Pioneer

Service Manual

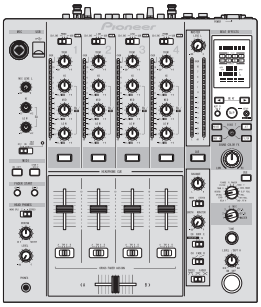

DJM-750-K

ORDER NO.
RRV4457

DJ MIXER

DJM-750-K
DJM-750-S

THIS MANUAL IS APPLICABLE TO THE FOLLOWING MODEL(S) AND TYPE(S).

Model	Type	Power Requirement	Remarks
DJM-750-K, DJM-750-S	SYXJ8	AC 220 V to 240 V	
DJM-750-K, DJM-750-S	UXJCB	AC 120 V	
DJM-750-K, DJM-750-S	LXJ	AC 110 V to 120 V or 220 V to 240 V	
DJM-750-K, DJM-750-S	KXJ5	AC 220 V	
DJM-750-K, DJM-750-S	XJCN5	AC 220 V to 240 V	


PIONEER CORPORATION 1-1, Shin-ogura, Saiwai-ku, Kawasaki-shi, Kanagawa 212-0031, Japan
PIONEER ELECTRONICS (USA) INC. P.O. Box 1760, Long Beach, CA 90801-1760, U.S.A.
PIONEER EUROPE NV Haven 1087, Keetberglaan 1, 9120 Melsele, Belgium
PIONEER ELECTRONICS ASIACENTRE PTE. LTD. 253 Alexandra Road, #04-01, Singapore 159936

K-MZV MAY 2013 Printed in Japan

SAFETY INFORMATION

This service manual is intended for qualified service technicians; it is not meant for the casual do-it-yourselfer. Qualified technicians have the necessary test equipment and tools, and have been trained to properly and safely repair complex products such as those covered by this manual.

Improperly performed repairs can adversely affect the safety and reliability of the product and may void the warranty. If you are not qualified to perform the repair of this product properly and safely, you should not risk trying to do so and refer the repair to a qualified service technician.

WARNING

This product may contain a chemical known to the State of California to cause cancer, or birth defects or other reproductive harm.

Health & Safety Code Section 25249.6 - Proposition 65

(FOR USA MODEL ONLY)

1. SAFETY PRECAUTIONS

The following check should be performed for the continued protection of the customer and service technician.

LEAKAGE CURRENT CHECK

Measure leakage current to a known earth ground (water pipe, conduit, etc.) by connecting a leakage current tester such as Simpson Model 229-2 or equivalent between the earth ground and all exposed metal parts of the appliance (input/output terminals, screwheads, metal overlays, control shaft, etc.). Plug the AC line cord of the appliance directly into a 120 V AC 60 Hz outlet and turn the AC power switch on. Any current measured must not exceed 0.5 mA.

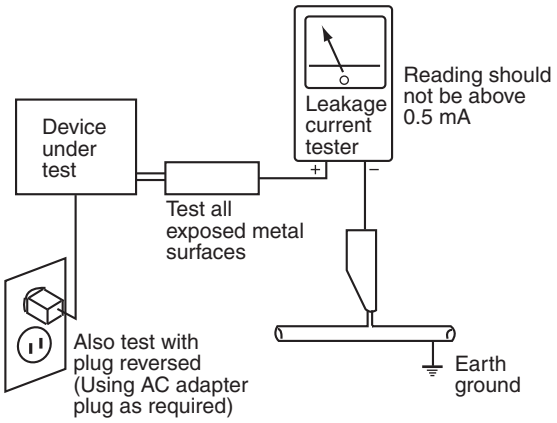

AC Leakage Test

ANY MEASUREMENTS NOT WITHIN THE LIMITS OUTLINED ABOVE ARE INDICATIVE OF A POTENTIAL SHOCK HAZARD AND MUST BE CORRECTED BEFORE RETURNING THE APPLIANCE TO THE CUSTOMER.

2. PRODUCT SAFETY NOTICE

Many electrical and mechanical parts in the appliance have special safety related characteristics. These are often not evident from visual inspection nor the protection afforded by them necessarily can be obtained by using replacement components rated for voltage, wattage, etc. Replacement parts which have these special safety characteristics are identified in this Service Manual.

Electrical components having such features are identified by marking with a ⚠ on the schematics and on the parts list in this Service Manual.

The use of a substitute replacement component which does not have the same safety characteristics as the PIONEER recommended replacement one, shown in the parts list in this Service Manual, may create shock, fire, or other hazards.

Product Safety is continuously under review and new instructions are issued from time to time. For the latest information, always consult the current PIONEER Service Manual. A subscription to, or additional copies of, PIONEER Service Manual may be obtained at a nominal charge from PIONEER.

CONTENTS

SAFETY INFORMATION 2
1. SERVICE PRECAUTIONS 5
1.1 NOTES ON SOLDERING 5
1.2 NOTES ON REPLACING 5
1.3 NOTES ON SERVICING 5
2. SPECIFICATIONS 6
3. BASIC ITEMS FOR SERVICE 7
3.1 CHECK POINTS AFTER SERVICING 7
3.2 JIGS LIST 7
3.3 PCB LOCATIONS 8
4. BLOCK DIAGRAM 10
4.1 OVERALL WIRING DIAGRAM 10
4.2 SYSTEM BLOCK DIAGRAM 12
4.3 DSP BLOCK DIAGRAM 14
4.4 CLOCK MAP 16
4.5 LED, KEY, VR ASSIGNMENTS 18
4.6 POWER BLOCK DIAGRAM 19
5. DIAGNOSIS 20
5.1 POWER ON SEQUENCE 20
5.2 SIMPLIFIED DIAGNOSTIC PROCEDURE FOR AUDIO SIGNAL 24
5.3 TROUBLESHOOTING 25
5.4 POWER SUPPLY DIAGNOSIS INFORMATION 37
5.5 VOLTAGE MONITORING CIRCUIT 38
5.6 ABOUT POLYSWITCH 40
5.7 ABOUT PROTECTOR 40
5.8 V+34D DIAGNOSIS 41
5.9 ERROR INDICATIONS 42
5.10 CONNECTION CHECK WITH EACH INTERFACE 43
5.11 DVS CONFIRMATION METHOD 44
6. SERVICE MODE 48
6.1 TEST MODE 48
6.2 ABOUT THE DEVICE 63
7. DISASSEMBLY 64
8. EACH SETTING AND ADJUSTMENT 75
8.1 NECESSARY ITEMS TO BE NOTED 75
8.2 UPDATING OF THE FIRMWARE 76
8.3 USER SETABLE ITEMS 78
8.4 SHEET FOR CONFIRMATION OF THE USER SETTING 78
9. EXPLODED VIEWS AND PARTS LIST 80
9.1 PACKING SECTION 80
9.2 EXTERIOR SECION 82
9.3 BOTTOM SECTION 84
9.4 CONTROL PANEL SECTION (1/2) 86
9.5 CONTROL PANEL SECTION (2/2) 88
10. SCHEMATIC DIAGRAM 90
10.1 INPUT ASSY (1/5) 90
10.2 INPUT ASSY (2/5) 92
10.3 INPUT ASSY (3/5) 94
10.4 INPUT ASSY (4/5) 96
10.5 INPUT ASSY (5/5) 98
10.6 MIC1 and MTRM ASSYS 100
10.7 MAIN ASSY (1/19) 102
10.8 MAIN ASSY (2/19) 104
10.9 MAIN ASSY (3/19) 106
10.10 MAIN ASSY (4/19) 108

10.11 MAIN ASSY (5/19) 110
10.12 MAIN ASSY (6/19) 112
10.13 MAIN ASSY (7/19) 114
10.14 MAIN ASSY (8/19) 116
10.15 MAIN ASSY (9/19) 118
10.16 MAIN ASSY (10/19) 120
10.17 MAIN ASSY (11/19) 122
10.18 MAIN ASSY (12/19) 124
10.19 MAIN ASSY (13/19) 126
10.20 MAIN ASSY (14/19) 128
10.21 MAIN ASSY (15/19) 130
10.22 MAIN ASSY (16/19) 132
10.23 MAIN ASSY (17/19) 134
10.24 MAIN ASSY (18/19) 136
10.25 MAIN ASSY (19/19) 138
10.26 SEC/HP ASSY (1/2) 140
10.27 SEC/HP ASSY (2/2) 142
10.28 USBI and HPJK ASSYS 144
10.29 PNLA ASSY (1/2) 146
10.30 PNLA ASSY (2/2) 148
10.31 PNLB and FADC ASSYS 150
10.32 FAD1 to FAD4 ASSYS 152
10.33 REG ASSY 153
10.34 TRANS, PRIMARY and ACSW ASSYS 154
10.35 WAVEFORMS 156
11. PCB CONNECTION DIAGRAM 160
11.1 INPUT, MIC1 and MTRM ASSYS 160
11.2 MAIN ASSY 164
11.3 SEC/HP, USBI and HPJK ASSYS 170
11.4 PNLA ASSY 174
11.5 PNLB and FADC ASSYS 178
11.6 FAD1 to FAD4 and REG ASSYS 182
11.7 TRANS, PRIMARY and ACSW ASSYS 184
12. PCB PARTS LIST 188

1. SERVICE PRECAUTIONS

1.1 NOTES ON SOLDERING

- For environmental protection, lead-free solder is used on the printed circuit boards mounted in this unit.
  Be sure to use lead-free solder and a soldering iron that can meet specifications for use with lead-free solders for repairs accompanied by reworking of soldering.

- Compared with conventional eutectic solders, lead-free solders have higher melting points, by approximately 40 ºC.
  Therefore, for lead-free soldering, the tip temperature of a soldering iron must be set to around 373 ºC in general, although the temperature depends on the heat capacity of the PC board on which reworking is required and the weight of the tip of the soldering iron.

Do NOT use a soldering iron whose tip temperature cannot be controlled.

Compared with eutectic solders, lead-free solders have higher bond strengths but slower wetting times and higher melting temperatures (hard to melt/easy to harden).

The following lead-free solders are available as service parts:
- Parts numbers of lead-free solder:
  GYP1006 1.0 in dia.
  GYP1007 0.6 in dia.
  GYP1008 0.3 in dia.

1.2 NOTES ON REPLACING

The part listed below is difficult to replace as a discrete component part.
When the part listed in the table is defective, replace whole Assy.

Assy Name	PCB Assy Part No.	Parts that is Diffcult to Replace			
		Ref No.	Function	Part No.	Remarks
MAIN Assy	DWX3430	IC1405	13V → 3.3V DC/DC converter	BD9328EFJ	IC with heat-pad
		IC1408	13V → 1.2V DC/DC converter	BD9328EFJ	IC with heat-pad
		IC2603	USB UCOM	ADSP-BF525BBCZ-5A	BGA
		IC3007	FPGA	XC3S50A-4FTG256C	BGA
		IC3201	DSP	D810K013BZKB400	BGA
		IC201	DAC	PCM1691DCA	IC with heat-pad

1.3 NOTES ON SERVICING

VOLTAGE MONITORING

This unit always monitors for power failure and will shut itself off immediately after an error is detected.
A power failure is indicated with flashing of the SETUP LED (Intervals: 250 ms [Lit 125 ms/Unlit 125 ms]).
All the LEDs other than SETUP LED will be unlit, and all the switches and VRs will be disabled.
Repair the unit according to the diagnostic procedures described in “5.4 INFORMATION ON POWER DIAGONOSTICS.”

CONFIRMATION OF USER-SETTING

This product has user- and club-setting data. Be sure to confirm those data before starting repair, although changing them may not have a large effect. Use the Check Sheet in “8.4,” to which you can transcribe the settings, as required.
The settings are stored in Flash ROM (IC2802) on the MAIN Assy.
To display the [USER SETUP] screen, hold [SETUP (WAKE UP)] pressed for at least 1 sec.
To display the [CLUB SETUP] screen, press [POWER] (ON) while holding [SETUP (WAKE UP)] pressed.

2. SPECIFICATIONS

General

Power requirements..... AC 220 V to 240 V, 50 Hz/60 Hz (SYXJ8)
AC 120 V, 60 Hz (UXJCB)
AC 110 V to 120 V or 220 V to 240 V, 50 Hz/60 Hz (LXJ)
AC 220 V, 60 Hz (KXJ5)
AC 220 V to 240 V, 50 Hz/ 60 Hz (XJCN5)

Power consumption .....32 W (SYXJ8)
30 W (UXJCB)
32 W (LXJ)
29 W (KXJ5)
32 W (XJCN5)

Power consumption (standby) ..... 0.45 W
Main unit weight..... 7.6 kg (17 lb)
Max. dimensions..... 320 mm (W) × 108 mm (H) × 376 mm (D)
(12.6 in. (W) × 4.3 in. (H) × 14.8 in. (D))
Tolerable operating temperature.....+5 °C to +35 °C (+41 °F to +95 °F)
Tolerable operating humidity..... 5 % to 85 % (no condensation)

Audio Section

Sampling rate ..... 96 kHz
MASTER D/A converter.....24 bits
Other A/D and D/A converters.....24 bits
Frequency characteristic
CD/LINE .....20 Hz to 20 kHz
S/N ratio (rated output, A-WEIGHTED)
PHONO ..... 92 dB
CD/LINE ..... 106 dB
MIC..... 84 dB
Total harmonic distortion (20 kHzBW)
CD/LINE — MASTER1 ..... 0.004 %
Standard input level / Input impedance
PHONO ..... –52 dBu/47 kΩ
CD/LINE ..... –12 dBu/47 kΩ
MIC..... –52 dBu/8.5 kΩ
RETURN..... –12 dBu/49 kΩ
Standard output level / Load impedance / Output impedance
MASTER1.....+6 dBu/10 kΩ/360 Ω or lower
MASTER2.....+2 dBu/10 kΩ/390 Ω or lower
REC OUT.....–8 dBu/10 kΩ/22 Ω or lower
BOOTH.....+2 dBu/10 kΩ/390 Ω or lower
SEND.....–12 dBu/10 kΩ/390 Ω or lower
PHONES .....+8.5 dBu/32 Ω/10 Ω or lower
Rated output level / Load impedance
MASTER1..... +24 dBu/10 kΩ
MASTER2..... +20 dBu/10 kΩ

Crosstalk
LINE..... 82 dB
Channel equalizer characteristic
HI .....–26 dB to +6 dB (13 kHz)
MID.....–26 dB to +6 dB (1 kHz)
LOW .....–26 dB to +6 dB (70 Hz)
Microphone equalizer characteristic
HI .....–12 dB to +12 dB (10 kHz)
LOW .....–12 dB to +12 dB (100 Hz)

Input / Output terminals

PHONO input terminal
RCA pin jack.....2 sets
CD/LINE input terminal
RCA pin jacks.....4 sets
LINE input terminal
RCA pin jack.....2 sets
MIC input terminal
XLR connector/phone jack (Ø 6.3 mm) ..... 1 set
RETURN Input terminals
Phone jack (Ø 6.3 mm)..... 1 set
MASTER output terminal
XLR connector..... 1 set
RCA pin jacks..... 1 set
BOOTH output terminal
RCA pin jacks..... 1 set
REC OUT output terminal
RCA pin jacks..... 1 set
SEND output terminal
Phone jack (Ø 6.3 mm)..... 1 set
DIGITAL MASTER OUT coaxial output terminal
RCA pin jacks..... 1 set
PHONES output terminal
Stereo phone jack (Ø 6.3 mm) ..... 1 set
USB terminal
B type ..... 1 set
CONTROL terminal
Mini phone jack (Ø 3.5 mm) .....2 sets

- The specifications and design of this product are subject to change without notice.
- Be sure to use the [MASTER1] terminals only for a balanced output. Connection with an unbalanced input (such as RCA) using an XLR to RCA converter cable (or converter adapter), etc., may lower the sound quality and/or result in noise.
  For connection with an unbalanced input (such as RCA), use the [MASTER2] terminals.

Accessories

- Driver software/operating instructions CD-ROM
  (DXX2726)
- USB cable
  (DDE1128)
- Power cord
  (SYXJ8, LXJ: ADG7062)
  (UXJCB: DDG1108)
  (KXJ5: ADG7115)
  (XJCN5: ADG7105)
- Read Before Use (Important)/Quick Start Guide
  (SYXJ8: DRH1205)
  (UXJCB: DRH1206)
  (LXJ: DRH1216)
  (KXJ5: DRH1219)
  (XJCN5: DRH1218)

3. BASIC ITEMS FOR SERVICE
3.1 CHECK POINTS AFTER SERVICING

Items to be checked after servicing / DJM

To keep the product quality after servicing, confirm recommended check points shown below.

No.	Procedures	Check points
1	Check the firmware version in Test mode.	The firmware version must be the latest one. If it is not the latest one, be sure to update it.
2	Confirm whether the customer complain has been solved. If the customer complain occurs with the specific source, such as Mic, each Input, Fader, Equalizer, and Trim, input that specific source for checking.	The customer complain must not be reappeared. Audio and operations must be normal.
3	Check the analog audio input (Check the MIC and RETURN.) (Make the analog connections with CDJ player, analog player and MIC.)	Audio and operations must be normal.
4	Check the analog audio output (MASTER1, 2, REC, BOOTH and SEND.) (Make the analog connection with CDJ player.)	Audio and operations must be normal.
5	Check the digital audio input/output	Audio for each channel and operations must be normal.
6	Check DVS signal route.	Make sure that PC applications function properly and that the audio signals and operations of each channel are normal.
7	Check the headphones output.	There must be no errors, such as noise, in the audio output.
8	Check playback, using the fader function. (Select the fader function then check operations of each channel with audio signals via the DSP.)	There must be no errors in audio output and operations of each channel.
9	Check the connection of each interface.	
	USB B	The device must be properly recognized by the PC.
10	Check the buttons and controls.	Make sure that all buttons and controls on the main unit function properly.
11	Check the FL displays and LEDs.	Check that all the FL displays and LEDs light in Test mode.
13	Check the user settings.	They must be returned to those set before repair.
13	Check the appearance of the product.	No scratches or dirt on its appearance after receiving it for service.

See the table below for the items to be checked regarding audio.

Item to be checked regarding audio
Distortion
Noise
Volume too low
Volume too high
Volume fluctuating
Sound interrupted

3.2 JIGS LIST

Jigs List

Jig Name	Part No.	Purpose of use / Remarks
USB cable	GGP1193	for PC connection

Lubricants and Glues List

Name	Part No.	Remarks
Silicon grease	GEM1057	Refer to "9.3 BOTTOM SECTION".
Lubricating oil	GYA1001	Refer to "9.4 CONTROL PANEL SECTION (1/2)".

3.3 PCB LOCATIONS

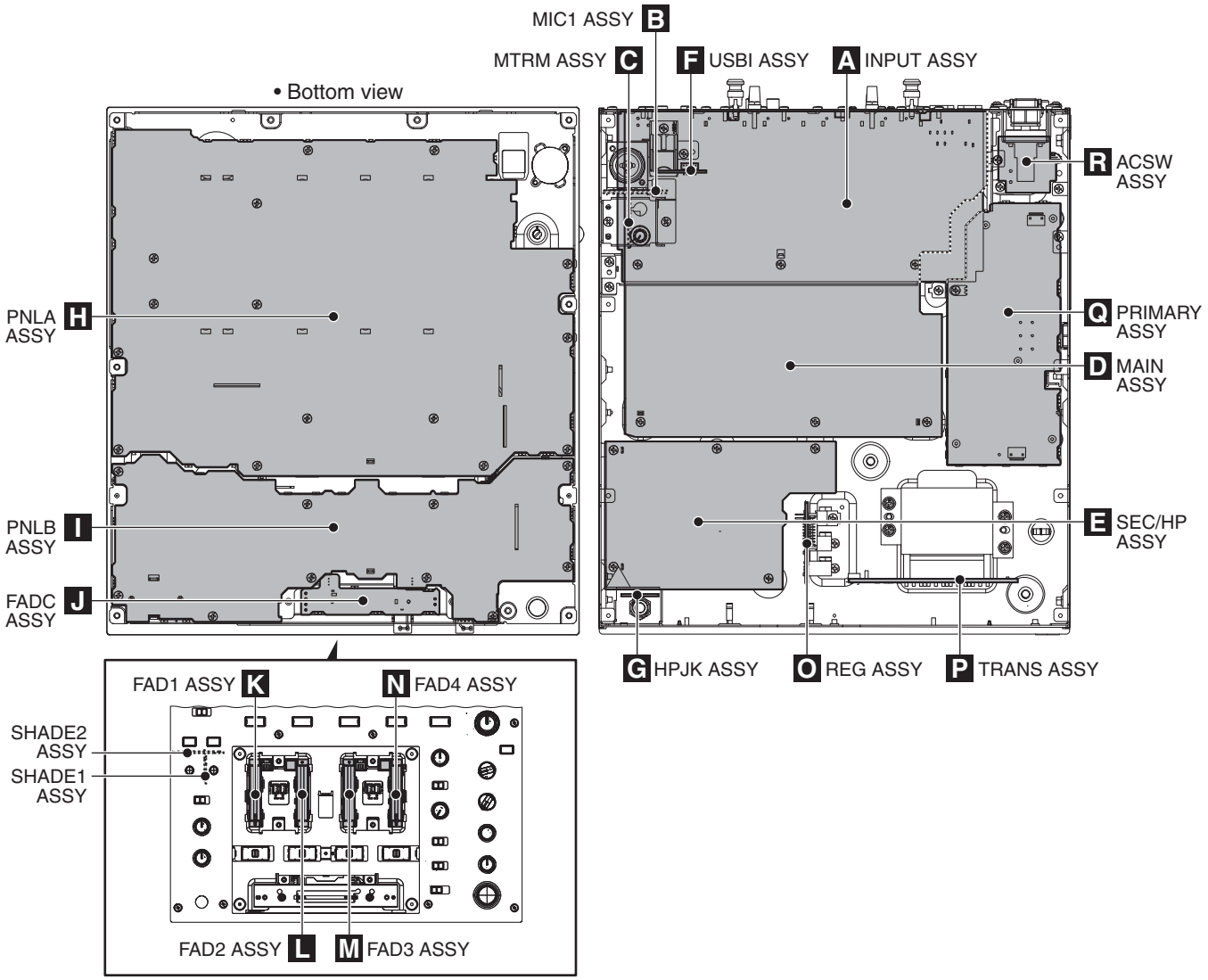

NOTES: ● *Parts marked by "NSP" are generally unavailable because they are not in our Master Spare Parts List.*
● *The ⚠ mark found on some component parts indicates the importance of the safety factor of the part. Therefore, when replacing, be sure to use parts of identical designation.*

LIST OF ASSEMBLIES

Mark	No.	Description	Part No.
NSP	1..	MOTHER ASSY	DWM2488
	2..	MAIN ASSY	DWX3430
	2..	USBI ASSY	DWX3431
NSP	1..	AUDIO ASSY	DWM2489
	2..	REG ASSY	DWR1528
	2..	SEC/HP ASSY	DWR1529
	2..	INPUT ASSY	DWX3432
	2..	HPJK ASSY	DWX3433
	2..	FAD1 ASSY	DWX3434
	2..	FAD2 ASSY	DWX3435
	2..	FAD3 ASSY	DWX3436
	2..	FAD4 ASSY	DWX3437
	2..	FADC ASSY	DWX3438

Mark	No.	Description	Part No.
NSP	1..	SUB ASSY (SYXJ8, KXJ5, XJCN5)	DWM2492
NSP	1..	SUB ASSY (UXJCB)	DWM2493
NSP	1..	SUB ASSY (LXJ)	DWM2490
	2..	ACSW ASSY	DWR1532
	2..	PRIMARY ASSY (SYXJ8, KXJ5, XJCN5)	DWR1535
	2..	PRIMARY ASSY (UXJCB)	DWR1537
	2..	PRIMARY ASSY (LXJ)	DWR1530
	2..	TRANS ASSY (SYXJ8, KXJ5, XJCN5)	DWR1536
	2..	TRANS ASSY (UXJCB)	DWR1538
	2..	TRANS ASSY (LXJ)	DWR1531
	2..	PNLB ASSY	DWX3440
	2..	MIC1 ASSY	DWX3441
	2..	MTRM ASSY	DWX3442
	2..	SHADE1 ASSY	DWX3479
	2..	SHADE2 ASSY	DWX3483
	1..	PNLA ASSY	DWX3439

4. BLOCK DIAGRAM

4.1 OVERALL WIRING DIAGRAM

- When ordering service parts, be sure to refer to "EXPLODED VIEWS and PARTS LIST" or "PCB PARTS LIST".
- The ⚠ mark found on some component parts indicates the importance of the safety factor of the part.
  Therefore, when replacing, be sure to use parts of identical designation.
- : The power supply is shown with the marked box.

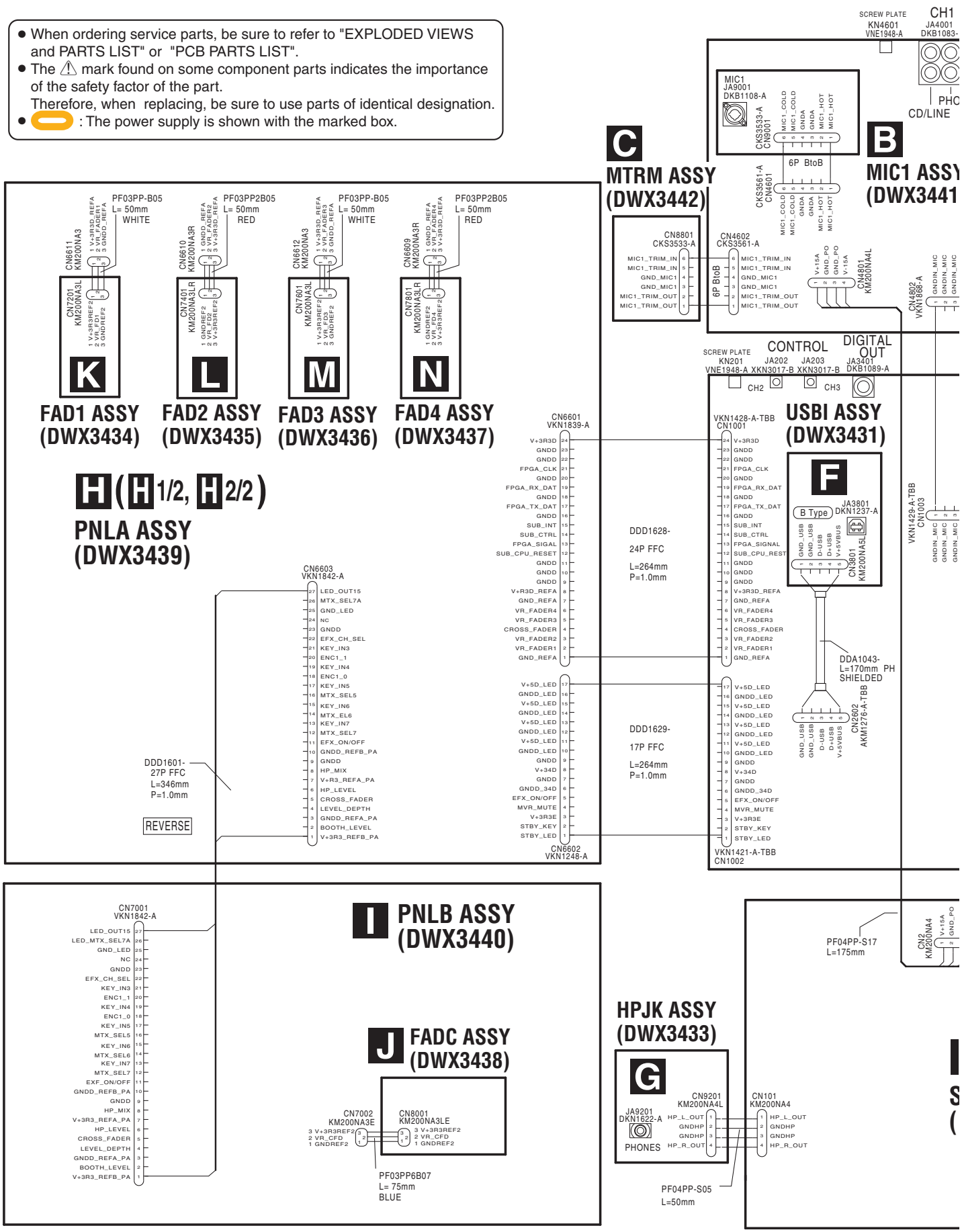

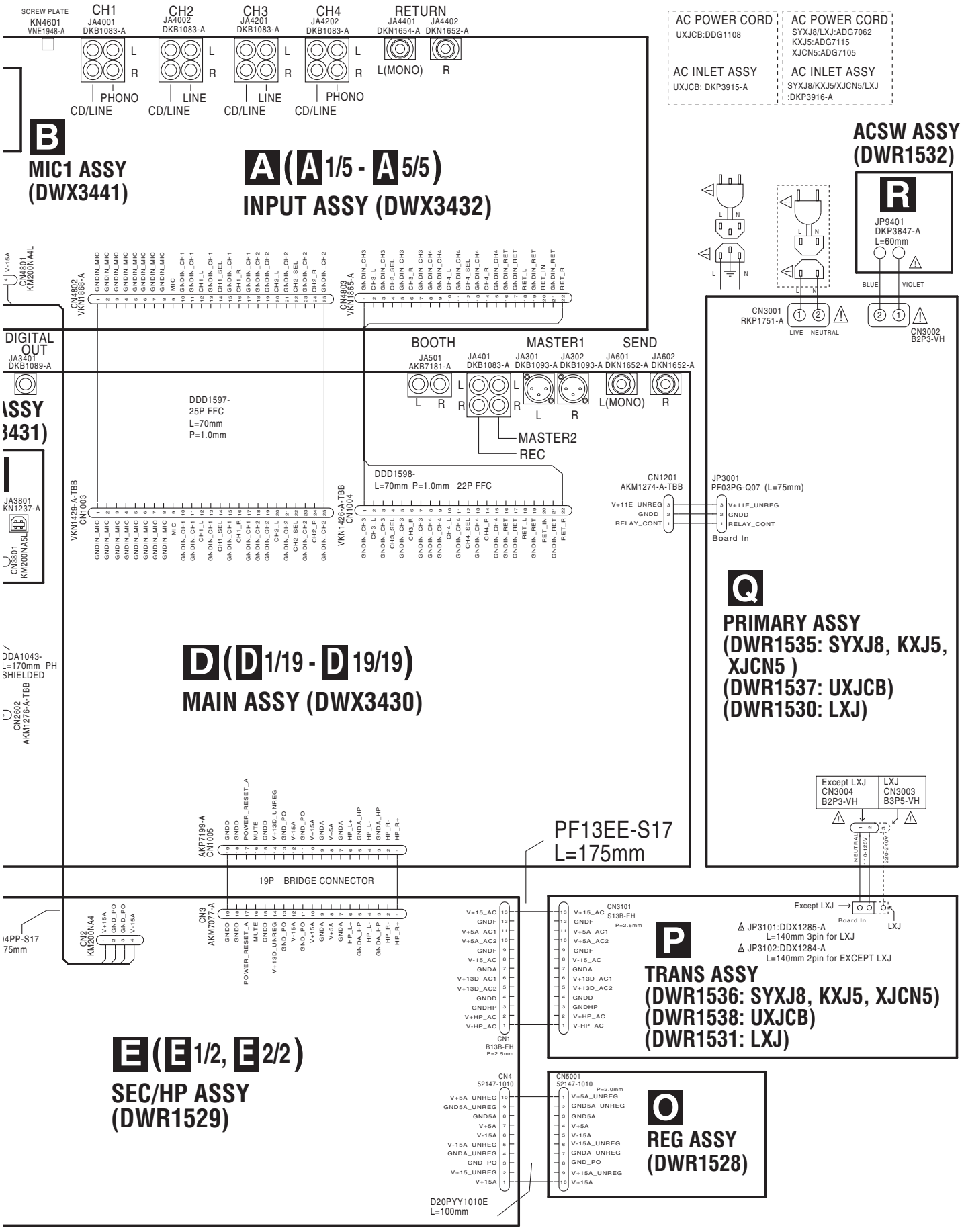
SCREW PLATE
KN4601
VNE1948-A
CH1
JA4001
DKB1083-A
CH2
JA4002
DKB1083-A
CH3
JA4201
DKB1083-A
CH4
JA4202
DKB1083-A
RETURN
JA4401
DKN1654-A
JA4402
DKN1652-A
L(MONO)
PHONO
CD/LINE
LINE
AC POWER CORD
UXJCB:DDG1108
AC INLET ASSY
UXJCB: DKP3915-A
AC POWER CORD
SYXJ8/LXJ:ADG7062
KXJ5:ADG7115
XJCN5:ADG7105
AC INLET ASSY
SYXJ8/KXJ5/XJCN5/LXJ
:DKP3916-A
B
MIC1 ASSY
(DWX3441)
A (A 1/5 - A 5/5)
INPUT ASSY (DWX3432)
ACSW ASSY
(DWR1532)
R
JP9401
DKP3847-A
L=60mm
BLUE
VIOLET
CN3001
RKP1751-A
LIVE
NEUTRAL
CN3002
B2P3-VH
CN4801
KM200NA4L
CN4802
VKN1868-A
CN4803
VKN1865-A
DIGITAL
OUT
JA3401
DKB1089-A
BOOTH
JA501
AKB7181-A
MASTER1
JA401
DKB1083-A
JA301
DKB1093-A
JA302
DKB1093-A
SEND
JA601
DKN1652-A
JA602
DKN1652-A
L(MONO)
MASTER2
REC
DDD1597-
25P FFC
L=70mm
P=1.0mm
DDD1598-
L=70mm P=1.0mm 22P FFC
CN1201
AKM1274-A-TBB
V+11E_UNREG
GNDD
RELAY_CONT
JP3001
PF03PG-Q07 (L=75mm)
Board In
Q
PRIMARY ASSY
(DWR1535: SYXJ8, KXJ5,
XJCN5)
(DWR1537: UXJCB)
(DWR1530: LXJ)
JA3801
KN1237-A
CN3801
KM200NA5L
VKN1429-A-TBB
CN1003
VKN1426-A-TBB
CN1004
D (D 1/19 - D 19/19)
MAIN ASSY (DWX3430)
CN2602
AKM1276-A-TBB
Except LXJ
CN3004
B2P3-VH
LXJ
CN3003
B3P5-VH
NEUTRAL
110-120V
220-240V
AKP7199-A
CN1005
PF13EE-S17
L=175mm
19P BRIDGE CONNECTOR
CN2
KM200NA4
CN3
AKM7077-A
CN3101
S13B-EH
P=2.5mm
Except LXJ
Board In
LXJ
JP3101:DDX1285-A
L=140mm 3pin for LXJ
JP3102:DDX1284-A
L=140mm 2pin for EXCEPT LXJ
P
TRANS ASSY
(DWR1536: SYXJ8, KXJ5, XJCN5)
(DWR1538: UXJCB)
(DWR1531: LXJ)
CN1
B13B-EH
P=2.5mm
E (E 1/2, E 2/2)
SEC/HP ASSY
(DWR1529)
CN4
52147-1010
CN5001
52147-1010
P=2.0mm
O
REG ASSY
(DWR1528)
D20PYY1010E
L=100mm

4.2 SYSTEM BLOCK DIAGRAM

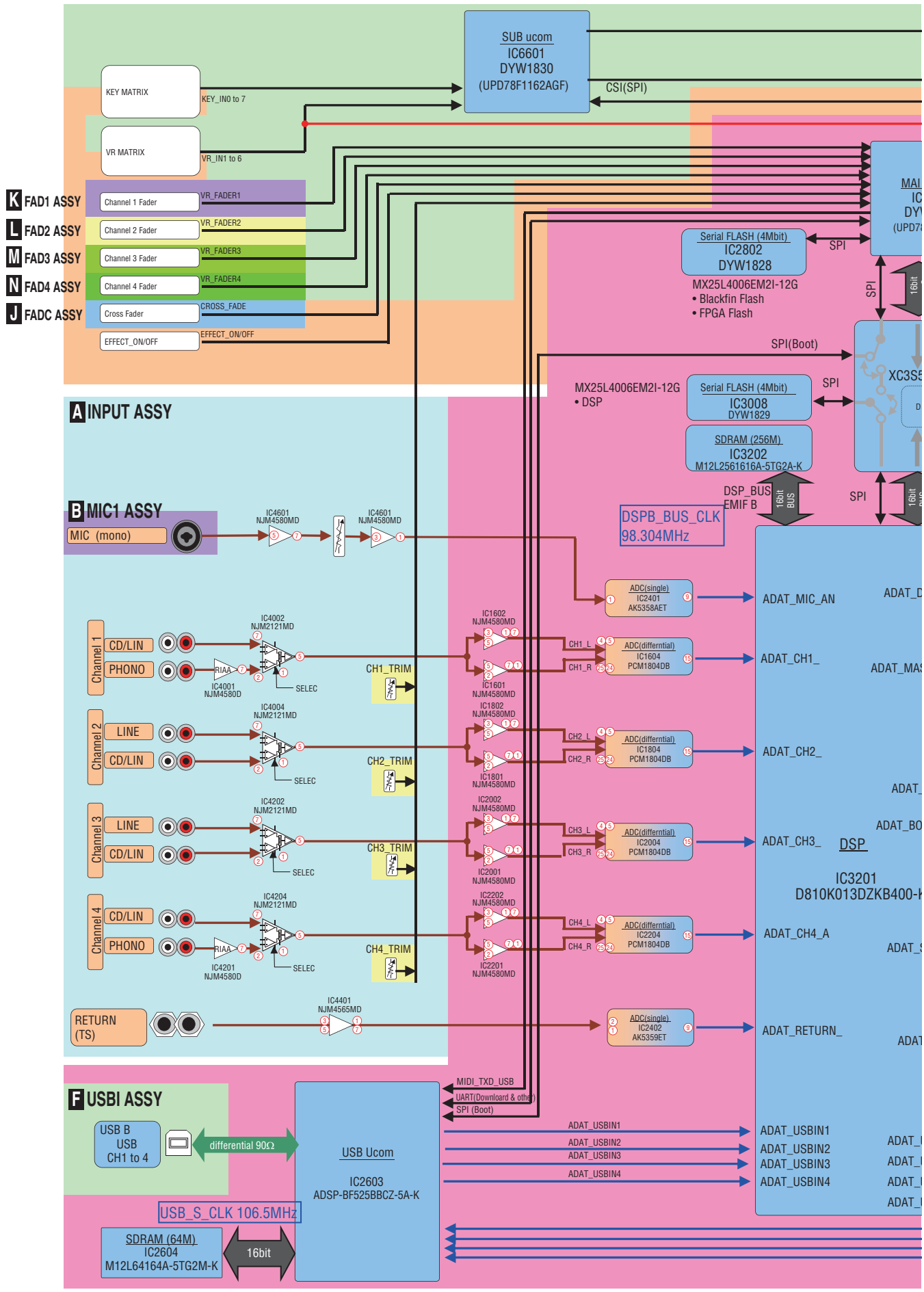

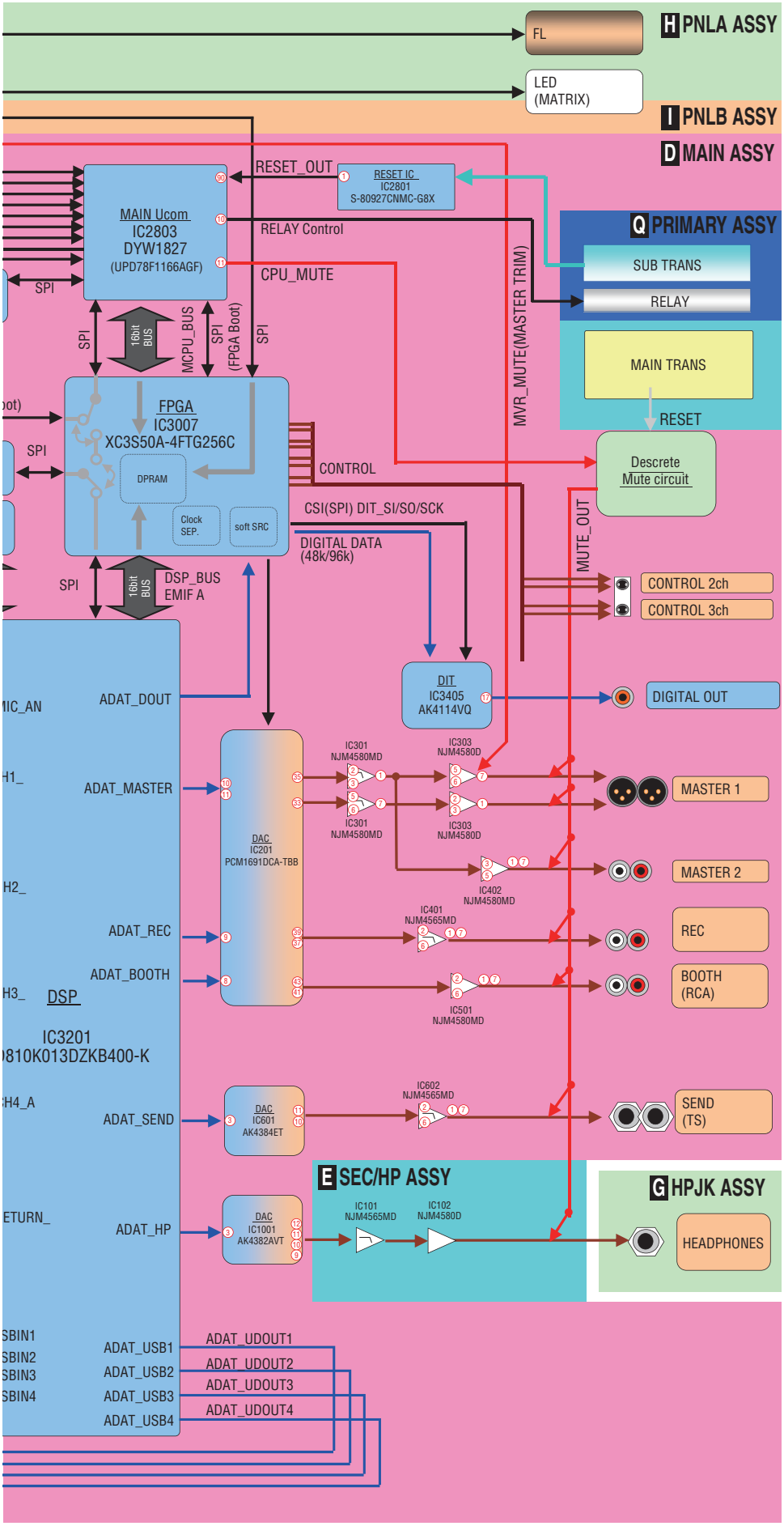
H PNLA ASSY
FL
LED (MATRIX)
I PNLB ASSY
D MAIN ASSY
MAIN Ucom
IC2803
DYW1827
(UPD78F1166AGF)
RESET_OUT
RESET IC
IC2801
S-80927CNMC-G8X
RELAY Control
CPU_MUTE
SPI
16bit BUS
MCPU_BUS
SPI (FPGA Boot)
FPGA
IC3007
XC3S50A-4FTG256C
DPRAM
Clock SEP.
soft SRC
CONTROL
CSI(SPI) DIT_SI/SO/SCK
DIGITAL DATA (48k/96k)
DSP_BUS
EMIF A
MVR_MUTE(MASTER TRIM)
Q PRIMARY ASSY
SUB TRANS
RELAY
MAIN TRANS
RESET
Descrete Mute circuit
MUTE_OUT
CONTROL 2ch
CONTROL 3ch
DIT
IC3405
AK4114VQ
DIGITAL OUT
ADAT_DOUT
ADAT_MASTER
ADAT_REC
ADAT_BOOTH
DAC
IC201
PCM1691DCA-TBB
IC301
NJM4580MD
IC303
NJM4580D
MASTER 1
MASTER 2
IC402
NJM4580MD
IC401
NJM4565MD
REC
BOOTH (RCA)
IC501
NJM4580MD
DSP
IC3201
ADAT_SEND
DAC
IC601
AK4384ET
IC602
NJM4565MD
SEND (TS)
E SEC/HP ASSY
IC101
NJM4565MD
IC102
NJM4580D
G HPJK ASSY
HEADPHONES
ADAT_HP
DAC
IC1001
AK4382AVT
ADAT_USB1
ADAT_USB2
ADAT_USB3
ADAT_USB4
ADAT_UDOUT1
ADAT_UDOUT2
ADAT_UDOUT3
ADAT_UDOUT4

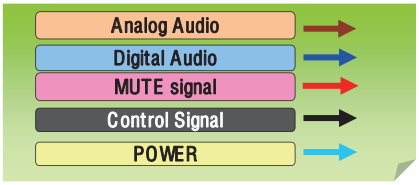
Analog Audio
Digital Audio
MUTE signal
Control Signal
POWER

4.3 DSP BLOCK DIAGRAM

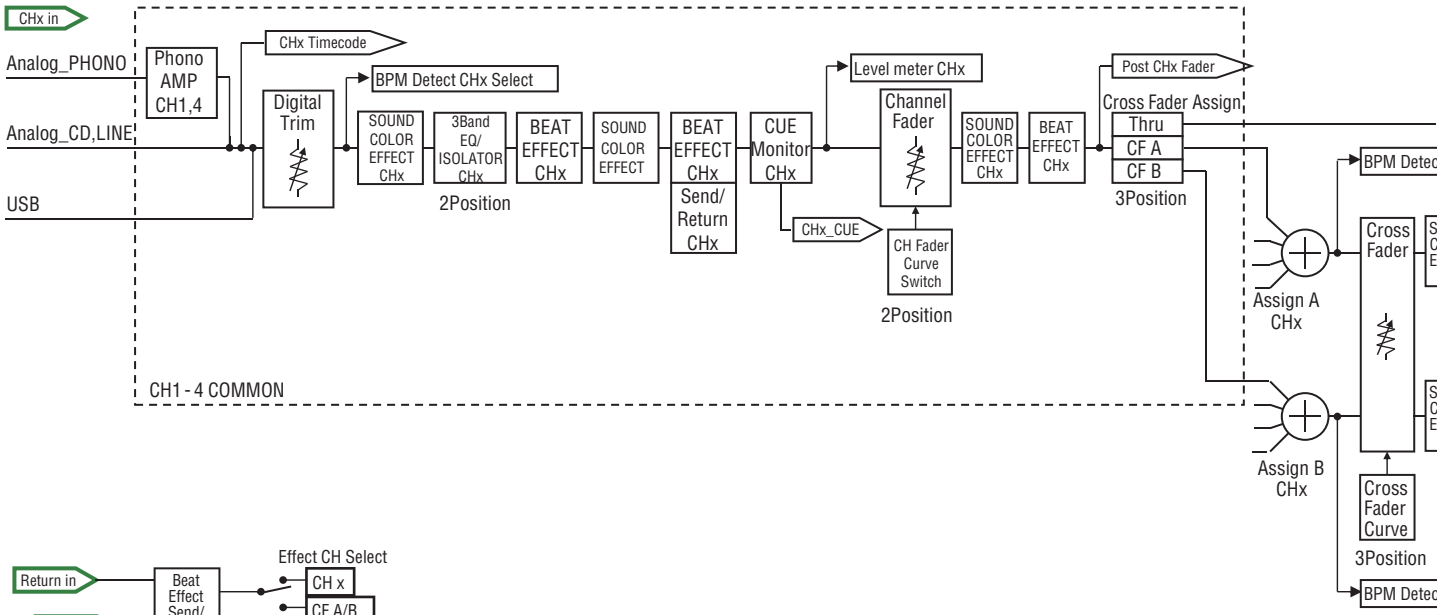

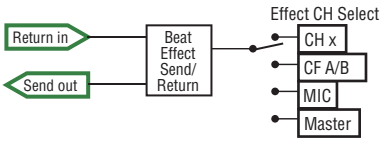

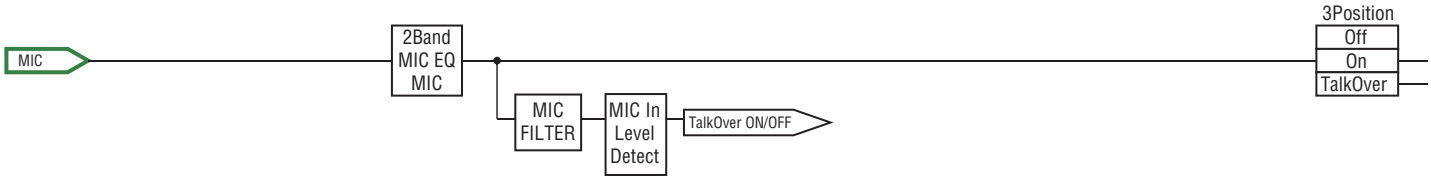

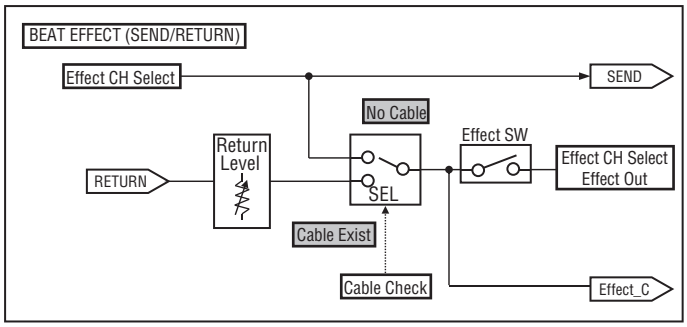

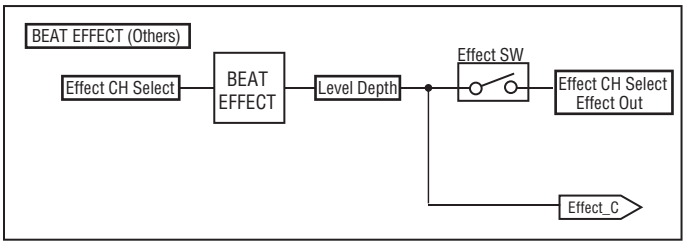

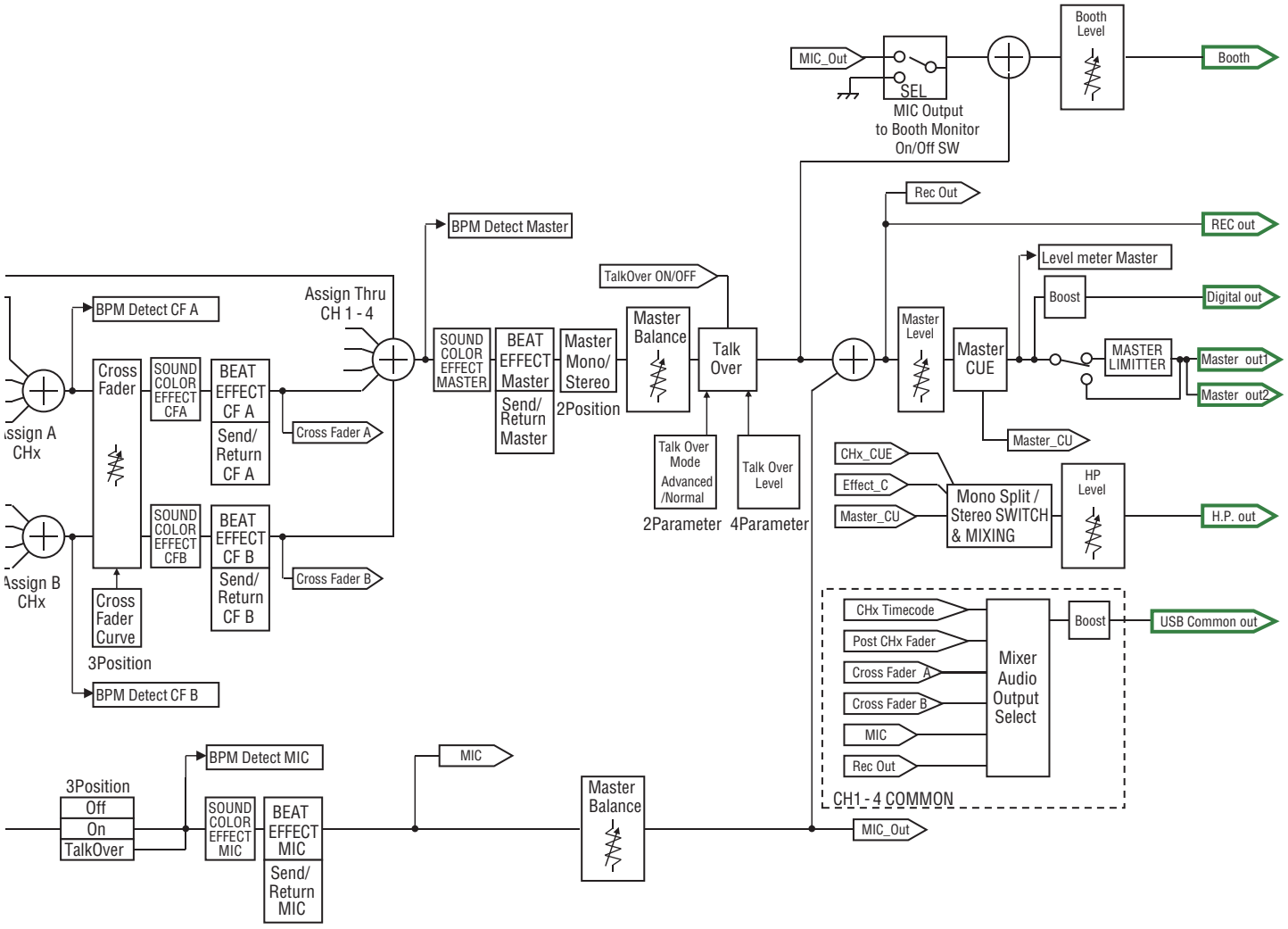
MIC_Out
SEL
MIC Output
to Booth Monitor
On/Off SW
Booth Level
Booth
Rec Out
REC out
BPM Detect Master
Level meter Master
TalkOver ON/OFF
Boost
Digital out
BPM Detect CF A
Assign Thru
CH 1 - 4
Master Balance
Master Level
Master CUE
MASTER LIMITTER
Master out1
Master out2
Cross Fader
SOUND COLOR EFFECT CFA
BEAT EFFECT CF A
Send/ Return CF A
SOUND COLOR EFFECT MASTER
BEAT EFFECT Master
Send/ Return Master
Master Mono/ Stereo
2Position
Talk Over
Cross Fader A
Talk Over Mode
Advanced /Normal
Talk Over Level
2Parameter
4Parameter
Master_CU
CHx_CUE
Effect_C
Master_CU
Mono Split / Stereo SWITCH & MIXING
HP Level
H.P. out
Assign A
CHx
Assign B
CHx
SOUND COLOR EFFECT CFB
BEAT EFFECT CF B
Send/ Return CF B
Cross Fader B
Cross Fader Curve
3Position
BPM Detect CF B
CHx Timecode
Post CHx Fader
Cross Fader A
Cross Fader B
MIC
Rec Out
Mixer Audio Output Select
Boost
USB Common out
CH1 - 4 COMMON
BPM Detect MIC
MIC
3Position
Off
On
TalkOver
SOUND COLOR EFFECT MIC
BEAT EFFECT MIC
Send/ Return MIC
Master Balance
MIC_Out
Effect CH Select
Effect Out
Effect_C
Mono Split / Stereo SWITCH & MIXING
CHx Cue On/Off SW
CHx_CUE
Effect Cue On/Off SW
Effect_CUE
Cue Mixing
L
R
Mono Split
SEL
Stereo
H.P. MIX L Out
MIXING
MONO SPLIT/
STEREO SWITCH
2Position
Mono Split
Master Cue On/Off SW
Master_CU
Master Mixing
L
SEL
Stereo
H.P. MIX R Out
R

4.4 CLOCK MAP

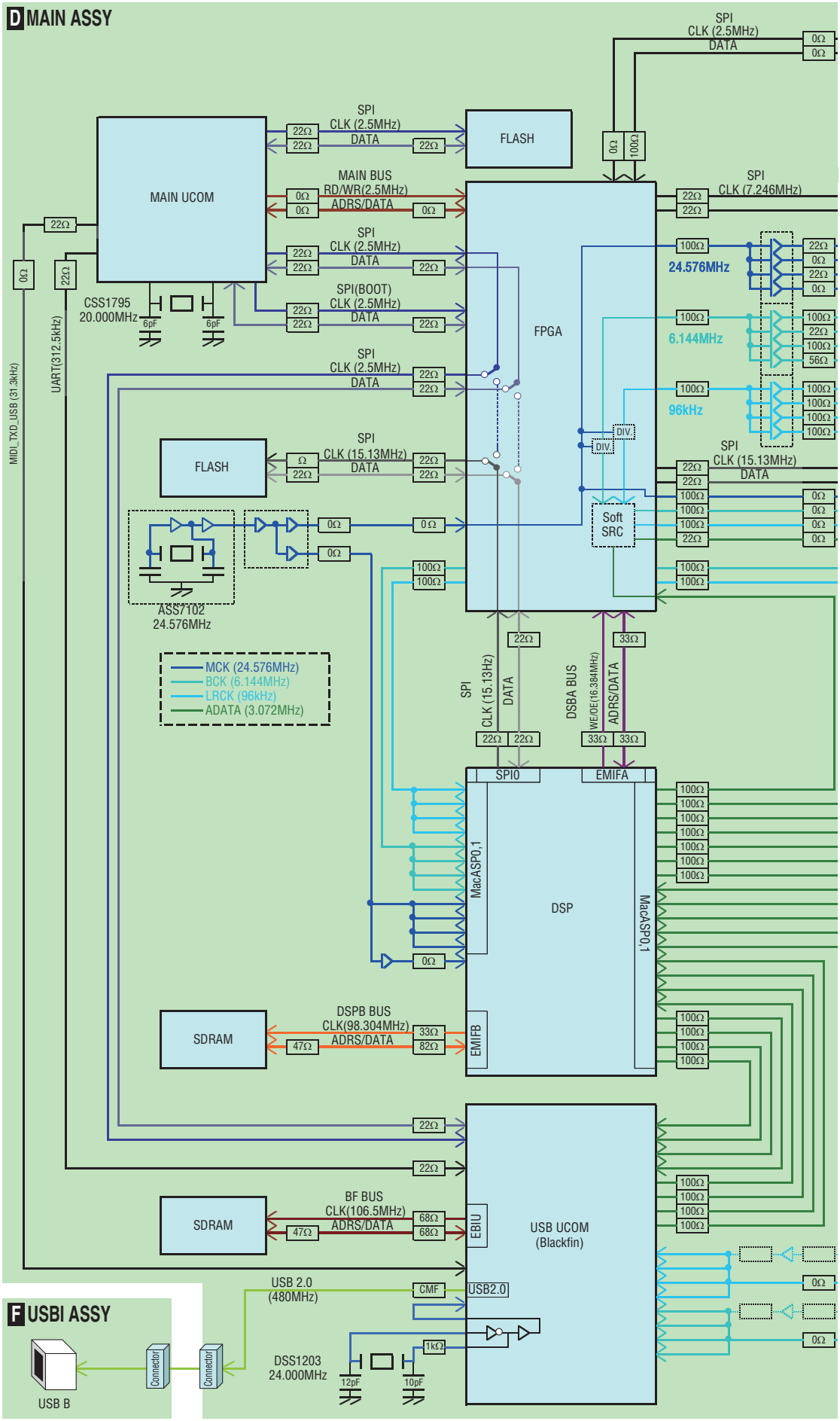
D MAIN ASSY
MAIN UCOM
FLASH
FPGA
SPI
CLK (2.5MHz)
DATA
MAIN BUS
RD/WR(2.5MHz)
ADRS/DATA
SPI(BOOT)
CLK (2.5MHz)
DATA
CSS1795
20.000MHz
6pF
6pF
SPI
CLK (7.246MHz)
24.576MHz
6.144MHz
96kHz
DIV
DIV
SPI
CLK (15.13MHz)
DATA
Soft
SRC
ASS7102
24.576MHz
MCK (24.576MHz)
BCK (6.144MHz)
LRCK (96kHz)
ADATA (3.072MHz)
SPI
CLK (15.13Hz)
DATA
DSBA BUS
WE/OE(16.384MHz)
ADRS/DATA
SPI0
EMIFA
MacASP0,1
DSP
MacASP0,1
EMIFB
SDRAM
DSPB BUS
CLK(98.304MHz)
ADRS/DATA
SDRAM
BF BUS
CLK(106.5MHz)
ADRS/DATA
EBIU
USB UCOM
(Blackfin)
USB2.0
CMF
USB 2.0
(480MHz)
DSS1203
24.000MHz
12pF
10pF
1kΩ
F USBI ASSY
USB B
Connector
Connector
MIDI_TXD_USB (31.3kHz)
UART(312.5kHz)

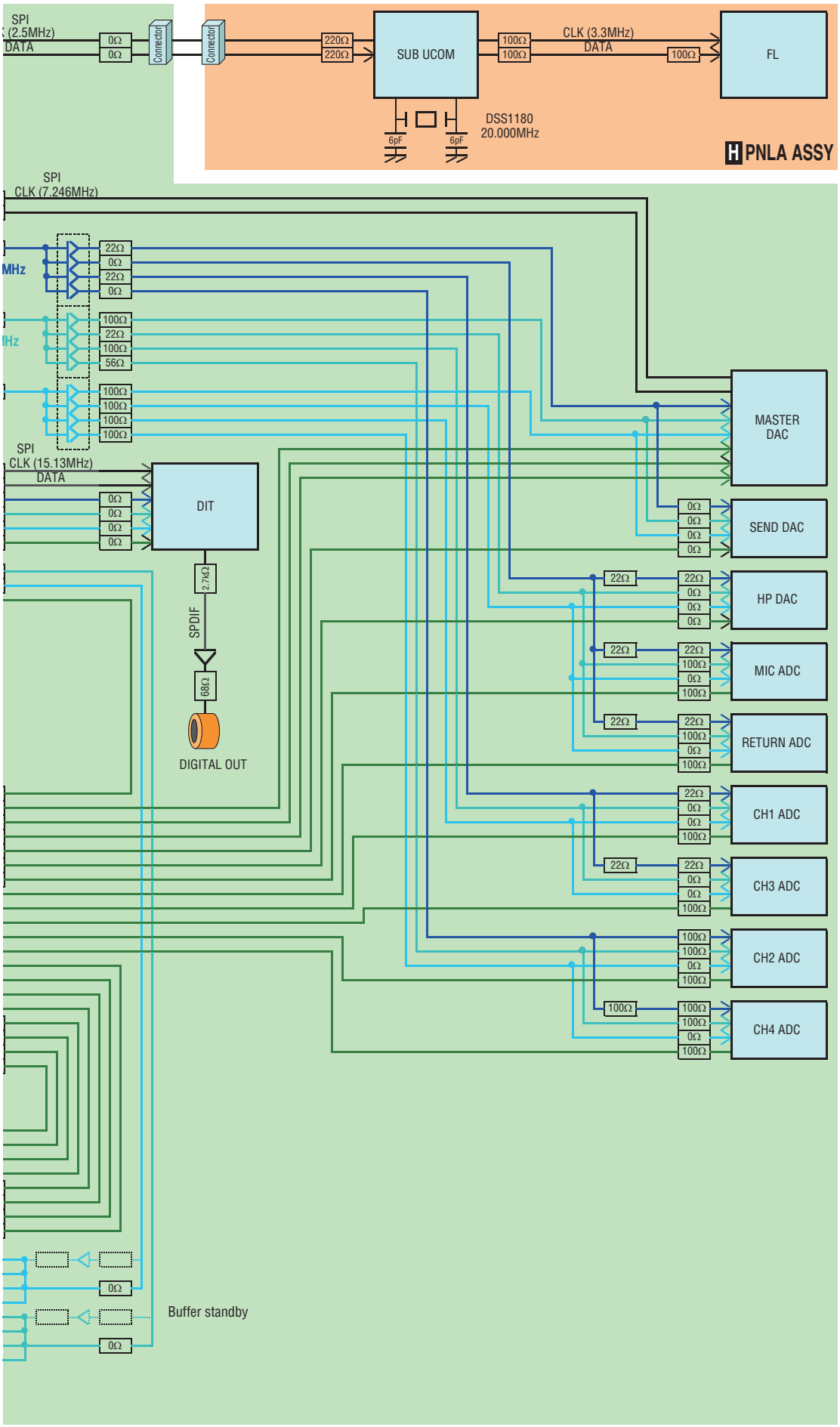
SPI
(2.5MHz)
DATA
0Ω
0Ω
Connector
Connector
220Ω
220Ω
SUB UCOM
100Ω
100Ω
CLK (3.3MHz)
DATA
100Ω
FL
6pF
6pF
DSS1180
20.000MHz
H PNLA ASSY
SPI
CLK (7.246MHz)
MHz
22Ω
0Ω
22Ω
0Ω
100Ω
22Ω
100Ω
56Ω
100Ω
100Ω
100Ω
100Ω
MASTER
DAC
SPI
CLK (15.13MHz)
DATA
0Ω
0Ω
0Ω
0Ω
DIT
SEND DAC
2.7kΩ
SPDIF
68Ω
DIGITAL OUT
22Ω
HP DAC
MIC ADC
RETURN ADC
CH1 ADC
CH3 ADC
CH2 ADC
CH4 ADC
100Ω
0Ω
Buffer standby
0Ω

4.5 LED, KEY, VR ASSIGNMENTS

LED matrix

	MTX_SEL1	MTX_SEL2	MTX_SEL3	MTX_SEL4	MTX_SEL5	MTX_SEL6	MTX_SEL7	MTX_SEL0
LED_OUT0	LV1_OVER	LV2_OVER	LV3_OVER	LV4_OVER	LVms_L_OVER	LVms_R_OVER		TALK OVER
LED_OUT1	LV1_10	LV2_10	LV3_10	LV4_10	LVms_L_10	LVms_R_10		MIDI ON/OFF
LED_OUT2	LV1_7	LV2_7	LV3_7	LV4_7	LVms_L_7	LVms_R_7		FADER START2
LED_OUT3	LV1_4	LV2_4	LV3_4	LV4_4	LVms_L_4	LVms_R_4		FADER START3
LED_OUT4	LV1_2	LV2_2	LV3_2	LV4_2	LVms_L_2	LVms_R_2		
LED_OUT5	LV1_1	LV2_1	LV3_1	LV4_1	LVms_L_1	LVms_R_1		
LED_OUT6	LV1_0	LV2_0	LV3_0	LV4_0	LVms_L_0	LVms_R_0		
LED_OUT7	LV1_-1	LV2_-1	LV3_-1	LV4_-1	LVms_L_-1	LVms_R_-1		
LED_OUT8	LV1_-2	LV2_-2	LV3_-2	LV4_-2	LVms_L_-2	LVms_R_-2		
LED_OUT9	LV1_-3	LV2_-3	LV3_-3	LV4_-3	LVms_L_-3	LVms_R_-3		
LED_OUT10	LV1_-5	LV2_-5	LV3_-5	LV4_-5	LVms_L_-5	LVms_R_-5		
LED_OUT11	LV1_-7	LV2_-4	LV3_-7	LV4_-7	LVms_L_-7	LVms_R_-7	CFX1(Noise)	CFX4(Jet)
LED_OUT12	LV1_-10	LV2_-10	LV3_-10	LV4_-10	LVms_L_-10	LVms_R_-10	CFX2(Crush)	CFX3(Filter)
LED_OUT13	LV1_-15	LV2_-15	LV3_-15	LV4_-15	LVms_L_-15	LVms_R_-15	BOOST	
LED_OUT14	LV1_-24	LV2_-24	LV3_-24	LV4_-24	LVms_L_-24	LVms_R_-24	BOOST VR	
LED_OUT15	CH1 CUE	CH2 CUE	CH3 CUE	CH4 CUE	MASTER CUR	EFX CUE	EFFECT ON/OFF	

: These buttons are lit dimly by software control.

: PNLB Assy

Except : PNLA Assy

KEY matrix

	MTX_SEL0	MTX_SEL1	MTX_SEL2	MTX_SEL3	MTX_SEL4	MTX_SEL5	MTX_SEL6	MTX_SEL7
KEY_IN0	CH3 FADER START	CH1 CUE	IN1 SELECT (CD/LINE)	IN3 SELECT (CD/LINE)	-	AUTO	-	BEAT EFX SELECT
KEY_IN1	CH2 FADER START	CH2 CUE	IN1 SELECT (USB)	IN3 SELECT (USB)	CH4 CUE	MASTER CUE	CH3 CUE	BEAT EFX SELECT
KEY_IN2	MIDI ON/OFF	MIC ON/OFF (OFF)	IN2 SELECT (CD/LINE)	IN4 SELECT (CD/LINE)	-	BOOST	EFX CUE	BEAT EFX SELECT
KEY_IN3	MIDI START/STOP	MIC ON/OFF (TALK OVER)	IN2 SELECT (USB)	IN4 SELECT (USB)	-	HP MONO/ST (MONO)	MASTER MONO/ST	BEAT EFX SELECT
KEY_IN4	-	-	-	-	-	CRFD ASSIGN CH2 (B)	EQ/ISO (ISOLATOR)	CRFD CURVE (right)
KEY_IN5	-	-	-	-	-	CRFD ASSIGN CH2 (A)	CHFD CURVE (left)	CRFD CURVE (left)
KEY_IN6	-	-	-	-	-	CRFD ASSIGN CH3 (B)	CRFD ASSIGN CH4 (B)	CRFD ASSIGN CH1 (B)
KEY_IN7	-	-	-	-	-	CRFD ASSIGN CH3 (A)	CRFD ASSIGN CH4 (A)	CRFD ASSIGN CH1 (A)

: PNLB Assy

Except : PNLA Assy

VR Assignment (AD port)

Microcomputer	Pin No.	Signal Name	Route	VR point
SUB UCOM (PNLA ASSY IC6601)	Pin 52	VR_IN1	Multiplexer VR_SEL_0_0 VR_SEL_0_1	CH3_EQ_HI
				CH4_TRIM
				CH3_TRIM
				CH4_EQ_HI
	Pin 53	VR_IN2		CH1_EQ_HI
				CH2_TRIM
				CH1_TRIM
				CH2_EQ_HI
	Pin 54	VR_IN3		CH2_EQ_MID
				CH3_EQ_LOW
				CH3_EQ_MID
				CH2_EQ_LOW
	Pin 55	VR_IN4		MIC_EQ_HI
				CH1_EQ_LOW
				CH1_EQ_MID
				MIC_EQ_LOW
	Pin 56	VR_master	Direct in AD port	MASTER_LEVEL
	Pin 57	VR_boost	Direct in AD port	BOOST
	Pin 58	VR_IN5	Multiplexer VR_SEL_1_0 VR_SEL_1_1	CH4_EQ_LOW
				HP_MIX
				CH4_EQ_MID
				EFX_CH_SEL
	Pin 59	VR_IN6		LEVEL/DEPTH
				BOOTH_LEVEL
				MASTER_BALANCE
				HP_LEVEL
MAIN UCOM (MAIN ASSY IC2803)	Pin 52	VR_FADER4	Direct in AD port	CH4_FADER
	Pin 53	VR_FADER3	Direct in AD port	CH3_FADER
	Pin 54	VR_FADER_CRS	Direct in AD port	CROSS_FADER
	Pin 55	VR_FADER2	Direct in AD port	CH2_FADER
	Pin 56	VR_FADER1	Direct in AD port	CH1_FADER

4.6 POWER BLOCK DIAGRAM

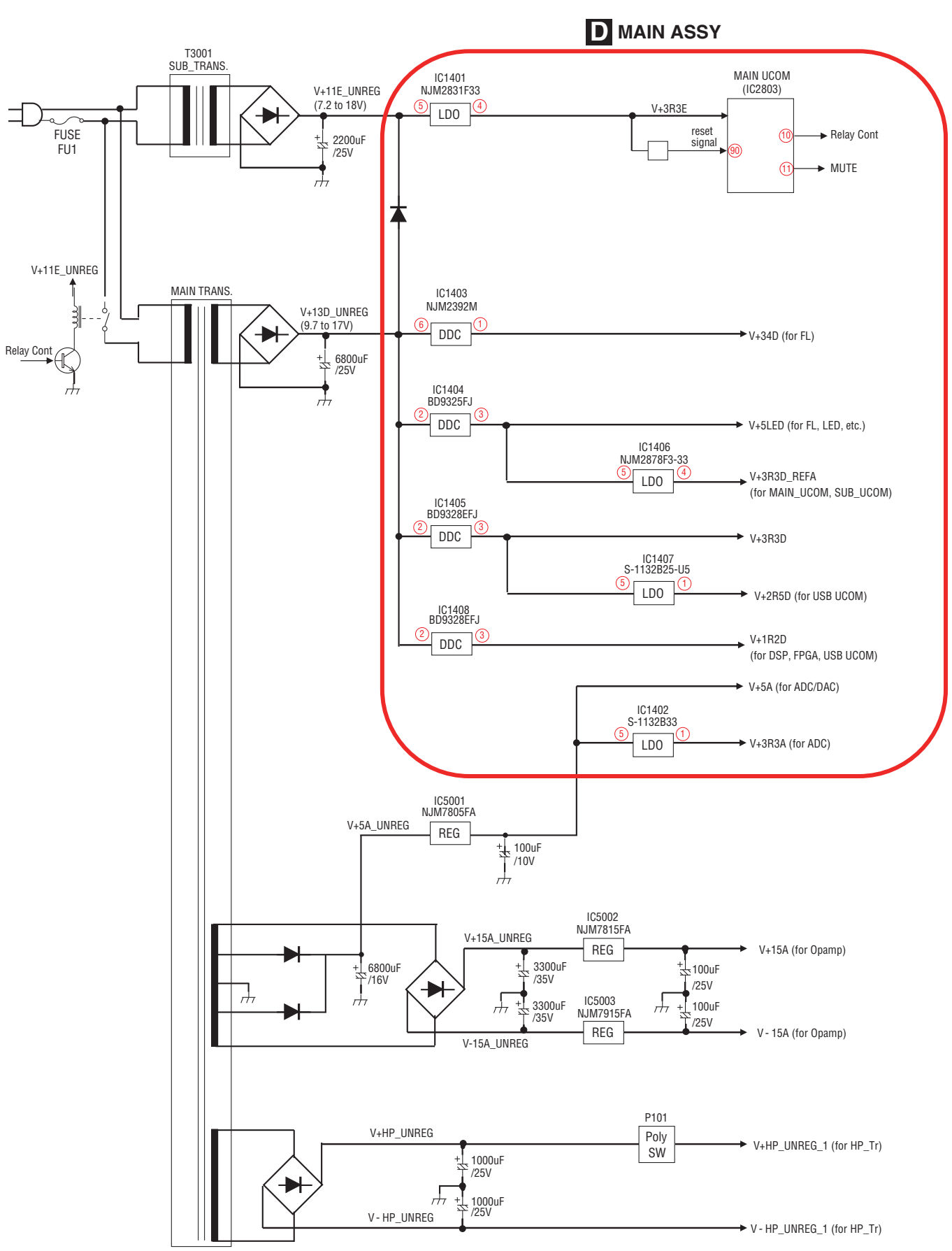

5. DIAGNOSIS
5.1 POWER ON SEQUENCE

Startup Sequence

* The signals indicated in blue boldface are those described in the Power Reset Muting Chart section.

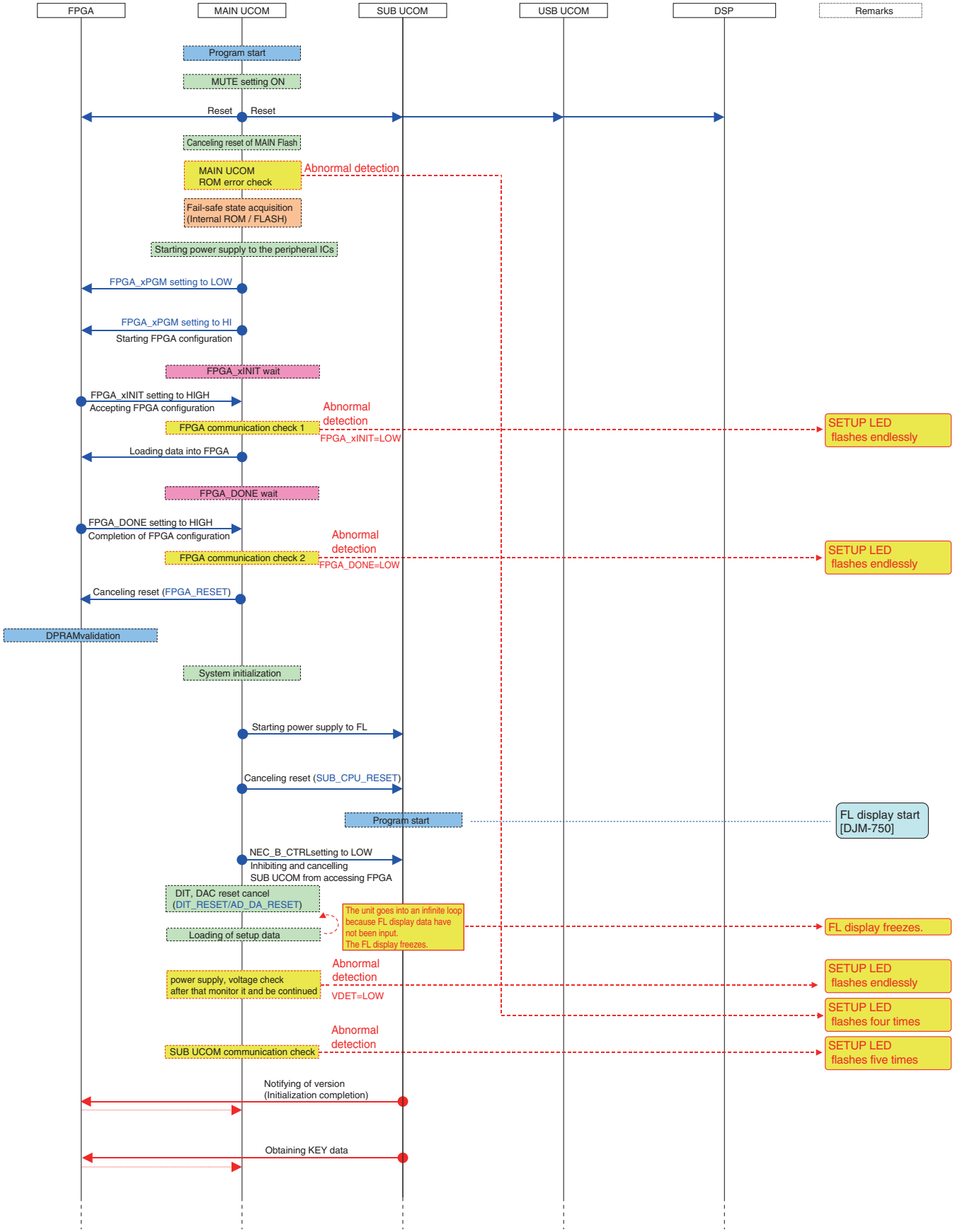

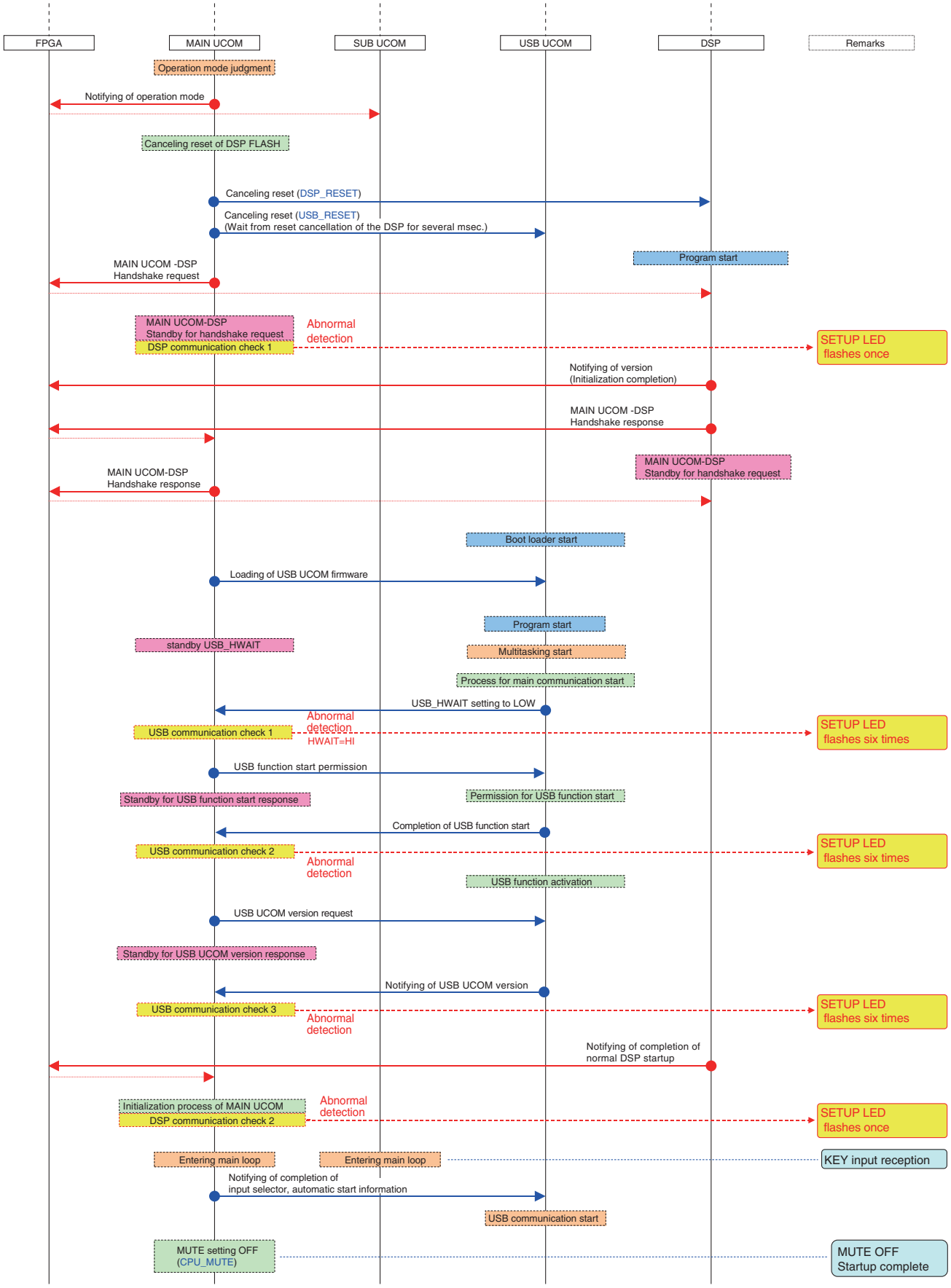
FPGA
MAIN UCOM
SUB UCOM
USB UCOM
DSP
Remarks
Operation mode judgment
Notifying of operation mode
Canceling reset of DSP FLASH
Canceling reset (DSP_RESET)
Canceling reset (USB_RESET)
(Wait from reset cancellation of the DSP for several msec.)
Program start
MAIN UCOM -DSP
Handshake request
MAIN UCOM-DSP
Standby for handshake request
DSP communication check 1
Abnormal
detection
SETUP LED
flashes once
Notifying of version
(Initialization completion)
MAIN UCOM -DSP
Handshake response
MAIN UCOM-DSP
Standby for handshake request
MAIN UCOM-DSP
Handshake response
Boot loader start
Loading of USB UCOM firmware
Program start
standby USB_HWAIT
Multitasking start
Process for main communication start
USB_HWAIT setting to LOW
Abnormal
detection
USB communication check 1
HWAIT=HI
SETUP LED
flashes six times
USB function start permission
Standby for USB function start response
Permission for USB function start
Completion of USB function start
USB communication check 2
Abnormal
detection
SETUP LED
flashes six times
USB function activation
USB UCOM version request
Standby for USB UCOM version response
Notifying of USB UCOM version
USB communication check 3
Abnormal
detection
SETUP LED
flashes six times
Notifying of completion of
normal DSP startup
Initialization process of MAIN UCOM
DSP communication check 2
Abnormal
detection
SETUP LED
flashes once
Entering main loop
Entering main loop
KEY input reception
Notifying of completion of
input selector, automatic start information
USB communication start
MUTE setting OFF
(CPU_MUTE)
MUTE OFF
Startup complete

Power Reset Mute Timing Chart

* The signals indicated in blue boldface are those described in the Startup Sequence section.

● When the unit is turned ON or returned to ON from Standby mode

● When the unit is turned OFF or shifts to Standby mode

* Standby mode differs from OFF only in the UNREG-system power.

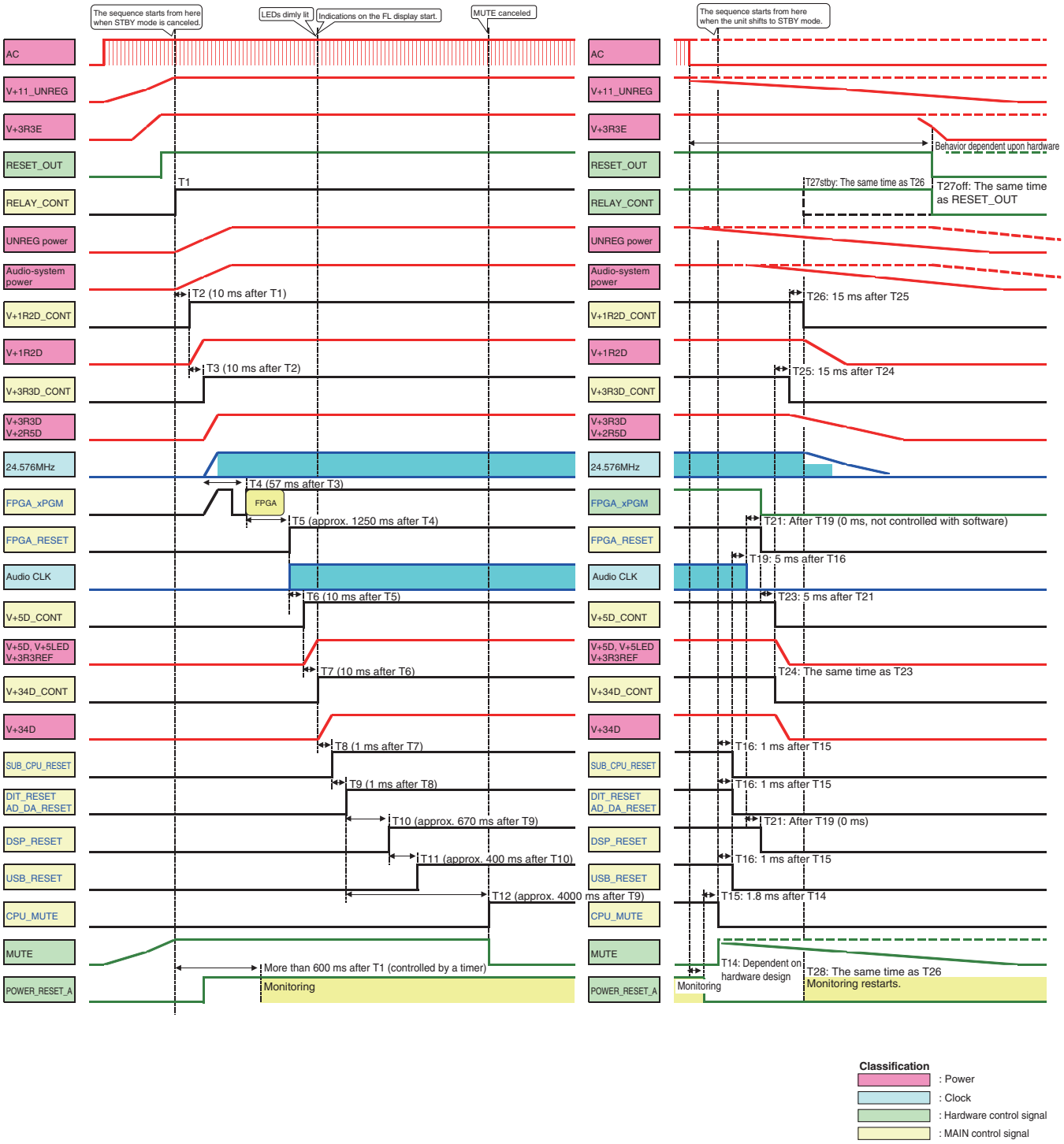

● Simplified Power-Supply Block Diagram

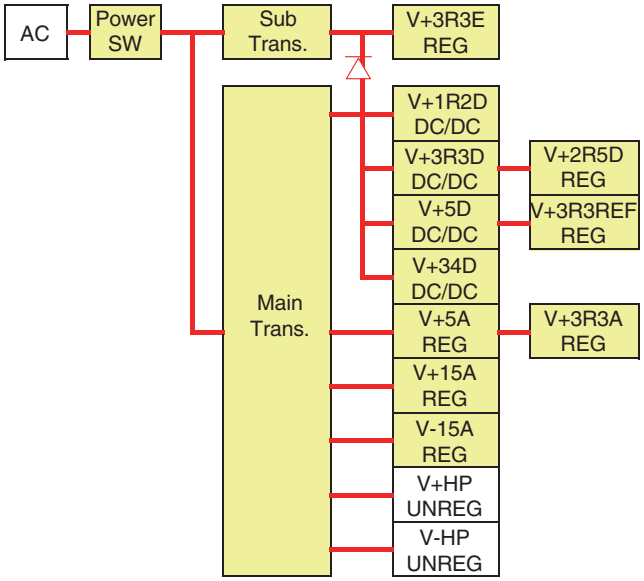

● Power-on sequence

[1] Supply of Standby power starts when the Power switch is set to ON. Muting is activated (ON)
[2] MAIN UCOM reset is canceled when Reset IC voltage is detected.
[3] Power supply to the main transformer starts when the RELAY_CONT signal level is changed from L to H.
Power supply to the audio system starts.
[4] V+1R2D supply starts when the V+1R2D_CONT signal level is changed from L to H.
[5] V+3R3D supply starts when the V+3R3D_CONT signal level is changed from L to H. Oscillation of 24.576 MHz starts.
[6] (After config files are read) FPGA reset is canceled.
Audio-system CLK output starts.
[7] V+5D supply starts when the V+5D_CONT signal level is changed from L to H.
[8] V+34D supply starts when the V+34D_CONT signal level is changed from L to H.
[9] SUB UCOM reset is canceled. Indications on the FL display start.
[10] ADC/DAC/DIT reset is canceled.
[11] DSP reset is canceled.
[12] USB UCOM reset is canceled.
[13] Muting is deactivated (OFF) with CPU_MUTE.

● Power-off sequence

[1] A decrease in UNREG voltage starts when the Power switch is set to OFF.
[2] The POWER_RESET_A signal level is changed from H to L when the Reset IC voltage is detected.
[3] Muting is activated (ON) with CPU_MUTE.
[4] SUB UCOM, ADC, DAC, DIT, and USB UCOM are reset.
[5] FPGA and DSP are reset. Audio-system CLK is stopped.
[6] V+5D/V+34D supply is stopped by a change of the CONT signal level from H to L.
[7] V+3R3D supply is stopped by a change of the V+3R3D_CONT signal level from H to L.
[8] V+1R2D supply is stopped by a change of the V+1R2D_CONT signal level from H to L.
[9] The MAIN UCOM is reset when the Reset IC voltage is detected.
[10] The main power supply is stopped by a change of the RELAY_CONT signal level from H to L.
When the unit shifts to Standby mode, main power is stopped at the same time as in Step [8].
[11] Muting is deactivated (OFF) with lowering of the MUTE voltage.

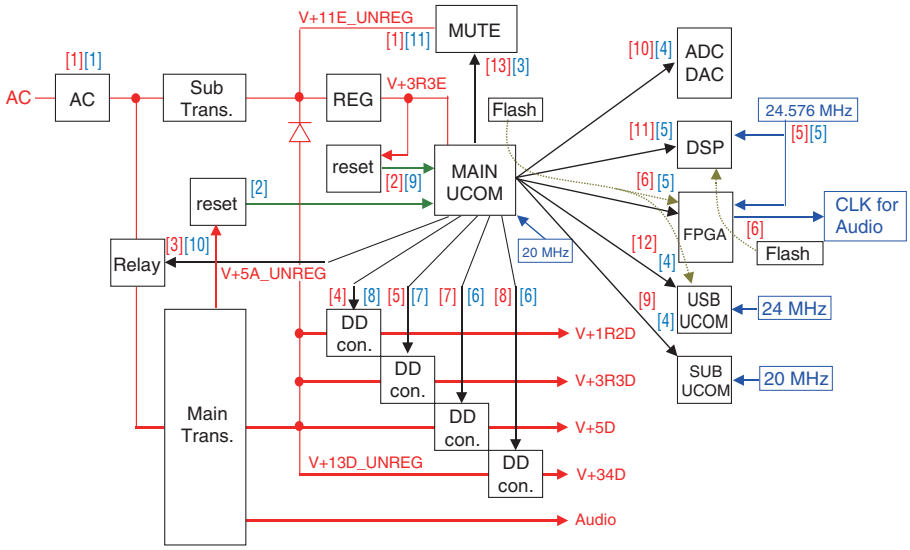

5.2 SIMPLIFIED DIAGNOSTIC PROCEDURE FOR AUDIO SIGNAL

Simplified diagnostics for the audio signal blocks are possible, using the NOISE effect functions of this unit, as shown below.

Diagnostic procedure

① In Test mode, check if any button, switch, VR, or LED functions improperly. (See "6.1 TEST MODE.")
If something is wrong, the PNLA or PNLB Assy is in failure. Repair the corresponding part on those Assys.

② Check that white noise is output, using the NOISE effect function.
Operating Procedure for the NOISE Effect (Refer to the Operating Instructions for details.)
1. Set the Effect Channel Selector to MASTER.
2. Press the NOISE button of the COLOR FX selector so that it starts flashing.
3. Turn the COLOR control to the LOW or HI side.

* Make sure that no Master VR is set to its –∞ position.
* To check the PHONES output signal, be sure to set the Master CUE to ON.

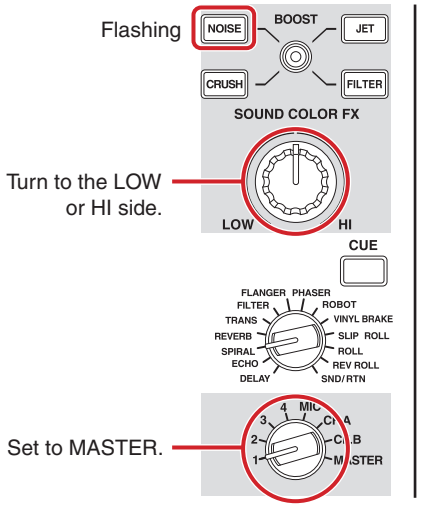

If white noise is audible: The blocks prior to the DSP can be deemed as being in failure.
If white noise is NOT audible: The DSP circuit and blocks subsequent to the DSP can be deemed as being in failure.

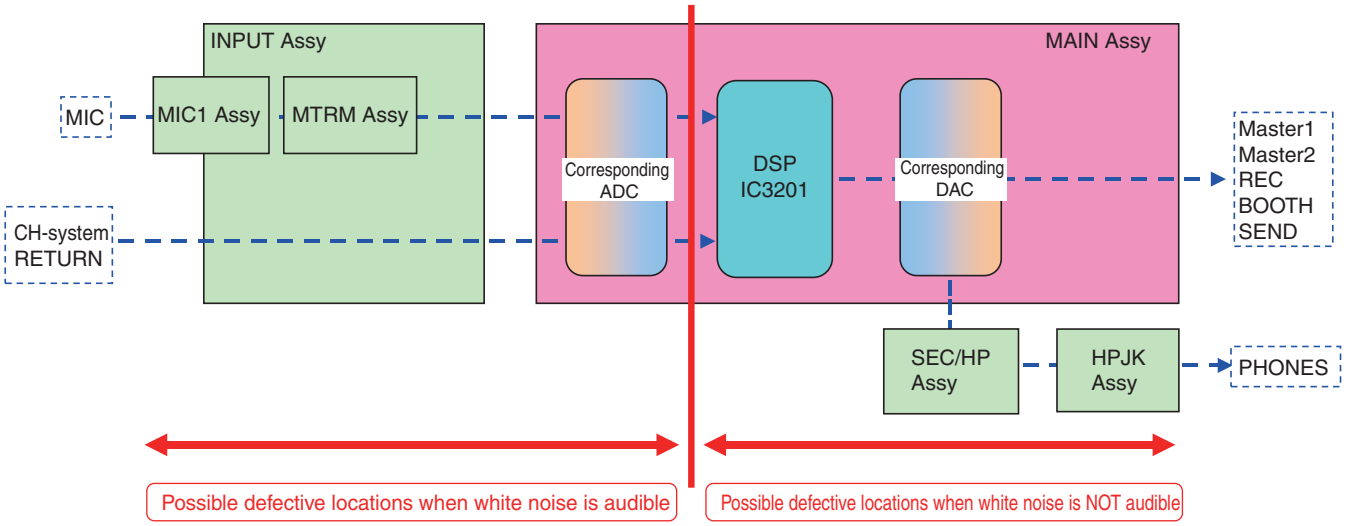

This diagnostic method is applicable to other DJ products equipped with an SG such as the NOISE effect generator.
* A control having the same function may have another name, depending on the model.

5.3 TROUBLESHOOTING

Contents

[0] Prior Confirmation
- [0-1] Checking Internal Cables

[1] Failure in Startup
- [1-1] The unit dose not turn on, and the LED of the SETUP LED does not flash.
- [1-2] The unit dose not turn on, and the LED of the SETUP LED flashes endlessly.
- [1-3] The unit dose not turn on, and the LED of the SETUP LED flashes four times.
- [1-4] No power, and freezing of the FL display (See "5.9 ERROR INDICATIONS.")
- [1-5] The unit dose not turn on, and the LED of the SETUP LED flashes five times.
- [1-6] The unit dose not turn on, and the LED of the SETUP LED flashes once.
- [1-7] The unit dose not turn on, and the LED of the SETUP LED flashes six times.

[2] AUDIO INPUT
- [2-1] No signal is input to the CD/LINE, PHONO connectors.
- [2-2] No signal is input to the MIC connector.
- [2-3] No signal is input to the RETURN connector.

[3] AUDIO OUTPUT
- [3-1] No signal is output from the MASTER1/ MASTER2/REC/BOOTH connectors.
- [3-2] No signal is output from the SEND connector.
- [3-3] No signal is output from the PHONES connector.
- [3-4] No signal is output from the DIGITAL MASTER OUT connector.

[4] USB
- [4-1] No connection to the PC, No signal is input to and output from the USB connector.
- [4-2] No timecode signal output from the mixer.

[5] FL
- [5-1] The FL does not light.

[6] LED/Button/SW/VR
- [6-1] Do not accept button /SW/VR operation
- [6-2] display is abnormal

[7] CONTROL
- [7-1] The FADER START function does not work

*Point to be checked – Assys are classified with prefix.
[1-**] MAIN Assy
[2-**] INPUT Assy
[3-**] PNLA Assy
[4-**] SEC/HP Assy
[5-**] PRIMARY Assy

* The blue character of the Diagnosis Point means the silk printing indication (as follows silk for services) on PC board declining by a check for services. The details, see "10. SCHEMATIC DIAGRAM" and "11. PCB CONNECTION DIAGRAM".

[0] Prior Confirmation

[0-1] Checking Internal Cables

No.	Cause	Diagnostics Point	Item to be Checked	Corrective Action	Reference
1	Disconnection, breakage, or loose connection of internal cables	Relevant part	Check that all the cables are securely connected. Check that there is no breakage in the cables.	Securely connect the cables. If a cable is broken, replace it.	4.1 OVERALL CONNECTION DIAGRAM

[1] Failure in Startup

*See [5.9 ERROR INDICATIONS], [5.1 POWER ON SEQUENCE_Startup Sequence] and [5.1 POWER ON SEQUENCE_Power Reset Mute Timing Chart].

[1-1] The unit dose not turn on, and the LED of the SETUP LED does not flash.

The fuse may be blowout or V+11E_UNREG, V+3R3E power failure or MAIN UCOM (IC2803), FLASH (IC2802) startup error may be suspected.

No.	Cause	Diagnostics Point	Item to be Checked	Corrective Action	Reference
1	Circuit failure Excessive power supply voltage injection	PRIMARY Assy FU1 5-1	Check the primary side fuse.	• If blowing of the fuse is visible, go to [2]. • If blowing of the fuse is not visible, go to [3].	————
2	Power failure	Each power supply	Check if any power supply is short-circuited to ground.	• If any power supply is short-circuited, repair it. • If no power supply is short-circuited, replace the fuse.	4.6 POWER BLOCK DIAGRAM 5.4 INFORMATION ON POWER DIAGNOSTICS
3	Power failure	MAIN Assy CN1201 pin 3 1-1 Silk for service [V+11E_UN]	Check for the V+11E_UNREG power.	• If the V+11E_UNREG power can be confirmed, go to [4]. • If the V+11E_UNREG power cannot be confirmed, go to [7].	4.6 POWER BLOCK DIAGRAM 5.4 INFORMATION ON POWER DIAGNOSTICS
4	Power failure, defective parts	MAIN Assy IC1401 pin 4 1-2 Silk for service [V+3R3E]	Check for the V+3R3E power.	• If the V+3R3E power can be confirmed, go to [5]. • If the V+3R3E power cannot be confirmed, the 3.3V REGULATOR (IC1401) block may be defective. Check for the status of soldering and replace it.	4.6 POWER BLOCK DIAGRAM 5.4 INFORMATION ON POWER DIAGNOSTICS

No.	Cause	Diagnostics Point	Item to be Checked	Corrective Action	Reference
5	RESET signal error	MAIN Assy IC2803 pin 90 1-3 Silk for service [RESET_OUT] [MAIN_CPU_RESET]	Check for the CPU_RESET signal.	• If the IC103_1 pin is high level, go to [6]. • If the IC103_1 pin is not high level, the RESET IC (IC2801) block may be defective. Check for the status of soldering and replace it.	————
6	20 MHz CLK error	MAIN Assy R2804 1-4	Check for the 20M_CLK signal. This is a simple check of whether a signal is output or not. A normal waveform cannot be observed, because the drive circuit is inside the IC.	• If an output signal can be confirmed, go to [8]. • If an output signal cannot be confirmed, the crystal (X2801) block or MAIN UCOM (IC2803) may be defective. Check for the status of soldering and replace it.	10.35 WAVEFORMS 1-4
7	Power failure, defective parts, Wire defect	PRIMARY Assy JP3001 pin 3 5-2	Check for the V+11E_UNREG power on PRIMARY Assy.	• If the V+11E_UNREG power can be confirmed, JP3001 may be defective. Replace it. • If the V+11E_UNREG power cannot be confirmed, the PRIMARY Assy may be defective. Replace it.	4.6 POWER BLOCK DIAGRAM 5.4 INFORMATION ON POWER DIAGNOSTICS
8	MAIN UCOM defective	MAIN Assy IC2803	If the symptom persists after the above corrections.	The MAIN UCOM (IC2803) may be defective. Replace it.	————

[1-2] The unit dose not turn on, and the LED of the SETUP LED flashes endlessly.

The unit is shut down in error by the Voltage Monitoring Circuit. Or communication error between the MAIN UCOM (IC2803) and FPGA (IC3007).

No.	Cause	Diagnostics Point	Item to be Checked	Corrective Action	Reference
1	Power failure	See “5.5 VOLTAGE MONITORING CIRCUIT.”	Check for power at each point, following “5.5 VOLTAGE MONITORING CIRCUIT.”	• If the VDET signal level is High, go to [2]. • If the VDET signal level is low, repair the abnormal power supply point.	5.5 VOLTAGE MONITORING CIRCUIT
2	Defective parts	MAIN Assy R3037 1-5 F3001 1-6	• Check for the V+3R3D_FPGA power. • Check for the V+1R2D_FPGA power.	• If the V+3R3D_FPGA power and V+1R2D_FPGA power can be confirmed, go to [3]. • If either power cannot be confirmed, the power line may be defective. Check for the status of soldering and replace it.	4.6 POWER BLOCK DIAGRAM 5.4 INFORMATION ON POWER DIAGNOSTICS
3	Defective parts	MAIN Assy IC3007 IC2802	If the symptom persists after the above corrections.	The FPGA (IC3007) or FLASH (IC2802) may be defective. Check for the status of soldering and replace it. Check for status of soldering of dumping resistor implementing on the communication line between MAIN UCOM and FPGA.	————

[1-3] The unit dose not turn on, and the LED of the SETUP LED flashes four times.

MAIN UCOM (IC2803) startup error may be suspected.

No.	Cause	Diagnostics Point	Item to be Checked	Corrective Action	Reference
1	20 MHz CLK error	MAIN Assy R2804 1-4	Check for the 20M_CLK signal. This is a simple check of whether a signal is output or not. A normal waveform cannot be observed, because the drive circuit is inside the IC.	• If an output signal can be confirmed, go to [2]. • If an output signal cannot be confirmed, the crystal (X2801) block may be defective. Check for the status of soldering and replace it.	10.35 WAVEFORMS 1-4
2	MAIN UCOM defective	MAIN Assy IC2803	If the symptom persists after the above corrections.	The MAIN UCOM (IC2803) may be defective. Replace it.	————

[1-4] No power, and freezing of the FL display (See "5.9 ERROR INDICATIONS.")

This error is generated because FL display data have not been input from the MAIN UCOM to the SUB UCOM.

No.	Cause	Diagnostics Point	Item to be Checked	Corrective Action	Reference
1	RESET signal error	MAIN Assy R3097 1-7	Check that the signal level of FPGA_RESET is High.	• If the signal level is High, go to [2]. • If the signal level is low, something on the FPGA_RESET path may be wrong. Check for the status of soldering and replace it.	————
2	24 MHz CLK error	MAIN Assy R3070 1-8	Check for the 24M_CLK_FPGA signal.	• If an output signal can be confirmed, go to [3]. • If an output signal cannot be confirmed, the 24MCLK (IC3204) block may be defective. Check for the status of soldering and replace it.	10.35 WAVEFORMS 1-8
3	Defective parts	MAIN Assy IC3007 IC2802	If the symptom persists after the above corrections.	The FPGA (IC3007) or FLASH (IC2802) may be defective. Check for the status of soldering and replace it. Check for status of soldering of dumping resistor implementing on the communication line between MAIN UCOM and FPGA.	————

[1-5] The unit dose not turn on, and the LED of the SETUP LED flashes five times.

Communication error between the MAIN UCOM (IC2803) and SUB UCOM (IC6601)

No.	Cause	Diagnostics Point	Item to be Checked	Corrective Action	Reference
1	Power failure, defective parts	PNLA Assy R6615 3-1 Silk for service [V+3R3D]	Check for the V+3R3D_PA power.	• If the V+3R3D_PA power can be confirmed, go to [2]. • If an V+3R3D_PA power cannot be confirmed, the power line may be defective. Check for the status of soldering and replace it.	4.6 POWER BLOCK DIAGRAM 5.4 INFORMATION ON POWER DIAGNOSTICS
2	RESET signal error	PNLA Assy IC6601 pin 90 3-2 Silk for service [SUB_RST]	Check that the signal level of SUB_CPU_RESET is High.	• If the signal level is High, go to [3]. • If the signal level is low, the path inside the MAIN Assy may be wrong. Check for the status of soldering and replace it.	————
3	20 MHz CLK error	PNLA Assy R6624 3-3	Check for the 20M_CLK signal. This is a simple check of whether a signal is output or not. A normal waveform cannot be observed, because the drive circuit is inside the IC.	• If the signal can be confirmed, go to [4]. • If an signal cannot be confirmed, crystal (X6601) block or SUB UCOM (IC6601) may be defective. Check for the status of soldering and replace it.	10.35 WAVEFORMS 3-3
4	Defective parts	PNLA Assy IC6601	If the symptom persists after the above corrections.	SUB UCOM (IC6601) may be defective. Replace it. Check for status of soldering of dumping resistor implementing on the communication line between FPGA and SUB UCOM.	————
5	Defective parts	MAIN Assy IC3007 IC2802	If the symptom persists after the above corrections.	FPGA (IC3007) may be defective. Check for the status of soldering and replace it. Check for status of soldering of dumping resistor implementing on the communication line between MAIN UCOM and FPGA.	————

[1-6] The unit dose not turn on, and the LED of the SETUP LED flashes once.

Communication error between the MAIN UCOM (IC2803) and DSP (IC3201).

No.	Cause	Diagnostics Point	Item to be Checked	Corrective Action	Reference
1	Power failure, defective parts	MAIN Assy R3209 1-9 F3201 1-10	• Check for the V+3R3D_DSP power. • Check for the V+1R2D_DSP power.	• If the V+3R3D_DSP power and V+1R2D_DSP power can be confirmed, go to [2]. • If either power cannot be confirmed, the power line may be defective. Check for the status of soldering and replace it.	4.6 POWER BLOCK DIAGRAM 5.4 INFORMATION ON POWER DIAGNOSTICS
2	RESET signal error	MAIN Assy R3276 1-11 Silk for service [DSP_RESET]	Check that the signal level of DSP_RESET is High.	• If the signal level is High, go to [3]. • If the signal level is low, something on the DSP_RESET path may be wrong. Check for the status of soldering and replace it.	————
3	24MCLK error	MAIN Assy R3234 1-12	Check for the 24M_CLK_DSP signal.	• If an output signal can be confirmed, go to [4]. • If an output signal cannot be confirmed, the 24MCLK (IC3204) block may be defective. Check for the status of soldering and replace it.	10.35 WAVEFORMS 1-12
4	Defective parts	MAIN Assy IC3201 IC3008	If the symptom persists after the above corrections.	DSP (IC3201) or FLASH (IC3008) may be defective. Check for the status of soldering and replace it. Check for status of soldering of dumping resistor implementing on the communication line between DSP and FPGA.	————

[1-7] The unit dose not turn on, and the LED of the SETUP LED flashes six times.

Communication error between the MAIN UCOM (IC2803) and USB UCOM (IC2603)

No.	Cause	Diagnostics Point	Item to be Checked	Corrective Action	Reference
1	Power failure, defective parts	MAIN Assy R2604 1-13 F2601 1-14 R2611 1-15	• Check for the V+3R3D_USB power. • Check for the V+1R2D_USB power. • Check for the V+2R5D_USB_PLL power.	• If the all power can be confirmed, go to [2]. • If either power cannot be confirmed, the power line may be defective. Check for the status of soldering and replace it.	4.6 POWER BLOCK DIAGRAM 5.4 INFORMATION ON POWER DIAGNOSTICS
2	RESET signal error	MAIN Assy R2669 1-16 Silk for service [USB_RST]	Check that the signal level of USB_RESET is High.	• If the signal level is High, go to [3]. • If the signal level is low, something on the USB_RESET path may be wrong. Check for the status of soldering and replace it.	————
3	24MCLK error	MAIN Assy R2624 1-17	Check for the 24M_CLK signal. This is a simple check of whether a signal is output or not. A normal waveform cannot be observed, because the drive circuit is inside the IC.	• If an output signal can be confirmed, go to [4]. • If an output signal cannot be confirmed, the crystal (X2601) block or USB UCOM (IC2603) may be defective. Check for the status of soldering and replace it.	10.35 WAVEFORMS 1-17
4	Defective parts	MAIN Assy IC2603 IC2802	If the symptom persists after the above corrections.	USB UCOM (IC2603) or FLASH (IC2802) may be defective. Replace it. Check for status of soldering of dumping resistor implementing on the communication line between MAIN UCOM and USB UCOM.	————

[2] AUDIO INPUT

[2-1] No signal is input to the CD/LINE, PHONO connectors.

No.	Cause	Diagnostics Point	Item to be Checked	Corrective Action	Reference
0	Prior Confirmation	CD/LINE, PHONO, LINE, USB */* selector switch / TRIM control	Confirm on the screen that the selector is set properly.	————	Operating instructions
1	Loose connection /defective parts	INPUT Assy IC4002/IC4003 (CH1) pin1 IC4004/IC4005 (CH2) pin1 IC4202/IC4203 (CH3) pin1 IC4204/IC4205 (CH4) pin1 2-1	[Confirmation of input signal selection] Check if the input signal selection at each switching operational amplifier (IC4002/IC4003/IC4004/IC4005/IC4202/ IC4203/IC4204/IC4205) is proper.	• If the selection is proper, go to [2]. • If the selection is not proper, soldering of parts in the peripheral circuits of the switching operational amplifiers or the control transistors (Q4005/Q4006/Q4205/Q4206) is defective or one or more of the parts is defective. Or part of the circuit in the path from the MAIN UCOM (IC2803) to a control transistor may be disrupted.	10.35 WAVEFORMS 2-1 (CD/LINE) 2-1 (PHONO)
2	Loose connection /defective parts	MAIN Assy IC1604 (CH1) 1-18 IC1804 (CH2) 1-19 IC2004 (CH3) 1-20 IC2204 (CH4) 1-21 pin 4, 5, 24, 25 Representative CH1_R- 1-18 /CH1_R+ 1-18 Silk for service each CH [L+][L-][R+][R-]	[Checking the ADC block] Check for an audio signal at the input connector of ADC (IC1604/IC1804/ IC2004/IC2204).	If no audio signal is input to ADC, a problem in an analog circuit at a previous stage may be suspected. • If an audio signal is input, go to [3]. • If no audio signal is input, check for a part where the signal is interrupted, by observing the audio signal in the path from the input connector to the ADC, then check the soldering status and check for a defective part in the corresponding part.	10.35 WAVEFORMS 2-2 (CD/LINE input signal) 2-3 (PHONO·MIC input signal) 1-18
3	Loose connection /defective parts	MAIN Assy IC1604(CH1) 1-22 IC1804(CH2) 1-23 IC2004(CH3) 1-24 IC2204(CH4) 1-25 pin 19	[Checking the ADC block] Check for the RESET signal of ADC.	• If the RESET signal level is L, go to [6]. • If the RESET signal level is H, go to [4].	————
4	Loose connection /defective parts	MAIN Assy IC1604 (CH1) IC1804 (CH2) IC2004 (CH3) IC2204 (CH4) 96k CLK: pin 17 Representative 1-26 6M CLK: pin 16 Representative 1-27 24M CLK: pin 18 Representative 1-28	[Checking the ADC block] Check for the CLK signal of ADC.	• If no CLK signal is input, go to [7]. • If the CLK signal is input, go to [5].	10.35 WAVEFORMS 1-26 1-27 1-28
5	Loose connection /defective parts	MAIN Assy IC1604(CH1) IC1804(CH2) IC2004(CH3) IC2204(CH4) pin 15 Representative 1-29 Silk for service each CH [ADAT_CH*]	[Checking the ADC block] Check for the signal output from ADC output terminal.	• If output signal cannot be confirmed, ADC may be defective. Check for the status of soldering and replace it. • If output signal can be confirmed, DSP (IC3201) must be improperly soldered or defective.	10.35 WAVEFORMS 1-29
6	Loose connection /defective parts	MAIN Assy IC2804 pin 1, pin 3 1-30 Silk for service [AD/DA_RESET]	[Checking the RESET signal path] Check for the RESET signal.	• If the signal level at Pin 1 is H and that at Pin 3 is L, IC2804 must be soldered impropely or defective. • If the signal level at Pin 1 is L and there is no abnormality in the path from the MAIN UCOM (IC2803) to IC2804, soldering of the MAIN UCOM (IC2803) or the IC itself is defective.	————
7	Loose connection /defective parts	MAIN Assy 96k CLK: IC3006 pin 10, pin 8 1-31 6M CLK: IC3004 pin 10, pin 8 1-32 24M CLK: IC3005 pin 10, pin 8 1-33	[Checking the CLK signal path] Check for the 96k CLK, 6M CLK and 24M CLK signals.	• If no signal is output from Pin 7 even though Pin 4 is normal for CH1/CH3, or if no signal is output from Pin 11 even though Pin 13 is normal for CH2/CH4, soldering of IC3006/ IC3004/IC3005 or these ICs themselves are defective. • If Pin 4 is not normal for CH1/CH3 or if Pin 13 is not normal for CH2/CH4, and if there is no abnormality in the path from the FPGA (IC3007) to IC3006/IC3004/IC3005, soldering of the FPGA (IC3007) or this IC itself is defective.	10.35 WAVEFORMS 1-31 1-32 1-33

[2-2] No signal is input to the MIC1 connectors.

No.	Cause	Diagnostics Point	Item to be Checked	Corrective Action	Reference
0	Prior Confirmation	OFF, ON, TALK OVER selector switch / TRIM control	Confirm on the screen that the selector is set properly.	————	Operating instructions
1	Loose connection /defective parts	MAIN Assy IC2401 MIC1: pin 1 1-34 Silk for service [MIC]	[Checking the ADC block] Check for an audio signal at the input connector of ADC (IC2401).	If no audio signal is input to ADC, a problem in an analog circuit at a previous stage may be suspected. • If an audio signal is input, go to [2]. • If no audio signal is input, check for a part where the signal is interrupted, by observing the audio signal in the path from the input connector to the ADC, then check the soldering status and check for a defective part in the corresponding part.	10.35 WAVEFORMS 1-34
2	Loose connection /defective parts	MAIN Assy IC2401 pin 13	[Checking the ADC block] Check for the RESET signal of ADC (IC2401).	• If the RESET signal level is L, go to [5]. • If the RESET signal level is H, go to [3].	————
3	Loose connection /defective parts	MAIN Assy IC2401 96k CLK: pin 10 1-37 6M CLK: pin 12 1-38 24M CLK: pin 11 1-39	[Checking the ADC block] Check for the CLK signal of ADC (IC2401).	• If no CLK signal is input, go to [7]. • If the CLK signal is input, go to [4].	10.35 WAVEFORMS 1-37 1-38 1-39
4	Loose connection /defective parts	MAIN Assy IC2401 pin 9 1-40 Silk for service [ADAT_MIC]	[Checking the ADC block] Check for the signal output from ADC (IC2401) output terminal.	• If output signal cannot be confirmed, ADC may be defective. Check for the status of soldering and replace it. • If output signal can be confirmed, DSP (IC3201) must be improperly soldered or defective.	10.35 WAVEFORMS 1-40
5	Loose connection /defective parts	MAIN Assy IC2804 pin10, pin 8 1-41 Silk for service [AD/DA_RESET]	[Checking the RESET signal path] Check for the RESET signal.	• If the signal level at Pin 10 is H and that at Pin 8 is L, IC2804 must be soldered impropely or defective. • If the signal level at Pin 10 is L and there is no abnormality in the path from the MAIN UCOM (IC2803) to IC2804, soldering of the MAIN UCOM (IC2803) or this IC itself is defective.	————
6	Loose connection /defective parts	MAIN Assy 96k CLK: IC3006 pin 10, pin 8 1-31 6M CLK: IC3004 pin 10, pin 8 1-32 24.576M CLK: IC3005 pin 10, pin 8 1-33	[Checking the CLK signal path] Check for the 96k CLK, 6M CLK and 24M CLK signals.	• If no signal is output from Pin 8 even though Pin 10 is normal, soldering of the IC3006/ IC3004/IC3005 or these ICs themselves are defective. • If Pin 10 is not normal and if there is no abnormality in the path from the FPGA (IC3007) to IC3006/IC3004/IC3005, soldering of the FPGA (IC3007) or this IC itself is defective.	10.35 WAVEFORMS 1-31 1-32 1-33

[2-3] No signal is input to the RETURN.

No.	Cause	Diagnostics Point	Item to be Checked	Corrective Action	Reference
0	Prior Confirmation	DELAY, ECHO, SPIRAL, REVERB, TRANS, FILTER, FLANGER, PHASER, ROBOT, VINYL BRAKE, SLIP ROLL, ROLL, REV ROLL, SND/RTN selector switch / ON/OFF button	• Check that the type for BEAT EFFECT is set to SND/RTN. • Check that the BEAT EFFECT is set to ON. • Check that a cable is connected to the RETURN L connector.	————	Operating instructions
1	Loose connection /defective parts	INPUT Assy CN4803 pin 20 2-4	Check that the RETURN IN signal level is H.	• If it is L, JA4401 or R4803 must be improperly soldered or defective. • If it is H, go to [2].	————
2	Loose connection /defective parts	MAIN Assy IC2402 pin1, pin 2 1-42 Silk for service [RETL][RETR]	[Checking the ADC block] Check for an audio signal at the input connector of ADC (IC2401).	If no audio signal is input to ADC, a problem in an analog circuit at a previous stage may be suspected. • If no audio signal is input, check for a part where the signal is interrupted, by observing the audio signal in the path from the input connector to the ADC, then check the soldering status and check for a defective part in the corresponding part. • If an audio signal is input, go to [3].	10.35 WAVEFORMS 1-42

No.	Cause	Diagnostics Point	Item to be Checked	Corrective Action	Reference
3	Loose connection /defective parts	MAIN Assy IC2402 pin 13 1-43	[Checking the RESET signal path] Check for the RESET signal at ADC.	• If the RESET signal level is L, go to 2-2 [5]. • If the RESET signal level is H, go to [4].	————
4	Loose connection /defective parts	MAIN Assy LRCK: IC2402 pin 10 1-44 BCLK: IC2402 pin 12 1-45 MCLK: IC2402 pin 11 1-46	[Checking the ADC block] Check for the CLK signal of ADC.	• If no CLK signal is input, go to 2-2 [6]. • If the CLK signal is input, go to [5].	10.35 WAVEFORMS 1-44 1-45 1-46
5	Loose connection /defective parts	MAIN Assy IC2402 pin 9 1-47 Silk for service [ADAT_RETURN]	[Checking the ADC block] Check for the signal output from ADC output terminal.	• If output signal cannot be confirmed, ADC may be defective. Check for the status of soldering and replace it. • If output signal can be confirmed, DSP (IC3201) must be improperly soldered or defective.	10.35 WAVEFORMS 1-47

[3] AUDIO OUTPUT

[3-1] No signal is output from the MASTER1/MASTER2/REC/BOOTH connectors.

No.	Cause	Diagnostics Point	Item to be Checked	Corrective Action	Reference
1	Prior Confirmation	MASTER1 / MASTER2 / REC / BOOTH	Identify the connector(s) that do(es) not output signals.	• If all connectors does output, go to [2]. • If neither MASTER 1 nor 2 connector outputs, go to [9]. • If only the MASTER 1 connector does not output, go to [10]. • If only the MASTER 2 connector does not output, go to [11]. • If only the BOOTH connector does not output, go to [13].	Operating instructions
2	Loose connection /defective parts	MAIN Assy IC201 1-48 Silk for service [MASTER_L+] [MASTER_L-] [MASTER_R+] [MASTER_R-] [REC_L] [REC_R] [BOOTH_L] [BOOTH_R]	[Checking the DAC block] Check for the DA converter (IC201) signal output. MASTER: pin 29, pin31, pin 33, pin 35 REC: pin37, pin 39 BOOTH: pin41, pin 43	• If the DAC output signal is normal, the MUTE circuit is activated. Go to [16]. • If no signal is output from the DAC output, go to [3].	10.35 WAVEFORMS 1-48 (MASTER) 1-48 (REC) 1-48 (BOOTH)
3	Loose connection /defective parts	MAIN Assy IC201 pin 8, 9, 10, 11 1-49	[Checking the DAC block] Check that a signal is input to the DA converter. MASTER: pin10, pin 11 REC: pin 9 BOOTH: pin 8	• If no signal is output, the DSP (IC3201) must be improperly soldered or defective. • If a signal is output, go to [4].	10.35 WAVEFORMS 1-49
4	Loose connection /defective parts	MAIN Assy IC201 pin 18 1-50	[Checking the DAC block] Check for the AMUTEI signal (IC201 pin 18).	• If it is L, the R212 or IC201 must be improperly soldered or defective. • If it is H, go to [5].	————
5	Loose connection /defective parts	MAIN Assy IC201 pin 15 1-51	[Checking the DAC block] Check for the RESET signal at DA converter.	• If it is H, go to [7]. • If it is L, go to [6].	————
6	Loose connection /defective parts	MAIN Assy 96k CLK: IC201 pin 6 1-52 6M CLK: IC201 pin 7 1-53 24M CLK: IC201 pin 14 1-54	[Checking the DAC block] Check for the CLK signal at DA converter.	• If a signal is output, go to [8]. • If the CLK signal is output, soldering of the IC201 or the IC itself is defective.	10.35 WAVEFORMS 1-52 1-53 1-54
7	Loose connection /defective parts	MAIN Assy IC2804 pin4, pin 6 1-55 Silk for service [AD/DA_RESET]	[Checking the RESET signal path] Check for the RESET signal.	• If the signal level at Pin 4 is H and that at Pin 6 is L, IC2804 must be soldered impropely or defective. • If the signal level at Pin 4 is L and there is no abnormality in the path from the MAIN UCOM (IC2803) to IC2804, soldering of the MAIN UCOM (IC2803) or the IC itself is defective.	————

No.	Cause	Diagnostics Point	Item to be Checked	Corrective Action	Reference
8	Loose connection /defective parts	MAIN Assy 96k CLK: IC3006 pin 1, pin 3 1-56 6M CLK: IC3004 pin 1, pin 3 1-57 24M CLK: IC3005 pin 1, pin 3 1-58	[Checking the CLK signal path] Check for the 96k CLK, 6M CLK and 24M CLK signals.	• If no signal is output from Pin 3 even though Pin 1 is normal, soldering of the IC3006/ IC3004/IC3005 or these ICs themselves are defective. • If Pin 1 is not normal and if there is no abnormality in the path from the FPGA (IC3007) to IC3006/IC3004/IC3005, soldering of the FPGA (IC3007) or this IC itself is defective.	10.35 WAVEFORMS 1-56 1-57 1-58
9	Loose connection /defective parts	MAIN Assy IC301 pin 1, pin 7 1-59 IC302 pin 1, pin 7 1-60 Silk for service [ML+][ML-] [MR+][MR-]	[Checking the MASTER Shaping Noise Filter] Check for the DAC differential audio signal output. Check the waveforms of the signals output pins of IC301/IC302.	• If a signal is output from the Pin 1/Pin 7 of IC301/IC302, go to [10] and [11]. • If signals are output from the DAC (Pins 29, 31, 33 and 35 of IC201) but not from Pins 1 and 7 of IC301/IC302, soldering of the IC301/IC302 block or some part in the block is defective. • If no signal is output from the DAC (Pins 37, 39, 41and 43 of IC123), go to [3].	10.35 WAVEFORMS 1-59 1-60
10	Loose connection /defective parts	MAIN Assy IC303 pin 1, pin 7 1-61 IC304 pin 1, pin 7 1-62	[Checking the Balanced Output AMP] Check the waveforms of the signals from the output pins of IC303/304.	• If no signal is output, soldering of the IC303/ IC304 is defective or the ICs themselves are defective. • If signals are output, soldering of the output capacitors (C355, C356, C357, C358) or the ICPs (P302, P301) is defective or the capacitors or ICPs themselves are defective. Or the MUTE circuited is activated. • If the MUTE circuited is activated, go to [14].	10.35 WAVEFORMS 1-61 1-62
11	Loose connection /defective parts	MAIN Assy IC402 pin 1, pin 7 1-63	[Checking the MASTER2] Check the waveform of IC402 output pin.	• If no signal is output, soldering of the IC402 or the IC itself is defective. • If signals are output, soldering of the output capacitors (C425, C426), output resistor (R427, R428) is defective or one or more of those parts is defective. Or the MUTE circuited is activated. • If the MUTE circuited is activated, go to [14].	10.35 WAVEFORMS 1-63
12	Loose connection /defective parts	MAIN Assy IC401 pin 1, pin 7 1-64	[Checking the REC] Check the waveform of IC401 output pin.	• If signals are output from the DAC (Pins 37 and 39 of IC201) but not from IC401, soldering of the IC401 block or some part in the block is defective. • If no signal is output from the DAC (Pins 37, and 39 of IC201), go to [3]. • If signals are output from Pins 1 and 7 of IC401, soldering of the output capacitors (C423, C424), output resistor (R422, R425, R419 and R426) is defective or one or more of those parts is defective. Or the MUTE circuited is activated. • If the MUTE circuited is activated, go to [17].	10.35 WAVEFORMS 1-64
13	Loose connection /defective parts	MAIN Assy IC501 pin 1, pin 7 1-96	[Checking the BOOTH] Check the waveform of IC501 output pin.	• If signals are output from the DAC (Pins 41 and 43 of IC201) but not from IC501, soldering of the IC501 block or some part in the block is defective. • If no signal is output from the DAC (Pins 41, and 43 of IC201), go to [3]. • If signals are output from Pins 1 and 7 of IC501, soldering of the output capacitors (C508, C520), output resistor (R505, R517) is defective or one or more of those parts is defective. Or the MUTE circuited is activated. • If the MUTE circuited is activated, go to [16].	10.35 WAVEFORMS 1-96
14	Loose connection /defective parts	MAIN Assy MASTER_MUTE 1-68 Silk for service [MASTER_MUTE]	[Checking the MASTER_MUTE] Check that the MASTER_MUTE signal 1-68 is within the range of approx. –14 to –15 V.	• If the signal is within the range of approx. –14 to –15 V, go to [16]. • If the signal is outside the range of approx. –14 to –15 V, go to [15].	————
15	Loose connection /defective parts	MASTER LEVEL knob / MAIN Assy CN1002 pin 4 1-69	[Checking the MVR_MUTE] • Check that the MASTER LEVEL knob is not set to –∞. • Check the FFC connections with the PNLA Assy. • Check that the MVR_MUTE (CN1002 pin 4) level is Low.	• If MVR_MUTE (CN1002 pin 4) is H, VR6607 or IC6605 on the PNLA Assy or peripheral parts must be improperly soldered or defective. • If MVR_MUTE (CN1002 pin 4) is L, Q203, Q204 or peripheral parts must be improperly soldered or defective. If the part is OK, go to [16].	————

No.	Cause	Diagnostics Point	Item to be Checked	Corrective Action	Reference
16	Loose connection /defective parts	MAIN Assy MUTE 1-70 Silk for service [MUTE]	[Checking the MUTE] Check that the MUTE signal 1-70 is within the range of approx. –14 to –15 V.	• If the signal is within the range of approx. –14 to –15 V, soldering of the MUTE transistor or parts in its peripheral circuits is defective or one or more of those parts is defective. MUTE transistor • • • MASTER1: Q305, Q306, Q307, Q308 MASTER2: Q407, Q408 REC: Q405, Q406 BOOTH: Q503, Q504 • If the signal is outside the range of approx. –14 to –15 V, check if the MUTE transistor is defective. If the transistor is OK, go to [17].	————
17	Loose connection /defective parts	MAIN Assy IC2803 pin 11 1-71 Silk for service [CPU_MUTE]	[Checking the CPU_MUTE] Check that the CPU_MUTE signal level is High.	• If it is L, MAIN UCOM (IC2803) or R2833 must be improperly soldered or defective. • If it is H, Q201, Q202 and Q205 must be improperly soldered or defective.	————

[3-2] No signal is output from the SEND connector.

No.	Cause	Diagnostics Point	Item to be Checked	Corrective Action	Reference
1	Loose connection /defective parts	MAIN Assy IC602 pin 1, pin 7 1-72 IC601 pin 1, pin 7 1-72 Silk for service [SEND_L][SEND_R]	[Checking the SEND] Check the waveform of IC602 output pin.	• If signals are output from Pins 1 and 7 of IC602, soldering of the output capacitors (C624, C625), output resistor (R621, R622) is defective or one or more of those parts is defective. Or the MUTE circuited is activated. • If the MUTE circuited is activated, go to 3-1 [17]. • If signals are output from the DAC (Pins 1 and 7 of IC601) but not from Pins 1 and 7 of IC602, soldering of the IC601 and IC602 block or some part in the block is defective. • If no signal is output from the DAC (Pins 10, and 11 of IC601), go to [2].	10.35 WAVEFORMS 1-72 (SEND output) 1-72 (SENDDAC output)
2	Loose connection /defective parts	MAIN Assy IC601 pin 3 1-73	[Checking the DAC] Check the input signal of DAC (IC601).	• If no signal is found, DSP (IC3201) must be improperly soldered or defective. • If a signal is found, go to [3].	10.35 WAVEFORMS 1-73
3	Loose connection /defective parts	MAIN Assy IC601 pin 5 1-74	[Checking the DAC] Check the RESET signal of DAC.	• If it is L, go to [5]. • If it is H, go to [4].	————
4	Loose connection /defective parts	MAIN Assy 96k CLK: IC601 pin 4 1-75 6M CLK: IC601 pin 2 1-76 24M CLK: IC601 pin 1 1-77	[Checking the DAC] Check the CLK signal of DAC.	• If no signal is found, go to [6]. • If a CLK signal is found, IC601 must be improperly soldered or defective. Or the MUTE circuited is activated. • If the MUTE circuited is activated, go to [7].	10.35 WAVEFORMS 1-75 1-76 1-77
5	Loose connection /defective parts	MAIN Assy IC2804 pin 4, pin 6 1-55 Silk for service [AD/DA_RESET]	[Checking the RESET signal path] Check for the RESET signal.	• If a signal level at Pin 4 is H and that at Pin 6 is L, IC2804 must be improperly soldered or defective. • If the signal level at Pin 4 is L and there is no abnormality in the path from the MAIN UCOM (IC2803) to IC2804, soldering of the MAIN UCOM (IC2803) or this IC itself is defective. Or the MUTE circuited is activated. • If the MUTE circuited is activated, go to [7].	————
6	Loose connection /defective parts	MAIN Assy 96k CLK: IC3006 pin 1, pin 3 1-56 6M CLK: IC3004 pin 1, pin 3 1-57 24M CLK: IC3005 pin 1, pin 3 1-58	[Checking the CLK signal path] Check for the 96k CLK, 6M CLK and 24M CLK signals.	• If Pin 1 is normal but a singal is not output from the Pin 3, IC3006/IC3004/IC3005 must be improperly soldered or defective. • If Pin 1 is not normal and if there is no abnormality in the path from the FPGA (IC3007) to IC3006/IC3004/IC3005, soldering of the FPGA (IC3007) or this IC itself is defective. Or the MUTE circuited is activated. • If the MUTE circuited is activated, go to [7].	10.35 WAVEFORMS 1-56 1-57 1-58
7	Loose connection /defective parts	MAIN Assy MUTE 1-70 Silk for service [MUTE]	[Checking the MUTE] Check that the MUTE signal 1-70 is within the range of approx. –14 to –15 V.	• If the signal is within the range of approx. –14 to –15 V, Q603, Q604 must be improperly soldered or defective. • If the signal is outside the range of approx. –14 to –15 V, check the above-mentioned MUTE transistors. If they are OK, go to [8].	————
8	Loose connection /defective parts	MAIN Assy IC2803 pin 11 1-71 Silk for service [CPU_MUTE]	[Checking the CPU_MUTE] Check that the CPU_MUTE level is High.	• If CPU_MUTE is Low, MAIN UCOM (IC2803) or R2833 must be improperly soldered or defective. • If PU_MUTE is High, Q201, Q202, Q205 must be improperly soldered or defective.	————

[3-3] No signal is output from the PHONES connector.

No.	Cause	Diagnostics Point	Item to be Checked	Corrective Action	Reference
0	Prior Confirmation	CUE button / LEVEL knob / MIXING knob / MONO, STEREO selector	Confirm on the screen that the selector is set properly.	————	Operating instructions
1	Loose connection /defective parts	MAIN Assy / SEC/HP Assy / HPJK Assy	Check for the connection between the MAIN Assy, SEC/HP Assy and HPJK Assy.	Correct any power connections.	————
2	Loose connection /defective parts	SEC/HP Assy CN101 pin 1, pin 4 4-1	Check for the signals at Pins 1 and 4 of CN101.	• If a signal is found, the HPJK Assy or wires are defective. Replace them. • If no signal is found, go to [3].	10.35 WAVEFORMS 4-1
3	Loose connection /defective parts	SEC/HP Assy HP_L+/L- HP_R+/R-	Check the audio signal of SEC/HP Assy.	• Check for a part where the signal is interrupted, by observing the audio signal before and after each block. Soldering of the part or the part itself where the signal is interrupted is defective. Or the MUTE circuit is activated. • If the MUTE circuited is activated, go to [4]. • If no signal is found at CN3, go to [5].	————
4	Loose connection /defective parts	SEC/HP Assy MUTE 4-2 Silk for service [MUTE]	[Checking the MUTE] Check that the MUTE signal 4-2 is within the range of approx. –14 to –15 V.	• If the signal is within the range of approx. –14 to –15 V, soldering of the MUTE transistors (Q103, Q104) or any part in their peripheral circuits is defective or one or more of those parts is defective. • If the signal is outside the range of approx. –14 to –15 V, check the conduction at CN3 and CN1005 and check the above-mentioned MUTE transistors. If they are OK, go to 3-1 [17].	————
5	Loose connection /defective parts	MAIN Assy IC1001 pin 9, 10, 11, 12 1-78 Silk for service [L+][L-][R+][R-]	[Checking the DAC] Check the output signal of DAC (IC1001).	• If the DAC output signal is normal, check the conduction at CN3 and CN1005. • If no DAC signal is found, go to [6].	10.35 WAVEFORMS 1-78
6	Loose connection /defective parts	MAIN Assy IC1001 pin 3 1-79 Silk for service [ADAT_HP]	[Checking the DAC] Check the input signal of DAC.	• If no signal is found, DSP (IC3201) must be improperly soldered or defective. • If signal is found, go to [7].	10.35 WAVEFORMS 1-79
7	Loose connection /defective parts	MAIN Assy IC1001 pin 5 1-80	[Checking the DAC] Check the RESET signal of DAC.	• If it is H, go to [8]. • If it is H, go to 2-2 [5].	————
8	Loose connection /defective parts	MAIN Assy 96k CLK: IC1001 pin 4 1-81 6M CLK: IC1001 pin 2 1-82 24M CLK: IC1001 pin 1 1-83	[Checking the DAC] Check the CLK signal of DAC.	• If no signal is found, go to 2-2 [6]. • If CLK signal is found, DAC (IC1001) must be improperly soldered or defective.	10.35 WAVEFORMS 1-81 1-82 1-83

[3-4] No signal is output from the DIGITAL MASTER OUT connector.

No.	Cause	Diagnostics Point	Item to be Checked	Corrective Action	Reference
1	Loose connection /defective parts	MAIN Assy IC3405 pin 16 1-84	Check for the signal at Pins 16 of DIT (IC3405).	• If the signal can be found, soldering of any part in the signal path from IC3405 to JA3401 may be defective. Check the soldering status. If soldering is OK, replace the defective part. • If no signal is found, go to [2].	10.35 WAVEFORMS 1-84
2	Loose connection /defective parts	MAIN Assy C3411 1-85	Check for the V+3R3D_DIT power.	• If V+3R3D_DIT power is found, go to [3]. • If V+3R3D_DIT power cannot be found, soldering of any part in the power path may be defective. Check the soldering status. If soldering is OK, replace the defective part.	4.6 POWER BLOCK DIAGRAM 5.4 INFORMATION ON POWER DIAGNOSTICS
3	Loose connection /defective parts	MAIN Assy R3434 1-86 Silk for service [DIT_RST]	Check that the DIT_RESET signal level is High.	• If it is H, go to [4]. • If the signal level is L, soldering of any part in the DIT_RESET path may be defective. Check the soldering status. If soldering is OK, replace the defective part.	————
4	Loose connection /defective parts	MAIN Assy IC3405 FPGASRC_LRCK pin 24 1-87 FPGASRC_BCK pin 26 1-88 ADAT_DOUT_FPGASRC pin 28 1-89 FPGASRC_MCLK pin 30 1-90	Check for the any signals of DIT (IC3405).	• If any signal is abnormal, soldering of any part in the signal path may be defective. Check the soldering status. If soldering is OK, replace the defective part. • If all signals are normal, soldering of the DIT (IC3405) or the IC itself may be defective. Check the soldering status. If soldering is OK, replace the defective part.	10.35 WAVEFORMS 1-87 1-88 1-89 1-90

[4] USB

[4-1] No connection to the PC, No signal is input to and output from the USB connector.

No.	Cause	Diagnostics Point	Item to be Checked	Corrective Action	Reference
0	Prior Confirmation	CD/LINE, PHONO, LINE, USB */* selector settings, PC settings	• Check that the selector is set to USB*/*. • Check that the driver software dedicated for the DJM-750 has been installed on the customer's PC. • Check that the DJM-750 utility of the connected PC is set properly.	————	Operating instructions
1	Loose connection /defective parts	MAIN Assy CN2602 V+5VBUS pin 5 1-91 D+USB pin 4 1-92 D-USB pin 3 1-93	• Check that the voltage at Pin 5 (V+5VBUS) of CN2602 is about 5 V (4.75 to 5.25) using a PC connected. • Check for the D+USB and D-USB signals.	• If any signal is abnormal, soldering of any part in the signal path from the PC to the MAIN Assy may be defective. Check for any breakage in the cable and check the soldering status. If both are OK, replace the defective part. • If all signals are normal, soldering of any part in the signal path from CN2602 to the USB UCOM (IC2603) or the USB UCOM (IC2603) is defective. Check the soldering status. If soldering is OK, replace the defective part.	10.35 WAVEFORMS 1-92 1-93

[4-2] No timecode signal output from the mixer.

No.	Cause	Diagnostics Point	Item to be Checked	Corrective Action	Reference
0	Prior Confirmation	CD/LINE, PHONO, LINE, USB */* selector settings, PC settings	• Check that the selector is set to USB*/*. • Check that the driver software dedicated for the DJM-750 has been installed on the customer's PC. • Check that the DJM-750 setting utility of the connected PC is set properly. • When using a DJ player (when using a Time code (control CD,)) check that the DJ player is connected via the CD/LINE connector. When using a turntable (when using a Time code (control turntable,)) check that the turntable is connected via the PHONO connector.	————	Operating instructions
1	Incorrect setting	PC Setting Utility ① (at the CD/LINE input)	Start up the Setup Utility that has been installed on the customer's PC then click on the MIXER OUTPUT tab. Check that CH* Timecode CD/LINE is selected.	If CH* Timecode PHONO is selected, set it to CH* Timecode CD/LINE.	Operating instructions
2	Incorrect setting	PC Setting Utility ② (at the PHONO input)	Start up the Setup Utility that has been installed on the customer's PC then click on the MIXER OUTPUT tab. Check that CH* Timecode PHONO is selected.	If CH* Timecode CD/LINE is selected, set it to CH* Timecode PHONO.	Operating instructions
3	Incorrect setting	Timecode signal output	Because the setting varies depending on the application used, see "5.11 DVS CONFIRMATION METHOD" for a simplified check method.	If the setting cannot be confirmed properly with the method described in the left column, possible reasons are as follows: ① The channel for USB AUDIO output of the DJM-750 and that for USB AUDIO input of TRAKTOR2 do not match. ⇒ Check the channel setting on the Input Routing screen in the Preferences window of TRAKTOR2 and that of the PC Setup Utility. ② Connection between an external device (DJ player, turntable) and the DJM-750 is not properly made. ⇒ Check the connection and check if the RCA cables are broken. After checking the above-mentioned items, check the setting of the application used again. If the symptom persists, a failure in hardware may be suspected. Check the CD/LINE and PHONO inputs and USB output, referring to [2-1] and [4-1] of Troubleshooting.	5.11 DVS CONFIRMATION METHOD Operating instructions

[5] FL

The FL is controlled by the SUB UCOM (IC6601).

[5-1] The FL does not light.
The driver power to be supplied to the FL is produced at the MAIN Assy.

No.	Cause	Diagnostics Point	Item to be Checked	Corrective Action	Reference
1	Power failure	PNLA Assy V6601 pin 24 3-12 pin 1 3-10 pin 25 3-9 MAIN Assy IC1407 V+3R3D Block 1-94 IC1405 V+5DBlock 1-95 IC1403 V+34DBlock 1-96	Check for the voltage of the FL. (V+3R3D_PA/V+5D_LED_PA/V+34D_PA)	If no loose connection is detected with the FL of the PNLA Assy but power voltage is not detected, check the mounting status of the DC-DC converter IC and peripheral parts for each voltage point of the MAIN Assy. If an error is detected, repair the defective parts.	4.6 POWER BLOCK DIAGRAM 5.4 INFORMATION ON POWER DIAGNOSTICS
2	Filament voltage error of the FL	PNLA Assy V6601: Voltage between pins 1P to 32P 3-11	Check that the FL filament voltage is 2.3 V.	If the voltage is outside the normal range, a bias circuit error of the FL may be suspected. Check the mounting status of Q6601, Q6602, and peripheral parts. If there is no problem, Q6601 or Q6602 may be defective. Replace them.	————
3	Signal errors	PNLA Assy V6601 pin 22 3-14 pin 21 3-13 pin 23 3-15 pin 24 3-16	Check for the output signal of the FL communication line and the cable connection status in the PNLA Assy. • FL_SCK • FL_TXD • FL_LAT • FL_BK	If no signal is output, check for the mounting status of SUB UCOM (IC6601). If there is no problem, the port may be defective. Replace it. If soldering is improper, resolder it.	10.35 WAVEFORMS 3-14 3-13 3-15 3-16
4	Defective FL	PNLA Assy	If the symptom persists after the above corrections.	FL may be defective. Replace it.	————

[6] LED/Button/SW/VR

The FL is controlled by the SUB UCOM (IC6601) and SUB UCOM (IC6601).
See "4.5 LED, KEY, VR ASSIGNMENTS".

[6-1] Do not accept button /SW/VR operation

No.	Cause	Diagnostics Point	Item to be Checked	Corrective Action	Reference
1	Defective button, SW, VR	TEST MODE	Check for each buttons /SWs/VRs works correctly with TEST MODE.	Each parts may be defective. Replace it.	6.1 TEST MODE

[6-2] LED display is abnormal

No.	Cause	Diagnostics Point	Item to be Checked	Corrective Action	Reference
1	Defective LED	TEST MODE	Check for each LEDs works correctly with TEST MODE.	Each parts may be defective. Replace it.	6.1 TEST MODE

[7] CONTROL

The control signal is output from the FPGA (IC3007).
To make the diagnostic procedure easier, set the CROSS FADER ASSIGN selectors for all channels to THRU before starting diagnosis.

[7-1] The FADER START function does not work

No.	Cause	Diagnostics Point	Item to be Checked	Corrective Action	Reference
0	Prior Confirmation	FADER START (CH2, CH3) button settings	Check that the FADER START (CH2, CH3) button is set to ON.	————	Operating instructions
1	Signal errors/ Loose connection	MAIN Assy C231 to C238 1-97 Representative CH1	• Check for the FADER_START signal when the CH FADER is changed from 0 to 10. • Check for the FADER_STOP signal when the CH FADER is changed from 10 to 0.	• If the signal is output, the CONTROL cable may be defective. Replace it. • If the signal is not output, go to [2].	10.35 WAVEFORMS 1-97
2	Power failure	MAIN Assy R222 1-98	Check for the V+5D_CONTROL power.	• If the V+5D_CONTROL power can be confirmed, go to [3]. • If V+5D_CONTROL power cannot be found, soldering of any part in the V+5D_CONTROL power path may be defective. Check the soldering status. If soldering is OK, replace the defective part.	4.6 POWER BLOCK DIAGRAM 5.4 INFORMATION ON POWER DIAGNOSTICS
3	Signal errors/ defective parts	MAIN Assy R3057, R3058 1-99 Representative CH1	• Check for the FADER_START signal when the CH FADER is changed from 0 to 10. • Check for the FADER_STOP signal when the CH FADER is changed from 10 to 0.	• If signal is output, the CONTROL block must be improperly defective. Replace it. • If no signal is output, the FPGA (IC3007) must be improperly soldered or defective.	10.35 WAVEFORMS 1-99

5.4 POWER SUPPLY DIAGNOSIS INFORMATION

	Observing Point	Name	Remarks	Normal Voltage Level	Possible defective point when a voltage error is generated	Standby State (Power SW ON)
MAIN ASSY	1	V+11E_UNREG		7.2 to 18	MAIN UCOM (IC2803), RESET IC (IC2801), SETUP LED (PNLA ASSY)	ON
	2	V+13D_UNREG		9.7 to 17	ALL DIGITAL CIRCUIT	OFF
	3	V+15A (V+15A_*)		14.25 to 15.75	ANALOG AUDIO CIRCUIT	OFF
	4	V-15A (V-15A_*)		-15.75 to -14.25	ANALOG AUDIO CIRCUIT	OFF
	5	V+5A (V+5A_*)		4.7 to 5.4	DAC, ADC	OFF
	6	V+5D (V+5D_*)		4.75 to 5.35	FL, LED, DIGITAL OUT, MAIN UCOM (IC2803)	OFF
	7	V+3R3E (V+3R3E_*)		3.2 to 3.4	MAIN UCOM (IC2803), RESET IC (IC2801), SETUP LED (PNLA ASSY)	ON
	8	V+3R3A (V+3R3A_*)		3.2 to 3.4	ADC	OFF
	9	V+3R3D (V+3R3D_*)		3.15 to 3.45	ALL DIGITAL CIRCUIT	OFF
	10	V+3R3D_REFA (V+3R3D_REFA_*)		3.15 to 3.45	MAIN UCOM (IC2803)	OFF
	11	V+2R5D (V+2R5D_*)		2.4 to 2.6	USB UCOM (IC2603)	OFF
	12	V+1R2D (V+1R2D_*)		1.1 to 1.28	FPGA (IC3007), DSP (IC3201), USB UCOM (IC2603)	OFF
	13	V+34D (V+34D_*)		31 to 36	FL	OFF
	14	V+5VBUS	Power of the connected PC	4.75 to 5.25	USB communication failure	ON
INPUT ASSY	15	V+15A		14.25 to 15.75	INPUT CIRCUIT	OFF
	16	V-15A		-15.75 to -14.25	INPUT CIRCUIT	OFF
SEC/HP ASSY	17	V+15A_UNREG		17.6 to 27.8	ANALOG AUDIO CIRCUIT	OFF
	18	V-15A_UNREG		-17.6 to -27.8	ANALOG AUDIO CIRCUIT	OFF
	19	V+5A_UNREG		7.4 to 12.0	DAC, ADC	OFF
	20	V+13D_UNREG		9.7 to 17	ALL DIGITAL CIRCUIT	OFF
	21	V+HP_UNREG	Before the polyswitch	4.5 to 9.5	HP CIRCUIT	OFF
	22	V+HP_UNREG_1	After the polyswitch	4.5 to 9.5	HP CIRCUIT	OFF
	23	V-HP_UNREG		-4.5 to -9.5	HP CIRCUIT	OFF
	24	V+15A		14.25 to 15.75	ANALOG AUDIO CIRCUIT	OFF
	25	V-15A		-15.75 to -14.25	ANALOG AUDIO CIRCUIT	OFF
	26	V+5A		4.7 to 5.4	DAC, ADC	OFF
REG ASSY	27	V+15A_UNREG		17.6 to 27.8	ANALOG AUDIO CIRCUIT	OFF
	28	V-15A_UNREG		-17.6 to -27.8	ANALOG AUDIO CIRCUIT	OFF
	29	V+5A_UNREG		7.4 to 12.0	DAC, ADC	OFF
	30	V+15A		14.25 to 15.75	ANALOG AUDIO CIRCUIT	OFF
	31	V-15A		-15.75 to -14.25	ANALOG AUDIO CIRCUIT	OFF
	32	V+5A		4.7 to 5.4	DAC, ADC	OFF
PNLA ASSY	33	V+5D_LED (V+5D_LED*)		4.75 to 5.35	FL,LED	OFF
	34	V+3R3E		3.2 to 3.4	SETUP LED	ON
	35	V+3R3D (V+3R3D_*)		3.15 to 3.45	FL, SUB UCOM (IC6601)	OFF
	36	V+34D (V+34D_*)		31 to 36	FL	OFF
	37	V+3R3D_REFA (V+3R3D_REFA_*)		3.15 to 3.45	CH1-4 FADER, CROSS FADER	OFF
PNLB ASSY	38	V+3R3_REFB (V+3R3D_REFB_*)		3.15 to 3.45	VR	OFF
	39	V+3R3D_REFA (V+3R3D_REFA_*)		3.15 to 3.45	CROSS FADER	OFF

ex) V+15A_* • • • • V+15A_O, V+15A_IN, etc • • •

5.5 VOLTAGE MONITORING CIRCUIT

Voltage-Monitoring Circuit

This unit monitors the voltages of the main power-supply ICs, using the VDET signal.
The VDET signal level is high (+3.3 V) during normal operations. When the level becomes low (0 V), detect abnormality in the MAIN UCOM (IC2803).

Product behavior when an error is generated

If power failure is detected with the VDET signal, the MAIN UCOM will stop supplying the primary source of power to the main transformer, setting the RELAY_CONT signal to low and interrupting the relay RY3001.

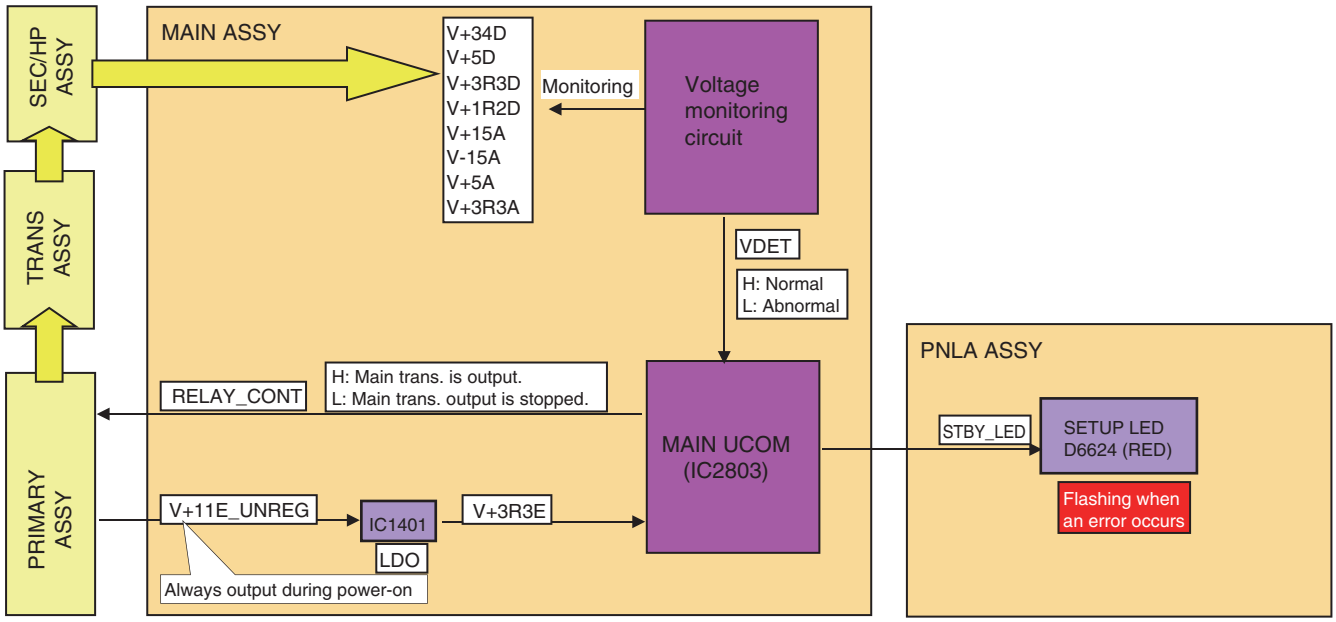

The MAIN UCOM also informs of power failure with flashing of the SETUP button, by sending the STBY_LED signal:
Flashing intervals: 250 ms (lit for 125 ms/unlit for 125 ms)
As the switching-system output is stopped, the indications other than the SETUP LED are unlit and all the switches and VRs are disabled.

Diagnostic procedure

If any voltage is abnormal, that error will be detected by the voltage-monitoring program after it is started after a usual startup of the unit. Then the power supply to the main transformer will be stopped. For this reason, power will be supplied for about 1 sec after startup.
Identify which power-supply IC is defective, by turning the unit OFF then back ON while monitoring each voltage with an oscilloscope. Check the value of each voltage immediately before stopping power supply.
Note: Each time before turning the unit ON, make sure that each power-supply IC is not short-circuited to GND.

Circuit diagram of the voltage-monitoring section

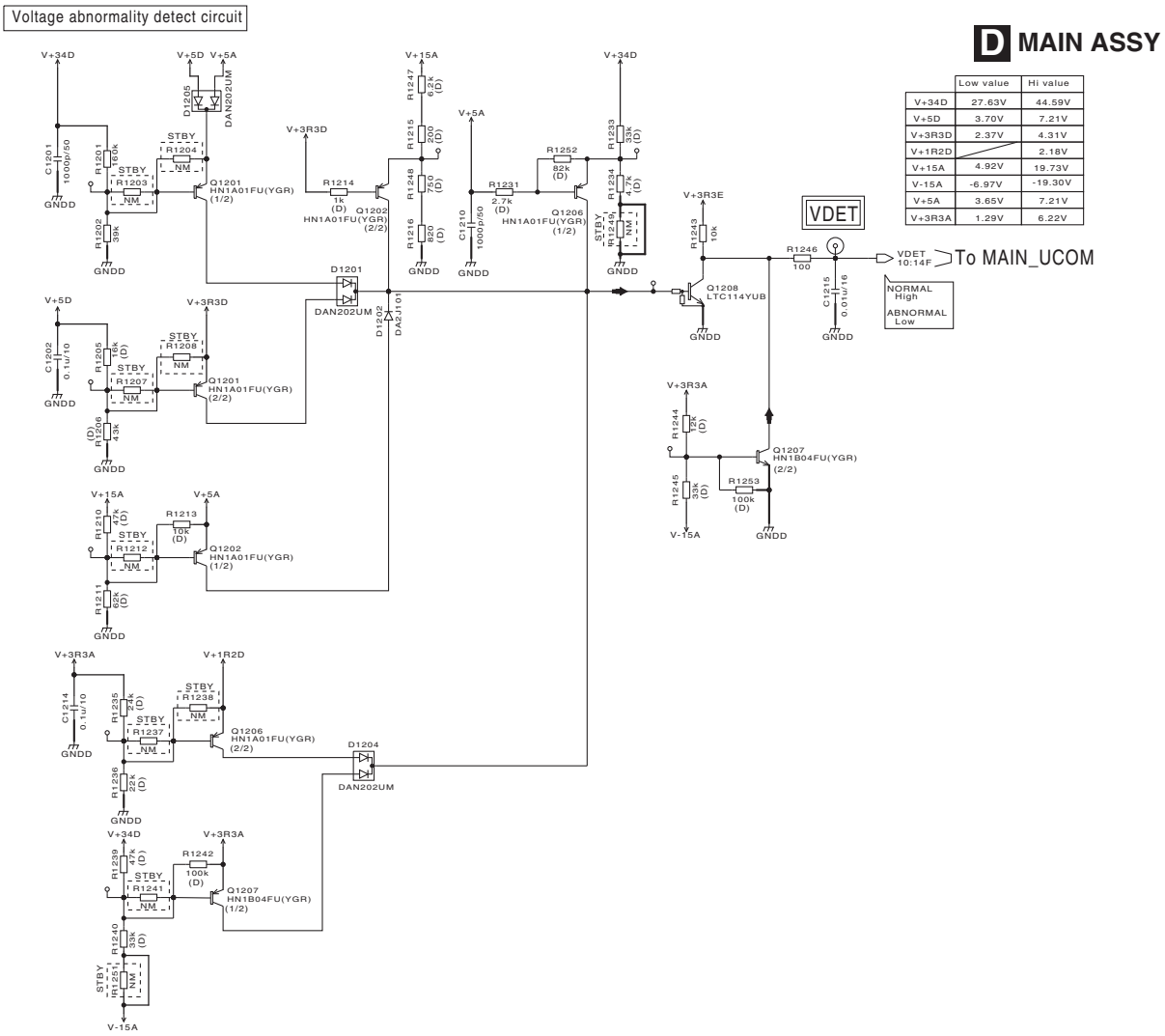

	Low value	Hi value
V+34D	27.63V	44.59V
V+5D	3.70V	7.21V
V+3R3D	2.37V	4.31V
V+1R2D		2.18V
V+15A	4.92V	19.73V
V-15A	-6.97V	-19.30V
V+5A	3.65V	7.21V
V+3R3A	1.29V	6.22V

Table 1: Voltage value of the voltage-monitoring section

Power	Over voltage / Under voltage	Threshold		Cause of error detection
		Detection range in consideration of variations	Center value	
V+34D	+	More than 38.50 to 49.57 V	44.59 V	Abnormality around IC1403
	–	19.72 to 30.29 V or less	27.63 V	Abnormality around IC1403 or, Short-circuiting at GND or different power supply
V+5D	+	More than 6.08 to 8.43 V	7.21 V	Abnormality around IC1404 or, Short-circuiting at different power supply
	–	3.37 to 4.30 V or less	3.70 V	Abnormality around IC1404 or, Short-circuiting at GND or different power supply
V+3R3D	+	More than 3.89 to 4.65 V	4.31 V	Abnormality around IC1405 or, Short-circuiting at different power supply
	–	1.26 to 2.81 V or less	2.37 V	Abnormality around IC1405 or, Short-circuiting at GND or different power supply
V+1R2D	+	More than 1.87 to 2.38 V	2.18 V	Abnormality around IC1408 or, Short-circuiting at different power supply
V+15A	+	More than 17.43 to 21.54 V	19.73 V	Short-circuiting at regulator (IC5002) IN/OUT
	–	3.72 to 7.23 V or less	4.92 V	Short-circuiting at GND or different power supply
V-15A	+	More than -17.07 to -21.55 V	-19.30 V	Short-circuiting at regulator (IC5003) IN/OUT
	–	-6.24 to -8.29 V or less	-6.97 V	Short-circuiting at GND or different power supply
V+5A	+	More than 6.08 to 8.43 V	7.21 V	Short-circuiting at regulator (IC5001) IN/OUT
	–	3.27 to 4.32 V or less	3.65 V	Short-circuiting at GND or different power supply
V+3R3A	+	More than 4.01 to 6.72 V	6.22 V	Short-circuiting at regulator (IC1402) IN/OUT
	–	1.12 to 1.95 V or less	1.29 V	Short-circuiting at GND or different power supply

5.6 ABOUT POLYSWITCH

This unit monitors the voltages of the main power-supply ICs, using the voltage-monitoring circuit. As resettable fuses (PolySwitches) are also used, some circuits cannot be monitored by the voltage-monitoring circuit when any resettable fuse is activated.
The resettable fuse opens when excess current flows and will be restored to a conductive state after the cause of the corresponding circuit error is removed. (Replacement of the resettable fuse is not required if the corresponding circuit error is remedied.)

■ Circuits using the resettable fuses

SEC/HP ASSY

Power-supply line using a resettable fuse: V+HP_UNREG

A circuit in the SEC/HP Assy may be in failure if the voltages of the above-mentioned power in the SEC/HP Assy are 0 V, with the UTILITY LED (STBY_LED) not flashing.
Possible causes: Abnormal or no HP output
Item to be checked: Check if there is any abnormality in the periphery of Q105 or Q106.

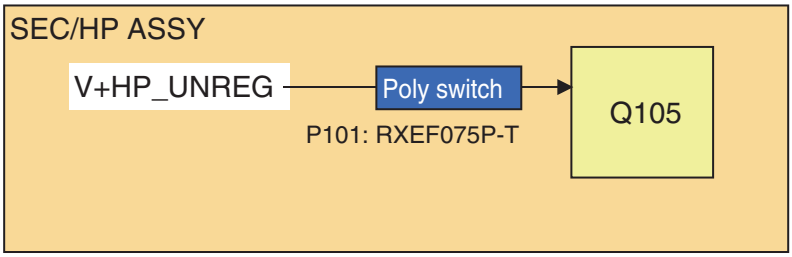

■ Diagnostic procedure when any resettable fuse is activated

1. Unplug the AC power cord.
2. Check for any error, such as short-circuiting or defective parts, in the circuits downstream from the resettable fuse.
3. Repair the detective part.

5.7 ABOUT PROTECTOR

This unit uses ICPs (IC protectors) in MASTER1 output circuit.
If the specified signal from the MASTER 1 connectors (XLR) is not properly output, check if any ICP is activated.

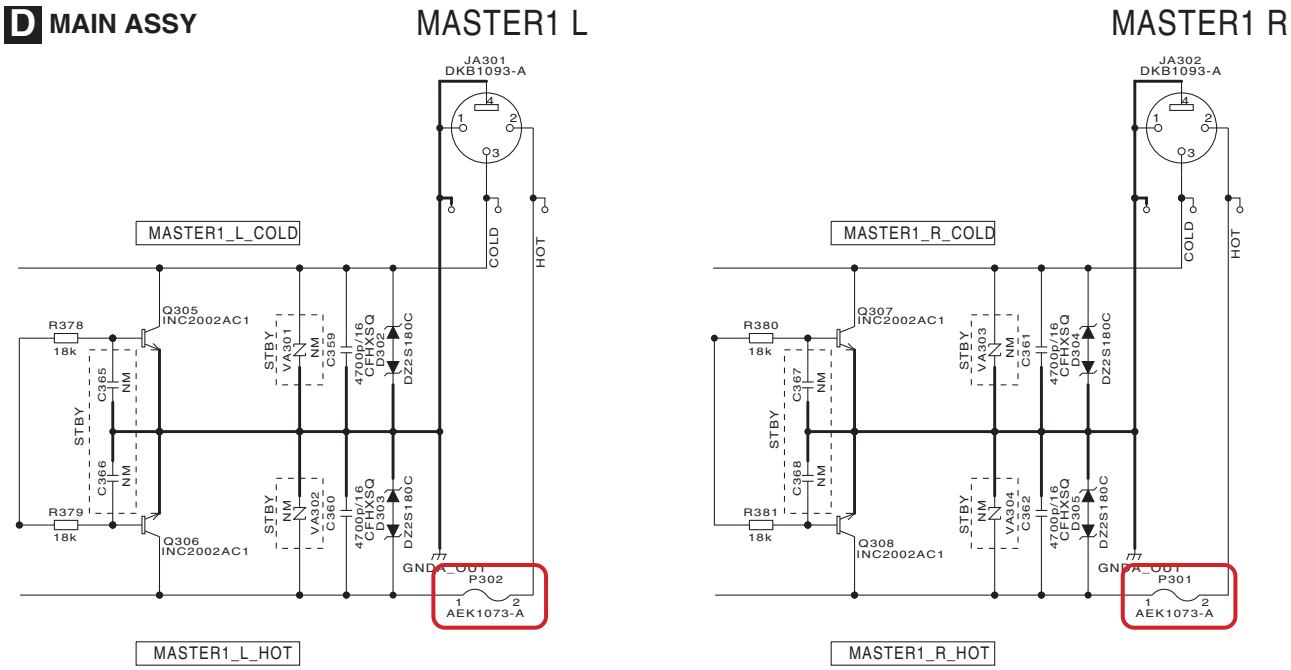

5.8 V+34D DIAGNOSIS

The driver power output for the FL (V+34D) is controlled with a transistor switch.

Diagnostic procedures when only V+34D is not output

① Check V+34D_1 at the prior stage of the transistor (Q1402).
② If no signal is detected at V+34D_1, the mounting status of the peripheral parts of the 34V DC/DC converter (IC1403) may be improper or IC1403 itself may be defective.
③ If a signal is detected at V+34D_1, check the Q1405 and Q1406.
If V+34D_CONT is L, the mounting status of the MAIN UCOM (IC2803) may be improper or IC2803 itself may be defective.
If V+5A is 0 V, confirm an output of IC5001 of REG Assy and connection state.
④ If both V+34D_CONT and V+5A are H:
If the output signal from Q1406 is L, the mounting status of Q1406 may be improper or Q1406 itself may be defective.
⑤ When the above does not have any problem, the following problems are thought about.
1. The mounting status of the peripheral parts of Q1401 or Q1402 may be improper or Q1401/Q1402 may be defective.
2. The mounting status of the peripheral parts of Q1403 or Q1404 may be improper or Q1403/Q1404 may be defective.

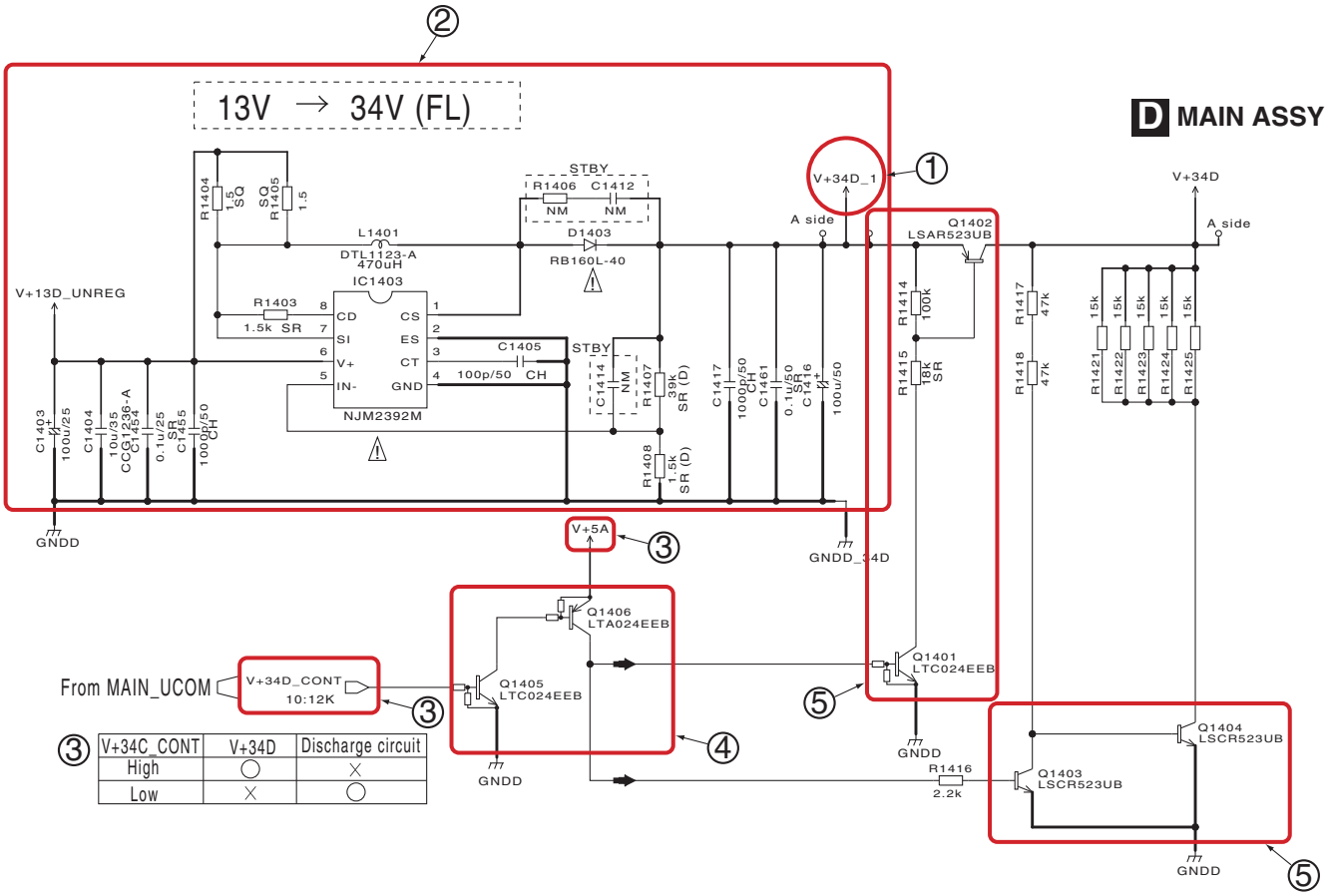

V+34C_CONT	V+34D	Discharge circuit
High	○	×
Low	×	○

5.9 ERROR INDICATIONS

Indications of Errors during Startup

Error indication	Error	Detection timing	Detection method	Defective part	Diagnostic procedure
Continuous flashing of the SETUP LED (lit for 125 ms/unlit for 125 ms)	Abnormal voltage	Under constant monitoring	Monitoring of the VDET signal with the voltage-monitoring circuit	Power	Troubleshooting: [1-2]
	FPGA configuration failed.	During power-on sequence*	Monitoring of the FPGA_xINIT/FPGA_DONE signal	FPGA (IC3007) circuitry	
Repeated 4-time flashing of the SETUP LED (lit and unlit for 250 ms each 4 times then unlit for 1 s)	MAIN UCOM ROM error	During power-on sequence*	Confirmation of internal ROM verification	MAIN (IC2803) circuitry	Troubleshooting: [1-3]
The FL display freezes, with the display shown below. 	FL display data cannot be received by the SUB UCOM.	During power-on sequence*	FL display data are not output from the MAIN UCOM.	Mainly FPGA (IC3007) circuitry	Troubleshooting: [1-4]
Repeated 5-time flashing of the SETUP LED (lit and unlit for 250 ms each 5 times then unlit for 1 s)	Handshake between MAIN and SUB failed.	During power-on sequence*	Confirmation of communication verification between MAIN UCOM and SUB UCOM via FPGA	BUS line between MAIN UCOM and FPGA	Troubleshooting: [1-5]
Repeated one-time flashing of the SETUP LED (lit then unlit for 250 ms each once then unlit for 1 s)	Handshake between MAIN and DSP failed.	During power-on sequence*	Confirmation of communication verification between MAIN UCOM and DSP via FPGA	DSP (IC3201) circuitry	Troubleshooting: [1-6]
Repeated 6-time flashing of the SETUP LED (lit and unlit for 250 ms each 6 times then unlit for 1 s)	Handshake between MAIN and USB failed.	During power-on sequence*	Confirmation of verification with the UART signal between MAIN UCOM and USB UCOM	USB (IC2603) circuitry	Troubleshooting: [1-7]

*See "5.1 POWER ON SEQUENCE."

Indications of Errors during Updating

* Be sure to perform updating properly, referring to "8.2 UPDATING OF THE FIRMWARE."

Indications on the unit

Effect display	Parameter display	Flashing of the SETUP LED*	Details of the error	Corrective action
[ERROR]	[E004]	Four times	MAIN UCOM UPDATE error	Perform updating again.
[LOADING]	None	Five times	SUB UCOM UPDATE error	Perform updating again.
[ERROR]	[E001]	Once	DSP Data UPDATE error	Perform updating again.
[ERROR]	[E001]	Once	DSP Program UPDATE error	Perform updating again.
[ERROR]	[E006]	Six times	USB UCOM UPDATE error	Perform updating again.
[ERROR]	[E008]	Eight times	USB-BOOT UPDATE error	Perform updating again.
[ERROR]	[E002]	Twice	FPGA UPDATE error	Perform updating again.
[ERROR]	[E009]	Nine times	SYS Ver. UPDATE error	Perform updating again.
[ERROR]	[E000]	Non	Other errors	Perform updating again.

*The SETUP LED flashes with a set of lit and unlit for 250 ms each for the specified number of times then unlit for 1 s.

Indications on the PC

Messages in the window	Error	Corrective action
! Your DJM-750 is not connected.	This message is displayed when the mixer and the PC are not connected.	After checking the connection via the USB connectors, perform updating again. See "Troubleshooting: [4-1]" if any error in USB connection is suspected.
! There is an error in the update file.	This message is displayed when no proper UPD file is found.	Download the UPD file again then perform updating again.
! An error has occurred. It was not possible to update the program.	This message is displayed when updating in progress was canceled because of an error.	Perform updating again.

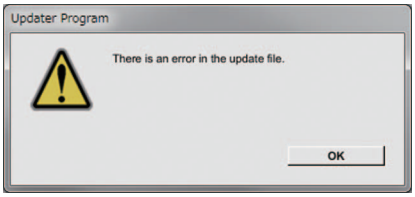

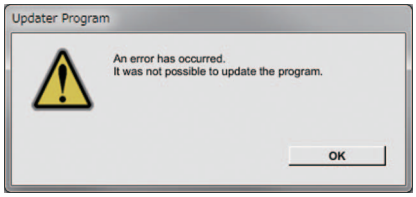

5.10 CONNECTION CHECK WITH EACH INTERFACE

■ USB

[USB Bconnector]

Whether communication between the PC connected via the USB B connector and this unit is properly performed or not can be confirmed on the PC.
Note: The driver software must be installed beforehand.

■ Use Device Manager for checking.

If the PC and this unit are properly connected, the components of this unit are added in Device Manager (under Hardware) as devices.
If all components are properly displayed, the PC and this unit are properly communicating via the USB connector.

In a case of Windows XP:
Start, Control Panel, System, Hardware, then Device Manager

Devices to be added:
- Universal Serial Bus controllers
  USB Composite Device
- Under “Sound, video and game controllers”
  PIONEER DJM-750
  USB Audio Device

A communication check may be easily performed if connection is made with Device Manager displayed on the PC screen.

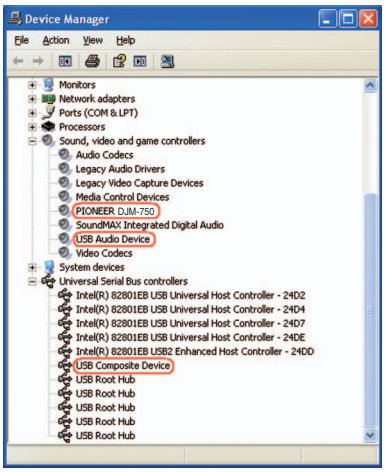

5.11 DVS CONFIRMATION METHOD

What is the DVS (Digital Vinyl System)?

The Digital Vinyl System (DVS) enables control of DJ software with normal DJ's operations of the CDJs or turntables, with use of a control CD or VINYL supplied with DJ software that supports the DVS. A control disc contains timecodes for controlling DJ software, which enable playback of music files stored on the PC from an assigned playback position at an assigned playback speed.

Note: For checking operations as the DVS, a control CD (CD on which timecodes are recorded) is required. However, assuming a case where no control CD is available, a simple check procedure using a music CD is explained here.

Necessary Items

- PC with the USB driver and TRAKTOR (demo version or TRAKTOR DDJ-T1 EDITION possible) installed
  Can download the Traktor demo version from the following URL.
  http://www.native-instruments.com/#/en/products/dj/traktor-pro-2/?page=1975
- Media (CD, etc.) for checking operations, CDJ player

Check Procedures

1. Connect this unit and a PC, using the USB cable.
2. Connect the audio output of CDJ Player to the CD/LINE of CH1 of this unit.
3. Set the CD/LINE, PHONO, LINE, and USB */* selectors to USB1/2.
4. For details on settings to be made on the PC, see “Settings for the Driver” and “Settings on TRAKTOR” below.
5. Play back the CDJ Player, and check the following items:
   - The level meters of Input Routing and Master Out on the TRAKTOR move in sync with audio output signals.
   - The Master Out is output normally.

   *Repeat the above steps for channels 2 to 4, to check the DVS paths.

Note:
The Master Out signal will not be output if the MAIN volume control is set to the minimum volume position.
If the MAIN volume indicators are not displayed on the screen, set the TRAKTOR screen to Full screen.

[Connection Diagram (When the CDJ Player is Connected to CH1)]

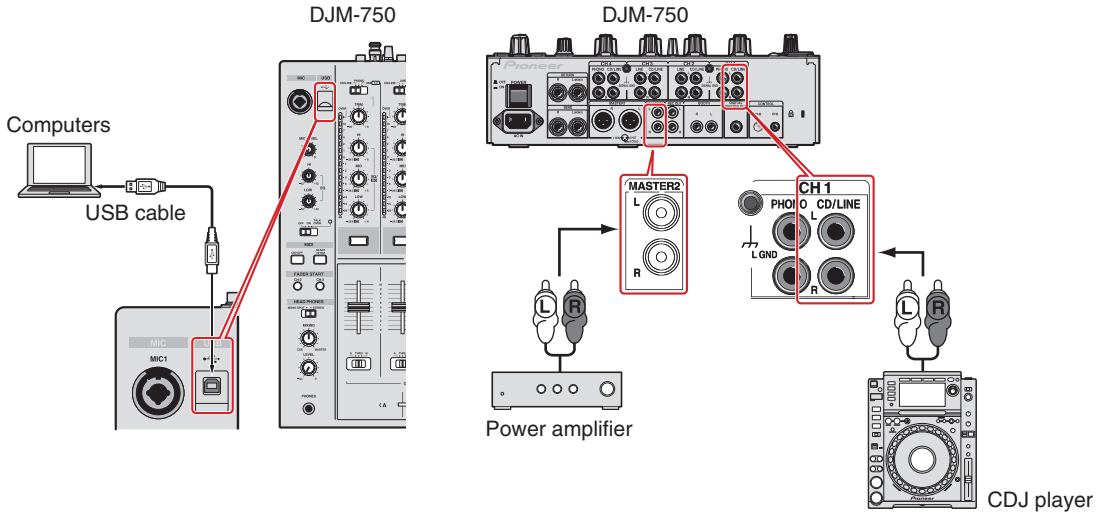

Settings for the Driver

Start up the "DJM-750 Settings Utility".

(Reference)
For Windows
Click [Start] menu → [All Programs] → [Pioneer] → [DJM-750] → [DJM-750 Settings Utility].

For MacOS
Click [Macintosh HD] → [Aplications] → [Pioneer] → [DJM-750] → [DJM-750 Settings Utility].

MIXER INPUT

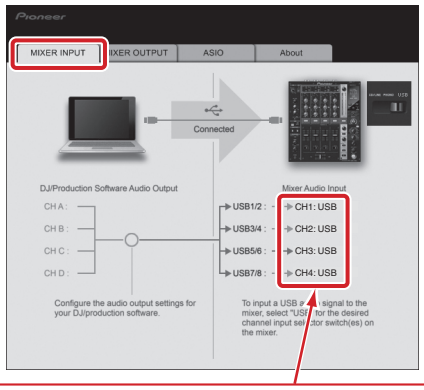

When the CD/LINE, PHONO, LINE, and USB */* selectors of the mixer are set to USB*/*, “USB” must be displayed on the PC screen.

MIXER OUTPUT

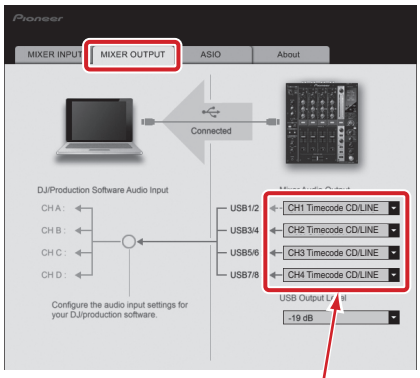

Set the Timecode CD/LINE.

Settings on TRAKTOR

① After starting TRAKTOR, set the deck layout, in "Mixer".

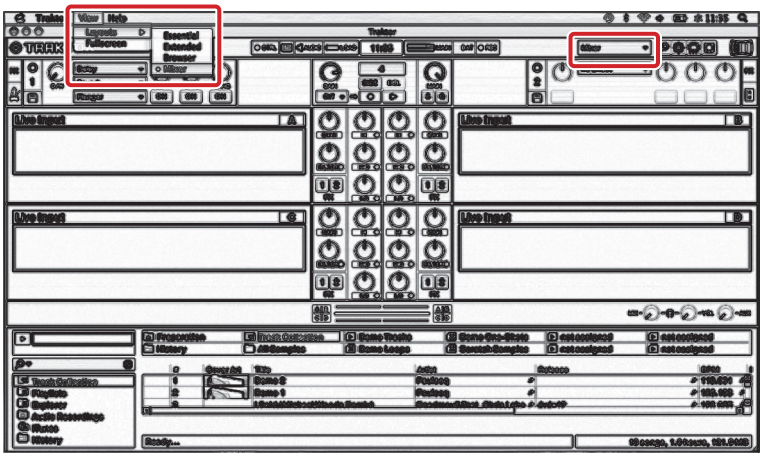

Figure of TRAKTOR2 screen image

② Set the deck A to D, in "Live Input".

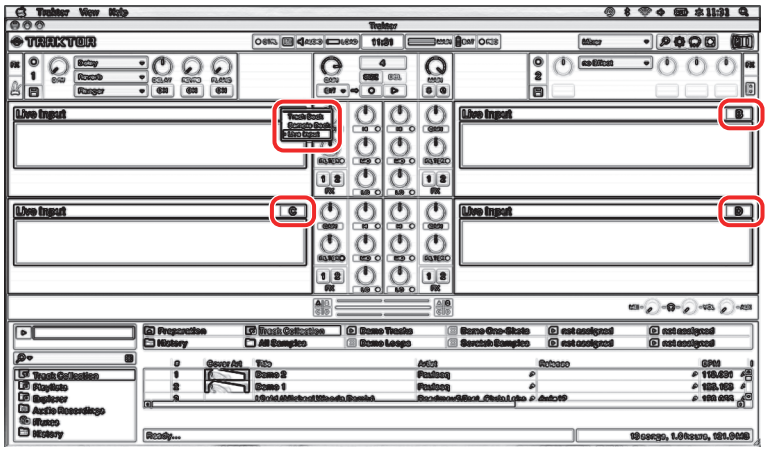

Figure of TRAKTOR2 screen image

③ Select Traktor then Preferences, or click on the "Preferences" button.

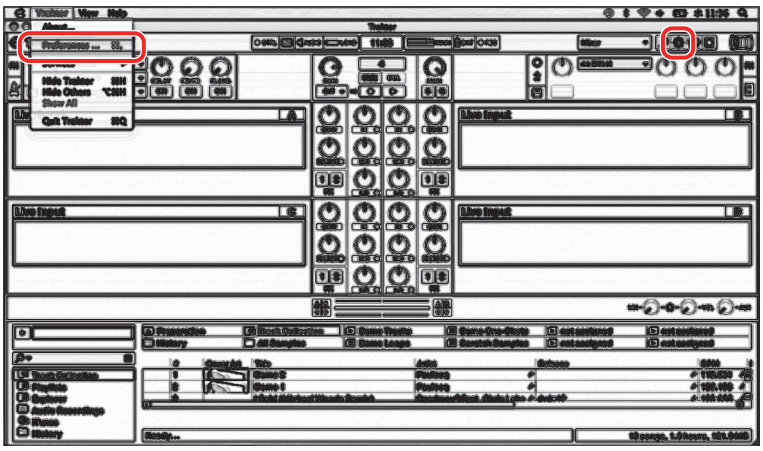

Figure of TRAKTOR2 screen image

④ In "Audio Setup", select for Windows: PIONEER DJM-750 ASIO, for Mac OS: PIONEER DJM-750.

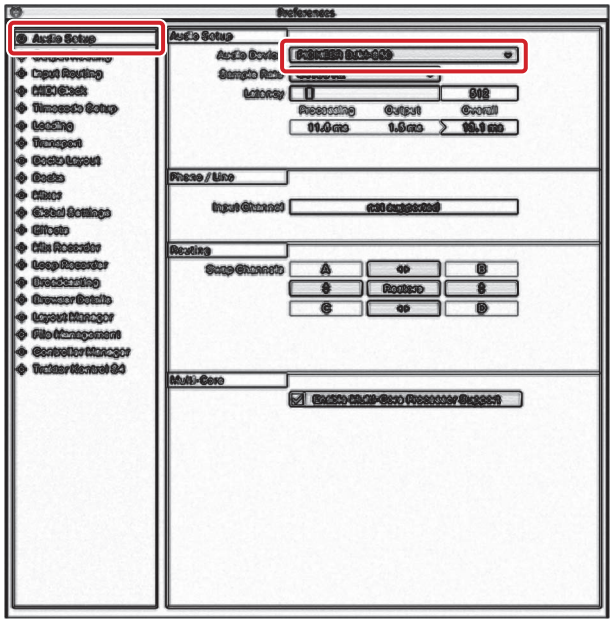

Figure of TRAKTOR2 screen image

⑤ In "Output Routing", select "External, Output Channel A-D".

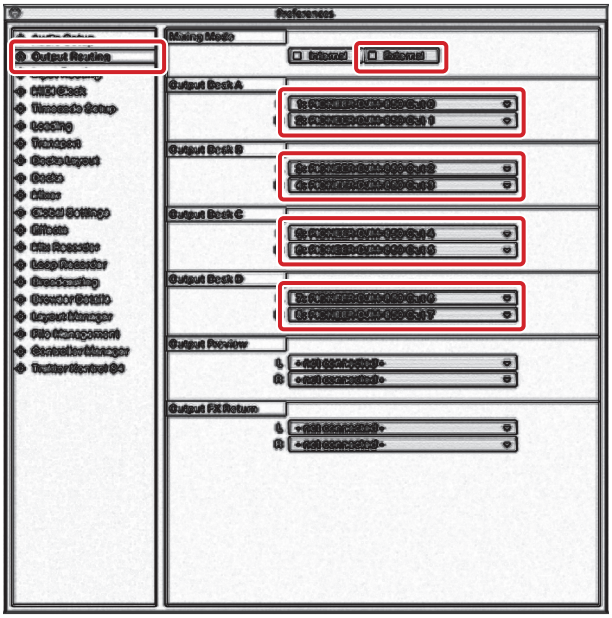

Figure of TRAKTOR2 screen image

⑥ In "Input Routing", select "Input Channel A-D".

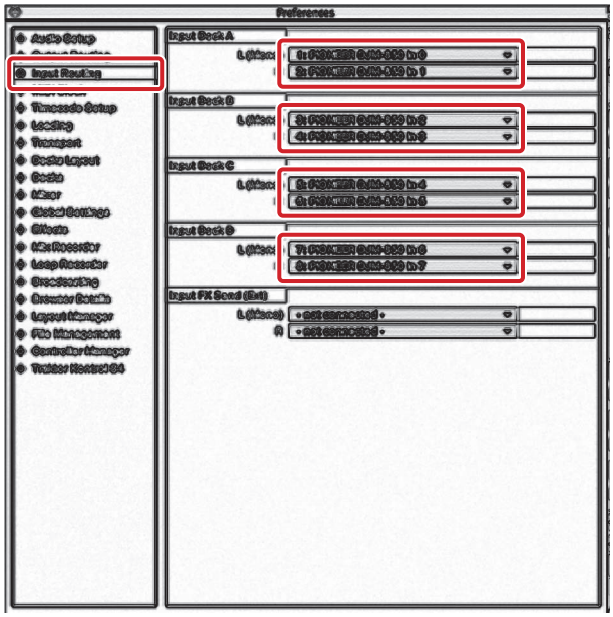

Figure of TRAKTOR2 screen image

With the above settings, CH 1 of the mixer is assigned to Deck A, CH 2 to Deck B, CH 3 to Deck C, and CH 4 to Deck D.

⑦ Close the "Preferences" window, by clicking on the Close "×" button.

⑧ Play the Audio signal of a Player connected to the Mixer, and confirm that a sound is output by the MASTER output.
The TRIM knob, Channel Fader, MASTER LEVEL knob of the input path do operation like normal mixer use.

6. SERVICE MODE
6.1 TEST MODE

1. Description of Test Modes

The Following 10 test modes are provided for this unit:

① Mode 1 : Confirmation of software version. "Version"
② Mode 2 : All LEDs & FL display "OFF" mode. "ALL CLR"
③ Mode 3 : ALL LEDs & FL display "ON" mode. "ALL SET"
④ Mode 4 : KEY operating test. "KEY TEST"
⑤ Mode 5 : SELECT SW Operating test. "SW TEST"
⑥ Mode 6 : Rotary VRs value test. "VOLTEST"
⑦ Mode 7 : Fader test. "FDRTEST"
⑧ Mode 8 : Confirmation of device. "DEVICE"
⑨ Mode 9 : Channel Level Indicator LED test. "LEDTEST"
⑩ Mode 10 : AD values of the rotary VRs test. "VOL AD"
⑪ Mode 11 : AD values of the fader test. "FDR AD"

2. Test Mode

Test Mode : ON

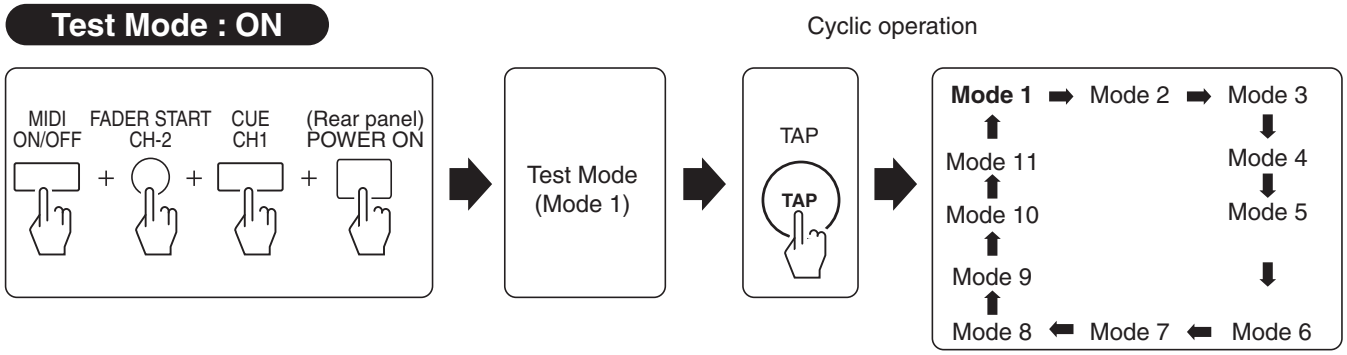

Test Mode : CANCEL

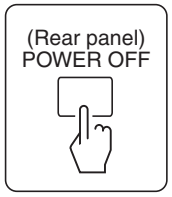

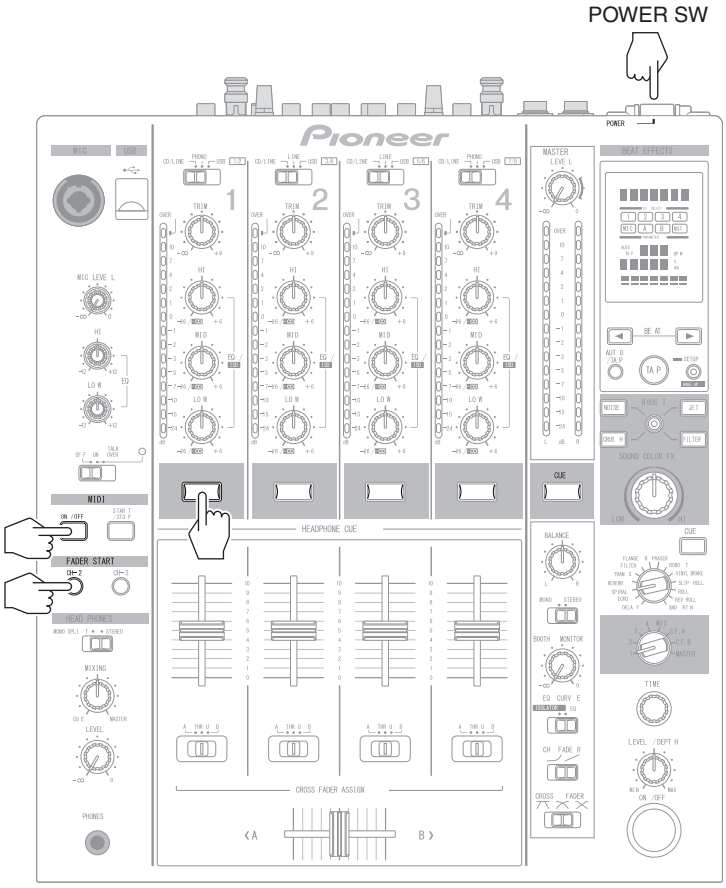

3. Test mode Contents

① Mode 1 : Confirmation of software version

- Mode for confirmation of the versions of the system, MAIN UCOM, SUB UCOM, DSP (program), DSP (data), USB UCOM, FPGA and BOOT.
  When this mode is entered, “Version” is displayed at the top of the FL display.

- Mode 1 consists of 8 pages for indicating the versions of the system, MAIN UCOM, SUB UCOM, DSP (program), DSP (data), USB UCOM, FPGA and BOOT.
  The pages can be changed by pressing the BEAT ◄, ► button.
  When Mode 1 is entered, the System Version Display mode is automatically entered.

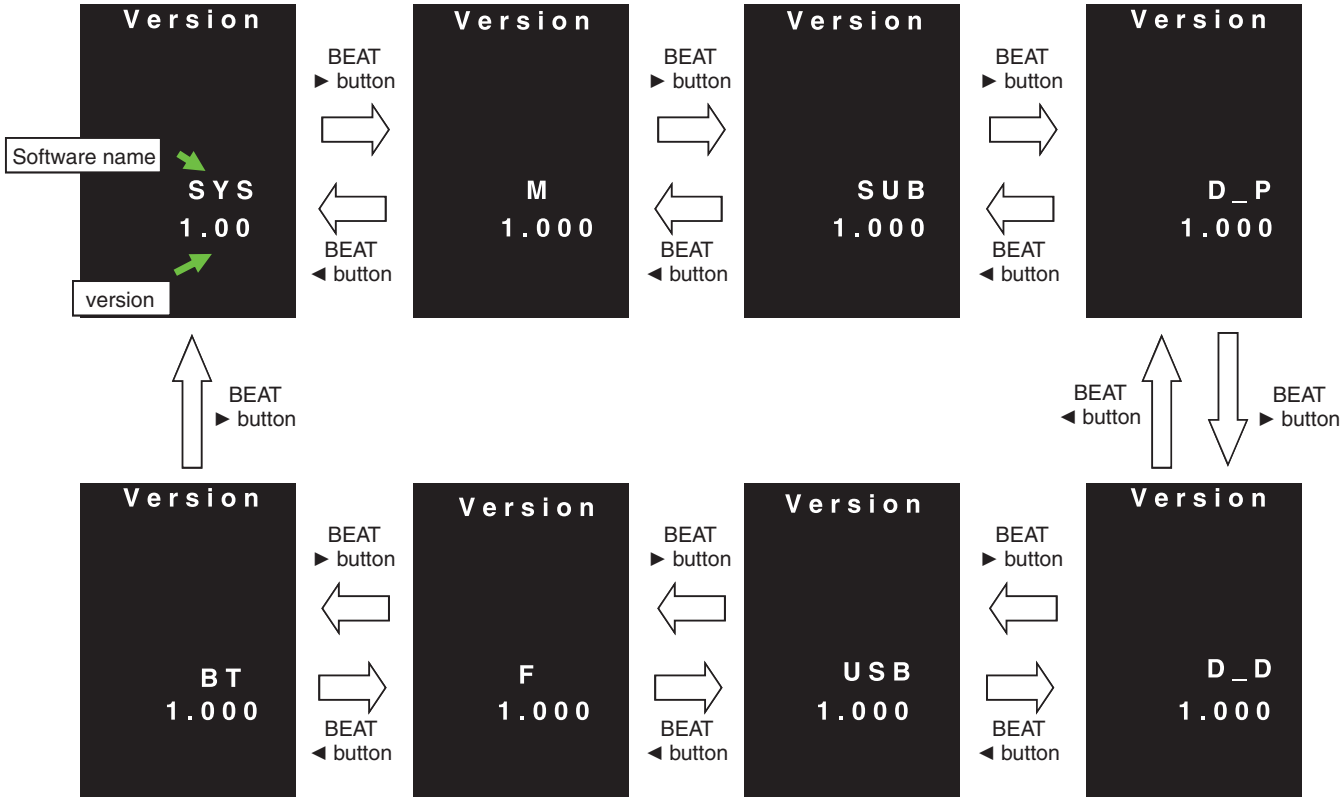

Software Name	FL Display
System	SYS
MAIN UCOM	M
SUB UCOM	SUB
DSP (program)	D_P
DSP (data)	D_D
USB UCOM	USB
FPGA	F
BOOT	BT

② Mode 2 : All LEDs & FL display “OFF” mode

- Mode for extinguishing all the LEDs and FL segments.
  Only after this mode is entered, “ALL CLR” is displayed for about 1 second at the top of the FL display.

③ Mode 3 : All LEDs & FL display “ON” mode

- Mode for lighting all the LEDs and FL segments.
  Only after this mode is entered, “ALL SET” is displayed for about 1 second at the top of the FL display.

④ Mode 4 : Key operating test

- Mode for indicating a pressed key with lighting of an LED and indication on the FL display.
  When this mode is entered, “KEYTEST” is displayed at the top of the FL display.
- The name of a pressed key is indicated on the FL display and The key LED which can light lit.

Operating Keys	Lighting LED	FL Display	Remark
MIDI ON/OFF button	MIDI ON/OFF button LED	MD_ON	
MIDI START/STOP button	None	MD_ST	
FADER START CH-2 button	FADER START CH-2 button LED	FSCH2	
FADER START CH-3 button	FADER START CH-3 button LED	FSCH3	
CUE CH1 button	CUE CH1 button LED	CUE_1	
CUE CH2 button	CUE CH2 button LED	CUE_2	
CUE CH3 button	CUE CH3 button LED	CUE_3	
CUE CH4 button	CUE CH4 button LED	CUE_4	
CUE MASTER button	CUE MASTER button LED	CUE_M	
CUE EFFECT button	CUE EFFECT button LED	CUE_E	
BEAT ◄ button	None	BEAT<	
BEAT ► button	None	BEAT>	
AUTO/TAP button	None	AUTO	
SETUP (WAKE UP) button	SETUP (WAKE UP) button LED	SETUP	
COLOR FX NOISE button	COLOR FX NOISE button LED	CFX_1	
COLOR FX JET button	COLOR FX JET button LED	CFX_2	
COLOR FX CRUSH button	COLOR FX CRUSH button LED	CFX_3	
COLOR FX FILTER button	COLOR FX FILTER button LED	CFX_4	
BOOST button	BOOST button LED and COLOR control LED	BOOST	
EFFECT ON/OFF button	EFFECT ON/OFF button LED	EFXon	

⑤ Mode 5 : SELECT SW Operating test. "SW TEST"

- When this mode is entered, “SW TEST” is displayed at the top of the FL display.

Operating Switches		Lighting LED		Remark
CD/LINE, PHONO, USB 1/2 selector switch CH1	: CD/LINE	CH1 Channel Level Indicator LED	7 dB	
	: PHONO		10 dB	
	: USB 1/2		OVER	
CD/LINE, LINE, USB 3/4 selector switch CH2	: CD/LINE	CH2 Channel Level Indicator LED	7 dB	
	: LINE		10 dB	
	: USB 3/4		OVER	
CD/LINE, LINE, USB 5/6 selector switch CH3	: CD/LINE	CH3 Channel Level Indicator LED	7 dB	
	: LINE		10 dB	
	: USB 5/6		OVER	
CD/LINE, PHONO, USB 7/8 selector switch CH4	: CD/LINE	CH4 Channel Level Indicator LED	7 dB	
	: PHONO		10 dB	
	: USB 7/8		OVER	
CROSS FADER ASSIGN (A, THRU, B) selector switch CH1	: Assign A	CH1 Channel Level Indicator LED	-24dB	
	: THRU		-15dB	
	: Assign B		-10dB	
CROSS FADER ASSIGN (A, THRU, B) selector switch CH2	: Assign A	CH2 Channel Level Indicator LED	-24dB	
	: THRU		-15dB	
	: Assign B		-10dB	
CROSS FADER ASSIGN (A, THRU, B) selector switch CH3	: Assign A	CH3 Channel Level Indicator LED	-24dB	
	: THRU		-15dB	
	: Assign B		-10dB	
CROSS FADER ASSIGN (A, THRU, B) selector switch CH4	: Assign A	CH4 Channel Level Indicator LED	-24dB	
	: THRU		-15dB	
	: Assign B		-10dB	
OFF, ON, TALK OVER selector switch	: OFF	CH1 Channel Level Indicator LED	-1dB	
	: ON		0dB	
	: TALK OVER		1dB	
MONO SPLIT, STEREO selector switch	: MONO SPLIT	CH1 Channel Level Indicator LED	-5dB	
	: STEREO		-3dB	
MONO, STEREO selector switch	: MONO	CH2 Channel Level Indicator LED	0dB	
	: STEREO		1dB	
EQ CURVE (ISOLATOR, EQ) selector switch	: ISOLATOR	CH2 Channel Level Indicator LED	-3dB	
	: EQ		-2dB	
CH FADER (,) selector switch	: Left	CH3 Channel Level Indicator LED	0dB	
	: Right		1dB	
CROSS FADER (, ,) selector switch	: Left	CH4 Channel Level Indicator LED	-1dB	
	: MID		0dB	
	: Right		1dB	
Effect channel selector switch 1, 2, 3, 4, MIC, CF.A, CF.B, MASTER	: 1	Master Level Indicator ED L CH	-24dB	
	: 2		-15dB	
	: 3		-10dB	
	: 4		-7dB	
	: MIC		-5dB	
	: CF.A		-3dB	
	: CF.B		-2dB	
	: MASTER		-1dB	

Operating Switches		Lighting LED		Remark
Beat effect selector switch DELAY, ECHO, SPIRAL, REVERB, TRANS, FILTER, FLANGER, PHASER, ROBOT, VINYL BRAKE, SLIP ROLL, ROLL, REV ROLL, SND/RTN	: DELAY	Master Level Indicator LED R CH	-24dB	
	: ECHO		-15dB	
	: SPIRAL		-10dB	
	: REVERB		-7dB	
	: TRANS		-5dB	
	: FILTER		-3dB	
	: FLANGER		-2dB	
	: PHASER		-1dB	
	: ROBOT		0dB	
	: VINYL BRAKE		1dB	
	: SLIP ROLL		2dB	
	: ROLL		4dB	
	: REV ROLL		7dB	
	: SND/RTN		10dB	

This mode is also used to check operation of the TIME control.
The value displayed on the FL display increases/decreases as you turn the TIME control:

Operation range
Initial value: 0
Maximum value: 100
Minimum value: -100

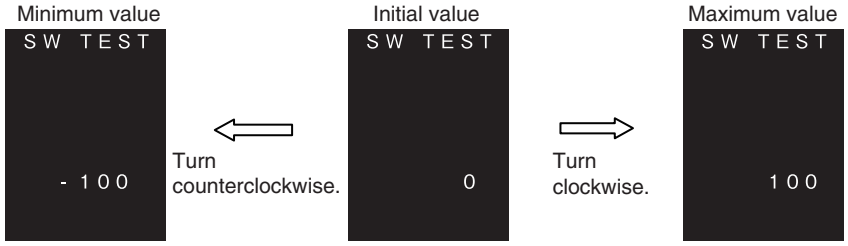

Correspondence diagram of Mode 5 : SELECT SW Operating test. "SW TEST"

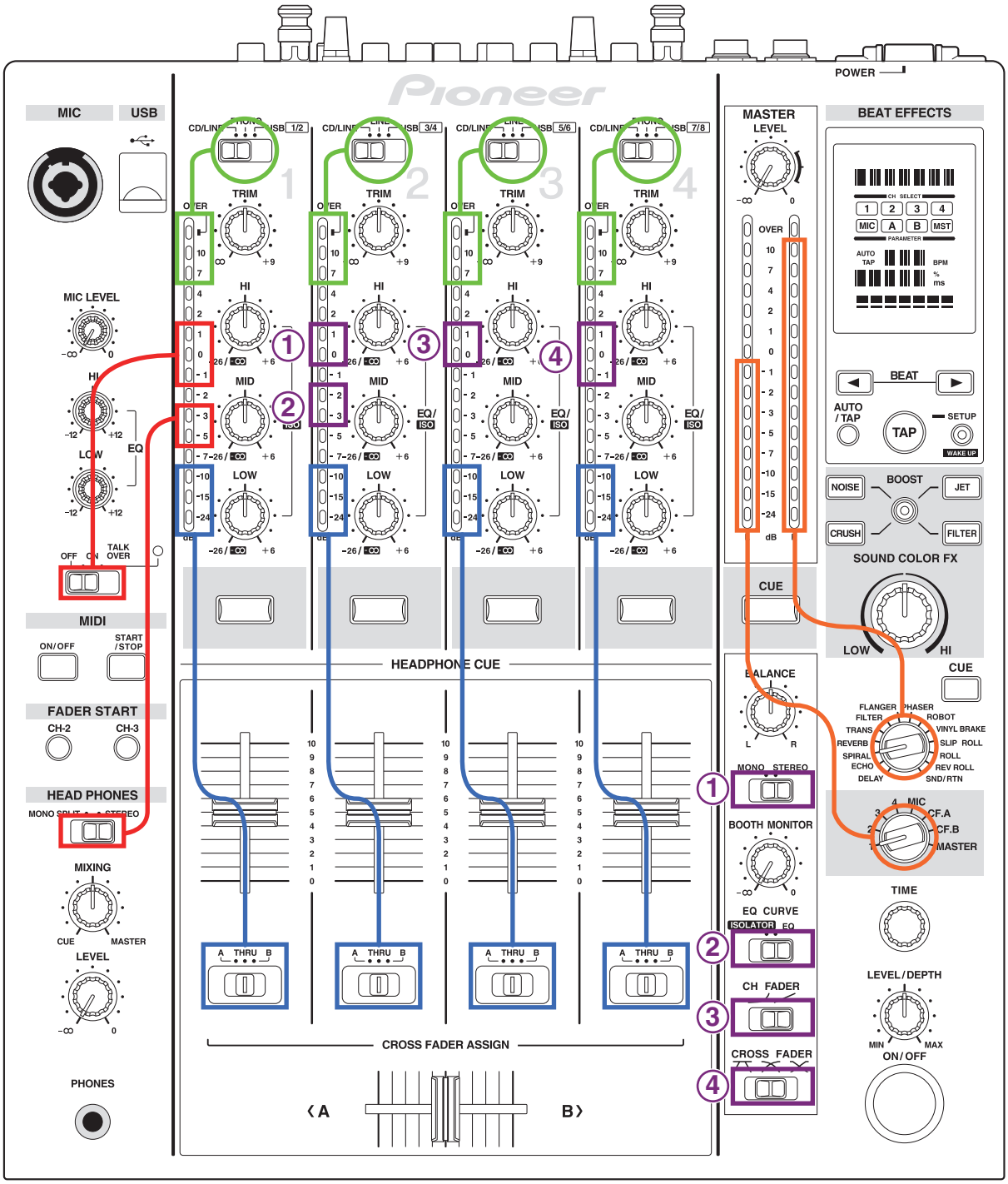

⑥ Mode 6 : Rotary VRs value test. "VOLTEST"

- Mode for confirmation of the AD conversion value for each rotary VR on the operation panel with lighting of a level indicator LED or the segments on the FL display
  When this mode is entered, “VOLTEST” is displayed at the top of the FL display.

- To indicate the AD conversion values for several rotary VRs with a level indicator, the rotary VRs are divided into 4 groups.
  The group pages can be changed by pressing the BEAT ◄, ► button.

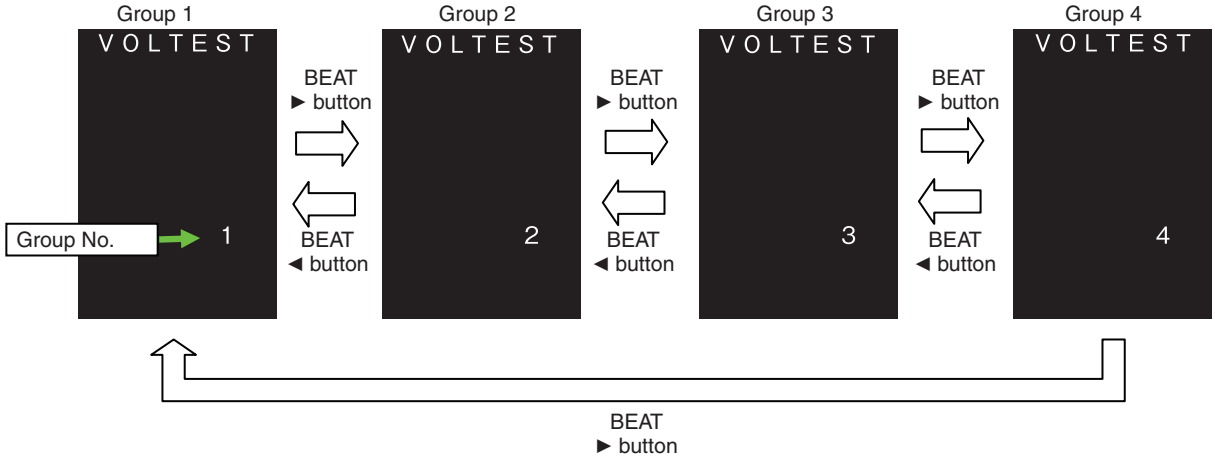

[Use of this mode during repair]

- For failure judgment of the rotary VRs
- For operation check of a rotary VR after replacement

• Group 1

Rotary VRs whose AD conversion values can be confirmed:

- CH1 TRIM control, CH2 TRIM control, CH3 TRIM control, CH4 TRIM control, EQ HI control, EQ LOW control, COLOR control

VR to be tested	Lit LED or FL	Remarks
CH1 TRIM control	CH1 Channel Level Indicator LED	"-∞": Lights off "+9": Full Illuminate
CH2 TRIM control	CH2 Channel Level Indicator LED	"-∞": Lights off "+9": Full Illuminate
CH3 TRIM control	CH3 Channel Level Indicator LED	"-∞": Lights off "+9": Full Illuminate
CH4 TRIM control	CH4 Channel Level Indicator LED	"-∞": Lights off "+9": Full Illuminate
EQ HI control	Master Level Indicator L LED	"-12": Lights off "+12": Full Illuminate
EQ LOW control	Master Level Indicator R LED	"-12": Lights off "+12": Full Illuminate
COLOR control	At the bottom of the FL display	"LOW": Lights off "HIGH": Full Illuminate

• Group 2

Rotary VRs whose AD conversion values can be confirmed:

• CH1 EQ/ISO HI control, CH2 EQ/ISO HI control, CH3 EQ/ISO HI control, CH4 EQ/ISO HI control, MIXING control, LEVEL control

VR to be tested	Lit LED or FL	Remarks
CH1 EQ/ISO HI control	CH1 Channel Level Indicator LED	"-26/-∞": Lights off "+6": Full Illuminate
CH2 EQ/ISO HI control	CH2 Channel Level Indicator LED	"-26/-∞": Lights off "+6": Full Illuminate
CH3 EQ/ISO HI control	CH3 Channel Level Indicator LED	"-26/-∞": Lights off "+6": Full Illuminate
CH4 EQ/ISO HI control	CH4 Channel Level Indicator LED	"-26/-∞": Lights off "+6": Full Illuminate
MIXING control	Master Level Indicator L LED	"CUE": Lights off "MASTER": Full Illuminate
LEVEL control	Master Level Indicator R LED	"-∞": Lights off "0": Full Illuminate

• Group 3

Rotary VRs whose AD conversion values can be confirmed:

• CH1 EQ/ISO MID control, CH2 EQ/ISO MID control, CH3 EQ/ISO MID control, CH4 EQ/ISO MID control, MASTER LEVEL control, BALANCE control

VR to be tested	Lit LED or FL	Remarks
CH1 EQ/ISO MID control	CH1 Channel Level Indicator LED	"-26/-∞": Lights off "+6": Full Illuminate
CH2 EQ/ISO MID control	CH2 Channel Level Indicator LED	"-26/-∞": Lights off "+6": Full Illuminate
CH3 EQ/ISO MID control	CH3 Channel Level Indicator LED	"-26/-∞": Lights off "+6": Full Illuminate
CH4 EQ/ISO MID control	CH4 Channel Level Indicator LED	"-26/-∞": Lights off "+6": Full Illuminate
MASTER LEVEL control	Master Level Indicator L LED	"-∞": Lights off "0": Full Illuminate
BALANCE control	Master Level Indicator R LED	"L": Lights off "R": Full Illuminate

• Group 4

Rotary VRs whose AD conversion values can be confirmed:

• CH1 EQ/ISO LOW control, CH2 EQ/ISO LOW control, CH3 EQ/ISO LOW control, CH4 EQ/ISO LOW control, BOOTH MONITOR control, LEVEL/DEPTH control

VR to be tested	Lit LED or FL	Remarks
CH1 EQ/ISO LOW control	CH1 Channel Level Indicator LED	"-26/-∞": Lights off "+6": Full Illuminate
CH2 EQ/ISO LOW control	CH2 Channel Level Indicator LED	"-26/-∞": Lights off "+6": Full Illuminate
CH3 EQ/ISO LOW control	CH3 Channel Level Indicator LED	"-26/-∞": Lights off "+6": Full Illuminate
CH4 EQ/ISO LOW control	CH4 Channel Level Indicator LED	"-26/-∞": Lights off "+6": Full Illuminate
BOOTH MONITOR control	Master Levele Indicator L LED	"-∞": Lights off "0": Full Illuminate
LEVEL/DEPTH control	Master Levele Indicator R LED	"MIN": Lights off "MAX": Full Illuminate

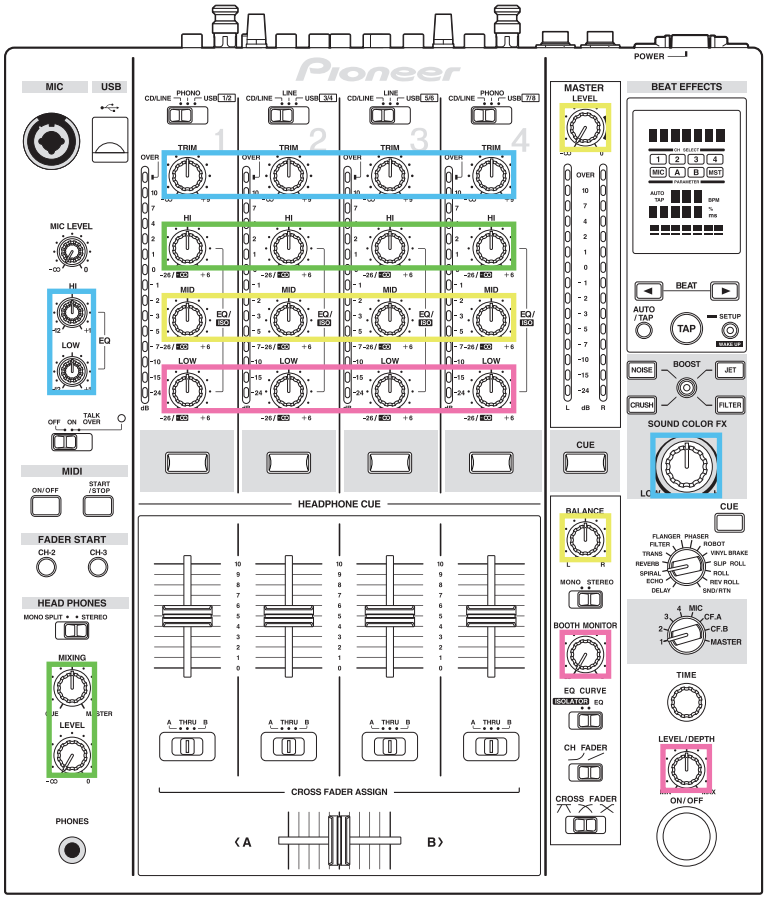

: Group 1
: Group 2
: Group 3
: Group 4

⑦ Mode 7 : Fader test. "FDRTEST"

- Mode for confirmation of the values of CH1–4 Channel FADER and CROSS FADER with the level indicator LEDs. When this mode is entered, “FDRTEST” is displayed at the top of the FL display.

[Use of this mode during repair]

- For failure judgment of the faders
- For operation check of a fader after replacement

Fader to be tested	Lit LED	Remarks
CH1 Channel Fader	CH1 Channel Level Indicator LED	"0": Lights off "10": Full Illuminate
CH2 Channel Fader	CH2 Channel Level Indicator LED	"0": Lights off "10": Full Illuminate
CH3 Channel Fader	CH3 Channel Level Indicator LED	"0": Lights off "10": Full Illuminate
CH4 Channel Fader	CH4 Channel Level Indicator LED	"0": Lights off "10": Full Illuminate
Cross Fader	Master Level Indicator L LED	"A": Lights off "B": Full Illuminate

⑧ Mode 8 : Confirmation of device. "DEVICE"

- Mode for confirming device information
  When this mode is entered, "DEVICE" is displayed at the top of the FL display.
- With this mode, perform only a check of SDRAM for DSP.
  If SDRAM works normally at the middle of FL display, be indicated with "OK" and be indicated at the abnormality with "NG".
  When a system is checking it, be indicated with "CHK".

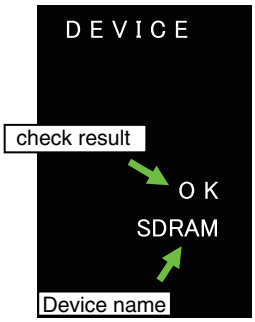

Device, Address	FL Display Name	Remarks
SDRAM for DSP	SDRAM	During a check : CHK Normal : OK Abnormal : NG

⑨ Mode 9 : Channel Level Indicator LED test. "LEDTEST"

- Mode for confirming lighting of the level indicator LEDs
  When this mode is entered, “LEDTEST” is displayed at the top of the FL display.
  The LEDs for CH1 CUE button, CH2 CUE button, CH3 CUE button, CH4 CUE button, MASTER CUE button, and EFFECT CUE button light.

- Each time the CUE button is pressed, the level indicator LEDs for each channel light one by one from the bottom.
  At first, all the LEDs are unlit.
  If the CUE button is pressed after it was pressed 15 times (when the top LED is lit), all the LEDs become unlit again.

Button to be tested	Lit Meter	Remarks
CH1 CUE button	CH1 Channel Level Indicator LED	
CH2 CUE button	CH2 Channel Level Indicator LED	
CH3 CUE button	CH3 Channel Level Indicator LED	
CH4 CUE button	CH4 Channel Level Indicator LED	
MASTER CUE button	Master Level Indicator L LED	
EFFECT CUE button	Master Level Indicator R LED	

⑩ Mode 10 : AD values of the rotary VRs test. "VOL AD"

- Mode for displaying the AD values of rotary VRs on the FL display for confirmation.
  When this mode is entered, “VOL AD” is displayed at the top of the FL display.
  To indicate the AD values for several rotary VRs with a single level meter, the rotary VRs are divided into 4 groups.
  The group pages can be changed by pressing the BEAT ◄, ► button.
  When the groups are switched, the name of the VR at the top of the group list is displayed at the bottom of the FL display.
  The rotary VRs in a group can be changed by pressing the CH1–4 CUE button.

- The maximum amplitude value among AD conversion values for a rotary VR being tested can be confirmed on each page of this mode.
  The value is expressed with the number of segments lit at the bottom of the FL display. The measurement procedure is as indicated below.
  Turn the rotary VR you wish to test to a desired position then press the EFFECT CUE key to start measurement. To reset, press the EFFECT CUE key again. During measurement, the maximum amplitude value will be continuously displayed.
  The EFFECT CUE key is lit during measurement and goes dark when reset.
  Details on the amplitude value display are shown in the figures below.

An amplitude value in the range of ±1 to ±6 with regard to the VR value at the beginning of measurement is displayed.
For a value greater than +7 or less than -7, all the 7 segments are lit.

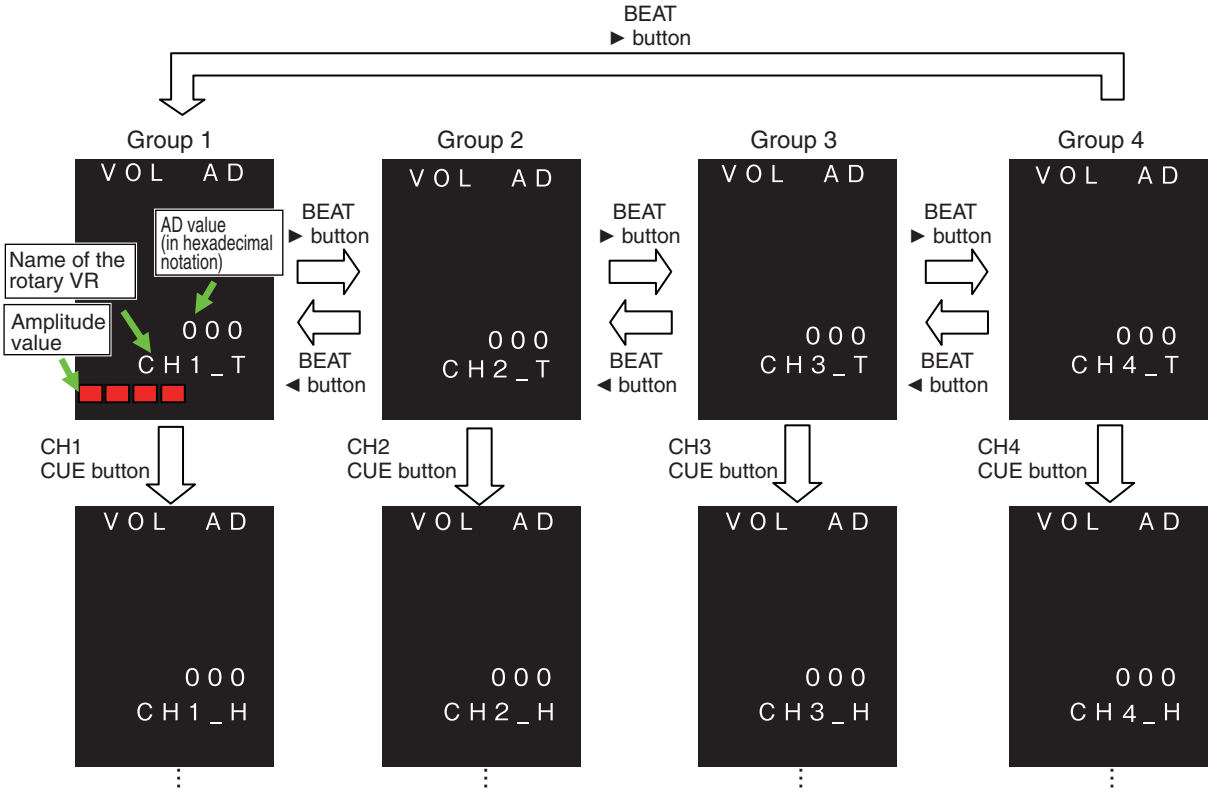

Note:
If the CUE button is pressed while the last VR on each group list is displayed, the top VR on that group list will then be displayed.

When the BEAT ◄, ► button is pressed for a layer lower than the 2nd one, the top VR on the list of the next group will be displayed.

[Use of this mode during repair]

- For failure judgment of the rotary VRs
  As a guide, amplitude values higher than +4 or lower than -4 may be judged as failure.
  The VRs can be set to any position during measurement. Possible symptoms are shown below.
  - The volume changes arbitrarily.
  - Interrupted sound leakage occurs even if the volume is decreased to the minimum at the Master or ZONE.
  - The MIDI signal is output even if the corresponding VR is not operated.
- For operation check of a rotary VR after replacement

• Group 1

Rotary VRs whose AD conversion values can be confirmed:

- CH1 TRIM control, CH1 EQ/ISO HI control, CH1 EQ/ISO MID control, CH1 EQ/ISO LOW control, COLOR control, EQ HI control, EQ LOW control

VR to be tested	FL Display Name	Remarks
CH1 TRIM control	CH1_T	"-∞": 000 "+9": 3FF
CH1 EQ/ISO HI control	CH1_H	"26/-∞": 000 "+6": 3FF
CH1 EQ/ISO MID control	CH1_M	"26/-∞": 000 "+6": 3FF
CH1 EQ/ISO LOW control	CH1_L	"26/-∞": 000 "+6": 3FF
COLOR control	BOOST	"LOW": 000 "HIGH": 3FF
EQ HI control	MIC_H	"-12": 000 "+12": 3FF
EQ LOW control	MIC_L	"-12": 000 "+12": 3FF

*As an AD value that is displayed on the FL display is the one before a hysteresis removal process, and as it has an amplitude, an error of about ±2 may be produced.

• Group 2

Rotary VRs whose AD conversion values can be confirmed:

- CH2 TRIM control, CH2 EQ/ISO HI control, CH2 EQ/ISO MID control, CH2 EQ/ISO LOW control, MIXING control, LEVEL control

VR to be tested	FL Display Name	Remarks
CH2 TRIM control	CH2_T	"-∞": 000 "+9": 3FF
CH2 EQ/ISO HI control	CH2_H	"-26/-∞": 000 "+6": 3FF
CH2 EQ/ISO MID control	CH2_M	"-26/-∞": 000 "+6": 3FF
CH2 EQ/ISO LOW control	CH2_L	"-26/-∞": 000 "+6": 3FF
MIXING control	HP_MX	"CUE": 000 "MASTER": 3FF
LEVEL control	HP_LV	"-∞": 000 "0": 3FF

*As an AD value that is displayed on the FL display is the one before a hysteresis removal process, and as it has an amplitude, an error of about ±2 may be produced.

• Group 3

Rotary VRs whose AD conversion values can be confirmed:

• CH3 TRIM control, CH3 EQ/ISO HI control, CH3 EQ/ISO MID control, CH3 EQ/ISO LOW control, MASTER LEVEL control, BALANCE control

VR to be tested	FL Display Name	Remarks
CH3 TRIM control	CH3_T	"-∞": 000 "+9": 3FF
CH3 EQ/ISO HI control	CH3_H	"-26/-∞": 000 "+6": 3FF
CH3 EQ/ISO MID control	CH3_M	"-26/-∞": 000 "+6": 3FF
CH3 EQ/ISO LOW control	CH3_L	"-26/-∞": 000 "+6": 3FF
MASTER LEVEL control	MSTLv	"-∞": 000 "0": 3FF
BALANCE control	MST_B	"L": 000 "R": 3FF

*As an AD value that is displayed on the FL display is the one before a hysteresis removal process, and as it has an amplitude, an error of about ±2 may be produced.

• Group 4

Rotary VRs whose AD conversion values can be confirmed:

• CH4 TRIM control, CH4 EQ/ISO HI control, CH4 EQ/ISO MID control, CH4 EQ/ISO LOW control, BOOTH MONITOR control, LEVEL/DEPTH control

VR to be tested	FL Display Name	Remarks
CH4 TRIM control	CH4_T	"-∞": 000 "+9": 3FF
CH4 EQ/ISO HI control	CH4_H	"-26/-∞": 000 "+6": 3FF
CH4 EQ/ISO MID control	CH4_M	"-26/-∞": 000 "+6": 3FF
CH4 EQ/ISO LOW control	CH4_L	"-26/-∞": 000 "+6": 3FF
BOOTH MONITOR control	BOOTH	"-∞": 000 "0": 3FF
LEVEL/DEPTH control	LV/DP	"MIN": 000 "MAX": 3FF

*As an AD value that is displayed on the FL display is the one before a hysteresis removal process, and as it has an amplitude, an error of about ±2 may be produced.

⑪ Mode 11 : AD values of the fader test. "FDR AD"

- Mode for displaying the AD values of the faders on the FL display for confirmation
  When this mode is entered, “FDR AD” is displayed at the top of the FL display.

- Mode 11 consists of 5 pages for indicating the values of 5 faders.
  The pages can be changed by pressing the BEAT ◄, ► button.
  When the groups are switched, the name of the VR at the top of the group list is displayed at the bottom of the FL display and its AD value is displayed in the middle.

- The maximum amplitude value among AD conversion values for a fader being tested can be confirmed on each page of this mode. The value is expressed with the number of segments lit at the bottom of the FL display. The measurement procedure is as indicated below.
  Set the fader you wish to test to a desired position then press the EFFECT CUE key to start measurement. To reset, press the EFFECT CUE key again. During measurement, the maximum amplitude value will be continuously displayed.
  The EFFECT CUE key is lit during measurement and goes dark when reset.
  Details on the amplitude value display are shown in the figures below.

An amplitude value in the range of ±1 to ±7 with regard to the VR value at the beginning of measurement is displayed.
For a value greater than +7 or less than -7, all the 7 segments are lit.

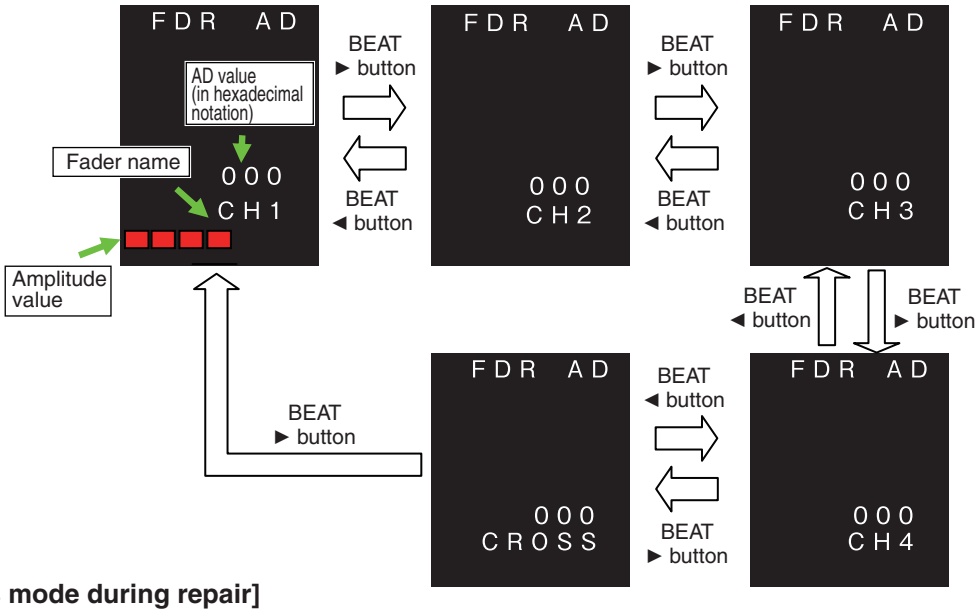

[Use of this mode during repair]

- For failure judgment of the faders
  As a guide, amplitude values higher than +4 or lower than -4 may be judged as failure.
  The VRs can be set to any position during measurement. Possible symptoms are shown below.
  - The volume changes arbitrarily.
  - Interrupted sound leakage occurs even if the volume is decreased to the minimum at the fader.
  - The MIDI signal is output even if the corresponding VR is not operated.
- For operation check of a fader after replacement

Faders that can be confirmed

Fader to be tested	FL Display Name	Remarks
CH1 Channel Fader	CH1	"0": 000 "10": 3FF
CH2 Channel Fader	CH2	"0": 000 "10": 3FF
CH3 Channel Fader	CH3	"0": 000 "10": 3FF
CH4 Channel Fader	CH4	"0": 000 "10": 3FF
Cross Fader	CROSS	"A": 000 "B": 3FF

4. Mode transition flowchart

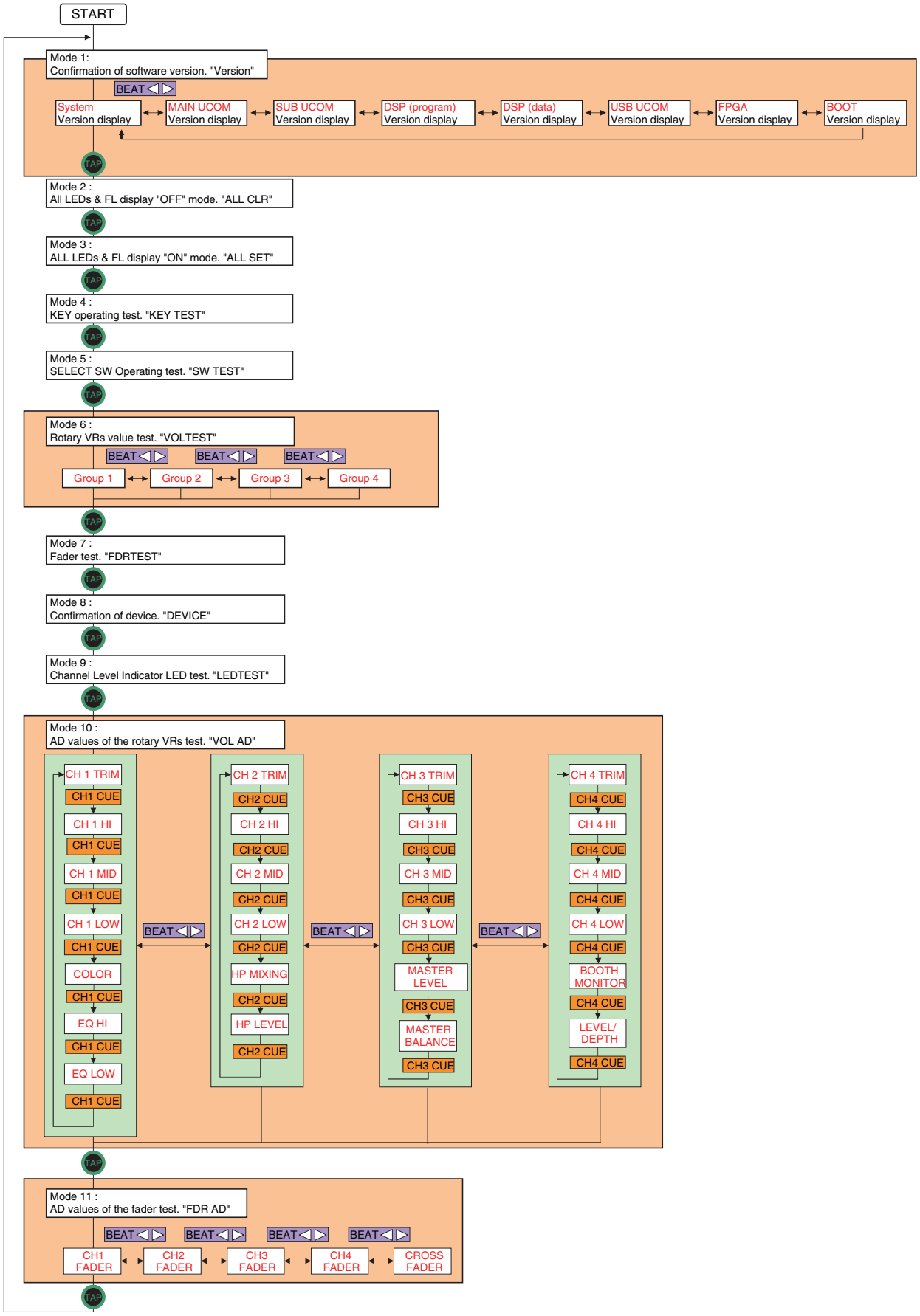

6.2 ABOUT THE DEVICE

Device Name	Function	Part No.	Reference No.	Assy
MAIN UCOM	Main control	DYW1827	IC2803	MAIN Assy
FLASH (4M)	Memory for Main, USB UCOM (Firmware)	DYW1828	IC2802	MAIN Assy
FPGA	For RAM, clock divider, SRC for digital out	XC3S50A-4FTG256C	IC3007	MAIN Assy
FLASH (4M)	Memory for DSP (Firmware)	DYW1829	IC3008	MAIN Assy
DSP	Audio DSP	D810K013DZKB400	IC3201	MAIN Assy
SDRAM (256M)	Memory for DSP (Work)	M12L2561616A-5TG2A	IC3202	MAIN Assy
USB UCOM	Controller for USB	ADSP-BF525BBCZ-5A	IC2603	MAIN Assy
SDRAM (64M)	Memory for USB UCOM (Work)	M12L64164A-5TG2Y	IC2604	MAIN Assy
SUB UCOM	LED, FL, KEY, VR control	DYW1830	IC6601	PNLA Assy

Two or more FLASH and SDRAM are mounted in this unit.
Please judge the device which you should diagnose in reference to this list.

7. DISASSEMBLY

Note: Even if the unit shown in the photos and illustrations in this manual may differ from your product, the procedures described here are common.

Knobs and Volumes Location

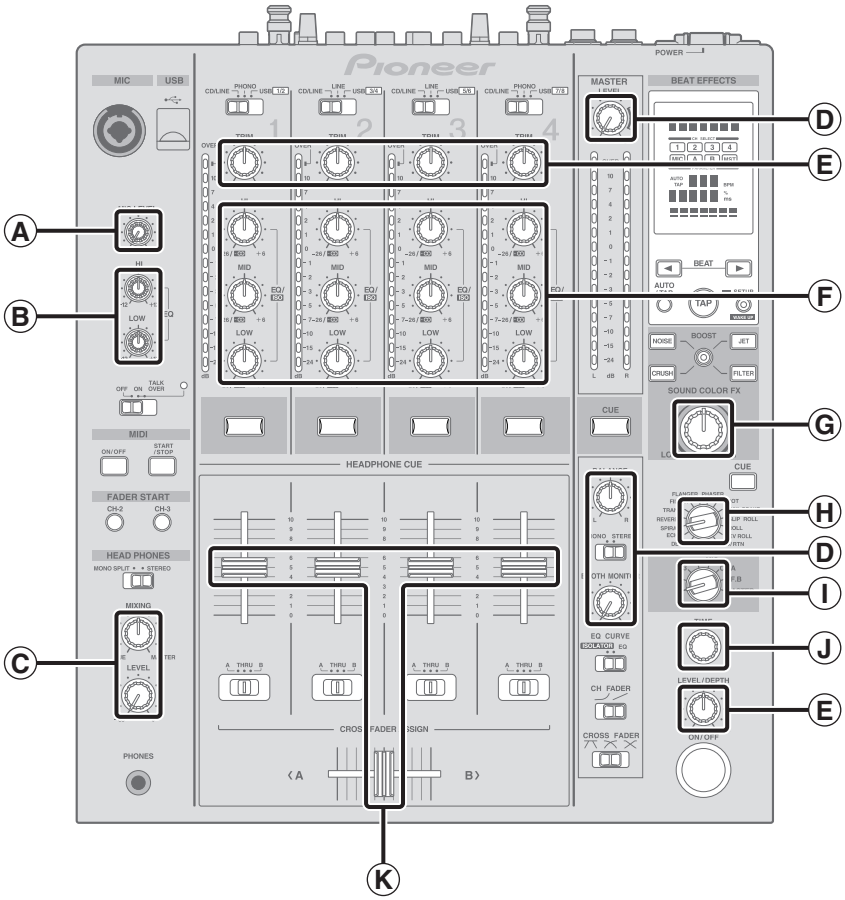

(A) DAA1302 ×1

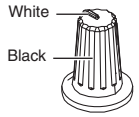

(B) DAA1301 ×2

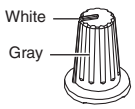

(C) DAA1212 ×2

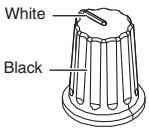

(D) DAA1210 ×3

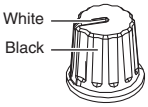

(E) DAA1220 ×4

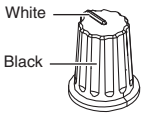

(F) DAA1306 ×12

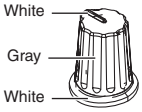

(G) DAA1309 ×1

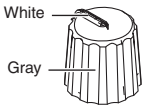

(H) DAA1205 ×1

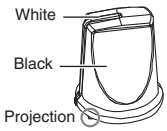

(K) Slider knob 1 (DAC2684) ×5 + Slider knob 2 (DAC2685) ×5 + Slider knob stopper (DNK5888) ×5

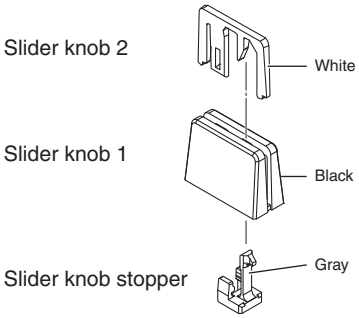

(I) DAA1213 ×1

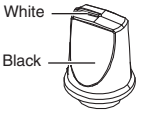

(J) DAA1214 ×1

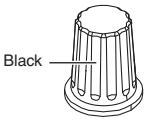

Disassembly

[1] Control Panel Section

[1-1] Front panel

(1) Remove the six screws. (BBZ40P060FTB)
(2) Remove the front panel.

Screw tightening order

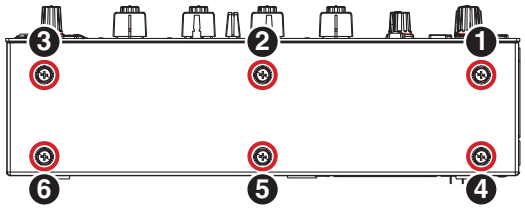

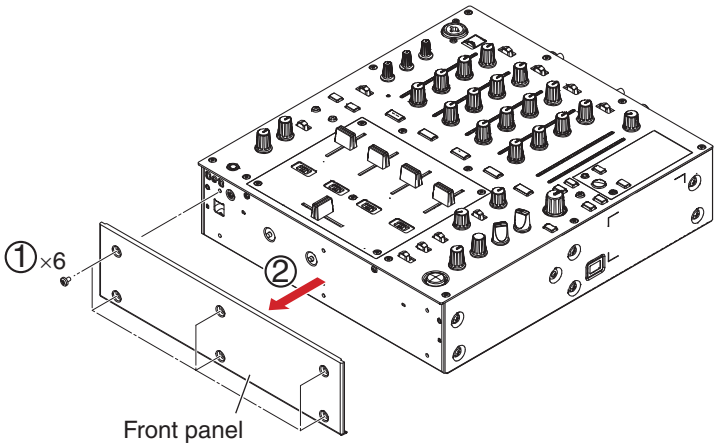

[1-2] Control panel section

(1) Remove the one knob (DAA1302).
(2) Remove the two screws. (BBZ30P060FTB)
(3) Remove the two screws. (BBZ30P060FTC)
(4) Remove the two screws. (BPZ30P120FTB)
(5) Remove the six screws.
(K: DBA1290, S: DBA1436)

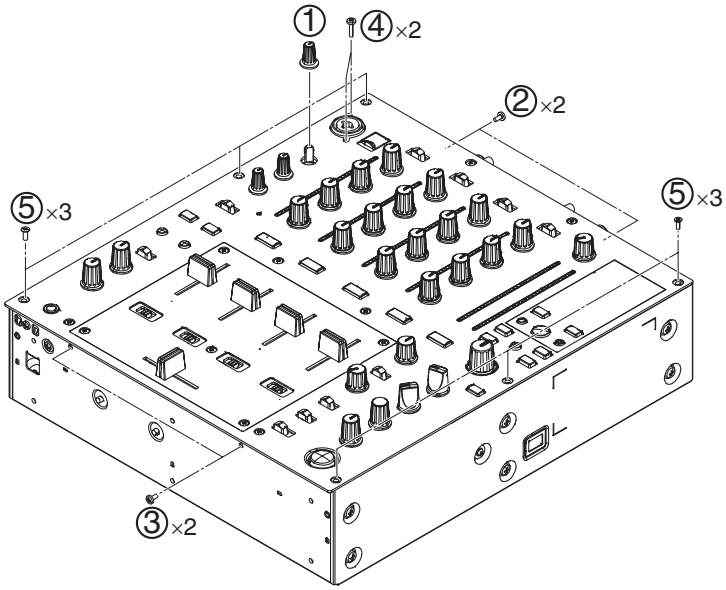

Screw tightening order

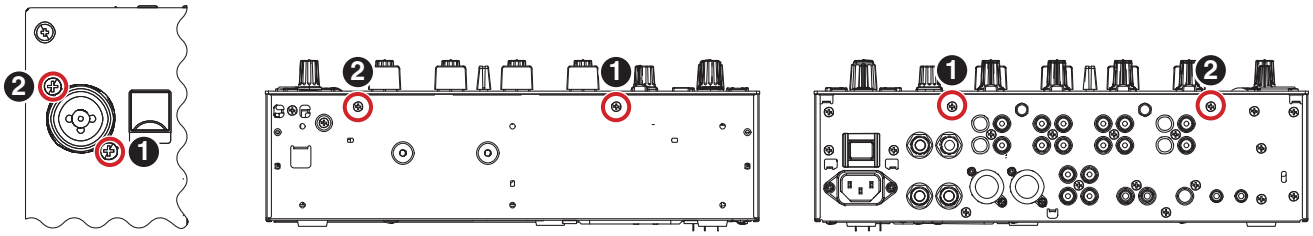

(6) Remove the control panel section.

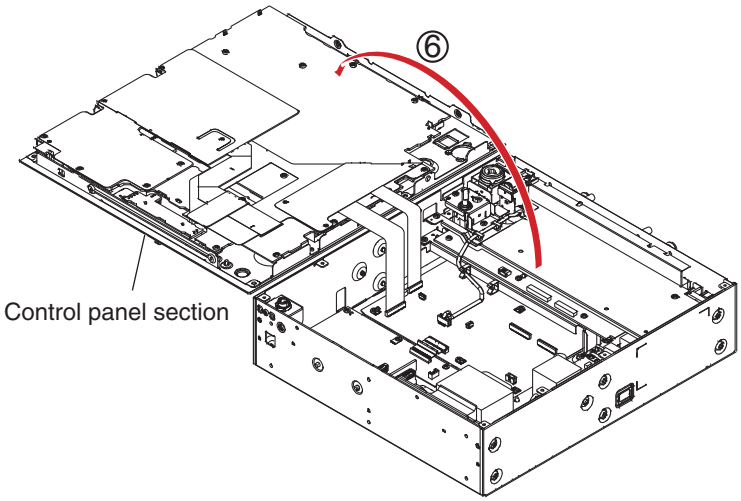

[2] INPUT Assy

(1) Disconnect the four short pin plugs.
(2) Remove the two washers and two nuts.
(3) Remove the two screws. (BBZ30P060FTB)
(4) Remove the four screws. (BPZ30P080FTB)

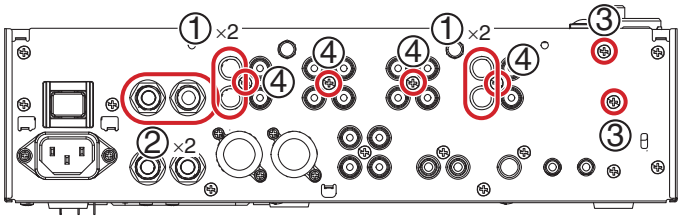

• Rear view

Screw tightening order

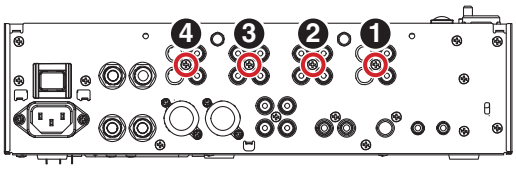

Nut tightening order

Tighten the nuts after tightening the screws indicated in the figure on the left.

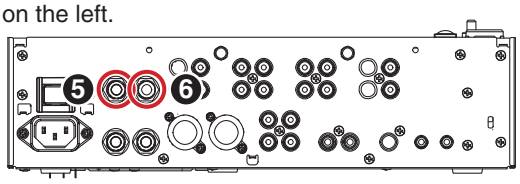

(5) Remove the bracket/SCN by removing the one screw. (BBZ30P060FTC)
(6) Remove the MTRM Assy with stay by removing the one screw. (BBZ30P060FTC)
(7) Remove the MIC1 Assy.

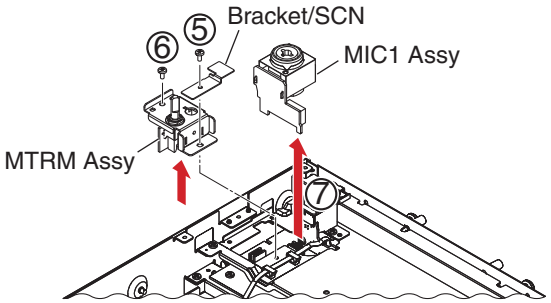

(8) Remove the five screws. (BBZ30P060FTC)
(9) Remove the shield plate/INP.

Screw tightening order

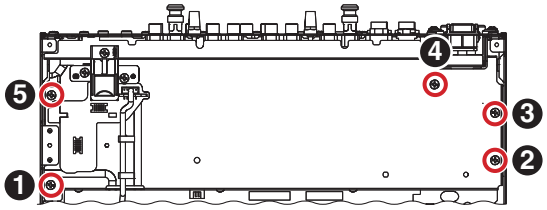

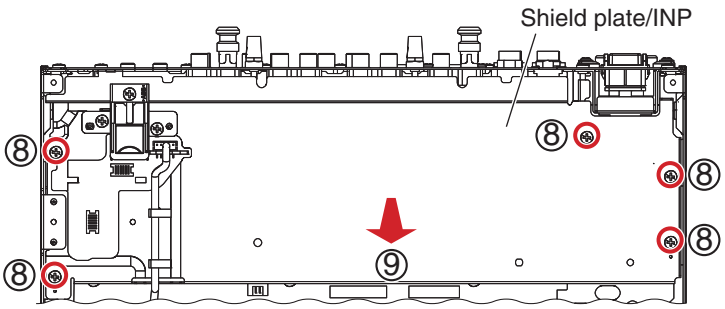

(10) Remove the three screws. (BBZ30P060FTC)

Screw tightening order

Before tightening these screws, be sure to tighten the screws and nuts for securing the INPUT Assy to the rear panel. (Positioning of the INPUT Assy is determined by its attachment position on the rear panel.)

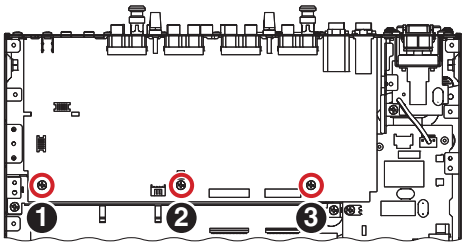

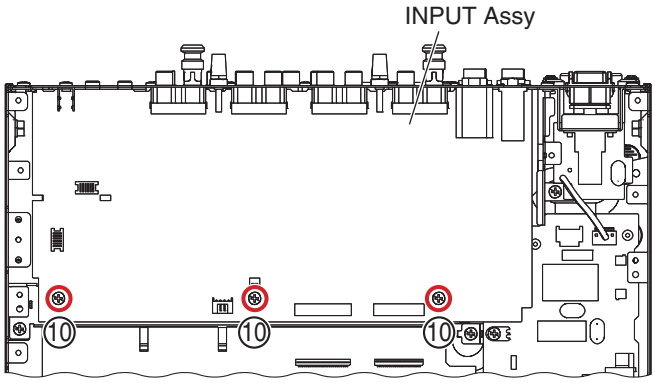

(11) Lift up the INPUT Assy to a front direction.

Diagnosis

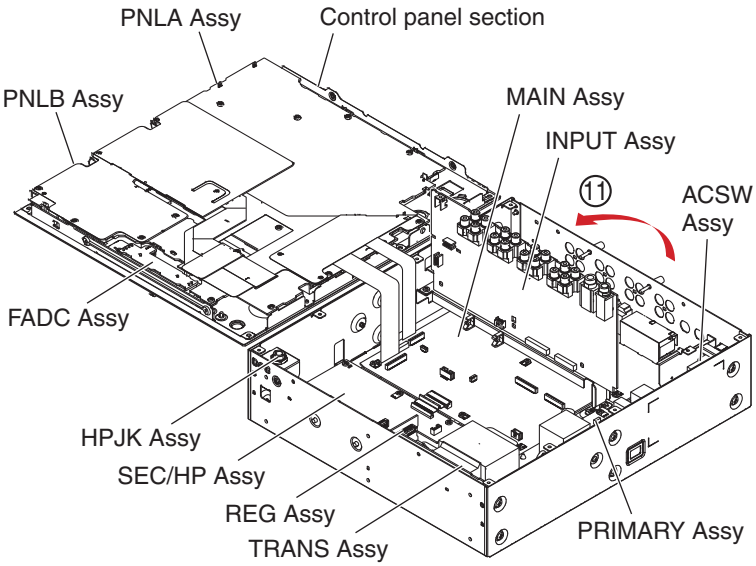

Reference information

Screw tightening order (Rear panel)

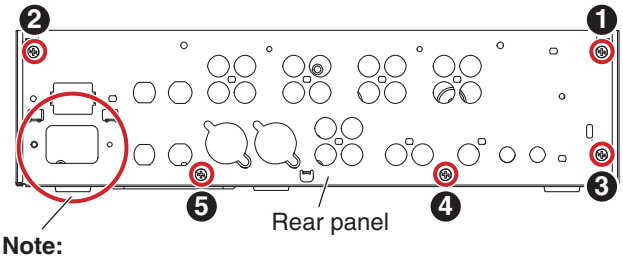

Note:
The rear panel is attached to the chassis with the INLET connector. Therefore, when detaching the rear panel, remove the two screws for INLET connector.

Screw tightening order (MAIN Assy)

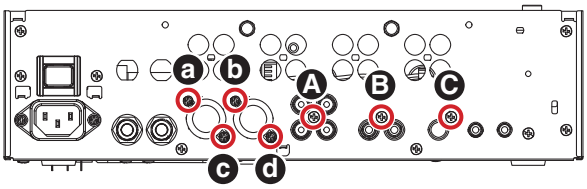

Nut tightening order (MAIN Assy)

Tighten the nuts after tightening the screws indicated in the figure on the upper.

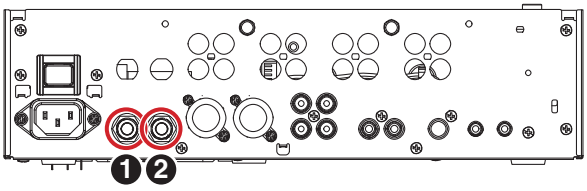

Screw tightening order (MAIN Assy)

Before tightening these screws, be sure to tighten the screws and nuts for securing the MAIN Assy to the rear panel. (Positioning of the MAIN Assy is determined by its attachment position on the rear panel.)

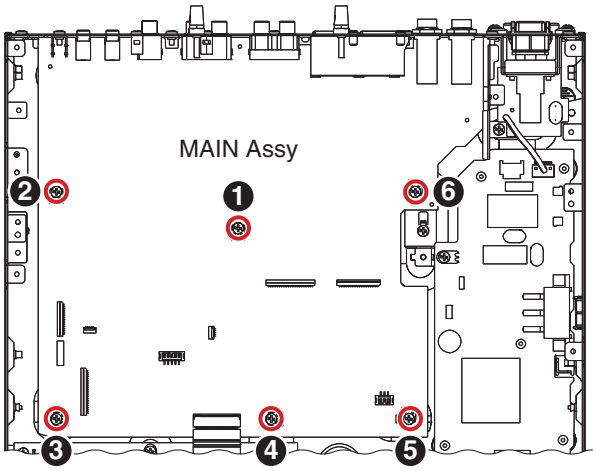

Screw tightening order (Bracket PSW)

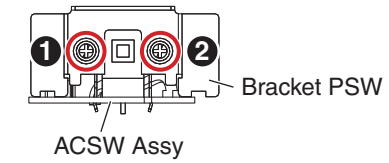

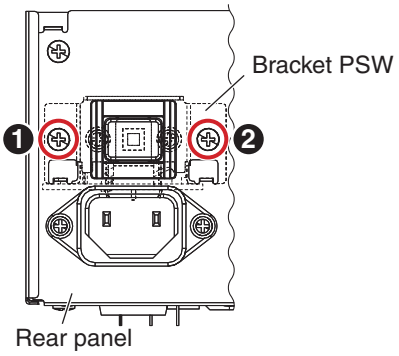

Screw tightening order (SEC/HP, REG Assy)

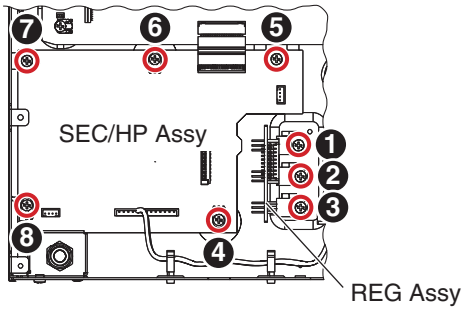

Screw tightening order (Stay/INP)

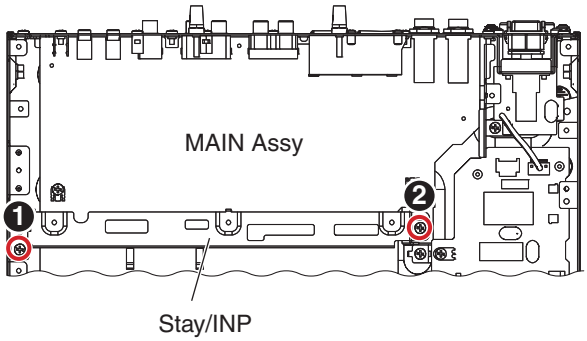

Screw tightening order (Bracket/USB)

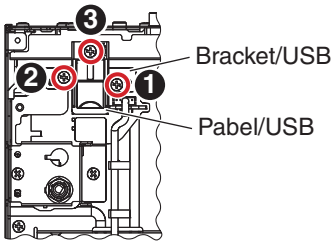

Screw tightening order (Bracket/MIC)

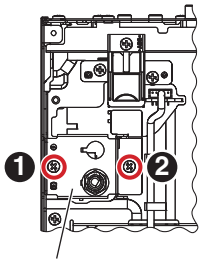

Screw tightening order (Side panel L)

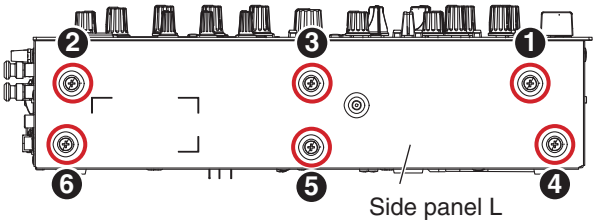

Screw tightening order (Side panel R)

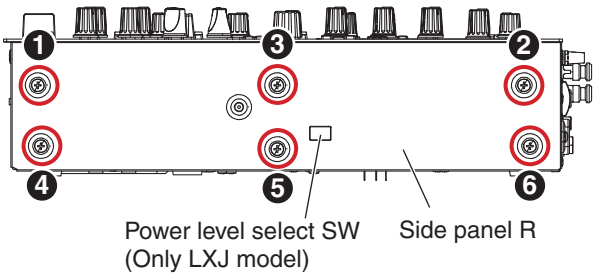

Jumper wire styling

3 rotations.
(For improving sound quality)

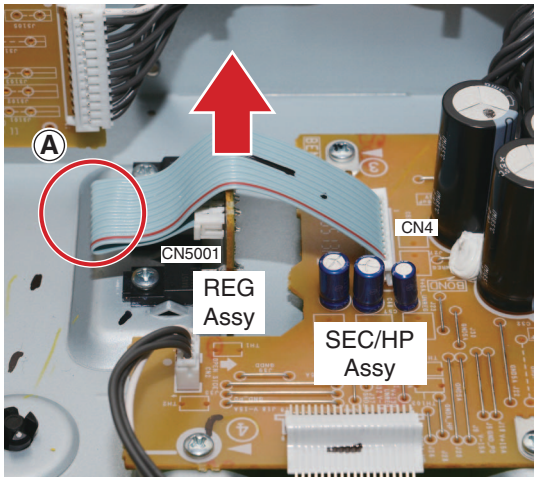

Bend the FFC at the place Ⓐ above so that the cable will not bulge in the direction indicated by the arrow (⬆).

Locking wire saddle position (LXJ model only)

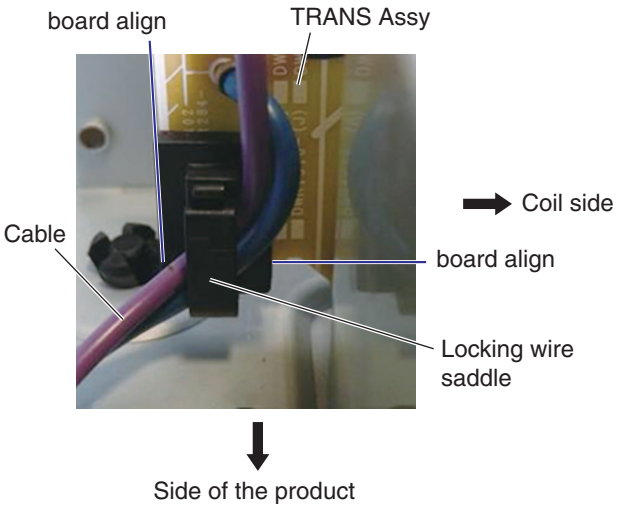

1: Adhere the Locking Wire Saddle so that its corner and that of the board align.
2: Be sure to clamp the cables to the Locking Wire Saddle so that they are styled coming from the coil side toward the side of the product, as shown in the figure above.

[3] Panel Section

[3-1] Control panel and Fader panel

(1) Remove the all knobs.
(2) Remove the five silider knobs 2,
five slider knobs 1, five slider knob stoppers.
(See below.)

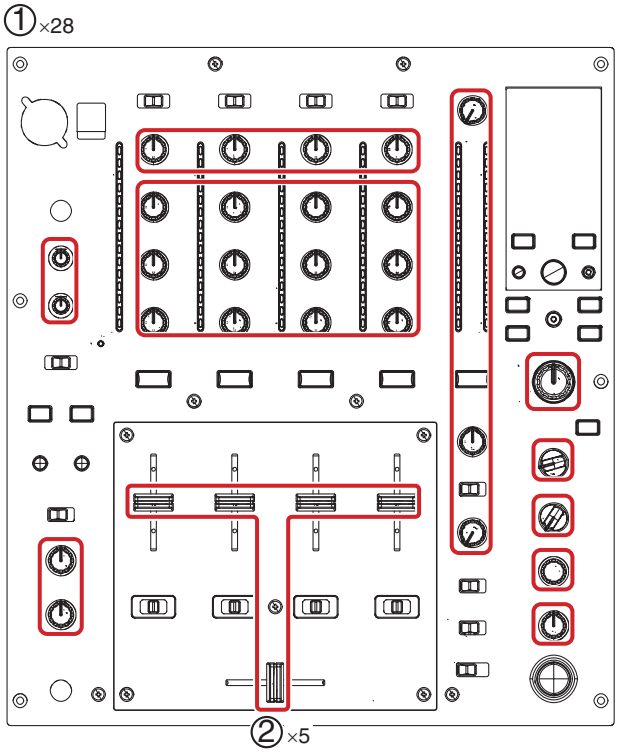

The reference of the direction

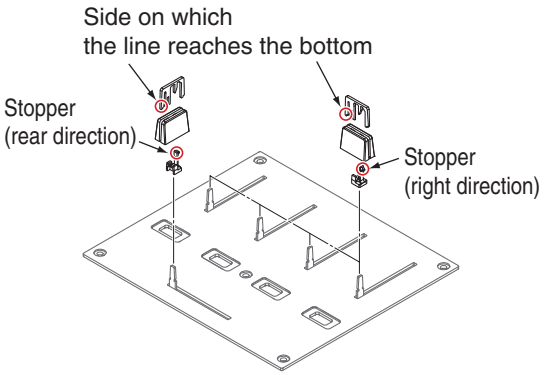

• Disassembly of the slider knob

The new slider knob adopted by this product is designed so that it is not pulled out easily.
Therefore, the method for removing the slider knob is different from the conventional method; it can only be pulled out after slider knob 2 is removed.

① Find the side on which the line reaches the bottom.

② Insert a pair of tweezers etc. beneath the line then push the slider knob 2 upward. To protect the panel from being scratched, use protective material.

③ Remove the slider knob 2.

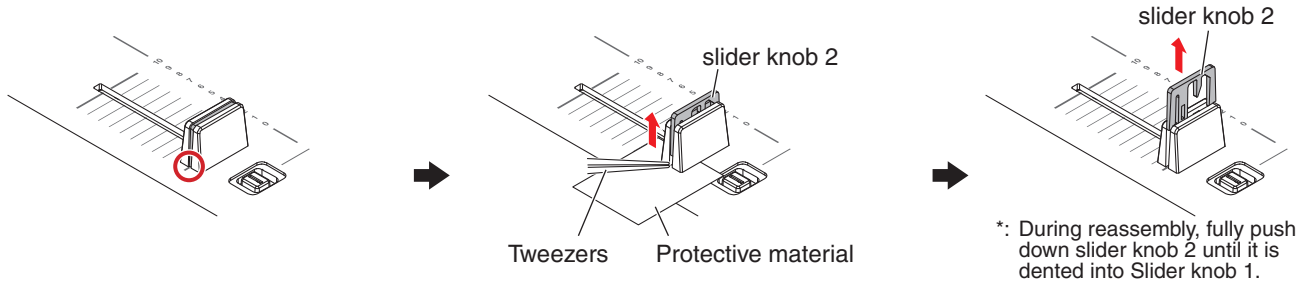

④ Remove the Slider knob 1.

⑤ Remove the slider knob stopper.

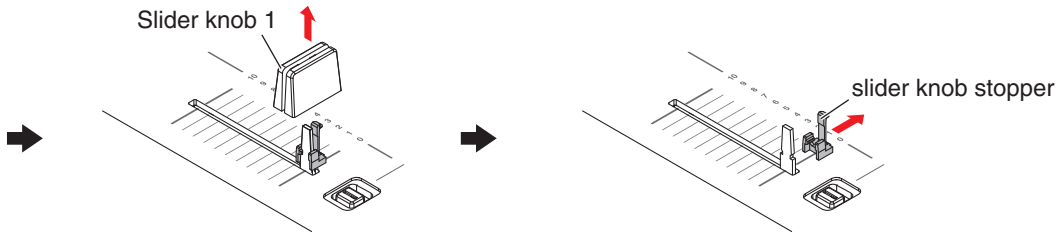

(3) Remove the six screws.
(K: DBA1290, S: DBA1436)
(4) Remove the five screws.
(K: DBA1290, S: DBA1436)
(5) Remove the Control panel and panel/FD.

Note:
When you remove only panel/FD, it is a process of step (2), (4).

Screw tightening order
(for MAIN unit)

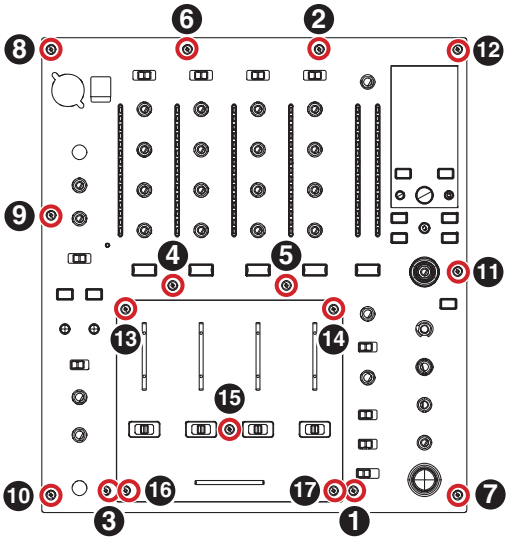

Note:
Screws ❶ – ❻ are for securing the control panel and stay/PNL, screws.
Screws ❼ – ⓬ are for securing the Control Panel Assy and the cabinet of the product.
Screws ⓭ – ⓱ are for securing the Panel/FD and stay/PNL.

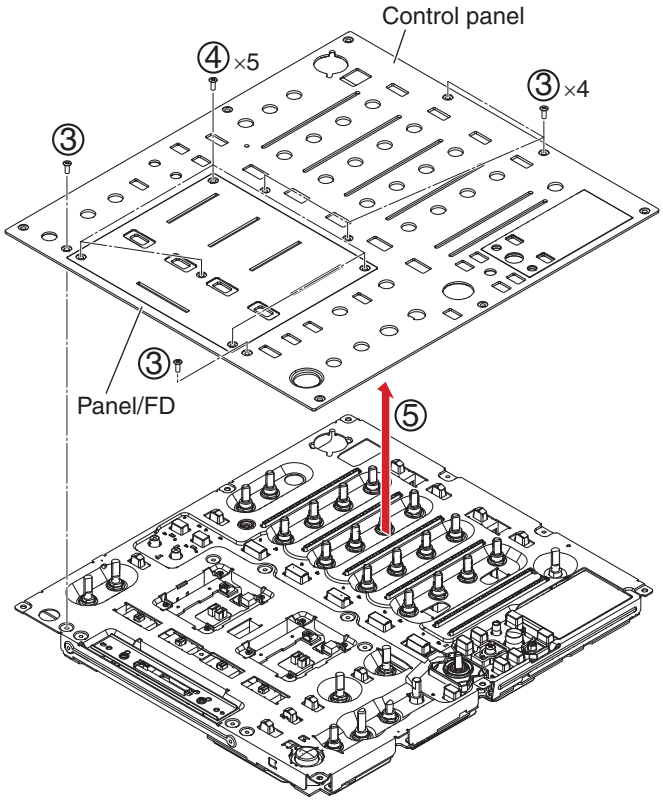

[3-2] Fader section
(1) Remove the two screws. (BBZ30P060FTC)
(2) Remove the FADC Assy.
(3) Disconnect the one connector. (CN7002)
(4) Remove the eight screws. (BSZ20P040FTB)
(5) Disconnect the four connectors.
(CN6611, 6610, 6612, 6609)
(6) Remove the FAD1 to FAD4 Assemblies.

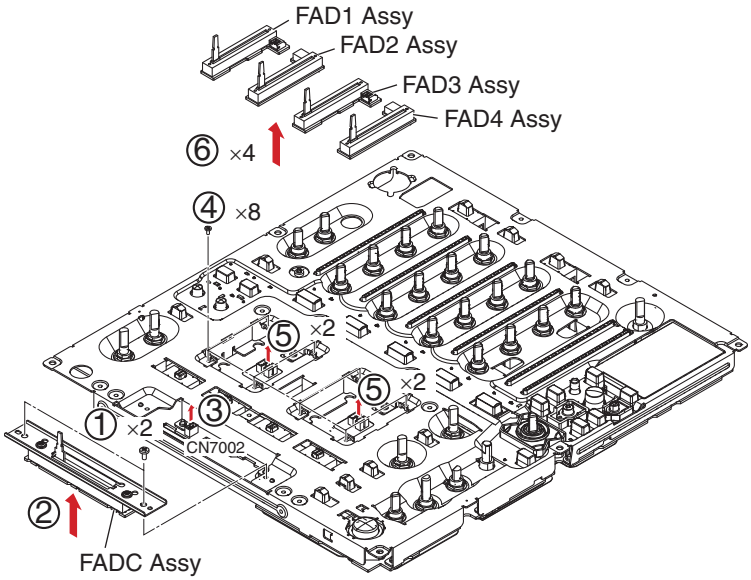

• Connectors color
Match the color of a connected connector.

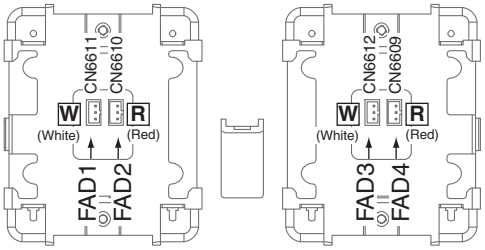

Screw tightening order

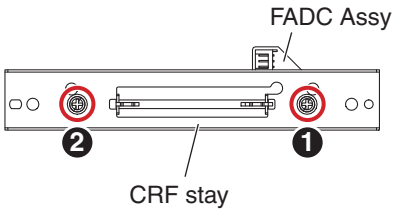

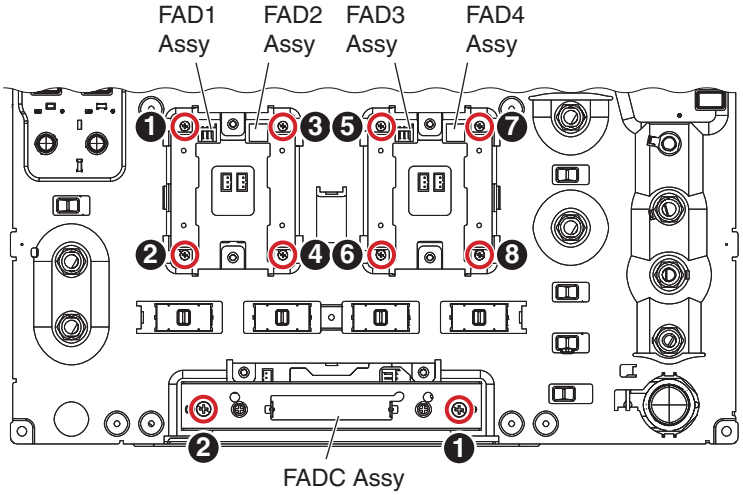

[3-3] PNLA and PNLB Assemblies

(1) Remove the lens.
(2) Remove the ring.
(3) Remove the reflector.

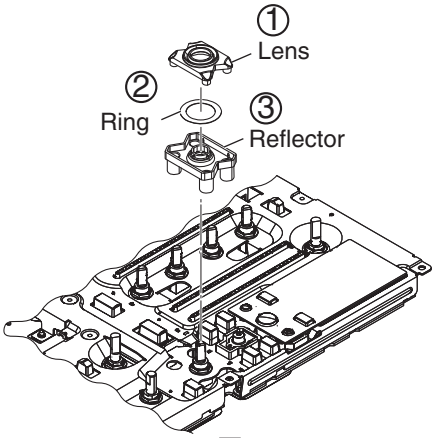

(4) Remove the 27 flange nuts M9.
(5) Remove the one nut.

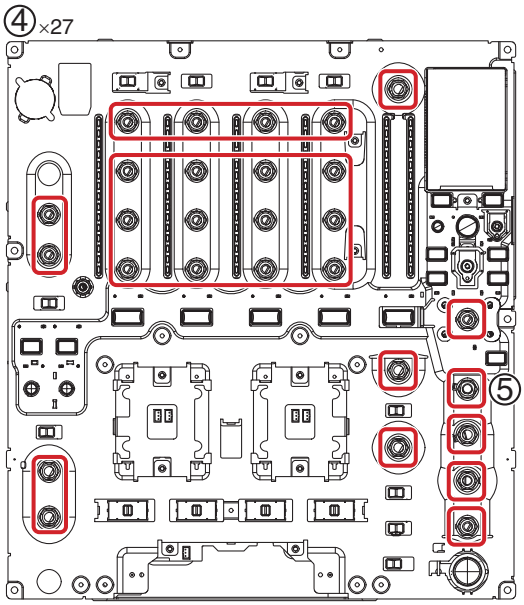

(6) Remove the button Assy/UTY.
(7) Remove the four slide SW caps (W).
(8) Remove the SW packing (EF).

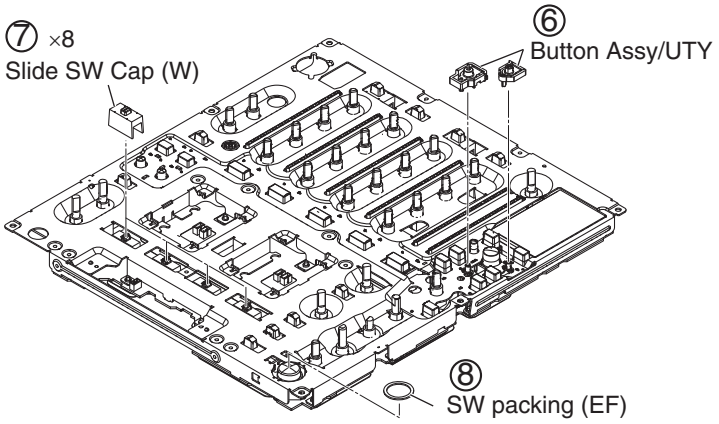

(9) Reverse the control panel section.
(10) Remove the six screws. (BBZ30P060FTC)
(11) Remove the five screws. (BBZ30P060FTC)
(12) Remove the barrier/PNL and barrier/A.
(13) Remove the 14 screws. (BBZ30P060FTC)
(14) Remove the PNLA and PNLB Assemblies.

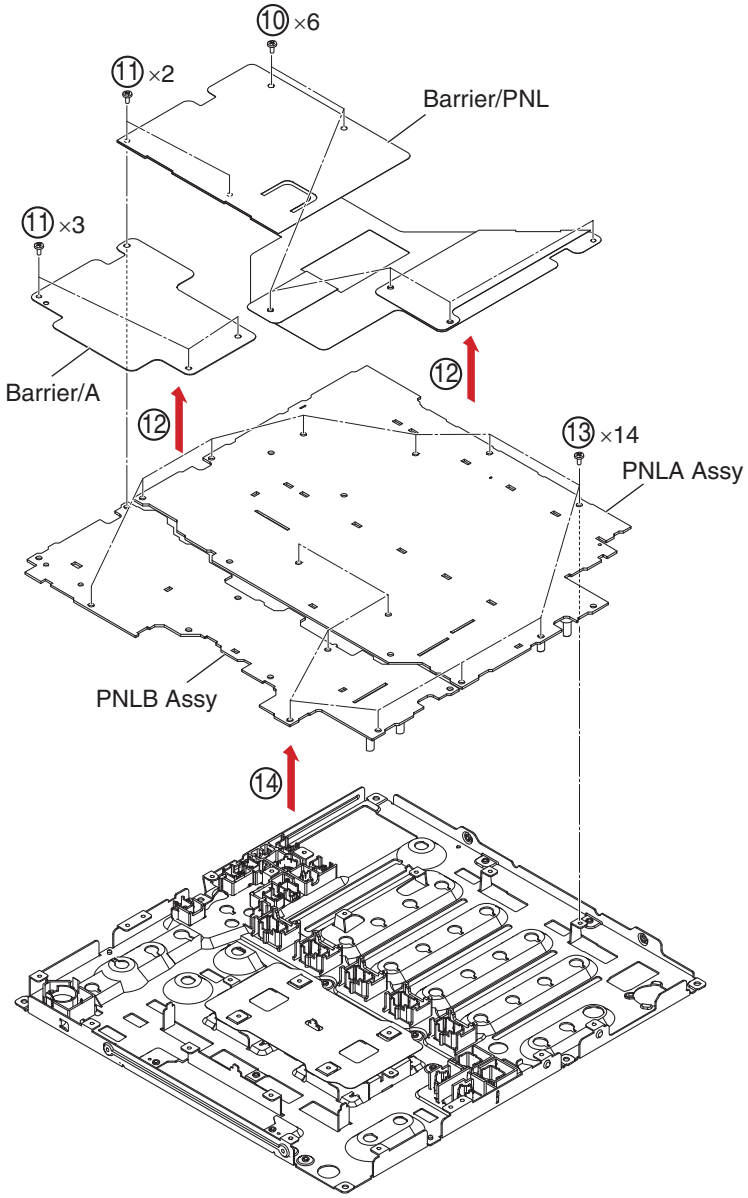

• Bottom view

Screw tightening order

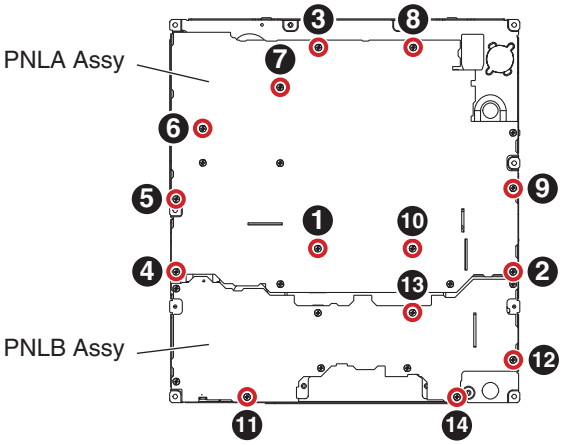

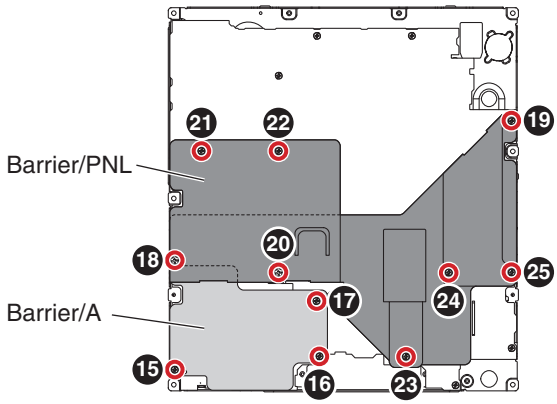

Note:
Tighten the screws (㉑ to ㉕) after performing styling of flexible cables.

Flexible cables, Barriers styling

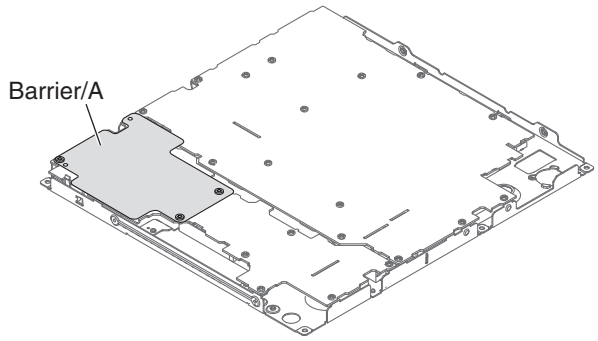

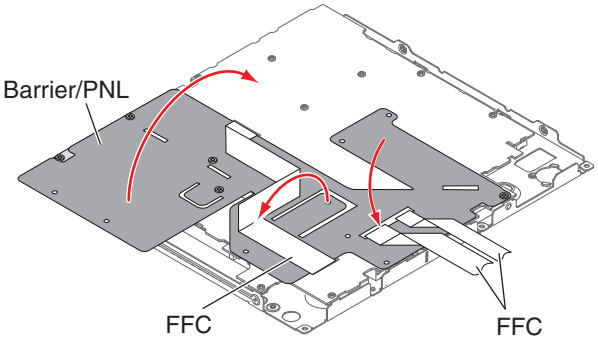

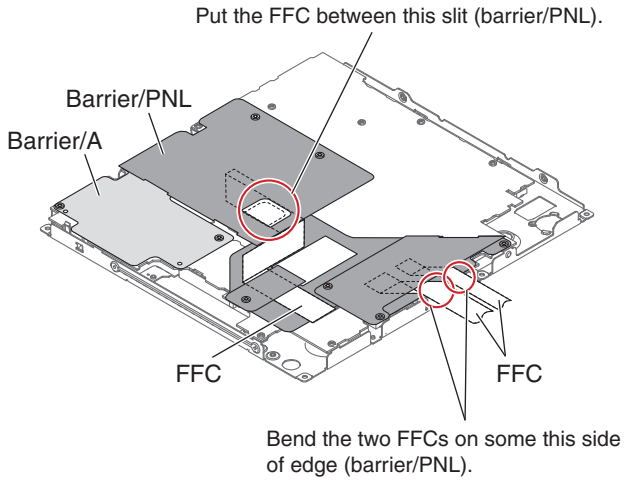

8. EACH SETTING AND ADJUSTMENT
8.1 NECESSARY ITEMS TO BE NOTED

It is recommended that you take note of the setting data before starting repair.
Use “8.4 SHEET FOR CONFIMATION OF THE USER SETTINGS” for taking notes.
After repairing, be sure to check the version of the firmware (see “Mode 1: For confirmation of the version” in “TEST MODE”), and if it is not the latest one, update to the latest version.

When the following parts are replaced, confirmation of the version of the firmware, updating to the latest version of the firmware.

- MAIN Assy
  (MAIN UCOM: IC2803, FLASH: IC2802, FLASH: IC3008)
- PNLA Assy
  (SUB UCOM: IC6601)

8.2 UPDATING OF THE FIRMWARE

A. Confirmation of the Download Files:

1. Unzip the downloaded file.

For Windows:
Save the downloaded file [DJM-750Updater_vxxx_Win.zip] to an arbitrary directory such as desktop and unzip it.

For MacOS:
Save the downloaded file [DJM-750Updater_vxxx_Mac.dmg] to an arbitrary directory such as desktop and double click to mount it.

2. Check the unzipped file.

For Windows:
The [DJM-750Updater_vxxx_Win] folder is generated when the file is unzipped.
Please ensure the following file is included in the folder.
1. [DJM750UP.upd]
2. [DJM-750Updater_vxxx.exe]
3. pcupdate.dll

For MacOS:
The [DJM-750Updater_vxxx_Mac] folder is generated when the file is extraced.
Please ensure the following file is included in the folder.
1. [DJM-750Updater_vxxx.app]

Notes:
• xxx is the version of the new firmware.
• Extension (.exe or .app) might not be shown depending on your computer settings.

B. Set up DJM-750 for updating:

1. Connect your computer with DJM-750.

Connect your computer and the DJM-750 using a USB cable.

2. Go into update mode.

While holding [CUE (BEAT EFFECT)] and [ON/OFF (BEAT EFFECT)] buttons, press the Power button to go into update mode.

3. Check the current version.

Please check the current version of your firmware by checking the version displayed on the VFD.
If the current version, xxx, is displayed, you do not need to continue the update process.

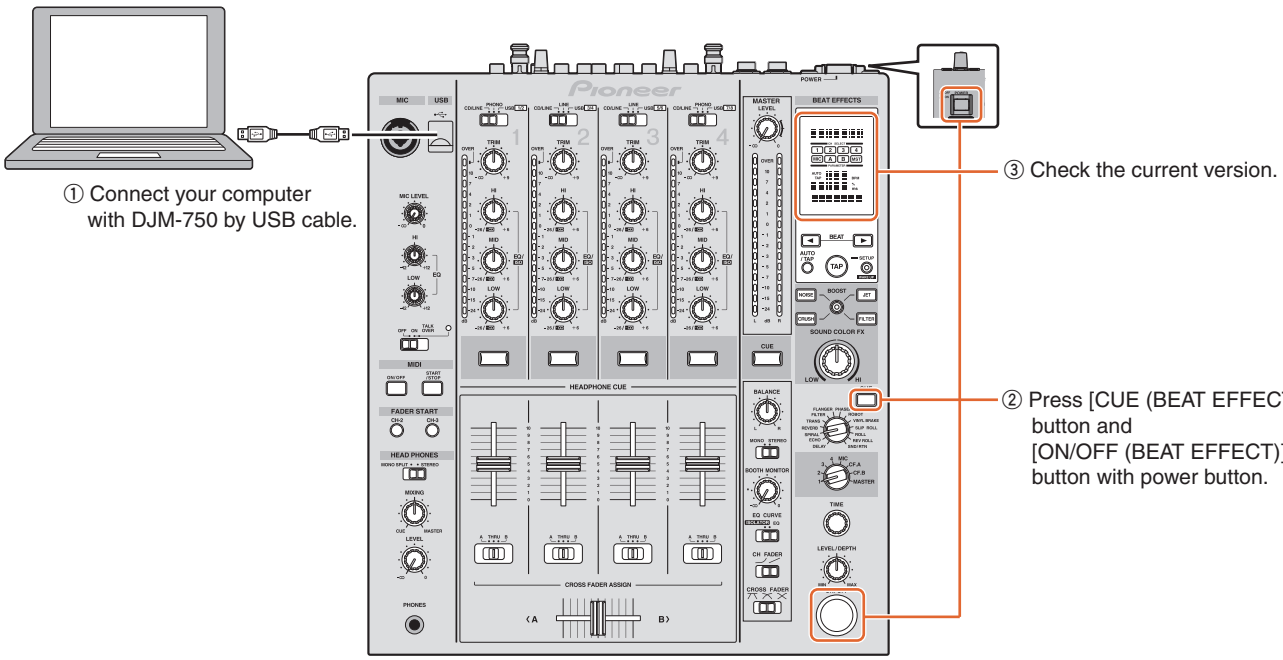

C. Update the firmware from your computer:

1. Start updating your firmware.

Close all the applications before you start updating.

<STEP1> Start the updater program.

For Windows:
Double click [DJM-750Updater_vxxx.exe] to start the updater program.
For MacOS:
Double click [DJM-750Updater_vxxx.app] to start the updater program.

<STEP2> Select a language.

Select a language from the dropdown list and click [OK].
The figure below shows selecting English.

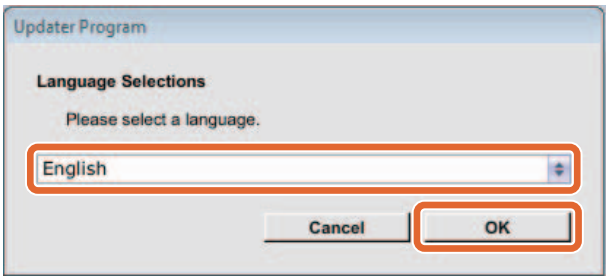

<STEP3> Check the version.

Ensure that the version for this update is x.xx and click [Start].
The figure below shows an example.
DO NOT remove Power and/or USB cables during updating.

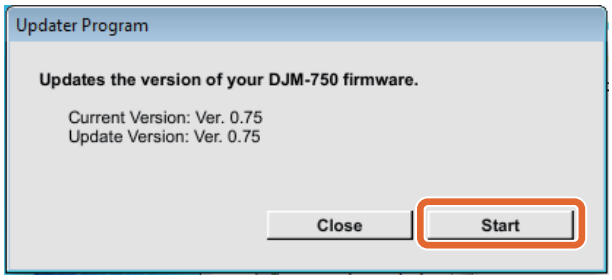

Update screen during updating

Please wait until the progress bar on the screen reaches 100%.

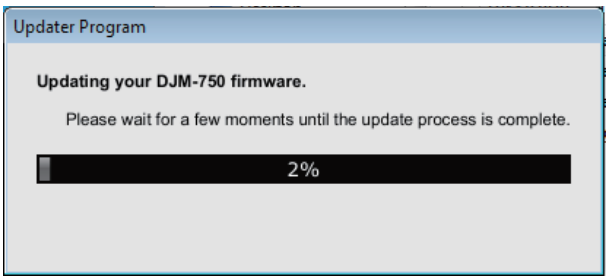

<STEP4> Update screen when the update is completed

Make sure that the update process has been completed. When the following "Update completed" message appears, click [OK]. "SUCCESS" message appears on the VFD of DJM-750 if the update is successfully completed.

<STEP5> Restart DJM-750.

Please turn off the power of DJM-750 and then turn it on again.

2. Check the current DJM-750 version to make sure that the update was completed.

<STEP1> Start DJM-750 in update mode:

While holding [CUE (BEAT EFFECT)] and [ON/OFF (BEAT EFFECT)] buttons, press the Power button.

<STEP2> Check the current version:

If the current version x.xx is displayed on the VFD of the DJM-750, the update has been successfully completed.

[Reference Information]

You can run this updater program only on the following OS:
Windows: WindowsXP/ Windows Vista/ Windows 7/ Windows8
MacOS: OS X 10.6/ 10.7/ 10.8

It will take approximately 3 minutes to complete the update process.

8.3 USER SETABLE ITEMS

	Setting Item	FL Display	Setting Area	Initial Value (Factory settings)	Part No.	Part Name	Ref No.	Assy	Content to be Stored
USER SETUP	MIDI CH	MIDI CH	1 to 16	1	DYW1828	Flash ROM	IC2802	MAIN	UTILITY setting
	MIDI Button Type	MIDI BT	TGL/TRG	TGL					
	TALK OVER MODE	TLK MOD	ADV/NOR	ADV					
	TALK OVER LEVEL	TLK LVL	-24dB/-18dB/-12dB/-6dB	-18dB					
CLUB SETUP	Digital Master Out Level	DOUT LV	-19dB/-15dB/-10dB/-5dB	-19dB					
	Digital Out Sampling Rate	DOUT FS	48kHz/96kHz	96kHz					
	MASTER ATT.	MST ATT	-6dB/-3dB/0dB	0dB					
	Auto Standby	AUTOSTB	ON/OFF	ON					
	Mic Output To Booth Monitor	MIC BTH	ON/OFF	ON					
	Peak Limiter	PKLIMIT	ON/OFF	ON					
	PC Utility	PC UTLY	ON/OFF	ON					
	Factory Reset	INITIAL	YES/NO	NO					

8.4 SHEET FOR CONFIRMATION OF THE USER SETTING

When you write down a setting item, please make use of this seat.

USER SETUP

MIDI CH

1	2	3	4	5	6	7	8
9	10	11	12	13	14	15	16

MIDI Button Type

TGL	TRG

TALK OVER MODE

NOR	ADV

TALK OVER LEVEL

-24dB	-18dB	-12dB	-6dB

CLUB SETUP

Digital Master Out Level

-19dB	-15dB	-10dB	-5dB

Digital Out Sampling Rate

48kHz	96kHz

MASTER ATT.

-6dB	-3dB	0dB

Auto Standby

OFF	ON

Mic Output To Booth Monitor

OFF	ON

Peak Limiter

OFF	ON

PC Utility

OFF	ON

Factory Reset

NEVER perform FACTORY RESET before taking note of setting data.

9. EXPLODED VIEWS AND PARTS LIST

NOTES:
- *Parts marked by "NSP" are generally unavailable because they are not in our Master Spare Parts List.*
- *The ⚠ mark found on some component parts indicates the importance of the safety factor of the part. Therefore, when replacing, be sure to use parts of identical designation.*
- *Screws adjacent to ▼ mark on product are used for disassembly.*
- *For the applying amount of lubricants or glue, follow the instructions in this manual. (In the case of no amount instructions, apply as you think it appropriate.)*

9.1 PACKING SECTION

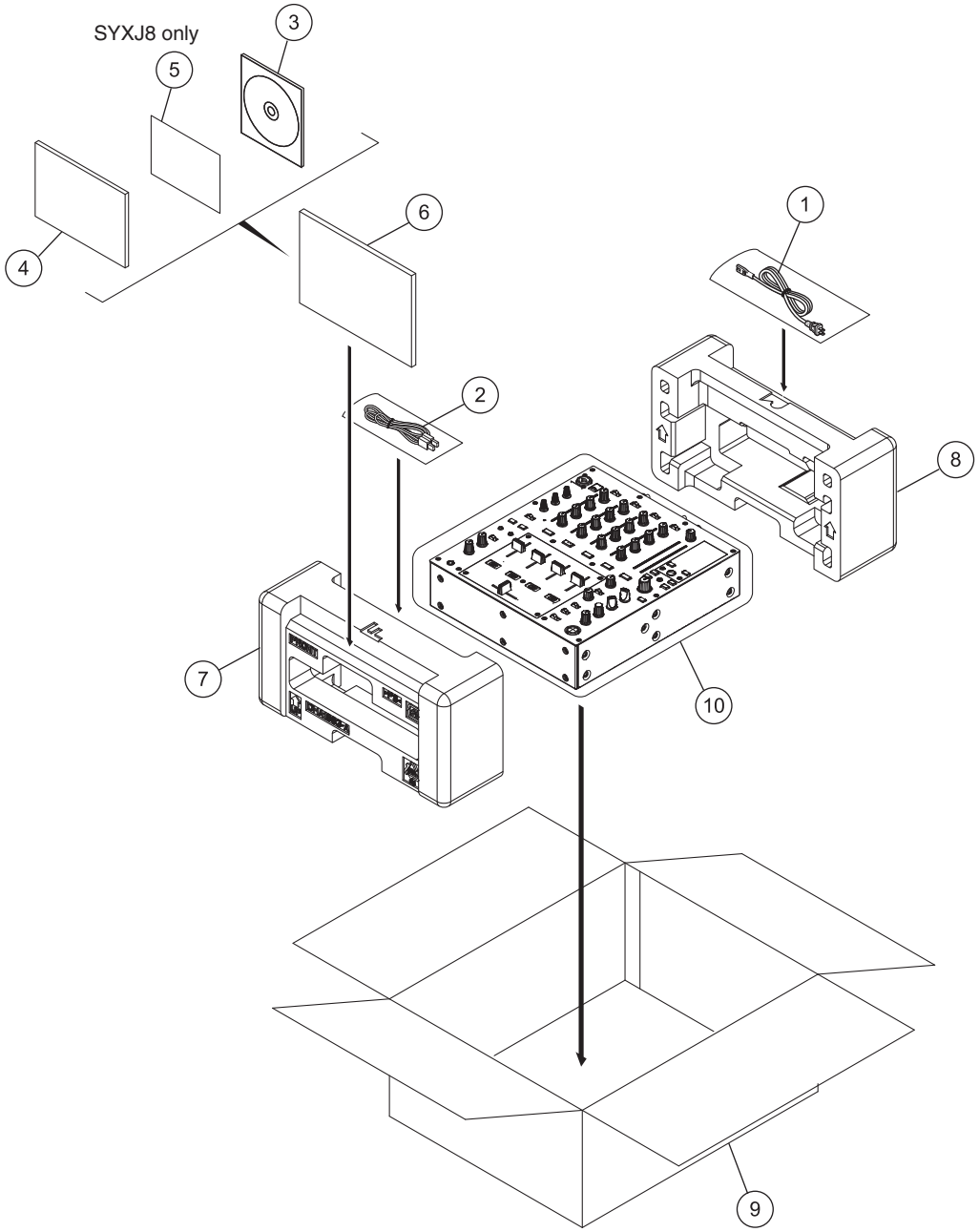

(1) PACKING SECTION PARTS LIST

Mark	No.	Description	Part No.
⚠	1	Power Cord	See Contrast table (2)
	2	USB Cable	DDE1128
	3	Driver Software/ Operating Instructions CD-ROM	DXX2726
	4	Read Before Use (Important)/ Quick Start Guide	See Contrast table (2)
NSP	5	Warranty	See Contrast table (2)
NSP	6	Polyethylene Bag	AHG7117
	7	Packing Pad/A	DHA1883
	8	Packing Pad/B	DHA1884
	9	Packing Case	See Contrast table (2)
	10	Packing Sheet	RHC1023

(2) CONTRAST TABLE

DJM-750-K/SYXJ8, UXJCB, LXJ, KXJ5, XJCN5, DJM-750-S/SYXJ8, UXJCB, LXJ, KXJ5 and XJCN5 are constructed the same except for the following:

Mark	No.	Symbol and Description	DJM-750-K /SYXJ8	DJM-750-K /UXJCB	DJM-750-K /LXJ	DJM-750-K /KXJ5	DJM-750-K /XJCN5
⚠	1	Power Cord	ADG7062	DDG1108	ADG7062	ADG7115	ADG7105
	4	Read Before Use (Important) /Quick Start Guide	DRH1205	DRH1206	DRH1216	DRH1219	DRH1218
NSP	5	Warranty	ARY7158	Not used	Not used	Not used	Not used
	9	Packing Case	DHG3239	DHG3240	DHG3241	DHG3244	DHG3243

Mark	No.	Symbol and Description	DJM-750-S /SYXJ8	DJM-750-S /UXJCB	DJM-750-S /LXJ	DJM-750-S /KXJ5	DJM-750-S /XJCN5
⚠	1	Power Cord	ADG7062	DDG1108	ADG7062	ADG7115	ADG7105
	4	Read Before Use (Important) /Quick Start Guide	DRH1205	DRH1206	DRH1216	DRH1219	DRH1218
NSP	5	Warranty	ARY7158	Not used	Not used	Not used	Not used
	9	Packing Case	DHG3245	DHG3246	DHG3247	DHG3250	DHG3249

9.2 EXTERIOR SECION

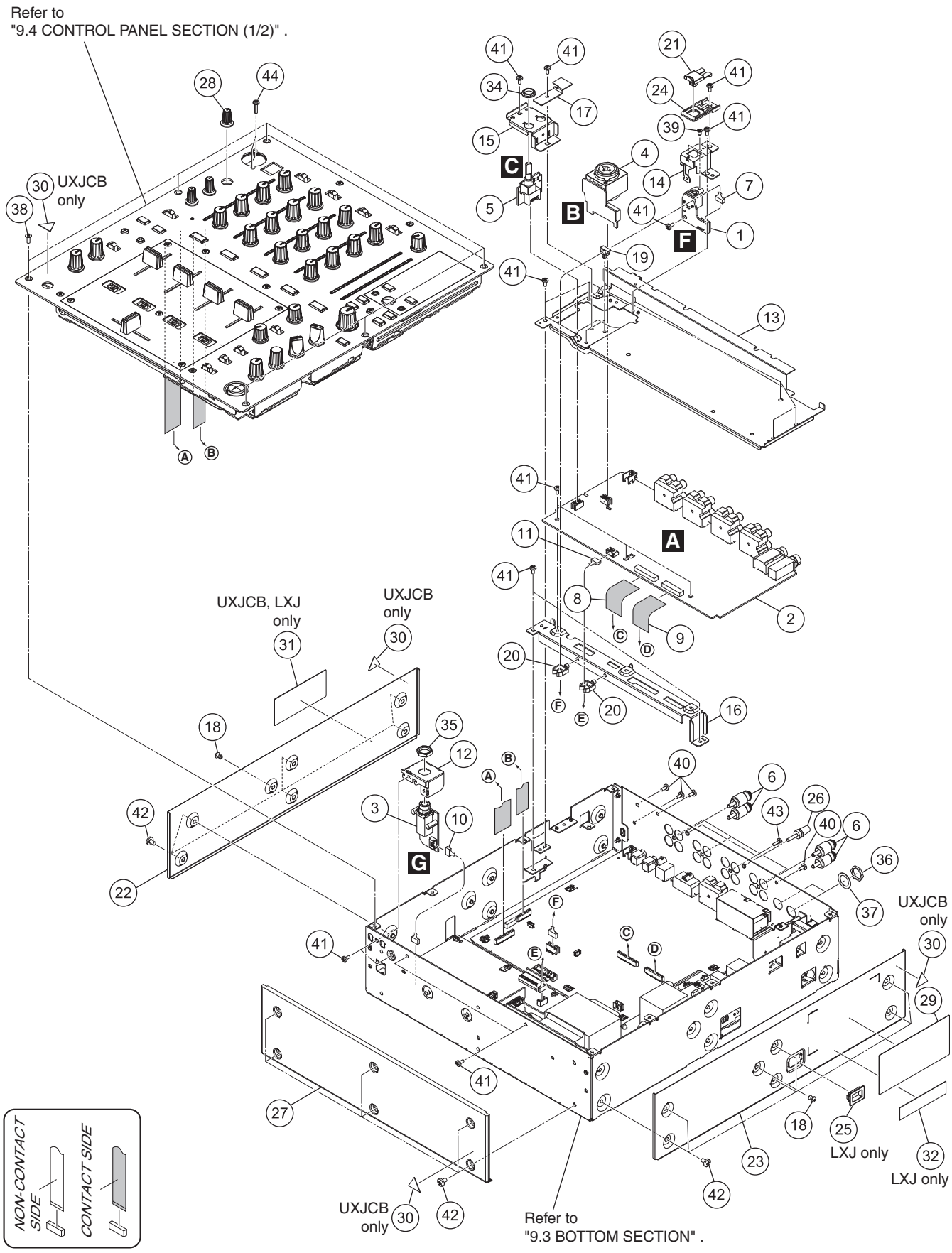

(1) EXTERIOR SECION PARTS LIST

Mark	No.	Description	Part No.
	1	USBI Assy	DWX3431
	2	INPUT Assy	DWX3432
	3	HPJK Assy	DWX3433
	4	MIC1 Assy	DWX3441
	5	MTRM Assy	DWX3442
	6	Plug/Pin	DKM1024
	7	Shielded Conn-Cable	DDA1043
	8	FFC/25P	DDD1597
	9	FFC/22P	DDD1598
	10	Connector Assy	PF04PP-S05
	11	Cable	PF04PP-S17
	12	Stay/HP	DNF1907
	13	Shield Plate/INP	DNF1908
	14	Bracket/USB	DNF1909
	15	Bracket/MIC	DNF1929
	16	Stay/INP	DNF1911
	17	Bracket/SCN	DNH3090
	18	Nylon Rivet	AEC1671
	19	Locking Mini Clamp	DEC2439
	20	Holder	VEC1355
	21	USB Cover B	DNK5868
	22	Side Panel L	DNK6061
	23	Side Panel R	See Contrast table (2)
	24	Panel/USB	DNK6120
	25	Knob/POW	See Contrast table (2)
	26	Terminal Screw	AKE-031
	27	Front Panel	DNK6063
	28	Knob/EQ	DAA1302
NSP	29	Name Label	See Contrast table (2)
NSP	30	Label	See Contrast table (2)
NSP	31	Caution Label	See Contrast table (2)
NSP	32	V Select Label	See Contrast table (2)
	33	• • • • •	
	34	Flange Nut M9	DBN1008
	35	Nut (M12)	NKX2FNI
	36	Nut M12	DBN1018
	37	Washer	DEC2920
	38	Screw (FE)	See Contrast table (2)
	39	Screw (M3*5)	DBA1340
	40	Screw	BBZ30P060FTB
	41	Screw	BBZ30P060FTC
	42	Screw	BBZ40P060FTB
	43	Screw	BPZ30P080FTB
	44	Screw	BPZ30P120FTB

(2) CONTRAST TABLE

DJM-750-K/SYXJ8, UXJCB, LXJ, KXJ5, XJCN5, DJM-750-S/SYXJ8, UXJCB, LXJ, KXJ5 and XJCN5 are constructed the same except for the following:

Mark	No.	Symbol and Description	DJM-750-K /SYXJ8	DJM-750-K /UXJCB	DJM-750-K /LXJ	DJM-750-K /KXJ5	DJM-750-K /XJCN5
	23	Side Panel R	DNK6062	DNK6062	DNK6065	DNK6062	DNK6062
	25	Knob/POW	Not used	Not used	DNK6066	Not used	Not used
NSP	29	Name Label	DAL1260	DAL1245	DAL1246	DAL1249	DAL1248
NSP	30	Label	Not used	DRW1975	Not used	Not used	Not used
NSP	31	Caution Label	Not used	DRW2429	DRW2430	Not used	Not used
NSP	32	V Select Label	Not used	Not used	DRW2400	Not used	Not used
	38	Screw (FE)	DBA1290	DBA1290	DBA1290	DBA1290	DBA1290

Mark	No.	Symbol and Description	DJM-750-S /SYXJ8	DJM-750-S /UXJCB	DJM-750-S /LXJ	DJM-750-S /KXJ5	DJM-750-S /XJCN5
	23	Side Panel R	DNK6062	DNK6062	DNK6065	DNK6062	DNK6062
	25	Knob/POW	Not used	Not used	DNK6066	Not used	Not used
NSP	29	Name Label	DAL1261	DAL1251	DAL1252	DAL1255	DAL1254
NSP	30	Label	Not used	DRW1975	Not used	Not used	Not used
NSP	31	Caution Label	Not used	DRW2429	DRW2430	Not used	Not used
NSP	32	V Select Label	Not used	Not used	DRW2400	Not used	Not used
	38	Screw (FE)	DBA1436	DBA1436	DBA1436	DBA1436	DBA1436

9.3 BOTTOM SECTION

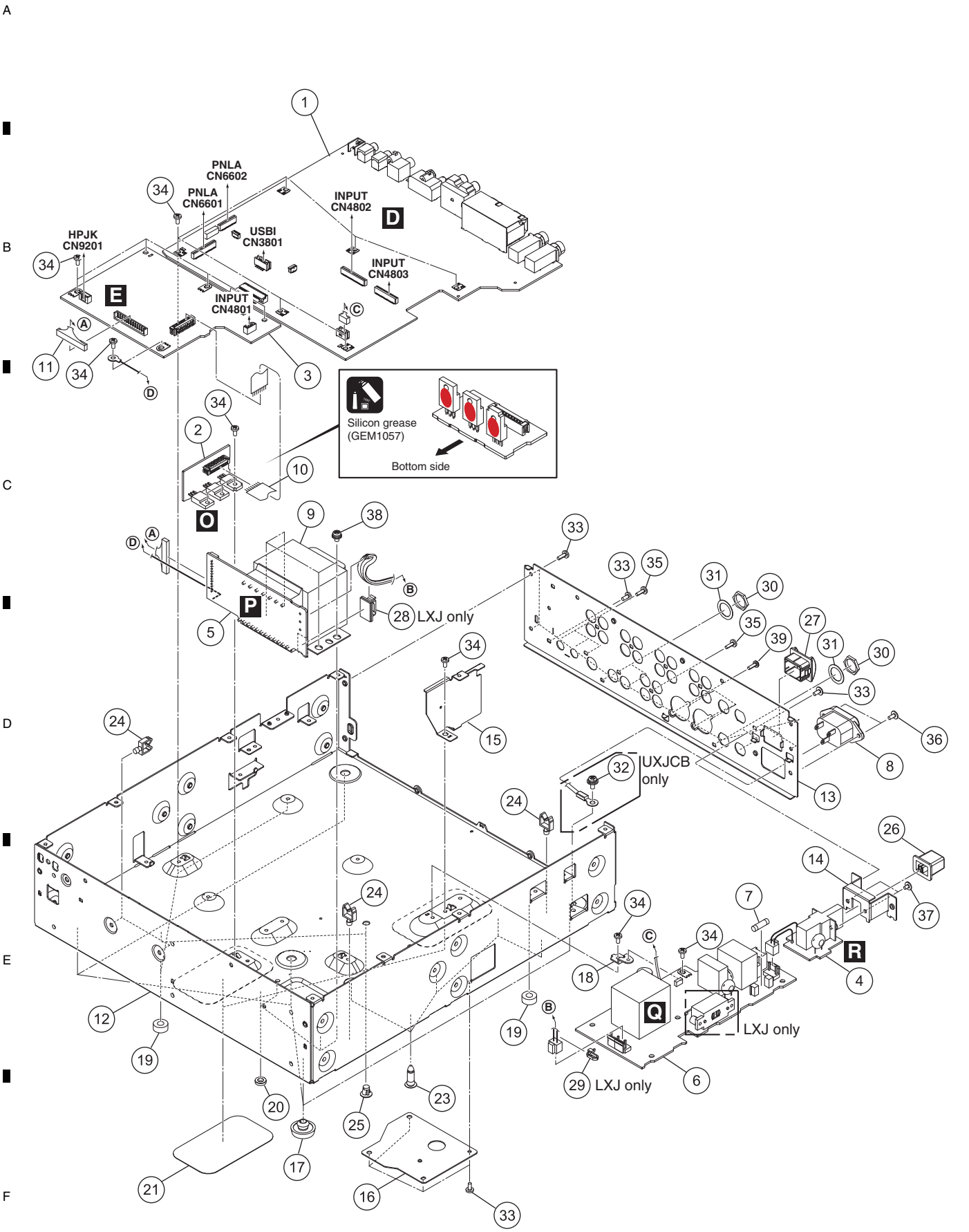

(1) BOTTOM SECTION PARTS LIST

Mark	No.	Description	Part No.
	1	MAIN Assy	DWX3430
	2	REG Assy	DWR1528
	3	SEC/HP Assy	DWR1529
	4	ACSW Assy	DWR1532
	5	PRIMARY Assy	See Contrast table (2)
	6	TRANS Assy	See Contrast table (2)
⚠	7	Fuse (T630 mA)	AEK1052
⚠	8	AC Inlet	See Contrast table (2)
⚠	9	Transformer	See Contrast table (2)
	10	Jumper Wire	D20PYY1010E
	11	Connector Assy	PF13EE-S17
NSP	12	Chassis/750	DNA1453
	13	Rear Panel	See Contrast table (2)
	14	Bracket PSW	DNF1759
	15	Shield Plate/PW	DNF1906
NSP	16	Plate	DNK6124
	17	Foot (Rubber)	REC-434
NSP	18	PCB Stay (FE)	VNE2489
NSP	19	Spacer	AEB7092
	20	Spacer	DEB1998
	21	Sheet/BOT	DEC3404
	22	•••••	
	23	PCB Holder	PNW2029
	24	Holder	VEC1355
NSP	25	PC Support	VEC1749
	26	Power Knob	DAC2306
	27	Power Knob Guard	DNK4534
	28	Locking Wire Saddle	See Contrast table (2)
	29	Binder	See Contrast table (2)
	30	Nut (M12)	NKX2FNI
	31	Washer	DEC2920
	32	Screw	See Contrast table (2)
	33	Screw	BBZ30P060FTB
	34	Screw	BBZ30P060FTC
	35	Screw	BPZ30P080FTB
	36	Screw	IBZ30P080FTB
	37	Screw	IMZ30P040FTC
	38	Screw	PMB40P060FTB
	39	Screw	PPZ30P080FTB

(2) CONTRAST TABLE

DJM-750-K/SYXJ8, UXJCB, LXJ, KXJ5, XJCN5, DJM-750-S/SYXJ8, UXJCB, LXJ, KXJ5 and XJCN5 are constructed the same except for the following:

Mark	No.	Symbol and Description	DJM-750-K /SYXJ8	DJM-750-K /UXJCB	DJM-750-K /LXJ	DJM-750-K /KXJ5	DJM-750-K /XJCN5
	5	PRIMARY Assy	DWR1535	DWR1537	DWR1530	DWR1535	DWR1535
	6	TRANS Assy	DWR1536	DWR1538	DWR1531	DWR1536	DWR1536
⚠	8	AC Inlet/3P	Not used	DKP3915	Not used	Not used	Not used
⚠	8	AC Inlet/2P	DKP3916	Not used	DKP3916	DKP3916	DKP3916
⚠	9	Transformer	DTT1256	DTT1257	DTT1256	DTT1256	DTT1256
	13	Rear Panel	DNC2101	DNC2102	DNC2103	DNC2106	DNC2105
	28	Locking Wire Saddle	Not used	Not used	DEC3439	Not used	Not used
	29	Binder	Not used	Not used	ZCA-SKB90BK	Not used	Not used
	32	Screw	Not used	PMH40P080FTC	Not used	Not used	Not used

Mark	No.	Symbol and Description	DJM-750-S /SYXJ8	DJM-750-S /UXJCB	DJM-750-S /LXJ	DJM-750-S /KXJ5	DJM-750-S /XJCN5
	5	PRIMARY Assy	DWR1535	DWR1537	DWR1530	DWR1535	DWR1535
	6	TRANS Assy	DWR1536	DWR1538	DWR1531	DWR1536	DWR1536
⚠	8	AC Inlet/3P	Not used	DKP3915	Not used	Not used	Not used
⚠	8	AC Inlet/2P	DKP3916	Not used	DKP3916	DKP3916	DKP3916
⚠	9	Transformer	DTT1256	DTT1257	DTT1256	DTT1256	DTT1256
	13	Rear Panel	DNC2101	DNC2102	DNC2103	DNC2106	DNC2105
	28	Locking Wire Saddle	Not used	Not used	DEC3439	Not used	Not used
	29	Binder	Not used	Not used	ZCA-SKB90BK	Not used	Not used
	32	Screw	Not used	PMH40P080FTC	Not used	Not used	Not used

9.4 CONTROL PANEL SECTION (1/2)

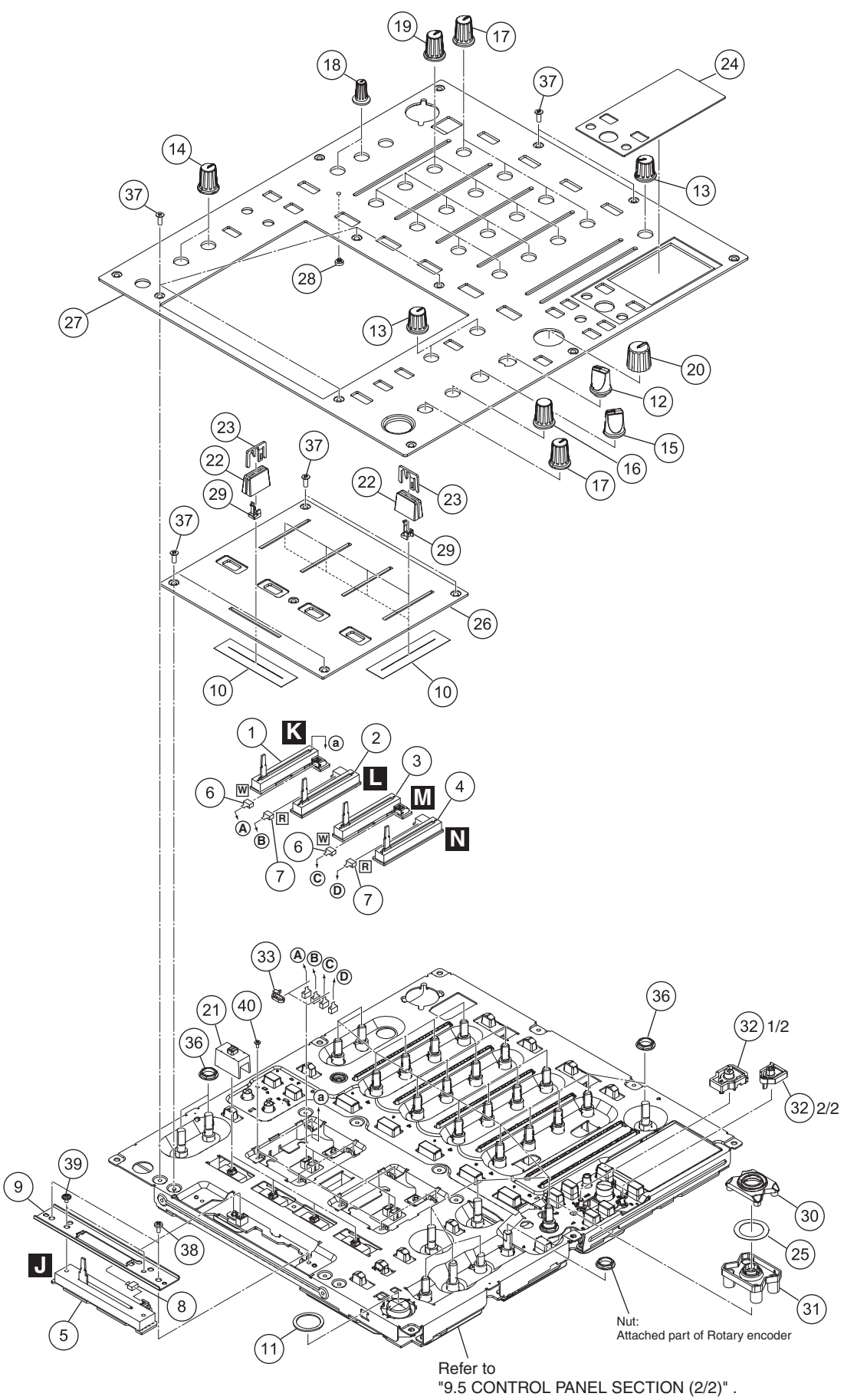

(1) CONTROL PANEL SECTION (1/2) PARTS LIST

Mark	No.	Description	Part No.
	1	FAD1 Assy	DWX3434
	2	FAD2 Assy	DWX3435
	3	FAD3 Assy	DWX3436
	4	FAD4 Assy	DWX3437
	5	FADC Assy	DWX3438
	6	Connector Assy	PF03PP-B05
	7	Connector Assy	PF03PP2B05
	8	Connector Assy	PF03PP6B07
	9	CRF Stay	DNF1870
	10	Fader Packing	DEC2903
	11	SW Packing (EF)	DEC2929
	12	Select Knob	DAA1205
	13	Knob (MA)	DAA1210
	14	Knob (Black)	DAA1212
	15	FX SEL Knob	DAA1213
	16	Knob (TIME)	DAA1214
	17	Rotary Knob (BN)	DAA1220
	18	Knob/MIC	DAA1301
	19	Knob/RSW	DAA1306
	20	Knob/FRE	DAA1309
	21	Slide SW Cap (W)	DAC2401
	22	Slider Knob 1	DAC2684
	23	Slider Knob 2	DAC2685
	24	Panel/FL	DAH2936
	25	Ring	DEC3479
	26	Panel/FD	See Contrast table (2)
	27	Control Panel	See Contrast table (2)
	28	Lens	DNK4532
	29	Slider Knob Stopper	DNK5888
	30	Lens	DNK6231
	31	Reflector	DNK6232
	32	Button Assy/UTY	DXB2138
	33	Binder	ZCA-SKB90BK
	34	• • • • •	
	35	• • • • •	
	36	Flange Nut M9	DBN1008
	37	Screw (FE)	See Contrast table (2)
	38	Screw	BBZ30P060FTC
	39	Screw	IMZ30P040FTC
	40	Screw	PMA20P040FTC

(2) CONTRAST TABLE

DJM-750-K/SYXJ8, UXJCB, LXJ, KXJ5, XJCN5, DJM-750-S/SYXJ8, UXJCB, LXJ, KXJ5 and XJCN5 are constructed the same except for the following:

Mark	No.	Symbol and Description	DJM-750-K /SYXJ8	DJM-750-K /UXJCB	DJM-750-K /LXJ	DJM-750-K /KXJ5	DJM-750-K /XJCN5
	26	Panel/FD	DNB1216	DNB1216	DNB1216	DNB1216	DNB1216
	27	Control Panel	DNB1218	DNB1218	DNB1218	DNB1218	DNB1218
	37	Screw (FE)	DBA1290	DBA1290	DBA1290	DBA1290	DBA1290

Mark	No.	Symbol and Description	DJM-750-S /SYXJ8	DJM-750-S /UXJCB	DJM-750-S /LXJ	DJM-750-S /KXJ5	DJM-750-S /XJCN5
	26	Panel/FD	DNB1217	DNB1217	DNB1217	DNB1217	DNB1217
	27	Control Panel	DNB1219	DNB1219	DNB1219	DNB1219	DNB1219
	37	Screw (FE)	DBA1436	DBA1436	DBA1436	DBA1436	DBA1436

9.5 CONTROL PANEL SECTION (2/2)

• Bottom view

Note:
Refer to “7. DISASSEMBLY” for styling of flexible cables, barriers.

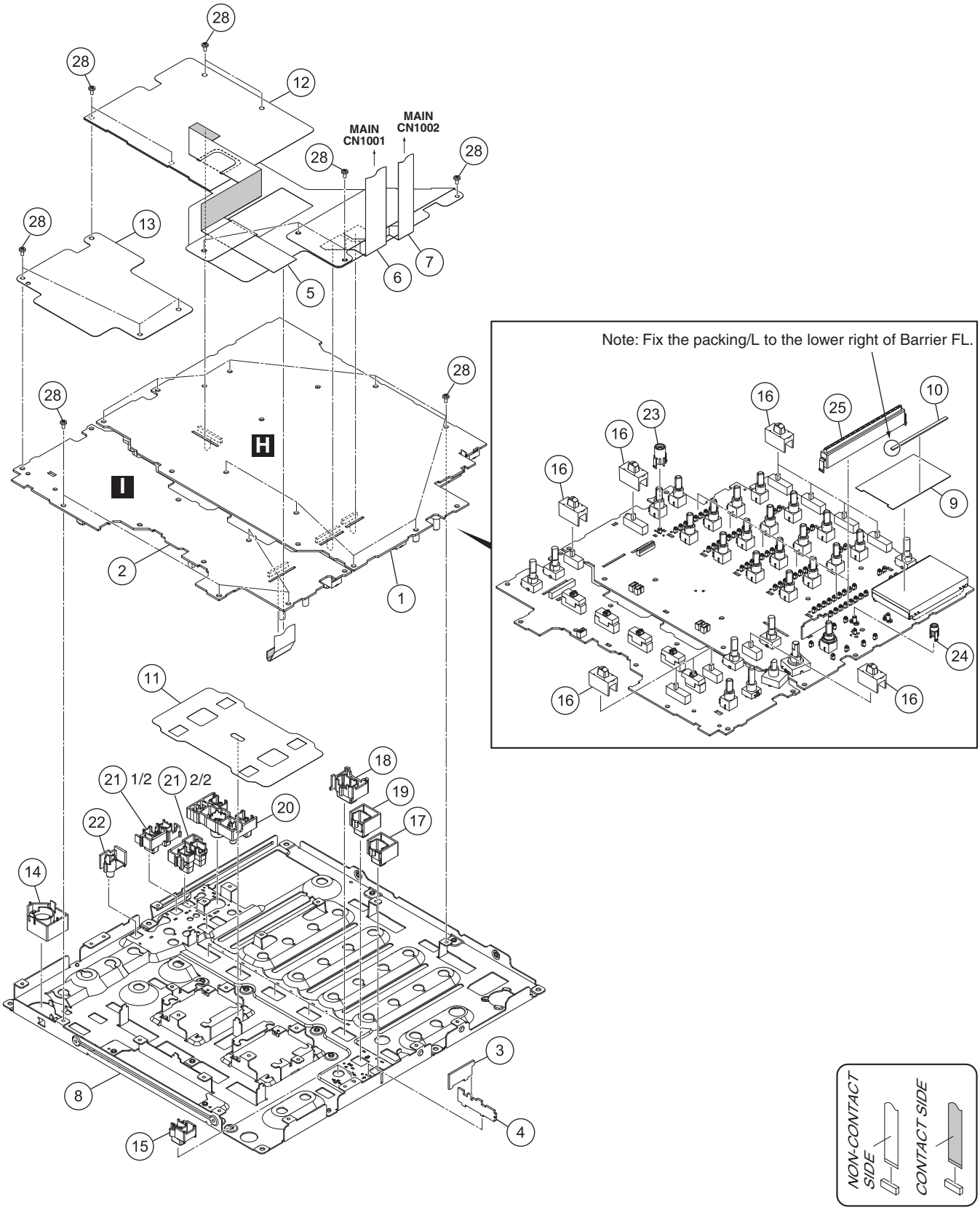

CONTROL PANEL SECTION (2/2) PARTS LIST

Mark	No.	Description	Part No.
	1	PNLA Assy	DWX3439
	2	PNLB Assy	DWX3440
	3	SHADE1 Assy	DWX3479
	4	SHADE2 Assy	DWX3483
	5	FFC/27P	DDD1601
	6	FFC/24P	DDD1628
	7	FFC/17P	DDD1629
	8	Stay/PNL	DND1275
	9	Barrier FL	DEC3351
	10	Packing/L	DEC3416
	11	Barrier/CHF	DMR1017
	12	Barrier/PNL	DMR1018
	13	Barrier/A	DMR1019
	14	Effect Knob	DAC2304
	15	Button (FL)	DAC2398
	16	Slide SW Cap	DAC2400
	17	MIC Knob	DAC2522
	18	Button/CUE	DAC2873
	19	Button/BLK	DAC2920
	20	Button/TAP	DAC2921
	21	Button/CFX	DAC2923
	22	Button/CUE	DAC2925
	23	Lens Holder	DNK4533
	24	Holder/LED	DNK6230
	25	Lebel Meter Assy	DXB1882
	26	•••••	
	27	•••••	
	28	Screw	BBZ30P060FTC

10. SCHEMATIC DIAGRAM

10.1 INPUT ASSY (1/5)

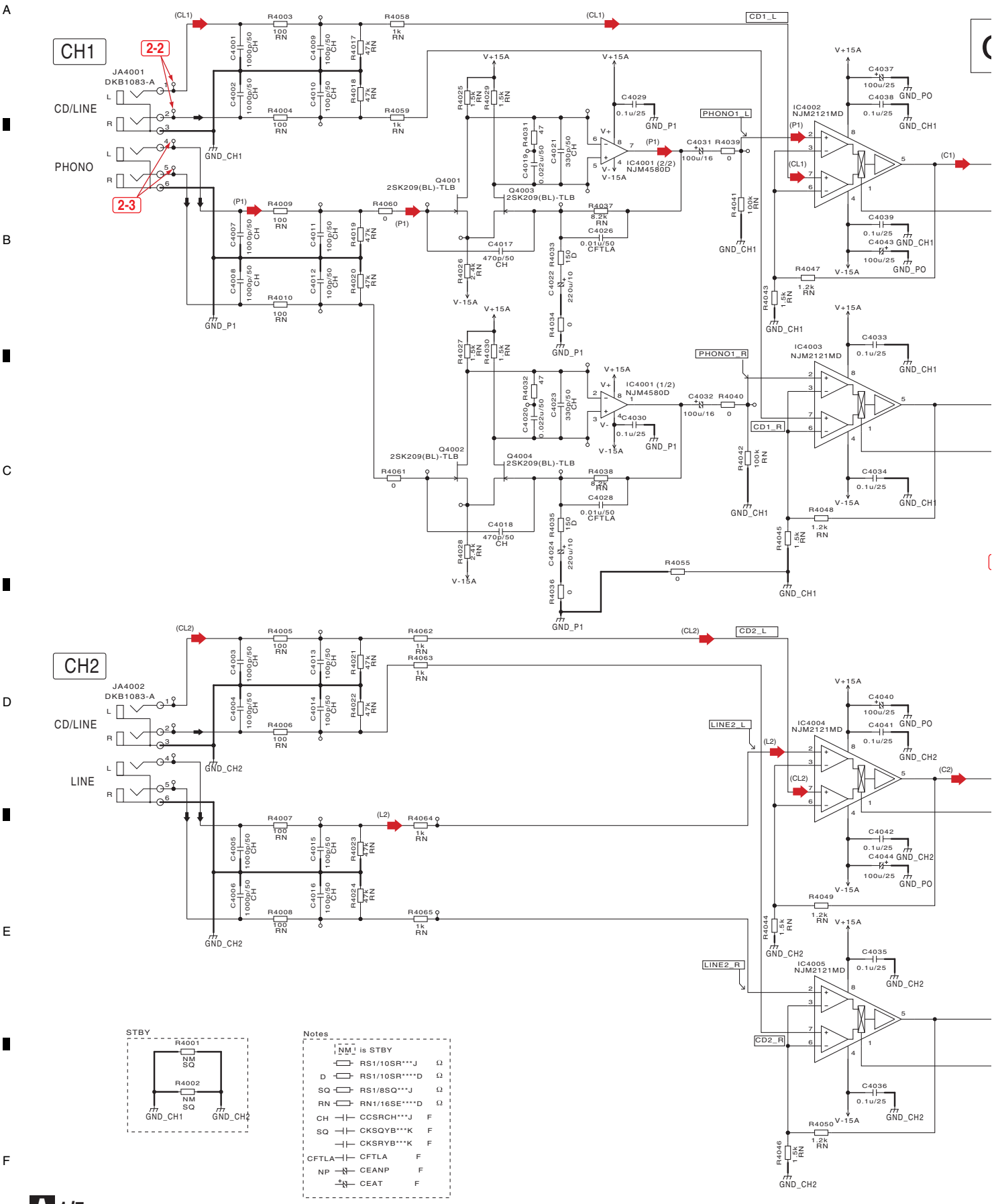

A 1/5

CH1 CH2 INPUT

A 1/5 INPUT ASSY (DWX3432)

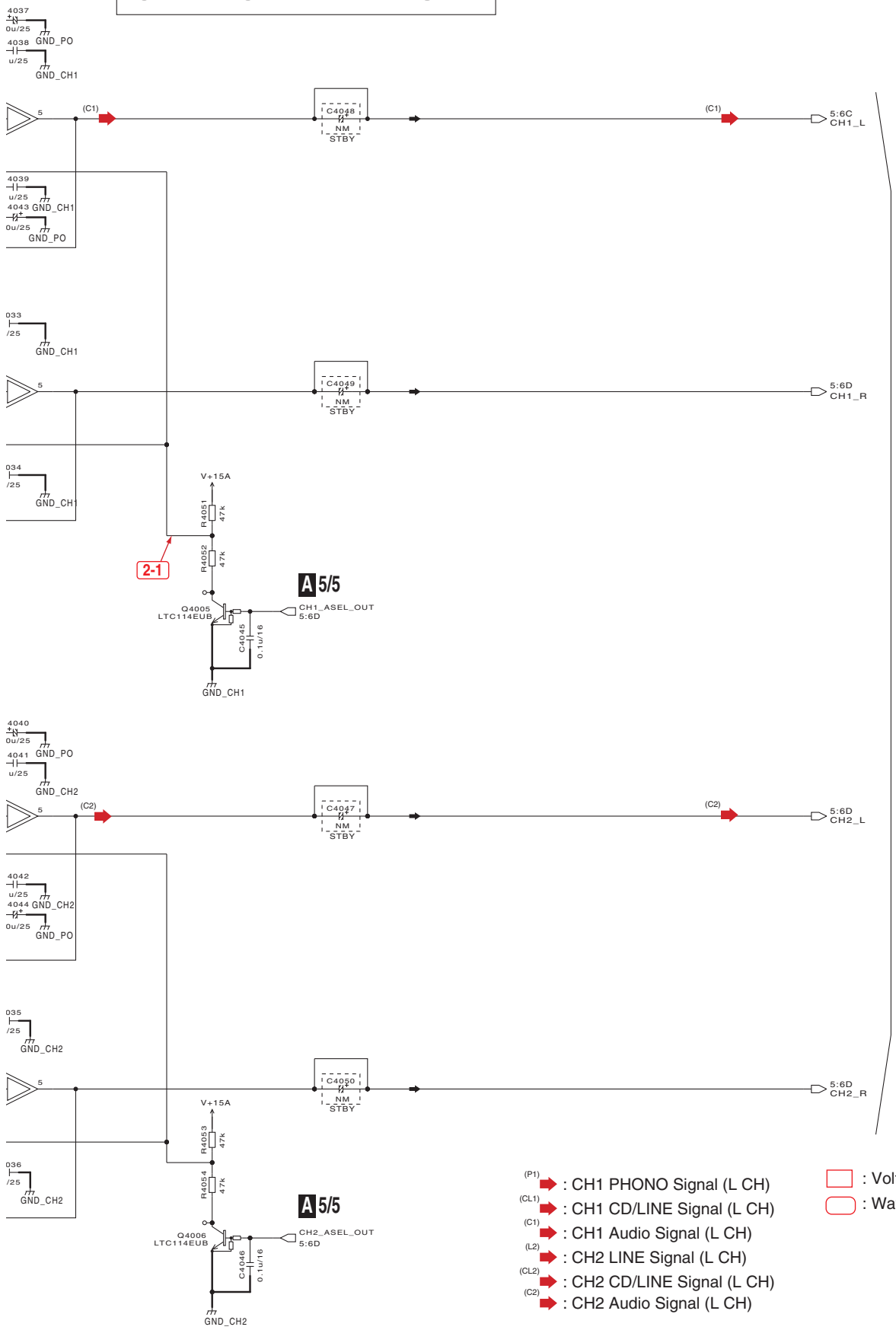

(P1) : CH1 PHONO Signal (L CH)
(CL1) : CH1 CD/LINE Signal (L CH)
(C1) : CH1 Audio Signal (L CH)
(L2) : CH2 LINE Signal (L CH)
(CL2) : CH2 CD/LINE Signal (L CH)
(C2) : CH2 Audio Signal (L CH)

: Voltage measuring point
: Waveform measuring point

A 1/5

10.2 INPUT ASSY (2/5)

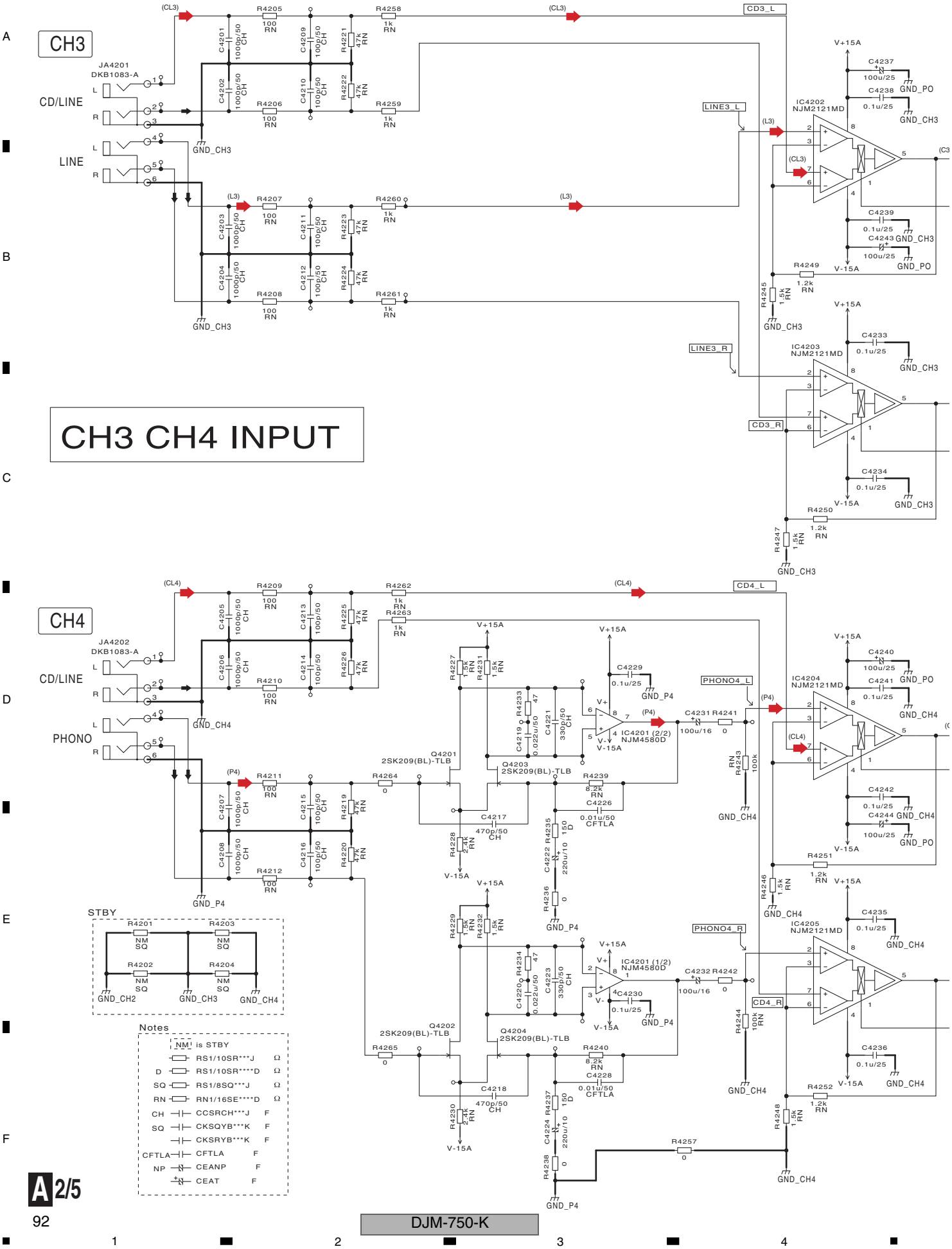

A 2/5 INPUT ASSY (DWX3432)

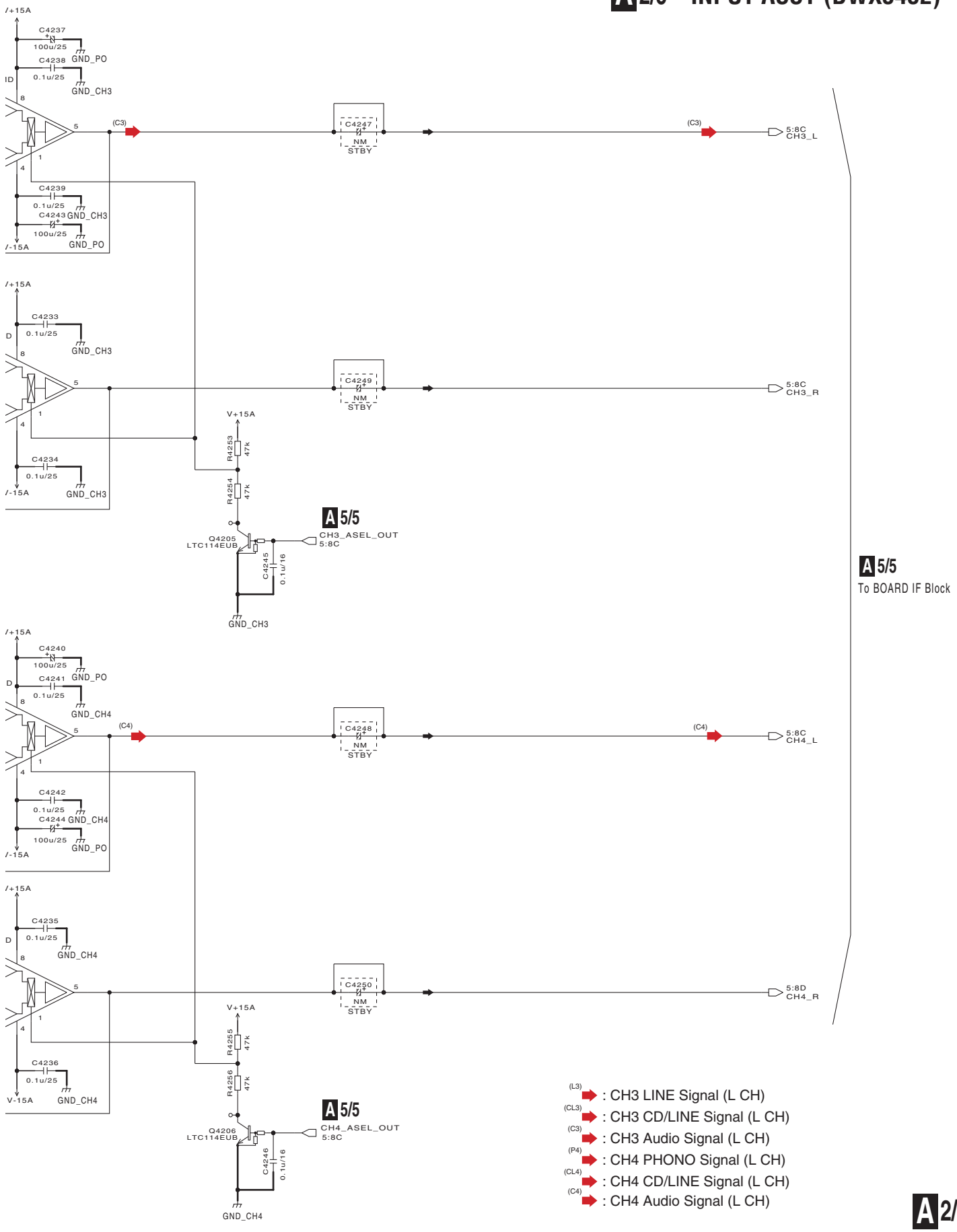

A 2/5

10.3 INPUT ASSY (3/5)

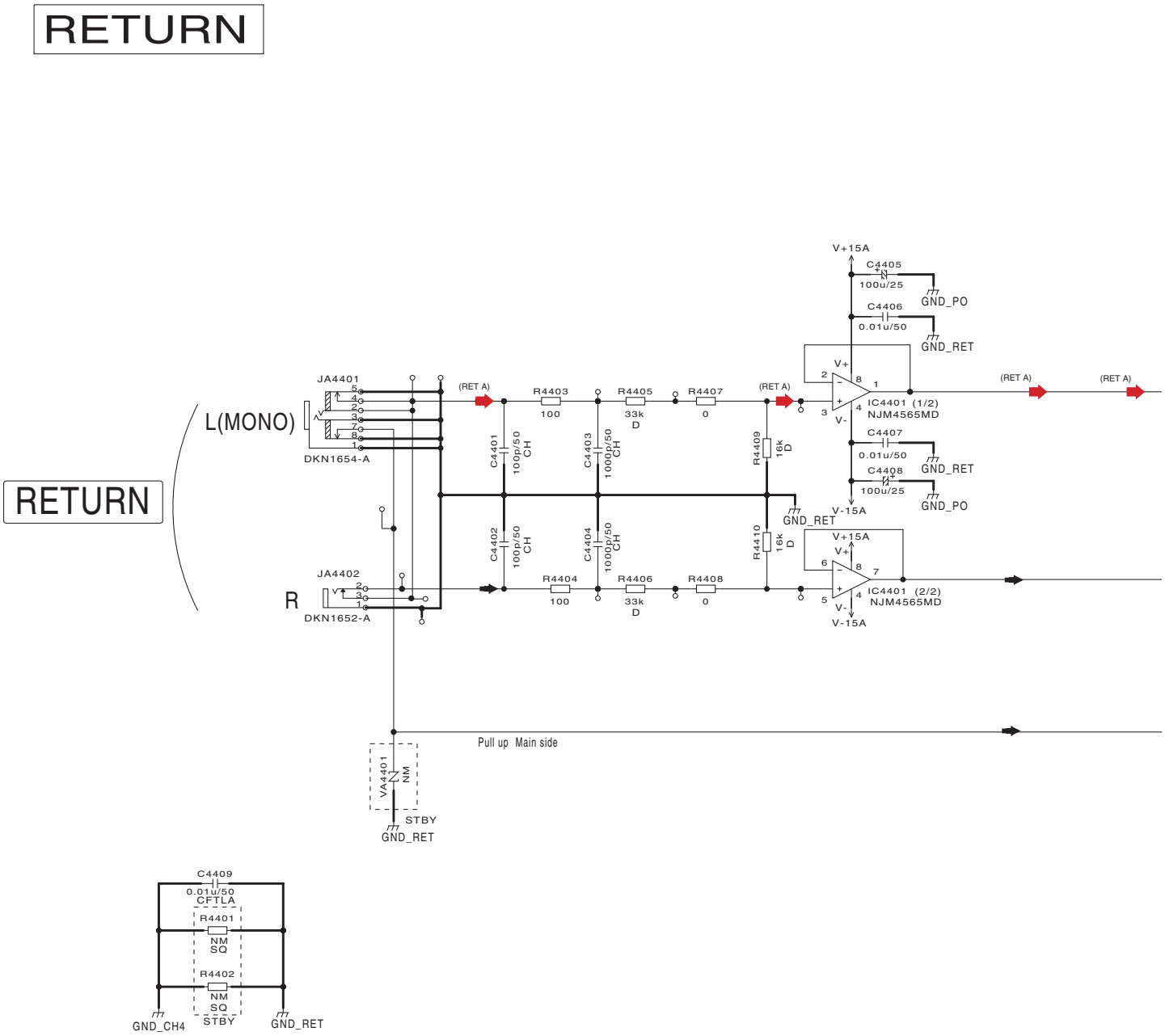

A 3/5 INPUT ASSY (DWX3432)

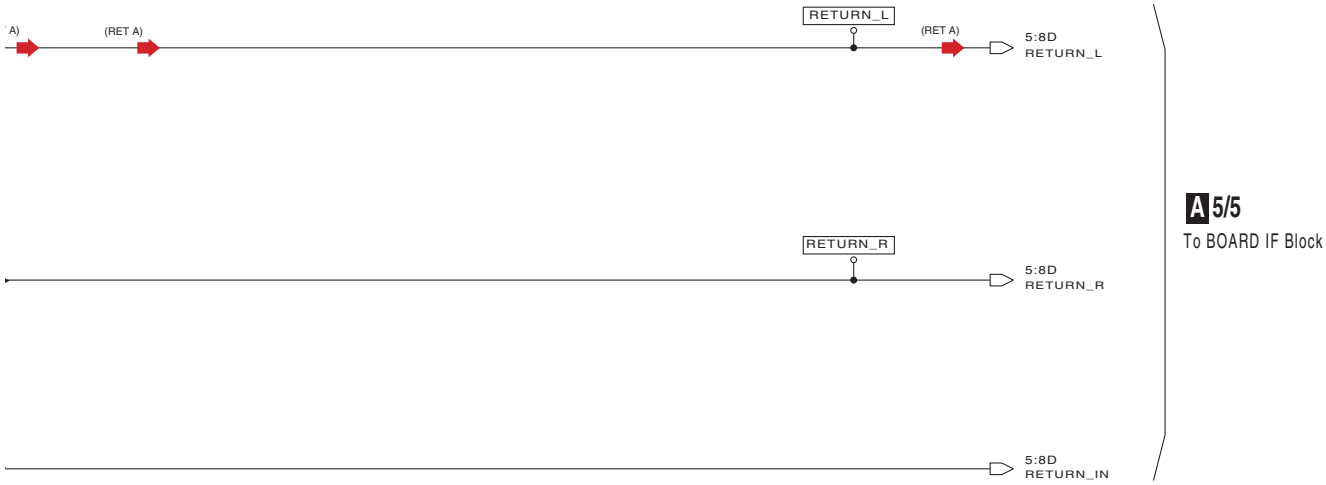

Notes

	NM	is STBY	
		RS1/10SR***J	Ω
D		RS1/10SR****D	Ω
SQ		RS1/8SQ***J	Ω
RN		RN1/16SE****D	Ω
CH		CCSRCH***J	F
SQ		CKSQYB***K	F
		CKSRYB***K	F
CFTLA		CFTLA	F
NP		CEANP	F
		CEAT	F

(RET A) : RETURN Audio Signal (L CH)

10.4 INPUT ASSY (4/5)

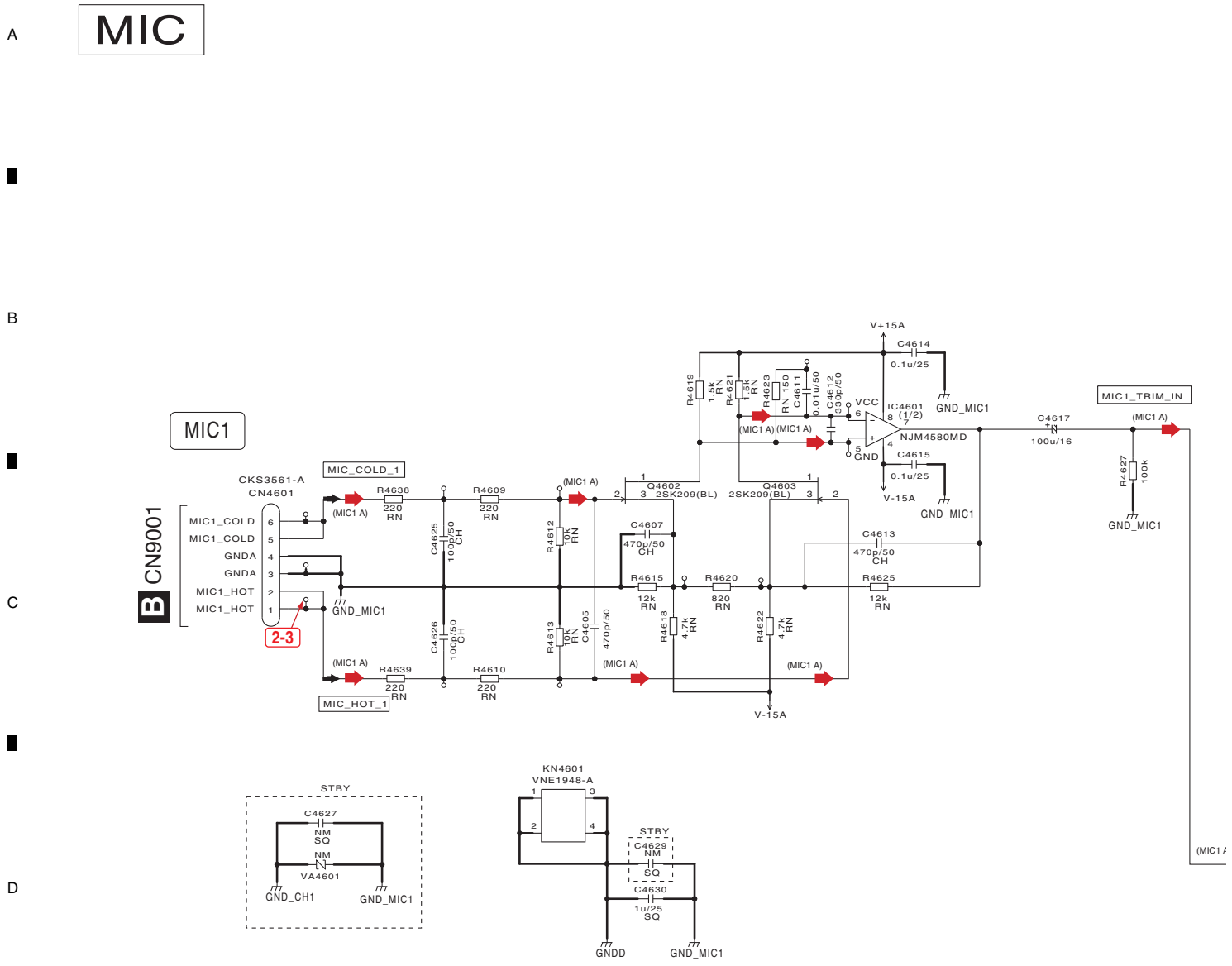

A 4/5 INPUT ASSY (DWX3432)

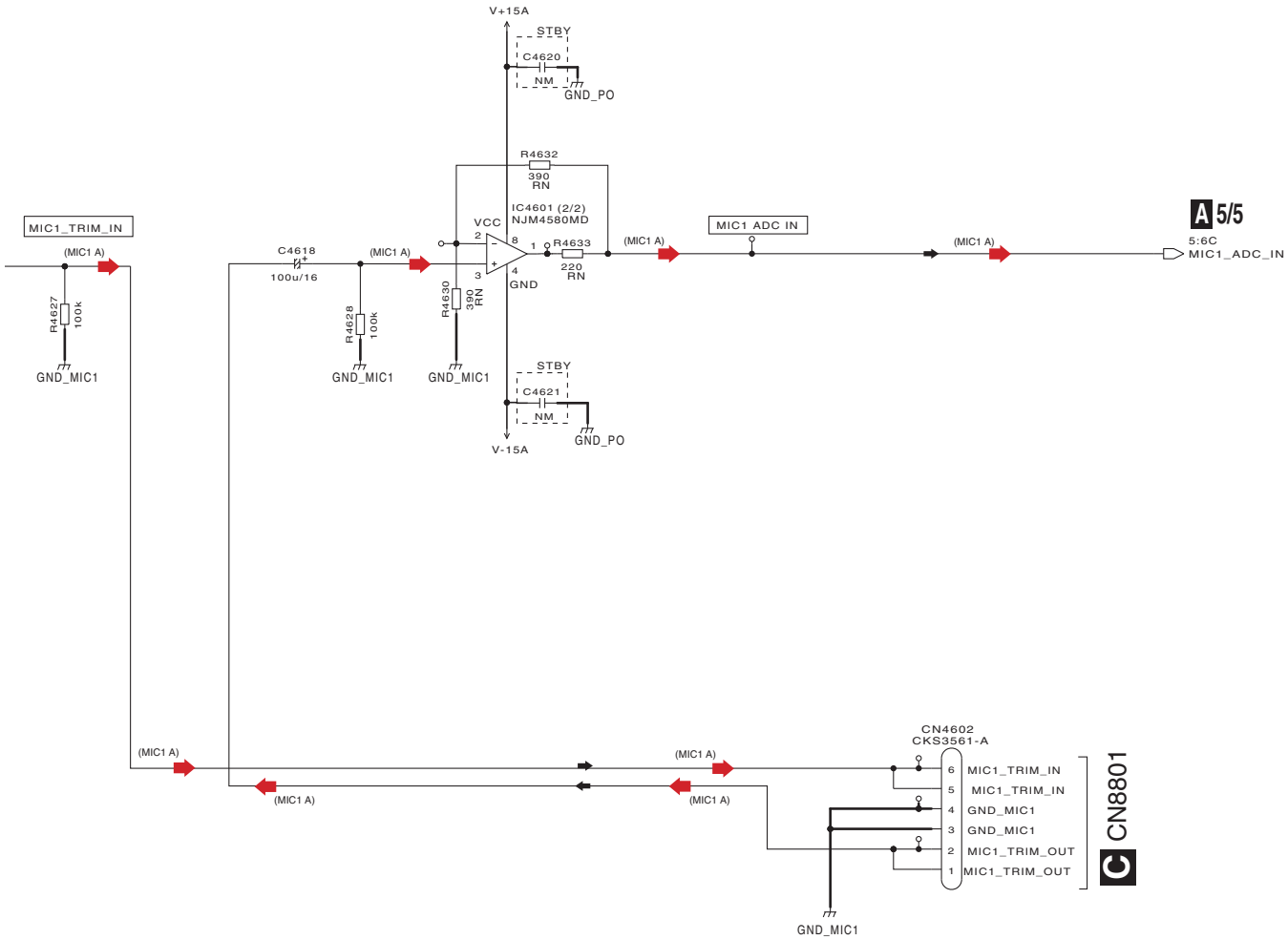

Notes

	NM	is STBY	
		RS1/10SR***J	Ω
D		RS1/10SR****D	Ω
SQ		RS1/8SQ***J	Ω
RN		RN1/16SE****D	Ω
CH		CCSRCH***J	F
SQ		CKSQYB***K	F
		CKSRYB***K	F
CFTLA		CFTLA	F
NP		CEANP	F
		CEAT	F

(MIC1 A) : MIC1 Audio Signal

: Voltage measuring point

: Waveform measuring point

10.5 INPUT ASSY (5/5)

BOARD I/F

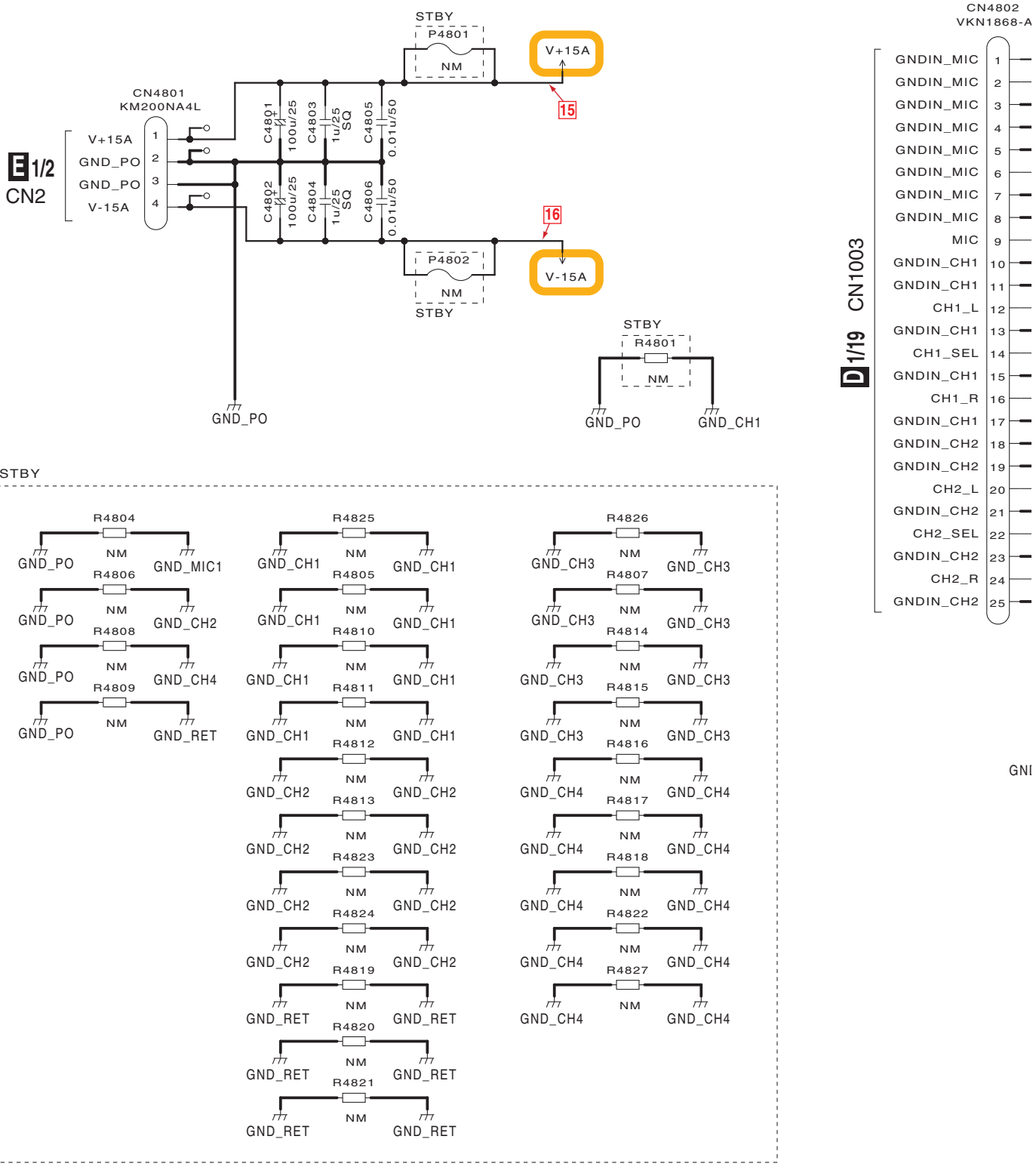

A 5/5

A 5/5 INPUT ASSY (DWX3432)

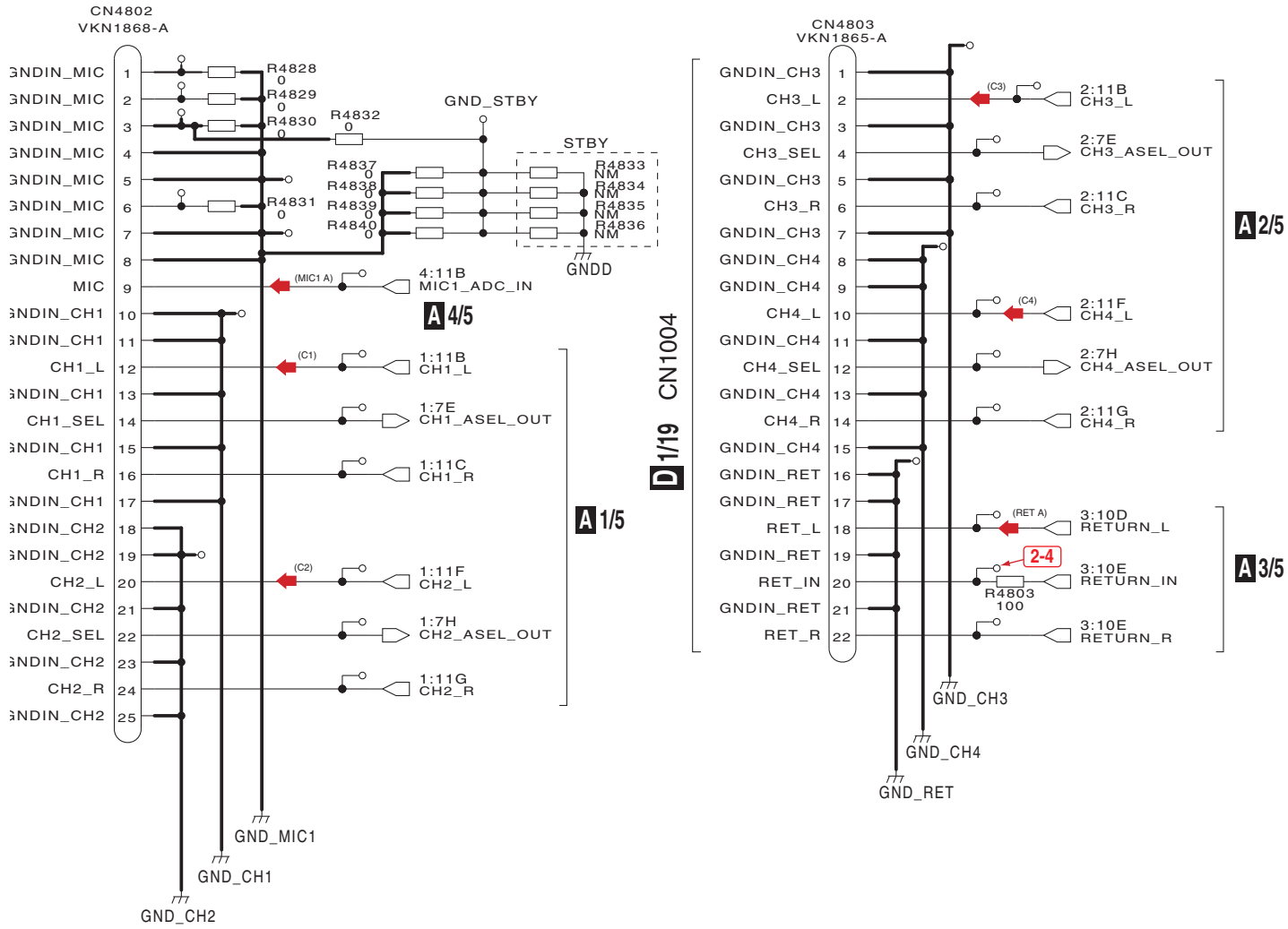

(C1) : CH1 Audio Signal (L CH)
(C2) : CH2 Audio Signal (L CH)
(C3) : CH3 Audio Signal (L CH)
(C4) : CH4 Audio Signal (L CH)
(RET A) : RETURN Audio Signal (L CH)
(MIC1 A) : MIC1 Audio Signal

: Voltage measuring point
: Waveform measuring point

10.6 MIC1 and MTRM ASSYS

A

B MIC1 ASSY (DWX3441)

C

MIC JACK

M

B

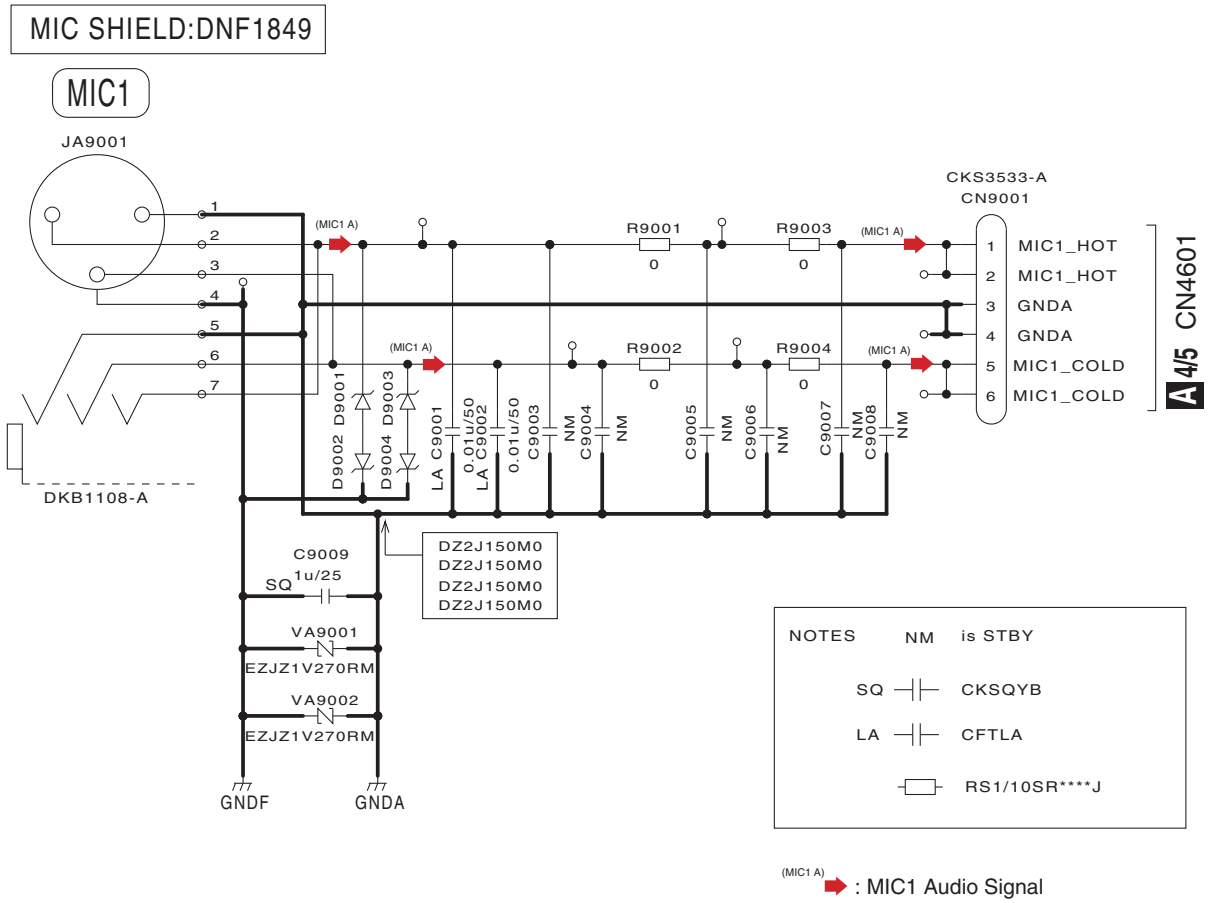

C

D

E

F

C MTRM ASSY (DWX3442)

MIC TRIM

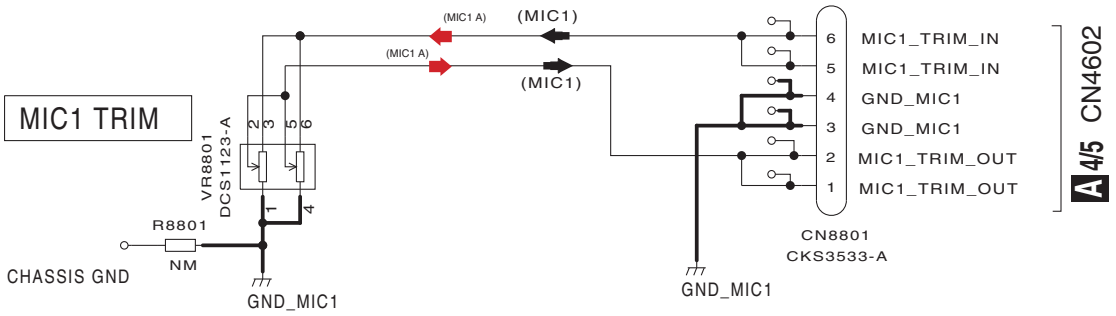

(MIC1 A) : MIC1 Audio Signal

NOTES
NM is STBY
RS1/10SR***J

10.7 MAIN ASSY (1/19)

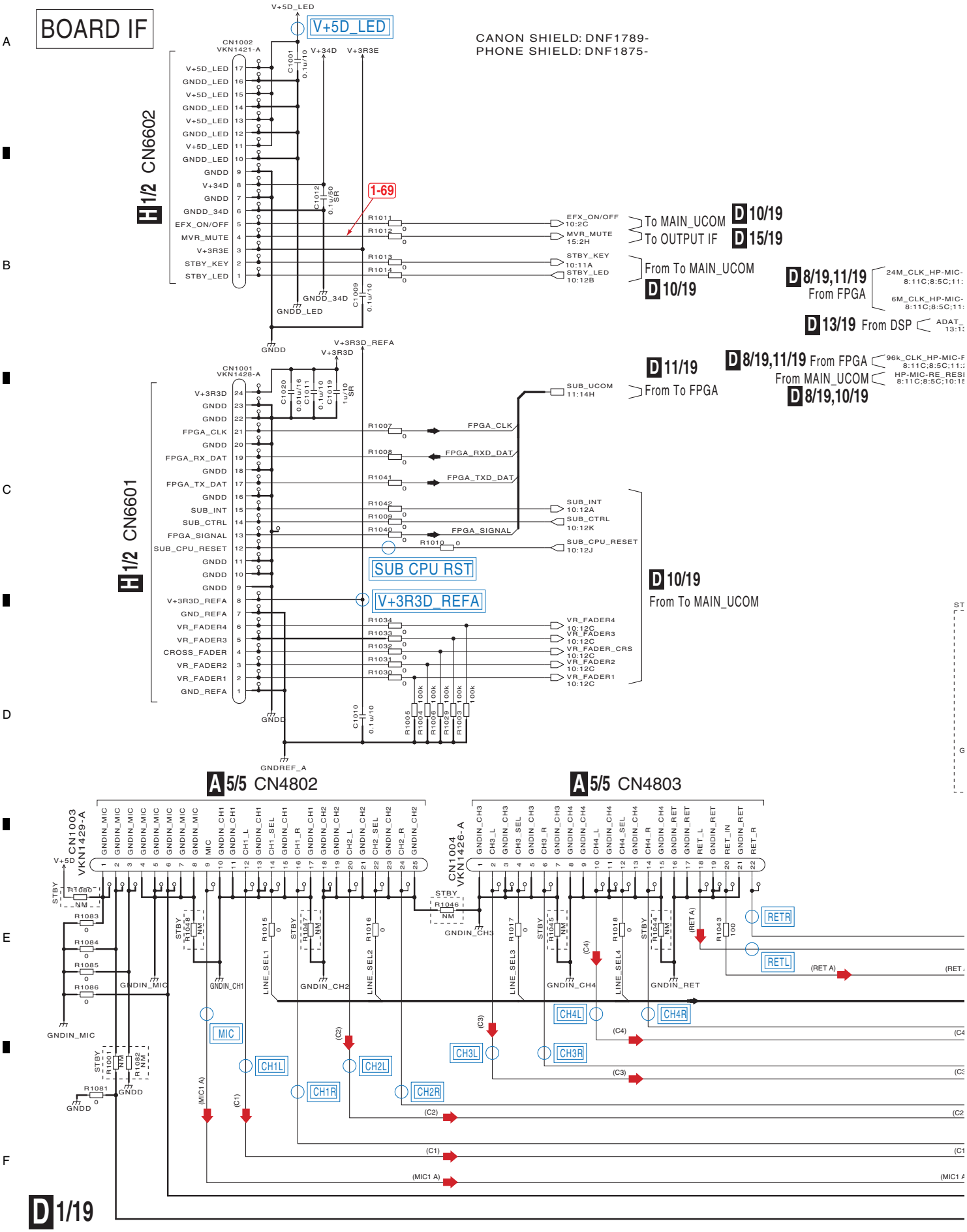

D 1/19 MAIN ASSY (DWX3430)

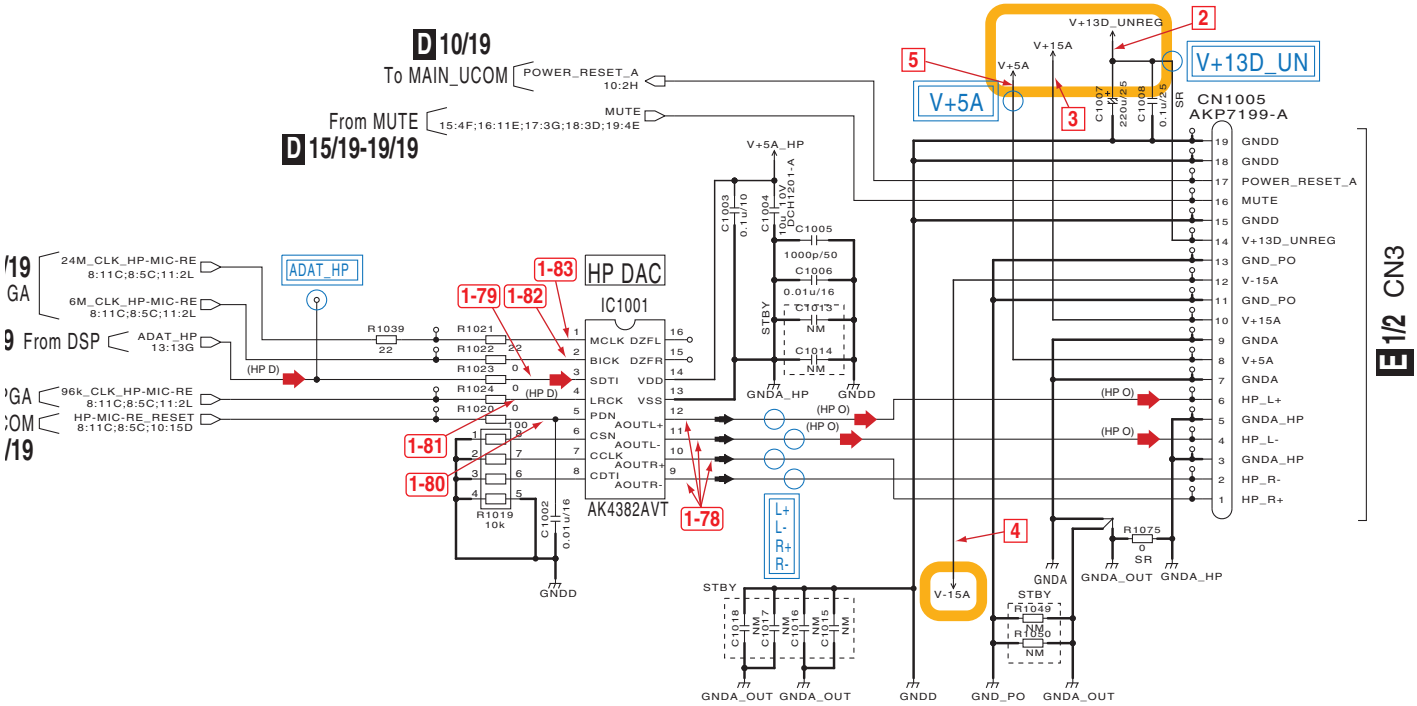

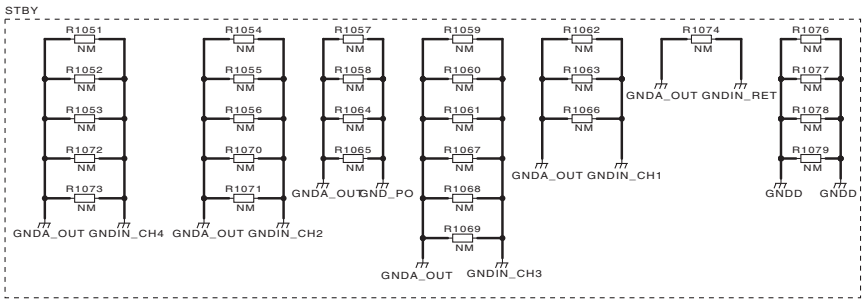

NOTES

NM	is STBY	
	RS1/16SS***J	Ω
(D)	RS1/16SS****D	Ω
SR	RS1/10SR***J	Ω
SR (D)	RS1/10SR****D	Ω
1/8W	RS1/8SQ***J	Ω
1/8W (F)	RS1/8SQ****F	Ω
1/4W	RS1/4SA***J	Ω
RN	RN1/16SE****D	Ω
	RAB4CQ***J	Ω
	CKSSYB***K	F
SR	CKSRYB***K	F
SQ	CKSQYB***K	F
CH	CCSSCH***J	F
CH (D)	CCSSCH***D	F
SRCH	CCSRCH***J	F
SQCH	CCSQCH***J	F
CFHXSQ	CFHXSQ***J	F
	CEVW***M	F
NP	CEVWNP***M	F
HVW	CEHVW***M	F
HVAW	CEHVAW***M	F
CEANP	CEANP***M	F

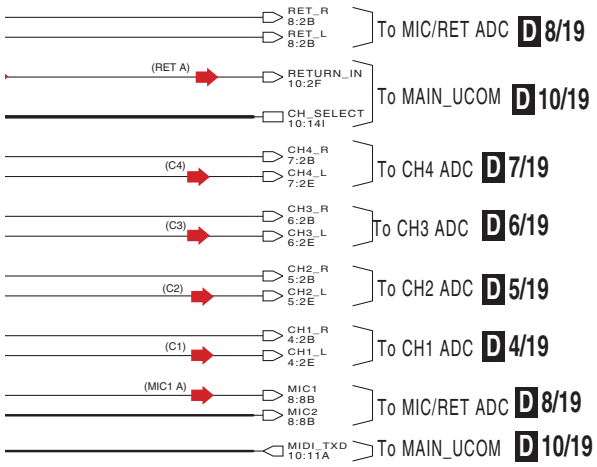

(C1) : CH1 Audio Signal (L CH)
(C2) : CH2 Audio Signal (L CH)
(C3) : CH3 Audio Signal (L CH)
(C4) : CH4 Audio Signal (L CH)
(RET A) : RETURN Audio Signal (L CH)
(MIC1 A) : MIC1 Audio Signal
(HP D) : HP OUT Digital Signal
(HP O) : HP OUT Signal (L ch)

: Voltage measuring point
: Waveform measuring point

***** The check point for service. (Legend silk indication on the PCB.)

D 1/19

10.8 MAIN ASSY (2/19)

POWER IF

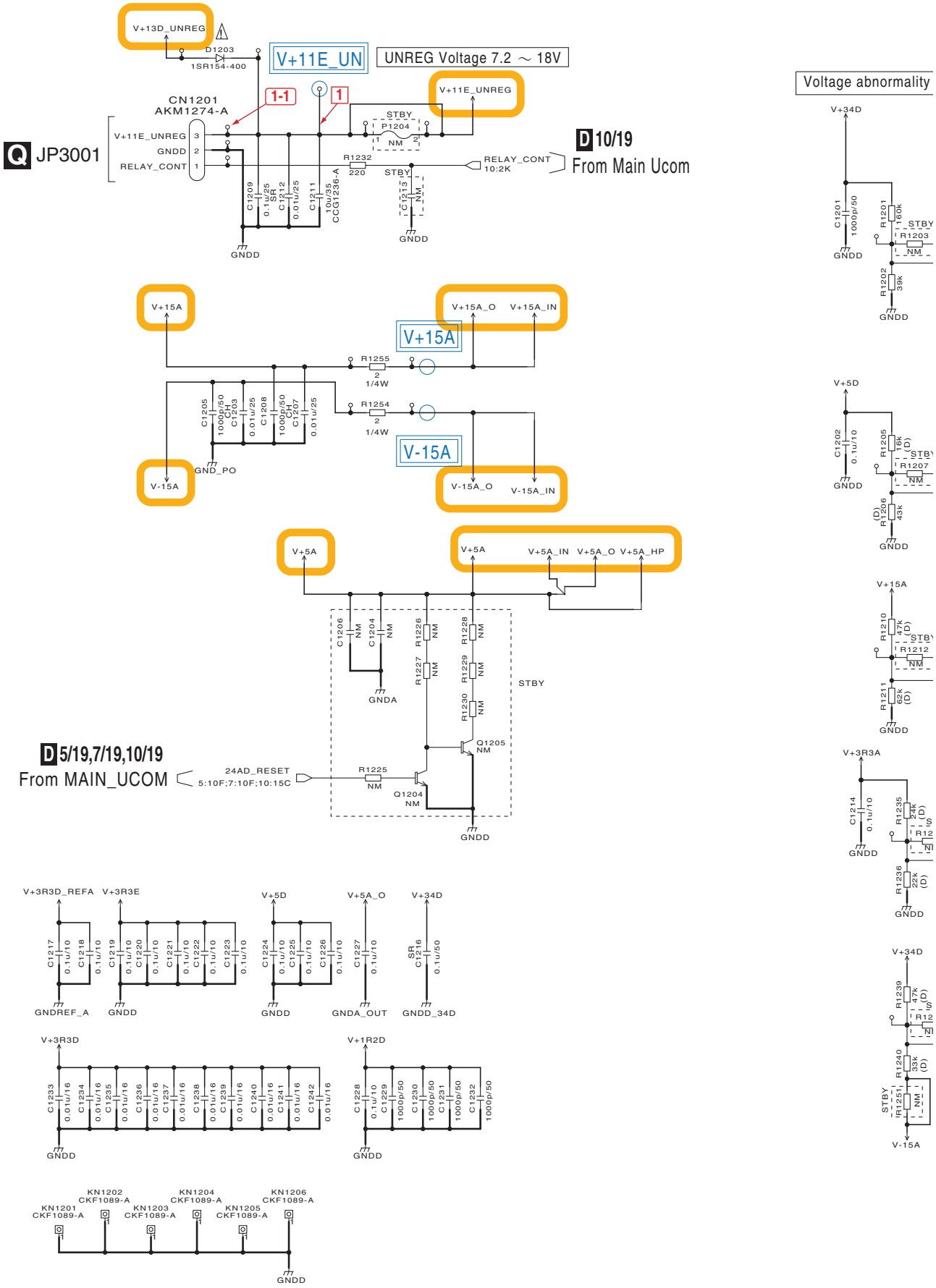

D 2/19

D 2/19 MAIN ASSY (DWX3430)

Voltage abnormality detect circuit

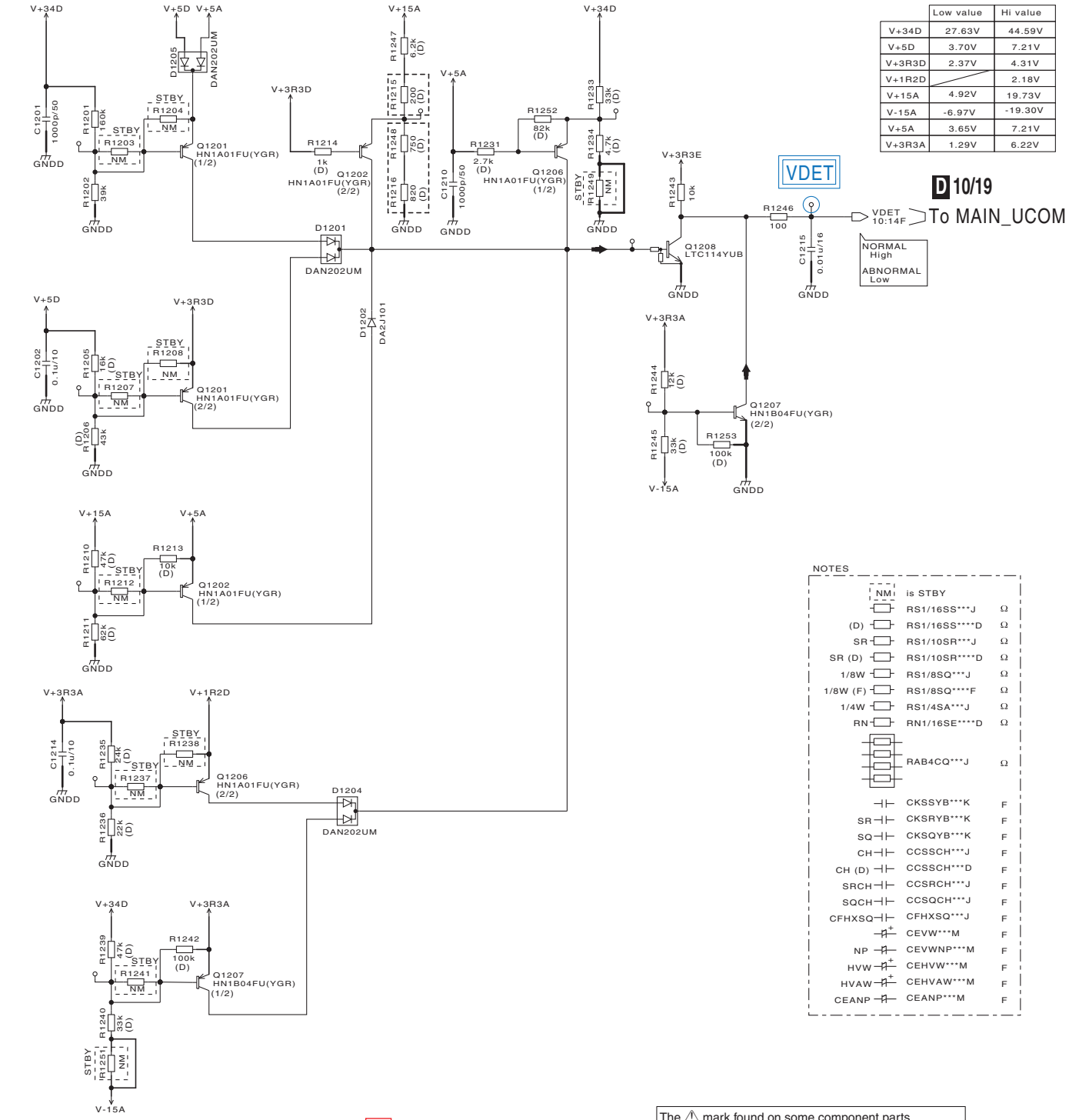

	Low value	Hi value
V+34D	27.63V	44.59V
V+5D	3.70V	7.21V
V+3R3D	2.37V	4.31V
V+1R2D		2.18V
V+15A	4.92V	19.73V
V-15A	-6.97V	-19.30V
V+5A	3.65V	7.21V
V+3R3A	1.29V	6.22V

D 10/19

NOTES

NM	is STBY	
	RS1/16SS***J	Ω
(D)	RS1/16SS****D	Ω
SR	RS1/10SR***J	Ω
SR (D)	RS1/10SR****D	Ω
1/8W	RS1/8SQ***J	Ω
1/8W (F)	RS1/8SQ****F	Ω
1/4W	RS1/4SA***J	Ω
RN	RN1/16SE****D	Ω
	RAB4CQ***J	Ω
	CKSSYB***K	F
SR	CKSRYB***K	F
SQ	CKSQYB***K	F
CH	CCSSCH***J	F
CH (D)	CCSSCH***D	F
SRCH	CCSRCH***J	F
SQCH	CCSQCH***J	F
CFHXSQ	CFHXSQ***J	F
	CEVW***M	F
NP	CEVWNP***M	F
HVW	CEHVW***M	F
HVAW	CEHVAW***M	F
CEANP	CEANP***M	F

: Voltage measuring point

: Waveform measuring point

The check point for service.
(Legend silk indication on the PCB.)

The ⚠ mark found on some component parts indicates the importance of the safety factor of the part. Therefore, when replacing, be sure to use parts of identical designation.

⚠ 印の部品は、安全上重要な部品です。
交換するときは、安全および性能維持のため
必ず指定の部品をご使用ください。

10.9 MAIN ASSY (3/19)

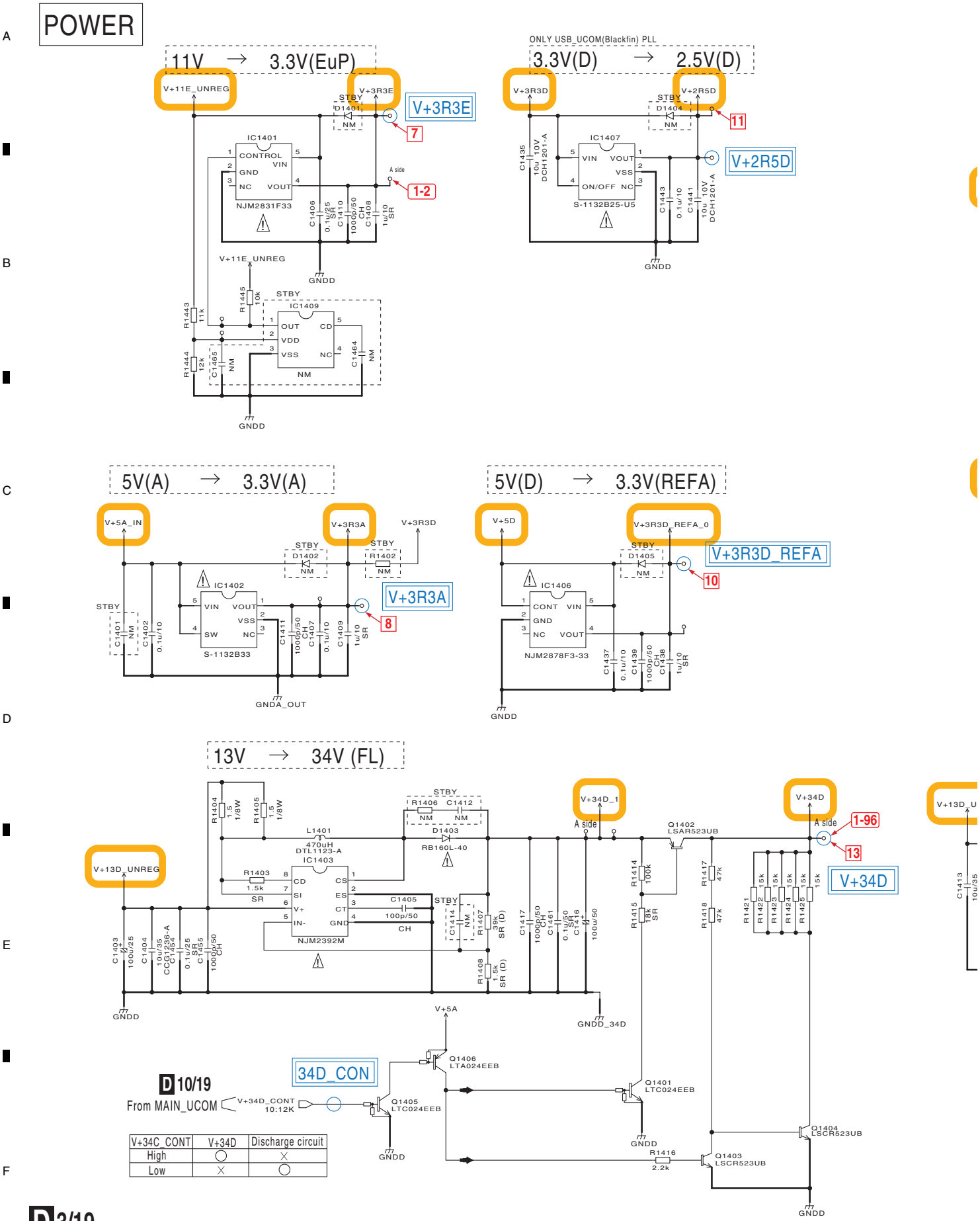

D 3/19 MAIN ASSY (DWX3430)

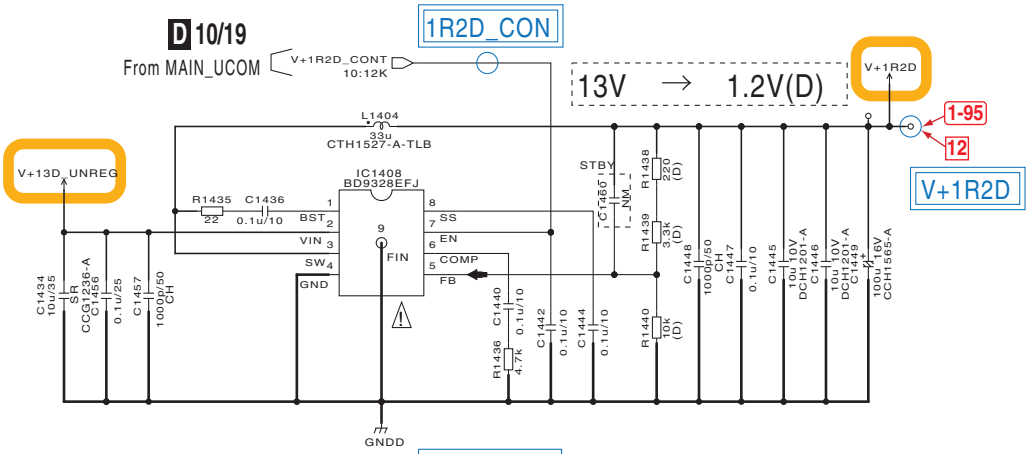

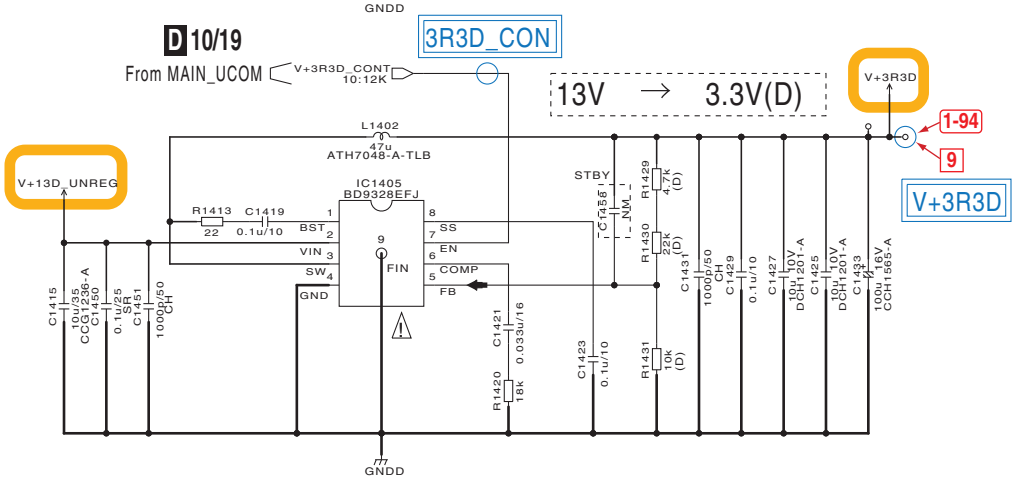

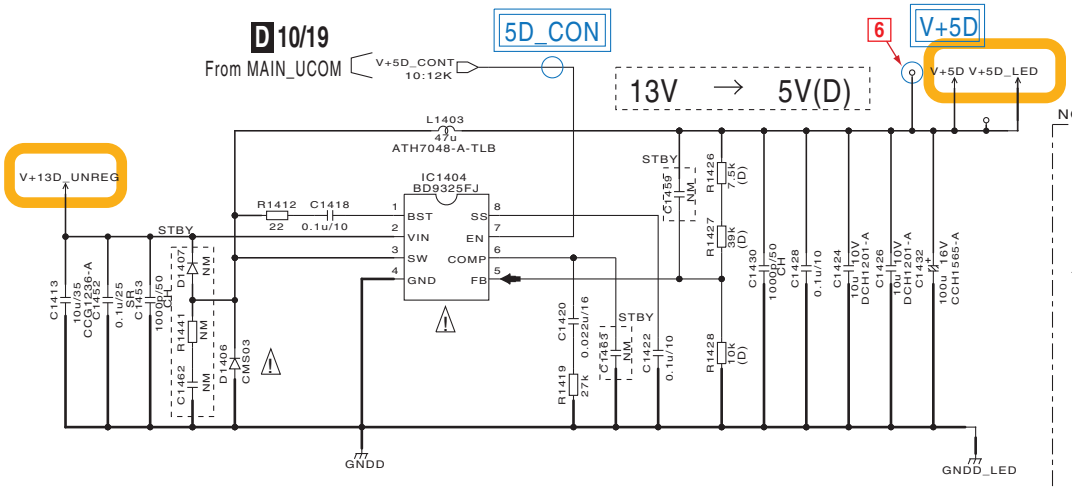

NOTES

NM	is STBY	
	RS1/16SS***J	Ω
(D)	RS1/16SS****D	Ω
SR	RS1/10SR***J	Ω
SR (D)	RS1/10SR****D	Ω
1/8W	RS1/8SQ***J	Ω
1/8W (F)	RS1/8SQ****F	Ω
1/4W	RS1/4SA***J	Ω
RN	RN1/16SE****D	Ω
	RAB4CQ***J	Ω
	CKSSYB***K	F
SR	CKSRYB***K	F
SQ	CKSQYB***K	F
CH	CCSSCH***J	F
CH (D)	CCSSCH***D	F
SRCH	CCSRCH***J	F
SQCH	CCSQCH***J	F
CFHXSQ	CFHXSQ***J	F
	CEVW***M	F
NP	CEVWNP***M	F
HVW	CEHVW***M	F
HVAW	CEHVAW***M	F
CEANP	CEANP***M	F

: Voltage measuring point

: Waveform measuring point

The ⚠ mark found on some component parts indicates the importance of the safety factor of the part. Therefore, when replacing, be sure to use parts of identical designation.

⚠ 印の部品は、安全上重要な部品です。
交換するときは、安全および性能維持のため
必ず指定の部品をご使用ください。

***** The check point for service. (Legend silk indication on the PCB.)

D 3/19

10.10 MAIN ASSY (4/19)

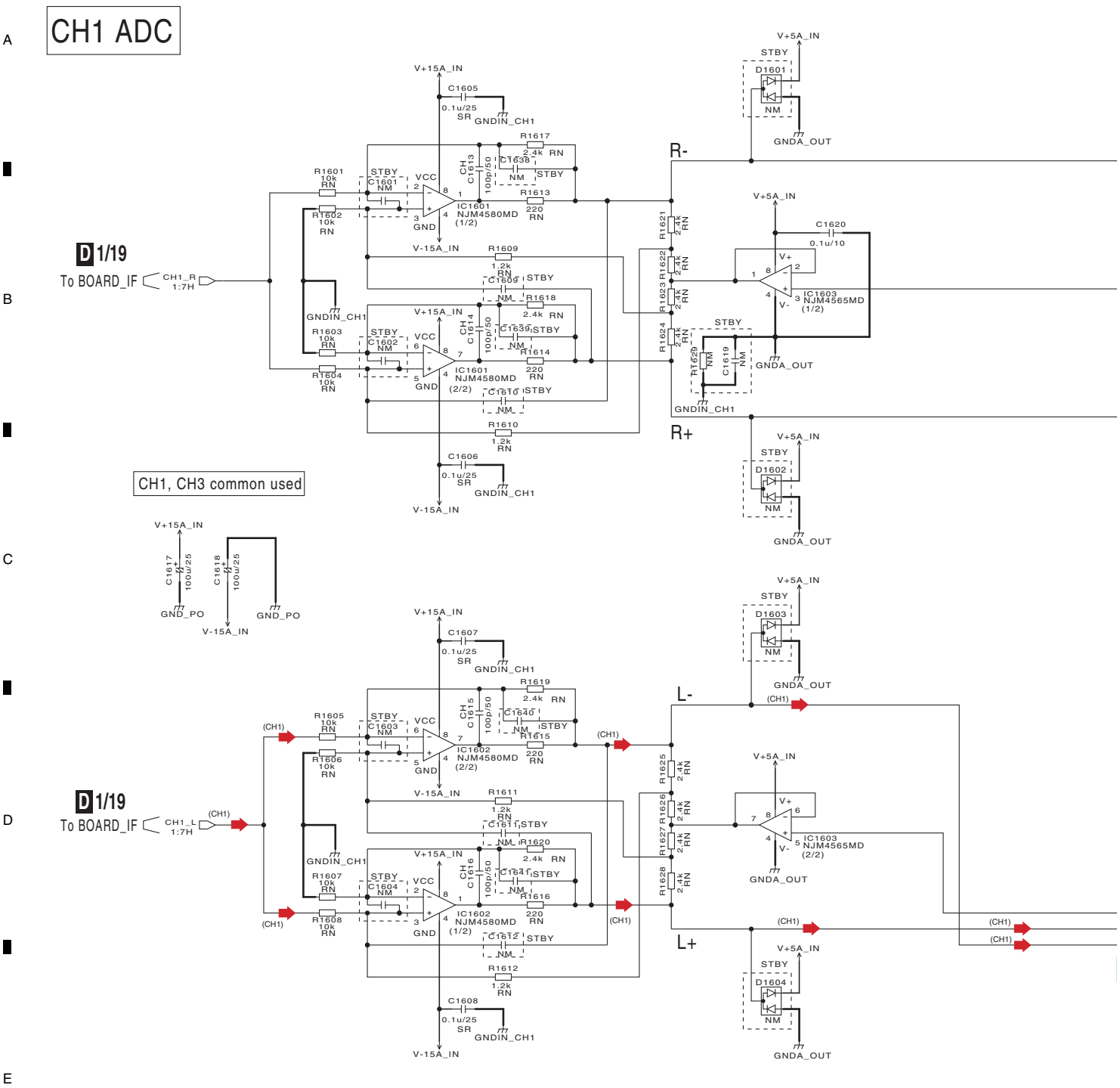

D 4/19 MAIN ASSY (DWX3430)

(CH1) : CH1 Audio Signal (L CH)

(CH1 D) : CH1 Digital Signal

: Voltage measuring point

: Waveform measuring point

NOTES

NM	is STBY	
	RS1/16SS***J	Ω
(D)	RS1/16SS****D	Ω
SR	RS1/10SR***J	Ω
SR (D)	RS1/10SR****D	Ω
1/8W	RS1/8SQ***J	Ω
1/8W (F)	RS1/8SQ****F	Ω
1/4W	RS1/4SA***J	Ω
RN	RN1/16SE****D	Ω
	RAB4CQ***J	Ω
	CKSSYB***K	F
SR	CKSRYB***K	F
SQ	CKSQYB***K	F
CH	CCSSCH***J	F
CH (D)	CCSSCH***D	F
SRCH	CCSRCH***J	F
SQCH	CCSQCH***J	F
CFHXSQ	CFHXSQ***J	F
	CEVW***M	F
NP	CEVWNP***M	F
HVW	CEHVW***M	F
HVAW	CEHVAW***M	F
CEANP	CEANP***M	F

***** The check point for service. (Legend silk indication on the PCB.)

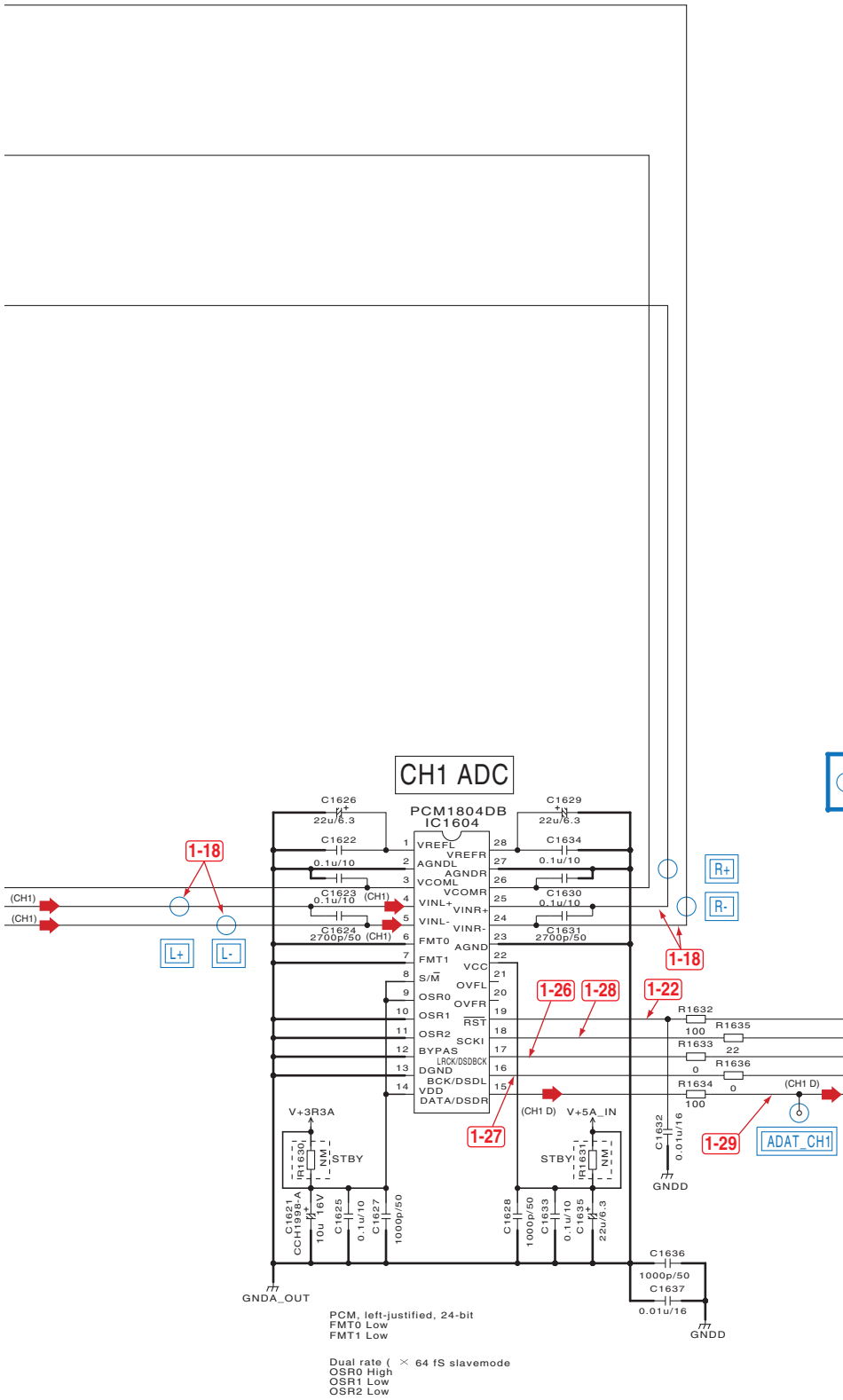

D 4/19

10.11 MAIN ASSY (5/19)

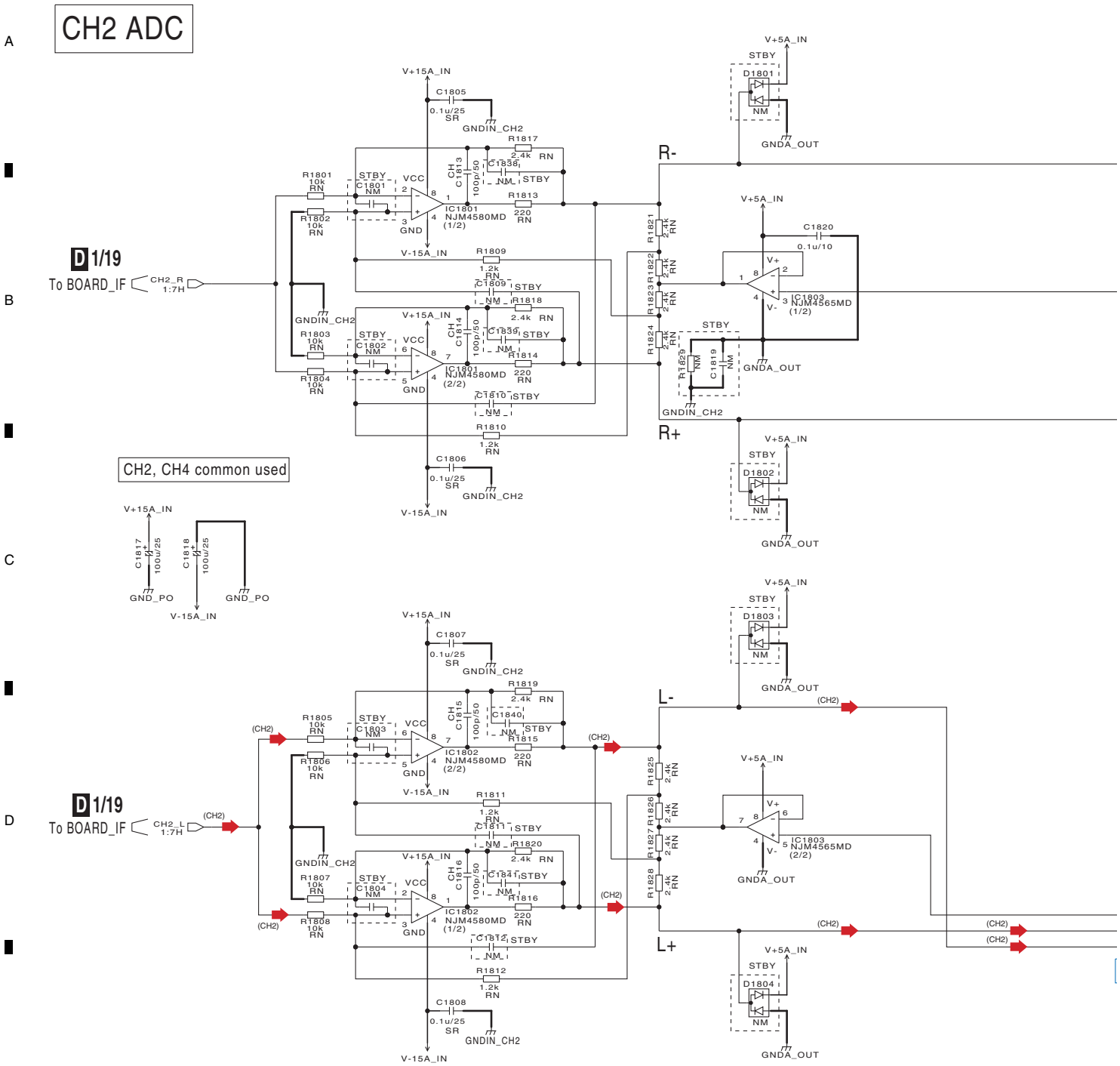

D 5/19 MAIN ASSY (DWX3430)

(CH2) : CH2 Audio Signal (L CH)

(CH2 D) : CH2 Digital Signal

: Voltage measuring point

: Waveform measuring point

NOTES

NM	is STBY	
	RS1/16SS***J	Ω
(D)	RS1/16SS****D	Ω
SR	RS1/10SR***J	Ω
SR (D)	RS1/10SR****D	Ω
1/8W	RS1/8SQ***J	Ω
1/8W (F)	RS1/8SQ****F	Ω
1/4W	RS1/4SA***J	Ω
RN	RN1/16SE****D	Ω
	RAB4CQ***J	Ω
	CKSSYB***K	F
SR	CKSRYB***K	F
SQ	CKSQYB***K	F
CH	CCSSCH***J	F
CH (D)	CCSSCH***D	F
SRCH	CCSRCH***J	F
SQCH	CCSQCH***J	F
CFHXSQ	CFHXSQ***J	F
	CEVW***M	F
NP	CEVWNP***M	F
HVW	CEHVW***M	F
HVAW	CEHVAW***M	F
CEANP	CEANP***M	F

***** The check point for service. (Legend silk indication on the PCB.)

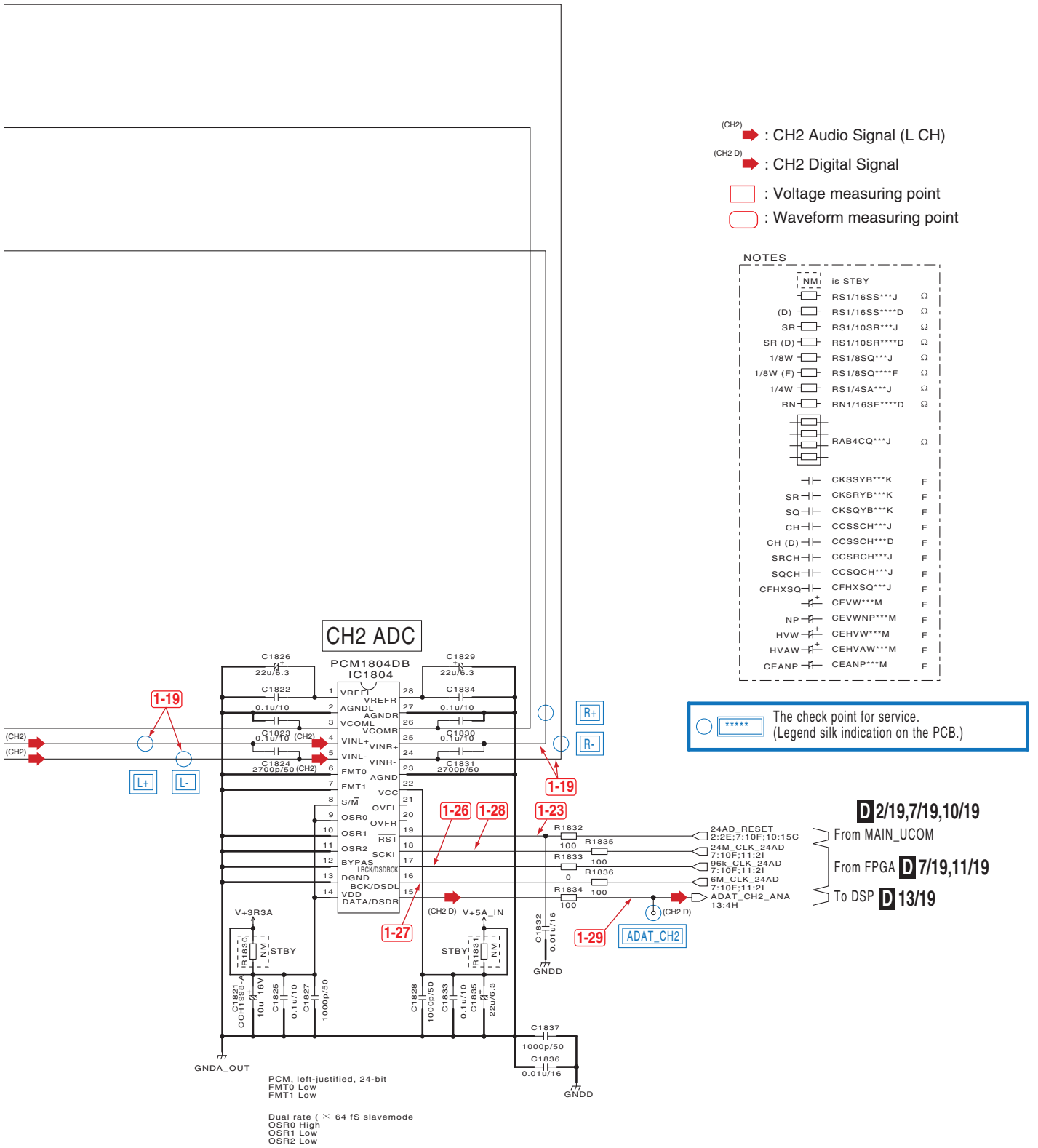

D 2/19,7/19,10/19
From MAIN_UCOM
From FPGA D 7/19,11/19
To DSP D 13/19

D 5/19

10.12 MAIN ASSY (6/19)

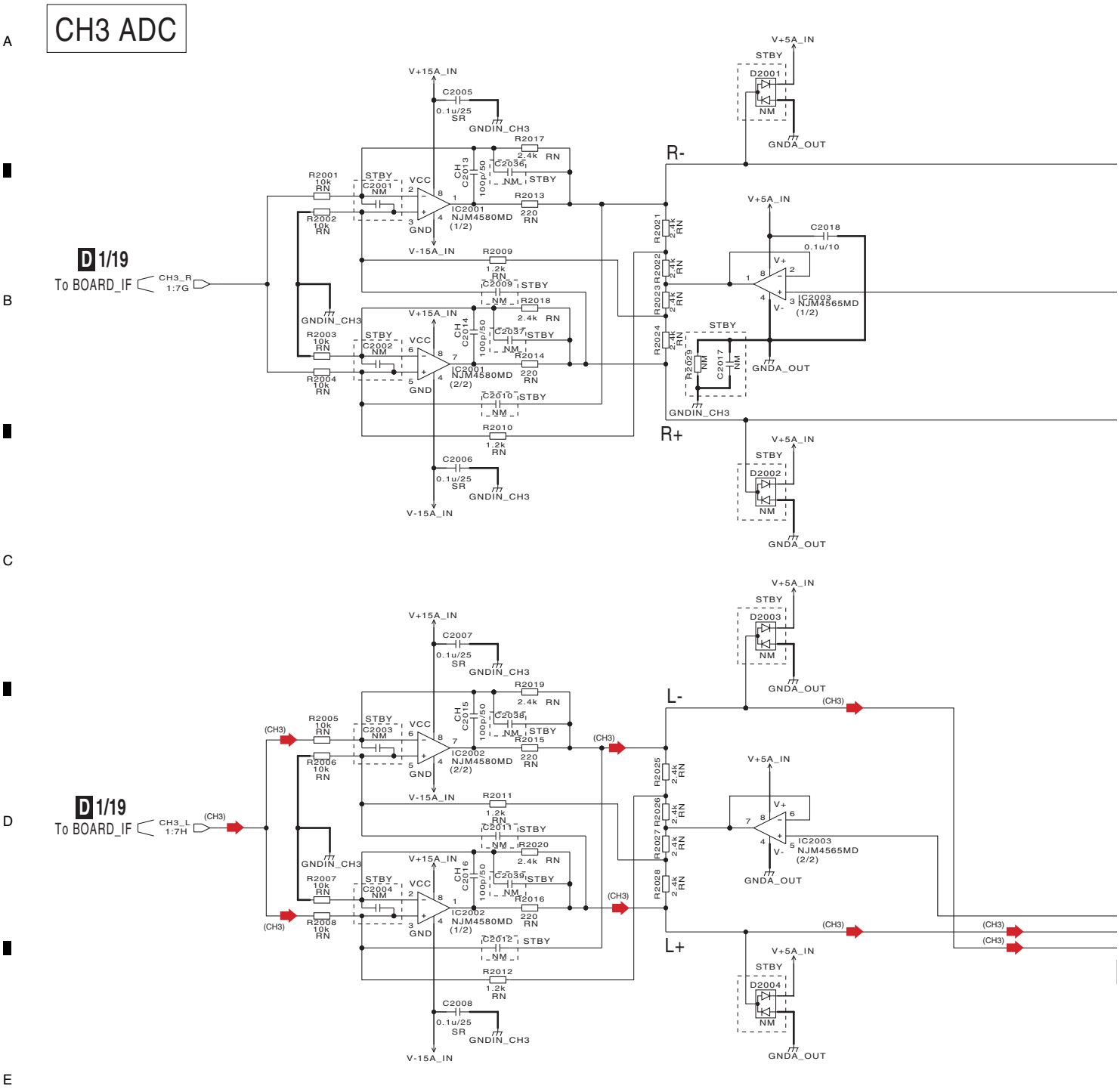

D 6/19 MAIN ASSY (DWX3430)

(CH3) : CH3 Audio Signal (L CH)
(CH3 D) : CH3 Digital Signal
: Voltage measuring point
: Waveform measuring point

NOTES

NM	is STBY	
	RS1/16SS***J	Ω
(D)	RS1/16SS****D	Ω
SR	RS1/10SR***J	Ω
SR (D)	RS1/10SR****D	Ω
1/8W	RS1/8SQ***J	Ω
1/8W (F)	RS1/8SQ****F	Ω
1/4W	RS1/4SA***J	Ω
RN	RN1/16SE****D	Ω
	RAB4CQ***J	Ω
	CKSSYB***K	F
SR	CKSRYB***K	F
SQ	CKSQYB***K	F
CH	CCSSCH***J	F
CH (D)	CCSSCH***D	F
SRCH	CCSRCH***J	F
SQCH	CCSQCH***J	F
CFHXSQ	CFHXSQ***J	F
	CEVW***M	F
NP	CEVWNP***M	F
HVW	CEHVW***M	F
HVAW	CEHVAW***M	F
CEANP	CEANP***M	F

The check point for service.
(Legend silk indication on the PCB.)

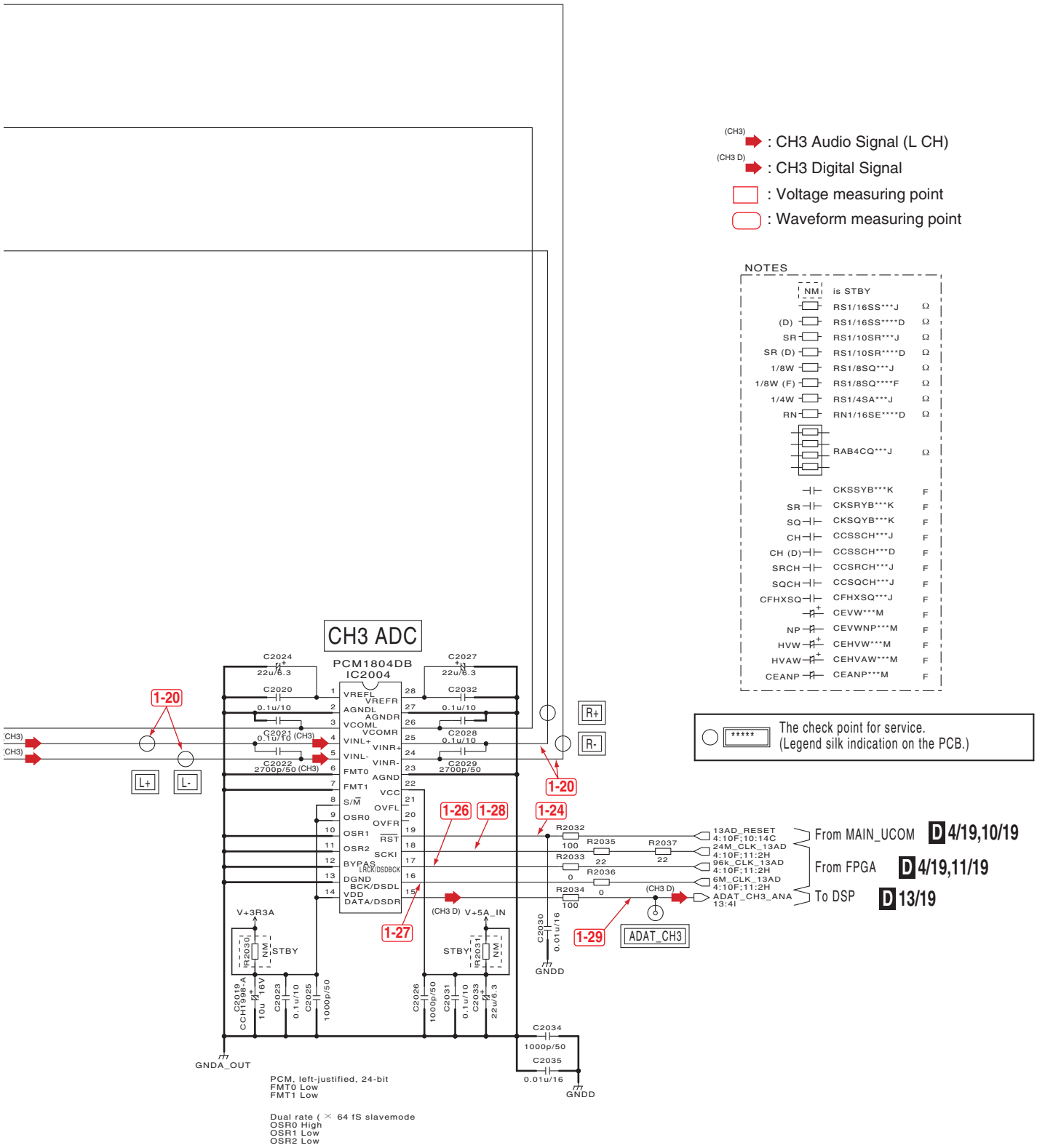

10.13 MAIN ASSY (7/19)

CH4 ADC

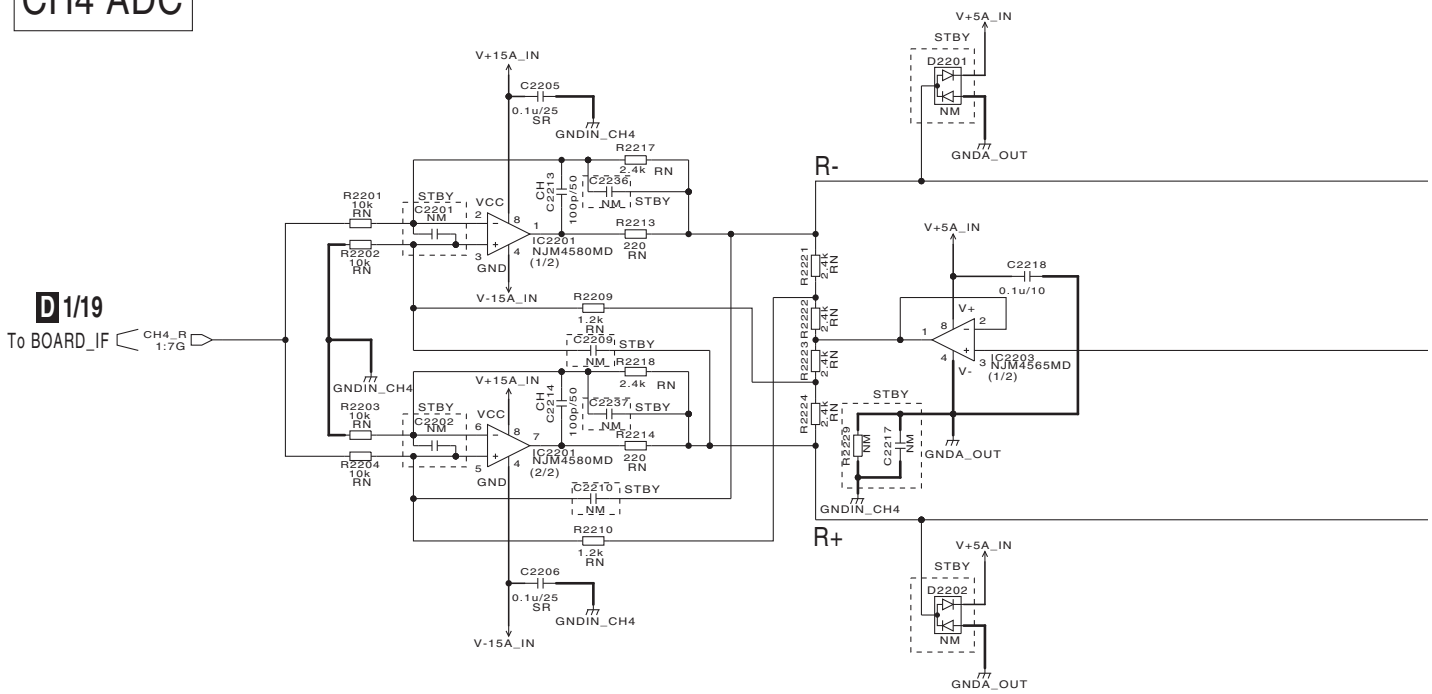

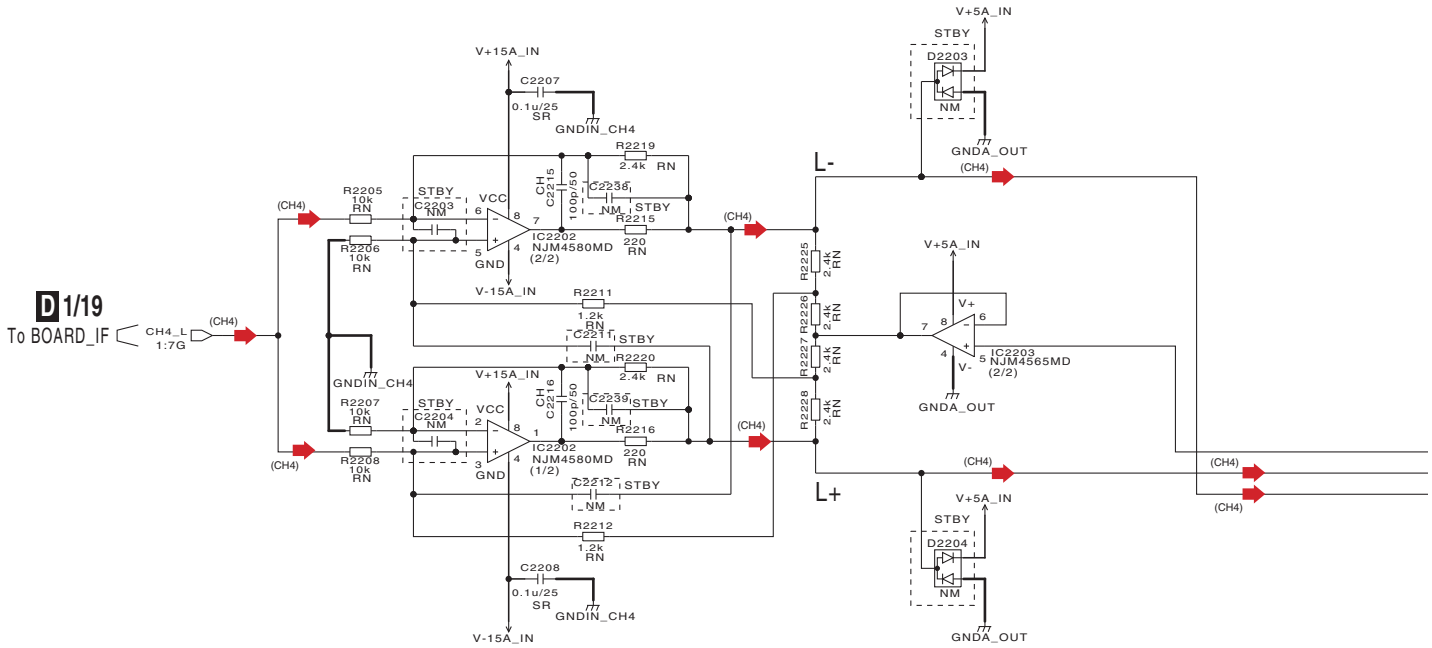

D 7/19

D 7/19 MAIN ASSY (DWX3430)

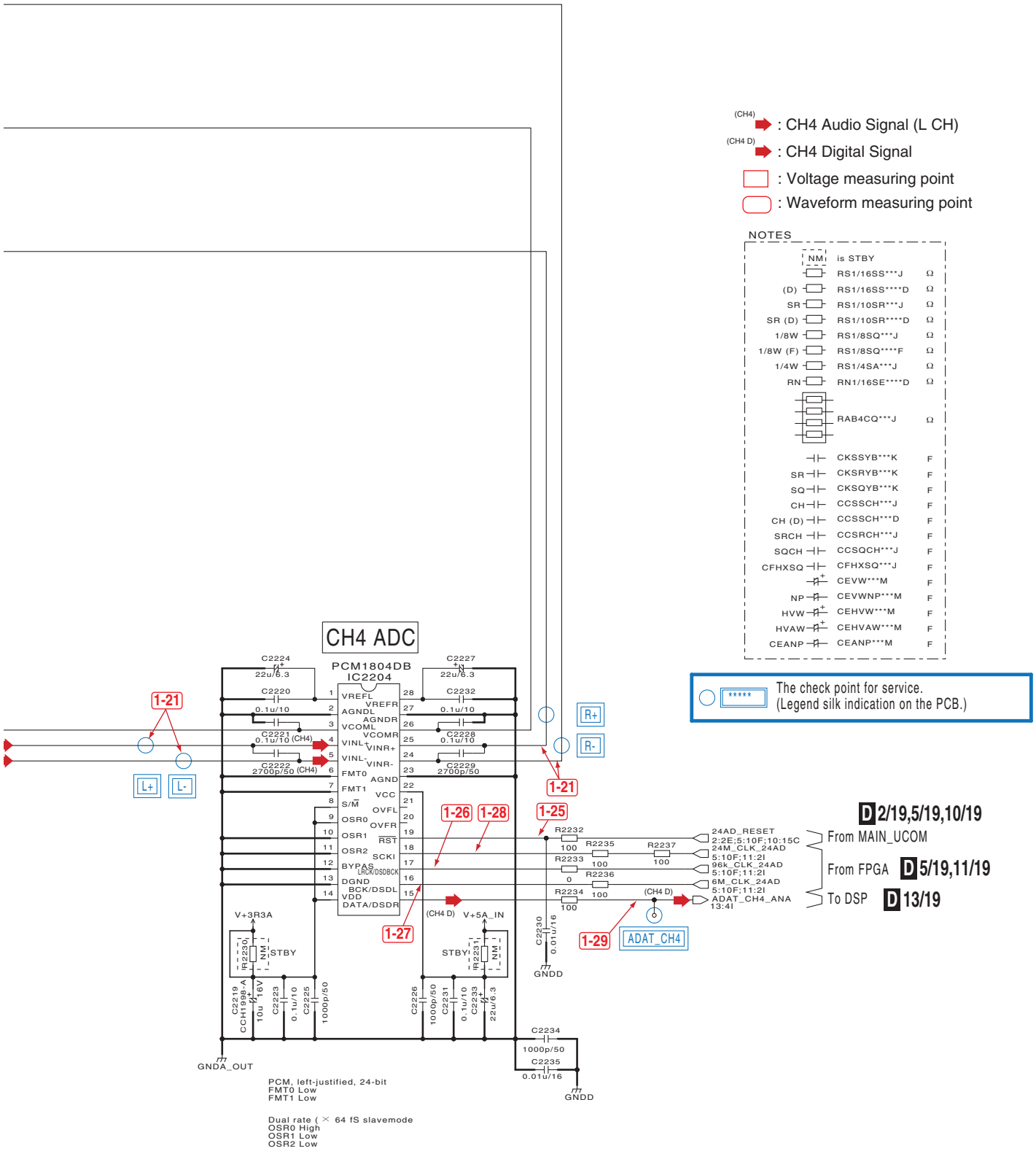

D 7/19

10.14 MAIN ASSY (8/19)

MIC/RET ADC

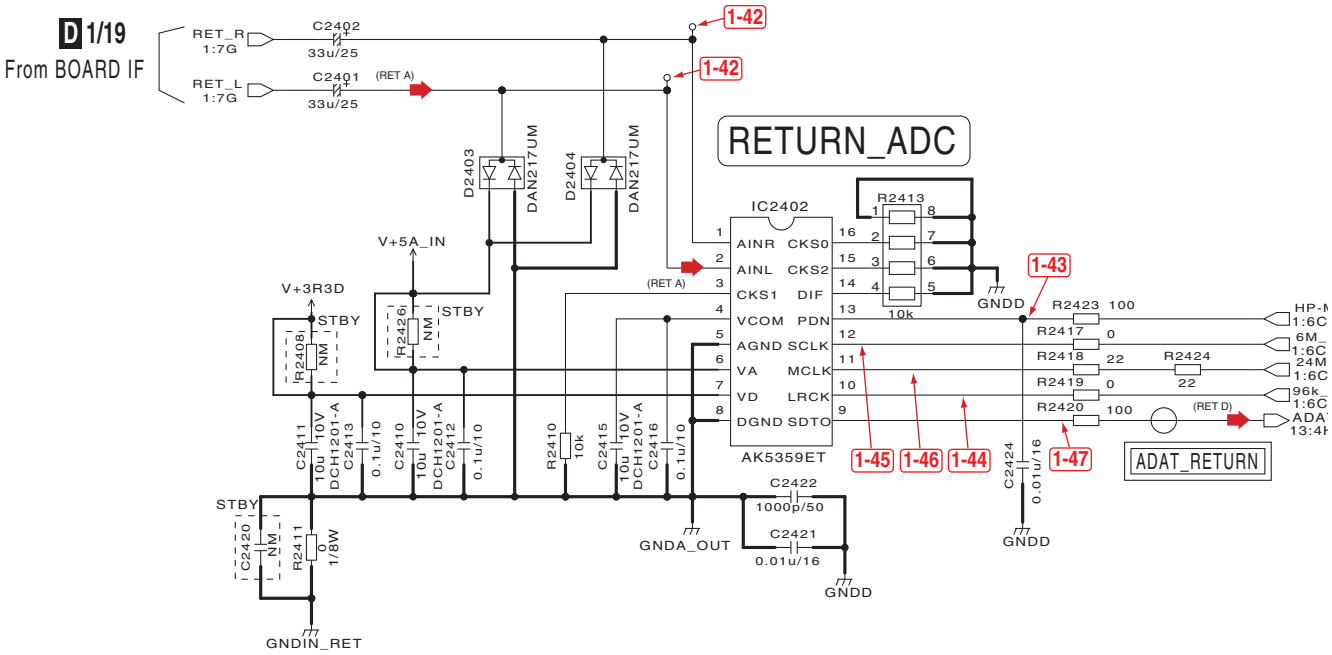

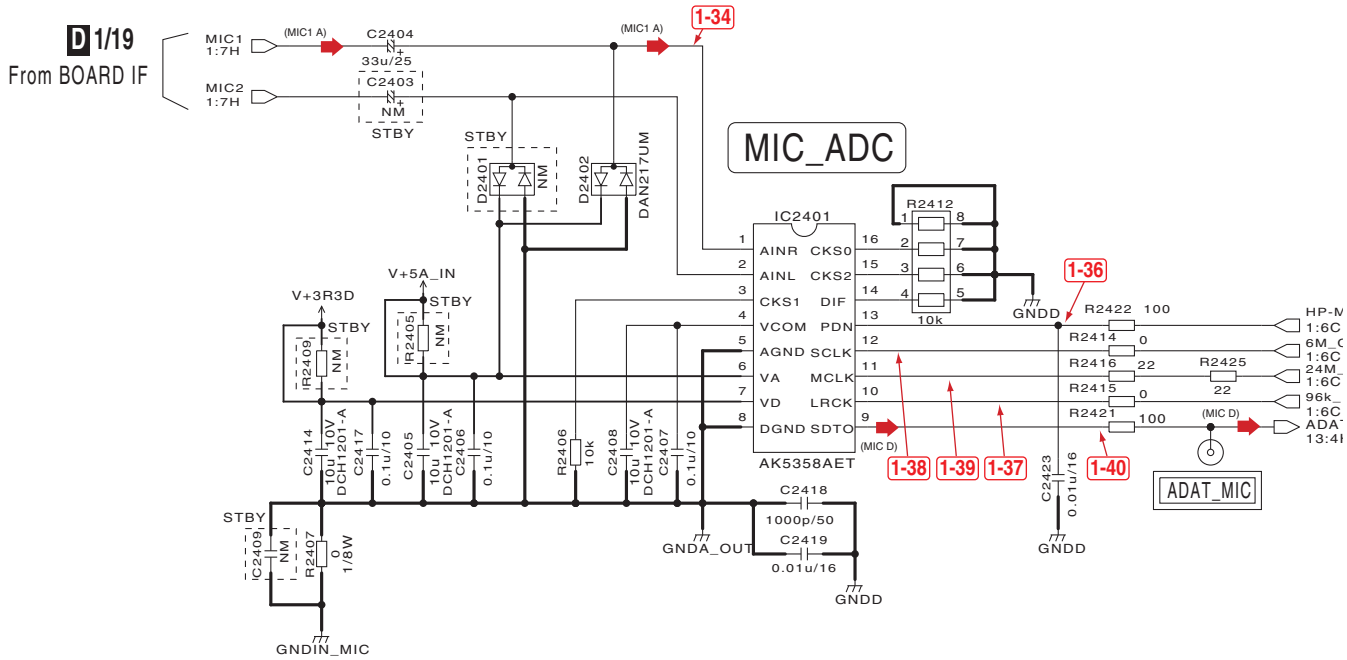

D 8/19

D 8/19 MAIN ASSY (DWX3430)

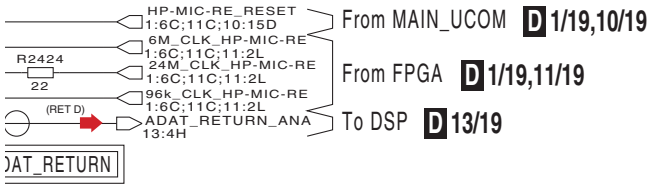

(RET A) : RETURN Audio Signal (L CH)
(RET D) : RETURN Digital Signal
(MIC1 A) : MIC1 Audio Signal
(MIC D) : MIC Digital Signal

: Voltage measuring point
: Waveform measuring point

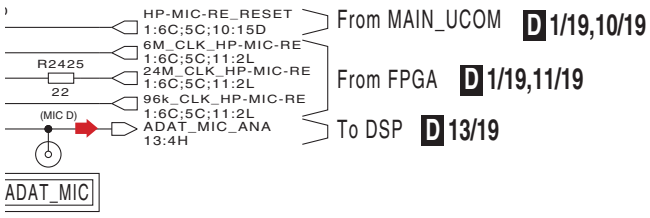

NOTES

NM	is STBY	
	RS1/16SS***J	Ω
(D)	RS1/16SS****D	Ω
SR	RS1/10SR***J	Ω
SR (D)	RS1/10SR****D	Ω
1/8W	RS1/8SQ***J	Ω
1/8W (F)	RS1/8SQ****F	Ω
1/4W	RS1/4SA***J	Ω
RN	RN1/16SE****D	Ω
	RAB4CQ***J	Ω
	CKSSYB***K	F
SR	CKSRYB***K	F
SQ	CKSQYB***K	F
CH	CCSSCH***J	F
CH (D)	CCSSCH***D	F
SRCH	CCSRCH***J	F
SQCH	CCSQCH***J	F
CFHXSQ	CFHXSQ***J	F
	CEVW***M	F
NP	CEVWNP***M	F
HVW	CEHVW***M	F
HVAW	CEHVAW***M	F
CEANP	CEANP***M	F

***** The check point for service.
(Legend silk indication on the PCB.)

D 8/19

10.15 MAIN ASSY (9/19)

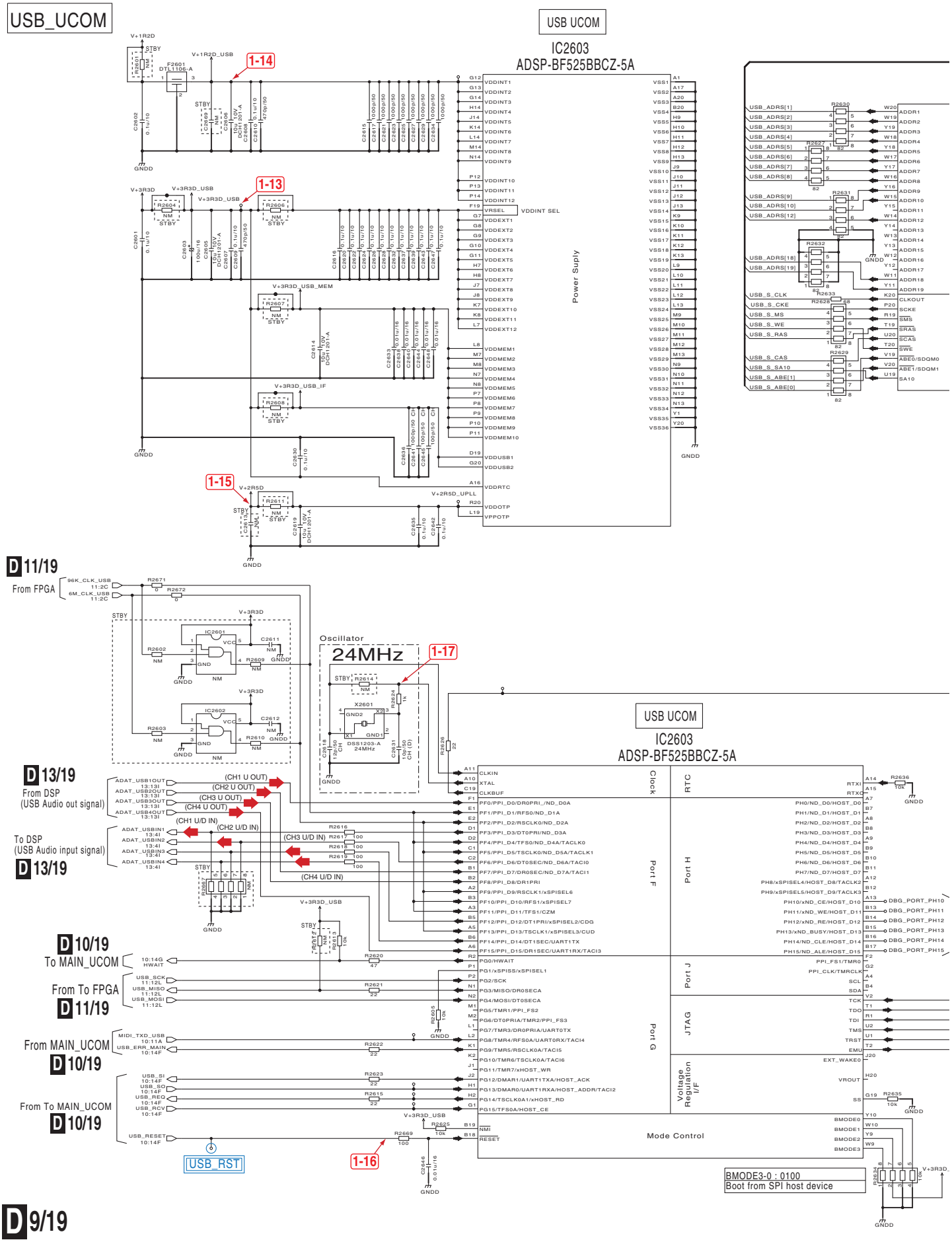

D 9/19 MAIN ASSY (DWX3430)

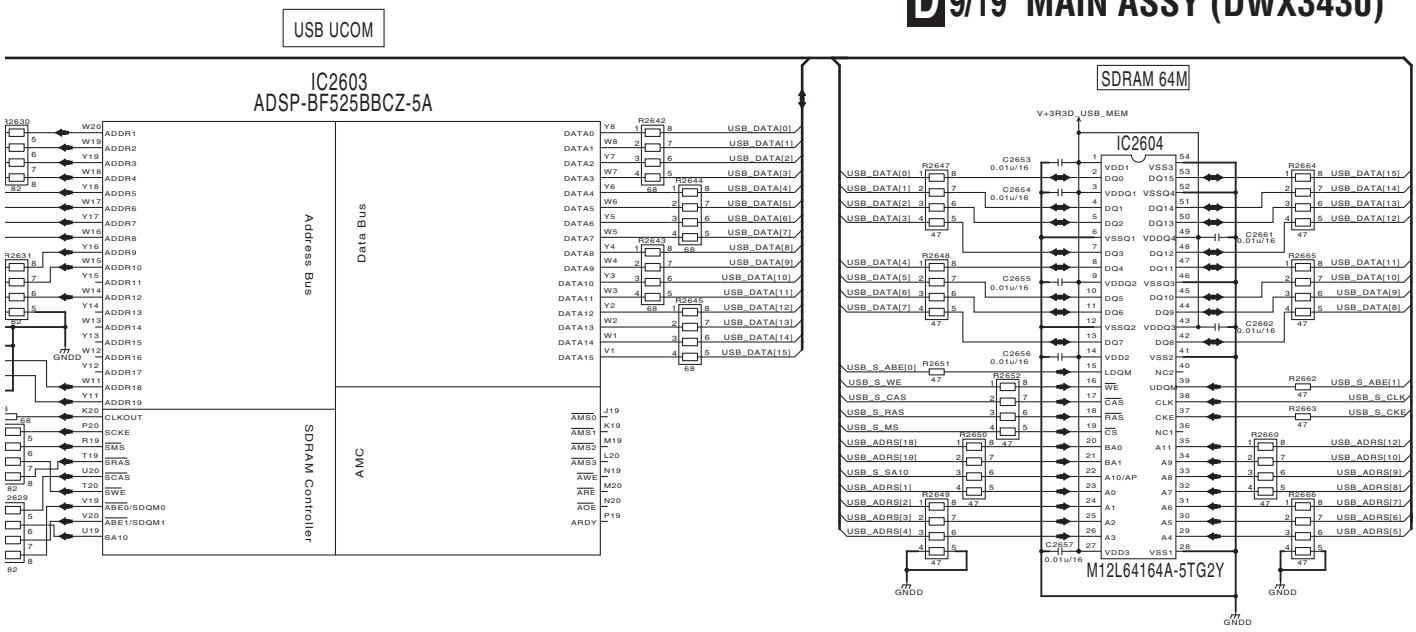

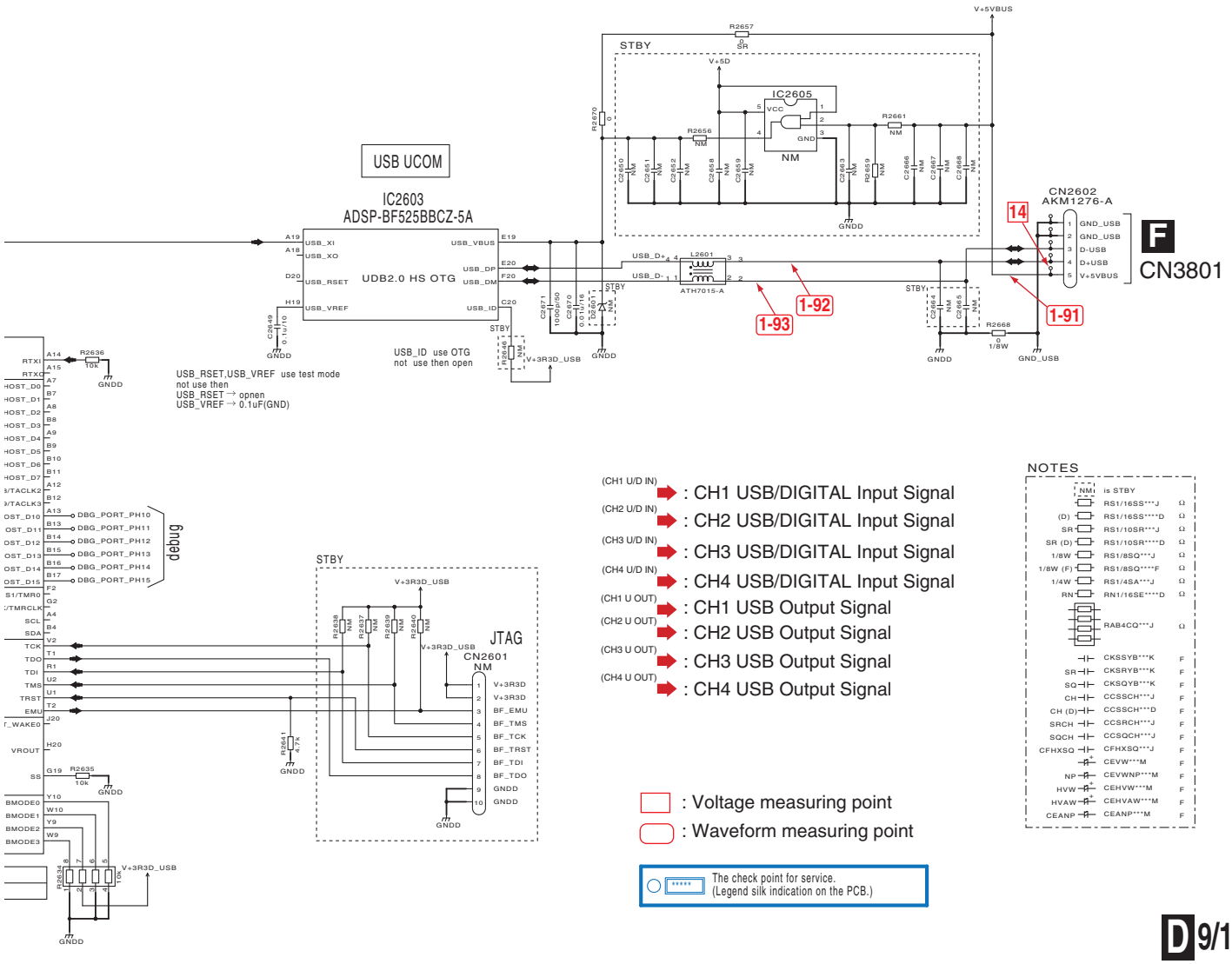

10.16 MAIN ASSY (10/19)

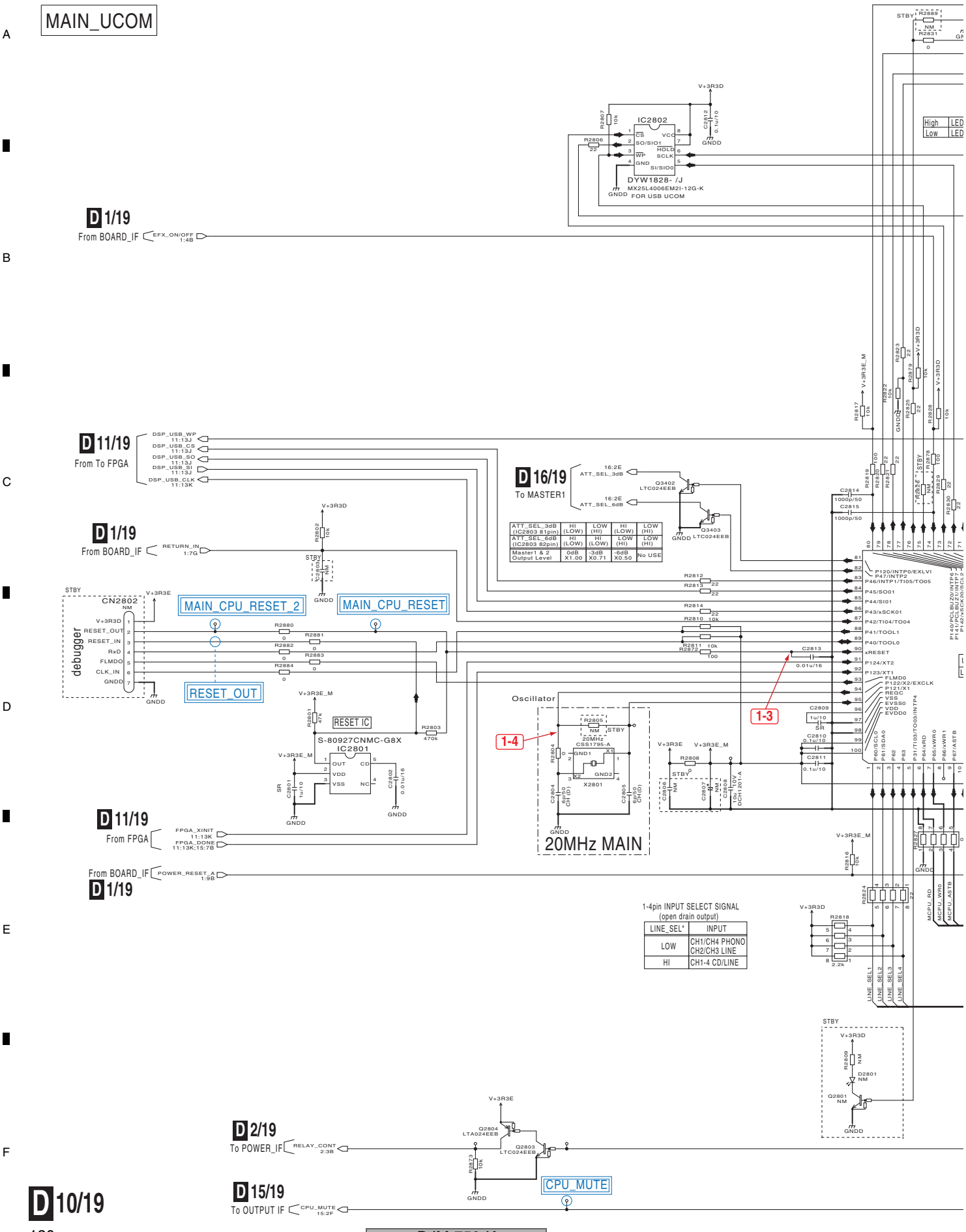

D 10/19 MAIN ASSY (DWX3430)

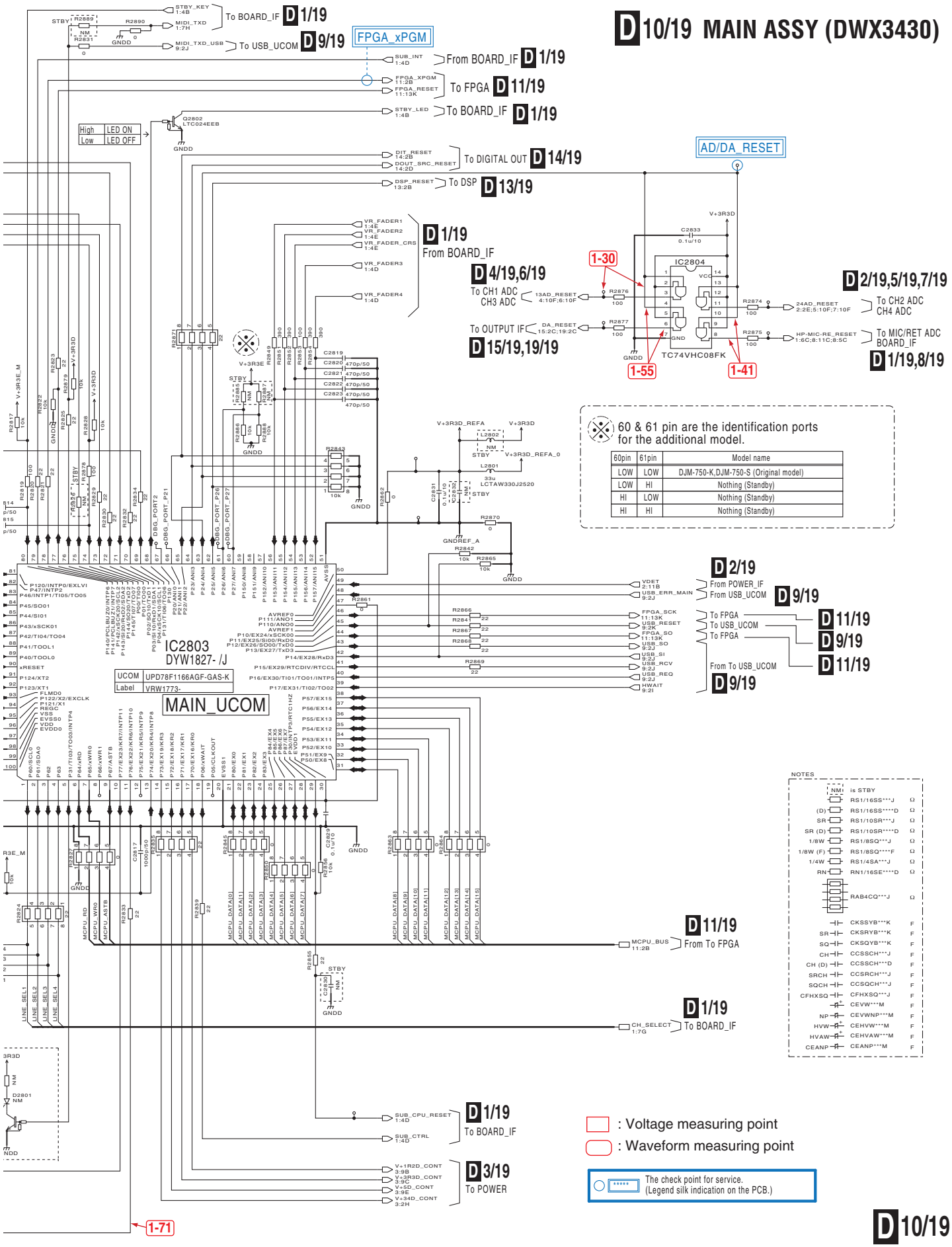

10.17 MAIN ASSY (11/19)

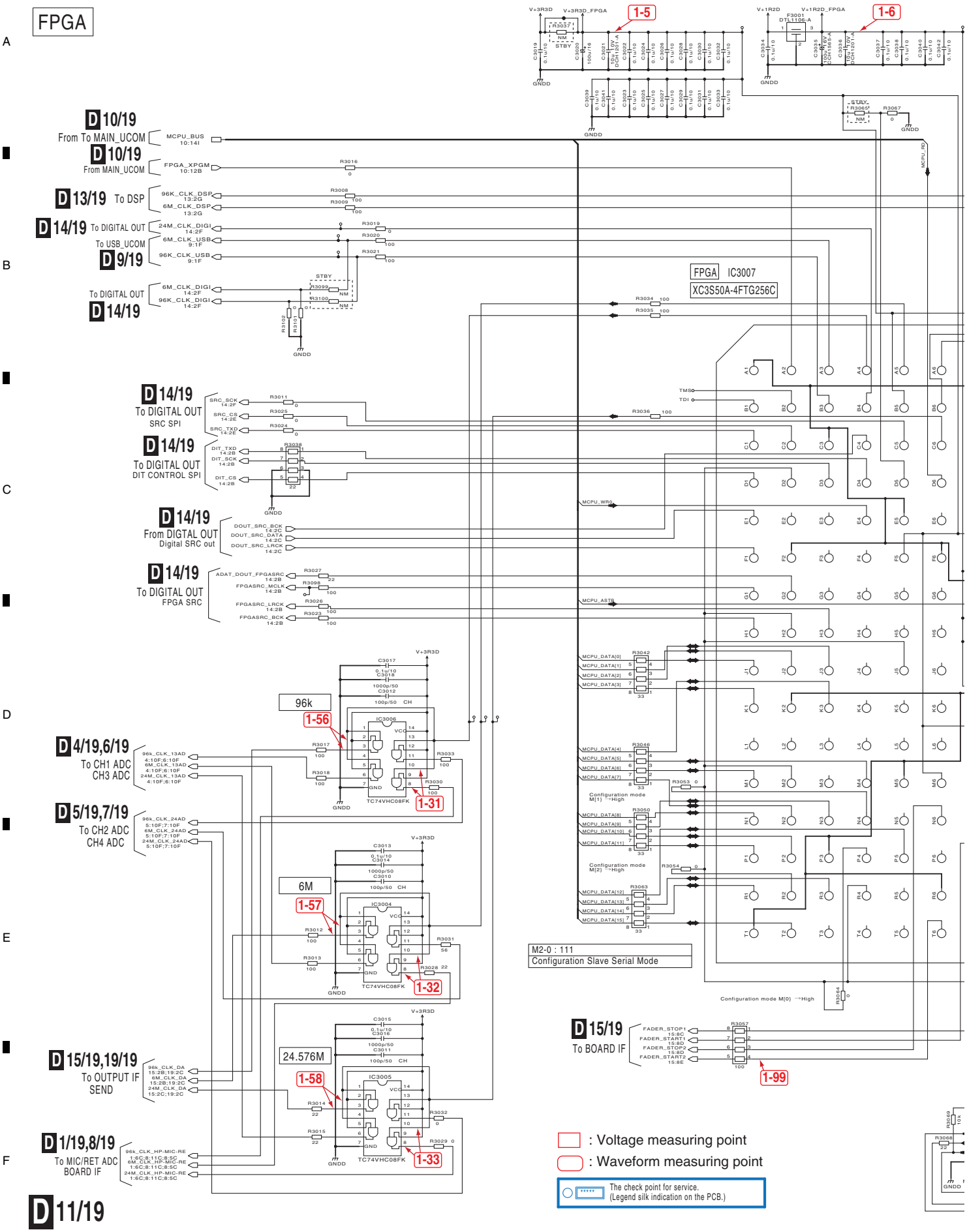

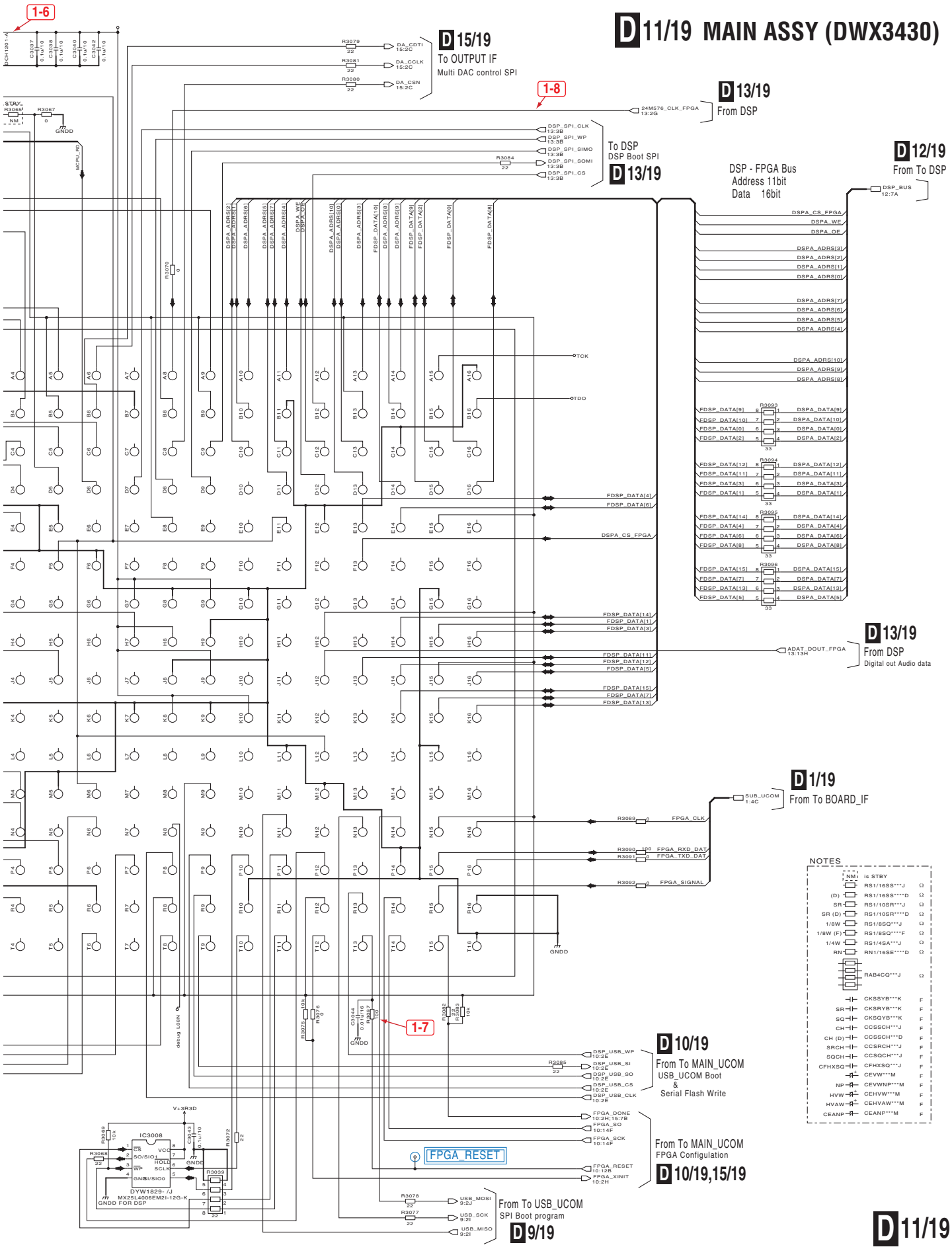
D 11/19 MAIN ASSY (DWX3430)
D 15/19
To OUTPUT IF
Multi DAC control SPI
D 13/19
From DSP
To DSP
DSP Boot SPI
D 13/19
D 12/19
From To DSP
DSP - FPGA Bus
Address 11bit
Data 16bit
D 13/19
From DSP
Digital out Audio data
D 1/19
From To BOARD_IF
D 10/19
From To MAIN_UCOM
USB_UCOM Boot
&
Serial Flash Write
From To MAIN_UCOM
FPGA Configuration
D 10/19,15/19
From To USB_UCOM
SPI Boot program
D 9/19
FPGA_RESET
IC3008
MX25L4006EM2I-12G-K
GNDD FOR DSP
NOTES
D 11/19

10.18 MAIN ASSY (12/19)

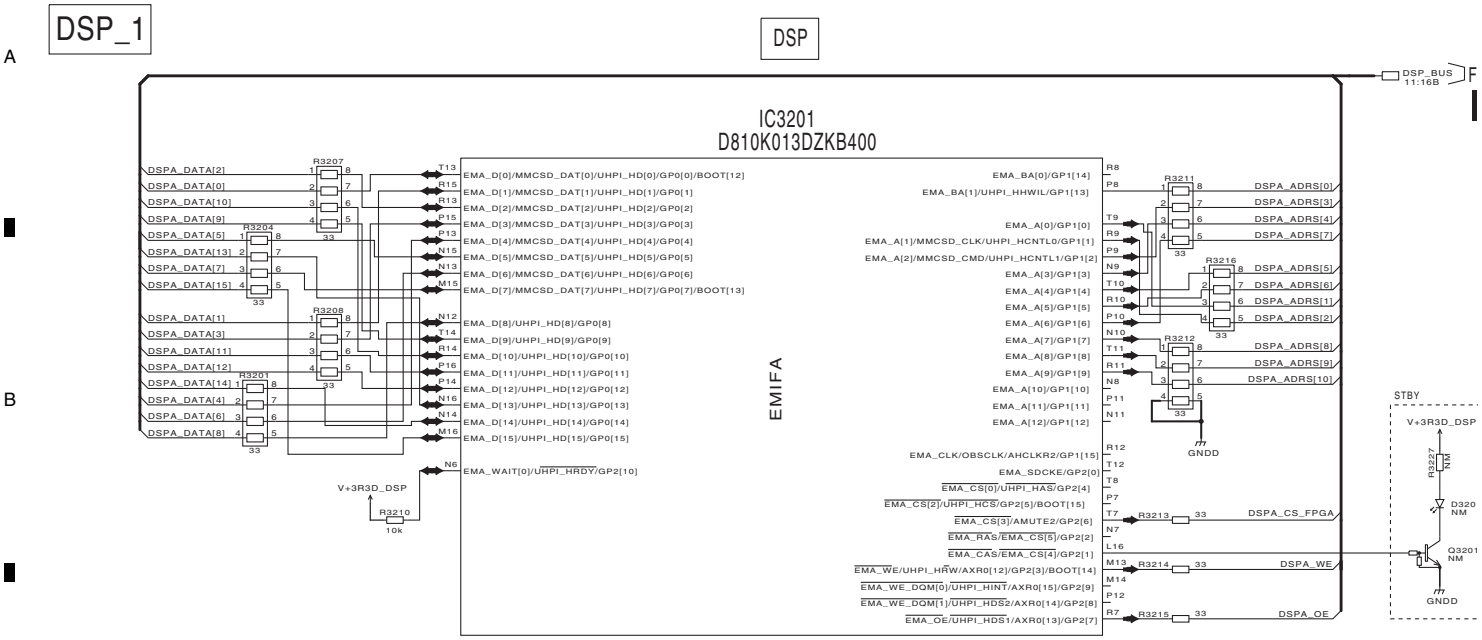

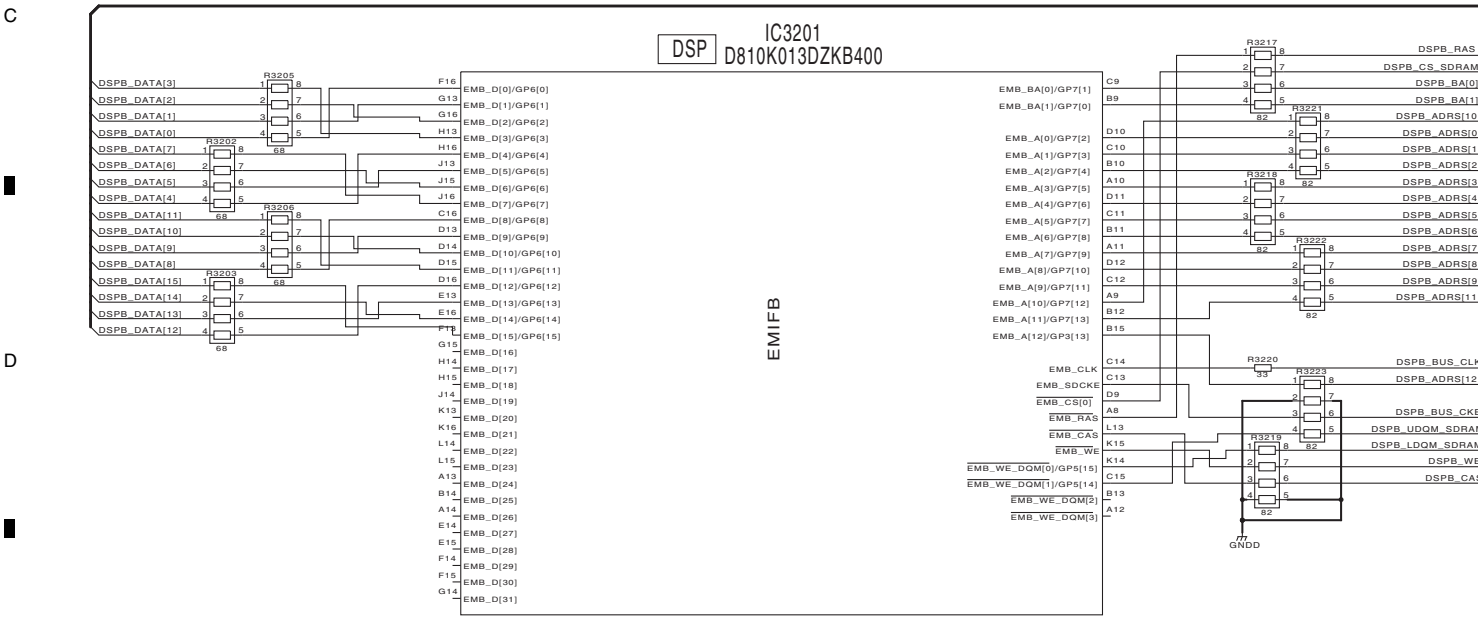

NOTES

NM	is STBY	
	RS1/16SS***J	Ω
(D)	RS1/16SS****D	Ω
SR	RS1/10SR***J	Ω
SR (D)	RS1/10SR****D	Ω
1/8W	RS1/8SQ***J	Ω
1/8W (F)	RS1/8SQ****F	Ω
1/4W	RS1/4SA***J	Ω
RN	RN1/16SE****D	Ω
	RAB4CQ***J	Ω
	CKSSYB***K	F
SR	CKSRYB***K	F
SQ	CKSQYB***K	F
CH	CCSSCH***J	F
CH (D)	CCSSCH***D	F
SRCH	CCSRCH***J	F
SQCH	CCSQCH***J	F
CFHXSQ	CFHXSQ***J	F
	CEVW***M	F
NP	CEVWNP***M	F
HVW	CEHVW***M	F
HVAW	CEHVAW***M	F
CEANP	CEANP***M	F

: Voltage measuring point

: Waveform measuring point

D 12/19

D 12/19 MAIN ASSY (DWX3430)

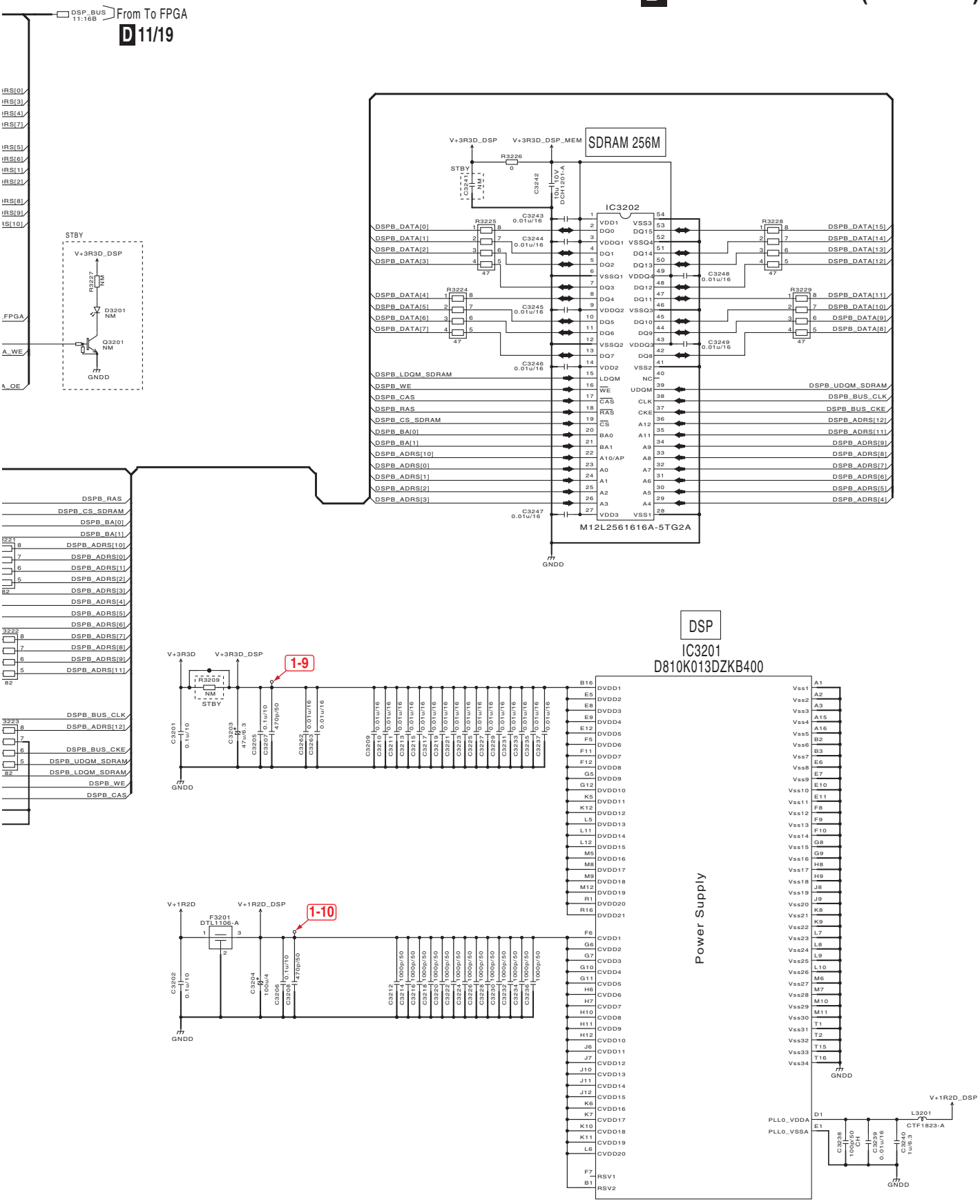

10.19 MAIN ASSY (13/19)

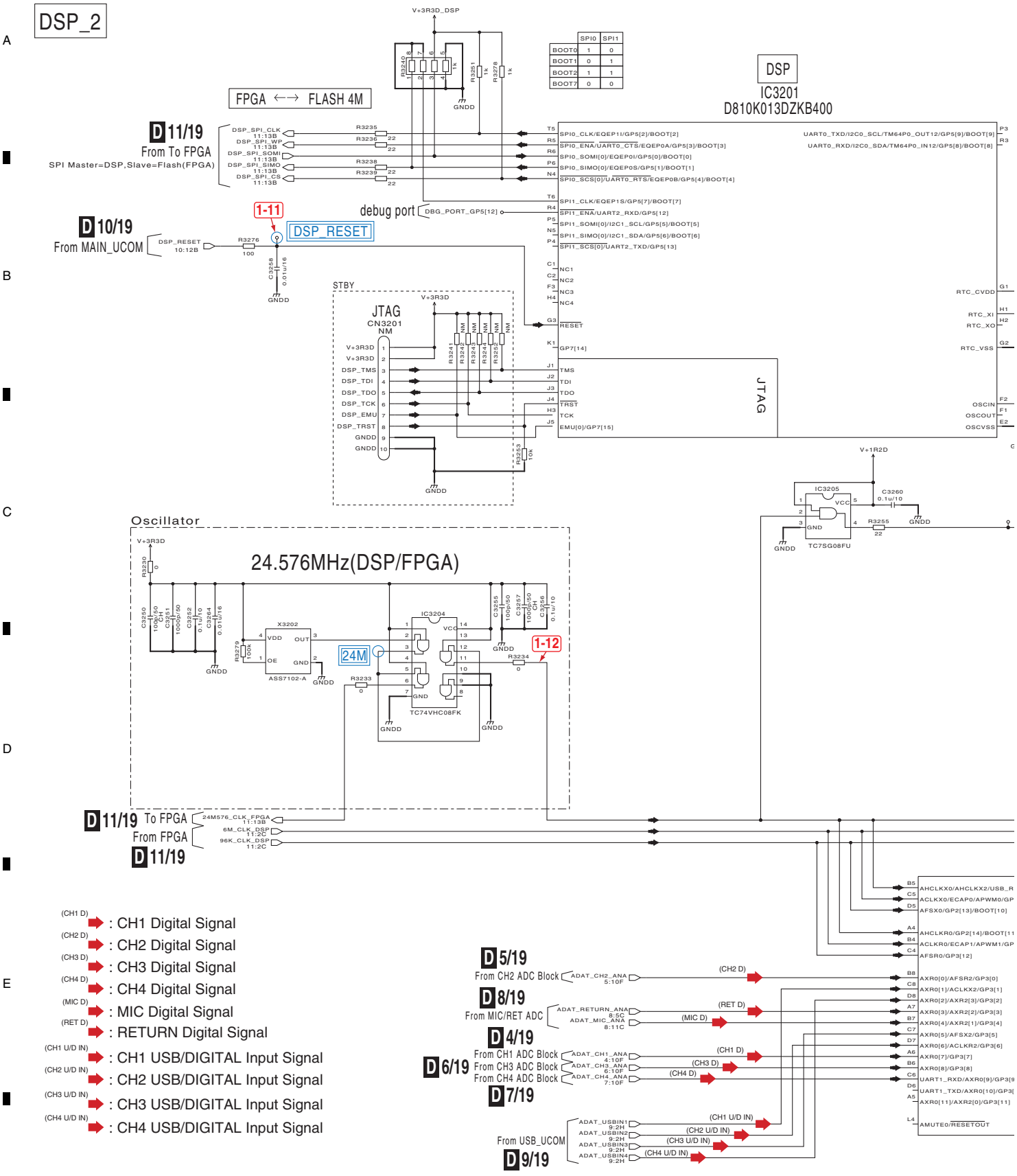

D 13/19

D 13/19 MAIN ASSY (DWX3430)

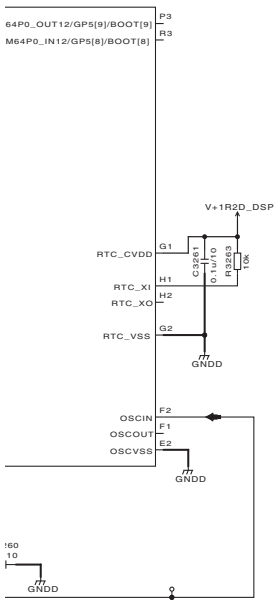

: Voltage measuring point

: Waveform measuring point

NOTES

NM	is STBY	
	RS1/16SS***J	Ω
(D)	RS1/16SS****D	Ω
SR	RS1/10SR***J	Ω
SR (D)	RS1/10SR****D	Ω
1/8W	RS1/8SQ***J	Ω
1/8W (F)	RS1/8SQ****F	Ω
1/4W	RS1/4SA***J	Ω
RN	RN1/16SE****D	Ω
	RAB4CQ***J	Ω
	CKSSYB***K	F
SR	CKSRYB***K	F
SQ	CKSQYB***K	F
CH	CCSSCH***J	F
CH (D)	CCSSCH***D	F
SRCH	CCSRCH***J	F
SQCH	CCSQCH***J	F
CFHXSQ	CFHXSQ***J	F
	CEVW***M	F
NP	CEVWNP***M	F
HVW	CEHVW***M	F
HVAW	CEHVAW***M	F
CEANP	CEANP***M	F

The check point for service.
(Legend silk indication on the PCB.)

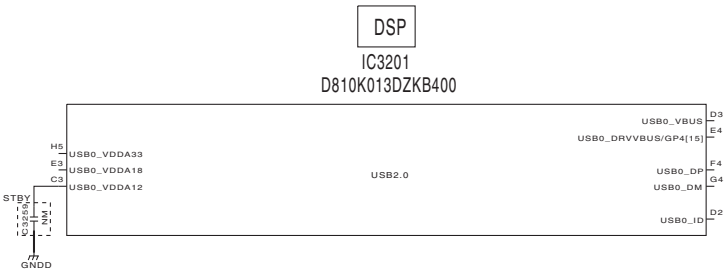

(HP D) : HP OUT Digital Signal
(MA D) : MASTER OUT Digital Signal
(BO D) : BOOTH OUT Digital Signal
(SEND D) : SEND OUT Digital Signal
(REC D) : REC OUT Digital Signal
(DIG OUT) : DIGITAL OUT Signal
(CH1 U OUT) : CH1 USB Output Signal
(CH2 U OUT) : CH2 USB Output Signal
(CH3 U OUT) : CH3 USB Output Signal
(CH4 U OUT) : CH4 USB Output Signal

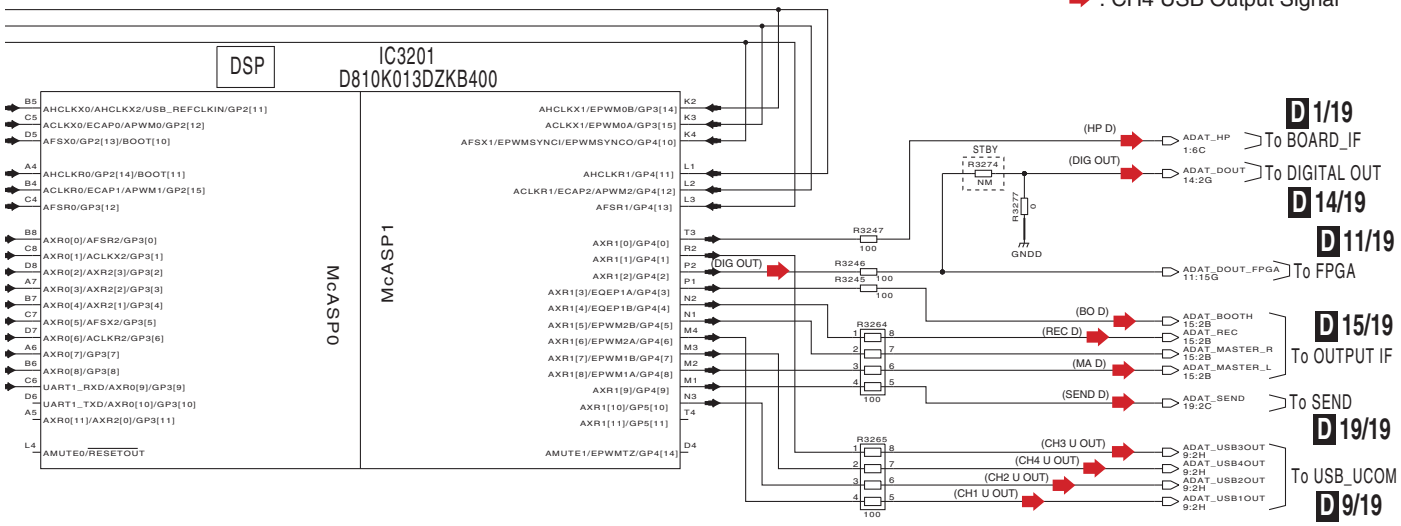

10.20 MAIN ASSY (14/19)

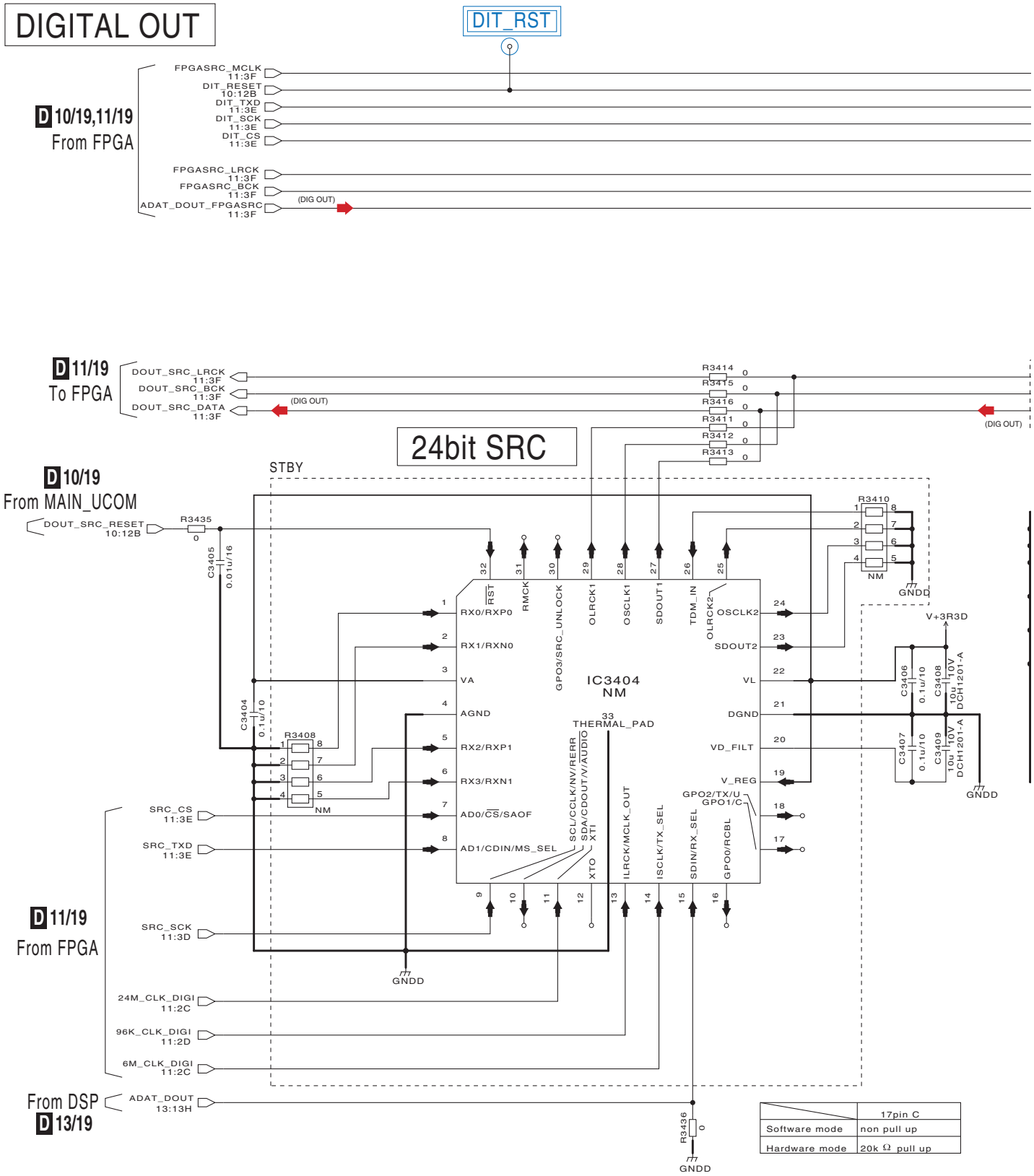

D 14/19

D 14/19 MAIN ASSY (DWX3430)

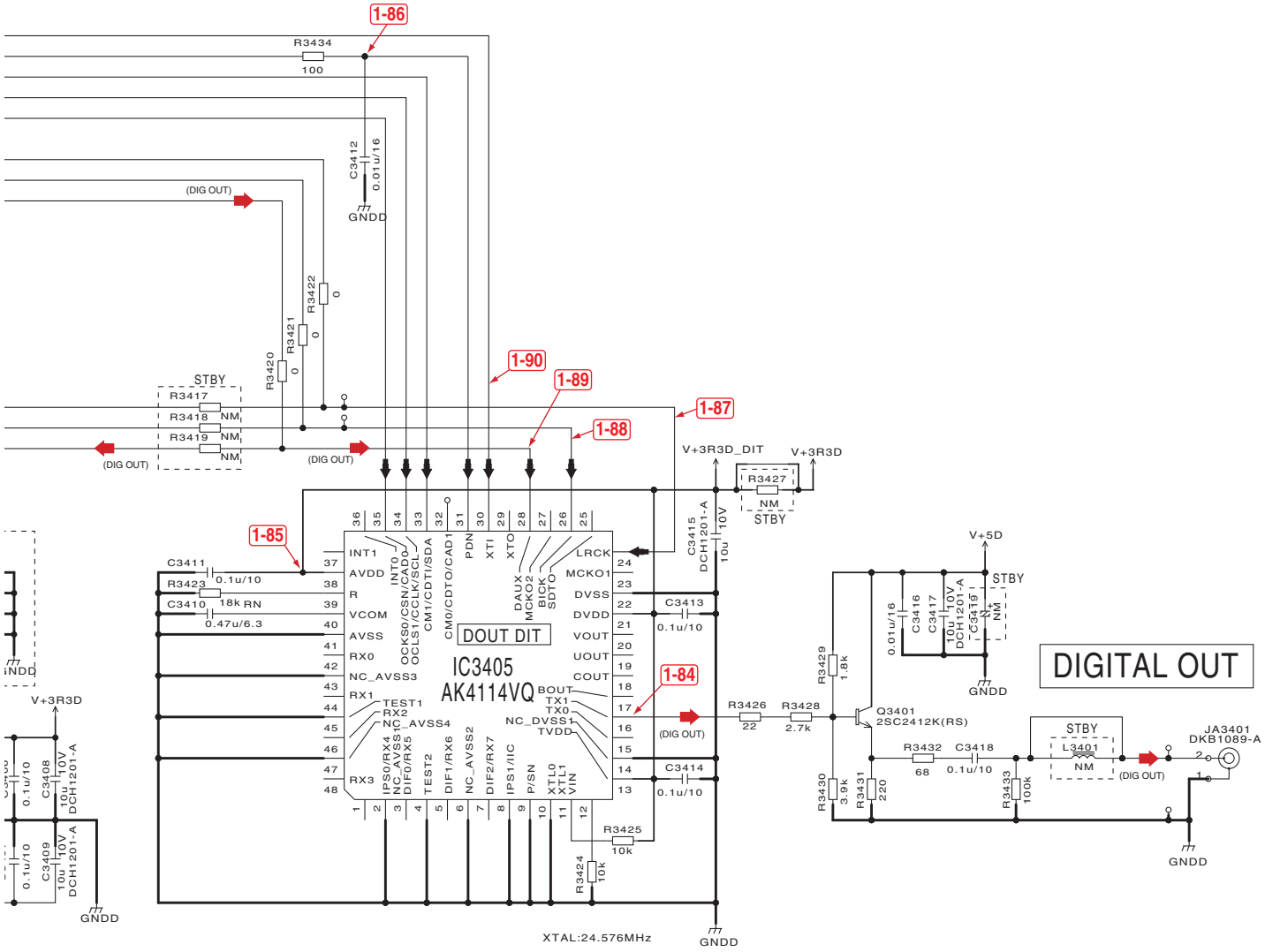

NOTES

NM	is STBY	
	RS1/16SS***J	Ω
(D)	RS1/16SS****D	Ω
SR	RS1/10SR***J	Ω
SR (D)	RS1/10SR****D	Ω
1/8W	RS1/8SQ***J	Ω
1/8W (F)	RS1/8SQ****F	Ω
1/4W	RS1/4SA***J	Ω
RN	RN1/16SE****D	Ω
	RAB4CQ***J	Ω
	CKSSYB***K	F
SR	CKSRYB***K	F
SQ	CKSQYB***K	F
CH	CCSSCH***J	F
CH (D)	CCSSCH***D	F
SRCH	CCSRCH***J	F
SQCH	CCSQCH***J	F
CFHXSQ	CFHXSQ***J	F
	CEVW***M	F
NP	CEVWNP***M	F
HVW	CEHVW***M	F
HVAW	CEHVAW***M	F
CEANP	CEANP***M	F

(DIG OUT) : DIGITAL OUT Signal

: Voltage measuring point

: Waveform measuring point

***** The check point for service. (Legend silk indication on the PCB.)

10.21 MAIN ASSY (15/19)

OUTPUT IF

TEST	MODE	FORMAT	MCLK	SCLK	LRCK
OPEN	SPI I2S	I2S Left-Justified 32bits	256fs 24.576MHz	64fs 6.144MHz	96kHz

MASTER / REC/ BOOTH DAC

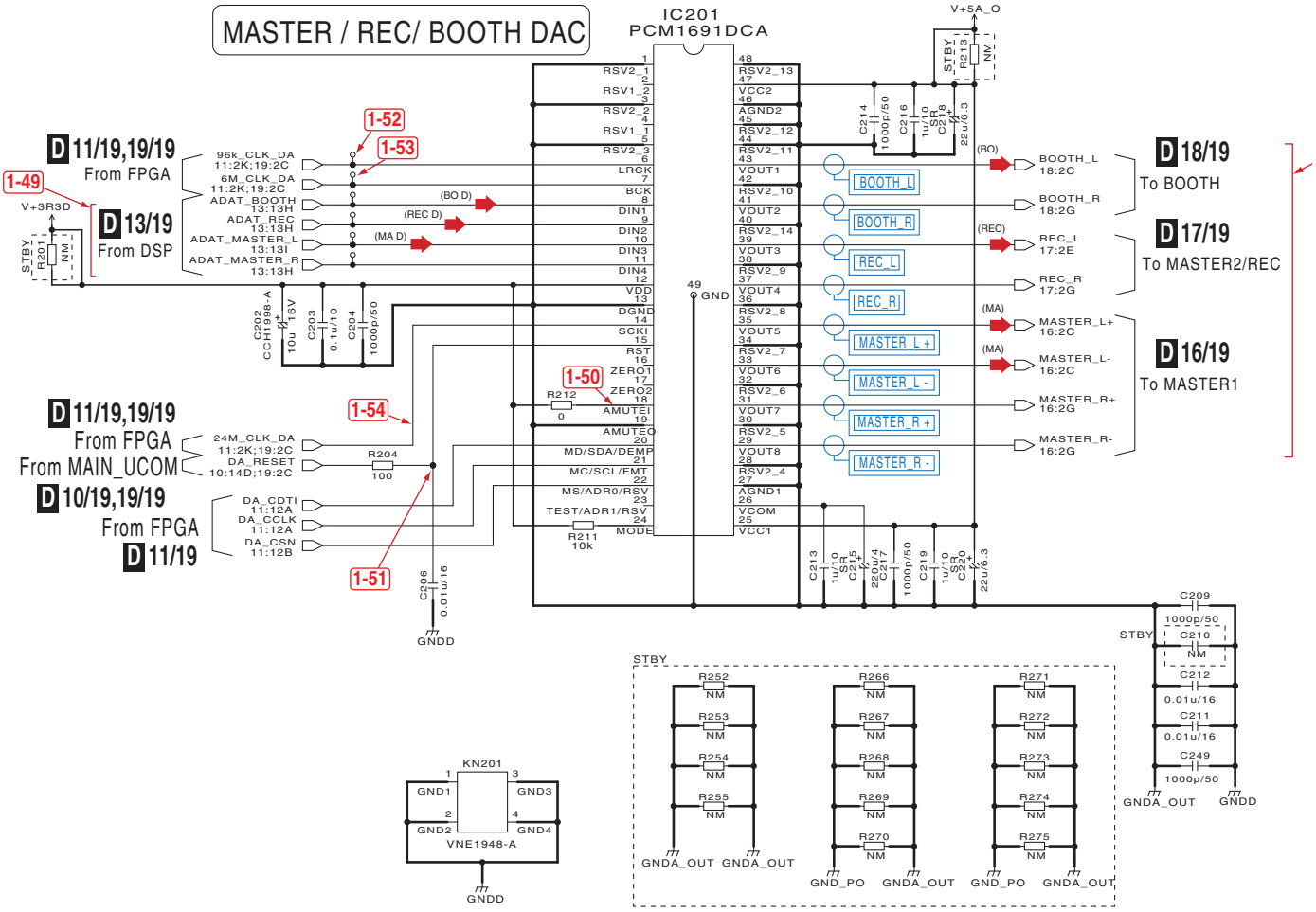

MUTE

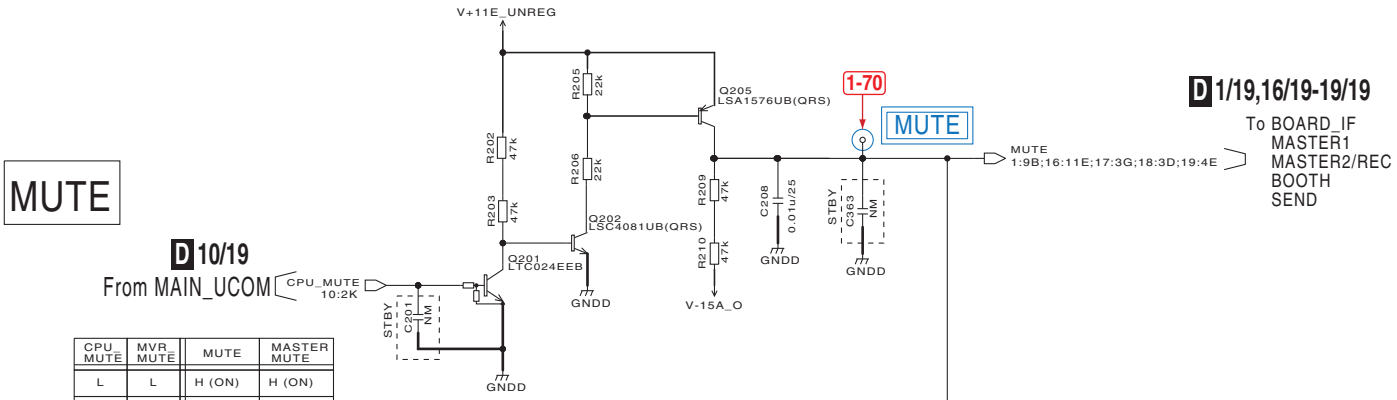

CPU_ MUTE	MVR_ MUTE	MUTE	MASTER MUTE
L	L	H (ON)	H (ON)
L	H	H (ON)	H (ON)
H	L	V-15A (OFF)	V-15A (OFF)
H	H	V-15A (OFF)	H (ON)

MASTER VR MUTE

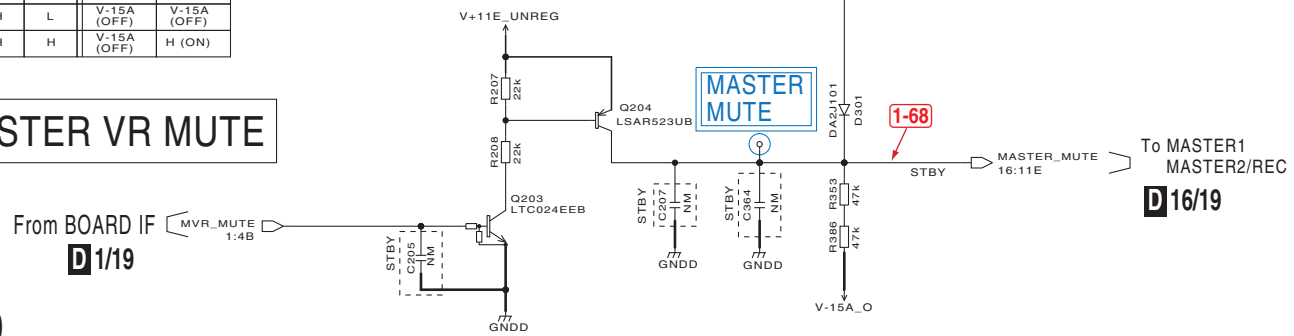

D 15/19

CONTROL

D 15/19 MAIN ASSY (DWX3430)

D 18/19
To BOOTH

D 17/19
To MASTER2/REC

D 16/19
To MASTER1

1-48

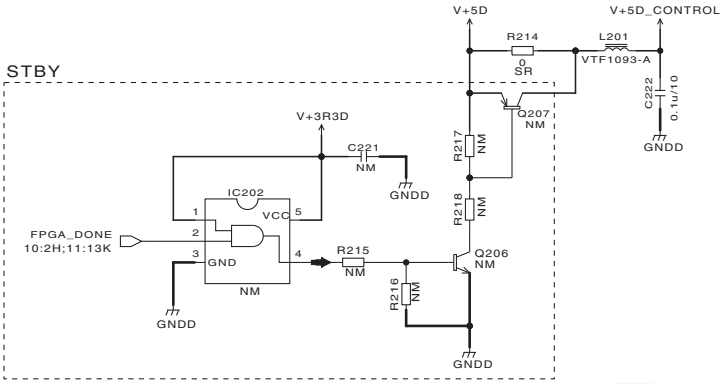

CONTROL1
(for CH2)

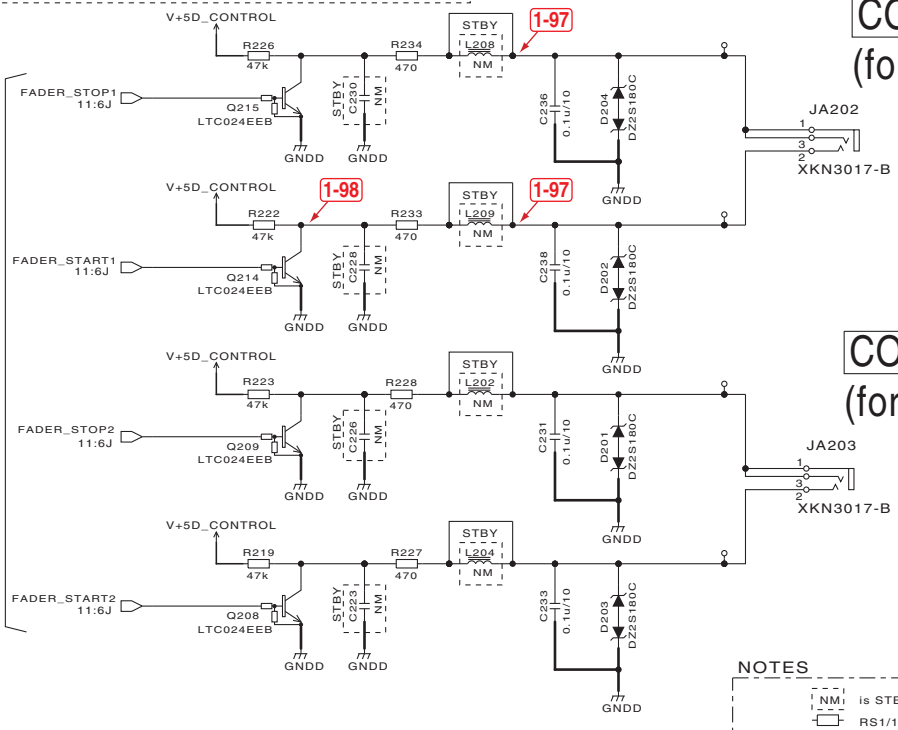

CONTROL2
(for CH3)

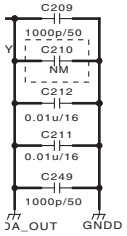

D 11/19
From FPGA

9,16/19-19/19
To BOARD_IF
MASTER1
MASTER2/REC
BOOTH
SEND

To MASTER1
MASTER2/REC
D 16/19

(MA D) : MASTER OUT Digital Signal
(BO D) : BOOTH OUT Digital Signal
(REC D) : REC OUT Digital Signal
(BO) : BOOTH OUT Signal (L ch)
(REC) : REC OUT Signal (L ch)
(MA) : MASTER OUT Signal (L ch)

: Voltage measuring point
: Waveform measuring point

***** The check point for service.
(Legend silk indication on the PCB.)

NOTES

NM	is STBY	
	RS1/16SS***J	Ω
(D)	RS1/16SS****D	Ω
SR	RS1/10SR***J	Ω
SR (D)	RS1/10SR****D	Ω
1/8W	RS1/8SQ***J	Ω
1/8W (F)	RS1/8SQ****F	Ω
1/4W	RS1/4SA***J	Ω
RN	RN1/16SE****D	Ω
	RAB4CQ***J	Ω
	CKSSYB***K	F
SR	CKSRYB***K	F
SQ	CKSQYB***K	F
CH	CCSSCH***J	F
CH (D)	CCSSCH***D	F
SRCH	CCSRCH***J	F
SQCH	CCSQCH***J	F
CFHXSQ	CFHXSQ***J	F
	CEVW***M	F
NP	CEVWNP***M	F
HVW	CEHVW***M	F
HVAW	CEHVAW***M	F
CEANP	CEANP***M	F

10.22 MAIN ASSY (16/19)

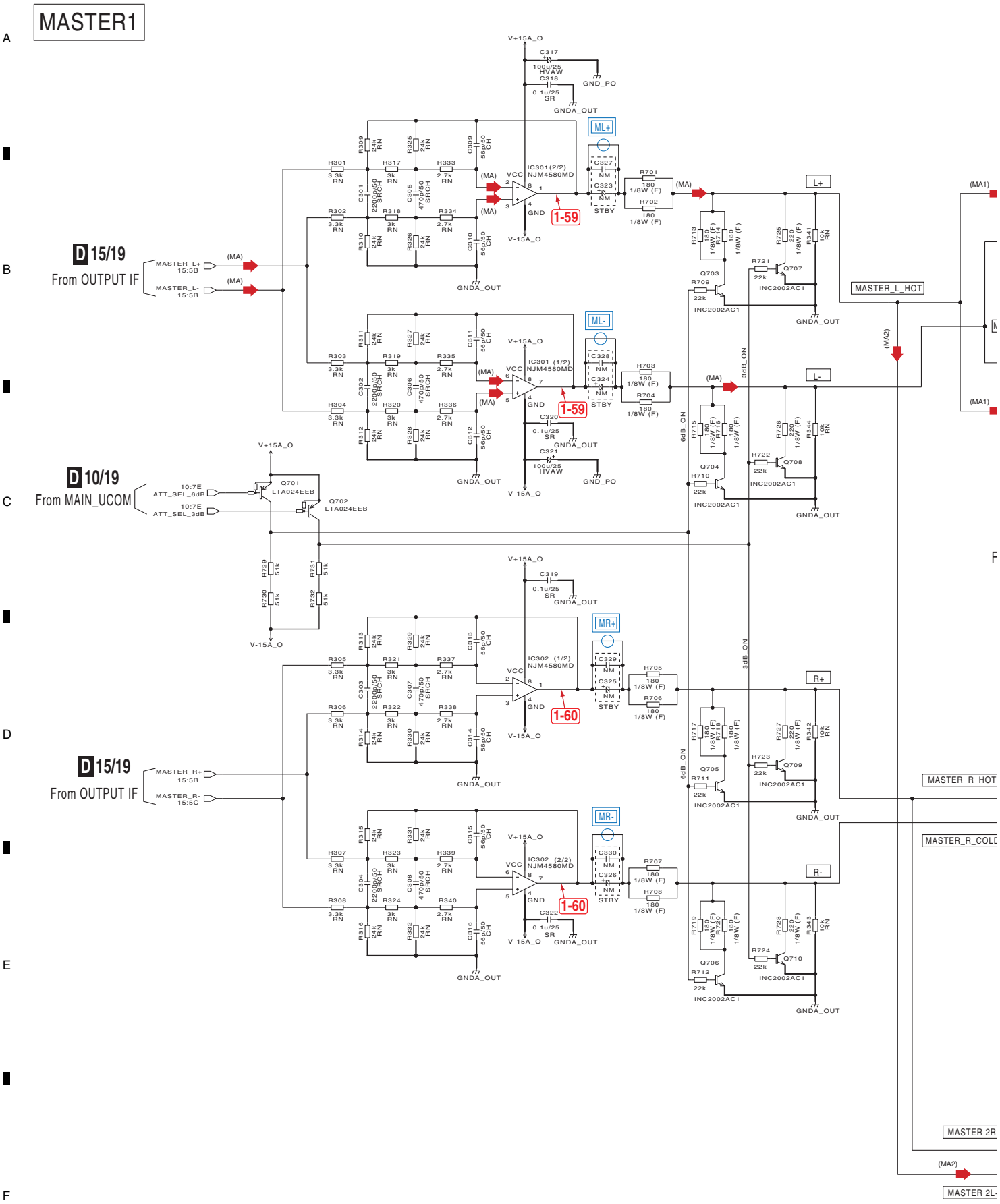

D 16/19

D 16/19 MAIN ASSY (DWX3430)

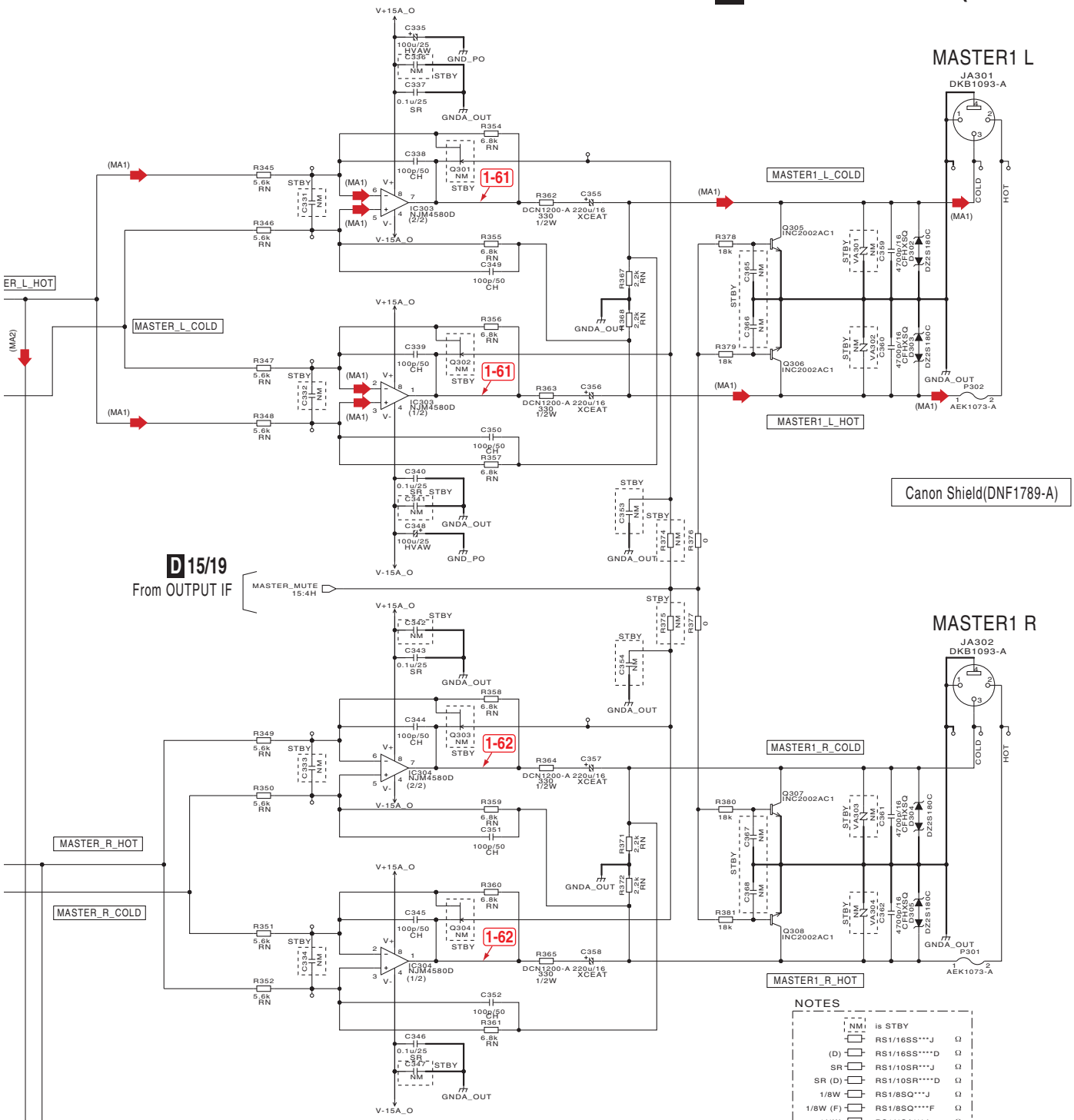

(MA) : MASTER OUT Signal (L ch)

(MA1) : MASTER1 OUT Signal (L ch)

(MA2) : MASTER2 OUT Signal (L ch)

: Voltage measuring point

: Waveform measuring point

The check point for service.
(Legend silk indication on the PCB.)

NOTES

NM	is STBY	
	RS1/16SS***J	Ω
(D)	RS1/16SS****D	Ω
SR	RS1/10SR***J	Ω
SR (D)	RS1/10SR****D	Ω
1/8W	RS1/8SQ***J	Ω
1/8W (F)	RS1/8SQ****F	Ω
1/4W	RS1/4SA***J	Ω
RN	RN1/16SE****D	Ω
	RAB4CQ***J	Ω
	CKSSYB***K	F
SR	CKSRYB***K	F
SQ	CKSQYB***K	F
CH	CCSSCH***J	F
CH (D)	CCSSCH***D	F
SRCH	CCSRCH***J	F
SQCH	CCSQCH***J	F
CFHXSQ	CFHXSQ***J	F
	CEVW***M	F
NP	CEVWNP***M	F
HVW	CEHVW***M	F
HVAW	CEHVAW***M	F
XCEAT	XCEAT***M	F
CEANP	CEANP***M	F

D 16/19

10.23 MAIN ASSY (17/19)

MASTER2,REC

(MA2) : MASTER2 OUT Signal (L ch)
(REC) : REC OUT Signal (L ch)
: Voltage measuring point
: Waveform measuring point

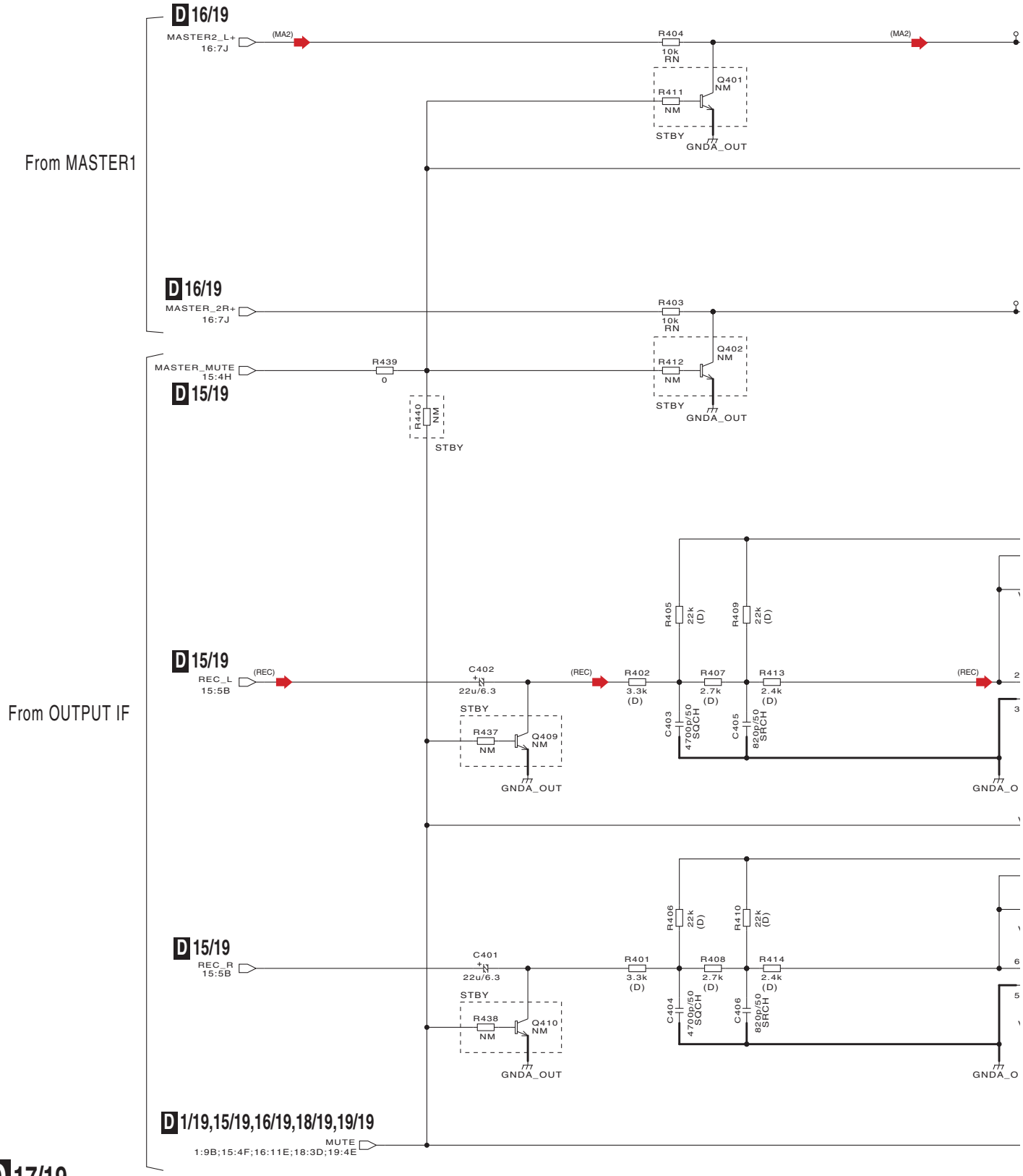

D 17/19 MAIN ASSY (DWX3430)

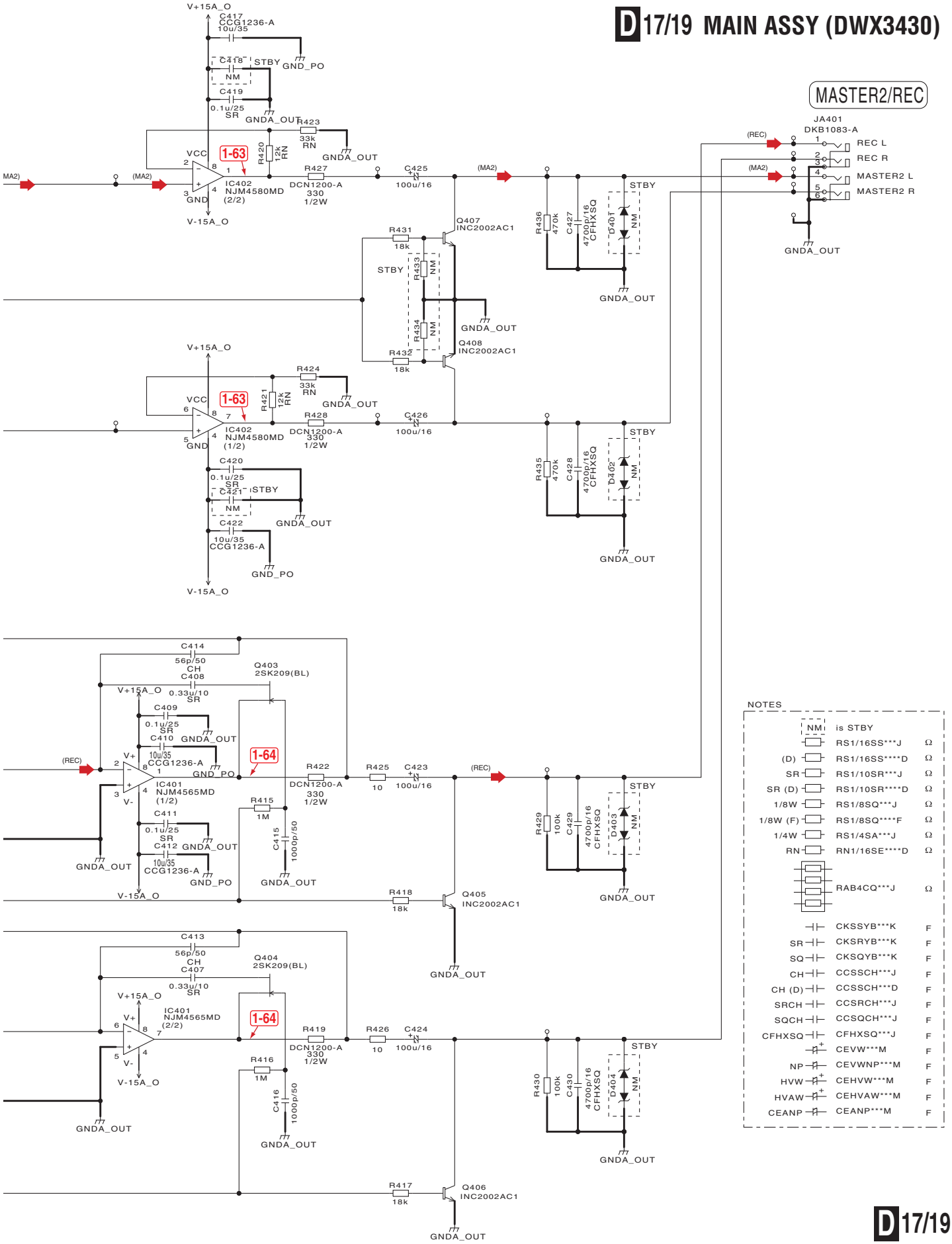

10.24 MAIN ASSY (18/19)

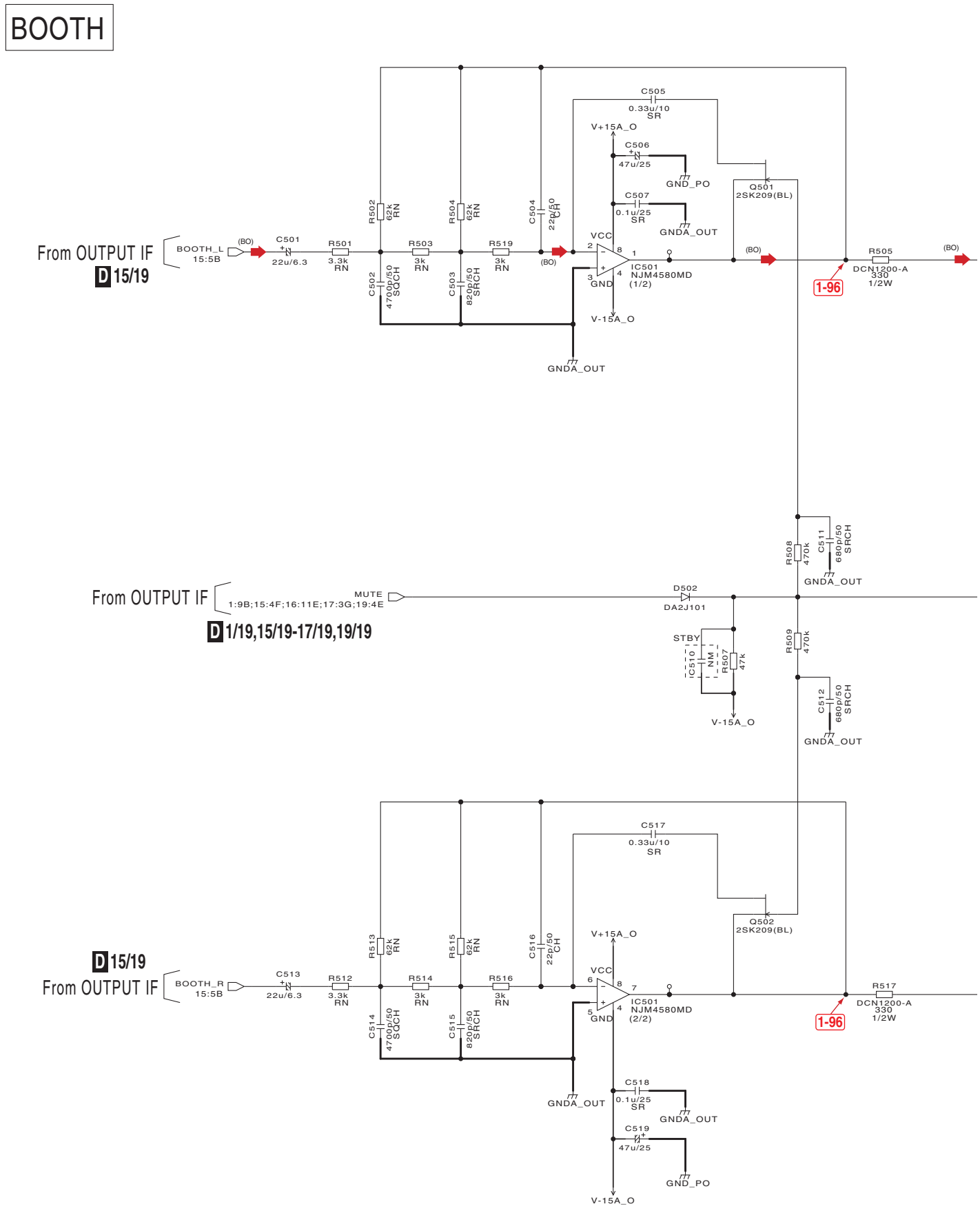

D 18/19

D 18/19 MAIN ASSY (DWX3430)

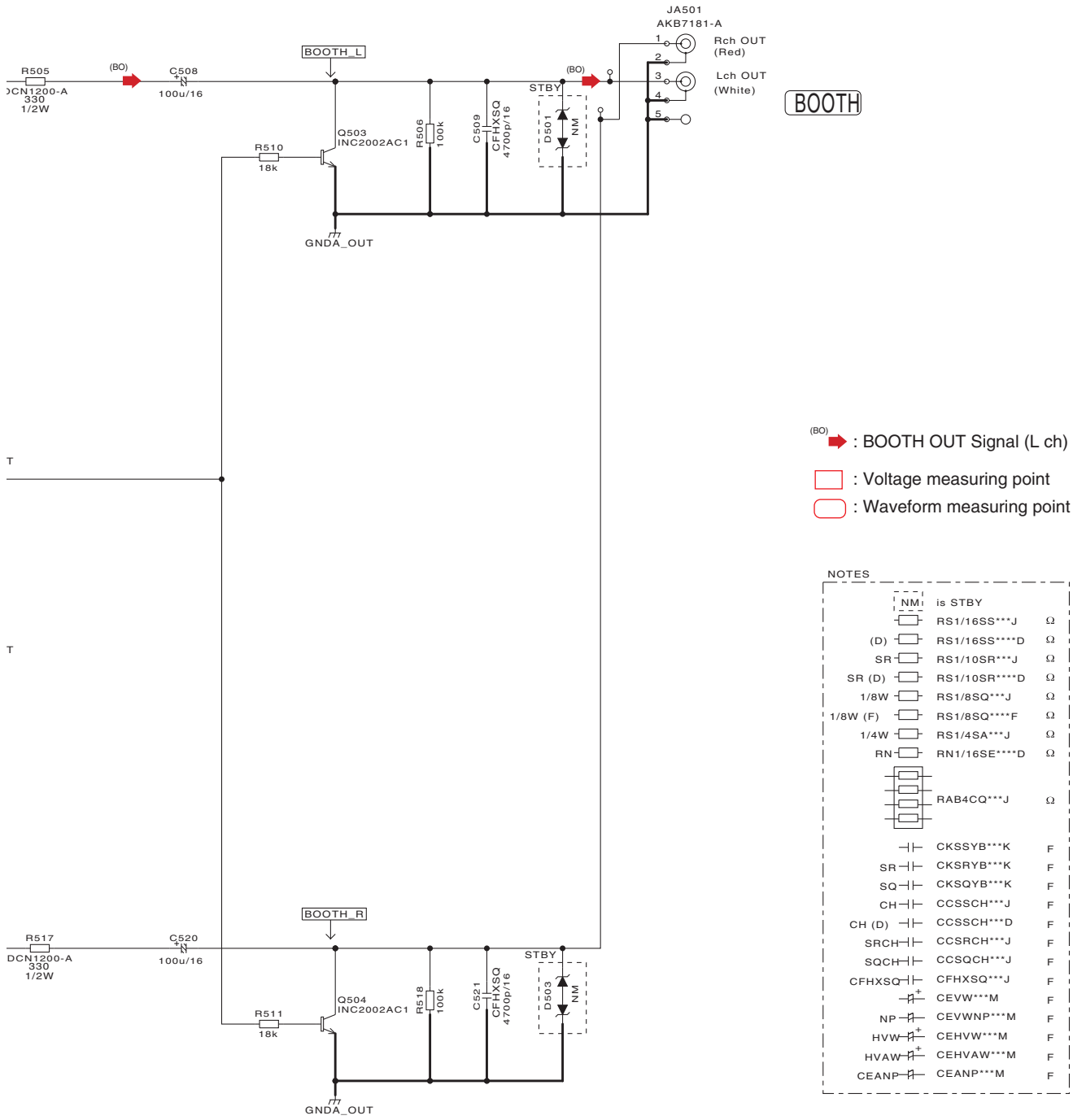

10.25 MAIN ASSY (19/19)

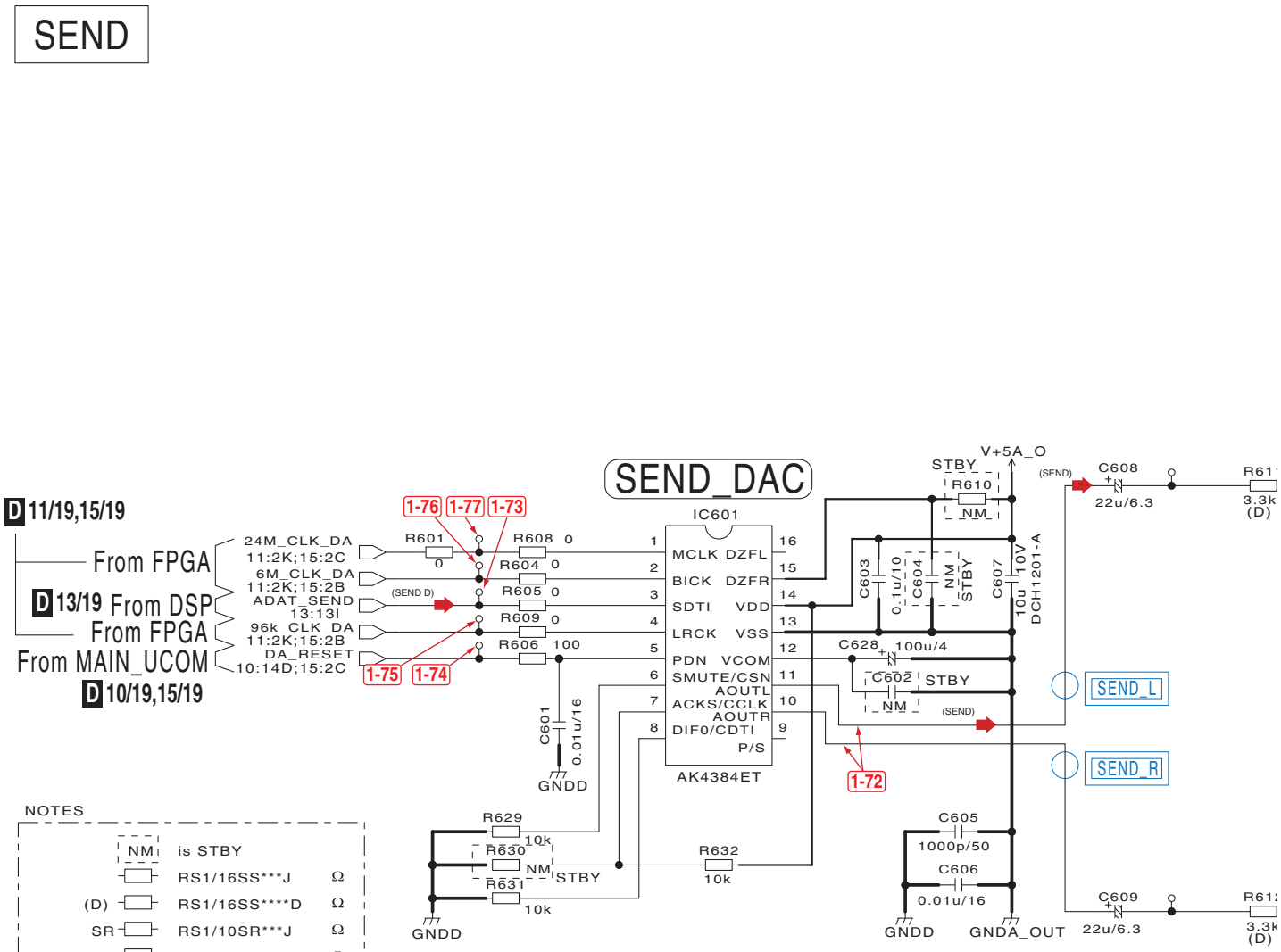

NOTES

NM	is STBY	
	RS1/16SS***J	Ω
(D)	RS1/16SS****D	Ω
SR	RS1/10SR***J	Ω
SR (D)	RS1/10SR****D	Ω
1/8W	RS1/8SQ***J	Ω
1/8W (F)	RS1/8SQ****F	Ω
1/4W	RS1/4SA***J	Ω
RN	RN1/16SE****D	Ω
	RAB4CQ***J	Ω
	CKSSYB***K	F
SR	CKSRYB***K	F
SQ	CKSQYB***K	F
CH	CCSSCH***J	F
CH (D)	CCSSCH***D	F
SRCH	CCSRCH***J	F
SQCH	CCSQCH***J	F
CFHXSQ	CFHXSQ***J	F
	CEVW***M	F
NP	CEVWNP***M	F
HVW	CEHVW***M	F
HVAW	CEHVAW***M	F
CEANP	CEANP***M	F

D 19/19

D 19/19 MAIN ASSY (DWX3430)

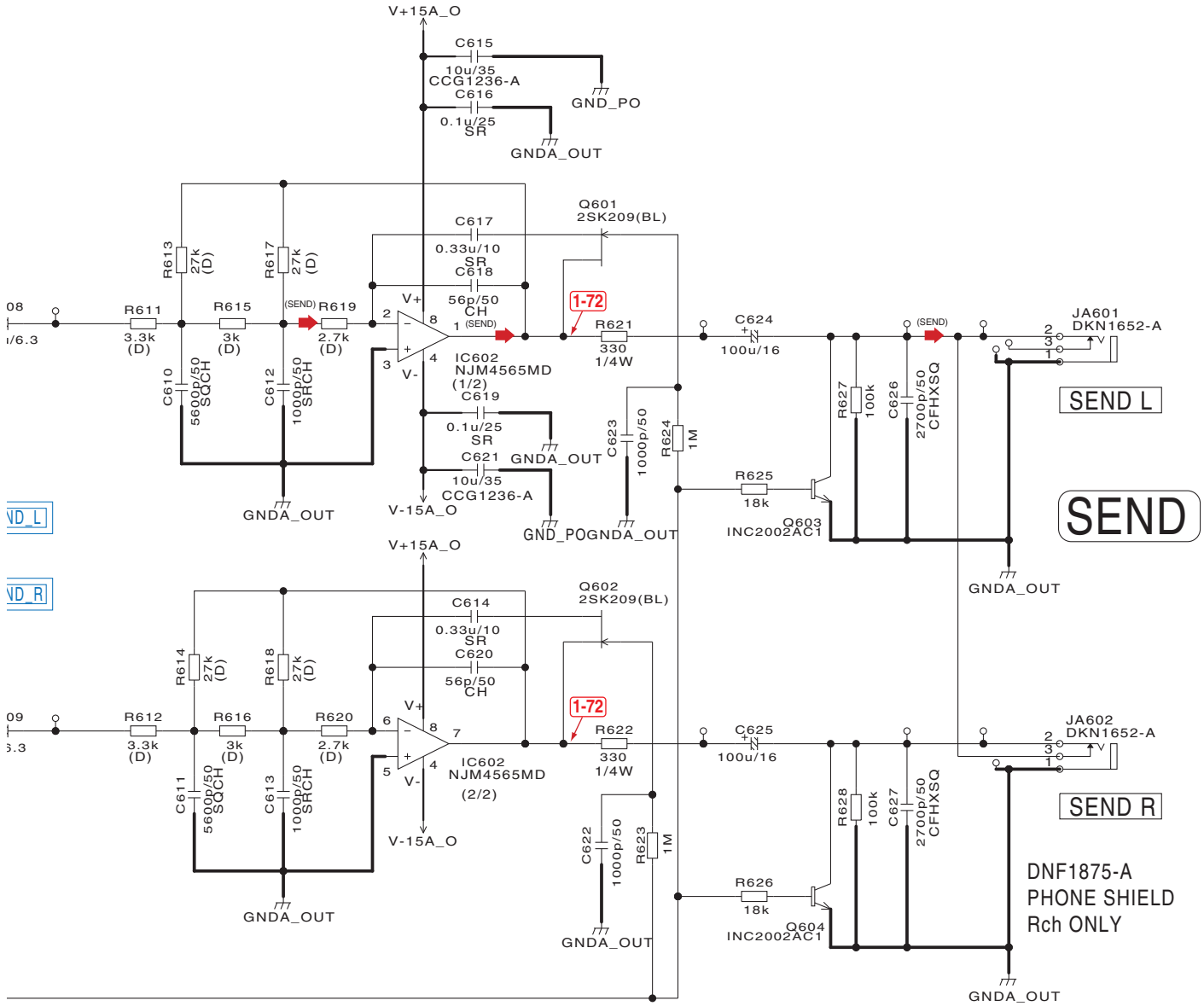

(SEND D) ➡ : SEND OUT Digital Signal

(SEND) ➡ : SEND OUT Signal (L ch)

▭ : Voltage measuring point

▭ : Waveform measuring point

○ ***** The check point for service.
(Legend silk indication on the PCB.)

10.26 SEC/HP ASSY (1/2)

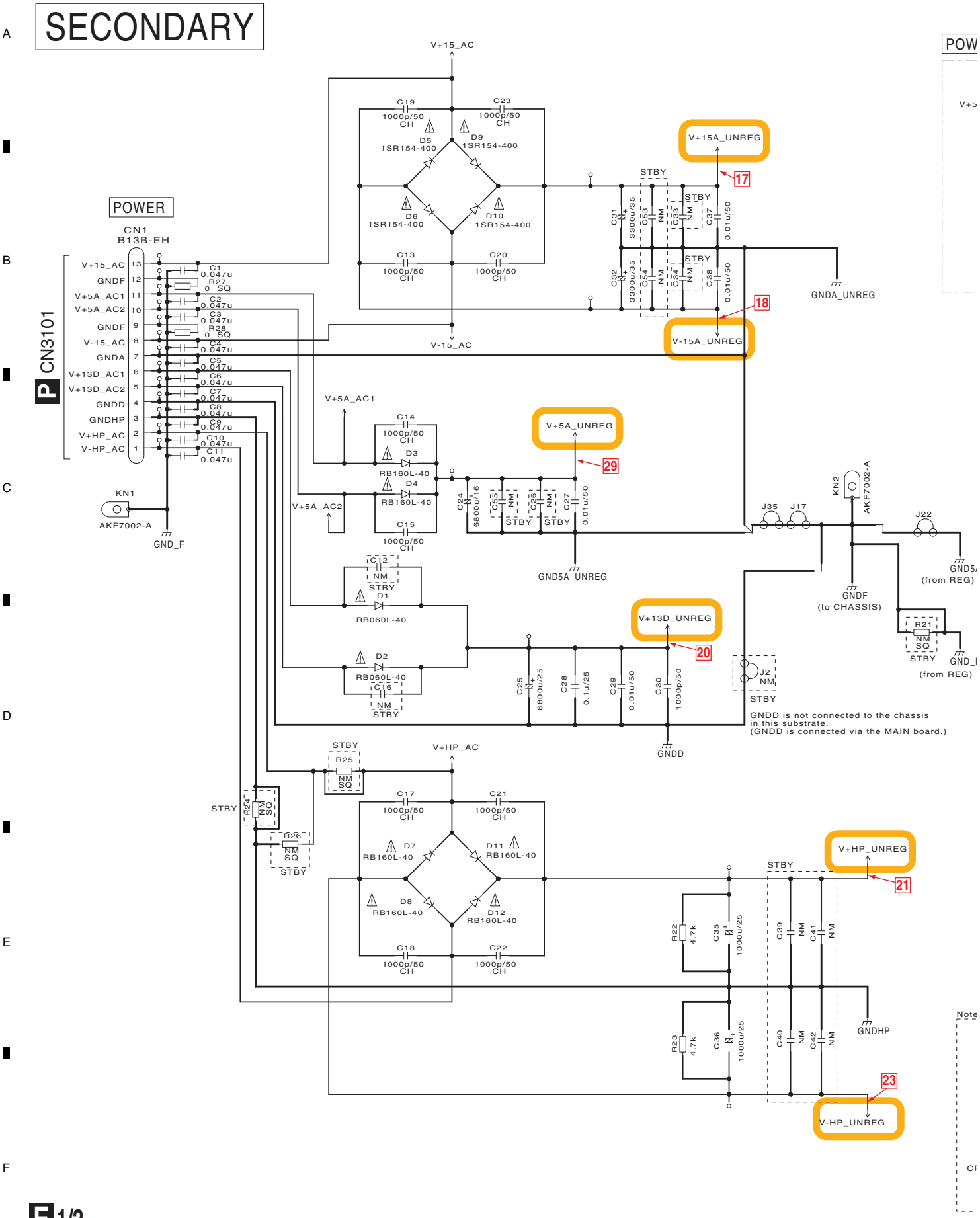

E 1/2 SEC/HP ASSY (DWR1529)

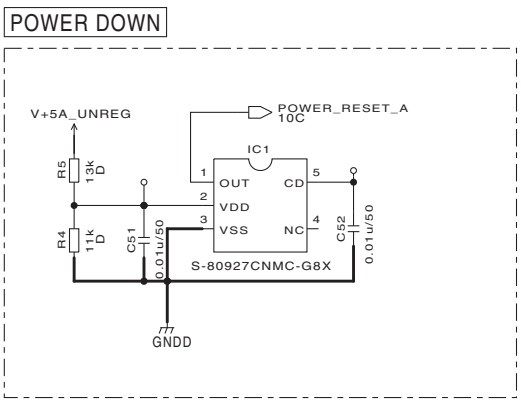

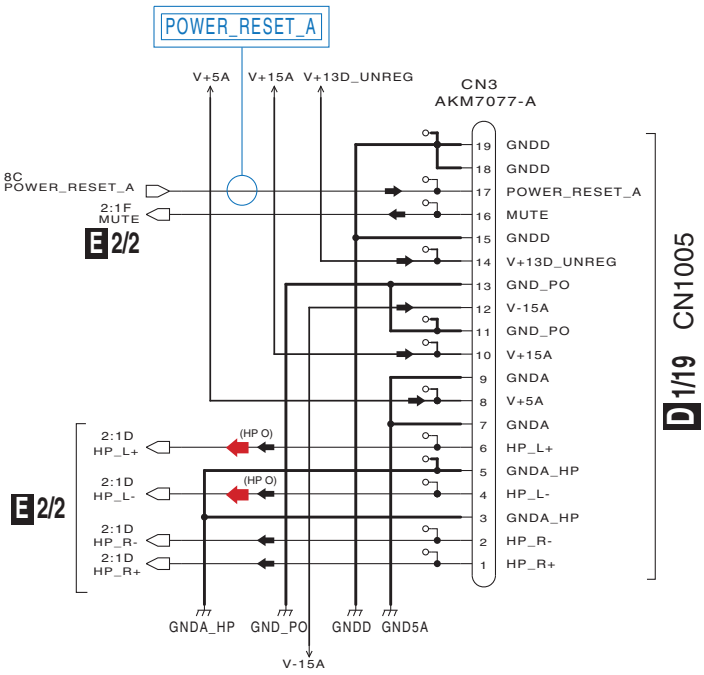

(HP O) : HP OUT Signal (L ch)

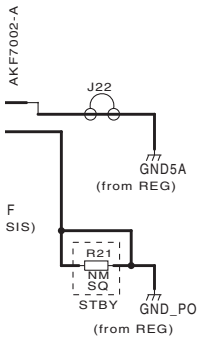

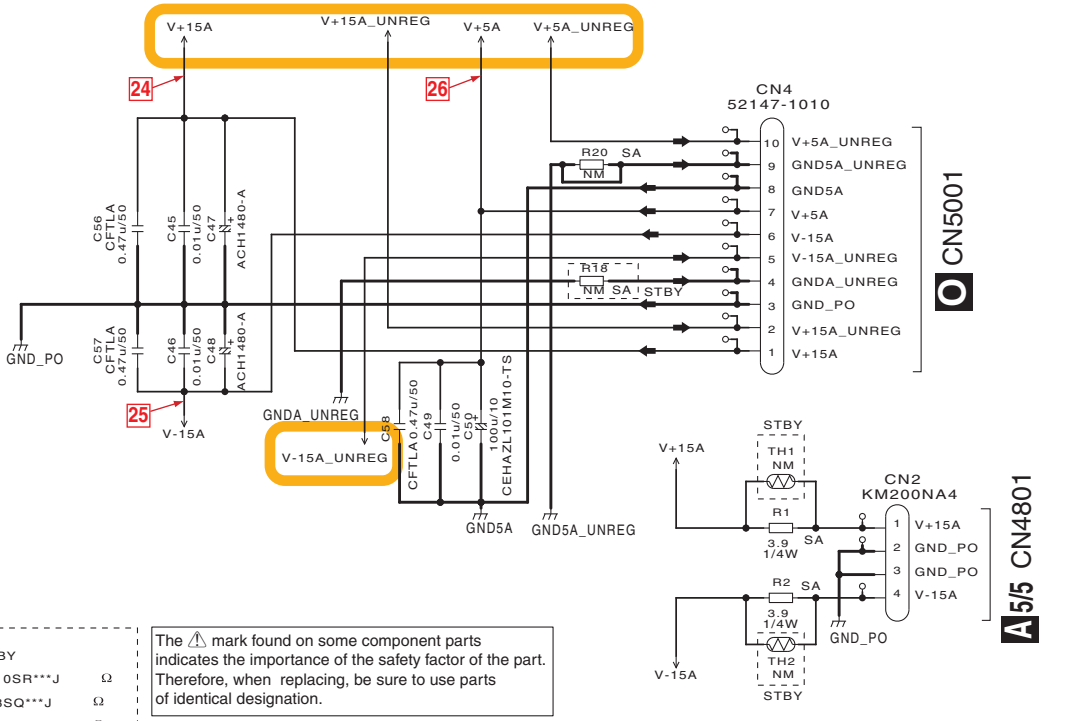

Notes

NM	is STBY	
	RS1/10SR***J	Ω
SQ	RS1/8SQ***J	Ω
SA	RS1/4SA***J	Ω
D	RS1/10SR****D	Ω
RN	RN1/16SE****D	Ω
CH	CCSRCH***J	F
	CKSRYB***K	F
	CKSQYB***K	F
CFTLA	CFTLA***J	F
NP	CEANP	F
	CEAT	F

The ⚠ mark found on some component parts indicates the importance of the safety factor of the part. Therefore, when replacing, be sure to use parts of identical designation.

⚠ 印の部品は、安全上重要な部品です。
交換するときは、安全および性能維持のため
必ず指定の部品をご使用ください。

: Voltage measuring point

: Waveform measuring point

***** The check point for service. (Legend silk indication on the PCB.)

E 1/2

10.27 SEC/HP ASSY (2/2)

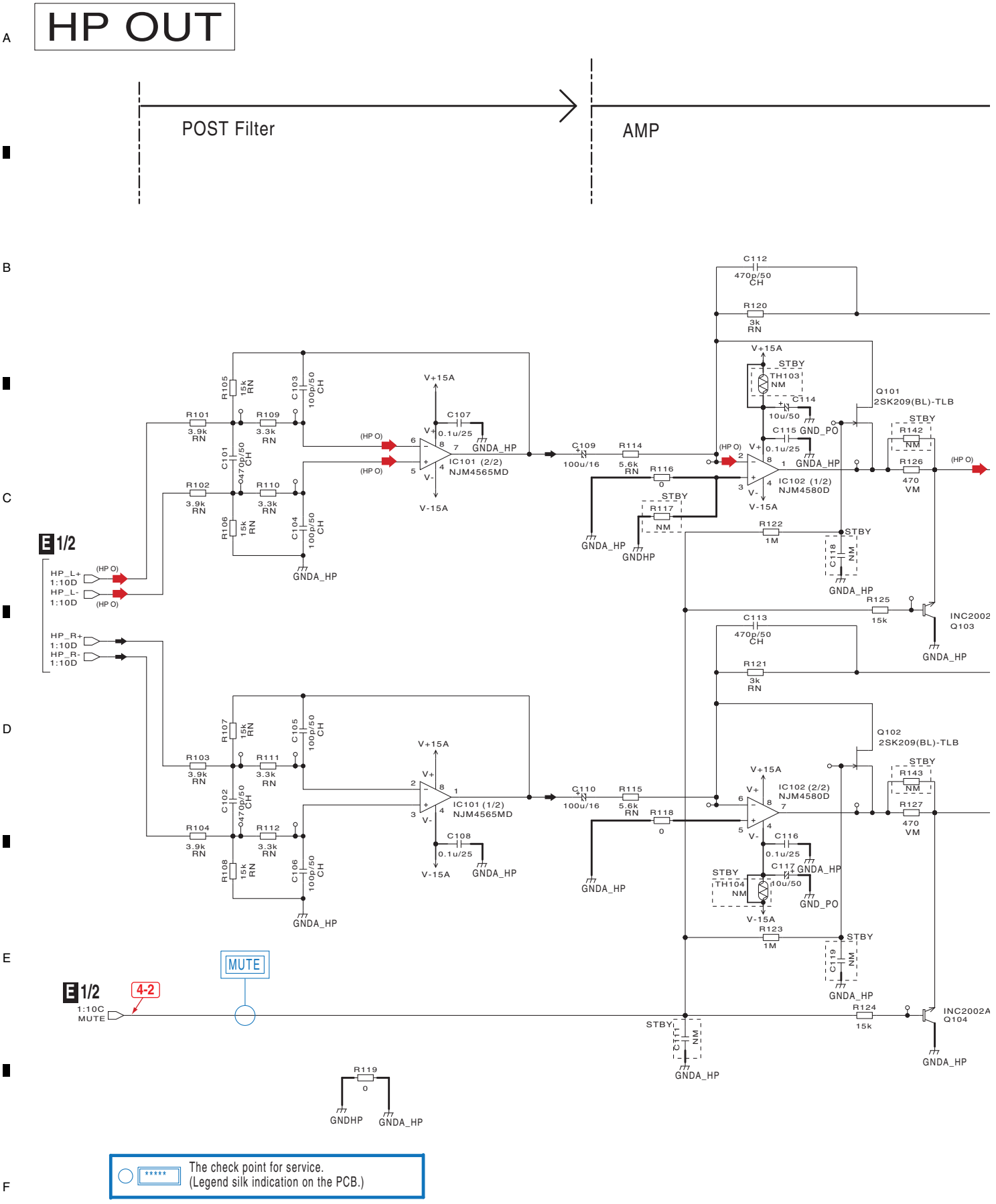

E 2/2

E 2/2 SEC/HP ASSY (DWR1529)

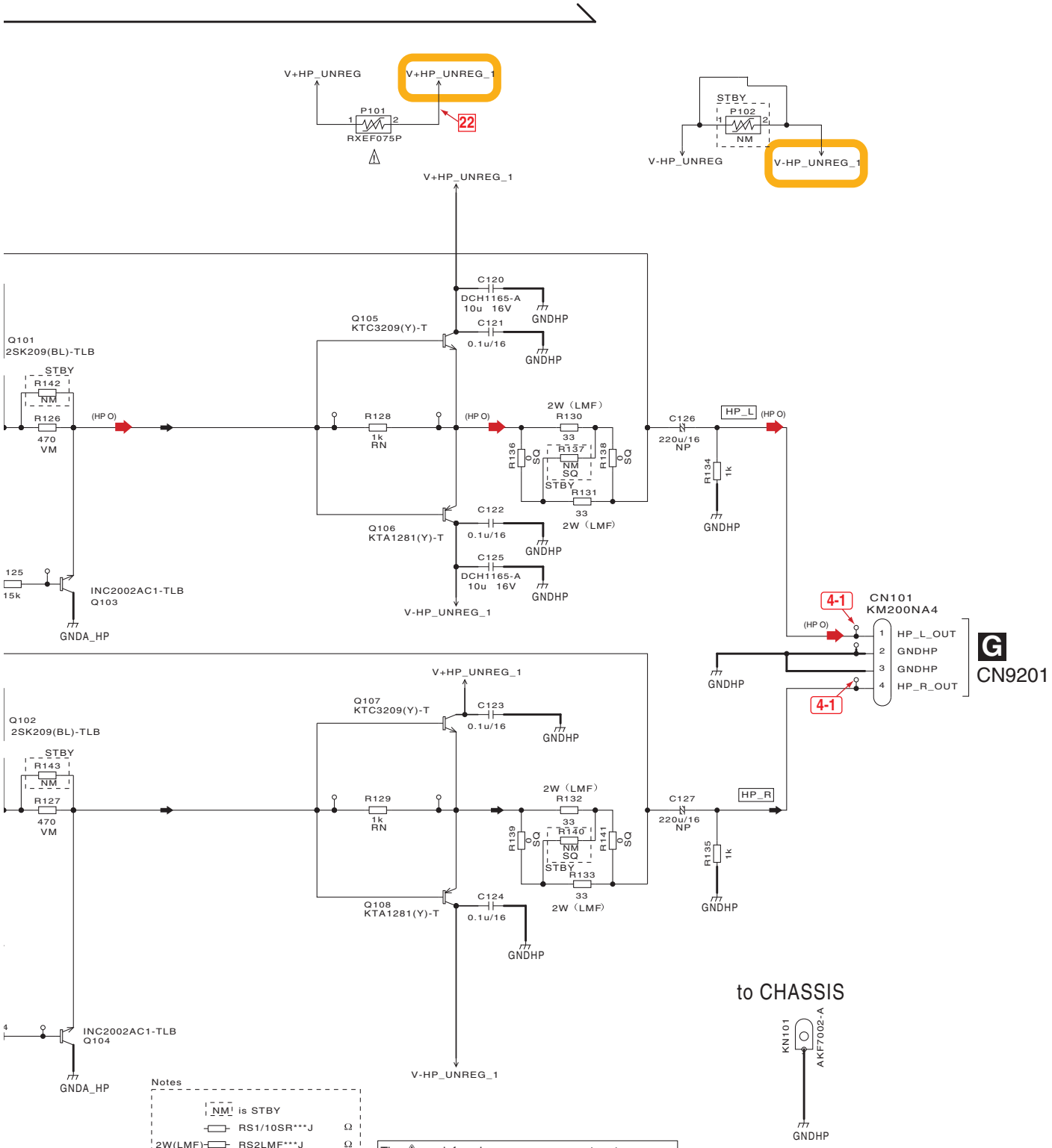

10.28 USBI and HPJK ASSYS

F USBI ASSY (DWX3431)

G

USB2.0 High speed

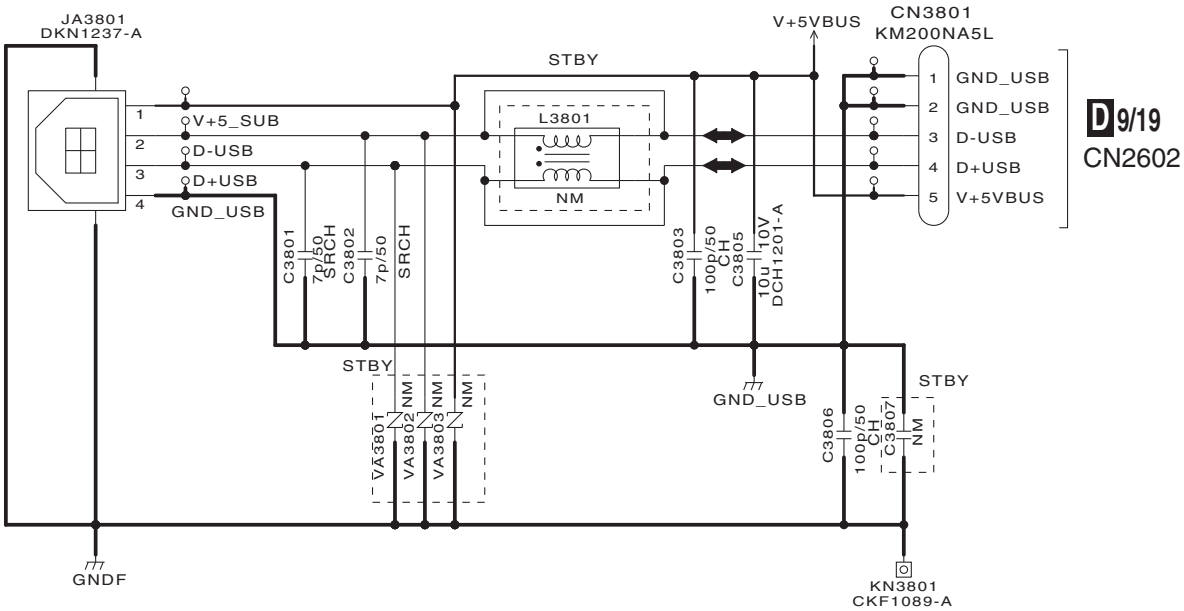

NOTES

NM	is STBY	
	RS1/16SS***J	Ω
	CKSSYB***K	F
CH	CCSSCH***J	F
SRCH	CCSRCH***D	F

G HPJK ASSY (DWX3433)

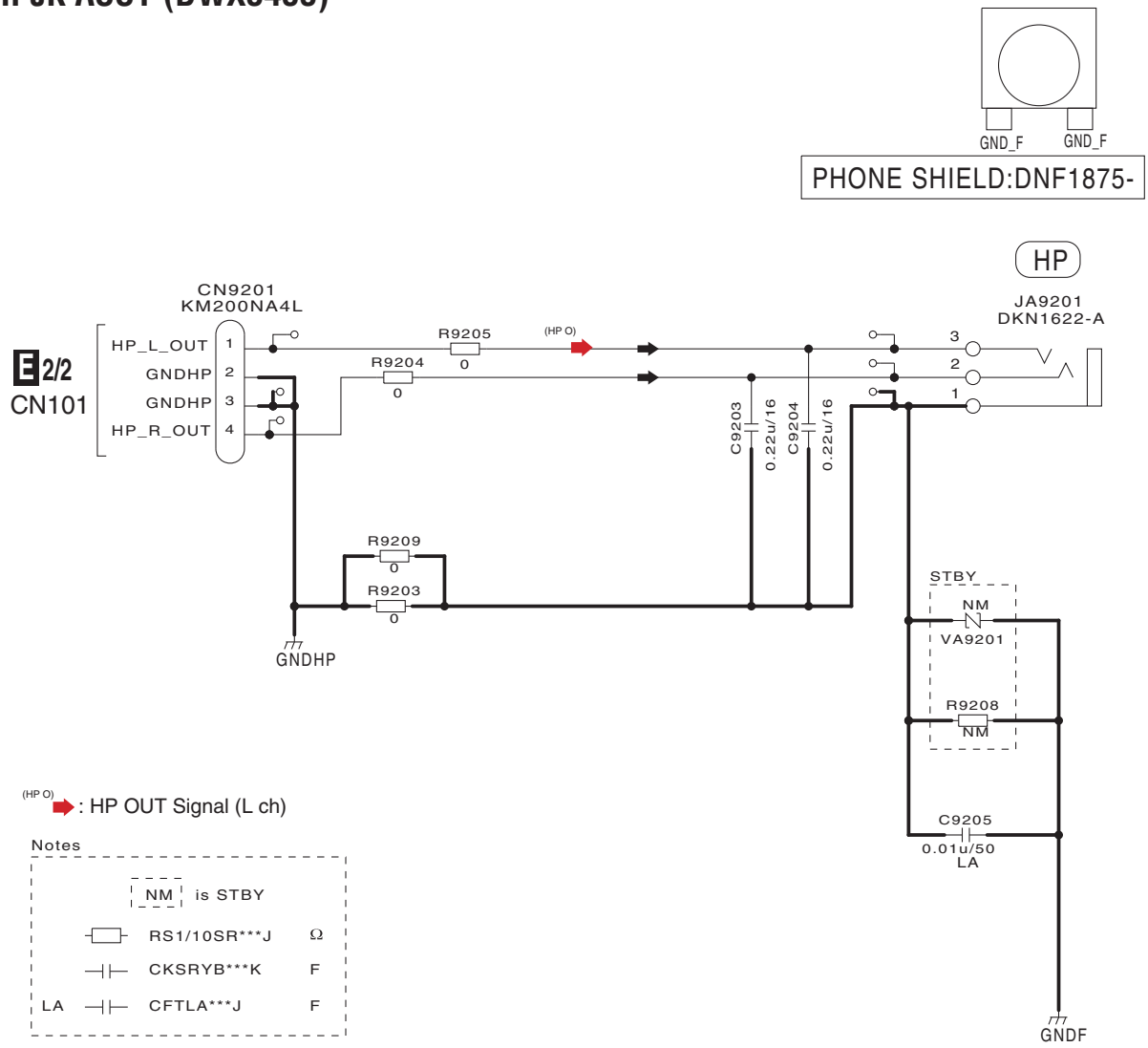

10.29 PNLA ASSY (1/2)

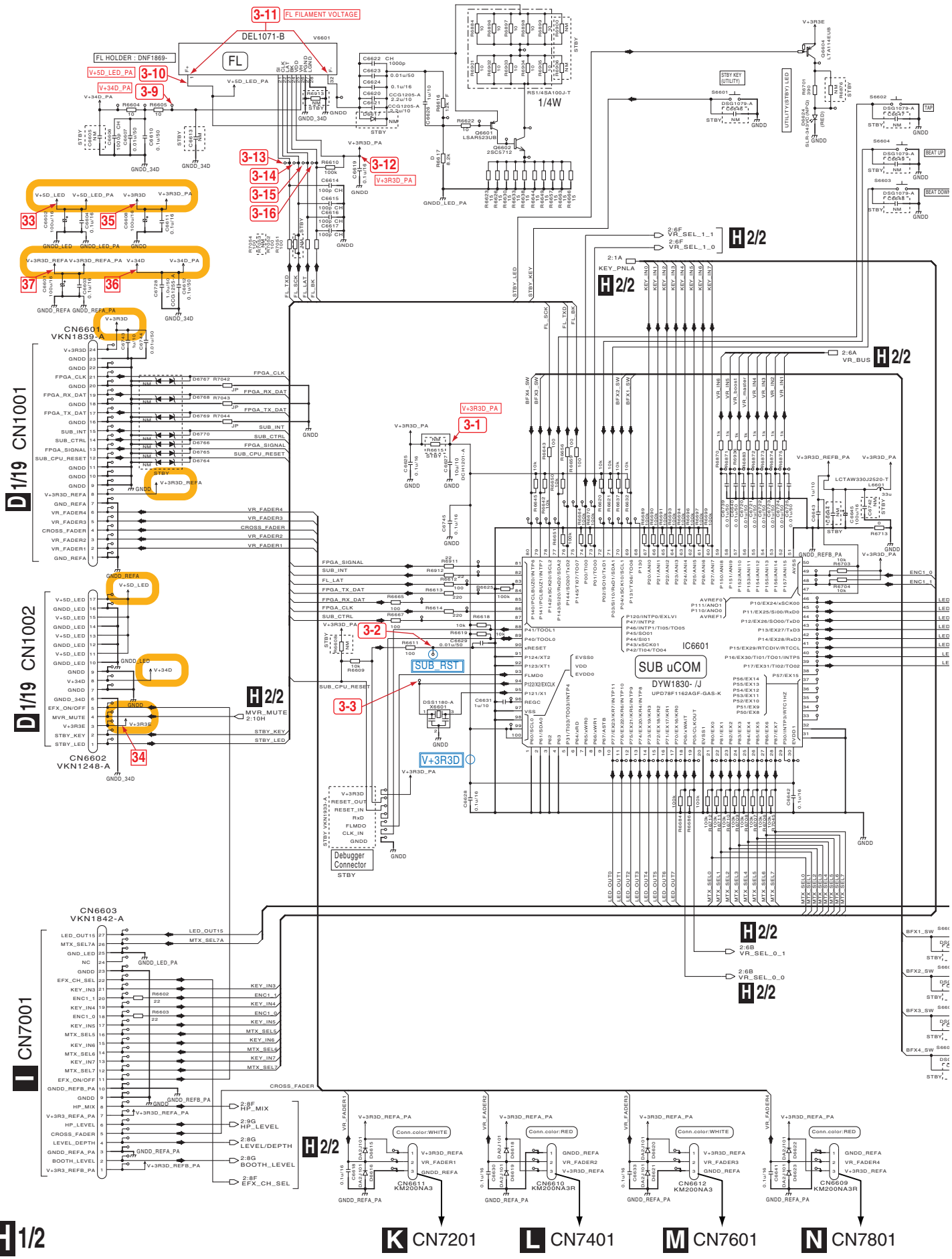

H 1/2 PNLA ASSY (DWX3439)

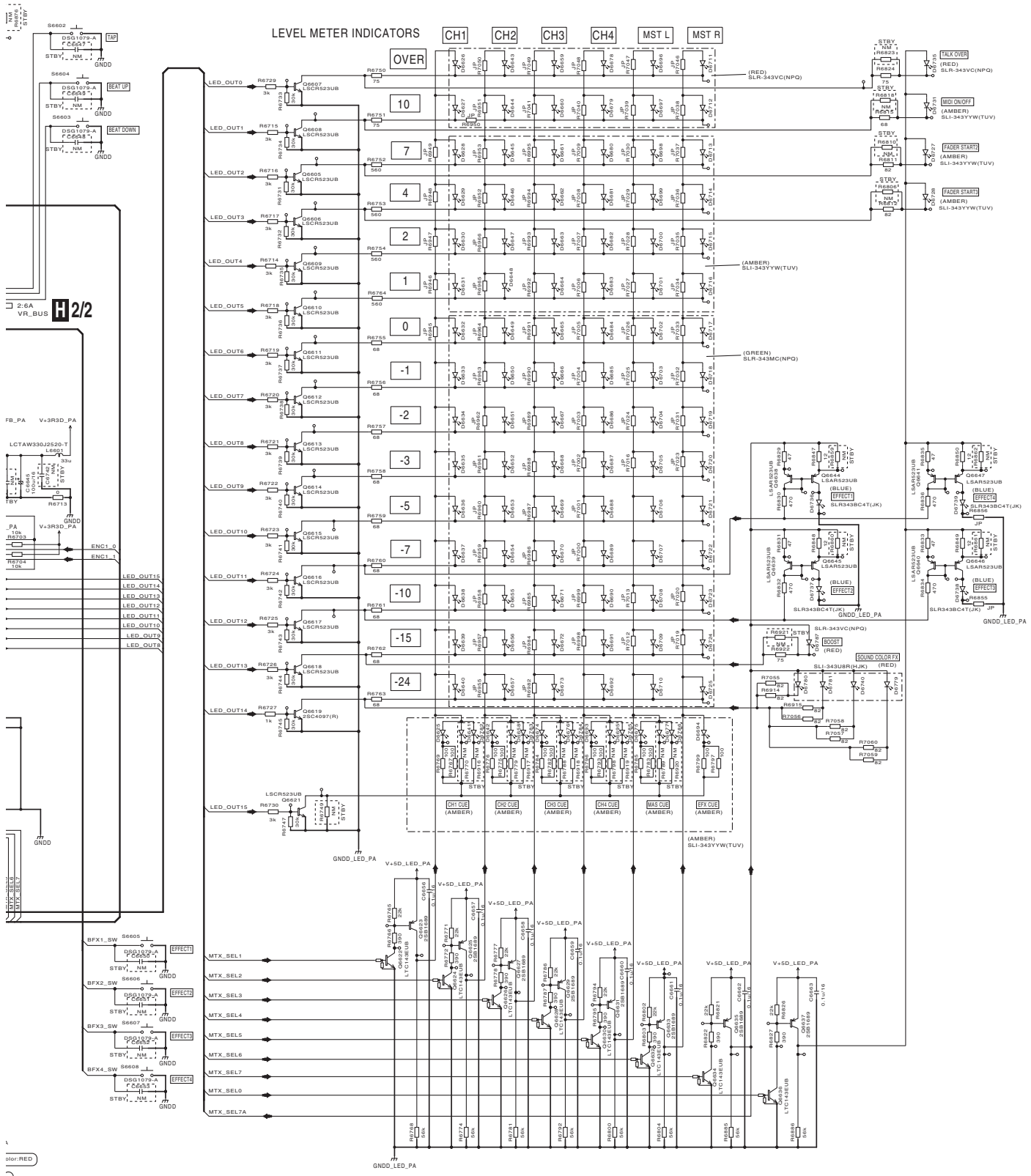

10.30 PNLA ASSY (2/2)

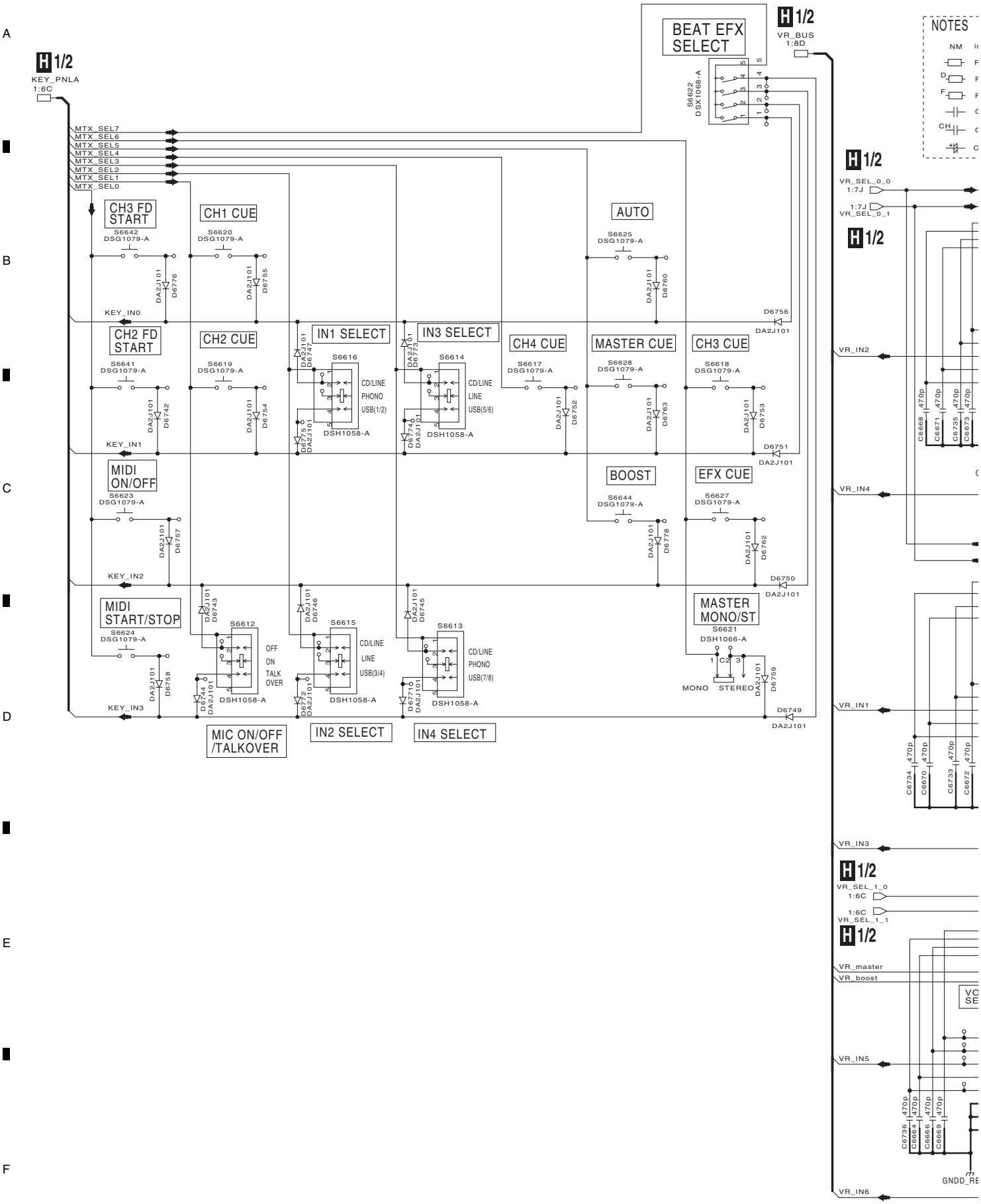

H 2/2

H 2/2 PNLA ASSY (DWX3439)

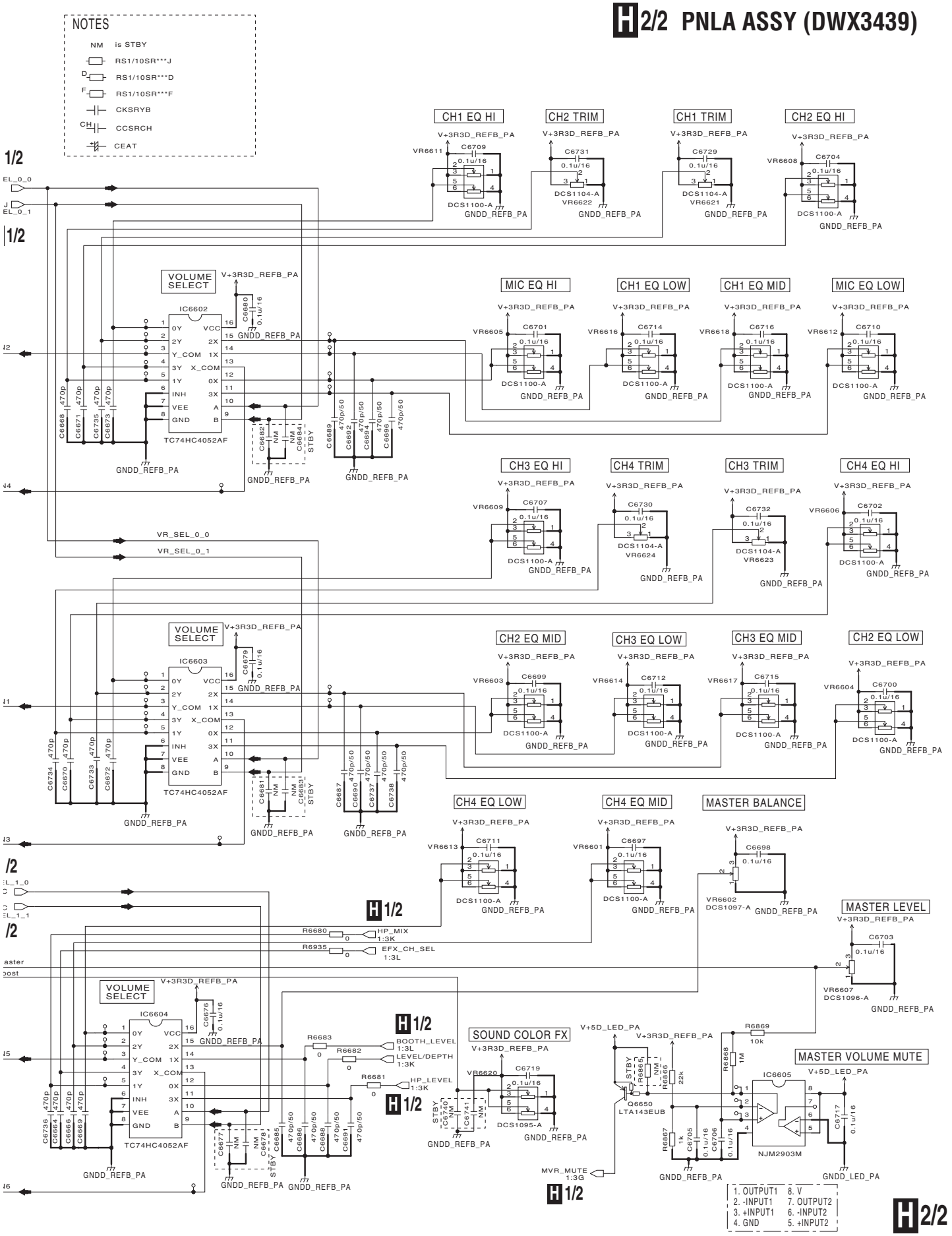

I PNLB ASSY (DWX3440)

: Voltage measuring point

: Waveform measuring point

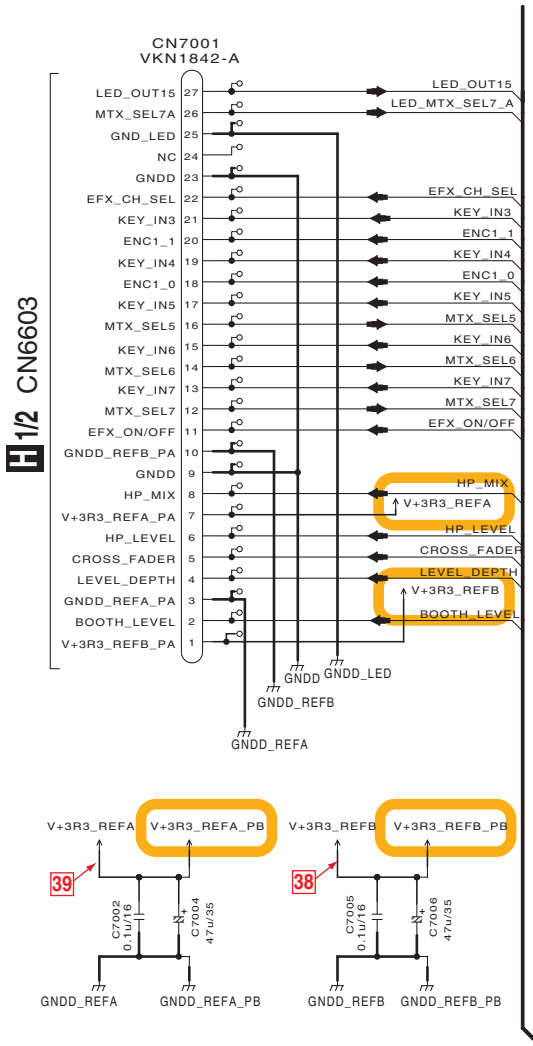

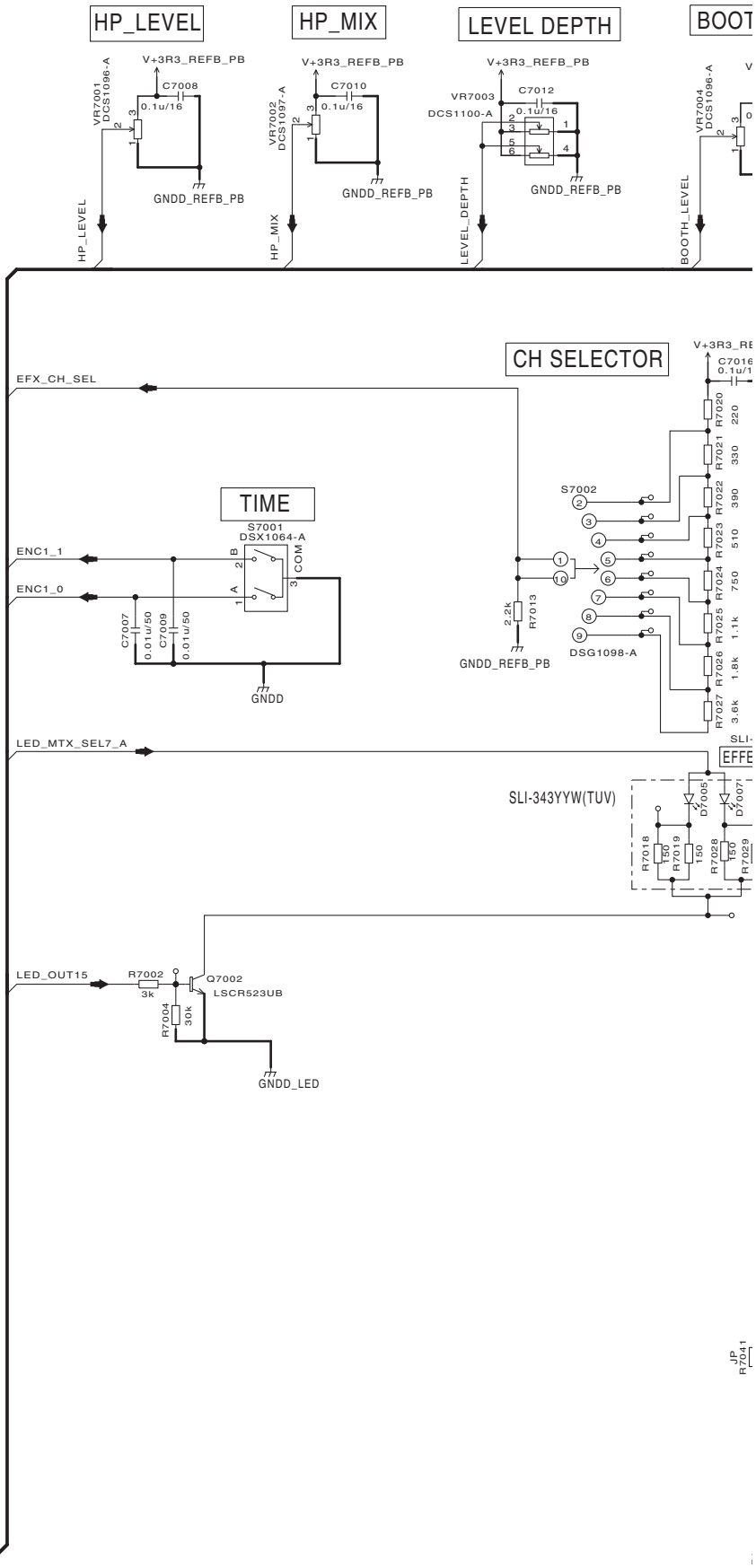

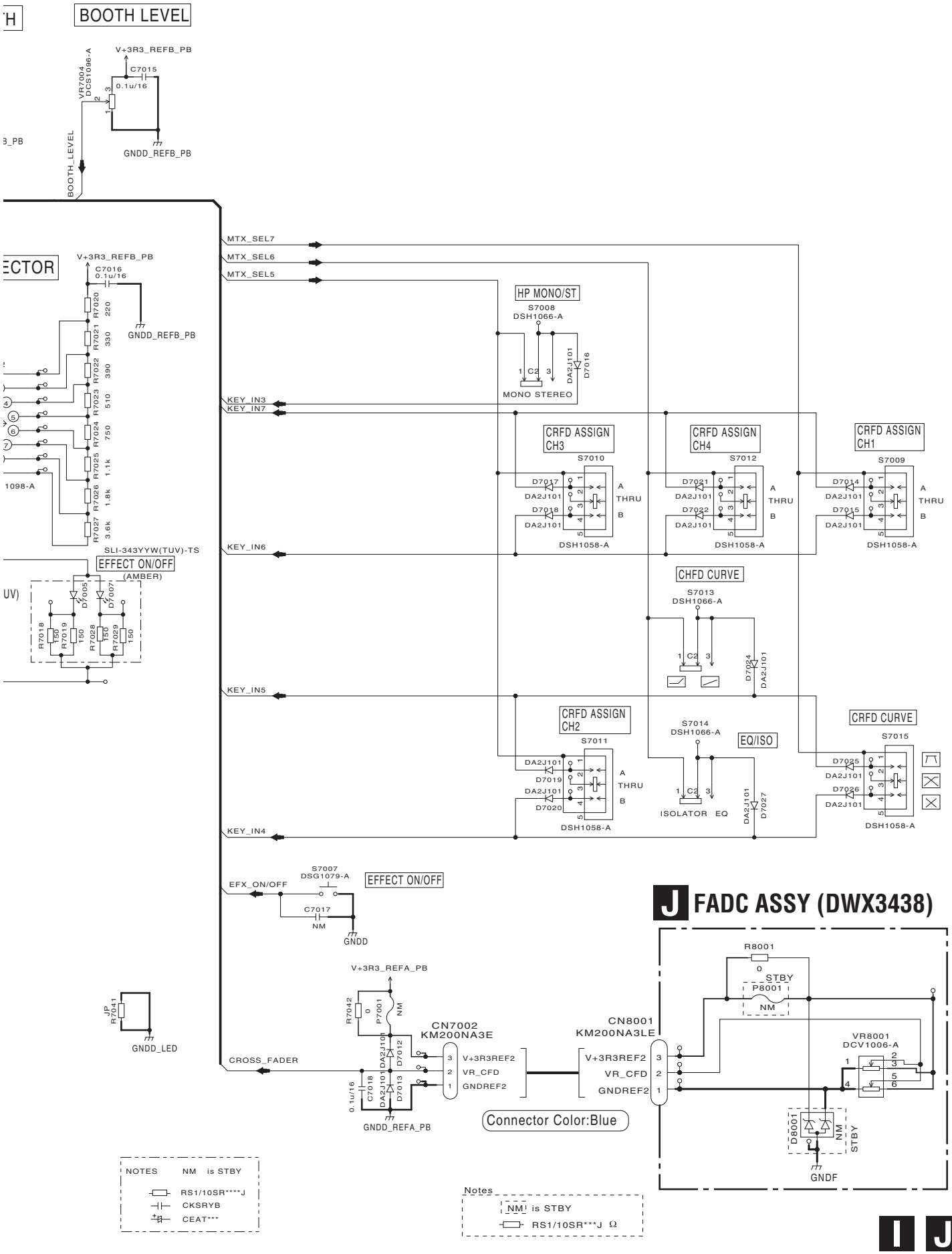
BOOTH LEVEL
V+3R3_REFB_PB
C7015
0.1u/16
VR7004
DCS1096-A
GNDD_REFB_PB
BOOTH_LEVEL
MTX_SEL7
MTX_SEL6
MTX_SEL5
V+3R3_REFB_PB
C7016
0.1u/16
GNDD_REFB_PB
R7020 220
R7021 330
R7022 390
R7023 510
R7024 750
R7025 1.1k
R7026 1.8k
R7027 3.6k
SLI-343YYW(TUV)-TS
EFFECT ON/OFF
(AMBER)
D7005
D7007
R7018 150
R7019 150
R7028 150
R7029 150
HP MONO/ST
S7008
DSH1066-A
MONO STEREO
DA2J101
D7016
KEY_IN3
KEY_IN7
CRFD ASSIGN CH3
S7010
D7017
D7018
DSH1058-A
CRFD ASSIGN CH4
S7012
D7021
D7022
DSH1058-A
CRFD ASSIGN CH1
S7009
D7014
D7015
DSH1058-A
A
THRU
B
KEY_IN6
CHFD CURVE
S7013
DSH1066-A
D7024
KEY_IN5
CRFD ASSIGN CH2
S7011
D7019
D7020
DSH1058-A
S7014
DSH1066-A
EQ/ISO
ISOLATOR EQ
D7027
CRFD CURVE
S7015
D7025
D7026
DSH1058-A
KEY_IN4
S7007
DSG1079-A
EFX_ON/OFF
EFFECT ON/OFF
C7017
NM
GNDD
J FADC ASSY (DWX3438)
R8001
0
STBY
P8001
NM
VR8001
DCV1006-A
D8001
GNDF
V+3R3_REFA_PB
R7042
0
P7001
NM
CN7002
KM200NA3E
CROSS_FADER
V+3R3REF2
VR_CFD
GNDREF2
C7018
0.1u/16
D7012
D7013
GNDD_REFA_PB
CN8001
KM200NA3LE
Connector Color:Blue
JP
R7041
GNDD_LED
NOTES NM is STBY
RS1/10SR****J
CKSRYB
CEAT***
Notes
NM is STBY
RS1/10SR***J Ω

10.32 FAD1 to FAD4 ASSYS

K FAD1 ASSY (DWX3434)

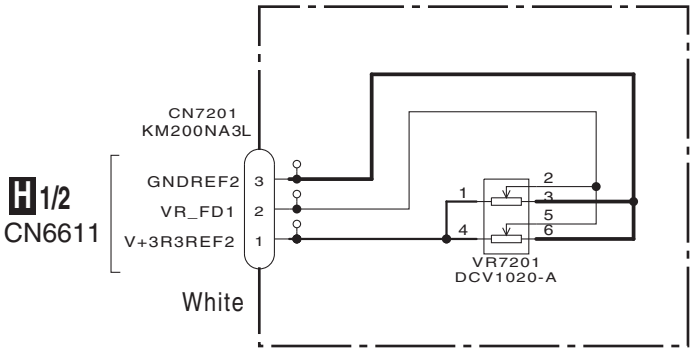

L FAD2 ASSY (DWX3435)

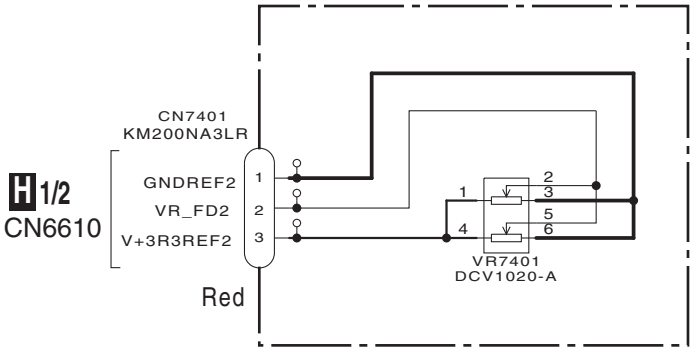

M FAD3 ASSY (DWX3436)

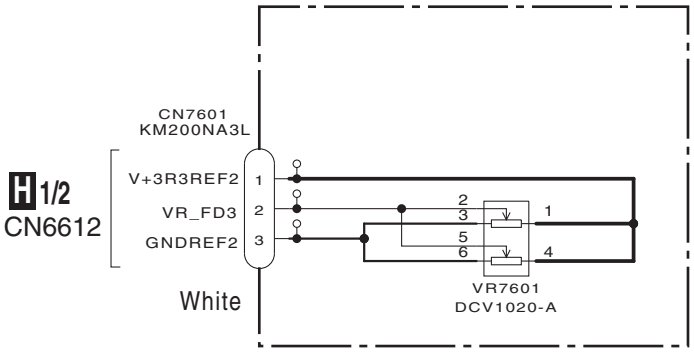

N FAD4 ASSY (DWX3437)

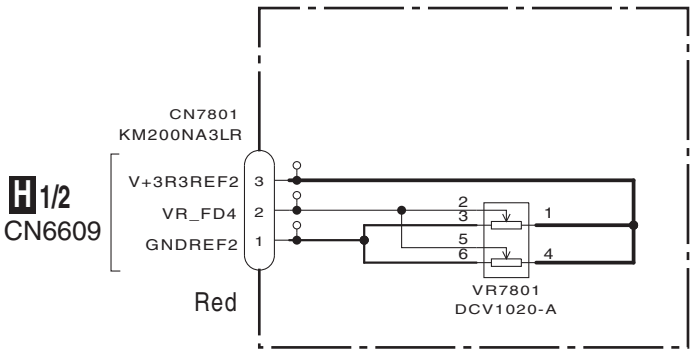

K L M N

10.33 REG ASSY

O REG ASSY (DWR1528)

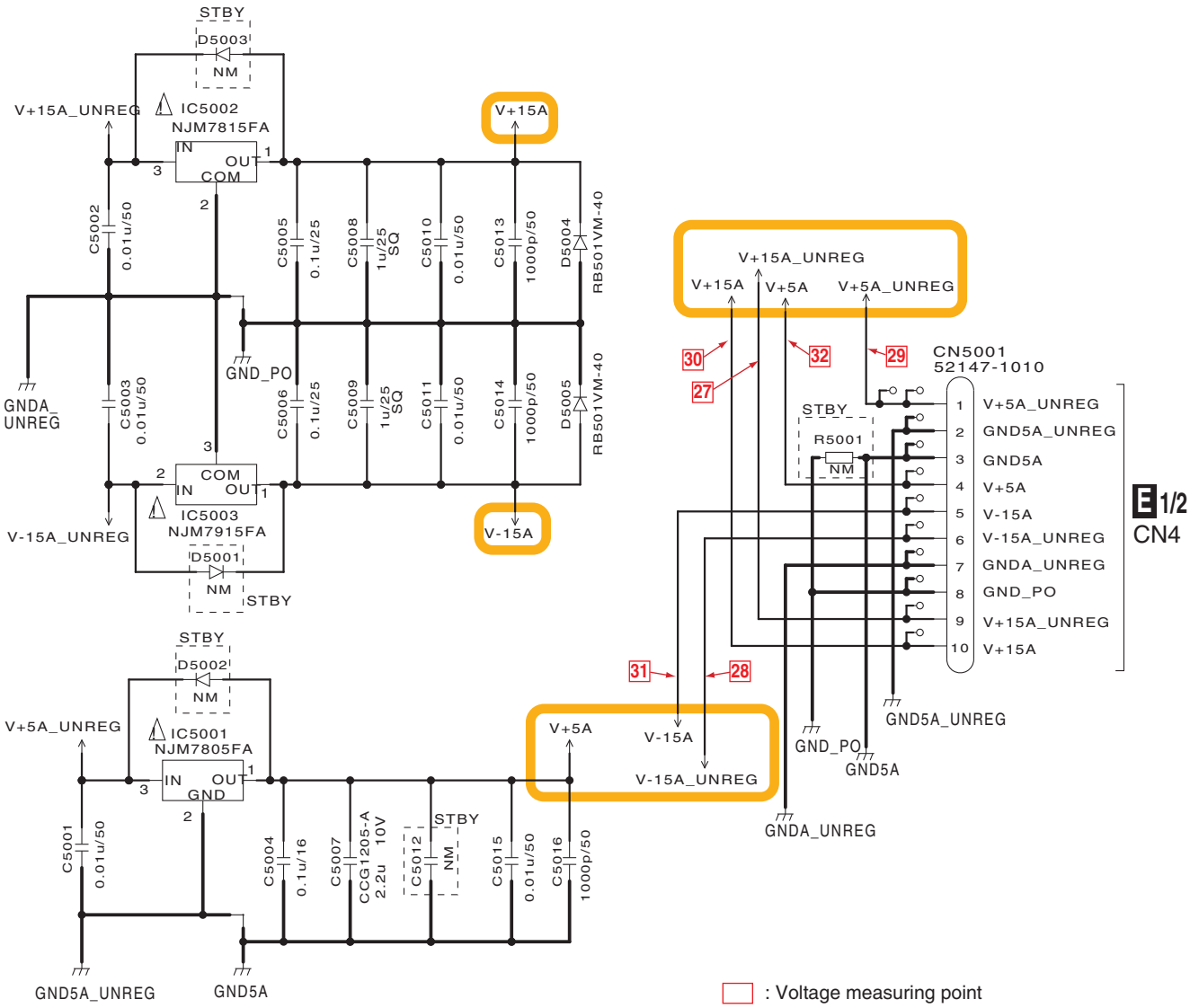

: Voltage measuring point

: Waveform measuring point

Notes

NM is STBY

CH	⊣⊢	CCSRCH***J	F
SQ	⊣⊢	CKSQYB***K	F
	⊣⊢	CKSRYB***K	F

【CAUTION】
Pin-Signal name of NJM7805FA is different in the specification and the circuit symbol.

	Specification	circuit symbol
1pin	INPUT	OUT
2pin	GND	GND
3pin	OUTPUT	IN

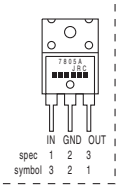

The ⚠ mark found on some component parts indicates the importance of the safety factor of the part. Therefore, when replacing, be sure to use parts of identical designation.

⚠ 印の部品は、安全上重要な部品です。
交換するときは、安全および性能維持のため
必ず指定の部品をご使用ください。

10.34 TRANS, PRIMARY and ACSW ASSYS

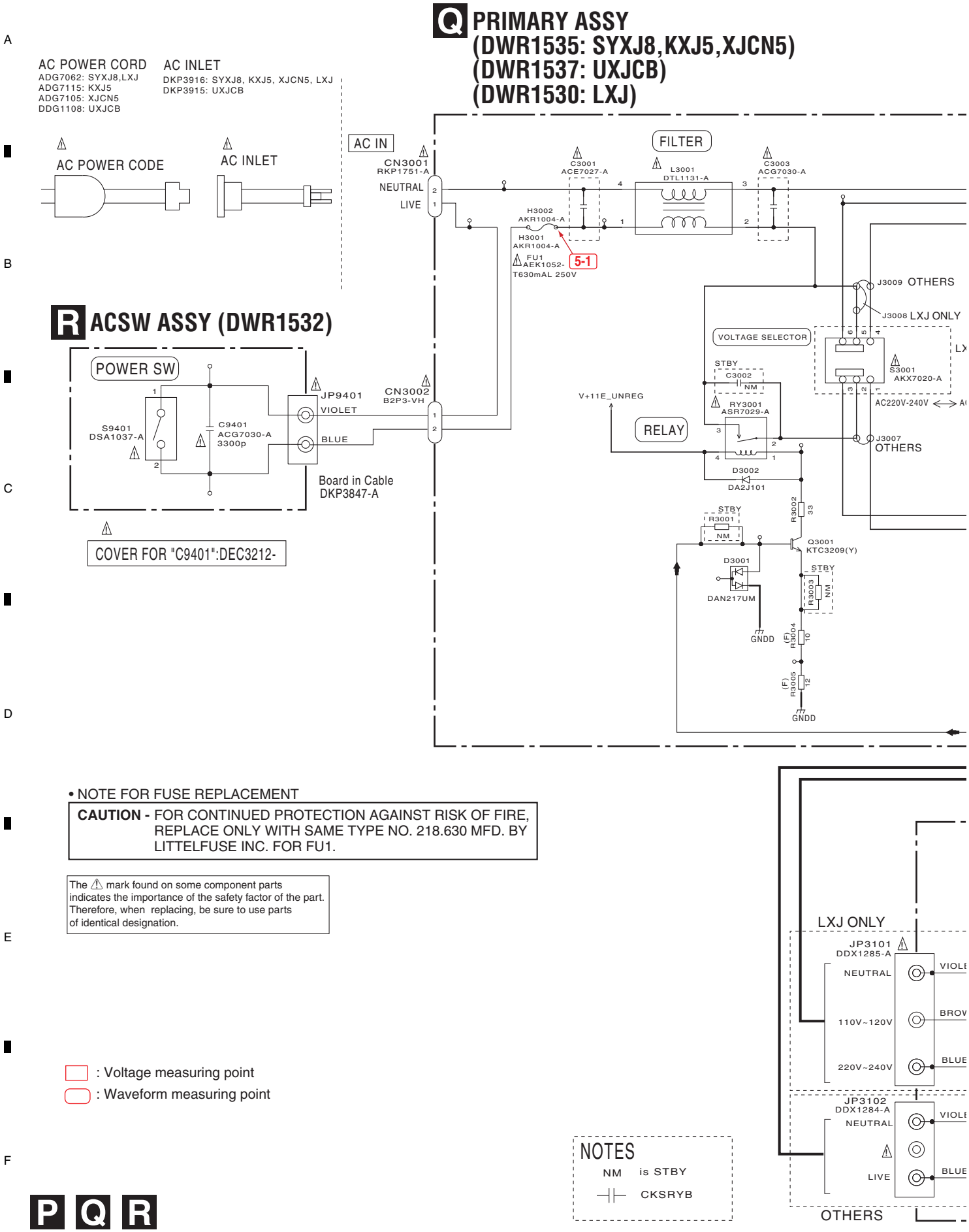

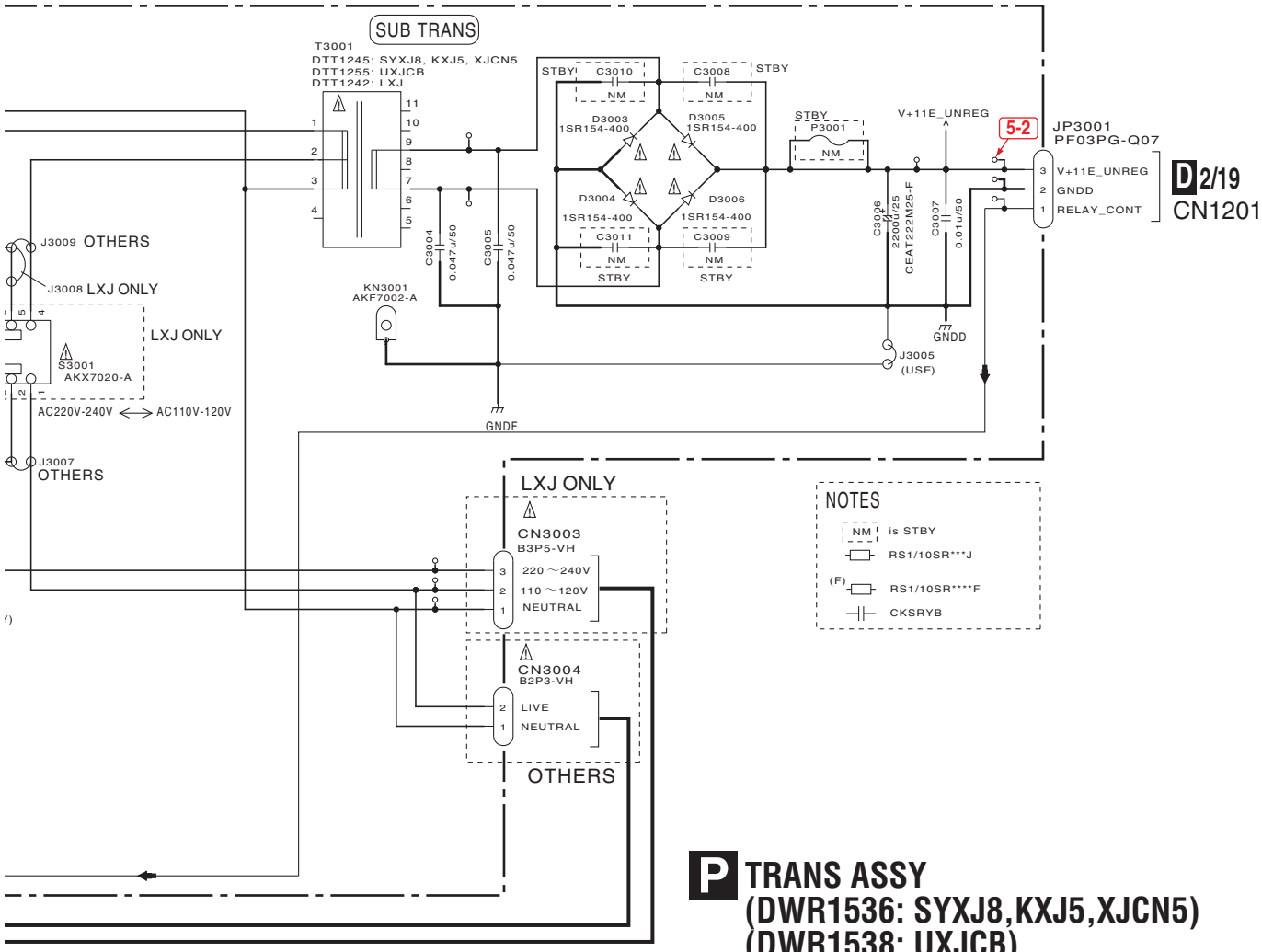

P TRANS ASSY
(DWR1536: SYXJ8,KXJ5,XJCN5)
(DWR1538: UXJCB)
(DWR1531: LXJ)

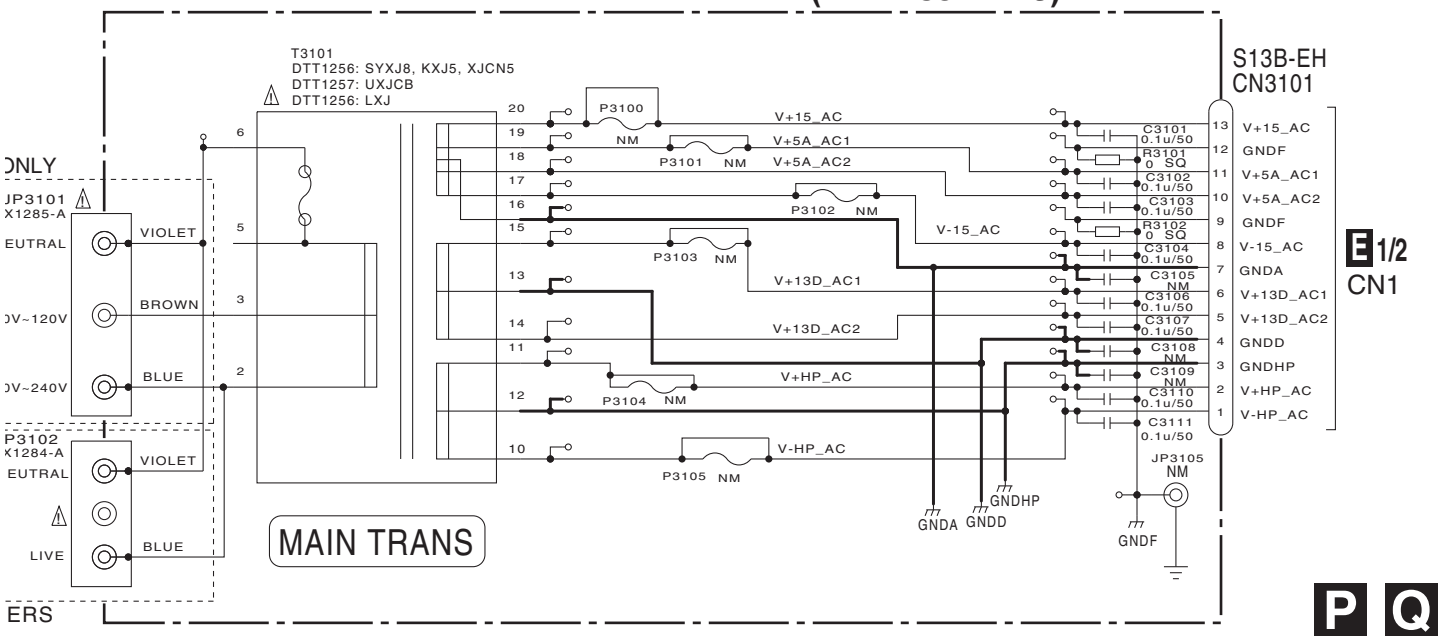

10.35 WAVEFORMS

Measurement Conditoion

IN or OUT	Measure CH	IN CH	IN LEVEL	IN FREQUENCY	RL	Other Settings	Other Settings
IN	CD/LINE	CH1/2/3/4	0 dB	1K	–	TRIM LEVEL VR Center	–
IN	LINE	CH2/3	0 dB	1K	–	TRIM LEVEL VR Center	–
IN	PHONO	CH1/4	-40 dB	1K	–	TRIM LEVEL VR Center	–
IN	MIC	MIC	-40 dB	1K	–	TRIM LEVEL VR Center	Center all EQs
IN	RETURN	RETURN	0 dB	1K	–	Level depth VR Center	–
IN	USB	USB1/2/3/4	0 dB	1K	–	TRIM LEVEL VR Center	–
OUT	MASTER1/2	CH1/CD/LINE	0 dB	1K	10 kΩ	MASTER LEVEL VR Center	Center all EQs/FADER Max
OUT	BOOTH	CH1/CD/LINE	0 dB	1K	10 kΩ	BOOTH LEVEL VR Center	Center all EQs/FADER Max
OUT	REC	CH1/CD/LINE	0 dB	1K	10 kΩ	–	Center all EQs/FADER Max
OUT	SEND	CH1/CD/LINE	0 dB	1K	10 kΩ	–	Center all EQs/FADER Max
OUT	HP	CH1/CD/LINE	0 dB	1K	32 Ω	HP LEVEL Center	Center all EQs/FADER Max
OUT	DIG OUT	CH1/CD/LINE	0 dB	1K	75 Ω	–	Center all EQs/FADER Max

Measure the output waveforms at the CH1 CD/LINE input.

TSET DISC <STD-905>
Track2 1 kHz 0 dB
Track6-2 1 kHz -40 dB
Playbak in CDJ.

Switch Type Setting

MASTER ATT	: 0 dB
MONO/ST (HP)	: ST
MON/ST (MASTER)	: ST
CH FADER CURVE	: Right side (linear)
CROSS FADER CURVE	: Center
CROSS FADER ASSIGN	: THRU
MIC SW	: ON
MASTER CUE	: ON
COLOR VR	: Center
ISOLATOR	: EQ

* The waveform for a high-speed signal is obtained, using an FET probe.
Note that the waveforms at the high-frequency band will be attenuated (a curve will be damped) compared with those indicated in this section if a passive probe (generally available) is used for diagnosis.

NOTE: The following waveforms were measured at the point of the corresponding balloon number in the schematic diagram and PCB diagram.

A INPUT ASSY

2-1 **INPUT SELECT (CD/LINE)**
V: 5 V/div. H: 200 μs/div.

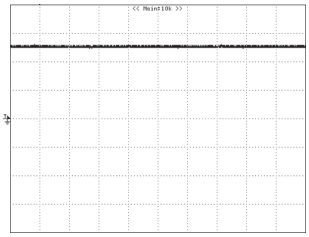

2-1 **INPUT SELECT (PHONO)**
V: 5 V/div. H: 200 μs/div.

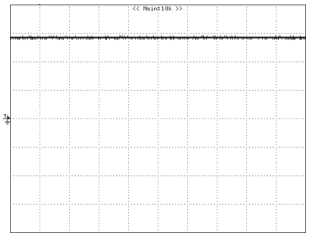

2-2 **CH1_L, R (CD/LINE)**
V: 1 V/div. H: 200 μs/div.

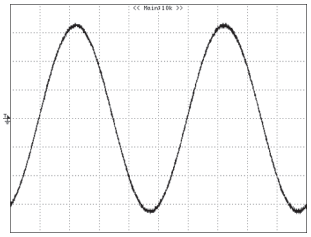

2-3 **CH1_L, R (PHONO)**
V: 20 mV/div. H: 200 μs/div.

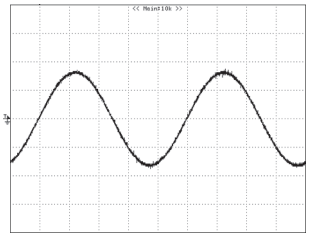

D MAIN ASSY

1-4 P122/X2/EXCLK
V: 1 V/div. H: 20 ns/div.

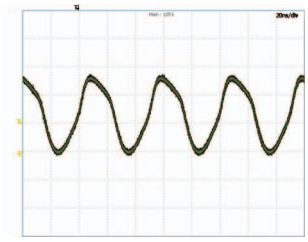

1-26 96k_CLK_13AD
V: 1 V/div. H: 2 µs/div.

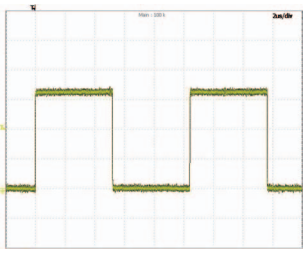

1-42 RET_L, R
V: 1 V/div. H: 200 µs/div.

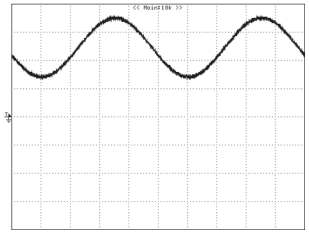

1-59 MASTER_L+, -
V: 1 V/div. H: 200 µs/div.
1-60

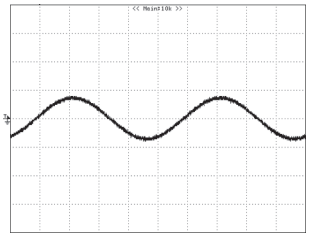

1-8 24M576_CLK_FPGA
V: 1 V/div. H: 10 ns/div.

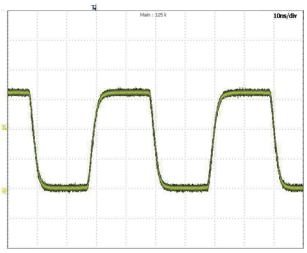

1-27 6M_CLK_13AD
V: 1 V/div. H: 20 ns/div.

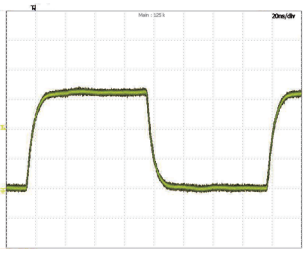

1-48 BOOTH_L, R
V: 1 V/div. H: 200 µs/div.

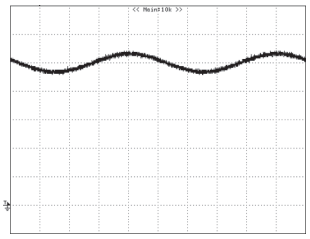

1-61 MASTER_L+, -
V: 1 V/div. H: 200 µs/div.
1-62

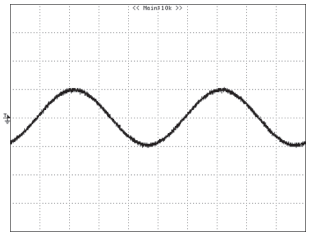

1-12 AHCLKR1/GP4[11]
V: 1 V/div. H: 10 ns/div.

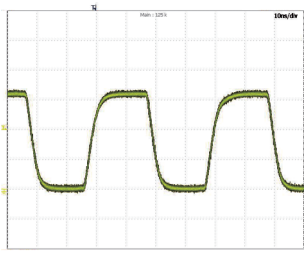

1-28 24M_CLK_13AD
V: 1 V/div. H: 10 ns/div.

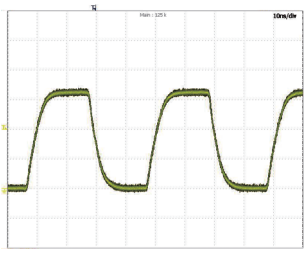

1-48 MASTER_L, R
V: 1 V/div. H: 200 µs/div.

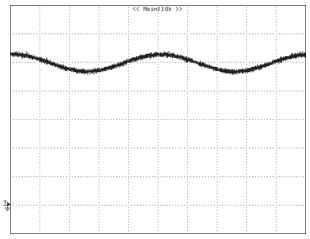

1-63 MASTER2_L, R
V: 1 V/div. H: 200 µs/div.

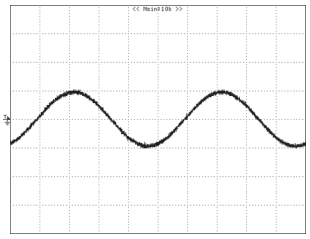

1-17 XTAL (24 MHz)
V: 1 V/div. H: 20 ns/div.

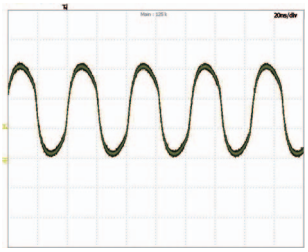

1-29 ADAT_CH1_ANA
V: 1 V/div. H: 2 µs/div.

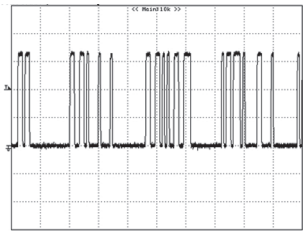

1-48 REC_L, R
V: 1 V/div. H: 200 µs/div.

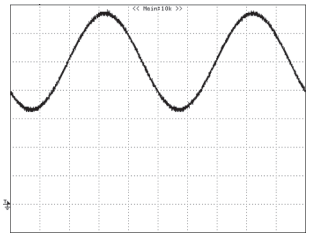

1-64 REC_L, R
V: 1 V/div. H: 200 µs/div.

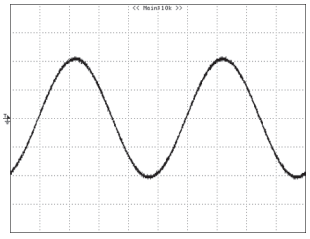

1-18 VINR+, -
V: 1 V/div. H: 200 µs/div.

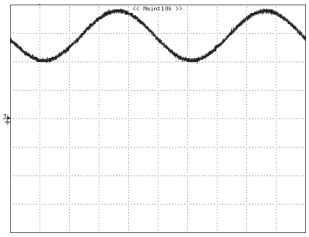

1-34 MIC1
V: 1 V/div. H: 200 µs/div.

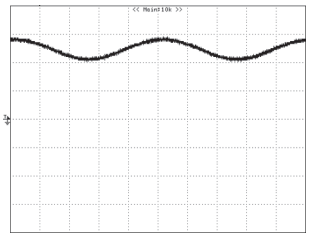

1-49 ADAT_BOOTH, REC, MASTER_L, R
V: 1 V/div. H: 2 µs/div.

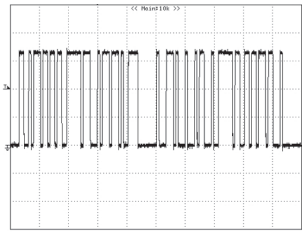

A B C D E F

D MAIN ASSY

1-72 SEND_L (SENDDAC output)
V: 1 V/div. H: 200 μs/div.

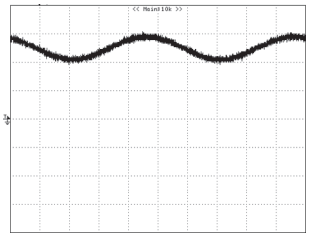

1-88 DOUT_SRC_BCK
V: 1 V/div. H: 50 ns/div.

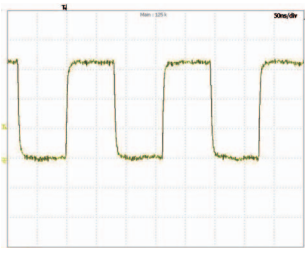

1-96 BOOTH L, R
V: 1 V/div. H: 200 μs/div.

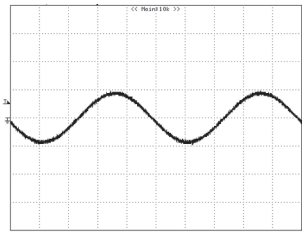

1-72 SEND_L (SEND output)
V: 1 V/div. H: 200 μs/div.

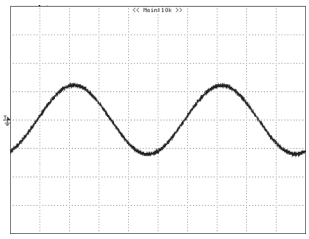

1-89 DOUT_SRC_DATA
V: 1 V/div. H: 500 ns/div.

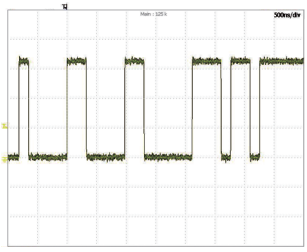

1-97 FADER_START1, FADER_STOP1
V: 1 V/div. H: 100 ms/div.
Fader Start button ON
CH Fader MIN ↔ MAX

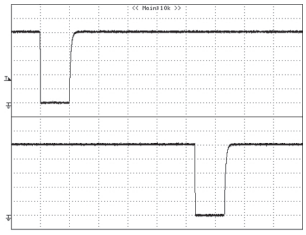

1-78 HP_L+, -, HP_R+, -
V: 1 V/div. H: 200 μs/div.

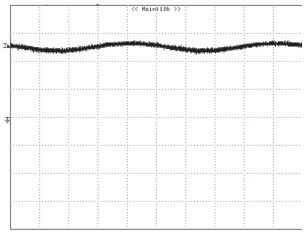

1-90 FPGASRC_MCLK
V: 1 V/div. H: 10 ns/div.

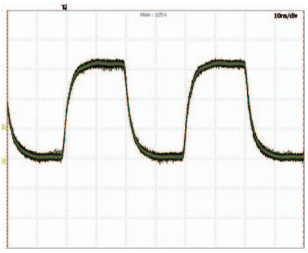

1-99 R3057, R3058
V: 1 V/div. H: 100 ms/div.
Fader Start button ON
CH Fader MIN ↔ MAX

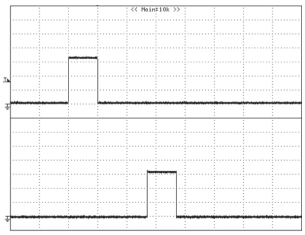

1-84 DIGITAL OUT
V: 1 V/div. H: 500 ns/div.

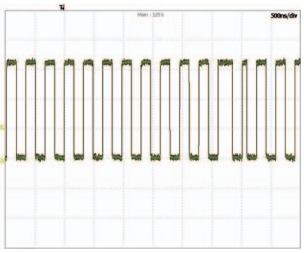

1-92 D+USB
V: 200 mV/div. H: 100 ns/div.

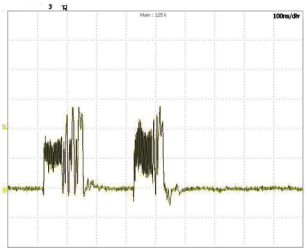

1-87 DOUT_SRC_LRCK
V: 1 V/div. H: 2 μs/div.

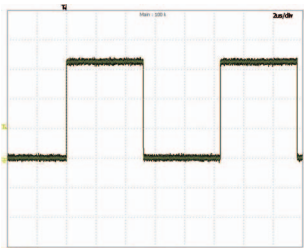

1-93 D-USB
V: 200 mV/div. H: 100 ns/div.

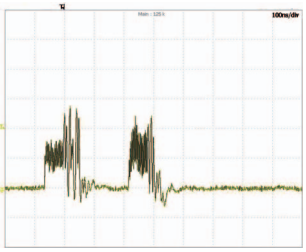

E SEC/HP ASSY

4-1 HP_L, R_OUT
V: 1 V/div. H: 200 μs/div.

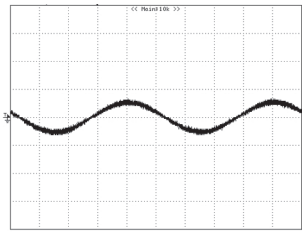

H PNLA ASSY

3-13 FL_TXD
V: 1 V/div. H: 500 μs/div.

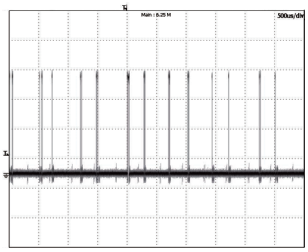

3-14 FL_SCK
V: 1 V/div. H: 500 μs/div.

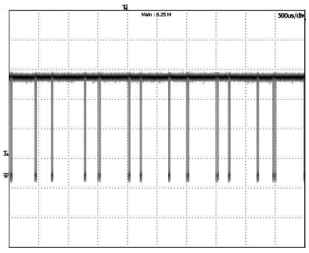

3-15 FL_LAT
V: 1 V/div. H: 500 μs/div.

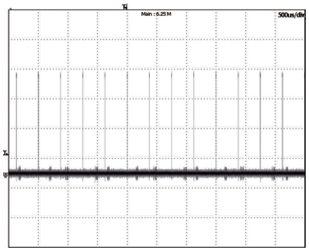

3-16 FL_BK
V: 1 V/div. H: 500 μs/div.

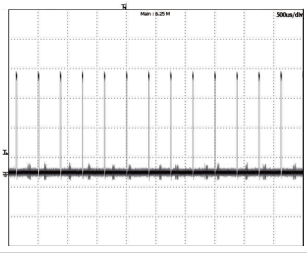

11. PCB CONNECTION DIAGRAM

11.1 INPUT, MIC1 and MTRM ASSYS

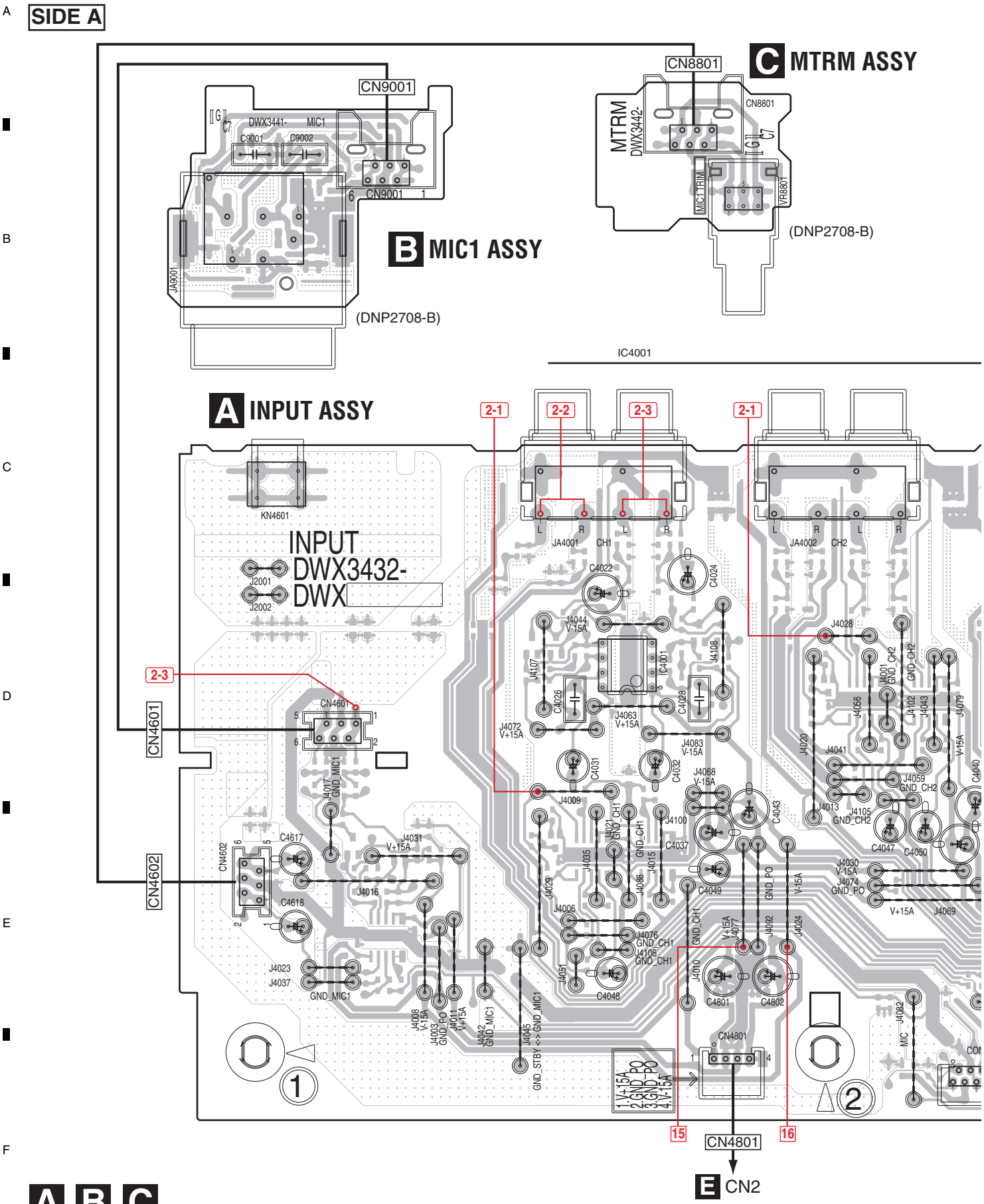

SIDE A

ASSY

: Voltage measuring point
: Waveform measuring point

NOTE FOR PCB DIAGRAMS :

1. The parts mounted on this PCB include all necessary parts for several destinations. For further information for respective destinations, be sure to check with the schematic diagram.

2. View point of PCB diagrams.

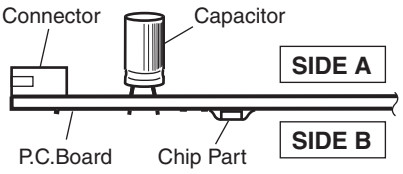

3)

IC4201

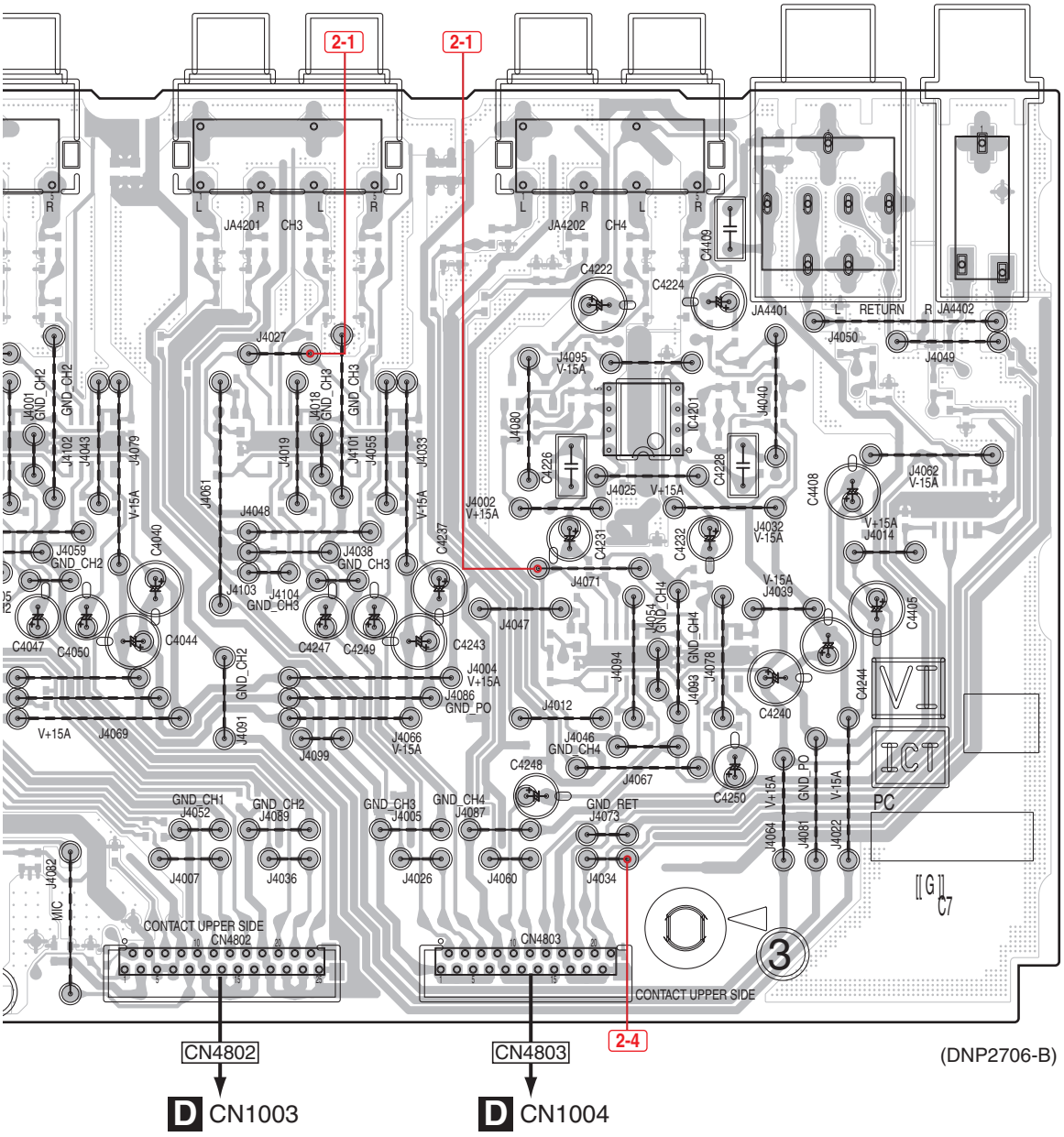

(DNP2706-B)

D CN1003

D CN1004

SIDE B

: Voltage measuring point

: Waveform measuring point

IC4401 Q4202 Q4204 IC4205 IC4204 Q4206 Q4203 Q4201 IC4203 IC4202 Q4205 IC4005 IC4004 Q4006

A INPUT ASSY

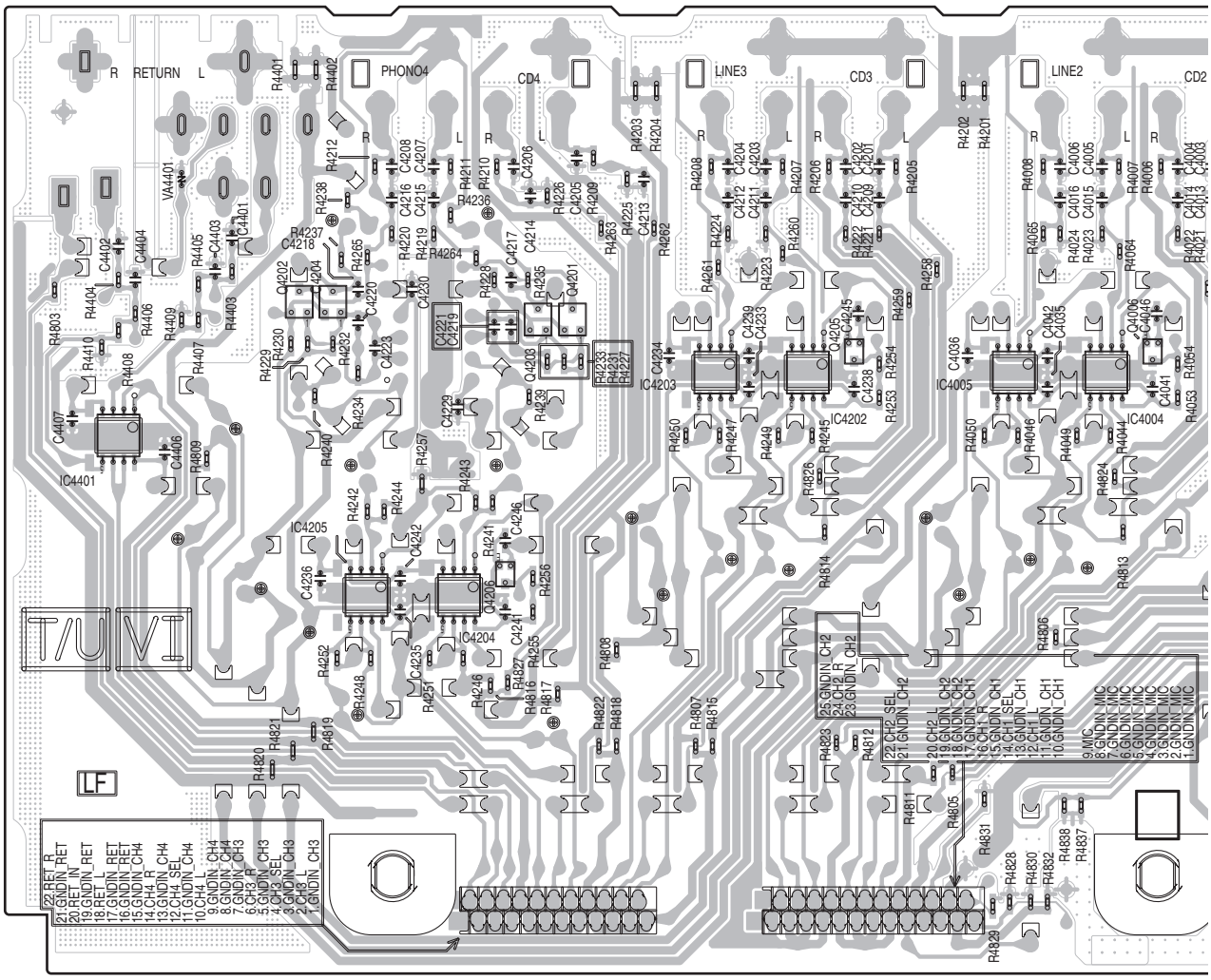

SIDE B

C MTRM ASSY

CN8801

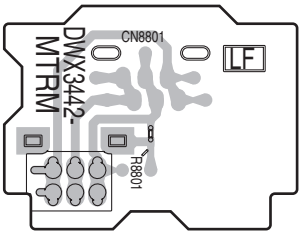

(DNP2708-B)

B MIC1 ASSY

CN9001

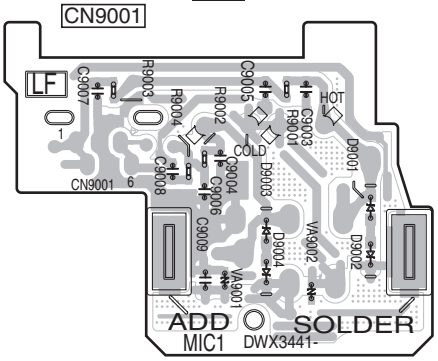

(DNP2708-B)

IC4004 Q4006 Q4002 Q4004 Q4003 Q4001 Q4005 Q4603 Q4602 IC4003 IC4002 IC4601

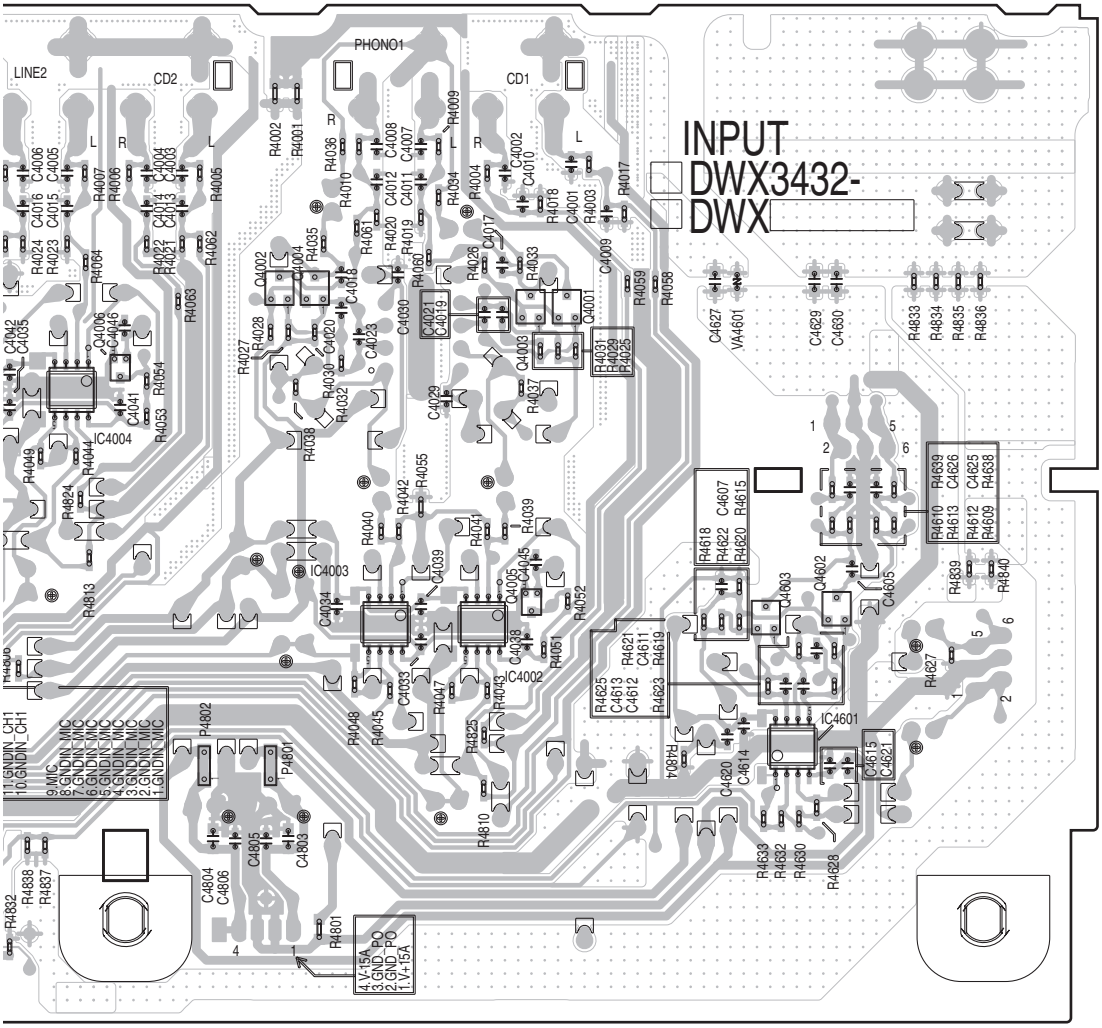

(DNP2706-B)

11.2 MAIN ASSY

SIDE A

The blue character is silk for services.

D MAIN ASSY

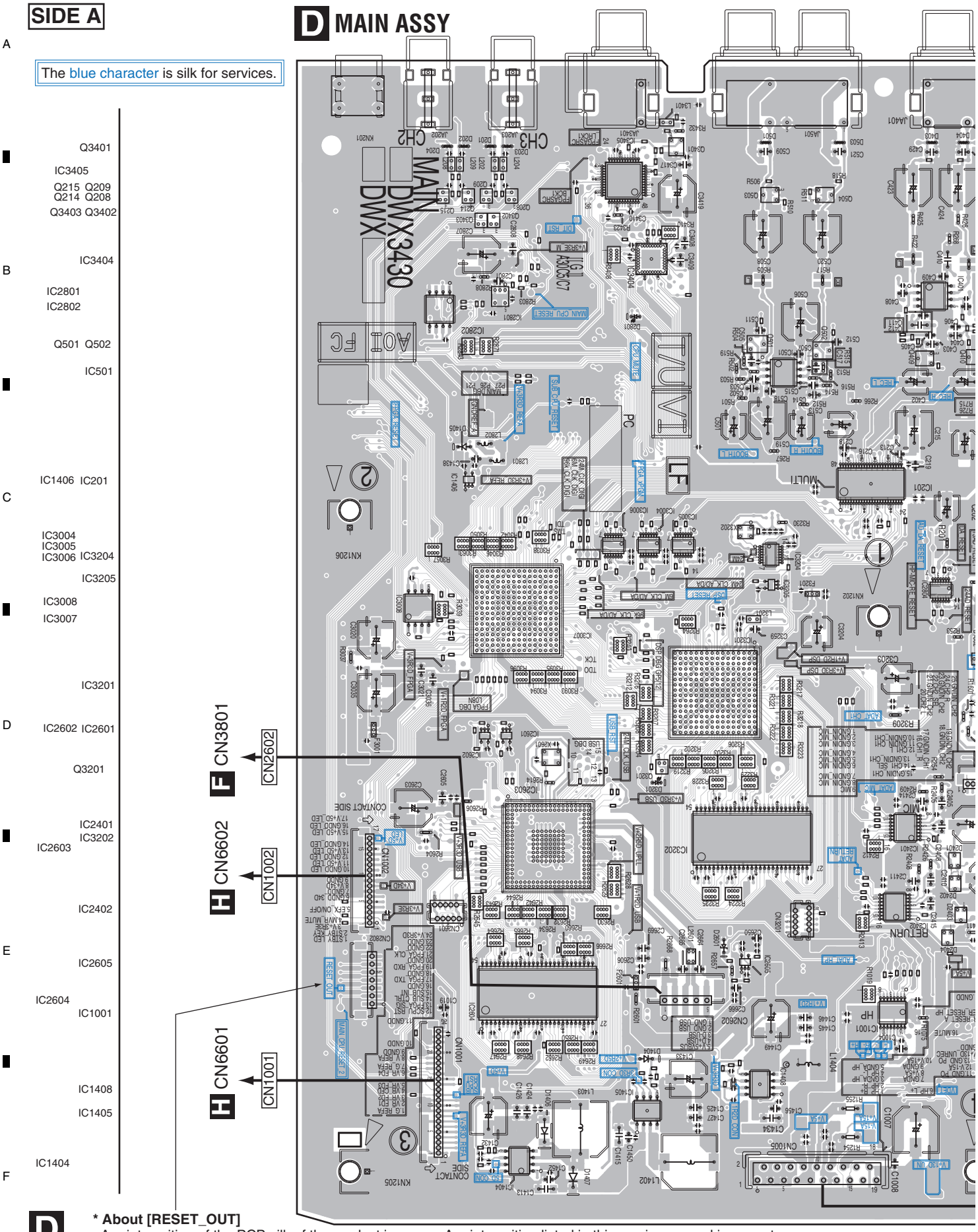

*** About [RESET_OUT]**
A print position of the PCB silk of the product is wrong. A print position listed in this service manual is correct.

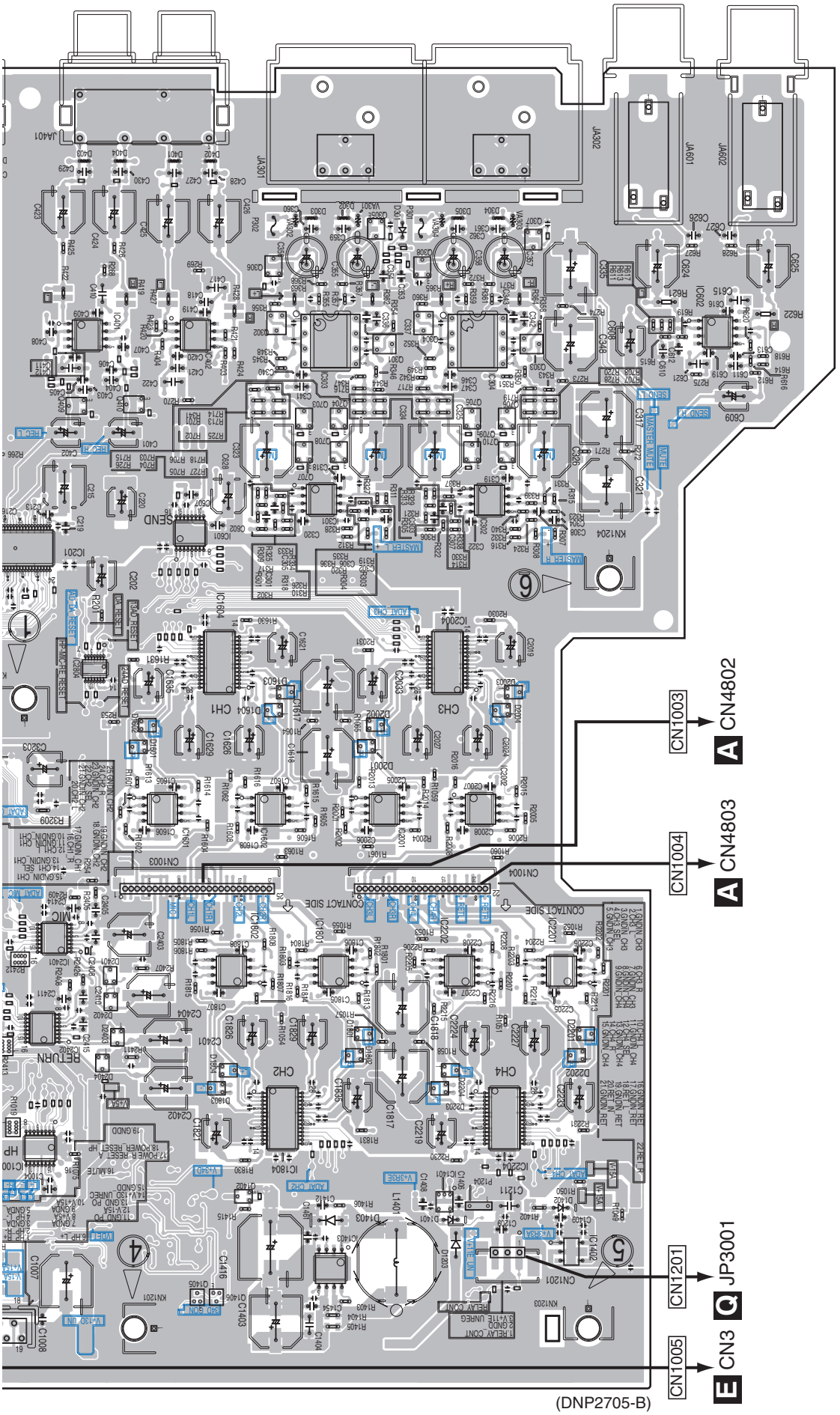

SIDE A

A

Q305
Q307
Q306 Q308

B

IC401 Q302 Q304
IC402 IC303 IC304 IC602
Q301 Q303

Q409
Q410 Q703-Q706

Q707-Q710

IC301 IC302

IC601

C

IC1604 IC2004
IC2804

IC1601 IC2001
IC1602 IC2002

D

IC1802 IC2202
IC1801 IC2201

E

IC1804 IC2204

Q1402 IC1401

IC1402
IC1403

Q1405
Q1406

F

D

SIDE A ● Measuring points of waveforms and voltages

: Voltage measuring point

: Waveform measuring point

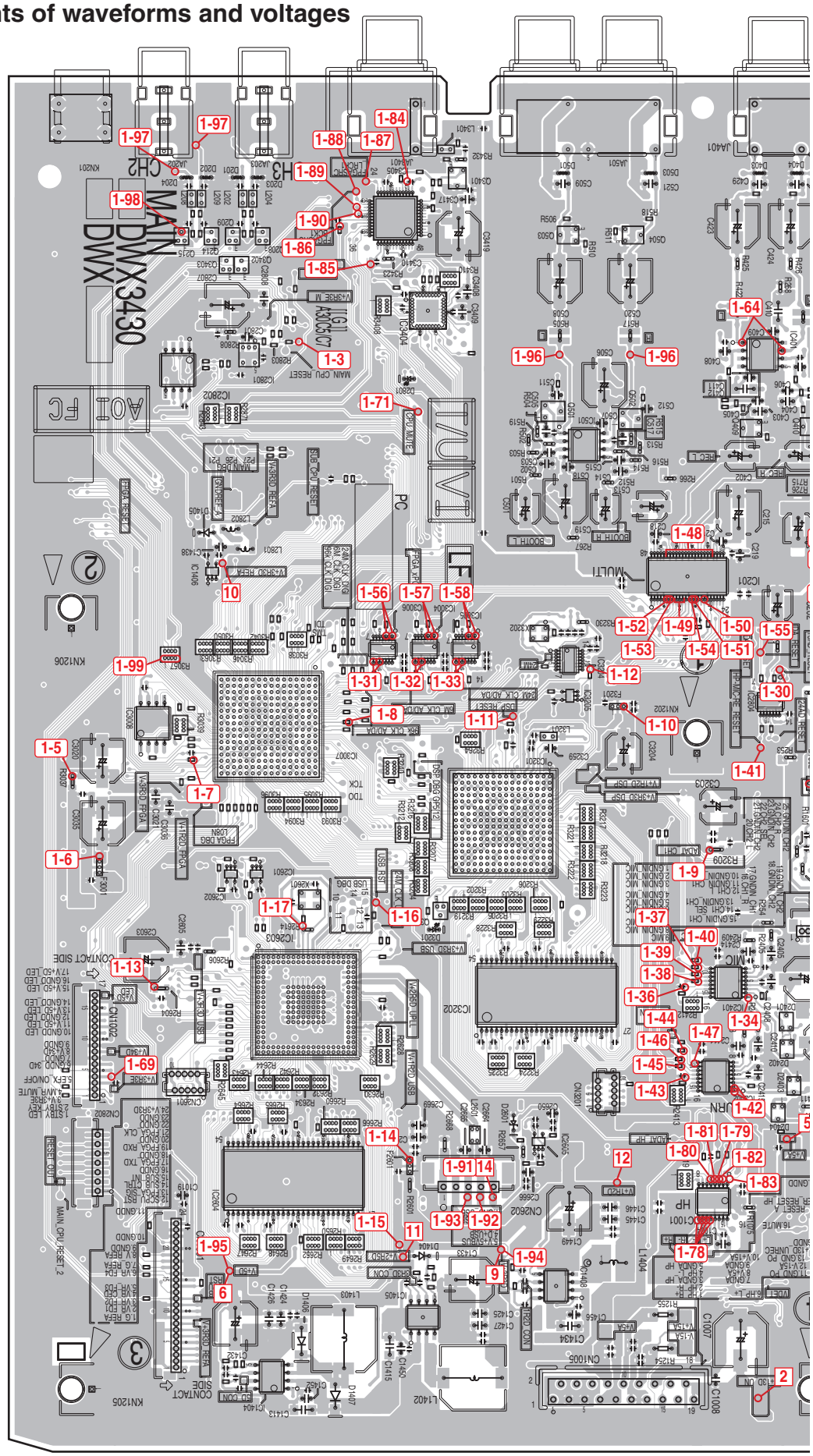

SIDE A

D MAIN ASSY

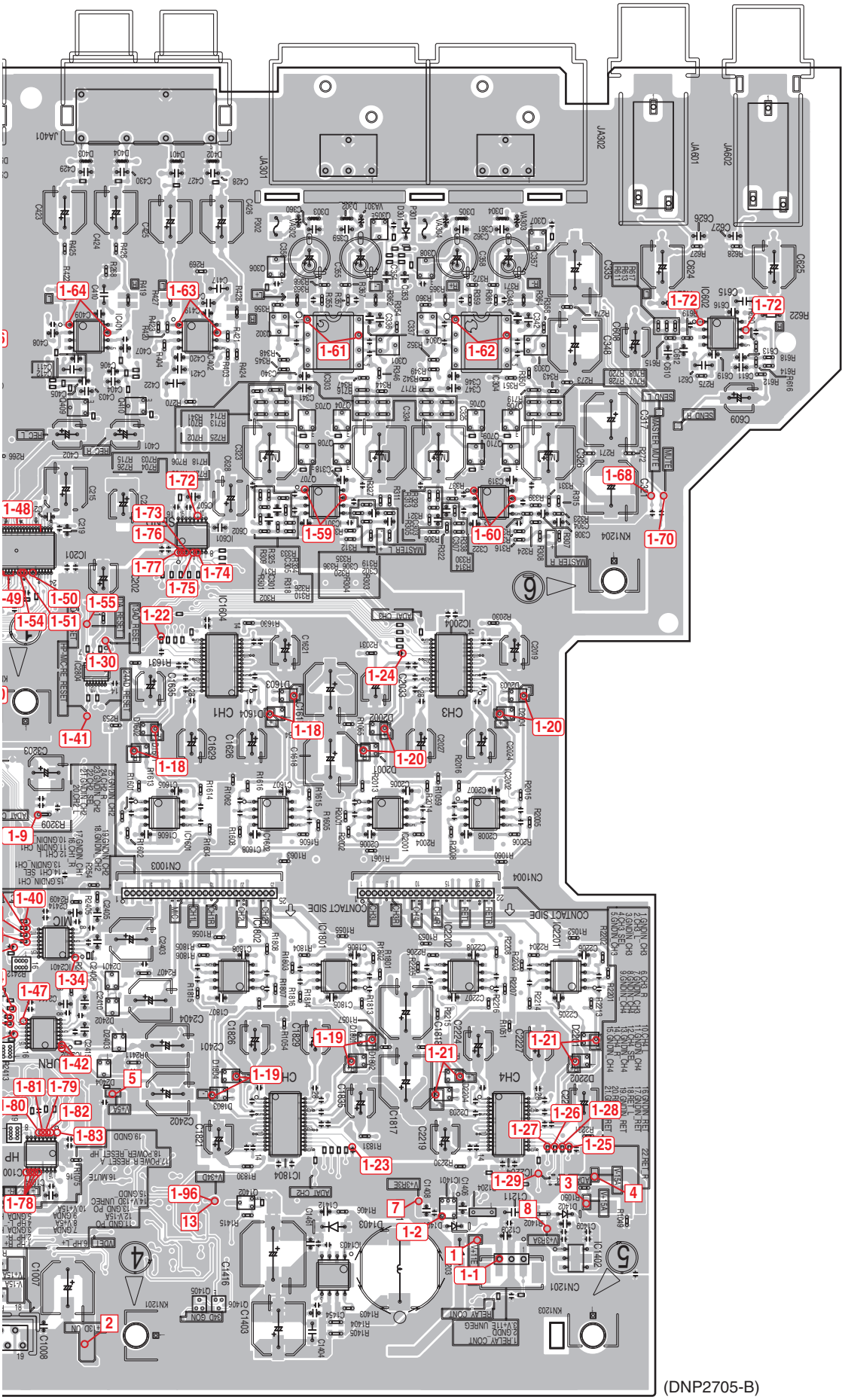

(DNP2705-B)

SIDE B

D MAIN ASSY

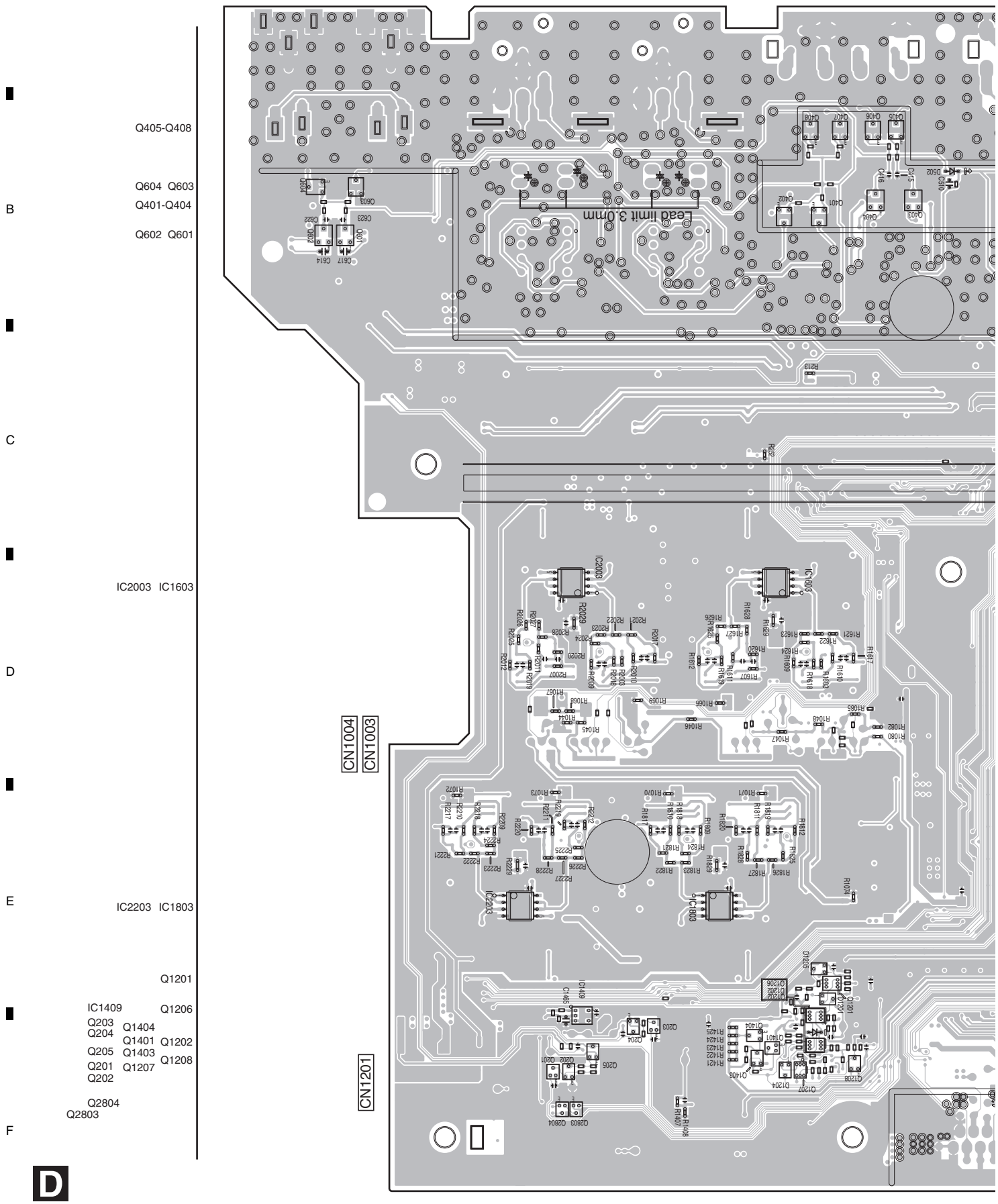

SIDE B

: Voltage measuring point
: Waveform measuring point

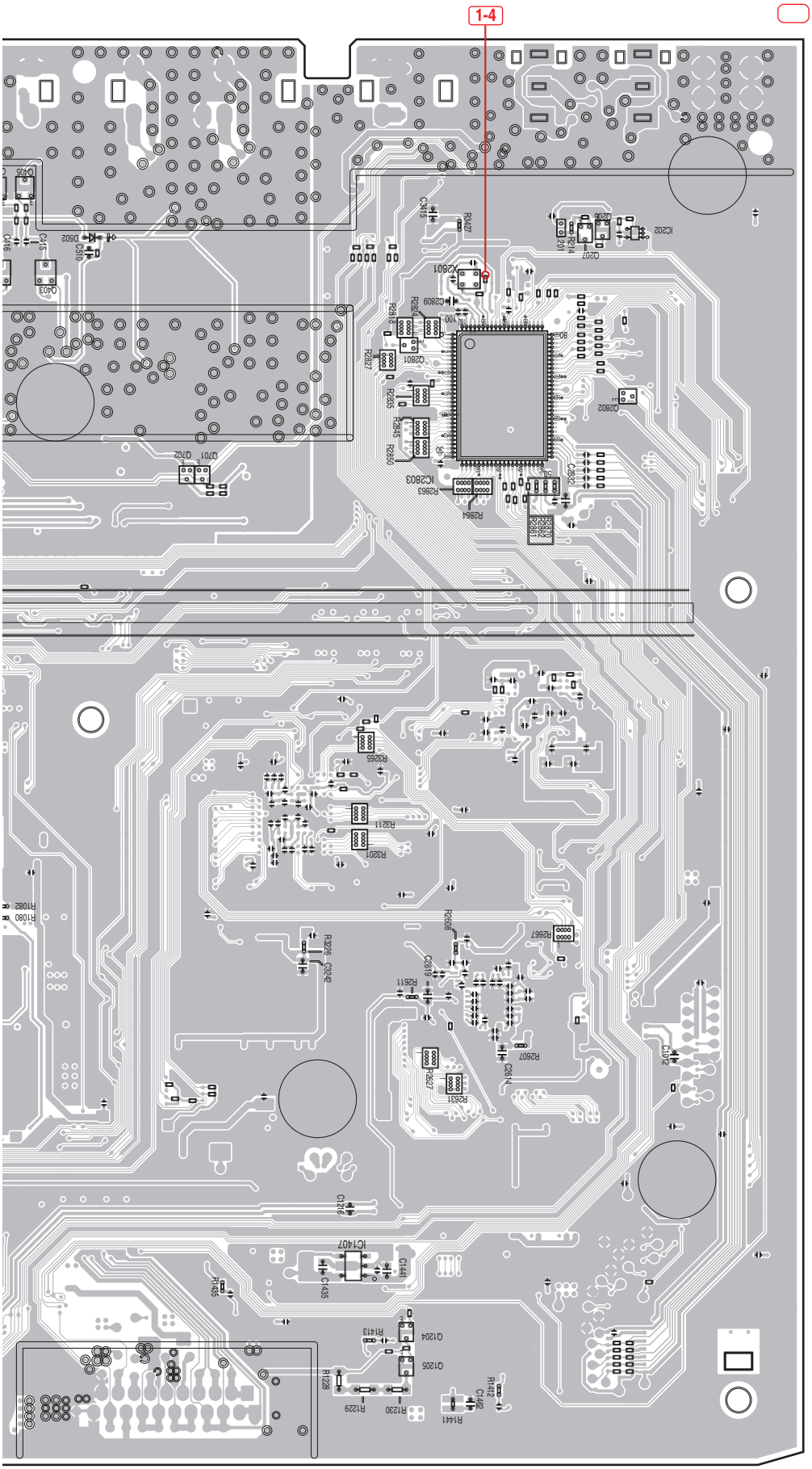

Q206
Q207
IC202

Q2801

IC2803
Q2802

Q701
Q702

IC1407

Q1204

Q1205

(DNP2705-B)

11.3 SEC/HP, USBI and HPJK ASSYS

SIDE A

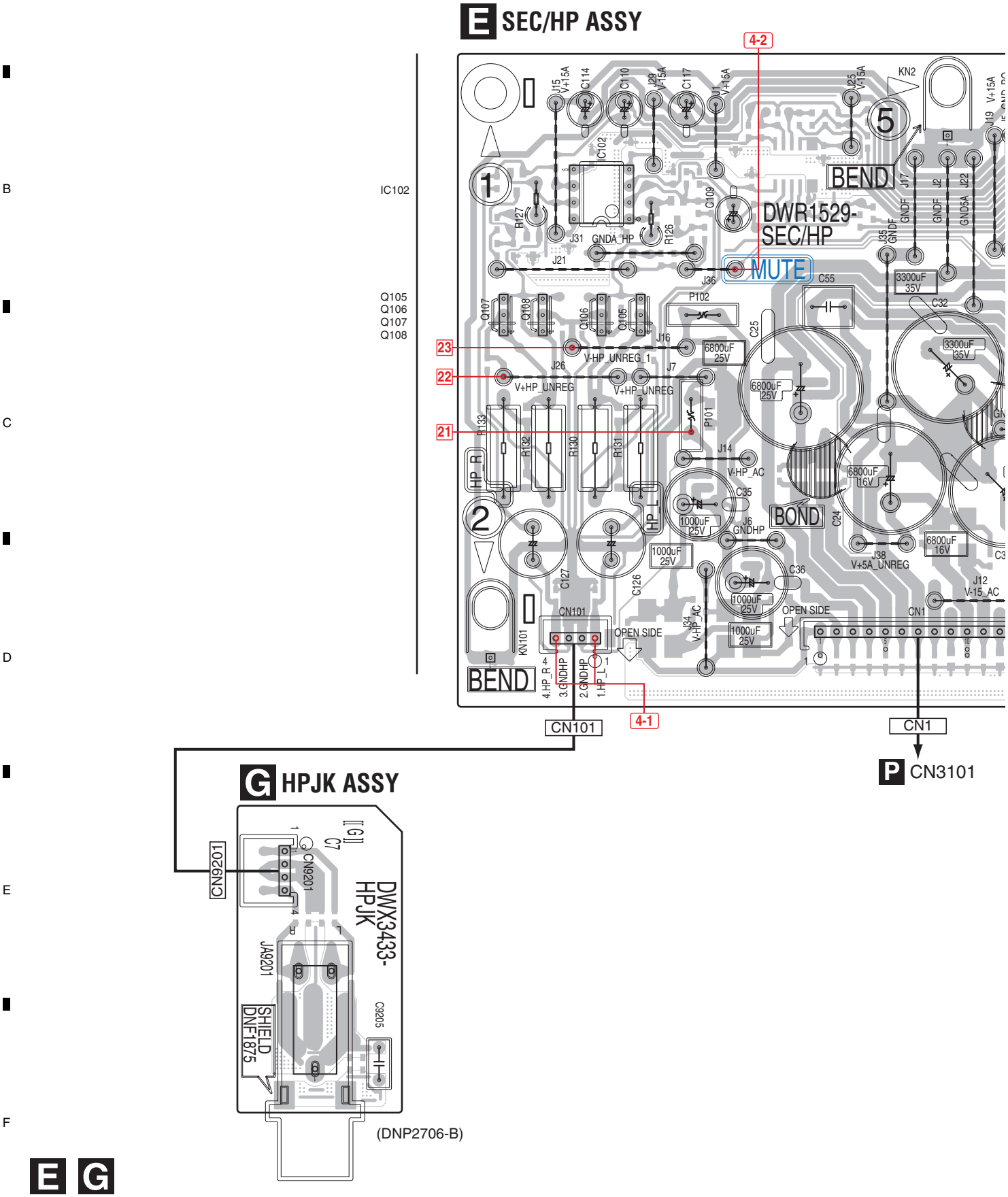

SIDE A

: Voltage measuring point

: Waveform measuring point

The blue character is silk for services.

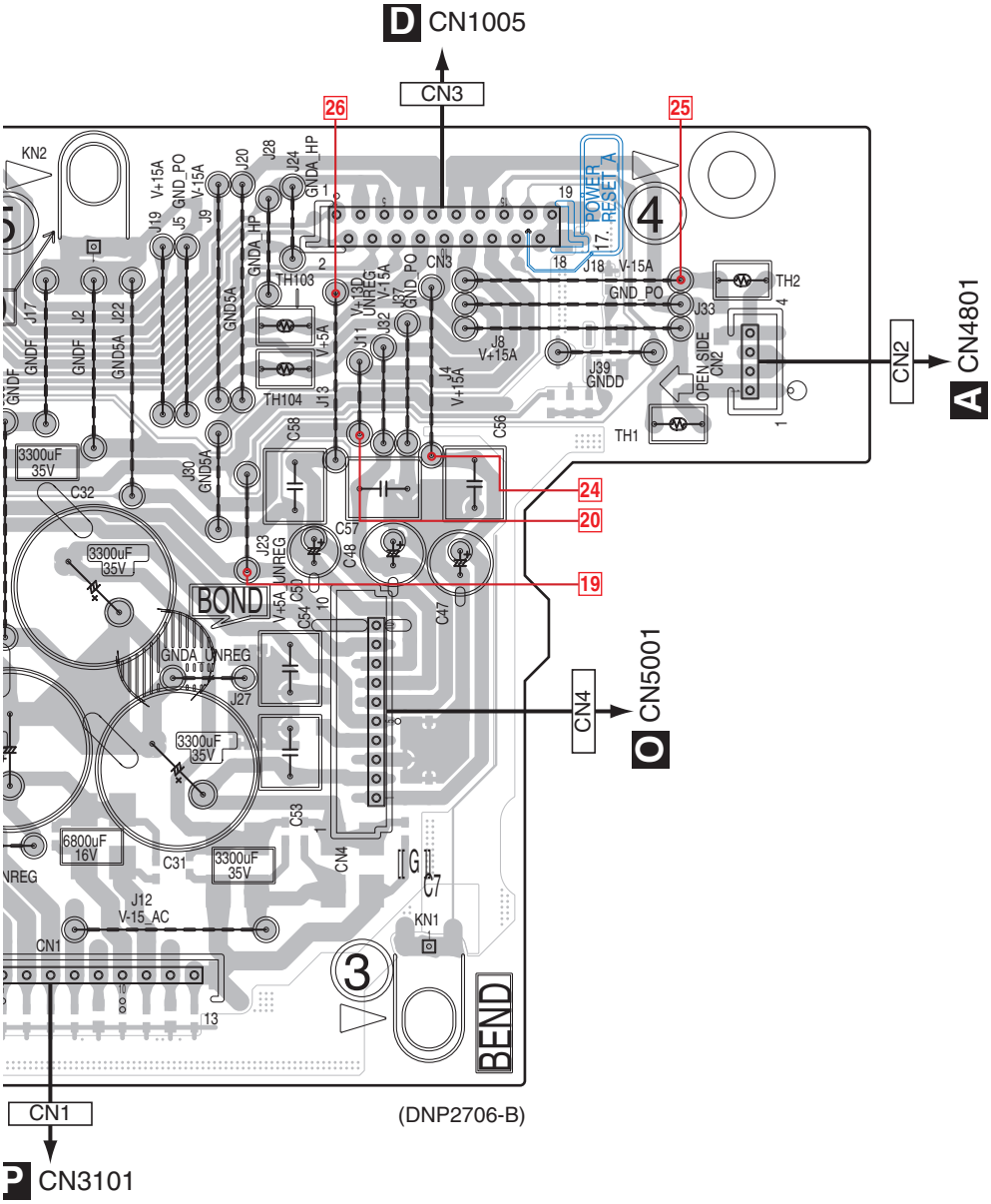

(DNP2706-B)

F USBI ASSY

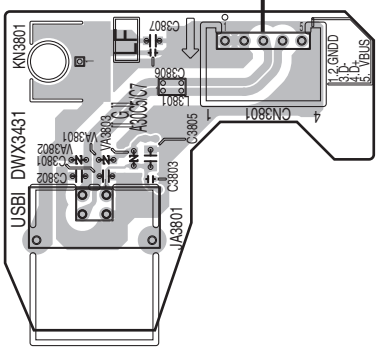

(DNP2705-B)

SIDE B

E SEC/HP ASSY

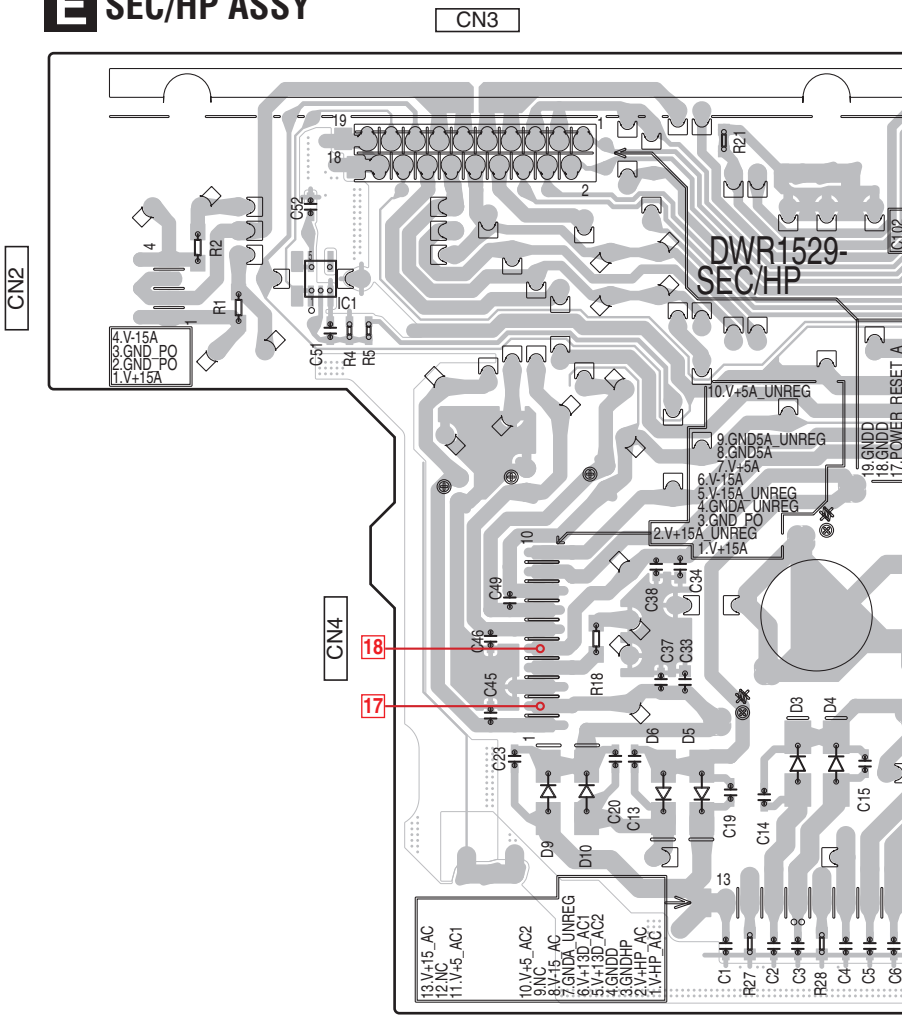

(DNP2706-B)

F USBI ASSY

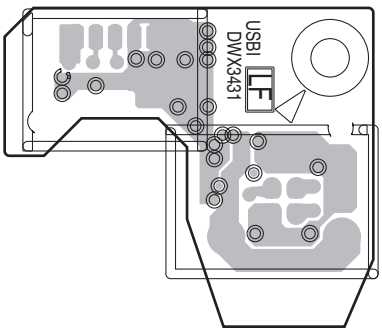

(DNP2705-B)

SIDE B

: Voltage measuring point
: Waveform measuring point

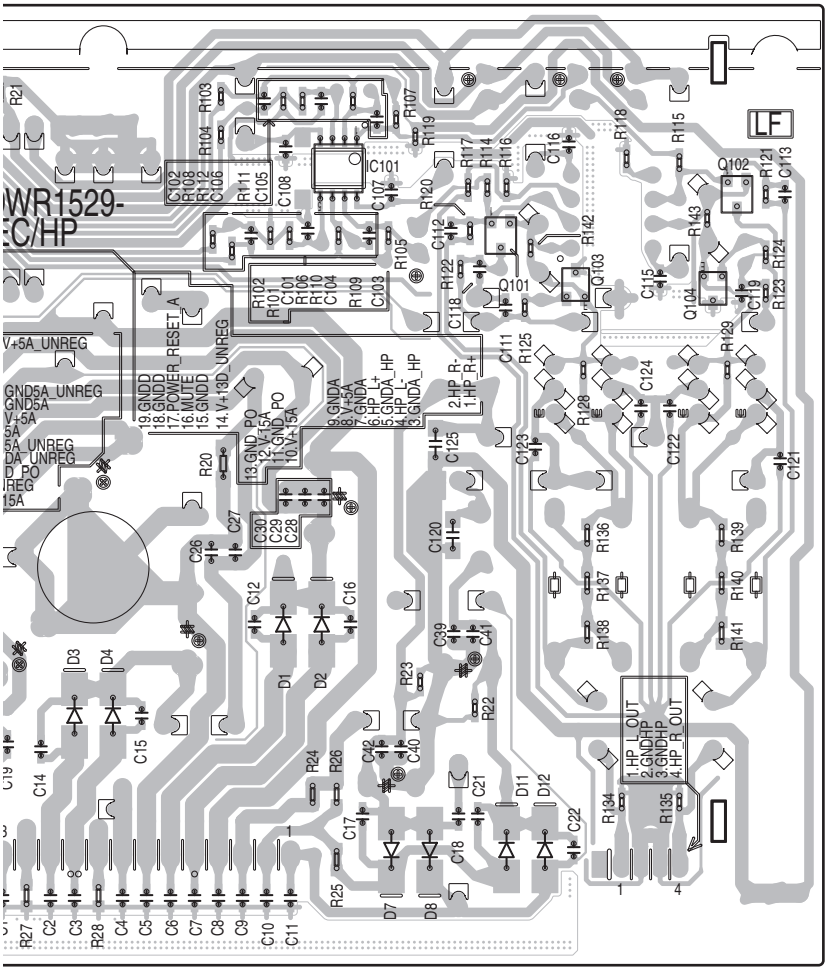

IC101
Q102
IC1 Q101
Q103
Q104

G HPJK ASSY

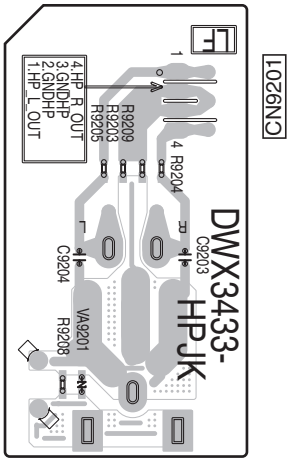

(DNP2706-B)

11.4 PNLA ASSY

SIDE A

H PNLA ASSY

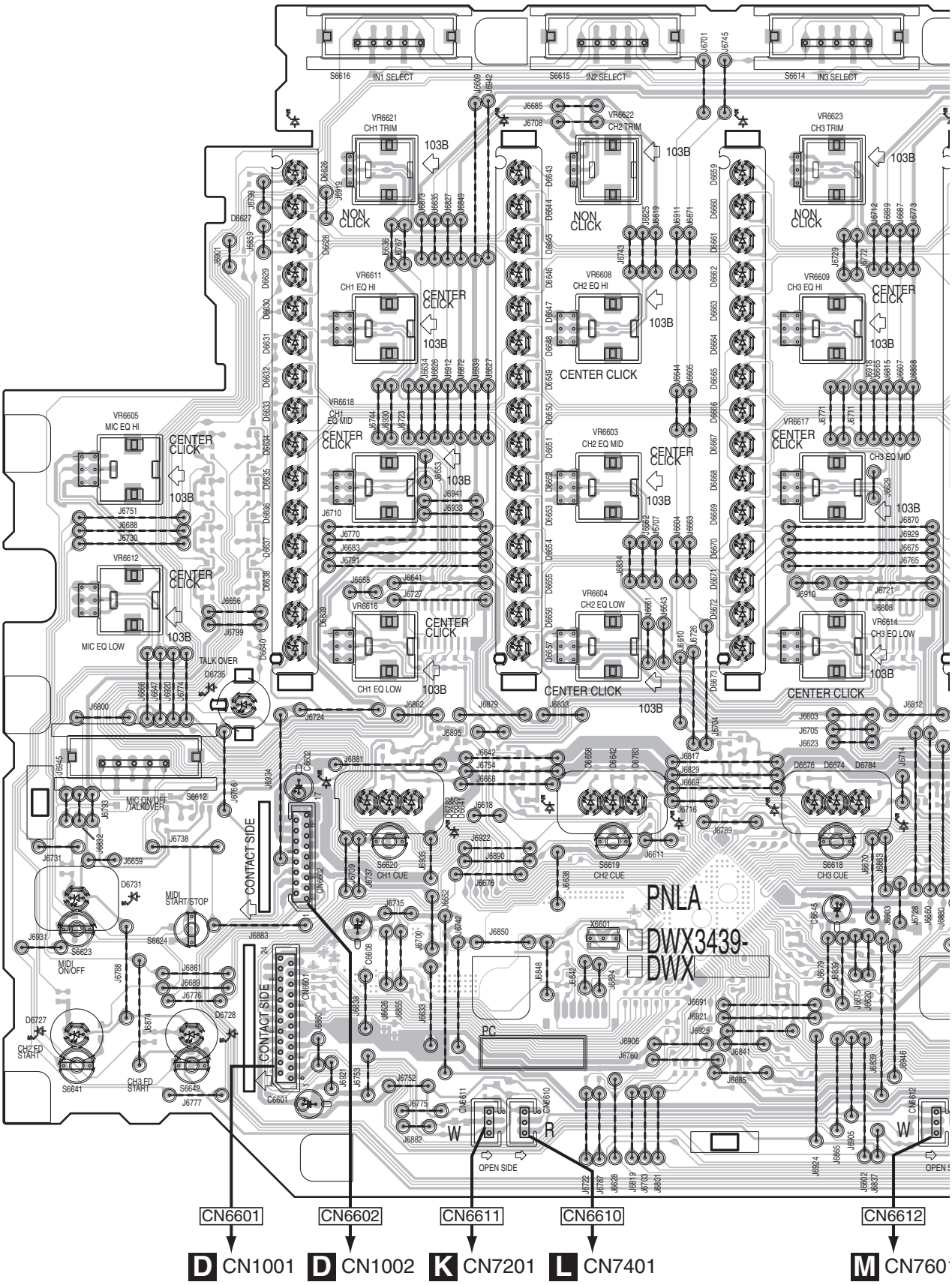

SIDE A

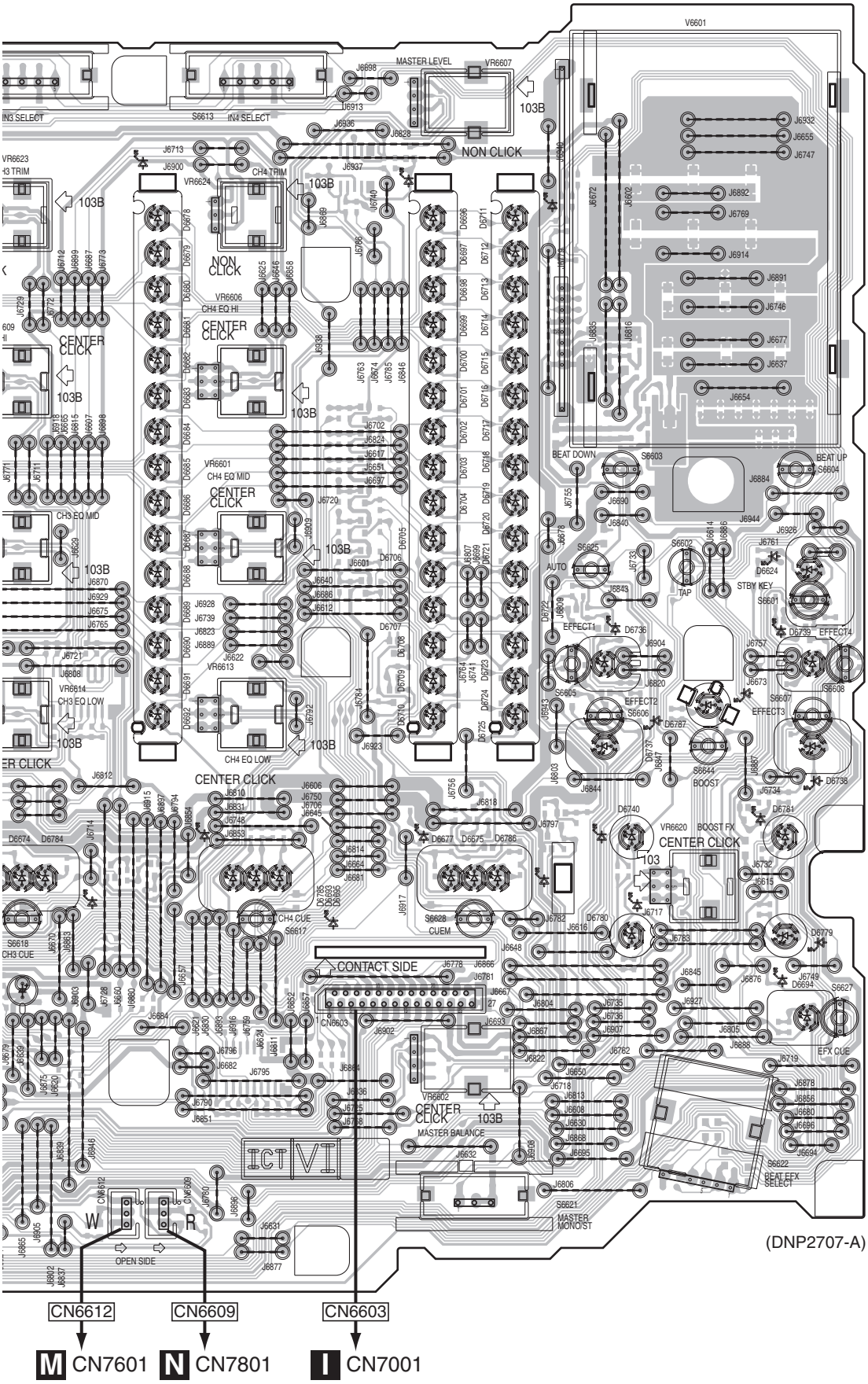

VR6607

VR6621-VR6624

VR6606
VR6608
VR6609
VR6611

VR6605
VR6601
VR6603
VR6617
VR6618

VR6612
VR6604
VR6613
VR6614
VR6616

VR6620

VR6602

SIDE B

H PNLA ASSY

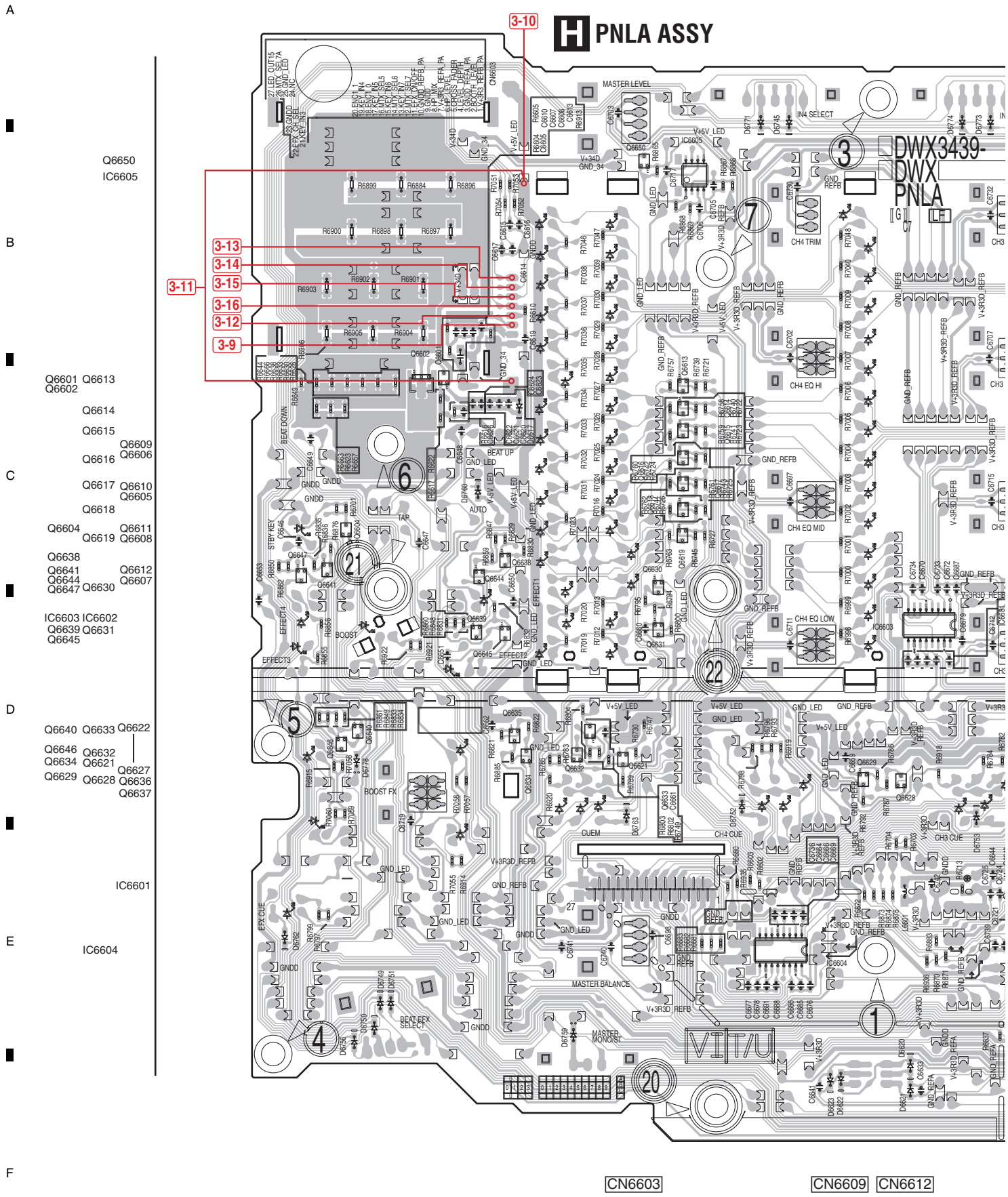

SIDE B

: Voltage measuring point

: Waveform measuring point

The blue character is silk for services.

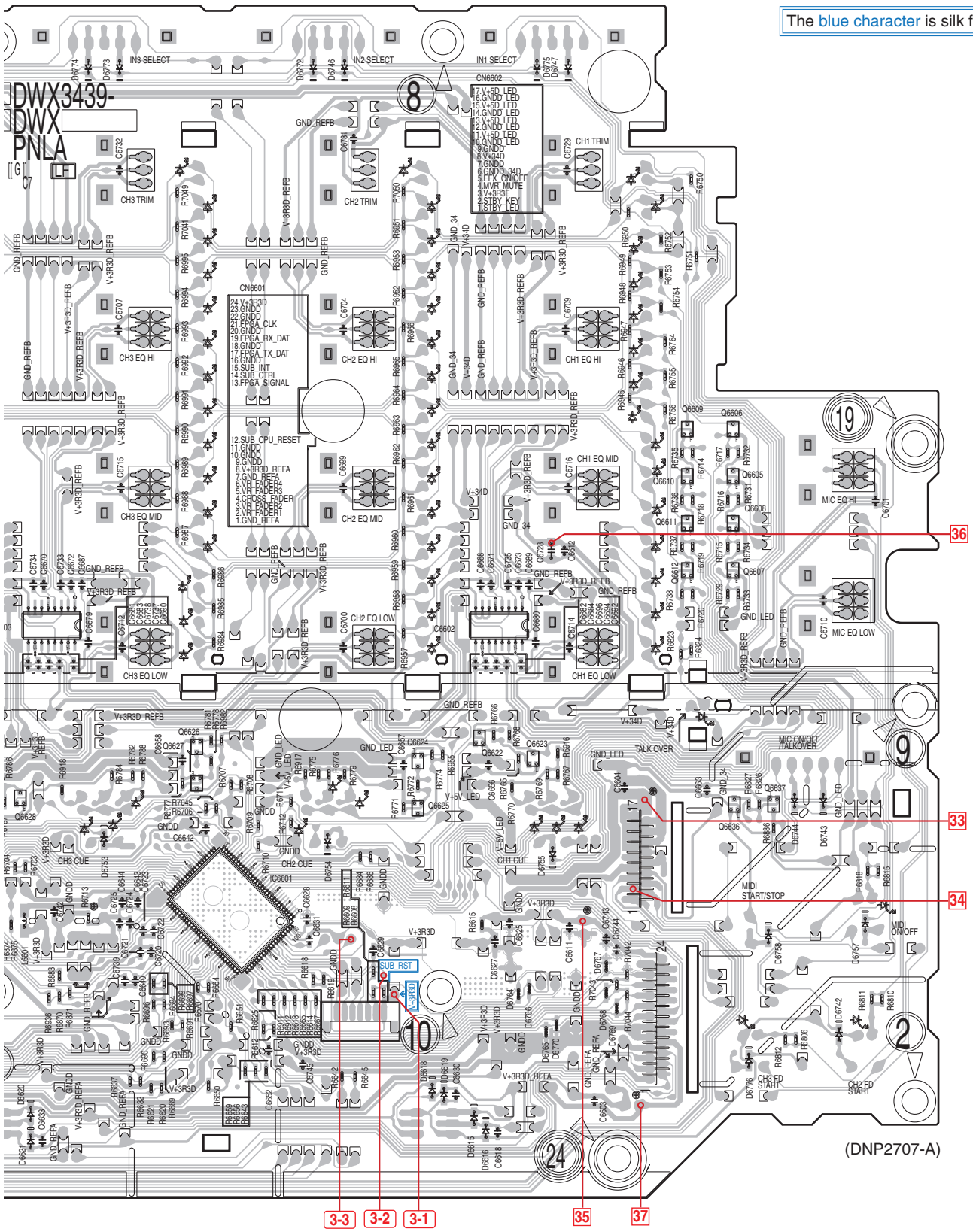

CN6612 CN6610 CN6611 CN6602 CN6601

11.5 PNLB and FADC ASSYS

SIDE A

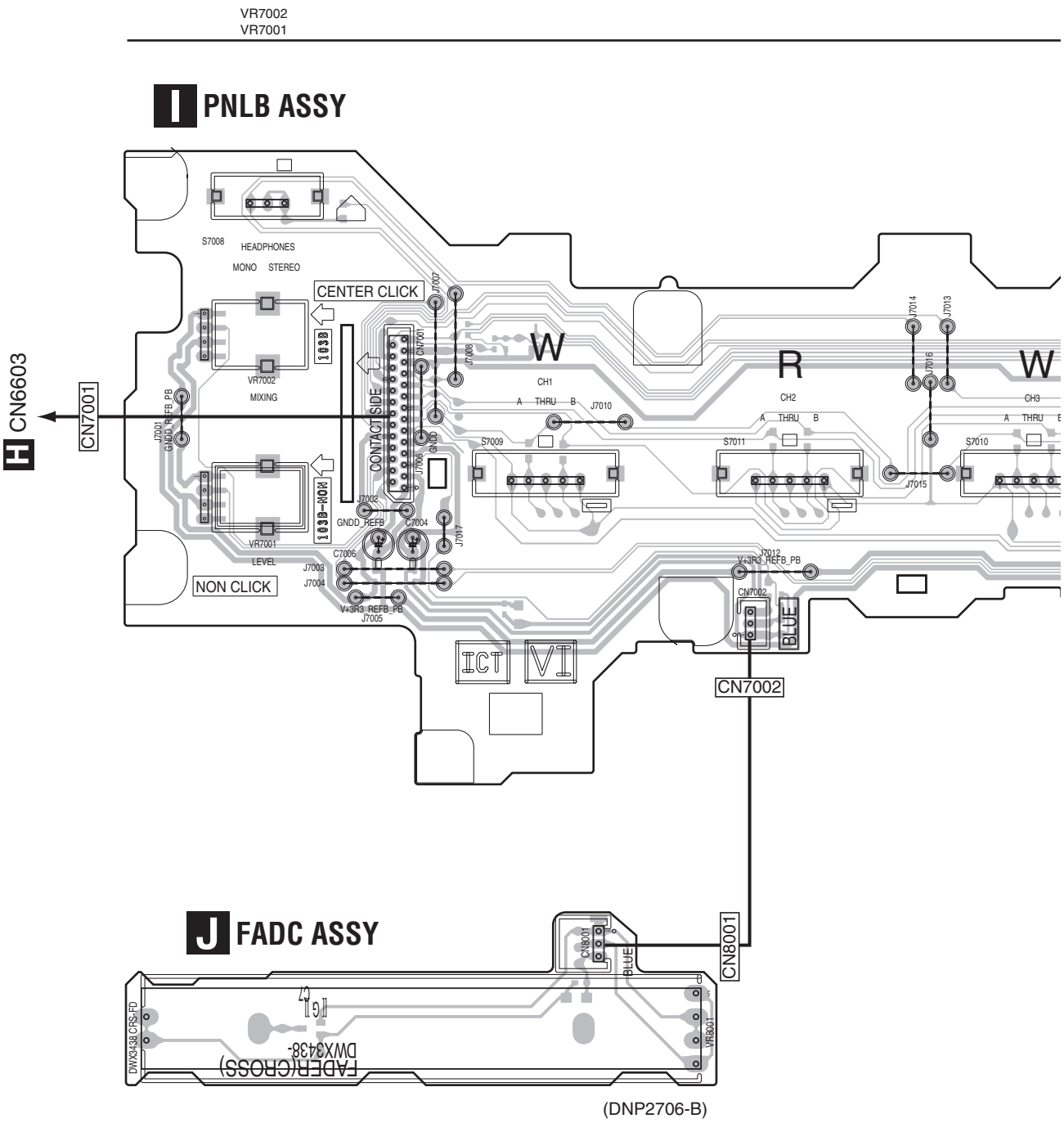

SIDE A

A

VR7004 VR7003

B

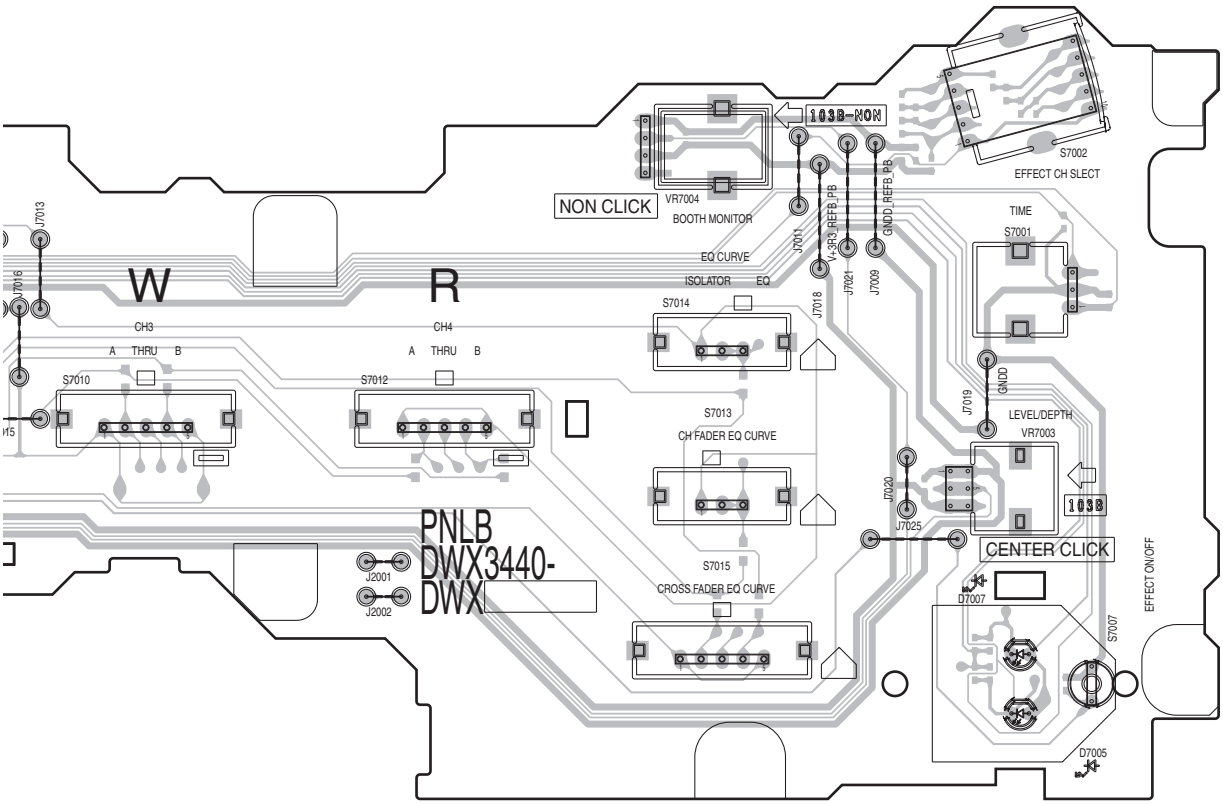

(DNP2708-B)

C

D

E

F

SIDE B

I PNLB ASSY

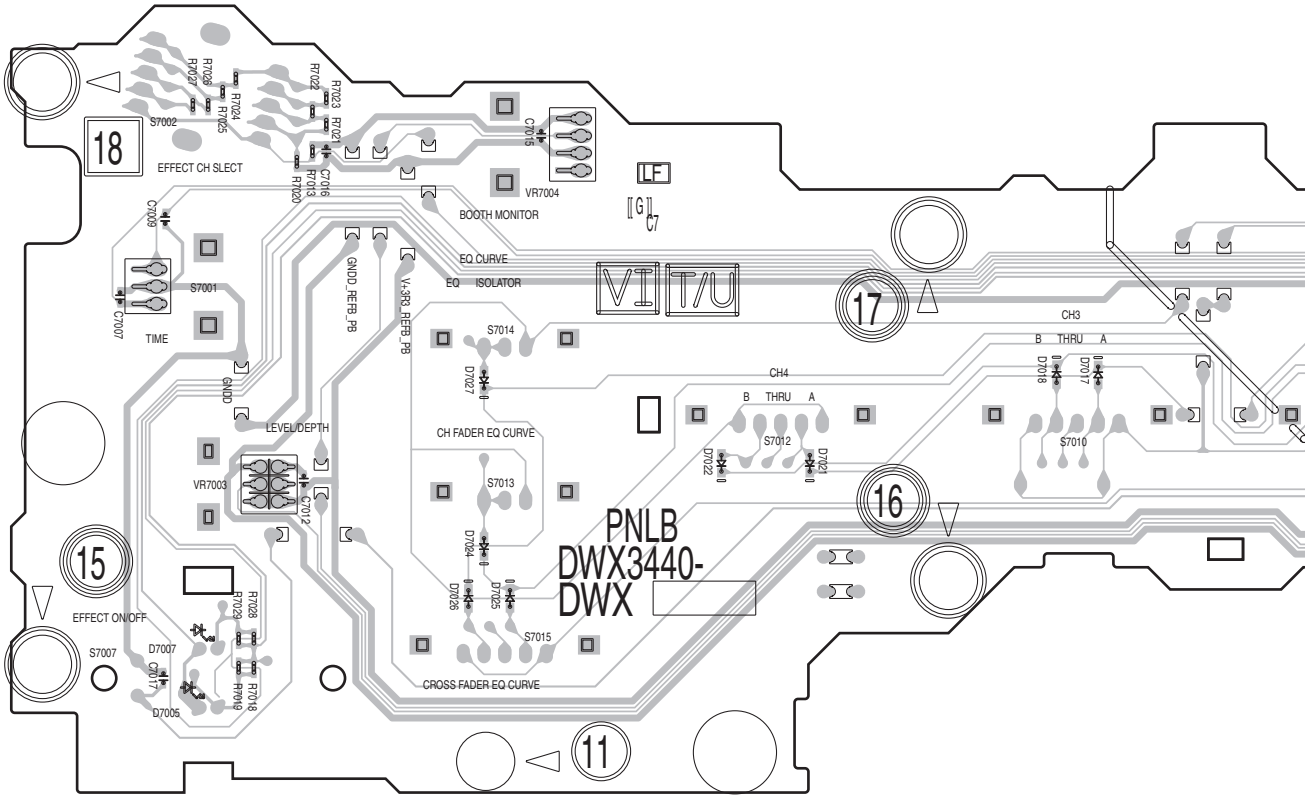

SIDE B

: Voltage measuring point
: Waveform measuring point

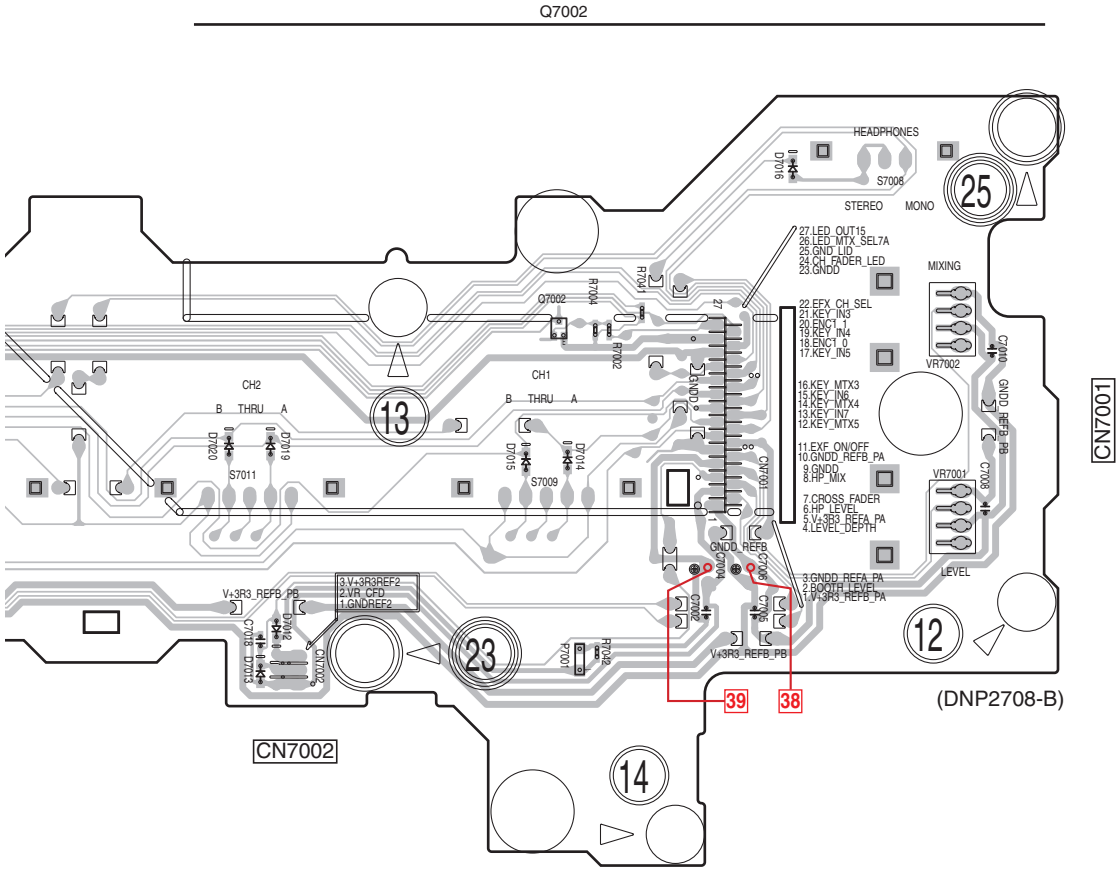

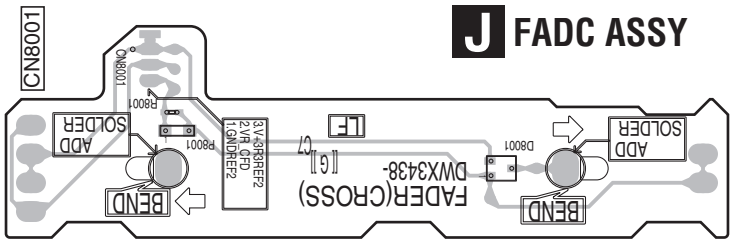

(DNP2706-B)

11.6 FAD1 to FAD4 and REG ASSYS

SIDE A

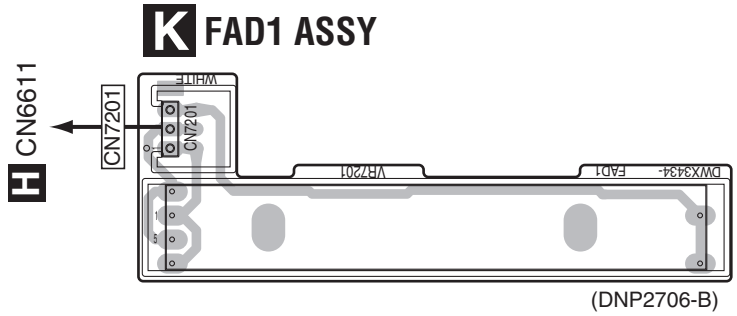

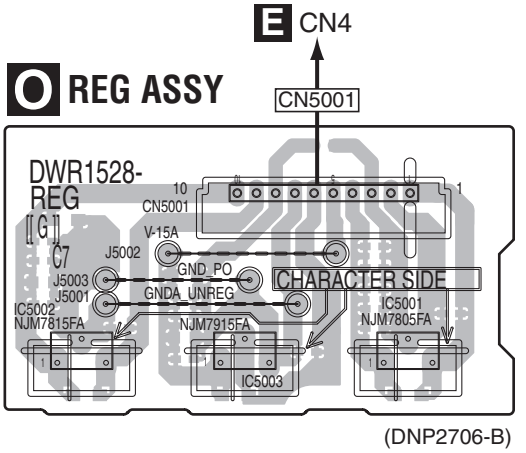

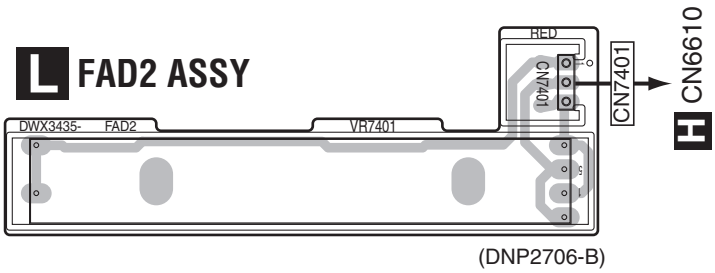

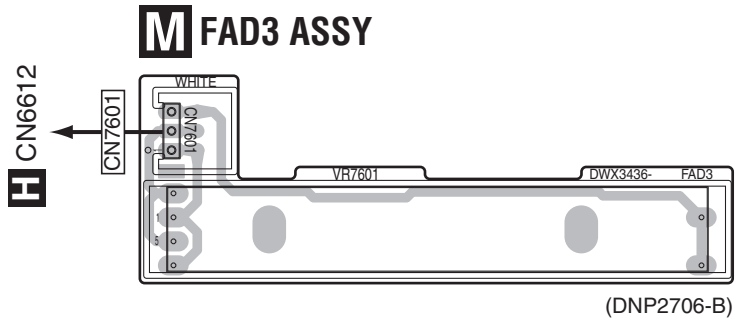

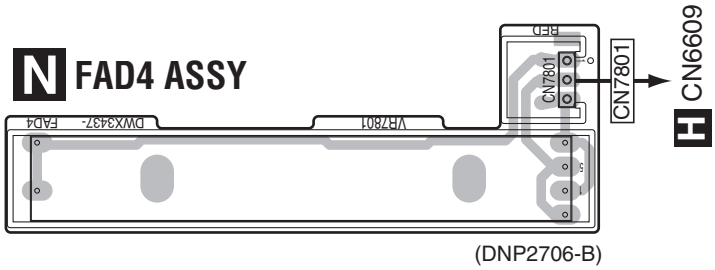

K L M N O

SIDE B

: Voltage measuring point
: Waveform measuring point

O REG ASSY

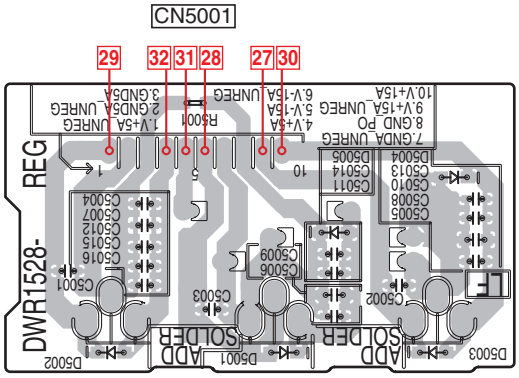

(DNP2706-B)

K FAD1 ASSY

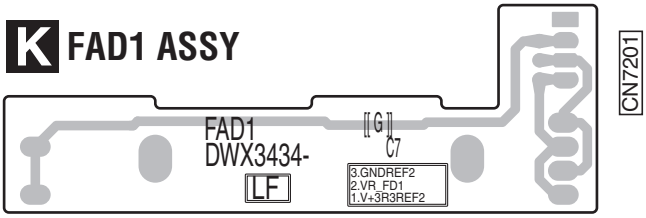

(DNP2706-B)

L FAD2 ASSY

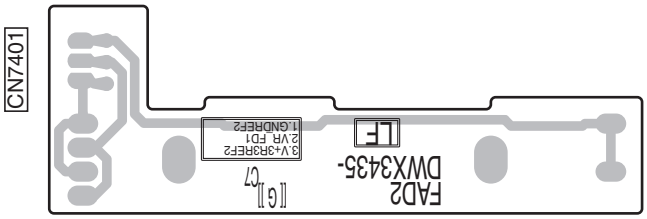

(DNP2706-B)

M FAD3 ASSY

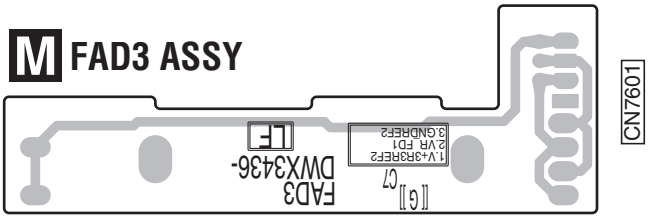

(DNP2706-B)

N FAD4 ASSY

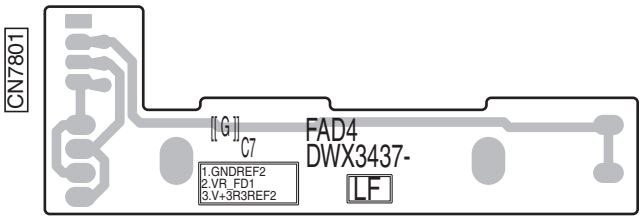

(DNP2706-B)

11.7 TRANS, PRIMARY and ACSW ASSYS

SIDE A

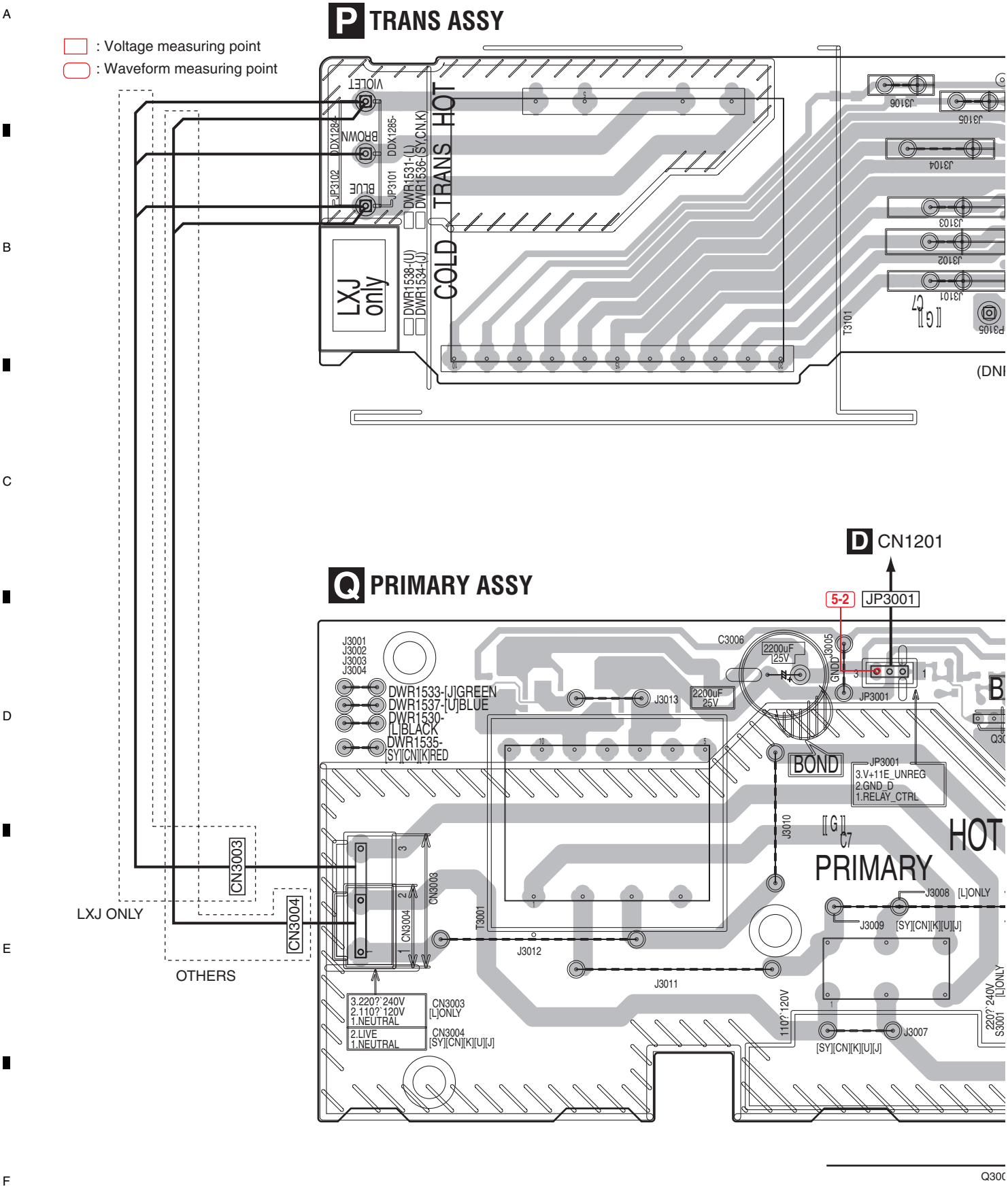

SIDE A

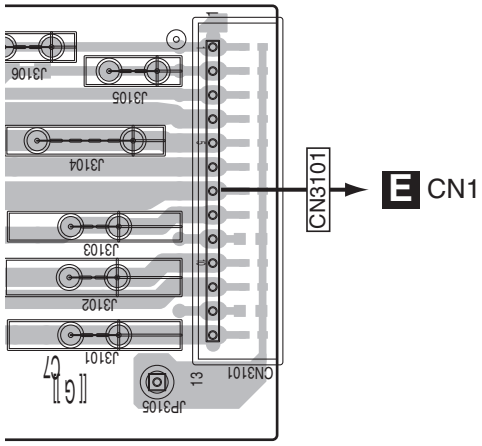

(DNP2708-B)

R ACSW ASSY

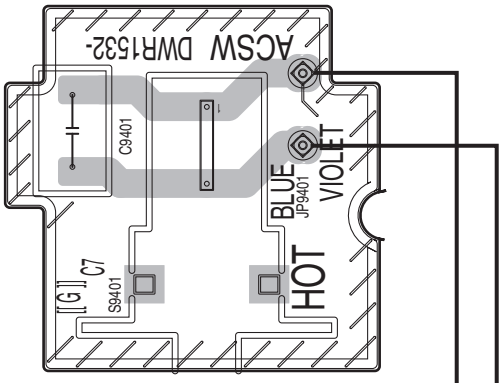

(DNP2708-B)

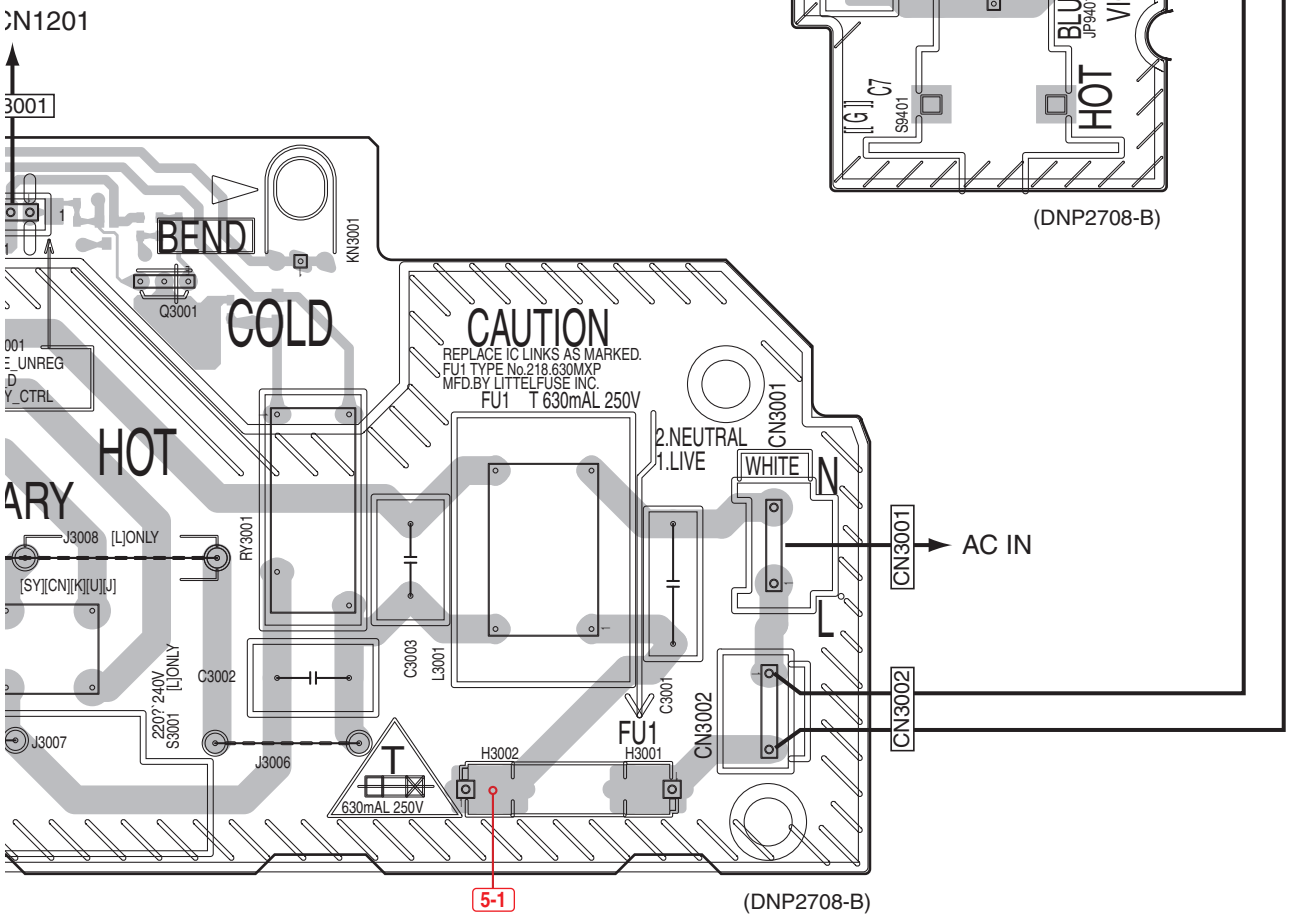

(DNP2708-B)

Q3001

SIDE B

P

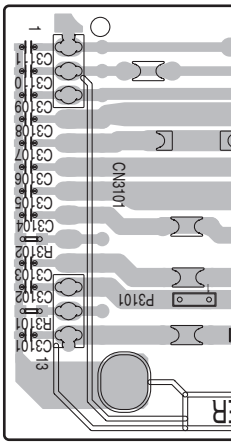

R ACSW ASSY

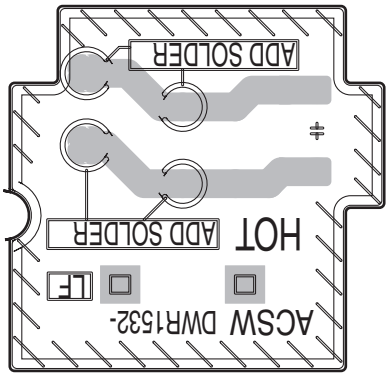

(DNP2708-B)

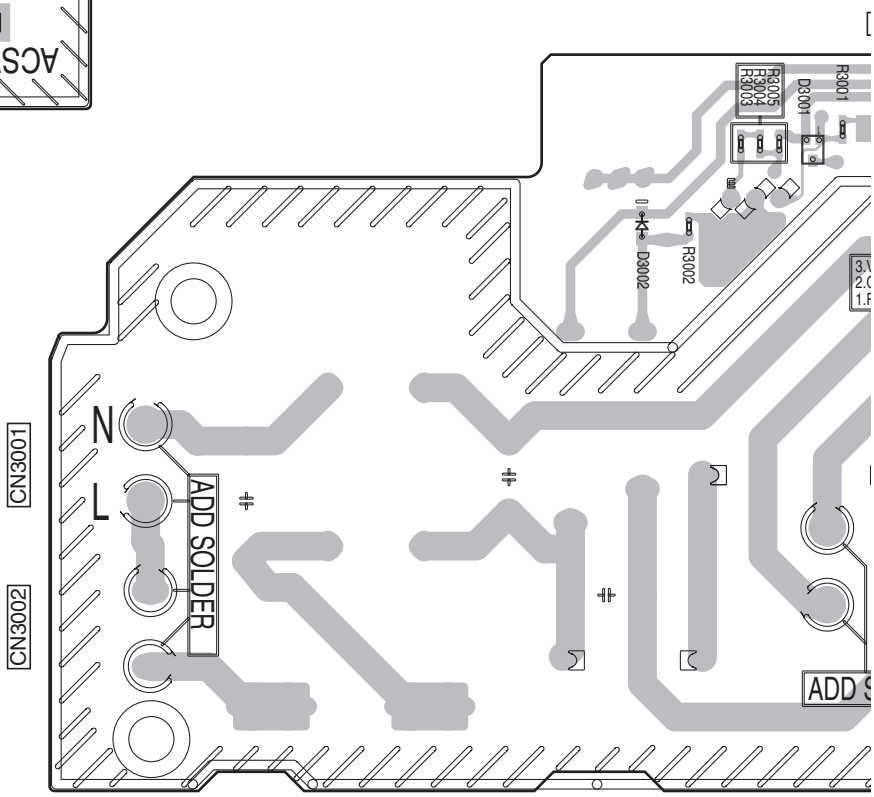

P Q R

SIDE B

P TRANS ASSY

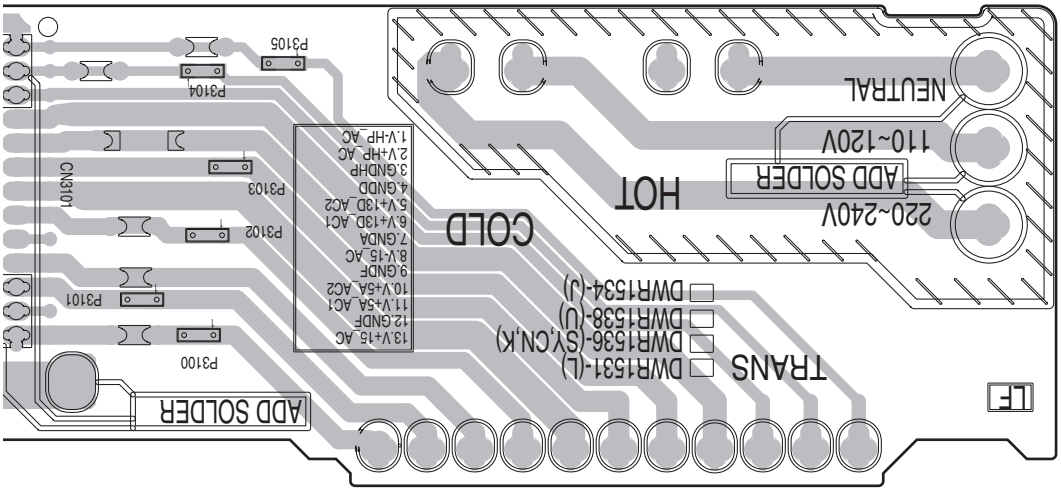

(DNP2708-B)

Q PRIMARY ASSY

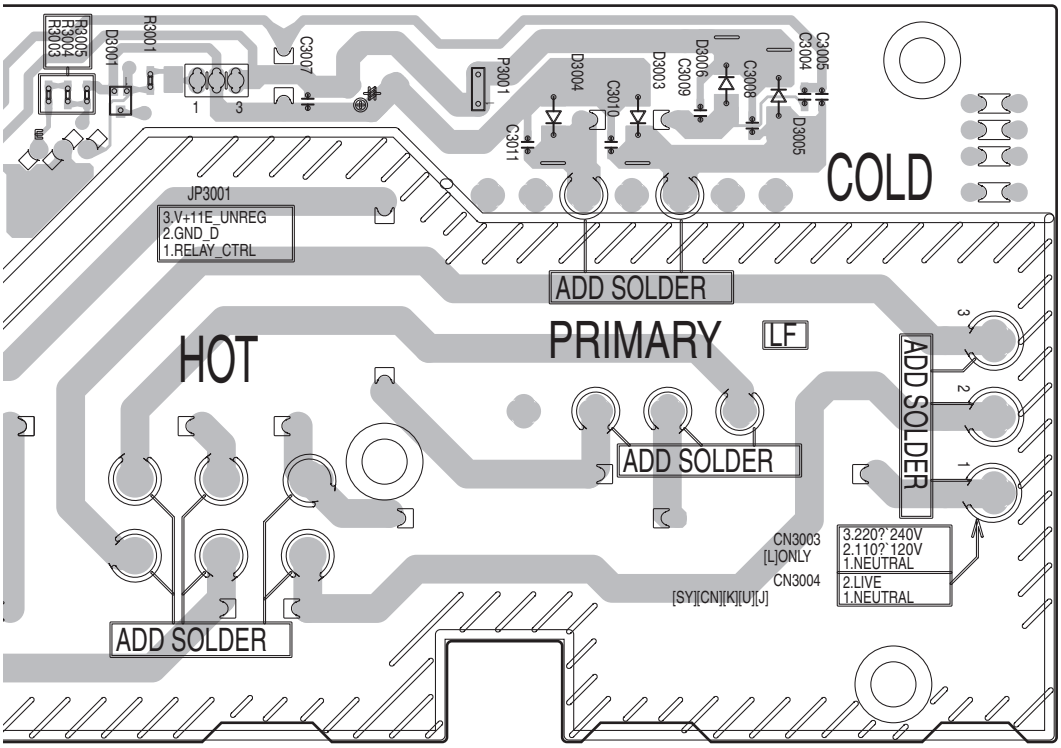

(DNP2708-B)

12. PCB PARTS LIST

NOTES: ● *Parts marked by "NSP" are generally unavailable because they are not in our Master Spare Parts List.*

● *The ⚠ mark found on some component parts indicates the importance of the safety factor of the part. Therefore, when replacing, be sure to use parts of identical designation.*

● *When ordering resistors, first convert resistance values into code form as shown in the following examples.*

Ex.1 When there are 2 effective digits (any digit apart from 0), such as 560 ohm and 47 k ohm (tolerance is shown by J = 5%, and K = 10%).

560 Ω	→	56×10^1	→	561	RD1/4PU 5 6 1 J
47 kΩ	→	47×10^3	→	473	RD1/4PU 4 7 3 J
0.5 Ω	→	R50			RN2H R 5 0 K
1 Ω	→	1R0			RS1P 1 R 0 K

Ex.2 When there are 3 effective digits (such as in high precision metal film resistors).

5.62 kΩ	→	562×10^1	→	5621	RN1/4PC 5 6 2 1 F

● *Meaning of the figures and others in the parentheses in the parts list.*

Example) IC 301 is on the point (face A, 91 of x-axis, and 111 of y-axis) of the corresponding PC board.
IC 301 (A, 91, 111) IC NJM2068V

LIST OF ASSEMBLIES

Mark	No. Description	Part No.
NSP	1..MOTHER ASSY	DWM2488
	2..MAIN ASSY	DWX3430
	2..USBI ASSY	DWX3431
NSP	1..AUDIO ASSY	DWM2489
	2..REG ASSY	DWR1528
	2..SEC/HP ASSY	DWR1529
	2..INPUT ASSY	DWX3432
	2..HPJK ASSY	DWX3433
	2..FAD1 ASSY	DWX3434
	2..FAD2 ASSY	DWX3435
	2..FAD3 ASSY	DWX3436
	2..FAD4 ASSY	DWX3437
	2..FADC ASSY	DWX3438
NSP	1..SUB ASSY (SYXJ8, KXJ5, XJCN5)	DWM2492
NSP	1..SUB ASSY (UXJCB)	DWM2493
NSP	1..SUB ASSY (LXJ)	DWM2490
	2..ACSW ASSY	DWR1532
	2..PRIMARY ASSY (SYXJ8, KXJ5, XJCN5)	DWR1535
	2..PRIMARY ASSY (UXJCB)	DWR1537
	2..PRIMARY ASSY (LXJ)	DWR1530
	2..TRANS ASSY (SYXJ8, KXJ5, XJCN5)	DWR1536
	2..TRANS ASSY (UXJCB)	DWR1538
	2..TRANS ASSY (LXJ)	DWR1531
	2..PNLB ASSY	DWX3440
	2..MIC1 ASSY	DWX3441
	2..MTRM ASSY	DWX3442
	2..SHADE1 ASSY	DWX3479
	2..SHADE2 ASSY	DWX3483
	1..PNLA ASSY	DWX3439

CONTRAST OF PCB ASSEMBLIES

P TRANS ASSY

DWR1536, DWR1538 and DWR1531 are constructed the same except for the following:

Mark	Symbol and Description	DWR1536	DWR1538	DWR1531
⚠	JP3102 Board in jumper/2P	DDX1284	DDX1284	Not used
⚠	JP3101 Board in jumper/3P	Not used	Not used	DDX1285

Q PRIMARY ASSY

DWR1535, DWR1537 and DWR1530 are constructed the same except for the following:

Mark	Symbol and Description	DWR1535	DWR1537	DWR1530
⚠	T3001 Transformer	DTT1245	DTT1255	DTT1242
⚠	S3001 Voltage selector	Not used	Not used	AKX7020
⚠	CN3004 Connector	B2P3-VH	B2P3-VH	Not used
⚠	CN3003 Connector (VH)	Not used	Not used	B3P5-VH

PARTS LIST (DJM-750-K/SYXJ8)

A INPUT ASSY

SEMICONDUCTORS

Mark	No. Description	Part No.
	IC 4001,4201	NJM4580D
	IC 4002-4005,4202-4205	NJM2121MD
	IC 4401	NJM4565MD
	IC 4601	NJM4580MD
	Q 4001-4004,4201-4204	2SK209
	Q 4005,4006,4205,4206	LTC114EUB
	Q 4602,4603	2SK209

Mark	No.	Description	Part No.
MISCELLANEOUS			
JA	4001,4002,4201,4202	JACK	DKB1083
JA	4401	6.5 DIA JACK	DKN1654
JA	4402	6.5 DIA JACK	DKN1652
KN	4601	SCREW PLATE	VNE1948
CN	4601,4602	CONNECTOR	CKS3561
CN	4801	L-PLUG(4P)	KM200NA4L
CN	4802	25P CONNECTOR	VKN1868
CN	4803	22P CONNECTOR	VKN1865
RESISTORS			
R	4003-4010,4205-4212		RN1/16SE1000D
R	4017-4024,4219-4226		RN1/16SE4702D
R	4025,4027,4029,4030		RN1/16SE1501D
R	4026,4028,4228,4230		RN1/16SE2401D
R	4033,4035,4235,4237		RS1/10SR1500D
R	4037,4038,4239,4240		RN1/16SE8201D
R	4041,4042,4243,4244		RN1/16SE1003D
R	4043-4046,4227,4229		RN1/16SE1501D
R	4047-4050,4249-4252		RN1/16SE1201D
R	4055,4257		RS1/8SQ0R0J
R	4058,4059,4062-4065		RN1/16SE1001D
R	4231,4232,4245-4248		RN1/16SE1501D
R	4258-4263		RN1/16SE1001D
R	4405,4406		RS1/10SR3302D
R	4409,4410		RS1/10SR1602D
R	4609,4610,4633,4638		RN1/16SE2200D
R	4612,4613		RN1/16SE1002D
R	4615,4625		RN1/16SE1202D
R	4618,4622		RN1/16SE4701D
R	4619,4621		RN1/16SE1501D
R	4620		RN1/16SE8200D
R	4623		RN1/16SE1500D
R	4630,4632		RN1/16SE3900D
R	4639		RN1/16SE2200D
Other Resistors			RS1/10SR###J
CAPACITORS			
C	4001-4008,4201-4208		CCSRCH102J50
C	4009-4016,4209-4216		CCSRCH101J50
C	4017,4018,4217,4218		CCSRCH471J50
C	4019,4020,4219,4220		CKSRYB223K50
C	4021,4023,4221,4223		CCSRCH331J50
C	4022,4024,4222,4224		CEAT221M10
C	4026,4028,4226,4228		CFTLA103J50
C	4029,4030,4033-4036		CKSRYB104K25
C	4031,4032,4231,4232		CEAT101M16
C	4037,4040,4043,4044		CEAT101M25
C	4038,4039,4041,4042		CKSRYB104K25
C	4045,4046,4245,4246		CKSRYB104K16
C	4229,4230,4233-4236		CKSRYB104K25
C	4237,4240,4243,4244		CEAT101M25
C	4238,4239,4241,4242		CKSRYB104K25
C	4401,4402,4625,4626		CCSRCH101J50
C	4403,4404		CCSRCH102J50
C	4405,4408,4801,4802		CEAT101M25
C	4406,4407,4611,4805		CKSRYB103K50
C	4409		CFTLA103J50
C	4605		CKSRYB471K50
C	4607,4613		CCSRCH471J50
C	4612		CKSRYB331K50
C	4614,4615		CKSRYB104K25
C	4617,4618		CEAT101M16
C	4630,4803,4804		CKSQYB105K25
C	4806		CKSRYB103K50

B MIC1 ASSY

Mark	No.	Description	Part No.
SEMICONDUCTORS			
D	9001-9004		DZ2J150M0
MISCELLANEOUS			
JA	9001	CANON CONNECTOR	DKB1108
CN	9001	PLUG	CKS3533
	0	MIC SHIELD	DNF1849
RESISTORS			
All Resistors			RS1/10SR###J
MISCELLANEOUS			
VA	9001,9002	VARISTORS	EZJZ1V270RM
CAPACITORS			
C	9001,9002		CFTLA103J50
C	9009		CKSQYB105K25

C MTRM ASSY

Mark	No.	Description	Part No.
MISCELLANEOUS			
VR	8801	ROTARY VR	DCS1123
CN	8801	PLUG	CKS3533

D MAIN ASSY

Mark	No.	Description	Part No.
SEMICONDUCTORS			
IC	201		PCM1691DCA
IC	301,302,402,501		NJM4580MD
IC	303,304		NJM4580D
IC	401,602,1603,1803		NJM4565MD
IC	601		AK4384ET
IC	1001		AK4382AVT
⚠ IC	1401		NJM2831F33
⚠ IC	1402		S-1132B33-U5
⚠ IC	1403		NJM2392M
⚠ IC	1404		BD9325FJ
⚠ IC	1405,1408		BD9328EFJ
⚠ IC	1406		NJM2878F3-33
⚠ IC	1407		S-1132B25-U5
IC	1601,1602,1801,1802		NJM4580MD
IC	1604,1804,2004,2204		PCM1804DB
IC	2001,2002,2201,2202		NJM4580MD
IC	2003,2203		NJM4565MD
IC	2401		AK5358AET
IC	2402		AK5359ET
IC	2603		ADSP-BF525BBCZ-5A
IC	2604		M12L64164A-5TG2Y
IC	2801		S-80927CNMC-G8X
IC	2802		DYW1828
IC	2803		DYW1827
IC	2804,3004-3006,3204		TC74VHC08FK
IC	3007		XC3S50A-4FTG256C
IC	3008		DYW1829
IC	3201		D810K013DZKB400

Mark	No.	Description	Part No.
5TG2A	IC 3202		M12L2561616A-
	IC 3205		TC7SG08FU
	IC 3405		AK4114VQ
	Q 201,203,208,209		LTC024EEB
	Q 202,1403,1404		LSCR523UB
	Q 204,205,1402		LSAR523UB
	Q 214,215,1401,1405		LTC024EEB
	Q 305-308,405-408		INC2002AC1
	Q 403,404,501,502		2SK209
	Q 503,504,603,604		INC2002AC1
	Q 601,602		2SK209
	Q 701,702,1406,2804		LTA024EEB
	Q 703-710		INC2002AC1
	Q 1201,1202,1206		HN1A01FU
	Q 1207		HN1B04FU
	Q 1208		LTC114YUB
	Q 2802,2803,3402,3403		LTC024EEB
	Q 3401		2SC2412K
	D 201-204,302-305		DZ2S180C
	D 301,502,1202		DA2J101
	D 1201,1204,1205		DAN202UM
⚠	D 1203		1SR154-400
⚠	D 1403		RB160L-40
⚠	D 1406		CMS03
	D 2402-2404		DAN217UM

MISCELLANEOUS

	L 201	FERRITE CORE	VTF1093
	L 1401	INDUCTOR (470 uH)	DTL1123
	L 1402,1403	POWER INDUCTOR (47 uH)	ATH7048
	L 1404	SMD SPL INDUCTOR (33 uH)	CTH1527
	L 2601	COIL	ATH7015
	L 2801	CHIP COIL	LCTAW330J2520
	L 3201	SMD FERRITE BEADS	CTF1823
	F 2601,3001,3201	EMI FILTER	DTL1106
	JA 202,203	STEREO MINI JACK	XKN3017
	JA 301,302	CANON CONNECTOR	DKB1093
	JA 401	JACK	DKB1083
	JA 501	PIN JACK(2P)	AKB7181
	JA 601,602	6.5 DIA JACK	DKN1652
	JA 3401	1P JACK	DKB1089
	KN 201	SCREW PLATE	VNE1948
	KN 1201-1206	WRAPPING TERMINAL	CKF1089
	X 2601	CRYSTAL(24 MHz)	DSS1203
	X 2801	RESONATOR (20 MHz)	CSS1795
	X 3202	CRYSTAL OSCILLATOR (24.576 MHz)	ASS7102
	CN 1001	24P CONNECTOR	VKN1428
	CN 1002	17P CONNECTOR	VKN1421
	CN 1003	25P CONNECTOR	VKN1429
	CN 1004	22P CONNECTOR	VKN1426
	CN 1005	19P RECEPTACLE	AKP7199
	CN 1201	CONNECTOR	AKM1274
	CN 2602	CONNECTOR	AKM1276
	0	CANON SHIELD	DNF1789
	0	PHONE SHIELD	DNF1875
	P 301,302	PROTECTOR(1A) (1 A)	AEK1073

RESISTORS

	R 214,1075,1085,2657		RS1/10SR0R0J
	R 301-308,501,512		RN1/16SE3301D
	R 309-316,325-332		RN1/16SE2402D
	R 317-324,503,514		RN1/16SE3001D
	R 333-340		RN1/16SE2701D
	R 341-344,403,404		RN1/16SE1002D
	R 345-352		RN1/16SE5601D
	R 354-361		RN1/16SE6801D
	R 362-365,419,422		DCN1200
	R 367,368,371,372		RN1/16SE2201D
	R 401,402,1439		RS1/16SS3301D
	R 405,406,409,410		RS1/16SS2202D
	R 407,408,1231		RS1/16SS2701D
	R 413,414		RS1/16SS2401D
	R 420,421		RN1/16SE1202D
	R 423,424		RN1/16SE3302D
	R 425,426		RS1/10SR100J
	R 427,428,505,517		DCN1200
	R 502,504,513,515		RN1/16SE6202D
	R 516,519		RN1/16SE3001D
	R 611,612		RS1/10SR3301D
	R 613,614,617,618		RS1/10SR2702D
	R 615,616		RS1/10SR3001D
	R 619,620		RS1/10SR2701D
	R 621,622		RS1/4SA331J
	R 627,628		RS1/10SR104J
	R 701-708,713-720		RS1/8SQ1800F
	R 725-728		RS1/8SQ2200F
	R 1019,2412,2413,2634		RAB4CQ103J
	R 1205		RS1/16SS1602D
	R 1206		RS1/16SS4302D
	R 1210,1239		RS1/16SS4702D
	R 1211		RS1/16SS6202D
	R 1213,1428,1431,1440		RS1/16SS1002D
	R 1214		RS1/16SS1001D
	R 1215		RS1/16SS2000D
	R 1216		RS1/16SS8200D
	R 1233,1240,1245		RS1/16SS3302D
	R 1234,1429		RS1/16SS4701D
	R 1235		RS1/16SS2402D
	R 1236,1430		RS1/16SS2202D
	R 1242,1253		RS1/16SS1003D
	R 1244		RS1/16SS1202D
	R 1247		RS1/16SS6201D
	R 1248		RS1/16SS7500D
	R 1252		RS1/16SS8202D
	R 1254,1255		RS1/4SA2R0J
	R 1403		RS1/10SR152J
	R 1404,1405		RS1/8SQ1R5J
	R 1407		RS1/10SR3902D
	R 1408		RS1/10SR1501D
	R 1412,1413,1435		RS1/10SR220J
	R 1415		RS1/10SR183J
	R 1421-1425		RS1/10SR153J
	R 1426		RS1/16SS7501D
	R 1427		RS1/16SS3902D
	R 1438		RS1/16SS2200D
	R 1601-1608,1801-1808		RN1/16SE1002D
	R 1609-1612,1809-1812		RN1/16SE1201D
	R 1613-1616,1813-1816		RN1/16SE2200D
	R 1617-1628,1817-1828		RN1/16SE2401D

Mark	No.	Description	Part No.
R	2001-2008,2201-2208		RN1/16SE1002D
R	2009-2012,2209-2212		RN1/16SE1201D
R	2013-2016,2213-2216		RN1/16SE2200D
R	2017-2028,2217-2228		RN1/16SE2401D
R	2407,2411,2668		RS1/8SQ0R0J
R	2627-2632,3217-3219		RAB4CQ820J
R	2642-2645,3202,3203		RAB4CQ680J
R	2647-2650,2652,2660		RAB4CQ470J
R	2664-2666,3224,3225		RAB4CQ470J
R	2808,2861,2862,2870		RS1/10SR0R0J
R	2818		RAB4CQ222J
R	2824,2835,2871,3038		RAB4CQ220J
R	2827,2845,2850,2863		RAB4CQ0R0J
R	2843		RAB4CQ103J
R	2864		RAB4CQ0R0J
R	3039		RAB4CQ220J
R	3042,3046,3050,3063		RAB4CQ330J
R	3057,3264,3265		RAB4CQ101J
R	3093-3096,3201,3204		RAB4CQ330J
R	3205,3206		RAB4CQ680J
R	3207,3208,3211,3212		RAB4CQ330J
R	3216		RAB4CQ330J
R	3221-3223		RAB4CQ820J
R	3226,3230		RS1/10SR0R0J
R	3228,3229		RAB4CQ470J
R	3240		RAB4CQ102J
R	3423		RN1/16SE1802D
R	3432		RS1/10SR680J
	Other Resistors		RS1/16SS###J

CAPACITORS

Mark	No.	Description	Part No.
C	202,1621,1821,2019		CCH1998
C	203,222,231,233		CKSSYB104K10
C	204,209,214,217		CKSSYB102K50
C	206,211,212,601		CKSSYB103K16
C	208,1203,1207,1212		CKSSYB103K25
C	213,216,219,1019		CKSRYB105K10
C	215		CEVW221M4
C	218,220,401,402		CEVW220M6R3
C	236,238,603,1001		CKSSYB104K10
C	249,415,416,605		CKSSYB102K50
C	301-304		CCSRCH222J50
C	305-308		CCSRCH471J50
C	309-316,413,414		CCSSCH560J50
C	317,321,335,348		CEHVAW101M25
C	318-320,322,337		CKSRYB104K25
C	338,339,344,345		CCSSCH101J50
C	340,343,346,409		CKSRYB104K25
C	349-352,1405		CCSSCH101J50
C	355-358		XCEAT221M16
C	359-362,427-430		CFHXSQ472J16
C	403,404,502,514		CCSQCH472J50
C	405,406,503,515		CCSRCH821J50
C	407,408,505,517		CKSRYB334K10
C	410,412,417,422		CCG1236
C	411,419,420,507		CKSRYB104K25
C	423-426,508,520		CEVW101M16
C	501,513,608,609		CEVW220M6R3
C	504,516		CCSSCH220J50
C	506,519		CEVW470M25
C	509,521		CFHXSQ472J16
C	511,512		CCSRCH681J50
C	518,616,619,1008		CKSRYB104K25
C	606,1002,1006,1020		CKSSYB103K16
C	607,1004,1424-1427		DCH1201
C	610,611		CCSQCH562J50
C	612,613		CCSRCH102J50
C	614,617		CKSRYB334K10
C	615,621,1211,1404		CCG1236
C	618,620		CCSSCH560J50
C	622,623,1005,1201		CKSSYB102K50
C	624,625,2603,3020		CEVW101M16
C	626,627		CFHXSQ272J50
C	628,3204		CEVW101M4
C	1003,1009-1011,1202		CKSSYB104K10
C	1007		CEVW221M25
C	1012,1216,1461		CKSRYB104K50
C	1205,1208,1410,1411		CCSSCH102J50
C	1209,1406,1450,1452		CKSRYB104K25
C	1210,1229-1232,1627		CKSSYB102K50
C	1214,1217-1228,1402		CKSSYB104K10
C	1215,1233-1242,1632		CKSSYB103K16
C	1403,1617,1618,1817		CEVW101M25
C	1407,1418,1419,1422		CKSSYB104K10
C	1408,1409,1438,2801		CKSRYB105K10
C	1413,1415,1434		CCG1236
C	1416		CEVW101M50
C	1417,1430,1431,1439		CCSSCH102J50
C	1420		CKSSYB223K16
C	1421		CKSSYB333K16
C	1423,1428,1429,1436		CKSSYB104K10
C	1432,1433,1449,3035		CCH1565
C	1435,1441,1445,1446		DCH1201
C	1437,1440,1442-1444		CKSSYB104K10
C	1447,1620,1622,1623		CKSSYB104K10
C	1448,1451,1453,1455		CCSSCH102J50
C	1454,1456,1605-1608		CKSRYB104K25
C	1457,2636		CCSSCH102J50
C	1613-1616,1813-1816		CCSSCH101J50
C	1624,1631,1824,1831		CKSSYB272K50
C	1625,1630,1633,1634		CKSSYB104K10
C	1626,1629,1635,1826		CEVW220M6R3
C	1628,1636,1827,1828		CKSSYB102K50
C	1637,1832,1836,2030		CKSSYB103K16
C	1805-1808,2005-2008		CKSRYB104K25
C	1818		CEVW101M25
C	1820,1822,1823,1825		CKSSYB104K10
C	1829,1835,2024,2027		CEVW220M6R3
C	1830,1833,1834,2018		CKSSYB104K10
C	1837,2025,2026,2034		CKSSYB102K50
C	2013-2016,2213-2216		CCSSCH101J50
C	2020,2021,2023,2028		CKSSYB104K10
C	2022,2029,2222,2229		CKSSYB272K50
C	2031,2032,2218,2220		CKSSYB104K10
C	2033,2224,2227,2233		CEVW220M6R3
C	2035,2230,2235,2419		CKSSYB103K16
C	2205-2208		CKSRYB104K25
C	2219		CCH1998
C	2221,2223,2228,2231		CKSSYB104K10
C	2225,2226,2234,2418		CKSSYB102K50

Mark	No.	Description	Part No.
	C 2232,2406,2407,2412		CKSSYB104K10
	C 2401,2402,2404		CEVW330M25
	C 2405,2408,2410,2411		DCH1201
	C 2413,2416,2417,2601		CKSSYB104K10
	C 2414,2415,2605,2606		DCH1201
	C 2421,2423,2424,2633		CKSSYB103K16
	C 2422,2615,2617,2621		CKSSYB102K50
	C 2602,2607,2608,2616		CKSSYB104K10
	C 2609,2610,2819-2823		CKSSYB471K50
	C 2614,2619,2808,3021		DCH1201
	C 2618		CCSSCH120J50
	C 2620,2622,2624,2626		CKSSYB104K10
	C 2623,2625,2627,2629		CKSSYB102K50
	C 2628,2630,2632,2635		CKSSYB104K10
	C 2631		CCSSCH100D50
	C 2634,2671,2814,2815		CKSSYB102K50
	C 2637,2639,2642,2643		CKSSYB104K10
	C 2638,2640,2644,2646		CKSSYB103K16
	C 2641,2645,3010-3012		CCSSCH101J50
	C 2647,2649,2810-2812		CKSSYB104K10
	C 2648,2653-2657,2661		CKSSYB103K16
	C 2662,2670,2802,2813		CKSSYB103K16
	C 2804,2805		CCSSCH6R0D50
	C 2809		CKSRYB105K10
	C 2817,3014,3016,3018		CKSSYB102K50
	C 2829,2831,2833,3013		CKSSYB104K10
	C 3015,3017,3019		CKSSYB104K10
	C 3022-3034,3037-3043		CKSSYB104K10
	C 3036,3242,3408,3409		DCH1201
	C 3044,3209-3211,3213		CKSSYB103K16
	C 3201,3202,3205,3206		CKSSYB104K10
	C 3203		CEVW470M6R3
	C 3207,3208		CKSSYB471K50
	C 3212,3214,3216,3218		CKSSYB102K50
	C 3215,3217,3219,3221		CKSSYB103K16
	C 3220,3222,3224,3226		CKSSYB102K50
	C 3223,3225,3227,3229		CKSSYB103K16
	C 3228,3230,3232,3234		CKSSYB102K50
	C 3231,3233,3235,3237		CKSSYB103K16
	C 3236,3251,3257		CKSSYB102K50
	C 3238,3250,3255		CCSSCH101J50
	C 3239,3243-3249,3258		CKSSYB103K16
	C 3240		CKSSYB105K6R3
	C 3252,3256,3260,3261		CKSSYB104K10
	C 3262-3264,3405,3412		CKSSYB103K16
	C 3404,3406,3407,3411		CKSSYB104K10
	C 3410		CKSSYB474K6R3
	C 3413,3414,3418		CKSSYB104K10
	C 3415,3417 (10 uF/10 V)		DCH1201
	C 3416		CKSSYB103K16

E SEC/HP ASSY

SEMICONDUCTORS

Mark	No.	Description	Part No.
	IC 1		S-80927CNMC-G8X
	IC 101		NJM4565MD
	IC 102		NJM4580D
	Q 101,102		2SK209
	Q 103,104		INC2002AC1
	Q 105,107		KTC3209
	Q 106,108		KTA1281
⚠	D 1,2		RB060L-40
⚠	D 3,4,7,8		RB160L-40
⚠	D 5,6,9,10		1SR154-400
⚠	D 11,12		RB160L-40

MISCELLANEOUS

Mark	No.	Description	Part No.
	KN 1,2,101	EARTH TERMINAL	AKF7002
	CN 1	CONNECTOR	B13B-EH
	CN 2,101	PLUG(4P)	KM200NA4
	CN 3	19P PLUG	AKM7077
	CN 4	10PJUMPER CONNECTOR	52147-1010
⚠	P 101	POLYSWITCH	RXEF075P

RESISTORS

Mark	No.	Description	Part No.
	R 1,2		RS1/4SA3R9J
	R 4		RS1/10SR1102D
	R 5		RS1/10SR1302D
	R 27,28,136,138		RS1/8SQ0R0J
	R 101-104		RN1/16SE3901D
	R 105-108		RN1/16SE1502D
	R 109-112		RN1/16SE3301D
	R 114,115		RN1/16SE5601D
	R 120,121		RN1/16SE3001D
	R 126,127		RD1/2VM471J
	R 128,129		RN1/16SE1001D
	R 130-133		RS2LMF330J
	R 139,141		RS1/8SQ0R0J
	Other Resistors		RS1/10SR###J

CAPACITORS

Mark	No.	Description	Part No.
	C 1-11		CKSRYB473K50
	C 13-15,17-23		CCSRCH102J50
	C 24		CEAT682M16
	C 25		CEAT682M25
	C 27,29,37,38		CKSRYB103K50
	C 28,107,108,115		CKSRYB104K25
	C 30		CKSRYB102K50
	C 31,32		CEAT332M35
	C 35,36		CEAT102M25
	C 45,46,49,51		CKSRYB103K50
	C 47,48		ACH1480
	C 50		CEHAZL101M10
	C 52		CKSRYB103K50
	C 56-58		CFTLA474J50
	C 101,102,112,113		CCSRCH471J50
	C 103-106		CCSRCH101J50
	C 109,110		CEAT101M16
	C 114,117		CEAT100M50
	C 116		CKSRYB104K25
	C 120,125		DCH1165
	C 121-124		CKSRYB104K16
	C 126,127		CEANP221M16

F USBI ASSY

MISCELLANEOUS

Mark	No.	Description	Part No.
	JA 9201	HEADPHONE JACK	DKN1622
	CN 9201	L-PLUG(4P)	KM200NA4L
	0	PHONE SHIELD	DNF1875

Mark	No.	Description	Part No.
RESISTORS			
	All Resistors		RS1/10SR###J
CAPACITORS			
C	9203,9204		CKSRYB224K16
C	9205		CFTLA103J50

G HPJK ASSY

Mark	No.	Description	Part No.
MISCELLANEOUS			
JA	9201	HEADPHONE JACK	DKN1622
CN	9201	L-PLUG(4P)	KM200NA4L
	0	PHONE SHIELD	DNF1875
RESISTORS			
	All Resistors		RS1/10SR###J
CAPACITORS			
C	9203,9204		CKSRYB224K16
C	9205		CFTLA103J50

H PNLA ASSY

Mark	No.	Description	Part No.
SEMICONDUCTORS			
IC	6601		DYW1830
IC	6602-6604		TC74HC4052AF
IC	6605		NJM2903M
Q	6601,6638-6641		LSAR523UB
Q	6602		2SC5712
Q	6604		LTA114EUB
Q	6605-6618,6621		LSCR523UB
Q	6619		2SC4097
Q	6622,6624,6626,6628		LTC143EUB
Q	6623,6625,6627,6629		2SB1689
Q	6630,6632,6634,6636		LTC143EUB
Q	6631,6633,6635,6637		2SB1689
Q	6644-6647		LSAR523UB
Q	6650		LTA143EUB
D	6615,6616,6618-6623		DA2J101
D	6624,6626,6627,6643		SLR-343VC(NPQ)
D	6625,6628-6631,6642		SLI-343YYW(TUV)
D	6632-6640,6649-6657		SLR-343MC(NPQ)
D	6644,6659,6660,6678		SLR-343VC(NPQ)
D	6645-6648,6661-6664		SLI-343YYW(TUV)
D	6665-6673,6684-6692		SLR-343MC(NPQ)
D	6674,6675,6680-6683		SLI-343YYW(TUV)
D	6679,6696,6697,6711		SLR-343VC(NPQ)
D	6693,6694,6698-6701		SLI-343YYW(TUV)
D	6702-6710,6717-6725		SLR-343MC(NPQ)
D	6712,6735,6787		SLR-343VC(NPQ)
D	6713-6716,6727,6728		SLI-343YYW(TUV)
D	6731		SLI-343YYW(TUV)
D	6736-6739		SLR343BC4T(JK)
D	6740,6779-6781		SLI-343U8R(HJK)
D	6742-6747,6749-6760		DA2J101
D	6762,6763,6771-6776		DA2J101
D	6778		DA2J101
MISCELLANEOUS			
L	6601	CHIP COIL	LCTAW330J2520
V	6601	VFD	DEL1071
VR	6601	VARIABLE RESISTOR	DCS1100
VR	6602	POTENTIOMETER	DCS1097
VR	6603-6606	VARIABLE RESISTOR	DCS1100
VR	6607	POTENTIOMETER	DCS1096
VR	6608,6609	VARIABLE RESISTOR	DCS1100
VR	6611-6614	VARIABLE RESISTOR	DCS1100
VR	6616-6618	VARIABLE RESISTOR	DCS1100
VR	6620	POTENTIONETER	DCS1095
VR	6621-6624	ROTARY VR	DCS1104
S	6601-6608,6617-6620	TACT SWITCH	DSG1079
S	6612-6616	SLIDE SWITCH	DSH1058
S	6621	SLIDE SWITCH	DSH1066
S	6622	ROTARY ENCODER	DSX1068
S	6623-6625,6627,6628	TACT SWITCH	DSG1079
S	6641,6642,6644	TACT SWITCH	DSG1079
X	6601	CERAMIC RESONATOR	DSS1180
CN	6601	24P CONNECTOR	VKN1839
CN	6602	17P CONNECTOR	VKN1248
CN	6603	27P CONNECTOR	VKN1842
CN	6609,6610	PLUG(3P)	KM200NA3R
CN	6611,6612	PLUG(3P)	KM200NA3
	0	FL HOLDER	DNF1869
RESISTORS			
R	6616		RS1/10SR1202F
R	6617		RS1/10SR8201D
R	6884,6896-6899		RS1/4SA100J
R	6901-6905		RS1/4SA100J
	Other Resistors		RS1/10SR###J
CAPACITORS			
C	6601,6602,6608,6645		CEAT101M16
C	6603,6604,6611,6618		CKSRYB104K16
C	6606,6622		CCSRCH102J50
C	6607,6623,6629,6640		CKSRYB103K50
C	6610,6612		CKSRYB104K50
C	6614-6617		CCSRCH101J50
C	6619,6624,6625,6628		CKSRYB104K16
C	6620,6621 (2.2 uF/10 V)		CCG1205
C	6626,6631,6643,6743		CKSRYB105K10
C	6627 (10 uF/10 V)		DCH1201
C	6630,6633,6641,6642		CKSRYB104K16
C	6656-6663,6676,6679		CKSRYB104K16
C	6664,6666,6668-6673		CKSRYB471K50
C	6680,6697-6707		CKSRYB104K16
C	6685-6692,6694,6696		CKSRYB471K50
C	6709-6712,6714-6717		CKSRYB104K16
C	6719,6729-6732,6745		CKSRYB104K16
C	6720-6725,6739,6744		CKSRYB103K50
C	6728 (1 uF/50 V)		CCG1255
C	6733-6738		CKSRYB471K50

I PNLB ASSY

Mark	No.	Description	Part No.
SEMICONDUCTORS			
Q	7002		LSCR523UB
D	7005,7007		SLI-343YYW(TUV)
D	7012-7022,7024-7027		DA2J101
MISCELLANEOUS			
VR	7001,7004	POTENTIOMETER	DCS1096
VR	7002	POTENTIOMETER	DCS1097
VR	7003	VARIABLE RESISTOR	DCS1100
S	7001	12MM GS ENCODER	DSX1064

Mark	No.	Description	Part No.
	S 7002	ROTARY SWITCH	DSG1098
	S 7007	TACT SWITCH	DSG1079
	S 7008,7013,7014	SLIDE SWITCH	DSH1066
	S 7009-7012,7015	SLIDE SWITCH	DSH1058
	CN 7001	27P CONNECTOR	VKN1842
	CN 7002	PLUG(3P)	KM200NA3E
RESISTORS			
	All Resistors		RS1/10SR###J
CAPACITORS			
	C 7002,7005,7008,7010		CKSRYB104K16
	C 7004,7006		CEAT470M35
	C 7007,7009		CKSRYB103K50
	C 7012,7015,7016,7018		CKSRYB104K16

J FADC ASSY

Mark	No.	Description	Part No.
MISCELLANEOUS			
	VR 8001	VARIABLE RESISTOR	DCV1006
	CN 8001	PLUG(3P)	KM200NA3LE
RESISTORS			
	All Resistors		RS1/10SR###J

K FAD1 ASSY

Mark	No.	Description	Part No.
MISCELLANEOUS			
	VR 7201	VARIABLE RESISTOR	DCV1020
	CN 7201	L-PLUG(3P)	KM200NA3L

L FAD2 ASSY

Mark	No.	Description	Part No.
MISCELLANEOUS			
	VR 7401	VARIABLE RESISTOR	DCV1020
	CN 7401	PLUG(3P)	KM200NA3LR

M FAD3 ASSY

Mark	No.	Description	Part No.
MISCELLANEOUS			
	VR 7601	VARIABLE RESISTOR	DCV1020
	CN 7601	L-PLUG(3P)	KM200NA3L

N FAD4 ASSY

Mark	No.	Description	Part No.
MISCELLANEOUS			
	VR 7801	VARIABLE RESISTOR	DCV1020
	CN 7801	PLUG(3P)	KM200NA3LR

O REG ASSY

Mark	No.	Description	Part No.
SEMICONDUCTORS			
⚠	IC 5001		NJM7805FA
⚠	IC 5002		NJM7815FA
⚠	IC 5003		NJM7915FA
	D 5004,5005		RB501VM-40
MISCELLANEOUS			
	CN 5001	10PJUMPER CONNECTOR	52147-1010
CAPACITORS			
	C 5001-5003,5010,5011		CKSRYB103K50
	C 5004		CKSRYB104K16
	C 5005,5006		CKSRYB104K25
	C 5007	(2.2 uF/10 V)	CCG1205
	C 5008,5009		CKSQYB105K25
	C 5013,5014,5016		CKSRYB102K50
	C 5015		CKSRYB103K50

P TRANS ASSY

Mark	No.	Description	Part No.
RESISTORS			
	All Resistors		RS1/8SQ###J
MISCELLANEOUS			
⚠	JP 3102	BOARD IN JUMPER/2P	DDX1284
CAPACITORS			
	C 3101-3104,3106,3107		CKSRYB104K50
	C 3110,3111		CKSRYB104K50

Q PRIMARY ASSY

Mark	No.	Description	Part No.
SEMICONDUCTORS			
	Q 3001		KTC3209
	D 3001		DAN217UM
	D 3002		DA2J101
⚠	D 3003-3006		1SR154-400
MISCELLANEOUS			
⚠	L 3001	FILTER	DTL1131
	H 3001,3002	FUSE CLIP	AKR1004
	KN 3001	EARTH TERMINAL	AKF7002
⚠	RY 3001	RELAY	ASR7029
⚠	T 3001	TRANSFORMER/CU	DTT1245
⚠	CN 3001	AC CODE SOCKET	RKP1751
⚠	CN 3002,3004	CONNECTOR	B2P3-VH
	JP 3001	CONNECTOR ASSY	PF03PG-Q07
RESISTORS			
	R 3002		RS1/10SR330J
	Other Resistors		RS1/10SR####F
CAPACITORS			
⚠	C 3001		ACE7027
⚠	C 3003		ACG7030
	C 3004,3005		CKSRYB473K50
	C 3006		CEAT222M25
	C 3007		CKSRYB103K50

R ACSW ASSY

Mark	No.	Description	Part No.
MISCELLANEOUS			
⚠	S 9401	SWITCH	DSA1037
⚠	0	MASK	DEC3212
⚠	JP 9401	CONNECTOR ASSY 2P	DKP3847
CAPACITORS			
⚠	C 9401		ACG7030