Pioneer

Service Manual

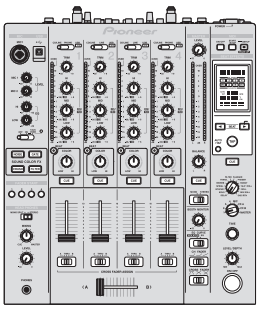

DJM-850-K

ORDER NO.
RRV4298

DJ MIXER

DJM-850-K
DJM-850-S

THIS MANUAL IS APPLICABLE TO THE FOLLOWING MODEL(S) AND TYPE(S).

Model	Type	Power Requirement	Remarks
DJM-850-K, DJM-850-S	SYXJ8	AC 220 V to 240 V	
DJM-850-K, DJM-850-S	UXJCB	AC 120 V	
DJM-850-K, DJM-850-S	LXJ	AC 110 V to 120 V or 220 V to 240 V	
DJM-850-K, DJM-850-S	KXJ5	AC 220 V	
DJM-850-K, DJM-850-S	XJCN5	AC 220 V to 240 V	

PIONEER CORPORATION 1-1, Shin-ogura, Saiwai-ku, Kawasaki-shi, Kanagawa 212-0031, Japan
PIONEER ELECTRONICS (USA) INC. P.O. Box 1760, Long Beach, CA 90801-1760, U.S.A.
PIONEER EUROPE NV Haven 1087, Keetberglaan 1, 9120 Melsele, Belgium
PIONEER ELECTRONICS ASIACENTRE PTE. LTD. 253 Alexandra Road, #04-01, Singapore 159936

K-MZV MAR. 2012 Printed in Japan

SAFETY INFORMATION

This service manual is intended for qualified service technicians; it is not meant for the casual do-it-yourselfer. Qualified technicians have the necessary test equipment and tools, and have been trained to properly and safely repair complex products such as those covered by this manual.

Improperly performed repairs can adversely affect the safety and reliability of the product and may void the warranty. If you are not qualified to perform the repair of this product properly and safely, you should not risk trying to do so and refer the repair to a qualified service technician.

WARNING

This product may contain a chemical known to the State of California to cause cancer, or birth defects or other reproductive harm.

Health & Safety Code Section 25249.6 - Proposition 65

(FOR USA MODEL ONLY)

1. SAFETY PRECAUTIONS

The following check should be performed for the continued protection of the customer and service technician.

LEAKAGE CURRENT CHECK

Measure leakage current to a known earth ground (water pipe, conduit, etc.) by connecting a leakage current tester such as Simpson Model 229-2 or equivalent between the earth ground and all exposed metal parts of the appliance (input/output terminals, screwheads, metal overlays, control shaft, etc.). Plug the AC line cord of the appliance directly into a 120 V AC 60 Hz outlet and turn the AC power switch on. Any current measured must not exceed 0.5 mA.

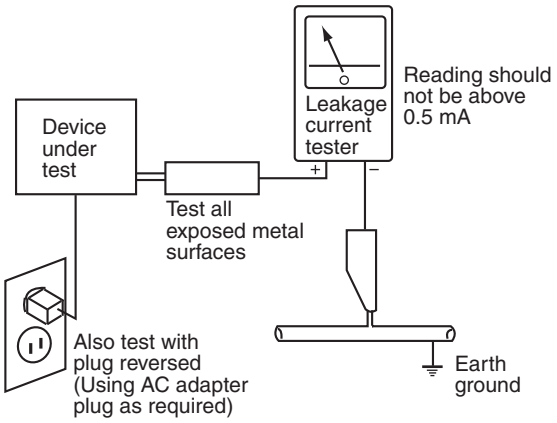

AC Leakage Test

ANY MEASUREMENTS NOT WITHIN THE LIMITS OUTLINED ABOVE ARE INDICATIVE OF A POTENTIAL SHOCK HAZARD AND MUST BE CORRECTED BEFORE RETURNING THE APPLIANCE TO THE CUSTOMER.

2. PRODUCT SAFETY NOTICE

Many electrical and mechanical parts in the appliance have special safety related characteristics. These are often not evident from visual inspection nor the protection afforded by them necessarily can be obtained by using replacement components rated for voltage, wattage, etc. Replacement parts which have these special safety characteristics are identified in this Service Manual.

Electrical components having such features are identified by marking with a ⚠ on the schematics and on the parts list in this Service Manual.

The use of a substitute replacement component which does not have the same safety characteristics as the PIONEER recommended replacement one, shown in the parts list in this Service Manual, may create shock, fire, or other hazards.

Product Safety is continuously under review and new instructions are issued from time to time. For the latest information, always consult the current PIONEER Service Manual. A subscription to, or additional copies of, PIONEER Service Manual may be obtained at a nominal charge from PIONEER.

CONTENTS

1. SERVICE PRECAUTIONS

1.1 NOTES ON SOLDERING

- For environmental protection, lead-free solder is used on the printed circuit boards mounted in this unit.
  Be sure to use lead-free solder and a soldering iron that can meet specifications for use with lead-free solders for repairs accompanied by reworking of soldering.

- Compared with conventional eutectic solders, lead-free solders have higher melting points, by approximately 40 ºC.
  Therefore, for lead-free soldering, the tip temperature of a soldering iron must be set to around 373 ºC in general, although the temperature depends on the heat capacity of the PC board on which reworking is required and the weight of the tip of the soldering iron.

Do NOT use a soldering iron whose tip temperature cannot be controlled.

Compared with eutectic solders, lead-free solders have higher bond strengths but slower wetting times and higher melting temperatures (hard to melt/easy to harden).

The following lead-free solders are available as service parts:
- Parts numbers of lead-free solder:
  GYP1006 1.0 in dia.
  GYP1007 0.6 in dia.
  GYP1008 0.3 in dia.

1.2 NOTES ON REPLACING

The part listed below is difficult to replace as a discrete component part.
When the part listed in the table is defective, replace whole Assy.

Assy Name	PCB Assy Part No.	Parts that is Diffcult to Replace			
		Ref No.	Function	Part No.	Remarks
MAIN Assy	DWX3360	IC1405	13V → 3.3V DC/DC converter	BD9328EFJ	IC with heat-pad
		IC1408	13V → 1.2V DC/DC converter	BD9328EFJ	IC with heat-pad
		IC2603	USB UCOM	ADSP-BF525BBCZ-5A	BGA
		IC3007	FPGA	XC3S50A-4FTG256C	BGA
		IC3201	DSP	D810K013BZKB400	BGA
		IC201	DAC	PCM1691DCA	IC with heat-pad

1.3 NOTES ON SERVICING

VOLTAGE MONITORING

This unit always monitors for power failure and will shut itself off immediately after an error is detected.
A power failure is indicated with flashing of the SETUP LED (Intervals: 250 ms [Lit 125 ms/Unlit 125 ms]).
All the LEDs other than SETUP LED will be unlit, and all the switches and VRs will be disabled.
Repair the unit according to the diagnostic procedures described in “5.3 INFORMATION ON POWER DIAGONOSTICS.”

CONFIRMATION OF USER-SETTING

This product has user- and club-setting data. Be sure to confirm those data before starting repair, although changing them may not have a large effect. Use the Check Sheet in “8.4,” to which you can transcribe the settings, as required.
The settings are stored in Flash ROM (IC2802) on the MAIN Assy.
To display the [USER SETUP] screen, hold [SETUP (WAKE UP)] pressed for at least 1 sec.
To display the [CLUB SETUP] screen, press [POWER] (ON) while holding [SETUP (WAKE UP)] pressed.

2. SPECIFICATIONS

General

Power requirements..... AC 220 V to 240 V, 50 Hz/ 60 Hz (SYXJ8)
AC 120 V, 60 Hz (UXJCB)
AC 110 V to 120 V or 220 V to 240 V, 50 Hz/ 60 Hz (LXJ)
AC 220 V, 60 Hz (KXJ5)
AC 220 V to 240 V, 50 Hz/ 60 Hz (XJCN5)
Power consumption .....32 W (SYXJ8)
30 W (UXJCB)
32 W (LXJ)
29 W (KXJ5)
32 W (XJCN5)
Power consumption (standby) ..... 0.45 W
Main unit weight..... 7 kg (17 lb)
Max. dimensions..... 320 mm (W) × 108 mm (H) × 381 mm (D)
(12.6 in. (W) × 4.3 in. (H) × 15 in. (D))
Tolerable operating temperature
..... +5 °C to +35 °C (+41 °F to +95 °F)
Tolerable operating humidity..... 5 % to 85 % (no condensation)

Audio Section

Sampling rate ..... 96 kHz
MASTER D/A converter.....32 bits
Other A/D and D/A converters.....24 bits
Frequency characteristic
CD/LINE .....20 Hz to 20 kHz
S/N ratio (rated output, A-WEIGHTED)
PHONO .....92 dB
CD/LINE .....106 dB
MIC1, MIC2 .....84 dB
Total harmonic distortion (20 kHzBW)
CD/LINE — MASTER1..... 0.004 %
Standard input level / Input impedance
PHONO ..... –52 dBu/47 kΩ
CD/LINE ..... –12 dBu/47 kΩ
MIC1 ..... –52 dBu/8.5 kΩ
MIC2..... –52 dBu/49 kΩ
RETURN..... –12 dBu/49 kΩ
Standard output level / Load impedance / Output impedance
MASTER1.....+6 dBu/10 kΩ/360 Ω or lower
MASTER2.....+2 dBu/10 kΩ/390 Ω or lower
REC OUT.....–8 dBu/10 kΩ/22 Ω or lower
BOOTH.....+6 dBu/10 kΩ/360 Ω or lower
SEND.....–12 dBu/10 kΩ/1 kΩ or lower
PHONES .....+8.5 dBu/32 Ω/10 Ω or lower
Rated output level / Load impedance
MASTER1..... +24 dBu/10 kΩ
MASTER2..... +20 dBu/10 kΩ
Crosstalk
LINE.....82 dB
Channel equalizer characteristic
HI .....–26 dB to +6 dB (13 kHz)
MID.....–26 dB to +6 dB (1 kHz)
LOW .....–26 dB to +6 dB (70 Hz)
Microphone equalizer characteristic
HI .....–12 dB to +12 dB (10 kHz)
LOW .....–12 dB to +12 dB (100 Hz)

Input / Output terminals

PHONO input terminal
RCA pin jack.....2 sets
CD/LINE input terminal
RCA pin jacks.....4 sets
LINE input terminal
RCA pin jack.....2 sets
MIC1 input terminal
XLR connector/phone jack (Ø 6.3 mm) ..... 1 set
MIC2 input terminal
Phone jack (Ø 6.3 mm)..... 1 set
RETURN Input terminals
Phone jack (Ø 6.3 mm)..... 1 set
MASTER output terminal
XLR connector..... 1 set
RCA pin jacks..... 1 set
BOOTH output terminal
Phone jack (Ø 6.3 mm)..... 1 set
REC OUT output terminal
RCA pin jacks..... 1 set
SEND output terminal
Phone jack (Ø 6.3 mm)..... 1 set
DIGITAL MASTER OUT coaxial output terminal
RCA pin jacks..... 1 set
MIDI OUT terminal
5P DIN ..... 1 set
PHONES output terminal
Stereo phone jack (Ø 6.3 mm) ..... 1 set
USB terminal
B type ..... 1 set
CONTROL terminal
Mini phone jack (Ø 3.5 mm) .....4 sets

- The specifications and design of this product are subject to change without notice.
- Be sure to use the [MASTER1] terminals only for a balanced output. Connection with an unbalanced input (such as RCA) using an XLR to RCA converter cable (or converter adapter), etc., may lower the sound quality and/or result in noise.
  For connection with an unbalanced input (such as RCA), use the [MASTER2] terminals.

Accessories

- Driver software CD-ROM
  (DXX2694)
- USB cable
  (DDE1128)
- Power cord
  (SYXJ8, LXJ: ADG7062)
  (UXJCB: DDG1108)
  (KXJ5: ADG7115)
  (XJCN5: ADG7105)
- Operating instructions
  (SYXJ8: DRB1604, DRB1605)
  (UXJCB: DRB1606)
  (LXJ: DRB1607)
  (KXJ5: DRB1608)
  (XJCN5: DRB1609)

3. BASIC ITEMS FOR SERVICE

3.1 CHECK POINTS AFTER SERVICING

Items to be checked after servicing / DJM

To keep the product quality after servicing, confirm recommended check points shown below.

No.	Procedures	Check points
1	Check the firmware version in Test mode.	The firmware version must be the latest one. If it is not the latest one, be sure to update it.
2	Confirm whether the customer complain has been solved. If the customer complain occurs with the specific source, such as Mic, each Input, Fader, Equalizer, and Trim, input that specific source for checking.	The customer complain must not be reappeared. Audio and operations must be normal.
3	Check the analog audio input (Check the MIC1, MIC2 and RETURN.) (Make the analog connections with CDJ player, analog player and MIC.)	Audio and operations must be normal.
4	Check the analog audio output (MASTER1, 2, REC, BOOTH and SEND.) (Make the analog connection with CDJ player.)	Audio and operations must be normal.
5	Check the digital audio input/output	Audio for each channel and operations must be normal.
6	Check DVS signal route.	Make sure that PC applications function properly and that the audio signals and operations of each channel are normal.
7	Check the headphones output.	There must be no errors, such as noise, in the audio output.
8	Check playback, using the fader function. (Select the fader function then check operations of each channel with audio signals via the DSP.)	There must be no errors in audio output and operations of each channel.
9	Check the connection of each interface.	
	USB B	The device must be properly recognized by the PC.
10	Check the buttons and controls.	Make sure that all buttons and controls on the main unit function properly.
11	Check the FL displays and LEDs.	Check that all the FL displays and LEDs light in Test mode.
13	Check the user settings.	They must be returned to those set before repair.
13	Check the appearance of the product.	No scratches or dirt on its appearance after receiving it for service.

See the table below for the items to be checked regarding audio.

Item to be checked regarding audio
Distortion
Noise
Volume too low
Volume too high
Volume fluctuating
Sound interrupted

3.2 JIGS LIST

■ Jigs List

Jig Name	Part No.	Purpose of use / Remarks
USB cable	GGP1193	for PC connection

■ Lubricants and Glues List

Name	Part No.	Remarks
Silicon grease	GEM1057	Refer to "9.3 BOTTOM SECTION".
Lubricating oil	GYA1001	Refer to "9.4 CONTROL PANEL SECTION (1/2)".

3.3 PCB LOCATIONS

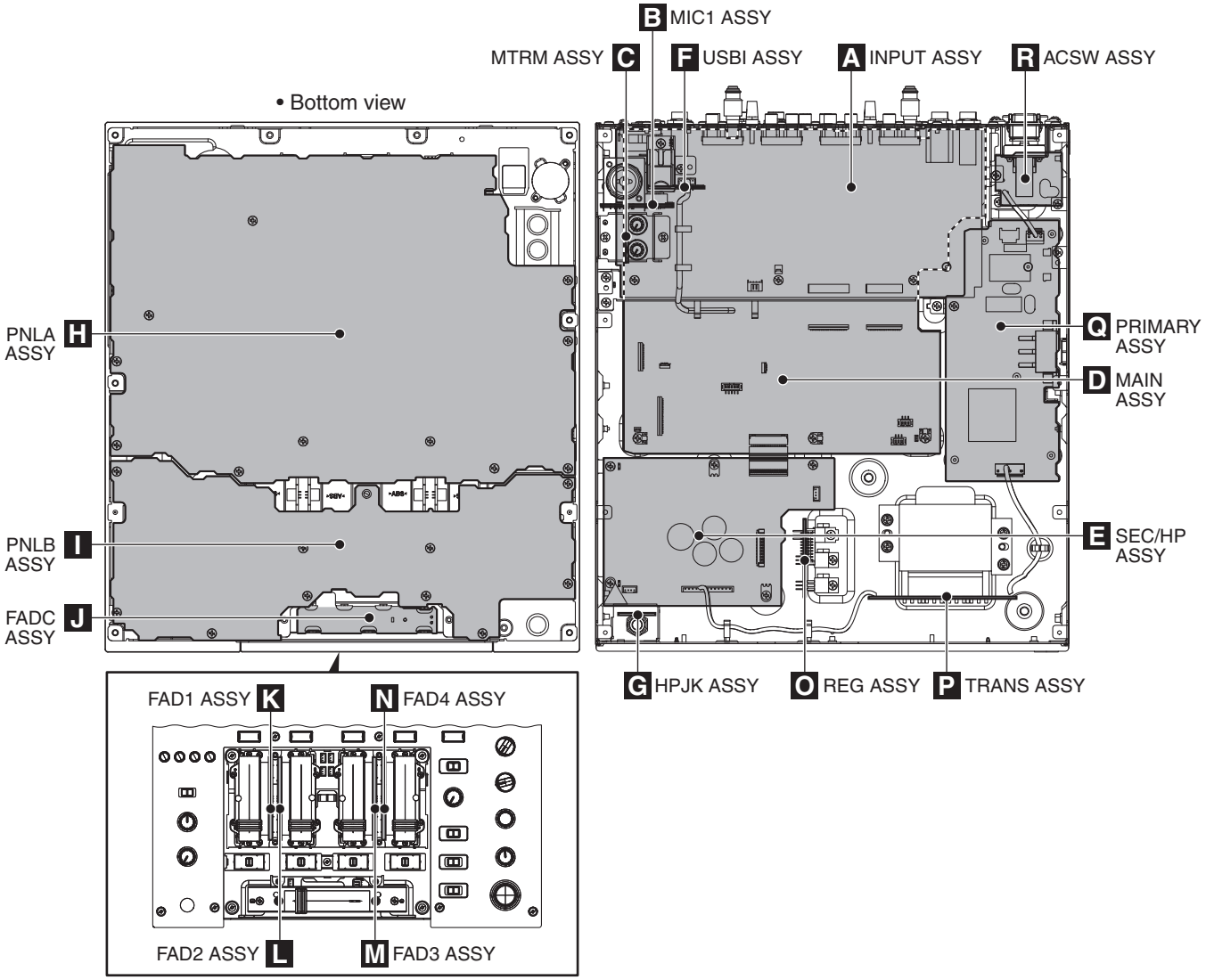

NOTES: ● *Parts marked by "NSP" are generally unavailable because they are not in our Master Spare Parts List.*
● *The ⚠ mark found on some component parts indicates the importance of the safety factor of the part. Therefore, when replacing, be sure to use parts of identical designation.*

LIST OF ASSEMBLIES

Mark	No.	Description	Part No.
NSP	1..	MOTHER ASSY	DWM2464
	2..	MAIN ASSY	DWX3360
	2..	USBI ASSY	DWX3361
NSP	1..	AUDIO ASSY	DWM2465
	2..	REG ASSY	DWR1510
	2..	SEC/HP ASSY	DWR1511
	2..	INPUT ASSY	DWX3362
	2..	HPJK ASSY	DWX3363
	2..	FAD1 ASSY	DWX3366
	2..	FAD2 ASSY	DWX3367
	2..	FAD3 ASSY	DWX3368
	2..	FAD4 ASSY	DWX3369
	2..	FADC ASSY	DWX3370

Mark	No.	Description	Part No.
NSP	1..	SUB ASSY (SYXJ8, KXJ5, XJCN5)	DWM2471
NSP	1..	SUB ASSY (UXJCB)	DWM2472
NSP	1..	SUB ASSY (LXJ)	DWM2466
	2..	ACSW ASSY	DWR1515
	2..	TRANS ASSY (SYXJ8, KXJ5, XJCN5)	DWR1516
	2..	TRANS ASSY (UXJCB)	DWR1517
	2..	TRANS ASSY (LXJ)	DWR1512
	2..	PRIMARY ASSY (SYXJ8, KXJ5, XJCN5)	DWR1519
	2..	PRIMARY ASSY (UXJCB)	DWR1520
	2..	PRIMARY ASSY (LXJ)	DWR1509
	2..	PNLB ASSY	DWX3365
	2..	MIC1 ASSY	DWX3371
	2..	MTRM ASSY	DWX3372
	1..	PNLA ASSY	DWX3359

A

B

C

D

E

F

4. BLOCK DIAGRAM

4.1 OVERALL WIRING DIAGRAM

- When ordering service parts, be sure to refer to "EXPLODED VIEWS and PARTS LIST" or "PCB PARTS LIST".
- The ⚠ mark found on some component parts indicates the importance of the safety factor of the part.
  Therefore, when replacing, be sure to use parts of identical designation.
- : The power supply is shown with the marked box.

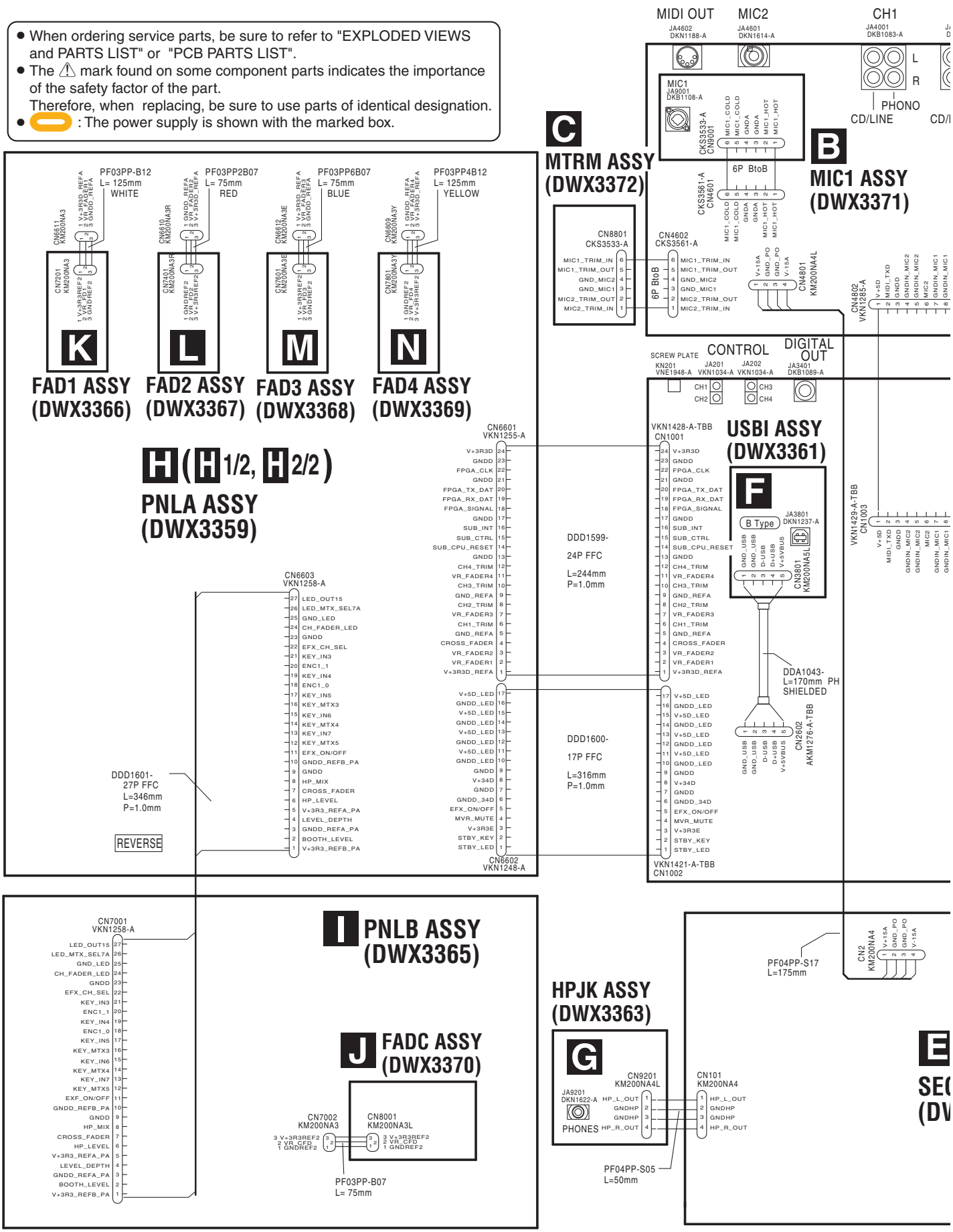

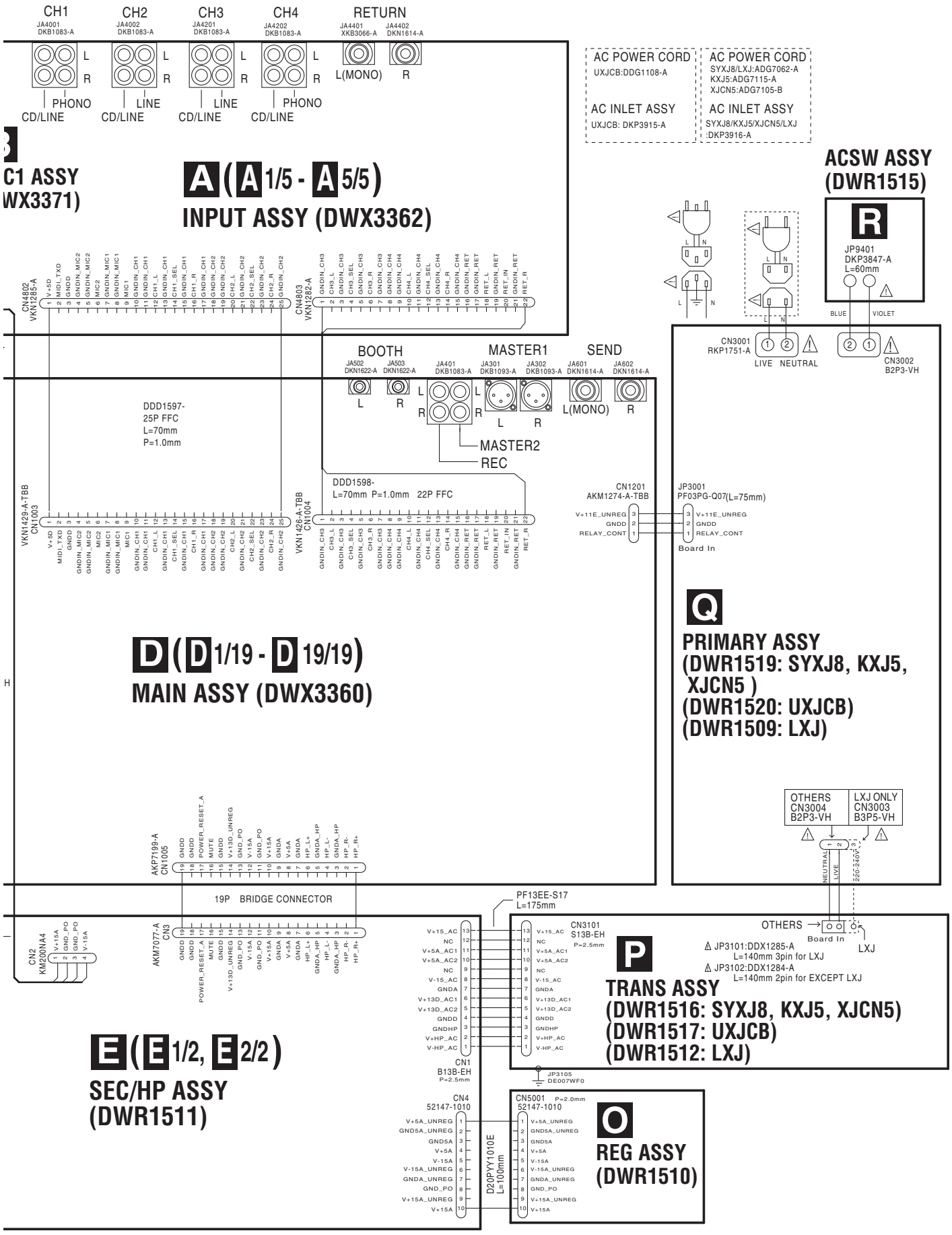
CH1
JA4001 DKB1083-A
CH2
JA4002 DKB1083-A
CH3
JA4201 DKB1083-A
CH4
JA4202 DKB1083-A
RETURN
JA4401 XKB3066-A
JA4402 DKN1614-A
L(MONO)
PHONO
CD/LINE
LINE
AC POWER CORD
UXJCB:DDG1108-A
AC INLET ASSY
UXJCB: DKP3915-A
AC POWER CORD
SYXJ8/LXJ:ADG7062-A
KXJ5:ADG7115-A
XJCN5:ADG7105-B
AC INLET ASSY
SYXJ8/KXJ5/XJCN5/LXJ
:DKP3916-A
ACSW ASSY
(DWR1515)
JP9401
DKP3847-A
L=60mm
BLUE
VIOLET
CN3001
RKP1751-A
LIVE
NEUTRAL
CN3002
B2P3-VH
C1 ASSY
WX3371)
A (A 1/5 - A 5/5)
INPUT ASSY (DWX3362)
CN4802
VKN1285-A
CN4803
VKN1282-A
BOOTH
JA502 DKN1622-A
JA503 DKN1622-A
MASTER1
JA401 DKB1083-A
JA301 DKB1093-A
JA302 DKB1093-A
SEND
JA601 DKN1614-A
JA602 DKN1614-A
MASTER2
REC
DDD1597-
25P FFC
L=70mm
P=1.0mm
DDD1598-
L=70mm P=1.0mm 22P FFC
VKN1429-A-TBB
CN1003
VKN1426-A-TBB
CN1004
CN1201
AKM1274-A-TBB
V+11E_UNREG
GNDD
RELAY_CONT
JP3001
PF03PG-Q07(L=75mm)
Board In
Q
PRIMARY ASSY
(DWR1519: SYXJ8, KXJ5,
XJCN5)
(DWR1520: UXJCB)
(DWR1509: LXJ)
D (D 1/19 - D 19/19)
MAIN ASSY (DWX3360)
OTHERS
CN3004
B2P3-VH
LXJ ONLY
CN3003
B3P5-VH
NEUTRAL
LIVE
220-240V
AKP7199-A
CN1005
19P BRIDGE CONNECTOR
PF13EE-S17
L=175mm
CN2
KM200NA4
AKM7077-A
CN3
CN3101
S13B-EH
P=2.5mm
OTHERS
Board In
LXJ
JP3101:DDX1285-A
L=140mm 3pin for LXJ
JP3102:DDX1284-A
L=140mm 2pin for EXCEPT LXJ
P
TRANS ASSY
(DWR1516: SYXJ8, KXJ5, XJCN5)
(DWR1517: UXJCB)
(DWR1512: LXJ)
E (E 1/2, E 2/2)
SEC/HP ASSY
(DWR1511)
CN1
B13B-EH
P=2.5mm
JP3105
DE007WF0
CN4
52147-1010
CN5001 P=2.0mm
52147-1010
D20PY1010E
L=100mm
O
REG ASSY
(DWR1510)

4.2 AUDIO SYSTEM BLOCK DIAGRAM

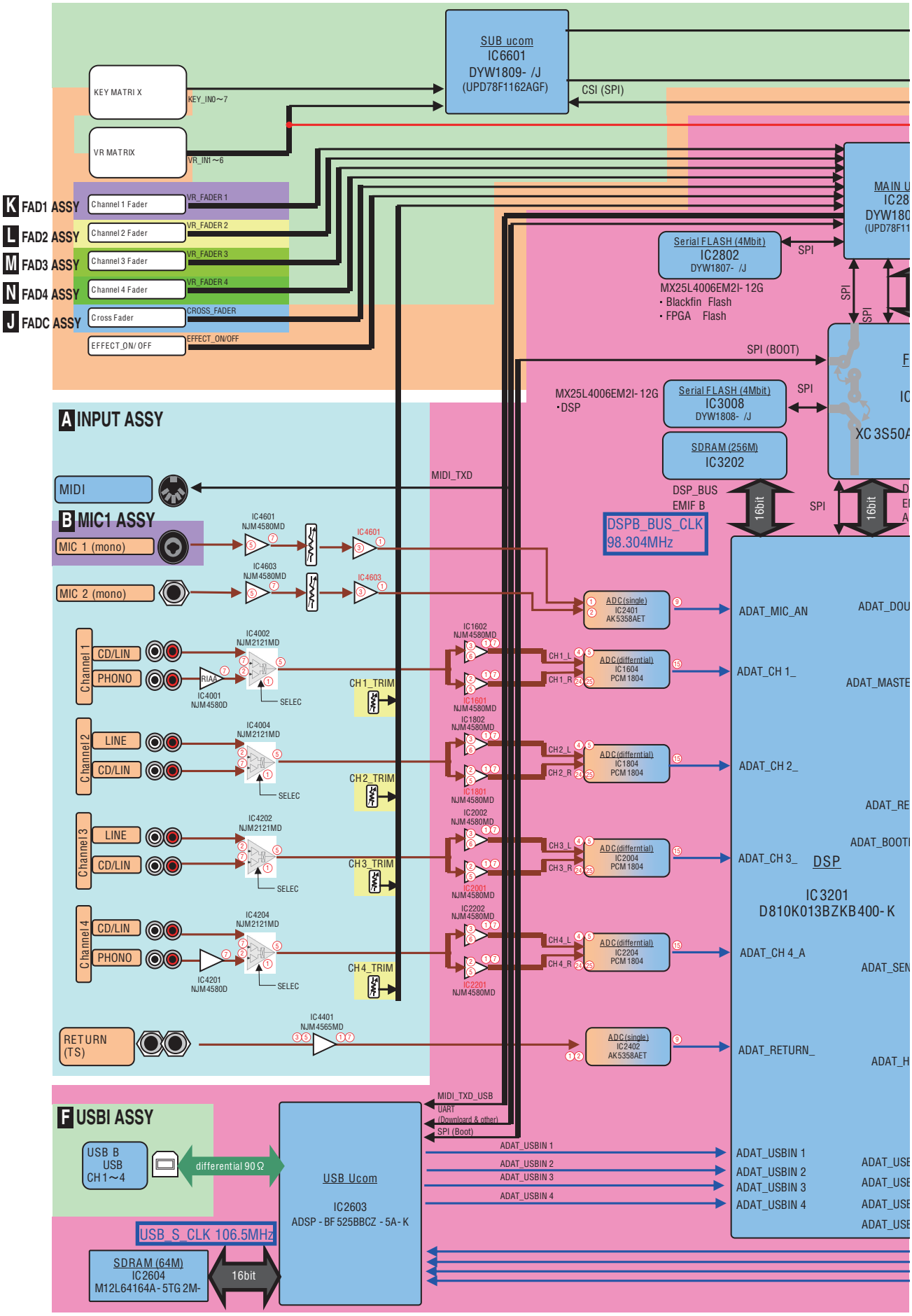

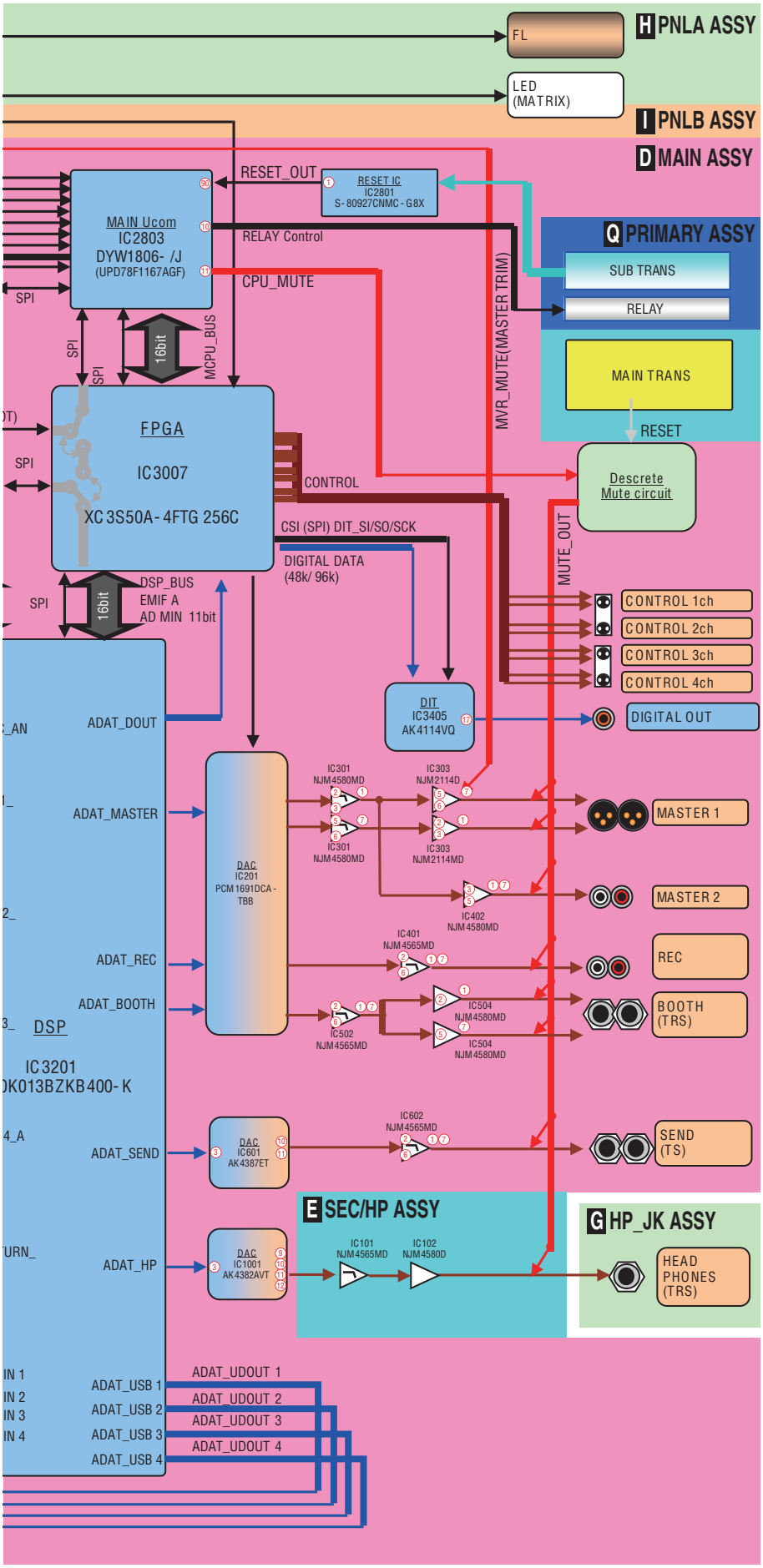
H PNLA ASSY
FL
LED (MATRIX)
I PNLB ASSY
D MAIN ASSY
RESET_OUT
RESET IC IC2801 S-80927CNMC-G8X
MAIN Ucom IC2803 DYW1806- /J (UPD78F1167AGF)
RELAY Control
CPU_MUTE
SPI
MCPU_BUS
16bit
FPGA IC3007 XC3S50A-4FTG 256C
CONTROL
CSI (SPI) DIT_SI/SO/SCK
DIGITAL DATA (48k/ 96k)
DSP_BUS
EMIF A
AD MIN 11bit
MVR_MUTE(MASTER TRIM)
Q PRIMARY ASSY
SUB TRANS
RELAY
MAIN TRANS
RESET
Descrete Mute circuit
MUTE_OUT
CONTROL 1ch
CONTROL 2ch
CONTROL 3ch
CONTROL 4ch
DIGITAL OUT
DIT IC3405 AK4114VQ
ADAT_DOUT
ADAT_MASTER
ADAT_REC
ADAT_BOOTH
ADAT_SEND
ADAT_HP
DAC IC201 PCM1691DCA-TBB
IC301 NJM4580MD
IC303 NJM2114D
IC303 NJM2114MD
IC402 NJM4580MD
IC401 NJM4565MD
IC502 NJM4565MD
IC504 NJM4580MD
MASTER 1
MASTER 2
REC
BOOTH (TRS)
DSP IC3201
DAC IC601 AK4387ET
IC602 NJM4565MD
SEND (TS)
E SEC/HP ASSY
DAC IC1001 AK4382AVT
IC101 NJM4565MD
IC102 NJM4580D
G HP_JK ASSY
HEAD PHONES (TRS)
ADAT_USB 1
ADAT_USB 2
ADAT_USB 3
ADAT_USB 4
ADAT_UDOUT 1
ADAT_UDOUT 2
ADAT_UDOUT 3
ADAT_UDOUT 4

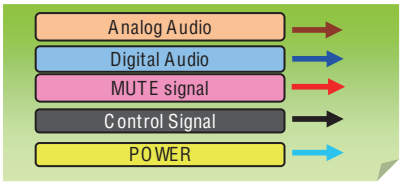
Analog Audio
Digital Audio
MUTE signal
Control Signal
POWER

4.3 DSP BLOCK DIAGRAM

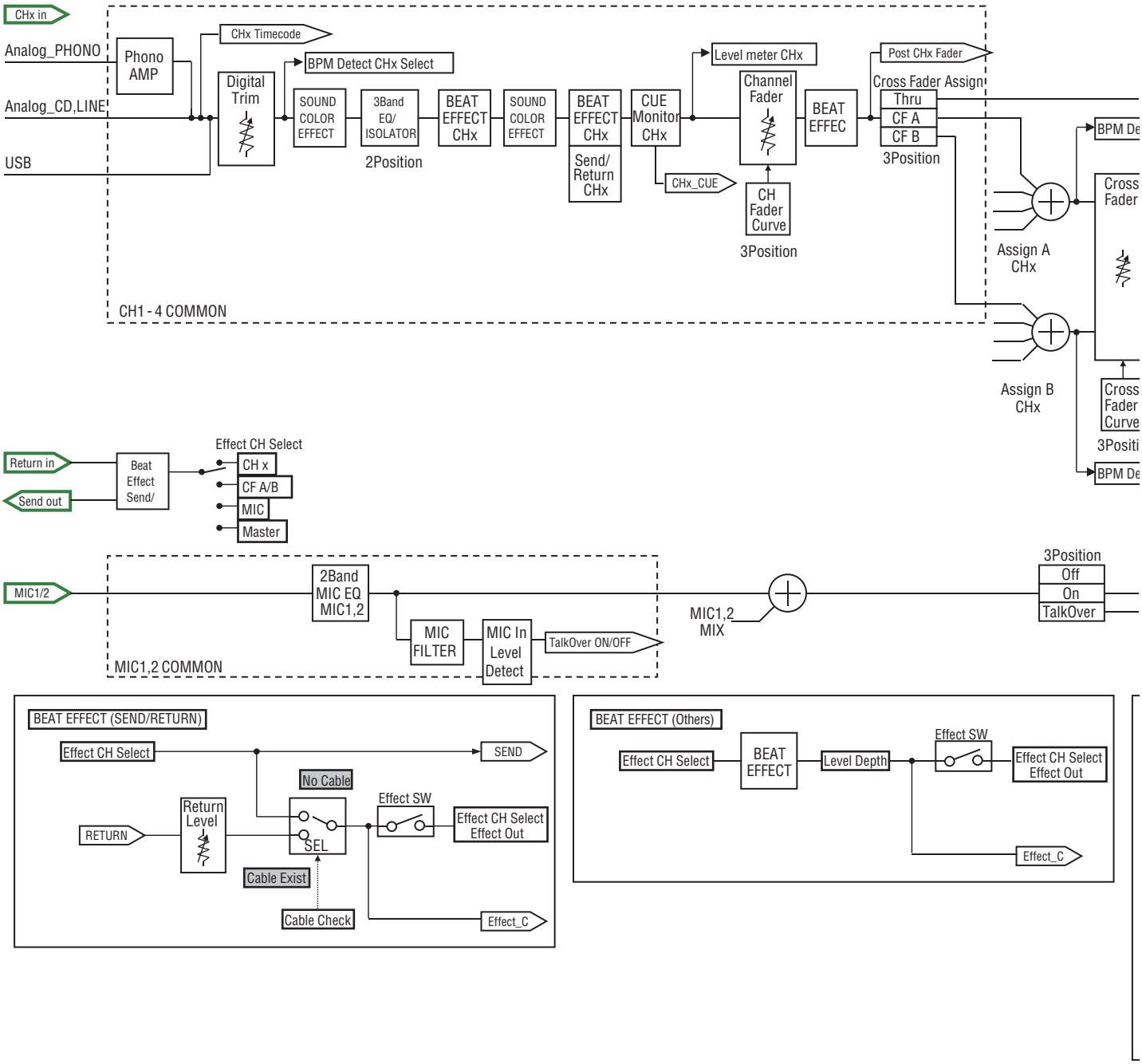

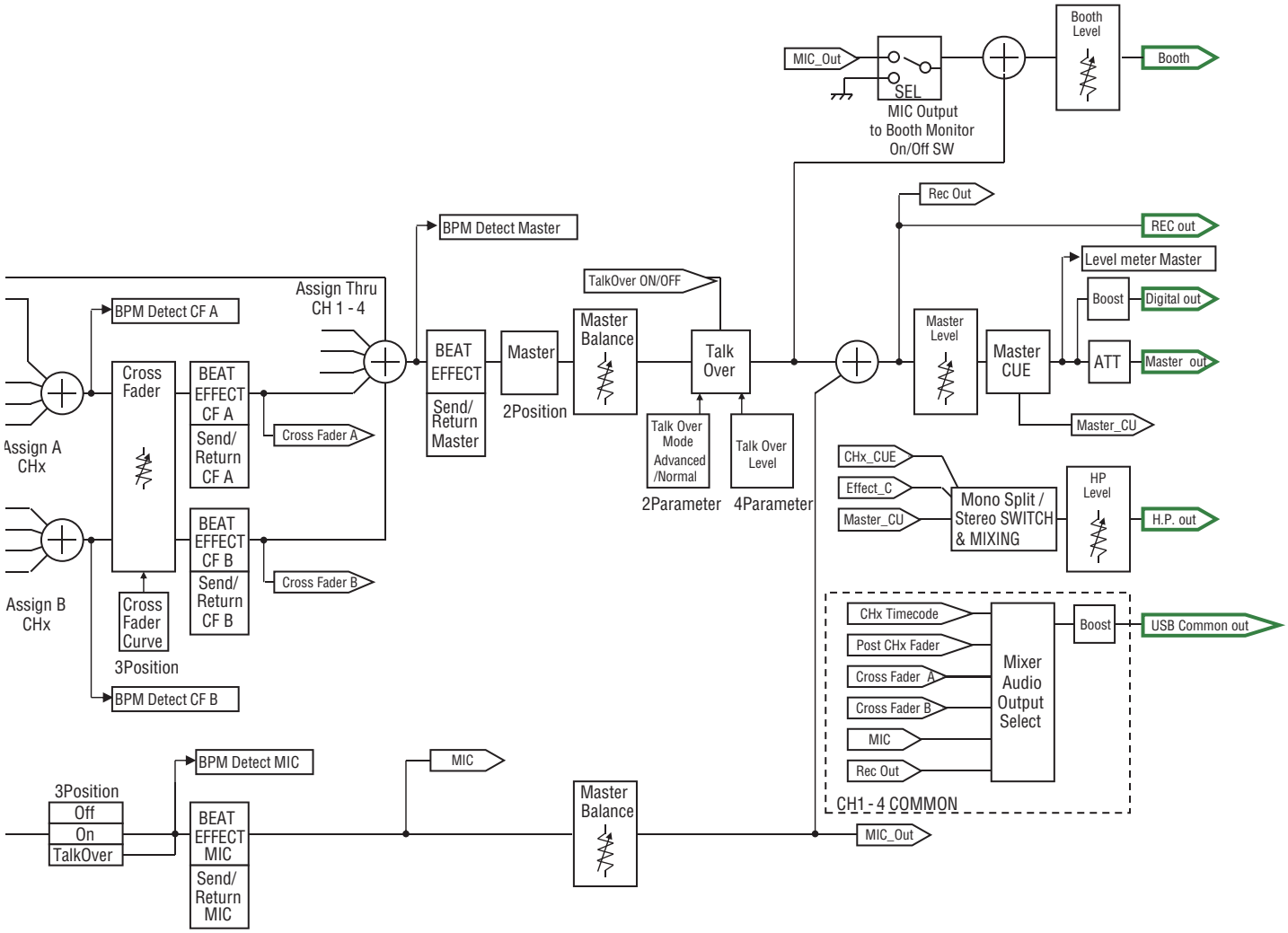
MIC_Out
SEL
MIC Output
to Booth Monitor
On/Off SW
Booth Level
Booth
Rec Out
REC out
BPM Detect Master
Level meter Master
TalkOver ON/OFF
Assign Thru
CH 1 - 4
BPM Detect CF A
Boost
Digital out
Master Level
Master CUE
ATT
Master out
Cross Fader
BEAT EFFECT CF A
Send/ Return CF A
BEAT EFFECT
Send/ Return Master
Master
2Position
Master Balance
Talk Over
Cross Fader A
Master_CU
Assign A
CHx
Talk Over Mode
Advanced /Normal
Talk Over Level
2Parameter
4Parameter
CHx_CUE
Effect_C
Master_CU
Mono Split / Stereo SWITCH & MIXING
HP Level
H.P. out
BEAT EFFECT CF B
Send/ Return CF B
Cross Fader B
Assign B
CHx
Cross Fader Curve
3Position
BPM Detect CF B
CHx Timecode
Post CHx Fader
Cross Fader A
Cross Fader B
MIC
Rec Out
Mixer Audio Output Select
Boost
USB Common out
CH1 - 4 COMMON
BPM Detect MIC
MIC
3Position
Off
On
TalkOver
BEAT EFFECT MIC
Send/ Return MIC
Master Balance
MIC_Out

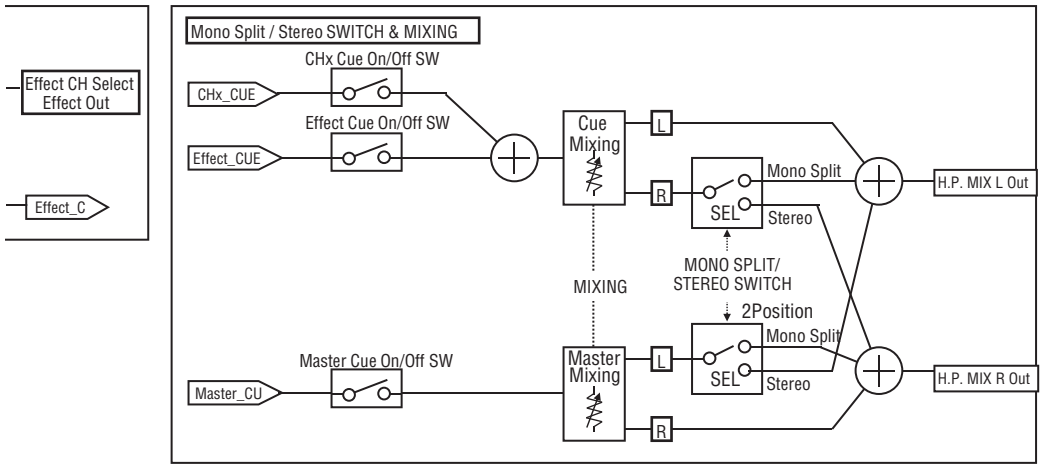
Effect CH Select
Effect Out
Effect_C
Mono Split / Stereo SWITCH & MIXING
CHx Cue On/Off SW
CHx_CUE
Effect Cue On/Off SW
Effect_CUE
Cue Mixing
L
R
Mono Split
SEL
Stereo
H.P. MIX L Out
MIXING
MONO SPLIT/
STEREO SWITCH
2Position
Mono Split
Master Cue On/Off SW
Master_CU
Master Mixing
L
SEL
Stereo
R
H.P. MIX R Out

4.4 POWER BLOCK DIAGRAM

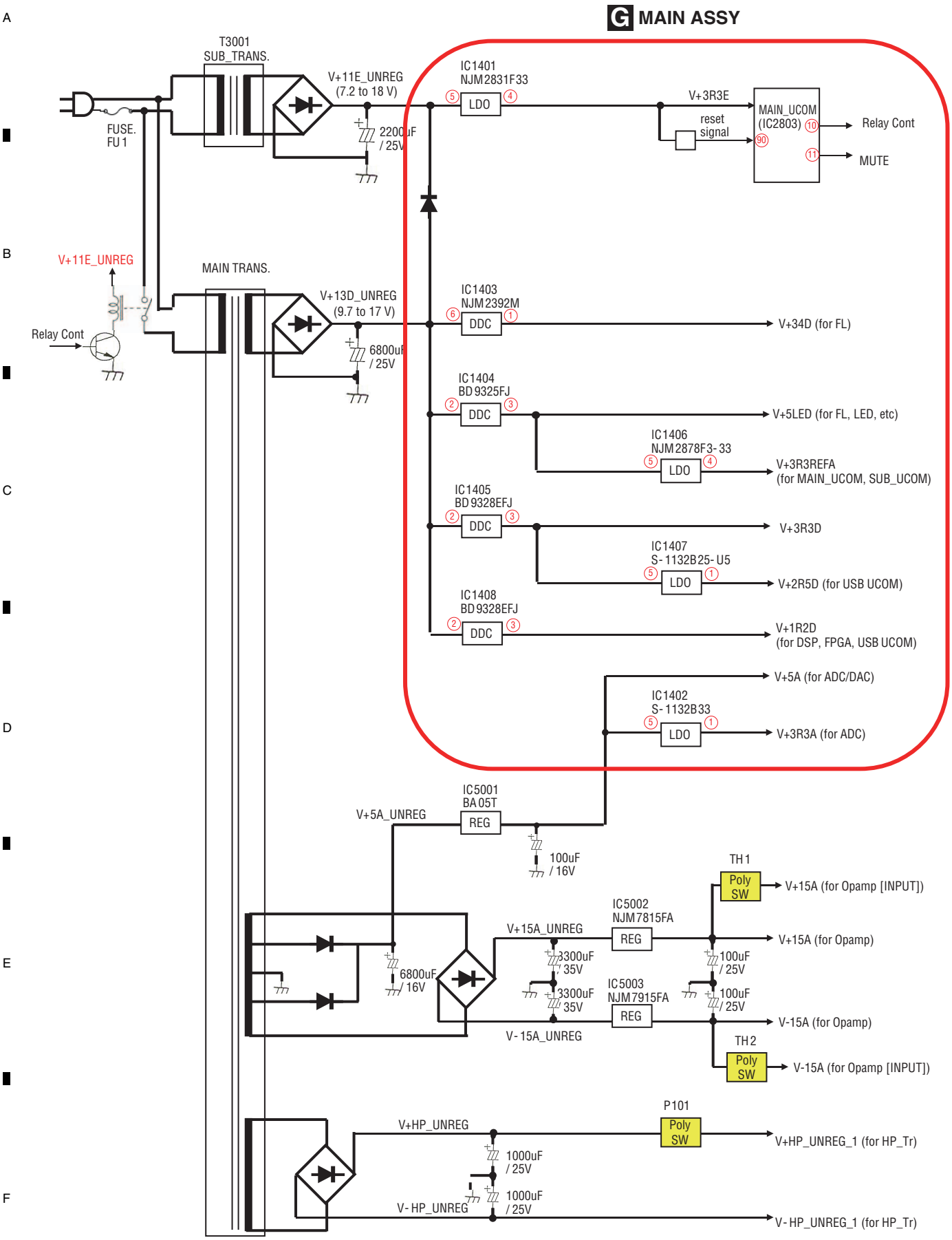

A

B

C

D

E

F

5. DIAGNOSIS
5.1 POWER ON SEQUENCE

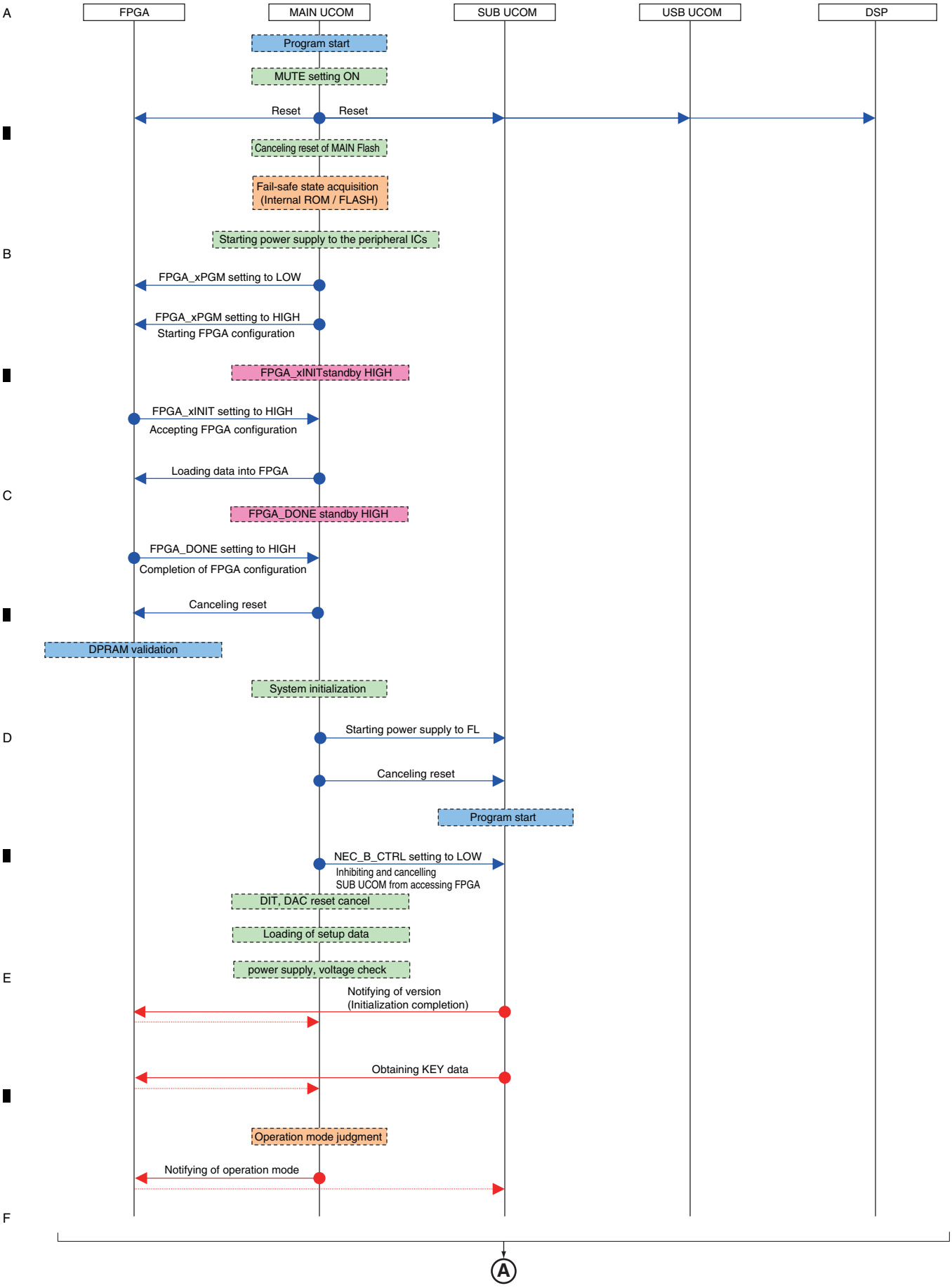

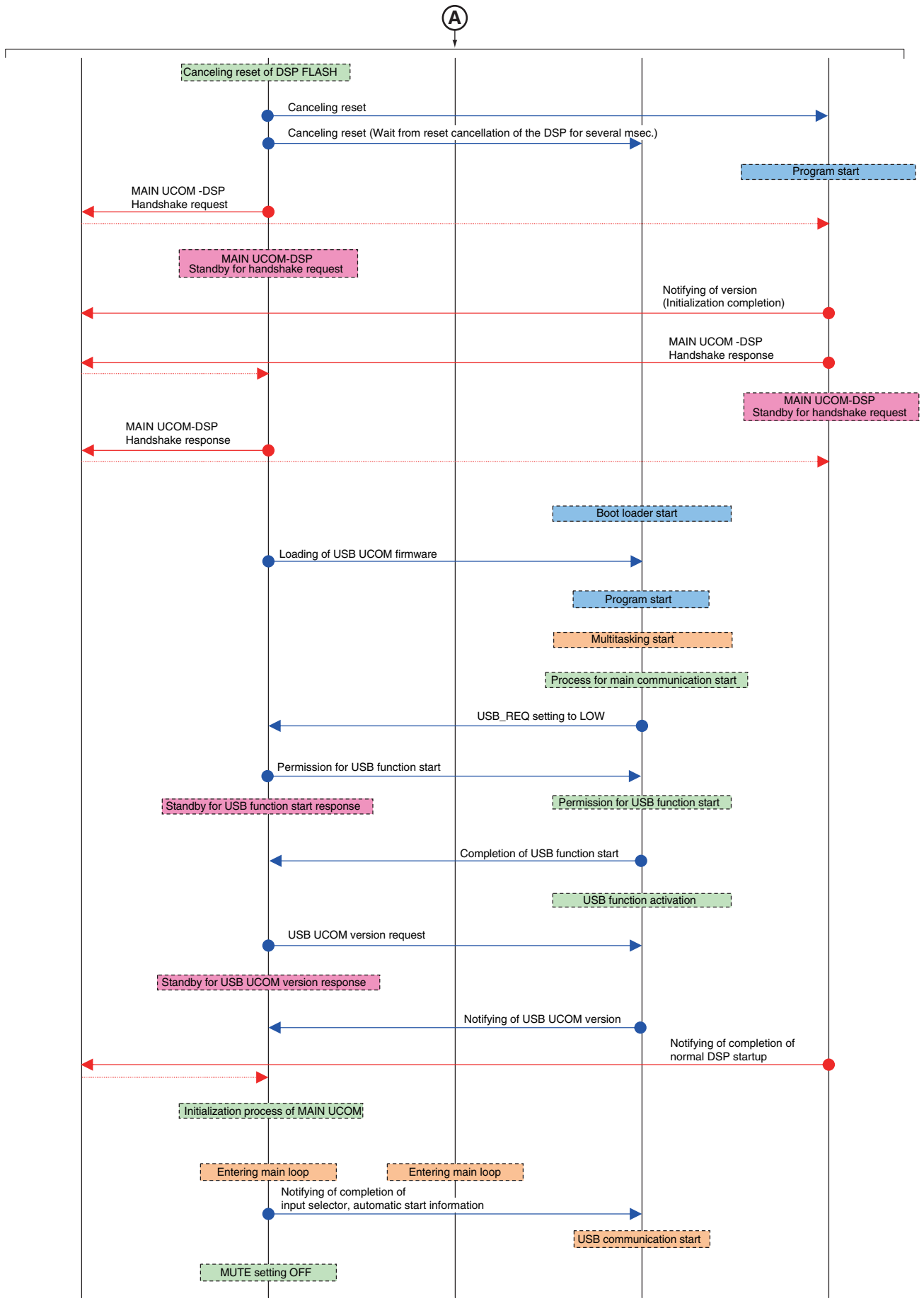
A
Canceling reset of DSP FLASH
Canceling reset
Canceling reset (Wait from reset cancellation of the DSP for several msec.)
Program start
MAIN UCOM -DSP
Handshake request
MAIN UCOM-DSP
Standby for handshake request
Notifying of version
(Initialization completion)
MAIN UCOM -DSP
Handshake response
MAIN UCOM-DSP
Standby for handshake request
MAIN UCOM-DSP
Handshake response
Boot loader start
Loading of USB UCOM firmware
Program start
Multitasking start
Process for main communication start
USB_REQ setting to LOW
Permission for USB function start
Standby for USB function start response
Permission for USB function start
Completion of USB function start
USB function activation
USB UCOM version request
Standby for USB UCOM version response
Notifying of USB UCOM version
Notifying of completion of
normal DSP startup
Initialization process of MAIN UCOM
Entering main loop
Entering main loop
Notifying of completion of
input selector, automatic start information
USB communication start
MUTE setting OFF

5.2 TROUBLESHOOTING

Contents

*Point to be checked – Assys are classified with prefix.
[1-**] MAIN Assy
[2-**] INPUT Assy
[3-**] PNLA Assy
[4-**] SEC/HP Assy
[5-**] PRIMARY Assy

[0] Prior Confirmation

[0-1] Checking Internal Cables

No.	Cause	Diagnostics Point	Item to be Checked	Corrective Action	Reference
1	Disconnection, breakage, or loose connection of internal cables	Relevant part	Check that all the cables are securely connected. Check that there is no breakage in the cables.	Securely connect the cables. If a cable is broken, replace it.	4.1 OVERALL CONNECTION DIAGRAM

[1] Failure in Startup

[1-1] The unit dose not turn on, and the LED of the SETUP LED does not flash.

The fuse may be blowout or V+11E_UNREG, V+3R3E power failure or MAIN UCOM (IC2803), FLASH (IC2802) startup error may be suspected.

No.	Cause	Diagnostics Point	Item to be Checked	Corrective Action	Reference
1	Circuit failure Excessive power supply voltage injection	PRIMARY Assy FU1 5-1	Check the primary side fuse.	• If blowing of the fuse is visible, go to [2]. • If blowing of the fuse is not visible, go to [3].	————
2	Power failure	Each power supply	Check if any power supply is short-circuited to ground.	• If any power supply is short-circuited, repair it. • If no power supply is short-circuited, replace the fuse.	4.4 POWER BLOCK DIAGRAM
3	Power failure	MAIN Assy CN1201 pin 3 1-1	Check for the V+11E_UNREG power.	• If the V+11E_UNREG power can be confirmed, go to [4]. • If the V+11E_UNREG power cannot be confirmed, go to [7].	4.4 POWER BLOCK DIAGRAM 5.3 INFORMATION ON POWER DIAGNOSTICS
4	Power failure, defective parts	MAIN Assy IC1401 pin 4 1-2	Check for the V+3R3E power.	• If the V+3R3E power can be confirmed, go to [5]. • If the V+3R3E power cannot be confirmed, the 3.3V REGULATOR (IC1401) block may be defective. Check for the status of soldering and replace it.	4.4 POWER BLOCK DIAGRAM 5.3 INFORMATION ON POWER DIAGNOSTICS
5	RESET signal error	MAIN Assy IC2803 pin 90 1-3	Check for the CPU_RESET signal.	• If the IC103_1 pin is high level, go to [6]. • If the IC103_1 pin is not high level, the RESET IC (IC2801) block may be defective. Check for the status of soldering and replace it.	————

No.	Cause	Diagnostics Point	Item to be Checked	Corrective Action	Reference
6	20 MHz CLK error	MAIN Assy R2804 1-4	Check for the 20M_CLK signal. This is a simple check of whether a signal is output or not. A normal waveform cannot be observed, because the drive circuit is inside the IC.	• If an output signal can be confirmed, go to [8]. • If an output signal cannot be confirmed, the crystal (X2801) block or MAIN UCOM (IC2803) may be defective. Check for the status of soldering and replace it.	10.35 WAVEFORMS 1-4
7	Power failure, defective parts, Wire defect	PRIMARY Assy JP3001 pin 3 5-2	Check for the V+11E_UNREG power on PRIMARY Assy.	• If the V+11E_UNREG power can be confirmed, JP3001 may be defective. Replace it. • If the V+11E_UNREG power cannot be confirmed, the PRIMARY Assy may be defective. Replace it.	4.4 POWER BLOCK DIAGRAM 5.3 INFORMATION ON POWER DIAGNOSTICS
8	MAIN UCOM defective	MAIN Assy IC2803	If the symptom persists after the above corrections.	The MAIN UCOM (IC2803) may be defective. Replace it.	————

[1-2] The unit dose not turn on, and the LED of the SETUP LED flashes four times.

MAIN UCOM (IC2803) startup error may be suspected.

No.	Cause	Diagnostics Point	Item to be Checked	Corrective Action	Reference
1	20 MHz CLK error	MAIN Assy R2804 1-4	Check for the 20M_CLK signal. This is a simple check of whether a signal is output or not. A normal waveform cannot be observed, because the drive circuit is inside the IC.	• If an output signal can be confirmed, go to [2]. • If an output signal cannot be confirmed, the crystal (X2801) block may be defective. Check for the status of soldering and replace it.	10.35 WAVEFORMS 1-4
2	MAIN UCOM defective	MAIN Assy IC2803	If the symptom persists after the above corrections.	The MAIN UCOM (IC2803) may be defective. Replace it.	————

[1-3] The unit dose not turn on, and the LED of the SETUP LED flashes two times.

Communication error between the MAIN UCOM (IC2803) and FPGA (IC3007)

No.	Cause	Diagnostics Point	Item to be Checked	Corrective Action	Reference
1	Power failure, defective parts	MAIN Assy R3037 1-5 F3001 1-6	• Check for the V+3R3D_FPGA power. • Check for the V+1R2D_FPGA power.	• If the V+3R3D_FPGA power and V+1R2D_FPGA power can be confirmed, go to [2]. • If either power cannot be confirmed, the power line may be defective. Check for the status of soldering and replace it.	4.4 POWER BLOCK DIAGRAM 5.3 INFORMATION ON POWER DIAGNOSTICS
2	RESET signal error	MAIN Assy R3097 1-7	Check that the signal level of FPGA_RESET is High.	• If the signal level is High, go to [3]. • If the signal level is low, something on the FPGA_RESET path may be wrong. Check for the status of soldering and replace it.	————
3	24MCLK error	MAIN Assy R3070 1-8	Check for the 24M_CLK_FPGA signal.	• If an output signal can be confirmed, go to [4]. • If an output signal cannot be confirmed, the 24MCLK (IC3204) block may be defective. Check for the status of soldering and replace it.	10.35 WAVEFORMS 1-8
4	Defective parts	MAIN Assy IC3007 IC2802	If the symptom persists after the above corrections.	The FPGA (IC3007) or FLASH (IC2802) may be defective. Replace it.	————

[1-4] The unit dose not turn on, and the LED of the SETUP LED flashes five times.

Communication error between the MAIN UCOM (IC2803) and SUB UCOM (IC6601)

No.	Cause	Diagnostics Point	Item to be Checked	Corrective Action	Reference
1	Power failure, defective parts	PNLA Assy R6615 3-1	Check for the V+3R3D_PA power.	• If the V+3R3D_PA power can be confirmed, go to [2]. • If an V+3R3D_PA power cannot be confirmed, the power line may be defective. Check for the status of soldering and replace it.	4.4 POWER BLOCK DIAGRAM 5.3 INFORMATION ON POWER DIAGNOSTICS
2	RESET signal error	PNLA Assy IC6601 pin 90 3-2	Check that the signal level of SUB_CPU_RESET is High.	• If the signal level is High, go to [3]. • If the signal level is low, the path inside the MAIN Assy may be wrong. Check for the status of soldering and replace it.	————
3	20 MHz CLK error	PNLA Assy R6624 3-3	Check for the 20M_CLK signal. This is a simple check of whether a signal is output or not. A normal waveform cannot be observed, because the drive circuit is inside the IC.	• If the signal can be confirmed, go to [4]. • If an signal cannot be confirmed, crystal (X6601) block or SUB UCOM (IC6601) may be defective. Check for the status of soldering and replace it.	10.35 WAVEFORMS 3-3
4	SUB UCOM defective	PNLA Assy IC6601	If the symptom persists after the above corrections.	SUB UCOM (IC6601) may be defective. Replace it.	————

A

[1-5] The unit dose not turn on, and the LED of the SETUP LED flashes once.

Communication error between the MAIN UCOM (IC2803) and DSP (IC3201).

No.	Cause	Diagnostics Point	Item to be Checked	Corrective Action	Reference
1	Power failure, defective parts	MAIN Assy R3209 1-9 F3201 1-10	• Check for the V+3R3D_DSP power. • Check for the V+1R2D_DSP power.	• If the V+3R3D_DSP power and V+1R2D_DSP power can be confirmed, go to [2]. • If either power cannot be confirmed, the power line may be defective. Check for the status of soldering and replace it.	4.4 POWER BLOCK DIAGRAM 5.3 INFORMATION ON POWER DIAGNOSTICS
2	RESET signal error	MAIN Assy R3276 1-11	Check that the signal level of DSP_RESET is High.	• If the signal level is High, go to [3]. • If the signal level is low, something on the DSP_RESET path may be wrong. Check for the status of soldering and replace it.	————
3	24MCLK error	MAIN Assy R3234 1-12	Check for the 24M_CLK_DSP signal.	• If an output signal can be confirmed, go to [4]. • If an output signal cannot be confirmed, the 24MCLK (IC3204) block may be defective. Check for the status of soldering and replace it.	10.35 WAVEFORMS 1-12
4	Defective parts	MAIN Assy IC3201 IC3008	If the symptom persists after the above corrections.	DSP (IC3201) or FLASH (IC3008) may be defective. Check for the status of soldering and replace it.	————

B

[1-6] The unit dose not turn on, and the LED of the SETUP LED flashes six times.

Communication error between the MAIN UCOM (IC2803) and USB UCOM (IC2603)

No.	Cause	Diagnostics Point	Item to be Checked	Corrective Action	Reference
1	Power failure, defective parts	MAIN Assy R2604 1-13 F2601 1-14 R2611 1-15	• Check for the V+3R3D_USB power. • Check for the V+1R2D_USB power. • Check for the V+2R5D_USB_PLL power.	• If the all power can be confirmed, go to [2]. • If either power cannot be confirmed, the power line may be defective. Check for the status of soldering and replace it.	4.4 POWER BLOCK DIAGRAM 5.3 INFORMATION ON POWER DIAGNOSTICS
2	RESET signal error	MAIN Assy R2669 1-16	Check that the signal level of USB_RESET is High.	• If the signal level is High, go to [3]. • If the signal level is low, something on the USB_RESET path may be wrong. Check for the status of soldering and replace it.	————
3	24MCLK error	MAIN Assy R2624 1-17	Check for the 24M_CLK signal. This is a simple check of whether a signal is output or not. A normal waveform cannot be observed, because the drive circuit is inside the IC.	• If an output signal can be confirmed, go to [4]. • If an output signal cannot be confirmed, the crystal (X2601) block or USB UCOM (IC2603) may be defective. Check for the status of soldering and replace it.	10.35 WAVEFORMS 1-17
4	Defective parts	MAIN Assy IC2603 IC2802	If the symptom persists after the above corrections.	USB UCOM (IC2603) or FLASH (IC2802) may be defective. Replace it.	————

C

D

[1-7] The unit dose not turn on, and the LED of the SETUP LED flashes endlessly.

The unit is shut down in error by the Voltage Monitoring Circuit.

No.	Cause	Diagnostics Point	Item to be Checked	Corrective Action	Reference
1	Power failure	See “5.4 VOLTAGE MONITORING CIRCUIT.”	Check for power at each point, following “5.4 VOLTAGE MONITORING CIRCUIT.”	Repair the defective parts.	5.4 VOLTAGE MONITORING CIRCUIT

E

F

[2] AUDIO INPUT

[2-1] No signal is input to the CD/LINE, PHONO connectors.

No.	Cause	Diagnostics Point	Item to be Checked	Corrective Action	Reference
0	Prior Confirmation	CD/LINE, PHONO, LINE, USB */* selector switch / TRIM control	Confirm on the screen that the selector is set properly.	————	Operating instructions
1	Loose connection /defective parts	INPUT Assy IC4002/IC4003 (CH1) pin1 IC4004/IC4005 (CH2) pin1 IC4202/IC4203 (CH3) pin1 IC4204/IC4205 (CH4) pin1 2-1	[Confirmation of input signal selection] Check if the input signal selection at each switching operational amplifier (IC4002/IC4003/IC4004/IC4005/IC4202/ IC4203/IC4204/IC4205) is proper.	• If the selection is proper, go to [2]. • If the selection is not proper, soldering of parts in the peripheral circuits of the switching operational amplifiers or the control transistors (Q4005/Q4006/Q4205/Q4206) is defective or one or more of the parts is defective. Or part of the circuit in the path from the MAIN UCOM (IC2803) to a control transistor may be disrupted.	10.35 WAVEFORMS 2-1 (CD) 2-1 (PHONO)
2	Loose connection /defective parts	MAIN Assy IC1604 (CH1) 1-18 IC1804 (CH2) 1-19 IC2004 (CH3) 1-20 IC2204 (CH4) 1-21 pin 4, 5, 24, 25 Representative CH1_R- 1-18 /CH1_R+ 1-18	[Checking the ADC block] Check for an audio signal at the input connector of ADC (IC1604/IC1804/ IC2004/IC2204).	If no audio signal is input to ADC, a problem in an analog circuit at a previous stage may be suspected. • If an audio signal is input, go to [3]. • If no audio signal is input, check for a part where the signal is interrupted, by observing the audio signal in the path from the input connector to the ADC, then check the soldering status and check for a defective part in the corresponding part.	10.35 WAVEFORMS 2-2 (CD input signal) 2-3 (PHONO·MIC input signal) 1-18
3	Loose connection /defective parts	MAIN Assy IC1604(CH1) 1-22 IC1804(CH2) 1-23 IC2004(CH3) 1-24 IC2204(CH4) 1-25 pin 19	[Checking the ADC block] Check for the RESET signal of ADC.	• If the RESET signal level is L, go to [6]. • If the RESET signal level is H, go to [4].	————
4	Loose connection /defective parts	MAIN Assy IC1604 (CH1) IC1804 (CH2) IC2004 (CH3) IC2204 (CH4) 96k CLK: pin 17 Representative 1-26 6M CLK: pin 16 Representative 1-27 24M CLK: pin 18 Representative 1-28	[Checking the ADC block] Check for the CLK signal of ADC.	• If no CLK signal is input, go to [7]. • If the CLK signal is input, go to [5].	10.35 WAVEFORMS 1-26 1-27 1-28
5	Loose connection /defective parts	MAIN Assy IC1604(CH1) IC1804(CH2) IC2004(CH3) IC2204(CH4) pin 15 Representative 1-29	[Checking the ADC block] Check for the signal output from ADC output terminal.	• If output signal cannot be confirmed, ADC may be defective. Check for the status of soldering and replace it. • If output signal can be confirmed, DSP (IC3201) must be improperly soldered or defective.	10.35 WAVEFORMS 1-29
6	Loose connection /defective parts	MAIN Assy IC2804 pin 1, pin 3 1-30	[Checking the RESET signal path] Check for the RESET signal.	• If the signal level at Pin 1 is H and that at Pin 3 is L, IC2804 must be soldered impropely or defective. • If the signal level at Pin 1 is L and there is no abnormality in the path from the MAIN UCOM (IC2803) to IC2804, soldering of the MAIN UCOM (IC2803) or the IC itself is defective.	————
7	Loose connection /defective parts	MAIN Assy 96k CLK: IC3006 pin 10, pin 8 1-31 6M CLK: IC3004 pin 10, pin 8 1-32 24M CLK: IC3005 pin 10, pin 8 1-33	[Checking the CLK signal path] Check for the 96k CLK, 6M CLK and 24M CLK signals.	• If no signal is output from Pin 7 even though Pin 4 is normal for CH1/CH3, or if no signal is output from Pin 11 even though Pin 13 is normal for CH2/CH4, soldering of IC3006/ IC3004/IC3005 or these ICs themselves are defective. • If Pin 4 is not normal for CH1/CH3 or if Pin 13 is not normal for CH2/CH4, and if there is no abnormality in the path from the FPGA (IC3007) to IC3006/IC3004/IC3005, soldering of the FPGA (IC3007) or this IC itself is defective.	10.35 WAVEFORMS 1-31 1-32 1-33

[2-2] No signal is input to the MIC1/MIC2 connectors.

No.	Cause	Diagnostics Point	Item to be Checked	Corrective Action	Reference
0	Prior Confirmation	OFF, ON, TALK OVER selector switch / TRIM control	Confirm on the screen that the selector is set properly.	————	Operating instructions
1	Loose connection /defective parts	MAIN Assy IC2401 MIC1: pin 1 1-34 MIC2: pin 2 1-35	[Checking the ADC block] Check for an audio signal at the input connector of ADC (IC2401).	If no audio signal is input to ADC, a problem in an analog circuit at a previous stage may be suspected. • If an audio signal is input, go to [2]. • If no audio signal is input, check for a part where the signal is interrupted, by observing the audio signal in the path from the input connector to the ADC, then check the soldering status and check for a defective part in the corresponding part.	10.35 WAVEFORMS 1-34 1-35
2	Loose connection /defective parts	MAIN Assy IC2401 pin 13	[Checking the ADC block] Check for the RESET signal of ADC (IC2401).	• If the RESET signal level is L, go to [5]. • If the RESET signal level is H, go to [3].	————
3	Loose connection /defective parts	MAIN Assy IC2401 96k CLK: pin 10 1-37 6M CLK: pin 12 1-38 24M CLK: pin 11 1-39	[Checking the ADC block] Check for the CLK signal of ADC (IC2401).	• If no CLK signal is input, go to [7]. • If the CLK signal is input, go to [4].	10.35 WAVEFORMS 1-37 1-38 1-39
4	Loose connection /defective parts	MAIN Assy IC2401 pin 9 1-40	[Checking the ADC block] Check for the signal output from ADC (IC2401) output terminal.	• If output signal cannot be confirmed, ADC may be defective. Check for the status of soldering and replace it. • If output signal can be confirmed, DSP (IC3201) must be improperly soldered or defective.	10.35 WAVEFORMS 1-40
5	Loose connection /defective parts	MAIN Assy IC2804 pin10, pin 8 1-41	[Checking the RESET signal path] Check for the RESET signal.	• If the signal level at Pin 10 is H and that at Pin 8 is L, IC2804 must be soldered impropely or defective. • If the signal level at Pin 10 is L and there is no abnormality in the path from the MAIN UCOM (IC2803) to IC2804, soldering of the MAIN UCOM (IC2803) or this IC itself is defective.	————
6	Loose connection /defective parts	MAIN Assy 96k CLK: IC3006 pin 10, pin 8 1-31 6M CLK: IC3004 pin 10, pin 8 1-32 24.576M CLK: IC3005 pin 10, pin 8 1-33	[Checking the CLK signal path] Check for the 96k CLK, 6M CLK and 24M CLK signals.	• If no signal is output from Pin 8 even though Pin 10 is normal, soldering of the IC3006/ IC3004/IC3005 or these ICs themselves are defective. • If Pin 10 is not normal and if there is no abnormality in the path from the FPGA (IC3007) to IC3006/IC3004/IC3005, soldering of the FPGA (IC3007) or this IC itself is defective.	10.35 WAVEFORMS 1-31 1-32 1-33

[2-3] No signal is input to the RETURN.

No.	Cause	Diagnostics Point	Item to be Checked	Corrective Action	Reference
0	Prior Confirmation	DELAY, ECHO, UP ECHO, SPIRAL, REVERB, TRANS, FILTER, FLANGER, PHASER, ROBOT, SLIP ROLL, ROLL, REV ROLL, SND/RTN selector switch / ON/OFF button	• Check that the type for BEAT EFFECT is set to SND/RTN. • Check that the BEAT EFFECT is set to ON. • Check that a cable is connected to the RETURN L connector.	————	Operating instructions
1	Loose connection /defective parts	INPUT Assy CN4803 pin 20 2-4	Check that the RETURN IN signal level is H.	• If it is L, JA4401 or R4803 must be improperly soldered or defective. • If it is H, go to [2].	————

No.	Cause	Diagnostics Point	Item to be Checked	Corrective Action	Reference
2	Loose connection /defective parts	MAIN Assy IC2402 pin1, pin 2 1-42	[Checking the ADC block] Check for an audio signal at the input connector of ADC (IC2401).	If no audio signal is input to ADC, a problem in an analog circuit at a previous stage may be suspected. • If no audio signal is input, check for a part where the signal is interrupted, by observing the audio signal in the path from the input connector to the ADC, then check the soldering status and check for a defective part in the corresponding part. • If an audio signal is input, go to [3].	10.35 WAVEFORMS 1-42
3	Loose connection /defective parts	MAIN Assy IC2402 pin 13 1-43	[Checking the RESET signal path] Check for the RESET signal at ADC.	• If the RESET signal level is L, go to 2-2 [5]. • If the RESET signal level is H, go to [4].	————
4	Loose connection /defective parts	MAIN Assy LRCK: IC2402 pin 10 1-44 BCLK: IC2402 pin 12 1-45 MCLK: IC2402 pin 11 1-46	[Checking the ADC block] Check for the CLK signal of ADC.	• If no CLK signal is input, go to 2-2 [6]. • If the CLK signal is input, go to [5].	10.35 WAVEFORMS 1-44 1-45 1-46
5	Loose connection /defective parts	MAIN Assy IC2402 pin 9 1-47	[Checking the ADC block] Check for the signal output from ADC output terminal.	• If output signal cannot be confirmed, ADC may be defective. Check for the status of soldering and replace it. • If output signal can be confirmed, DSP (IC3201) must be improperly soldered or defective.	10.35 WAVEFORMS 1-47

[3] AUDIO OUTPUT

[3-1] No signal is output from the MASTER1/MASTER2/REC/BOOTH connectors.

No.	Cause	Diagnostics Point	Item to be Checked	Corrective Action	Reference
1	Prior Confirmation	MASTER1 / MASTER2 / REC / BOOTH	Identify the connector(s) that do(es) not output signals.	• If all connectors does output, go to [2]. • If neither MASTER 1 nor 2 connector outputs, go to [9]. • If only the MASTER 1 connector does not output, go to [10]. • If only the MASTER 2 connector does not output, go to [11]. • If only the BOOTH connector does not output, go to [13].	Operating instructions
2	Loose connection /defective parts	MAIN Assy IC201 1-48	[Checking the DAC block] Check for the DA converter (IC201) signal output. MASTER: pin 29, pin31, pin 33, pin 35 REC: pin37, pin 39 BOOTH: pin41, pin 43	• If the DAC output signal is normal, the MUTE circuit is activated. Go to [15]. • If no signal is output from the DAC output, go to [3].	10.35 WAVEFORMS 1-48 (MASTER) 1-48 (REC) 1-48 (BOOTH)
3	Loose connection /defective parts	MAIN Assy IC201 pin 8, 9, 10, 11 1-49	[Checking the DAC block] Check that a signal is input to the DA converter. MASTER: pin10, pin 11 REC: pin 9 BOOTH: pin 8	• If no signal is output, the DSP (IC3201) must be improperly soldered or defective. • If a signal is output, go to [4].	10.35 WAVEFORMS 1-49
4	Loose connection /defective parts	MAIN Assy IC201 pin 18 1-50	[Checking the DAC block] Check for the AMUTEI signal (IC201 pin 18).	• If it is L, the R212 or IC201 must be improperly soldered or defective. • If it is H, go to [5].	————
5	Loose connection /defective parts	MAIN Assy IC201 pin 15 1-51	[Checking the DAC block] Check for the RESET signal at DA converter.	• If it is H, go to [7]. • If it is L, go to [6].	————
6	Loose connection /defective parts	MAIN Assy 96k CLK: IC201 pin 6 1-52 6M CLK: IC201 pin 7 1-53 24M CLK: IC201 pin 14 1-54	[Checking the DAC block] Check for the CLK signal at DA converter.	• If a signal is output, go to [8]. • If the CLK signal is output, soldering of the IC201 or the IC itself is defective.	10.35 WAVEFORMS 1-52 1-53 1-54

No.	Cause	Diagnostics Point	Item to be Checked	Corrective Action	Reference
7	Loose connection /defective parts	MAIN Assy IC2804 pin4, pin 6 1-55	[Checking the RESET signal path] Check for the RESET signal.	• If the signal level at Pin 4 is H and that at Pin 6 is L, IC2804 must be soldered impropely or defective. • If the signal level at Pin 4 is L and there is no abnormality in the path from the MAIN UCOM (IC2803) to IC2804, soldering of the MAIN UCOM (IC2803) or the IC itself is defective.	————
8	Loose connection /defective parts	MAIN Assy 96k CLK: IC3006 pin 1, pin 3 1-56 6M CLK: IC3004 pin 1, pin 3 1-57 24M CLK: IC3005 pin 1, pin 3 1-58	[Checking the CLK signal path] Check for the 96k CLK, 6M CLK and 24M CLK signals.	• If no signal is output from Pin 3 even though Pin 1 is normal, soldering of the IC3006/ IC3004/IC3005 or these ICs themselves are defective. • If Pin 1 is not normal and if there is no abnormality in the path from the FPGA (IC3007) to IC3006/IC3004/IC3005, soldering of the FPGA (IC3007) or this IC itself is defective.	10.35 WAVEFORMS 1-56 1-57 1-58
9	Loose connection /defective parts	MAIN Assy IC301 pin 1, pin 7 1-59 IC302 pin 1, pin 7 1-60	[Checking the MASTER Shaping Noise Filter] Check for the DAC differential audio signal output. Check the waveforms of the signals output pins of IC301/IC302.	• If a signal is output from the Pin 1/Pin 7 of IC301/IC302, go to [10] and [11]. • If signals are output from the DAC (Pins 29, 31, 33 and 35 of IC201) but not from Pins 1 and 7 of IC301/IC302, soldering of the IC301/IC302 block or some part in the block is defective. • If no signal is output from the DAC (Pins 37, 39, 41and 43 of IC123), go to [3].	10.35 WAVEFORMS 1-59 1-60
10	Loose connection /defective parts	MAIN Assy IC303 pin 1, pin 7 1-61 IC304 pin 1, pin 7 1-62	[Checking the Balanced Output AMP] Check the waveforms of the signals from the output pins of IC303/304.	• If no signal is output, soldering of the IC303/ IC304 is defective or the ICs themselves are defective. • If signals are output, soldering of the output capacitors (C355, C356, C357, C358) or the ICPs (P302, P301) is defective or the capacitors or ICPs themselves are defective. Or the MUTE circuited is activated. • If the MUTE circuited is activated, go to [15].	10.35 WAVEFORMS 1-61 1-62
11	Loose connection /defective parts	MAIN Assy IC402 pin 1, pin 7 1-63	[Checking the MASTER2] Check the waveform of IC402 output pin.	• If no signal is output, soldering of the IC402 or the IC itself is defective. • If signals are output, soldering of the output capacitors (C425, C426), output resistor (R427, R428) is defective or one or more of those parts is defective. Or the MUTE circuited is activated. • If the MUTE circuited is activated, go to [17].	10.35 WAVEFORMS 1-63
12	Loose connection /defective parts	MAIN Assy IC401 pin 1, pin 7 1-64	[Checking the REC] Check the waveform of IC401 output pin.	• If signals are output from the DAC (Pins 37 and 39 of IC201) but not from IC401, soldering of the IC401 block or some part in the block is defective. • If no signal is output from the DAC (Pins 37, and 39 of IC201), go to [3]. • If signals are output from Pins 1 and 7 of IC401, soldering of the output capacitors (C423, C424), output resistor (R422, R425, R419 and R426) is defective or one or more of those parts is defective. Or the MUTE circuited is activated. • If the MUTE circuited is activated, go to [17].	10.35 WAVEFORMS 1-64
13	Loose connection /defective parts	MAIN Assy IC502 pin 1, pin 7 1-65	[Checking the BOOTH Shaping Noise Filter] Check the waveform of IC502 output pin.	• If signals are output from Pins 1 and 7 of IC502, go to [14]. • If signals are output from the DAC (Pins 41 and 43 of IC201) but not from Pins 1 and 7 of IC502, soldering of IC502, or IC502 block is defective or one or more of those parts is defective. • If no signal is output from the DAC (Pins 41 and 43 of IC201), go to [3].	10.35 WAVEFORMS 1-65
14	Loose connection /defective parts	MAIN Assy IC503 pin 1, pin 7 1-66 IC504 pin 1, pin 7 1-67	[Checking the BOOTH Balanced Output AMP] Check the waveform of IC503/IC504 output pin.	• If no signal is output, soldering of the IC503/ IC504 or the IC itself is defective. Or the MUTE circuited is activated. • If signals are output, soldering of the output capacitors (C553, C554, C555 and C556), output resistor (R542, R545, R548 and R551) is defective or one or more of those parts is defective. Or the MUTE circuited is activated. • If the MUTE circuited is activated, go to [17].	10.35 WAVEFORMS 1-66 1-67

No.	Cause	Diagnostics Point	Item to be Checked	Corrective Action	Reference
15	Loose connection /defective parts	MAIN Assy MASTER_MUTE 1-68	[Checking the MASTER_MUTE] Check that the MASTER_MUTE signal 1-68 is within the range of approx. –14 to –15 V.	• If the signal is within the range of approx. –14 to –15 V, go to [17]. • If the signal is outside the range of approx. –14 to –15 V, go to [16].	————
16	Loose connection /defective parts	MASTER LEVEL knob / MAIN Assy CN1002 pin 4 1-69	[Checking the MVR_MUTE] • Check that the MASTER LEVEL knob is not set to –∞. • Check the FFC connections with the PNLA Assy. • Check that the MVR_MUTE (CN1002 pin 4) level is Low.	• If MVR_MUTE (CN1002 pin 4) is H, VR6607 or IC6605 on the PNLA Assy or peripheral parts must be improperly soldered or defective. • If MVR_MUTE (CN1002 pin 4) is L, Q203, Q204 or peripheral parts must be improperly soldered or defective.	————
17	Loose connection /defective parts	MAIN Assy MUTE 1-70	[Checking the MUTE] Check that the MUTE signal 1-70 is within the range of approx. –14 to –15 V.	• If the signal is within the range of approx. –14 to –15 V, soldering of the MUTE transistor or parts in its peripheral circuits is defective or one or more of those parts is defective. MUTE transistor • • • MASTER1: Q305, Q306, Q307, Q308 MASTER2: Q401, Q402, Q407, Q408 REC: Q405, Q406 BOOTH: Q513, Q514, Q515, Q516, Q509, Q510, Q511, Q512 SEND: Q603, Q604 • If the signal is outside the range of approx. –14 to –15 V, check if the MUTE transistor is defective. If the transistor is OK, go to [18].	————
18	Loose connection /defective parts	MAIN Assy IC2803 pin 11 1-71	[Checking the CPU_MUTE] Check that the CPU_MUTE signal level is High.	• If it is L, MAIN UCOM (IC2803) or R2833 must be improperly soldered or defective. • If it is H, Q201, Q202 and Q205 must be improperly soldered or defective.	————

[3-2] No signal is output from the SEND connector.

No.	Cause	Diagnostics Point	Item to be Checked	Corrective Action	Reference
1	Loose connection /defective parts	MAIN Assy IC602 pin 1, pin 7 1-72 IC601 pin 1, pin 7 1-72	[Checking the SEND] Check the waveform of IC602 output pin.	• If signals are output from Pins 1 and 7 of IC602, soldering of the output capacitors (C624, C625), output resistor (R621, R622) is defective or one or more of those parts is defective. Or the MUTE circuited is activated. • If the MUTE circuited is activated, go to [17]. • If signals are output from the DAC (Pins 1 and 7 of IC601) but not from Pins 1 and 7 of IC602, soldering of the IC601 and IC602 block or some part in the block is defective. • If no signal is output from the DAC (Pins 10, and 11 of IC601), go to [2].	10.35 WAVEFORMS 1-72 (SEND output) 1-72 (SENDDAC output)
2	Loose connection /defective parts	MAIN Assy IC601 pin 3 1-73	[Checking the DAC] Check the input signal of DAC (IC601).	• If no signal is found, DSP (IC3201) must be improperly soldered or defective. • If a signal is found, go to [3].	10.35 WAVEFORMS 1-73
3	Loose connection /defective parts	MAIN Assy IC601 pin 5 1-74	[Checking the DAC] Check the RESET signal of DAC.	• If it is L, go to [5]. • If it is H, go to [4].	————
4	Loose connection /defective parts	MAIN Assy 96k CLK: IC601 pin 4 1-75 6M CLK: IC601 pin 2 1-76 24M CLK: IC601 pin 1 1-77	[Checking the DAC] Check the CLK signal of DAC.	• If no signal is found, go to [6]. • If a CLK signal is found, IC601 must be improperly soldered or defective.	10.35 WAVEFORMS 1-75 1-76 1-77
5	Loose connection /defective parts	MAIN Assy IC2804 pin 4, pin 6 1-55	[Checking the RESET signal path] Check the RESET signal.	• If a signal level at Pin 4 is H and that at Pin 6 is L, IC2804 must be improperly soldered or defective. • If the signal level at Pin 4 is L and there is no abnormality in the path from the MAIN UCOM (IC2803) to IC2804, soldering of the MAIN UCOM (IC2803) or this IC itself is defective.	————
6	Loose connection /defective parts	MAIN Assy 96k CLK: IC3006 pin 1, pin 3 1-56 6M CLK: IC3004 pin 1, pin 3 1-57 24M CLK: IC3005 pin 1, pin 3 1-58	[Checking the CLK signal path] Check for the 96k CLK, 6M CLK and 24M CLK signals.	• If Pin 1 is normal but a singal is not output from the Pin 3, IC3006/IC3004/IC3005 must be improperly soldered or defective. • If Pin 1 is not normal and if there is no abnormality in the path from the FPGA (IC3007) to IC3006/IC3004/IC3005, soldering of the FPGA (IC3007) or this IC itself is defective.	10.35 WAVEFORMS 1-56 1-57 1-58

[3-3] No signal is output from the PHONES connector.

No.	Cause	Diagnostics Point	Item to be Checked	Corrective Action	Reference
0	Prior Confirmation	CUE button / LEVEL knob / MIXING knob / MONO, STEREO selector	Confirm on the screen that the selector is set properly.	————	Operating instructions
1	Loose connection /defective parts	MAIN Assy / SEC/HP Assy / HPJK Assy	Check for the connection between the MAIN Assy, SEC/HP Assy and HPJK Assy.	Correct any power connections.	————
2	Loose connection /defective parts	SEC/HP Assy CN101 pin 1, pin 4 4-1	Check for the signals at Pins 1 and 4 of CN101.	• If a signal is found, the HPJK Assy or wires are defective. Replace them. • If no signal is found, go to [3].	10.35 WAVEFORMS 4-1
3	Loose connection /defective parts	SEC/HP Assy HP_L+/L- HP_R+/R-	Check the audio signal of SEC/HP Assy.	• Check for a part where the signal is interrupted, by observing the audio signal before and after each block. Soldering of the part or the part itself where the signal is interrupted is defective. Or the MUTE circuit is activated. • If the MUTE circuited is activated, go to [4]. • If no signal is found at CN3, go to [5].	————
4	Loose connection /defective parts	SEC/HP Assy MUTE 4-2	[Checking the MUTE] Check that the MUTE signal 4-2 is within the range of approx. –14 to –15 V.	• If the signal is within the range of approx. –14 to –15 V, soldering of the MUTE transistors (Q103, Q104) or any part in their peripheral circuits is defective or one or more of those parts is defective. • If the signal is outside the range of approx. –14 to –15 V, check the conduction at CN3 and CN1005 and check the above-mentioned MUTE transistors. If they are OK, go to 3-1 [17].	————
5	Loose connection /defective parts	MAIN Assy IC1001 pin 9, 10, 11, 12 1-78	[Checking the DAC] Check the output signal of DAC (IC1001).	• If the DAC output signal is normal, check the conduction at CN3 and CN1005. • If no DAC signal is found, go to [6].	10.35 WAVEFORMS 1-78
6	Loose connection /defective parts	MAIN Assy IC1001 pin 3 1-79	[Checking the DAC] Check the input signal of DAC.	• If no signal is found, DSP (IC3201) must be improperly soldered or defective. • If signal is found, go to [7].	10.35 WAVEFORMS 1-79
7	Loose connection /defective parts	MAIN Assy IC1001 pin 5 1-80	[Checking the DAC] Check the RESET signal of DAC.	• If it is H, go to [8]. • If it is H, go to 2-2 [5].	————
8	Loose connection /defective parts	MAIN Assy 96k CLK: IC1001 pin 4 1-81 6M CLK: IC1001 pin 2 1-82 24M CLK: IC1001 pin 1 1-83	[Checking the DAC] Check the CLK signal of DAC.	• If no signal is found, go to 2-2 [6]. • If CLK signal is found, DAC (IC1001) must be improperly soldered or defective.	10.35 WAVEFORMS 1-81 1-82 1-83

[3-4] No signal is output from the DIGITAL MASTER OUT connector.

No.	Cause	Diagnostics Point	Item to be Checked	Corrective Action	Reference
1	Loose connection /defective parts	MAIN Assy IC3405 pin 16 1-84	Check for the signal at Pins 16 of DIT (IC3405).	• If the signal can be found, soldering of any part in the signal path from IC3405 to JA3401 may be defective. Check the soldering status. If soldering is OK, replace the defective part. • If no signal is found, go to [2].	10.35 WAVEFORMS 1-84
2	Loose connection /defective parts	MAIN Assy C3411 1-85	Check for the V+3R3D_DIT power.	• If V+3R3D_DIT power is found, go to [3]. • If V+3R3D_DIT power cannot be found, soldering of any part in the power path may be defective. Check the soldering status. If soldering is OK, replace the defective part.	4.4 POWER BLOCK DIAGRAM 5.3 INFORMATION ON POWER DIAGNOSTICS
3	Loose connection /defective parts	MAIN Assy R3434 1-86	Check that the DIT_RESET signal level is High.	• If it is H, go to [4]. • If the signal level is L, soldering of any part in the DIT_RESET path may be defective. Check the soldering status. If soldering is OK, replace the defective part.	————
4	Loose connection /defective parts	MAIN Assy IC3405 FPGASRC_LRCK pin 24 1-87 FPGASRC_BCK pin 26 1-88 ADAT_DOUT_FPGASRC pin 28 1-89 FPGASRC_MCLK pin 30 1-90	Check for the any signals of DIT (IC3405).	• If any signal is abnormal, soldering of any part in the signal path may be defective. Check the soldering status. If soldering is OK, replace the defective part. • If all signals are normal, soldering of the DIT (IC3405) or the IC itself may be defective. Check the soldering status. If soldering is OK, replace the defective part.	10.35 WAVEFORMS 1-87 1-88 1-89 1-90

[4] USB

[4-1] Co connection to the PC, No signal is input to and output from the USB connector.

No.	Cause	Diagnostics Point	Item to be Checked	Corrective Action	Reference
0	Prior Confirmation	CD/LINE, PHONO, LINE, USB */* selector settings, PC settings	• Check that the selector is set to USB*/*. • Check that the driver software dedicated for the DJM-850 has been installed on the customer's PC. • Check that the DJM-850 utility of the connected PC is set properly.	————	Operating instructions
1	Loose connection /defective parts	MAIN Assy CN2602 V+5VBUS pin 5 1-91 D+USB pin 4 1-92 D-USB pin 3 1-93	• Check that the voltage at Pin 5 (V+5VBUS) of CN2602 is about 5 V (4.75 to 5.25) using a PC connected. • Check for the D+USB and D-USB signals.	• If any signal is abnormal, soldering of any part in the signal path from the PC to the MAIN Assy may be defective. Check for any breakage in the cable and check the soldering status. If both are OK, replace the defective part. • If all signals are normal, soldering of any part in the signal path from CN2602 to the USB UCOM (IC2603) or the USB UCOM (IC2603) is defective. Check the soldering status. If soldering is OK, replace the defective part.	10.35 WAVEFORMS 1-92 1-93

[4-2] No timecode signal input to the mixer.

No.	Cause	Diagnostics Point	Item to be Checked	Corrective Action	Reference
0	Prior Confirmation	CD/LINE, PHONO, LINE, USB */* selector settings, PC settings	• Check that the selector is set to USB*/*. • Check that the driver software dedicated for the DJM-850 has been installed on the customer's PC. • Check that the DJM-850 utility of the connected PC is set properly. • When using a DJ player (when using a Time code (control CD,)) check that the DJ player is connected via the CD connector. When using a turntable (when using a Time code (control turntable,)) check that the turntable is connected via the PHONO connector.	————	Operating instructions
1	Incorrect setting	PC Setting Utility ① (at the CD input)	Start up the Setup Utility that has been installed on the customer's PC then click on the MIXER OUTPUT tab. Check that CH* Timecode CD is selected.	If CH* Timecode PHONO is selected, set it to CH* Timecode CD.	Operating instructions
2	Incorrect setting	PC Setting Utility ② (at the PHONO input)	Start up the Setup Utility that has been installed on the customer's PC then click on the MIXER OUTPUT tab. Check that CH* Timecode PHONO is selected.	If CH* Timecode CD is selected, set it to CH* Timecode PHONO.	Operating instructions
3	Incorrect setting	DECK mode of TRAKTOR2	Start up TRAKTOR2 that has been installed on the customer's PC then check that two record icons are displayed next to the Play button on the track deck. (If a record icon is displayed, the unit is in Scratch Control mode, which signifies that the DVS can be used.)	If CUE and CUP are displayed next to the Play button on the track deck (in Internal Playback mode), switch to Scratch Control mode. To switch modes, click on ▼ beneath [A], [B], [C] or [D] on the deck GUI.	TRAKTOR2 manual
4	Incorrect setting	Playback Tracking mode of TRAKTOR2	Check that one of the two record icons next to the Play button on the track deck is lit.	If both their icons are unlit, set TRAKTOR2 to Playback Tracking mode.	TRAKTOR2 manual
5	Incorrect setting	Timecode signal input	Select Preferences, Timecode Setup, then Timecode Inputs on TRAKTOR2, then check that the double circle is displayed for the channel to which the timecode signal is input. (The double circle for VINYL is displayed somewhat distorted. The shapes of the double circles for the outer and inner tracks are different.) Perform this check only when a timecode control CD or VINYL (media on which timecodes are recorded) is available.	If no double circle is displayed, possible reasons are as follows: ① The channel for USB AUDIO output of the DJM-850 and that for USB AUDIO input of TRAKTOR2 do not match. → Check the channel setting on the Input Routing screen in the Preferences window of TRAKTOR2 and that of the PC Setup Utility. ② Connection between the external device (DJ player, turntable) and the DJM-850 is not properly made. → Check the connection and check if the RCA cables are broken.	————

[5] FL

The FL is controlled by the SUB UCOM (IC6601).

[5-1] The FL does not light.
The driver power to be supplied to the FL is produced at the MAIN Assy.

No.	Cause	Diagnostics Point	Item to be Checked	Corrective Action	Reference
1	Power failure	PNLA Assy V6601 pin 24 3-12 pin 1 3-10 pin 25 3-9 MAIN Assy IC1407 V+3R3D Block 1-94 IC1405 V+5DBlock 1-95 IC1403 V+34DBlock 1-96	Check for the voltage of the FL. (V+3R3D_PA/V+5D_LED_PA/V+34D_PA)	If no loose connection is detected with the FL of the PNLA Assy but power voltage is not detected, check the mounting status of the DC-DC converter IC and peripheral parts for each voltage point of the MAIN Assy. If an error is detected, repair the defective parts.	4.4 POWER BLOCK DIAGRAM 5.3 INFORMATION ON POWER DIAGNOSTICS
2	Filament voltage error of the FL	PNLA Assy V6601: Voltage between pins 1P to 32P 3-11	Check that the FL filament voltage is 2.3 V.	If the voltage is outside the normal range, a bias circuit error of the FL may be suspected. Check the mounting status of Q6601, Q6602, and peripheral parts. If there is no problem, Q6601 or Q6602 may be defective. Replace them.	————
3	Signal errors	PNLA Assy V6601 pin 22 3-14 pin 21 3-13 pin 23 3-15 pin 24 3-16	Check for the output signal of the FL communication line and the cable connection status in the PNLA Assy. • FL_SCK • FL_TXD • FL_LAT • FL_BK	If no signal is output, check for the mounting status of SUB UCOM (IC6601). If there is no problem, the port may be defective. Replace it. If soldering is improper, resolder it.	10.35 WAVEFORMS 3-14 3-13 3-15 3-16
4	Defective FL	PNLA Assy	If the symptom persists after the above corrections.	FL may be defective. Replace it.	————

[6] CONTROL

The control signal is output from the FPGA (IC3007).
To make the diagnostic procedure easier, set the CROSS FADER ASSIGN selectors for all channels to THRU before starting diagnosis.

[6-1] The FADER START function does not work

No.	Cause	Diagnostics Point	Item to be Checked	Corrective Action	Reference
0	Prior Confirmation	USER SETUP settings FADER START button settings	• Check that FADER START in the USER SETUP is set to ON. • Check that the FADER START button is set to ON.	————	Operating instructions
1	Signal errors/ Loose connection	MAIN Assy C231 to C238 1-97 Representative CH1	• Check for the FADER_START signal when the CH FADER is changed from 0 to 10. • Check for the FADER_STOP signal when the CH FADER is changed from 10 to 0.	• If the signal is output, the CONTROL cable may be defective. Replace it. • If the signal is not output, go to [2].	10.35 WAVEFORMS 1-97
2	Power failure	MAIN Assy R222 1-98	Check for the V+5D_CONTROL power.	• If the V+5D_CONTROL power can be confirmed, go to [3]. • If V+5D_CONTROL power cannot be found, soldering of any part in the V+5D_CONTROL power path may be defective. Check the soldering status. If soldering is OK, replace the defective part.	4.4 POWER BLOCK DIAGRAM 5.3 INFORMATION ON POWER DIAGNOSTICS
3	Signal errors/ defective parts	MAIN Assy R3057, R3058 1-99 Representative CH1	• Check for the FADER_START signal when the CH FADER is changed from 0 to 10. • Check for the FADER_STOP signal when the CH FADER is changed from 10 to 0.	• If signal is output, the CONTROL block must be improperly defective. Replace it. • If no signal is output, the FPGA (IC3007) must be improperly soldered or defective.	10.35 WAVEFORMS 1-99

5.3 POWER SUPPLY DIAGNOSIS INFORMATION

	Observing Point	Name	Remarks	Normal Voltage Level	Possible defective point when a voltage error is generated	Standby State (Power SW ON)
MAIN ASSY	1	V+11E_UNREG		7.2 to 18	MAIN UCOM (IC2803), RESET IC (IC2801), SETUP LED (PNLA ASSY)	ON
	2	V+13D_UNREG		9.7 to 17	ALL DIGITAL CIRCUIT	OFF
	3	V+15A (V+15A_*)		14.25 to 15.75	ANALOG AUDIO CIRCUIT	OFF
	4	V-15A (V-15A_*)		-15.75 to -14.25	ANALOG AUDIO CIRCUIT	OFF
	5	V+5A (V+5A_*)		4.7 to 5.4	DAC, ADC	OFF
	6	V+5D (V+5D_*)		4.75 to 5.35	FL, LED, MIDI, DIGITAL OUT, MAIN UCOM (IC2803)	OFF
	7	V+3R3E (V+3R3E_*)		3.2 to 3.4	MAIN UCOM (IC2803), RESET IC (IC2801), SETUP LED (PNLA ASSY)	ON
	8	V+3R3A (V+3R3A_*)		3.2 to 3.4	ADC	OFF
	9	V+3R3D (V+3R3D_*)		3.15 to 3.45	ALL DIGITAL CIRCUIT	OFF
	10	V+3R3D_REFA (V+3R3D_REFA_*)		3.15 to 3.45	MAIN UCOM (IC2803)	OFF
	11	V+2R5D (V+2R5D_*)		2.4 to 2.6	USB UCOM (IC2603)	OFF
	12	V+1R2D (V+1R2D_*)		1.1 to 1.28	FPGA (IC3007), DSP (IC3201), USB UCOM (IC2603)	OFF
	13	V+34D (V+34D_*)		31 to 36	FL	OFF
	14	V+5VBUS	Power of the connected PC	4.75 to 5.25	USB communication failure	ON
INPUT ASSY	15	V+15A	After the polyswitch	14.25 to 15.75	INPUT CIRCUIT	OFF
	16	V-15A	After the polyswitch	-15.75 to -14.25	INPUT CIRCUIT	OFF
	17	V+5D (V+5D_*)		4.75 to 5.35	MIDI OUT	OFF
SEC/HP ASSY	18	V+15A_UNREG		17.6 to 27.8	ANALOG AUDIO CIRCUIT	OFF
	19	V-15A_UNREG		-17.6 to 27.8	ANALOG AUDIO CIRCUIT	OFF
	20	V+5A_UNREG		7.4 to 12.0	DAC, ADC	OFF
	21	V+13D_UNREG		9.7 to 17	ALL DIGITAL CIRCUIT	OFF
	22	V+HP_UNREG	Before the polyswitch	4.5 to 9.5	HP CIRCUIT	OFF
	23	V+HP_UNREG_1	After the polyswitch	4.5 to 9.5	HP CIRCUIT	OFF
	24	V-HP_UNREG		-4.5 to -9.5	HP CIRCUIT	OFF
	25	V+15A		14.25 to 15.75	ANALOG AUDIO CIRCUIT	OFF
	26	V-15A		-15.75 to -14.25	ANALOG AUDIO CIRCUIT	OFF
	27	V+5A		4.7 to 5.4	DAC, ADC	OFF
REG ASSY	28	V+15A_UNREG		17.6 to 27.8	ANALOG AUDIO CIRCUIT	OFF
	29	V-15A_UNREG		-17.6 to 27.8	ANALOG AUDIO CIRCUIT	OFF
	30	V+5A_UNREG		7.4 to 12.0	DAC, ADC	OFF
	31	V+15A		14.25 to 15.75	ANALOG AUDIO CIRCUIT	OFF
	32	V-15A		-15.75 to -14.25	ANALOG AUDIO CIRCUIT	OFF
	33	V+5A		4.7 to 5.4	DAC, ADC	OFF
PNLA ASSY	34	V+5D_LED (V+5D_LED*)		4.75 to 5.35	FL,LED	OFF
	35	V+3R3E		3.2 to 3.4	SETUP LED	ON
	36	V+3R3D (V+3R3D_*)		3.15 to 3.45	FL, SUB UCOM (IC6601)	OFF
	37	V+34D (V+34D_*)		31 to 36	FL	OFF
	38	V+3R3D_REFA (V+3R3D_REFA_*)		3.15 to 3.45	CH1-4 FADER, CROSS FADER	OFF
PNLB ASSY	39	V+3R3_REFB (V+3R3D_REFB_*)		3.15 to 3.45	VR	OFF
	40	V+3R3D_REFA (V+3R3D_REFA_*)		3.15 to 3.45	CROSS FADER	OFF

ex) V+15A_* • • • • V+15A_O, V+15A_IN, etc • • •

5.4 VOLTAGE MONITORING CIRCUIT

Voltage-Monitoring Circuit

This unit monitors the voltages of the main power-supply ICs, using the VDET signal.
The VDET signal level is high (+3.3 V) during normal operations. When the level becomes low (0 V), detect abnormality in the MAIN UCOM (IC2803).

Product behavior when an error is generated

If power failure is detected with the VDET signal, the MAIN UCOM will stop supplying the primary source of power to the main transformer, setting the RELAY_CONT signal to low and interrupting the relay RY3001.

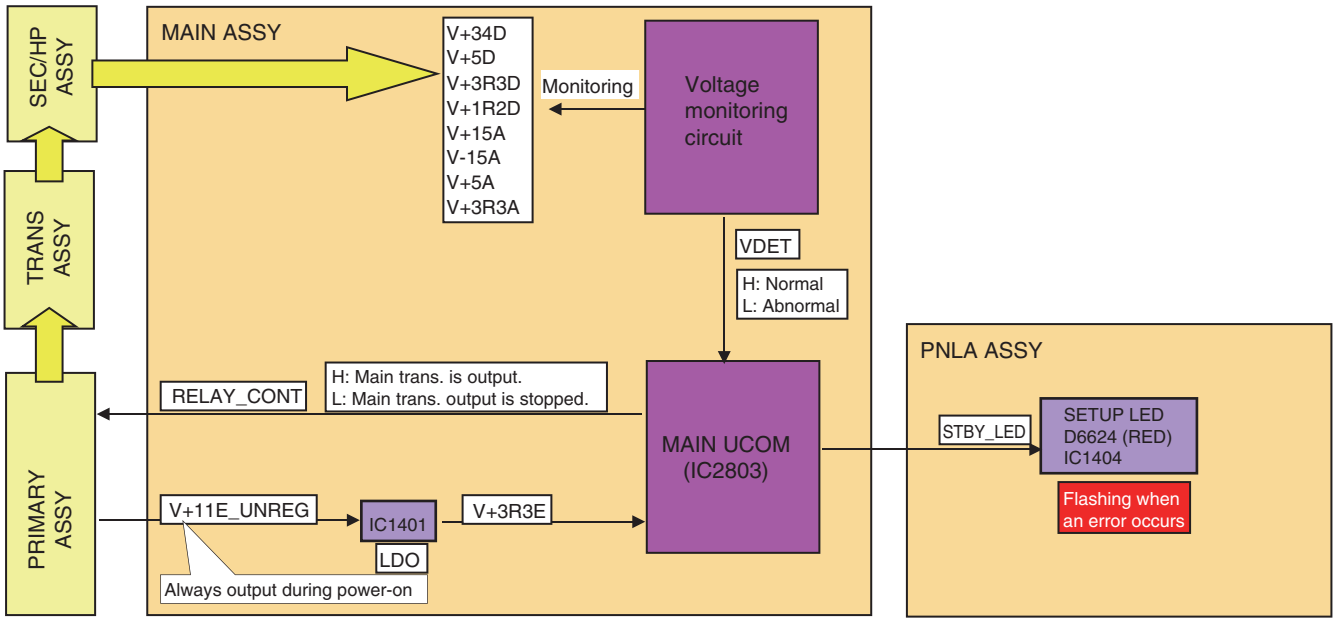

The MAIN UCOM also informs of power failure with flashing of the SETUP button, by sending the STBY_LED signal:
Flashing intervals: 250 ms (lit for 125 ms/unlit for 125 ms)
As the switching-system output is stopped, the indications other than the SETUP LED are unlit and all the switches and VRs are disabled.

Diagnostic procedure

If any voltage is abnormal, that error will be detected by the voltage-monitoring program after it is started after a usual startup of the unit. Then the power supply to the main transformer will be stopped. For this reason, power will be supplied for about 1 sec after startup.
Identify which power-supply IC is defective, by turning the unit OFF then back ON while monitoring each voltage with an oscilloscope. Check the value of each voltage immediately before stopping power supply.
Note: Each time before turning the unit ON, make sure that each power-supply IC is not short-circuited to GND.

Circuit diagram of the voltage-monitoring section

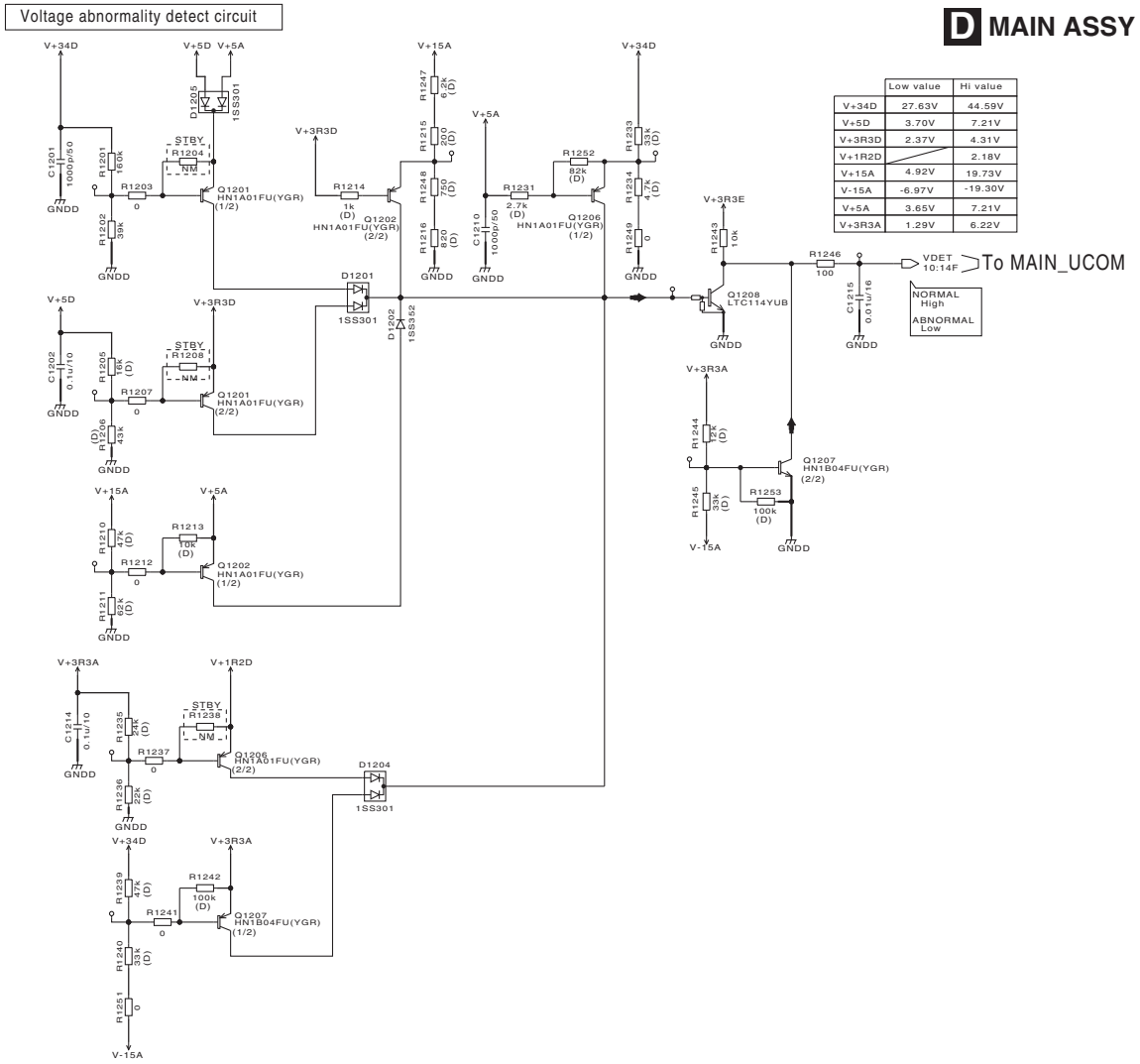

	Low value	Hi value
V+34D	27.63V	44.59V
V+5D	3.70V	7.21V
V+3R3D	2.37V	4.31V
V+1R2D		2.18V
V+15A	4.92V	19.73V
V-15A	-6.97V	-19.30V
V+5A	3.65V	7.21V
V+3R3A	1.29V	6.22V

Table 1: Voltage value of the voltage-monitoring section

Power	Over voltage / Under voltage	Threshold		Cause of error detection
		Detection range in consideration of variations	Center value	
V+34D	+	More than 38.50 to 49.57 V	44.59 V	Abnormality around IC1403
	–	19.72 to 30.29 V or less	27.63 V	Abnormality around IC1403 or, Short-circuiting at GND or different power supply
V+5D	+	More than 6.08 to 8.43 V	7.21 V	Abnormality around IC1404 or, Short-circuiting at different power supply
	–	3.37 to 4.30 V or less	3.70 V	Abnormality around IC1404 or, Short-circuiting at GND or different power supply
V+3R3D	+	More than 3.89 to 4.65 V	4.31 V	Abnormality around IC1405 or, Short-circuiting at different power supply
	–	1.26 to 2.81 V or less	2.37 V	Abnormality around IC1405 or, Short-circuiting at GND or different power supply
V+1R2D	+	More than 1.87 to 2.38 V	2.18 V	Abnormality around IC1408 or, Short-circuiting at different power supply
V+15A	+	More than 17.43 to 21.54 V	19.73 V	Short-circuiting at regulator (IC5002) IN/OUT
	–	3.72 to 7.23 V or less	4.92 V	Short-circuiting at GND or different power supply
V-15A	+	More than -17.07 to -21.55 V	-19.30 V	Short-circuiting at regulator (IC5003) IN/OUT
	–	-6.24 to -8.29 V or less	-6.97 V	Short-circuiting at GND or different power supply
V+5A	+	More than 6.08 to 8.43 V	7.21 V	Short-circuiting at regulator (IC5001) IN/OUT
	–	3.27 to 4.32 V or less	3.65 V	Short-circuiting at GND or different power supply
V+3R3A	+	More than 4.01 to 6.72 V	6.22 V	Short-circuiting at regulator (IC1402) IN/OUT
	–	1.12 to 1.95 V or less	1.29 V	Short-circuiting at GND or different power supply

5.5 ABOUT POLYSWITCH

This unit monitors the voltages of the main power-supply ICs, using the voltage-monitoring circuit. As resettable fuses (PolySwitches) are also used, some circuits cannot be monitored by the voltage-monitoring circuit when any resettable fuse is activated.
The resettable fuse opens when excess current flows and will be restored to a conductive state after the cause of the corresponding circuit error is removed. (Replacement of the resettable fuse is not required if the corresponding circuit error is remedied.)

Circuits using the resettable fuses

① **INPUT ASSY**

Power-supply line using a resettable fuse: V+15A
Power-supply line using a resettable fuse: V-15A

A circuit in the INPUT Assy may be in failure if the voltages of the above-mentioned power in the INPUT Assy are 0 V, with the UTILITY LED (STBY_LED) not flashing.
Possible causes: Abnormal audio input
Item to be checked: Check the peripheries of the ICs in the INPUT Assy to which the above-mentioned power is supplied.

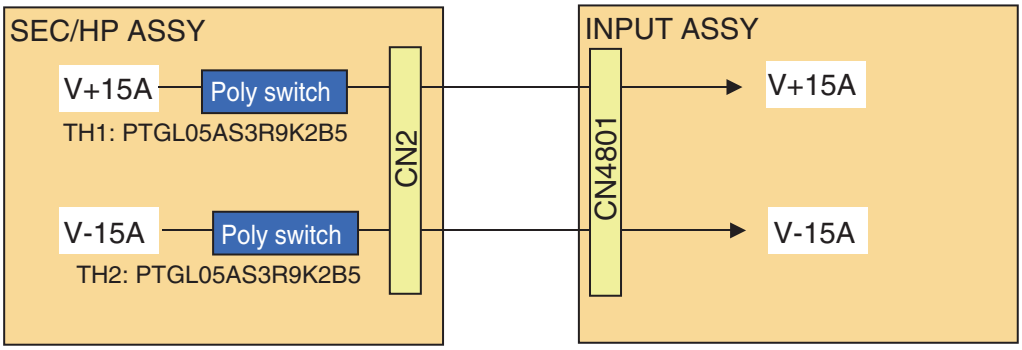

② **SEC/HP ASSY**

Power-supply line using a resettable fuse: V+HP_UNREG

A circuit in the SEC/HP Assy may be in failure if the voltages of the above-mentioned power in the SEC/HP Assy are 0 V, with the UTILITY LED (STBY_LED) not flashing.
Possible causes: Abnormal or no HP output
Item to be checked: Check if there is any abnormality in the periphery of Q105 or Q106.

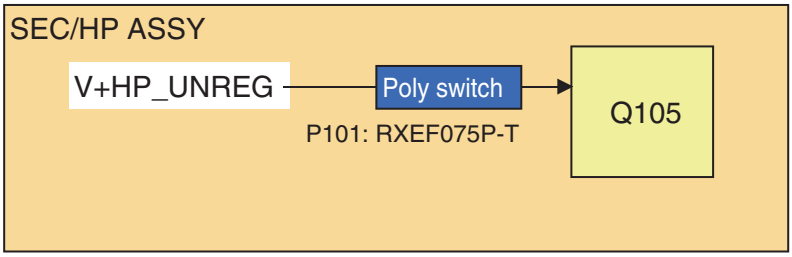

Diagnostic procedure when any resettable fuse is activated

1. Unplug the AC power cord.
2. Check for any error, such as short-circuiting or defective parts, in the circuits downstream from the resettable fuse.
3. Repair the detective part.

5.6 ABOUT PROTECTOR

This unit uses ICPs (IC protectors) in MASTER1 output circuit.
If the specified signal from the MASTER 1 connectors (XLR) is not properly output, check if any ICP is activated.

D MAIN ASSY

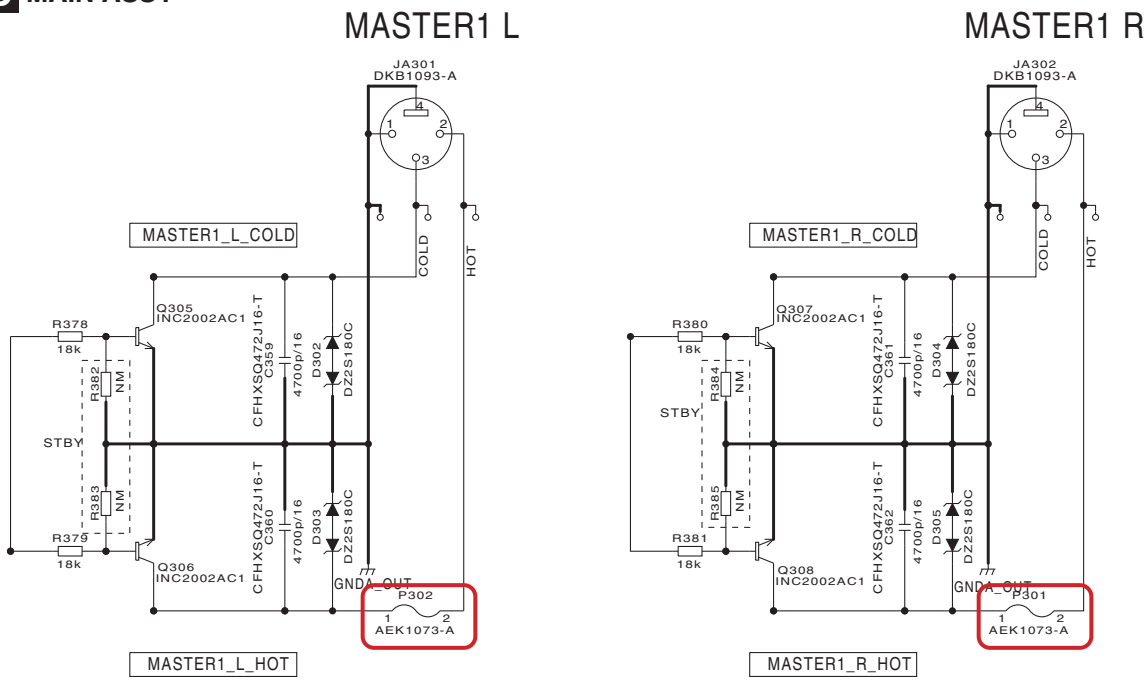

5.7 V+34D DIAGNOSIS

The driver power output for the FL (V+34D) is controlled with a transistor switch.

Diagnostic procedures when only V+34D is not output

① Check V+34D_1 at the prior stage of the transistor (Q1402).
② If no signal is detected at V+34D_1, the mounting status of the peripheral parts of the 34V DC/DC converter (IC1403) may be improper or IC1403 itself may be defective.
③ If a signal is detected at V+34D_1, check the Q1405 and Q1406.
If V+34D_CONT is L, the mounting status of the MAIN UCOM (IC2803) may be improper or IC2803 itself may be defective.
If V+5A is 0 V, confirm an output of IC5001 of REG Assy and connection state.
④ If both V+34D_CONT and V+5A are H:
If the output signal from Q1406 is L, the mounting status of Q1406 may be improper or Q1406 itself may be defective.
⑤ When the above does not have any problem, the following problems are thought about.
1. The mounting status of the peripheral parts of Q1401 or Q1402 may be improper or Q1401/Q1402 may be defective.
2. The mounting status of the peripheral parts of Q1403 or Q1404 may be improper or Q1403/Q1404 may be defective.

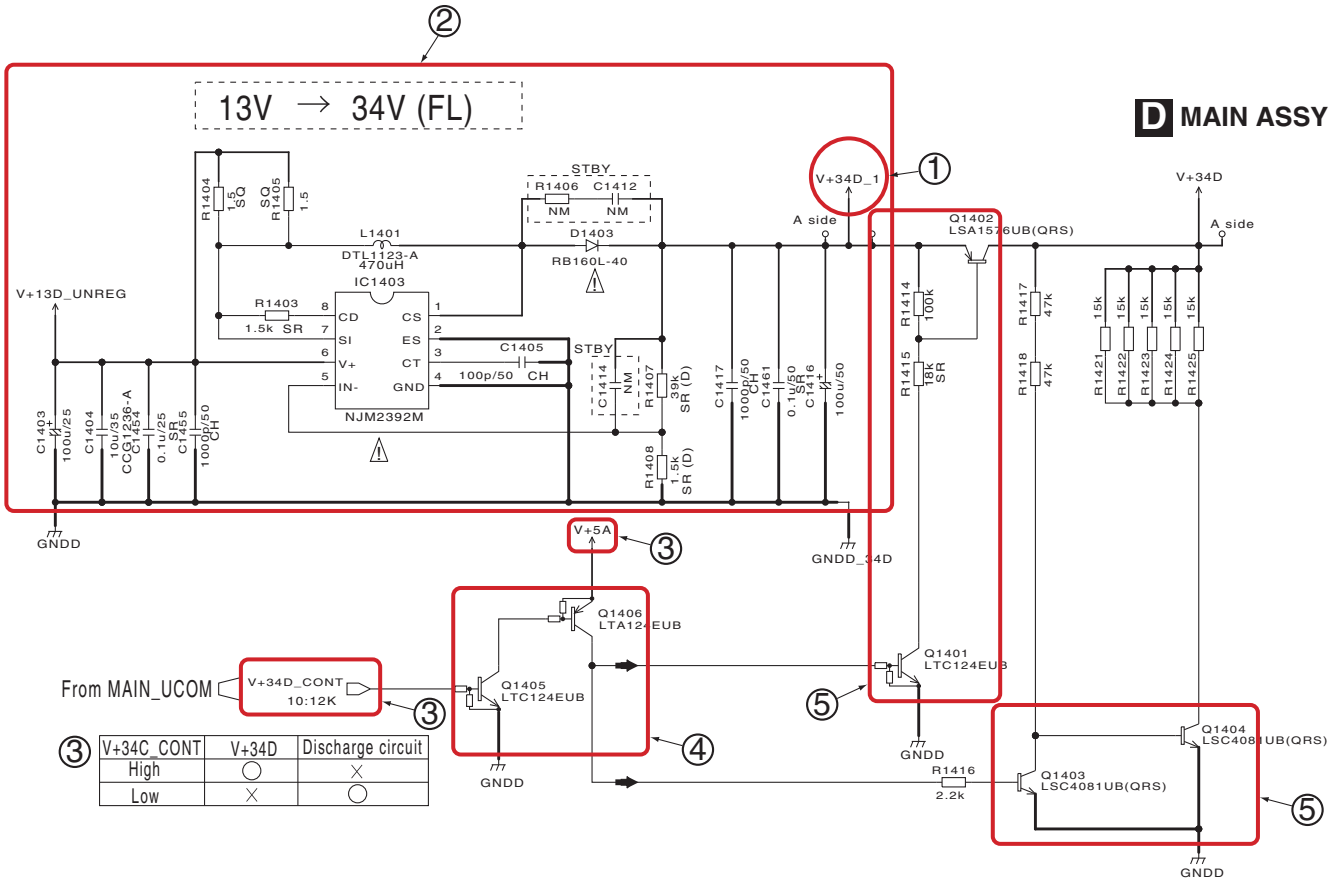

V+34C_CONT	V+34D	Discharge circuit
High	○	×
Low	×	○

5.8 ERROR INDICATIONS

Indications of Errors during Startup

Error (in the order of detection)	Detecting Microcomputer	Indication	Cause	Diagnostic procedure
MAIN UCOM (IC2803)	MAIN UCOM (IC2803)	Repeated 4-time flashing of the SETUP LED.	ROM error check	Troubleshooting: [1-2]
FPGA (IC3007)	MAIN UCOM (IC2803)	Repeated 2-time flashing of the SETUP LED.	Configuration with MAIN UCOM is NG	Troubleshooting: [1-3]
SUB UCOM (IC6601)	MAIN UCOM (IC2803)	Repeated 5-time flashing of the SETUP LED.	Handshake with MAIN UCOM is NG	Troubleshooting: [1-4]
DSP (IC3201)	MAIN UCOM (IC2803)	Repeated 1-time flashing of the SETUP LED.	Handshake with MAIN UCOM is NG	Troubleshooting: [1-5]
USB UCOM (Audio section)(IC2603)	MAIN UCOM (IC2803)	Repeated 6-time flashing of the SETUP LED.	Handshake with MAIN UCOM is NG	Troubleshooting: [1-6]

Indications of Errors during Power Failure

The SETUP LED infinite flashes.

Indications of Errors during Updating

Effect Indication	Parameter Indication	SETUP LED flashing	BPM Indication	Microcomputer in failure	Correspondence
ERROR	E004	4	Lit off	MAIN UCOM UPDATE error	Please update it again.
ERROR	E002	2	Lit off	FPGA UPDATE error	Please update it again.
ERROR	Non	5	Lit off	SUB UCOM UPDATE error	Please update it again.
ERROR	E001	1	Lit off	DSP data UPDATE error	Please update it again.
ERROR	E001	1	Lit off	DSP program UPDATE error	Please update it again.
ERROR	E006	6	Lit off	USB UCOM UPDATE error	Please update it again.
ERROR	E008	8	Lit off	USB UCOM BOOT UPDATE error	Please update it again.
ERROR	E009	9	Lit off	SYS Ver. UPDATE error	Please update it again.
ERROR	E000	Non	Lit off	Others, the whole error	Please update it again.

5.9 CONNECTION CHECK WITH EACH INTERFACE

■ USB

[USB Bconnector]

Whether communication between the PC connected via the USB B connector and this unit is properly performed or not can be confirmed on the PC.
Note: The driver software must be installed beforehand.

■ Use Device Manager for checking.

If the PC and this unit are properly connected, the components of this unit are added in Device Manager (under Hardware) as devices.
If all components are properly displayed, the PC and this unit are properly communicating via the USB connector.

In a case of Windows XP:
Start, Control Panel, System, Hardware, then Device Manager

Devices to be added:
- Universal Serial Bus controllers
  USB Composite Device
- Under “Sound, video and game controllers”
  PIONEER DJM-850
  USB Audio Device

A communication check may be easily performed if connection is made with Device Manager displayed on the PC screen.

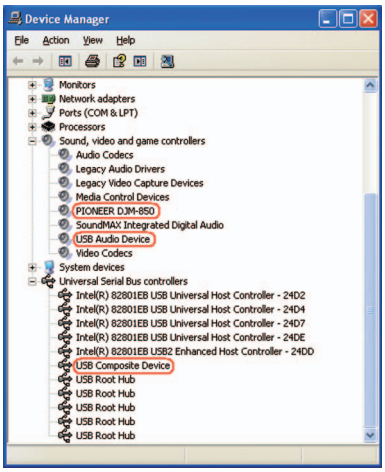

5.10 HOW TO CONFIRM THE DVS SIGNAL ROUTE

What is the DVS (Digital Vinyl System)?

The Digital Vinyl System (DVS) enables control of DJ software with normal DJ's operations of the CDJs or turntables, with use of a control CD or VINYL supplied with DJ software that supports the DVS. A control disc contains timecodes for controlling DJ software, which enable playback of music files stored on the PC from an assigned playback position at an assigned playback speed.

Note: For checking operations as the DVS, a control CD (CD on which timecodes are recorded) is required. However, assuming a case where no control CD is available, a simple check procedure using a music CD is explained here.

Necessary Items

- PC with the USB driver and TRAKTOR (demo version or TRAKTOR DDJ-T1 EDITION possible) installed
  Can download the Traktor demo version from the following URL.
  http://www.native-instruments.com/#/en/products/dj/traktor-pro-2/?page=1975
- Media (CD, etc.) for checking operations, CDJ player

Check Procedures

1. Connect this unit and a PC, using the USB cable.
2. Connect the audio output of CDJ Player to the CD/LINE of CH1 of this unit.
3. Set the CD/LINE, PHONO, LINE, and USB */* selectors to USB1/2.
4. For details on settings to be made on the PC, see “Settings for the Driver” and “Settings on TRAKTOR” below.
5. Play back the CDJ Player, and check the following items:
   - The level meters of Input Routing and Master Out on the TRAKTOR move in sync with audio output signals.
   - The Master Out is output normally.
   *Repeat the above steps for channels 2 to 4, to check the DVS paths.

Note:
The Master Out signal will not be output if the MAIN volume control is set to the minimum volume position.
If the MAIN volume indicators are not displayed on the screen, set the TRAKTOR screen to Full screen.

[Connection Diagram (When the CDJ Player is Connected to CH1)]

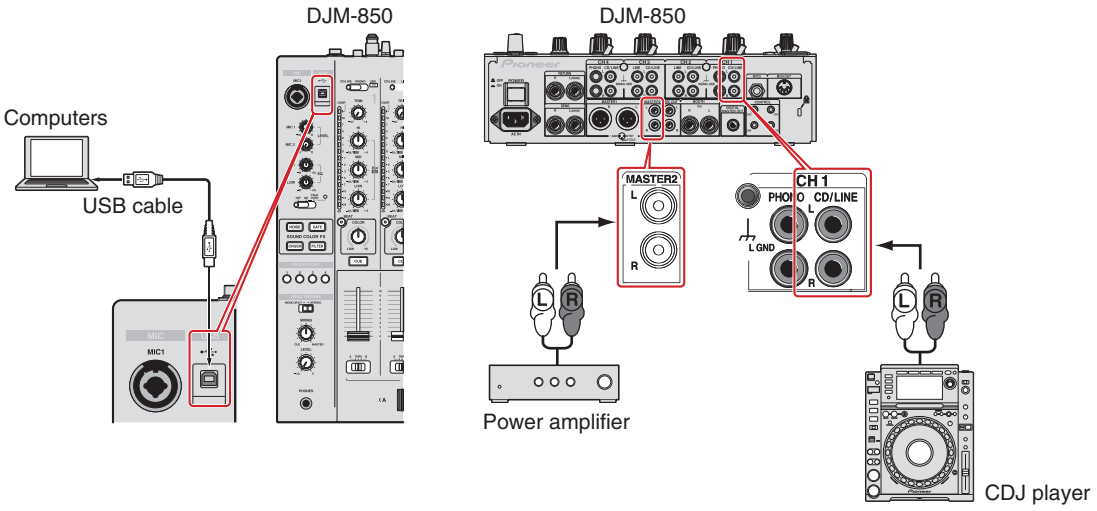

Settings for the Driver

Start up the "DJM-850 Settings Utility".

(Reference)

For Windows

Click [Start] menu → [All Programs] → [Pioneer] → [DJM-850] → [DJM-850 Settings Utility].

For MacOS

Click [Macintosh HD] → [Aplications] → [Pioneer] → [DJM-850] → [DJM-850 Settings Utility].

MIXER INPUT

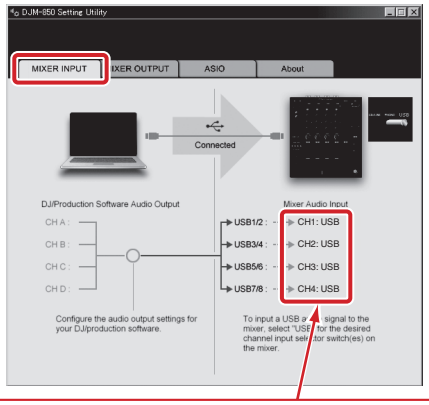

When the CD/LINE, PHONO, LINE, and USB */* selectors of the mixer are set to USB*/*, “USB” must be displayed on the PC screen.

MIXER OUTPUT

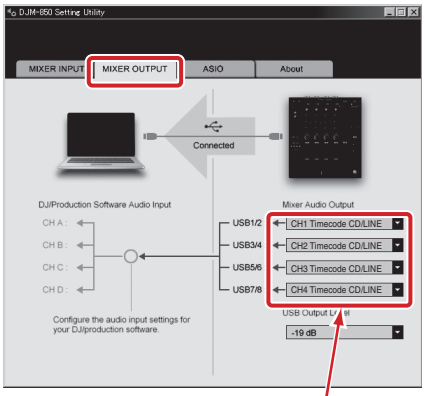

Set the Timecode CD/LINE.

Settings on TRAKTOR

① After starting TRAKTOR, set the deck layout, in "Mixer".

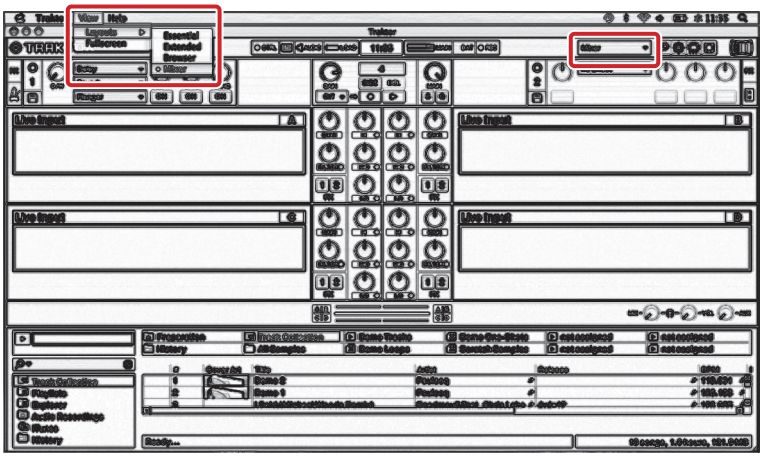

Figure of TRAKTOR2 screen image

② Set the deck A to D, in "Live Input".

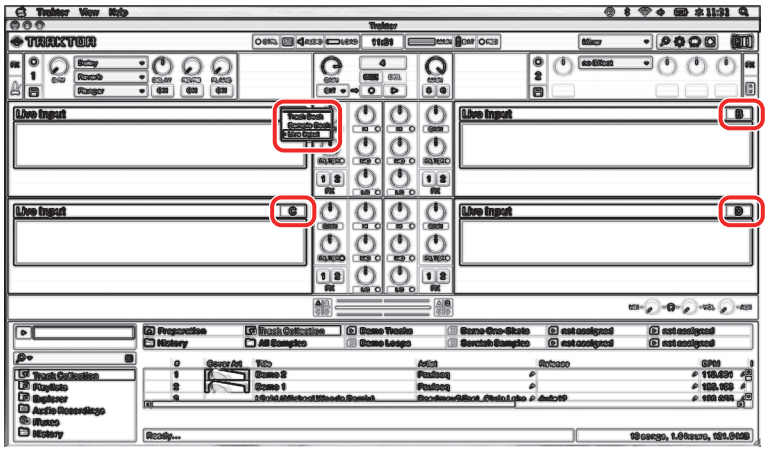

Figure of TRAKTOR2 screen image

③ Select Traktor then Preferences, or click on the "Preferences" button.

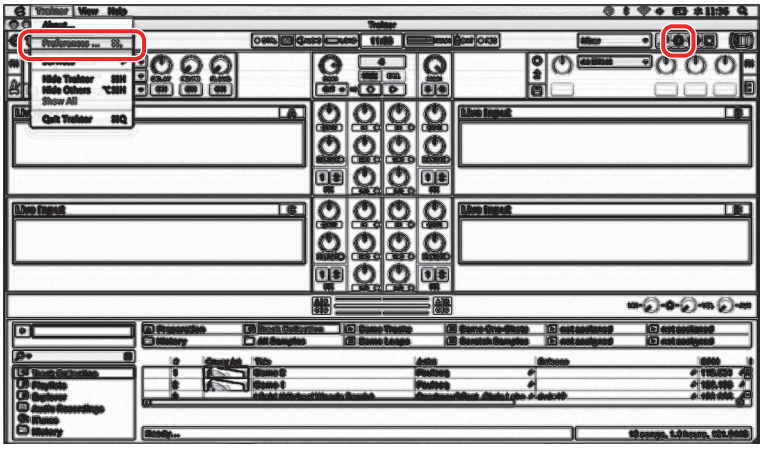

Figure of TRAKTOR2 screen image

④ In "Audio Setup", select "DJM-850".

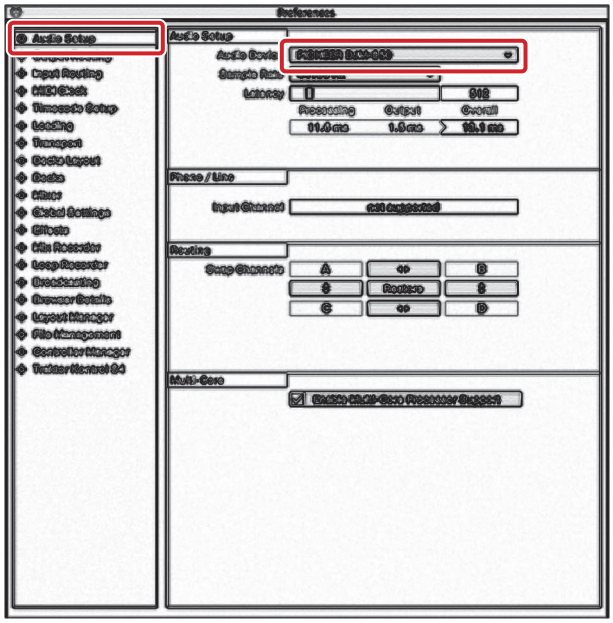

Figure of TRAKTOR2 screen image

⑤ In "Output Routing", select "External, Output Channel A-D".

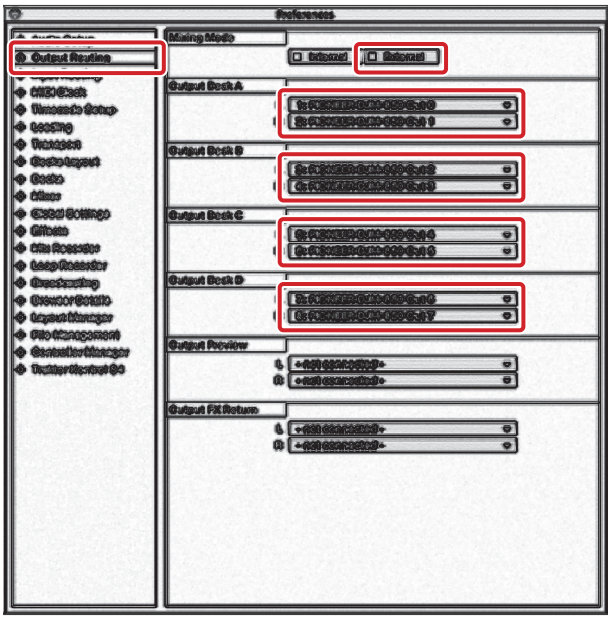

Figure of TRAKTOR2 screen image

⑥ In "Input Routing", select "Input Channel A-D".

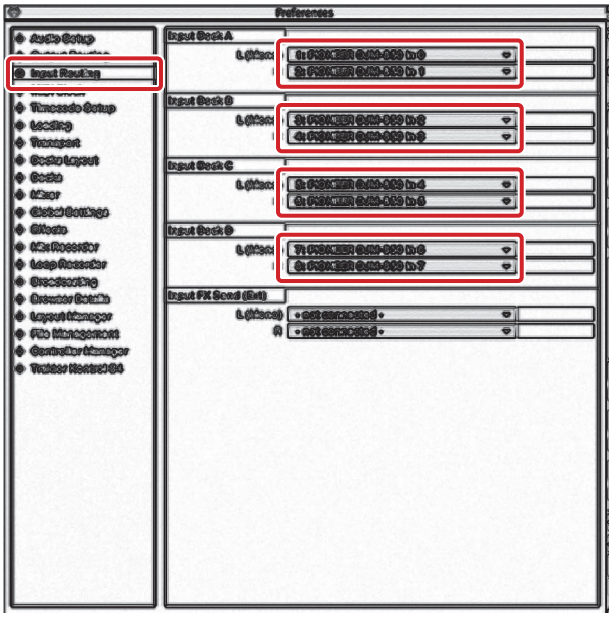

Figure of TRAKTOR2 screen image

With the above settings, CH 1 of the mixer is assigned to Deck A, CH 2 to Deck B, CH 3 to Deck C, and CH 4 to Deck D.

⑦ Close the "Preferences" window, by clicking on the Close "×" button.

⑧ Play the Audio signal of a Player connected to the Mixer, and confirm that a sound is output by the MASTER output.
The TRIM knob, Channel Fader, MASTER LEVEL knob of the input path do operation like normal mixer use.

5.11 IC INFORMATION

■ DYW1806 (MAIN ASSY: IC2803)

MAIN UCOM

• Pin Function

No.	I/O Port Name	I/O	Signal Name	Description	Pull-up (Note)
1	P60/SCL0	O	LINE_SEL1	CH1 LINE/PHONO input line switch	×
2	P61/SDA0	O	LINE_SEL2	CH2 LINE/PHONO input line switch	×
3	P62	O	LINE_SEL3	CH3 LINE/PHONO input line switch	×
4	P63	O	LINE_SEL4	CH4 LINE/PHONO input line switch	×
5	P31/TI03/TO03/INTP4	O	DEBUG_LED	Debug LED indication confirmation	×
6	P64/RD	O	MCPU_RD	Bus control	×
7	P65/WR0	O	MCPU_WR0	Bus control	×
8	P66/WR1	O	NC	Bus control: Not used (open)	×
9	P67/ASTB	O	MCPU_ASTB	Bus control	×
10	P77/EX23/KR7/INTP11	O	RELAY_CONT	Standby mode transition	×
11	P76/EX22/KR6/INTP10	O	CPU_MUTE	Mute signal H: MUTE, L: MUTE cancel	×
12	P75/EX21/KR5/INTP9	O	NC	Not used (open)	×
13	P74/EX20/KR4/INTP8	I	POWER_RESET_A	Standby mode transition	×
14	P73/EX19/KR3	O	V+34D_CONT	Power supply start-up, down for sequence control	×
15	P72/EX18/KR2	O	V+5D_CONT	Power supply start-up, down for sequence control	×
16	P71/EX17/KR1	O	V+3R3D_CONT	Power supply start-up, down for sequence control	×
17	P70/EX16/KR0	O	V+1R2D_CONT	Power supply start-up, down for sequence control	×
18	P06/WAIT	O	SUB_CTRL	NEC B control signal (Communication permission signal to NEC B)	×
19	P05/CLKOUT	O	NC	Not used (open)	×
20	EVSS1	G	GNDD	Ground	–
21	P80/EX0	I/O	MCPU_DATA0	Bus input / output 0	×
22	P81/EX1	I/O	MCPU_DATA1	Bus input / output 1	×
23	P82/EX2	I/O	MCPU_DATA2	Bus input / output 2	×
24	P83/EX3	I/O	MCPU_DATA3	Bus input / output 3	×
25	P84/EX4	I/O	MCPU_DATA4	Bus input / output 4	×
26	P85/EX5	I/O	MCPU_DATA5	Bus input / output 5	×
27	P86/EX6	I/O	MCPU_DATA6	Bus input / output 6	×
28	P87/EX7	I/O	MCPU_DATA7	Bus input / output 7	×
29	P30/INTP3/RTC1HZ	O	SUB_CPU_RESET	SUB UCOM reset	×
30	EVDD1	V	V+3R3E	Power supply (Connect to 3.3 V)	–
31	P50/EX8	I/O	MCPU_DATA8	Bus input / output 8	×
32	P51/EX9	I/O	MCPU_DATA9	Bus input / output 9	×
33	P52/EX10	I/O	MCPU_DATA10	Bus input / output 10	×
34	P53/EX11	I/O	MCPU_DATA11	Bus input / output 11	×
35	P54/EX12	I/O	MCPU_DATA12	Bus input / output 12	×
36	P55/EX13	I/O	MCPU_DATA13	Bus input / output 13	×
37	P56/EX14	I/O	MCPU_DATA14	Bus input / output 14	×
38	P57/EX15	I/O	MCPU_DATA15	Bus input / output 15	×
39	P17/EX31TI02/TO02	I	HWAIT	HWAIT	×
40	P16/EX30/TI01/TO01/INTP5	I	USB_REQ	Communication prohibition signal from USB UCOM (BF) (0 can communicate)	○
41	P15/EX29/RTCDIV/RTCCL	O	USB_RCV	Transmission permission signal to USB UCOM (BF) (1 admits the transmission)	×
42	P14/EX28/RxD3	I	USB_SI	UART input from USB UCOM (BF)	×
43	P13/EX27/TxD3	O	USB_SO	UART output to USB UCOM (BF)	×
44	P12/EX26/SO00/TxD0	O	FPGA_SO	Sync serial data output for FPGA	×
45	P11/EX25/SI00/RxD0	O	USB_RESET	USB reset	×
46	P10/EX24/SCK00	O	FPGA_SCK	Serial clock output for FPGA	×
47	AVREF1	V	V+3R3E	Power supply (Connect to 3.3 V)	–
48	P110/ANO0	I	USB_ERR_MAIN	Error signal from USB	–
49	P111/ANO1	I	VDET	Power supply abnormality detection	–
50	AVREF0	V	V+3R3D_REFA	Power supply (Connect to 3.3 V)	–

Note "–": There is no built-in pulling up function

• Pin Function

No.	I/O Port Name	I/O	Signal Name	Description	Pull-up (Note)
51	AVSS	G	GNDREF_A	Ground	–
52	P157/ANI15	I	VR_TRIM4	Trim 4	–
53	P156/ANI14	I	VR_FADER4	CH4 fader	–
54	P155/ANI13	I	VR_TRIM3	Trim 3	–
55	P154/ANI12	I	VR_TRIM2	Trim 2	–
56	P153/ANI11	I	VR_FADER3	CH3 fader	–
57	P152/ANI10	I	VR_TRIM1	Trim 1	–
58	P151/ANI9	I	VR_FADER_CRS	Cross fader	–
59	P150/ANI8	I	VR_FADER2	CH2 fader	–
60	P27/ANI7	I	VR_FADER1	CH1 fader	–
61	P26/ANI6	O	NC	Not used (open)	–
62	P25/ANI5	O	DSP_RESET	DSP reset	–
63	P24/ANI4	O	DIT_RESET	DIT reset	–
64	P23/ANI3	O	DOUT_SRC_RESET	DIT SRC reset	–
65	P22/ANI2	O	AD_DA_RESET	ADC DAC reset	–
66	P21/ANI1	O	NC	Not used (open)	–
67	P20/ANI0	O	DBG_PORT2(NC)	Palpation port for microcomputer debug	–
68	P130	O	STBY_LED	UTILITY/Standby cancellation key indicator	×
69	P131/TI06/TO06	O	DSP_USB_WP	Write protect (4 MBit serial FLASH for MAIN, DSP common use)	×
70	P04/SCK10/SCL10	O	MFL_SCK	Sync serial clock output for MAIN Flash	×
71	P03/SI10/RxD1/SDA10	I	MFL_RxD	Sync serial data input for MAIN Flash	×
72	P02/SO10/TxD1	O	MFL_TxD	Sync serial data output for MAIN Flash	×
73	P01/TO00	O	MFL_CS	Chip select for MAIN Flash	×
74	P00/TI00	I	EFX_ON/OFF	Beat effect ON/OFF switch	×
75	P145/TI07/TO07	O	MFL_WP	Write protect (4 MBit serial FLASH for built-in MAIN)	×
76	P144/SO20/TxD2	O	MIDI_TXD	MIDI output	×
77	P143/SI20/RxD2/SDA20	O	FPGA_RESET	FPGA reset	×
78	P142/SCK20/SCL20	O	FPGA_XPGM	PROG_B output signal	×
79	P141/PCLBUZ1/INTP7	I	SUB_INT	Notice during the access to FPGA and external interrupt generation signal to SUB UCOM	×
80	P140/PCLBUZ0/INTP6	I	STBY_KEY	Standby cancel interrupt, external interrupt pin	×
81	P120/INTP0/EXLVI	O	DBG_PORT1(NC)	Palpation port for microcomputer debug	×
82	P47/INTP2	O	DBG_PORT0(NC)	Palpation port for microcomputer debug	×
83	P46/INTP1/TI05/TO05	O	DSP_USB_CS	Chip select for DSP Update/USB Boot (course switch)	×
84	P45/SO01	O	DSP_USB_SO	Serial data output for DSP Update/USB Boot	×
85	P44/SI01	I	DSP_USB_SI	Serial data input for DSP Update/USB Boot	×
86	P43/SCK01	O	DSP_USB_CLK	Serial clock output for DSP Update/USB Boot	×
87	P42/TI04/TO04	I	RETERN_IN	RETURN output connection confirmation switch	×
88	P41/TOOL1	O	TOOL1	Clock output for debugger	×
89	P40/TOOL0	I/O	TOOL0	Flash memory programer/Data input, output for debugger	×
90	RESET	I	RESET_OUT	Reset cancellation of MAIN UCOM	–
91	P124/XT2	I	FPGA XINIT	INT_B input signal	–
92	P123/XT1	I	FPGA_DONE	DONE input signal (for end judgments)	–
93	FLMD0	I	FLMD0	Draw a flash memory programming mode	–
94	P122/X2/EXCLK	O	X2	X2 (crystal/ceramic) oscillation	–
95	P121/X1	I	X1	X2 (crystal/ceramic) oscillation	–
96	REGC	O	REGC	Regulator output for internal working	–
97	VSS	G	GNDD	Ground	–
98	EVSS0	G	GNDD	Ground	–
99	VDD	V	V+3R3E	Power supply (Connect to 3.3 V)	–
100	EVDD0	V	V+3R3E	Power supply (Connect to 3.3 V)	–

Note "–": There is no built-in pulling up function

■ DYW1809 (PNLA ASSY: IC6601)

SUB UCOM

• Pin Function

No.	I/O Port Name	I/O	Signal Name	Description	Pull-up (Note)
1	P60/SCL0	O	NC	Not used (open)	×
2	P61/SDA0	O	NC	Not used (open)	×
3	P62	O	NC	Not used (open)	×
4	P63	O	NC	Not used (open)	×
5	P31/TI03/TO03/INTP4	I	CFX_BEAT_SW1	CFX_BEAT1 key input	×
6	P64/RD	I	CFX_BEAT_SW2	CFX_BEAT2 key input	×
7	P65/WR0	I	CFX_BEAT_SW3	CFX_BEAT3 key input	×
8	P66/WR1	I	CFX_BEAT_SW4	CFX_BEAT4 key input	×
9	P67/ASTB	O	NC	Not used (open)	×
10	P77/EX23/KR7/INTP11	O	LED_MTX_SEL0	LED matrix grid selection signal 0	×
11	P76/EX22/KR6/INTP10	O	LED_MTX_SEL1	LED matrix grid selection signal 1	×
12	P75/EX21/KR5/INTP9	O	LED_MTX_SEL2	LED matrix grid selection signal 2	×
13	P74/EX20/KR4/INTP8	O	LED_MTX_SEL3	LED matrix grid selection signal 3	×
14	P73/EX19/KR3	O	LED_MTX_SEL4	LED matrix grid selection signal 4	×
15	P72/EX18/KR2	O	LED_MTX_SEL5	LED matrix grid selection signal 5	×
16	P71/EX17/KR1	O	LED_MTX_SEL6	LED matrix grid selection signal 6	×
17	P70/EX16/KR0	O	LED_MTX_SEL7	LED matrix grid selection signal 7	×
18	P06/WAIT	O	VR_SEL_0_0	VR select (0_0, 0_1) for IC6602	×
19	P05/CLKOUT	O	VR_SEL_0_1		×
20	EVSS1	G	GNDD	Ground for port	–
21	P80/EX0	O	LED_OUT8	LED lighting signal 8	×
22	P81/EX1	O	LED_OUT7	LED lighting signal 7	×
23	P82/EX2	O	LED_OUT6	LED lighting signal 6	×
24	P83/EX3	O	LED_OUT5	LED lighting signal 5	×
25	P84/EX4	O	LED_OUT4	LED lighting signal 4	×
26	P85/EX5	O	LED_OUT3	LED lighting signal 3	×
27	P86/EX6	O	LED_OUT2	LED lighting signal 2	×
28	P87/EX7	O	LED_OUT1	LED lighting signal 1	×
29	P30/INTP3/RTC1HZ	O	LED_OUT0	LED lighting signal 0	×
30	EVDD1	V	V+3R3D_PA	Power supply for port	–
31	P50/EX8	O	LED_OUT9	LED lighting signal 9	×
32	P51/EX9	O	LED_OUT10	LED lighting signal 10	×
33	P52/EX10	O	LED_OUT11	LED lighting signal 11	×
34	P53/EX11	O	LED_OUT12	LED lighting signal 12	×
35	P54/EX12	O	LED_OUT13	LED lighting signal 13	×
36	P55/EX13	O	LED_OUT14	LED lighting signal 14	×
37	P56/EX14	O	LED_OUT15	LED lighting signal 15	×
38	P57/EX15	O	NC	Not used (open)	×
39	P17/EX31TI02/TO02	O	KEY_MTX_SEL0	Key matrix grid selection signal 0	×
40	P16/EX30/TI01/TO01/INTP5	O	KEY_MTX_SEL1	Key matrix grid selection signal 1	×
41	P15/EX29/RTCDIV/RTCCL	O	KEY_MTX_SEL2	Key matrix grid selection signal 2	×
42	P14/EX28/RxD3	O	KEY_MTX_SEL3	Key matrix grid selection signal 3	×
43	P13/EX27/TxD3	O	KEY_MTX_SEL4	Key matrix grid selection signal 4	×
44	P12/EX26/SO00/TxD0	O	KEY_MTX_SEL5	Key matrix grid selection signal 5	×
45	P11/EX25/SI00/RxD0	O	KEY_MTX_SEL6	Key matrix grid selection signal 6	×
46	P10/EX24/SCK00	O	KEY_MTX_SEL7	Key matrix grid selection signal 7	×
47	AVREF1	V	V+3R3D_REFB_PA	Reference power supply for DAC	–
48	P110/ANO0	I	BEAT_DOWN	Beat down key input	–
49	P111/ANO1	I	BEAT_UP	Beat up key input	–
50	AVREF0	V	V+3R3D_REFB_PA	Reference power supply for AD	–

Note "–": There is no built-in pulling up function

• Pin Function

No.	I/O Port Name	I/O	Signal Name	Description	Pull-up (Note)
51	AVSS	G	GNDD_REFB_PA	Reference ground for AD/DA	–
52	P157/ANI15	I	VR_IN1	VR IC 1_1 (for IC6604)	–
53	P156/ANI14	I	VR_IN2	VR IC 1_2 (for IC6604)	–
54	P155/ANI13	I	VR_IN3	VR IC 2_1 (for IC6603)	–
55	P154/ANI12	I	VR_IN4	VR IC 2_2 (for IC6603)	–
56	P153/ANI11	I	VR_IN5	VR IC 3_1 (for IC6602)	–
57	P152/ANI10	I	VR_IN6	VR IC 3_2 (for IC6602)	–
58	P151/ANI9	I	EFX_CH_SEL	Effect CH select (Perform a voltage value in AD)	–
59	P150/ANI8	O	SUB_INT	Interrupt request signal to MAIN UCOM	–
60	P27/ANI7	I	KEY_IN7	Key input signal 7	–
61	P26/ANI6	I	KEY_IN6	Key input signal 6	–
62	P25/ANI5	I	KEY_IN5	Key input signal 5	–
63	P24/ANI4	I	KEY_IN4	Key input signal 4	–
64	P23/ANI3	I	KEY_IN3	Key input signal 3	–
65	P22/ANI2	I	KEY_IN2	Key input signal 2	–
66	P21/ANI1	I	KEY_IN1	Key input signal 1	–
67	P20/ANI0	I	KEY_IN0	Key input signal 0	–
68	P130	O	NC	Not used (open)	×
69	P131/TI06/TO06	I	CFX1_SW	CFX_SW1 key input	×
70	P04/SCK10/SCL10	I	CFX2_SW	CFX_SW2 key input	×
71	P03/SI10/RxD1/SDA10	O	NC	Not used (open)	×
72	P02/SO10/TxD1	O	NC	Not used (open)	×
73	P01/TO00	O	VR_SEL_1_0	VR select (1_0, 1_1) for IC6603, 6604	×
74	P00/TI00	O	VR_SEL_1_1		×
75	P145/TI07/TO07	O	FL_BK	Break signal for FL	×
76	P144/SO20/TxD2	O	FL_TXD	Sync serial data output for FL update	×
77	P143/SI20/RxD2/SDA20	I	TAP_SW1	TAP SW key input	×
78	P142/SCK20/SCL20	O	FL_SCK	Serial clock output for FL update	×
79	P141/PCLBUZ1/INTP7	I	CFX3_SW	CFX_SW3 key input	×
80	P140/PCLBUZ0/INTP6	I	CFX4_SW	CFX_SW4 key input	×
81	P120/INTP0/EXLVI	O	FPGA_SIGNAL	Communication start signal to FPGA	×
82	P47/INTP2	O	NC	Not used (open)	×
83	P46/INTP1/TI05/TO05	O	FL_LAT	Latch signal for FL	×
84	P45/SO01	O	FPGA_TX_DAT	Transmit data of FPGA	×
85	P44/SI01	I	FPGA_RX_DAT	Receive data from FPGA	×
86	P43/SCK01	O	FPGA_CLK	Data transmission and reception clock with FPGA	×
87	P42/TI04/TO04	I	SUB_CTRL	SUB UCOM control signal (Communication permission signal from MAIN UCOM)	×
88	P41/TOOL1	O	TOOL1	Clock output for debugger	×
89	P40/TOOL0	O	TOOL0	Flash memory programmer/Clock input, output for debugger	×
90	RESET	I	SUB_CPU_RESET	Reset cancellation from MAIN UCOM	–
91	P124/XT2	I	ENC1_1	Encoder 1	–
92	P123/XT1	I	ENC1_0	Encoder 1	–
93	FLMD0	I	FLMD0	Draw a flash memory programming mode	–
94	P122/X2/EXCLK	O	X2	X1 (crystal/ceramic) oscillation	–
95	P121/X1	I	X1	X1 (crystal/ceramic) oscillation	–
96	REGC	V	REGC	Regulator output for internal working, be connected to Vss through a capacitor.	–
97	VSS	G	GNDD	Ground	–
98	EVSS0	G	GNDD	Ground for port	–
99	VDD	V	V+3R3D_PA	Power supply	–
100	EVDD0	V	V+3R3D_PA	Power supply for port	–

Note "–": There is no built-in pulling up function

■ D810K013BZKB400 (MAIN ASSY: IC3201)

DSP

• Pin Function

Pin No.	Pin Name	I/O	Function and Operation
A1	Vss	G	GND
A2	Vss	G	GND
A3	Vss	G	GND
A4	AHCLKR0/RMII_MHZ_50_CLK/GP2[14]/BOOT[11]	I	McASP0 receive master clock
A5	AXR0[11]/AXR2[0]/GP3[11]	O	Not used (open)
A6	AXR0[7]/MDIO_CLK/GP3[7]	I	CH1 ANALOG IN
A7	AXR0[3]/RMII_CRS_DV/AXR2[2]/GP3[7]	I	RETURN IN
A8	EMB_RAS	O	SDRAM connection
A9	EMB_A[10]/GP7[12]	O	SDRAM address
A10	EMB_A[3]/GP7[5]	O	SDRAM address
A11	EMB_A[7]/GP7[9]	O	SDRAM address
A12	EMB_WE_DQM[3]	O	Not used (open)
A13	EMB_D[24]	O	Not used (open)
A14	EMB_D[26]	O	Not used (open)
A15	Vss	G	GND
A16	Vss	G	GND
B1	RSV2	V	Power supply 1.2 V
B2	Vss	G	GND
B3	Vss	G	GND
B4	ACLKR0/ECAP1/APWM1/GP2[15]	I	McASP0 receive bit clock
B5	AHCLKX0/AHCLKX2/USB_REFCLKIN/GP2[11]	I	McASP0 transmit master clock
B6	AXR0[8]/MDIO_D/GP3[8]	I	CH3 ANALOG IN
B7	AXR0[4]/RMII_RXD[0]/AXR2[1]/GP3[4]	I	MIC IN
B8	AXR0[0]/RMII_TXD[0]/AFSR2/GP3[0]	I	CH2 ANALOG IN
B9	EMB_BA[1]/GP7[0]	O	SDRAM bank address
B10	EMB_A[2]/GP7[4]	O	SDRAM address
B11	EMB_A[6]/GP7[8]	O	SDRAM address
B12	EMB_A[11]/GP7[13]	O	SDRAM address
B13	EMB_WE_DQM[2]	O	Not used (open)
B14	EMB_D[25]	O	Not used (open)
B15	EMB_A[12]/GP3[13]	O	SDRAM address
B16	DVDD	V	Power supply 3.3 V
C1	USB1_VDDA33		Not used (open)
C2	USB1_VDDA18		Not used (open)
C3	USB0_VDDA12		GND
C4	AFSR0/GP3[12]	I	McASP0 receive frame sync
C5	ACLKX0/ECAP0/APWM0/GP2[12]	I	McASP0 transmit bit clock
C6	UART1_RXD/AXR0[9]/GP3[9]	I	CH4 ANALOG IN
C7	AXR0[5]/RMII_RXD[1]/AFSX2/GP3[5]	I	CH3 USB IN
C8	AXR0[1]/RMII_TXD[1]/ACLKX2/GP3[1]	I	CH1 USB IN
C9	EMB_BA[0]/GP7[1]	O	SDRAM bank address
C10	EMB_A[1]/GP7[3]	O	SDRAM address
C11	EMB_A[5]/GP7[7]	O	SDRAM address
C12	EMB_A[9]/GP7[11]	O	SDRAM address
C13	EMB_SDCKE	O	SDRAM connection
C14	EMB_CLK	O	SDRAM clock
C15	EMB_WE_DQM[1]/GP5[14]	O	SDRAM connection
C16	EMB_D[8]/GP6[8]	I/O	SDRAM data bus
D1	PLL0_VDDA	V	Power supply 1.2 V
D2	USB0_ID	G	Not used (open)
D3	USB0_VBUS	G	Not used (open)
D4	AMUTE1/EHRPWMTZ/GP4[14]	O	Not used (open)
D5	AFSX0/GP2[13]/BOOT[10]	I	McASP0 transmit frame sync
D6	UART1_TXD/AXR0[10]/GP3[10]	O	Not used (open)
D7	AXR0[6]/RMII_RXER/ACLKR2/GP3[6]	I	CH2 USB IN
D8	AXR0[2]/RMII_TXEN/AXR2[3]/GP3[2]	I	CH4 USB IN
D9	EMB_CS[0]	O	SDRAM chip select
D10	EMB_A[0]/GP7[2]	O	SDRAM address
D11	EMB_A[4]/GP7[6]	O	SDRAM address

• Pin Function

Pin No.	Pin Name	I/O	Function and Operation
D12	EMB_A[8]/GP7[10]	O	SDRAM address
D13	EMB_D[9]/GP6[9]	I/O	SDRAM data bus
D14	EMB_D[10]/GP6[10]	I/O	SDRAM data bus
D15	EMB_D[11]/GP6[11]	I/O	SDRAM data bus
D16	EMB_D[12]/GP6[12]	I/O	SDRAM data bus
E1	PLL0_VSSA	G	GND
E2	OSCVSS	G	GND
E3	USB0_VDDA18		Not used (open)
E4	USB0_DRVVBUS/GP4[15]	O	Not used (open)
E5	DVDD	V	Power supply 3.3 V
E6	Vss	G	GND
E7	Vss	G	GND
E8	DVDD	V	Power supply 3.3 V
E9	DVDD	V	Power supply 3.3 V
E10	Vss	G	GND
E11	Vss	G	GND
E12	DVDD	V	Power supply 3.3 V
E13	EMB_D[13]/GP6[13]	I/O	SDRAM data bus
E14	EMB_D[27]	O	Not used (open)
E15	EMB_D[28]	O	Not used (open)
E16	EMB_D[14]/GP6[14]	I/O	SDRAM data bus
F1	OSCOUT	O	Not used (open)
F2	OSCIN	I	CLOCK
F3	USB0_VSSA		Not used (open)
F4	USB0_DP		Not used (open)
F5	DVDD	V	Power supply 3.3 V
F6	CVDD	V	Power supply 1.2 V
F7	RSV1		Not used (open)
F8	Vss	G	GND
F9	Vss	G	GND
F10	Vss	G	GND
F11	DVDD	V	Power supply 3.3 V
F12	DVDD	V	Power supply 3.3 V
F13	EMB_D[15]/GP6[15]	I/O	SDRAM data bus
F14	EMB_D[29]	O	Not used (open)
F15	EMB_D[30]	O	Not used (open)
F16	EMB_D[0]/GP6[0]	I/O	SDRAM data bus
G1	RTC_CVDD	V	Power supply 1.2 V
G2	RTC_VSS	G	GND
G3	RESET	I	Reset signal
G4	USB0_DM		Not used (open)
G5	DVDD	V	Power supply 3.3 V
G6	CVDD	V	Power supply 1.2 V
G7	CVDD	V	Power supply 1.2 V
G8	Vss	G	GND
G9	Vss	G	GND
G10	CVDD	V	Power supply 1.2 V
G11	CVDD	V	Power supply 1.2 V
G12	DVDD	V	Power supply 3.3 V
G13	EMB_D[1]/GP6[1]	I/O	SDRAM data bus
G14	EMB_D[31]	O	Not used (open)
G15	EMB_D[16]	O	Not used (open)
G16	EMB_D[2]/GP6[2]	I/O	SDRAM data bus
H1	RTC_XI	I	Power supply 1.2 V
H2	RTC_XO	O	Not used (open)
H3	TCK	I	JTAG test clock
H4	USB0_VSSA33		Not used (open)
H5	USB0_VDDA33		Not used (open)
H6	CVDD	V	Power supply 1.2 V

• Pin Function

Pin No.	Pin Name	I/O	Function and Operation
H7	CVDD	V	Power supply 1.2 V
H8	Vss	G	GND
H9	Vss	G	GND
H10	CVDD	V	Power supply 1.2 V
H11	CVDD	V	Power supply 1.2 V
H12	CVDD	V	Power supply 1.2 V
H13	EMB_D[3]/GP6[3]	I/O	SDRAM data bus
H14	EMB_D[17]	O	Not used (open)
H15	EMB_D[18]	O	Not used (open)
H16	EMB_D[4]/GP6[4]	I/O	SDRAM data bus
J1	TMS	I	JTAG test mode select
J2	TDI	I	JTAG test data input
J3	TDO	O	JTAG test data output
J4	TRST	I	JTAG test reset
J5	EMU[0]	I	Miscellaneous emulation pin
J6	CVDD	V	Power supply 1.2 V
J7	CVDD	V	Power supply 1.2 V
J8	Vss	G	GND
J9	Vss	G	GND
J10	CVDD	V	Power supply 1.2 V
J11	CVDD	V	Power supply 1.2 V
J12	CVDD	V	Power supply 1.2 V
J13	EMB_D[5]/GP6[5]	I/O	SDRAM data bus
J14	EMB_D[19]	O	Not used (open)
J15	EMB_D[6]/GP6[6]	I/O	SDRAM data bus
J16	EMB_D[7]/GP6[7]	I/O	SDRAM data bus
K1	RTCK (GP7[14])	O	Not used (open)
K2	AHCLKX1/EPWM0B/GP3[14]	I	McASP1 transmit master clock
K3	ACLKX1/EPWM0A/GP3[15]	I	McASP1 transmit bit clock
K4	AFSX1/EPWMSYNCI/EPWMSYNCO/GP4[10]	I	McASP1 transmit frame sync
K5	DVDD	V	Power supply 3.3 V
K6	CVDD	V	Power supply 1.2 V
K7	CVDD	V	Power supply 1.2 V
K8	Vss	G	GND
K9	Vss	G	GND
K10	CVDD	V	Power supply 1.2 V
K11	CVDD	V	Power supply 1.2 V
K12	DVDD	V	Power supply 3.3 V
K13	EMB_D[20]	O	Not used (open)
K14	EMB_WE_DQM[0]/GP5[15]	O	SDRAM connection
K15	EMB_WE	O	SDRAM connection
K16	EMB_D[21]	O	Not used (open)
L1	AHCLKR1/GP4[11]	I	McASP1 receive master clock
L2	ACLKR1/ECAP2/APWM2/GP4[12]	I	McASP1 receive bit clock
L3	AFSR1/GP4[13]	I	McASP1 receive frame sync
L4	AMUTE0/RESETOUT	O	Not used (open)
L5	DVDD	V	Power supply 3.3 V
L6	CVDD	V	Power supply 1.2 V
L7	Vss	G	GND
L8	Vss	G	GND
L9	Vss	G	GND
L10	Vss	G	GND
L11	DVDD	V	Power supply 3.3 V
L12	DVDD	V	Power supply 3.3 V
L13	EMB_CAS	O	SDRAM column address strobe
L14	EMB_D[22]	O	Not used (open)
L15	EMB_D[23]	O	Not used (open)
L16	EMA_CAS/EMA_CS[4]/GP2[1]	O	Not used (open)
M1	AXR1[9]/GP4[9]	O	SEND OUT

• Pin Function

Pin No.	Pin Name	I/O	Function and Operation
M2	AXR1[8]/EPWM1A/GP4[8]	O	MASTER L OUT
M3	AXR1[7]/EPWM1B/GP4[7]	O	USB CH4 OUT
M4	AXR1[6]/EPWM2A/GP4[6]	O	USB CH1 OUT
M5	DVDD	V	Power supply 3.3 V
M6	Vss	G	GND
M7	Vss	G	GND
M8	DVDD	V	Power supply 3.3 V
M9	DVDD	V	Power supply 3.3 V
M10	Vss	G	GND
M11	Vss	G	GND
M12	DVDD	V	Power supply 3.3 V
M13	EMA_WE/UHPI_URW/AXR0[12]/GP2[3]/BOOT[14]	O	FPGA connection
M14	EMA_WE_DQM[0]/UHPI_HINT/AXR0[15]/GP2[9]	O	Not used (open)
M15	EMA_D[7]/MMCSD_DAT[7]/UHPI_HD[7]/GP0[7]/BOOT[13]	I/O	External data bus
M16	EMA_D[15]/UHPI_HD[15]/LCD_D[15]/GP0[15]	I/O	External data bus
N1	AXR1[5]/EPWM2B/GP4[5]	O	MASTER R OUT
N2	AXR1[4]/EQEP1B/GP4[4]	O	REC OUT
N3	AXR1[10]/GP5[10]	O	USB CH2 OUT
N4	SPI0_SCS[0]/UART0_RTS/EQEP0B/GP5[4]/BOOT[4]	O	SPI CHIP SELECT
N5	SPI1_SIMO[0]/I2C1_SDA/GP5[6]/BOOT[6]	O	Not used (open)
N6	EMA_WAIT[0]/UHPI_HRDY/GP2[10]	I	PULL UP (3.3 V)
N7	EMA_RAS/EMA_CS[5]/GP2[2]	O	Not used (open)
N8	EMA_A[10]/LCD_VSYNC/GP1[10]	O	Not used (open)
N9	EMA_A[3]/LCD_D[6]/GP1[3]	O	External data bus
N10	EMA_A[7]/LCD_D[0]/GP1[7]	O	External data bus
N11	EMA_A[12]/LCD_MCLK/GP1[12]	O	Not used (open)
N12	EMA_D[8]/UHPI_HD[8]/LCD_D[8]/GP0[8]	I/O	External data bus
N13	EMA_D[6]/MMCSD_DAT[6]/UHPI_HD[6]/GP0[6]	I/O	External data bus
N14	EMA_D[14]/UHPI_HD[14]/LCD_D[14]/GP0[14]	I/O	External data bus
N15	EMA_D[5]/MMCSD_DAT[5]/UHPI_HD[5]/GP0[5]	I/O	External data bus
N16	EMA_D[13]/UHPI_HD[13]/LCD_D[13]/GP0[13]	I/O	External data bus
P1	AXR1[3]/EQEP1A/GP4[3]	O	BOOTH OUT
P2	AXR1[2]/GP4[2]	O	DIGITAL OUT
P3	UART0_TXD/I2C0_SCL/TM640_OUT12/GP5[9]/BOOT[9]	O	Not used (open)
P4	SPI1_SCS[0]/UART2_TXD/GP5[13]	O	Not used (open)
P5	SPI1_SOMI[0]/I2C1_SCL/GP5[5]/BOOT[5]	O	Not used (open)
P6	SPI0_SIMO[0]/EQEP0S/GP5[1]/BOOT[1]	O	BOOT mode setting/ For SPI communication
P7	EMA_CS[2]/UHPI_HCS/GP2[5]/BOOT[15]	O	Not used (open)
P8	EMA_BA[1]/LCD_D[5]/UHPI_HHWL/GP1[13]	O	External address
P9	EMA_A[2]/MMCSD_CMD/UHPI_HCNTL1/GP1[2]	O	External address
P10	EMA_A[6]/LCD_D[1]/GP1[6]	O	External address
P11	EMA_A[11]/LCD_AC_ENB_CS/GP1[11]	O	Not used (open)
P12	EMA_WE_DQM[1]/UHPI_HDS2/AXR0[14]/GP2[8]	O	Not used (open)
P13	EMA_D[4]/MMCSD_DAT[4]/UHPI_HD[4]/GP0[4]	I/O	External data bus
P14	EMA_D[12]/UHPI_HD[12]/LCD_D[12]/GP0[12]	I/O	External data bus
P15	EMA_D[3]/MMCSD_DAT[3]/UHPI_HD[3]/GP0[3]	I/O	External data bus
P16	EMA_D[11]/UHPI_HD[11]/LCD_D[11]/GP0[11]	I/O	External data bus
R1	DVDD	V	Power supply 3.3 V
R2	AXR1[1]/GP4[1]	O	USB CH3 OUT
R3	UART0_RXD/I2C0_SDA/TIM64P0_IN12/GP5[8]/BOOT[8]	O	Not used (open)
R4	SPI1_ENA/UART2_RXD/GP5[12]	O	For DSP processing cycle measurement
R5	SPI0_ENA/UART0_CTS/EQEP0A/GP5[3]/BOOT[3]	O	For SPI communication
R6	SPI0_SOMI[0]/EQEP0I/GP5[0]/BOOT[0]	I	BOOT mode setting/ For SPI communication
R7	EMA_OE/UHPI_HDS1/AXR0[13]/GP2[7]	O	FPGA connection
R8	EMA_BA[0]/LCD_D[4]/GP1[14]	O	Not used (open)
R9	EMA_A[1]/MMCSD_CLK/UHPI_HCNTL0/GP1[1]	O	External address
R10	EMA_A[5]/LCD_D[2]/GP1[5]	O	External address
R11	EMA_A[9]/LCD_HSYNC/GP1[9]	O	External address
R12	EMA_CLK/OBSCLK/AHCLKR2/GP1[15]	O	Not used (open)

• Pin Function

Pin No.	Pin Name	I/O	Function and Operation
R13	EMA_D[2]/MMCSD_DAT[4]/UHPI_HD[2]/GP0[2]	I/O	External data bus
R14	EMA_D[10]/UHPI_HD[10]/LCD_D[10]/GP0[10]	I/O	External data bus
R15	EMA_D[1]/MMCSD_DAT[1]/UHPI_HD[1]/GP0[1]	I/O	External data bus
R16	DVDD	V	Power supply 3.3 V
T1	Vss	G	GND
T2	Vss	G	GND
T3	AXR1[0]/GP4[0]	O	HEAD PHONE OUT
T4	AXR1[11]/GP5[11]	O	Not used (open)
T5	SPI0_CLK/EQEP1I/GP5[2]/BOOT[2]	I/O	BOOT mode setting/ SPI CLOCK
T6	SPI1_CLK/EQEP1S/GP5[7]/BOOT[7]	I	BOOT mode setting
T7	EMA_CS[3]/AMUTE2/GP2[6]	O	FPGA connection
T8	EMA_CS[0]/UHPI_HAS/GP2[4]	O	Not used (open)
T9	EMA_A[0]/LCD_D[7]/GP1[0]	O	External address
T10	EMA_A[4]/LCD_D[3]/GP1[4]	O	External address
T11	EMA_A[8]/LCD_D[3]/GP1[4]	O	External address
T12	EMA_SDCKE/GP2[0]	O	Not used (open)
T13	EMA_D[0]/MMCSD_DAT[0]/UHPI_HD[0]/GP0[0]/BOOT[12]	I/O	External data bus
T14	EMA_D[9]/UHPI_HD[9]/LCD_D[9]/GP0[9]	I/O	External data bus
T15	Vss	G	GND
T16	Vss	G	GND

■ ADSP-BF525BBCZ-5A (MAIN ASSY: IC2603)

USB UCOM

• Pin Function

Pin No.	Pin Name	I/O	Function and Operation
A01	VSS	G	VSS (Ground)
A02	PF9/PPI D9/RSCLK1/xSPISEL6	I	Bit clock for receive (CH3, CH4)
A03	PF11/PPI D11/TFS1/CZM	I	LR clock for transmission (CH3, CH4)
A04	SCL	I/O	Not used
A05	PF13/PPI D13/TSCLK1/xSPISEL3/CUD	I	Bit clock for transmission (CH3, CH4)
A06	PF15/PPI D15/DR1SEC/UART1RX/TACI3	I	Audio input (CH4)
A07	PH0/ND_D0/HOST_D0	I	Not used
A08	PH2/ND_D2/HOST_D2	I	Not used
A09	PH4/ND_D4/HOST_D4	I	Not used
A10	XTAL	O	Clock output
A11	CLKIN	I	Clock input
A12	PH8/xSPISEL4/HOST_D8/TACLK2	I	Not used
A13	PH10/xND_CE/HOST_D10	I	Not used
A14	RTXI	I	Real time clock input
A15	RTXO	O	Not used
A16	VDDRTC	V	Power supply for real time clock
A17	VSS	G	VSS (Ground)
A18	USB_XO	O	USB clock output
A19	USB_XI	I	USB clock input
A20	VSS	G	VSS (Ground)
B01	PF7/PPI D7/DR0SEC/ND_D7A/TACI1	I	Audio input (CH2)
B02	PF8/PPI D8/DR1PRI	I	Audio input (CH3)
B03	PF10/PPI D10/RFS1/xSPISEL7	I	LR clock for receive (CH3, CH4)
B04	SDA	I/O	Not used
B05	PF12/PPI D12/DT1PRI/xSPISEL2/CDG	O	Audio output (CH3)
B06	PF14/PPI D14/DT1SEC/UART1TX	O	Audio output (CH4)
B07	PH1/ND_D1/HOST_D1	I	Not used
B08	PH3/ND_D3/HOST_D3	I	Not used
B09	PH5/ND_D5/HOST_D5	I	Not used
B10	PH6/ND_D6/HOST_D6	I	Not used
B11	PH7/ND_D7/HOST_D7	I	Not used
B12	PH9/xSPISEL5/HOST_D9/TACLK3	I	Not used
B13	PH11/xND_WE/HOST_D11	I	Not used
B14	PH12/xND_RE/HOST_D12	I	Not used
B15	PH13/xND_BUSY/HOST_D13	I	Not used
B16	PH14/ND_CLE/HOST_D14	I	Not used
B17	PH15/ND_ALE/HOST_D15	I	Not used
B18	RESET~	I	Reset
B19	NMI~	I	Non-Maskable interrupt
B20	VSS	G	VSS (Ground)
C01	PF5/PPI D5/TSCLK0/ND_D5A/TACLK1	I	Bit clock for transmission (CH1, CH2)
C02	PF6/PPI D6/DT0SEC/ND_D6A/TACI0	O	Audio output (CH2)
C19	CLKBUF	O	Clock buffer
C20	USB_ID	I	USB mode judgment
D01	PF3/PPI D3/DT0PRI/ND_D3A	O	Audio output (CH1)
D02	PF4/PPI D4/TFS0/ND_D4A/TACLK0	I	LR clock for transmission (CH1, CH2)
D19	VDDUSB	V	3.3 V USB reference voltage
D20	USB_RSET	I	USB OTG setting
E01	PF1/PPI D1/RFS0/ND_D1A	I	LR clock for receive (CH1, CH2)
E02	PF2/PPI D2/RSCLK0/ND_D2A	I	Bit clock for receive (CH1, CH2)
E19	USB_VBUS	I	5 V voltage for USB
E20	USB_DP	I/O	USB data line (Differential +)
F01	PF0/PPI D0/DR0PRI /ND_D0A	I	Audio input (CH1)
F02	PPI_FS1/TMR0	O	Not used
F19	VDDEXT	V	Power supply voltage for I/O
F20	USB_DM	I/O	USB data line (Differential -)
G01	PG15/TFS0A/HOST_CE	I	USB_RCV: UART receive information (MAIN)
G02	PPI_CLK/TMRCLK	I	Not used
G07	VDDEXT	V	Power supply voltage for I/O

• Pin Function

Pin No.	Pin Name	I/O	Function and Operation
G08	VDDEXT	V	Power supply voltage for I/O
G09	VDDEXT	V	Power supply voltage for I/O
G10	VDDEXT	V	Power supply voltage for I/O
G11	VDDEXT	V	Power supply voltage for I/O
G12	VDDINT	V	Power supply voltage for internal core
G13	VDDINT	V	Power supply voltage for internal core
G14	VDDINT	V	Power supply voltage for internal core
G19	PG~	I	Power supply surveillance
G20	VDDUSB	V	3.3 V power supply voltage for USB
H01	PG13/DMAR0/UART1RXA/HOST_ADDR/TACI2	I	UART communication receive line (MAIN)
H02	PG14/TSCLK0A1/xHOST_RD	O	USB_REQ: UART communication request (MAIN)
H07	VDDEXT	V	Power supply voltage for I/O
H08	VDDEXT	V	Power supply voltage for I/O
H09	VSS	G	VSS (Ground)
H10	VSS	G	VSS (Ground)
H11	VSS	G	VSS (Ground)
H12	VSS	G	VSS (Ground)
H13	VSS	G	VSS (Ground)
H14	VDDINT	V	Power supply voltage for internal core
H19	USB_VREF	I	USB reference power supply voltage
H20	EXT_WAKE1	O	Not used
J01	PG11/TMR7/xHOST_WR	I	Not used
J02	PG12/DMAR1/UART1TXA/HOST_ACK	O	UART communication transmission line (MAIN)
J07	VDDEXT	V	Power supply voltage for I/O
J08	VDDEXT	V	Power supply voltage for I/O
J09	VSS	G	VSS (Ground)
J10	VSS	G	VSS (Ground)
J11	VSS	G	VSS (Ground)
J12	VSS	G	VSS (Ground)
J13	VSS	G	VSS (Ground)
J14	VDDINT	V	Power supply voltage for internal core
J19	AMS0~	O	Not used
J20	EXT_WAKE0	O	Not used
K01	PG9/TMR5/RSCLK0A/TACI5	O	UART1 communication error (MAIN)
K02	PG10/TMR6/TSCLK0A/TACI6	I	Not used
K07	VDDEXT	V	Power supply voltage for I/O
K08	VDDEXT	V	Power supply voltage for I/O
K09	VSS	G	VSS (Ground)
K10	VSS	G	VSS (Ground)
K11	VSS	G	VSS (Ground)
K12	VSS	G	VSS (Ground)
K13	VSS	G	VSS (Ground)
K14	VDDINT	V	Power supply voltage for internal core
K19	AMS1~	O	Not used
K20	CLKOUT	O	Clock output for SDRAM
L01	PG7/TMR3/DR0PRIA/UART0TX	I	Not used
L02	PG8/TMR4/RFS0A/UART0RX/TACI4	I	MIDI receive (UART)
L07	VDDEXT	V	Power supply voltage for I/O
L08	VDDMEM	V	Power supply voltage for I/O
L09	VSS	G	VSS (Ground)
L10	VSS	G	VSS (Ground)
L11	VSS	G	VSS (Ground)
L12	VSS	G	VSS (Ground)
L13	VSS	G	VSS (Ground)
L14	VDDINT	V	Power supply voltage for internal core
L19	VPPOTP	V	Power supply voltage for one time programming
L20	AMS3~	O	Not used
M01	PG5/TMR1/PPI_FS2	I	Not used
M02	PG6/DT0PRIA/TMR2/PPI_FS3	I	Not used

• Pin Function

Pin No.	Pin Name	I/O	Function and Operation
M07	VDDMEM	V	Power supply voltage for memory
M08	VDDMEM	V	Power supply voltage for memory
M09	VSS	G	VSS (Ground)
M10	VSS	G	VSS (Ground)
M11	VSS	G	VSS (Ground)
M12	VSS	G	VSS (Ground)
M13	VSS	G	VSS (Ground)
M14	VDDINT	V	Power supply voltage for internal core
M19	AMS2~	O	Not used
M20	ARE~	O	Not used
N01	PG3/MISO/DR0SECA	O	SPI output (For starting)
N02	PG4/MOSI/DT0SECA	I	SPI input (For starting)
N07	VDDMEM	V	Power supply voltage for memory
N08	VDDMEM	V	Power supply voltage for memory
N09	VSS	G	VSS (Ground)
N10	VSS	G	VSS (Ground)
N11	VSS	G	VSS (Ground)
N12	VSS	G	VSS (Ground)
N13	VSS	G	VSS (Ground)
N14	VDDINT	V	Power supply voltage for internal core
N19	AWE~	O	Not used
N20	AOE~	O	Not used
P01	PG1/xSPISS/xSPISEL1	I	SPI slave select (For starting)
P02	PG2/SCK	I	SPI clock (For starting)
P07	VDDMEM	V	Power supply voltage for memory
P08	VDDMEM	V	Power supply voltage for memory
P09	VDDMEM	V	Power supply voltage for memory
P10	VDDMEM	V	Power supply voltage for memory
P11	VDDMEM	V	Power supply voltage for memory
P12	VDDINT	V	Power supply voltage for internal core
P13	VDDINT	V	Power supply voltage for internal core
P14	VDDINT	V	Power supply voltage for internal core
P19	ARDY	I	Not used
P20	SCKE	O	Clock enable for SDRAM
R01	TDI	I	JTAG serial data input
R02	PG0/HWAIT	O	Boot host wait
R19	SMS~	O	SDRAM bank select
R20	VDDOTP	V	Power supply voltage for one time programming
T01	TDO	O	JTAG serial data output
T02	EMU	O	JTAG emulation output
T19	SRAS~	O	SDRAM row address strobe
T20	SWE~	O	SDRAM write enable
U01	TRST~	I	JTAG reset
U02	TMS	I	JTAG mode select
U19	SA10	O	SDRAM A10
U20	SCAS~	O	SDRAM column address strobe
V01	DATA15	I/O	Data bus
V02	TCK	I	JTAG clock
V19	ABE0~/SDQM0	O	SDRAM data mask
V20	ABE1~/SDQM1	O	SDRAM data mask
W01	DATA14	I/O	Data bus
W02	DATA13	I/O	Data bus
W03	DATA11	I/O	Data bus
W04	DATA09	I/O	Data bus
W05	DATA07	I/O	Data bus
W06	DATA05	I/O	Data bus
W07	DATA03	I/O	Data bus
W08	DATA01	I/O	Data bus
W09	BMODE3	I	Boot mode judgment

• Pin Function

Pin No.	Pin Name	I/O	Function and Operation
W10	BMODE1	I	Boot mode judgment
W11	ADDR18	O	Address bus
W12	ADDR16	O	Not used
W13	ADDR14	O	Not used
W14	ADDR12	O	Address bus
W15	ADDR10	O	Address bus
W16	ADDR08	O	Address bus
W17	ADDR06	O	Address bus
W18	ADDR04	O	Address bus
W19	ADDR02	O	Address bus
W20	ADDR01	O	Address bus
Y01	VSS	G	VSS (Ground)
Y02	DATA12	I/O	Data bus
Y03	DATA10	I/O	Data bus
Y04	DATA08	I/O	Data bus
Y05	DATA06	I/O	Data bus
Y06	DATA04	I/O	Data bus
Y07	DATA02	I/O	Data bus
Y08	DATA00	I/O	Data bus
Y09	BMODE2	I	Boot mode judgment
Y10	BMODE0	I	Boot mode judgment
Y11	ADDR19	O	Address bus
Y12	ADDR17	O	Not used
Y13	ADDR15	O	Not used
Y14	ADDR13	O	Not used
Y15	ADDR11	O	Not used
Y16	ADDR09	O	Address bus
Y17	ADDR07	O	Address bus
Y18	ADDR05	O	Address bus
Y19	ADDR03	O	Address bus
Y20	VSS	G	VSS (Ground)

6. SERVICE MODE
6.1 TEST MODE

1. Description of Test Modes

The Following 10 test modes are provided for this unit:

① Mode 1 : Confirmation of software version. "Version"
② Mode 2 : All LEDs & FL display "OFF" mode. "ALL CLR"
③ Mode 3 : ALL LEDs & FL display "ON" mode. "ALL SET"
④ Mode 4 : KEY operating test. "KEY TEST"
⑤ Mode 5 : SELECT SW Operating test. "SW TEST"
⑥ Mode 6 : Rotary VRs value test. "VOLTEST"
⑦ Mode 7 : Fader test. "FDRTEST"
⑧ Mode 8 : Channel Level Indicator LED test. "LEDTEST"
⑨ Mode 10 : AD values of the rotary VRs test. "VOL AD"
⑩ Mode 11 : AD values of the fader test. "FDR AD"

2. Test Mode

Test Mode : ON

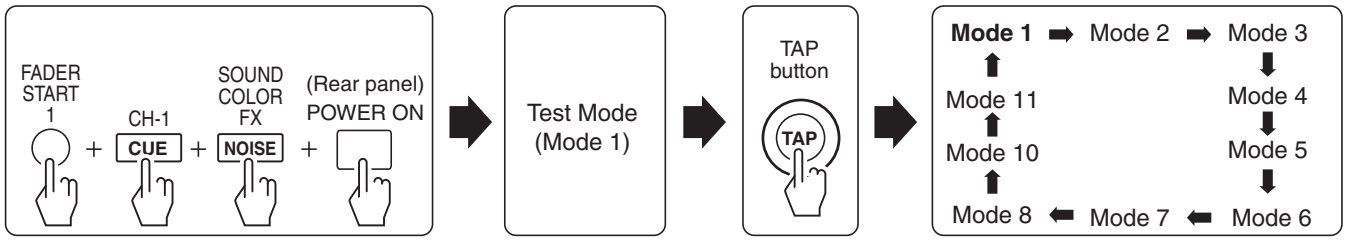

Test Mode : CANCEL

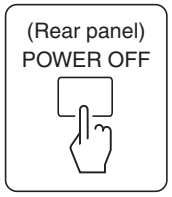

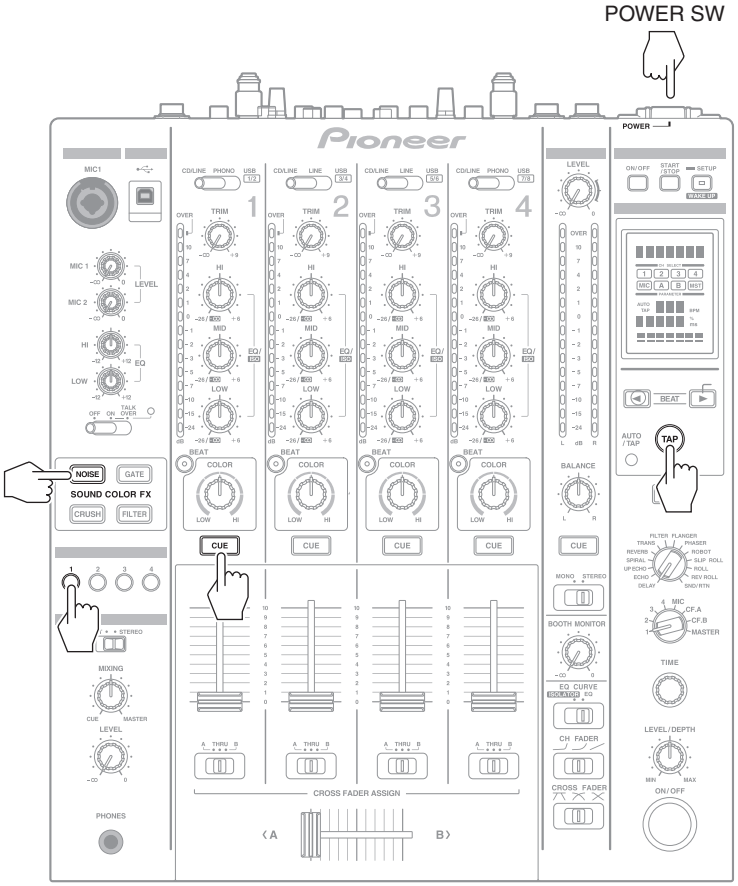

3. Test mode Contents

① Mode 1 : Confirmation of software version

- Mode for confirmation of the versions of the system, MAIN UCOM, SUB UCOM, DSP (program), DSP (data), USB UCOM, FPGA and BOOT.
  When this mode is entered, “Version” is displayed at the top of the FL display and the TAP key lights.

- Mode 1 consists of 8 pages for indicating the versions of the system, MAIN UCOM, SUB UCOM, DSP (program), DSP (data), USB UCOM, FPGA and BOOT.
  The pages can be changed by pressing the BEAT ◄, ► button.
  When Mode 1 is entered, the System Version Display mode is automatically entered.

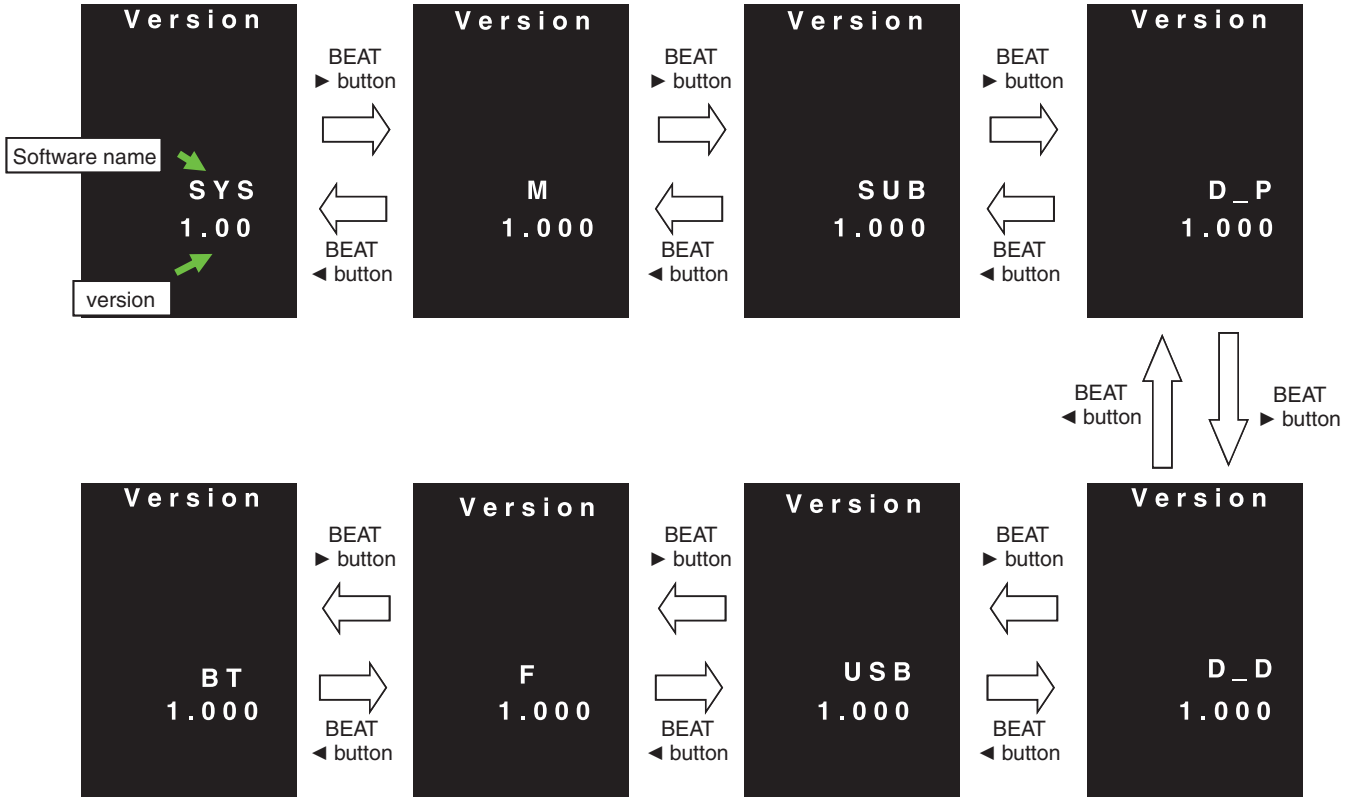

Software Name	FL Display
System	SYS
MAIN UCOM	M
SUB UCOM	SUB
DSP (program)	D_P
DSP (data)	D_D
USB UCOM	USB
FPGA	F
BOOT	BT

② Mode 2 : All LEDs & FL display “OFF” mode

- Mode for extinguishing all the LEDs and FL segments.
  Only after this mode is entered, “ALL CLR” is displayed for about 1 second at the top of the FL display.

  Note: The CH1 CUE, CH2 CUE, CH3 CUE, CH4 CUE, MASTER CUE and BEAT EFFECTS CUE button LEDs light dimly.

③ Mode 3 : All LEDs & FL display “ON” mode

- Mode for lighting all the LEDs and FL segments.
  Only after this mode is entered, “ALL SET” is displayed for about 1 second at the top of the FL display.

④ Mode 4 : Key operating test

- Mode for indicating a pressed key with lighting of an LED and indication on the FL display.
  When this mode is entered, “KEYTEST” is displayed at the top of the FL display and the TAP key lights.
- The name of a pressed key is indicated on the FL display.

Operating Keys	Lighting LED	FL Display	Remark
FADER START 1 button	FADER START 1 button LED	FSCH1	
FADER START 2 button	FADER START 2 button LED	FSCH2	
FADER START 3 button	FADER START 3 button LED	FSCH3	
FADER START 4 button	FADER START 3 button LED	FSCH4	
CH1 CUE button	CH1 CUE button LED	CUE_1	
CH2 CUE button	CH2 CUE button LED	CUE_2	
CH3 CUE button	CH3 CUE button LED	CUE_3	
CH4 CUE button	CH4 CUE button LED	CUE_4	
MASTER CUE button	MASTER CUE LED	CUE_M	
BEAT EFFECTS CUE button	BEAT EFFECTS CUE button LED	CUE_E	
SOUND COLOR FX NOISE button	SOUND COLOR FX NOISE button LED	CFX_1	
SOUND COLOR FX GATE button	SOUND COLOR FX GATE button LED	CFX_2	
SOUND COLOR FX CRUSH button	SOUND COLOR FX CRUSH button LED	CFX_3	
SOUND COLOR FX FILTER button	SOUND COLOR FX FILTERbutton LED	CFX_4	
SETUP (WAKE UP) button	SETUP (WAKE UP) button LED	SETUP	
MIDI ON/OFF button	MIDI ON/OFF button LED	MD_ON	
MIDI START/STOP button	None	MD_ST	
BEAT ◄ button	None	BEAT<	
BEAT ► button	None	BEAT>	
AUTO/TAP button	None	AUTO	
BEAT EFFECT ON/OFF button	BEAT EFFECT ON/OFF button LED	EFXon	
CH1 BEAT button	CH1 BEAT button LED	CF_B1	
CH2 BEAT button	CH2 BEAT button LED	CF_B2	
CH3 BEAT button	CH3 BEAT button LED	CF_B3	
CH4 BEAT button	CH4 BEAT button LED	CF_B4	

⑤ Mode 5 : SELECT SW Operating test. "SW TEST"

- When this mode is entered, “SW TEST” is displayed at the top of the FL display and the TAP key lights.

Operating Switches		Lighting LED		Remark
CD/LINE, PHONO, LINE, USB 1/2 selector switch CH1	: CD/LINE	CH1 Channel Level Indicator LED	7 dB	
	: PHONO		10 dB	
	: USB 1/2		OVER	
CD/LINE, PHONO, LINE, USB 3/4 selector switch CH1	: CD/LINE	CH2 Channel Level Indicator LED	7 dB	
	: PHONO		10 dB	
	: USB 3/4		OVER	
CD/LINE, PHONO, LINE, USB 5/6 selector switch CH1	: CD/LINE	CH3 Channel Level Indicator LED	7 dB	
	: PHONO		10 dB	
	: USB 5/6		OVER	
CD/LINE, PHONO, LINE, USB 7/8 selector switch CH1	: CD/LINE	CH4 Channel Level Indicator LED	7 dB	
	: PHONO		10 dB	
	: USB 7/8		OVER	
CROSS FADER ASSIGN (A, THRU, B) selector switch CH1	: Assign A	CH1 Channel Level Indicator LED	-24dB	
	: THRU		-15dB	
	: Assign B		-10dB	
CROSS FADER ASSIGN (A, THRU, B) selector switch CH2	: Assign A	CH2 Channel Level Indicator LED	-24dB	
	: THRU		-15dB	
	: Assign B		-10dB	
CROSS FADER ASSIGN (A, THRU, B) selector switch CH3	: Assign A	CH3 Channel Level Indicator LED	-24dB	
	: THRU		-15dB	
	: Assign B		-10dB	
CROSS FADER ASSIGN (A, THRU, B) selector switch CH4	: Assign A	CH4 Channel Level Indicator LED	-24dB	
	: THRU		-15dB	
	: Assign B		-10dB	
OFF, ON, TALK OVER selector switch	: OFF	CH1 Channel Level Indicator LED	-1dB	
	: ON		0dB	
	: TALK OVER		1dB	
MONO SPLIT, STEREO selector switch	: MONO SPLIT	CH1 Channel Level Indicator LED	-5dB	
	: STEREO		-3dB	
MONO, STEREO selector switch	: MONO	CH2 Channel Level Indicator LED	0dB	
	: STEREO		1dB	
EQ CURVE (ISOLATOR, EQ) selector switch	: ISOLATOR	CH2 Channel Level Indicator LED	-3dB	
	: EQ		-2dB	
CH FADER selector switch	: Left	CH3 Channel Level Indicator LED	-1dB	
	: MID		0dB	
	: Right		1dB	
CROSS FADER selector switch	: Left	CH4 Channel Level Indicator LED	-1dB	
	: MID		0dB	
	: Right		1dB	
1, 2, 3, 4, MIC, CF.A, CF.B, MASTER selector switch	: 1	Master Level Indicator ED L CH	-24dB	
	: 2		-15dB	
	: 3		-10dB	
	: 4		-7dB	
	: MIC		-5dB	
	: CF.A		-3dB	
	: CF.B		-2dB	
	: MASTER		-1dB	

Operating Switches		Lighting LED		Remark
DELAY, ECHO, UP ECHO, SPIRAL, REVERB, TRANS, FILTER, FLANGER, PHASER, ROBOT, SLIP ROLL, ROLL, REV ROLL, SND/RTN selector switch	: DELAY	Master Level Indicator LED R CH	-24dB	
	: ECHO		-15dB	
	: UP ECHO		-10dB	
	: SPIRAL		-7dB	
	: REVERB		-5dB	
	: TRANS		-3dB	
	: FILTER		-2dB	
	: FLANGER		-1dB	
	: PHASER		0dB	
	: ROBOT		1dB	
	: SLIP ROLL		2dB	
	: ROLL		4dB	
	: REV ROLL		7dB	
	: SND/RTN (MIDI LFO)		10dB	

This mode is also used to check operation of the TIME control.
The value displayed on the FL display increases/decreases as you turn the TIME control:

Operation range
Initial value: 0
Maximum value: 100
Minimum value: -100

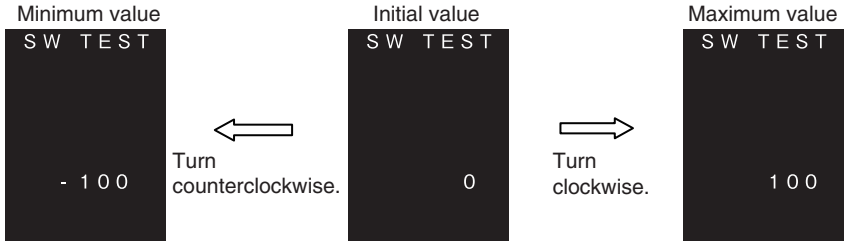

Correspondence diagram of Mode 5 : SELECT SW Operating test. "SW TEST"

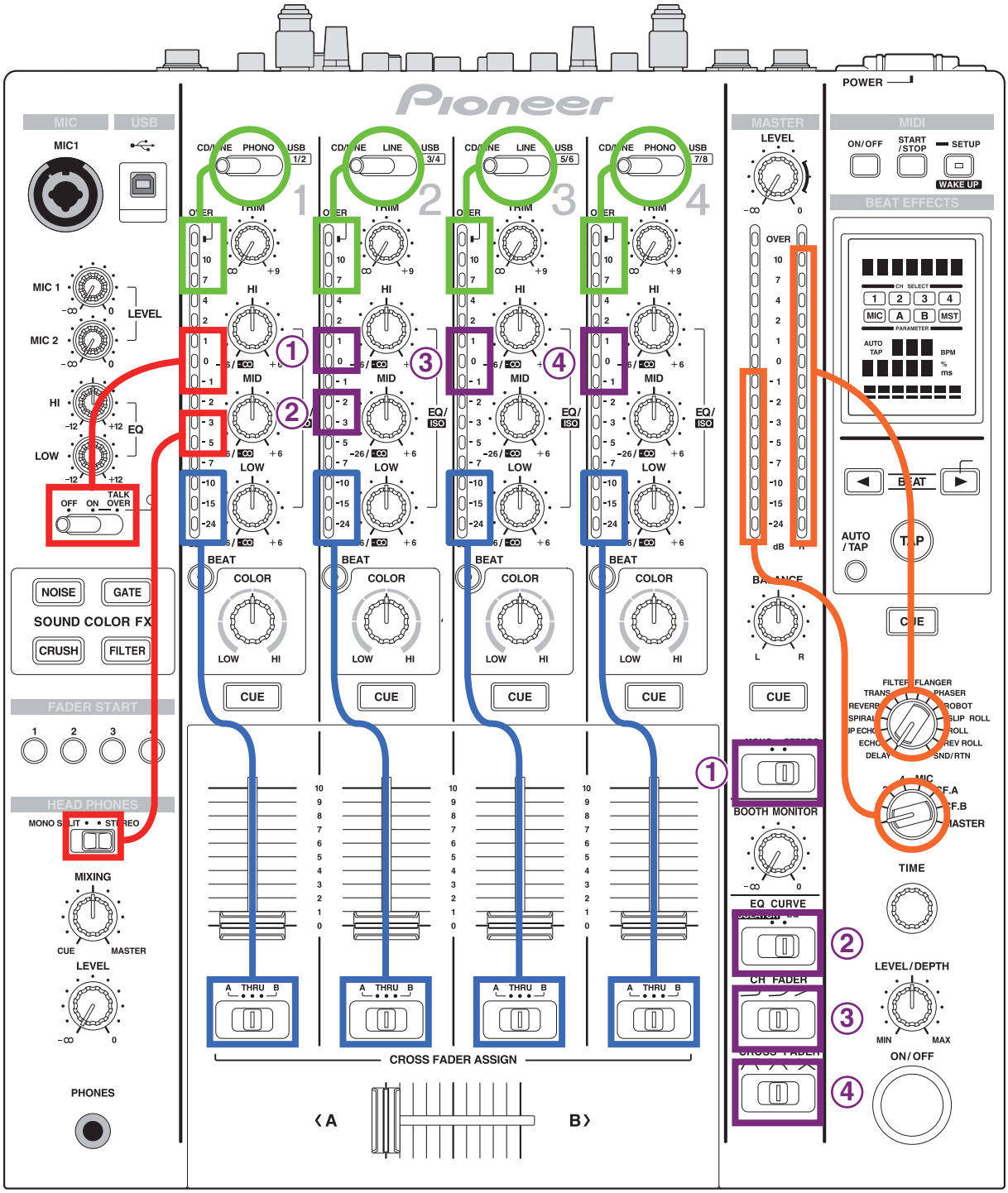

⑥ Mode 6 : Rotary VRs value test. "VOLTEST"

- Mode for confirmation of the AD conversion value for each rotary VR on the operation panel with lighting of a level indicator LED or the segments on the FL display
  When this mode is entered, “VOLTEST” is displayed at the top of the FL display and the TAP key lights.

- To indicate the AD conversion values for several rotary VRs with a level indicator, the rotary VRs are divided into 4 groups.
  The group pages can be changed by pressing the BEAT ◄, ► button.

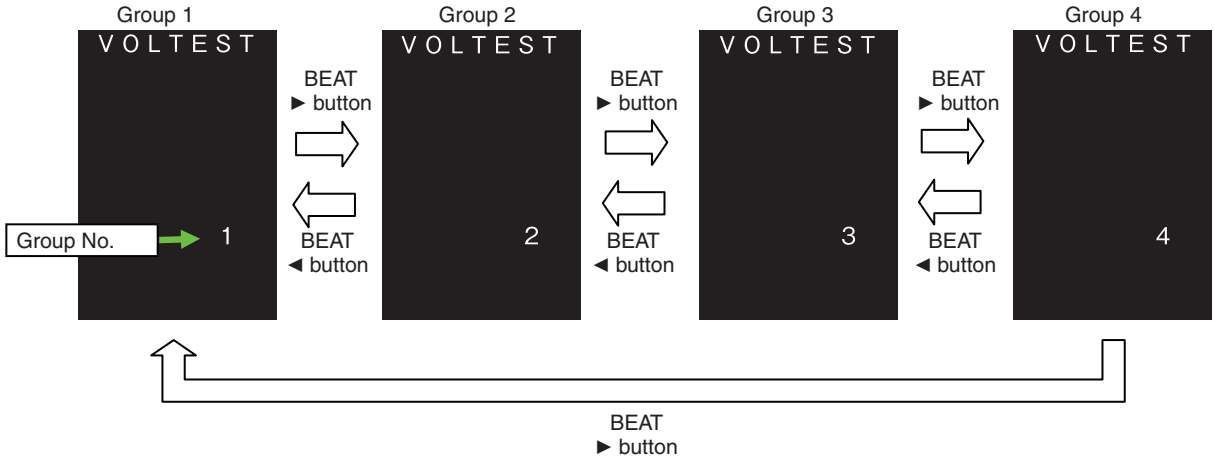

[Use of this mode during repair]

- For failure judgment of the rotary VRs
- For operation check of a rotary VR after replacement

• Group 1

Rotary VRs whose AD conversion values can be confirmed:

- CH1 TRIM control, CH2 TRIM control, CH3 TRIM control, CH4 TRIM control, EQ HI control, EQ LOW control, CH1 COLOR control

VR to be tested	Lit LED or FL	Remarks
CH1 TRIM control	CH1 Channel Level Indicator LED	"-∞": Lights off "+9": Full Illuminate
CH2 TRIM control	CH2 Channel Level Indicator LED	"-∞": Lights off "+9": Full Illuminate
CH3 TRIM control	CH3 Channel Level Indicator LED	"-∞": Lights off "+9": Full Illuminate
CH4 TRIM control	CH4 Channel Level Indicator LED	"-∞": Lights off "+9": Full Illuminate
EQ HI control	Master Level Indicator L LED	"-12": Lights off "+12": Full Illuminate
EQ LOW control	Master Level Indicator R LED	"-12": Lights off "+12": Full Illuminate
CH1 COLOR control	At the bottom of the FL display	"LOW": Lights off "HIGH": Full Illuminate

• Group 2

Rotary VRs whose AD conversion values can be confirmed:

• CH1 EQ/ISO HI control, CH2 EQ/ISO HI control, CH3 EQ/ISO HI control, CH4 EQ/ISO HI control, MIXING control, LEVEL control, CH2 COLOR control

VR to be tested	Lit LED or FL	Remarks
CH1 EQ/ISO HI control	CH1 Channel Level Indicator LED	"-∞/-26": Lights off "+6": Full Illuminate
CH2 EQ/ISO HI control	CH2 Channel Level Indicator LED	"-∞/-26": Lights off "+6": Full Illuminate
CH3 EQ/ISO HI control	CH3 Channel Level Indicator LED	"-∞/-26": Lights off "+6": Full Illuminate
CH4 EQ/ISO HI control	CH4 Channel Level Indicator LED	"-∞/-26": Lights off "+6": Full Illuminate
MIXING control	Master Level Indicator L LED	"CUE": Lights off "MASTER": Full Illuminate
LEVEL control	Master Level Indicator R LED	"-∞": Lights off "0": Full Illuminate
CH2 COLOR control	At the bottom of the FL display	"LOW": Lights off "HIGH": Full Illuminate

• Group 3

Rotary VRs whose AD conversion values can be confirmed:

• CH1 EQ/ISO MID control, CH2 EQ/ISO MID control, CH3 EQ/ISO MID control, CH4 EQ/ISO MID control, MASTER LEVEL control, BALANCE control, CH3 COLOR control

VR to be tested	Lit LED or FL	Remarks
CH1 EQ/ISO MID control	CH1 Channel Level Indicator LED	"-∞/-26": Lights off "+6": Full Illuminate
CH2 EQ/ISO MID control	CH2 Channel Level Indicator LED	"-∞/-26": Lights off "+6": Full Illuminate
CH3 EQ/ISO MID control	CH3 Channel Level Indicator LED	"-∞/-26": Lights off "+6": Full Illuminate
CH4 EQ/ISO MID control	CH4 Channel Level Indicator LED	"-∞/-26": Lights off "+6": Full Illuminate
MASTER LEVEL control	Master Level Indicator L LED	"-∞": Lights off "0": Full Illuminate
BALANCE control	Master Level Indicator R LED	"L": Lights off "R": Full Illuminate
CH3 COLOR control	At the bottom of the FL display	"LOW": Lights off "HIGH": Full Illuminate

• Group 4

Rotary VRs whose AD conversion values can be confirmed:

• CH1 EQ/ISO LOW control, CH2 EQ/ISO LOW control, CH3 EQ/ISO LOW control, CH4 EQ/ISO LOW control, BOOTH MONITOR control, LEVEL/DEPTH control, CH4 COLOR control

VR to be tested	Lit LED or FL	Remarks
CH1 EQ/ISO LOW control	CH1 Channel Level Indicator LED	"-∞/-26": Lights off "+6": Full Illuminate
CH2 EQ/ISO LOW control	CH2 Channel Level Indicator LED	"-∞/-26": Lights off "+6": Full Illuminate
CH3 EQ/ISO LOW control	CH3 Channel Level Indicator LED	"-∞/-26": Lights off "+6": Full Illuminate
CH4 EQ/ISO LOW control	CH4 Channel Level Indicator LED	"-∞/-26": Lights off "+6": Full Illuminate
BOOTH MONITOR control	Master Levele Indicator L LED	"-∞": Lights off "0": Full Illuminate
LEVEL/DEPTH control	Master Levele Indicator R LED	"MIN": Lights off "MAX": Full Illuminate
CH4 COLOR control	At the bottom of the FL display	"LOW": Lights off "HIGH": Full Illuminate

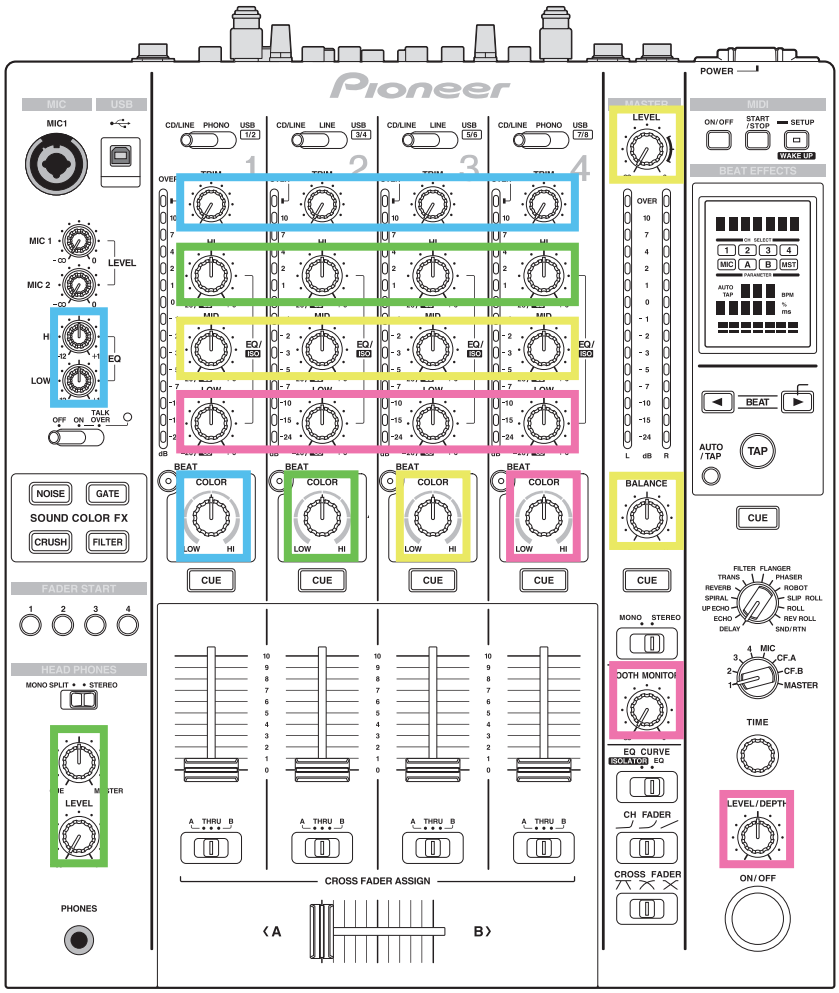

: Group 1

: Group 2

: Group 3

: Group 4

⑦ Mode 7 : Fader test. "FDRTEST"

- Mode for confirmation of the values of CH1–4 Channel FADER and CROSS FADER with the level indicator LEDs.
  When this mode is entered, “FDRTEST” is displayed at the top of the FL display and the TAP key lights.

[Use of this mode during repair]

- For failure judgment of the faders
- For operation check of a fader after replacement

Fader to be tested	Lit LED	Remarks
CH1 Channel Fader	CH1 Channel Level Indicator LED	"0": Lights off "10": Full Illuminate
CH2 Channel Fader	CH2 Channel Level Indicator LED	"0": Lights off "10": Full Illuminate
CH3 Channel Fader	CH3 Channel Level Indicator LED	"0": Lights off "10": Full Illuminate
CH4 Channel Fader	CH4 Channel Level Indicator LED	"0": Lights off "10": Full Illuminate
Cross Fader	Master Level Indicator L LED	"A": Full Illuminate "B": Lights off

⑧ Mode 8 : Channel Level Indicator LED test. "LEDTEST"

- Mode for confirming lighting of the level indicator LEDs
  When this mode is entered, “LEDTEST” is displayed at the top of the FL display and the TAP key lights.
  The LEDs for CH1 CUE button, CH2 CUE button, CH3 CUE button, CH4 CUE button, MASTER CUE button, and EFFECT CUE button light.

- Each time the CUE button is pressed, the level indicator LEDs for each channel light one by one from the bottom.
  At first, all the LEDs are unlit.
  If the CUE button is pressed after it was pressed 15 times (when the top LED is lit), all the LEDs become unlit again.

Button to be tested	Lit Meter	Remarks
CH1 CUE button	CH1 Channel Level Indicator LED	
CH2 CUE button	CH2 Channel Level Indicator LED	
CH3 CUE button	CH3 Channel Level Indicator LED	
CH4 CUE button	CH4 Channel Level Indicator LED	
MASTER CUE button	Master Level Indicator L LED	
EFFECT CUE button	Master Level Indicator R LED	

⑨ Mode 10 : AD values of the rotary VRs test. "VOL AD"

- Mode for displaying the AD values of rotary VRs on the FL display for confirmation.
  When this mode is entered, “VOL AD” is displayed at the top of the FL display.
  To indicate the AD values for several rotary VRs with a single level meter, the rotary VRs are divided into 4 groups.
  The group pages can be changed by pressing the BEAT ◄, ► button.
  When the groups are switched, the name of the VR at the top of the group list is displayed at the bottom of the FL display.
  The rotary VRs in a group can be changed by pressing the CH1–4 CUE button.

- The maximum amplitude value among AD conversion values for a rotary VR being tested can be confirmed on each page of this mode.
  The value is expressed with the number of segments lit at the bottom of the FL display. The measurement procedure is as indicated below.
  Turn the rotary VR you wish to test to a desired position then press the EFFECT CUE key to start measurement. To reset, press the EFFECT CUE key again. During measurement, the maximum amplitude value will be continuously displayed.
  The EFFECT CUE key is lit during measurement and goes dark when reset.
  Details on the amplitude value display are shown in the figures below.

An amplitude value in the range of ±1 to ±6 with regard to the VR value at the beginning of measurement is displayed.
For a value greater than +7 or less than -7, all the 7 segments are lit.

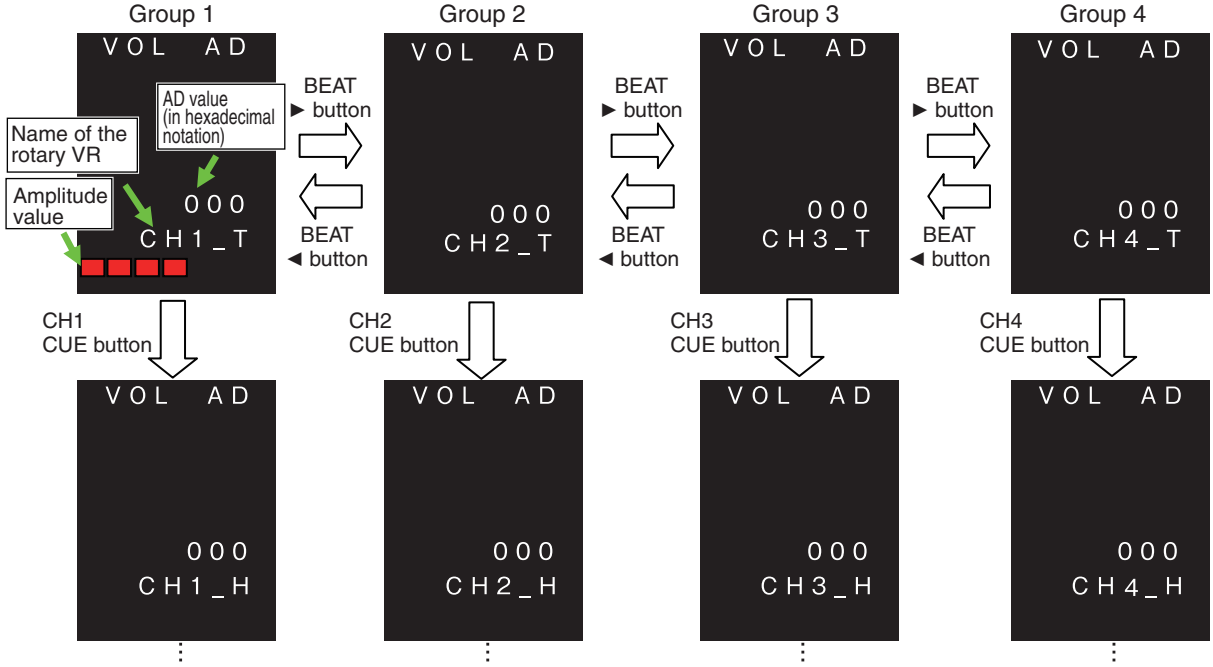

Note:
If the CUE button is pressed while the last VR on each group list is displayed, the top VR on that group list will then be displayed.

When the BEAT ◄, ► button is pressed for a layer lower than the 2nd one, the top VR on the list of the next group will be displayed.

[Use of this mode during repair]

- For failure judgment of the rotary VRs
  As a guide, amplitude values higher than +4 or lower than -4 may be judged as failure.
  The VRs can be set to any position during measurement. Possible symptoms are shown below.
  - The volume changes arbitrarily.
  - Interrupted sound leakage occurs even if the volume is decreased to the minimum at the Master or ZONE.
  - The MIDI signal is output even if the corresponding VR is not operated.
- For operation check of a rotary VR after replacement

• Group 1

Rotary VRs whose AD conversion values can be confirmed:

- CH1 TRIM control, CH1 EQ/ISO HI control, CH1 EQ/ISO MID control, CH1 EQ/ISO LOW control, CH1 COLOR control, EQ HI control, EQ LOW control

VR to be tested	FL Display Name	Remarks
CH1 TRIM control	CH1_T	"-∞": 000 "+9": 3FF
CH1 EQ/ISO HI control	CH1_H	"-∞/-26": 000 "+6": 3FF
CH1 EQ/ISO MID control	CH1_M	"-∞/-26": 000 "+6": 3FF
CH1 EQ/ISO LOW control	CH1_L	"-∞/-26": 000 "+6": 3FF
CH1 COLOR control	CH1_C	"LOW": 000 "HIGH": 3FF
EQ HI control	MIC_H	"-12": 000 "+12": 3FF
EQ LOW control	MIC_L	"-12": 000 "+12": 3FF

*As an AD value that is displayed on the FL display is the one before a hysteresis removal process, and as it has an amplitude, an error of about ±2 may be produced.

• Group 2

Rotary VRs whose AD conversion values can be confirmed:

- CH2 TRIM control, CH2 EQ/ISO HI control, CH2 EQ/ISO MID control, CH2 EQ/ISO LOW control, CH2 COLOR control, MIXING control, LEVEL control

VR to be tested	FL Display Name	Remarks
CH2 TRIM control	CH2_T	"-∞": 000 "+9": 3FF
CH2 EQ/ISO HI control	CH2_H	"-∞/-26": 000 "+6": 3FF
CH2 EQ/ISO MID control	CH2_M	"-∞/-26": 000 "+6": 3FF
CH2 EQ/ISO LOW control	CH2_L	"-∞/-26": 000 "+6": 3FF
CH2 COLOR control	CH2_C	"LOW": 000 "HIGH": 3FF
MIXING control	HP_MX	"CUE": 000 "MASTER": 3FF
LEVEL control	HP_LV	"-∞": 000 "0": 3FF

*As an AD value that is displayed on the FL display is the one before a hysteresis removal process, and as it has an amplitude, an error of about ±2 may be produced.

• Group 3

Rotary VRs whose AD conversion values can be confirmed:

• CH3 TRIM control, CH3 EQ/ISO HI control, CH3 EQ/ISO MID control, CH3 EQ/ISO LOW control, CH3 COLOR control, MASTER LEVEL control, BALANCE control

VR to be tested	FL Display Name	Remarks
CH3 TRIM control	CH3_T	"-∞": 000 "+9": 3FF
CH3 EQ/ISO HI control	CH3_H	"-∞/-26": 000 "+6": 3FF
CH3 EQ/ISO MID control	CH3_M	"-∞/-26": 000 "+6": 3FF
CH3 EQ/ISO LOW control	CH3_L	"-∞/-26": 000 "+6": 3FF
CH3 COLOR control	CH3_C	"LOW": 000 "HIGH": 3FF
MASTER LEVEL control	MSTLv	"-∞": 000 "0": 3FF
BALANCE control	MST_B	"L": 000 "R": 3FF

*As an AD value that is displayed on the FL display is the one before a hysteresis removal process, and as it has an amplitude, an error of about ±2 may be produced.

• Group 4

Rotary VRs whose AD conversion values can be confirmed:

• CH4 TRIM control, CH4 EQ/ISO HI control, CH4 EQ/ISO MID control, CH4 EQ/ISO LOW control, CH4 COLOR control, BOOTH MONITOR control, LEVEL/DEPTH control

VR to be tested	FL Display Name	Remarks
CH4 TRIM control	CH4_T	"-∞": 000 "+9": 3FF
CH4 EQ/ISO HI control	CH4_H	"-∞/-26": 000 "+6": 3FF
CH4 EQ/ISO MID control	CH4_M	"-∞/-26": 000 "+6": 3FF
CH4 EQ/ISO LOW control	CH4_L	"-∞/-26": 000 "+6": 3FF
CH4 COLOR control	CH4_C	"LOW": 000 "HIGH": 3FF
BOOTH MONITOR control	BOOTH	"-∞": 000 "0": 3FF
LEVEL/DEPTH control	LV/DP	"MIN": 000 "MAX": 3FF

*As an AD value that is displayed on the FL display is the one before a hysteresis removal process, and as it has an amplitude, an error of about ±2 may be produced.

⑩ Mode 11 : AD values of the fader test. "FDR AD"

- Mode for displaying the AD values of the faders on the FL display for confirmation
  When this mode is entered, “FDR AD” is displayed at the top of the FL display and the TAP key lights.

- Mode 11 consists of 5 pages for indicating the values of 5 faders.
  The pages can be changed by pressing the BEAT ◄, ► button.
  When the groups are switched, the name of the VR at the top of the group list is displayed at the bottom of the FL display and its AD value is displayed in the middle.

- The maximum amplitude value among AD conversion values for a fader being tested can be confirmed on each page of this mode. The value is expressed with the number of segments lit at the bottom of the FL display. The measurement procedure is as indicated below.
  Set the fader you wish to test to a desired position then press the EFFECT CUE key to start measurement. To reset, press the EFFECT CUE key again. During measurement, the maximum amplitude value will be continuously displayed.
  The EFFECT CUE key is lit during measurement and goes dark when reset.
  Details on the amplitude value display are shown in the figures below.

An amplitude value in the range of ±1 to ±7 with regard to the VR value at the beginning of measurement is displayed.
For a value greater than +7 or less than -7, all the 7 segments are lit.

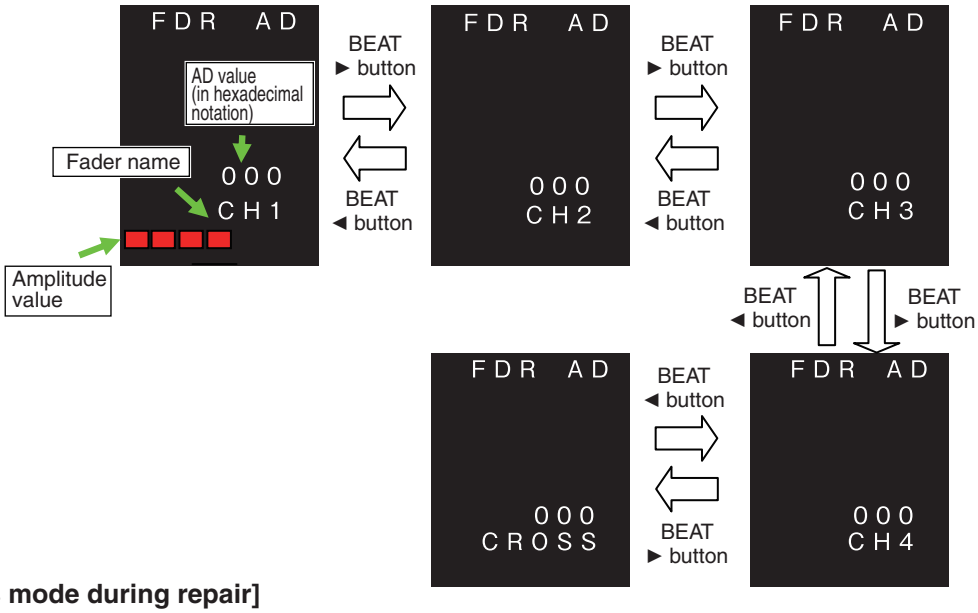

[Use of this mode during repair]

- For failure judgment of the faders
  As a guide, amplitude values higher than +4 or lower than -4 may be judged as failure.
  The VRs can be set to any position during measurement. Possible symptoms are shown below.
  - The volume changes arbitrarily.
  - Interrupted sound leakage occurs even if the volume is decreased to the minimum at the fader.
  - The MIDI signal is output even if the corresponding VR is not operated.
- For operation check of a fader after replacement

Faders that can be confirmed

Fader to be tested	FL Display Name	Remarks
CH1 Channel Fader	CH1	"0": 000 "10": 3FF
CH2 Channel Fader	CH2	"0": 000 "10": 3FF
CH3 Channel Fader	CH3	"0": 000 "10": 3FF
CH4 Channel Fader	CH4	"0": 000 "10": 3FF
Cross Fader	CROSS	"A": 000 "B": 3FF

4. Mode transition flowchart

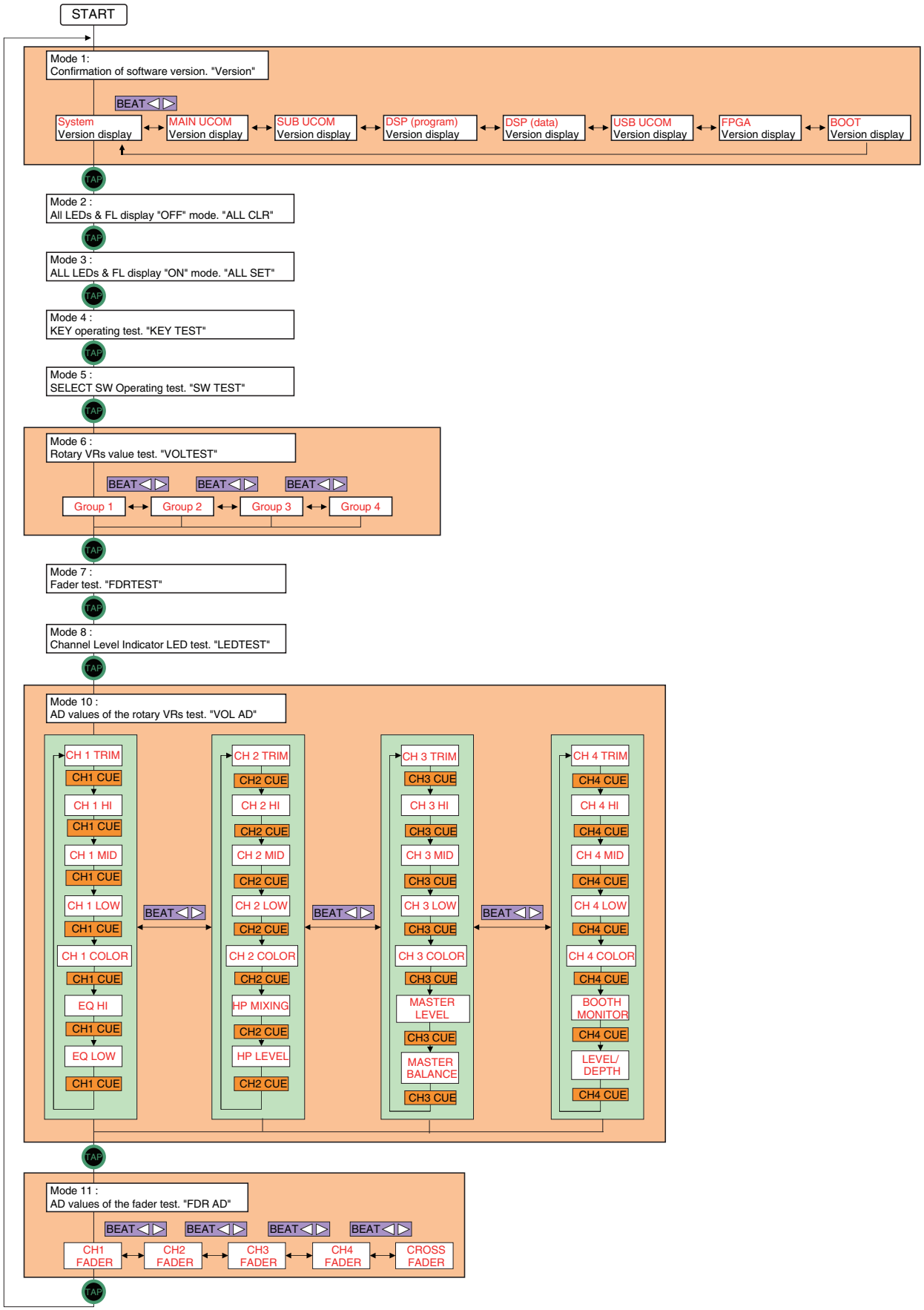

6.2 ABOUT THE DEVICE

Device Name	Function	Part No.	Reference No.	Assy
MAIN UCOM	Main control	DYW1806	IC2803	MAIN Assy
FLASH (4M)	Memory for Main, USB UCOM (Firmware)	DYW1807	IC2802	MAIN Assy
FPGA	For RAM, Digital input distinction, clock divider	XC3S50A-4FTG256C	IC2214	MAIN Assy
FLASH (4M)	Memory for DSP (Firmware)	DYW1808	IC3008	MAIN Assy
DSP	Audio DSP	D810K013BZKB400	IC3201	MAIN Assy
SDRAM (256M)	Memory for DSP (Work)	M12L2561616A-5TG2A	IC3202	MAIN Assy
USB UCOM	Controller for USB	ADSP-BF525BBCZ-5A	IC2603	MAIN Assy
SDRAM (64M)	Memory for USB UCOM (Work)	M12L64164A-5TG2M	IC2604	MAIN Assy
SUB UCOM	LED, FL, KEY, VR control	DYW1809	IC6601	PNLA Assy

Two or more FLASH and SDRAM are mounted in this unit.
Please judge the device which you should diagnose in reference to this list.

7. DISASSEMBLY

Note: Even if the unit shown in the photos and illustrations in this manual may differ from your product, the procedures described here are common.

Knobs and Volumes Location

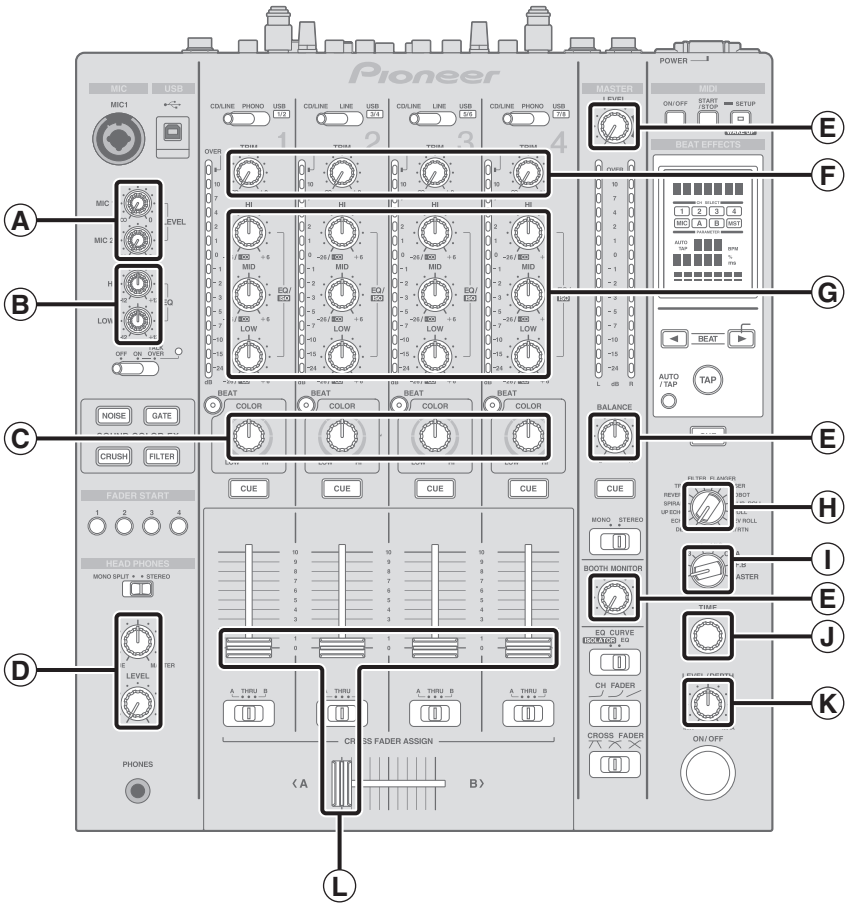

Ⓐ Knob/MIC (DAA1301) ×2

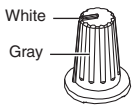

Ⓑ Knob/EQ (DAA1302) ×2

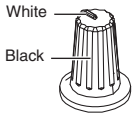

Ⓒ Rotary SW Knob (HM) (DAA1256) ×4

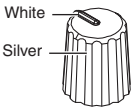

Ⓓ Knob (Black) (DAA1212) ×2

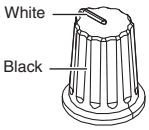

Ⓔ Knob (MA) (DAA1210) ×3

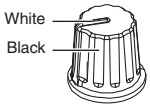

Ⓕ Knob/CH (DAA1300) ×4

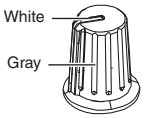

Ⓖ Rotary SW Knob (B) (DAA1176) ×12

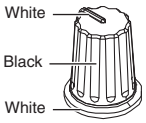

Ⓗ Select Knob (DAA1205) ×1

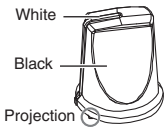

Ⓛ Slider Knob 1 (DAC2684) ×5 + Slider Knob 2 (DAC2685) ×5 + Slider Knob Stopper (DNK5888) ×5

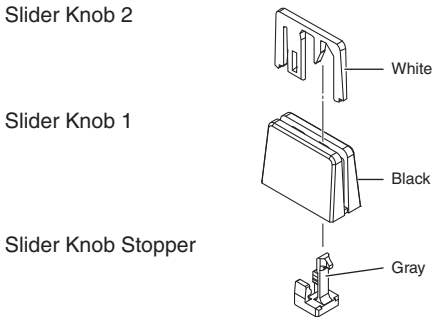

Ⓘ FX SEL Knob (DAA1213) ×1

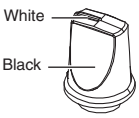

Ⓙ Knob (TIME) (DAA1214) ×1

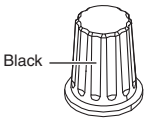

Ⓚ Rotary Knob (BN) (DAA1220) ×1

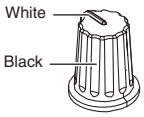

Disassembly

[1] Control Panel Section

[1-1] Front panel

(1) Remove the six screws. (BBZ40P060FTB)
(2) Remove the front panel.

Screw tightening order

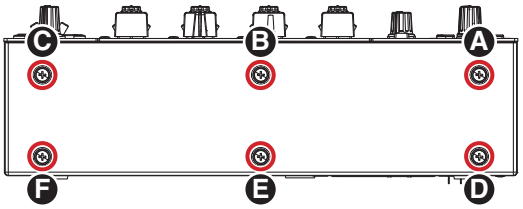

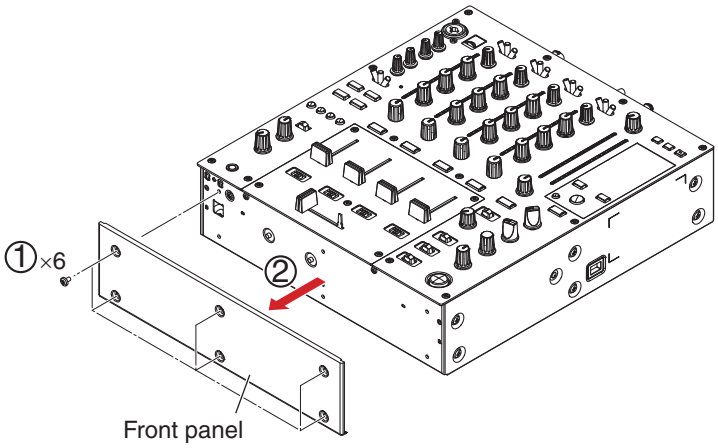

[1-2] Control panel section

(1) Remove the two knob/MIC.
(2) Remove the two screws. (BBZ30P060FTB)
(3) Remove the two screws. (BBZ30P060FTC)
(4) Remove the two screws. (BPZ30P120FTB)
(5) Remove the six screws.
(K: DBA1290, S: DBA1436)

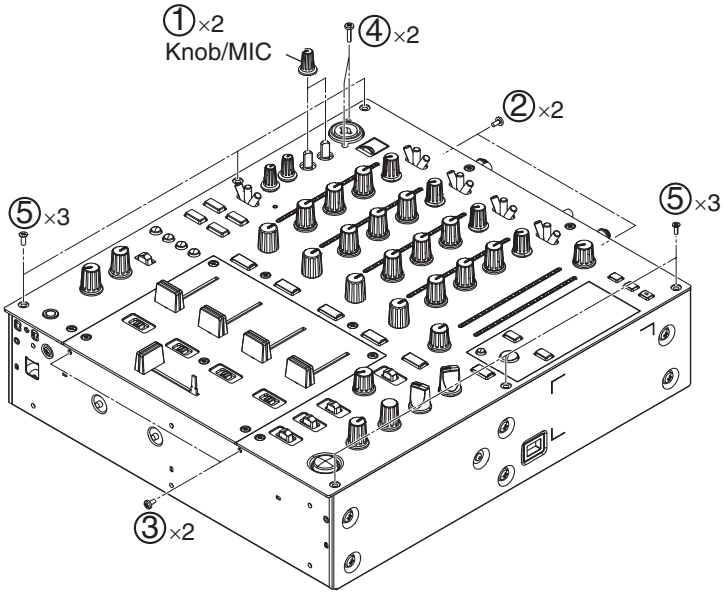

Screw tightening order

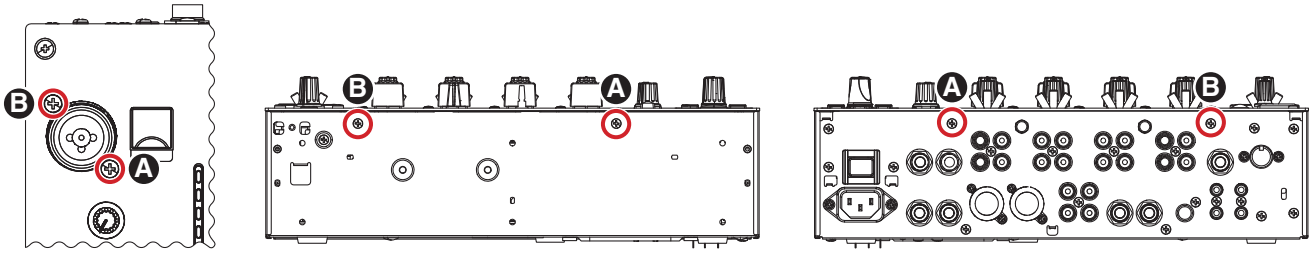

(6) Remove the control panel section.

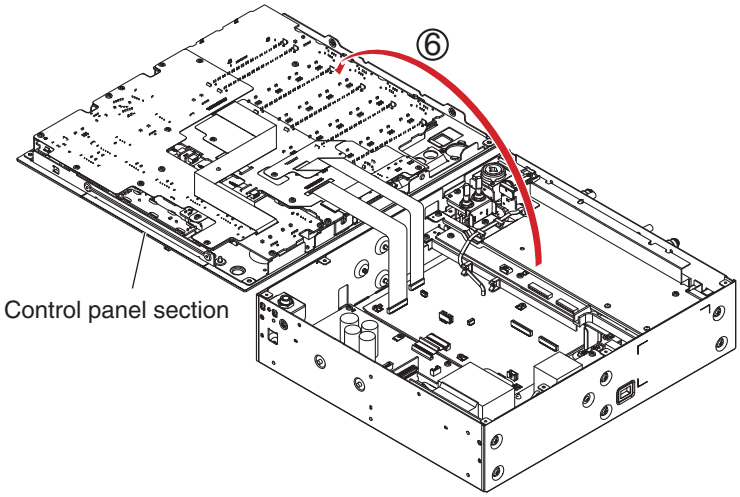

[2] INPUT Assy

(1) Disconnect the four short pin plugs.
(2) Remove the three washers and three nuts.
(3) Remove the two screws. (PMH30P100FTB)
(4) Remove the one screw. (BBZ30P060FTB)
(5) Remove the four screws. (BPZ30P080FTB)

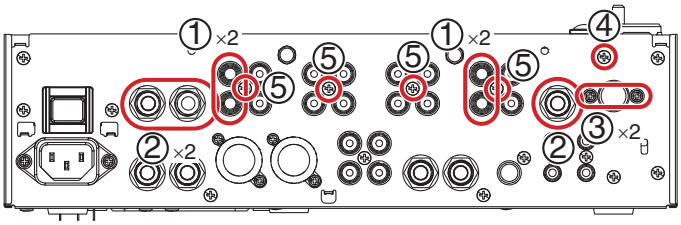

• Rear view

Screw tightening order

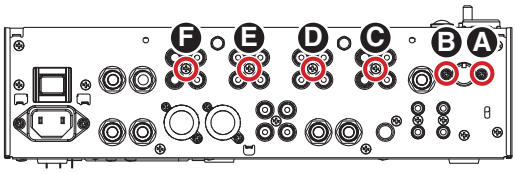

Nut tightening order

Tighten the nuts after tightening the screws indicated in the figure on the left.

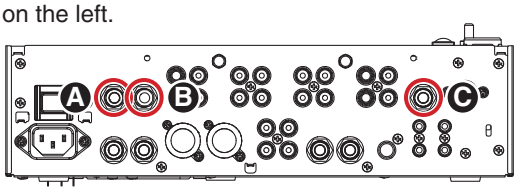

(6) Remove the MIC1 Assy.
(7) Remove the two screws. (BBZ30P060FTC)
(8) Remove the MTRM Assy with stay.

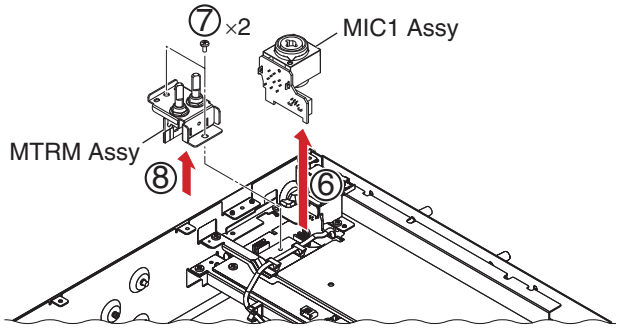

(9) Remove the five screws. (BBZ30P060FTC)
(10) Remove the shield plate/INP.

Screw tightening order

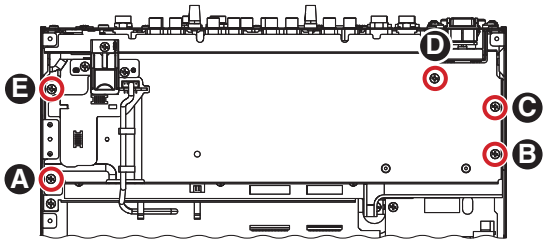

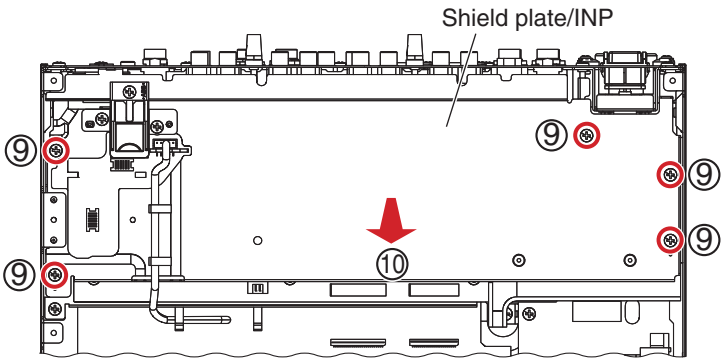

(11) Remove the three screws. (BBZ30P060FTC)

Screw tightening order

Before tightening these screws, be sure to tighten the screws and nuts for securing the INPUT Assy to the rear panel. (Positioning of the INPUT Assy is determined by its attachment position on the rear panel.)

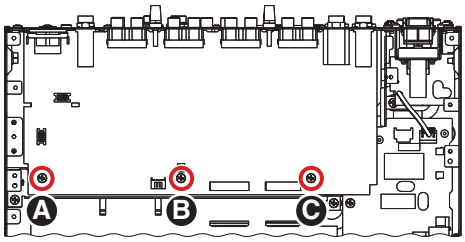

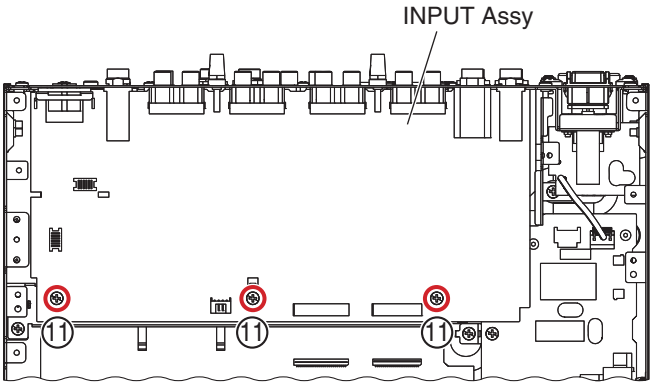

(12) Lift up the INPUT Assy to a front direction.

Diagnosis

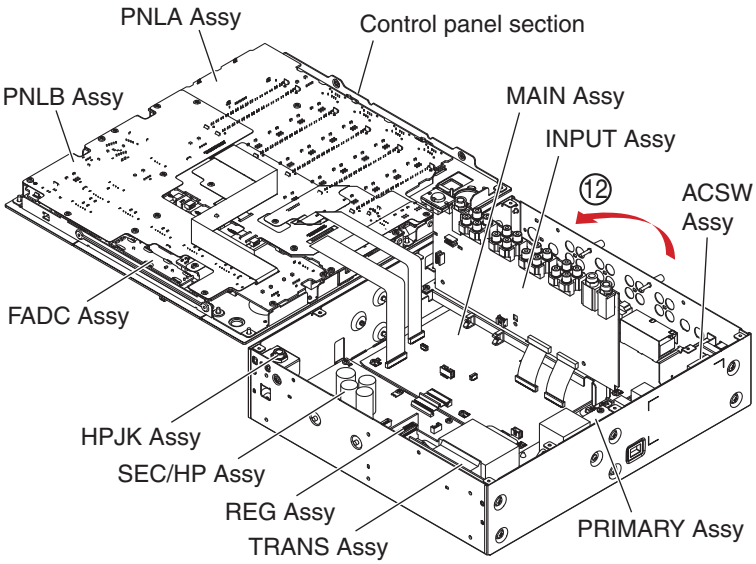

Reference information

Screw tightening order (Rear panel)

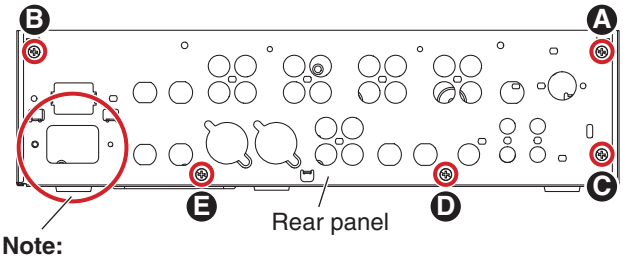

Note:
The rear panel is attached to the chassis with the INLET connector. Therefore, when detaching the rear panel, remove the two screws for INLET connector.

Screw tightening order (MAIN Assy)

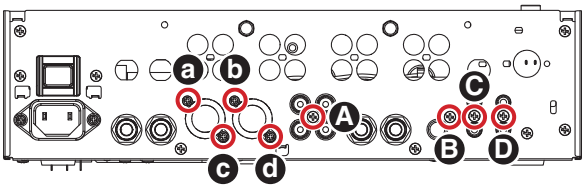

Nut tightening order (MAIN Assy)

Tighten the nuts after tightening the screws indicated in the figure on the upper.

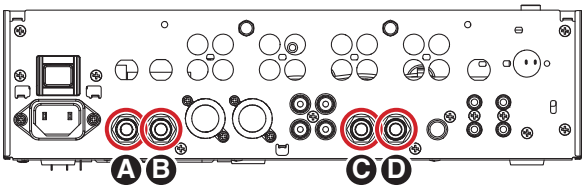

Screw tightening order (MAIN Assy)

Before tightening these screws, be sure to tighten the screws and nuts for securing the MAIN Assy to the rear panel. (Positioning of the MAIN Assy is determined by its attachment position on the rear panel.)

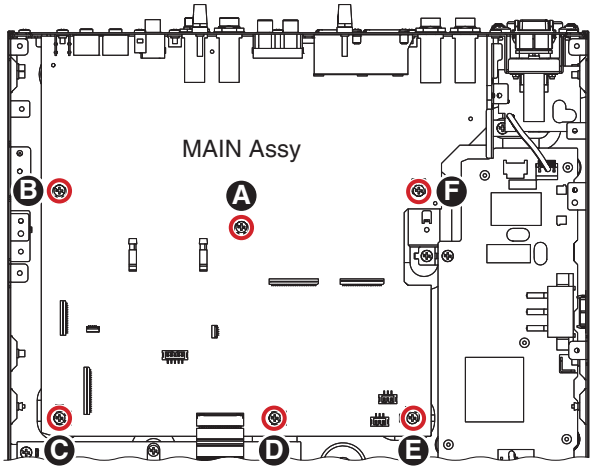

Screw tightening order (Bracket PSW)

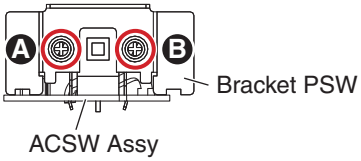

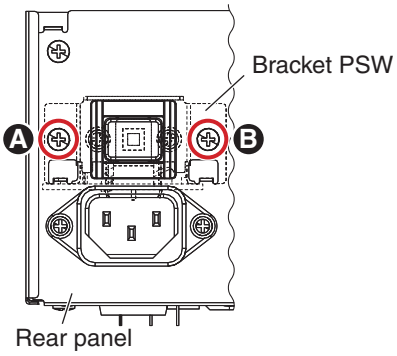

Screw tightening order (SEC/HP, REG Assy)

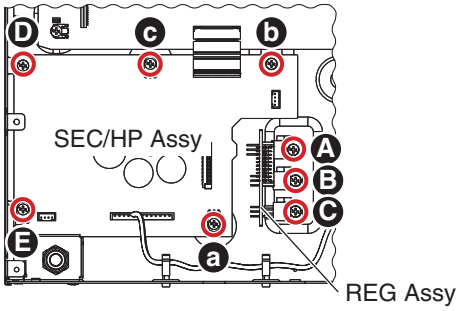

Screw tightening order (Stay/INP)

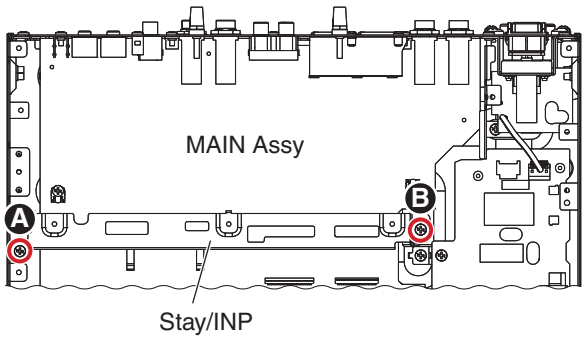

Screw tightening order (Bracket/USB)

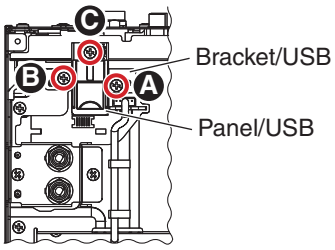

Screw tightening order (Bracket/MIC)

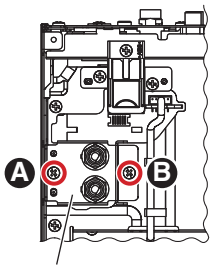

Nut tightening order (Bracket/MIC)

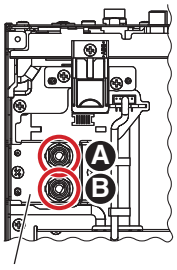

Screw tightening order (Side panel L)

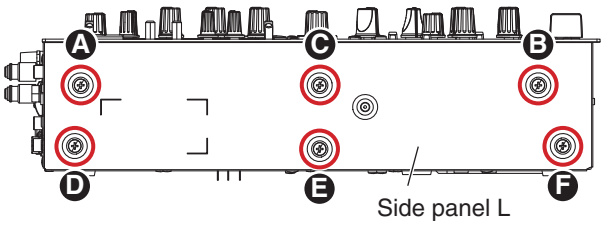

Screw tightening order (Side panel R)

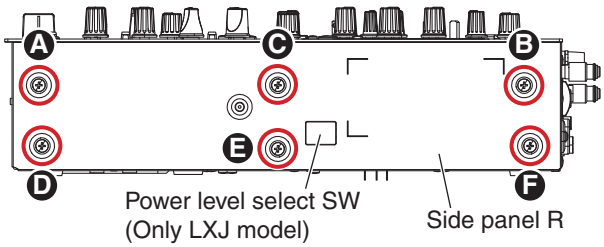

Jumper wire styling

3 rotations.
(For improving sound quality)

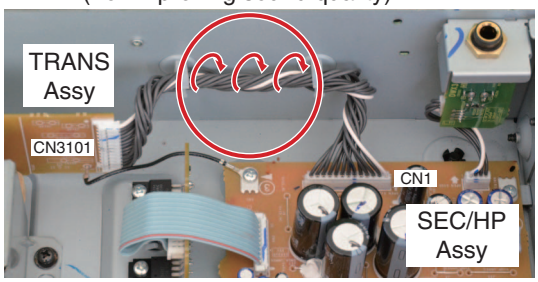

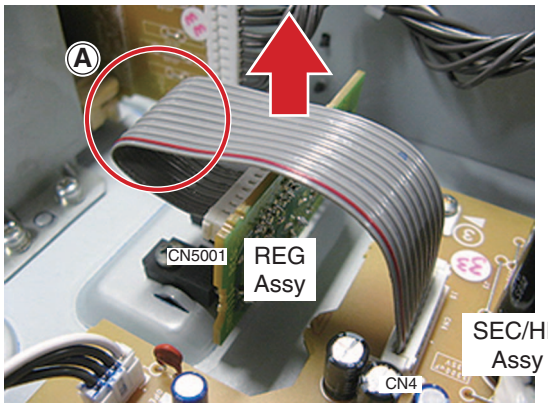

Bend the FFC at the place Ⓐ above so that the cable will not bulge in the direction indicated by the arrow (↑).

Locking wire saddle position (LXJ model only)

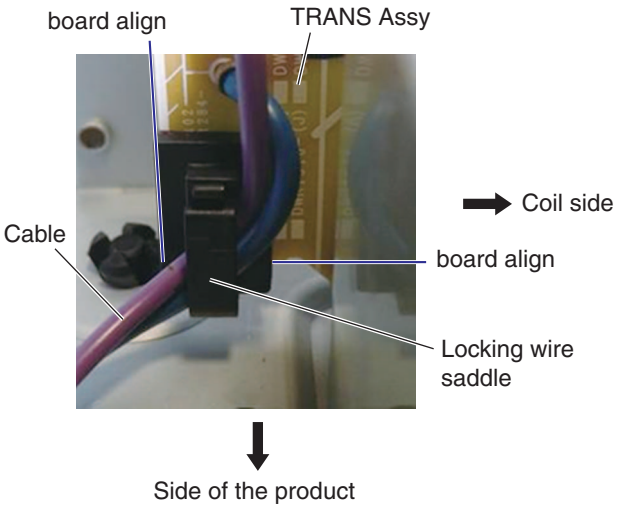

1: Adhere the Locking Wire Saddle so that its corner and that of the board align.
2: Be sure to clamp the cables to the Locking Wire Saddle so that they are styled coming from the coil side toward the side of the product, as shown in the figure above.

[3] Panel Section

[3-1] Control panel and Fader panel

(1) Remove the all knobs.
(2) Remove the five silider knobs 2, five slider knobs 1, five slider knob stoppers. (See below.)

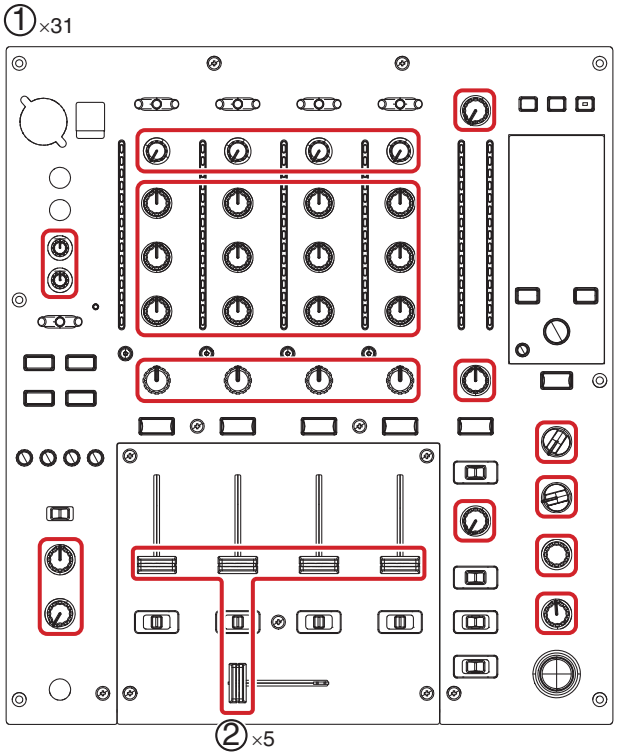

The reference of the direction

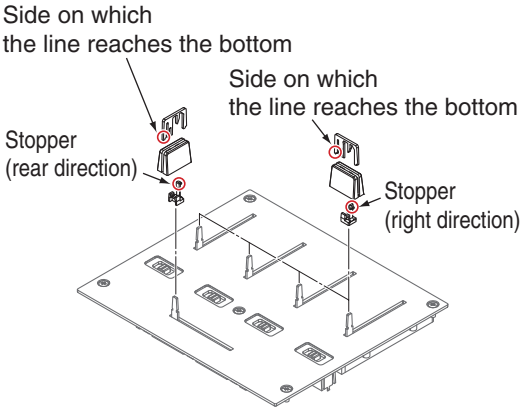

• Disassembly of the slider knob

The new slider knob adopted by this product is designed so that it is not pulled out easily.
Therefore, the method for removing the slider knob is different from the conventional method; it can only be pulled out after slider knob 2 is removed.

① Find the side on which the line reaches the bottom.

② Insert a pair of tweezers etc. beneath the line then push the slider knob 2 upward. To protect the panel from being scratched, use protective material.

③ Remove the slider knob 2.

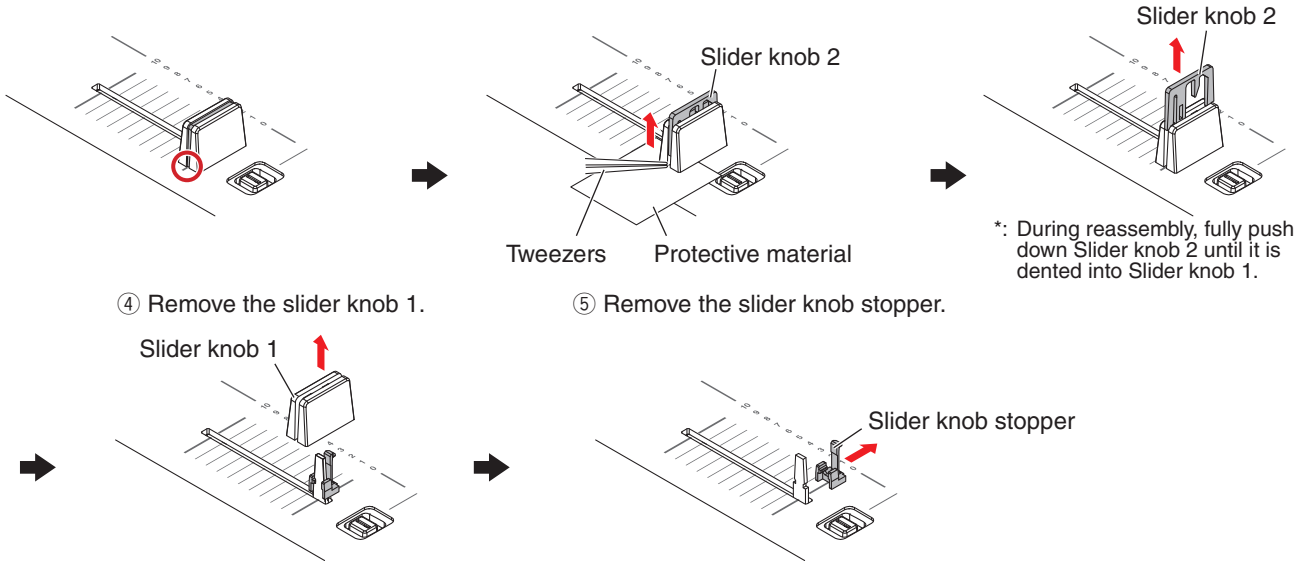

(3) Remove the six screws.
(K: DBA1290, S: DBA1436)
(4) Remove the five screws.
(K: DBA1290, S: DBA1436)
(5) Remove the Control panel and Fader panel.

Note:
When you remove only Fader panel, it is a process of step (2), (4).

Screw tightening order
(for MAIN unit)

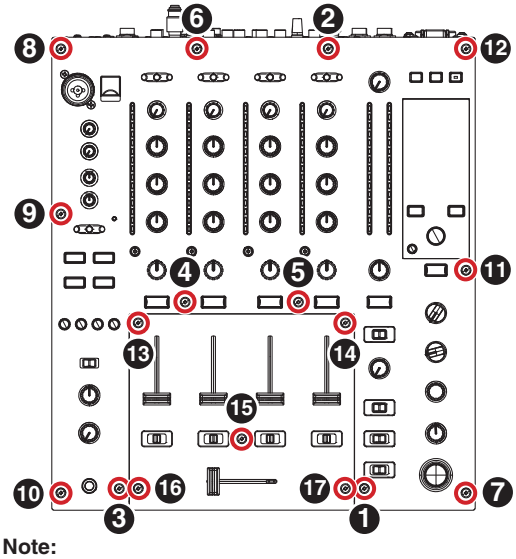

Note:
Screws ❶ – ❻ are for securing the control panel and panel stay, screws.
Screws ❼ – ⓬ are for securing the Control Panel Assy and the cabinet of the product.
Screws ⓭ – ⓱ are for securing the Fader Panel and the cabinet of the product.

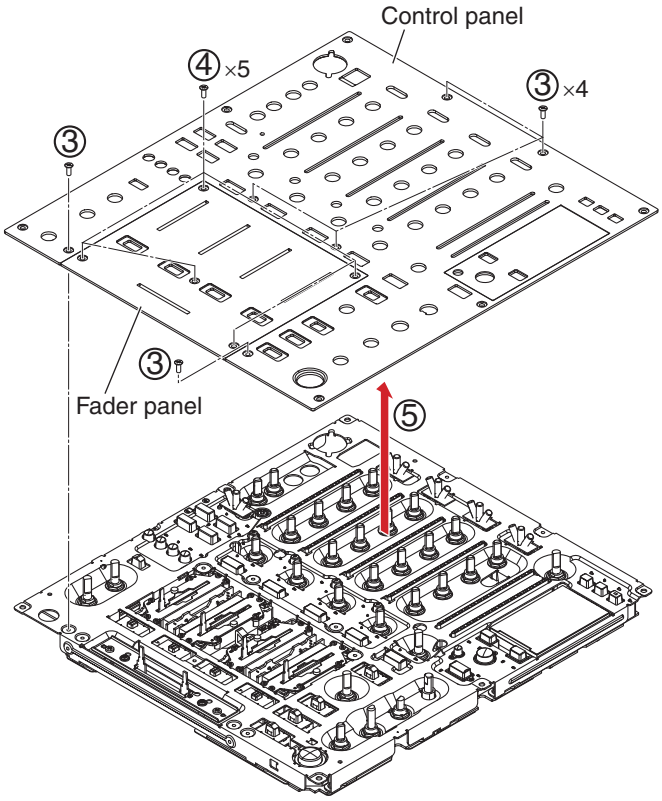

[3-2] Fader section

(1) Remove the two screws. (BBZ30P060FTC)
(2) Remove the FADC Assy.
(3) Disconnect the one connector. (CN8001)
(4) Remove the eight screws. (BSZ20P040FTB)
(5) Remove the FAD1 to FAD4 Assemblies.
(6) Disconnect the four connectors.
(CN7201, 7401, 7601, 7801)
(7) Release the jumper wire from clamper.

• Connectors color

Match the color of a connected connector.

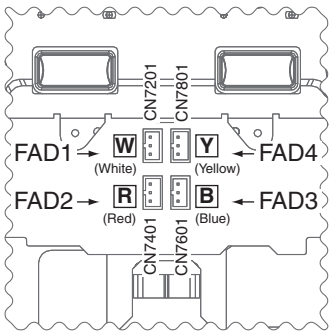

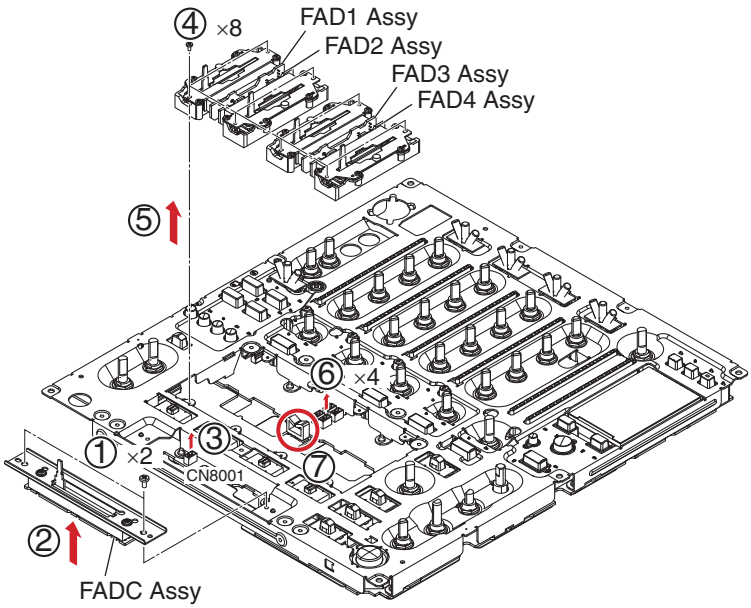

Screw tightening order

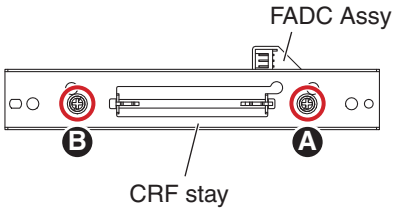

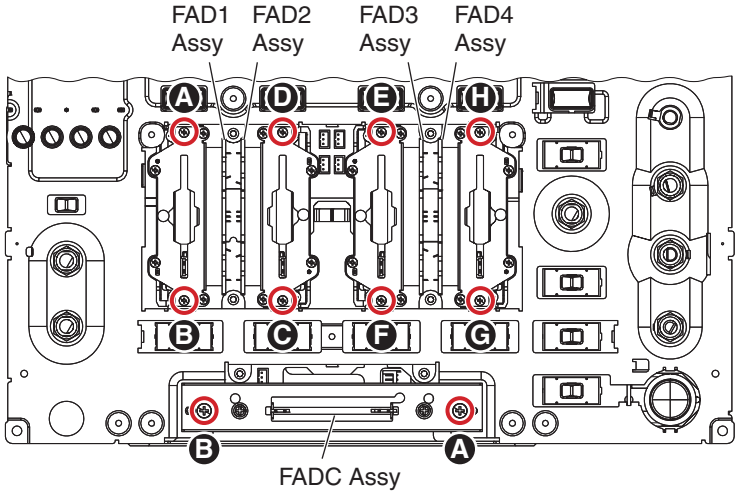

Cable styling

Style the cable (yellow) from the FAD4 Assy so that it is placed between the PNLB Assy and the FAD3 Fader section and will not protrude from the bottom of the PNLB Assy.

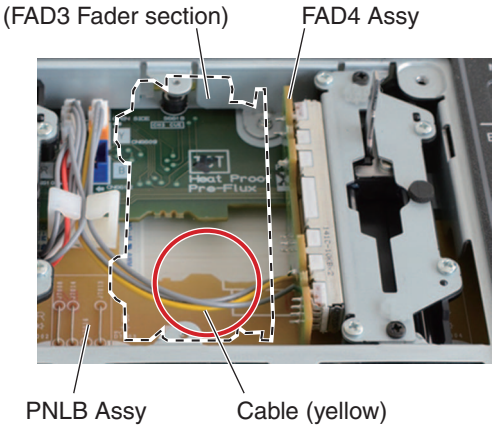

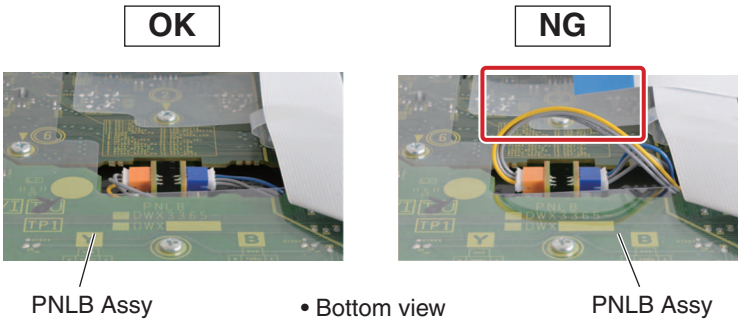

• **FAD1 to FAD4 Assemblies**

(1) Remove the four screws. (BPZ20P060FTC)
(2) Remove the FAD Assy with VR stay.
(3) Remove th two screws. (PMH20P040FTC)
(4) Remove the FAD Assy.

(5) Remove the two screws and remove the guide shaft (S) and slider base section. (CPZ26P080FTC)
(6) Remove the slider section from guide shaft (S).
(7) Remove the two screws and remove the lever plate. (BPZ20P060FTC)

Screw tightening order

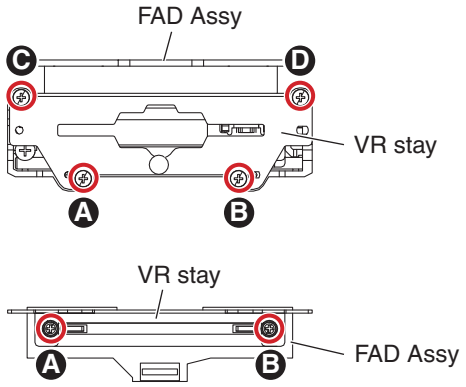

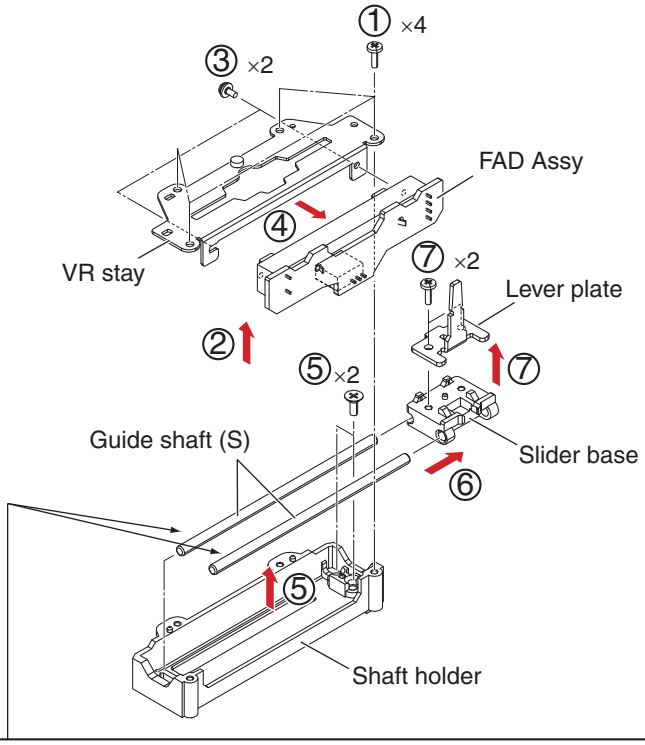

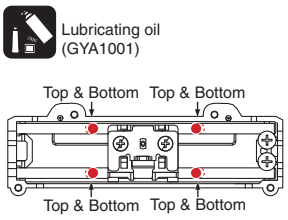

Note:
Greasing must be performed at a total of 8 points, 2 points each for the upper and bottom places of each shaft. (0.4 to 1 mg per point × 8 points)
After applying grease, move the slider base back and forth from one end to the other for approximately 10 to 20 strokes, in order to fully spread the grease.

[3-3] PNLA and PNLB Assemblies

(1) Remove the 30 flange nuts M9.
(2) Remove the one nut.

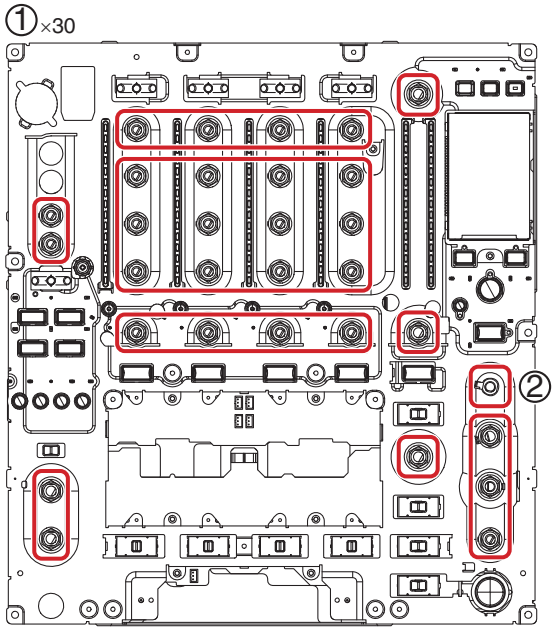

(3) Remove the five SW packings.
(4) Remove the eight slide SW caps (W).
(5) Remove the SW packing (EF).

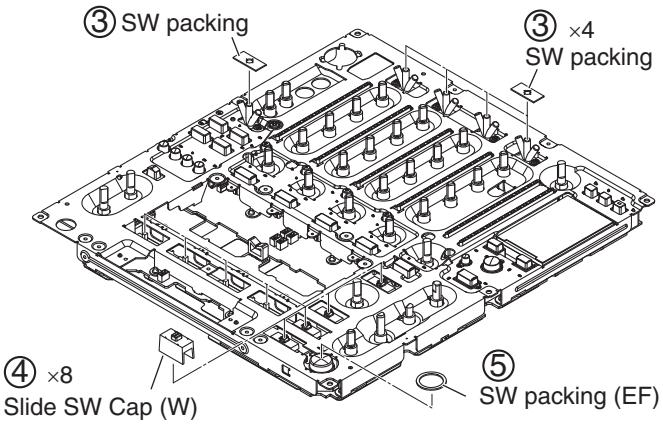

(6) Reverse the control panel section.
(7) Remove the 13 screws. (BBZ30P060FTC)
(8) Remove the barrier/A and barrier/PNL.
(9) Remove the seven screws. (BBZ30P060FTC)
(10) Remove the one screws (PBH30P080FTB)
(11) Remove the PNLA and PNLB Assemblies.

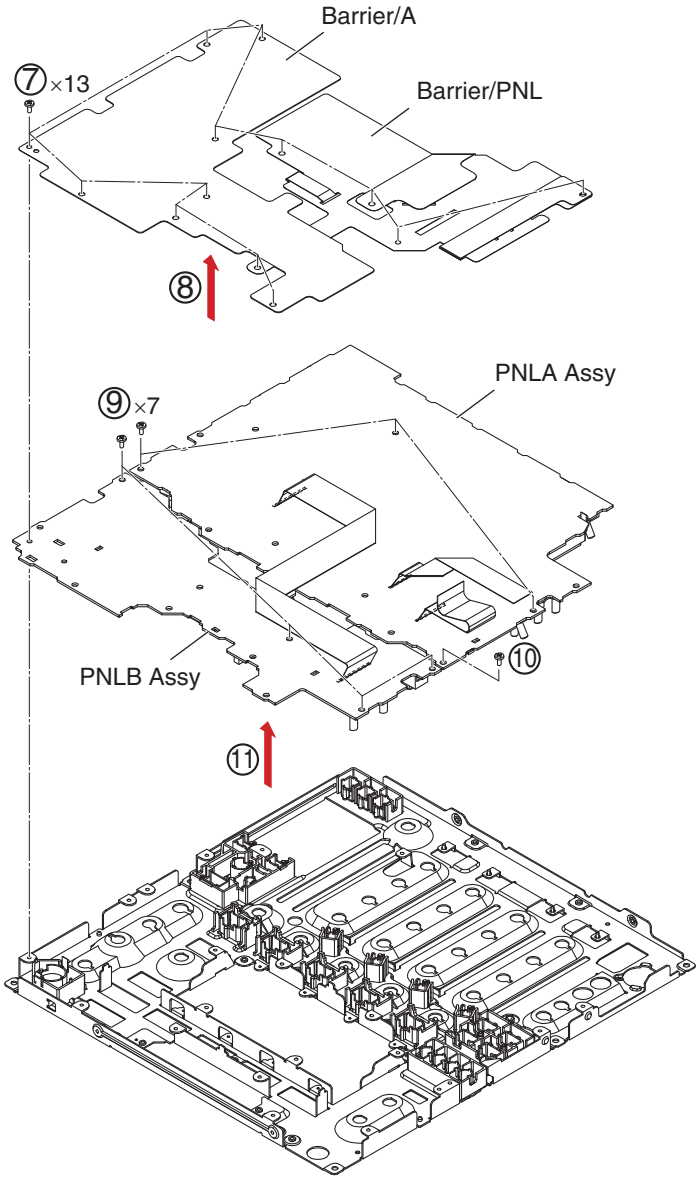

• Bottom view

Screw tightening order

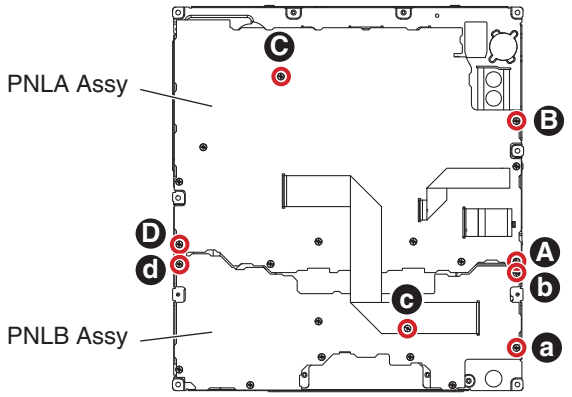

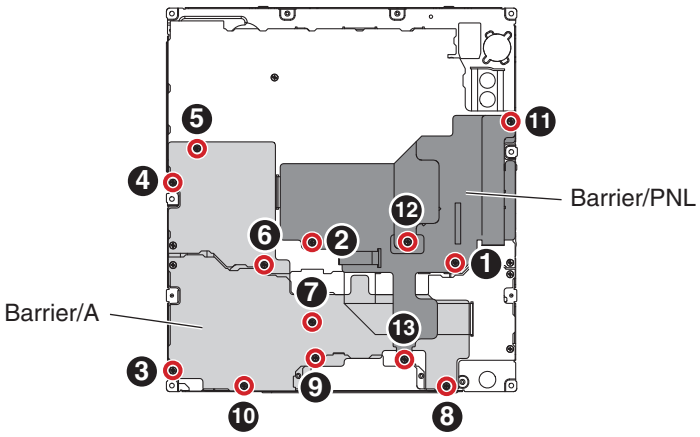

Note:
When the PNLA Assy and PNLB Assy were both detached, secure the screws in the order of follows.
Ⓐ→ⓐ→Ⓑ→ⓑ→ⓒ→Ⓒ→Ⓓ→ⓓ

Note:
Tighten the screws (⓫ to ⓭) after performing styling of flexible cables.

Flexible cables, Barriers styling

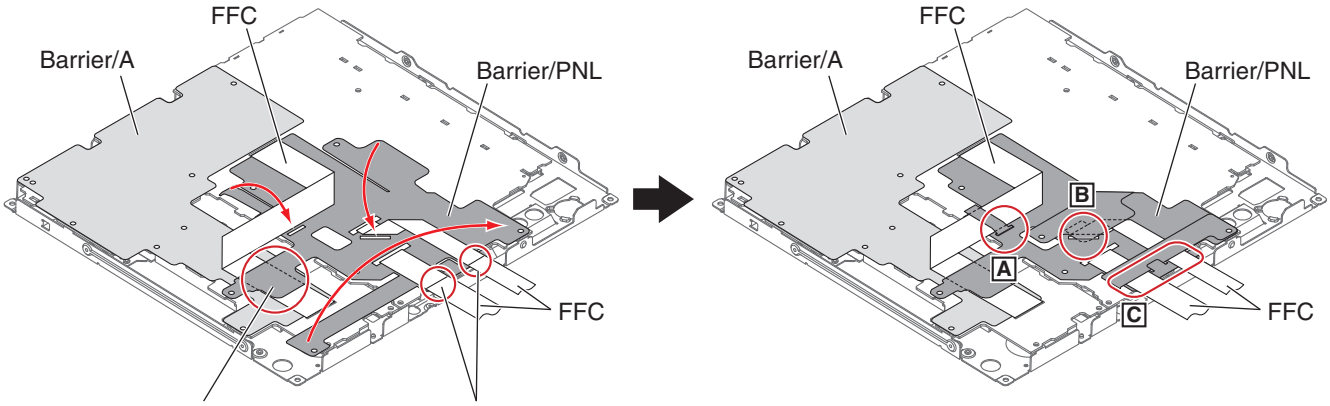

Be sure to place the PNLB Assy, Barrier/A, FFC, and Barrier/PNL, in that order, from the bottom upward.

Bend the two FFCs on some this side of edge (barrier/PNL).

A

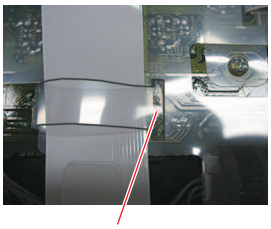

Be sure to insert the hook.

B

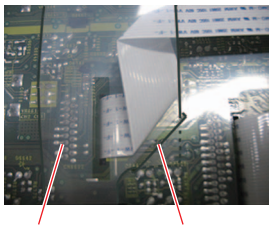

Bending part slit

Be sure to insert this bending part of the barrier into the slit of the Barrier/PNL.

C

Be sure to insert the bending part of the barrier beneath the raising tab during styling.

Bending part

Raising tab

Be sure that each FFC is separately placed up and down with regard to the above raising tab and that they do not overlap.

8. EACH SETTING AND ADJUSTMENT

8.1 NECESSARY ITEMS TO BE NOTED

It is recommended that you take note of the setting data before starting repair.
Use “8.4 SHEET FOR CONFIMATION OF THE USER SETTINGS” for taking notes.
After repairing, be sure to check the version of the firmware (see “Mode 1: For confirmation of the version” in “TEST MODE”), and if it is not the latest one, update to the latest version.

When the following parts are replaced, confirmation of the version of the firmware, updating to the latest version of the firmware.

- MAIN Assy
  (MAIN UCOM: IC2803, FLASH: IC2802, FLASH: IC3008)
- PNLA Assy
  (SUB UCOM: IC6601)

8.2 UPDATING OF THE FIRMWARE

A. Confirmation of the Download Files:

1. Unzip the downloaded file.

Windows:
Put [DJM-850_vxxx_WIN.zip] which you downloaded in any directory including the desktop, and please unzip it.

Macintosh:
Put [DJM-850_vxxx_MAC.dmg] which you downloaded in any directory including the desktop, and please unfold by double click.

2. Confirm the contents of the file.

Windows:
[DJM-850_vxxx_WIN] folder is generated.
1. [DJM-850_vxxx.exe]
2. [DJM-850_update_manual.pdf]

Macintosh:
[DJM-850_vxxx_MAC] folder is generated.
1. [DJM-850_vxxx.app]
2. [DJM-850_update_manual.pdf]

Notes:
- The above xxx denotes the version of new firmware.
- The extension (.exe or .upd) may not be displayed, depending on the setting of the computer.

B. Preparation for Updating on the DJM-850:

① **Connect computer with DJM-850.**

Connect your computer with DJM-850 by USB cable.

② **Move to update mode.**

Press [CUE (BEAT EFFECT)] button and [ON/OFF (BEAT EFFECT)] button with power button.

③ **Check the current version.**

Check the current version of your firmware by "current version" on FL display.
(No need to update it if current version shows as x.xx. It is the latest firmware.)

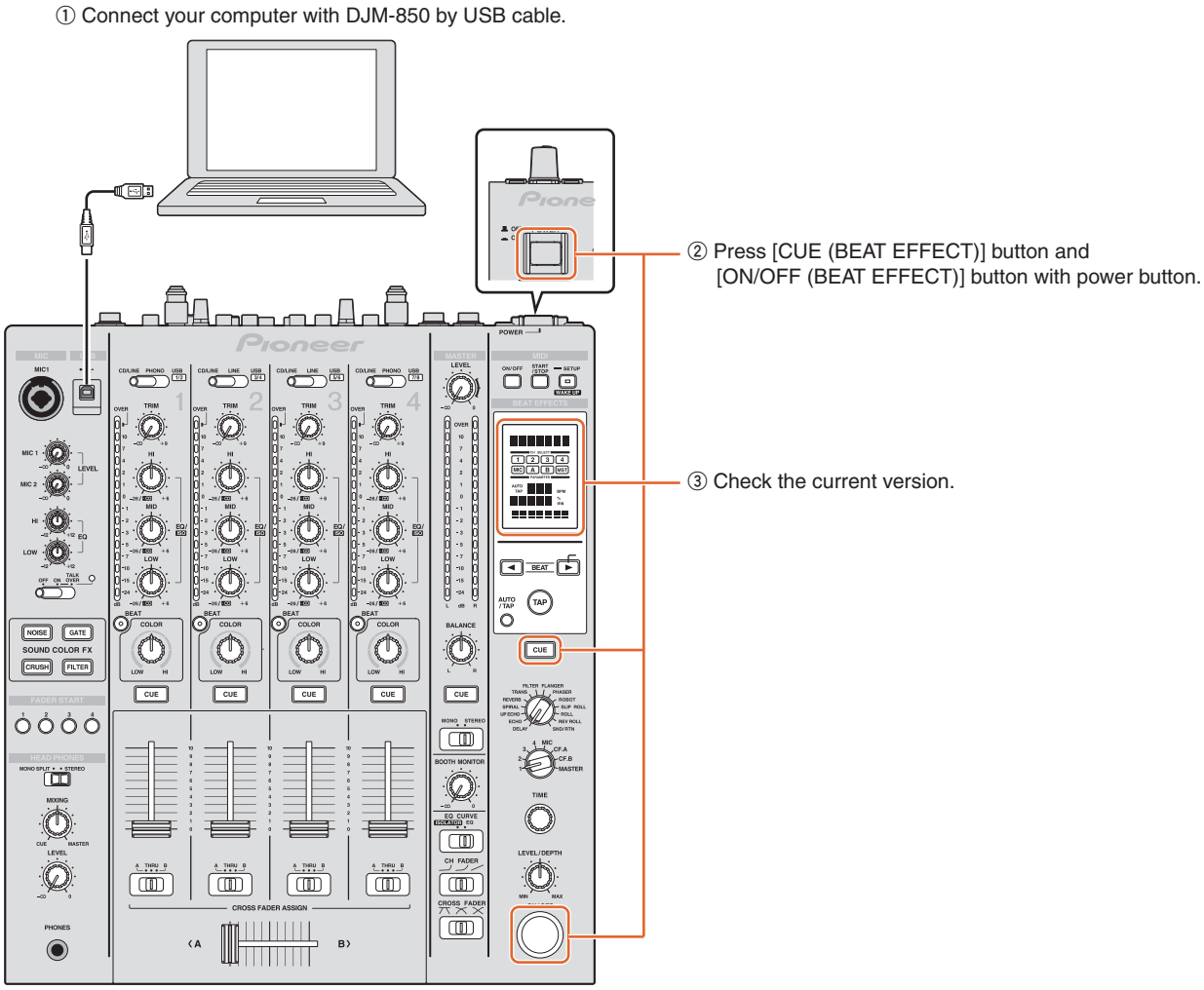

C. Operate a computer, and please execute update:

1. Executing Updating

Close all of applications before updating.

<STEP1> Start update tool

Windows:
Double click [DJM-850_vxxx.exe].

Macintosh:
Double click [DJM-850_vxxx.app].

<STEP2> Language selection screen

Choose a language to become the use, and lick "OK" button.
(a selection screen English as for the follows)

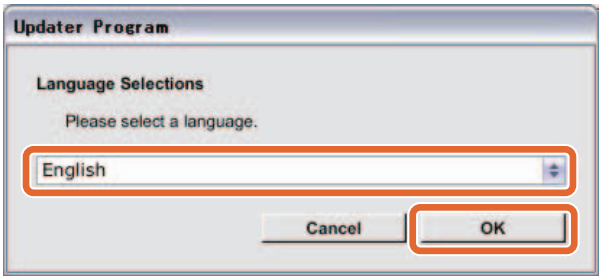

<STEP3> Version confirmation screen

Confirm that an update version is x.xx, and click [start].
Never pull power cord, USB cable during update.
(the following screen is an example)

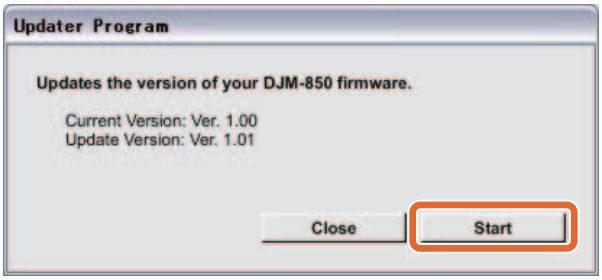

Screen during the update

Please wait until a progress bar arrives at the end.

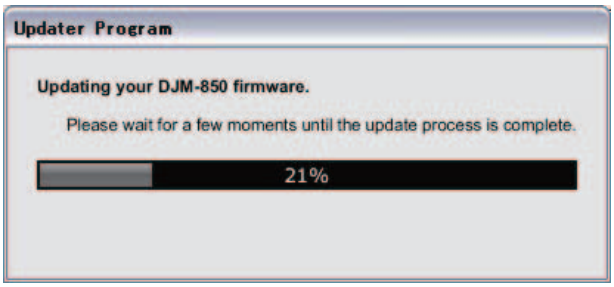

<STEP4> Update completion screen

Confirm completion of the update.
The following screen was displayed, and please click [OK].
When "SUCCESS" message is displayed on FL display of DJM-850, update is completion.

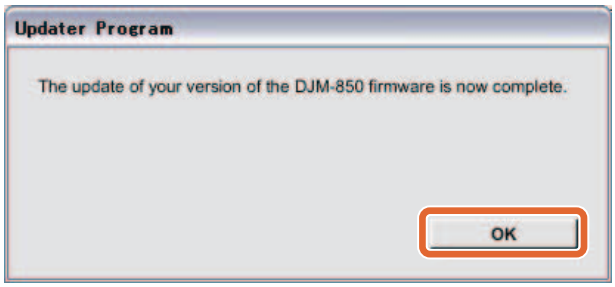

<STEP5> DJM-850 restart

Turn it on again after turning off the power of DJM-850 once.

2. Update was completed, or confirm a current version of DJM-850.

<STEP1> Start with an update mode

Press [CUE (BEAT EFFECT)] button and
[ON/OFF (BEAT EFFECT)] button with power button.

<STEP2> The confirmation of the version

If the version on the FL display of DJM-850 is displayed with x.xx, the update is completed normally.

[Reference information]

The update tool is available by the following OS's.
Windows: WindowsXP/Windows Vista/Windows 7
Mac: OS X 10.5/OS X 10.6/OS X 10.7

Be approximately 3 minutes at update time.

8.3 USER SETABLE ITEMS

	Setting Item	FL Display	Setting Area	Initial Value (Factory settings)	Part No.	Part Name	Ref No.	Assy	Content to be Stored
USER SETUP	Fader Start	F.S.	ON/OFF	ON	DYW1807	Flash ROM	IC2802	MAIN	UTILITY setting
	MIDI CH	MIDI CH	1 to 16	1					
	MIDI Button Type	MIDI BT	Toggle/Trigger	Toggle					
	TALK OVER MODE	TLK MOD	ADVANCED / NORMAL	ADVANCED					
	TALK OVER LEVEL	TLK LVL	-24dB/-18dB/-12dB/-6dB	-18dB					
CLUB SETUP	Digital Master Out Level	DOUT LV	-19dB/-15dB/-10dB/-5dB	-19dB					
	Digital Out Sampling Rate	DOUT FS	48kHz/96kHz	96kHz					
	MASTER ATT.	MST ATT	-6dB/-3dB/0dB	0dB					
	Auto Standby	AUTOSTB	ON/OFF	ON					
	Mic Output To Booth Monitor	MIC BTH	ON/OFF	ON					
	PC Utility	PC UTLY	ON/OFF	ON					
	Factory Reset	INITIAL	YES/NO	NO					

8.4 SHEET FOR CONFIRMATION OF THE USER SETTING

When you write down a setting item, please make use of this seat.

USER SETUP

Fader Start

OFF	ON

MIDI CH

1	2	3	4	5	6	7	8
9	10	11	12	13	14	15	16

MIDI Button Type

TGL	TRG

TALK OVER MODE

NOR	ADV

TALK OVER LEVEL

-24dB	-18dB	-12dB	-6dB

CLUB SETUP

Digital Master Out Level

-19dB	-15dB	-10dB	-5dB

Digital Out Sampling Rate

48kHz	96kHz

MASTER ATT.

-6dB	-3dB	0dB

Auto Standby

OFF	ON

Mic Output To Booth Monitor

OFF	ON

PC Utility

OFF	ON

Factory Reset

NEVER perform FACTORY RESET before taking note of setting data.

9. EXPLODED VIEWS AND PARTS LIST

NOTES:
- *Parts marked by "NSP" are generally unavailable because they are not in our Master Spare Parts List.*
- *The ⚠ mark found on some component parts indicates the importance of the safety factor of the part. Therefore, when replacing, be sure to use parts of identical designation.*
- *Screws adjacent to ▼ mark on product are used for disassembly.*
- *For the applying amount of lubricants or glue, follow the instructions in this manual. (In the case of no amount instructions, apply as you think it appropriate.)*

9.1 PACKING SECTION

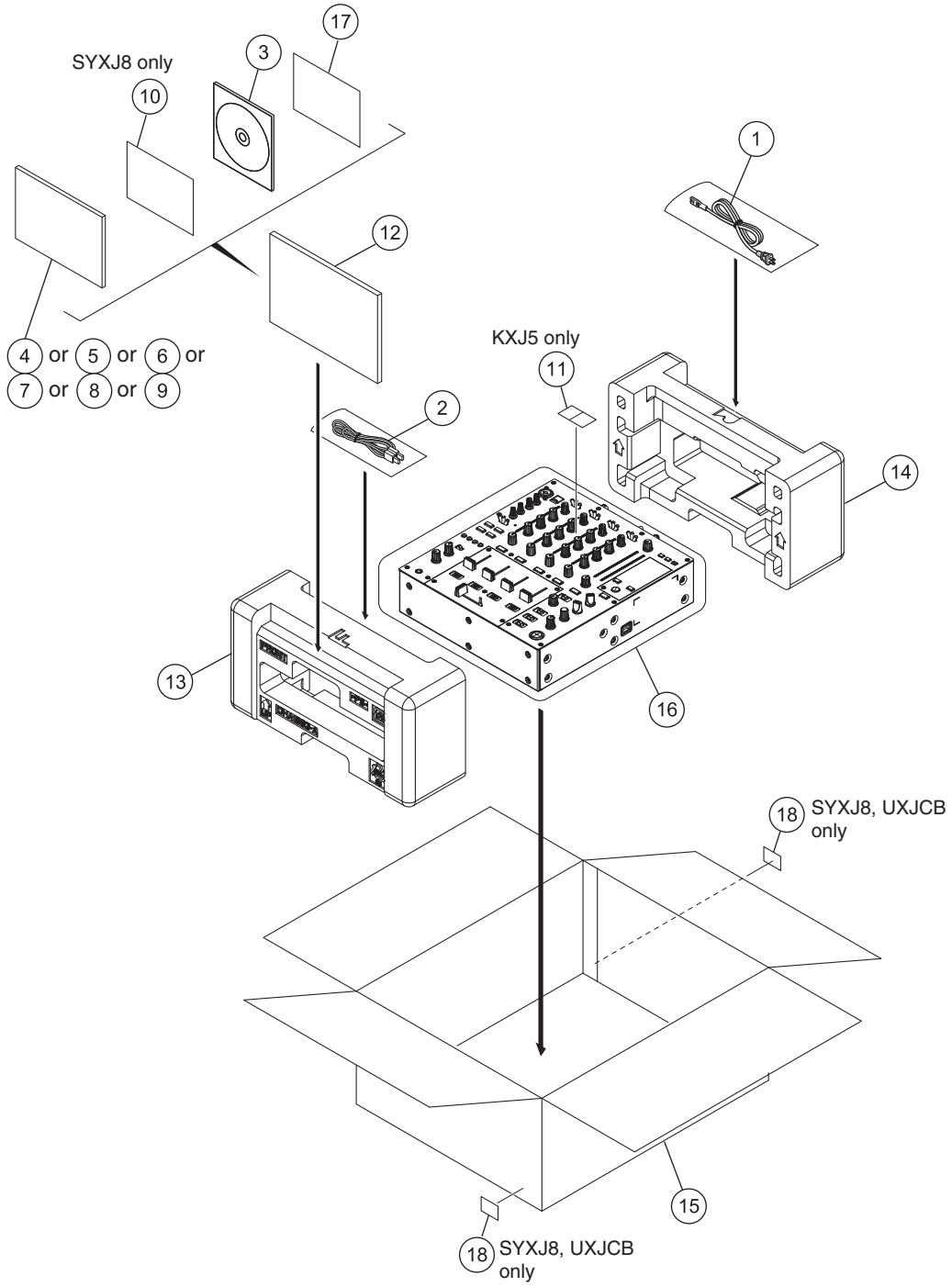

(1) PACKING SECTION PARTS LIST

Mark	No.	Description	Part No.
⚠	1	AC Power Cord	See Contrast table (2)
	2	USB Cable	DDE1128
	3	Driver Software CD-ROM	DXX2694
	4	Operating Instructions	See Contrast table (2)
	5	Operating Instructions	See Contrast table (2)
	6	Operating Instructions	See Contrast table (2)
	7	Operating Instructions	See Contrast table (2)
	8	Operating Instructions	See Contrast table (2)
	9	Operating Instructions	See Contrast table (2)
NSP	10	Warranty Card (WY)	See Contrast table (2)
NSP	11	Label RCY	See Contrast table (2)
NSP	12	Polyethylene Bag	AHG7117
	13	Packing Pad/A	DHA1883
	14	Packing Pad/B	DHA1884
	15	Packing Case	See Contrast table (2)
	16	Packing Sheet	RHC1023
NSP	17	Leaflet/NI	DRM1367
	18	Label/NI	See Contrast table (2)

(2) CONTRAST TABLE

DJM-850-K/SYXJ8, UXJCB, LXJ, KXJ5, XJCN5, DJM-850-S/SYXJ8, UXJCB, LXJ, KXJ5 and XJCN5 are constructed the same except for the following:

Mark	No.	Symbol and Description	DJM-850-K /SYXJ8	DJM-850-K /UXJCB	DJM-850-K /LXJ	DJM-850-K /KXJ5	DJM-850-K /XJCN5
⚠	1	AC Power Cord	ADG7062	DDG1108	ADG7062	ADG7115	ADG7105
	4	Operating Instructions (En, Fr, De, It)	DRB1604	Not used	Not used	Not used	Not used
	5	Operating Instructions (Nl, Es, Ru)	DRB1605	Not used	Not used	Not used	Not used
	6	Operating Instructions (En)	Not used	DRB1606	Not used	Not used	Not used
	7	Operating Instructions (En, Es, Zhtw)	Not used	Not used	DRB1607	Not used	Not used
	8	Operating Instructions (Ko)	Not used	Not used	Not used	DRB1608	Not used
	9	Operating Instructions (En, Zhcn)	Not used	Not used	Not used	Not used	DRB1609
NSP	10	Warranty Card (WY)	ARY7107	Not used	Not used	Not used	Not used
NSP	11	Label RCY	Not used	Not used	Not used	DRW2487	Not used
	15	Packing Case	DHG3093	DHG3094	DHG3095	DHG3098	DHG3097
	18	Label/NI	DRW2543	DRW2543	Not used	Not used	Not used

Mark	No.	Symbol and Description	DJM-850-S /SYXJ8	DJM-850-S /UXJCB	DJM-850-S /LXJ	DJM-850-S /KXJ5	DJM-850-S /XJCN5
⚠	1	AC Power Cord	ADG7062	DDG1108	ADG7062	ADG7115	ADG7105
	4	Operating Instructions (En, Fr, De, It)	DRB1604	Not used	Not used	Not used	Not used
	5	Operating Instructions (Nl, Es, Ru)	DRB1605	Not used	Not used	Not used	Not used
	6	Operating Instructions (En)	Not used	DRB1606	Not used	Not used	Not used
	7	Operating Instructions (En, Es, Zhtw)	Not used	Not used	DRB1607	Not used	Not used
	8	Operating Instructions (Ko)	Not used	Not used	Not used	DRB1608	Not used
	9	Operating Instructions (En, Zhcn)	Not used	Not used	Not used	Not used	DRB1609
NSP	10	Warranty Card (WY)	ARY7107	Not used	Not used	Not used	Not used
NSP	11	Label RCY	Not used	Not used	Not used	DRW2487	Not used
	15	Packing Case	DHG3105	DHG3106	DHG3107	DHG3110	DHG3109
	18	Label/NI	DRW2543	DRW2543	Not used	Not used	Not used

9.2 EXTERIOR SECION

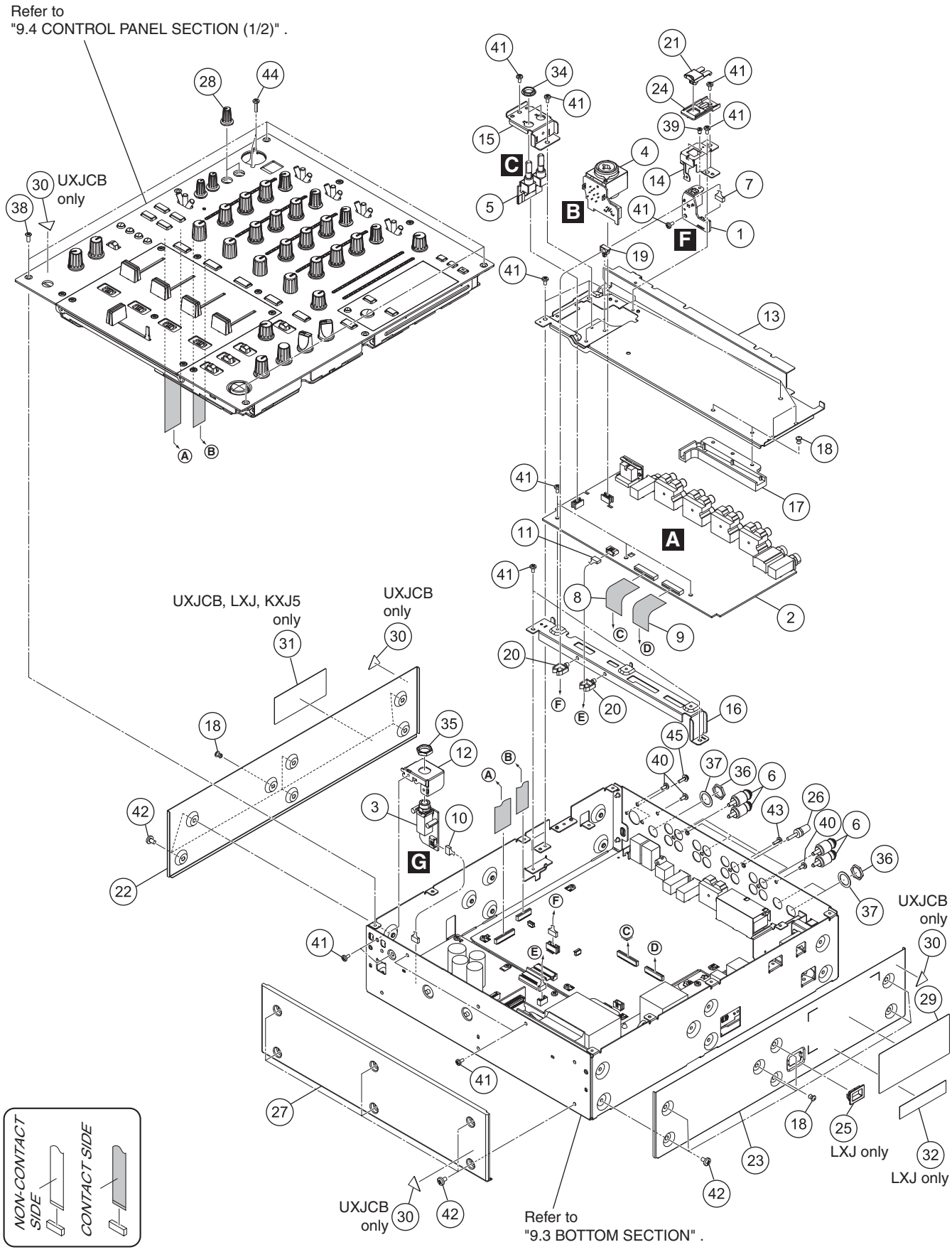

(1) EXTERIOR SECION PARTS LIST

Mark	No.	Description	Part No.
	1	USBI Assy	DWX3361
	2	INPUT Assy	DWX3362
	3	HPJK Assy	DWX3363
	4	MIC1 Assy	DWX3371
	5	MTRM Assy	DWX3372
	6	Short Pin Plug	AKM7008
	7	Shielded Conn-Cable	DDA1043
	8	FFC/25P	DDD1597
	9	FFC/22P	DDD1598
	10	Connector Assy (J2)	PF04PP-S05
	11	Cable (J3)	PF04PP-S17
	12	Stay/HP	DNF1907
	13	Shield Plate/INP	DNF1908
	14	Bracket/USB	DNF1909
	15	Bracket/MIC	DNF1910
	16	Stay/INP	DNF1911
	17	Cover/PCB	DNK6136
	18	Nylon Rivet	AEC1671
	19	Locking Mini Clamp	DEC2439
	20	Holder	VEC1355
	21	USB Cover B	DNK5868
	22	Side Panel L	DNK6061
	23	Side Panel R	See Contrast table (2)
	24	Panel/USB	DNK6120
	25	Knob/POW	See Contrast table (2)
	26	Terminal Screw	AKE-031
	27	Front Panel	DNK6063
	28	Knob/MIC	DAA1301
NSP	29	Label	See Contrast table (2)
NSP	30	Label	See Contrast table (2)
NSP	31	Caution Label	See Contrast table (2)
NSP	32	V Select Label	See Contrast table (2)
	33	•••••	
	34	Flange Nut M9	DBN1008
	35	Nut M12	DBN1018
	36	Nut (M12)	NKX2FNI
	37	Washer	DEC2920
	38	Screw (FE)	See Contrast table (2)
	39	Screw (M3*5)	DBA1340
	40	Screw	BBZ30P060FTB
	41	Screw	BBZ30P060FTC
	42	Screw	BBZ40P060FTB
	43	Screw	BPZ30P080FTB
	44	Screw	BPZ30P120FTB
	45	Screw	PMH30P100FTB

(2) CONTRAST TABLE

DJM-850-K/SYXJ8, UXJCB, LXJ, KXJ5, XJCN5, DJM-850-S/SYXJ8, UXJCB, LXJ, KXJ5 and XJCN5 are constructed the same except for the following:

Mark	No.	Symbol and Description	DJM-850-K /SYXJ8	DJM-850-K /UXJCB	DJM-850-K /LXJ	DJM-850-K /KXJ5	DJM-850-K /XJCN5
	23	Side Panel R	DNK6062	DNK6062	Not used	DNK6062	DNK6062
	23	Side Panel R/G	Not used	Not used	DNK6065	Not used	Not used
	25	Knob/POW	Not used	Not used	DNK6066	Not used	Not used
NSP	29	Label	DAL1207	DAL1208	DAL1209	DAL1212	DAL1211
NSP	30	Label	Not used	DRW1975	Not used	Not used	Not used
NSP	31	Caution Label	Not used	DRW2429	DRW2430	DRW2542	Not used
NSP	32	V Select Label	Not used	Not used	DRW2400	Not used	Not used
	38	Screw (FE)	DBA1290	DBA1290	DBA1290	DBA1290	DBA1290

Mark	No.	Symbol and Description	DJM-850-S /SYXJ8	DJM-850-S /UXJCB	DJM-850-S /LXJ	DJM-850-S /KXJ5	DJM-850-S /XJCN5
	23	Side Panel R	DNK6062	DNK6062	Not used	DNK6062	DNK6062
	23	Side Panel R/G	Not used	Not used	DNK6065	Not used	Not used
	25	Knob/POW	Not used	Not used	DNK6066	Not used	Not used
NSP	29	Label	DAL1213	DAL1214	DAL1215	DAL1218	DAL1217
NSP	30	Label	Not used	DRW1975	Not used	Not used	Not used
NSP	31	Caution Label	Not used	DRW2429	DRW2430	DRW2542	Not used
NSP	32	V Select Label	Not used	Not used	DRW2400	Not used	Not used
	38	Screw (FE)	DBA1436	DBA1436	DBA1436	DBA1436	DBA1436

9.3 BOTTOM SECTION

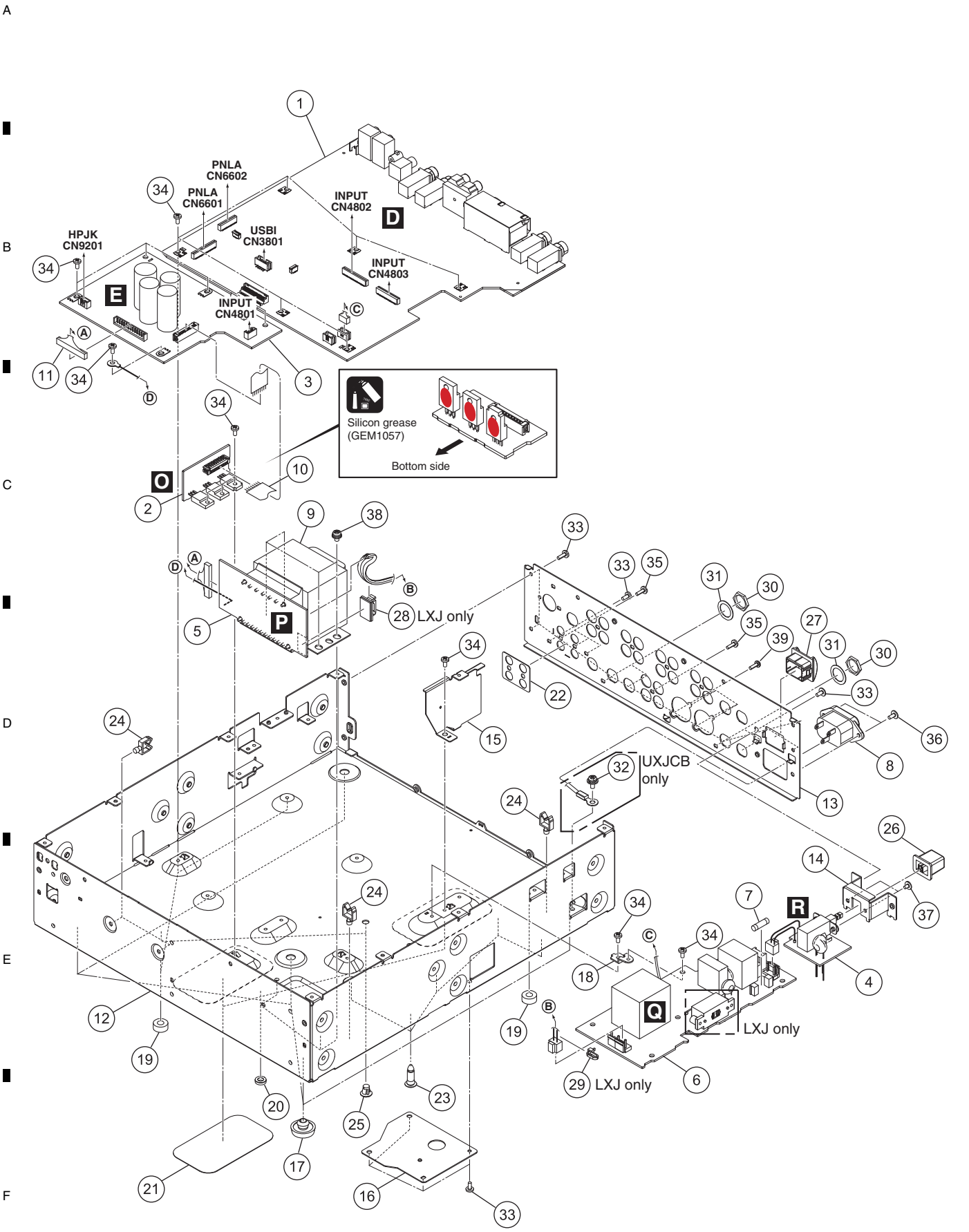

(1) BOTTOM SECTION PARTS LIST

Mark	No.	Description	Part No.
	1	MAIN Assy	DWX3360
	2	REG Assy	DWR1510
	3	SEC/HP Assy	DWR1511
	4	ACSW Assy	DWR1515
	5	TRANS Assy	See Contrast table (2)
	6	PRIMARY Assy	See Contrast table (2)
⚠	7	Fuse (FU1: T630 mA)	AEK1052
⚠	8	AC Inlet	See Contrast table (2)
⚠	9	Transformer/L (T3101)	See Contrast table (2)
	10	Jumper Wire (J1)	D20PYY1010E
	11	Connector Assy (J4)	PF13EE-S17
NSP	12	Chassis	DNA1437
	13	Rear Panel	See Contrast table (2)
	14	Bracket PSW	DNF1759
	15	Shield Plate/PW	DNF1906
NSP	16	Plate	DNK6124
	17	Foot (Rubber)	REC-434
NSP	18	PCB Stay (FE)	VNE2489
NSP	19	Spacer	AEB7092
	20	Spacer	DEB1998
	21	Sheet/BOT	DEC3404
NSP	22	Insulating Sheet	DMR1010
	23	PCB Holder	PNW2029
	24	Holder	VEC1355
NSP	25	PC Support	VEC1749
	26	Power Knob	DAC2306
	27	Power Knob Guard	DNK4534
	28	Locking Wire Saddle	See Contrast table (2)
	29	Binder	See Contrast table (2)
	30	Nut (M12)	NKX2FNI
	31	Washer	DEC2920
	32	Screw	See Contrast table (2)
	33	Screw	BBZ30P060FTB
	34	Screw	BBZ30P060FTC
	35	Screw	BPZ30P080FTB
	36	Screw	IBZ30P080FTB
	37	Screw	IMZ30P040FTC
	38	Screw	PMB40P060FTB
	39	Screw	PPZ30P080FTB

(2) CONTRAST TABLE

DJM-850-K/SYXJ8, UXJCB, LXJ, KXJ5, XJCN5, DJM-850-S/SYXJ8, UXJCB, LXJ, KXJ5 and XJCN5 are constructed the same except for the following:

Mark	No.	Symbol and Description	DJM-850-K /SYXJ8	DJM-850-K /UXJCB	DJM-850-K /LXJ	DJM-850-K /KXJ5	DJM-850-K /XJCN5
	5	TRANS Assy	DWR1516	DWR1517	DWR1512	DWR1516	DWR1516
	6	PRIMARY Assy	DWR1519	DWR1520	DWR1509	DWR1519	DWR1519
⚠	8	AC Inlet/2P	DKP3916	Not used	DKP3916	DKP3916	DKP3916
⚠	8	AC Inlet/3P	Not used	DKP3915	Not used	Not used	Not used
⚠	9	Transformer/L (T3101)	DTT1256	DTT1257	DTT1256	DTT1256	DTT1256
	13	Rear Panel	DNC2069	DNC2070	DNC2081	DNC2082	DNC2073
	28	Locking Wire Saddle	Not used	Not used	DEC3439	Not used	Not used
	29	Binder	Not used	Not used	ZCA-SKB90BK	Not used	Not used
	32	Screw	Not used	PMH40P080FTC	Not used	Not used	Not used

Mark	No.	Symbol and Description	DJM-850-S /SYXJ8	DJM-850-S /UXJCB	DJM-850-S /LXJ	DJM-850-S /KXJ5	DJM-850-S /XJCN5
	5	TRANS Assy	DWR1516	DWR1517	DWR1512	DWR1516	DWR1516
	6	PRIMARY Assy	DWR1519	DWR1520	DWR1509	DWR1519	DWR1519
⚠	8	AC Inlet/2P	DKP3916	Not used	DKP3916	DKP3916	DKP3916
⚠	8	AC Inlet/3P	Not used	DKP3915	Not used	Not used	Not used
⚠	9	Transformer/L (T3101)	DTT1256	DTT1257	DTT1256	DTT1256	DTT1256
	13	Rear Panel	DNC2069	DNC2070	DNC2081	DNC2082	DNC2073
	28	Locking Wire Saddle	Not used	Not used	DEC3439	Not used	Not used
	29	Binder	Not used	Not used	ZCA-SKB90BK	Not used	Not used
	32	Screw	Not used	PMH40P080FTC	Not used	Not used	Not used

9.4 CONTROL PANEL SECTION (1/2)

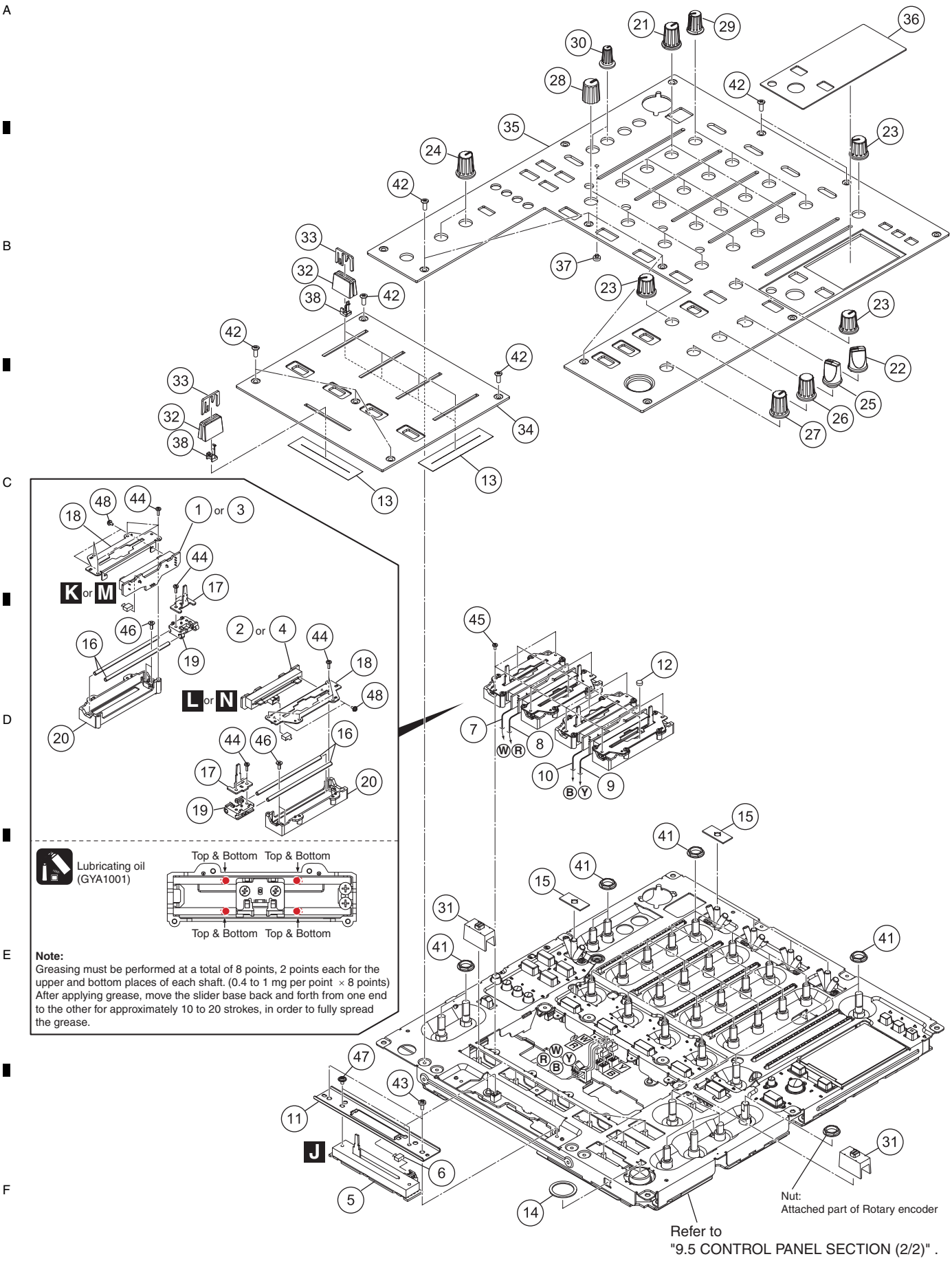

(1) CONTROL PANEL SECTION (1/2) PARTS LIST

Mark	No.	Description	Part No.
	1	FAD1 Assy	DWX3366
	2	FAD2 Assy	DWX3367
	3	FAD3 Assy	DWX3368
	4	FAD4 Assy	DWX3369
	5	FADC Assy	DWX3370
	6	Connector Assy	PF03PP-B07
	7	Connector Assy	PF03PP-B12
	8	Connector Assy	PF03PP2B07
	9	Connector Assy	PF03PP4B12
	10	Connector Assy	PF03PP6B07
	11	CRF Stay	DNF1870
	12	SW Cushion HH48/2	DEC2538
	13	Fader Packing	DEC2903
	14	SW Packing (EF)	DEC2929
	15	SW Packing	DED1177
NSP	16	Guide Shaft (S)	DLA1918
	17	Lever Plate	DNH2954
	18	VR Stay	DNH2955
	19	Slider Base	DNK5851
	20	Shaft Holder	DNK5852
	21	Rotary SW Knob (B)	DAA1176
	22	Select Knob	DAA1205
	23	Knob (MA)	DAA1210
	24	Knob (Black)	DAA1212
	25	FX SEL Knob	DAA1213
	26	Knob (TIME)	DAA1214
	27	Rotary Knob (BN)	DAA1220
	28	Rotary SW Knob (HM)	DAA1256
	29	Knob/CH	DAA1300
	30	Knob/EQ	DAA1302
	31	Slide SW Cap (W)	DAC2401
	32	Slider Knob 1	DAC2684
	33	Slider Knob 2	DAC2685
	34	Fader Panel	See Contrast table (2)
	35	Control Panel	See Contrast table (2)
	36	Panel/FL	DAH2877
	37	Lens	DNK4532
	38	Slider Knob Stopper	DNK5888
	39	• • • • •	
	40	• • • • •	
	41	Flange Nut M9	DBN1008
	42	Screw (FE)	See Contrast table (2)
	43	Screw	BBZ30P060FTC
	44	Screw	BPZ20P060FTC
	45	Screw	BSZ20P040FTB
	46	Screw	CPZ26P080FTC
	47	Screw	IMZ30P040FTC
	48	Screw	PMH20P040FTC

(2) CONTRAST TABLE

DJM-850-K/SYXJ8, UXJCB, LXJ, KXJ5, XJCN5, DJM-850-S/SYXJ8, UXJCB, LXJ, KXJ5 and XJCN5 are constructed the same except for the following:

Mark	No.	Symbol and Description	DJM-850-K /SYXJ8	DJM-850-K /UXJCB	DJM-850-K /LXJ	DJM-850-K /KXJ5	DJM-850-K /XJCN5
	34	Fader Panel	DNB1196	DNB1196	DNB1196	DNB1196	DNB1196
	35	Control Panel	DNB1197	DNB1197	DNB1197	DNB1197	DNB1197
	42	Screw (FE)	DBA1290	DBA1290	DBA1290	DBA1290	DBA1290

Mark	No.	Symbol and Description	DJM-850-S /SYXJ8	DJM-850-S /UXJCB	DJM-850-S /LXJ	DJM-850-S /KXJ5	DJM-850-S /XJCN5
	34	Fader Panel	DNB1201	DNB1201	DNB1201	DNB1201	DNB1201
	35	Control Panel	DNB1202	DNB1202	DNB1202	DNB1202	DNB1202
	42	Screw (FE)	DBA1436	DBA1436	DBA1436	DBA1436	DBA1436

9.5 CONTROL PANEL SECTION (2/2)

• Bottom view

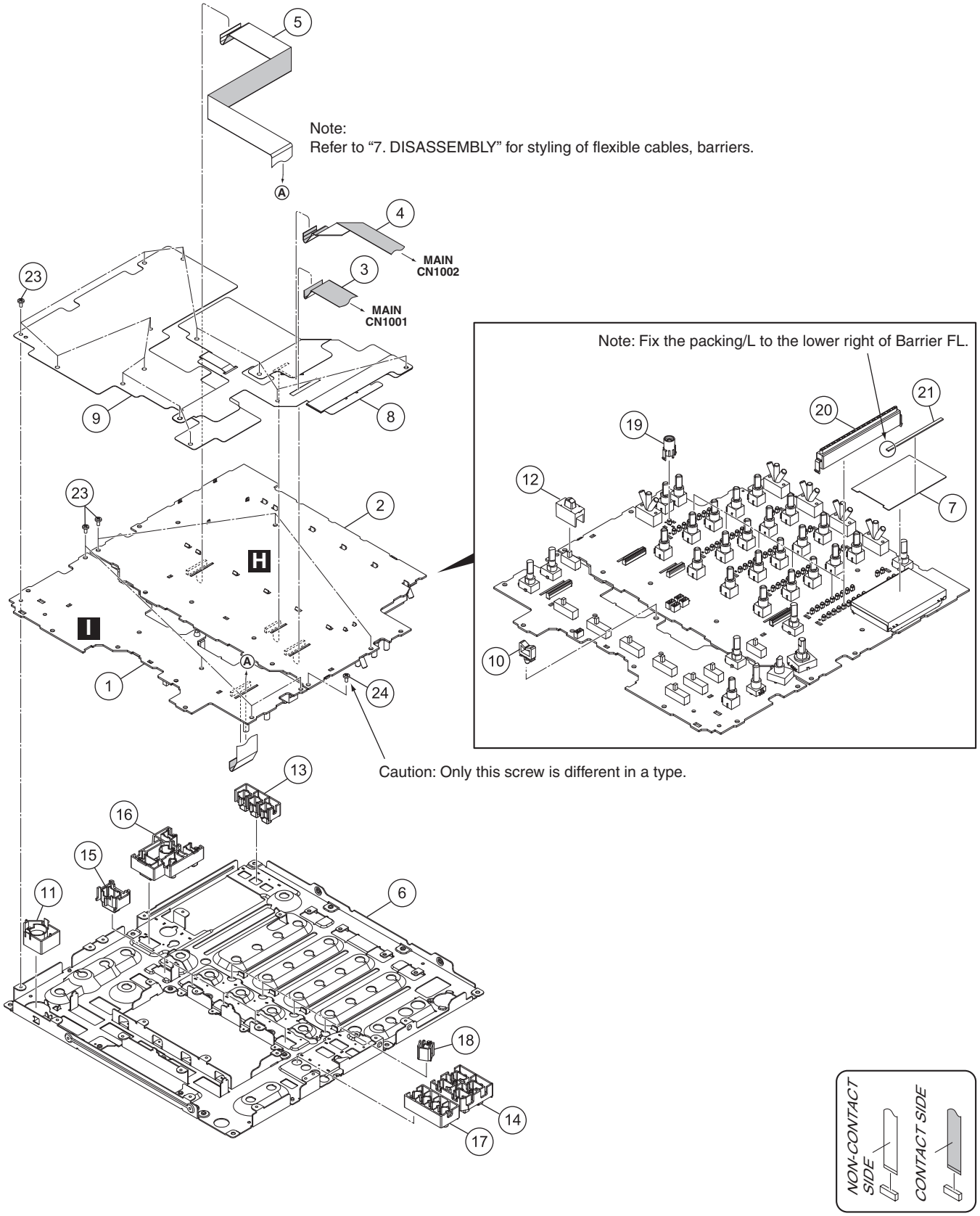

CONTROL PANEL SECTION (2/2) PARTS LIST

Mark	No.	Description	Part No.
	1	PNLB Assy	DWX3365
	2	PNLA Assy	DWX3359
	3	FFC/24P	DDD1599
	4	FFC/17P	DDD1600
	5	FFC/27P	DDD1601
	6	Panel Stay	DND1272
	7	Barrier FL	DEC3351
	8	Barrier/PNL	DMR1007
	9	Barrier/A	DMR1009
	10	Wire Saddle	XEC3100
	11	Effect Knob	DAC2304
	12	Slide SW Cap	DAC2400
	13	Button (MIDI)	DAC2655
	14	Button/CFX	DAC2837
	15	Button/CUE	DAC2838
	16	Button/TAP	DAC2839
	17	Button/FS	DAC2840
	18	Button/BFX	DAC2841
	19	Lens Holder	DNK4533
	20	Lebel Meter Assy	DXB1882
	21	Packing/L	DEC3416
	22	•••••	
	23	Screw	BBZ30P060FTC
	24	Screw	PBH30P080FTB

A B C D E F

10. SCHEMATIC DIAGRAM
10.1 INPUT ASSY (1/5)

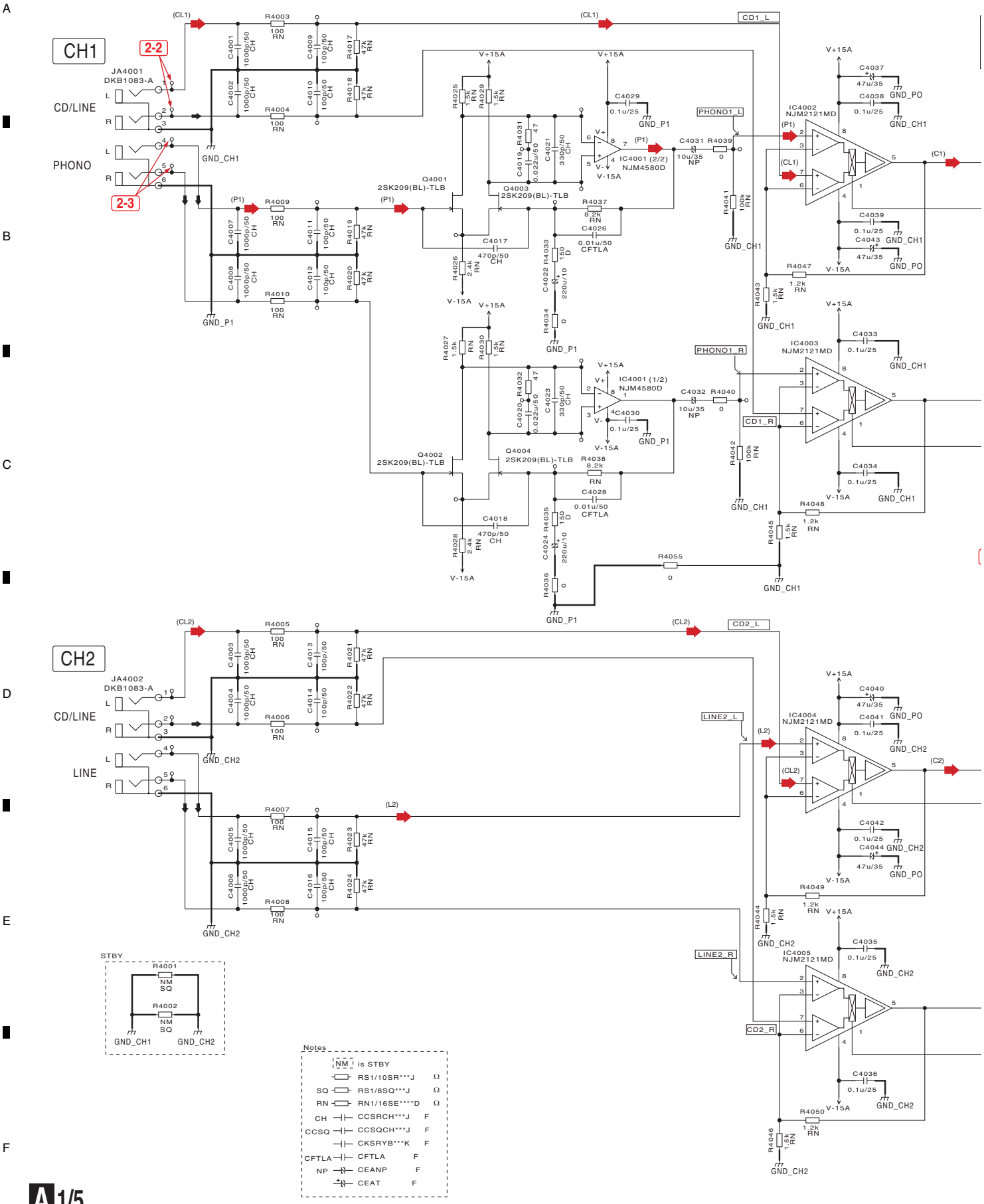

A 1/5

CH1 CH2 INPUT

A 1/5 INPUT ASSY (DWX3362)

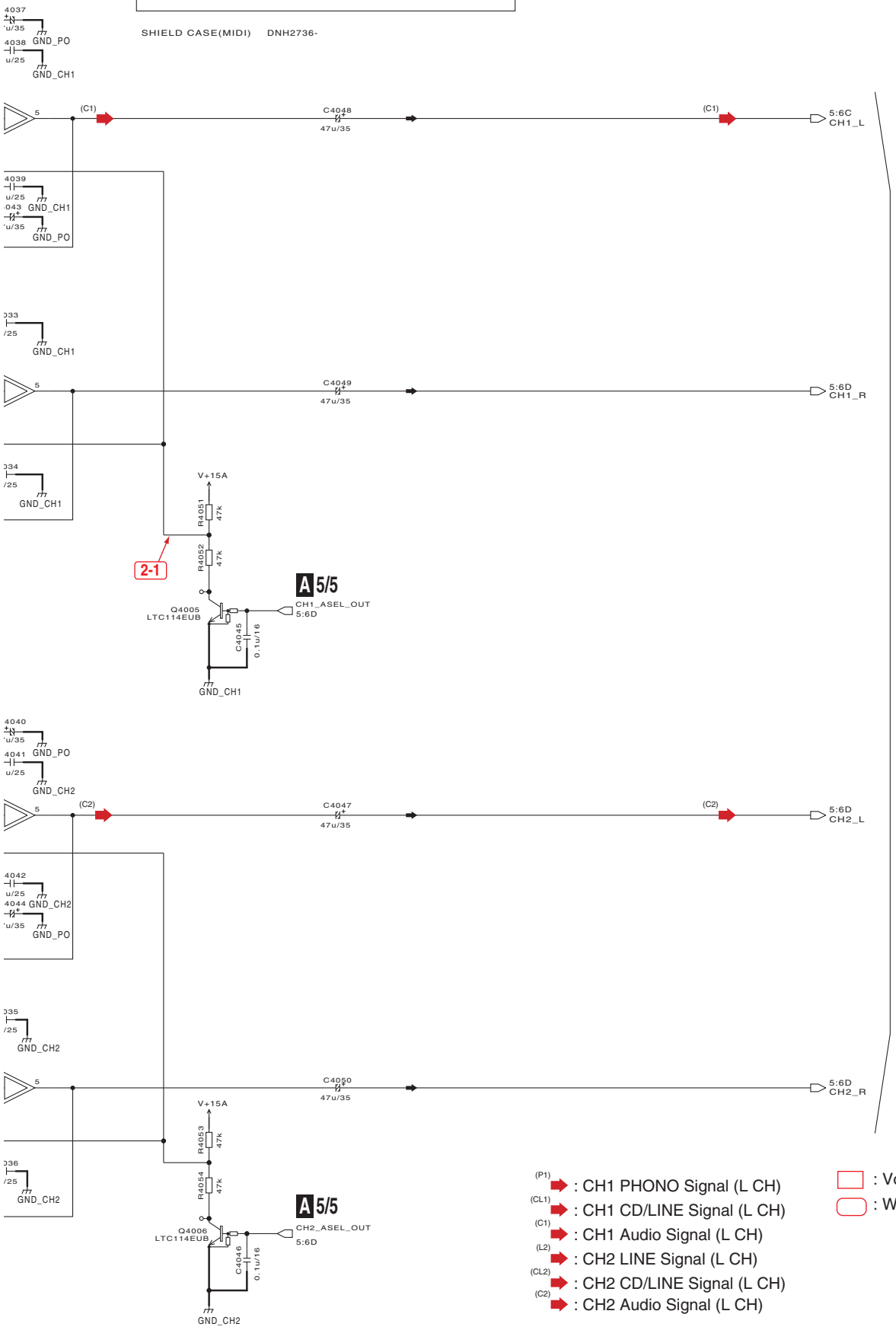

(P1) : CH1 PHONO Signal (L CH)
(CL1) : CH1 CD/LINE Signal (L CH)
(C1) : CH1 Audio Signal (L CH)
(L2) : CH2 LINE Signal (L CH)
(CL2) : CH2 CD/LINE Signal (L CH)
(C2) : CH2 Audio Signal (L CH)

: Voltage measuring point
: Waveform measuring point

A 1/5

10.2 INPUT ASSY (2/5)

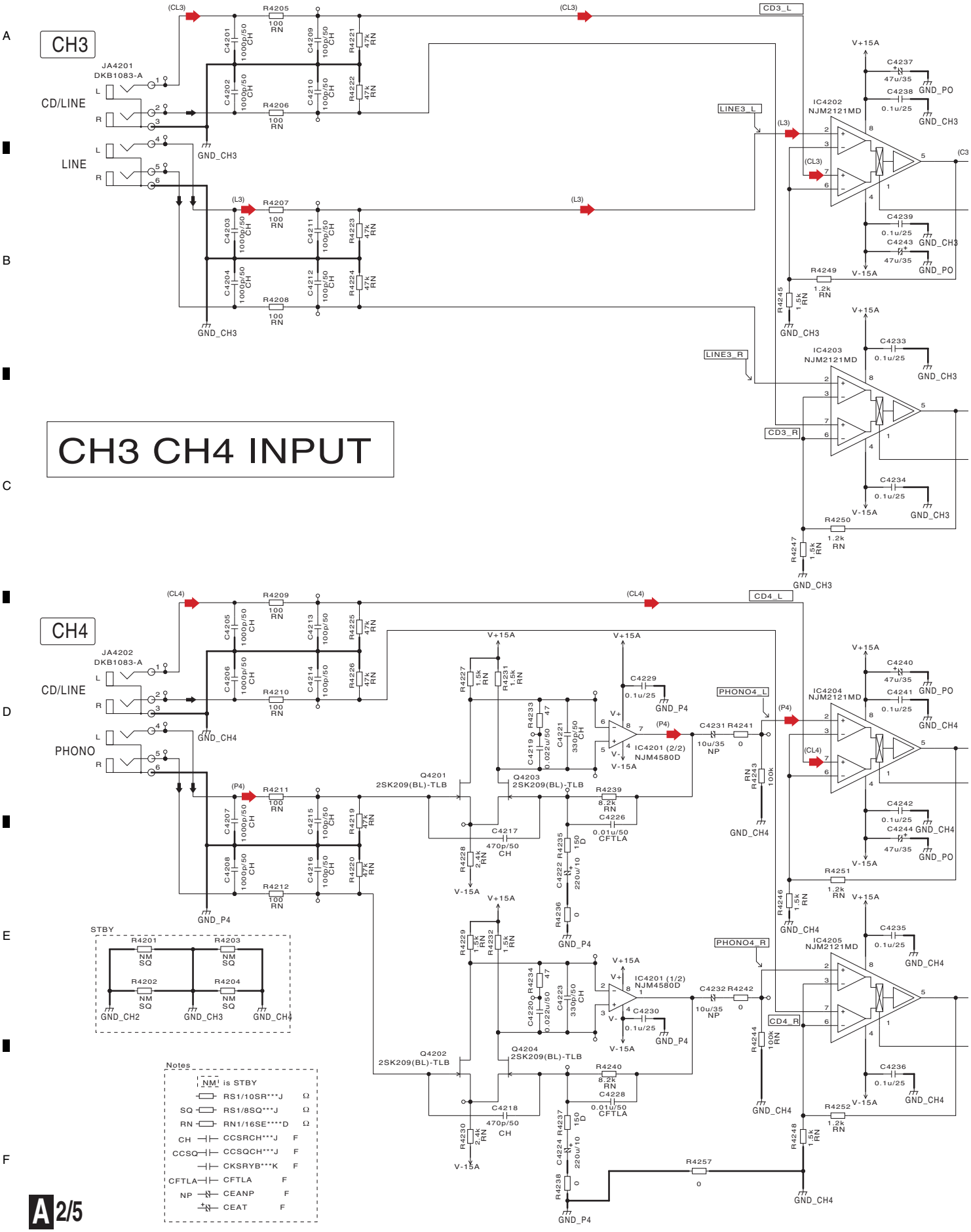

A 2/5

A 2/5 INPUT ASSY (DWX3362)

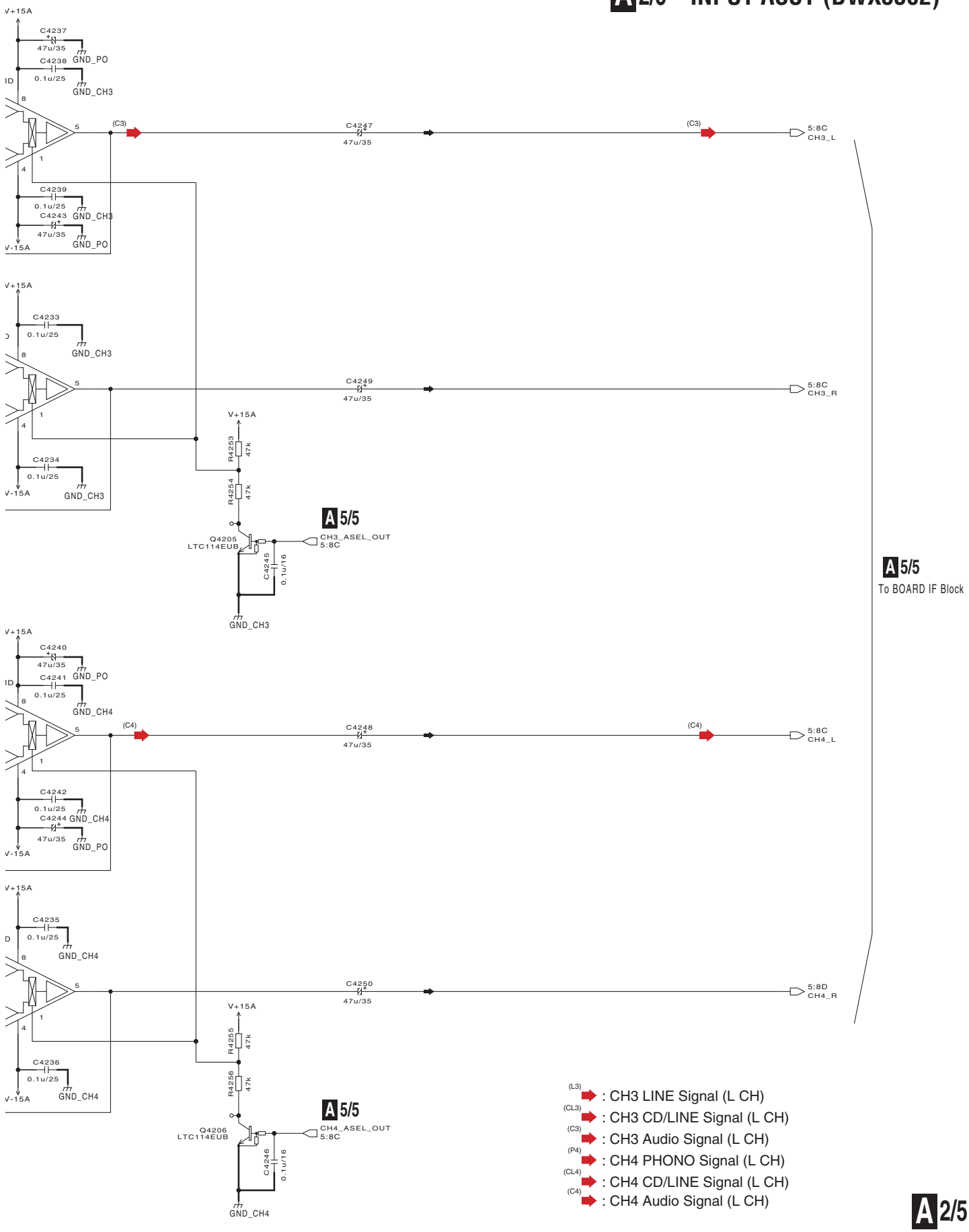

A 2/5

10.3 INPUT ASSY (3/5)

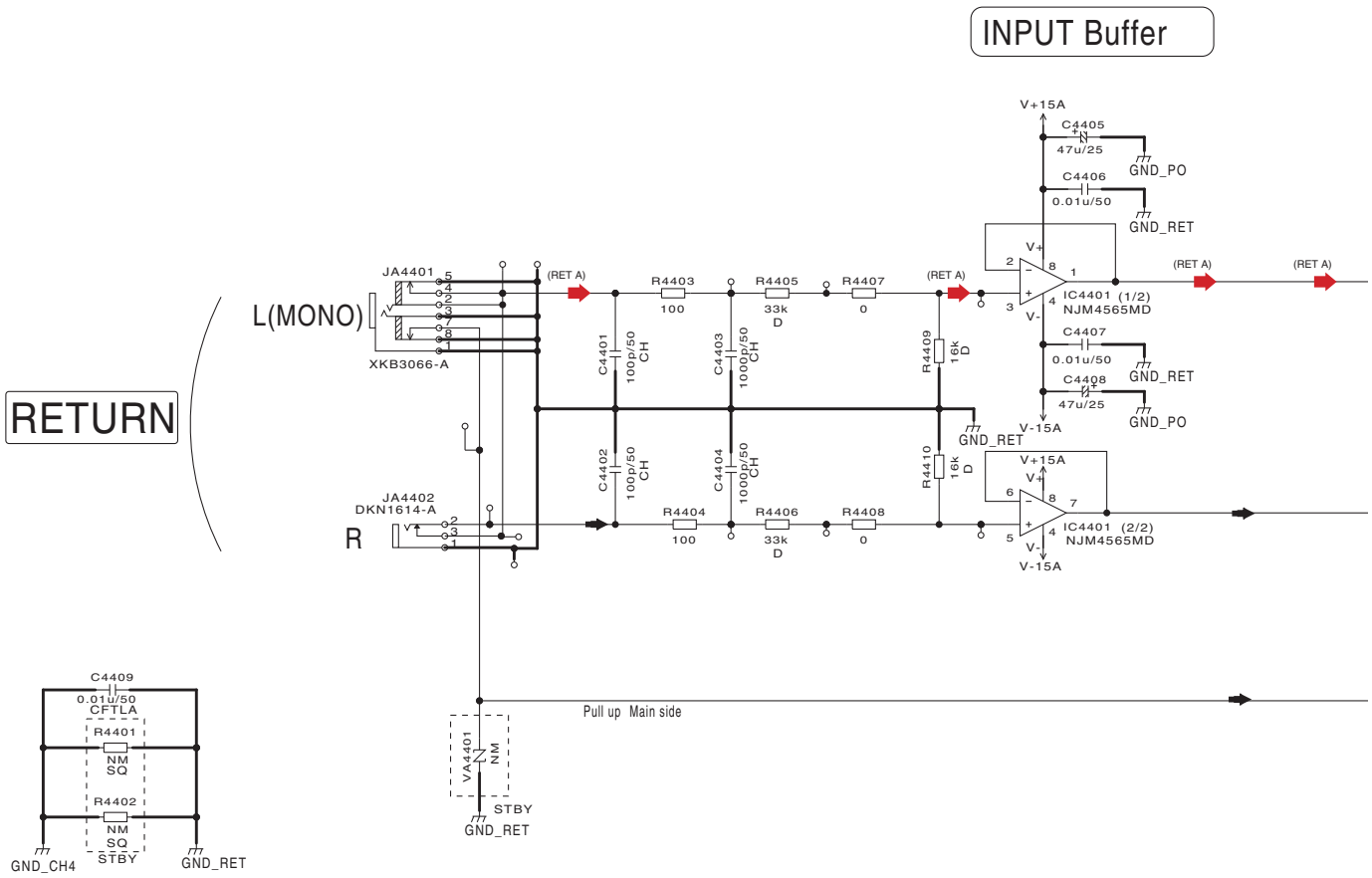

A 3/5 INPUT ASSY (DWX3362)

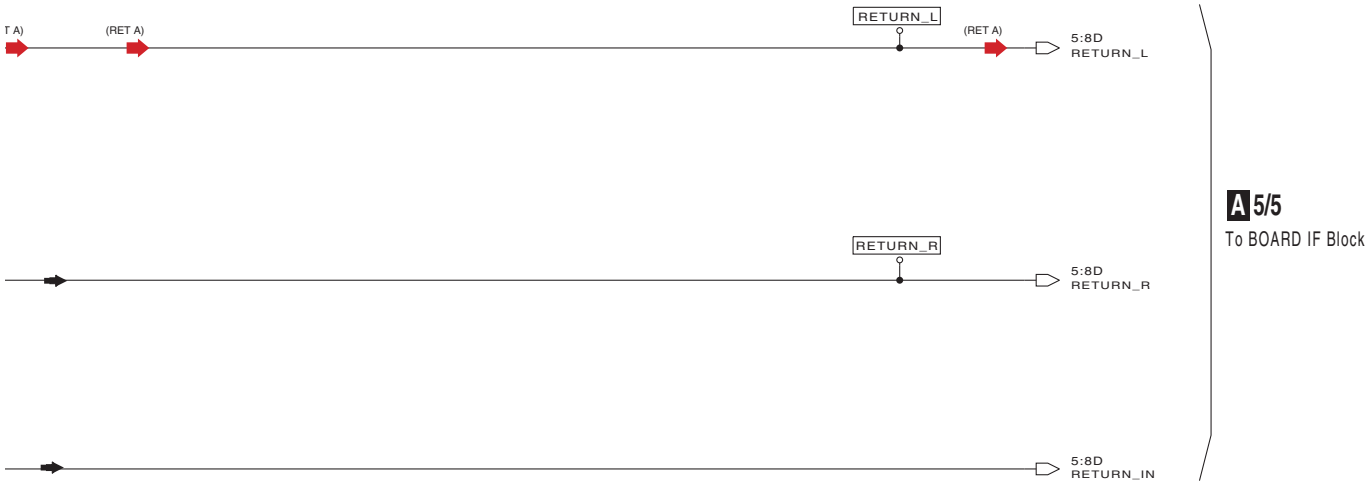

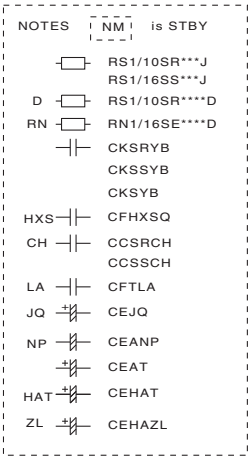

(RET A) : RETURN Audio Signal (L CH)

10.4 INPUT ASSY (4/5)

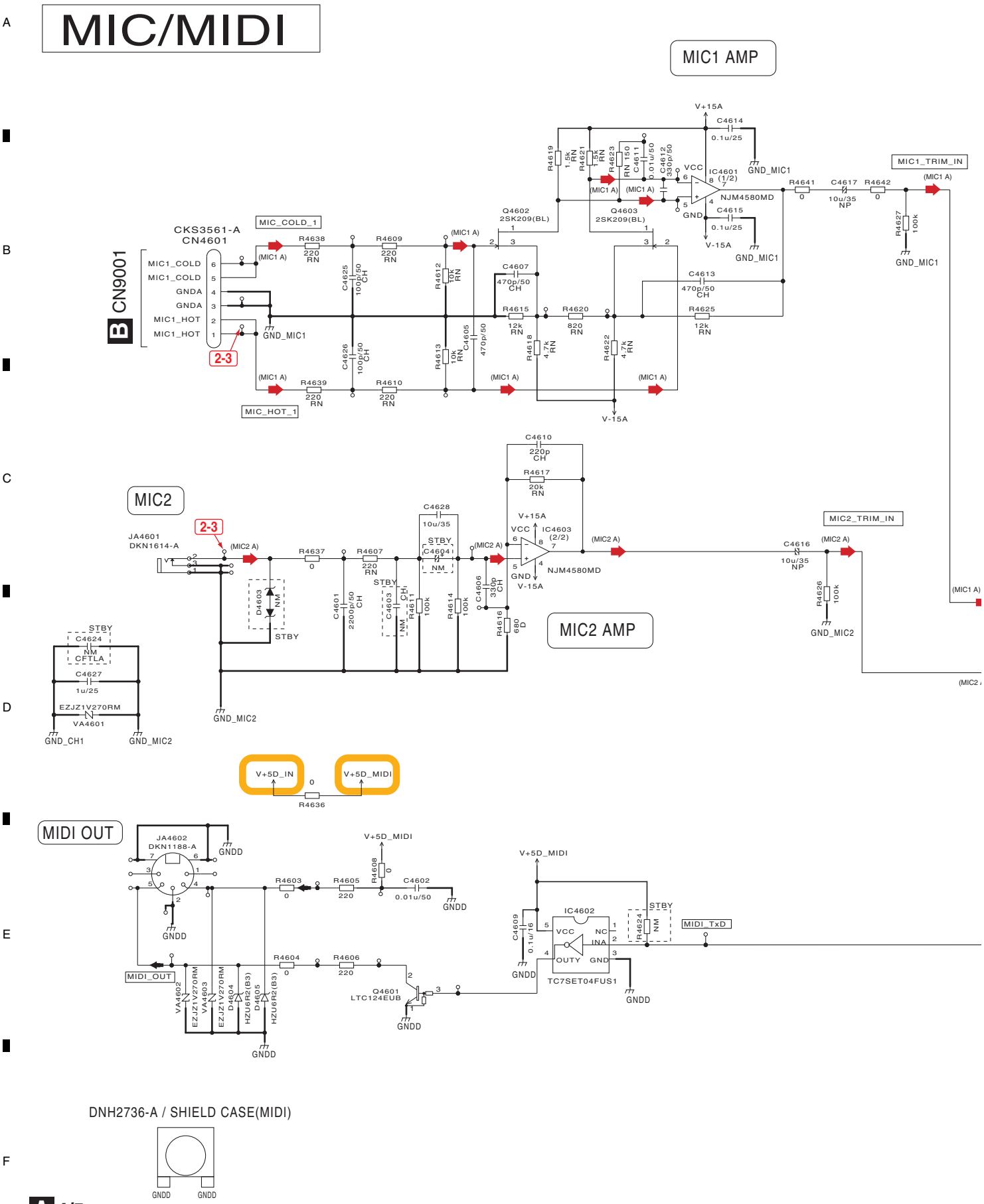

A 4/5 INPUT ASSY (DWX3362)

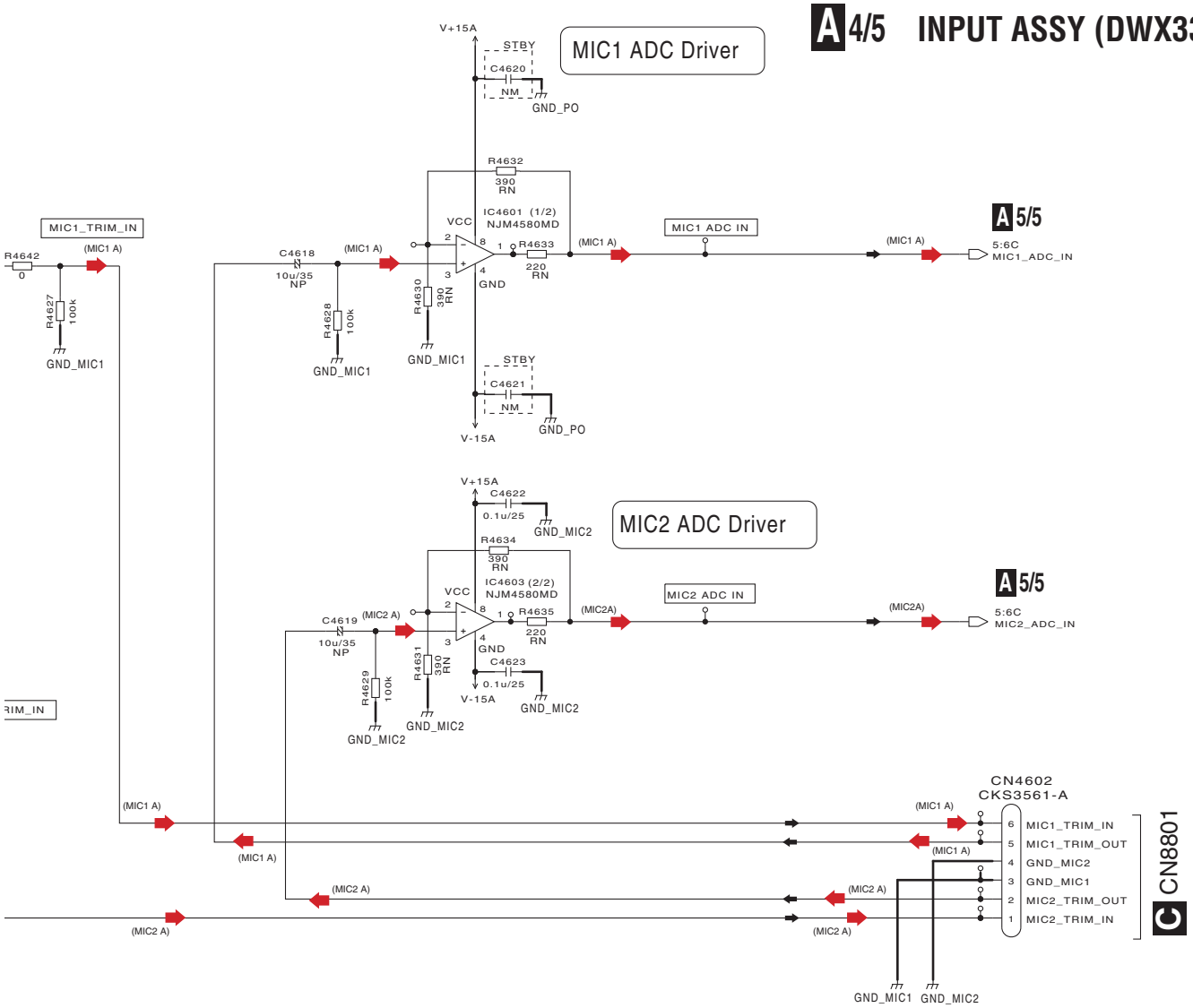

BOARD I/F

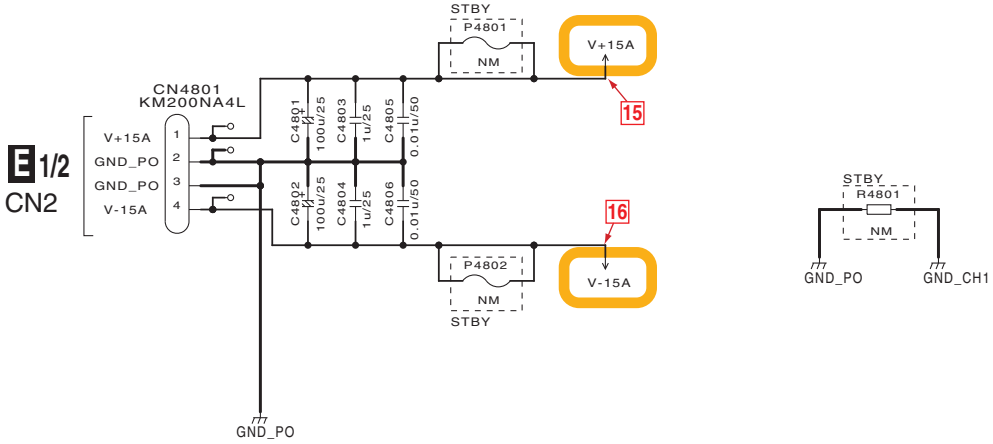

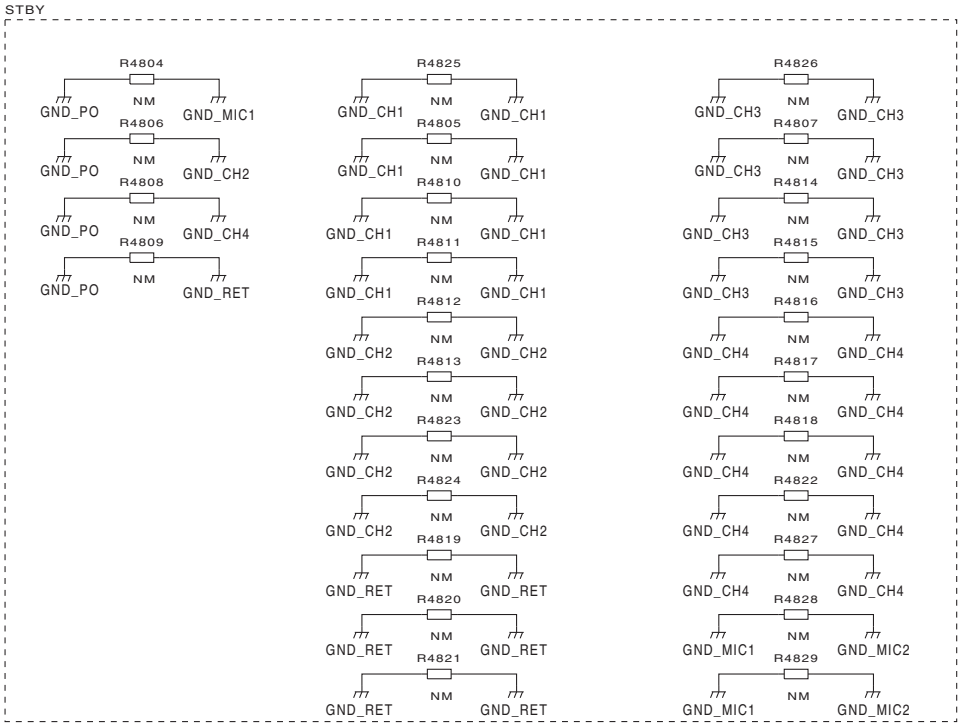

D 1/19 CN1003

A 5/5

A 5/5 INPUT ASSY (DWX3362)

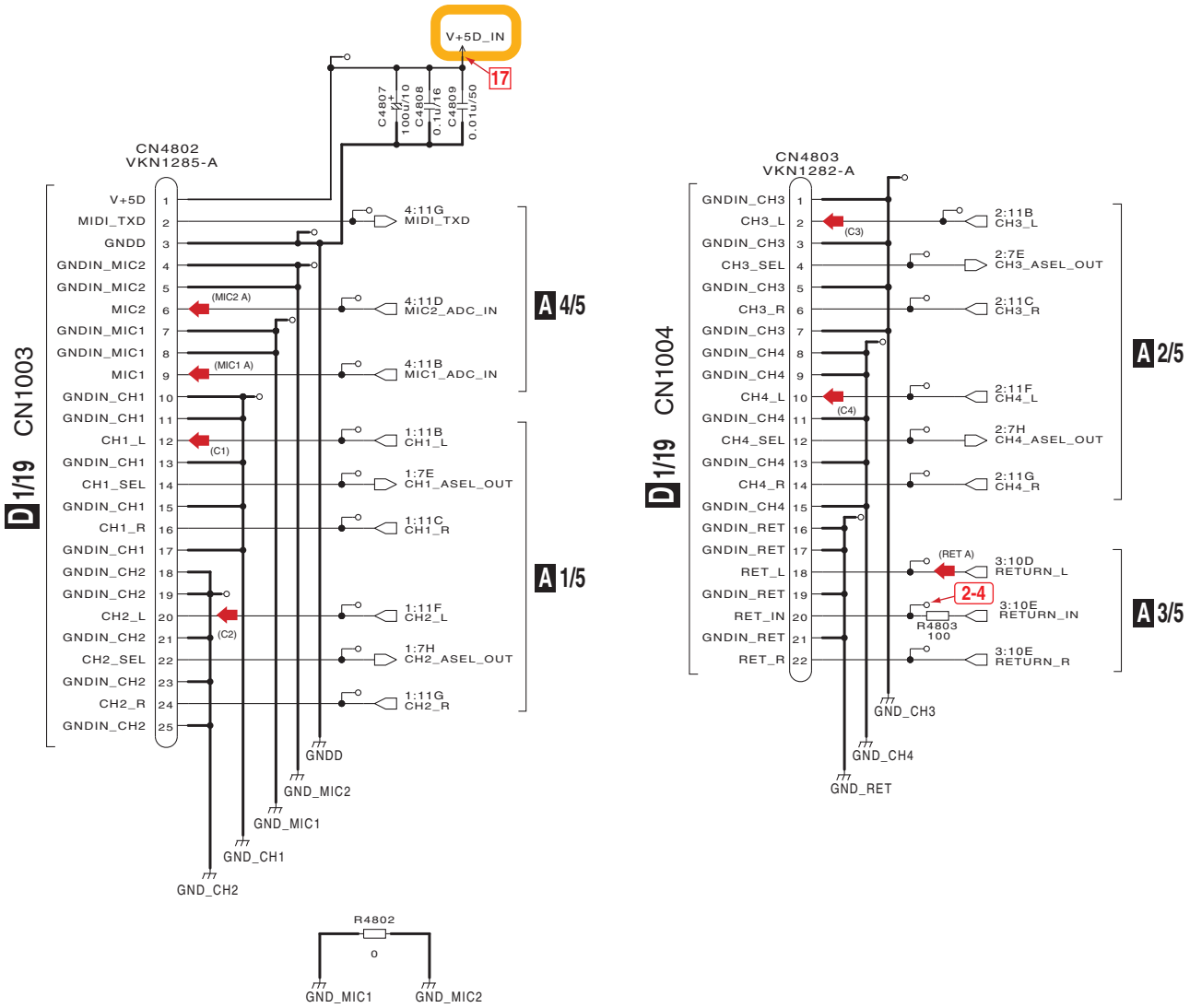

(C1) : CH1 Audio Signal (L CH)
(C2) : CH2 Audio Signal (L CH)
(C3) : CH3 Audio Signal (L CH)
(C4) : CH4 Audio Signal (L CH)
(RET A) : RETURN Audio Signal (L CH)
(MIC1 A) : MIC1 Audio Signal
(MIC2 A) : MIC2 Audio Signal

: Voltage measuring point
: Waveform measuring point

A 5/5

10.6 MIC1 and MTRM ASSYS

A

B MIC1 ASSY (DWX3371)

C

MIC JACK

M

B

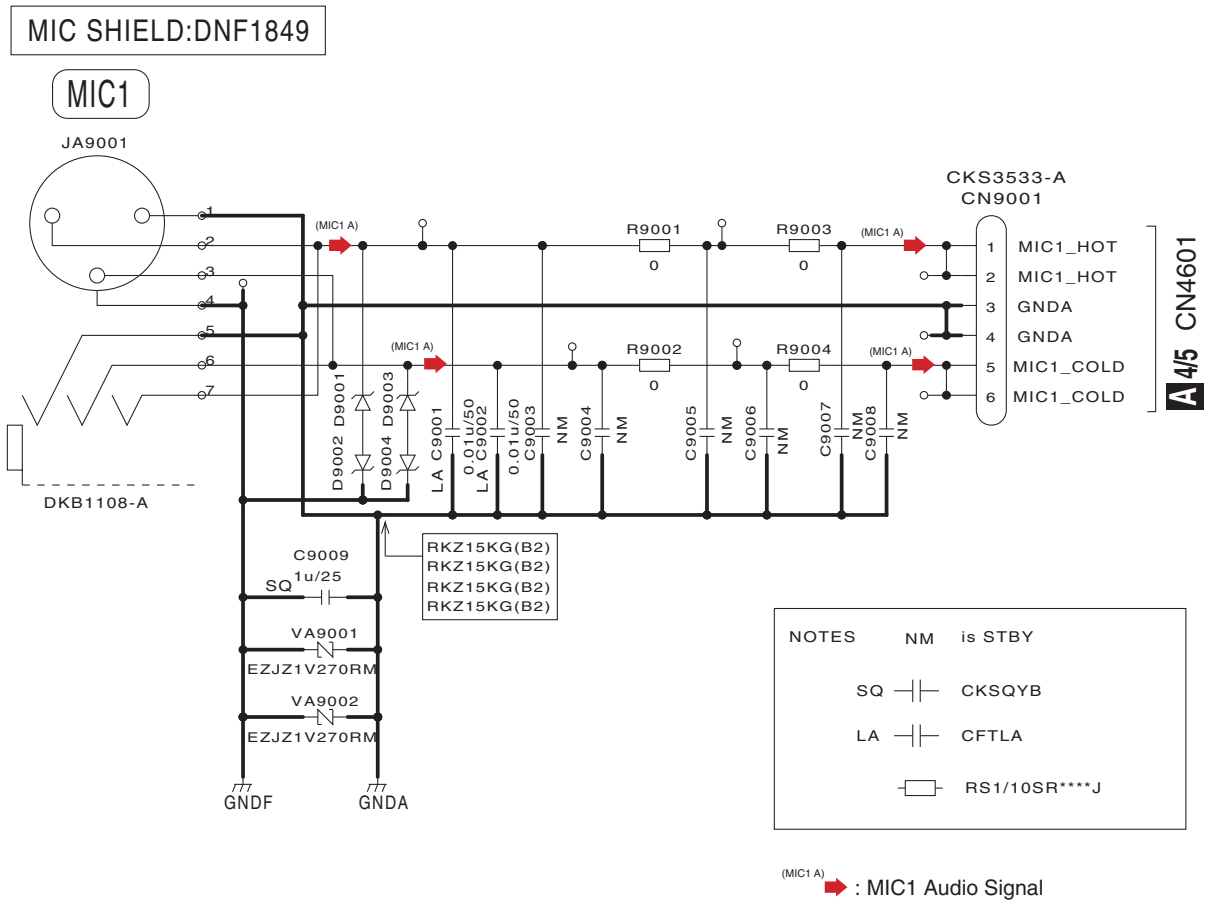

C

M

C

M

C

D

E

F

B

C MTRM ASSY (DWX3372)

MIC TRIM

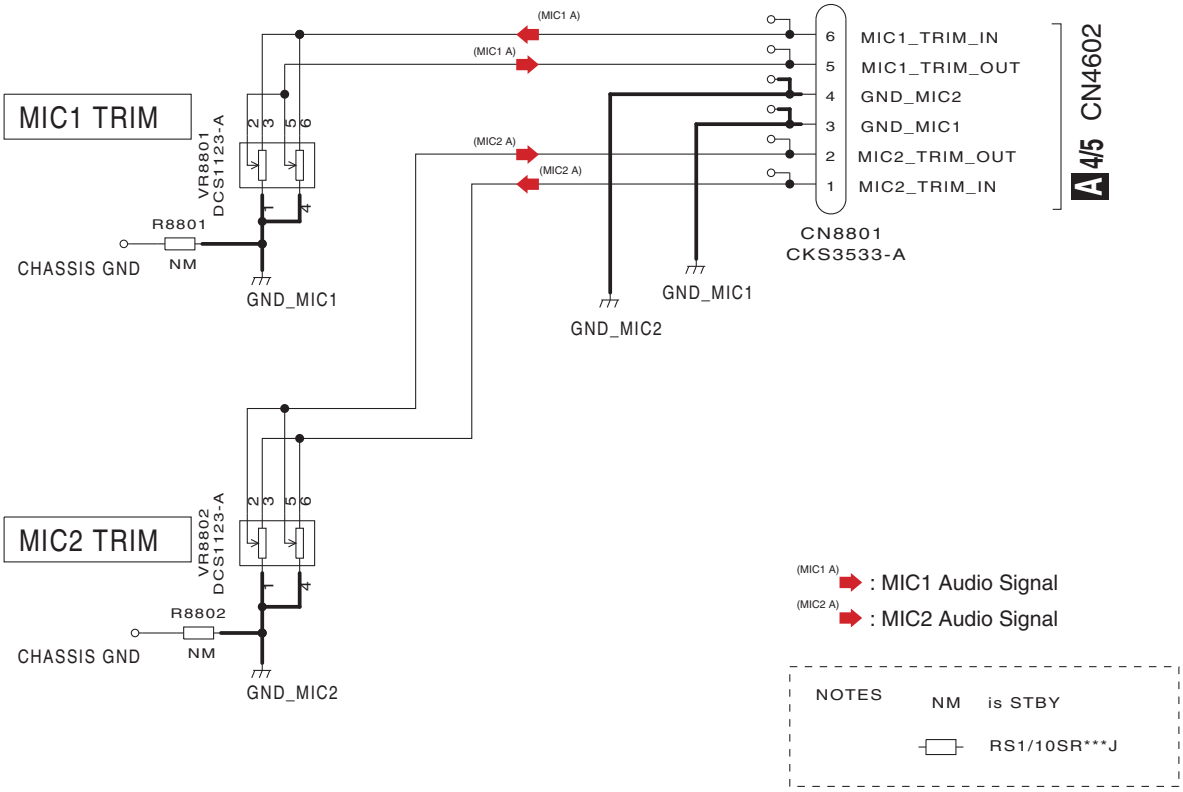

10.7 MAIN ASSY (1/19)

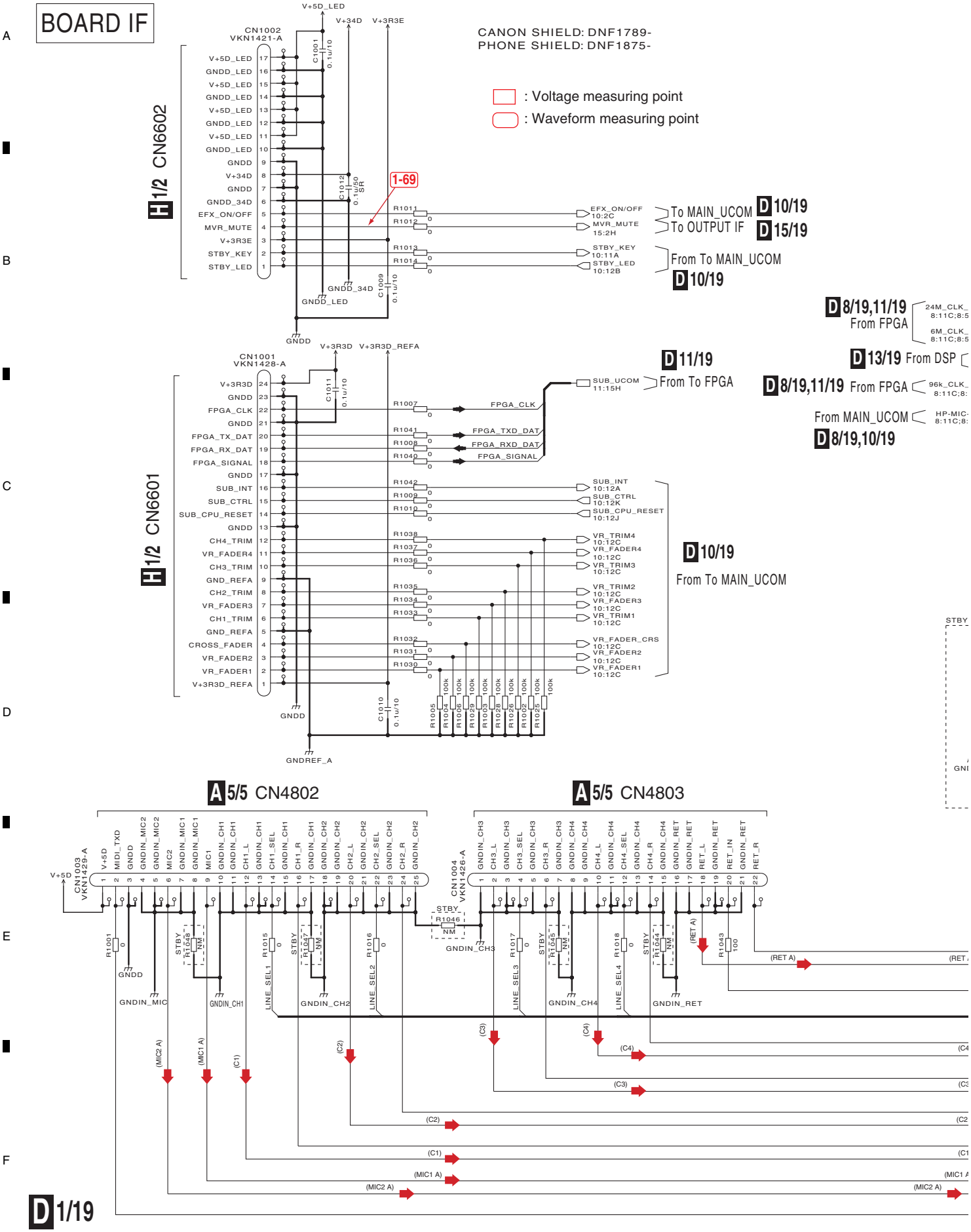

D 1/19 MAIN ASSY (DWX3360)

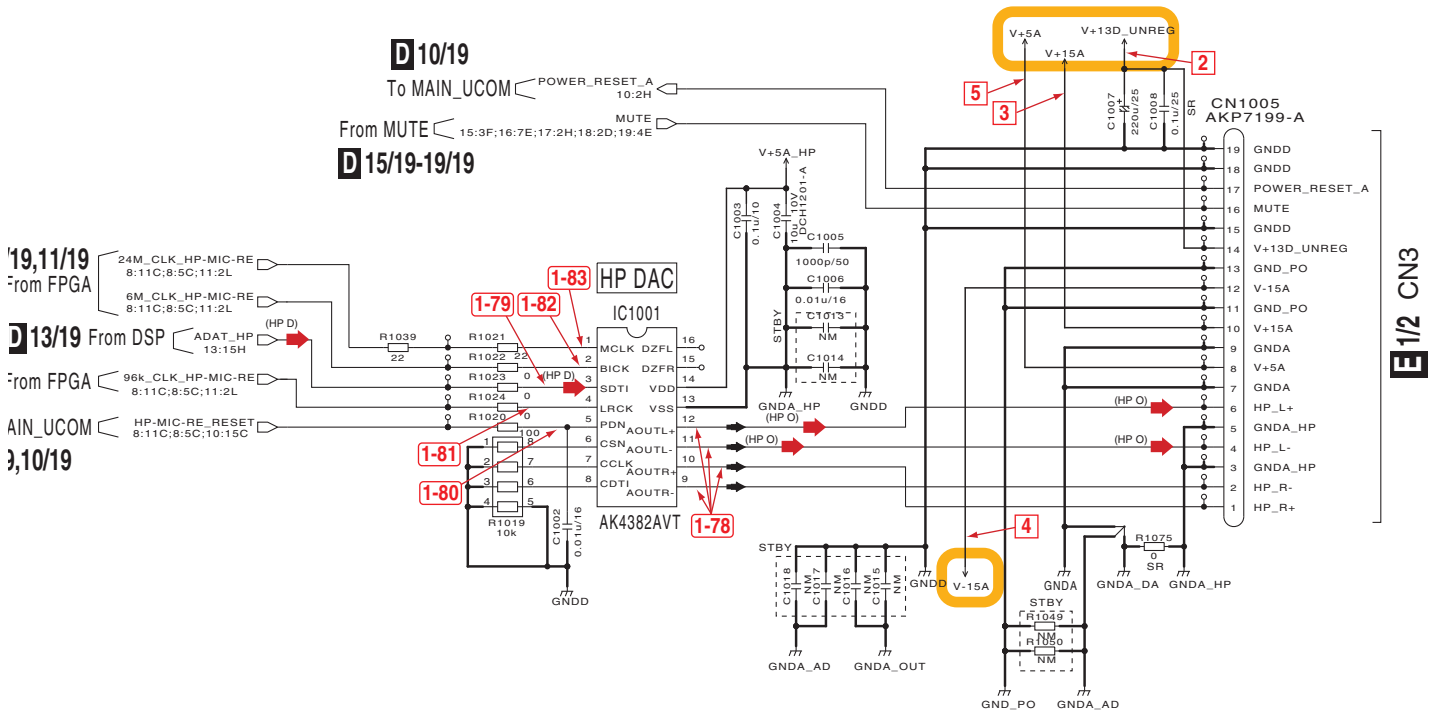

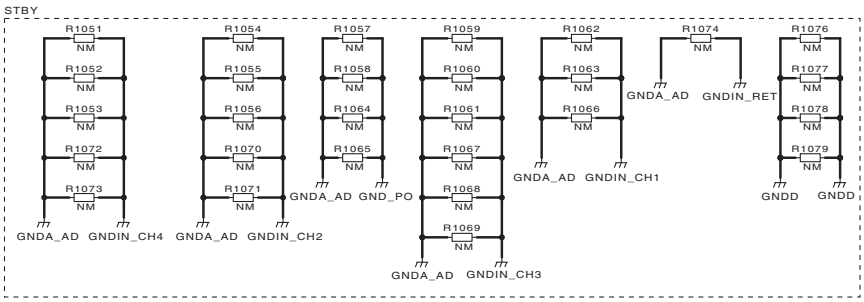

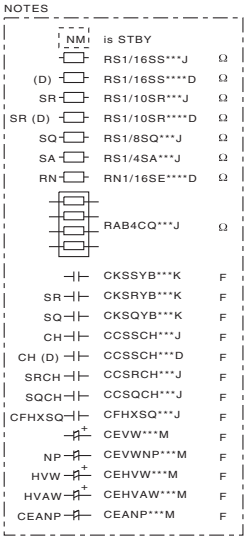

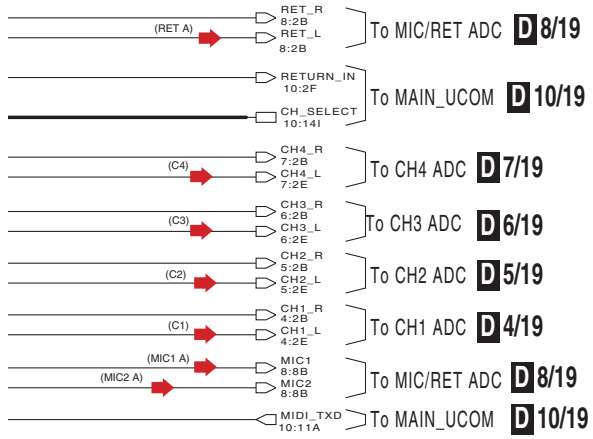

(C1) : CH1 Audio Signal (L CH)
(C2) : CH2 Audio Signal (L CH)
(C3) : CH3 Audio Signal (L CH)
(C4) : CH4 Audio Signal (L CH)
(RET A) : RETURN Audio Signal (L CH)
(MIC1 A) : MIC1 Audio Signal
(MIC2 A) : MIC2 Audio Signal
(HP D) : HP OUT Digital Signal
(HP O) : HP OUT Signal (L ch)

: Voltage measuring point
: Waveform measuring point

D 1/19

10.8 MAIN ASSY (2/19)

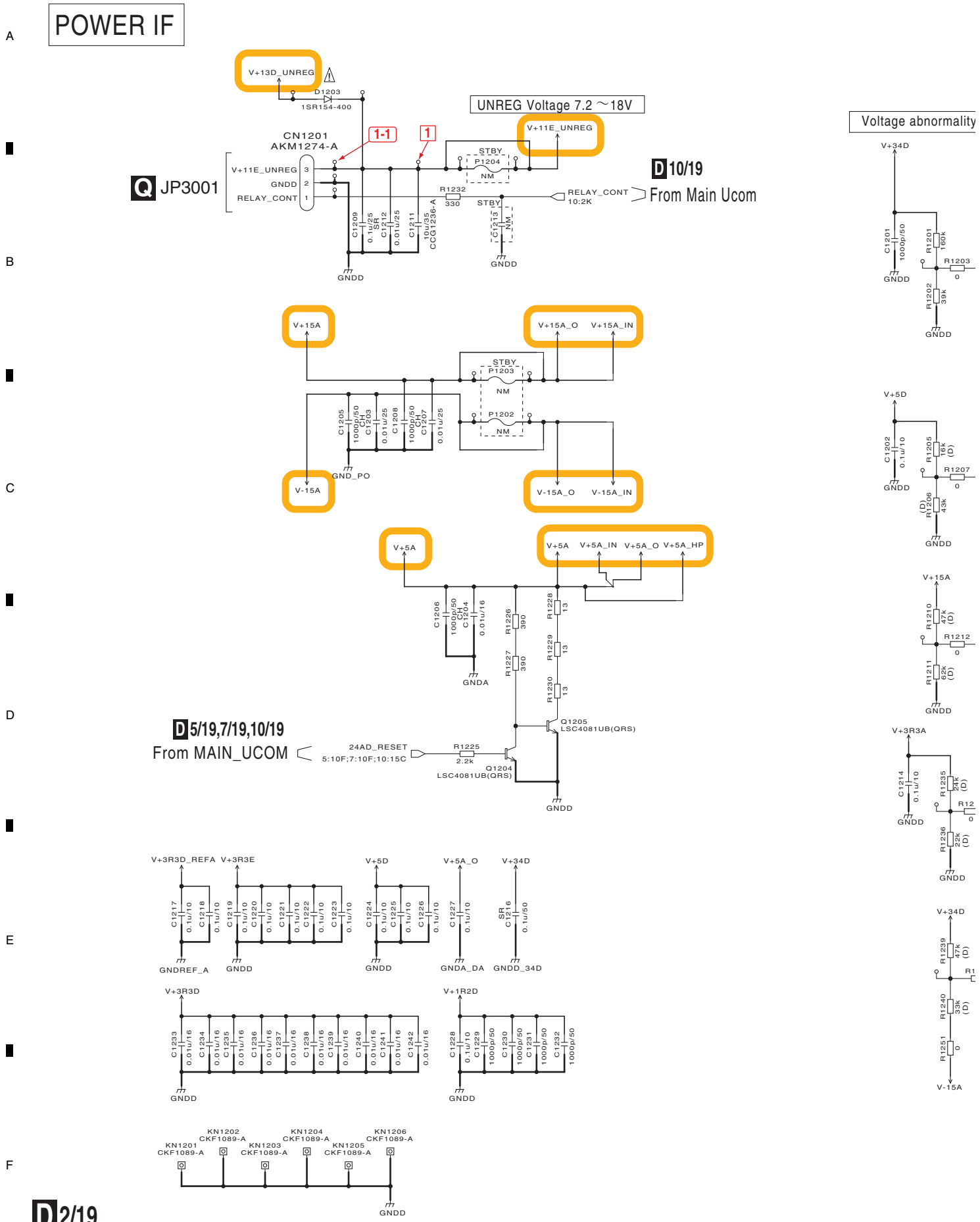

D 2/19 MAIN ASSY (DWX3360)

Voltage abnormality detect circuit

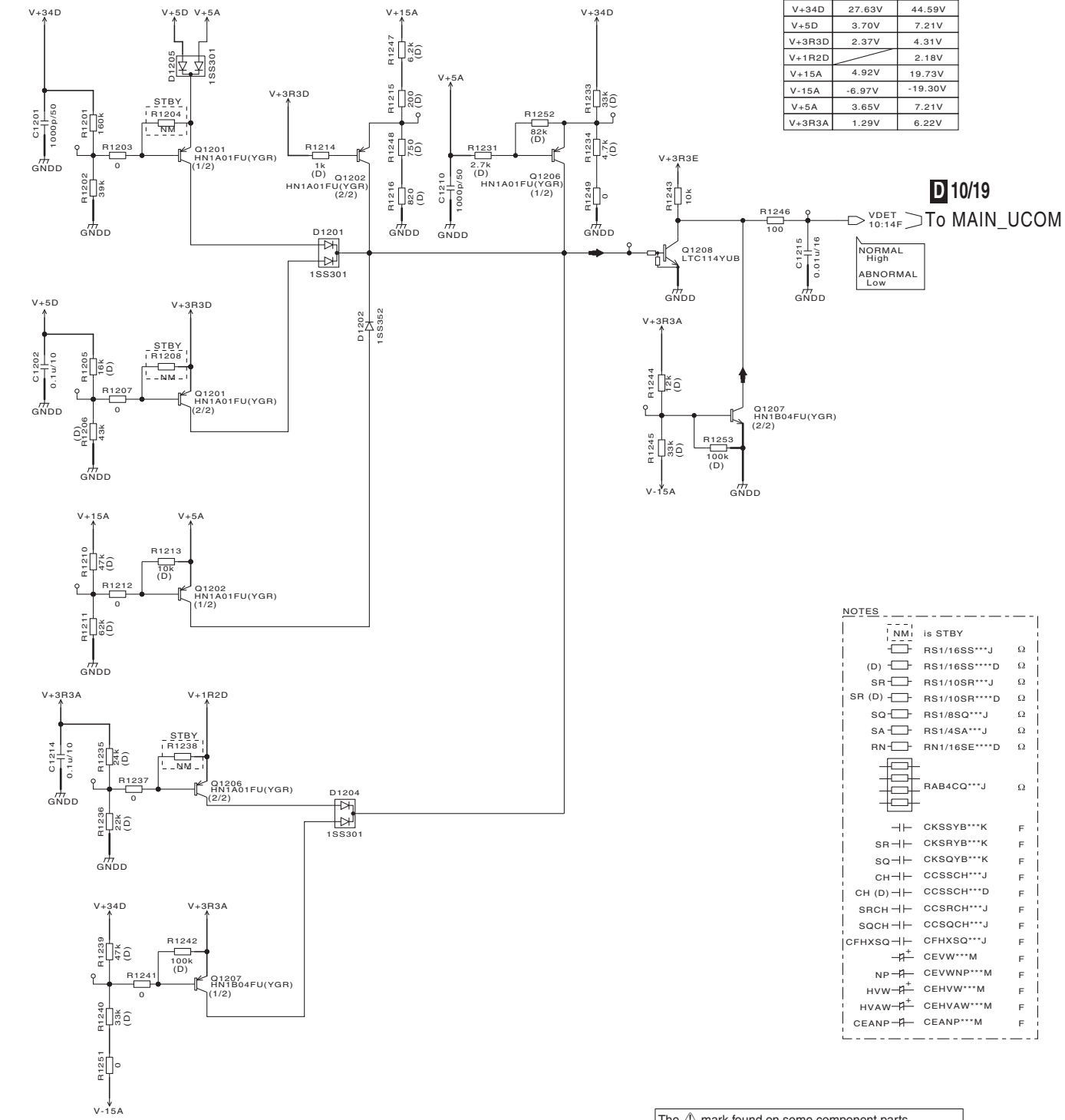

	Low value	Hi value
V+34D	27.63V	44.59V
V+5D	3.70V	7.21V
V+3R3D	2.37V	4.31V
V+1R2D		2.18V
V+15A	4.92V	19.73V
V-15A	-6.97V	-19.30V
V+5A	3.65V	7.21V
V+3R3A	1.29V	6.22V

D 10/19

NOTES

NM	is STBY	
	RS1/16SS***J	Ω
(D)	RS1/16SS****D	Ω
SR	RS1/10SR***J	Ω
SR (D)	RS1/10SR****D	Ω
SQ	RS1/8SQ***J	Ω
SA	RS1/4SA***J	Ω
RN	RN1/16SE****D	Ω
	RAB4CQ***J	Ω
	CKSSYB***K	F
SR	CKSRYB***K	F
SQ	CKSQYB***K	F
CH	CCSSCH***J	F
CH (D)	CCSSCH***D	F
SRCH	CCSRCH***J	F
SQCH	CCSQCH***J	F
CFHXSQ	CFHXSQ***J	F
	CEVW***M	F
NP	CEVWNP***M	F
HVW	CEHVW***M	F
HVAW	CEHVAW***M	F
CEANP	CEANP***M	F

: Voltage measuring point

: Waveform measuring point

The ⚠ mark found on some component parts indicates the importance of the safety factor of the part. Therefore, when replacing, be sure to use parts of identical designation.

⚠ 印の部品は、安全上重要な部品です。
交換するときは、安全および性能維持のため
必ず指定の部品をご使用ください。

10.9 MAIN ASSY (3/19)

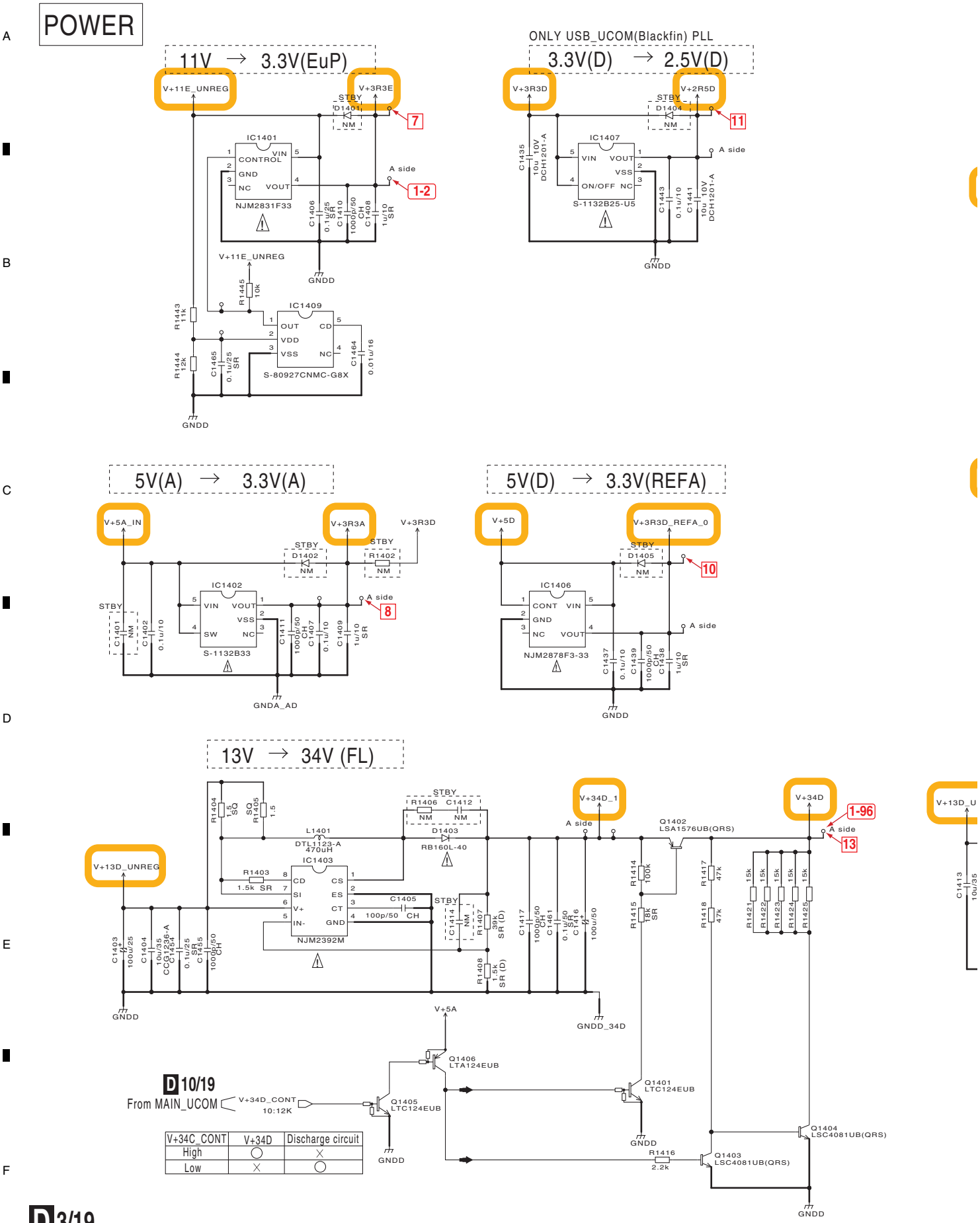

D 3/19 MAIN ASSY (DWX3360)

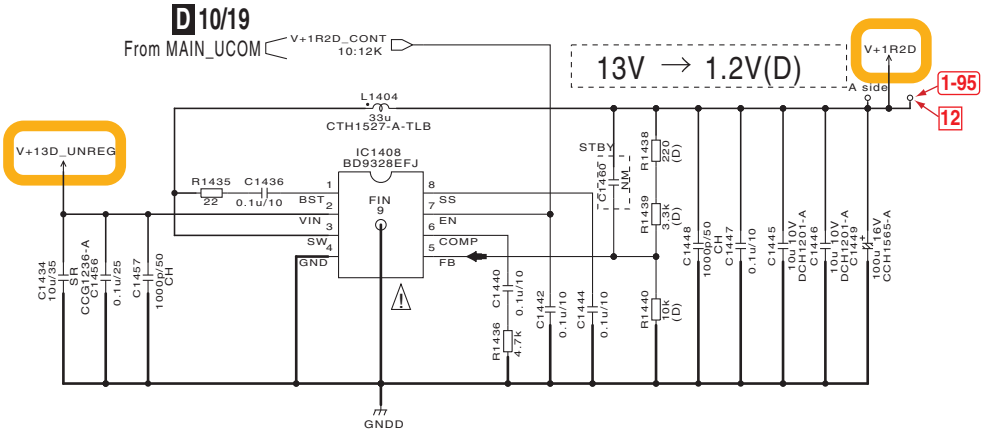

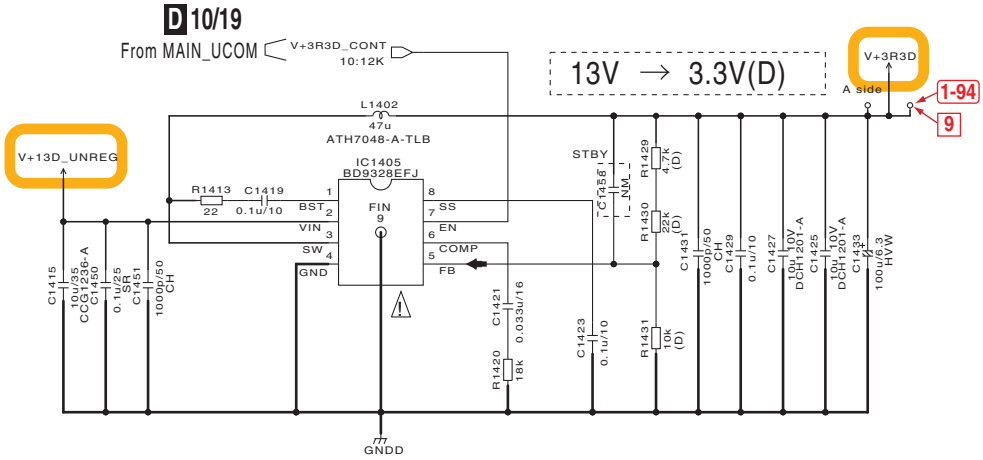

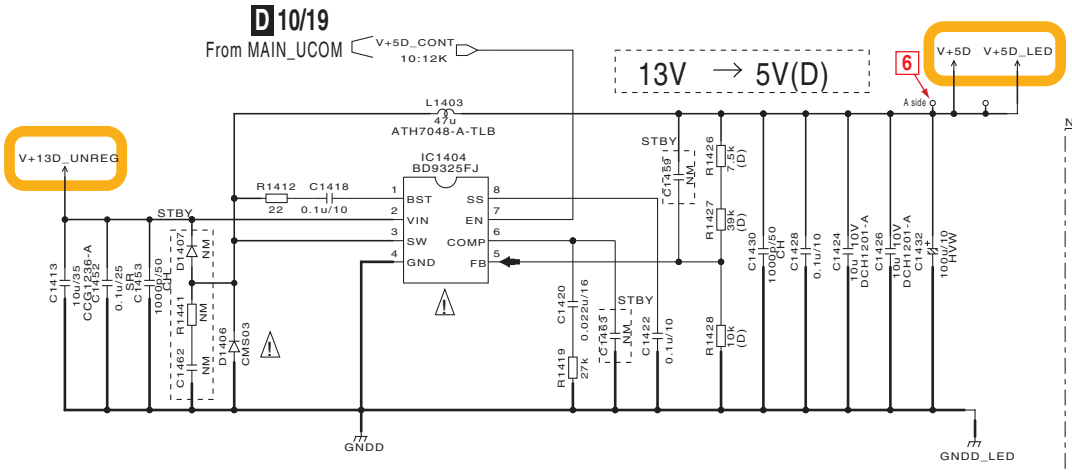

NOTES

NM	is STBY	
	RS1/16SS***J	Ω
(D)	RS1/16SS****D	Ω
SR	RS1/10SR***J	Ω
SR (D)	RS1/10SR****D	Ω
SQ	RS1/8SQ***J	Ω
SA	RS1/4SA***J	Ω
RN	RN1/16SE****D	Ω
	RAB4CQ***J	Ω
	CKSSYB***K	F
SR	CKSRYB***K	F
SQ	CKSQYB***K	F
CH	CCSSCH***J	F
CH (D)	CCSSCH***D	F
SRCH	CCSRCH***J	F
SQCH	CCSQCH***J	F
CFHXSQ	CFHXSQ***J	F
	CEVW***M	F
NP	CEVWNP***M	F
HVW	CEHVW***M	F
HVAW	CEHVAW***M	F
CEANP	CEANP***M	F

: Voltage measuring point

: Waveform measuring point

The ⚠ mark found on some component parts indicates the importance of the safety factor of the part. Therefore, when replacing, be sure to use parts of identical designation.

⚠ 印の部品は、安全上重要な部品です。
交換するときは、安全および性能維持のため
必ず指定の部品をご使用ください。

(QRS)

10.10 MAIN ASSY (4/19)

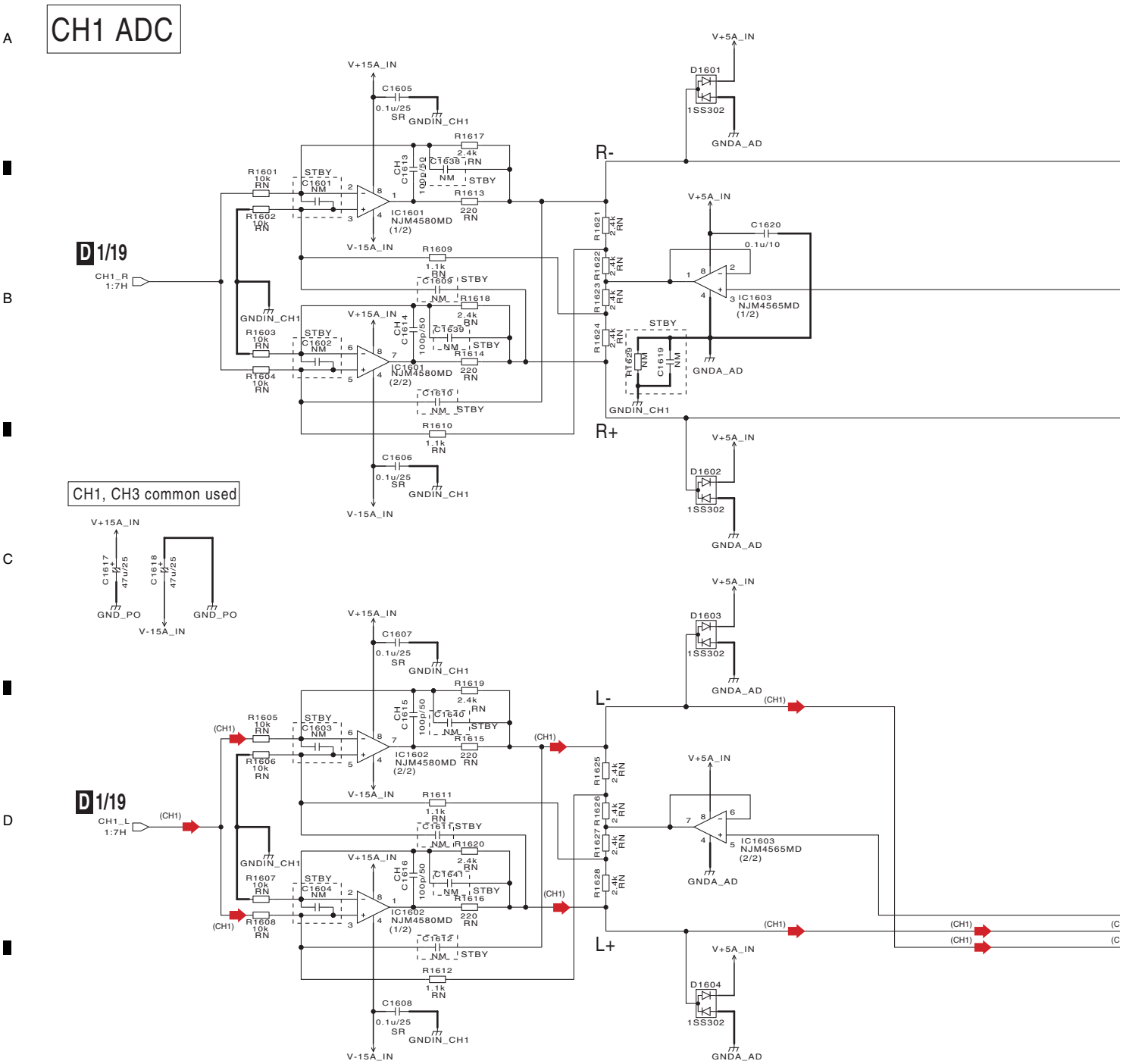

D 4/19

D 4/19 MAIN ASSY (DWX3360)

(CH1) : CH1 Audio Signal (L CH)

(CH1 D) : CH1 Digital Signal

NOTES

NM	is STBY	
	RS1/16SS***J	Ω
(D)	RS1/16SS****D	Ω
SR	RS1/10SR***J	Ω
SR (D)	RS1/10SR****D	Ω
SQ	RS1/8SQ***J	Ω
SA	RS1/4SA***J	Ω
RN	RN1/16SE****D	Ω
	RAB4CQ***J	Ω
	CKSSYB***K	F
SR	CKSRYB***K	F
SQ	CKSQYB***K	F
CH	CCSSCH***J	F
CH (D)	CCSSCH***D	F
SRCH	CCSRCH***J	F
SQCH	CCSQCH***J	F
CFHXSQ	CFHXSQ***J	F
	CEVW***M	F
NP	CEVWNP***M	F
HVW	CEHVW***M	F
HVAW	CEHVAW***M	F
CEANP	CEANP***M	F

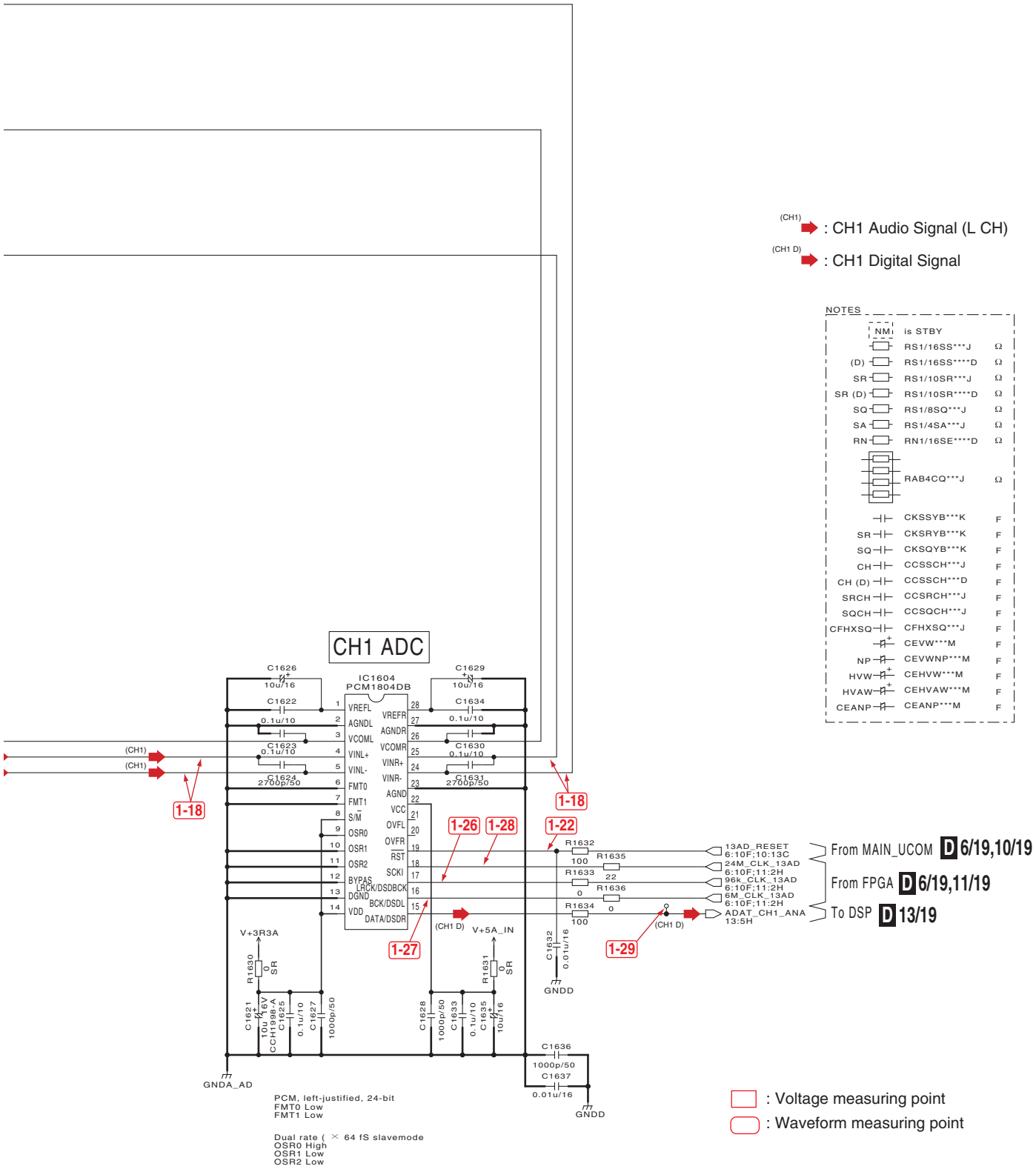

D 4/19

10.11 MAIN ASSY (5/19)

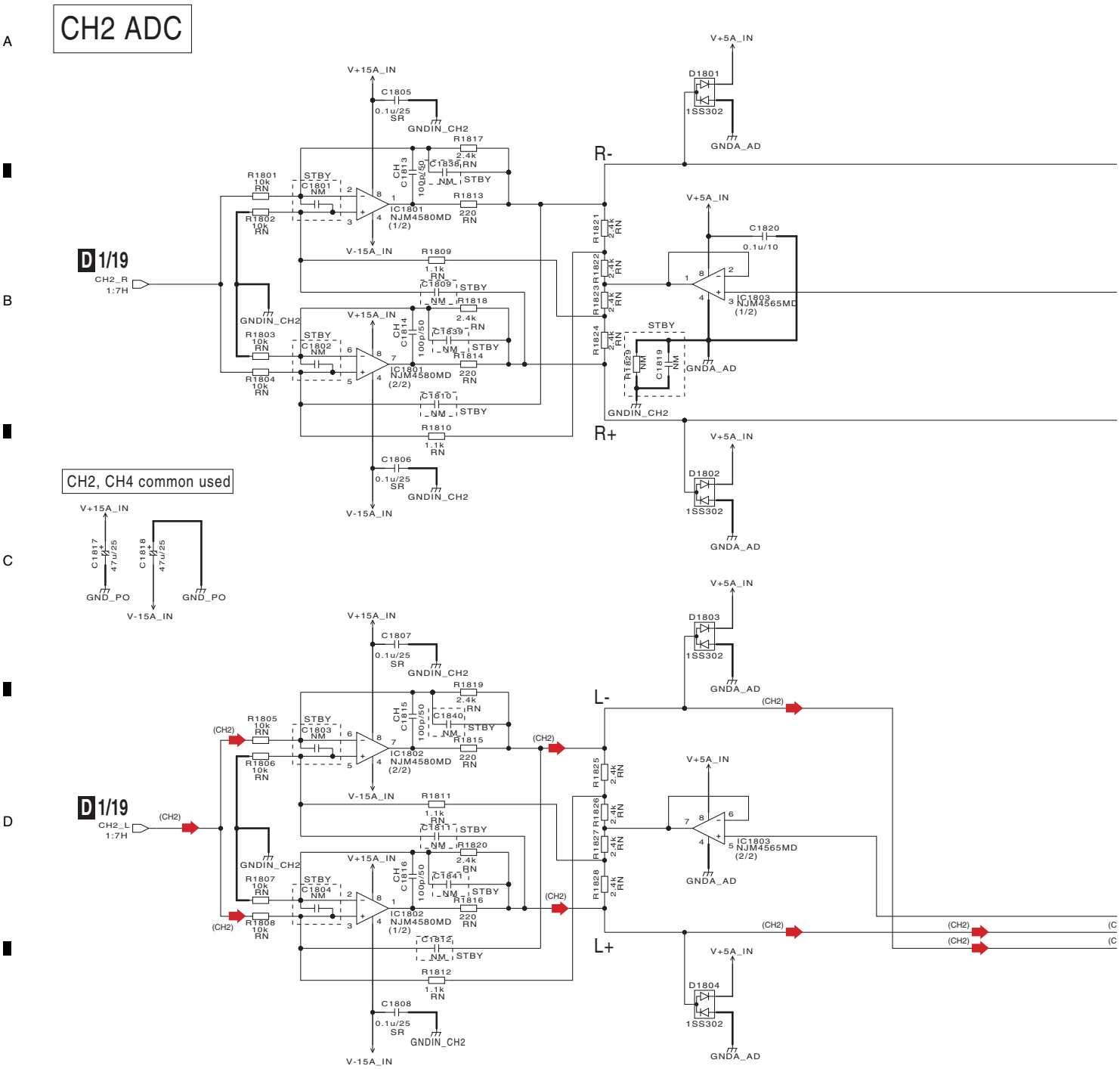

D 5/19

D 5/19 MAIN ASSY (DWX3360)

(CH2) : CH2 Audio Signal (L CH)

(CH2 D) : CH2 Digital Signal

NOTES

NM	is STBY	
	RS1/16SS***J	Ω
(D)	RS1/16SS****D	Ω
SR	RS1/10SR***J	Ω
SR (D)	RS1/10SR****D	Ω
SQ	RS1/8SQ***J	Ω
SA	RS1/4SA***J	Ω
RN	RN1/16SE****D	Ω
	RAB4CQ***J	Ω
	CKSSYB***K	F
SR	CKSRYB***K	F
SQ	CKSQYB***K	F
CH	CCSSCH***J	F
CH (D)	CCSSCH***D	F
SRCH	CCSRCH***J	F
SQCH	CCSQCH***J	F
CFHXSQ	CFHXSQ***J	F
	CEVW***M	F
NP	CEVWNP***M	F
HVW	CEHVW***M	F
HVAW	CEHVAW***M	F
CEANP	CEANP***M	F

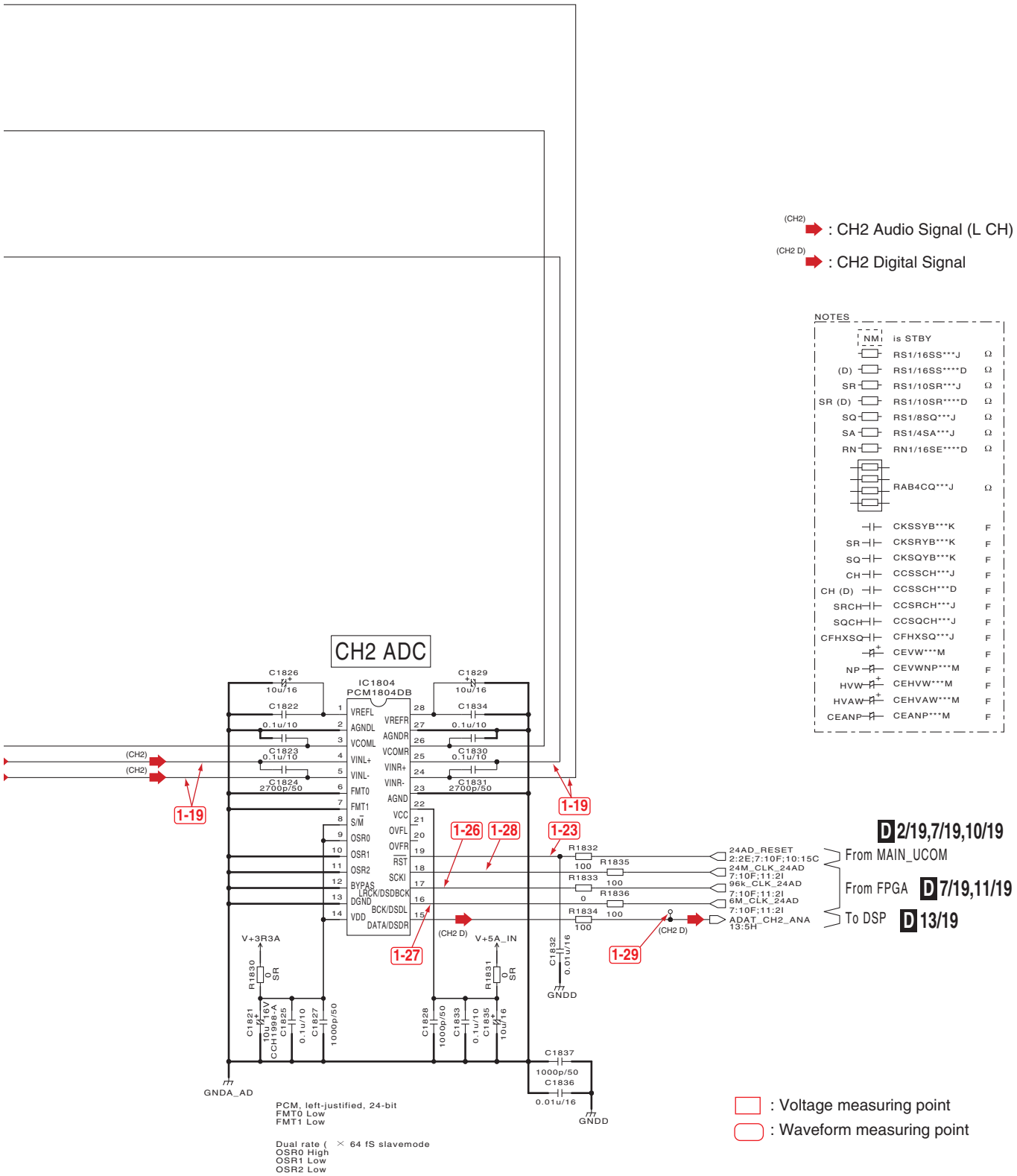

: Voltage measuring point

: Waveform measuring point

D 5/19

10.12 MAIN ASSY (6/19)

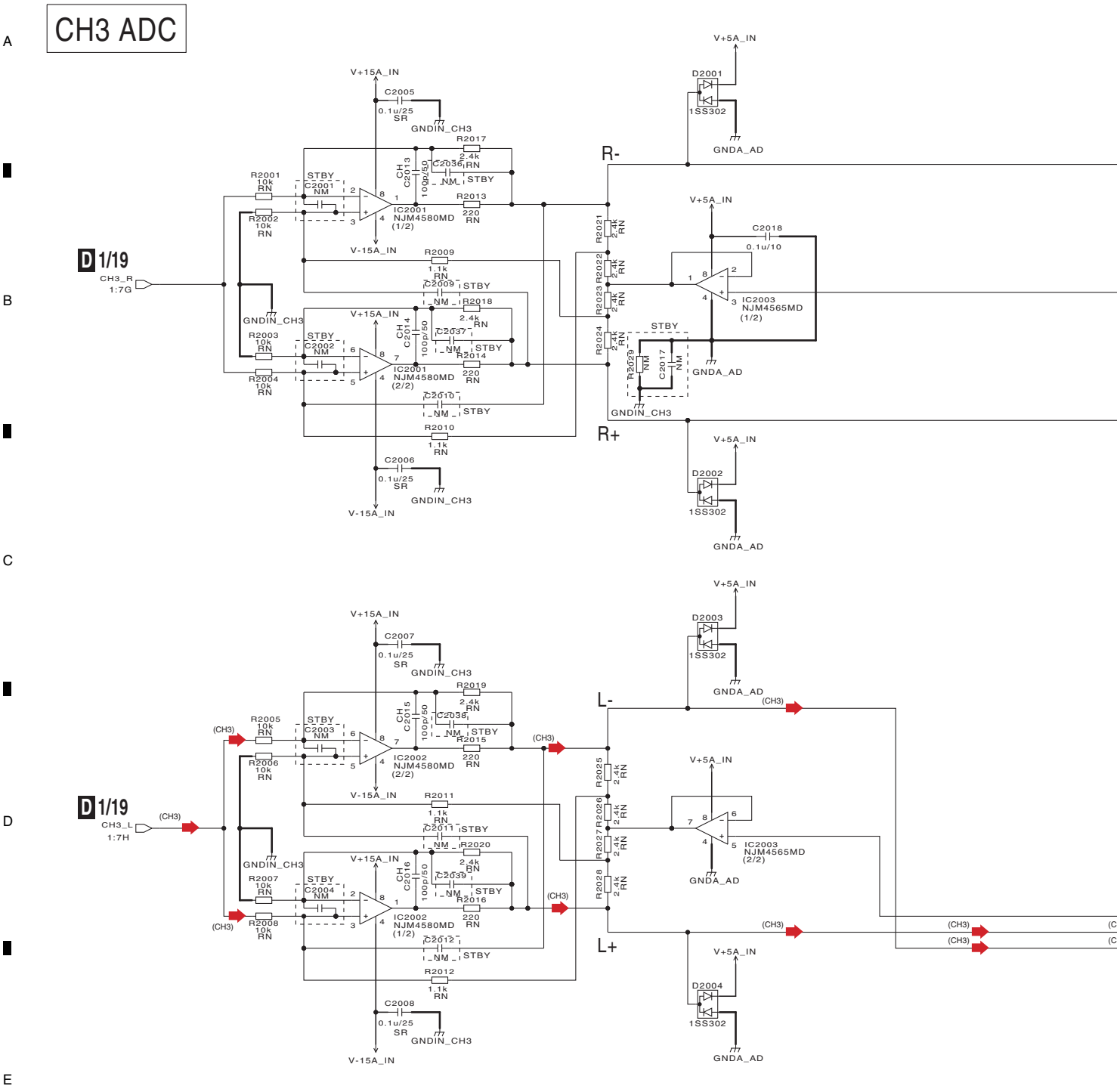

D 6/19 MAIN ASSY (DWX3360)

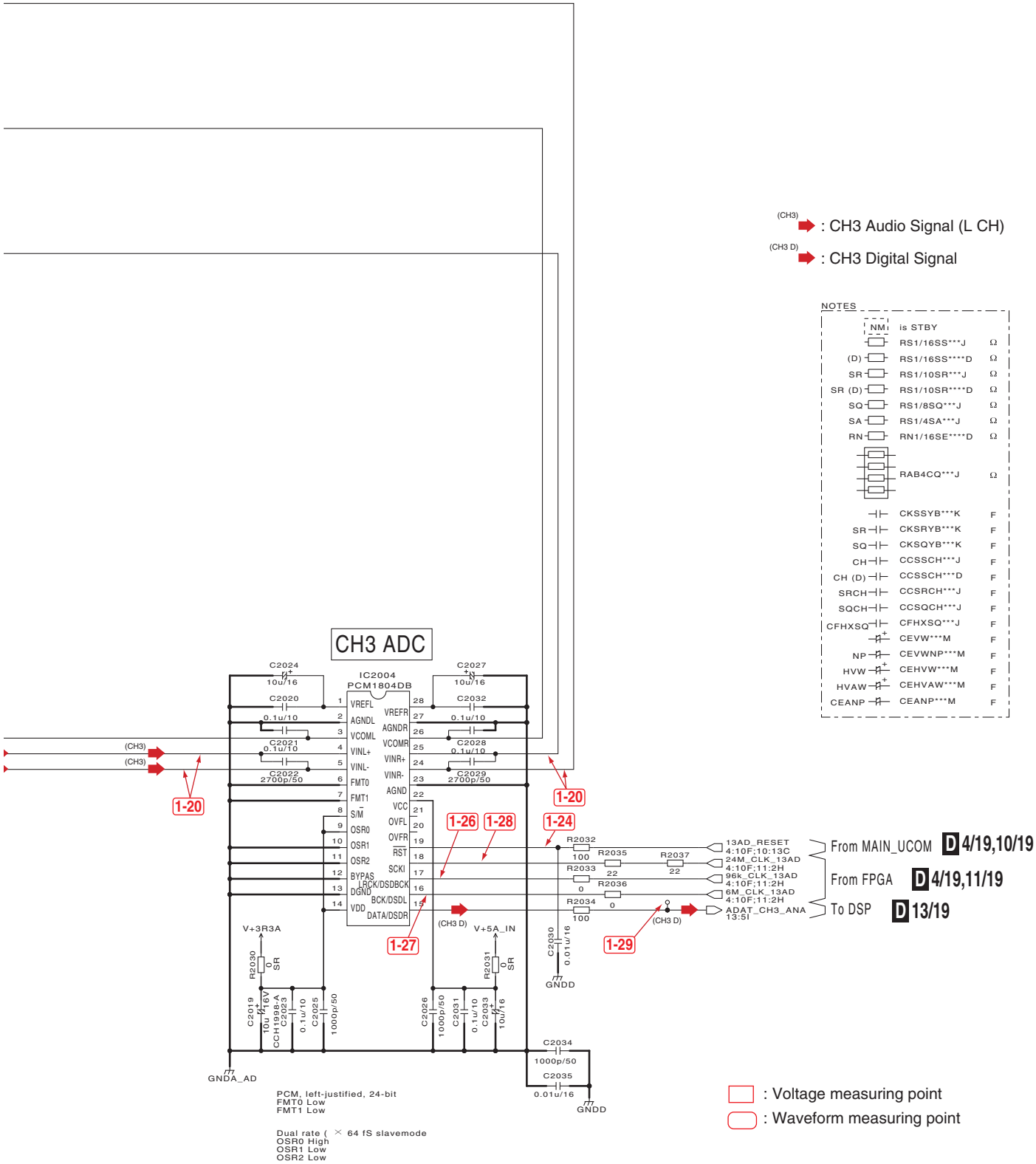

10.13 MAIN ASSY (7/19)

CH4 ADC

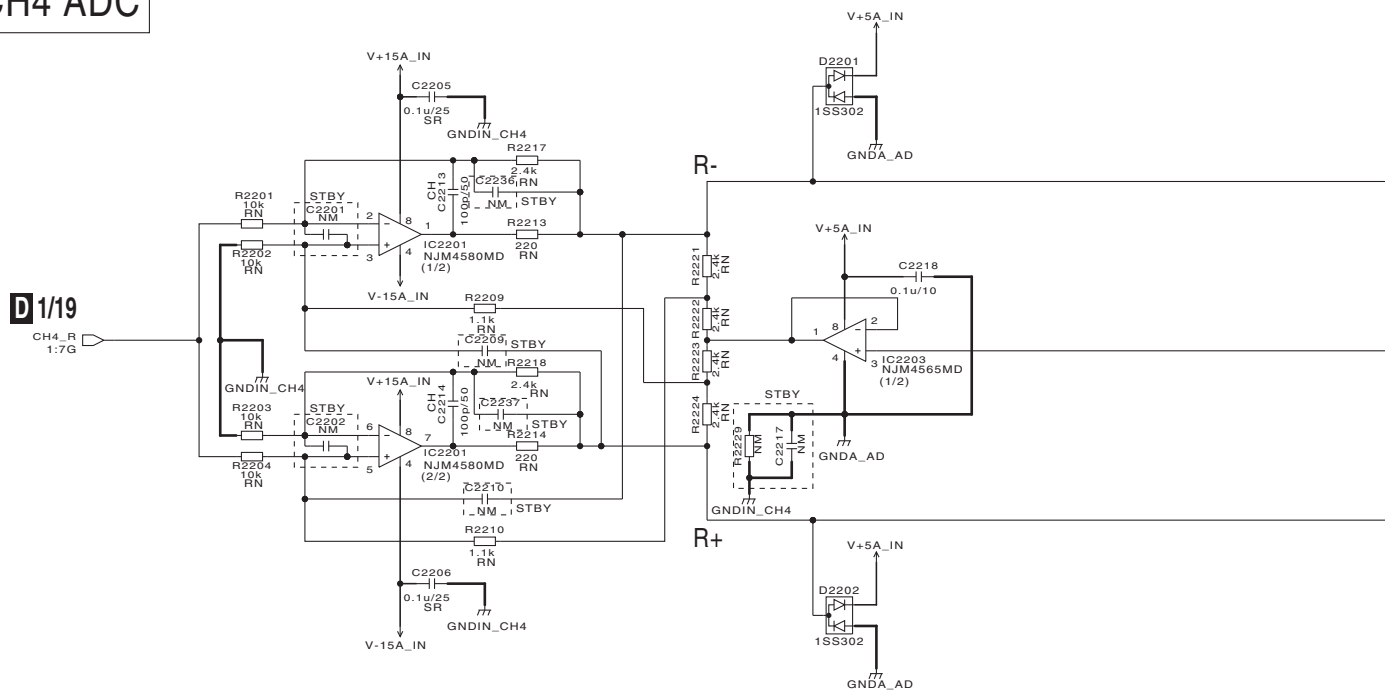

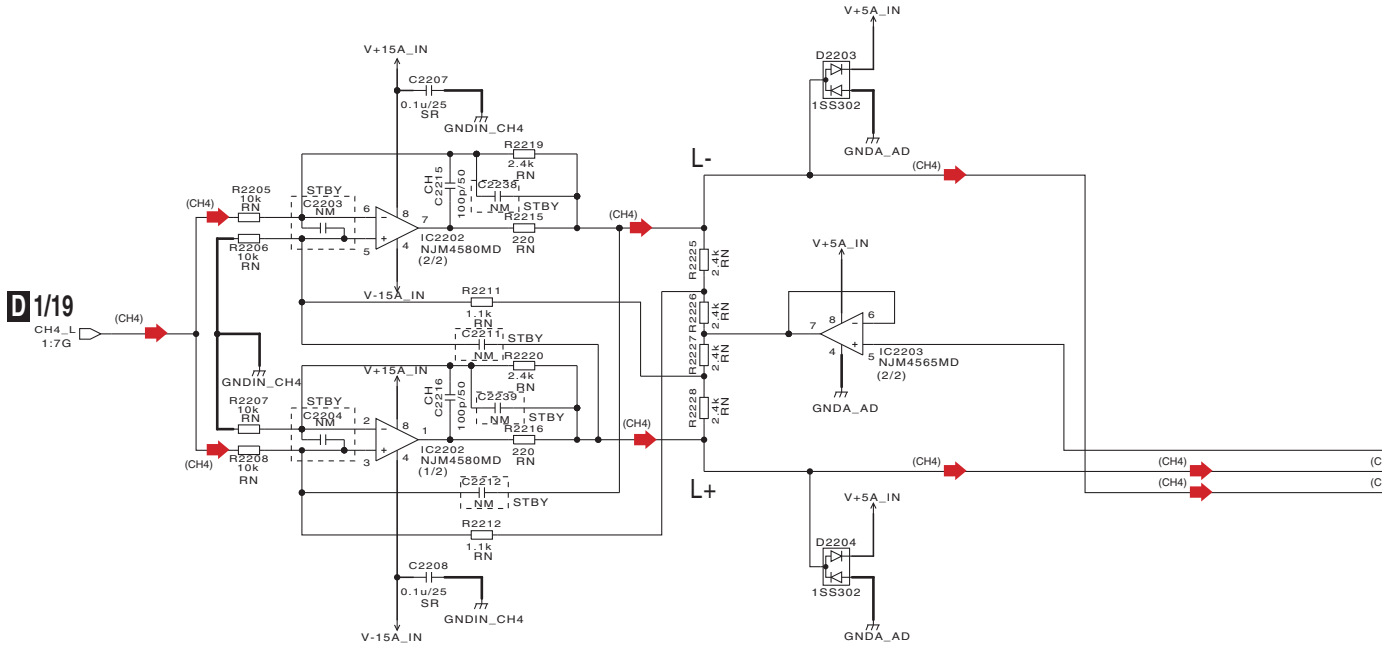

D 7/19

D 7/19 MAIN ASSY (DWX3360)

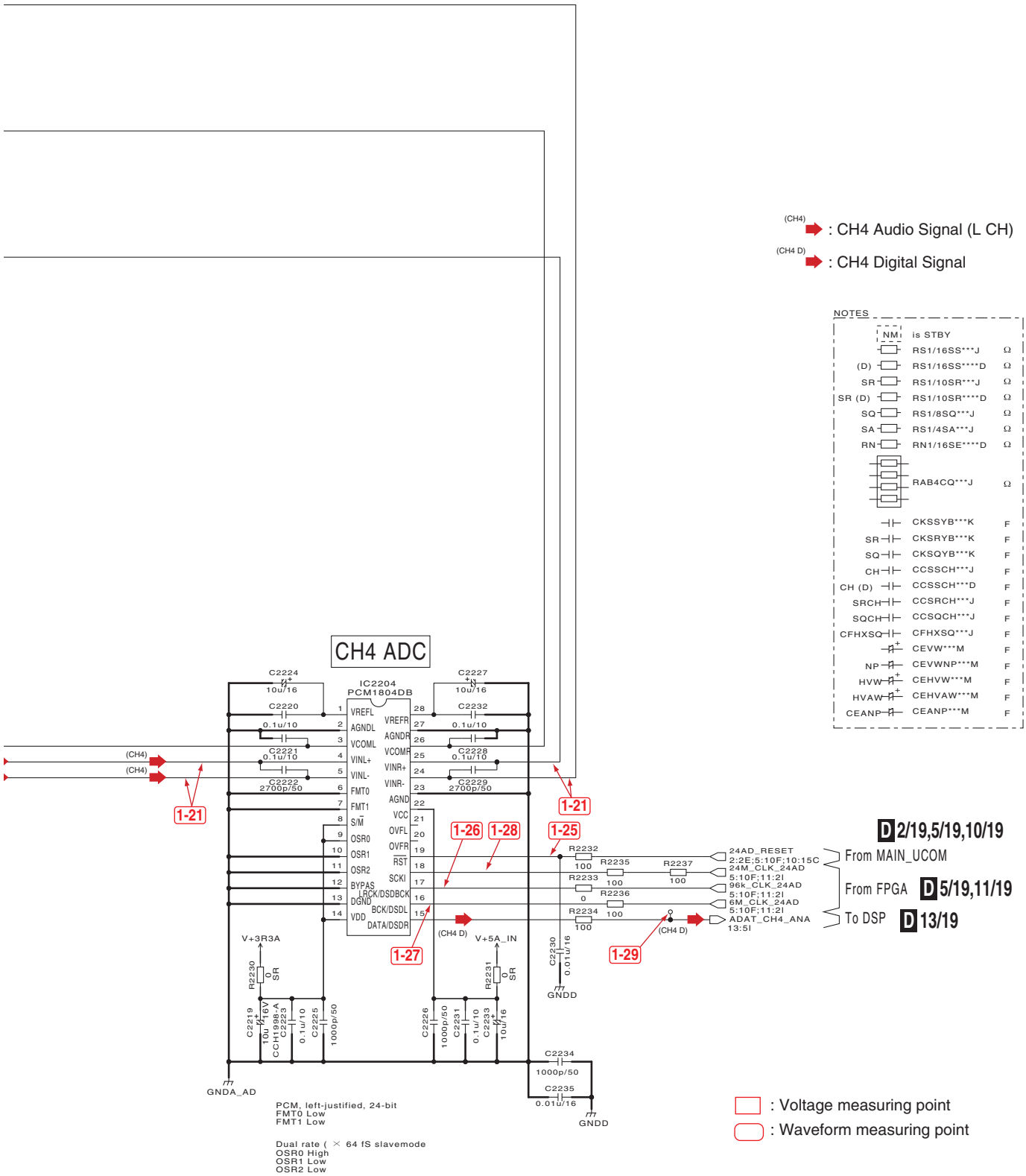

10.14 MAIN ASSY (8/19)

MIC/RET ADC

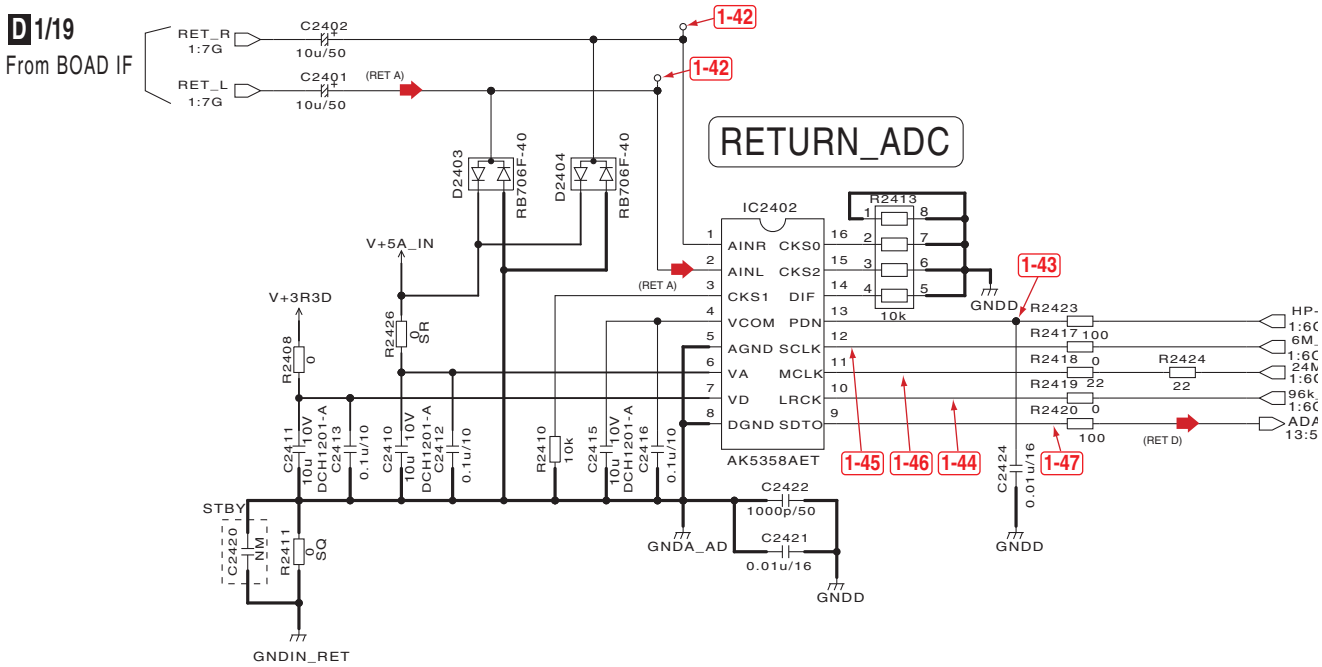

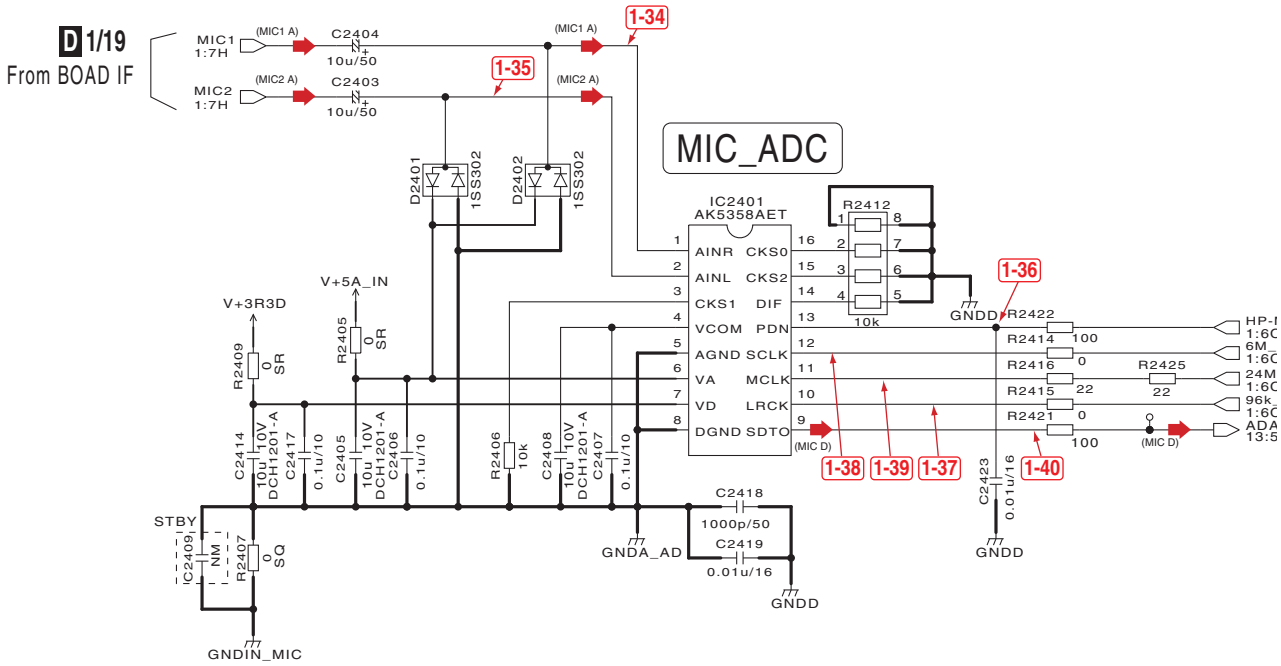

D 8/19

D 8/19 MAIN ASSY (DWX3360)

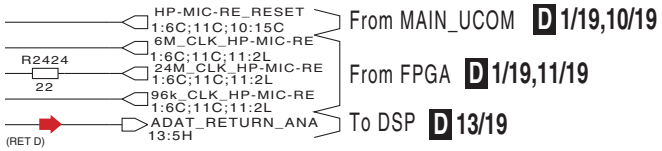

(RET A) : RETURN Audio Signal (L CH)
(RET D) : RETURN Digital Signal
(MIC1 A) : MIC1 Audio Signal
(MIC2 A) : MIC2 Audio Signal
(MIC D) : MIC Digital Signal

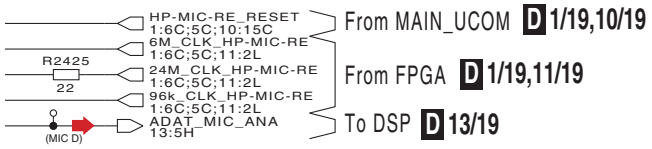

NOTES

NM	is STBY	
	RS1/16SS***J	Ω
(D)	RS1/16SS****D	Ω
SR	RS1/10SR***J	Ω
SR (D)	RS1/10SR****D	Ω
SQ	RS1/8SQ***J	Ω
SA	RS1/4SA***J	Ω
RN	RN1/16SE****D	Ω
	RAB4CQ***J	Ω
	CKSSYB***K	F
SR	CKSRYB***K	F
SQ	CKSQYB***K	F
CH	CCSSCH***J	F
CH (D)	CCSSCH***D	F
SRCH	CCSRCH***J	F
SQCH	CCSQCH***J	F
CFHXSQ	CFHXSQ***J	F
	CEVW***M	F
NP	CEVWNP***M	F
HVW	CEHVW***M	F
HVAW	CEHVAW***M	F
CEANP	CEANP***M	F

: Voltage measuring point
: Waveform measuring point

D 8/19

10.15 MAIN ASSY (9/19)

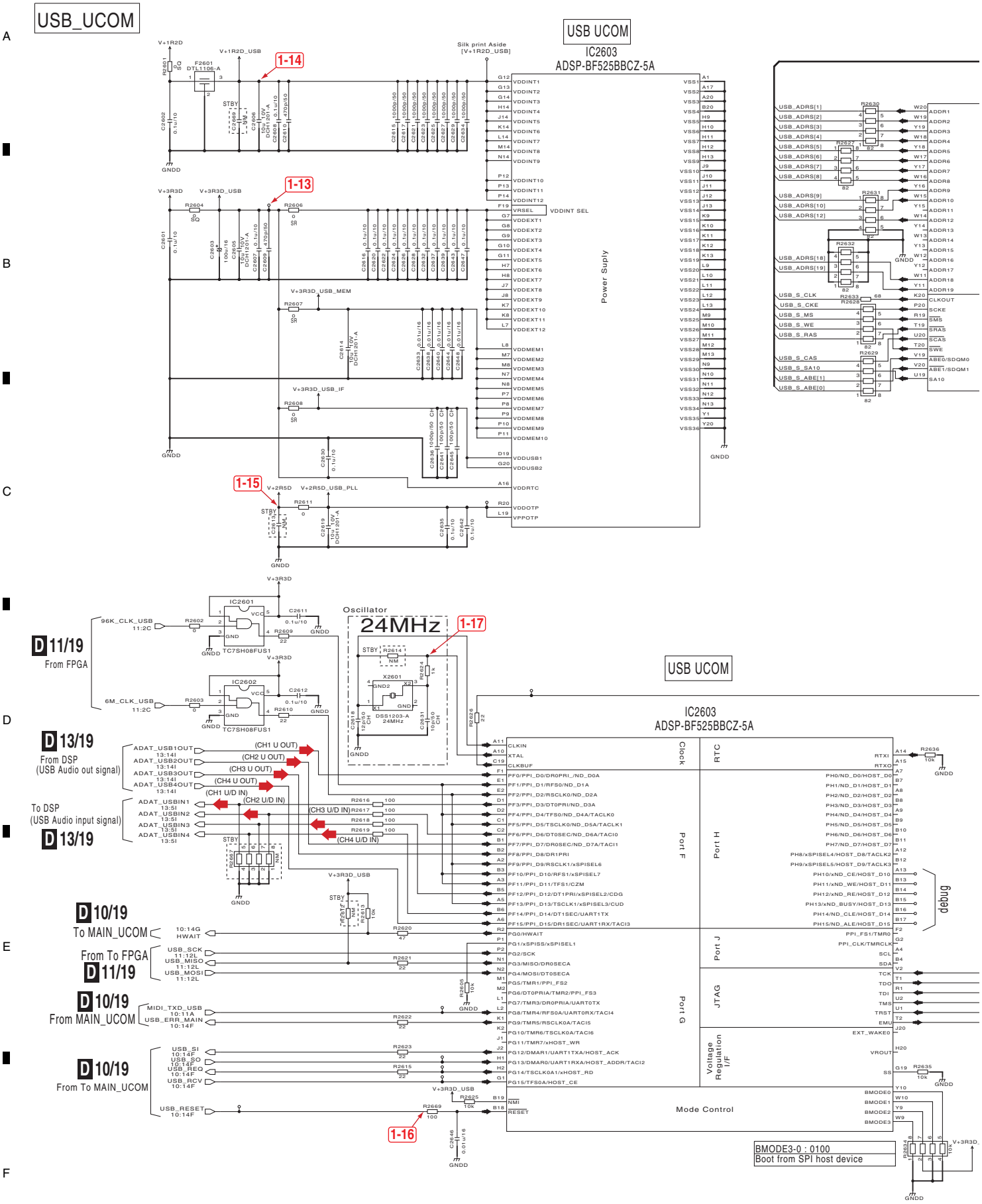

D 9/19

D 9/19 MAIN ASSY (DWX3360)

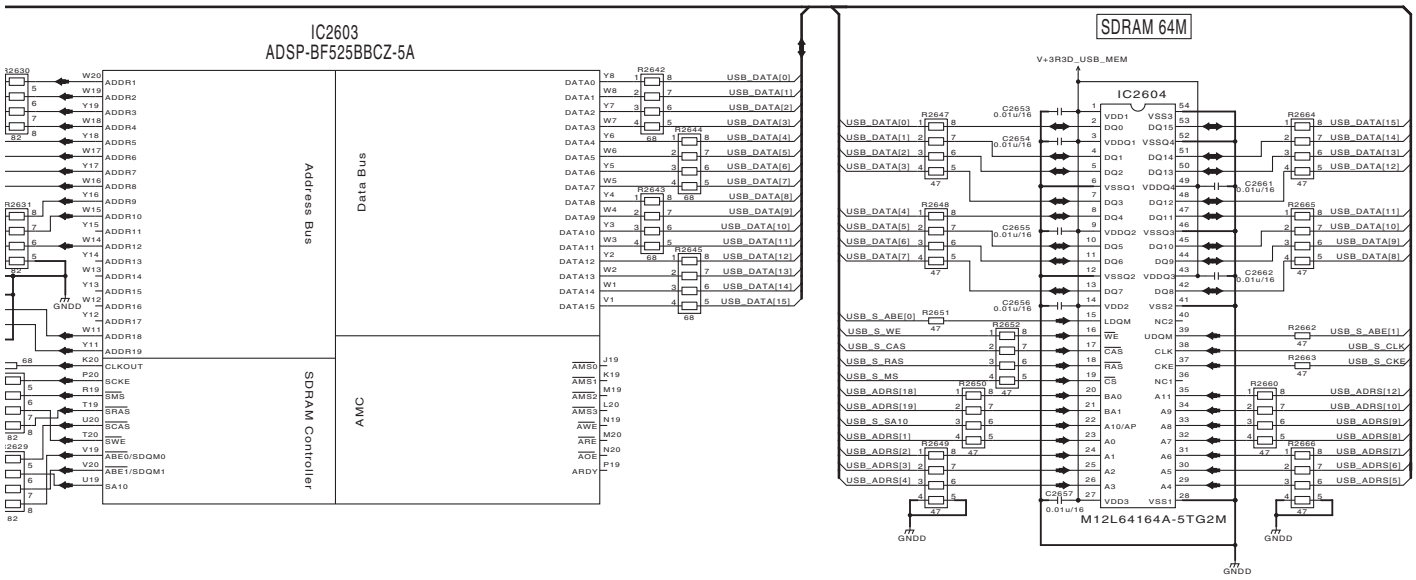

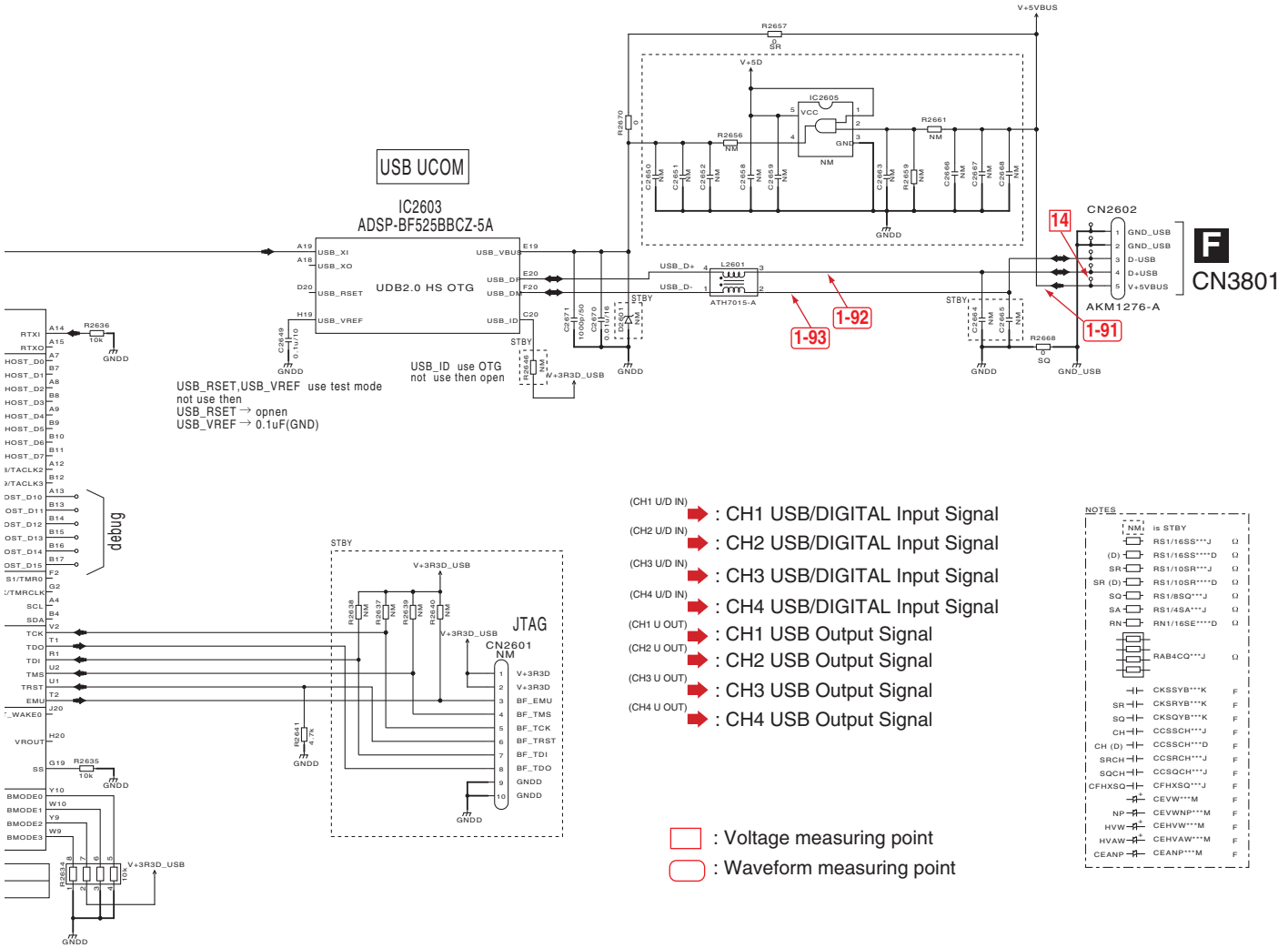

10.16 MAIN ASSY (10/19)

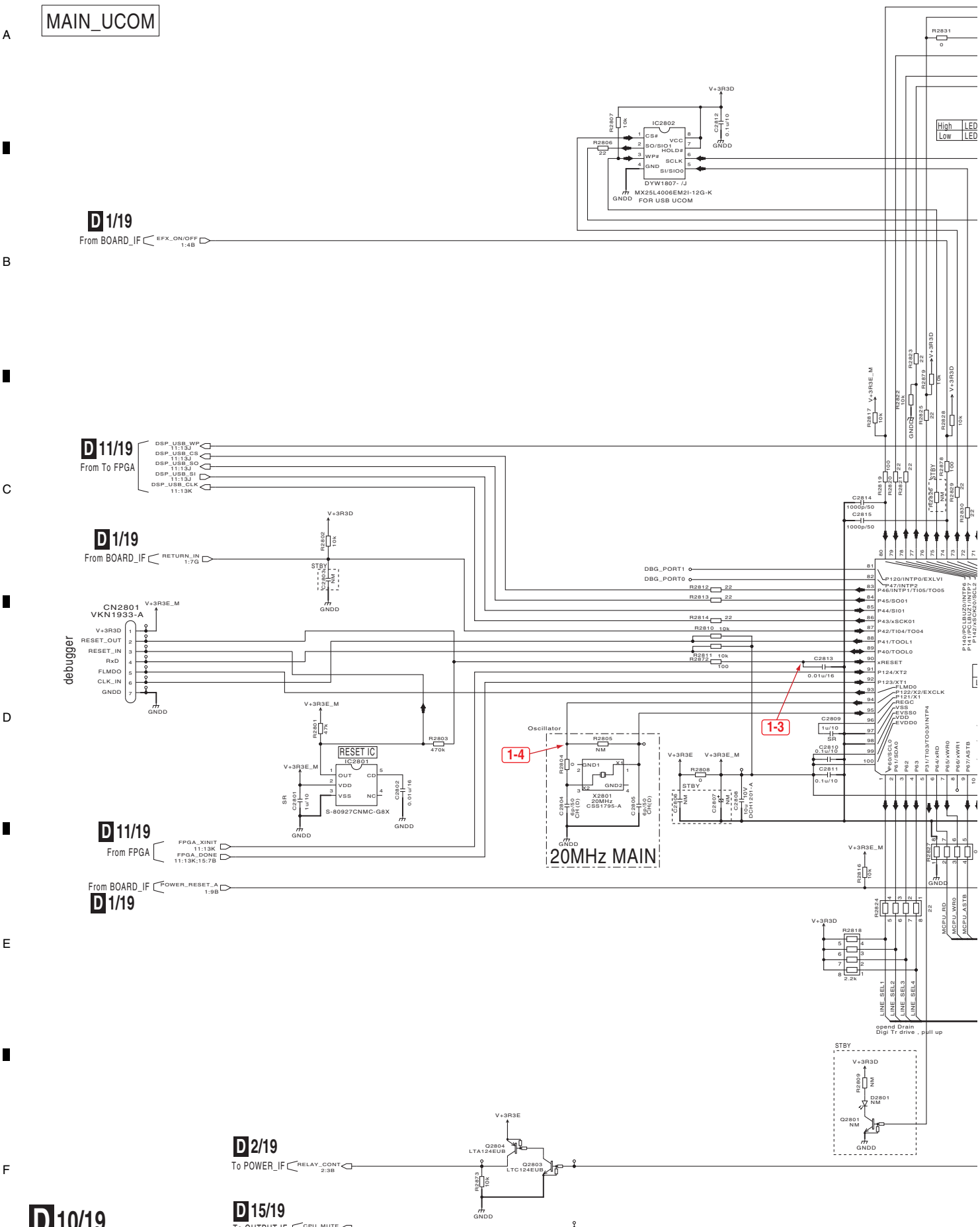

D 10/19 MAIN ASSY (DWX3360)

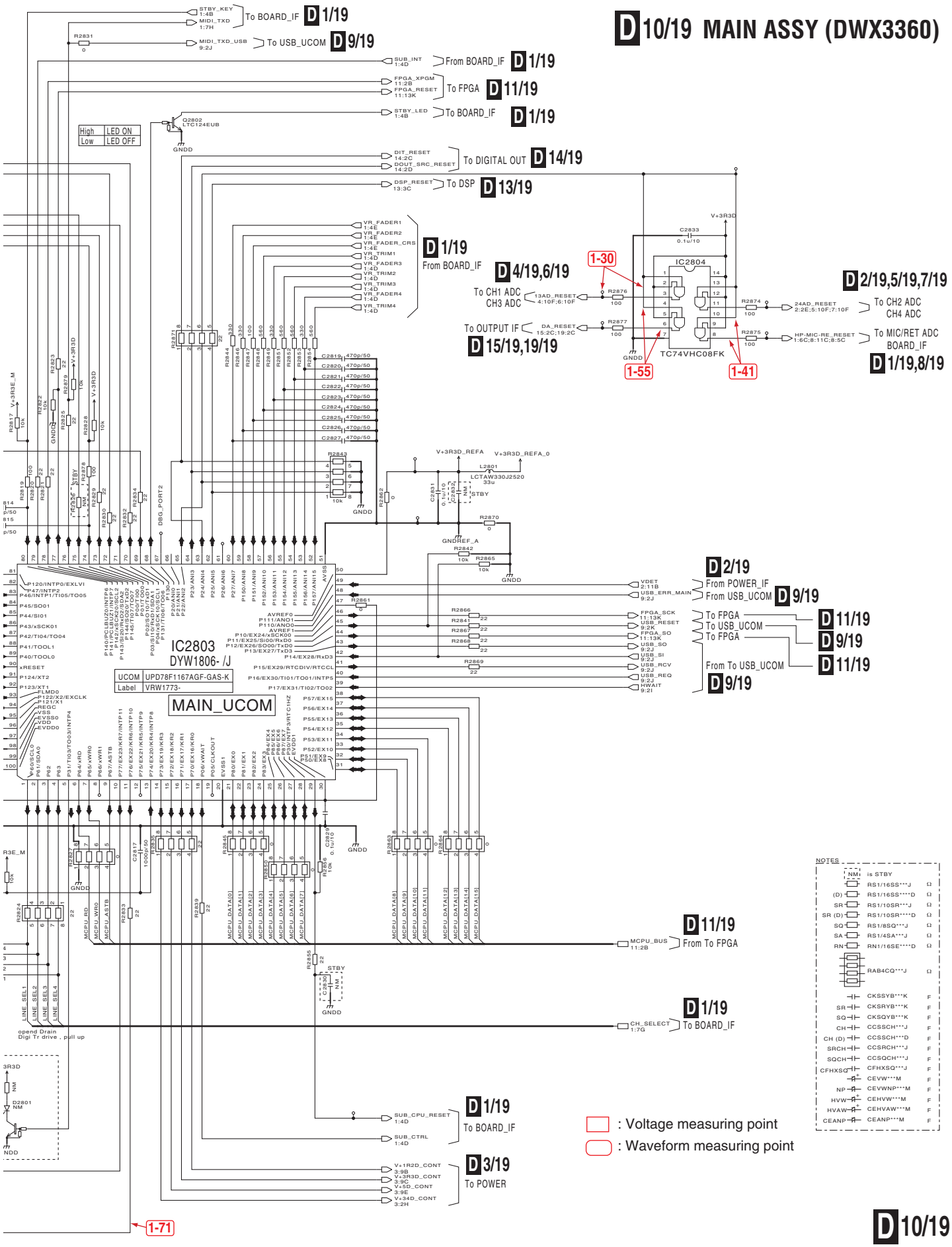

D 10/19

10.17 MAIN ASSY (11/19)

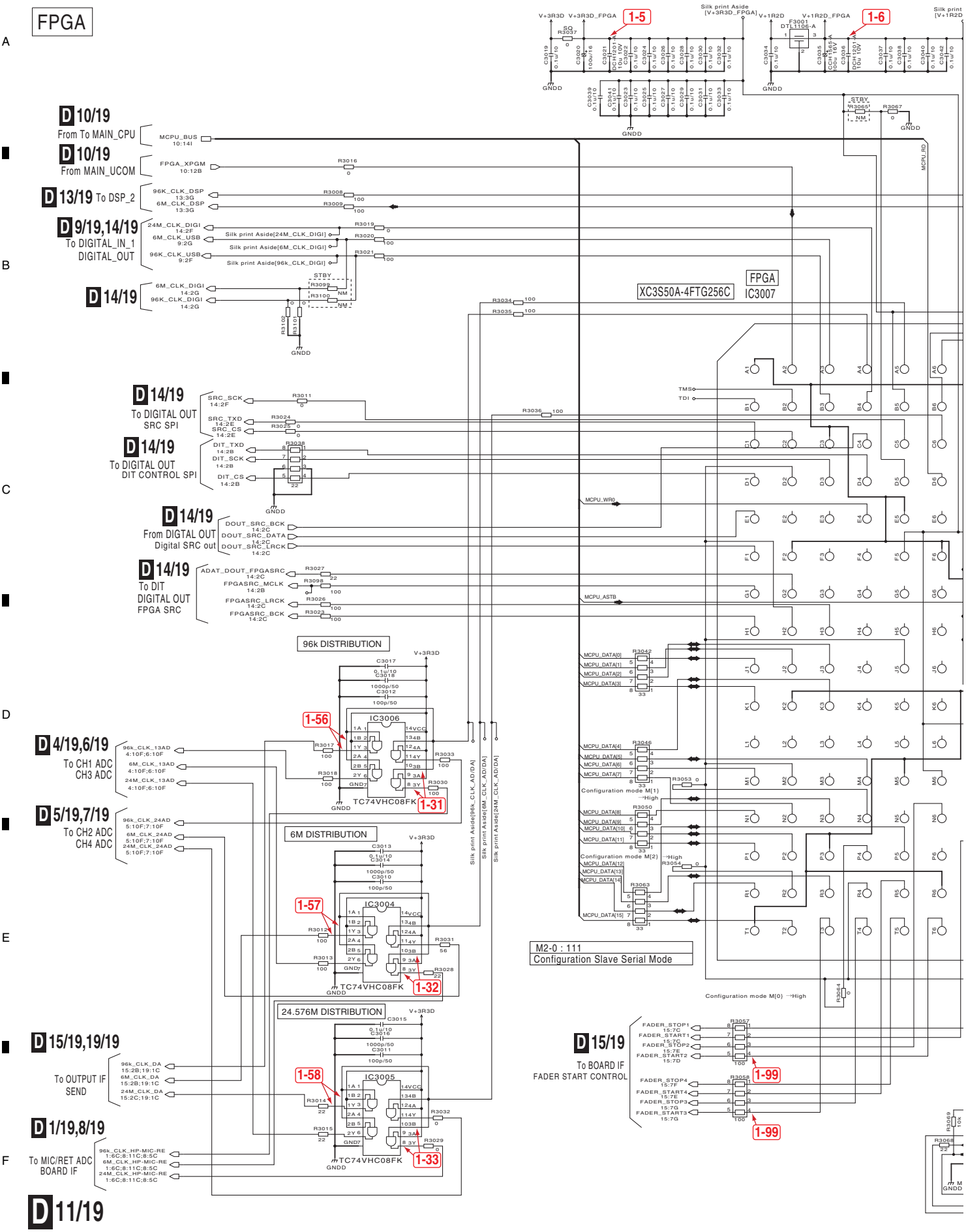

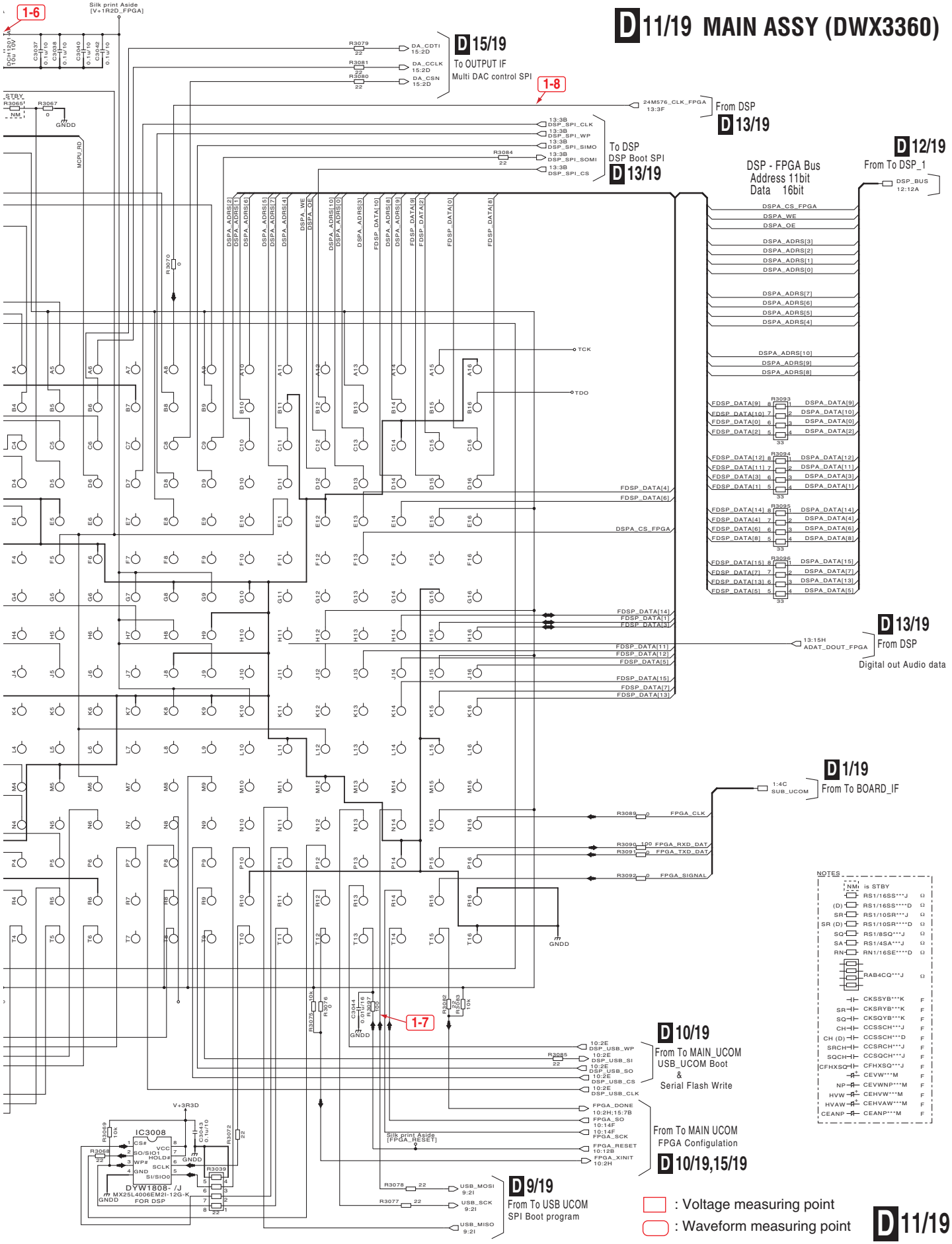
D 11/19 MAIN ASSY (DWX3360)
1-6
Silk print Aside [V+1R2D_FPGA]
D 15/19
To OUTPUT IF
Multi DAC control SPI
DA_CDTI 15:2D
DA_CCLK 15:2D
DA_CSN 15:2D
1-8
From DSP
D 13/19
24M576_CLK_FPGA 13:3F
To DSP
DSP Boot SPI
D 13/19
DSP_SPI_CLK
DSP_SPI_WP
DSP_SPI_SIMO
DSP_SPI_SOMI
DSP_SPI_CS
D 12/19
From To DSP_1
DSP_BUS 12:12A
DSP - FPGA Bus
Address 11bit
Data 16bit
DSPA_CS_FPGA
DSPA_WE
DSPA_OE
DSPA_ADRS[3]
DSPA_ADRS[2]
DSPA_ADRS[1]
DSPA_ADRS[0]
DSPA_ADRS[7]
DSPA_ADRS[6]
DSPA_ADRS[5]
DSPA_ADRS[4]
DSPA_ADRS[10]
DSPA_ADRS[9]
DSPA_ADRS[8]
TCK
TDO
D 13/19
From DSP
Digital out Audio data
13:15H ADAT_DOUT_FPGA
D 1/19
From To BOARD_IF
1:4C SUB_UCOM
FPGA_CLK
FPGA_RXD_DAT
FPGA_TXD_DAT
FPGA_SIGNAL
GNDD
1-7
D 10/19
From To MAIN_UCOM
USB_UCOM Boot
&
Serial Flash Write
DSP_USB_WP
DSP_USB_SI
DSP_USB_SO
DSP_USB_CS
DSP_USB_CLK
From To MAIN UCOM
FPGA Configulation
D 10/19,15/19
FPGA_DONE
FPGA_SO
FPGA_SCK
FPGA_RESET
FPGA_XINIT
Silk print Aside [FPGA_RESET]
D 9/19
From To USB UCOM
SPI Boot program
USB_MOSI
USB_SCK
USB_MISO
IC3008
DYW1808- /J
MX25L4006EM2I-12G-K
FOR DSP
V+3R3D
NOTES
NM is STBY
: Voltage measuring point
: Waveform measuring point
D 11/19

10.18 MAIN ASSY (12/19)

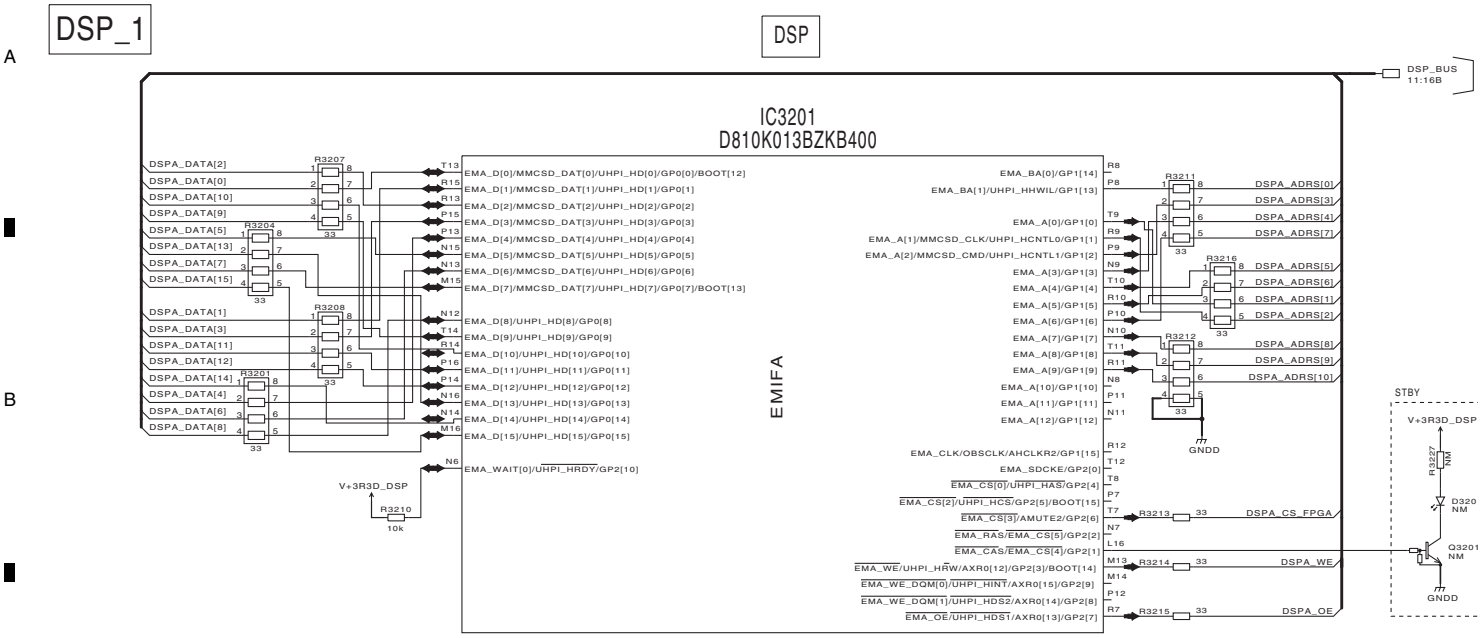

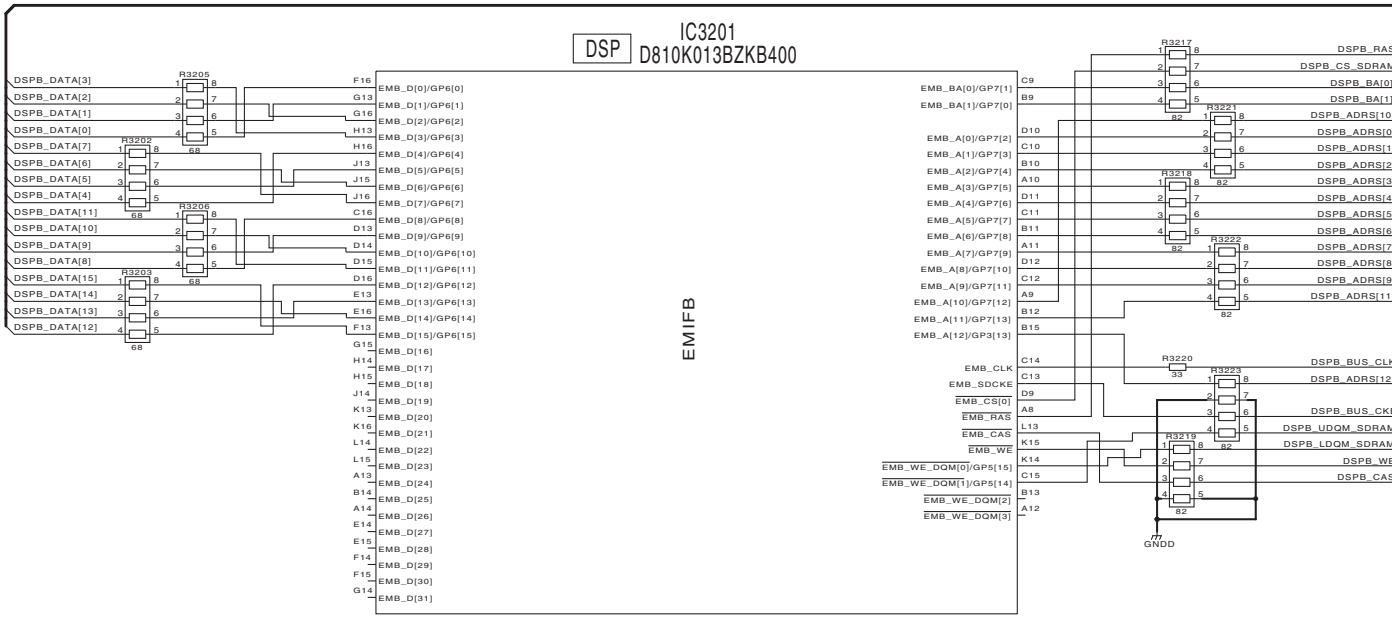

NOTES

NM	is STBY	
	RS1/16SS***J	Ω
(D)	RS1/16SS****D	Ω
SR	RS1/10SR***J	Ω
SR (D)	RS1/10SR****D	Ω
SQ	RS1/8SQ***J	Ω
SA	RS1/4SA***J	Ω
RN	RN1/16SE****D	Ω
	RAB4CQ***J	Ω
	CKSSYB***K	F
SR	CKSRYB***K	F
SQ	CKSQYB***K	F
CH	CCSSCH***J	F
CH (D)	CCSSCH***D	F
SRCH	CCSRCH***J	F
SQCH	CCSQCH***J	F
CFHXSQ	CFHXSQ***J	F
	CEVW***M	F
NP	CEVWNP***M	F
HVW	CEHVW***M	F
HVAW	CEHVAW***M	F
CEANP	CEANP***M	F

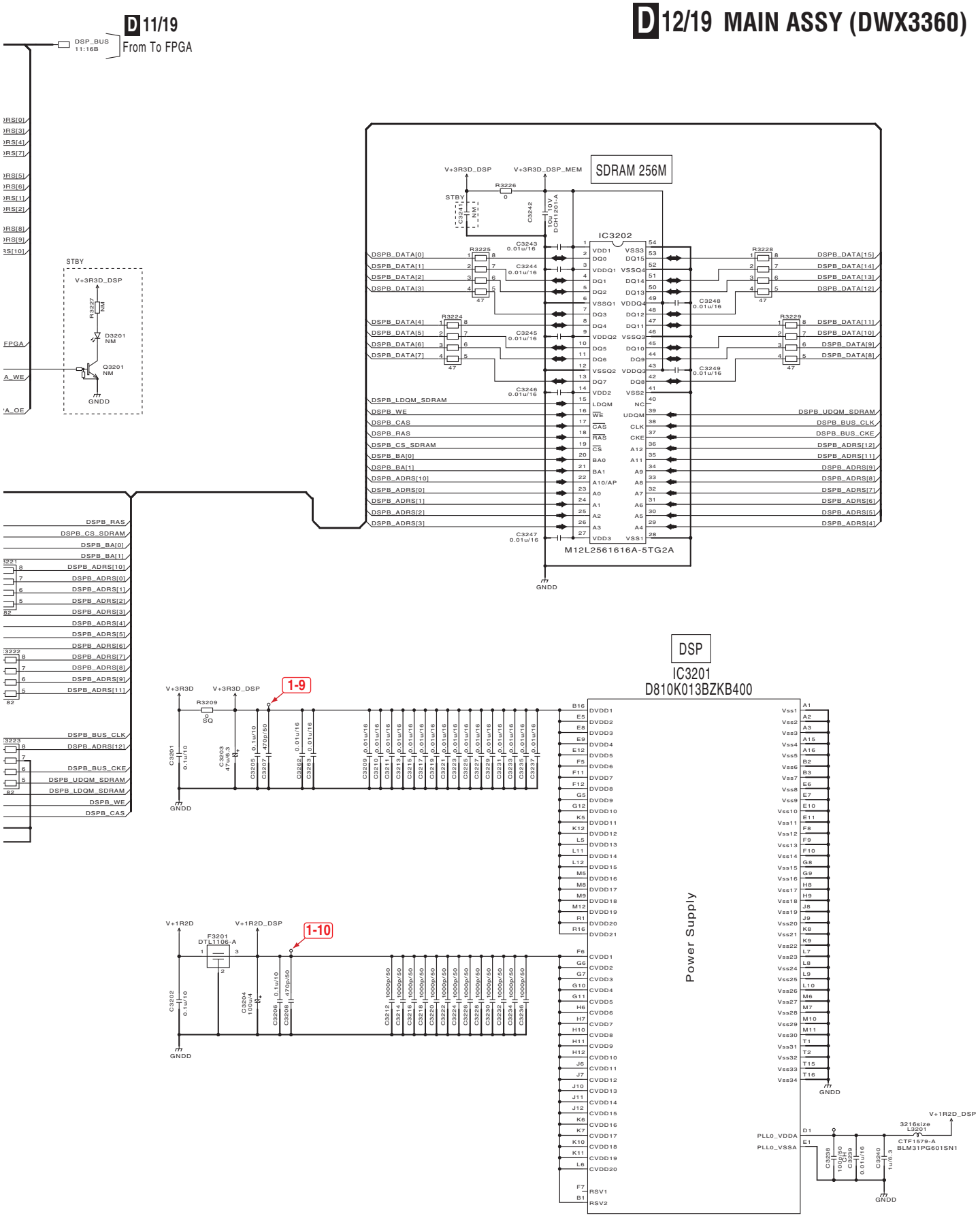
D 11/19
From To FPGA
DSP_BUS 11:16B
SDRAM 256M
IC3202
M12L2561616A-5TG2A
V+3R3D_DSP
V+3R3D_DSP_MEM
STBY
GNDD
DSP
IC3201
D810K013BZKB400
Power Supply
V+3R3D
V+1R2D
V+1R2D_DSP
1-9
1-10
F3201
DTL1106-A
CTF1579-A
BLM31PG601SN1
3216size
L3201
PLL0_VDDA
PLL0_VSSA
DSPB_DATA[0]
DSPB_DATA[1]
DSPB_DATA[2]
DSPB_DATA[3]
DSPB_DATA[4]
DSPB_DATA[5]
DSPB_DATA[6]
DSPB_DATA[7]
DSPB_DATA[8]
DSPB_DATA[9]
DSPB_DATA[10]
DSPB_DATA[11]
DSPB_DATA[12]
DSPB_DATA[13]
DSPB_DATA[14]
DSPB_DATA[15]
DSPB_LDQM_SDRAM
DSPB_WE
DSPB_CAS
DSPB_RAS
DSPB_CS_SDRAM
DSPB_BA[0]
DSPB_BA[1]
DSPB_ADRS[10]
DSPB_ADRS[0]
DSPB_ADRS[1]
DSPB_ADRS[2]
DSPB_ADRS[3]
DSPB_ADRS[4]
DSPB_ADRS[5]
DSPB_ADRS[6]
DSPB_ADRS[7]
DSPB_ADRS[8]
DSPB_ADRS[9]
DSPB_ADRS[11]
DSPB_ADRS[12]
DSPB_UDQM_SDRAM
DSPB_BUS_CLK
DSPB_BUS_CKE
: Voltage measuring point
: Waveform measuring point

10.19 MAIN ASSY (13/19)

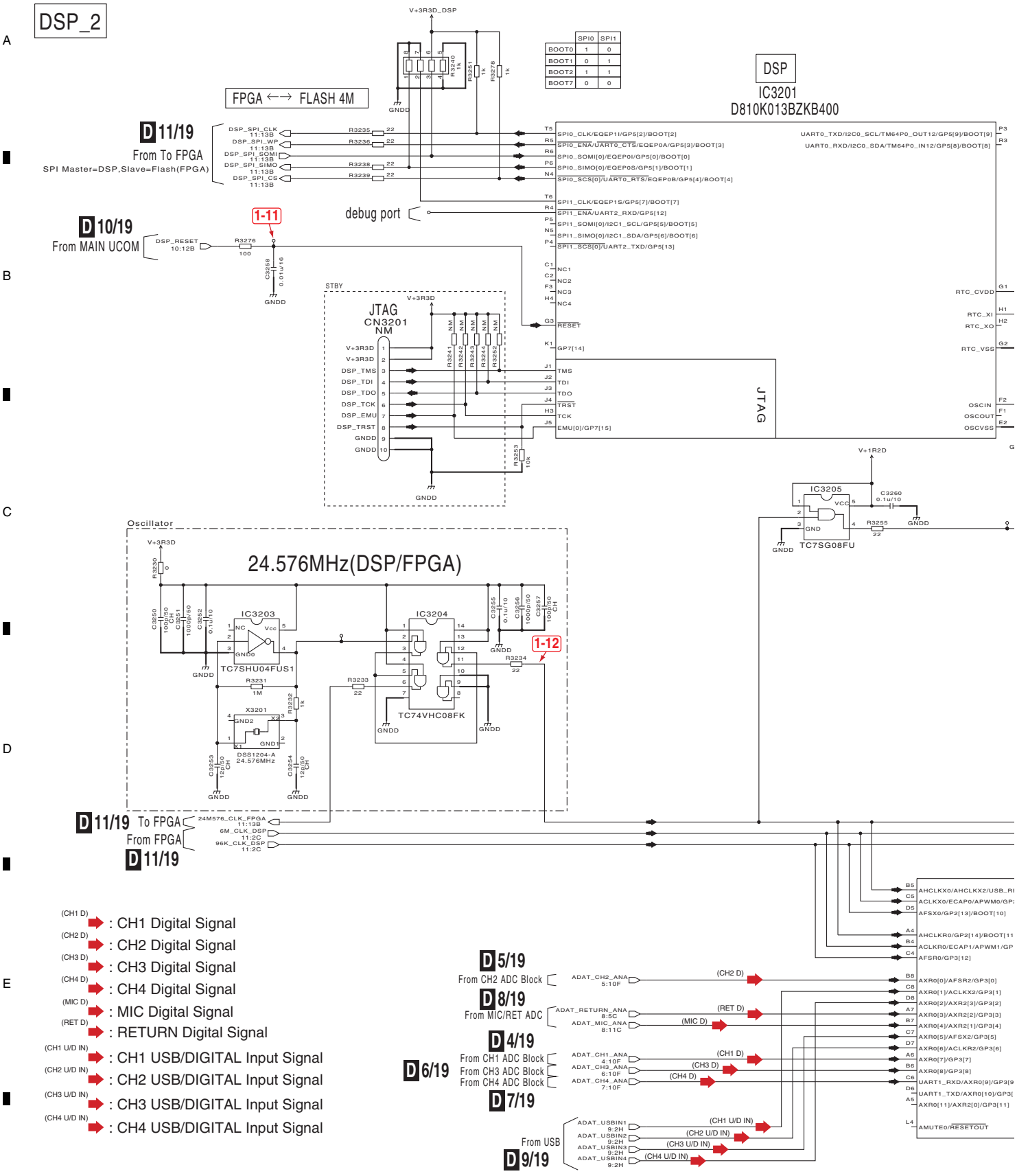

D 13/19

D 13/19 MAIN ASSY (DWX3360)

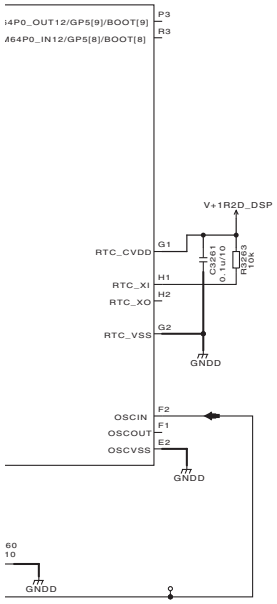

NOTES

NM	is STBY	
	RS1/16SS***J	Ω
(D)	RS1/16SS****D	Ω
SR	RS1/10SR***J	Ω
SR (D)	RS1/10SR****D	Ω
SQ	RS1/8SQ***J	Ω
SA	RS1/4SA***J	Ω
RN	RN1/16SE****D	Ω
	RAB4CQ***J	Ω
	CKSSYB***K	F
SR	CKSRYB***K	F
SQ	CKSQYB***K	F
CH	CCSSCH***J	F
CH (D)	CCSSCH***D	F
SRCH	CCSRCH***J	F
SQCH	CCSQCH***J	F
CFHXSQ	CFHXSQ***J	F
	CEVW***M	F
NP	CEVWNP***M	F
HVW	CEHVW***M	F
HVAW	CEHVAW***M	F
CEANP	CEANP***M	F

DSP
IC3201
D810K013BZKB400

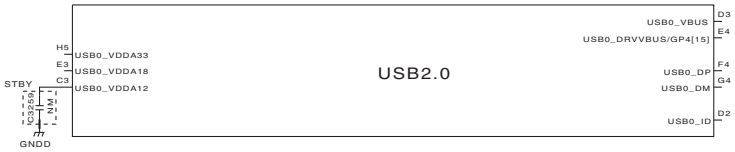

(HP D) : HP OUT Digital Signal
(MA D) : MASTER OUT Digital Signal
(BO D) : BOOTH OUT Digital Signal
(SEND D) : SEND OUT Digital Signal
(REC D) : REC OUT Digital Signal
(DIG OUT) : DIGITAL OUT Signal
(CH1 U OUT) : CH1 USB Output Signal
(CH2 U OUT) : CH2 USB Output Signal
(CH3 U OUT) : CH3 USB Output Signal
(CH4 U OUT) : CH4 USB Output Signal

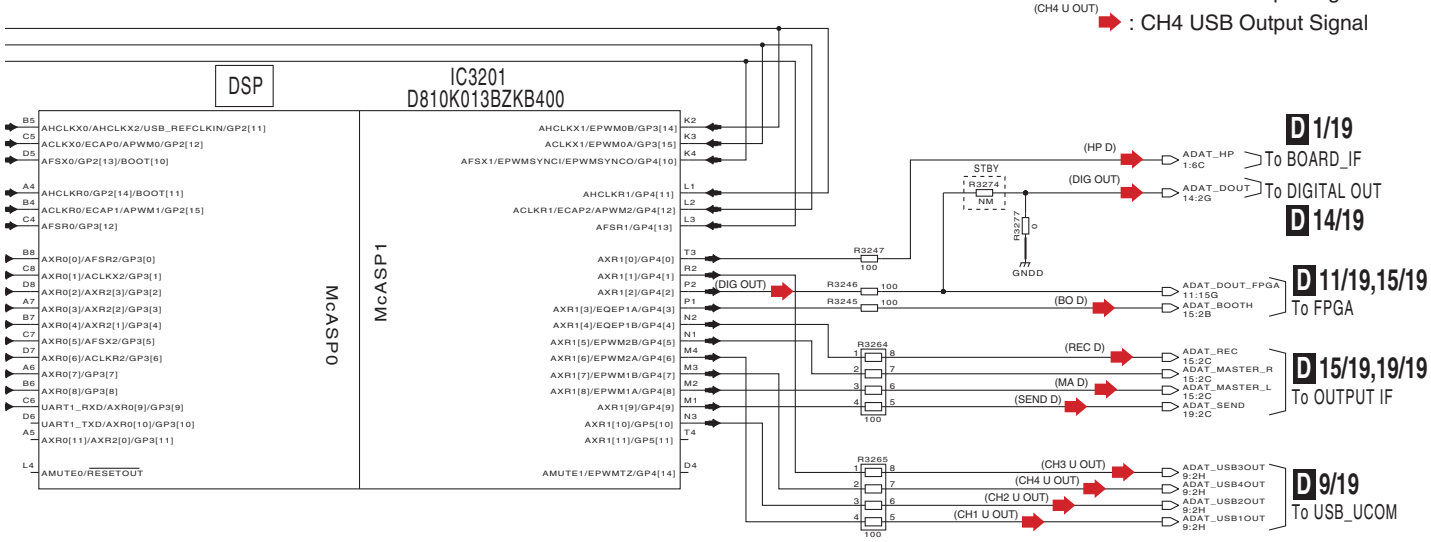

: Voltage measuring point
: Waveform measuring point

D 13/19

10.20 MAIN ASSY (14/19)

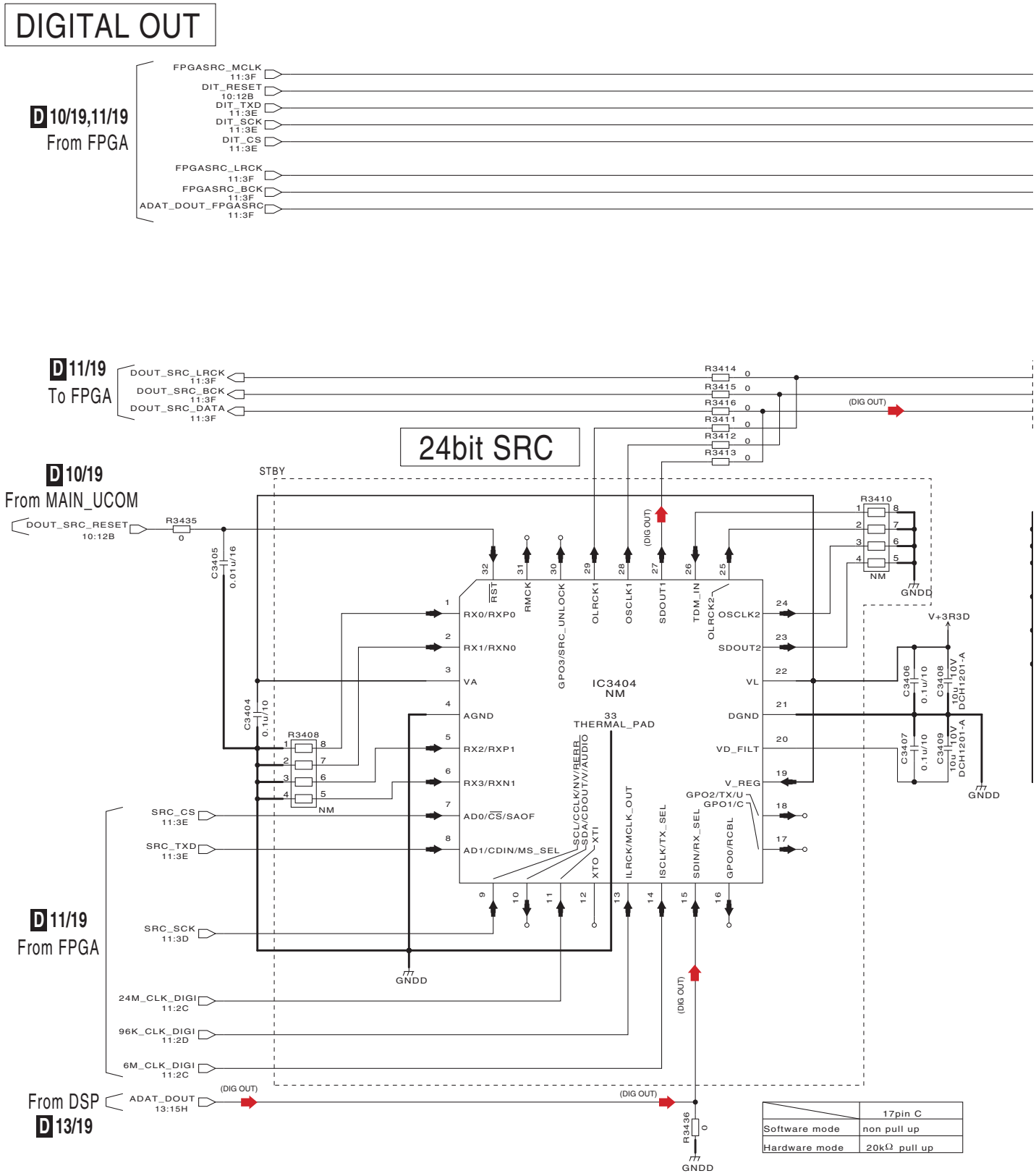

D 14/19

D 14/19 MAIN ASSY (DWX3360)

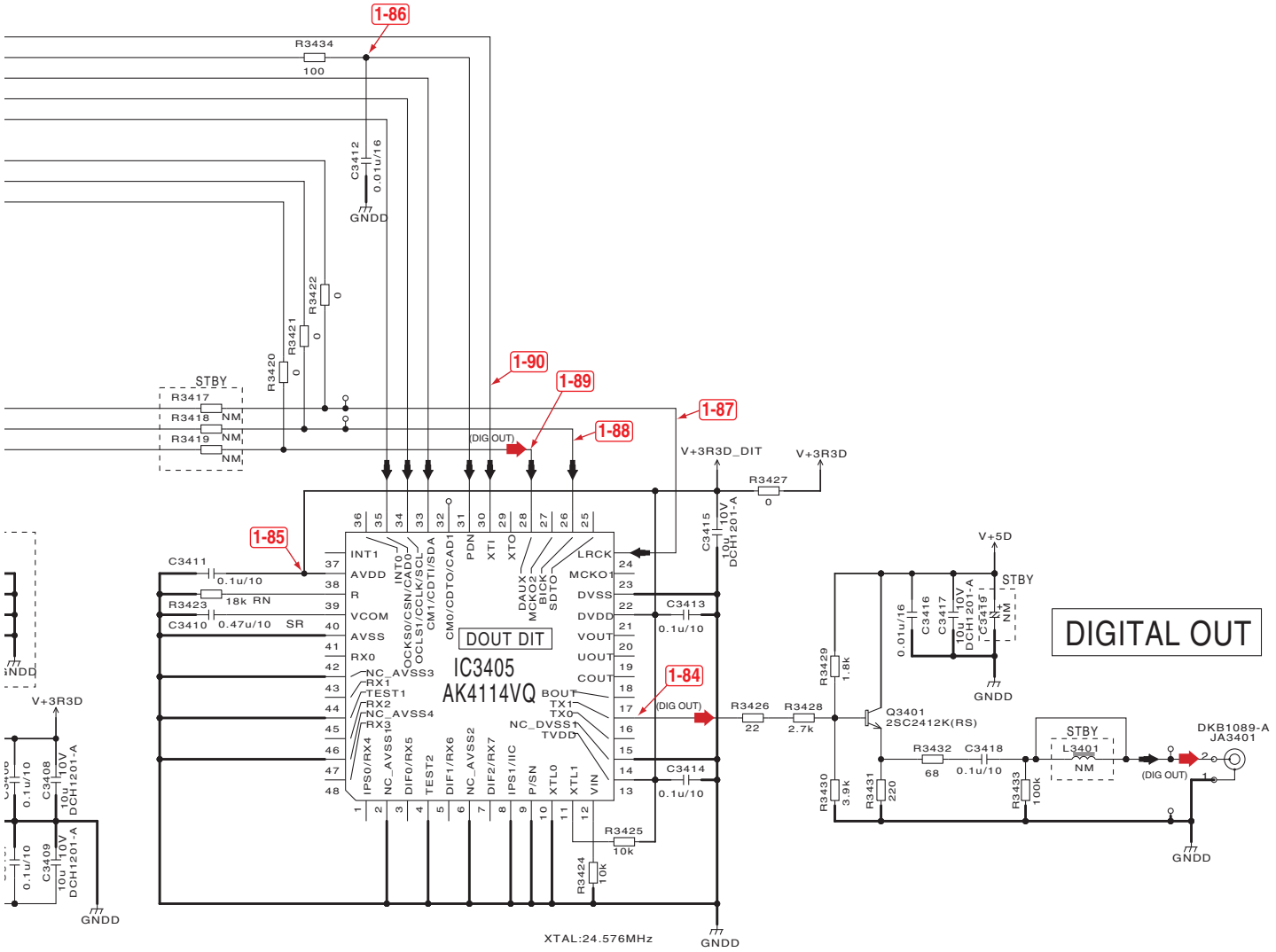

NOTES

NM	is STBY	
	RS1/16SS***J	Ω
(D)	RS1/16SS****D	Ω
SR	RS1/10SR***J	Ω
SR (D)	RS1/10SR****D	Ω
SQ	RS1/8SQ***J	Ω
SA	RS1/4SA***J	Ω
RN	RN1/16SE****D	Ω
	RAB4CQ***J	Ω
	CKSSYB***K	F
SR	CKSRYB***K	F
SQ	CKSQYB***K	F
CH	CCSSCH***J	F
CH (D)	CCSSCH***D	F
SRCH	CCSRCH***J	F
SQCH	CCSQCH***J	F
CFHXSQ	CFHXSQ***J	F
	CEVW***M	F
NP	CEVWNP***M	F
HVW	CEHVW***M	F
HVAW	CEHVAW***M	F
CEANP	CEANP***M	F

(DIG OUT) : DIGITAL OUT Signal

: Voltage measuring point

: Waveform measuring point

D 14/19

10.21 MAIN ASSY (15/19)

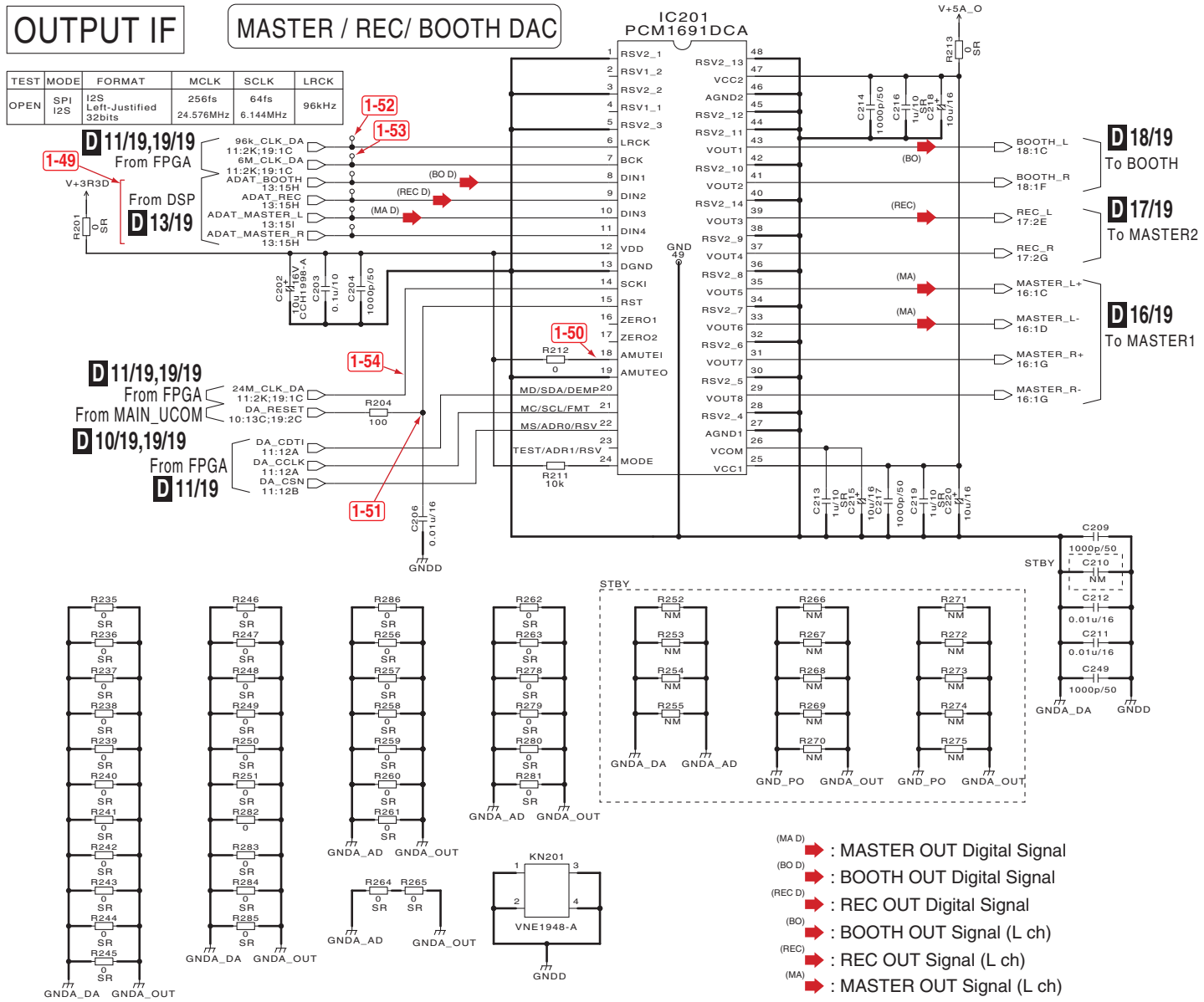

TEST	MODE	FORMAT	MCLK	SCLK	LRCK
OPEN	SPI I2S	I2S Left-Justified 32bits	256fs 24.576MHz	64fs 6.144MHz	96kHz

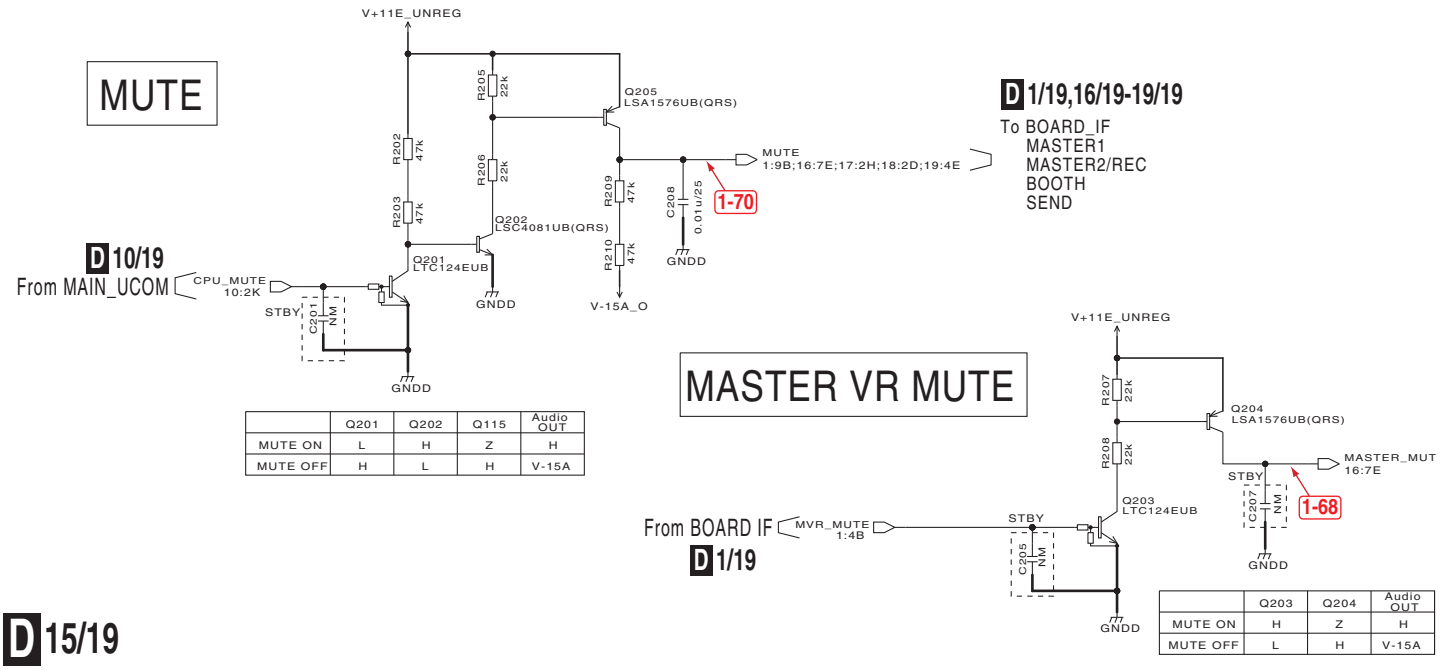

	Q201	Q202	Q115	Audio OUT
MUTE ON	L	H	Z	H
MUTE OFF	H	L	H	V-15A

	Q203	Q204	Audio OUT
MUTE ON	H	Z	H
MUTE OFF	L	H	V-15A

D 15/19

D 15/19 MAIN ASSY (DWX3360)

CONTROL

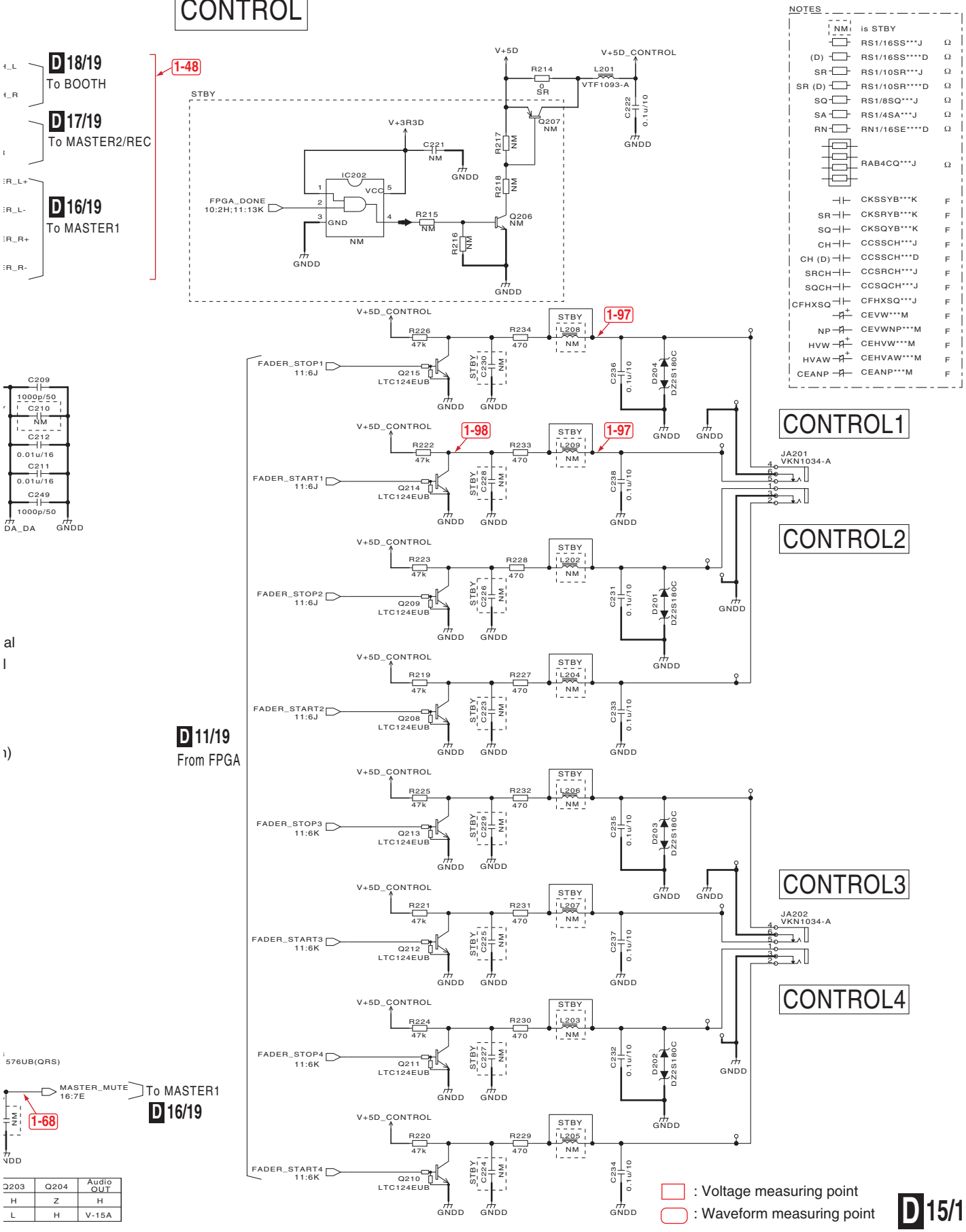

10.22 MAIN ASSY (16/19)

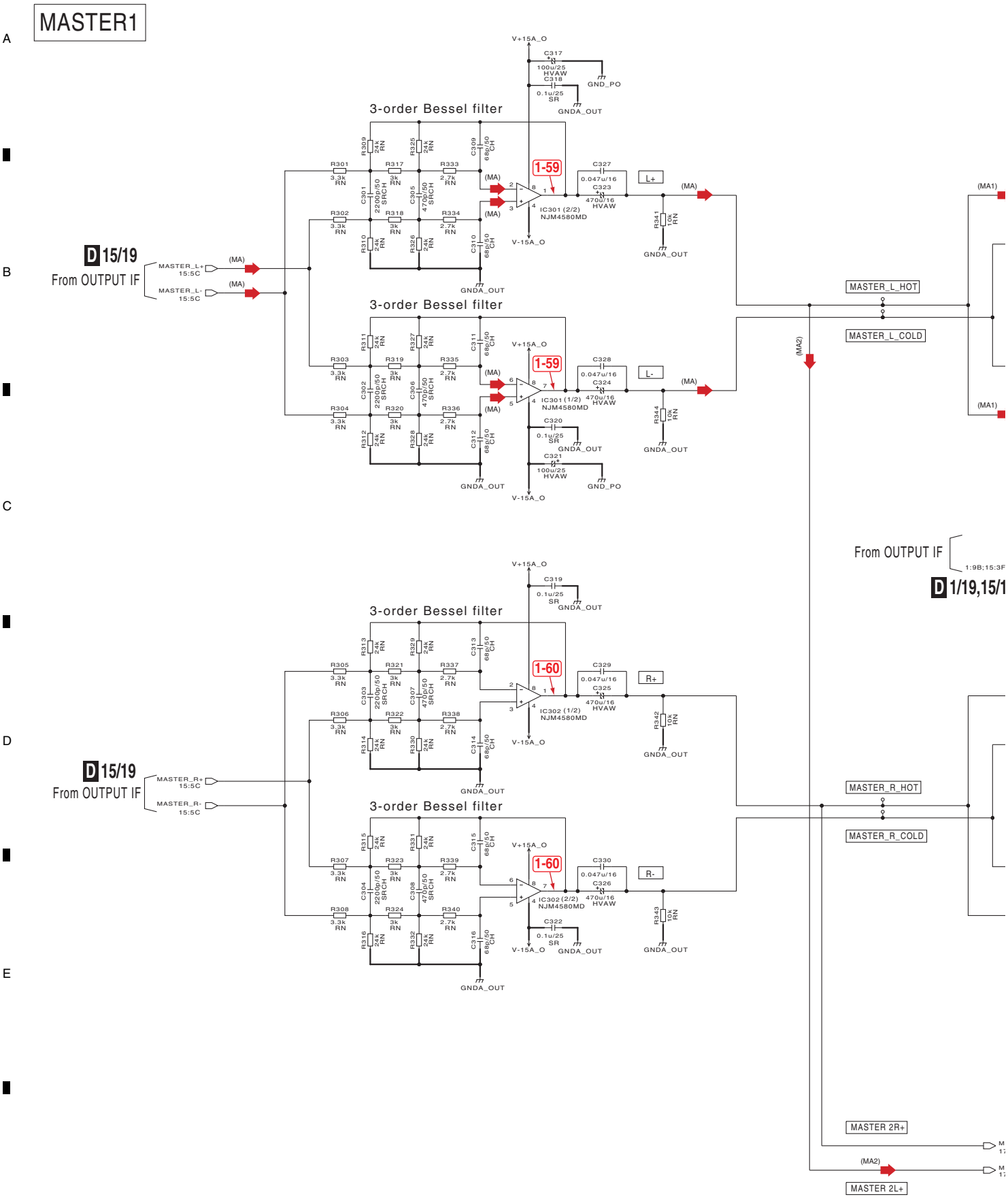

D 16/19

D 16/19 MAIN ASSY (DWX3360)

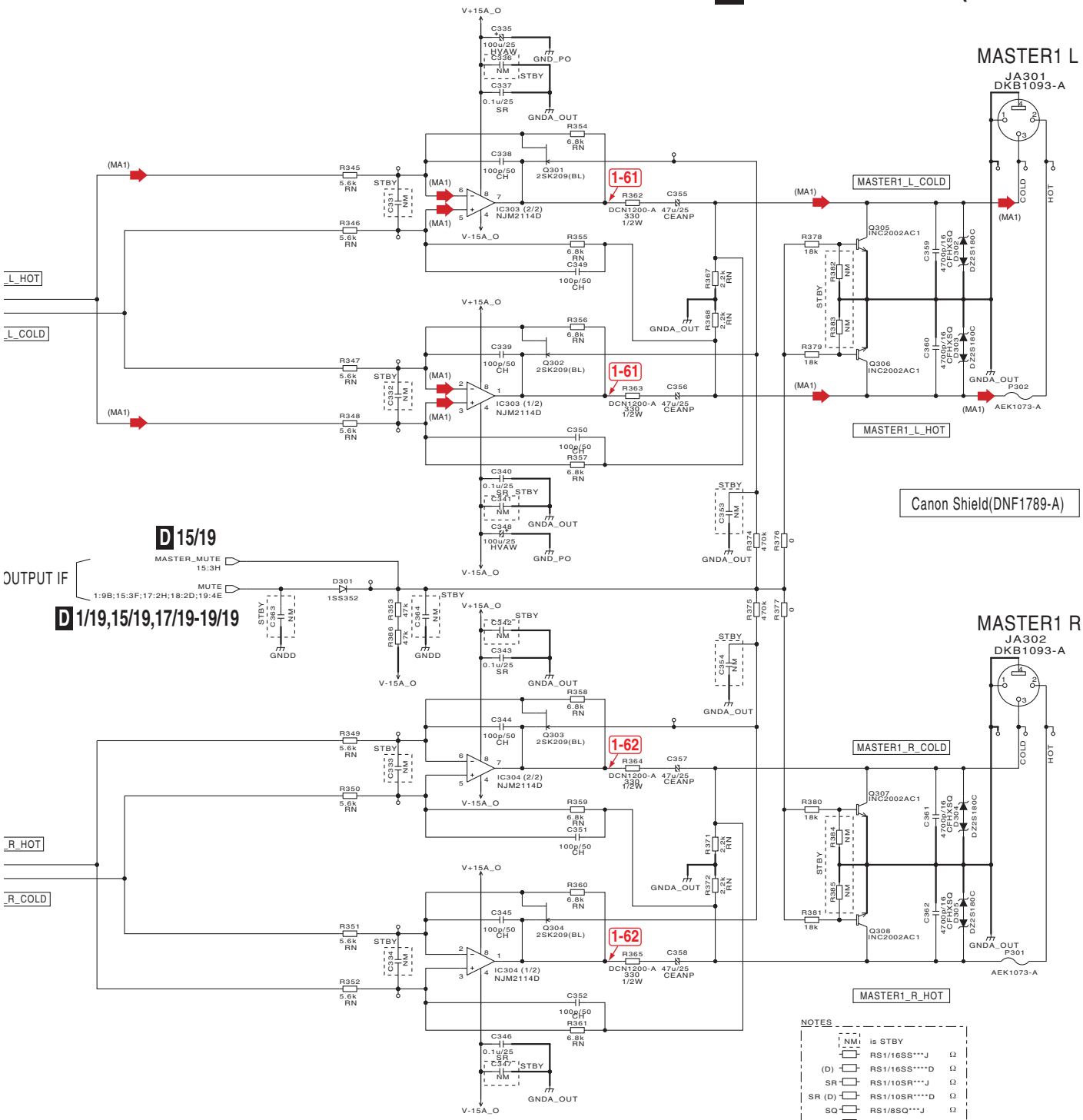

10.23 MAIN ASSY (17/19)

MASTER2,REC

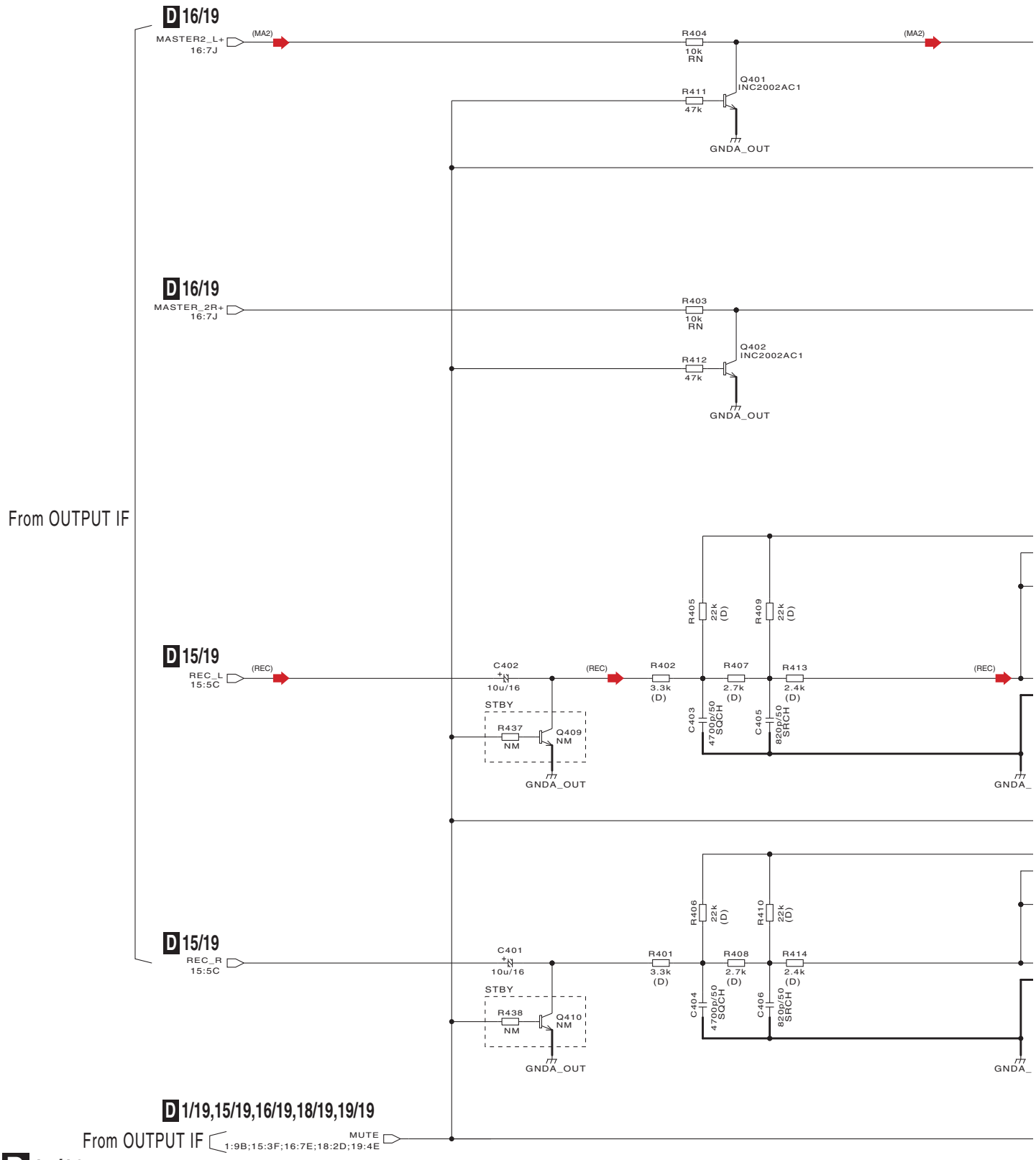

D 17/19 MAIN ASSY (DWX3360)

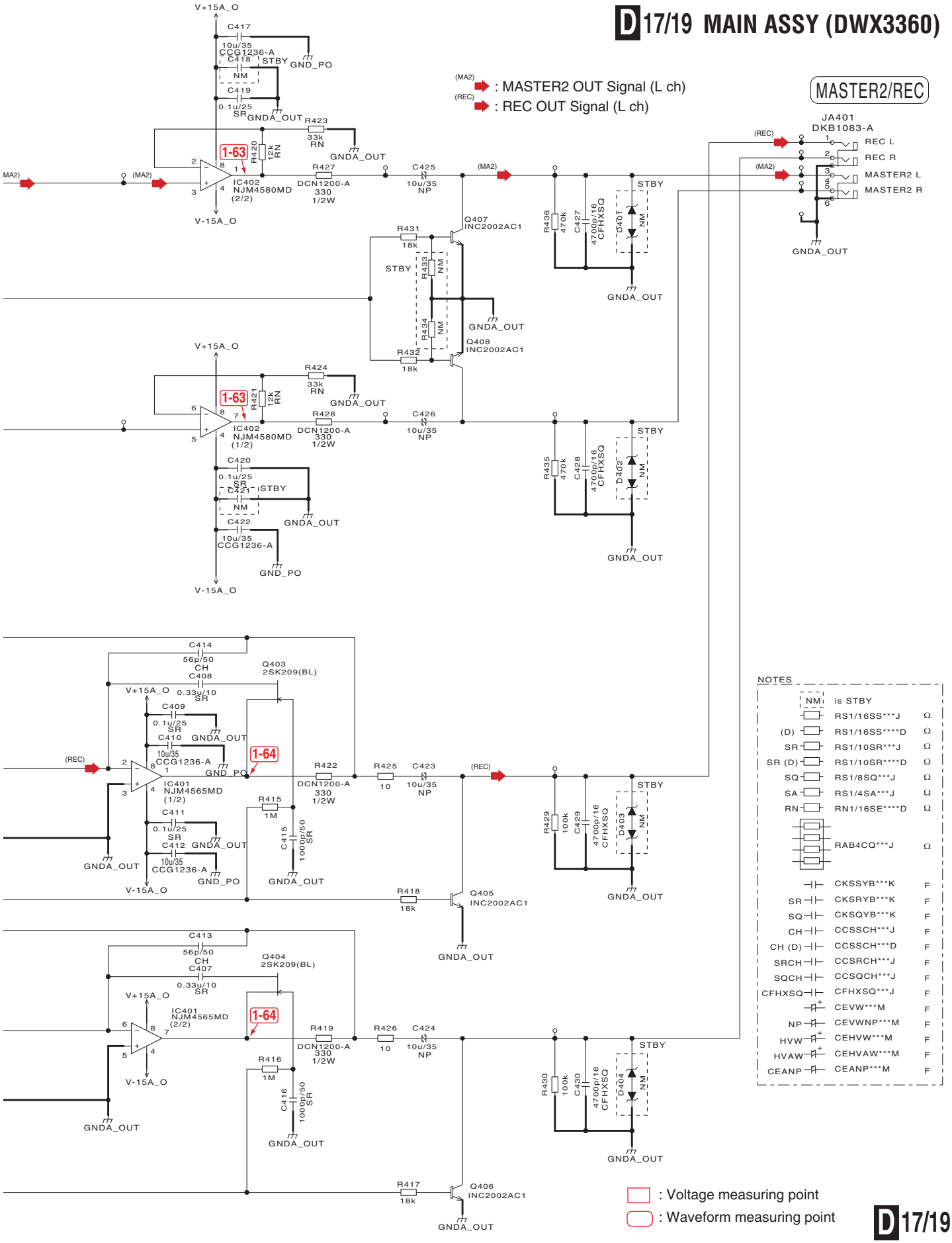

10.24 MAIN ASSY (18/19)

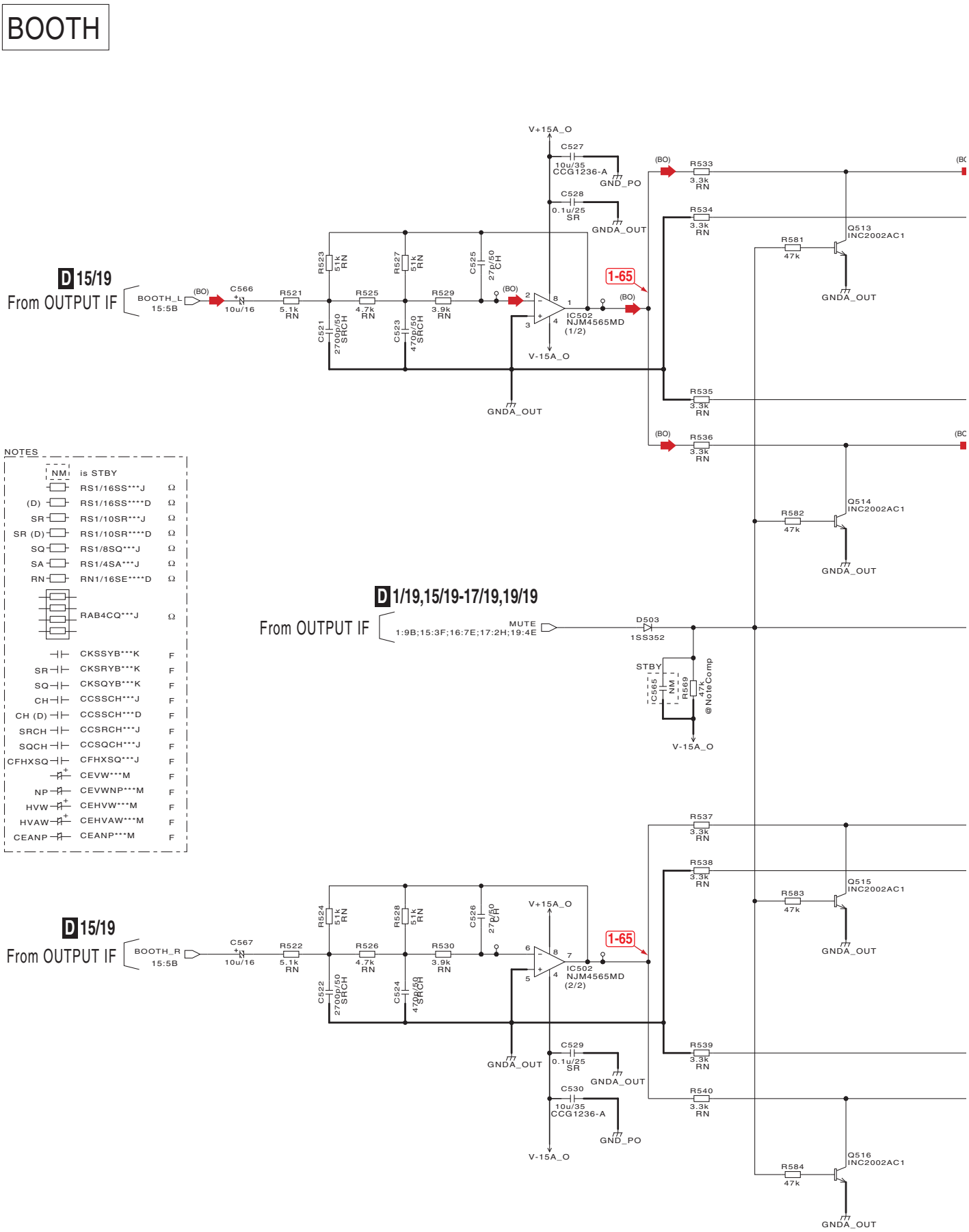

D 18/19 MAIN ASSY (DWX3360)

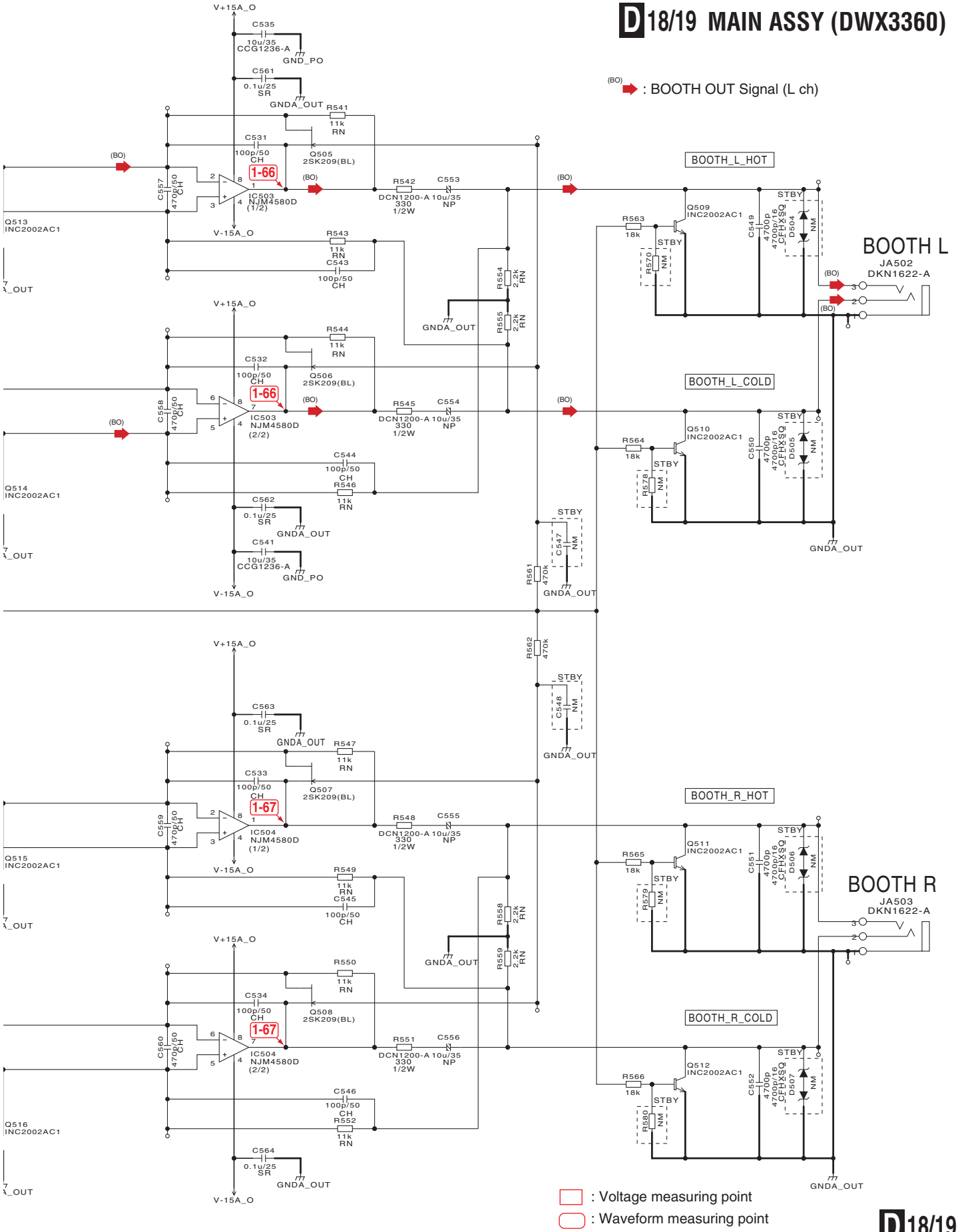

D 18/19

10.25 MAIN ASSY (19/19)

SEND

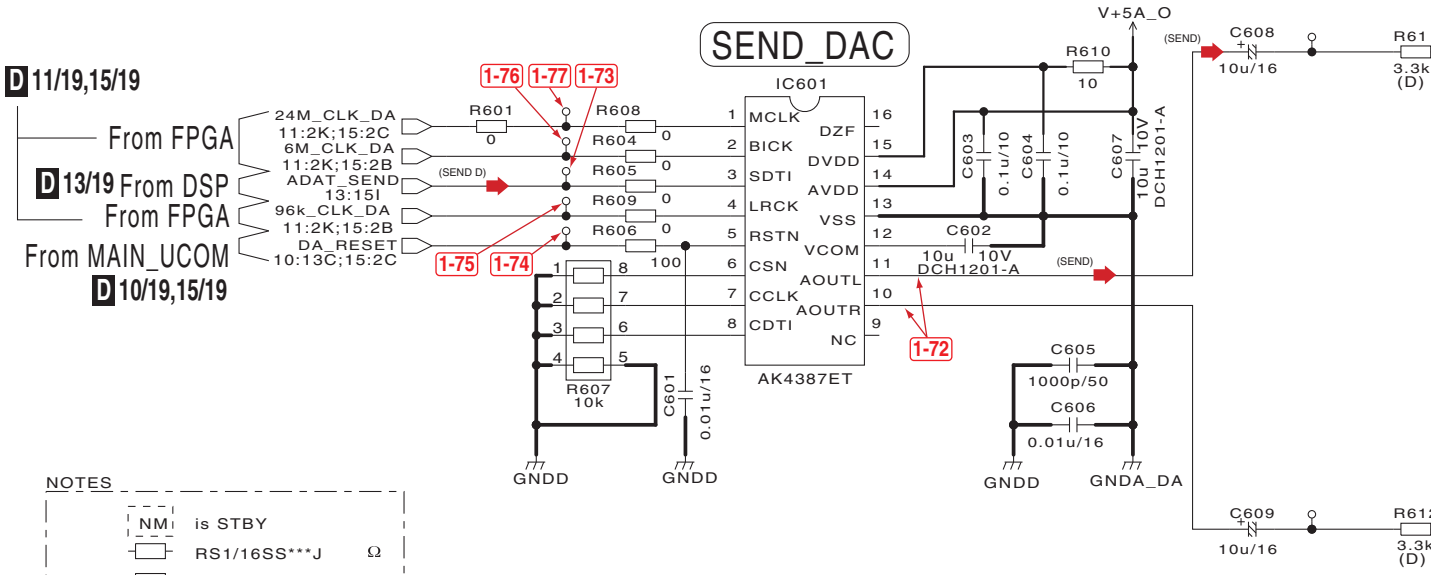

NOTES

NM	is STBY	
	RS1/16SS***J	Ω
(D)	RS1/16SS****D	Ω
SR	RS1/10SR***J	Ω
SR (D)	RS1/10SR****D	Ω
SQ	RS1/8SQ***J	Ω
SA	RS1/4SA***J	Ω
RN	RN1/16SE****D	Ω
	RAB4CQ***J	Ω
	CKSSYB***K	F
SR	CKSRYB***K	F
SQ	CKSQYB***K	F
CH	CCSSCH***J	F
CH (D)	CCSSCH***D	F
SRCH	CCSRCH***J	F
SQCH	CCSQCH***J	F
CFHXSQ	CFHXSQ***J	F
	CEVW***M	F
NP	CEVWNP***M	F
HVW	CEHVW***M	F
HVAW	CEHVAW***M	F
CEANP	CEANP***M	F

D 1/19,15/19-18/19

From OUTPUT IF — MUTE 1:9B;15:3F;16:7E;17:2H;18:2D

(SEND D) : SEND OUT Digital Signal

(SEND) : SEND OUT Signal (L ch)

D 19/19

D 19/19 MAIN ASSY (DWX3360)

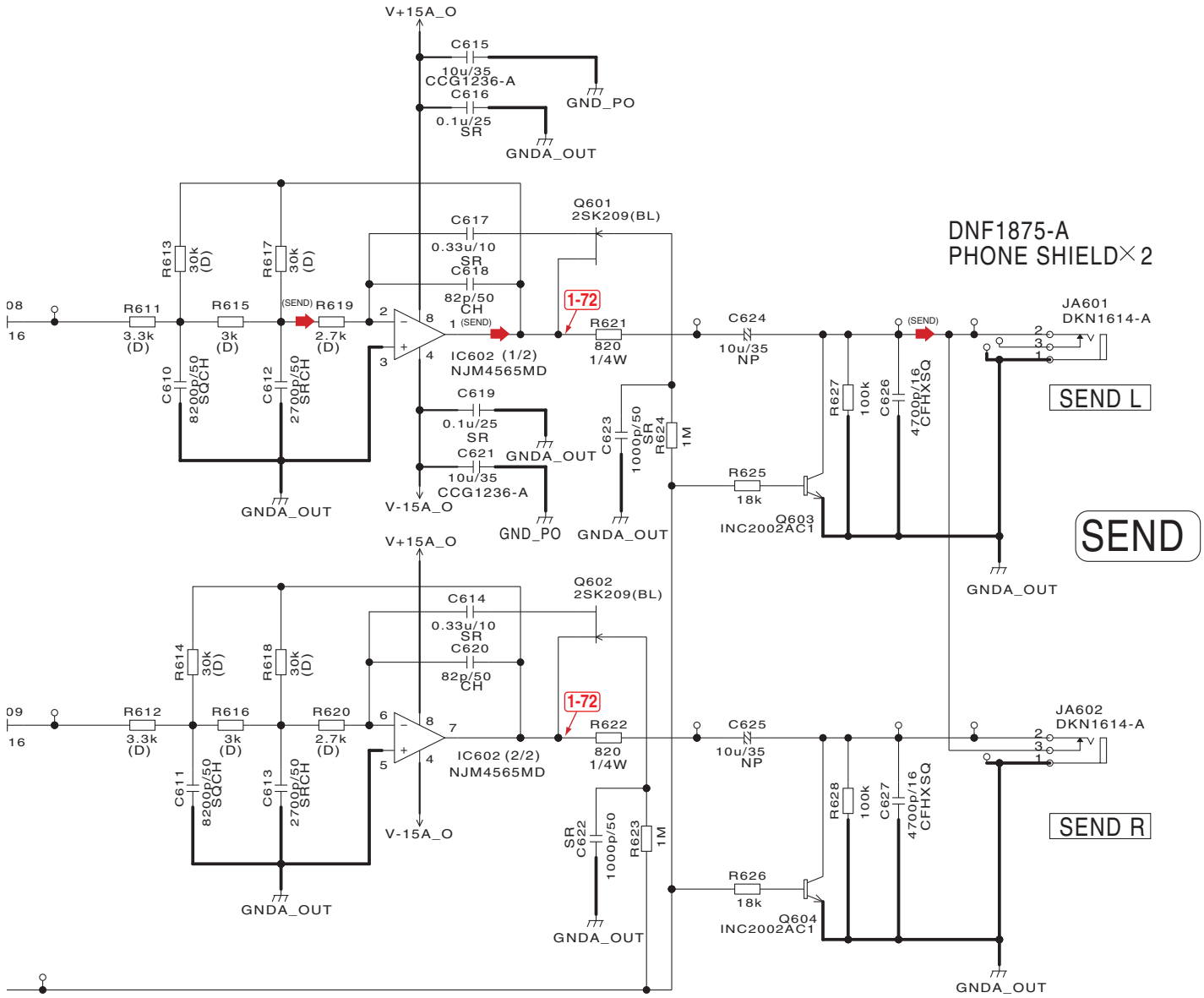

: Voltage measuring point

: Waveform measuring point

D 19/19

10.26 SEC/HP ASSY (1/2)

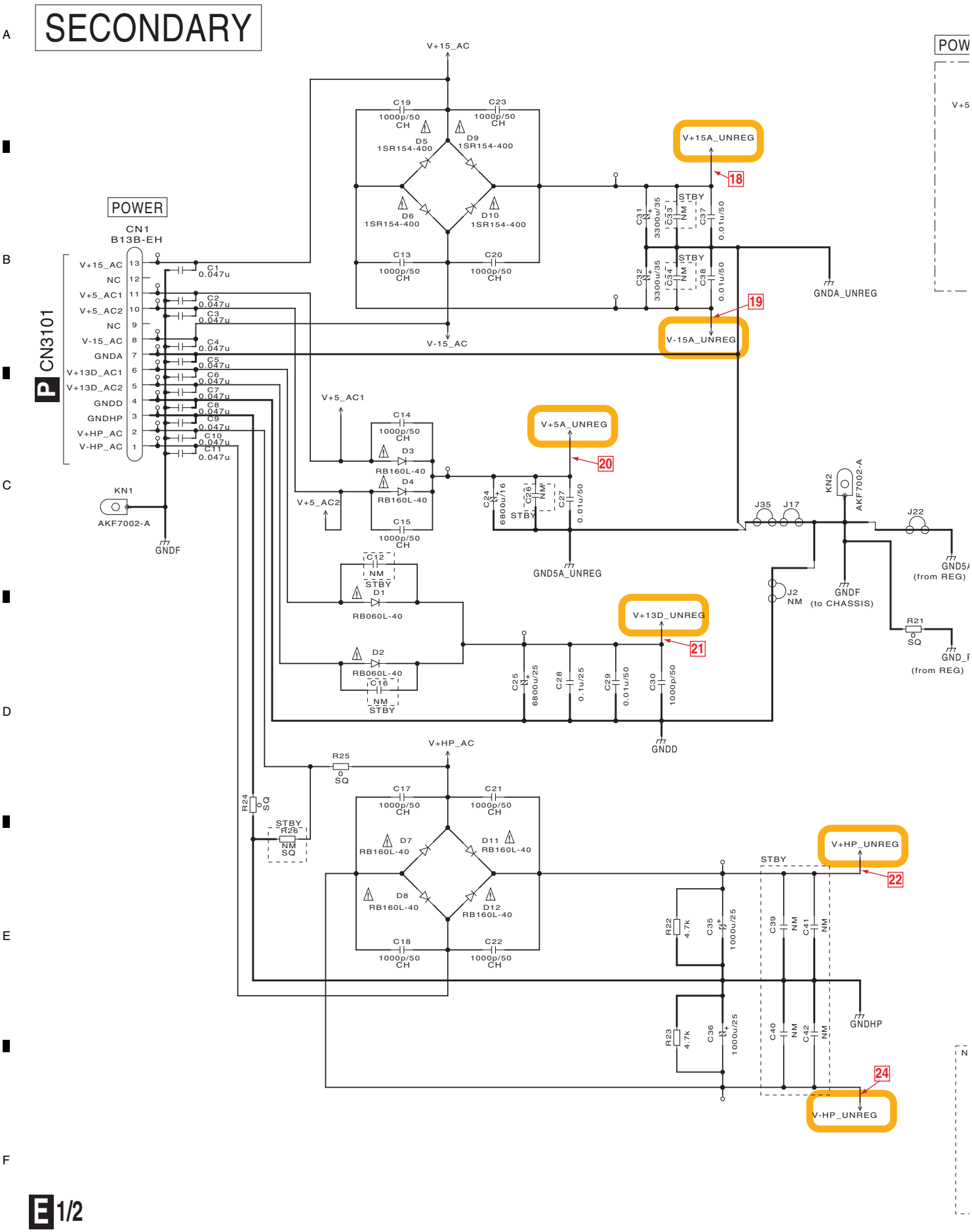

E 1/2 SEC/HP ASSY (DWR1511)

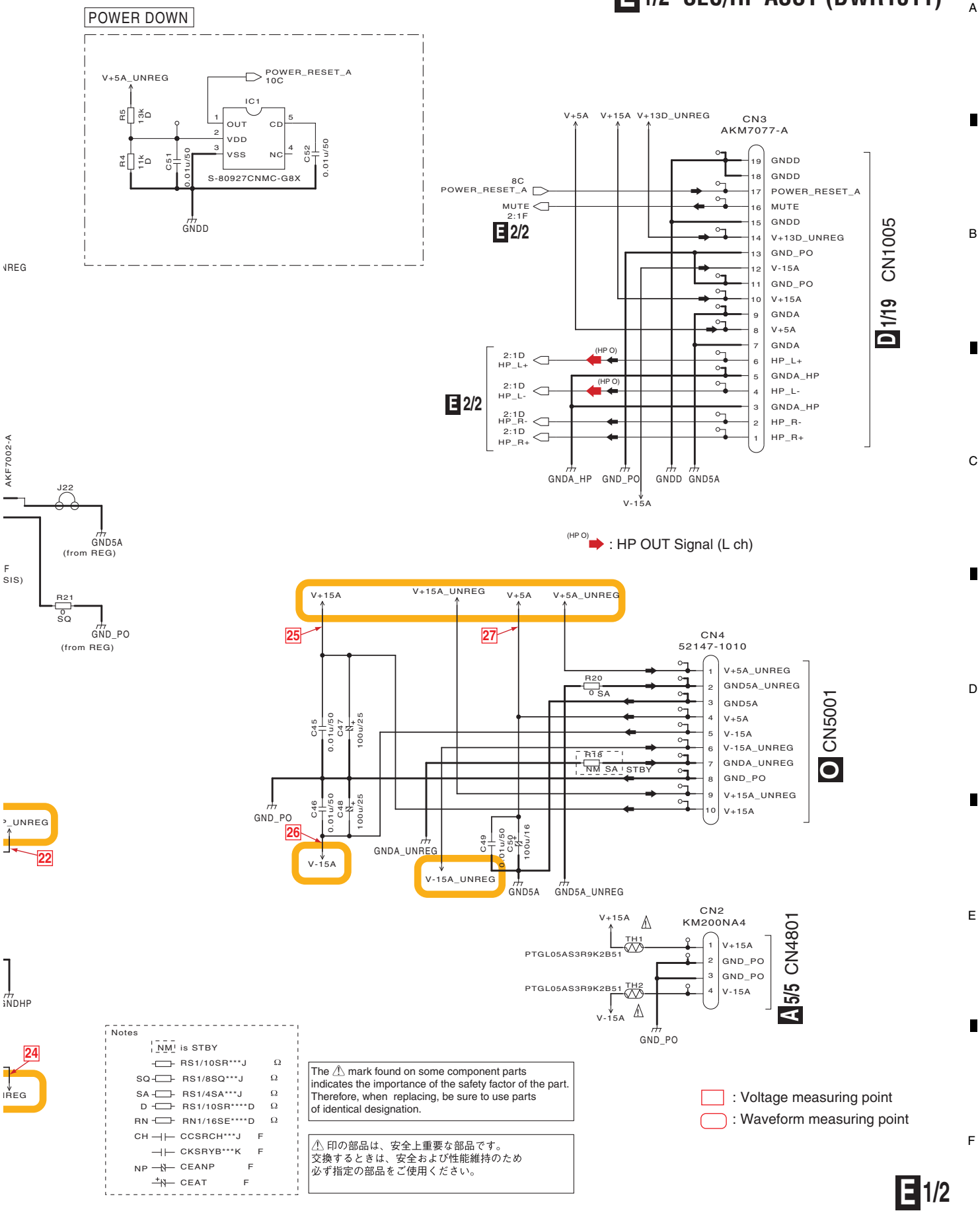

10.27 SEC/HP ASSY (2/2)

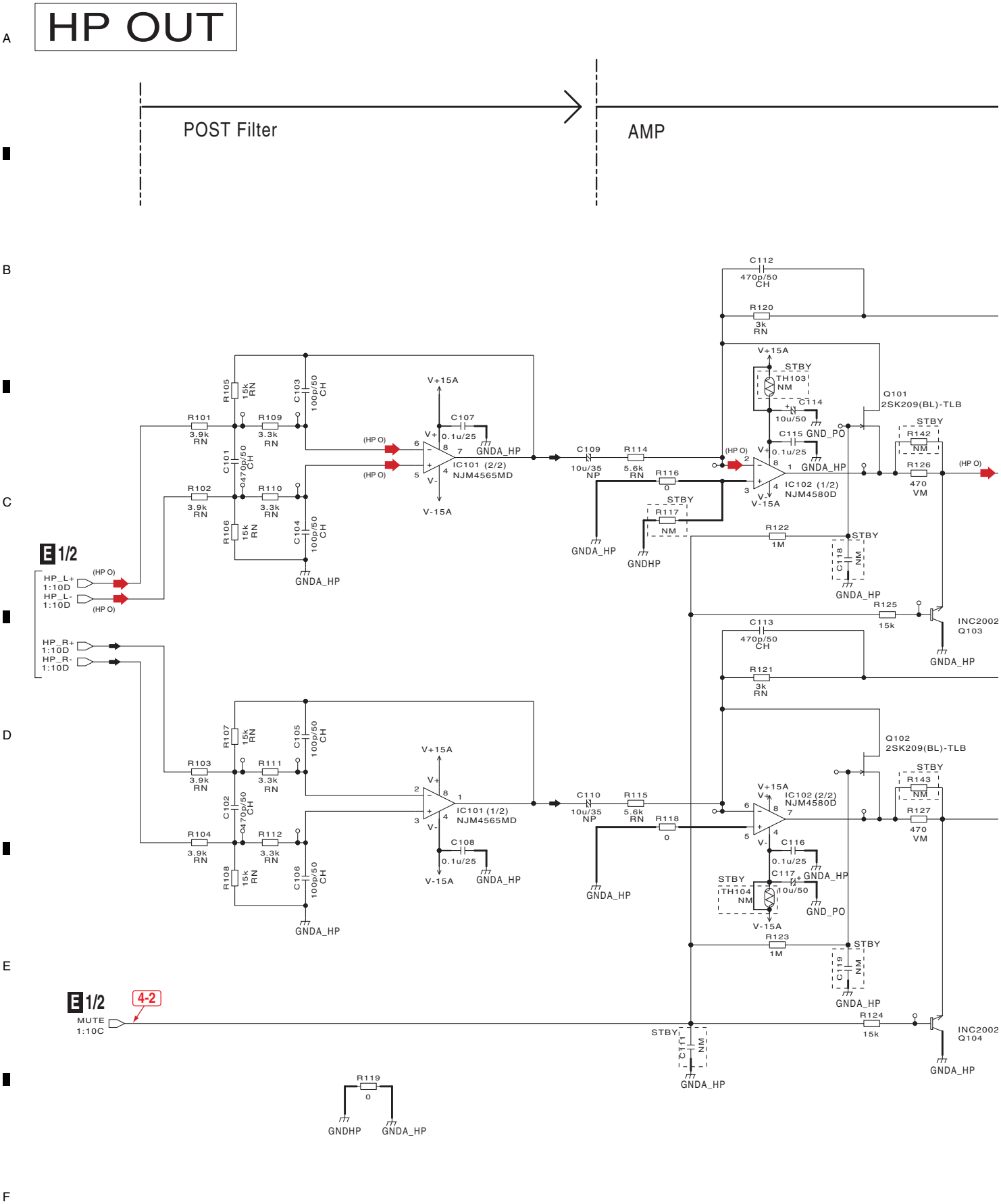

E 2/2 SEC/HP ASSY (DWR1511)

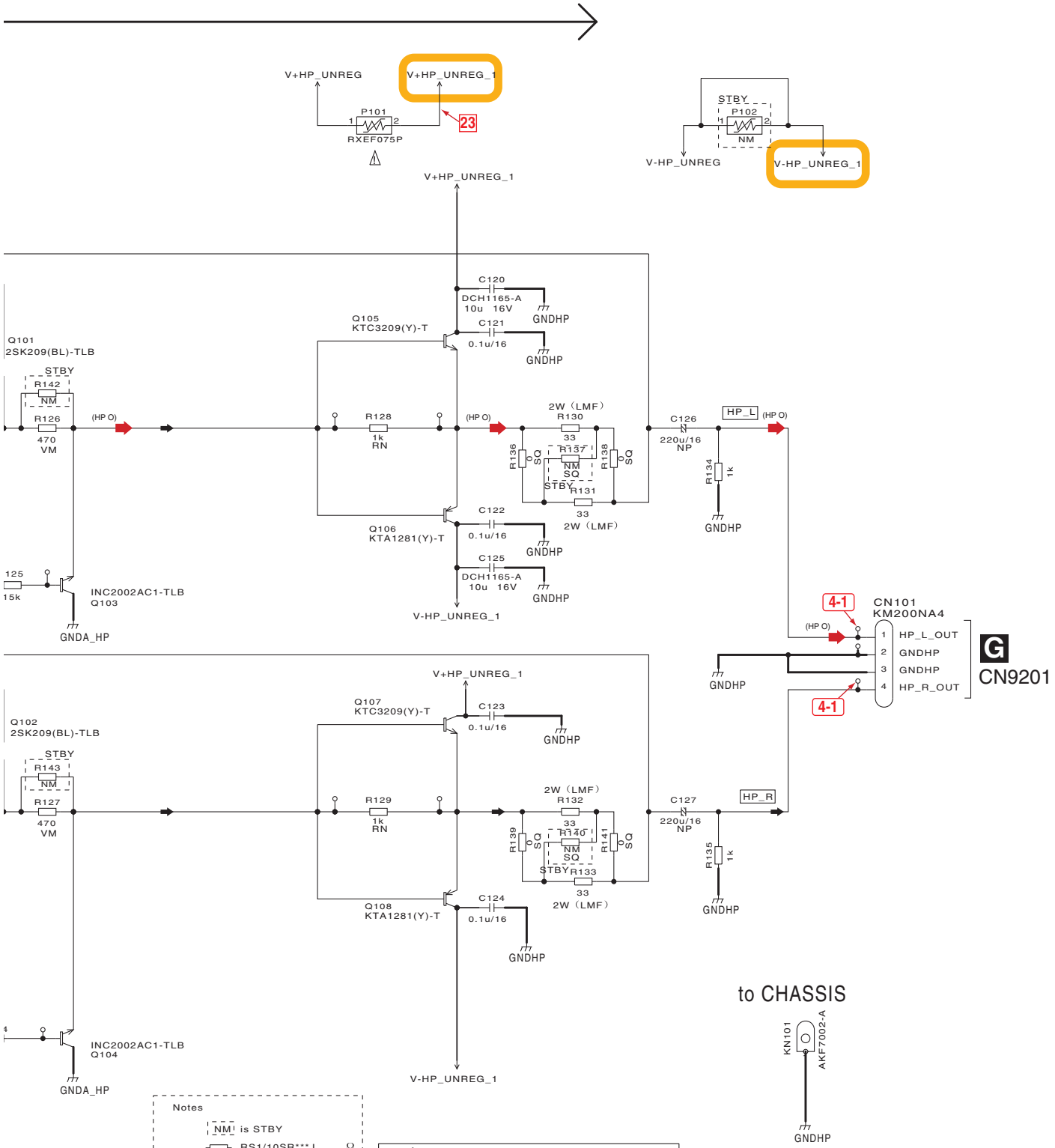

Notes

NM is STBY

	RS1/10SR***J	Ω	
2W(LMF)	RS2LMF***J	Ω	
D	RS1/10SR****D	Ω	
RN	RN1/16SE****D	Ω	
SQ	RS1/8SQ***J	Ω	
	CKSRYB***K		F
CH	CCSRCH***J		F
NP	CEANP		F
	CEAT		F

The ⚠ mark found on some component parts indicates the importance of the safety factor of the part. Therefore, when replacing, be sure to use parts of identical designation.

⚠ 印の部品は、安全上重要な部品です。
交換するときは、安全および性能維持のため
必ず指定の部品をご使用ください。

(HP O) : HP OUT Signal (L ch)

: Voltage measuring point

: Waveform measuring point

10.28 USBI and HPJK ASSYS

A

F USBI ASSY (DWX3361)

G

B

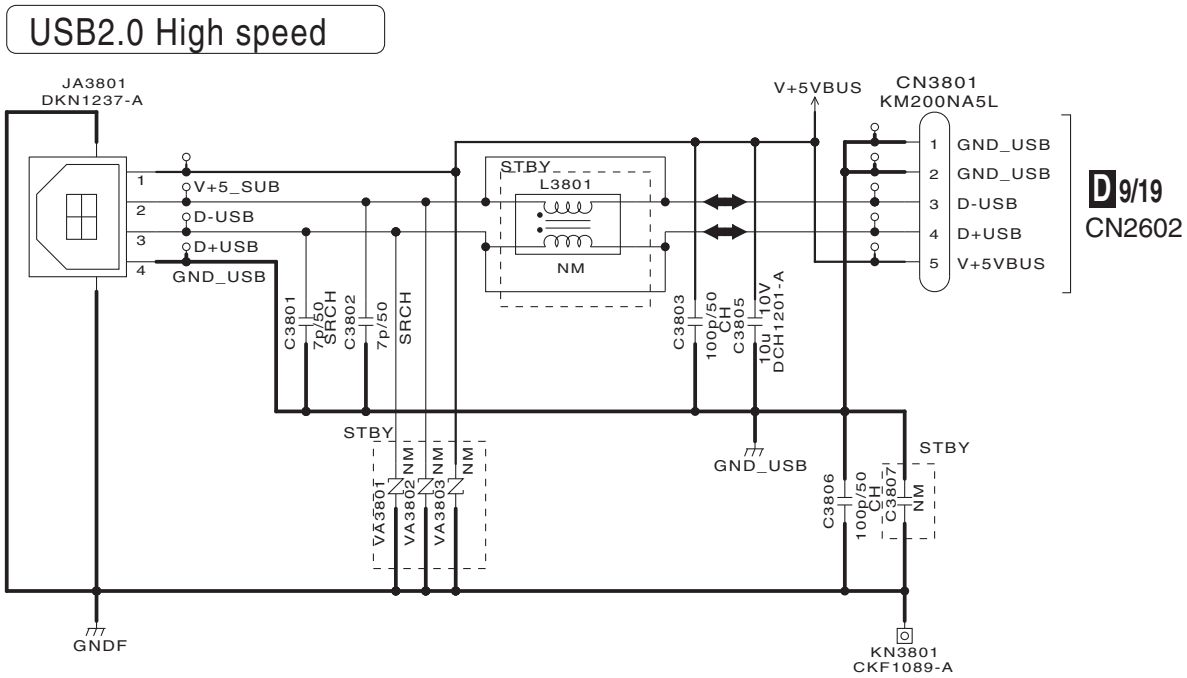

C

D

NOTES

NM	is STBY	
	RS1/16SS***J	Ω
	CKSSYB***K	F
CH	CCSSCH***J	F
SRCH	CCSRCH***J	F

E

F

G HPJK ASSY (DWX3363)

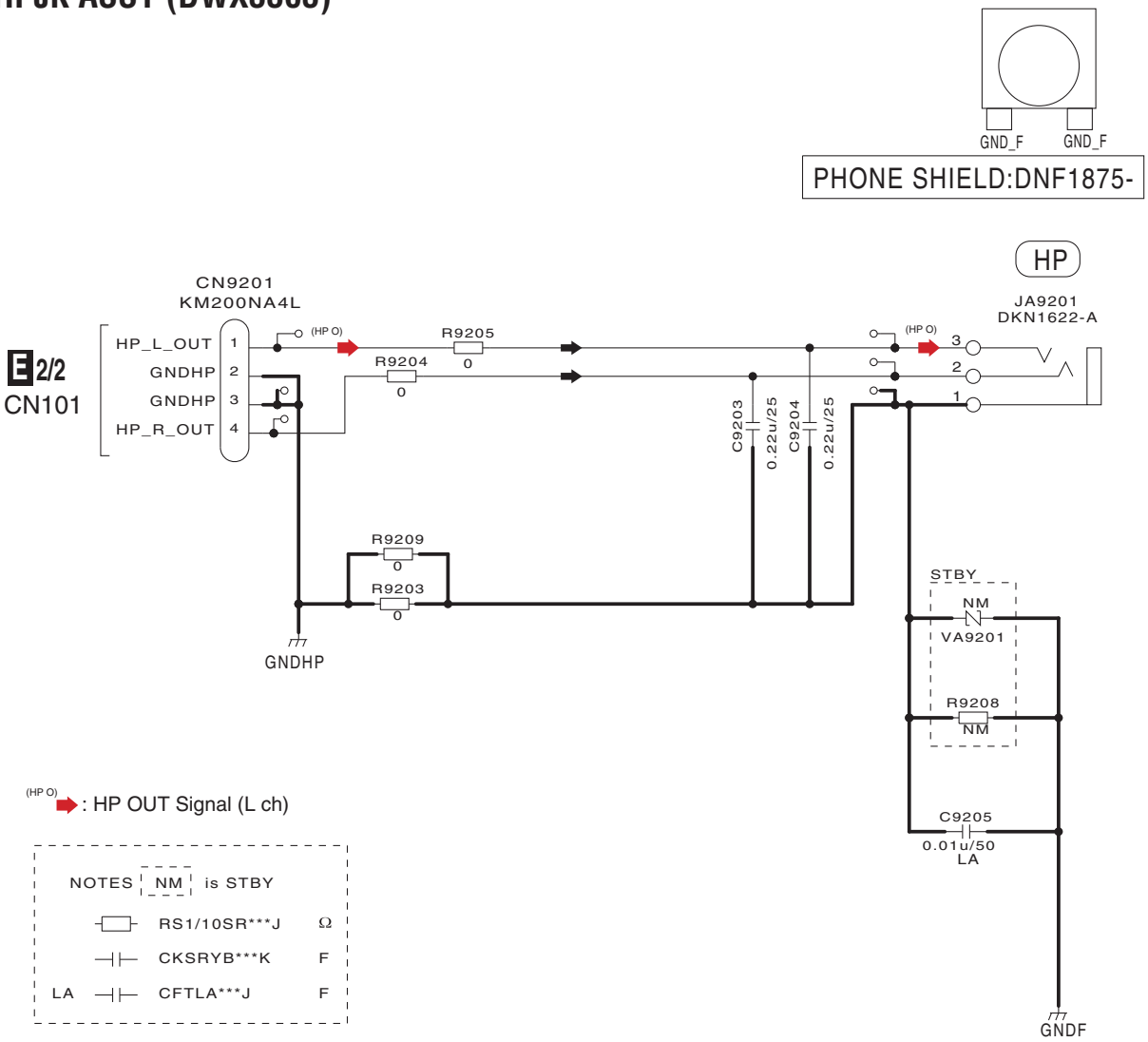

10.29 PNLA ASSY (1/2)

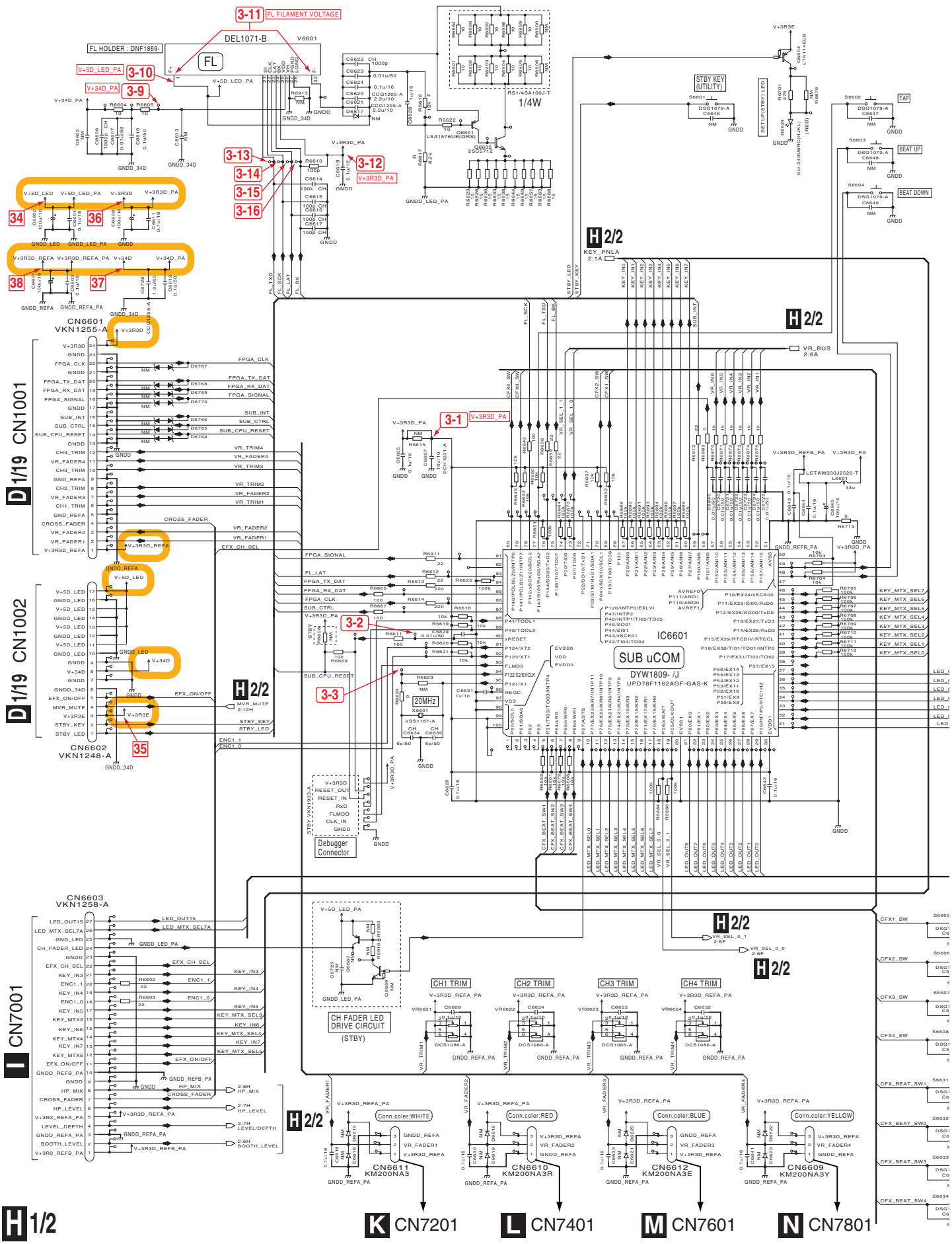

H 1/2 PNLA ASSY (DWX3359)

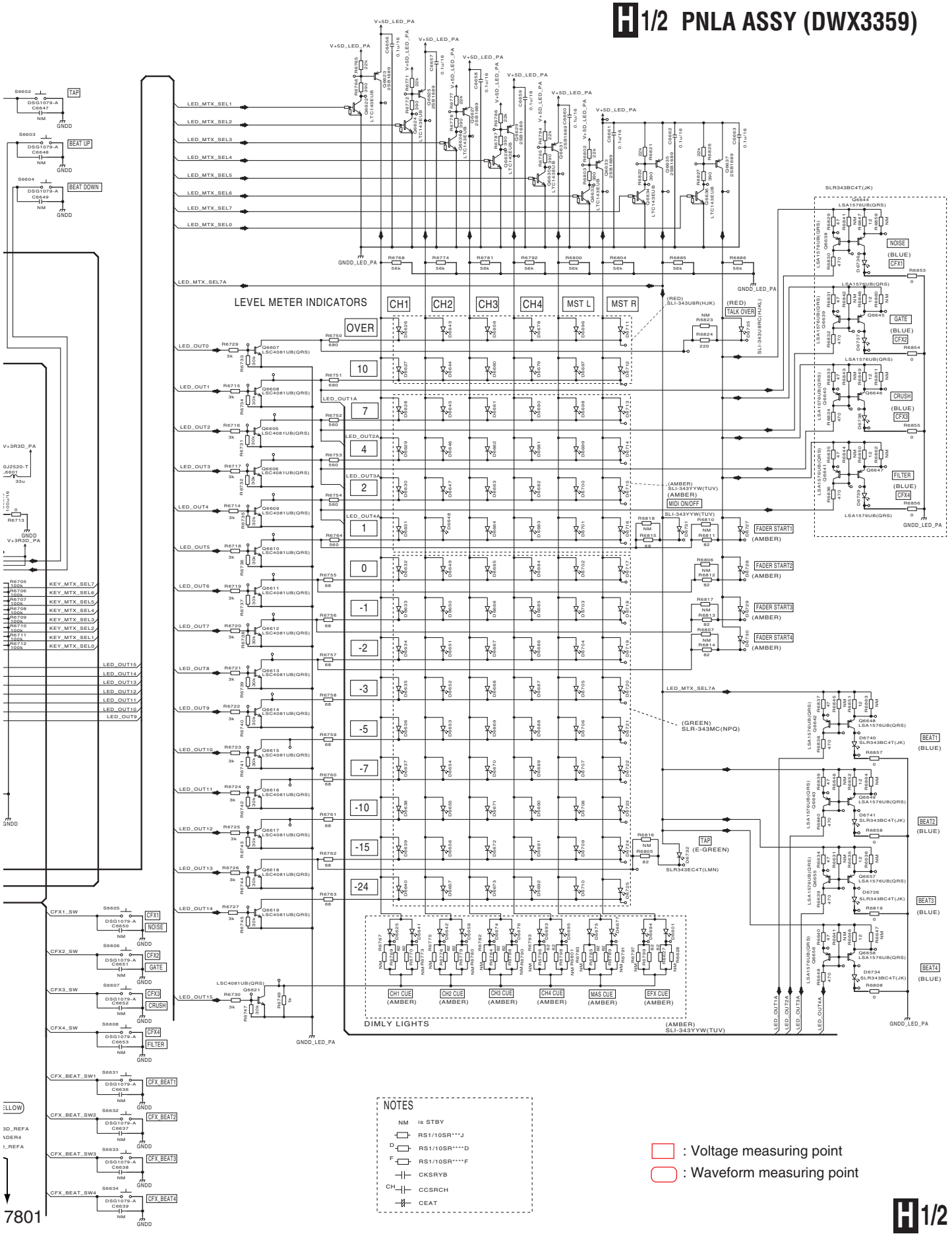

NOTES

NM is STBY

RS1/10SR***J

D RS1/10SR****D

F RS1/10SR****F

CKSRYB

CH CCSRCH

CEAT

: Voltage measuring point

: Waveform measuring point

10.30 PNLA ASSY (2/2)

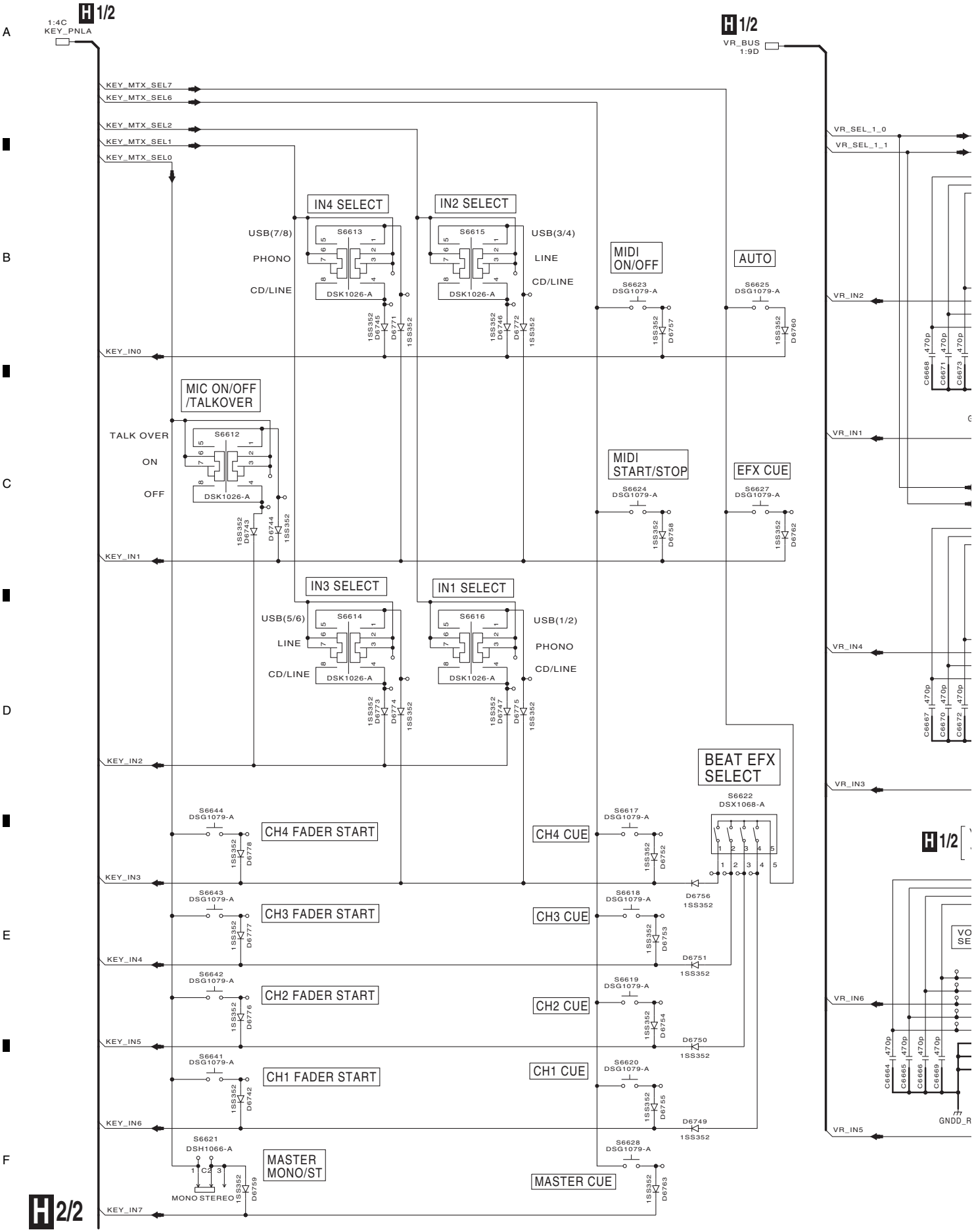

H 2/2 PNLA ASSY (DWX3359)

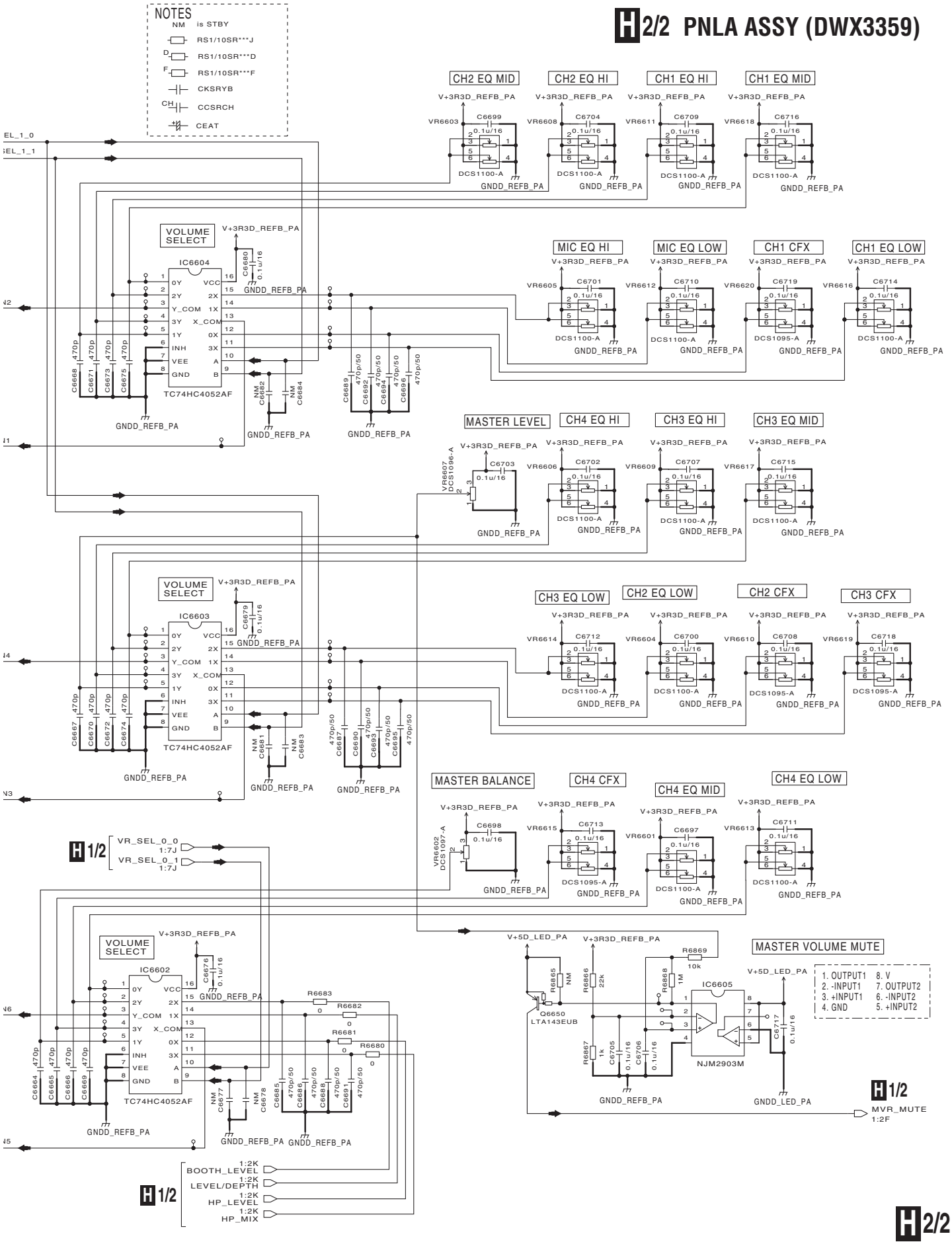

I PNLB ASSY (DWX3365)

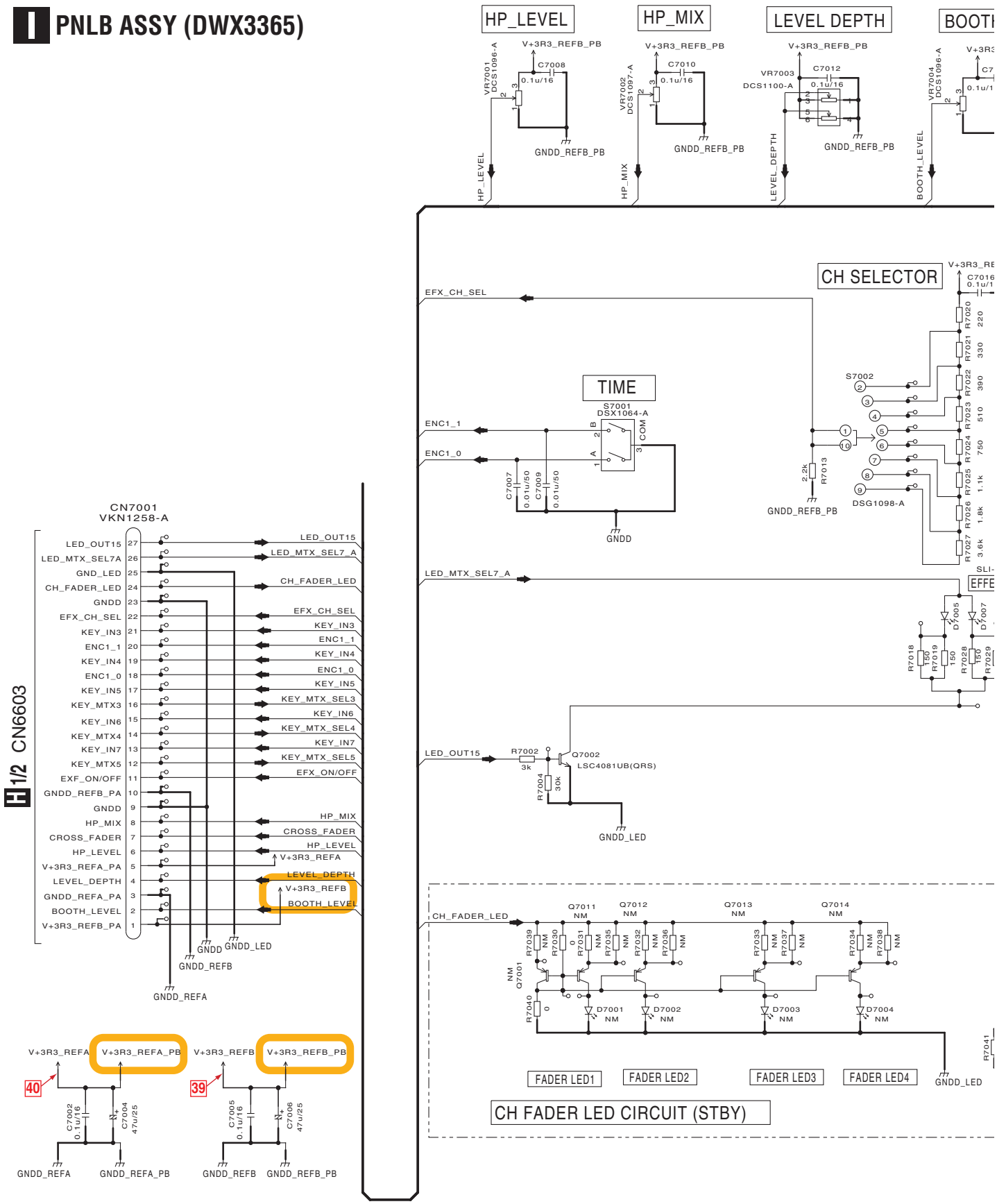

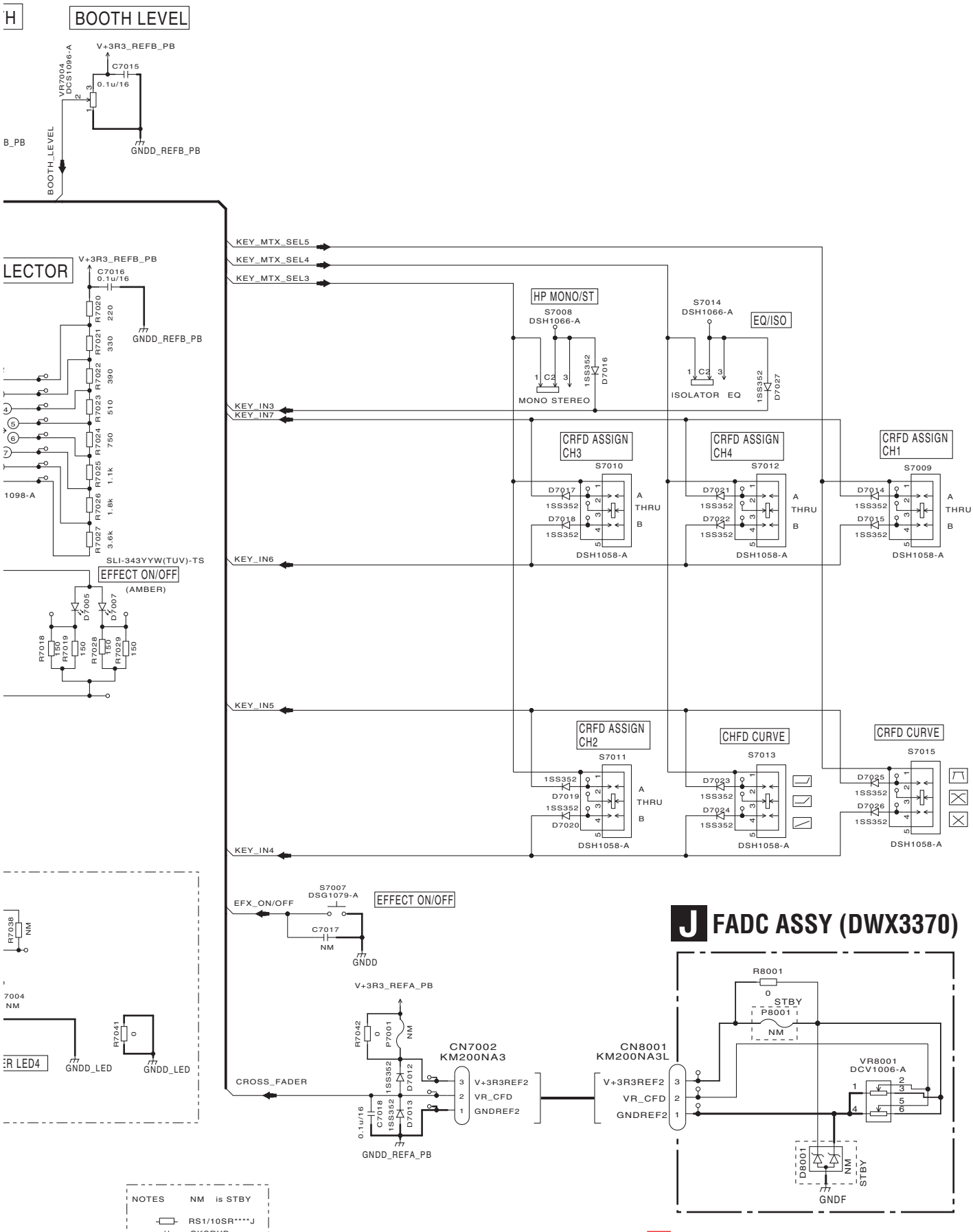
BOOTH LEVEL
V+3R3_REFB_PB
C7015
0.1u/16
VR7004
DCS1096-A
GNDD_REFB_PB
BOOTH_LEVEL
LECTOR
C7016
0.1u/16
R7020 220
R7021 330
R7022 390
R7023 510
R7024 750
R7025 1.1k
R7026 1.8k
R7027 3.6k
SLI-343YYW(TUV)-TS
EFFECT ON/OFF
(AMBER)
D7005
D7007
R7018 150
R7019 150
R7028 150
R7029 150
KEY_MTX_SEL5
KEY_MTX_SEL4
KEY_MTX_SEL3
HP MONO/ST
S7008
DSH1066-A
MONO STEREO
S7014
DSH1066-A
EQ/ISO
ISOLATOR EQ
1SS352
D7016
D7027
KEY_IN3
KEY_IN7
CRFD ASSIGN CH3
S7010
CRFD ASSIGN CH4
S7012
CRFD ASSIGN CH1
S7009
D7017
D7018
D7021
D7022
D7014
D7015
A
THRU
B
DSH1058-A
KEY_IN6
KEY_IN5
CRFD ASSIGN CH2
S7011
D7019
D7020
CHFD CURVE
S7013
D7023
D7024
CRFD CURVE
S7015
D7025
D7026
KEY_IN4
EFX_ON/OFF
S7007
DSG1079-A
EFFECT ON/OFF
C7017
NM
GNDD
R7038 NM
R7041 0
GNDD_LED
V+3R3_REFA_PB
R7042 0
P7001 NM
CN7002
KM200NA3
CROSS_FADER
C7018
0.1u/16
D7012
D7013
V+3R3REF2
VR_CFD
GNDREF2
GNDD_REFA_PB
CN8001
KM200NA3L
J FADC ASSY (DWX3370)
R8001
0
STBY
P8001
NM
VR8001
DCV1006-A
D8001
GNDF
NOTES NM is STBY
RS1/10SR****J
CKSRYB
CEAT***
: Voltage measuring point
: Waveform measuring point

10.32 FAD1 to FAD4 ASSYS

A

K FAD1 ASSY (DWX3366)

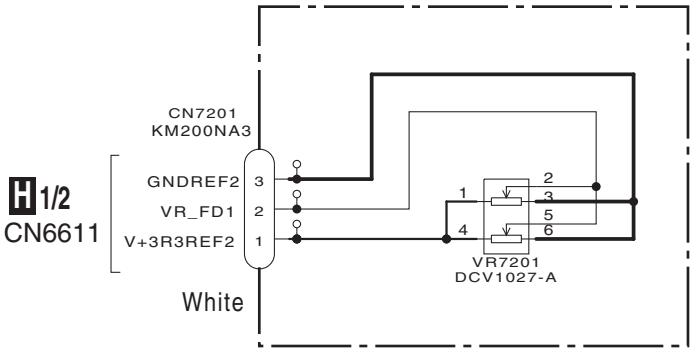

B

L FAD2 ASSY (DWX3367)

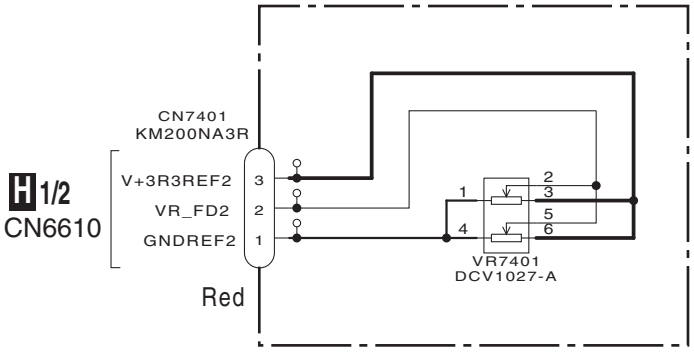

C

M FAD3 ASSY (DWX3368)

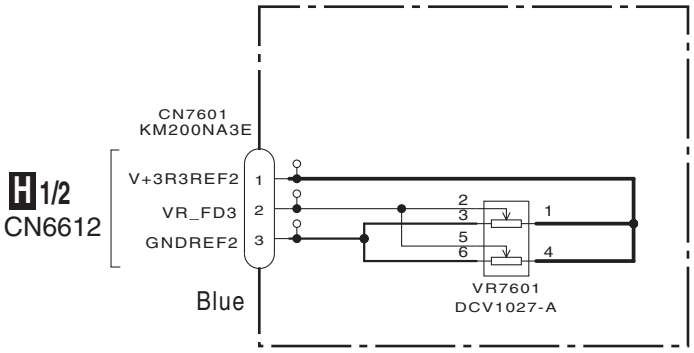

D

N FAD4 ASSY (DWX3369)

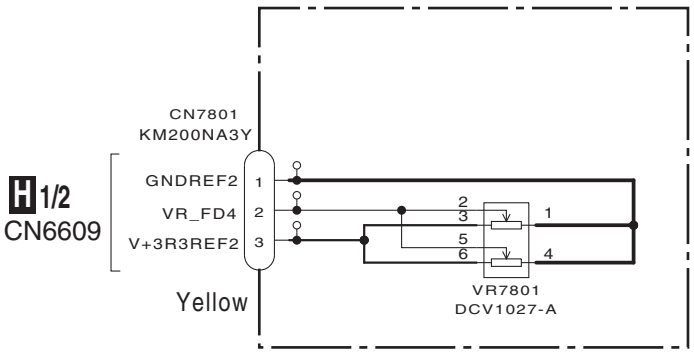

E

F

K L M N

10.33 REG ASSY

O REG ASSY (DWR1510)

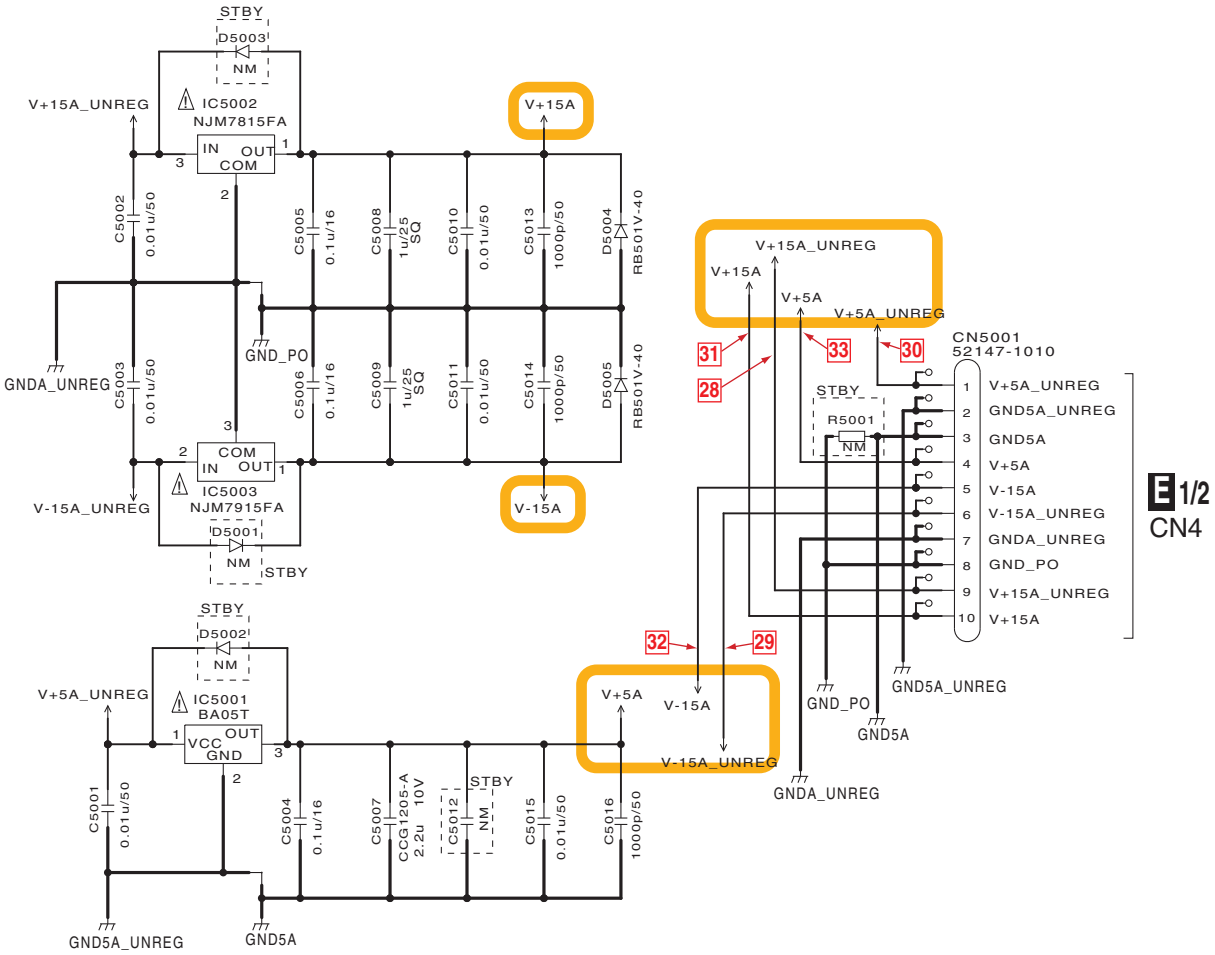

: Voltage measuring point

: Waveform measuring point

The ⚠ mark found on some component parts indicates the importance of the safety factor of the part. Therefore, when replacing, be sure to use parts of identical designation.

⚠ 印の部品は、安全上重要な部品です。
交換するときは、安全および性能維持のため
必ず指定の部品をご使用ください。

Notes

NM is STBY

CH	CCSRCH***J	F
SQ	CKSQYB***K	F
	CKSRYB***K	F

10.34 TRANS, PRIMARY and ACSW ASSYS

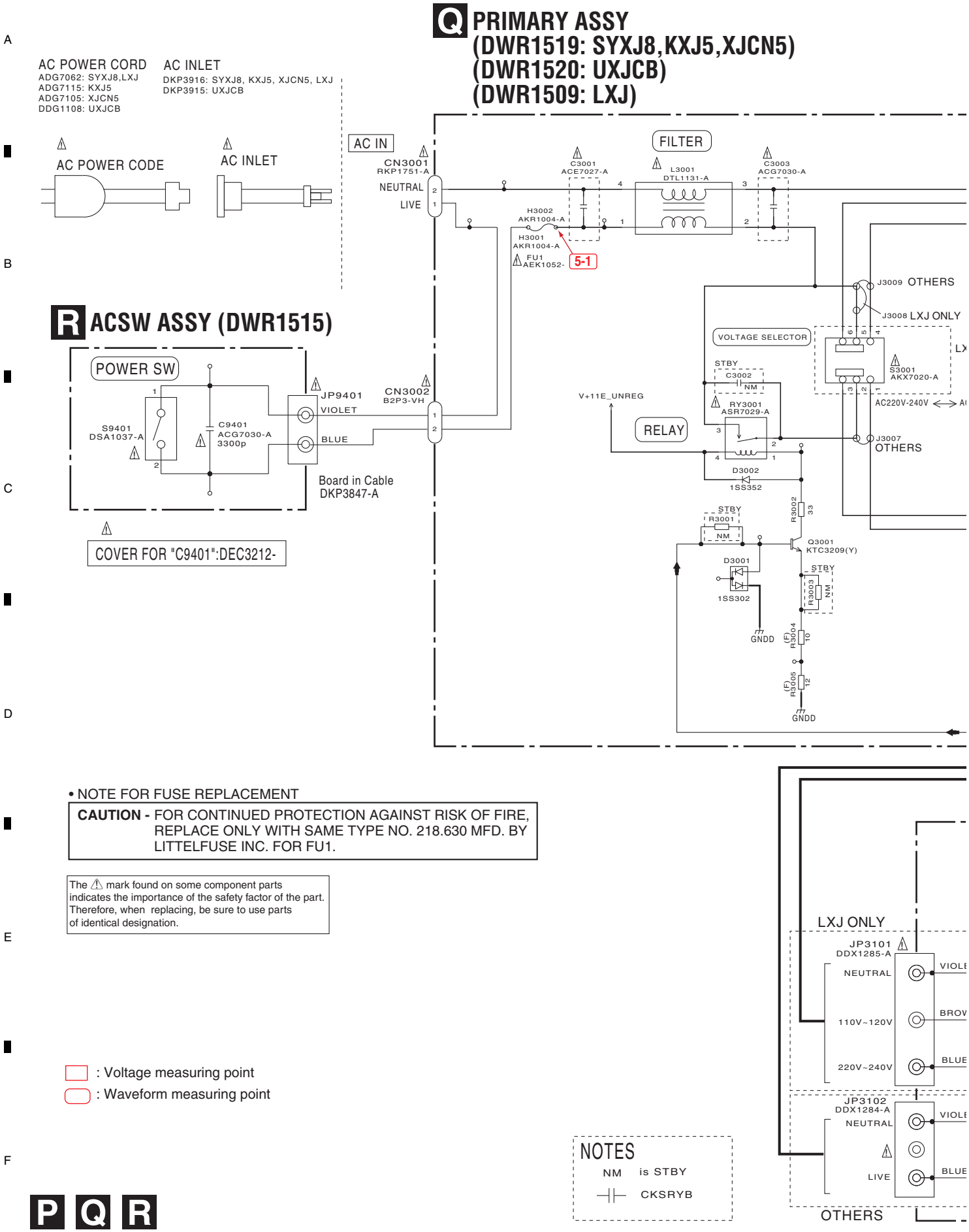

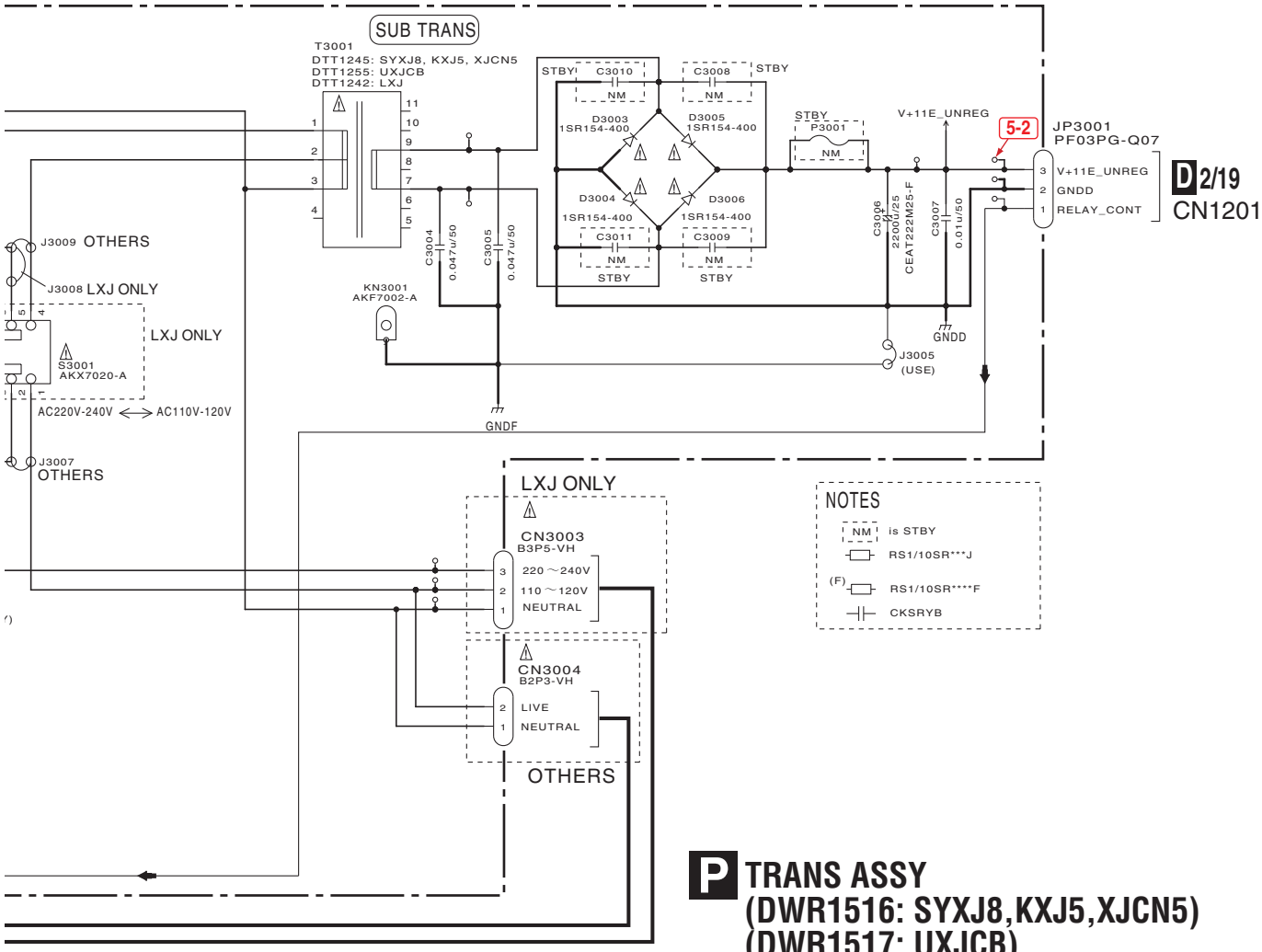

P TRANS ASSY
(DWR1516: SYXJ8,KXJ5,XJCN5)
(DWR1517: UXJCB)
(DWR1512: LXJ)

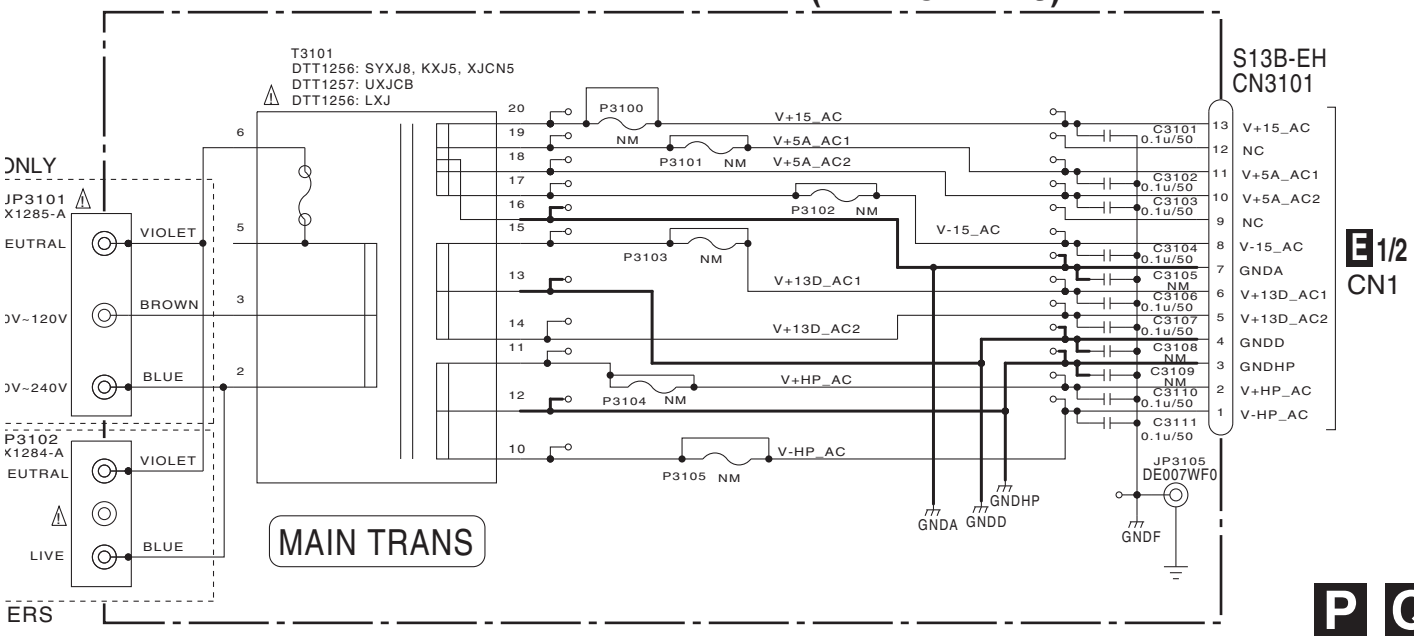

P Q

10.35 WAVEFORMS

Measurement Conditoion

IN or OUT	Measure CH	IN CH	IN LEVEL	IN FREQUENCY	RL	Other Settings	Other Settings
IN	CD	CH1/2/3/4	0 dB	1K	–	TRIM LEVEL VR Center	–
IN	LINE	CH2/3	0 dB	1K	–	TRIM LEVEL VR Center	–
IN	PHONO	CH1/4	-40 dB	1K	–	TRIM LEVEL VR Center	–
IN	MIC	MIC	-40 dB	1K	–	TRIM LEVEL VR MAX	Center all EQs
IN	RETURN	RETURN	0 dB	1K	–	Level depth VR Center	–
IN	USB	USB1/2/3/4	0 dB	1K	–	TRIM LEVEL VR Center	–
OUT	MASTER1/2	CH1/CD	0 dB	1K	10 kΩ	MASTER LEVEL VR Center	Center all EQs/FADER Max
OUT	BOOTH	CH1/CD	0 dB	1K	10 kΩ	BOOTH LEVEL VR Center	Center all EQs/FADER Max
OUT	REC	CH1/CD	0 dB	1K	10 kΩ	–	Center all EQs/FADER Max
OUT	SEND	CH1/CD	0 dB	1K	10 kΩ	–	Center all EQs/FADER Max
OUT	HP	CH1/CD	0 dB	1K	32 Ω	HP LEVEL Center	Center all EQs/FADER Max
OUT	DIG OUT	CH1/CD	0 dB	1K	75 Ω	–	Center all EQs/FADER Max

Measure the output waveforms at the CH1 CD input.

Switch Type Setting

MASTER ATT	: 0 dB
MONO/ST (HP)	: ST
MON/ST (MASTER)	: ST
CH FADER CURVE	: Right side (linear)
CROSS FADER CURVE	: Center
CROSS FADER ASSIGN	: THRU
MIC SW	: ON
MASTER CUE	: ON
FILTER	: MIN
ISOLATOR	: EQ

NOTE: The following waveforms were measured at the point of the corresponding balloon number in the schematic diagram and PCB diagram.

A INPUT ASSY

2-1 **INPUT SELECT (CD)**
V: 5 V/div. H: 200 μs/div.

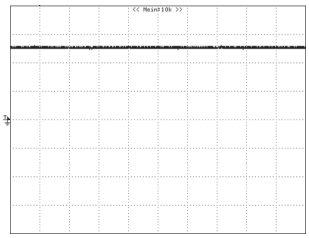

2-1 **INPUT SELECT (PHONO)**
V: 5 V/div. H: 200 μs/div.

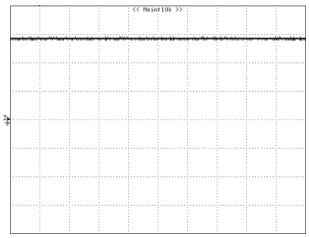

2-2 **CH1_L, R (CD, LINE)**
V: 1 V/div. H: 200 μs/div.

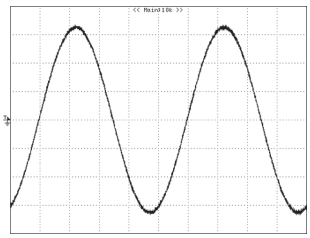

2-3 **CH1_L, R (PHONO)**
V: 20 mV/div. H: 200 μs/div.

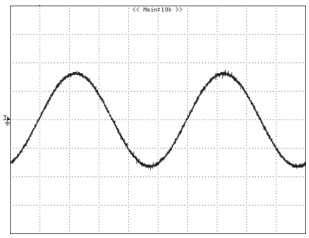

D MAIN ASSY

1-4 P122/X2/EXCLK
V: 1 V/div. H: 20 ns/div.

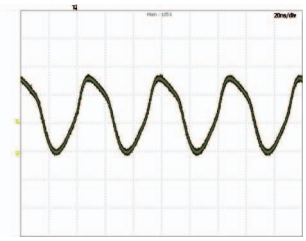

1-26 96k_CLK_13AD
V: 1 V/div. H: 2 µs/div.

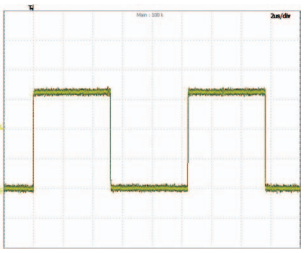

1-42 RET_L, R
V: 1 V/div. H: 200 µs/div.

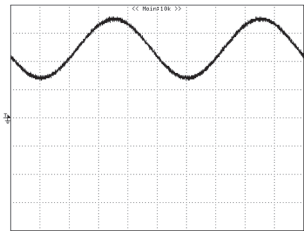

1-59 MASTER_L+, -
V: 1 V/div. H: 200 µs/div.
1-60

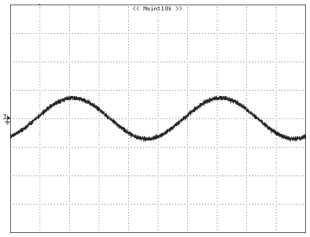

1-8 24M576_CLK_FPGA
V: 1 V/div. H: 10 ns/div.

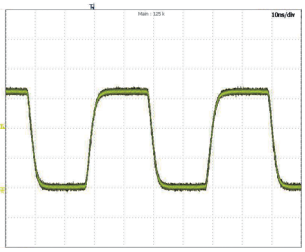

1-27 6M_CLK_13AD
V: 1 V/div. H: 20 ns/div.

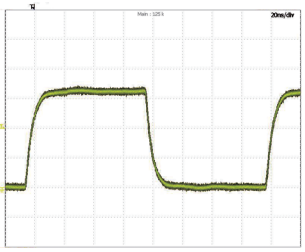

1-48 BOOTH_L, R
V: 5 V/div. H: 200 µs/div.

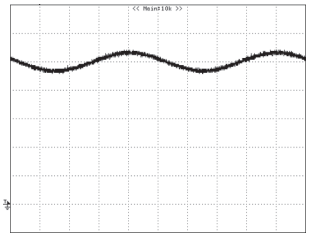

1-61 MASTER_L+, -
V: 1 V/div. H: 200 µs/div.
1-62

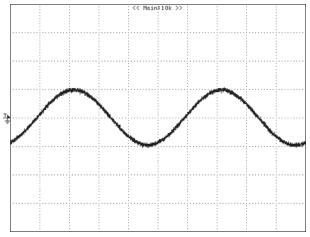

1-12 AHCLKR1/GP4[11]
V: 1 V/div. H: 10 ns/div.

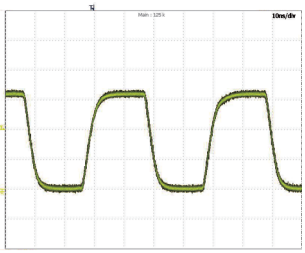

1-28 24M_CLK_13AD
V: 1 V/div. H: 10 ns/div.

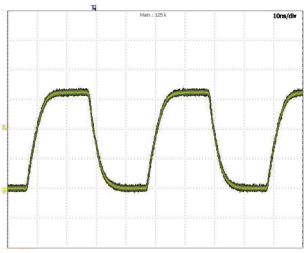

1-48 MASTER_L, R
V: 5 V/div. H: 200 µs/div.

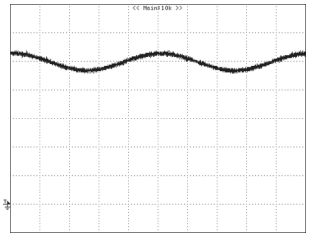

1-63 MASTER2_L, R
V: 1 V/div. H: 200 µs/div.

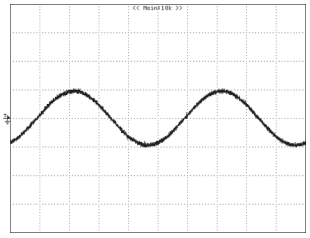

1-17 XTAL (24 MHz)
V: 1 V/div. H: 20 ns/div.

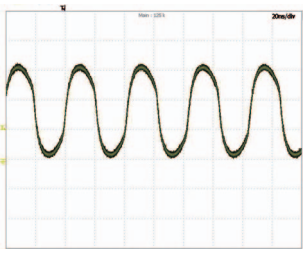

1-29 ADAT_CH1_ANA
V: 5 V/div. H: 2 µs/div.

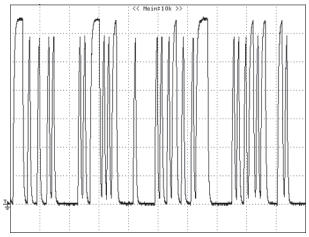

1-48 REC_L, R
V: 5 V/div. H: 200 µs/div.

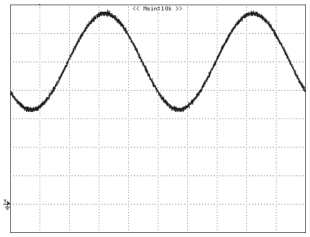

1-64 REC_L, R
V: 1 V/div. H: 200 µs/div.

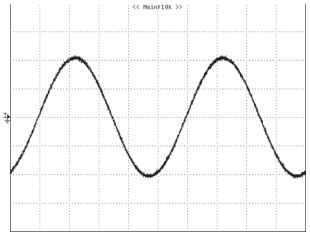

1-18 VINR+, -
V: 1 V/div. H: 200 µs/div.

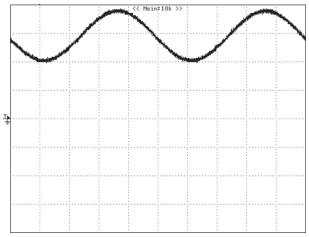

1-34 MIC1, MIC2
V: 1 V/div. H: 200 µs/div.
1-35

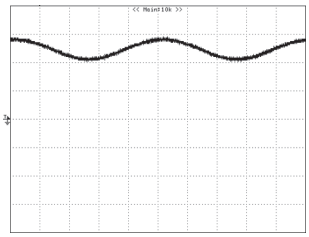

1-49 ADAT_BOOTH, REC, MASTER_L, R
V: 5 V/div. H: 2 µs/div.

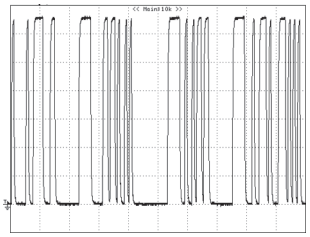

1-65 BOOTH_L, R
V: 1 V/div. H: 200 µs/div.

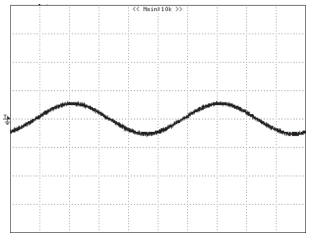

D MAIN ASSY

A

1-66 **BOOTH_L, R**
V: 1 V/div. H: 200 µs/div.

1-67

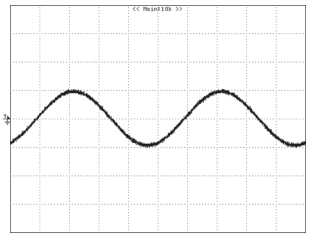

1-87 **DOUT_SRC_LRCK**
V: 1 V/div. H: 2 µs/div.

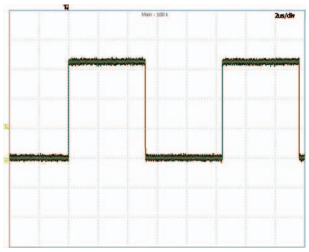

1-93 **D-USB**
V: 200 mV/div. H: 100 ns/div.

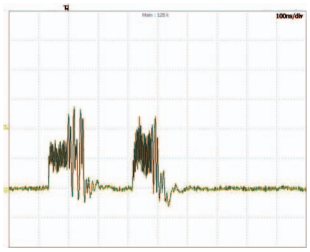

B

1-72 **SEND_L (SENDDAC output)**
V: 1 V/div. H: 200 µs/div.

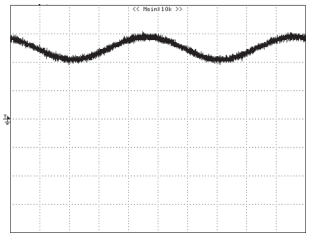

1-88 **DOUT_SRC_BCK**
V: 1 V/div. H: 50 ns/div.

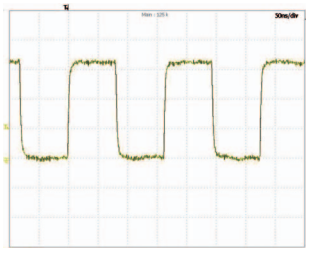

1-97 **FADER_START1, FADER_STOP1**
V: 1 V/div. H: 100 ms/div.

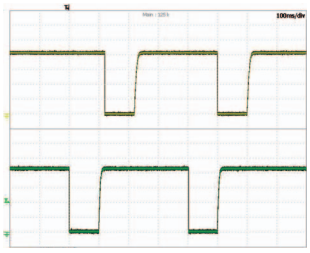

C

1-72 **SEND_L (SEND output)**
V: 1 V/div. H: 200 µs/div.

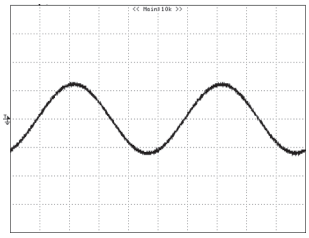

1-89 **DOUT_SRC_DATA**
V: 1 V/div. H: 500 ns/div.

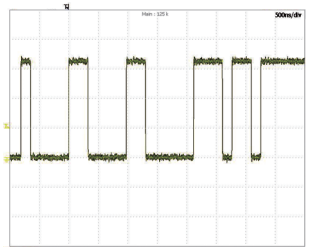

1-99 **R3057, R3058**
V: 1 V/div. H: 100 ms/div.

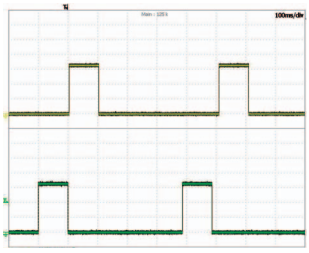

D

1-78 **HP_L+, -, HP_R+, -**
V: 1 V/div. H: 200 µs/div.

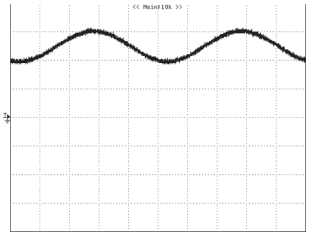

1-90 **FPGASRC_MCLK**
V: 1 V/div. H: 10 ns/div.

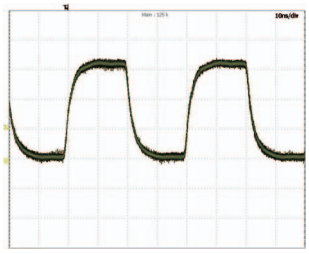

E

1-84 **DIGITAL OUT**
V: 1 V/div. H: 500 ns/div.

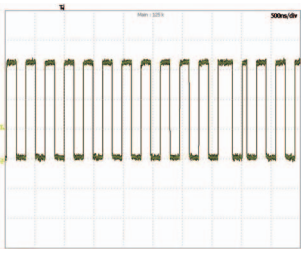

1-92 **D+USB**
V: 200 mV/div. H: 100 ns/div.

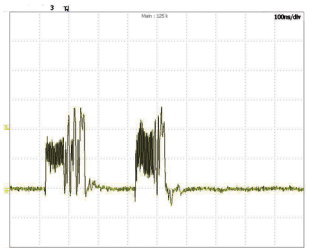

F

E SEC/HP ASSY

4-1 **HP_L, R_OUT**
V: 1 V/div. H: 200 μs/div.

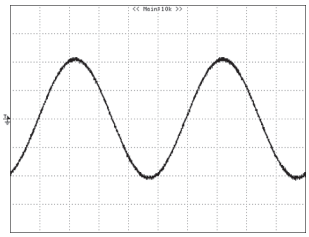

H PNLA ASSY

3-13 **FL_TXD**
V: 1 V/div. H: 500 μs/div.

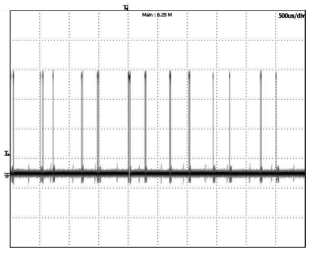

3-14 **FL_SCK**
V: 1 V/div. H: 500 μs/div.

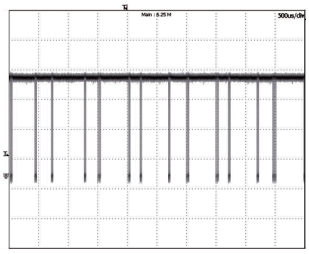

3-16 **FL_LAT**
V: 1 V/div. H: 500 μs/div.

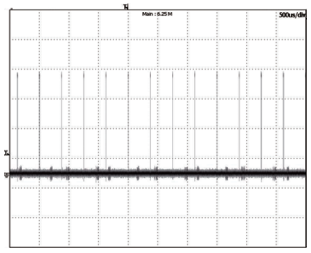

3-16 **FL_BK**
V: 1 V/div. H: 500 μs/div.

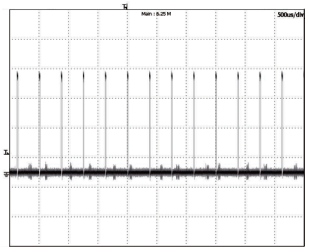

11. PCB CONNECTION DIAGRAM

11.1 INPUT, MIC1 and MTRM ASSYS

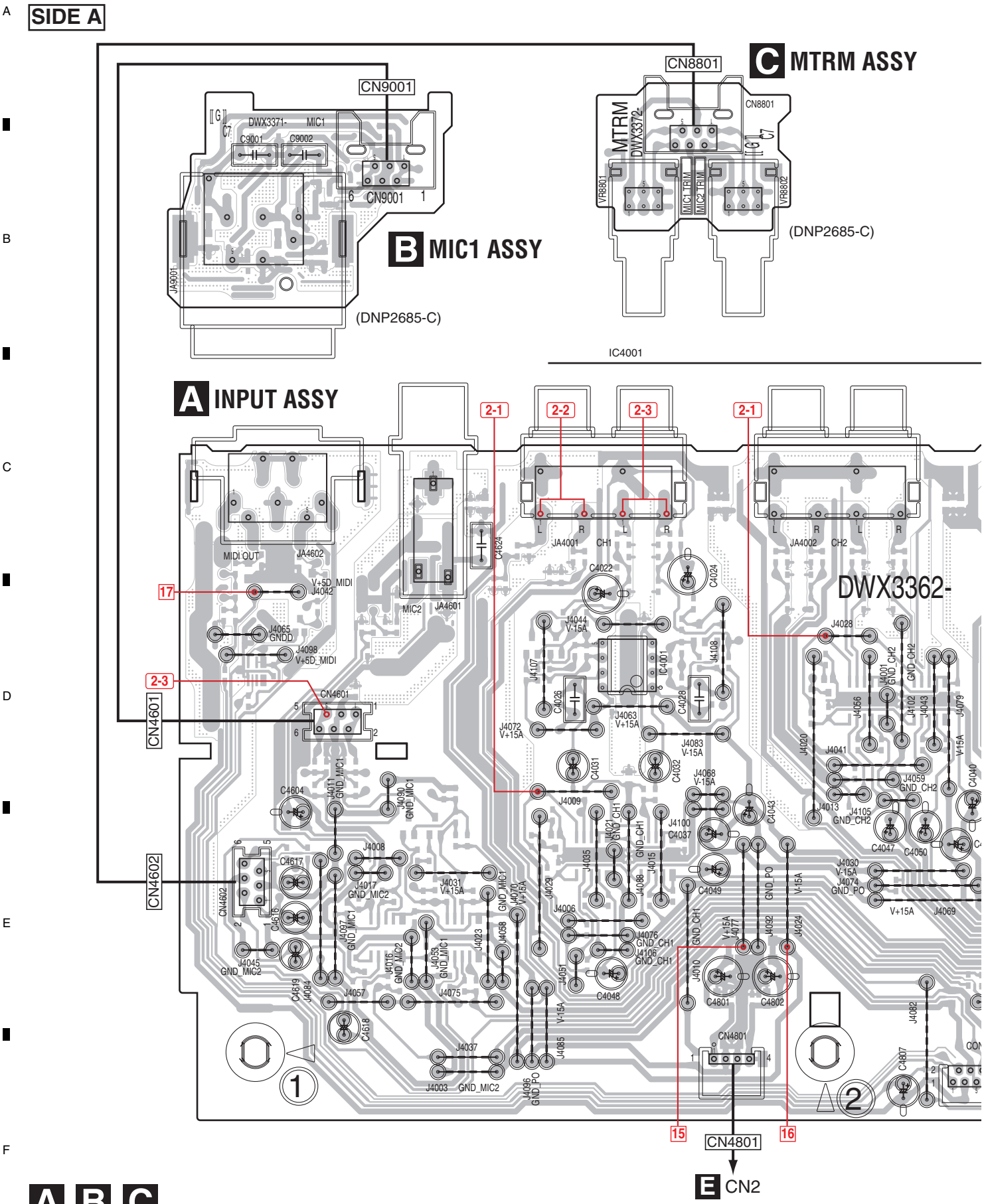

A B C

SIDE A

ASSY

: Voltage measuring point
: Waveform measuring point

NOTE FOR PCB DIAGRAMS :

1. The parts mounted on this PCB include all necessary parts for several destinations. For further information for respective destinations, be sure to check with the schematic diagram.

2. View point of PCB diagrams.

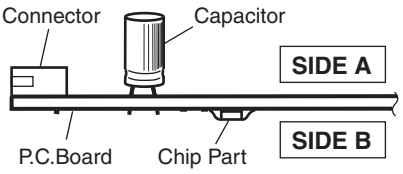

IC4201

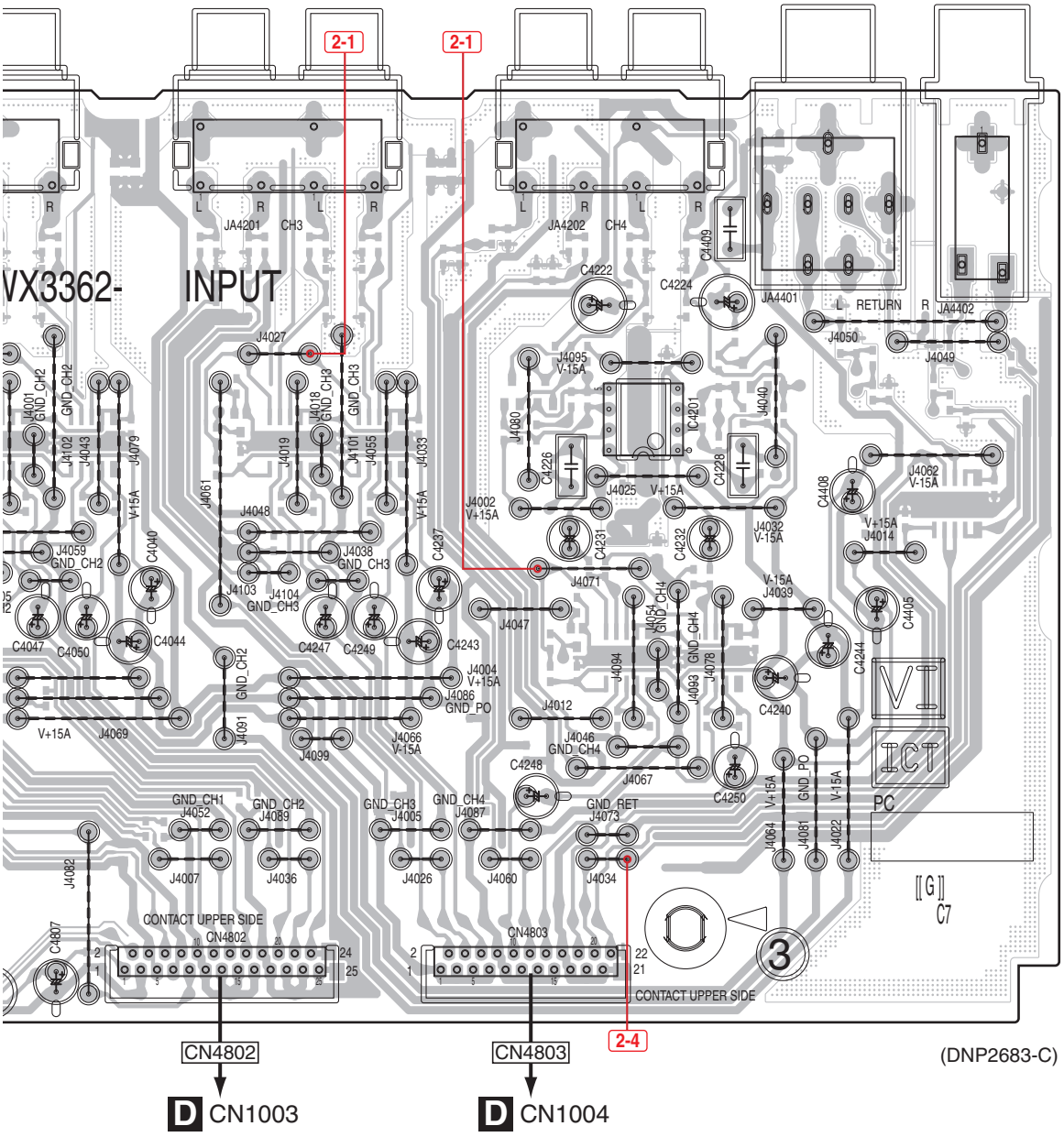

(DNP2683-C)

SIDE B

: Voltage measuring point

: Waveform measuring point

IC4401 Q4202 Q4204 IC4205 IC4204 Q4206 Q4203 Q4201 IC4203 IC4202 Q4205 IC4005 IC4004 Q4006

A INPUT ASSY

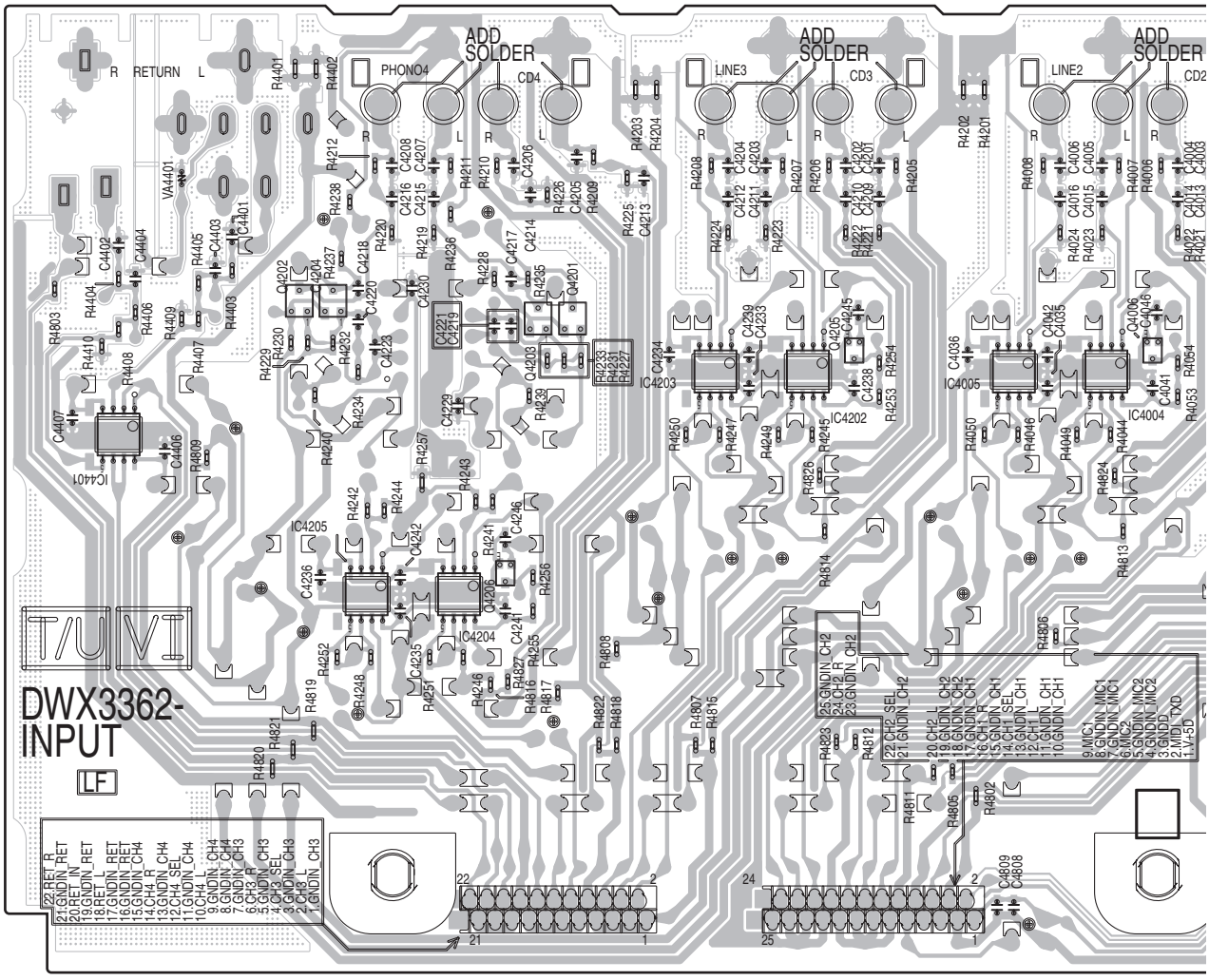

SIDE B

C MTRM ASSY

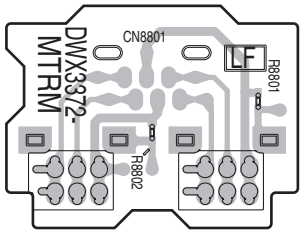

(DNP2685-C)

B MIC1 ASSY

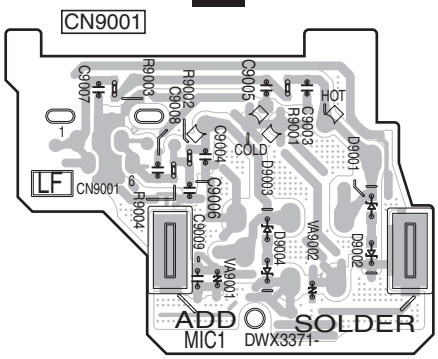

(DNP2685-C)

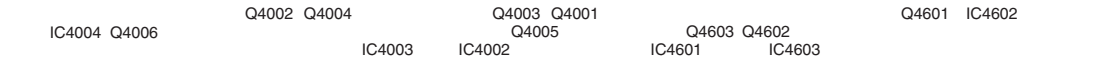

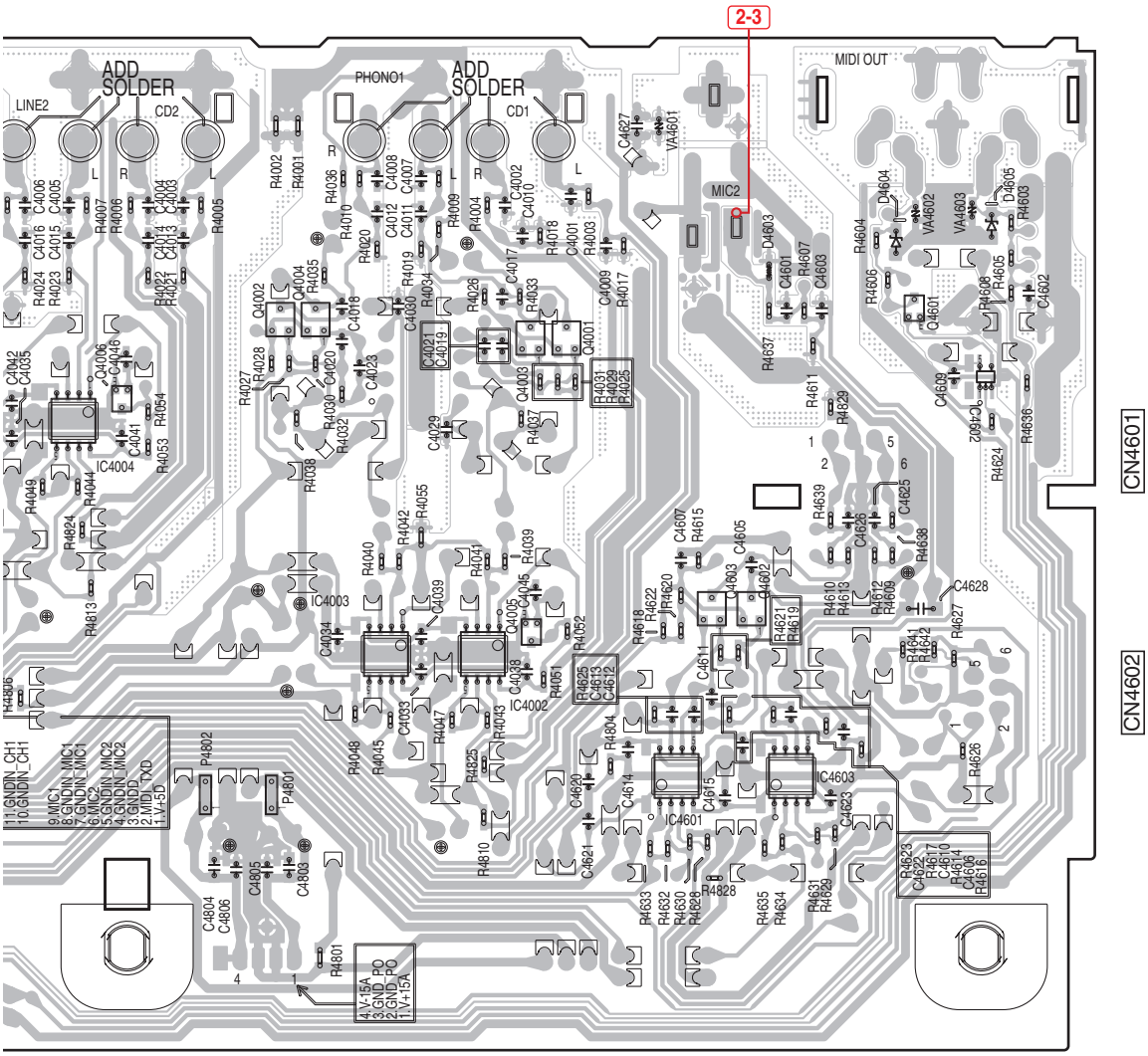

(DNP2683-C)

11.2 MAIN ASSY

SIDE A

D MAIN ASSY

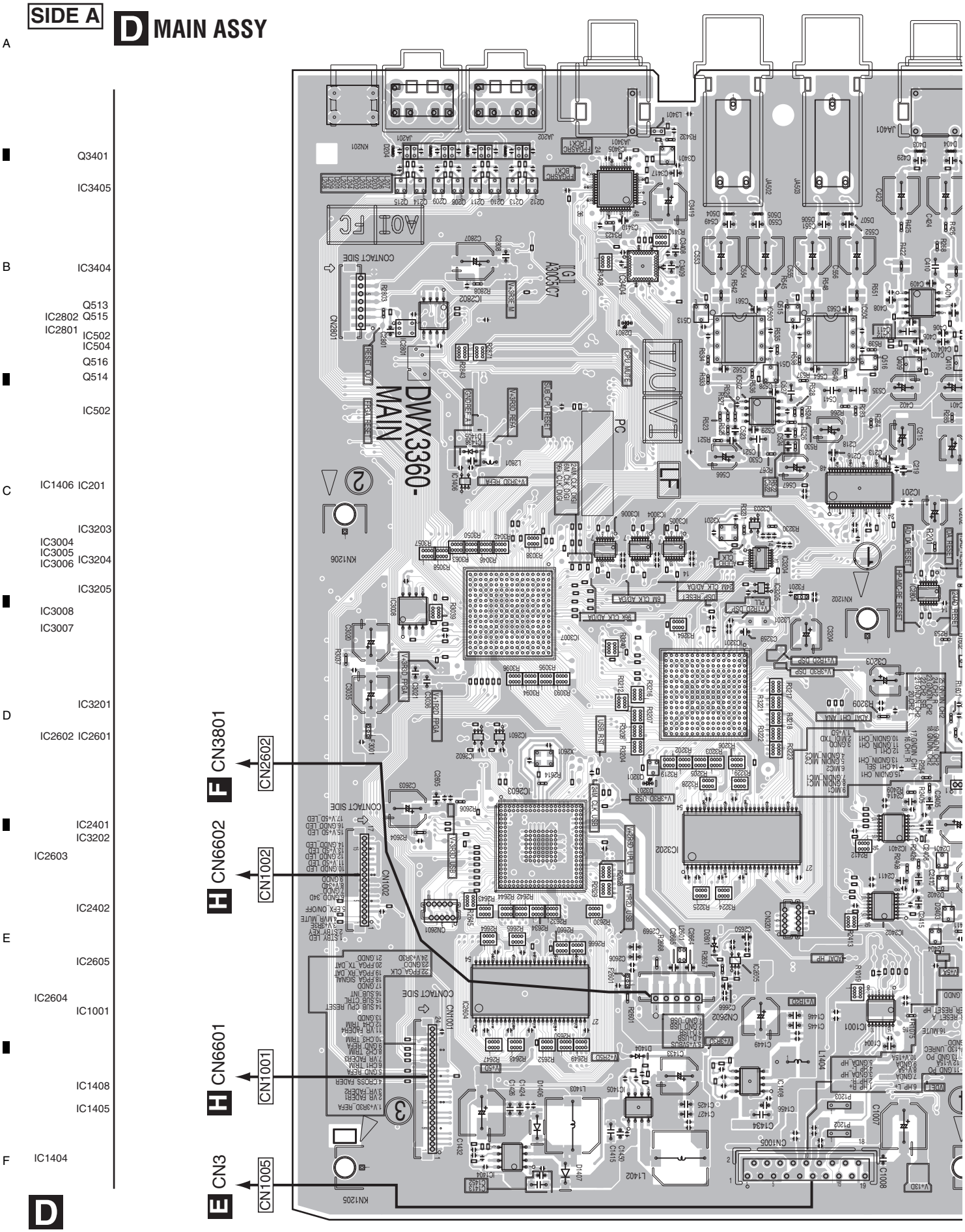

SIDE A

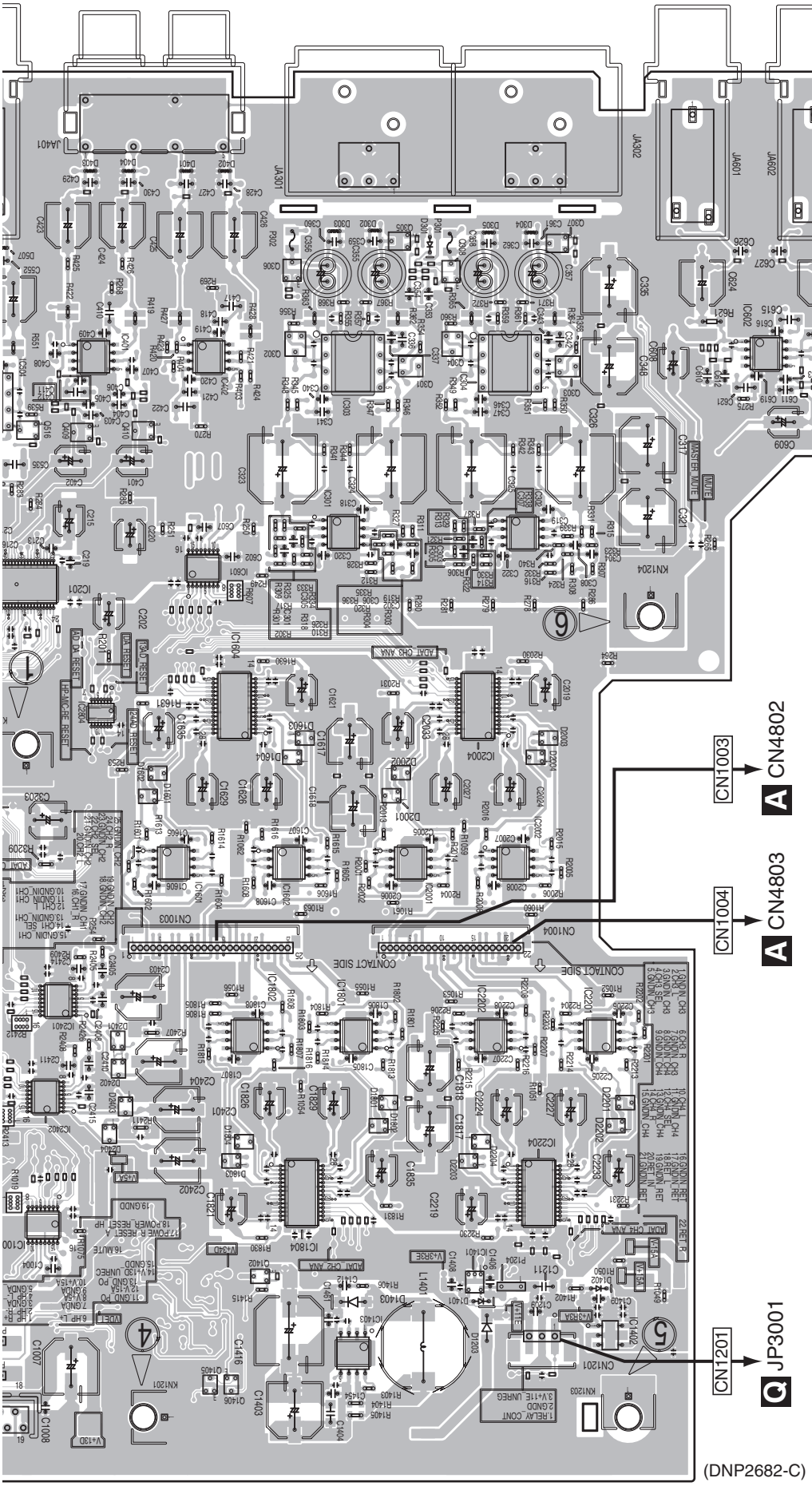

A

Q305
Q307
Q308
Q306

B

IC401 Q302 Q304
IC402 IC303 IC304 IC602
Q301 Q303

Q409
Q410

IC301 IC302

IC601

C

IC1604 IC2004
IC2804

IC1601 IC2001
IC1602 IC2002

D

IC1802 IC2202
IC1801 IC2201

E

IC1804 IC2204

Q1402 IC1401

IC1402
IC1403

Q1405
Q1406

F

D

SIDE A ● Measuring points of waveforms and voltages

: Voltage measuring point

: Waveform measuring point

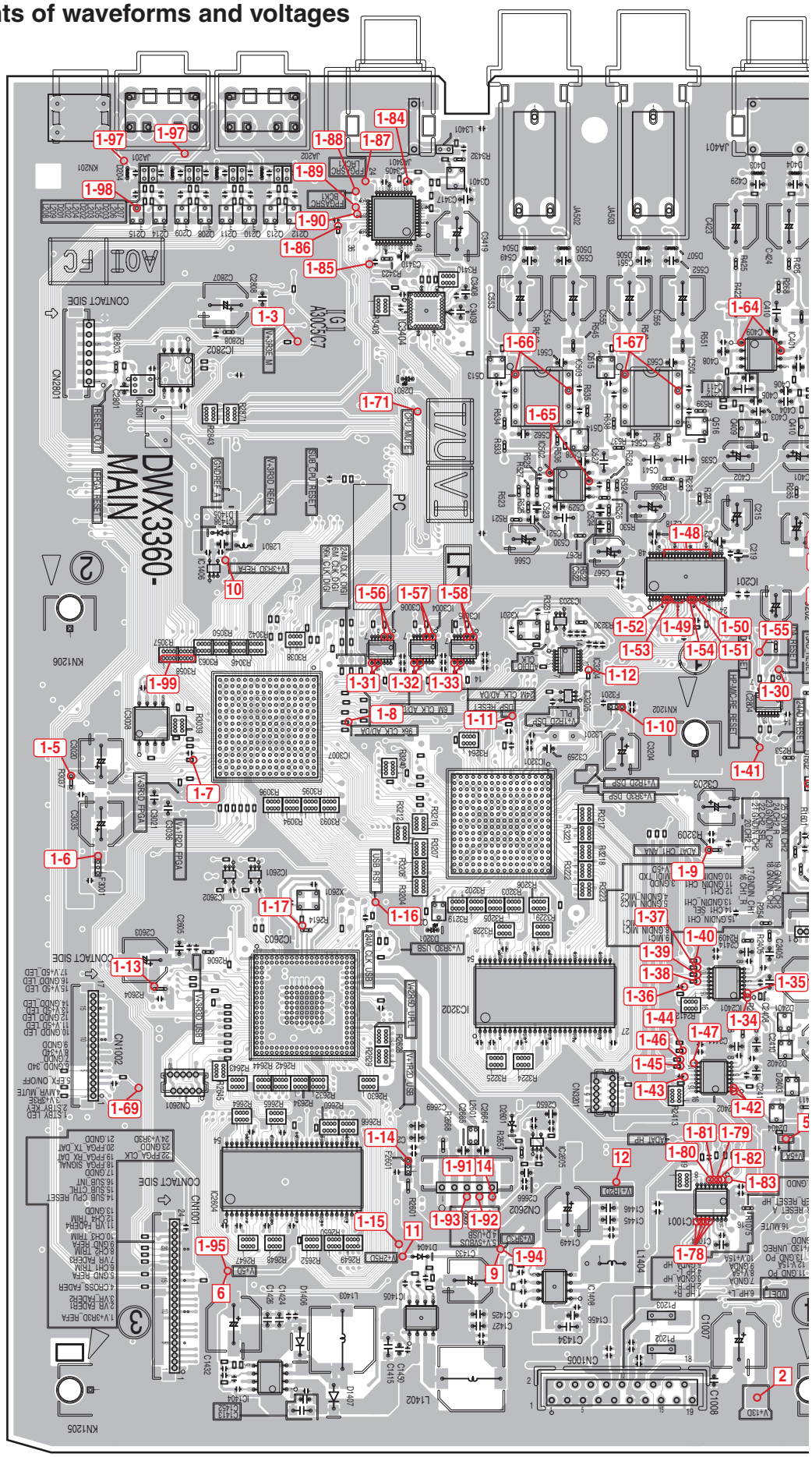

SIDE A

D MAIN ASSY

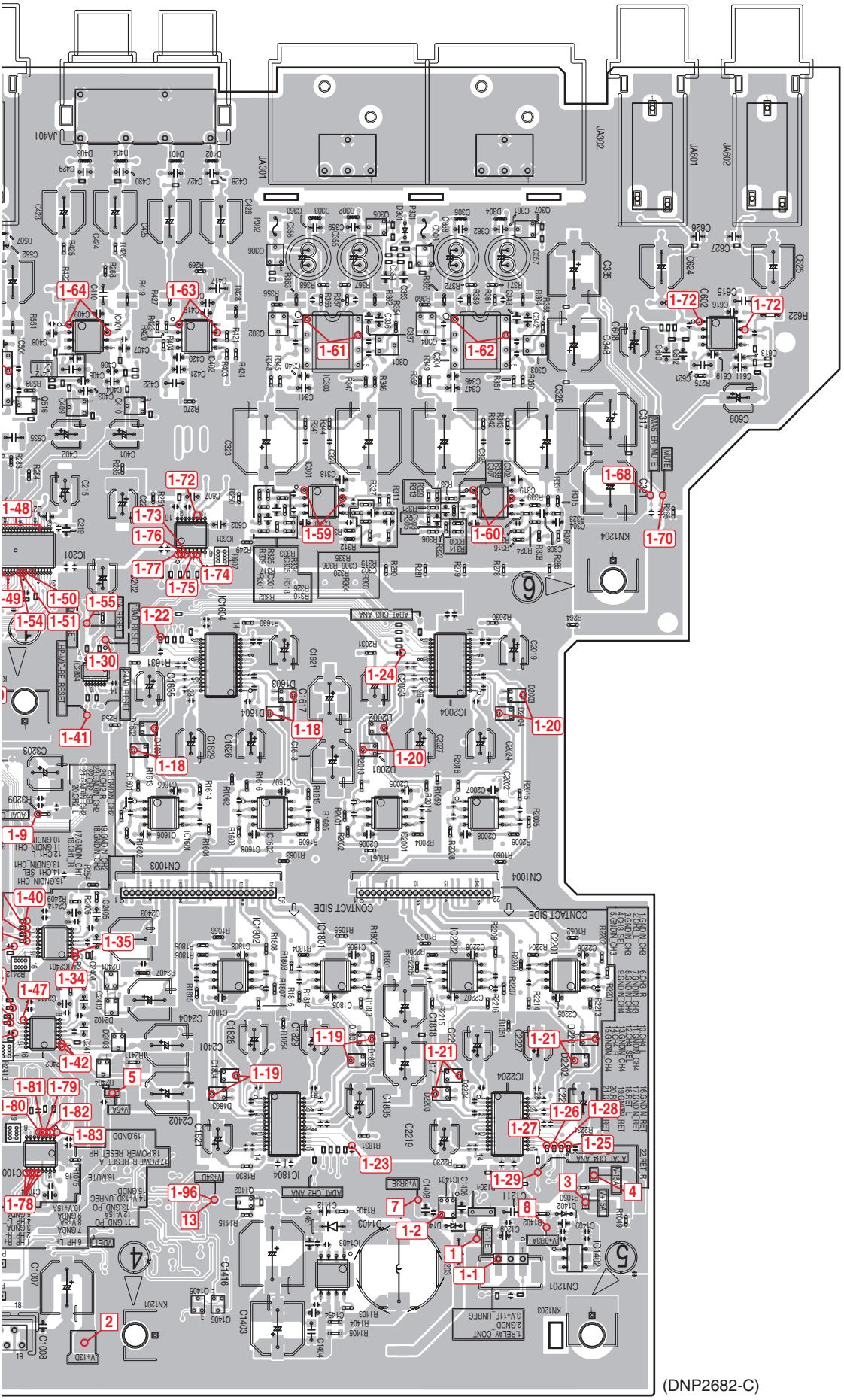

(DNP2682-C)

SIDE B

D MAIN ASSY

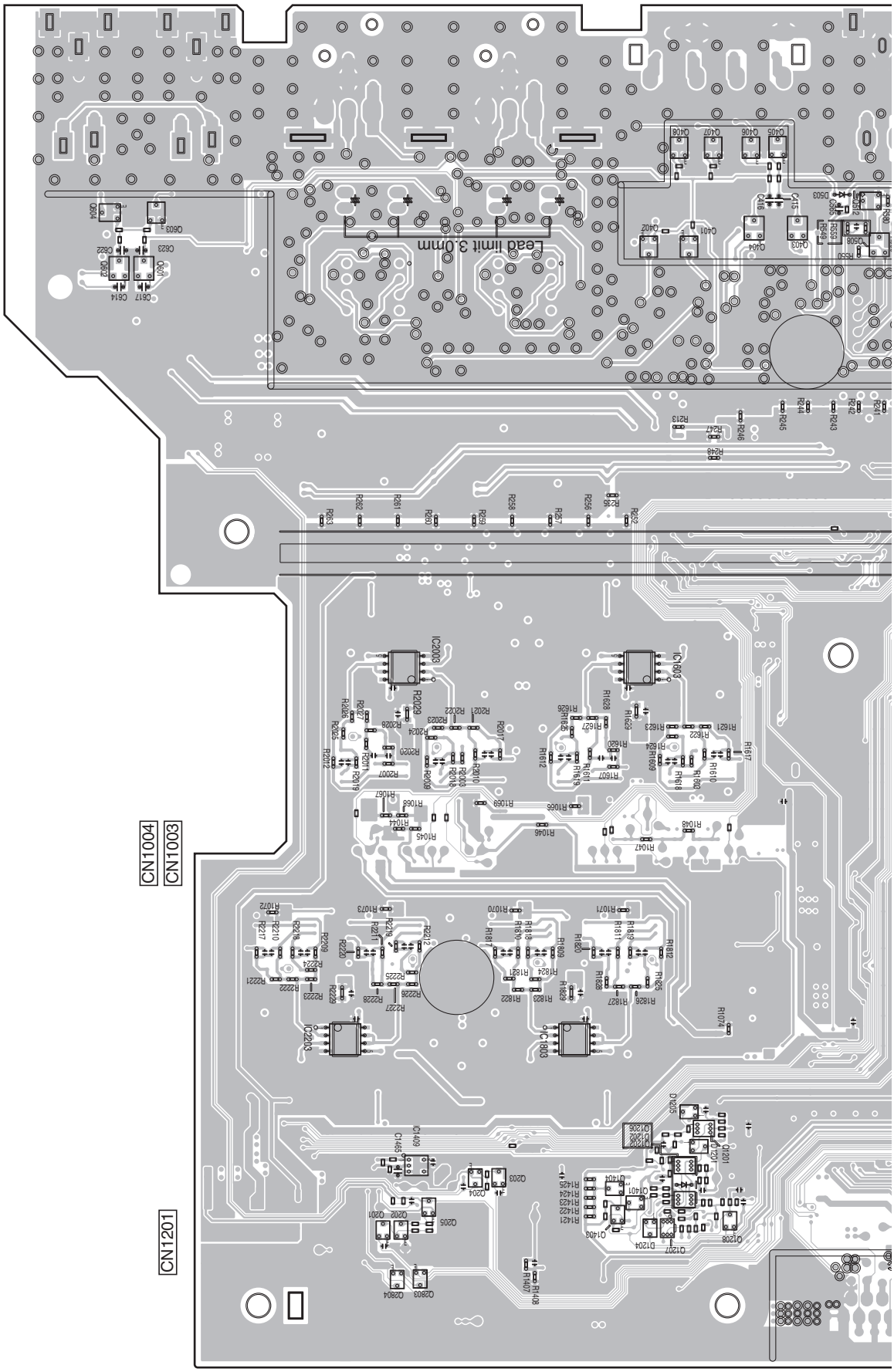

SIDE B

: Voltage measuring point

: Waveform measuring point

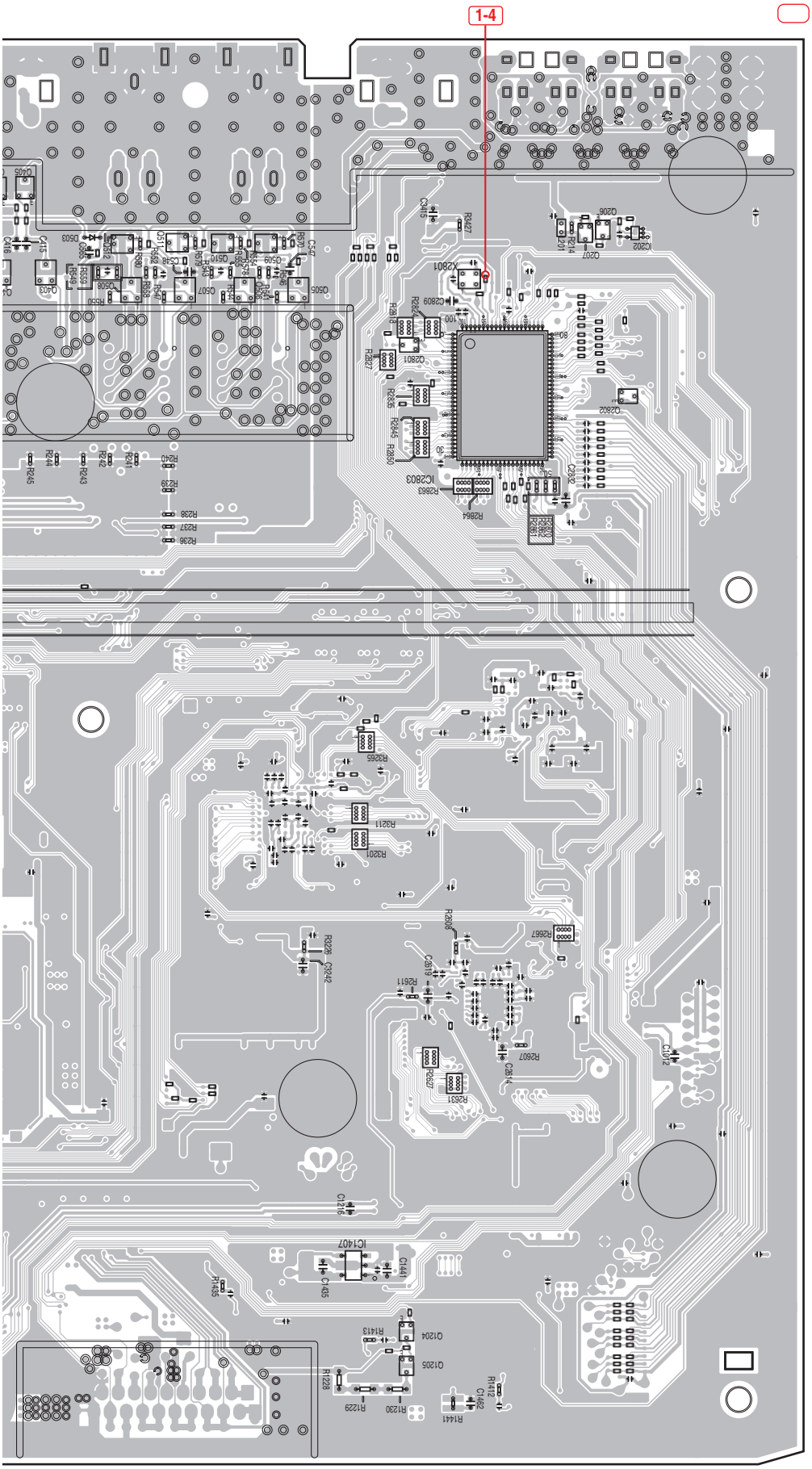

Q509-Q512 Q206 Q207 IC202

Q505-Q508

Q2801

IC2803

Q2802

IC1407

Q1204

Q1205

(DNP2682-C)

11.3 SEC/HP, USBI and HPJK ASSYS

SIDE A

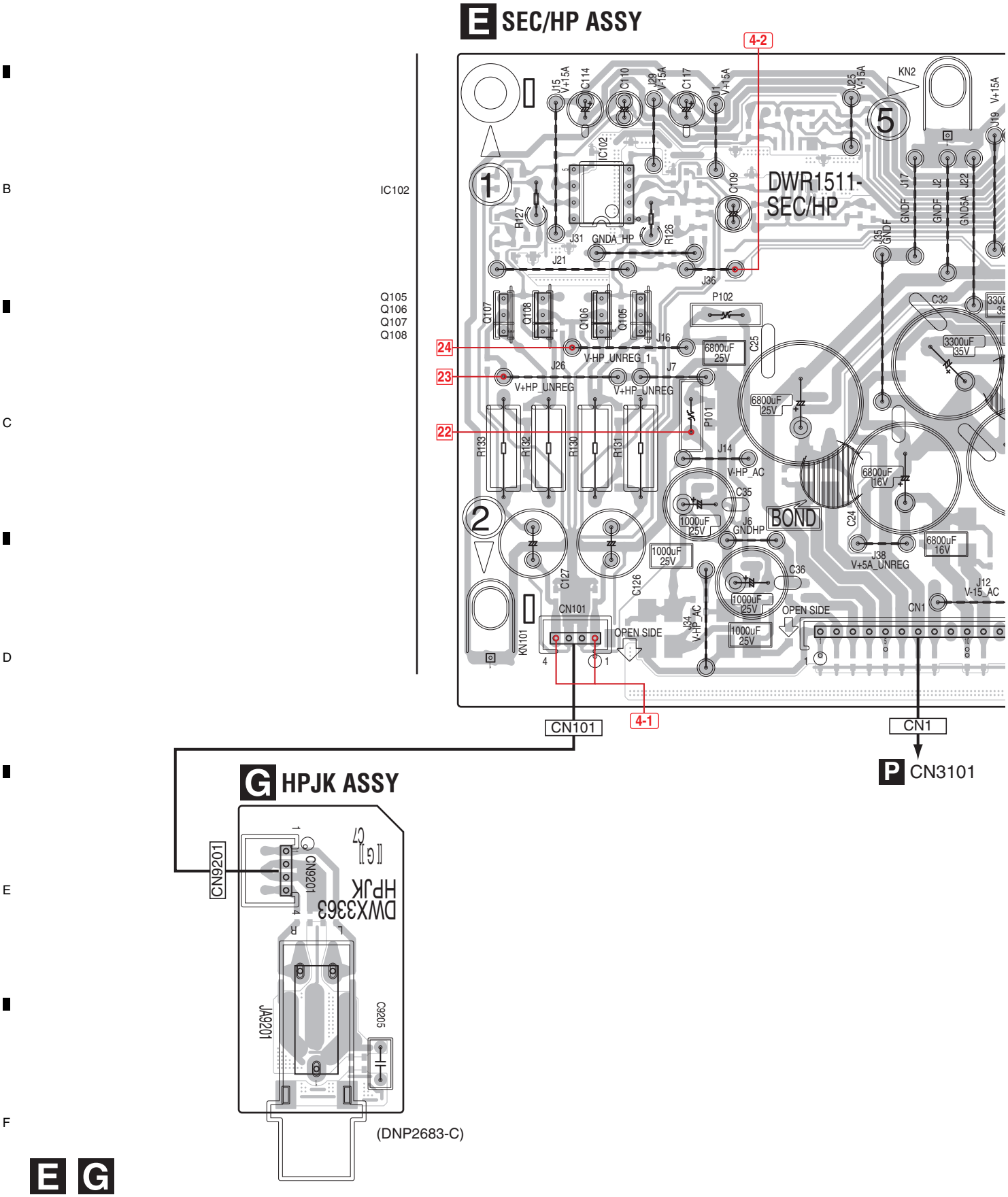

SIDE A

: Voltage measuring point
: Waveform measuring point

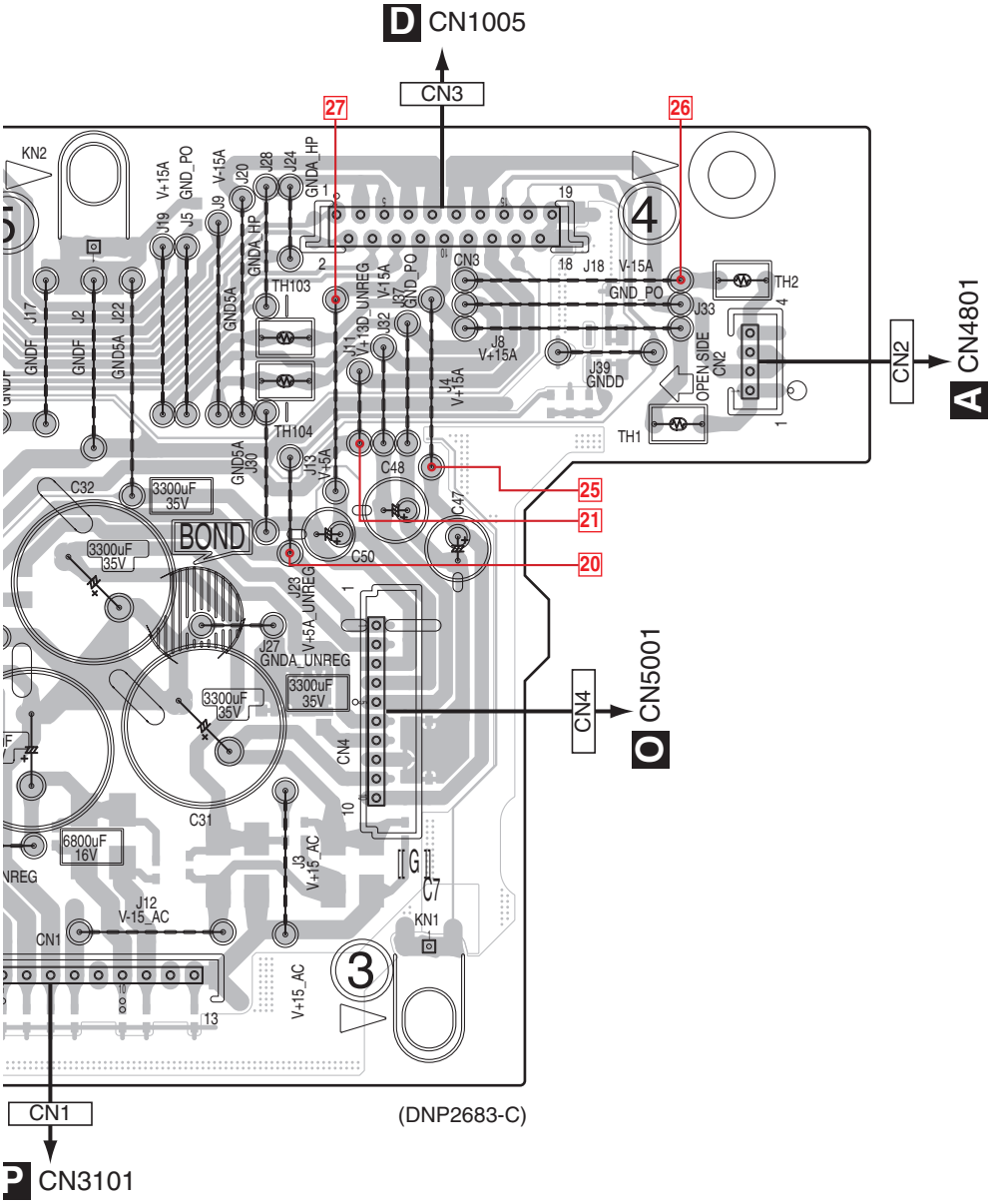

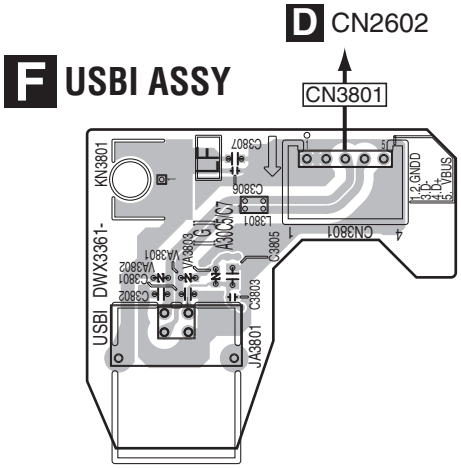

E F

SIDE B

E SEC/HP ASSY

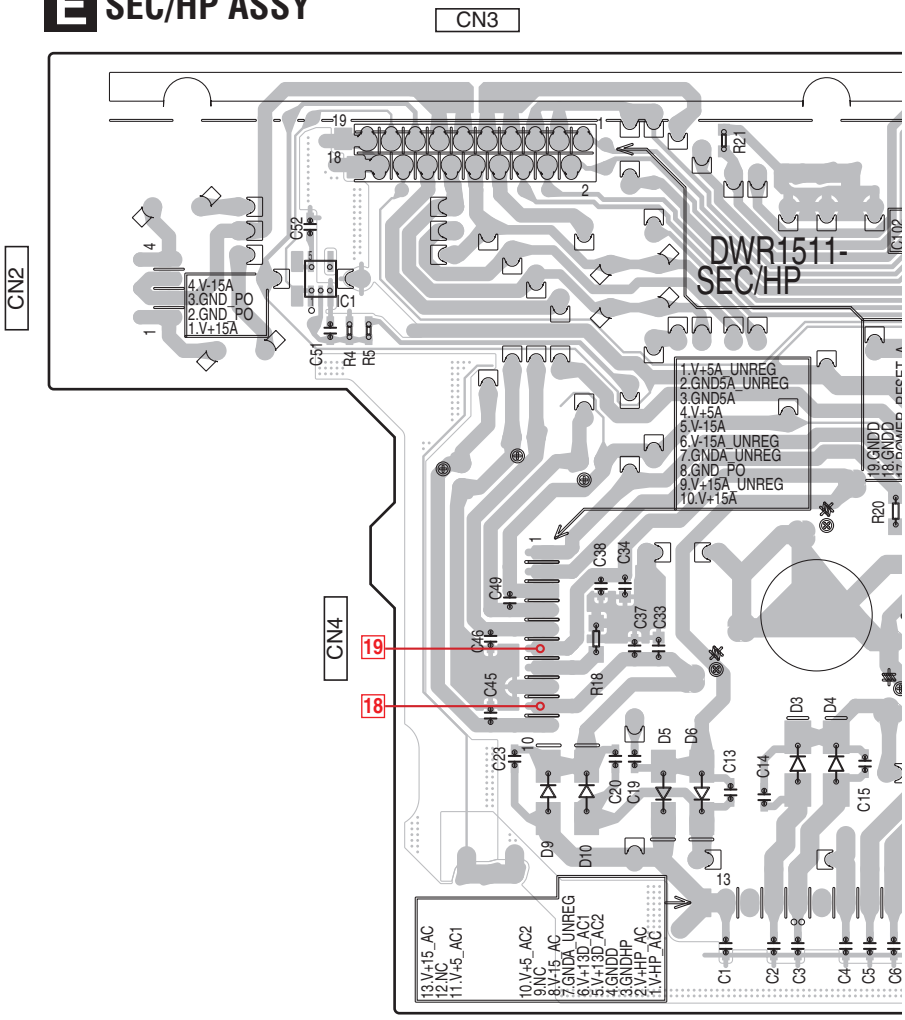

(DNP2683-C)

F USBI ASSY

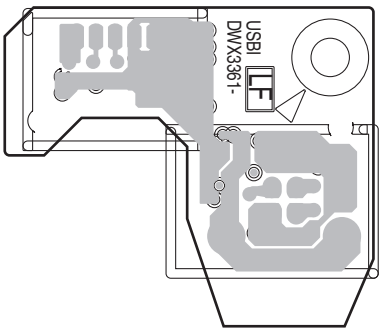

(DNP2682-C)

SIDE B

: Voltage measuring point
: Waveform measuring point

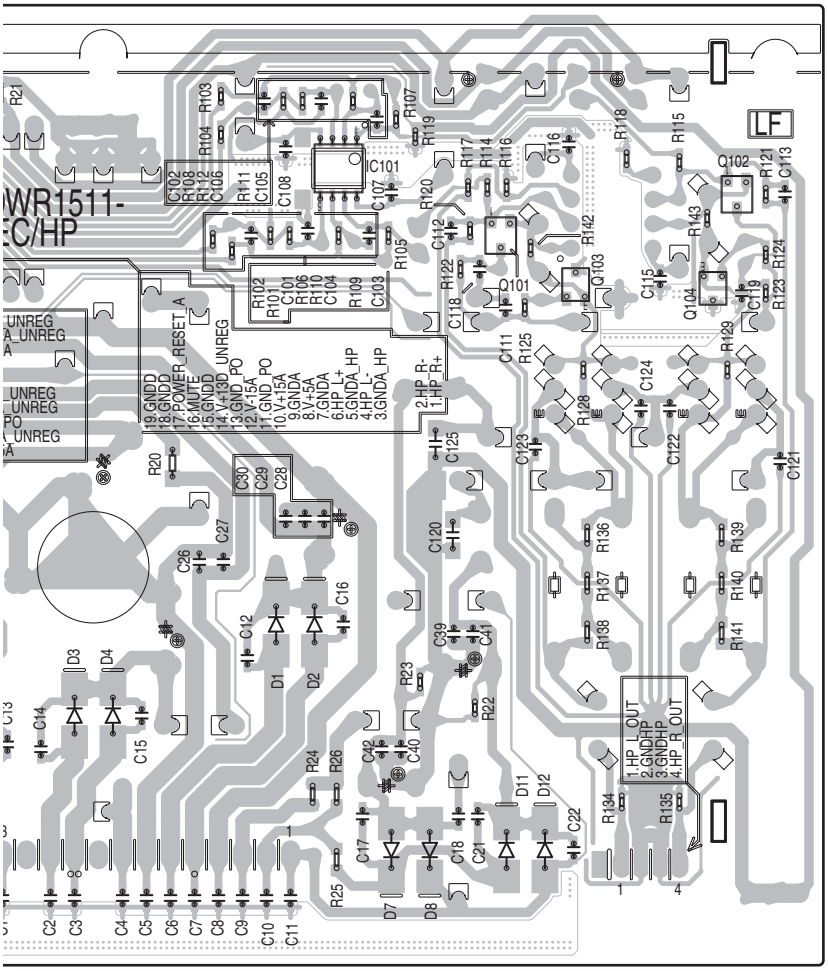

G HPJK ASSY

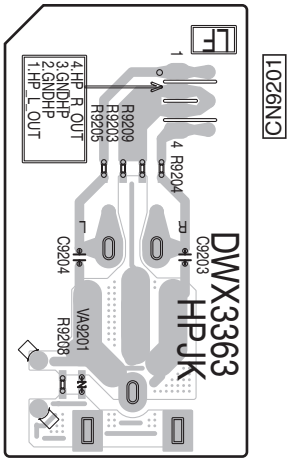

(DNP2683-C)

11.4 PNLA ASSY

SIDE A

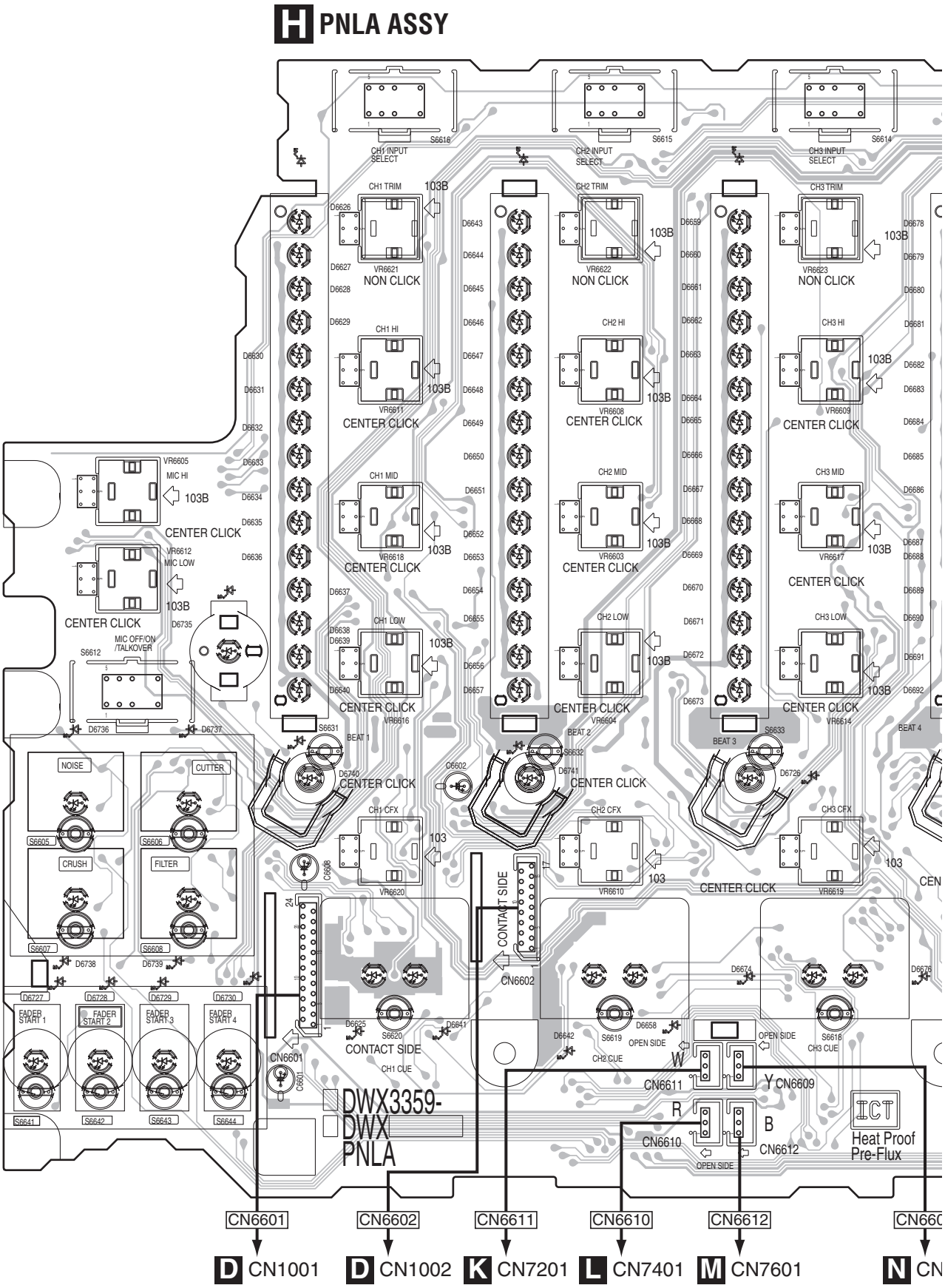

SIDE A

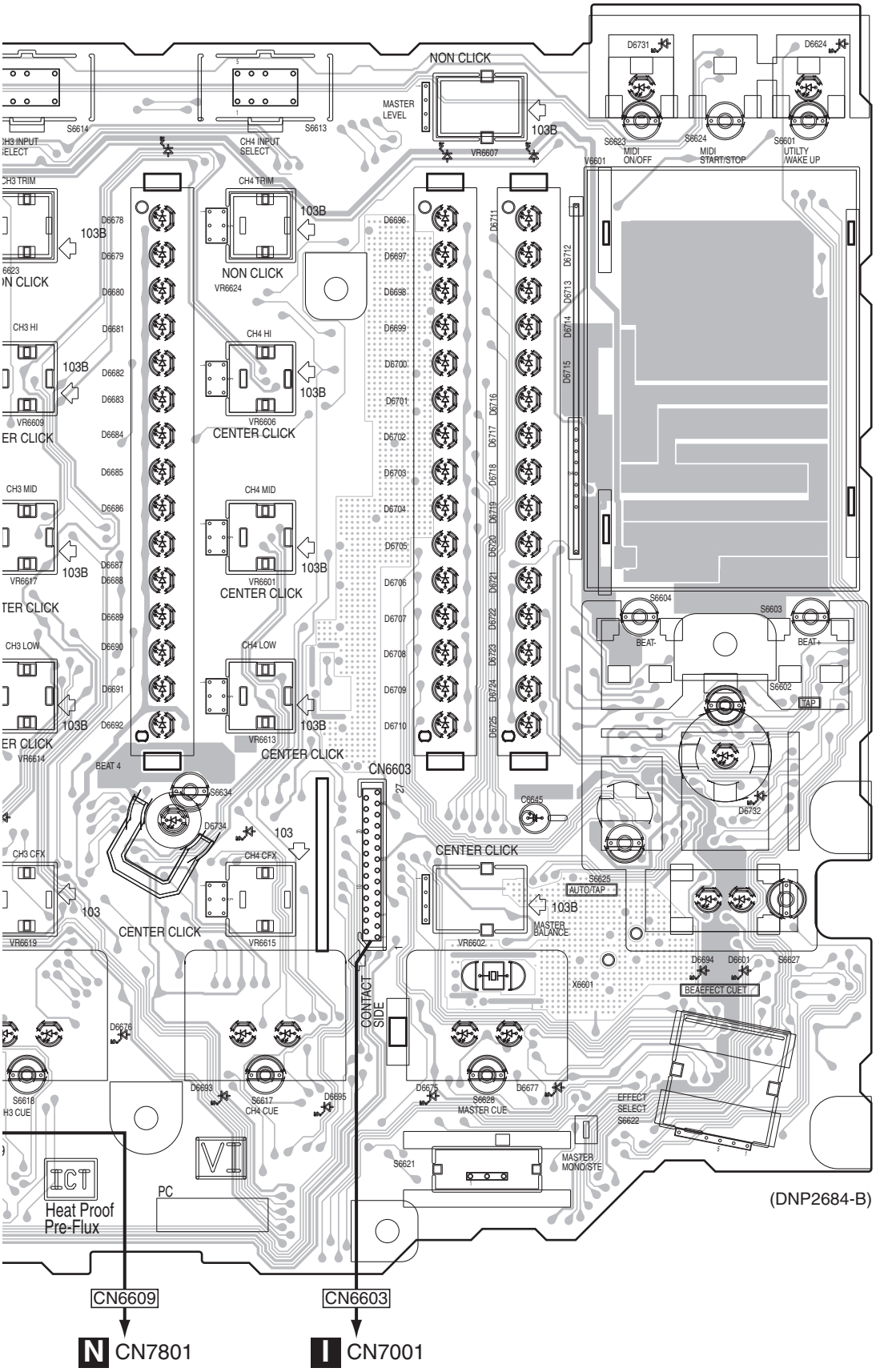

VR6607

VR6621-VR6624

VR6606
VR6608
VR6609
VR6611

VR6605
VR6601
VR6603
VR6617
VR6618

VR6612

VR6604
VR6613
VR6614
VR6616

VR6610
VR6615 VR6602
VR6619
VR6620

SIDE B

H PNLA ASSY

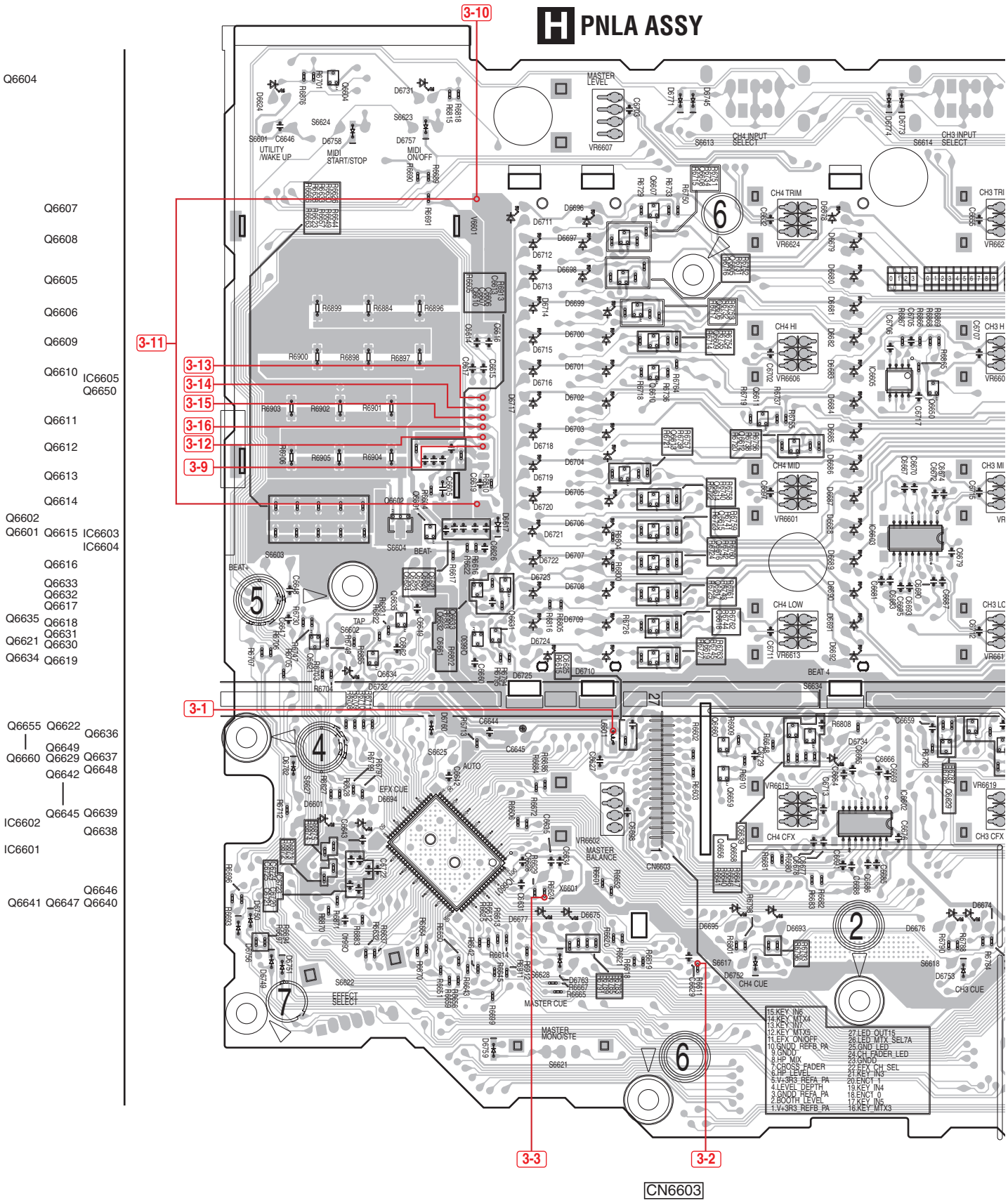

SIDE B

: Voltage measuring point

: Waveform measuring point

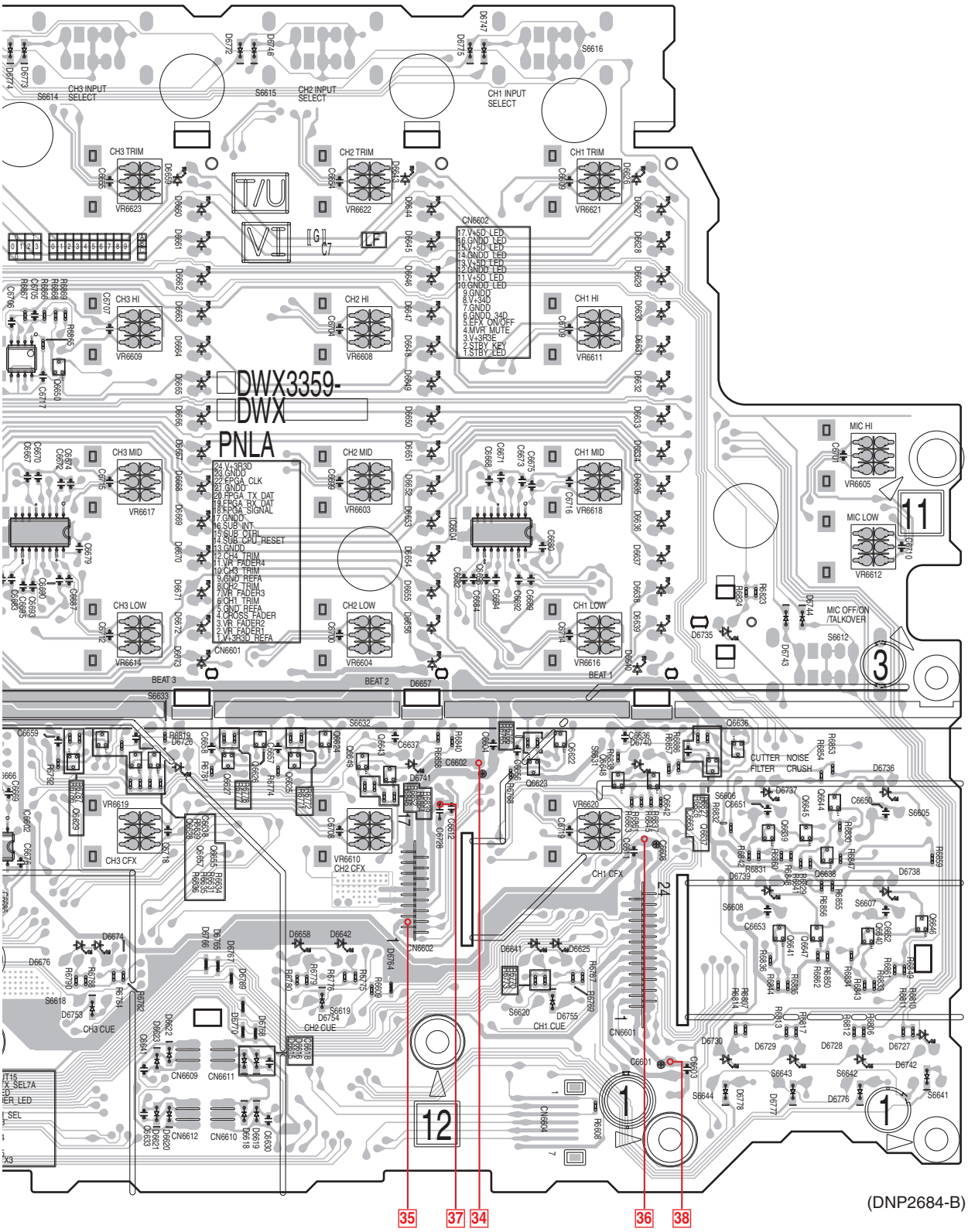

CN6609 CN6611
CN6612 CN6610

CN6602

CN6601

11.5 PNLB and FADC ASSYS

SIDE A

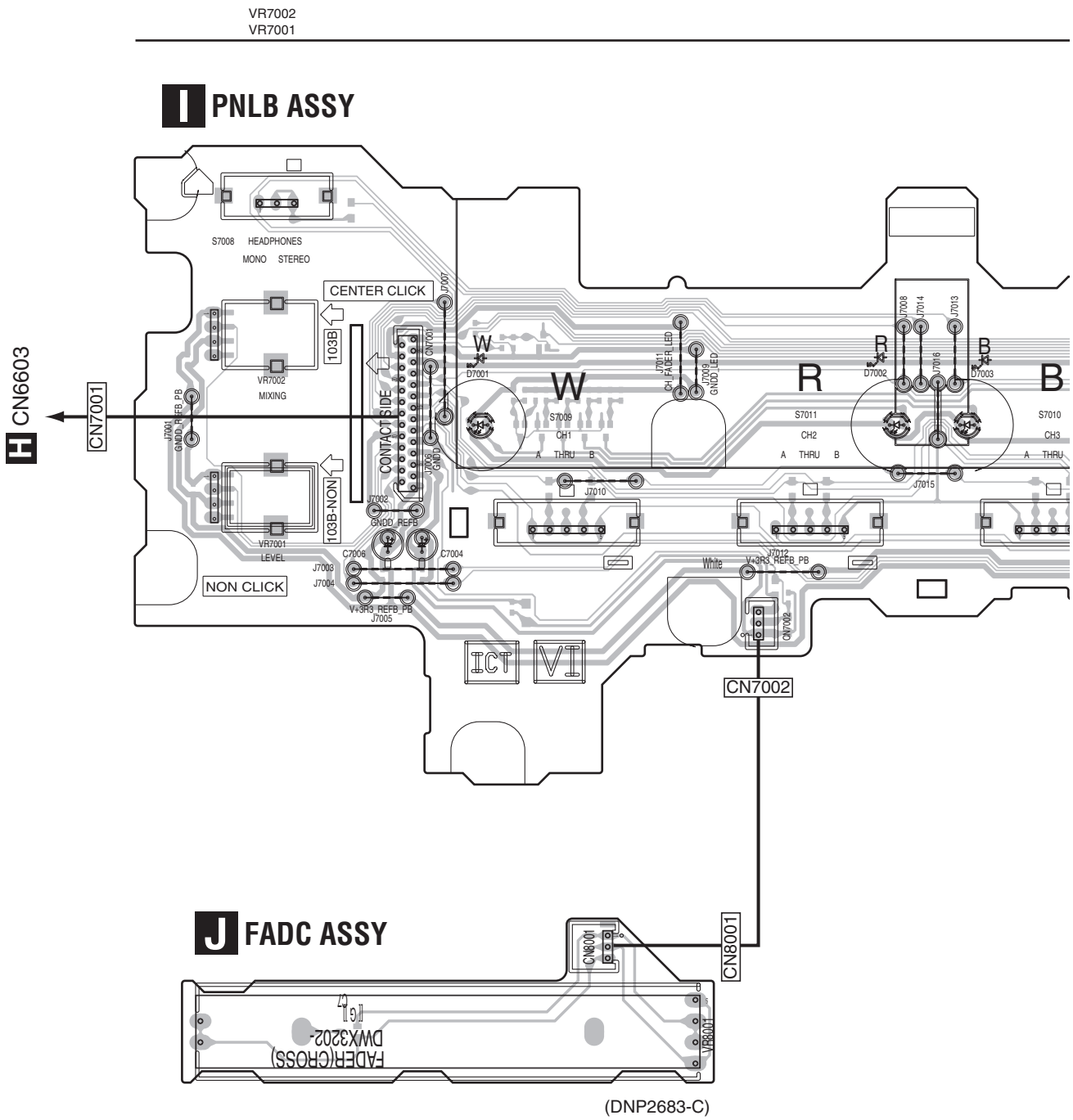

SIDE A

A

B

C

D

E

F

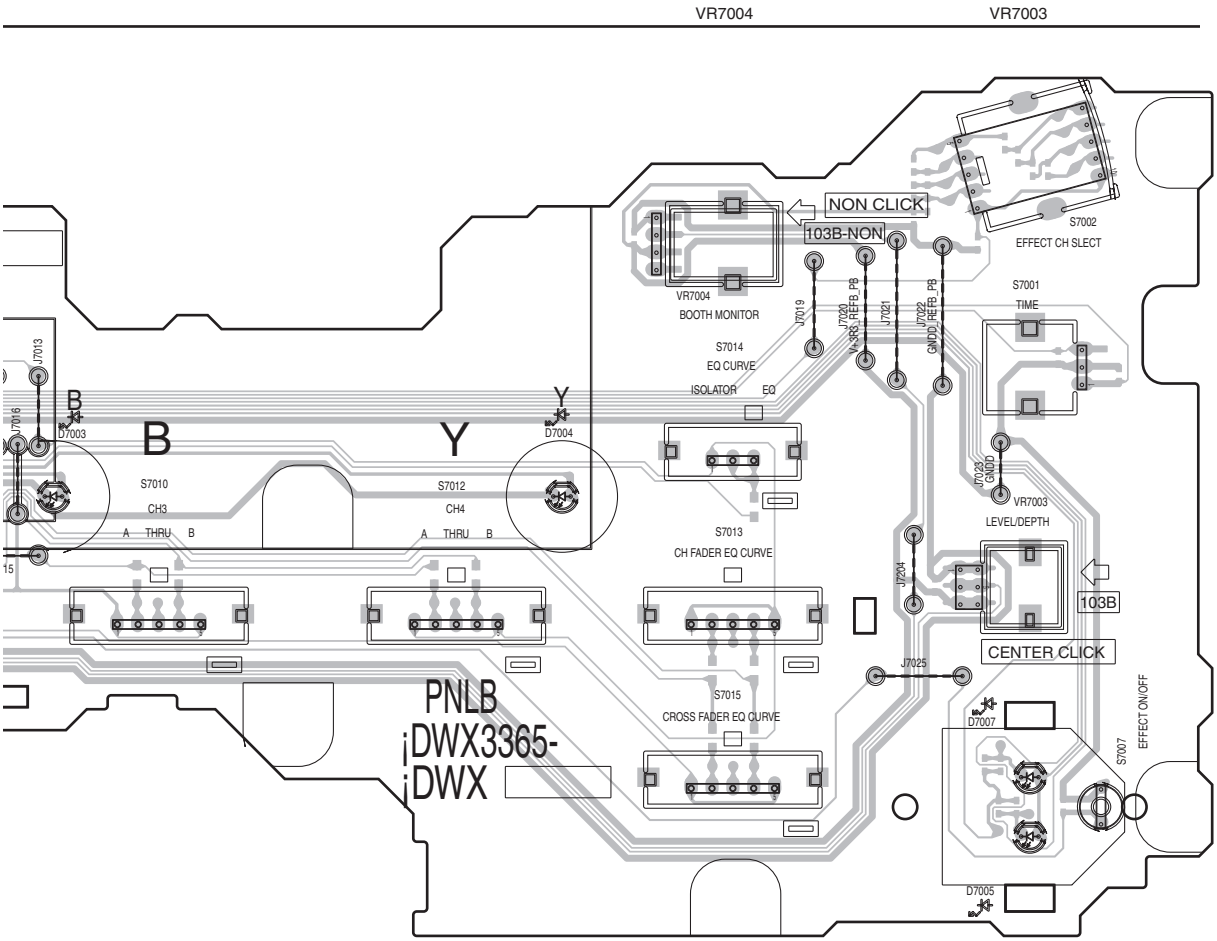

(DNP2685-C)

SIDE B

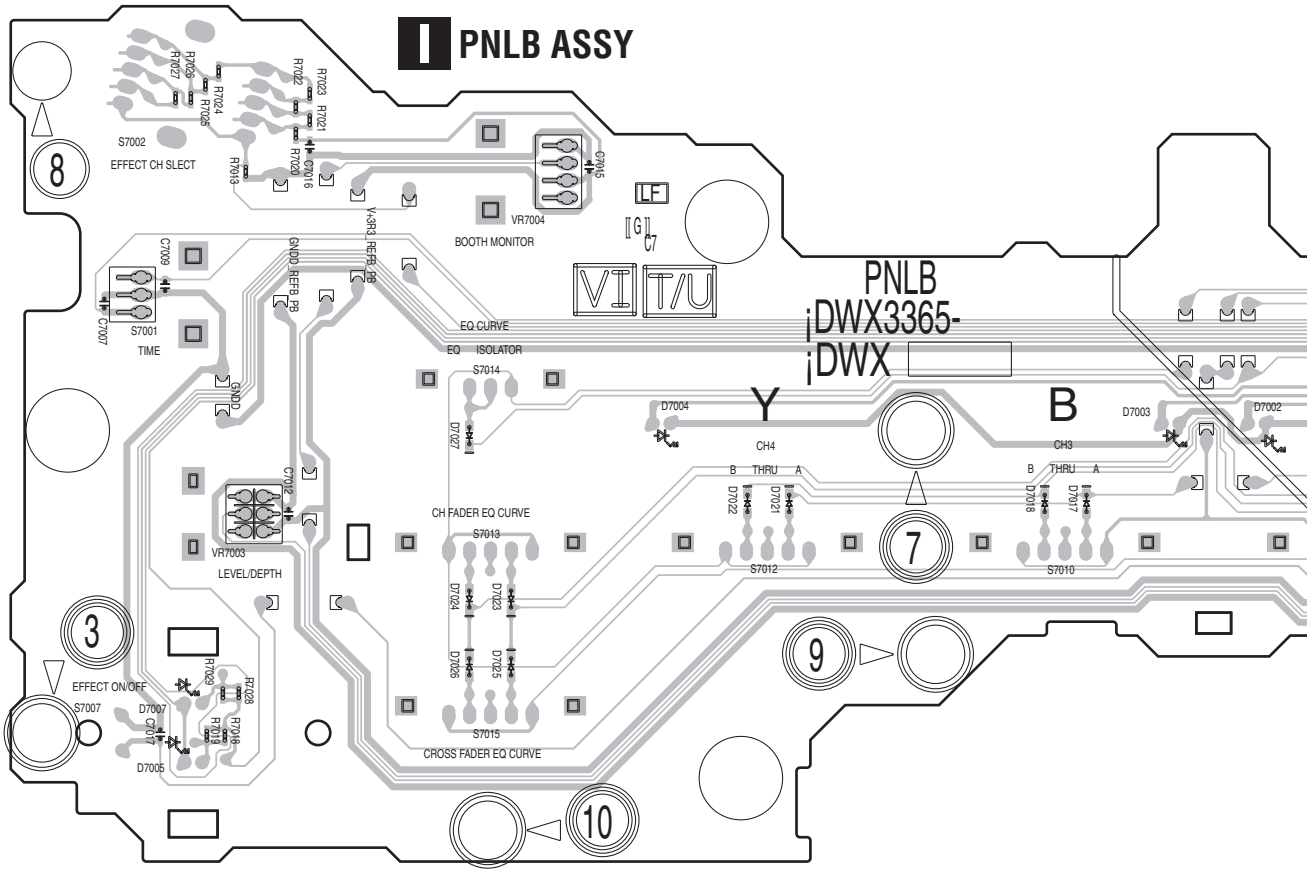
PNLB ASSY
PNLB
¡DWX3365-
¡DWX
S7002
EFFECT CH SLECT
R7027
R7026
R7024
R7028
R7022
R7023
R7021
R7020
C7016
R7013
C7015
VR7004
BOOTH MONITOR
C7009
C7007
S7001
TIME
V-3R3
REFR_PB
GNDD
EQ CURVE
EQ ISOLATOR
S7014
D7027
D7004
Y
B
D7003
D7002
CH4
CH3
B THRU A
C7012
VR7003
LEVEL/DEPTH
CH FADER EQ CURVE
S7013
D7024
D7023
D7026
D7025
S7015
CROSS FADER EQ CURVE
D7022
D7021
S7012
D7018
D7017
S7010
EFFECT ON/OFF
S7007
D7007
C7017
D7005
R7029
R7028
R7018
R7019
8
3
7
9
10

SIDE B

: Voltage measuring point
: Waveform measuring point

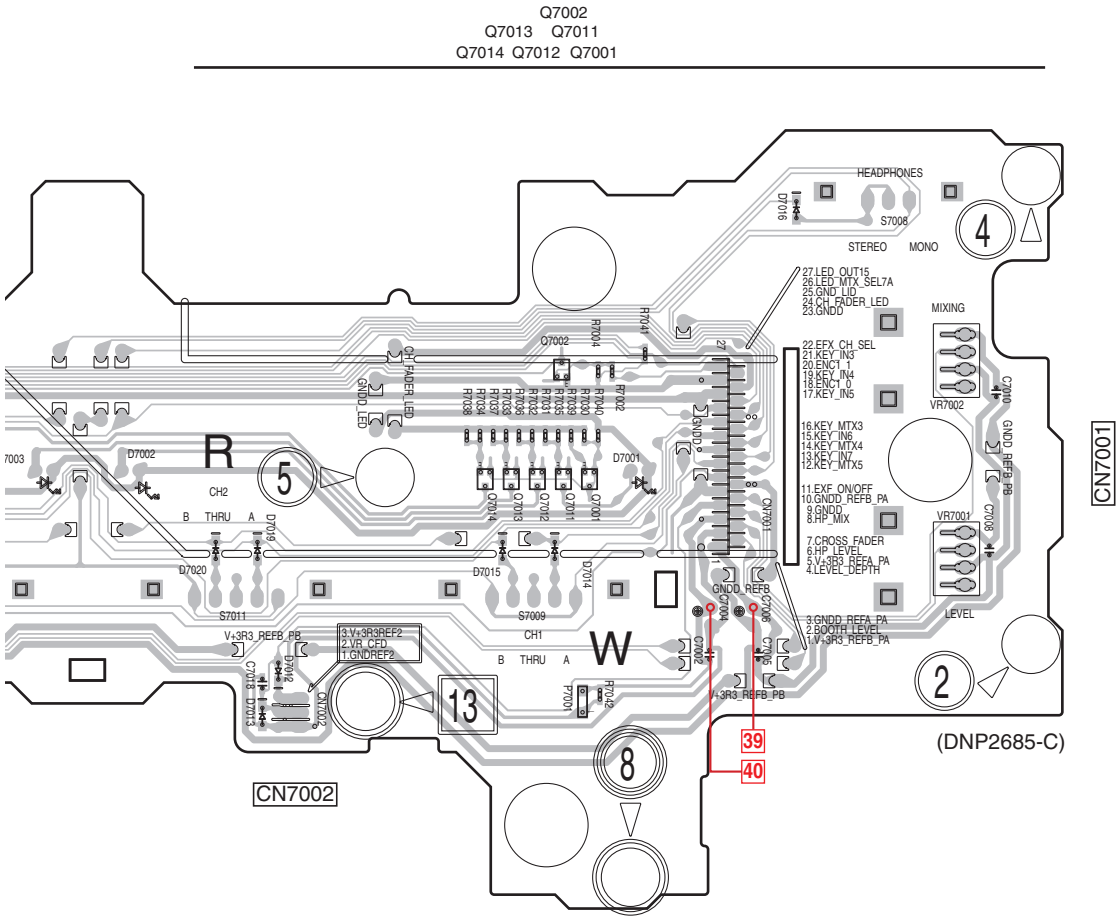

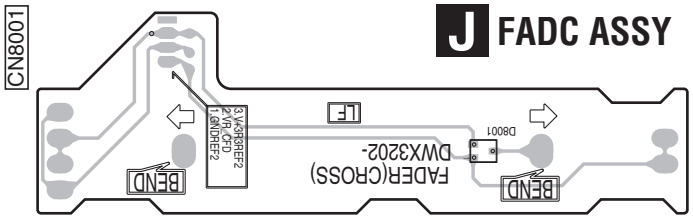

(DNP2683-C)

11.6 FAD1 to FAD4 and REG ASSYS

SIDE A

K FAD1 ASSY

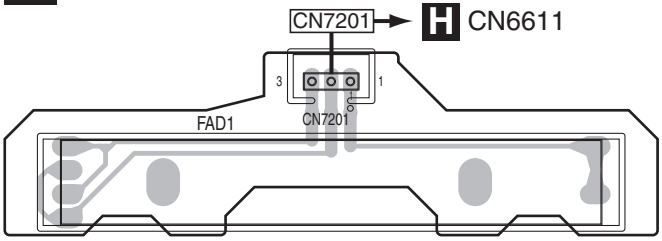

(DNP2683-C)

L FAD2 ASSY

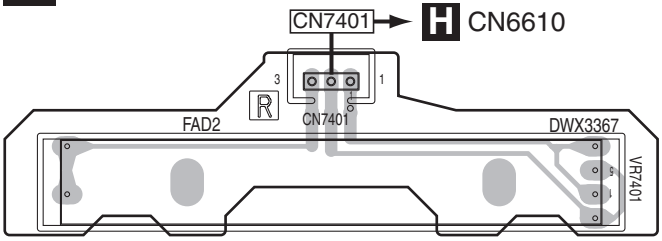

(DNP2683-C)

M FAD3 ASSY

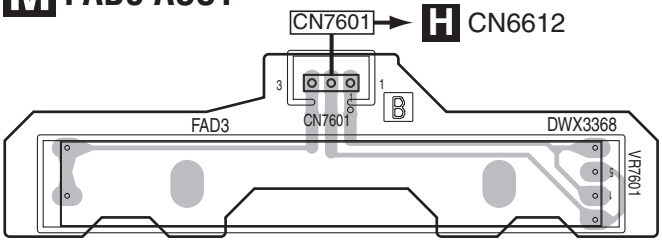

(DNP2683-C)

N FAD4 ASSY

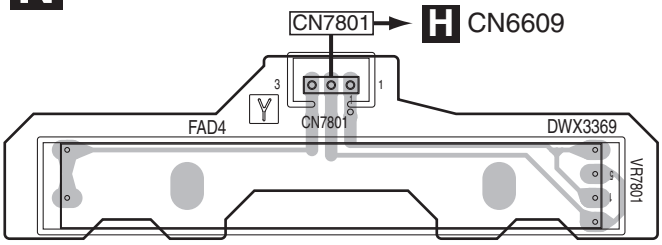

(DNP2683-C)

O REG ASSY

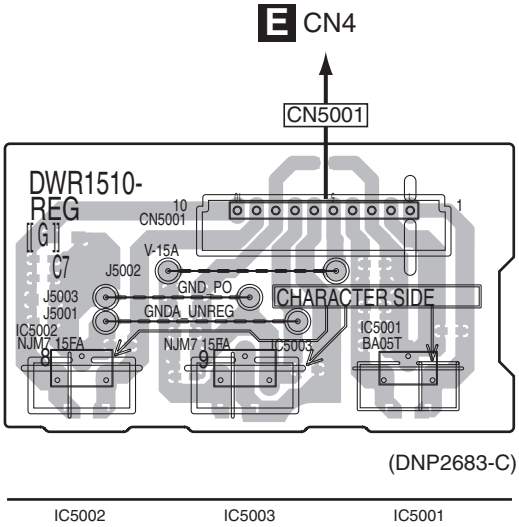

(DNP2683-C)

IC5002 IC5003 IC5001

K L M N O

: Voltage measuring point
: Waveform measuring point

SIDE B

O REG ASSY

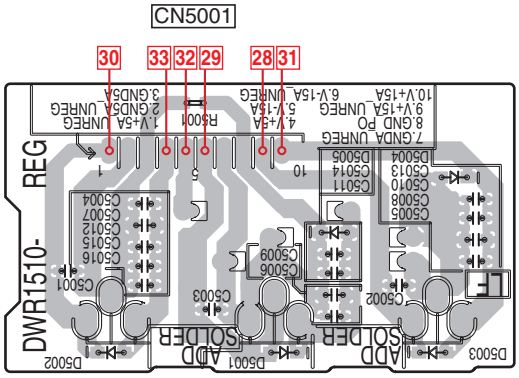

(DNP2683-C)

K FAD1 ASSY

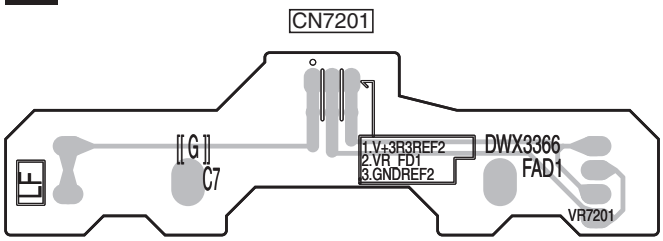

(DNP2683-C)

L FAD2 ASSY

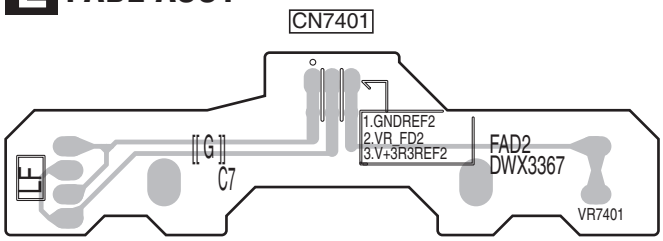

(DNP2683-C)

M FAD3 ASSY

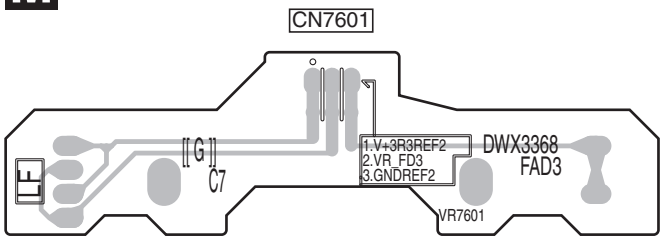

(DNP2683-C)

N FAD4 ASSY

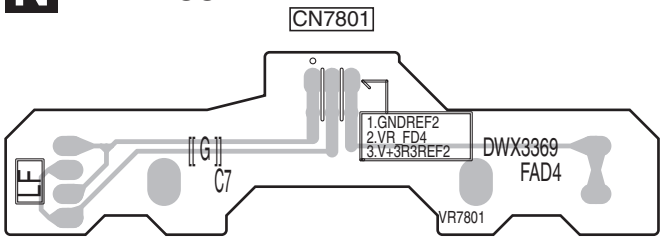

(DNP2683-C)

11.7 TRANS, PRIMARY and ACSW ASSYS

SIDE A

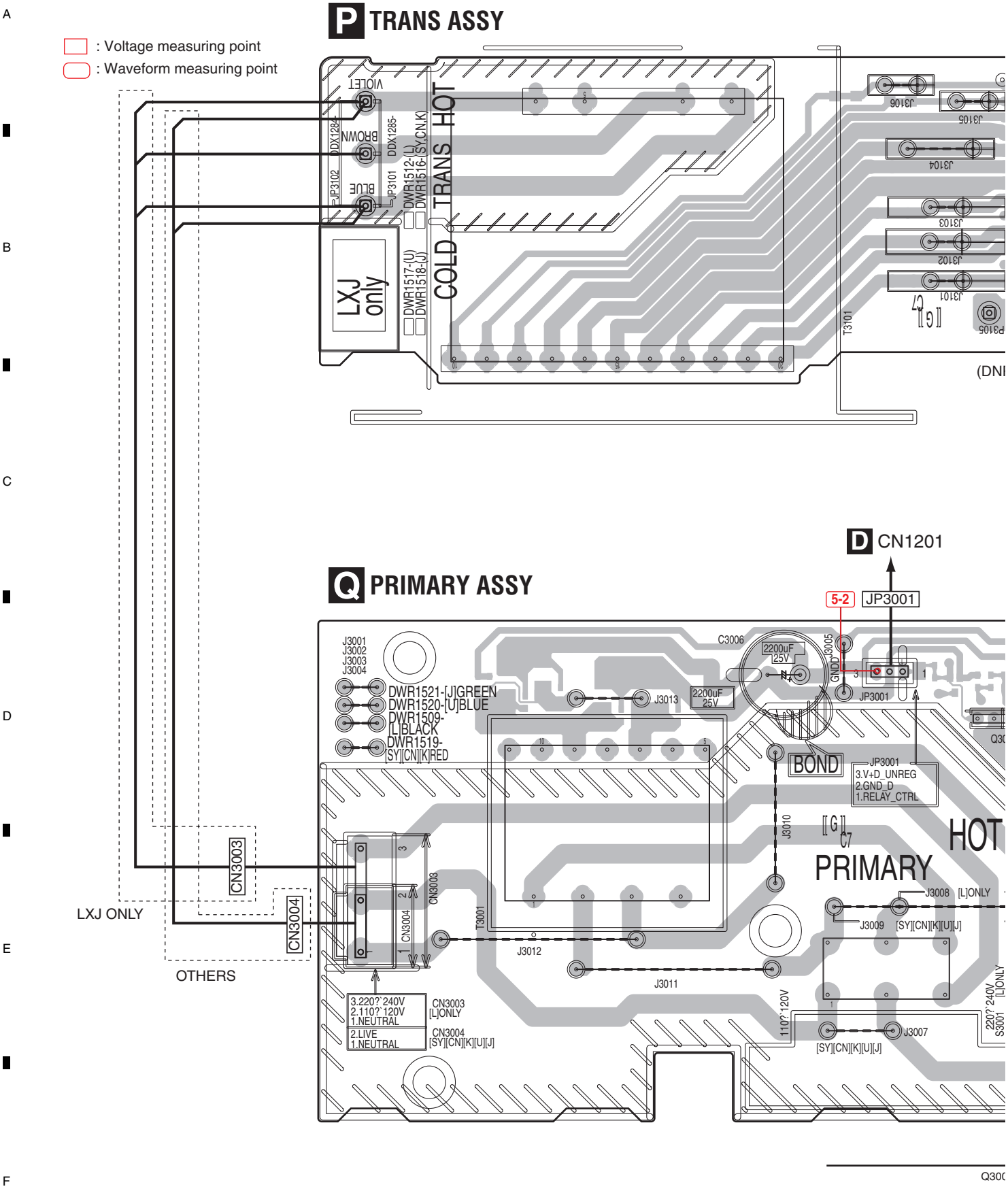

SIDE A

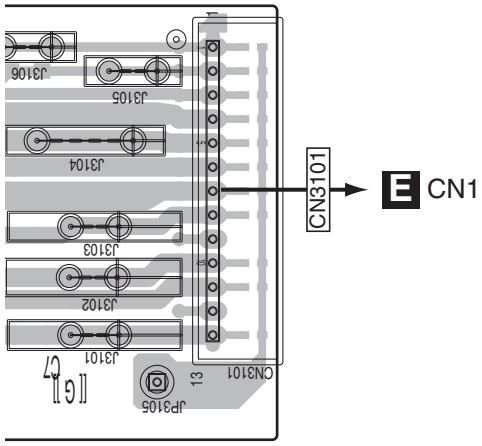

(DNP2685-C)

R ACSW ASSY

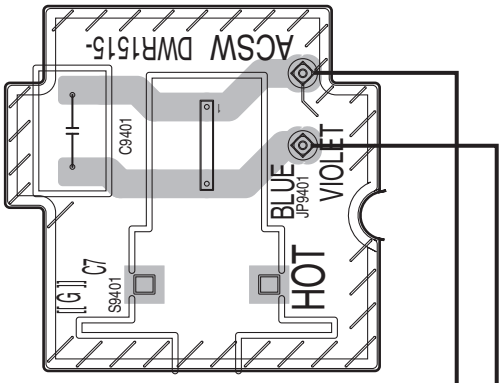

(DNP2685-C)

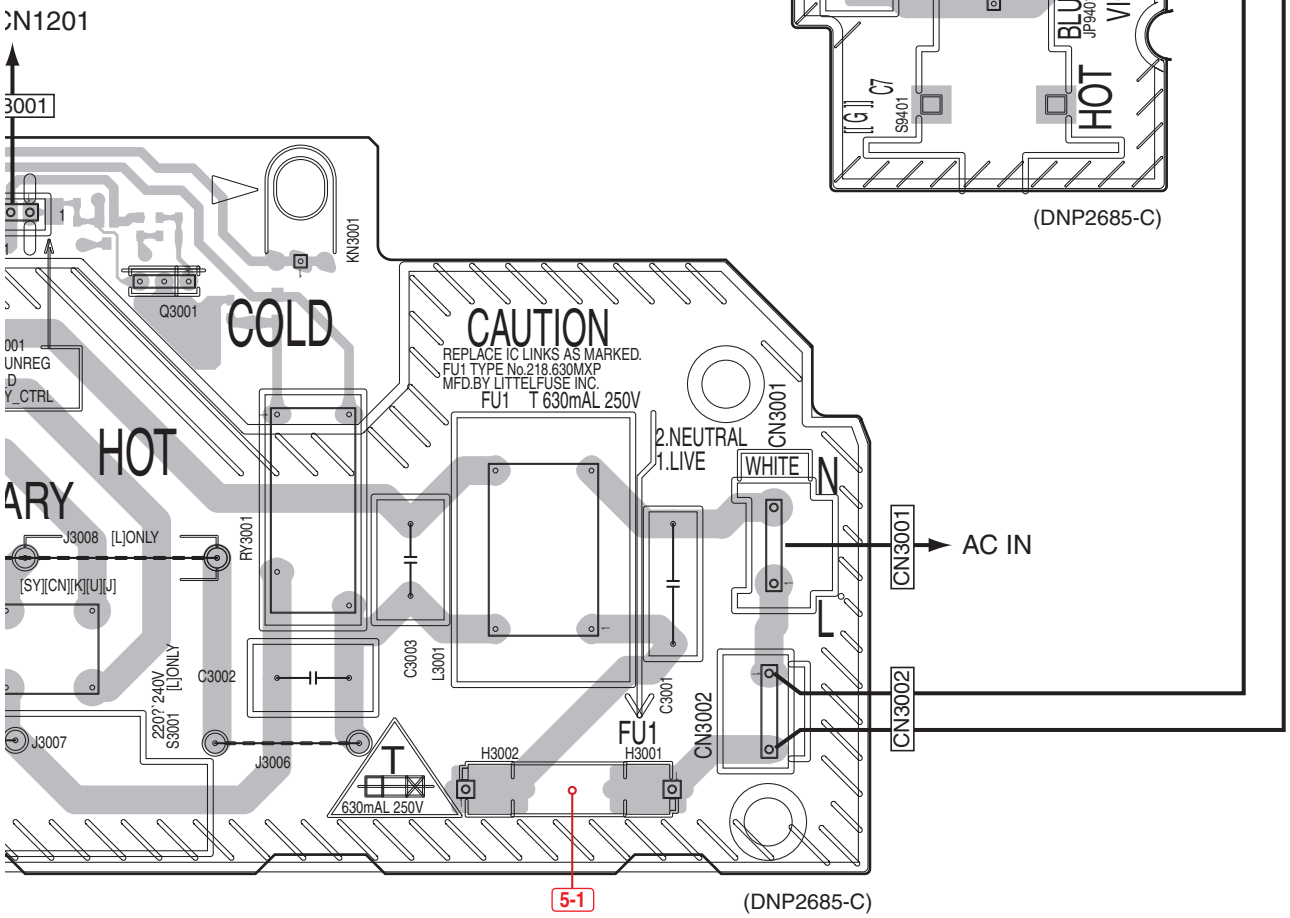

(DNP2685-C)

Q3001

SIDE B

P

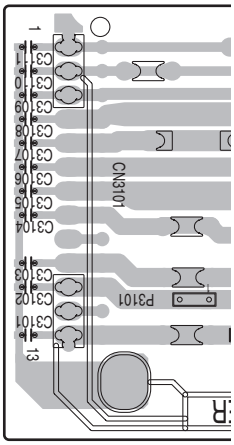

R ACSW ASSY

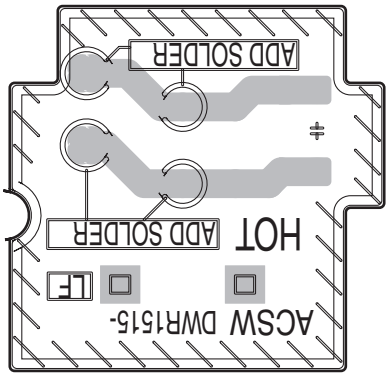

(DNP2685-C)

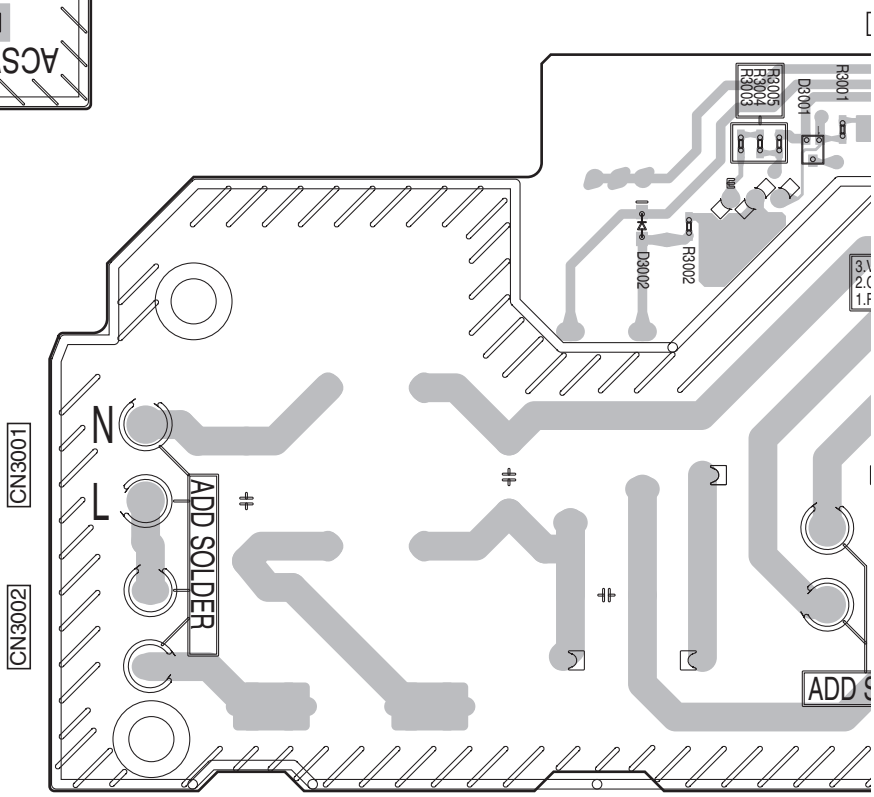

P Q R

SIDE B

P TRANS ASSY

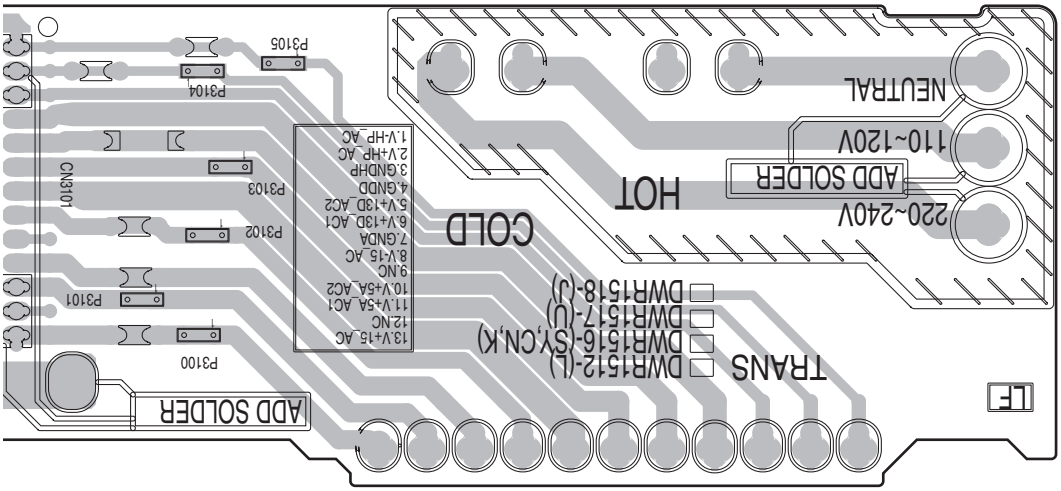

(DNP2685-C)

Q PRIMARY ASSY

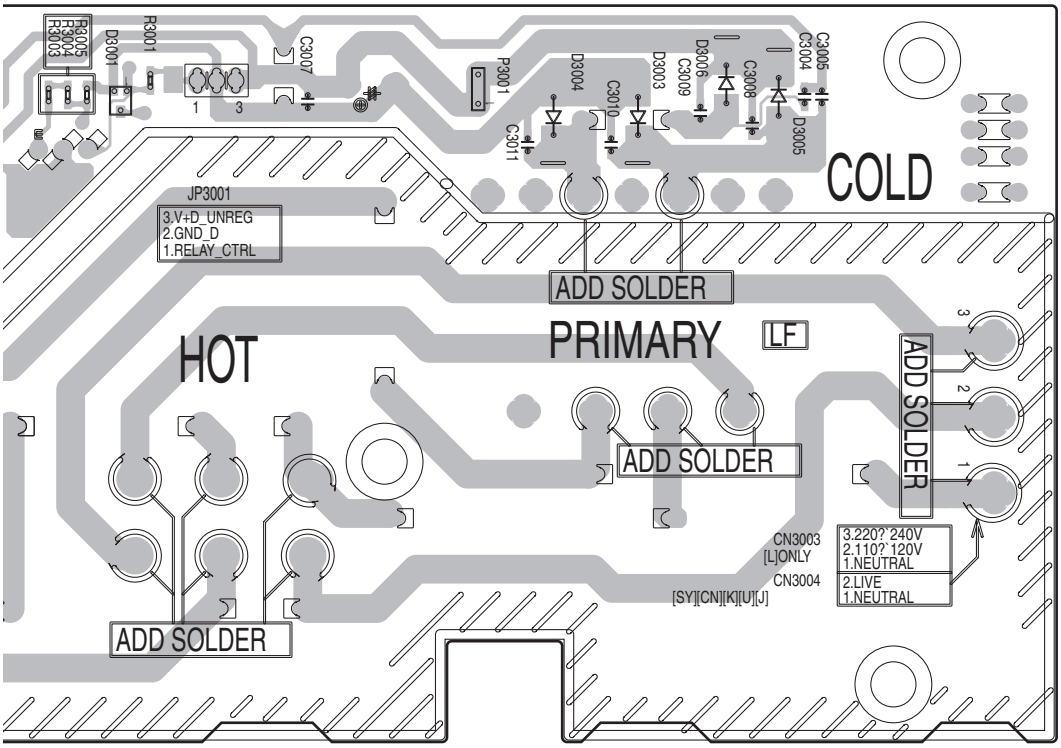

(DNP2685-C)

12. PCB PARTS LIST

NOTES: ● *Parts marked by "NSP" are generally unavailable because they are not in our Master Spare Parts List.*

● *The ⚠ mark found on some component parts indicates the importance of the safety factor of the part. Therefore, when replacing, be sure to use parts of identical designation.*

● *When ordering resistors, first convert resistance values into code form as shown in the following examples.*

Ex.1 When there are 2 effective digits (any digit apart from 0), such as 560 ohm and 47 k ohm (tolerance is shown by J = 5%, and K = 10%).

560 Ω	→	56×10^1	→	561	RD1/4PU 5 6 1 J
47 kΩ	→	47×10^3	→	473	RD1/4PU 4 7 3 J
0.5 Ω	→	R50			RN2H R 5 0 K
1 Ω	→	1R0			RS1P 1 R 0 K

Ex.2 When there are 3 effective digits (such as in high precision metal film resistors).

5.62 kΩ	→	562×10^1	→	5621	RN1/4PC 5 6 2 1 F

● *Meaning of the figures and others in the parentheses in the parts list.*

Example) IC 301 is on the point (face A, 91 of x-axis, and 111 of y-axis) of the corresponding PC board.
IC 301 (A, 91, 111) IC NJM2068V

LIST OF ASSEMBLIES

Mark	No. Description	Part No.
NSP	1..MOTHER ASSY	DWM2464
	2..MAIN ASSY	DWX3360
	2..USBI ASSY	DWX3361
NSP	1..AUDIO ASSY	DWM2465
	2..REG ASSY	DWR1510
	2..SEC/HP ASSY	DWR1511
	2..INPUT ASSY	DWX3362
	2..HPJK ASSY	DWX3363
	2..FAD1 ASSY	DWX3366
	2..FAD2 ASSY	DWX3367
	2..FAD3 ASSY	DWX3368
	2..FAD4 ASSY	DWX3369
	2..FADC ASSY	DWX3370
NSP	1..SUB ASSY (SYXJ8, KXJ5, XJCN5)	DWM2471
NSP	1..SUB ASSY (UXJCB)	DWM2472
NSP	1..SUB ASSY (LXJ)	DWM2466
	2..ACSW ASSY	DWR1515
	2..TRANS ASSY (SYXJ8, KXJ5, XJCN5)	DWR1516
	2..TRANS ASSY (UXJCB)	DWR1517
	2..TRANS ASSY (LXJ)	DWR1512
	2..PRIMARY ASSY (SYXJ8, KXJ5, XJCN5)	DWR1519
	2..PRIMARY ASSY (UXJCB)	DWR1520
	2..PRIMARY ASSY (LXJ)	DWR1509
	2..PNLB ASSY	DWX3365
	2..MIC1 ASSY	DWX3371
	2..MTRM ASSY	DWX3372
	1..PNLA ASSY	DWX3359

CONTRAST OF PCB ASSEMBLIES

P TRANS ASSY

DWR1516, DWR1517 and DWR1512 are constructed the same except for the following:

Mark	Symbol and Description	DWR1516	DWR1517	DWR1512
⚠	JP3102 Board in jumper/2P	DDX1284	DDX1284	Not used
⚠	JP3101 Board in jumper/3P	Not used	Not used	DDX1285

Q PRIMARY ASSY

DWR1519, DWR1520 and DWR1509 are constructed the same except for the following:

Mark	Symbol and Description	DWR1519	DWR1520	DWR1509
⚠	T3001 Transformer	DTT1245	DTT1255	DTT1242
⚠	S3001 Voltage selector	Not used	Not used	AKX7020
⚠	CN3004 Connector	B2P3-VH	B2P3-VH	Not used
⚠	CN3003 Connector (VH)	Not used	Not used	B3P5-VH

PARTS LIST (DJM-850-K/SYXJ8)

A INPUT ASSY

SEMICONDUCTORS

Mark	No. Description	Part No.
	IC 4001,4201	NJM4580D
	IC 4002-4005,4202-4205	NJM2121MD
	IC 4401	NJM4565MD
	IC 4601,4603	NJM4580MD
	IC 4602	TC7SET04FUS1
	Q 4001-4004,4201-4204	2SK209
	Q 4005,4006,4205,4206	LTC114EUB
	Q 4601	LTC124EUB

Mark	No.	Description	Part No.
	Q 4602,4603		2SK209
	D 4604,4605		HZU6R2(B3)
MISCELLANEOUS			
	JA 4001,4002,4201,4202	JACK	DKB1083
	JA 4401	HEADPHONE JACK	XKB3066
	JA 4402,4601	MIC JACK	DKN1614
	JA 4602	CONNECTOR	DKN1188
	CN 4601,4602	CONNECTOR	CKS3561
	CN 4801	L-PLUG (4P)	KM200NA4L
	CN 4802	25P CONNECTOR	VKN1285
	CN 4803	22P CONNECTOR	VKN1282
	0	SHIELD CASE (MIDI)	DNH2736
	VA 4601-4603	VARISTORS	EZJZ1V270RM
RESISTORS			
	R 4003-4010,4205-4212		RN1/16SE1000D
	R 4017-4024,4219-4226		RN1/16SE4702D
	R 4025,4027,4029,4030		RN1/16SE1501D
	R 4026,4028,4228,4230		RN1/16SE2401D
	R 4033,4035,4235,4237		RS1/10SR1500D
	R 4037,4038,4239,4240		RN1/16SE8201D
	R 4041,4042,4243,4244		RN1/16SE1003D
	R 4043-4046,4227,4229		RN1/16SE1501D
	R 4047-4050,4249-4252		RN1/16SE1201D
	R 4055,4257,4802		RS1/8SQ0R0J
	R 4231,4232,4245-4248		RN1/16SE1501D
	R 4405,4406		RS1/10SR3302D
	R 4409,4410		RS1/10SR1602D
	R 4607,4609,4610,4633		RN1/16SE2200D
	R 4612,4613		RN1/16SE1002D
	R 4615,4625		RN1/16SE1202D
	R 4616		RS1/10SR6800D
	R 4617		RN1/16SE2002D
	R 4618,4622		RN1/16SE4701D
	R 4619,4621		RN1/16SE1501D
	R 4620		RN1/16SE8200D
	R 4623		RN1/16SE1500D
	R 4630-4632,4634		RN1/16SE3900D
	R 4635,4638,4639		RN1/16SE2200D
	Other Resistors		RS1/10SR###J
CAPACITORS			
	C 4001-4008,4201-4208		CCSRCH102J50
	C 4009-4016,4209-4216		CCSRCH101J50
	C 4017,4018,4217,4218		CCSRCH471J50
	C 4019,4020,4219,4220		CKSRYB223K50
	C 4021,4023,4221,4223		CCSRCH331J50
	C 4022,4024,4222,4224		CEAT221M10
	C 4026,4028,4226,4228		CFTLA103J50
	C 4029,4030,4033-4036		CKSRYB104K25
	C 4031,4032,4231,4232		CEANP100M35
	C 4037,4040,4043,4044		CEAT470M35
	C 4038,4039,4041,4042		CKSRYB104K25
	C 4045,4046,4245,4246		CKSRYB104K16
	C 4047-4050,4237,4240		CEAT470M35
	C 4229,4230,4233-4236		CKSRYB104K25
	C 4238,4239,4241,4242		CKSRYB104K25
	C 4243,4244,4247-4250		CEAT470M35
	C 4401,4402,4625,4626		CCSRCH101J50
	C 4403,4404		CCSRCH102J50
	C 4405,4408		CEAT470M25
	C 4406,4407,4602,4611		CKSRYB103K50

Mark	No.	Description	Part No.
	C 4409		CFTLA103J50
	C 4601		CCSRCH222J50
	C 4605		CKSRYB471K50
	C 4606		CCSRCH331J50
	C 4607,4613		CCSRCH471J50
	C 4609,4808		CKSRYB104K16
	C 4610		CCSRCH221J50
	C 4612		CKSRYB331K50
	C 4614,4615,4622,4623		CKSRYB104K25
	C 4616-4619		CEANP100M35
	C 4627,4803,4804		CKSQYB105K25
	C 4628		CCG1236
	C 4801,4802		CEAT101M25
	C 4805,4806,4809		CKSRYB103K50
	C 4807		CEAT101M10

B MIC1 ASSY

SEMICONDUCTORS

	D 9001-9004		RKZ15KG(B2)
MISCELLANEOUS			
	JA 9001	CANON CONNECTOR	DKB1108
	CN 9001	PLUG	CKS3533
	0	MIC SHIELD	DNF1849
RESISTORS			
	All Resistors		RS1/10SR###J
MISCELLANEOUS			
	VA 9001,9002	VARISTORS	EZJZ1V270RM
CAPACITORS			
	C 9001,9002		CFTLA103J50
	C 9009		CKSQYB105K25

C MTRM ASSY

MISCELLANEOUS

	VR 8801,8802	ROTARY VR	DCS1123
	CN 8801	PLUG	CKS3533

D MAIN ASSY

SEMICONDUCTORS

	IC 201		PCM1691DCA
	IC 301,302,402,1601		NJM4580MD
	IC 303,304		NJM2114D
	IC 401,502,602,1603		NJM4565MD
	IC 503,504		NJM4580D
	IC 601		AK4387ET
	IC 1001		AK4382AVT
	IC 1401		NJM2831F33
⚠	IC 1402		S-1132B33-U5
⚠	IC 1403		NJM2392M
⚠	IC 1404		BD9325FJ
⚠	IC 1405,1408		BD9328EFJ
⚠	IC 1406		NJM2878F3-33
⚠	IC 1407		S-1132B25-U5
	IC 1409,2801		S-80927CNMC-G8X
	IC 1602,1801,1802,2001		NJM4580MD

Mark	No.	Description	Part No.
	IC 1604,1804,2004,2204		PCM1804DB
	IC 1803,2003,2203		NJM4565MD
	IC 2002,2201,2202		NJM4580MD
	IC 2401,2402		AK5358AET
	IC 2601,2602		TC7SH08FUS1
	IC 2603		ADSP-BF525BBCZ-5A
	IC 2604		M12L64164A-5TG2M
	IC 2802		DYW1807
	IC 2803		DYW1806
	IC 2804,3004-3006,3204		TC74VHC08FK
	IC 3007		XC3S50A-4FTG256C
	IC 3008		DYW1808
	IC 3201		D810K013BZKB400
	IC 3202		M12L2561616A-5TG2A
	IC 3203		TC7SHU04FUS1
	IC 3205		TC7SG08FU
	IC 3405		AK4114VQ
	Q 201,203,208-215		LTC124EUB
	Q 202,1204,1205,1403		LSC4081UB
	Q 204,205,1402		LSA1576UB
	Q 301-304,403,404		2SK209
	Q 305-308,401,402		INC2002AC1
	Q 405-408,509-516		INC2002AC1
	Q 505-508,601,602		2SK209
	Q 603,604		INC2002AC1
	Q 1201,1202,1206		HN1A01FU
	Q 1207		HN1B04FU
	Q 1208		LTC114YUB
	Q 1401,1405,2802,2803		LTC124EUB
	Q 1404		LSC4081UB
	Q 1406,2804		LTA124EUB
	Q 3401		2SC2412K
	D 201-204,302-305		DZ2S180C
	D 301,503,1202		1SS352
	D 1201,1204,1205		1SS301
⚠	D 1203		1SR154-400
⚠	D 1403		RB160L-40
⚠	D 1406		CMS03
	D 1601-1604,1801-1804		1SS302
	D 2001-2004,2201-2204		1SS302
	D 2401,2402		1SS302
	D 2403,2404		RB706F-40

MISCELLANEOUS

Mark	No.	Description	Part No.
	L 201	FERRITE CORE	VTF1093
	L 1401	INDUCTOR (470 UH)	DTL1123
	L 1402,1403	POWER INDUCTOR	ATH7048
	L 1404	SMD SPL INDUCTOR	CTH1527
	L 2601	COIL	ATH7015
	L 2801	CHIP COIL	LCTAW330J2520
	L 3201	INDUCTOR	CTF1579
	F 2601,3001,3201	EMI FILTER	DTL1106
	JA 201,202	2P MINI JACK	VKN1034
	JA 301,302	CANON CONNECTOR	DKB1093
	JA 401	JACK	DKB1083
	JA 502,503	HEADPHONE JACK	DKN1622
	JA 601,602	MIC JACK	DKN1614
	JA 3401	1P JACK	DKB1089
	KN 201	SCREW PLATE	VNE1948
	KN 1201-1206	WRAPPING TERMINAL	CKF1089
	X 2601	CRYSTAL (24 MHz)	DSS1203
	X 2801	RESONATOR (20 MHz)	CSS1795
	X 3201	CRYSTAL(24.576 MHz)	DSS1204
	CN 1001	24P CONNECTOR	VKN1428
	CN 1002	17P CONNECTOR	VKN1421
	CN 1003	25P CONNECTOR	VKN1429
	CN 1004	22P CONNECTOR	VKN1426
	CN 1005	19P RECEPTACLE	AKP7199
	CN 1201	CONNECTOR	AKM1274
	CN 2602	CONNECTOR	AKM1276
	CN 2801	CONNECTOR	VKN1933
	0	CANON SHIELD	DNF1789
	0	PHONE SHIELD	DNF1875
	P 301,302	PROTECTOR (1 A)	AEK1073

RESISTORS

Mark	No.	Description	Part No.
	R 201,213,214		RS1/10SR0R0J
	R 235-251,256-265		RS1/10SR0R0J
	R 278-281,283-286		RS1/10SR0R0J
	R 301-308,533-540		RN1/16SE3301D
	R 309-316,325-332		RN1/16SE2402D
	R 317-324		RN1/16SE3001D
	R 333-340		RN1/16SE2701D
	R 341-344,403,404		RN1/16SE1002D
	R 345-352		RN1/16SE5601D
	R 354-361		RN1/16SE6801D
	R 362-365,419,422		DCN1200
	R 367,368,371,372		RN1/16SE2201D
	R 401,402,611,612		RS1/16SS3301D
	R 405,406,409,410		RS1/16SS2202D
	R 407,408,619,620		RS1/16SS2701D
	R 413,414		RS1/16SS2401D
	R 420,421		RN1/16SE1202D
	R 423,424		RN1/16SE3302D
	R 425,426		RS1/10SR100J
	R 427,428,542,545		DCN1200
	R 521,522		RN1/16SE5101D
	R 523,524,527,528		RN1/16SE5102D
	R 525,526		RN1/16SE4701D
	R 529,530		RN1/16SE3901D
	R 541,543,544,546		RN1/16SE1102D
	R 547,549,550,552		RN1/16SE1102D
	R 548,551		DCN1200
	R 554,555,558,559		RN1/16SE2201D
	R 607,1019,2412,2413		RAB4CQ103J
	R 613,614,617,618		RS1/16SS3002D
	R 615,616		RS1/16SS3001D
	R 621,622		RS1/4SA821J
	R 1075,1630,1631,1830		RS1/10SR0R0J
	R 1205		RS1/16SS1602D
	R 1206		RS1/16SS4302D
	R 1210,1239		RS1/16SS4702D
	R 1211		RS1/16SS6202D
	R 1213,1428,1431,1440		RS1/16SS1002D
	R 1214		RS1/16SS1001D
	R 1215		RS1/16SS2000D
	R 1216		RS1/16SS8200D
	R 1228-1230		RS1/4SA130J
	R 1231		RS1/16SS2701D
	R 1233,1240,1245		RS1/16SS3302D

Mark	No.	Description	Part No.
	R 1234,1429		RS1/16SS4701D
	R 1235		RS1/16SS2402D
	R 1236,1430		RS1/16SS2202D
	R 1242,1253		RS1/16SS1003D
	R 1244		RS1/16SS1202D
	R 1247		RS1/16SS6201D
	R 1248		RS1/16SS7500D
	R 1252		RS1/16SS8202D
	R 1403		RS1/10SR152J
	R 1404,1405		RS1/8SQ1R5J
	R 1407		RS1/10SR3902D
	R 1408		RS1/10SR1501D
	R 1412,1413,1435		RS1/10SR220J
	R 1415		RS1/10SR183J
	R 1421-1425		RS1/10SR153J
	R 1426		RS1/16SS7501D
	R 1427		RS1/16SS3902D
	R 1438		RS1/16SS2200D
	R 1439		RS1/16SS3301D
	R 1601-1608,1801-1808		RN1/16SE1002D
	R 1609-1612,1809-1812		RN1/16SE1101D
	R 1613-1616,1813-1816		RN1/16SE2200D
	R 1617-1628,1817-1828		RN1/16SE2401D
	R 1831,2030,2031,2230		RS1/10SR0R0J
	R 2001-2008,2201-2208		RN1/16SE1002D
	R 2009-2012,2209-2212		RN1/16SE1101D
	R 2013-2016,2213-2216		RN1/16SE2200D
	R 2017-2028,2217-2228		RN1/16SE2401D
	R 2231,2405,2408,2409		RS1/10SR0R0J
	R 2407,2411,2601,2604		RS1/8SQ0R0J
	R 2426,2606-2608,2611		RS1/10SR0R0J
	R 2627-2632,3217-3219		RAB4CQ820J
	R 2634,2843		RAB4CQ103J
	R 2642-2645,3202,3203		RAB4CQ680J
	R 2647-2650,2652,2660		RAB4CQ470J
	R 2657,2808,2861,2862		RS1/10SR0R0J
	R 2664-2666,3224,3225		RAB4CQ470J
	R 2668,3037,3209		RS1/8SQ0R0J
	R 2803		RS1/10SR474J
	R 2818		RAB4CQ222J
	R 2824,2835,2871,3038		RAB4CQ220J
	R 2827,2845,2850,2863		RAB4CQ0R0J
	R 2864		RAB4CQ0R0J
	R 2870,3226,3230,3427		RS1/10SR0R0J
	R 3039		RAB4CQ220J
	R 3042,3046,3050,3063		RAB4CQ330J
	R 3057,3058,3264,3265		RAB4CQ101J
	R 3093-3096,3201,3204		RAB4CQ330J
	R 3205,3206		RAB4CQ680J
	R 3207,3208,3211,3212		RAB4CQ330J
	R 3216		RAB4CQ330J
	R 3221-3223		RAB4CQ820J
	R 3228,3229		RAB4CQ470J
	R 3231		RS1/10SR105J
	R 3240		RAB4CQ102J
	R 3423		RN1/16SE1802D
	R 3432		RS1/10SR680J
	Other Resistors		RS1/16SS###J

Mark	No.	Description	Part No.
CAPACITORS			
	C 202,1621,1821,2019		CCH1998
	C 203,222,231-238		CKSSYB104K10
	C 204,209,214,217		CKSSYB102K50
	C 206,211,212,601		CKSSYB103K16
	C 208,1203,1207,1212		CKSSYB103K25
	C 213,216,219,1408		CKSRYB105K10
	C 215,218,220,401		CEVW100M16
	C 249,605,1005,1201		CKSSYB102K50
	C 301-304		CCSRCH222J50
	C 305-308,523,524		CCSRCH471J50
	C 309-316		CCSSCH680J50
	C 317,321,335,348		CEHVAW101M25
	C 318-320,322,337		CKSRYB104K25
	C 323-326		CEHVAW471M16
	C 327-330		CKSSYB473K16
	C 338,339,344,345		CCSSCH101J50
	C 340,343,346,409		CKSRYB104K25
	C 349-352,531-534		CCSSCH101J50
	C 355-358		CEANP470M25
	C 359-362,427-430		CFHXSQ472J16
	C 402,566,567,608		CEVW100M16
	C 403,404		CCSQCH472J50
	C 405,406		CCSRCH821J50
	C 407,408,614,617		CKSRYB334K10
	C 410,412,417,422		CCG1236
	C 411,419,420,528		CKSRYB104K25
	C 413,414		CCSSCH560J50
	C 415,416,622,623		CKSRYB102K50
	C 423-426,553-556		CEVWNP100M35
	C 521,522,612,613		CCSRCH272J50
	C 525,526		CCSSCH270J50
	C 527,530,535,541		CCG1236
	C 529,561-564,616		CKSRYB104K25
	C 543-546,1405		CCSSCH101J50
	C 549-552,626,627		CFHXSQ472J16
	C 557-560		CCSSCH471J50
	C 602,607,1004		DCH1201
	C 603,604,1001,1003		CKSSYB104K10
	C 606,1002,1006,1204		CKSSYB103K16
	C 609,1626,1629,1635		CEVW100M16
	C 610,611		CCSQCH822J50
	C 615,621,1211,1404		CCG1236
	C 618,620		CCSSCH820J50
	C 619,1008,1209,1406		CKSRYB104K25
	C 624,625		CEVWNP100M35
	C 1007		CEVW221M25
	C 1009-1011,1202,1214		CKSSYB104K10
	C 1012,1216,1461		CKSRYB104K50
	C 1205,1206,1208,1410		CCSSCH102J50
	C 1210,1229-1232,1627		CKSSYB102K50
	C 1215,1233-1242,1464		CKSSYB103K16
	C 1217-1228,1402,1407		CKSSYB104K10
	C 1403		CEVW101M25
	C 1409,1438,2801,2809		CKSRYB105K10
	C 1411,1417,1430,1431		CCSSCH102J50
	C 1413,1415,1434		CCG1236
	C 1416		CEVW101M50
	C 1418,1419,1422,1423		CKSSYB104K10
	C 1420		CKSSYB223K16

Mark	No.	Description	Part No.
	C 1421		CKSSYB333K16
	C 1424-1427,1435,1441		DCH1201
	C 1428,1429,1436,1437		CKSSYB104K10
	C 1432		CEHVW101M10
	C 1433		CEHVW101M6R3
	C 1439,1448,1451,1453		CCSSCH102J50
	C 1440,1442-1444,1447		CKSSYB104K10
	C 1445,1446,2405,2408		DCH1201
	C 1449,3035		CCH1565
	C 1450,1452,1454,1456		CKSRYB104K25
	C 1455,1457,2636		CCSSCH102J50
	C 1465,1605-1608		CKSRYB104K25
	C 1613-1616,1813-1816		CCSSCH101J50
	C 1617,1618,1817,1818		CEVW470M25
	C 1620,1622,1623,1625		CKSSYB104K10
	C 1624,1631,1824,1831		CKSSYB272K50
	C 1628,1636,1827,1828		CKSSYB102K50
	C 1630,1633,1634,1820		CKSSYB104K10
	C 1632,1637,1832,1836		CKSSYB103K16
	C 1805-1808,2005-2008		CKSRYB104K25
	C 1822,1823,1825,1830		CKSSYB104K10
	C 1826,1829,1835,2024		CEVW100M16
	C 1833,1834,2018,2020		CKSSYB104K10
	C 1837,2025,2026,2034		CKSSYB102K50
	C 2013-2016,2213-2216		CCSSCH101J50
	C 2021,2023,2028,2031		CKSSYB104K10
	C 2022,2029,2222,2229		CKSSYB272K50
	C 2027,2033,2224,2227		CEVW100M16
	C 2030,2035,2230,2235		CKSSYB103K16
	C 2032,2218,2220,2221		CKSSYB104K10
	C 2205-2208		CKSRYB104K25
	C 2219		CCH1998
	C 2223,2228,2231,2232		CKSSYB104K10
	C 2225,2226,2234,2418		CKSSYB102K50
	C 2233		CEVW100M16
	C 2401-2404		CEVW100M50
	C 2406,2407,2412,2413		CKSSYB104K10
	C 2410,2411,2414,2415		DCH1201
	C 2416,2417,2601,2602		CKSSYB104K10
	C 2419,2421,2423,2424		CKSSYB103K16
	C 2422,2615,2617,2621		CKSSYB102K50
	C 2603,3020		CEVW101M16
	C 2605,2606,2614,2619		DCH1201
	C 2607,2608,2611,2612		CKSSYB104K10
	C 2609,2610,2819-2827		CKSSYB471K50
	C 2616,2620,2622,2624		CKSSYB104K10
	C 2618,3253,3254		CCSSCH120J50
	C 2623,2625,2627,2629		CKSSYB102K50
	C 2626,2628,2630,2632		CKSSYB104K10
	C 2631		CCSSCH100D50
	C 2633,2638,2640,2644		CKSSYB103K16
	C 2634,2671,2814,2815		CKSSYB102K50
	C 2635,2637,2639,2642		CKSSYB104K10
	C 2641,2645,3010-3012		CCSSCH101J50
	C 2643,2647,2649		CKSSYB104K10
	C 2646,2648,2653-2657		CKSSYB103K16
	C 2661,2662,2670,2802		CKSSYB103K16
	C 2804,2805		CCSSCH6R0D50
	C 2808,3021,3036,3242		DCH1201

Mark	No.	Description	Part No.
	C 2810-2812,2829,2831		CKSSYB104K10
	C 2813,3044,3209-3211		CKSSYB103K16
	C 2817,3014,3016,3018		CKSSYB102K50
	C 2833,3013,3015,3017		CKSSYB104K10
	C 3019,3022-3034		CKSSYB104K10
	C 3037-3043,3201,3202		CKSSYB104K10
	C 3203		CEVW470M6R3
	C 3204		CEVW101M4
	C 3205,3206,3252,3255		CKSSYB104K10
	C 3207,3208		CKSSYB471K50
	C 3212,3214,3216,3218		CKSSYB102K50
	C 3213,3215,3217,3219		CKSSYB103K16
	C 3220,3222,3224,3226		CKSSYB102K50
	C 3221,3223,3225,3227		CKSSYB103K16
	C 3228,3230,3232,3234		CKSSYB102K50
	C 3229,3231,3233,3235		CKSSYB103K16
	C 3236,3251,3256		CKSSYB102K50
	C 3237,3239,3243-3249		CKSSYB103K16
	C 3238,3250,3257		CCSSCH101J50
	C 3240		CKSSYB105K6R3
	C 3258,3262,3263,3405		CKSSYB103K16
	C 3260,3261,3404,3406		CKSSYB104K10
	C 3407,3411,3413,3414		CKSSYB104K10
	C 3408,3409,3415,3417		DCH1201
	C 3410		CKSRYB474K10
	C 3412,3416		CKSSYB103K16
	C 3418		CKSSYB104K10

E SEC/HP ASSY

SEMICONDUCTORS

	IC 1		S-80927CNMC-G8X
	IC 101		NJM4565MD
	IC 102		NJM4580D
	Q 101,102		2SK209
	Q 103,104		INC2002AC1
	Q 105,107		KTC3209
	Q 106,108		KTA1281
⚠	D 1,2		RB060L-40
⚠	D 3,4,7,8		RB160L-40
⚠	D 5,6,9,10		1SR154-400
⚠	D 11,12		RB160L-40
⚠	TH 1,2		PTGL05AS3R9K2B51

MISCELLANEOUS

	KN 1,2,101	EARTH TERMINAL	AKF7002
	CN 1	CONNECTOR	B13B-EH
	CN 2,101	PLUG (4P)	KM200NA4
	CN 3	19P PLUG	AKM7077
	CN 4	10PJUMPER CONNECTOR	52147-1010
⚠	P 101	POLYSWITCH	RXEF075P

RESISTORS

	R 4		RS1/10SR1102D
	R 5		RS1/10SR1302D
	R 20		RS1/4SA0R0J
	R 21,24,25,136		RS1/8SQ0R0J
	R 101-104		RN1/16SE3901D
	R 105-108		RN1/16SE1502D
	R 109-112		RN1/16SE3301D
	R 114,115		RN1/16SE5601D

Mark	No.	Description	Part No.
R	120,121		RN1/16SE3001D
R	126,127		RD1/2VM471J
R	128,129		RN1/16SE1001D
R	130-133		RS2LMF330J
R	138,139,141		RS1/8SQ0R0J
Other Resistors			RS1/10SR###J

CAPACITORS

C	1-11		CKSRYB473K50
C	13-15,17-23		CCSRCH102J50
C	24		CEAT682M16
C	25		CEAT682M25
C	27,29,37,38		CKSRYB103K50
C	28,107,108,115		CKSRYB104K25
C	30		CKSRYB102K50
C	31,32		CEAT332M35
C	35,36		CEAT102M25
C	45,46,49,51		CKSRYB103K50
C	47,48		CEAT101M25
C	50		CEAT101M16
C	52		CKSRYB103K50
C	101,102,112,113		CCSRCH471J50
C	103-106		CCSRCH101J50
C	109,110		CEANP100M35
C	114,117		CEAT100M50
C	116		CKSRYB104K25
C	120,125		DCH1165
C	121-124		CKSRYB104K16
C	126,127		CEANP221M16

F USBI ASSY

MISCELLANEOUS

JA	3801	USB CONNECTOR	DKN1237
KN	3801	WRAPPING TERMINAL	CKF1089
CN	3801	L-PLUG (5P)	KM200NA5L

CAPACITORS

C	3801,3802		CCSRCH7R0D50
C	3803,3806		CCSSCH101J50
C	3805		DCH1201

G HPJK ASSY

MISCELLANEOUS

JA	9201	HEADPHONE JACK	DKN1622
CN	9201	L-PLUG (4P)	KM200NA4L
	0	PHONE SHIELD	DNF1875

RESISTORS

All Resistors			RS1/10SR###J

CAPACITORS

C	9203,9204		CKSRYB224K25
C	9205		CFTLA103J50

H PNLA ASSY

SEMICONDUCTORS

IC	6601		DYW1809
IC	6602-6604		TC74HC4052AF
IC	6605		NJM2903M
Q	6601,6638-6649		LSA1576UB
Q	6602		2SC5712
Q	6604		LTA114EUB
Q	6605-6619,6621		LSC4081UB
Q	6622,6624,6626,6628		LTC143EUB
Q	6623,6625,6627,6629		2SB1689
Q	6630,6632,6634,6636		LTC143EUB
Q	6631,6633,6635,6637		2SB1689
Q	6650		LTA143EUB
Q	6655-6658		LSA1576UB
D	6601,6625,6628-6631		SLI-343YYW(TUV)
D	6624,6735		SLI-343U8RC(HJKL)
D	6626,6627,6643,6644		SLI-343U8R(HJK)
D	6632-6640,6649-6657		SLR-343MC(NPQ)
D	6641,6642,6645-6648		SLI-343YYW(TUV)
D	6658,6661-6664		SLI-343YYW(TUV)
D	6659,6660,6678,6679		SLI-343U8R(HJK)
D	6665-6673,6684-6692		SLR-343MC(NPQ)
D	6674-6677,6680-6683		SLI-343YYW(TUV)
D	6693-6695,6698-6701		SLI-343YYW(TUV)
D	6696,6697,6711,6712		SLI-343U8R(HJK)
D	6702-6710,6717-6725		SLR-343MC(NPQ)
D	6713-6716,6727-6731		SLI-343YYW(TUV)
D	6726,6734,6736-6741		SLR343BC4T(JK)
D	6732		SLR343EC4T(LMN)
D	6742-6747,6749-6760		1SS352
D	6762,6763,6771-6778		1SS352

MISCELLANEOUS

L	6601	CHIP COIL	LCTAW330J2520
V	6601	VFD	DEL1071
VR	6601	VARIABLE RESISTOR	DCS1100
VR	6602	POTENTIOMETER	DCS1097
VR	6603-6606	VARIABLE RESISTOR	DCS1100
VR	6607	POTENTIOMETER	DCS1096
VR	6608,6609	VARIABLE RESISTOR	DCS1100
VR	6610,6615,6619	POTENTIONETER	DCS1095
VR	6611-6614	VARIABLE RESISTOR	DCS1100
VR	6616-6618	VARIABLE RESISTOR	DCS1100
VR	6620	POTENTIONETER	DCS1095
VR	6621-6624	ROTARY VR	DCS1086
S	6601-6608,6617-6620	TACT SWITCH	DSG1079
S	6612-6616	LEVER SWITCH	DSK1026
S	6621	SLIDE SWITCH	DSH1066
S	6622	ROTARY ENCODER	DSX1068
S	6623-6625,6627,6628	TACT SWITCH	DSG1079
S	6631-6634,6641-6644	TACT SWITCH	DSG1079
X	6601	CRYSTAL RESONATOR (20 MHz)	VSS1167
CN	6601	24P CONNECTOR	VKN1255
CN	6602	17P CONNECTOR	VKN1248
CN	6603	27P CONNECTOR	VKN1258
CN	6609	PLUG (3P)	KM200NA3Y
CN	6610	PLUG (3P)	KM200NA3R
CN	6611	PLUG (3P)	KM200NA3
CN	6612	PLUG (3P)	KM200NA3E
	0	FL HOLDER	DNF1869

RESISTORS

R	6616		RS1/10SR1202F
R	6617		RS1/10SR8201D
R	6884,6896-6899		RS1/4SA100J

Mark	No.	Description	Part No.
	R 6901-6905		RS1/4SA100J
	Other Resistors		RS1/10SR###J
	CAPACITORS		
	C 6601,6602,6608,6645		CEAT101M16
	C 6603,6604,6609,6611		CKSRYB104K16
	C 6606,6622		CCSRCH102J50
	C 6607,6623,6629,6640		CKSRYB103K50
	C 6610,6612		CKSRYB104K50
	C 6614-6617		CCSRCH101J50
	C 6618,6619,6624,6625		CKSRYB104K16
	C 6620,6621		CCG1205
	C 6626,6631		CKSRYB105K10
	C 6627		DCH1201
	C 6628,6630,6632,6633		CKSRYB104K16
	C 6634,6635		CCSRCH6R0D50
	C 6641-6644,6654-6663		CKSRYB104K16
	C 6664-6675,6685-6696		CKSRYB471K50
	C 6676,6679,6680		CKSRYB104K16
	C 6697-6719		CKSRYB104K16
	C 6720-6725		CKSRYB103K50
	C 6728		CCG1255

I PNLB ASSY

Mark	No.	Description	Part No.
	SEMICONDUCTORS		
	Q 7002		LSC4081UB
	D 7005,7007		SLI-343YYW(TUV)
	D 7012-7027		1SS352
	MISCELLANEOUS		
	VR 7001,7004	POTENTIOMETER	DCS1096
	VR 7002	POTENTIOMETER	DCS1097
	VR 7003	VARIABLE RESISTOR	DCS1100
	S 7001	12MM GS ENCODER	DSX1064
	S 7002	ROTARY SWITCH	DSG1098
	S 7007	TACT SWITCH	DSG1079
	S 7008,7014	SLIDE SWITCH	DSH1066
	S 7009-7013,7015	SLIDE SWITCH	DSH1058
	CN 7001	27P CONNECTOR	VKN1258
	CN 7002	PLUG (3P)	KM200NA3
	RESISTORS		
	All Resistors		RS1/10SR###J
	CAPACITORS		
	C 7002,7005,7008,7010		CKSRYB104K16
	C 7004,7006		CEAT470M25
	C 7007,7009		CKSRYB103K50
	C 7012,7015,7016,7018		CKSRYB104K16

J FADC ASSY

Mark	No.	Description	Part No.
	MISCELLANEOUS		
	VR 8001	VARIABLE RESISTOR	DCV1006
	CN 8001	L-PLUG (3P)	KM200NA3L
	RESISTORS		
	All Resistors		RS1/10SR###J

K FAD1 ASSY

Mark	No.	Description	Part No.
	MISCELLANEOUS		
	VR 7201	SLIDE VR	DCV1027
	CN 7201	PLUG (3P)	KM200NA3

L FAD2 ASSY

Mark	No.	Description	Part No.
	MISCELLANEOUS		
	VR 7401	SLIDE VR	DCV1027
	CN 7401	PLUG (3P)	KM200NA3R

M FAD3 ASSY

Mark	No.	Description	Part No.
	MISCELLANEOUS		
	VR 7601	SLIDE VR	DCV1027
	CN 7601	PLUG (3P)	KM200NA3E

N FAD4 ASSY

Mark	No.	Description	Part No.
	MISCELLANEOUS		
	VR 7801	SLIDE VR	DCV1027
	CN 7801	PLUG (3P)	KM200NA3Y

O REG ASSY

Mark	No.	Description	Part No.
	SEMICONDUCTORS		
⚠	IC 5001		BA05T
⚠	IC 5002		NJM7815FA
⚠	IC 5003		NJM7915FA
	D 5004,5005		RB501V-40
	MISCELLANEOUS		
	CN 5001	10PJUMPER CONNECTOR	52147-1010
	CAPACITORS		
	C 5001-5003,5010,5011		CKSRYB103K50
	C 5004-5006		CKSRYB104K16
	C 5007		CCG1205
	C 5008,5009		CKSQYB105K25
	C 5013,5014,5016		CKSRYB102K50
	C 5015		CKSRYB103K50

P TRANS ASSY

Mark	No.	Description	Part No.
	MISCELLANEOUS		
⚠	JP 3102	BOARD IN JUMPER/2P	DDX1284
	CAPACITORS		
	C 3101-3104,3106,3107		CKSRYB104K50
	C 3110,3111		CKSRYB104K50

Q PRIMARY ASSY

Mark	No.	Description	Part No.
	SEMICONDUCTORS		
	Q 3001		KTC3209
	D 3001		1SS302
	D 3002		1SS352
⚠	D 3003-3006		1SR154-400
	MISCELLANEOUS		
⚠	L 3001	FILTER	DTL1131
	H 3001,3002	FUSE CLIP	AKR1004

Mark	No.	Description	Part No.
	KN 3001	EARTH TERMINAL	AKF7002
⚠	RY 3001	RELAY	ASR7029
⚠	T 3001	TRANSFOMER (SY)	DTT1245
⚠	CN 3001	AC CODE SOCKET	RKP1751
⚠	CN 3002,3004	CONNECTOR	B2P3-VH
	JP 3001	CONNECTOR ASSY	PF03PG-Q07

RESISTORS

	R 3002		RS1/10SR330J
	Other Resistors		RS1/10SR####F

CAPACITORS

⚠	C 3001		ACE7027
⚠	C 3003		ACG7030
	C 3004,3005		CKSRYB473K50
	C 3006		CEAT222M25
	C 3007		CKSRYB103K50

R ACSW ASSY

MISCELLANEOUS

⚠	S 9401	SWITCH	DSA1037
⚠	0	MASK	DEC3212
⚠	JP 9401	CONNECTOR ASSY 2P	DKP3847

CAPACITORS

⚠	C 9401		ACG7030