Pioneer sound.vision.soul

Service Manual

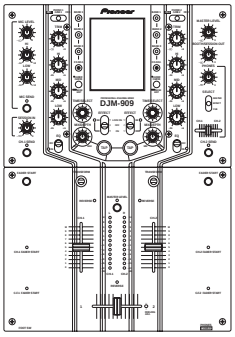

DJM-909

ORDER NO.
RRV2871

DJ MIXER

DJM-909

THIS MANUAL IS APPLICABLE TO THE FOLLOWING MODEL(S) AND TYPE(S).

Model	Type	Power Requirement	Remarks
DJM-909	KUCXJ	AC120V	
DJM-909	WYXJ	AC220 - 240V	
DJM-909	TLTXJ	AC110 - 240V	

For details, refer to "Important symbols for good services" .

PIONEER CORPORATION 4-1, Meguro 1-chome, Meguro-ku, Tokyo 153-8654, Japan
PIONEER ELECTRONICS (USA) INC. P.O. Box 1760, Long Beach, CA 90801-1760, U.S.A.
PIONEER EUROPE NV Haven 1087, Keetberglaan 1, 9120 Melsele, Belgium
PIONEER ELECTRONICS ASIACENTRE PTE. LTD. 253 Alexandra Road, #04-01, Singapore 159936
ⒸPIONEER CORPORATION 2003
T-ZZY DEC. 2003 printed in Japan

SAFETY INFORMATION

This service manual is intended for qualified service technicians ; it is not meant for the casual do-it-yourselfer. Qualified technicians have the necessary test equipment and tools, and have been trained to properly and safely repair complex products such as those covered by this manual.
Improperly performed repairs can adversely affect the safety and reliability of the product and may void the warranty. If you are not qualified to perform the repair of this product properly and safely, you should not risk trying to do so and refer the repair to a qualified service technician.

WARNING
This product contains lead in solder and certain electrical parts contain chemicals which are known to the state of California to cause cancer, birth defects or other reproductive harm.

Health & Safety Code Section 25249.6 – Proposition 65

(FOR USA MODEL ONLY)

1. SAFETY PRECAUTIONS

The following check should be performed for the continued protection of the customer and service technician.

LEAKAGE CURRENT CHECK

Measure leakage current to a known earth ground (water pipe, conduit, etc.) by connecting a leakage current tester such as Simpson Model 229-2 or equivalent between the earth ground and all exposed metal parts of the appliance (input/output terminals, screwheads, metal overlays, control shaft, etc.). Plug the AC line cord of the appliance directly into a 120V AC 60Hz outlet and turn the AC power switch on. Any current measured must not exceed 0.5mA.

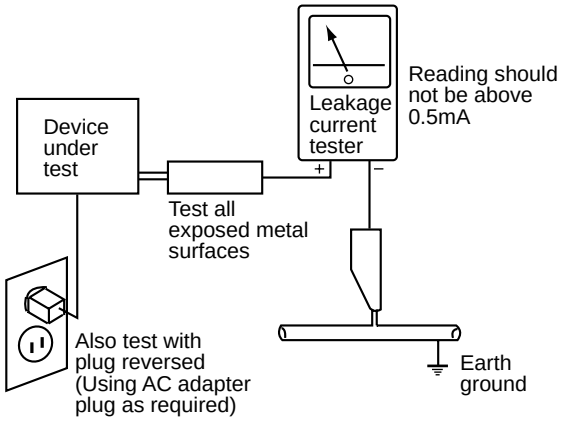

AC Leakage Test

ANY MEASUREMENTS NOT WITHIN THE LIMITS OUTLINED ABOVE ARE INDICATIVE OF A POTENTIAL SHOCK HAZARD AND MUST BE CORRECTED BEFORE RETURNING THE APPLIANCE TO THE CUSTOMER.

2. PRODUCT SAFETY NOTICE

Many electrical and mechanical parts in the appliance have special safety related characteristics. These are often not evident from visual inspection nor the protection afforded by them necessarily can be obtained by using replacement components rated for voltage, wattage, etc. Replacement parts which have these special safety characteristics are identified in this Service Manual.

Electrical components having such features are identified by marking with a ⚠ on the schematics and on the parts list in this Service Manual.
The use of a substitute replacement component which does not have the same safety characteristics as the PIONEER recommended replacement one, shown in the parts list in this Service Manual, may create shock, fire, or other hazards.

Product Safety is continuously under review and new instructions are issued from time to time. For the latest information, always consult the current PIONEER Service Manual. A subscription to, or additional copies of, PIONEER Service Manual may be obtained at a nominal charge from PIONEER.

[Important symbols for good services]
In this manual, the symbols shown-below indicate that adjustments, settings or cleaning should be made securely.
When you find the procedures bearing any of the symbols, be sure to fulfill them:

1. Product safety

You should conform to the regulations governing the product (safety, radio and noise, and other regulations), and should keep the safety during servicing by following the safety instructions described in this manual.

2. Adjustments

To keep the original performances of the product, optimum adjustments or specification confirmation is indispensable. In accordance with the procedures or instructions described in this manual, adjustments should be performed.

3. Cleaning

For optical pickups, tape-deck heads, lenses and mirrors used in projection monitors, and other parts requiring cleaning, proper cleaning should be performed to restore their performances.

4. Shipping mode and shipping screws

To protect the product from damages or failures that may be caused during transit, the shipping mode should be set or the shipping screws should be installed before shipping out in accordance with this manual, if necessary.

5. Lubricants, glues, and replacement parts

Appropriately applying grease or glue can maintain the product performances. But improper lubrication or applying glue may lead to failures or troubles in the product. By following the instructions in this manual, be sure to apply the prescribed grease or glue to proper portions by the appropriate amount.For replacement parts or tools, the prescribed ones should be used.

CONTENTS

SAFETY INFORMATION....2
1. SPECIFICATIONS....5
2. EXPLODED VIEWS AND PARTS LIST....6
2.1 PACKING....6
2.2 EXTERIOR SECTION....8
2.3 CONTROL PANEL (LOWER) SECTION....10
2.4 CONTROL PANEL (UPPER) SECTION....12
2.5 FRONT PANEL SECTION....14
3. BLOCK DIAGRAM AND SCHEMATIC DIAGRAM....16
3.1 BLOCK DIAGRAM....16
3.1.1 OVERALL BLOCK DIAGRAM....16
3.1.2 DSP/ LCD BLOCK DIAGRAM....18
3.2 OVERALL CONNECTION DIAGRAM....20
3.3 MAIN ASSY (1/6)....22
3.4 MAIN ASSY (2/6)....24
3.5 MAIN ASSY (3/6)....26
3.6 MAIN ASSY (4/6)....28
3.7 MAIN ASSY (5/6)....30
3.8 MAIN ASSY (6/6)....32
3.9 DSP ASSY (1/2)....34
3.10 DSP ASSY (2/2)....36
3.11 C1EQ ASSY (1/2)....38
3.12 C1EQ ASSY (2/2)....40
3.13 C2EQ ASSY....42
3.14 C1BF ASSY....44
3.15 C2BF ASSY....46
3.16 MICB ASSY....48
3.17 HPBO ASSY....50

3.18 FDVR ASSY 52
3.19 SDRT ASSY 54
3.20 XLR ASSY (1/2) 56
3.21 XLR ASSY (2/2) 58
3.22 LVMR (1/2), C1TR, C2TR, FVA1 and FVA2 ASSYS 60
3.23 LVMR ASSY (2/2) 62
3.24 CFVR, RVSW and FSSW ASSYS 64
3.25 LCD ASSY 66
3.26 SW POWER SUPPLAY 68
3.27 VOLTAGES 69
3.28 WAVEFORMS 75
4. PCB CONNECTION DIAGRAM 80
4.1 MAIN ASSY 80
4.2 DSP ASSY 84
4.3 C1EQ ASSY 86
4.4 C2EQ ASSY 87
4.5 C1BF ASSY 88
4.6 C2BF ASSY 89
4.7 MICB ASSY 90
4.8 HPBO ASSY 91
4.9 LVMR, C1TR, C2TR, FVA1, FVA2 and FDVR ASSYS 92
4.10 LVMR, C1TR, C2TR, FVA1, FVA2 and FDVR ASSYS 94
4.11 SDRT ASSYS 96
4.12 XLR ASSY 97
4.13 CFVR, RVSW and FSSW ASSYS 98
4.14 LCD ASSY 100
4.15 SW POWER SUPPLY 102
5. PCB PARTS LIST 104
6. ADJUSTMENT 112
6.1 ADJUSTMENT REQUIRED WHEN THE SET IS REPAIRED OR REPLACED 112
6.2 CH1 OFFSET ADJUSTMENT 114
6.3 CH1 GAIN ADJUSTMENT 115
6.4 CH2 OFFSET ADJUSTMENT 116
6.5 CH2 GAIN ADJUSTMENT 117
6.6 CH1 EQ Low ADJUSTMENT 118
6.7 CH1 EQ Mid ADJUSTMENT 119
6.8 CH1 EQ Hi ADJUSTMENT 120
6.9 CH2 EQ Low ADJUSTMENT 121
6.10 CH2 EQ Mid ADJUSTMENT 122
6.11 CH2 EQ Hi ADJUSTMENT 123
7. GENERAL INFORMATION 124
7.1 DIAGNOSIS 124
7.1.1 SERVICE MODE 124
7.1.2 Rewriting of the Software 128
7.1.3 POWER ON SEQUENCE 135
7.1.4 Table of the roles of the microcomputers 136
7.1.5 DISASSEMBLY 138
7.1.6 CONFIGURATION OF THE PC BOARD 144
7.2 PARTS 145
7.2.1 IC INFORMATION 145
8. PANEL FACILITIES AND SPECIFICATIONS 150

1. SPECIFICATIONS

Audio Section

Input terminal (input level/impedance)

CD 1, 2 ..... –14 dBV (200 mV) / 22 kΩ
LINE 1, 2 ..... –14 dBV (200 mV) / 47 kΩ
PHONO 1, 2 ..... –54 dBV (2 mV) / 47 kΩ
MIC .... –54 dBV (2 mV) / 3 kΩ
SESSION IN ..... –14 dBV (200 mV) / 22 kΩ
RETURN ..... –14 dBV (200 mV) / 22 kΩ

Output terminal (output level/impedance)

MASTER OUT 1 (XLR) ..... 0 dBV (1 V) / 600Ω
MASTER OUT 2 (RCA) ..... 0 dBV (1 V) / 1 kΩ
BOOTH / SESSION OUT ..... 0 dBV (1 V) / 1 kΩ
SEND ..... –14 dBV (200 mV) / 1 kΩ
PHONES ..... 6 dBV (2 V) / 22 Ω or less
(Rated load impedance 32 Ω)

Frequency characteristics

CD, LINE, MIC ..... 20 Hz to 20 kHz
PHONO (RIAA) ..... 20 Hz to 20 kHz

SN ratio

CD, LINE ..... 93 dB or more (EFFECT OFF)
PHONO..... 78 dB or more
MIC ..... 64 dB or more

Total harmonic distortion rate

CD, LINE ..... 0.02% or less
Cross talk (1 kHz) ..... 77 dB or more

Channel equalizer (CD, LINE/PHONO)

HI ..... +6 dB to –26 dB
MID..... +6 dB to –26 dB
LOW ..... +6 dB to –26 dB

Microphone equalizer (MIC)

HI ..... +12 dB to –12 dB
LOW ..... +12 dB to –12 dB

[KUCXJ type]
Electrical Section, etc.

Power supply voltage ..... AC 120 V, 60 Hz
Power consumption ..... 31 W
Operating temperature ..... +5 °C to +35 °C (41 °F to 95 °F)
Operating humidity ..... 5% to 85%
External dimensions ..... 251 (W) x 381.6 (D) x 107.9 (H) mm
9-7/8 (W) x 15 (D) x 4-1/4 (H) in
Weight ..... 6.5 kg
14 lbs 5 oz

Accessories

- Hexagonal Allen driver 1
- These operating instructions..... 1
- Warranty 1

[WYXJ type]
Electrical Section, etc.

Power supply voltage ..... AC 220-240 V, 50/60 Hz
Power consumption ..... 30 W
Operating temperature ..... +5°C to +35°C
Operating humidity ..... 5% to 85%
External dimensions ..... 251 (W) x 381.6 (D) x 107.9 (H) mm
Weight ..... 6.5 kg

Accessories

- Hexagonal Allen driver 1
- These operating instructions..... 1

[TLTXJ type]
Electrical Section, etc.

Power supply voltage ..... AC 110-240 V, 50/60 Hz
Power consumption ..... 30 W
Operating temperature ..... +5°C to +35°C
Operating humidity ..... 5% to 85%
External dimensions ..... 251 (W) x 381.6 (D) x 107.9 (H) mm
Weight ..... 6.5 kg

Accessories

- Hexagonal Allen driver 1
- These operating instructions..... 1

For improvement purposes, specifications and design may be subject to modification without notice.

Accessories

- Hexagonal Allen driver.....x1
  (DEX1018)

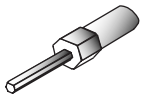

- Operating instructions..... x1
- Warranty..... x1

2. EXPLODED VIEWS AND PARTS LIST

NOTES:
- *Parts marked by "NSP" are generally unavailable because they are not in our Master Spare Parts List.*
- *The ⚠ mark found on some component parts indicates the importance of the safety factor of the part. Therefore, when replacing, be sure to use parts of identical designation.*
- *Screws adjacent to ▼ mark on product are used for disassembly.*
- *For the applying amount of lubricants or glue, follow the instructions in this manual. (In the case of no amount instructions, apply as you think it appropriate.)*

2.1 PACKING

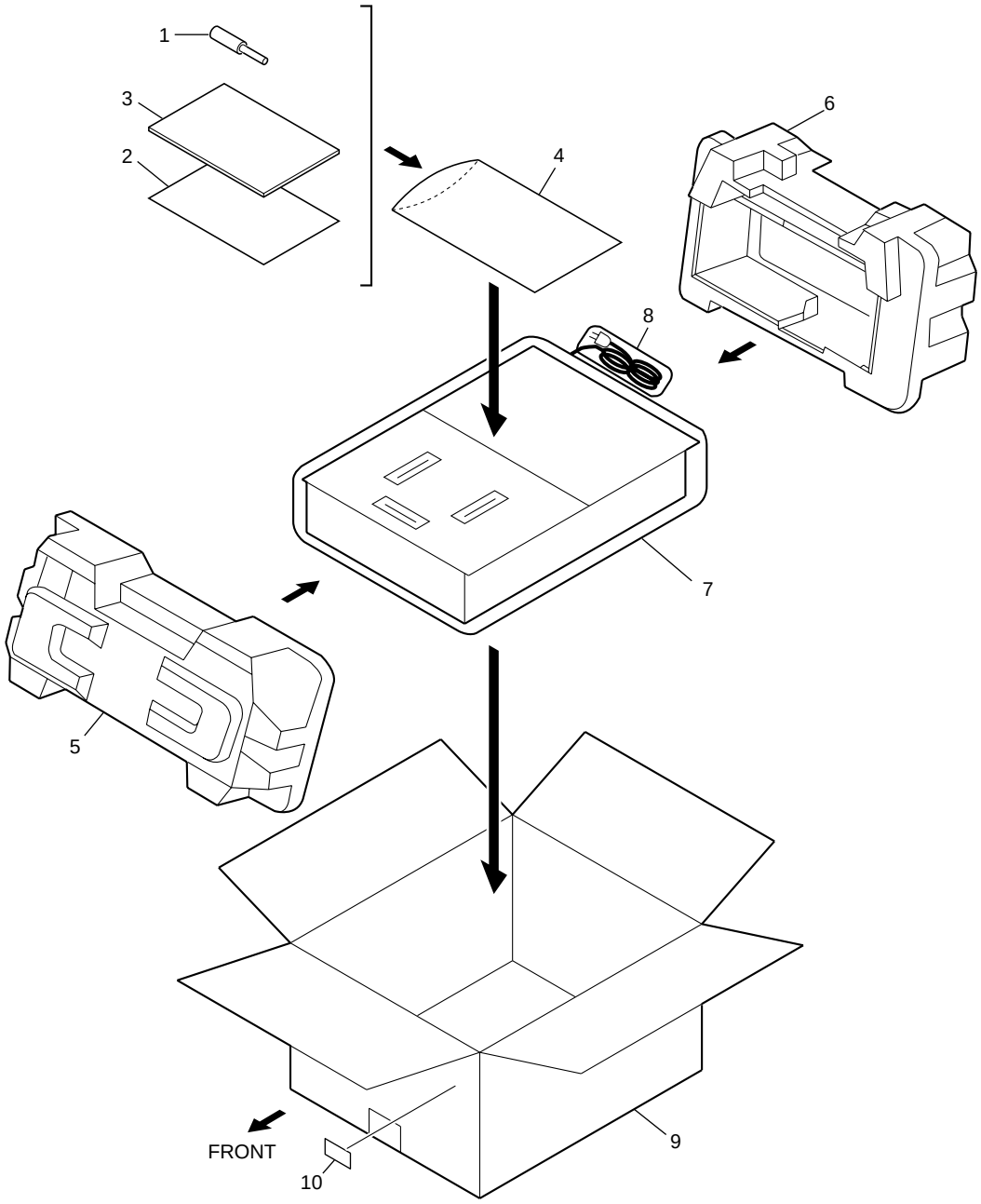

PACKING parts List

Mark	No.	Description	Part No.
	1	Hexagon Screwdriver	DEX1018
NSP	2	Warranty Card	See Contrast table(2)
	3	Operating Instructions	See Contrast table(2)
	4	Polyethylene Bag (0.03 x 230 x 340)	Z21-038
	5	Pad (A)	DHA1586
	6	Pad (B)	DHA1587
	7	Sheet	RHX1006
	8	Polyethylene Bag	VHL1051
	9	Packing Case	See Contrast table(2)
NSP	10	Label	VRW1629

(2) CONTRAST TABLE

DJM-909/ KUCXJ, DJM-909/ WYXJ and DJM-909/ TLTXJ are constructed the same except for the following :

Mark	No.	Symbol and Description	DJM-909 KUCXJ	DJM-909 WYXJ	DJM-909 TLTXJ
NSP	2	Warranty Card	ARY7043	Not used	Not used
	3	Operating Instructions (English)	DRB1349	Not used	Not used
	3	Operating Instructions (English/ French/ German/ Italian/ Duch/ Spanish)	Not used	DRB1350	Not used
	3	Operating Instructions (English/ Spanish/ Chinese)	Not used	Not used	DRB1351
	9	Packing Case	DHG2441	DHG2440	DHG2442

2.2 EXTERIOR SECTION

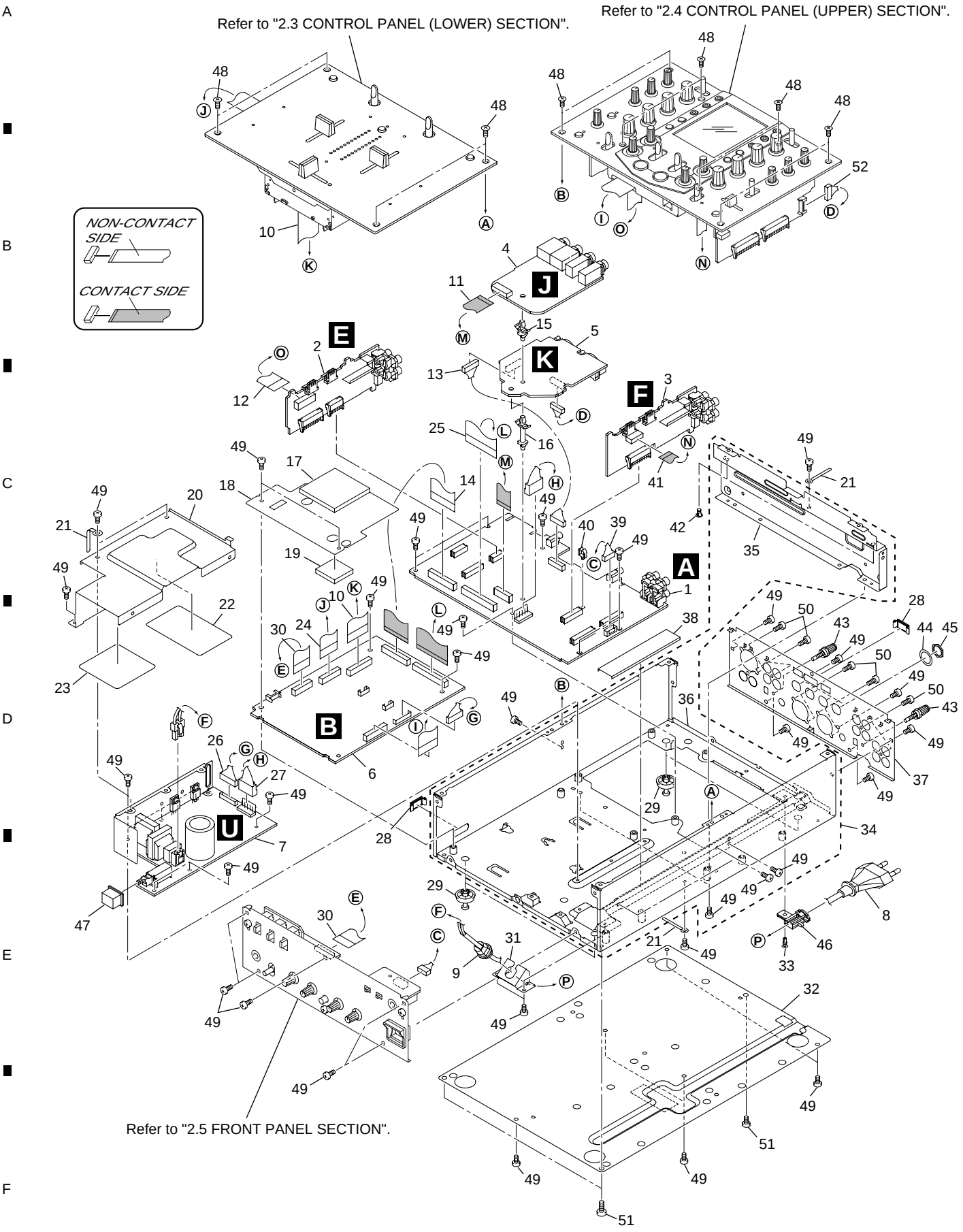

EXTERIOR SECTION Parts List

Mark	No.	Description	Part No.
	1	MAIN Assy	DWX2337
	2	C1BF Assy	DWS1328
	3	C2BF Assy	DWS1329
	4	SDRT Assy	DWX2321
	5	XLR Assy	DWX2322
	6	DSP Assy	DWX2316
⚠	7	SW POWER SUPPLY	DWR1377
⚠	8	AC Power Cord	See Contrast table(2)
⚠	9	Strain Relief	See Contrast table(2)
	10	Flexible Cable (23P)	DDD1239
	11	Flexible Cable (15P)	DDD1243
	12	Flexible Cable (17P)	DDD1234
	13	Connector Assy (9P)	DKP3662
	14	Flexible Cable (27P)	DDD1242
	15	Locking Card Spacer	PNW2917
NSP	16	PC Support	VEC1584
	17	Spacer B	DEC2622
	18	Shield Sheet G	DEC2610
	19	Spacer A	DEC2617
NSP	20	Shield Case	DNH2572
NSP	21	Cord Stopper	ZCB-069Z
	22	Shield Sheet B	DEC2570
	23	Shield Sheet C	DEC2584
	24	Flexible Cable (19P)	DDD1238
	25	Flexible Cable (35P)	DDD1241
	26	Connector Assy	PF08EE-D15
	27	Connector Assy	DKP3659
	28	Blind Cap	DNK4218
	29	Foot	REC-434
	30	Flexible Cable (17P)	DDD1246
	31	Cord Stopper Stay	DNH2576
NSP	32	Bottom Plate	DNH2570
	33	Rivet	RBM-003
NSP	34	Chassis (9) Assy	DXB1815
NSP	35	Partition Plate	DNH2573
NSP	36	Chassis (9)	DNA1296
NSP	37	Rear Panel	See Contrast table(2)
	38	Shield Sheet A	DEC2569
	39	Connector Assy (6P)	DKP3661
	40	Mini Clamp	DEC2588
	41	Flexible Cable (11P)	DDD1245
	42	Card Spacer	DNK2769
	43	Terminal Screw	AKE-031
	44	Washer	DBE1010
	45	Nut	NKX2FUC
	46	Cord Cover	DNK4197
	47	Power Knob	DAC2133
	48	Screw	CMZ30P100FZK
	49	Screw	BBZ30P060FZK
	50	Screw	BPZ30P080FMC
	51	Screw	BBZ40P120FMC
	52	Connector Assy (8P)	DKP3660

(2) CONTRAST TABLE

DJM-909/ KUCXJ, DJM-909/ WYXJ and DJM-909/ TLTXJ are constructed the same except for the following :

Mark	No.	Symbol and Description	DJM-909 KUCXJ	DJM-909 WYXJ	DJM-909 TLTXJ
⚠	8	AC Power Cord	VDG1075	VDG1077	VDG1077
⚠	9	Strain Relief	CM-22C	CM-22B	CM-22B
NSP	37	Rear Panel	DNC1656	DNC1655	DNC1657

2.3 CONTROL PANEL (LOWER) SECTION

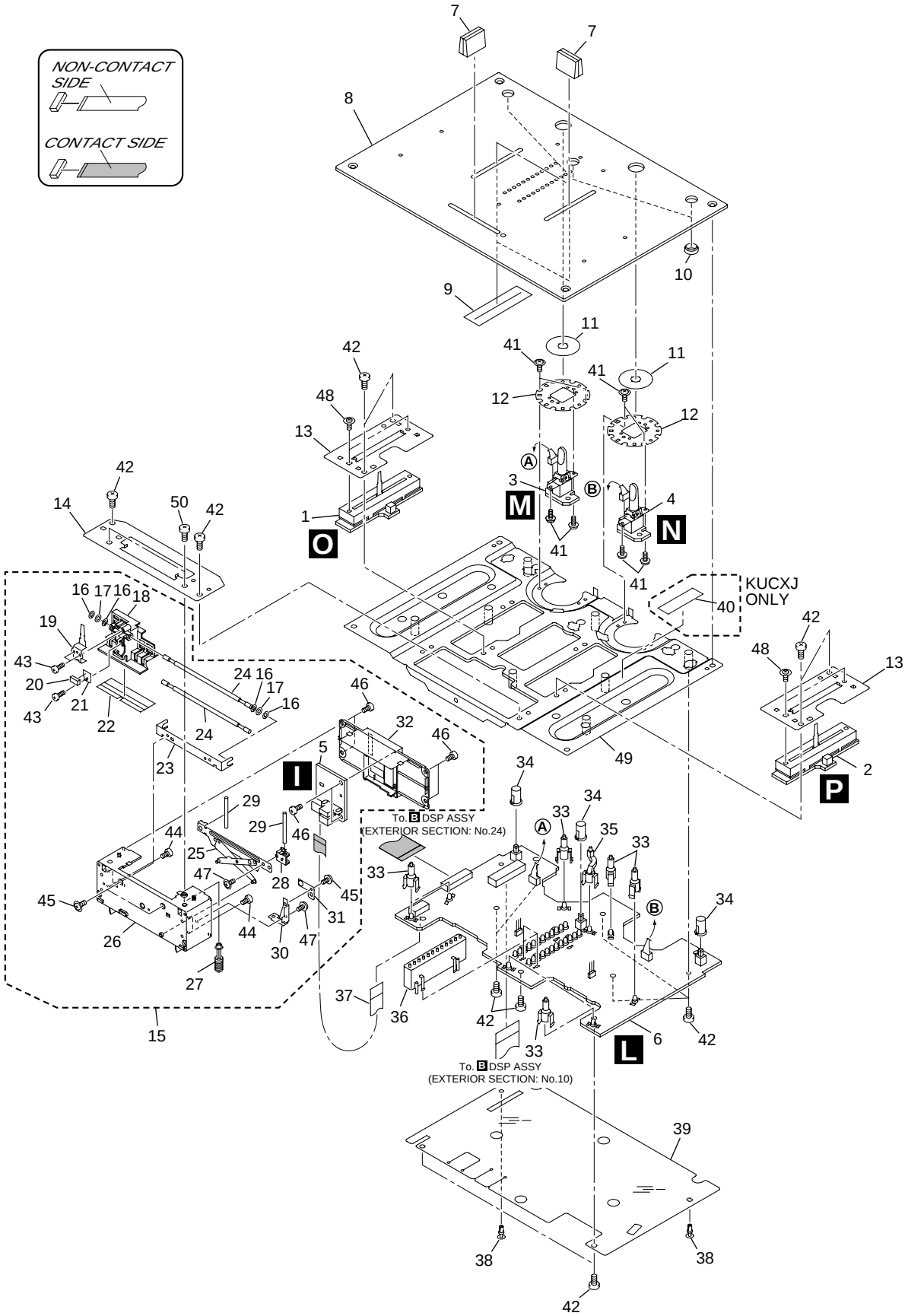

CONTROL PANEL (LOWER) SECTION Parts List

Mark	No.	Description	Part No.
	1	FVA1 Assy	DWX2323
	2	FVA2 Assy	DWX2324
	3	C1TR Assy	DWS1334
	4	C2TR Assy	DWS1335
	5	FDVR Assy	DWX2320
	6	LVMR Assy	DWS1330
	7	Slider Knob (L)	DNK4210
	8	Control Panel (D9)	DNB1121
	9	Fader Packing (A)	DEC2571
	10	Push SW Guide	DNK4208
	11	SW Packing (A)	DEC2573
	12	Transform Panel	DNF1682
	13	CH Fader Bracket	DNF1683
	14	CR Fader Bracket	DNF1684
	15	Cross Fader Assy-S	DXX2535
	16	Washer	WT28D060D025
	17	O Ring (2.8)	DEB1618
	18	Slider Base	DNK4192
	19	Lever Plate	DNH2564
	20	Fader Magnet	DMG1010
	21	Yoke	DNH2569
	22	Encoder Plate S	DEC2568
	23	Stopper S	DNH2578
	24	Guide Shaft	DLA1966
	25	MG Plate Assy	DXA1968
	26	Case A	DNK4193
	27	Worm gear S	DNK4195
	28	Rack gear S	DNK4196
	29	MG Shaft	DLA1947
	30	WG Holder	DNF1681
	31	WG Spring	DBK1245
	32	Case B	DNK4194
	33	LED Lens (C)	DNK4217
	34	Push SW Knob (B)	DNK4207
	35	LED Lens (B)	DNK4216
	36	Level Meter Holder	DNK4214
	37	Flexible Cable (9P)	DDD1240
	38	Rivet	RBM-003
	39	Shield Sheet (F)	DEC2591
	40	65 Label (S)	See Contrast table(2)
	41	Screw	AMZ26P040FMC
	42	Screw	BBZ30P060FZK
	43	Screw	BPZ20P060FMC
	44	Screw	CPZ26P100FZK
	45	Screw	AMZ20P040FMC
	46	Screw	BPZ20P050FMC
	47	Screw	PBA1062
	48	Thin Head Screw	DBA1198
NSP	49	Panel Stay (D) Assy	DXB1787
	50	Screw	BPZ30P080FMC

(2) CONTRAST TABLE

DJM-909/ KUCXJ, DJM-909/ WYXJ and DJM-909/ TLTXJ are constructed the same except for the following :

Mark	No.	Symbol and Description	DJM-909 KUCXJ	DJM-909 WYXJ	DJM-909 TLTXJ
	40	65 Label (S)	DRW2164	Not used	Not used

2.4 CONTROL PANEL (UPPER) SECTION

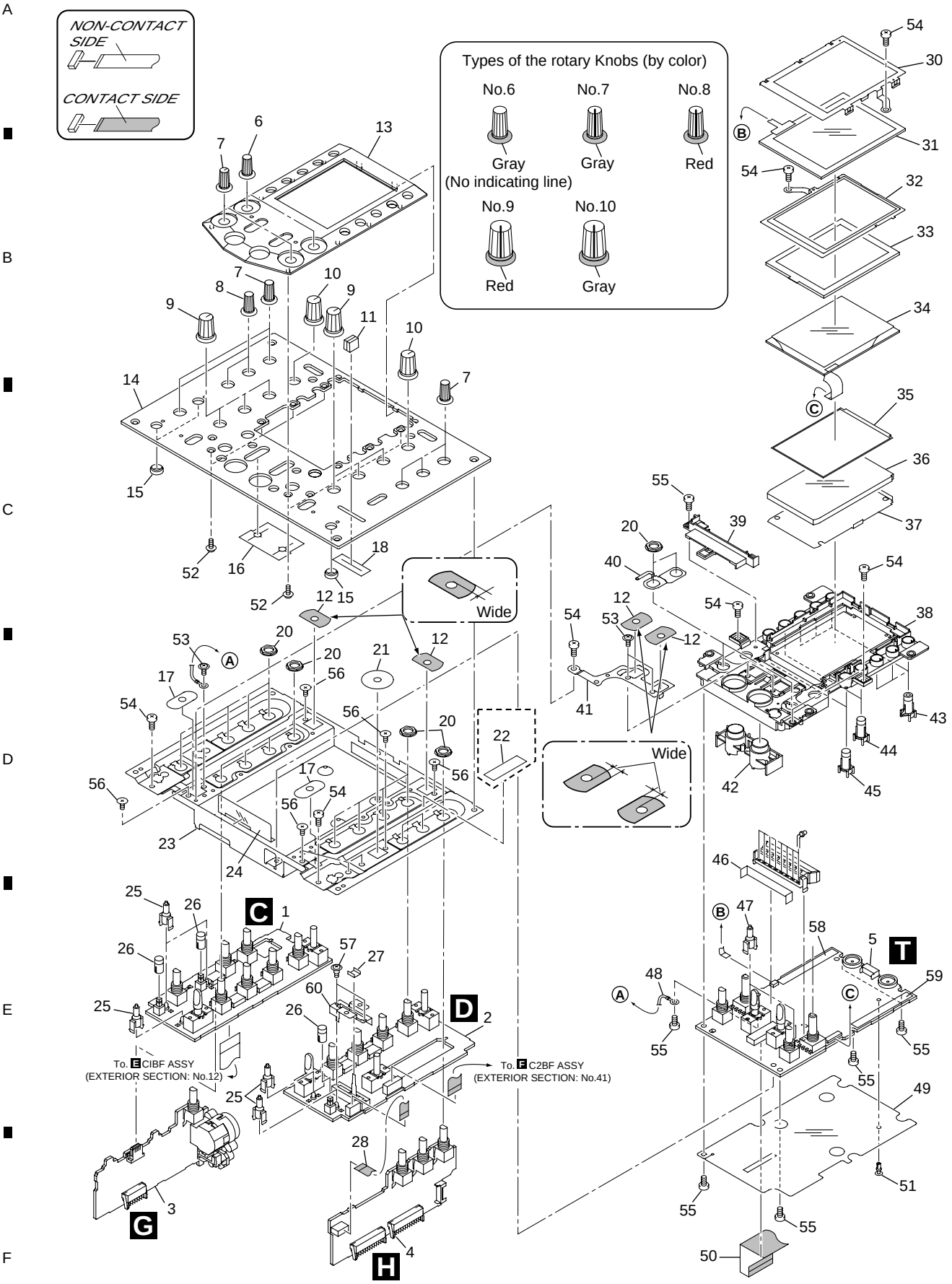

CONTROL PANEL (UPPER) SECTION Parts List

Mark	No.	Description	Part No.
	1	C1EQ Assy	DWS1326
	2	C2EQ Assy	DWS1327
	3	MICB Assy	DWX2318
	4	HPBO Assy	DWX2319
	5	LCD Assy	DWX2317
	6	Rotary Knob (Small: Gray)	DNK4205
	7	Rotary Knob (Small: Gray)	DNK4203
	8	Rotary Knob (Small: Red)	DNK4204
	9	Rotary Knob (Large: Red)	DNK4202
	10	Rotary Knob (Large: Glay)	DNK4201
	11	Slider Knob (S)	DNK4211
	12	SW Packing (D)	DEC2580
	13	Escutcheon	DNK4222
	14	Control Panel (U9)	DNB1120
	15	Push SW Guide	DNK4208
	16	SW Packing (C)	DEC2621
	17	SW Packing (B)	DEC2574
	18	Fader Packing (B)	DEC2572
	19	• • • • •	
	20	Flange Nut	DBN1004
	21	SW Packing (A)	DEC2573
	22	65 Label (S)	See Contrast table(2)
NSP	23	Panel Stay (U9)	DND1250
	24	Shield Sheet E	DEC2581
	25	LED Lens (A)	DNK4215
	26	Push SW Knob (A)	DNK4206
	27	Cue Earth Plate	DBK1252
	28	Flexible Cable (7P)	DDD1244
	29	• • • • •	
	30	Earth Plate	DNH2577
	31	Touch Panel	DSX1062
	32	Bracket	DNH2574
	33	Gasket	DEC2632
	34	LCD Module	DAV1002
	35	Diffusion Sheet	DEC2619
	36	Lighting Conductor	DNK4200
	37	Reflection Sheet	DEC2620
	38	LCD Holder	DNK4199
	39	LCD Holder (M)	DNK4225
	40	Earth Spring	DBK1248
	41	Earth Bracket	DNH2575
	42	Tap Knob	DNK4209
	43	Preset Knob	DNK4306
	44	Tact Knob (E)	DNK4265
	45	Tact Knob	DNK4213
	46	Shade Sheet	DEC2631
	47	LED Lens (C)	DNK4217
	48	Earth Lug Assy	DDX1191
	49	Shield Sheet D	DEC2579
	50	Flexible Cable (21P)	DDD1237
	51	Rivet	RBM-003
	52	Screw	PBA1062
	53	Screw	AMZ26P040FMC
	54	Screw	BBZ30P060FZK
	55	Screw	BPZ30P080FMC
	56	Screw	CMZ26P050FZK
	57	Screw	DBA1141
	58	Knob Cushion L	DEC2656
	59	Knob Cushion R	DEC2657
	60	Cue Fader Bracket	DNF1690

(2) CONTRAST TABLE

DJM-909/ KUCXJ, DJM-909/ WYXJ and DJM-909/ TLTXJ are constructed the same except for the following :

Mark	No.	Symbol and Description	DJM-909 KUCXJ	DJM-909 WYXJ	DJM-909 TLTXJ
	22	65 Label (S)	DRW2164	Not used	Not used

2.5 FRONT PANEL SECTION

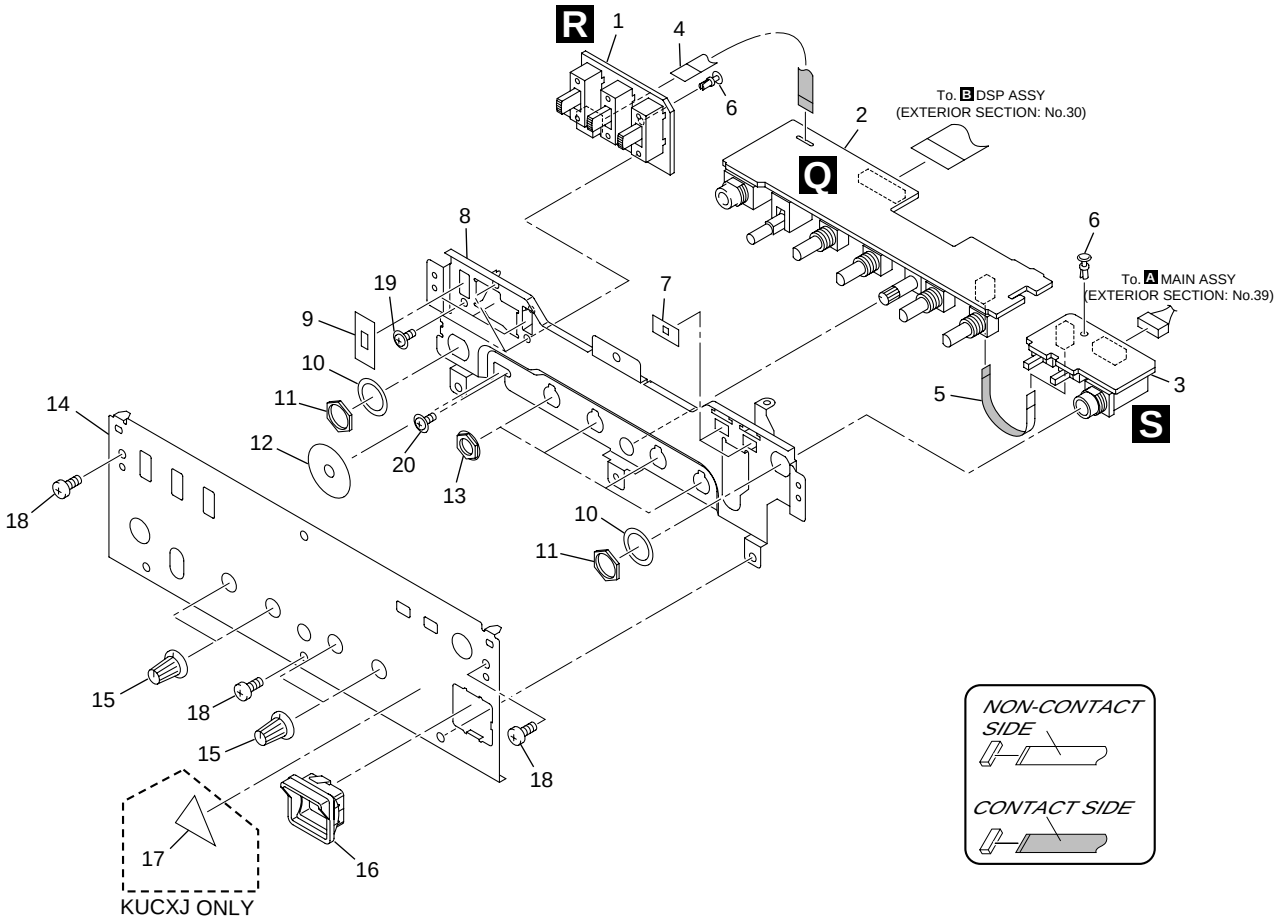

FRONT PANEL SECTION Parts List

Mark	No.	Description	Part No.
	1	RVSW Assy	DWS1332
	2	CFVR Assy	DWS1331
	3	FSSW Assy	DWS1333
	4	Flexible Cable (6P)	DDD1235
	5	Flexible Cable (3P)	DDD1236
	6	Rivet	RBM-003
	7	Slide Packing (B)	DEC2590
NSP	8	Front Panel Stay	DNH2571
	9	Slide SW Packing (A)	DEC2589
	10	Washer	DBE1010
	11	Nut	NKX2FUC
	12	SW Packing (A)	DEC2573
	13	Flange Nut	DBN1004
	14	Front Panel (9)	DNB1119
	15	Rotary Knob (SS)	DAA1162
	16	Power Knob Guide	DNK4198
NSP	17	Caution Label	See Contrast table(2)
	18	Screw	BBZ30P060FZK
	19	Screw	AMZ26P040FMC
	20	Screw	PMA30P060FMC

(2) CONTRAST TABLE

DJM-909/ KUCXJ, DJM-909/ WYXJ and DJM-909/ TLTXJ are constructed the same except for the following :

Mark	No.	Symbol and Description	DJM-909 KUCXJ	DJM-909 WYXJ	DJM-909 TLTXJ
NSP	17	Caution Label	DRW1975	Not used	Not used

3. BLOCK DIAGRAM AND SCHEMATIC DIAGRAM

3.1 BLOCK DIAGRAM

3.1.1 OVERALL BLOCK DIAGRAM

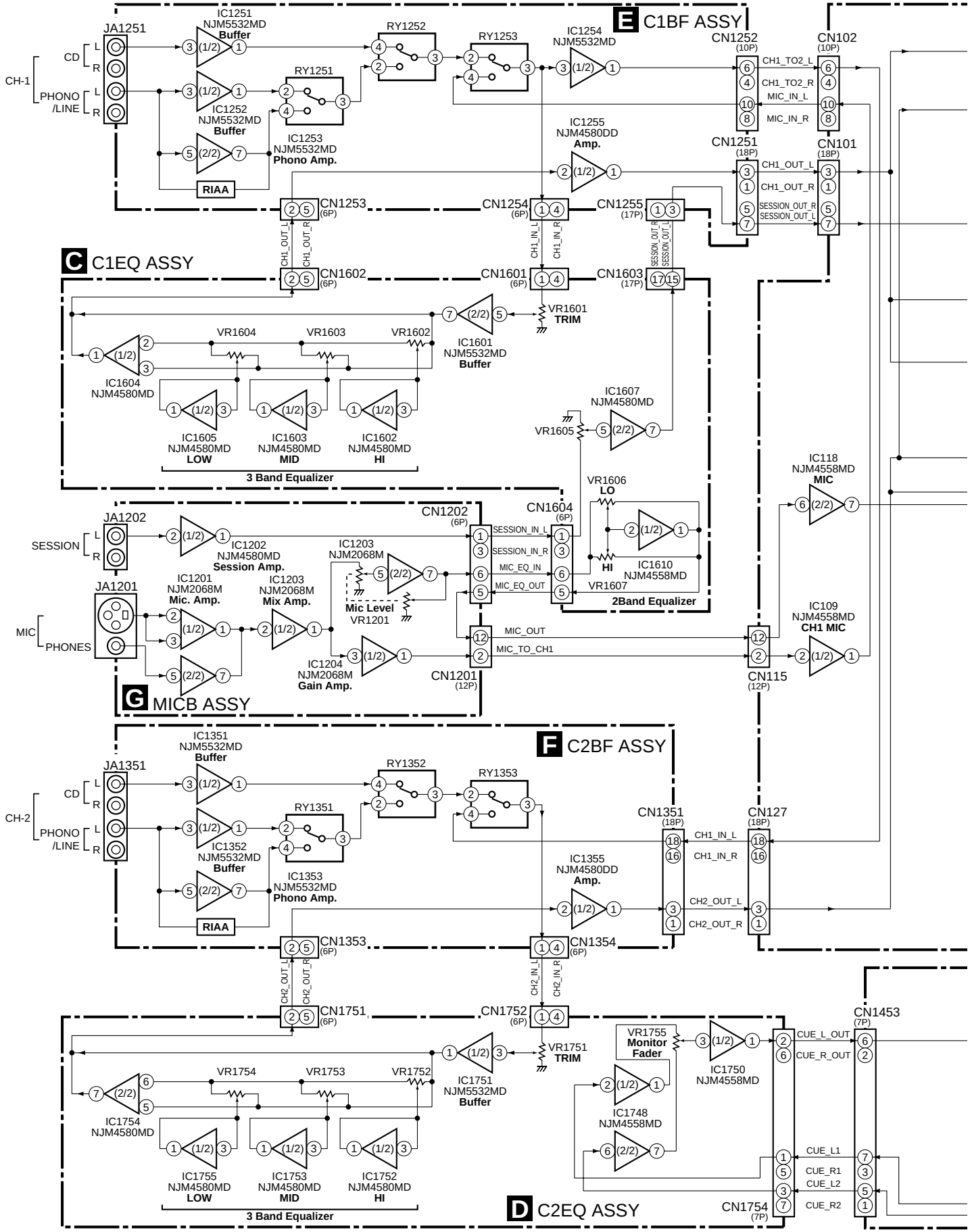

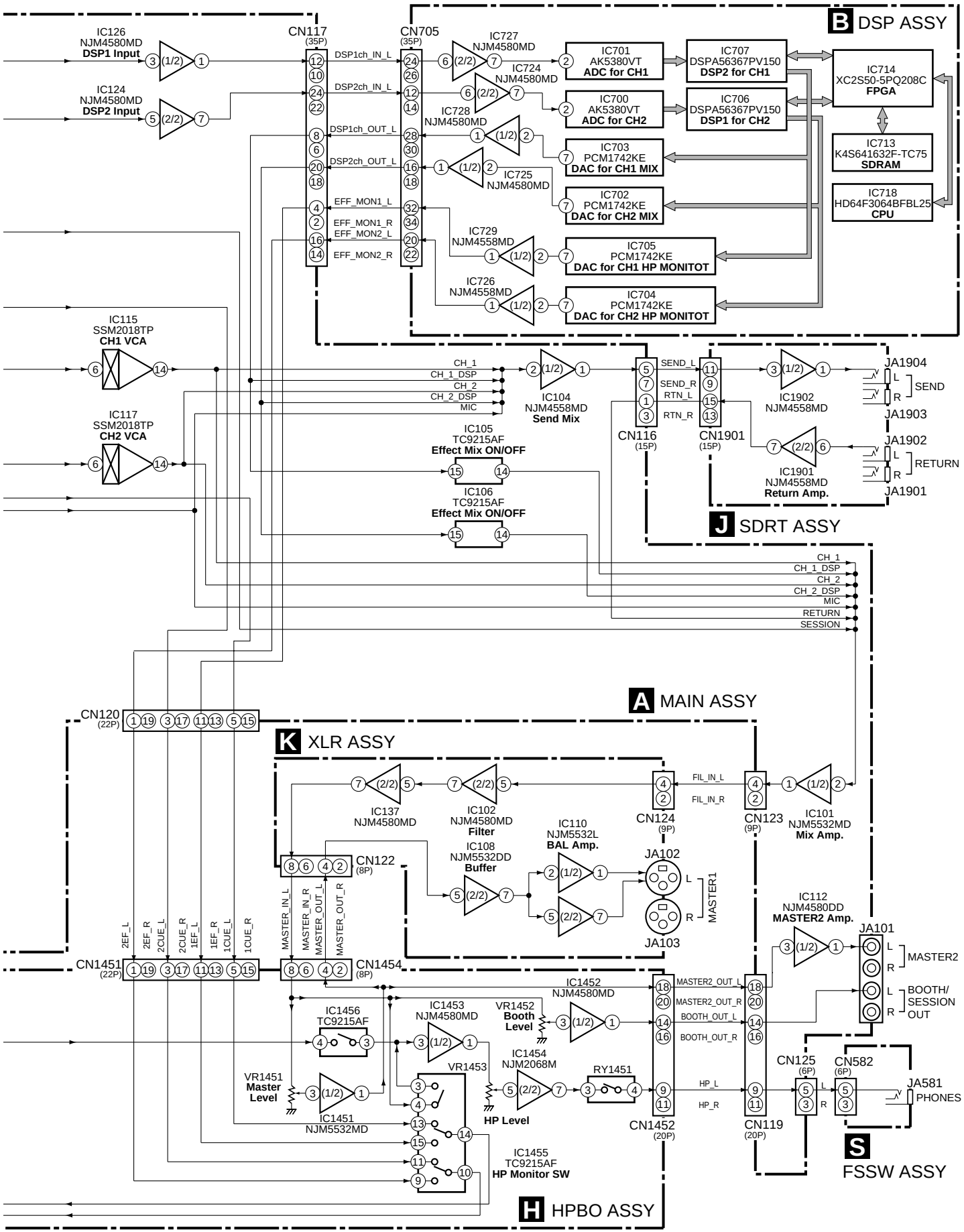
B DSP ASSY
IC126
NJM4580MD
DSP1 Input
IC124
NJM4580MD
DSP2 Input
CN117
(35P)
CN705
(35P)
DSP1ch_IN_L
DSP2ch_IN_L
DSP1ch_OUT_L
DSP2ch_OUT_L
EFF_MON1_L
EFF_MON1_R
EFF_MON2_L
EFF_MON2_R
IC727
NJM4580MD
IC724
NJM4580MD
IC728
NJM4580MD
IC725
NJM4580MD
IC729
NJM4558MD
IC726
NJM4558MD
IC701
AK5380VT
ADC for CH1
IC700
AK5380VT
ADC for CH2
IC703
PCM1742KE
DAC for CH1 MIX
IC702
PCM1742KE
DAC for CH2 MIX
IC705
PCM1742KE
DAC for CH1 HP MONITOT
IC704
PCM1742KE
DAC for CH2 HP MONITOT
IC707
DSPA56367PV150
DSP2 for CH1
IC706
DSPA56367PV150
DSP1 for CH2
IC714
XC2S50-5PQ208C
FPGA
IC713
K4S641632F-TC75
SDRAM
IC718
HD64F3064BFBL25
CPU
IC115
SSM2018TP
CH1 VCA
IC117
SSM2018TP
CH2 VCA
CH_1
CH_1_DSP
CH_2
CH_2_DSP
MIC
IC104
NJM4558MD
Send Mix
IC105
TC9215AF
Effect Mix ON/OFF
IC106
TC9215AF
Effect Mix ON/OFF
SEND_L
SEND_R
RTN_L
RTN_R
CN116
(15P)
CN1901
(15P)
IC1902
NJM4558MD
IC1901
NJM4558MD
Return Amp.
JA1904
JA1903
JA1902
JA1901
SEND
RETURN
J SDRT ASSY
CH_1
CH_1_DSP
CH_2
CH_2_DSP
MIC
RETURN
SESSION
A MAIN ASSY
CN120
(22P)
K XLR ASSY
IC137
NJM4580MD
IC102
NJM4580MD
Filter
CN124
(9P)
FIL_IN_L
FIL_IN_R
CN123
(9P)
IC101
NJM5532MD
Mix Amp.
IC110
NJM5532L
BAL Amp.
IC108
NJM5532DD
Buffer
CN122
(8P)
JA102
JA103
MASTER1
IC112
NJM4580DD
MASTER2 Amp.
JA101
MASTER2
BOOTH/
SESSION
OUT
2EF_L
2EF_R
2CUE_L
2CUE_R
1EF_L
1EF_R
1CUE_L
1CUE_R
MASTER_IN_L
MASTER_IN_R
MASTER_OUT_L
MASTER_OUT_R
CN1451
(22P)
CN1454
(8P)
IC1452
NJM4580MD
MASTER2_OUT_L
MASTER2_OUT_R
BOOTH_OUT_L
BOOTH_OUT_R
IC1456
TC9215AF
IC1453
NJM4580MD
VR1452
Booth
Level
IC1454
NJM2068M
RY1451
VR1453
HP Level
VR1451
Master
Level
IC1451
NJM5532MD
IC1455
TC9215AF
HP Monitor SW
HP_L
HP_R
CN1452
(20P)
CN119
(20P)
CN125
(6P)
CN582
(6P)
JA581
PHONES
S
FSSW ASSY
H HPBO ASSY

3.1.2 DSP/ LCD BLOCK DIAGRAM

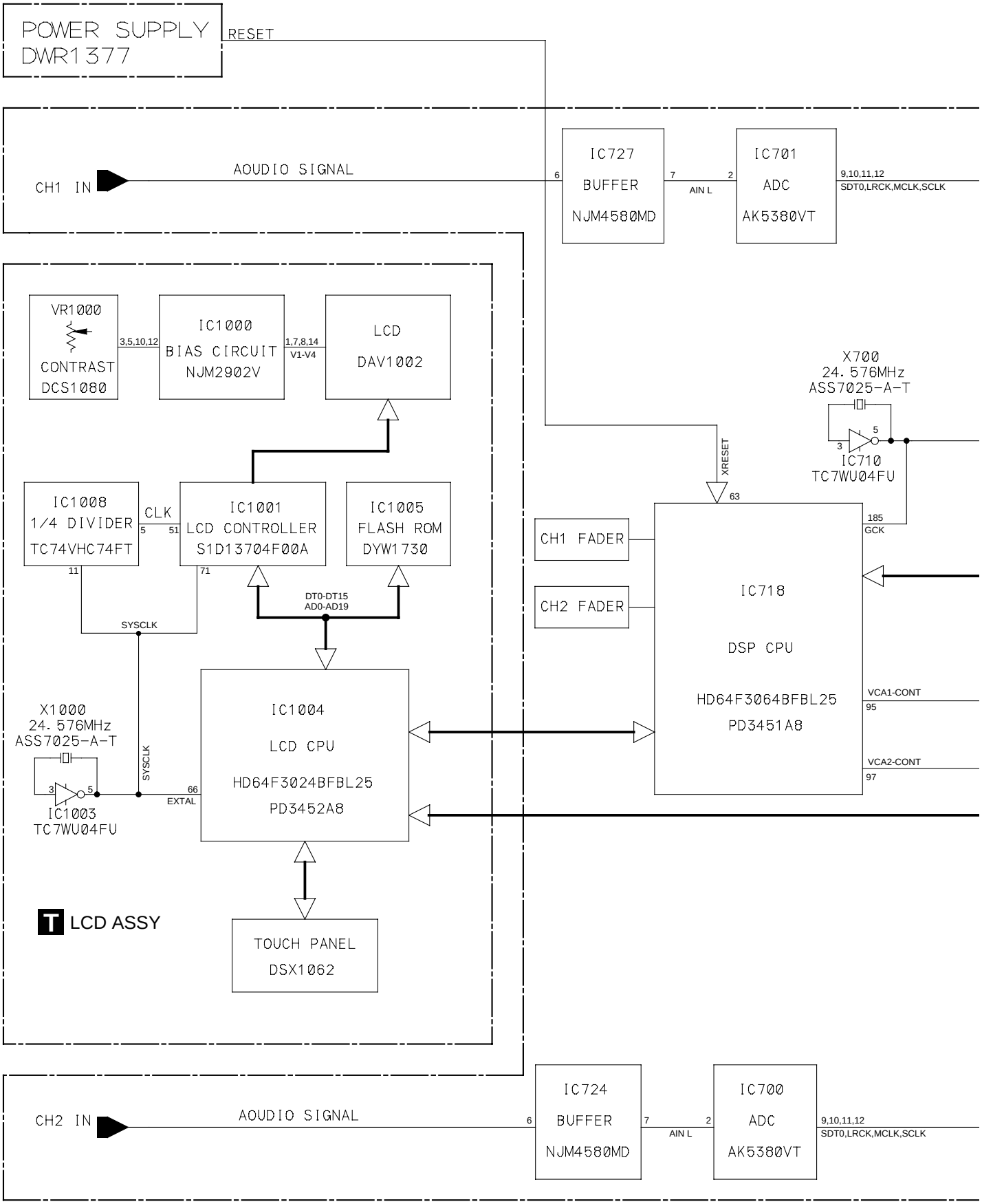

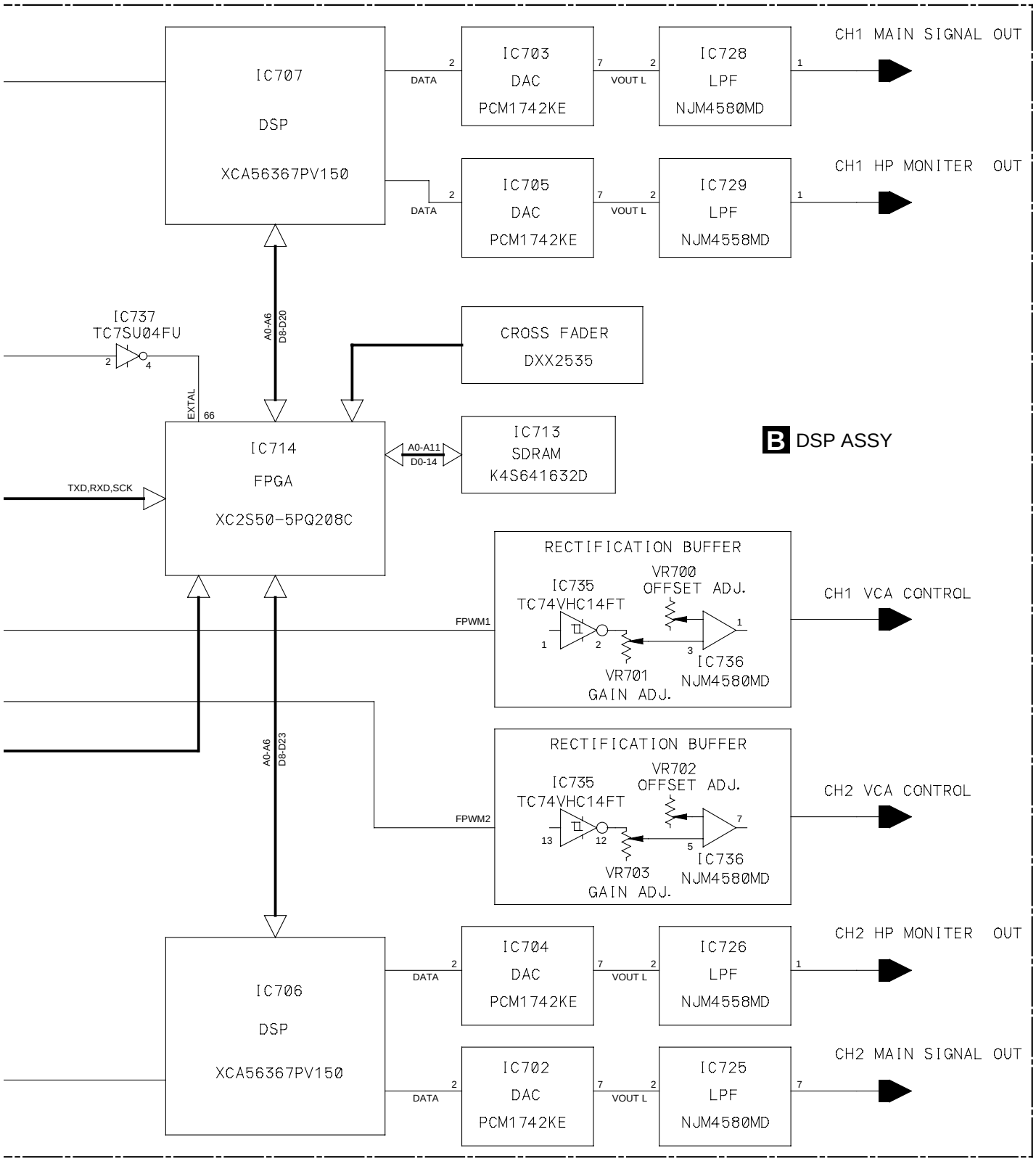
IC707
DSP
XCA56367PV150
DATA
IC703
DAC
PCM1742KE
VOUT L
IC728
LPF
NJM4580MD
CH1 MAIN SIGNAL OUT
IC705
DAC
PCM1742KE
IC729
LPF
NJM4558MD
CH1 HP MONITER OUT
IC737
TC7SU04FU
EXTAL
A0-A6
D8-D20
CROSS FADER
DXX2535
IC714
FPGA
XC2S50-5PQ208C
TXD,RXD,SCK
A0-A11
D0-14
IC713
SDRAM
K4S641632D
B DSP ASSY
RECTIFICATION BUFFER
IC735
TC74VHC14FT
VR700
OFFSET ADJ.
FPWM1
VR701
GAIN ADJ.
IC736
NJM4580MD
CH1 VCA CONTROL
A0-A6
D8-D23
RECTIFICATION BUFFER
IC735
TC74VHC14FT
VR702
OFFSET ADJ.
FPWM2
VR703
GAIN ADJ.
IC736
NJM4580MD
CH2 VCA CONTROL
IC706
DSP
XCA56367PV150
IC704
DAC
PCM1742KE
IC726
LPF
NJM4558MD
CH2 HP MONITER OUT
IC702
DAC
PCM1742KE
IC725
LPF
NJM4580MD
CH2 MAIN SIGNAL OUT

3.2 OVERALL CONNECTION DIAGRAM

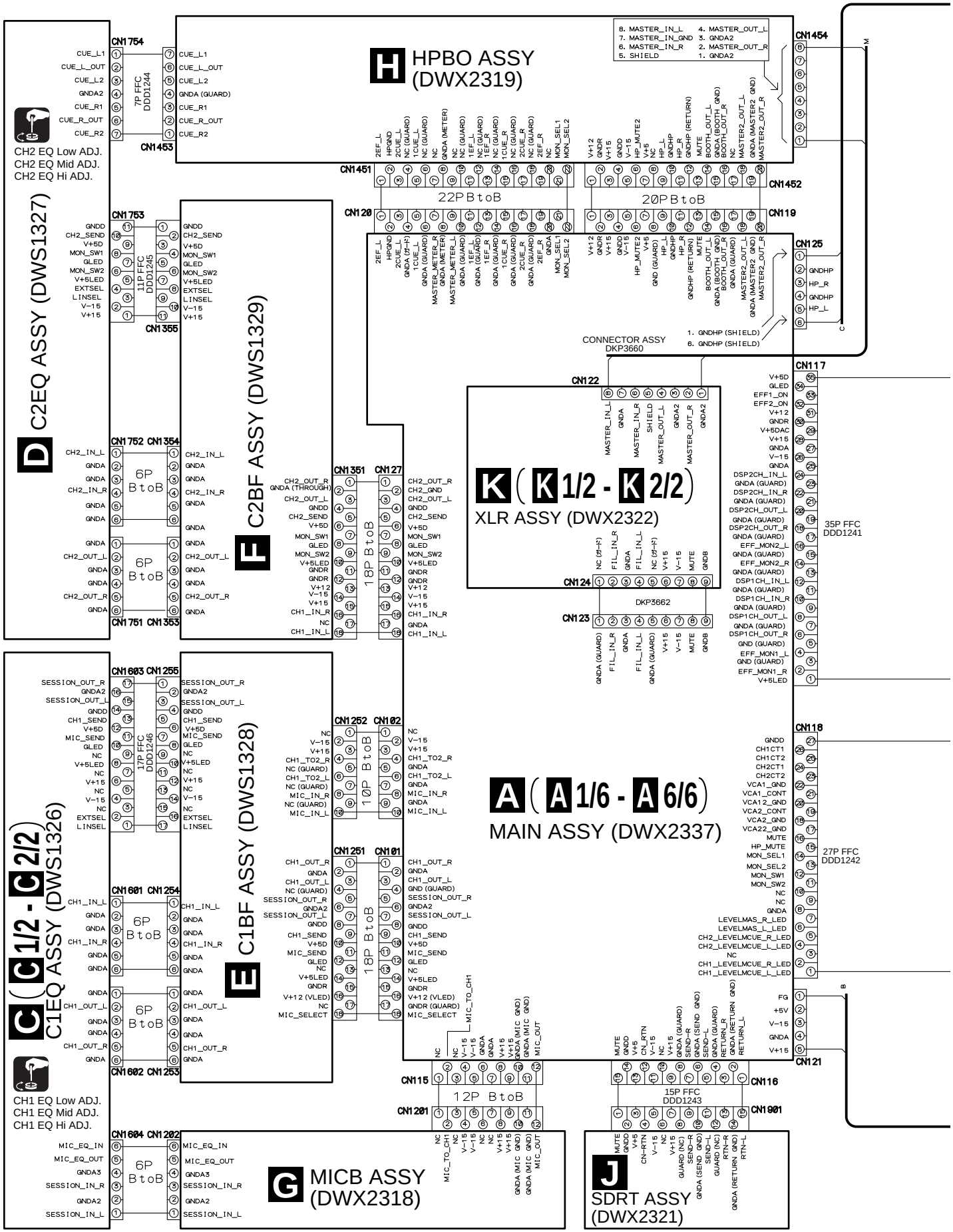

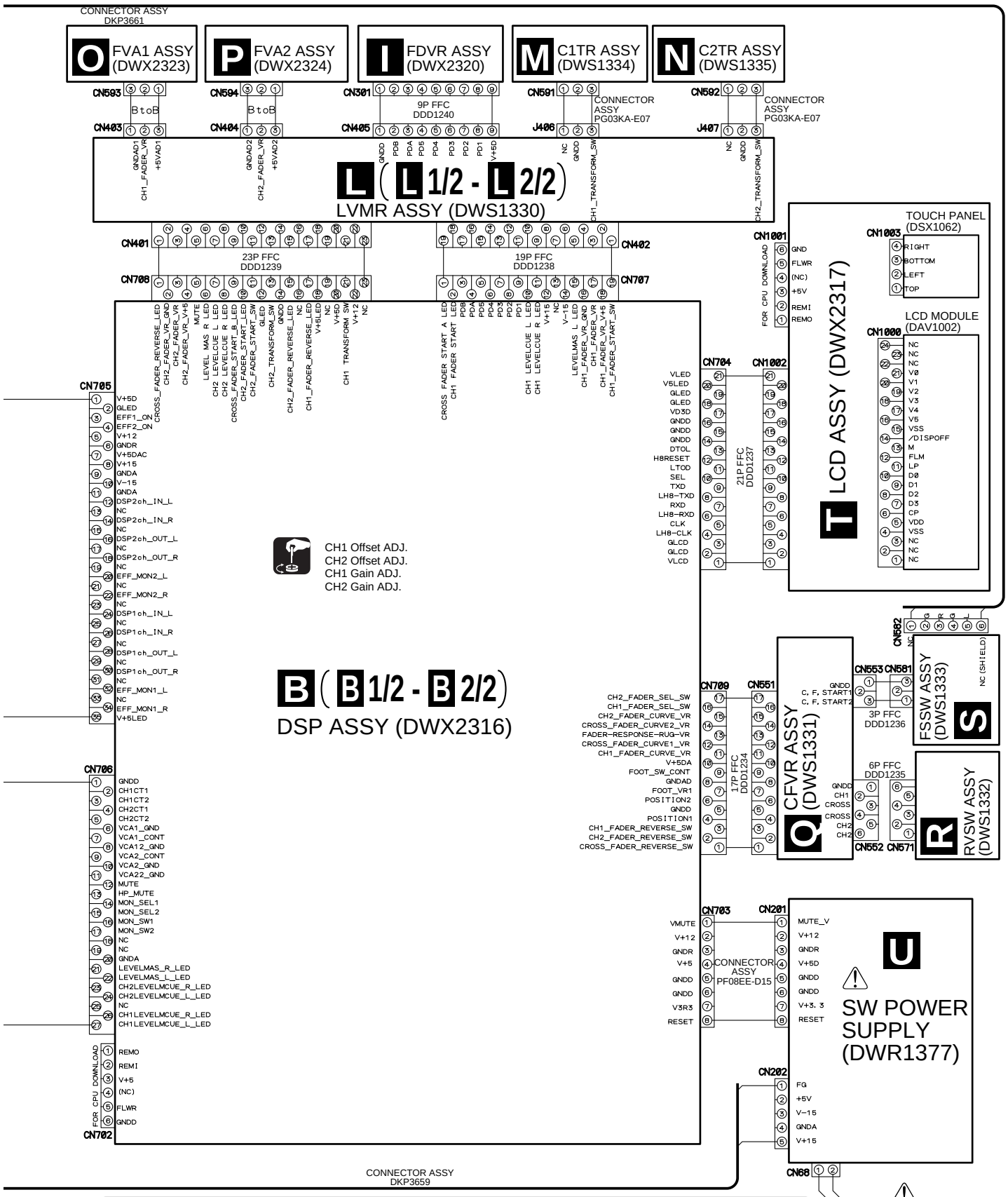

- When ordering service parts, be sure to refer to "EXPLODED VIEWS and PARTS LIST" or "PCB PARTS LIST".
- The ⚠ mark found on some component parts indicates the importance of the safety factor of the part. Therefore, when replacing, be sure to use parts of identical designation.
- : The power supply is shown with the marked box.

3.3 MAIN ASSY (1/6)

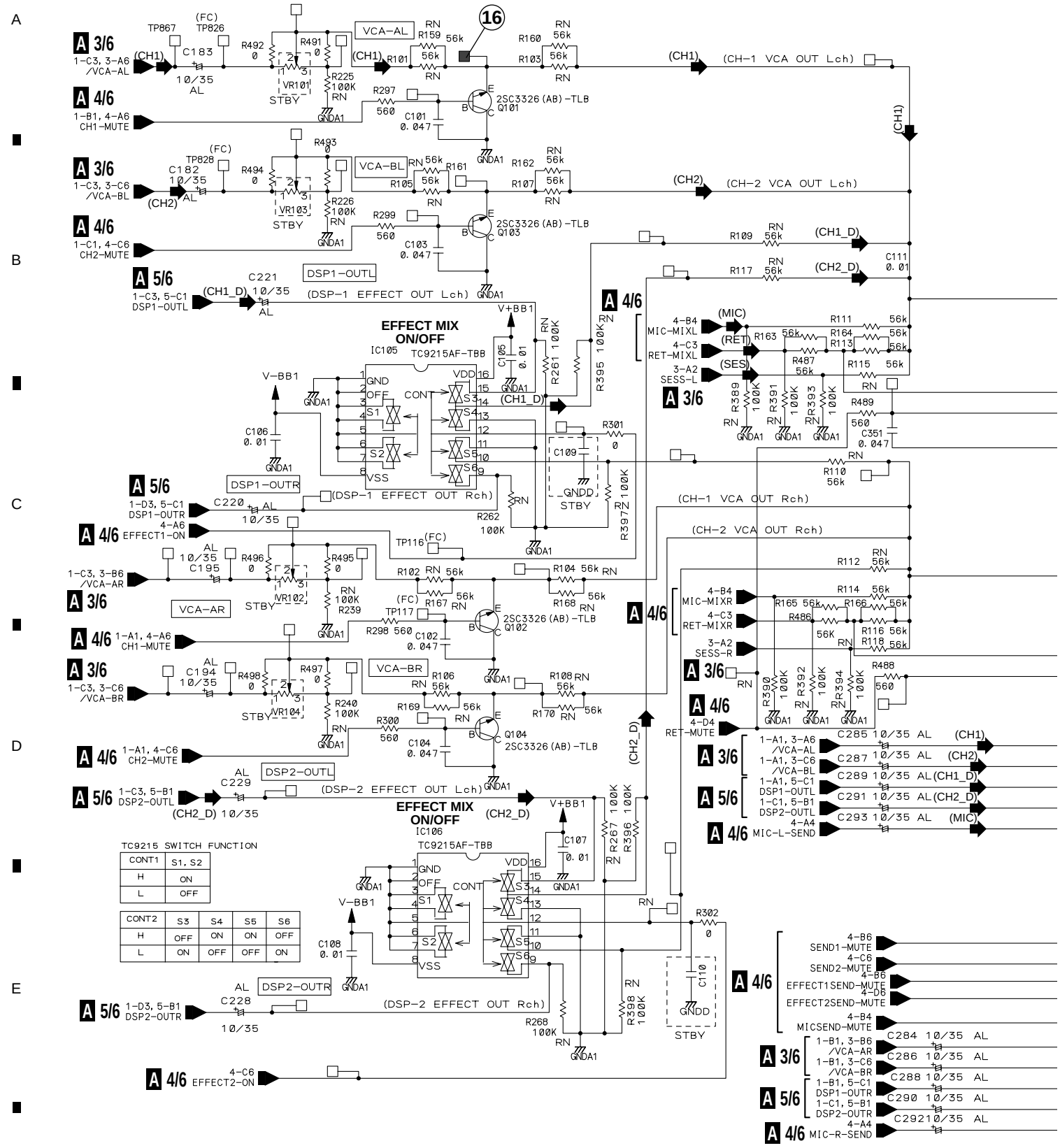

A 1/6

A 1/6 MAIN ASSY (DWX2337)

• MIX AMP. BLOCK

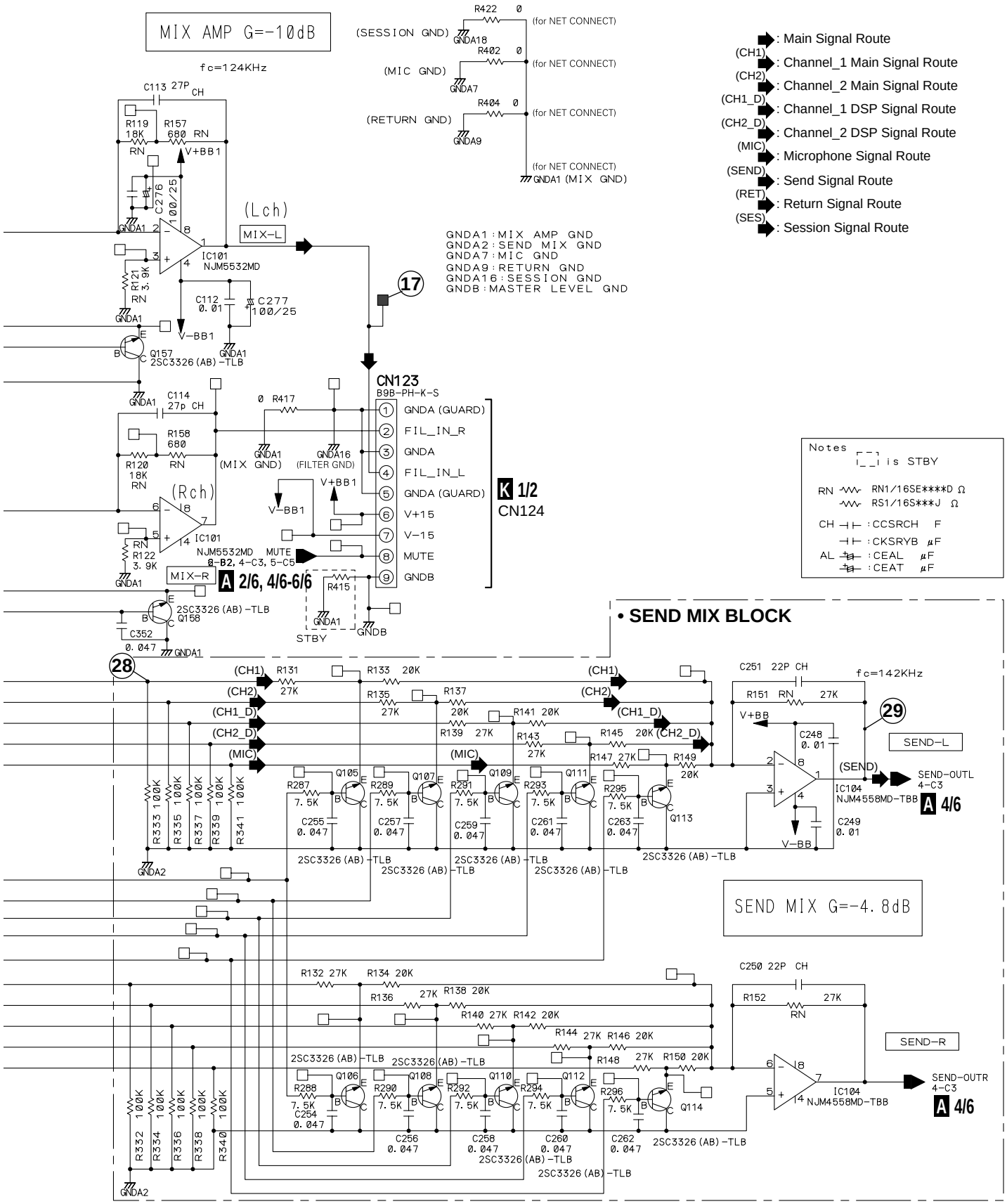

3.4 MAIN ASSY (2/6)

A 2/6 MAIN ASSY (DWX2337)

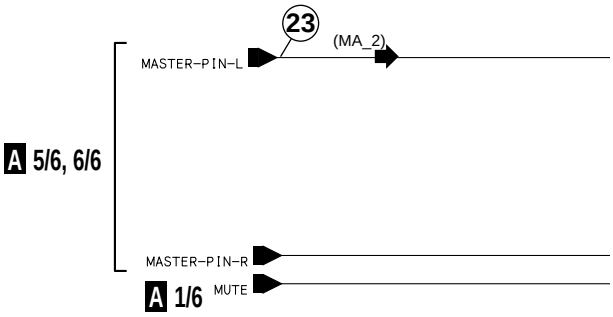

(MA_2) : MASTER_2 Signal Route
(BOOTH) : Booth Signal Route

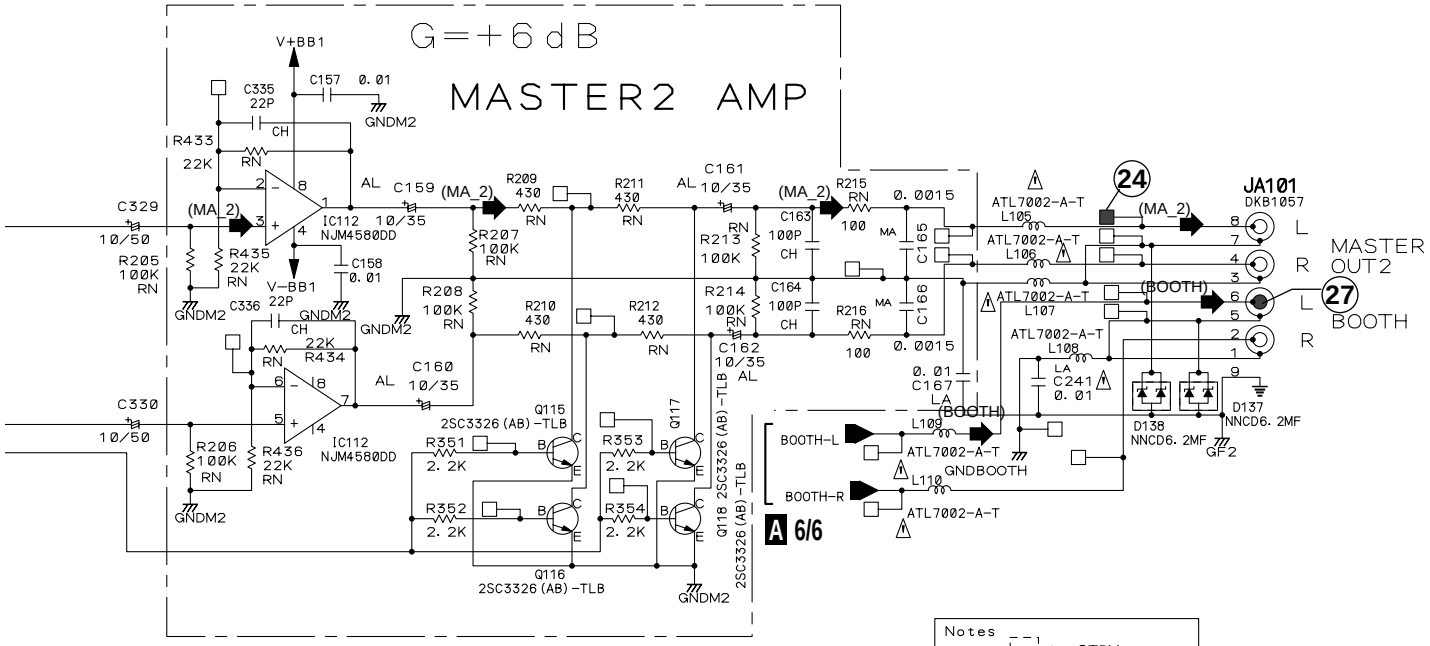

Notes
[ ] is STBY
RN RN1/16SE****D Ω
RS1/16S***J Ω
CH :CCSRCH F
LA :CFTLA μF
MA :CQMA μF
:CKSRYB μF
AL :CEAL μF
:CEAT μF

UPPER	R	W	MASTER2
LOWER	R	W	BOOTH

A 2/6

3.5 MAIN ASSY (3/6)

A 3/6 MAIN ASSY (DWX2337)

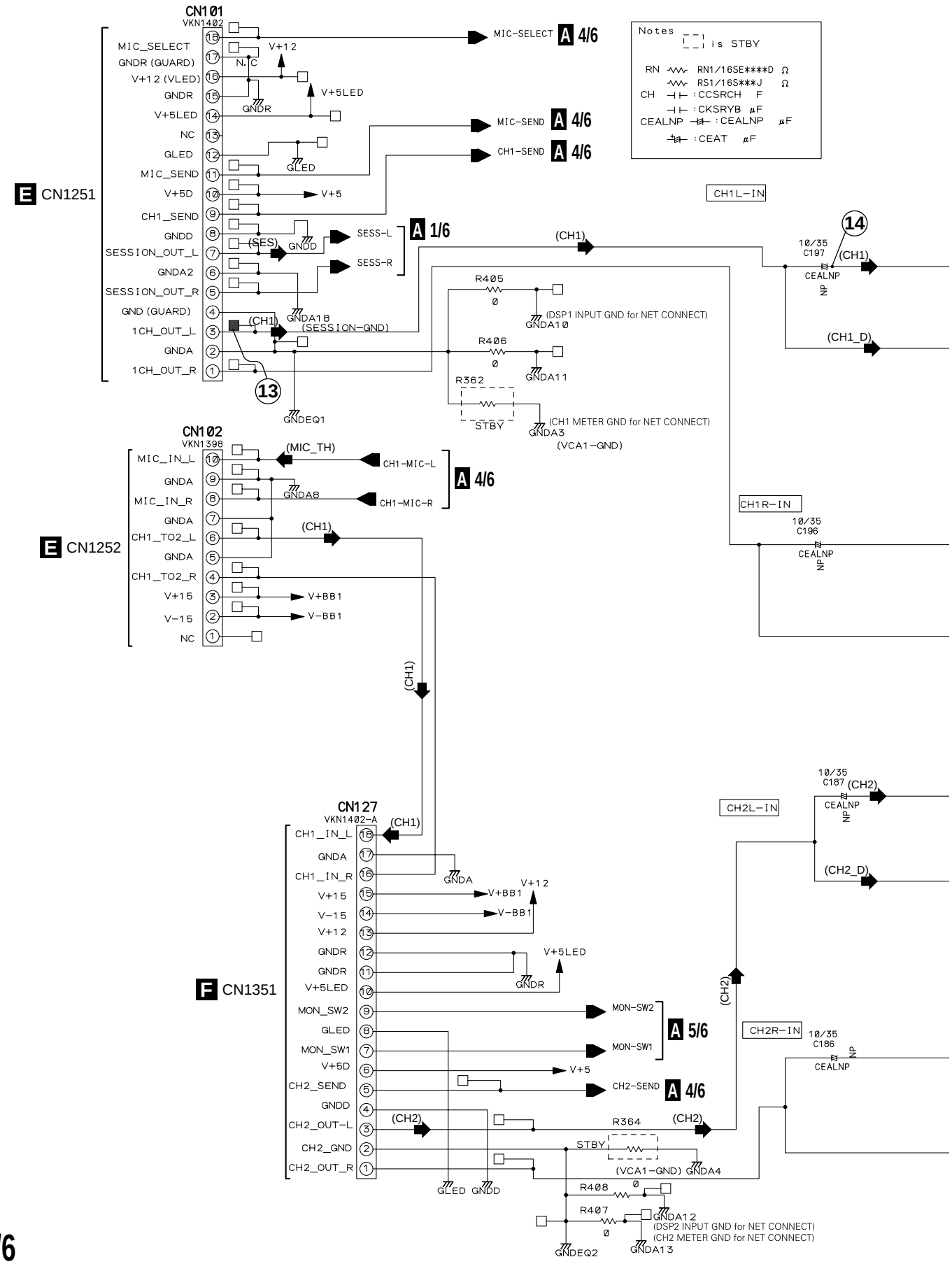

A 3/6

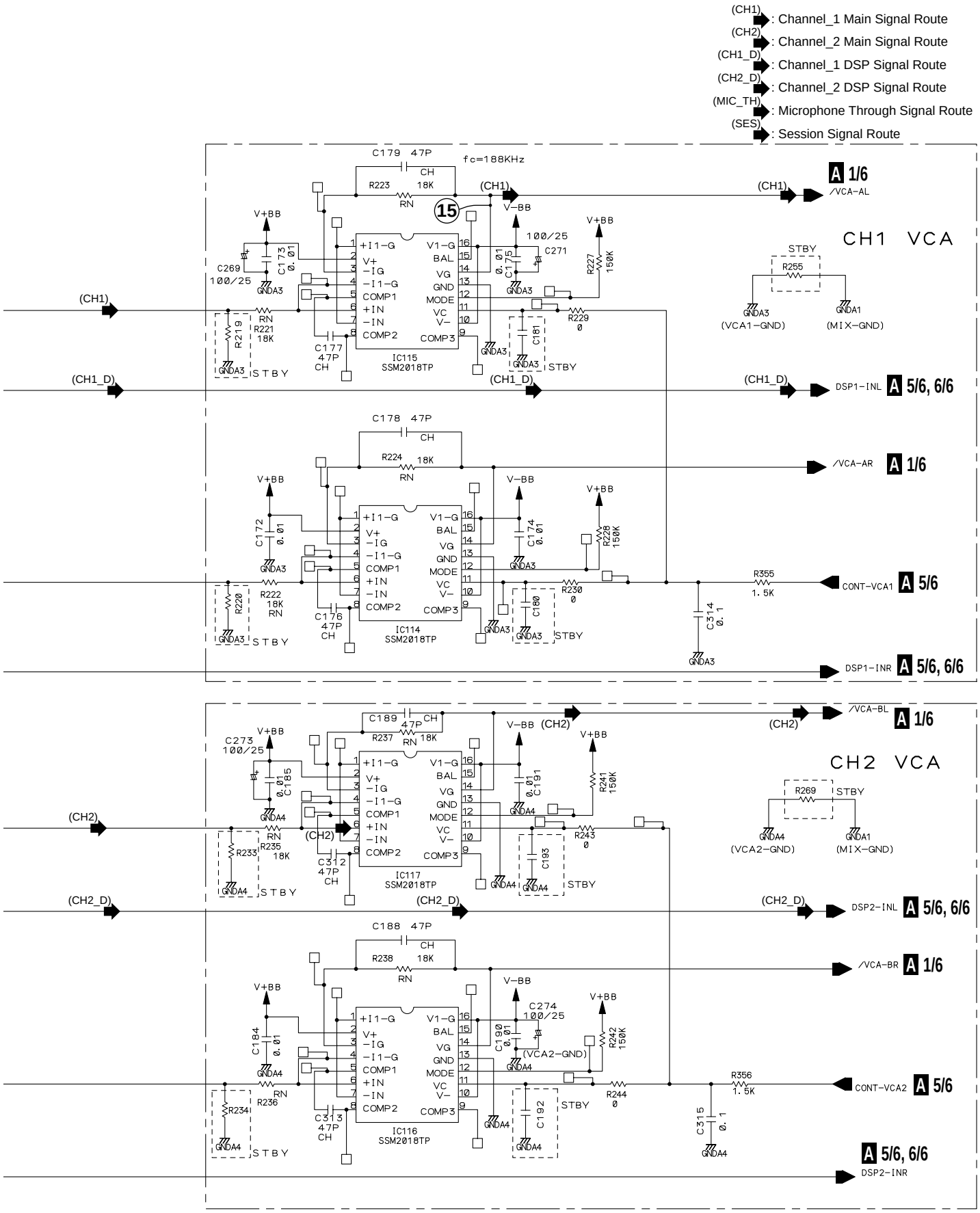
(CH1): Channel_1 Main Signal Route
(CH2): Channel_2 Main Signal Route
(CH1_D): Channel_1 DSP Signal Route
(CH2_D): Channel_2 DSP Signal Route
(MIC_TH): Microphone Through Signal Route
(SES): Session Signal Route
CH1 VCA
CH2 VCA
fc=188KHz
IC115 SSM2018TP
IC114 SSM2018TP
IC117 SSM2018TP
IC116 SSM2018TP
/VCA-AL
/VCA-AR
/VCA-BL
/VCA-BR
DSP1-INL
DSP1-INR
DSP2-INL
DSP2-INR
CONT-VCA1
CONT-VCA2
(VCA1-GND)
(MIX-GND)
(VCA2-GND)
A 1/6
A 5/6, 6/6
A 5/6

A 3/6

3.6 MAIN ASSY (4/6)

A 4/6 MAIN ASSY (DWX2337)

TC9215 SWITCH FUNCTION

CONT1	S1, S2
H	ON
L	OFF

CONT2	S3	S4	S5	S6
H	OFF	ON	ON	OFF
L	ON	OFF	OFF	ON

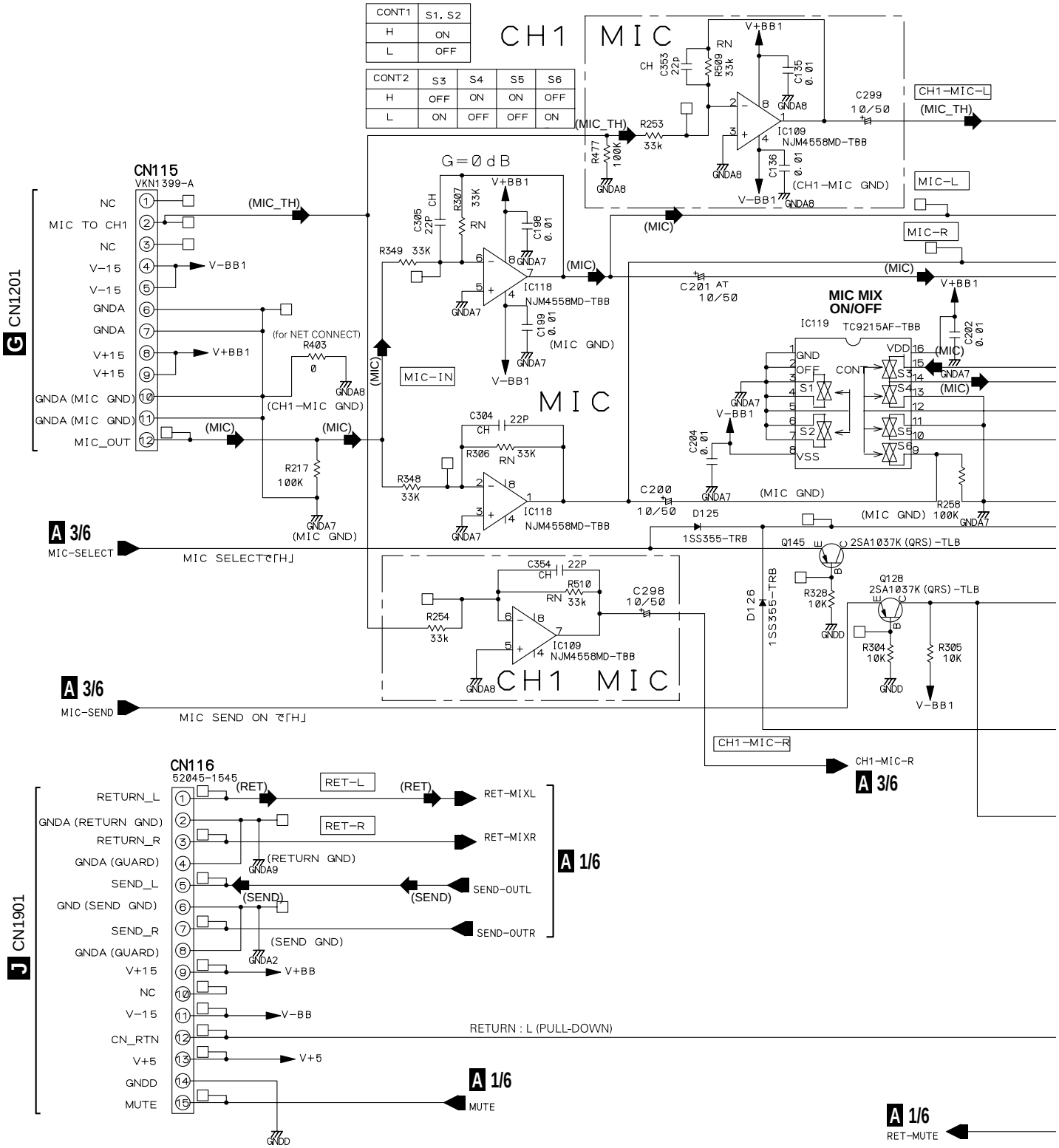

A 4/6

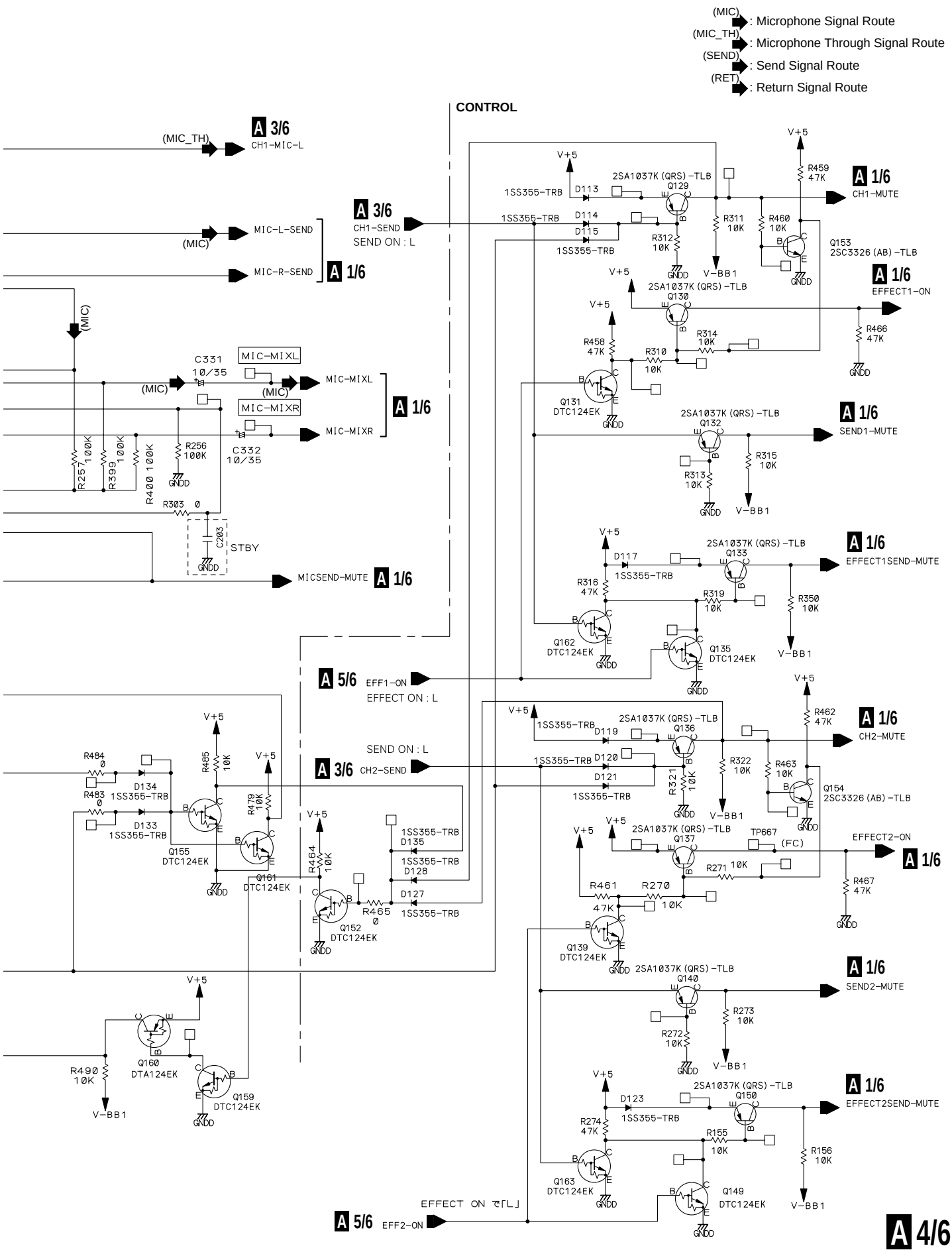
(MIC) : Microphone Signal Route
(MIC_TH) : Microphone Through Signal Route
(SEND) : Send Signal Route
(RET) : Return Signal Route
CONTROL
A 3/6 CH1-MIC-L
(MIC_TH)
A 3/6 CH1-SEND
SEND ON : L
MIC-L-SEND
(MIC)
MIC-R-SEND
A 1/6
(MIC)
C331 10/35
MIC-MIXL
(MIC)
(MIC)
MIC-MIXL
MIC-MIXR
MIC-MIXR
A 1/6
C332 10/35
R257 100K
R399 100K
R400 100K
R256 100K
GNDD
R303 0
C203
STBY
MICSEND-MUTE
A 1/6
A 5/6 EFF1-ON
EFFECT ON : L
SEND ON : L
A 3/6 CH2-SEND
V+5
R484 0
R483 0
D134 1SS355-TRB
D133 1SS355-TRB
R485 10K
R479 10K
Q155 DTC124EK
Q161 DTC124EK
R464 10K
1SS355-TRB D135
1SS355-TRB D128
D127 1SS355-TRB
R465 0
Q152 DTC124EK
Q160 DTA124EK
R490 10K
V-BB1
Q159 DTC124EK
1SS355-TRB D113
2SA1037K (QRS) -TLB Q129
R459 47K
A 1/6 CH1-MUTE
1SS355-TRB D114
D115 1SS355-TRB
R311 10K
R460 10K
R312 10K
Q153 2SC3326 (AB) -TLB
2SA1037K (QRS) -TLB Q130
A 1/6 EFFECT1-ON
R458 47K
R310 10K
R314 10K
R466 47K
Q131 DTC124EK
2SA1037K (QRS) -TLB Q132
A 1/6 SEND1-MUTE
R313 10K
R315 10K
D117 1SS355-TRB
2SA1037K (QRS) -TLB Q133
A 1/6 EFFECT1SEND-MUTE
R316 47K
R319 10K
R350 10K
Q162 DTC124EK
Q135 DTC124EK
1SS355-TRB D119
2SA1037K (QRS) -TLB Q136
R462 47K
A 1/6 CH2-MUTE
1SS355-TRB D120
D121 1SS355-TRB
R322 10K
R463 10K
R321 10K
Q154 2SC3326 (AB) -TLB
2SA1037K (QRS) -TLB Q137
TP667 (FC)
EFFECT2-ON
A 1/6
R271 10K
R461 47K
R270 10K
R467 47K
Q139 DTC124EK
2SA1037K (QRS) -TLB Q140
A 1/6 SEND2-MUTE
R273 10K
R272 10K
D123 1SS355-TRB
2SA1037K (QRS) -TLB Q150
A 1/6 EFFECT2SEND-MUTE
R274 47K
R155 10K
R156 10K
Q163 DTC124EK
Q149 DTC124EK
EFFECT ON ﾁｪｯｸ
A 5/6 EFF2-ON
A 4/6

3.7 MAIN ASSY (5/6)

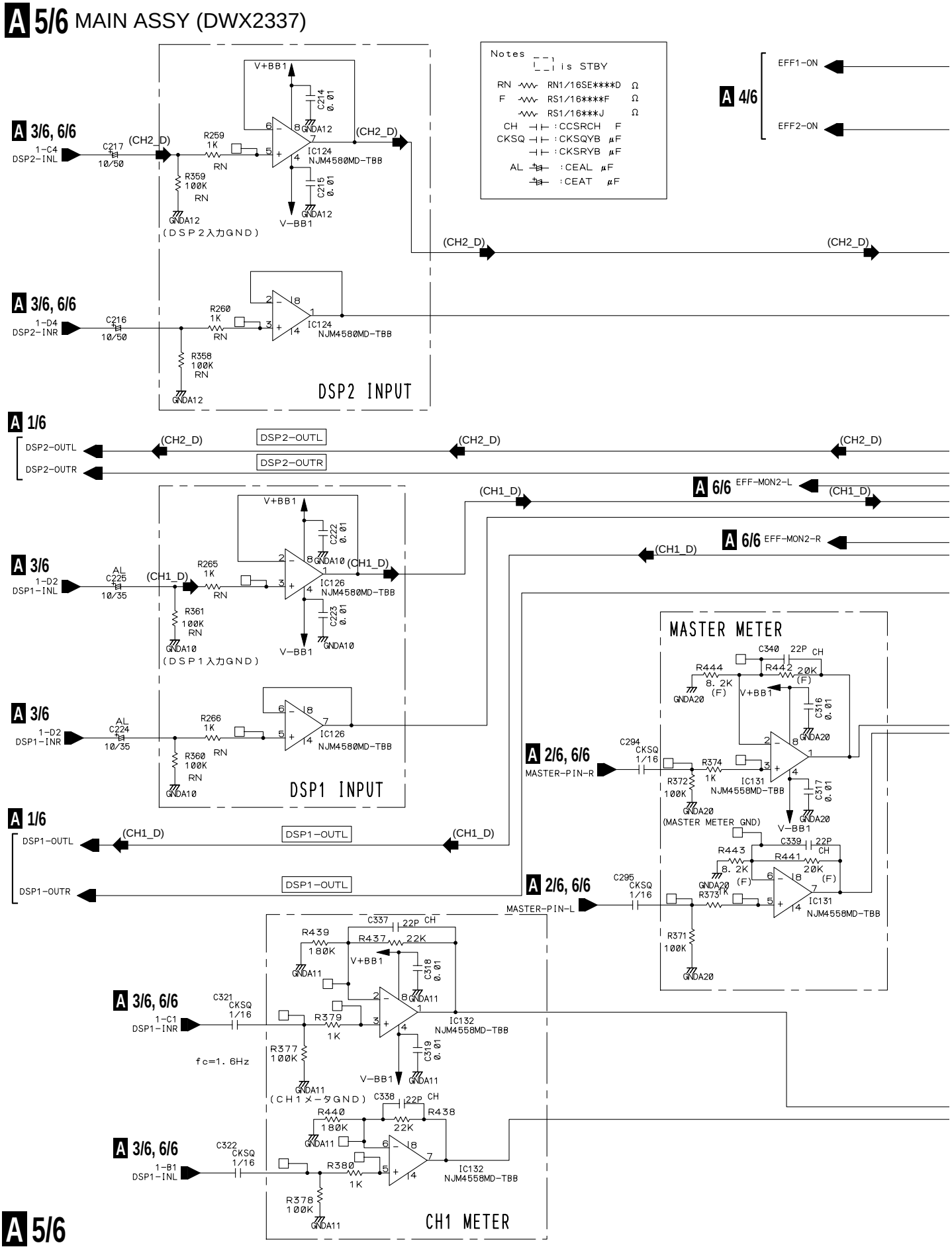

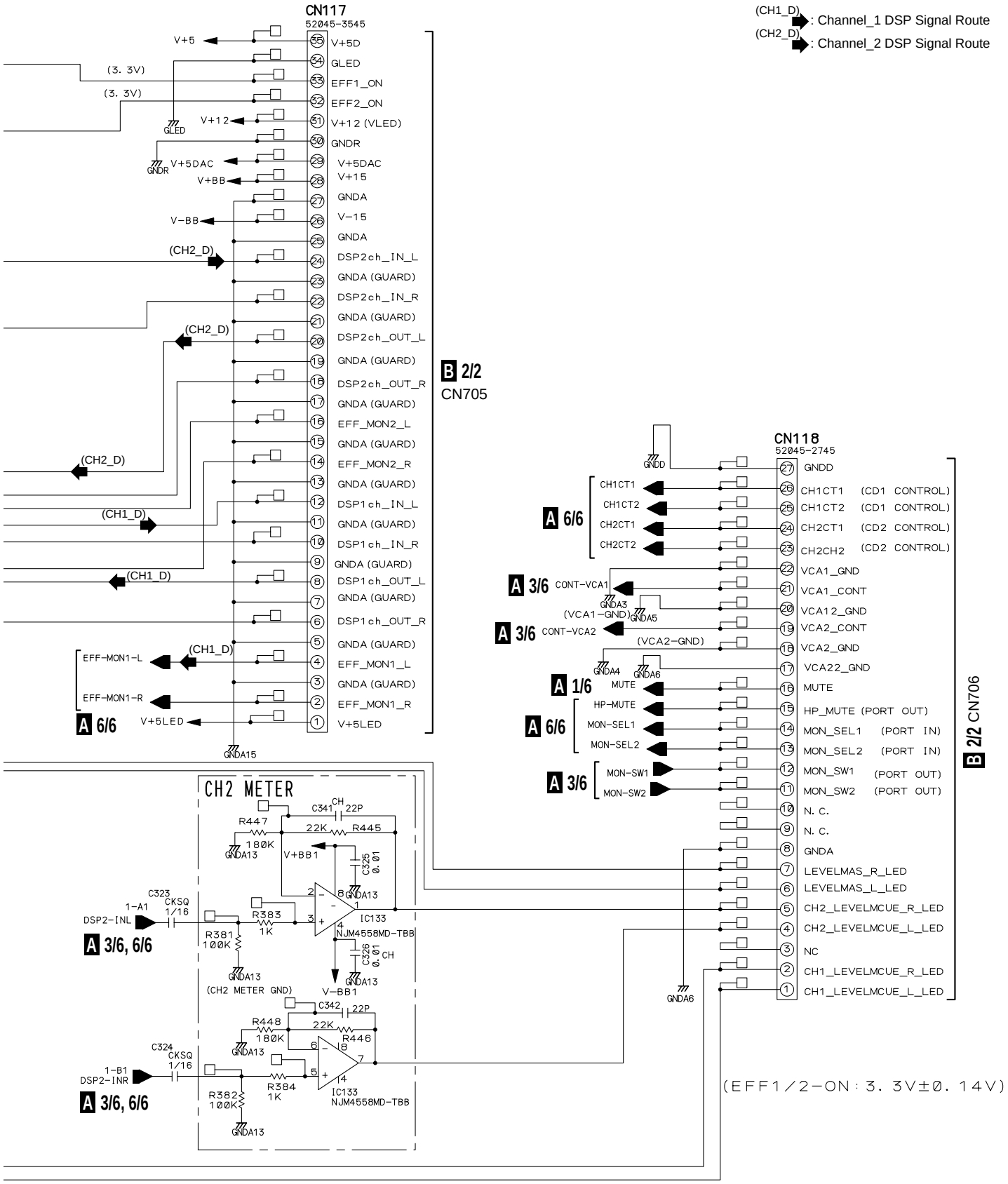
CN117
52045-3545
(CH1_D): Channel_1 DSP Signal Route
(CH2_D): Channel_2 DSP Signal Route
V+5D
GLED
EFF1_ON
EFF2_ON
V+12 (VLED)
GNDR
V+5DAC
V+15
GNDA
V-15
DSP2ch_IN_L
GNDA (GUARD)
DSP2ch_IN_R
DSP2ch_OUT_L
DSP2ch_OUT_R
EFF_MON2_L
EFF_MON2_R
DSP1ch_IN_L
DSP1ch_IN_R
DSP1ch_OUT_L
DSP1ch_OUT_R
EFF_MON1_L
EFF_MON1_R
V+5LED
B 2/2
CN705
CN118
52045-2745
GNDD
CH1CT1 (CD1 CONTROL)
CH1CT2 (CD1 CONTROL)
CH2CT1 (CD2 CONTROL)
CH2CH2 (CD2 CONTROL)
VCA1_GND
VCA1_CONT
VCA12_GND
VCA2_CONT
VCA2_GND
VCA22_GND
MUTE
HP_MUTE (PORT OUT)
MON_SEL1 (PORT IN)
MON_SEL2 (PORT IN)
MON_SW1 (PORT OUT)
MON_SW2 (PORT OUT)
N. C.
GNDA
LEVELMAS_R_LED
LEVELMAS_L_LED
CH2_LEVELMCUE_R_LED
CH2_LEVELMCUE_L_LED
NC
CH1_LEVELMCUE_R_LED
CH1_LEVELMCUE_L_LED
B 2/2 CN706
A 6/6
A 3/6
A 1/6
CONT-VCA1
CONT-VCA2
(VCA1-GND)
(VCA2-GND)
CH METER
C341 CH 22P
R447 180K
R445 22K
V+BB1
C325 0.01
IC133
NJM4558MD-TBB
C326 0.01 CH
V-BB1
(CH2 METER GND)
C323 CKSQ 1/16
1-A1
DSP2-INL
R381 100K
R383 1K
A 3/6, 6/6
C342 22P
R448 180K
R446 22K
C324 CKSQ 1/16
1-B1
DSP2-INR
R382 100K
R384 1K
(EFF1/2-ON: 3.3V±0.14V)
GNDA15
GNDA13
GNDA6
GNDA3
GNDA4
GNDA5
(3.3V)
V+5
V+12
V+BB
V-BB
(CH1_D)
(CH2_D)

A 5/6

3.8 MAIN ASSY (6/6)

A 6/6 MAIN ASSY (DWX2337)

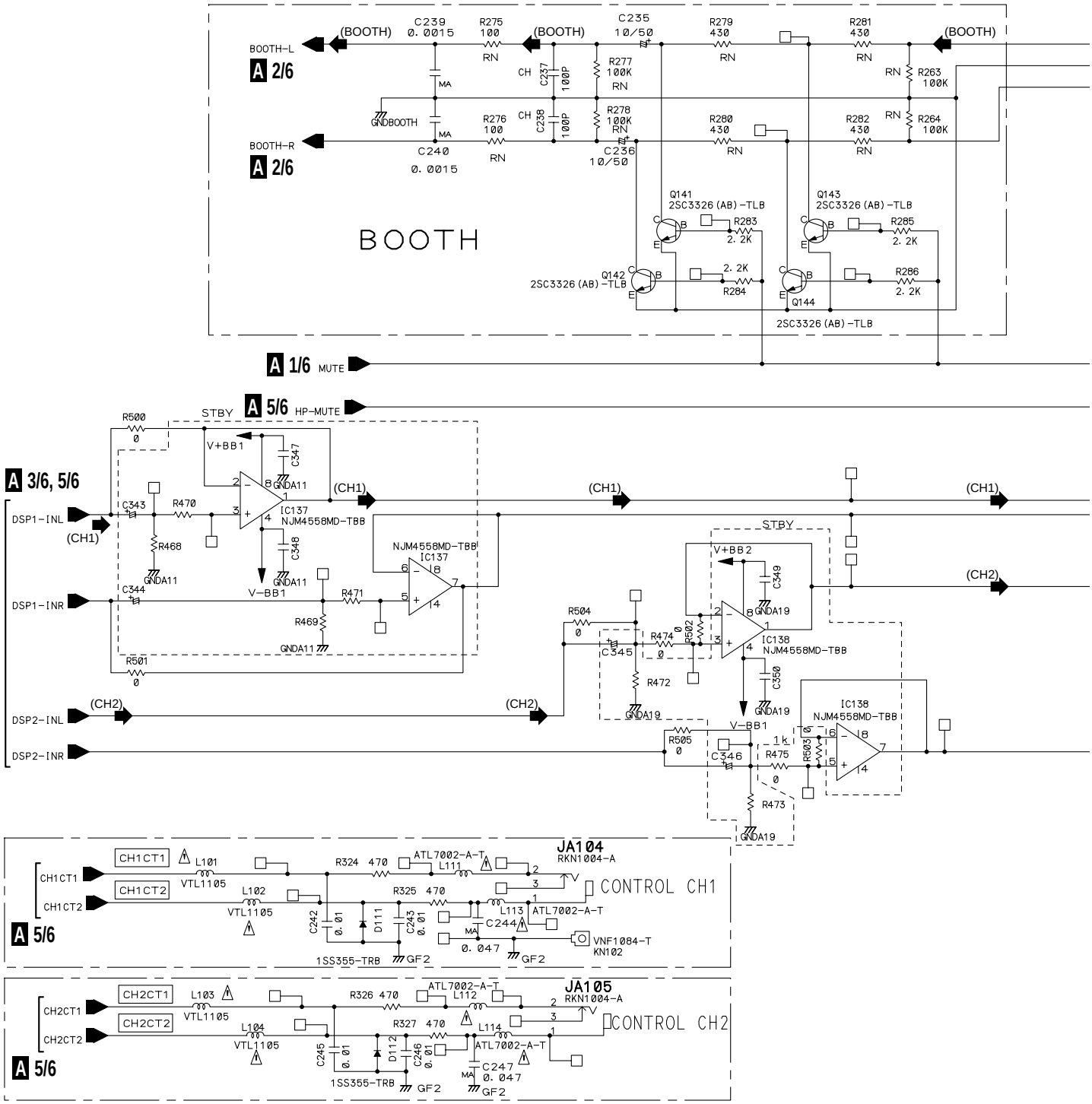

GNDA1 : MIX AMP GND
GNDA2 : SEND MIX GND
GNDA3 : VCA1 GND
GNDA4 : VCA2 GND
GNDA5 : VCA12 GND
GNDA6 : VCA22 GND
GNDA7 : MIC GND
GNDA8 : CH1 MIC GND
GNDA9 : RETURN GND
GNDA10 : DSP1INPUT GND

GNDA11 : CH1METER GND
GNDA12 : DSP2INPUT GND
GNDA13 : CH2METER GND
GNDA14 : MASTER METER GND
GNDA15 : DSP GND
GNDA16 : FILTER GND
GNDA17 : MASTER LEVEL IN GND
GNDA18 : SESSION GND
GNDM2 : MASTER2 GND
GNDB : MASTER LEVEL OUT GND

Notes
[ ] is STBY
RN RN1/16SE****D Ω
RS1/16S***J Ω
CH : CCSRCH F
MA : CQMA μF
CKSRYB μF
AL : CEAL μF
CEAT μF

A 6/6

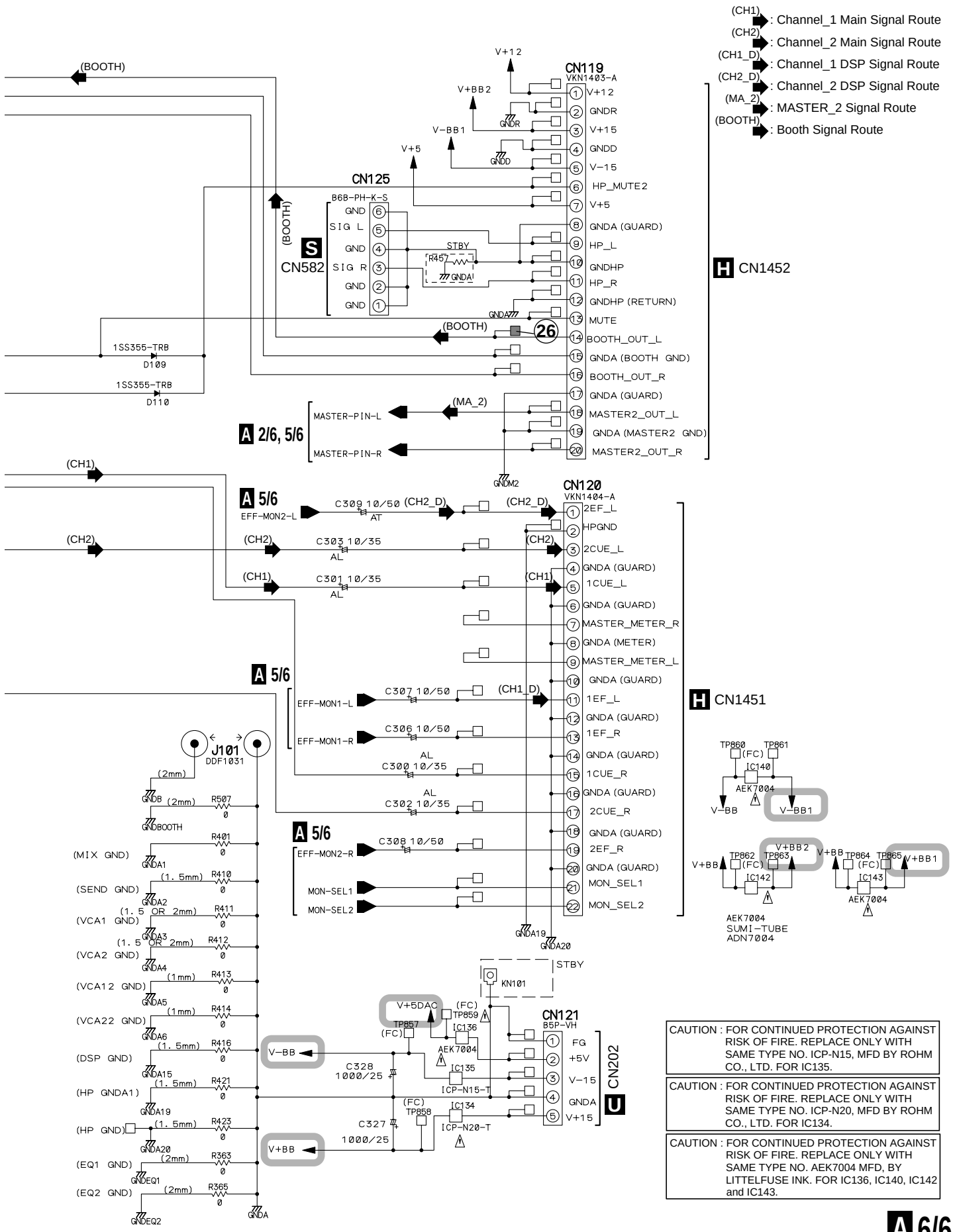

CAUTION : FOR CONTINUED PROTECTION AGAINST RISK OF FIRE. REPLACE ONLY WITH SAME TYPE NO. ICP-N15, MFD BY ROHM CO., LTD. FOR IC135.

CAUTION : FOR CONTINUED PROTECTION AGAINST RISK OF FIRE. REPLACE ONLY WITH SAME TYPE NO. ICP-N20, MFD BY ROHM CO., LTD. FOR IC134.

CAUTION : FOR CONTINUED PROTECTION AGAINST RISK OF FIRE. REPLACE ONLY WITH SAME TYPE NO. AEK7004 MFD, BY LITTELFUSE INK. FOR IC136, IC140, IC142 and IC143.

3.9 DSP ASSY (1/2)

B 1/2 DSP ASSY (DWX2316)

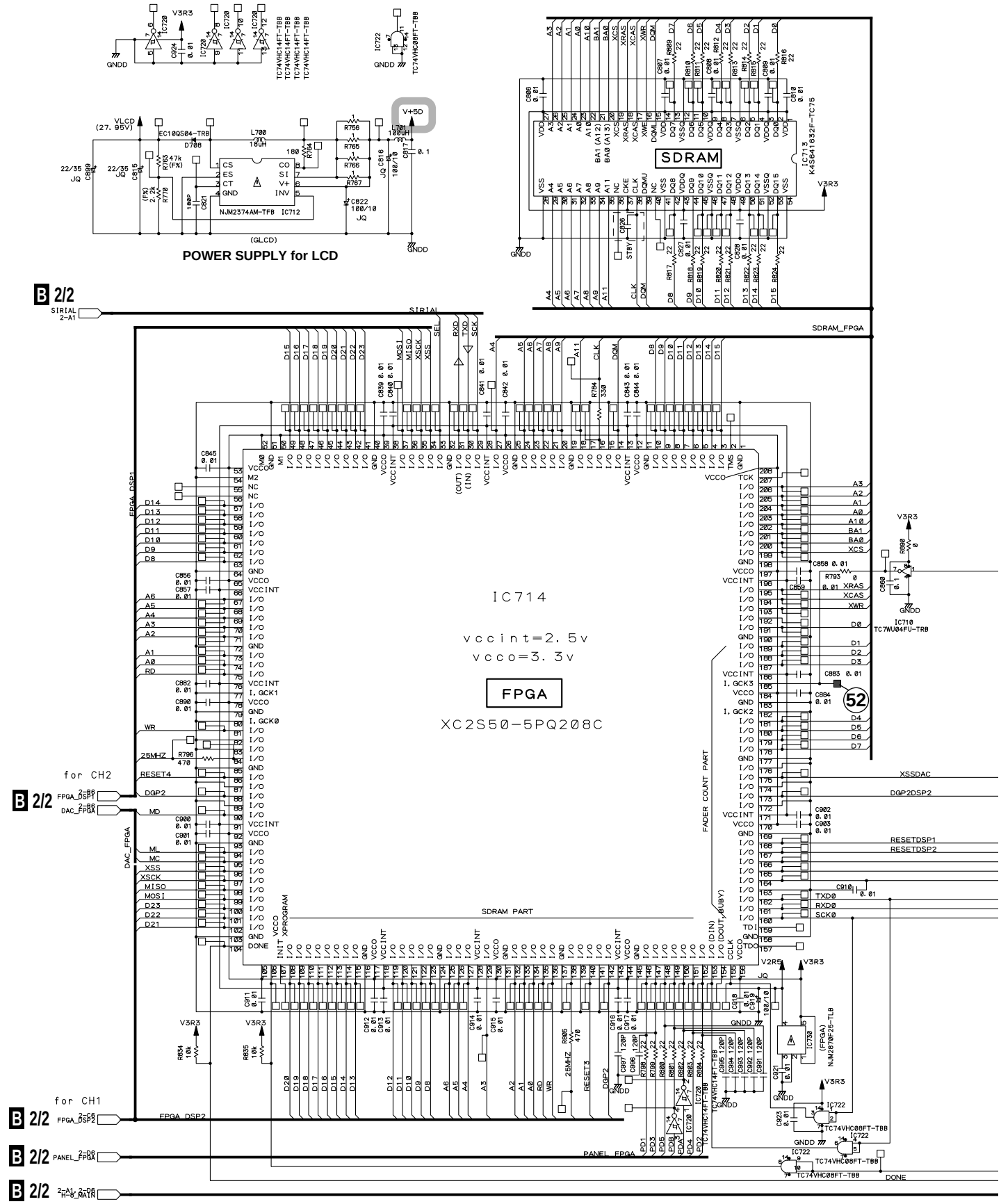

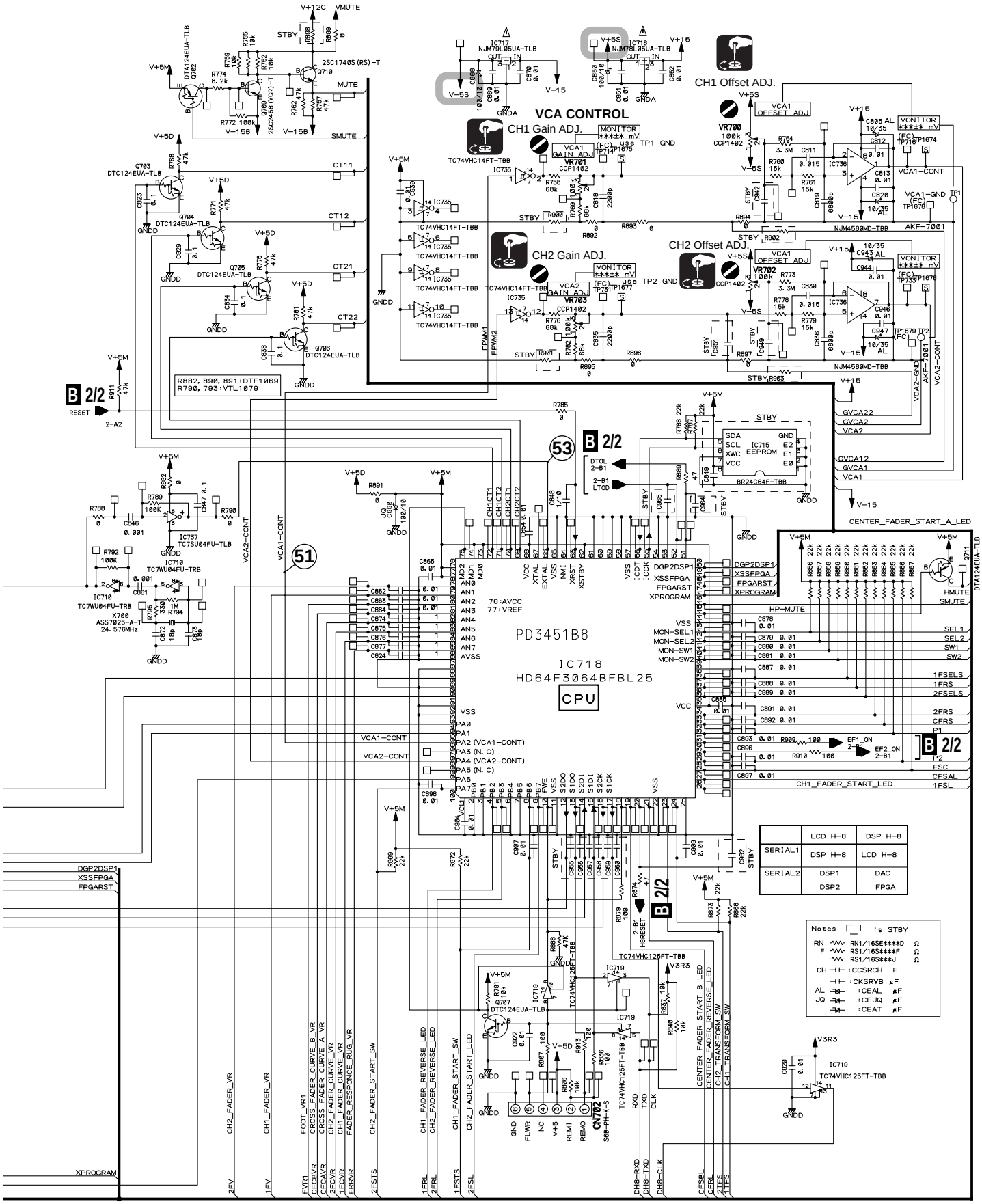
VCA CONTROL
CH1 Offset ADJ.
CH1 Gain ADJ.
CH2 Gain ADJ.
CH2 Offset ADJ.
PD3451B8
IC718
HD64F3064BFBL25
CPU
B 2/2
B 1/2
CENTER_FADER_START_A_LED
CH1_FADER_START_LED
LCD H-8
DSP H-8
SERIAL1
SERIAL2
DSP1
DSP2
DAC
FPGA
Notes
Is STBY

3.10 DSP ASSY (2/2)

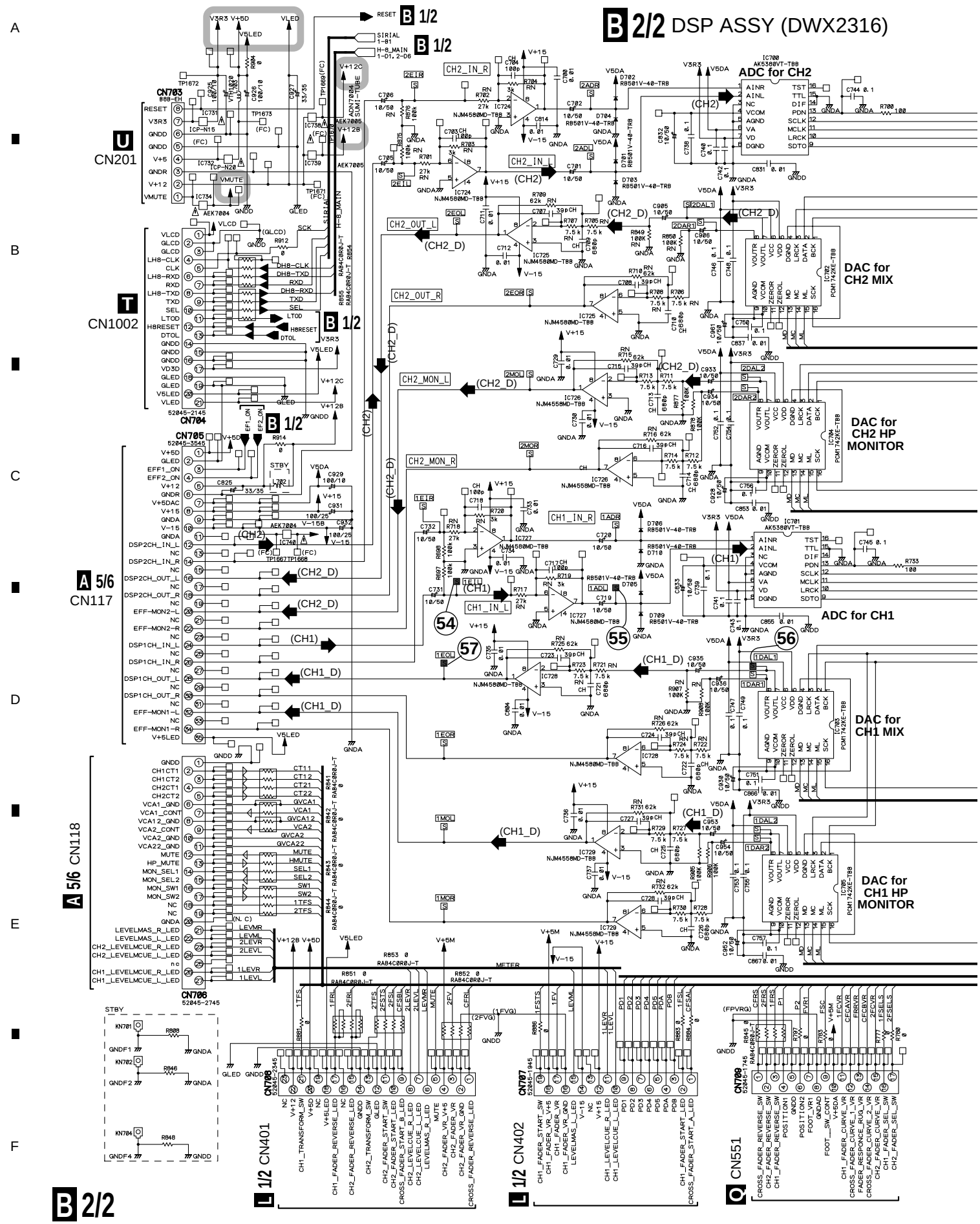

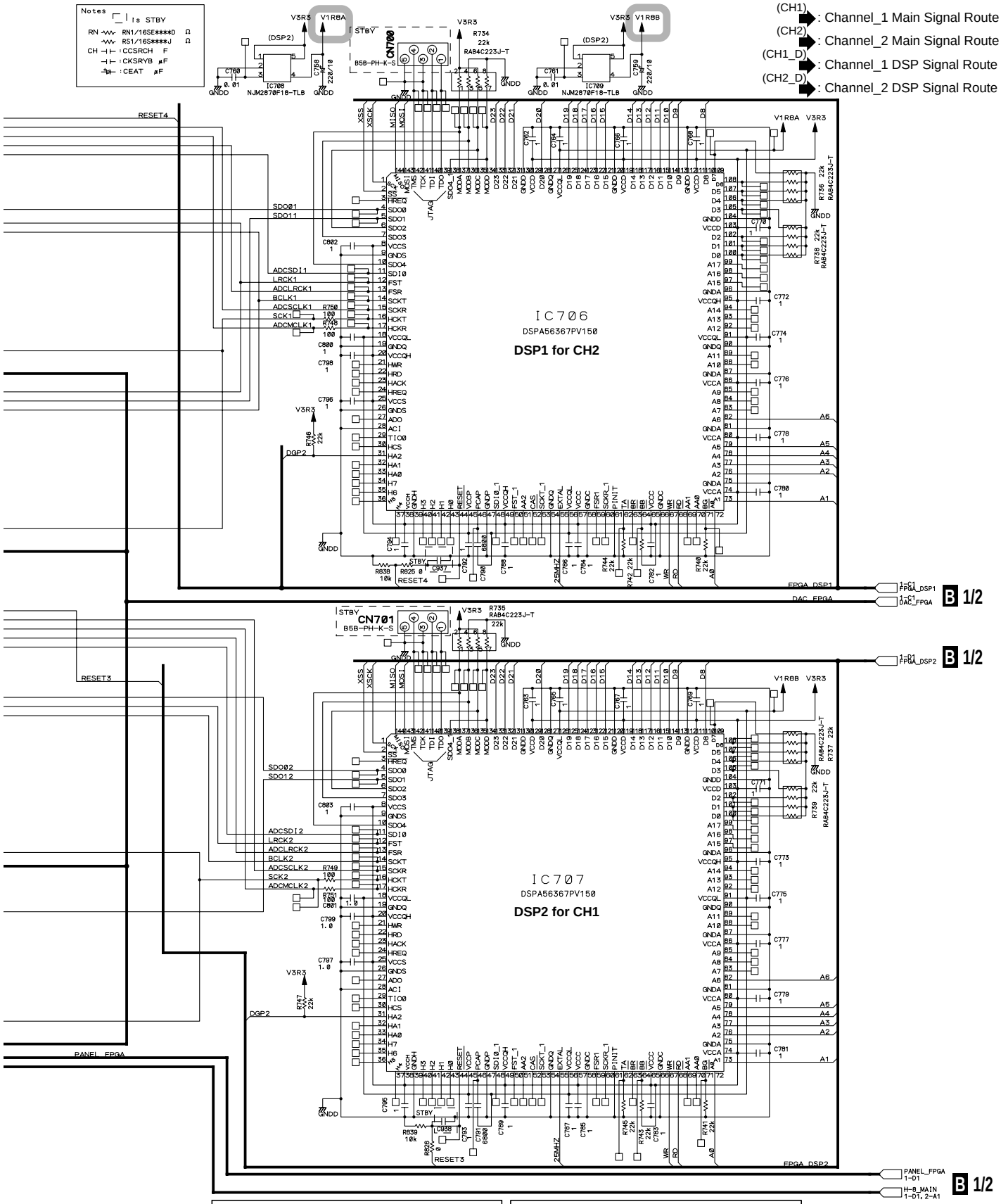

CAUTION : FOR CONTINUED PROTECTION AGAINST RISK OF FIRE. REPLACE ONLY WITH SAME TYPE NO. ICP-N15, MFD BY ROHM CO., LTD. FOR IC731.	CAUTION : FOR CONTINUED PROTECTION AGAINST RISK OF FIRE. REPLACE ONLY WITH SAME TYPE NO. AEK7004 MFD, BY LITTELFUSE INK. FOR IC734 and IC740.
CAUTION : FOR CONTINUED PROTECTION AGAINST RISK OF FIRE. REPLACE ONLY WITH SAME TYPE NO. ICP-N20, MFD BY ROHM CO., LTD. FOR IC732.	CAUTION : FOR CONTINUED PROTECTION AGAINST RISK OF FIRE. REPLACE ONLY WITH SAME TYPE NO. AEK7005 MFD, BY LITTELFUSE INK. FOR IC738 and IC739.

B 2/2

3.11 C1EQ ASSY (1/2)

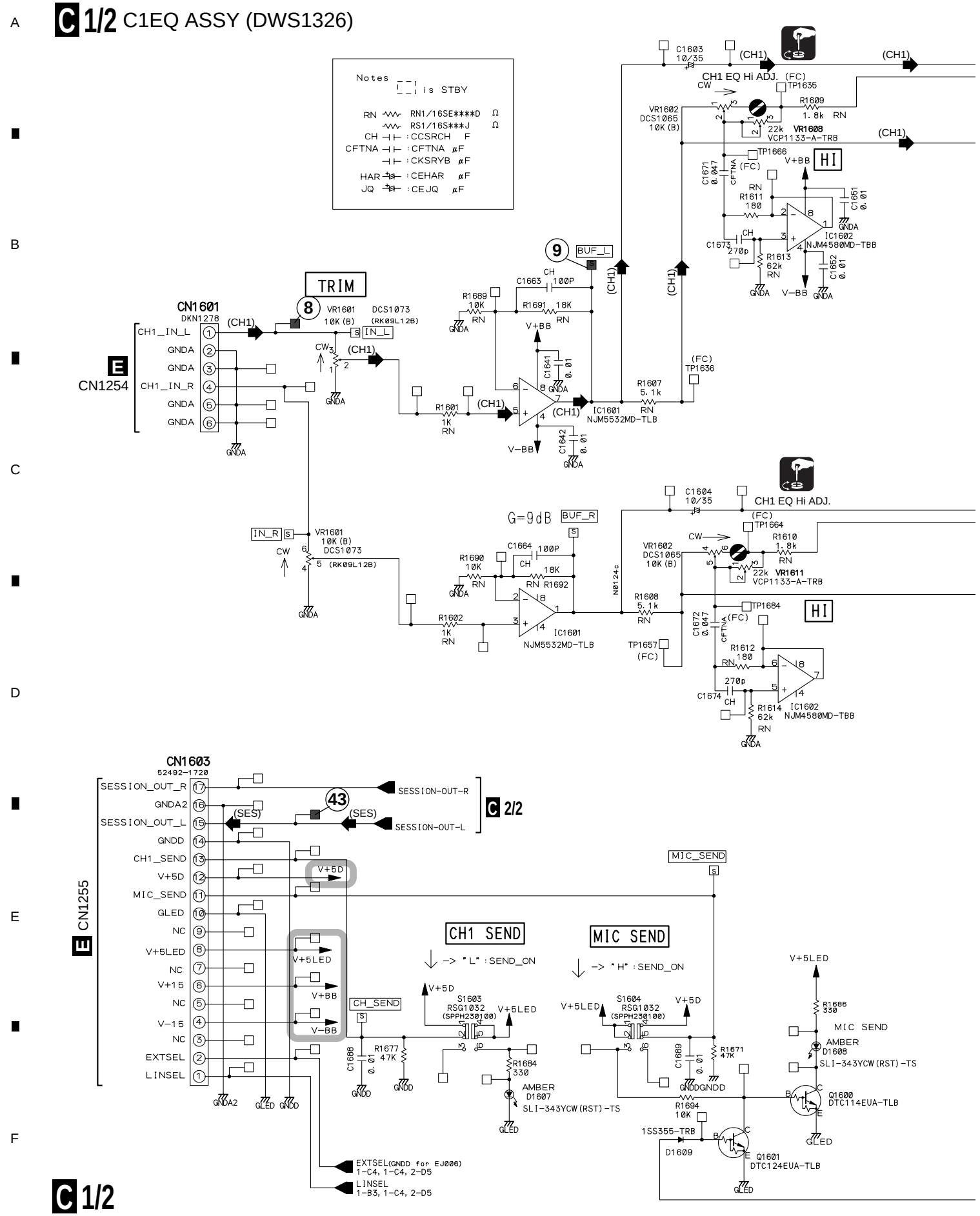

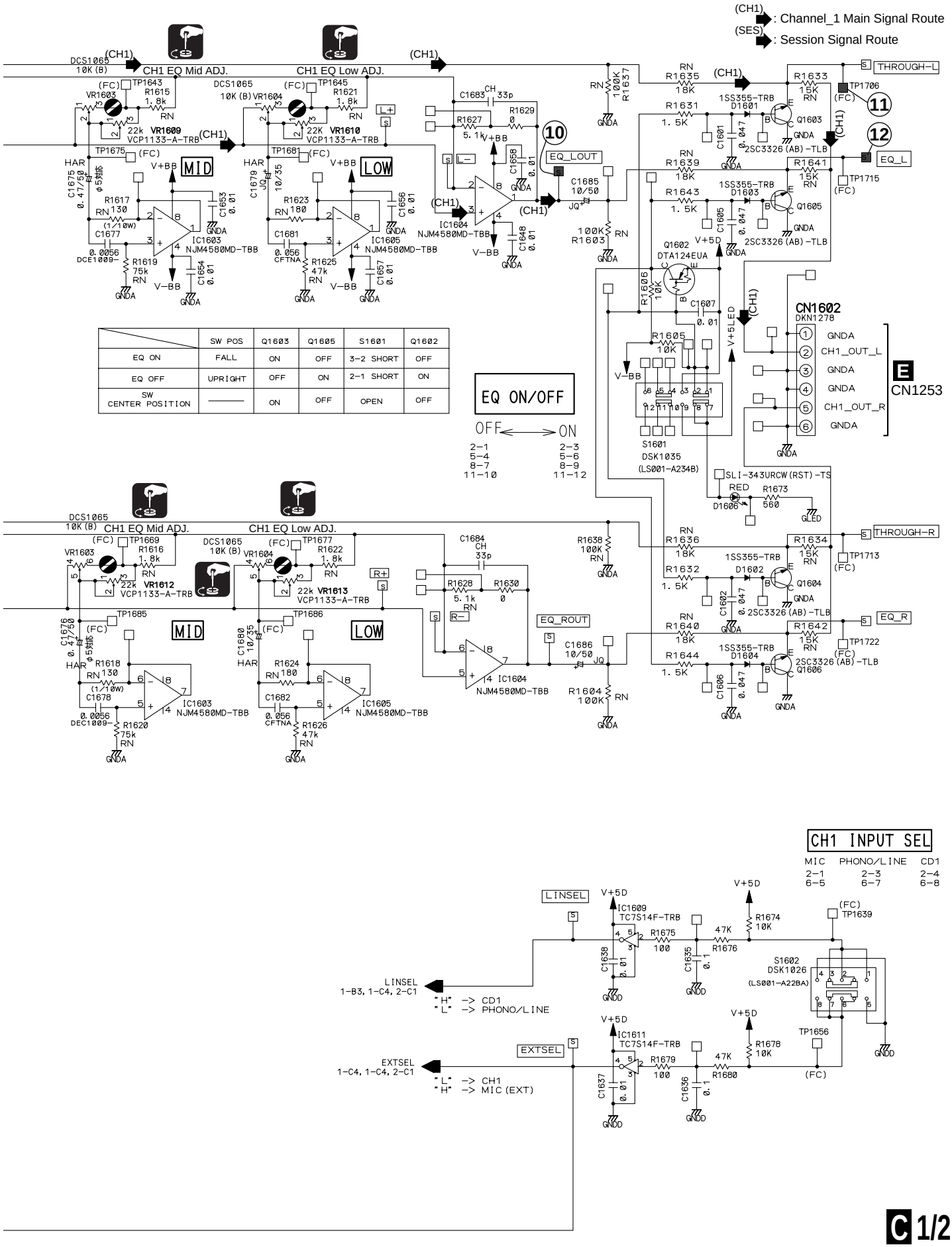

	SW POS	Q1603	Q1605	S1601	Q1602
EQ ON	FALL	ON	OFF	3-2 SHORT	OFF
EQ OFF	UPRIGHT	OFF	ON	2-1 SHORT	ON
SW CENTER POSITION	———	ON	OFF	OPEN	OFF

3.12 C1EQ ASSY (2/2)

C 2/2 C1EQ ASSY (DWS1326)

(MIC) : Microphone Signal Route
(SES) : Session Signal Route

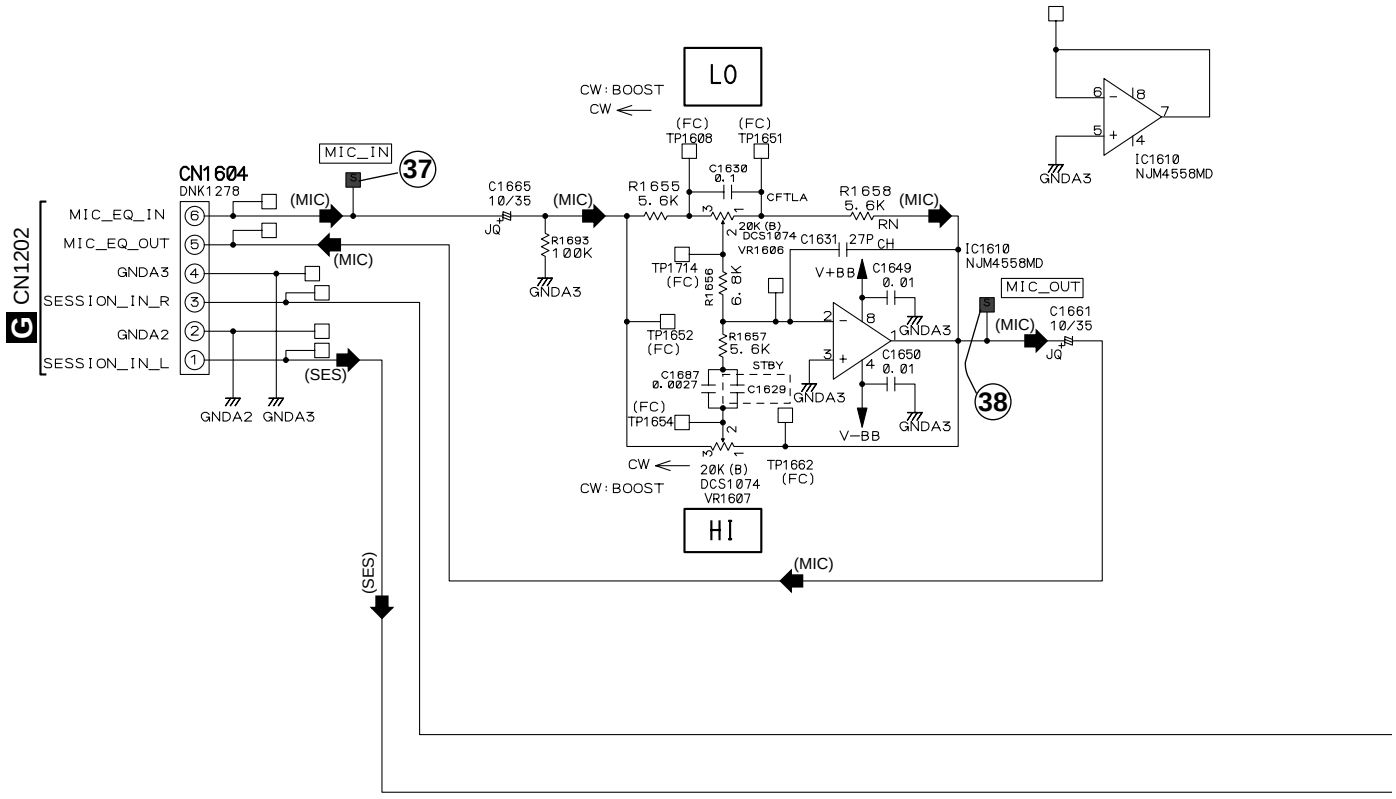

A

B

C

D

E

F

Notes

is STBY

RN RN1/16SE***D Ω
RS1/16S***J Ω
CH :CCSRCH F
CFTLA :CFTLA μF
:CKSRYB μF
JQ :CEJQ μF

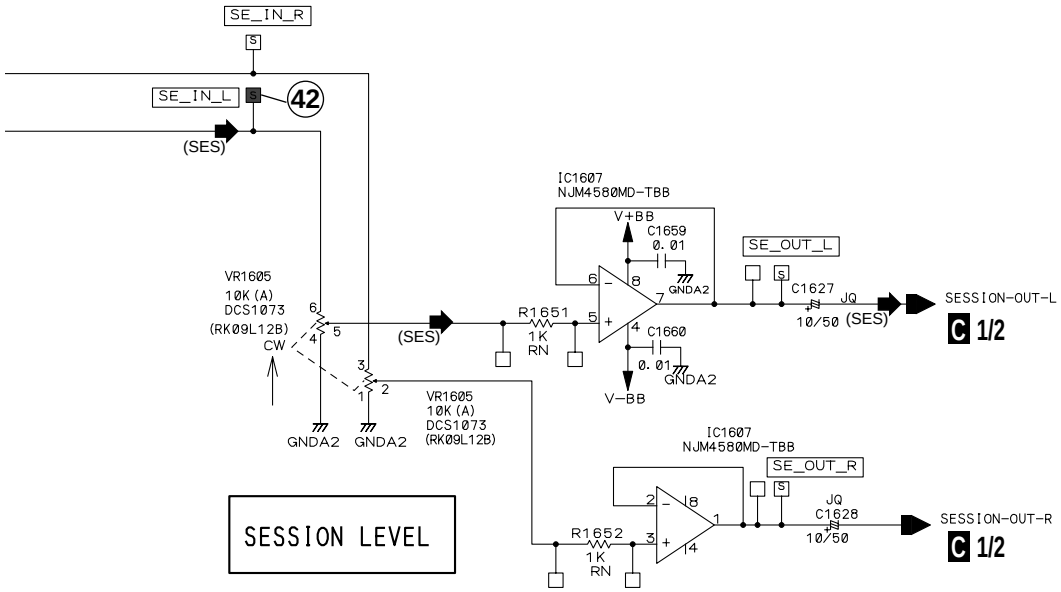

3.13 C2EQ ASSY

D C2EQ ASSY (DWS1327)

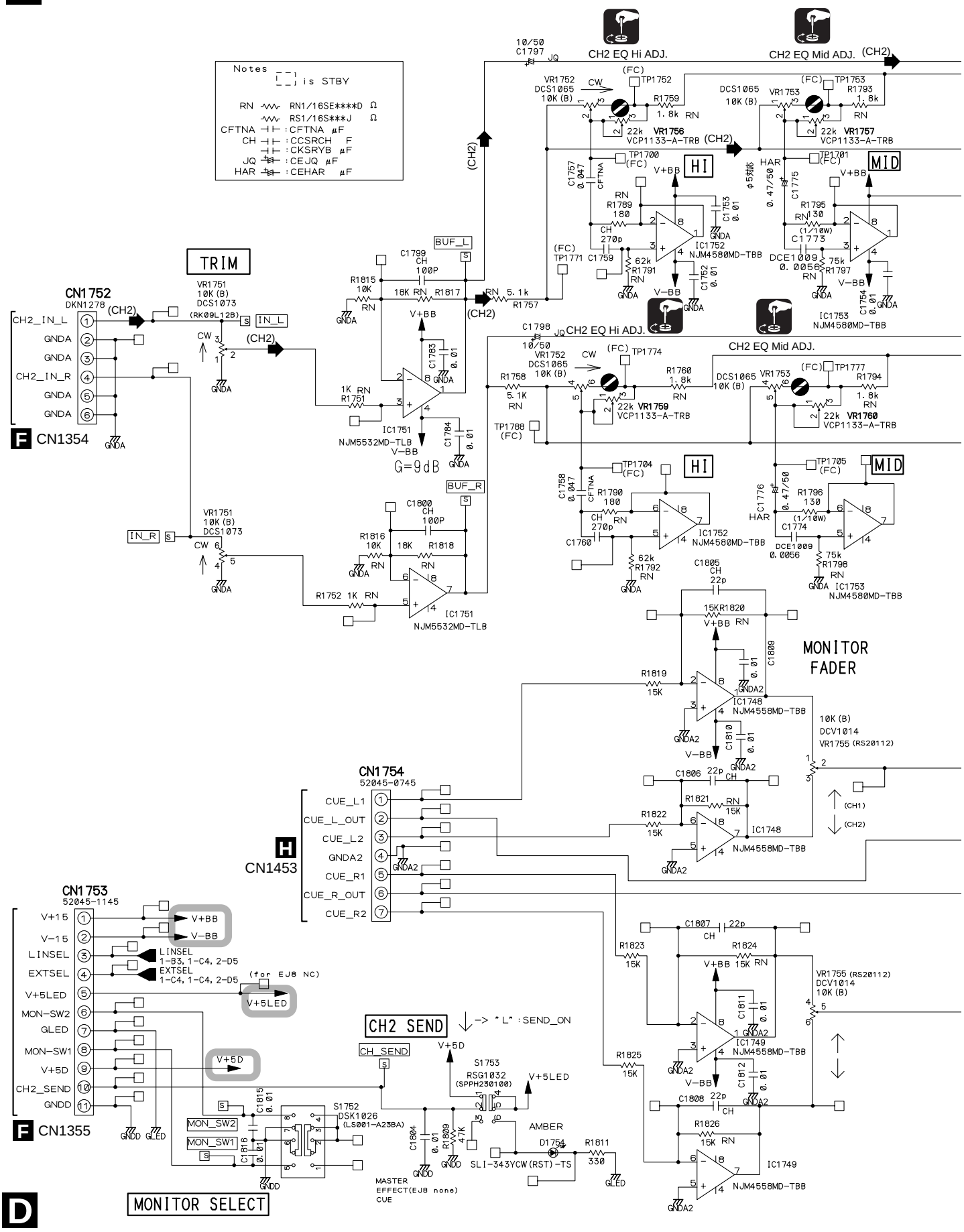

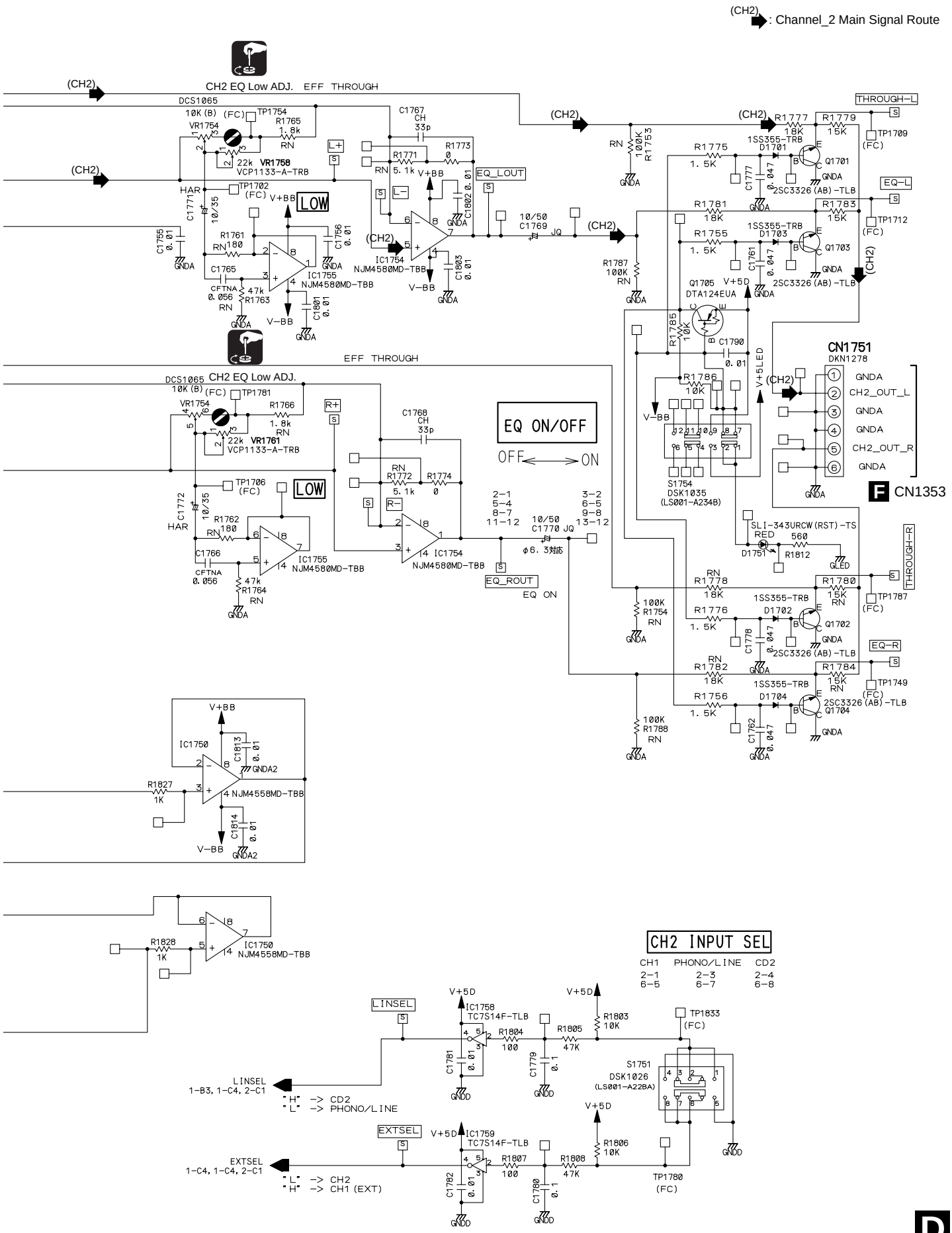
(CH2) : Channel_2 Main Signal Route
CH2 EQ Low ADJ. EFF THROUGH
DCS1065
10K (B) (FC) TP1754
VR1754
R1765 1.8k RN
22k VR1758 VCP1133-A-TRB
C1767 CH 33p
R1771 5.1k RN
R1773 0
V+BB
EQ_LOUT
C1802 0.01
C1803 0.01
IC1754 NJM4580MD-TBB
V-BB
GNDA
HAR
TP1702 (FC)
LOW
C1771 10/35
C1755 0.01
R1761 180 RN
C1765 CFTNA 0.056
47k R1763 RN
IC1755 NJM4580MD-TBB
C1756 0.01
C1801 0.01
10/50 C1769 JQ
R1787 100K RN
R1753 100K RN
THROUGH-L
R1777 18K
R1779 15K
TP1709 (FC)
R1775 1.5K
1SS355-TRB D1701
Q1701 2SC3326(AB)-TLB
C1777 0.047
EQ-L
R1781 18K
R1783 15K
TP1712 (FC)
R1755 1.5K
1SS355-TRB D1703
Q1703 2SC3326(AB)-TLB
C1761 0.047
Q1705 DTA124EUA
V+5D
R1785 10K
C1790 0.01
V+5LED
CN1751 DKN1278
GNDA
CH2_OUT_L
CH2_OUT_R
F CN1353
R1786 10K
S1754 DSK1035 (LS001-A234B)
SLI-343URCW(RST)-TS RED D1751
560 R1812
GLED
EFF THROUGH
CH2 EQ Low ADJ.
DCS1065
10K (B) (FC) TP1781
VR1754
R1766 1.8k RN
22k VR1761 VCP1133-A-TRB
C1768 CH 33p
R1772 5.1k RN
R1774 0
EQ ON/OFF
OFF ON
TP1706 (FC)
LOW
C1772 10/35
HAR
R1762 180 RN
C1766 CFTNA 0.056
47k R1764 RN
IC1755 NJM4580MD-TBB
IC1754 NJM4580MD-TBB
2-1 5-4 8-7 11-12
3-2 6-5 9-8 13-12
10/50 C1770 JQ
φ6.3対応
EQ_ROUT
EQ ON
100K R1754 RN
THROUGH-R
R1778 18K
R1780 15K RN
TP1787 (FC)
R1776 1.5K
1SS355-TRB D1702
Q1702 2SC3326(AB)-TLB
C1778 0.047
EQ-R
R1782 18K
R1784 15K RN
TP1749 (FC)
R1756 1.5K
1SS355-TRB D1704
Q1704 2SC3326(AB)-TLB
C1762 0.047
100K R1788 RN
IC1750
C1813 0.01
GNDA2
R1827 1K
NJM4558MD-TBB
C1814 0.01
R1828 1K
IC1750 NJM4558MD-TBB
CH2 INPUT SEL
CH1 PHONO/LINE CD2
2-1 2-3 2-4
6-5 6-7 6-8
LINSEL
IC1758 TC7S14F-TLB
R1804 100
R1805 47K
R1803 10K
TP1833 (FC)
C1781 0.01
C1779 0.1
GNDD
S1751 DSK1026 (LS001-A22BA)
LINSEL 1-B3, 1-C4, 2-C1
"H" -> CD2
"L" -> PHONO/LINE
EXTSEL
IC1759 TC7S14F-TLB
R1807 100
R1808 47K
R1806 10K
TP1780 (FC)
C1782 0.01
C1780 0.1
EXTSEL 1-C4, 1-C4, 2-C1
"L" -> CH2
"H" -> CH1 (EXT)

3.14 C1BF ASSY

E C1BF ASSY (DWS1328)

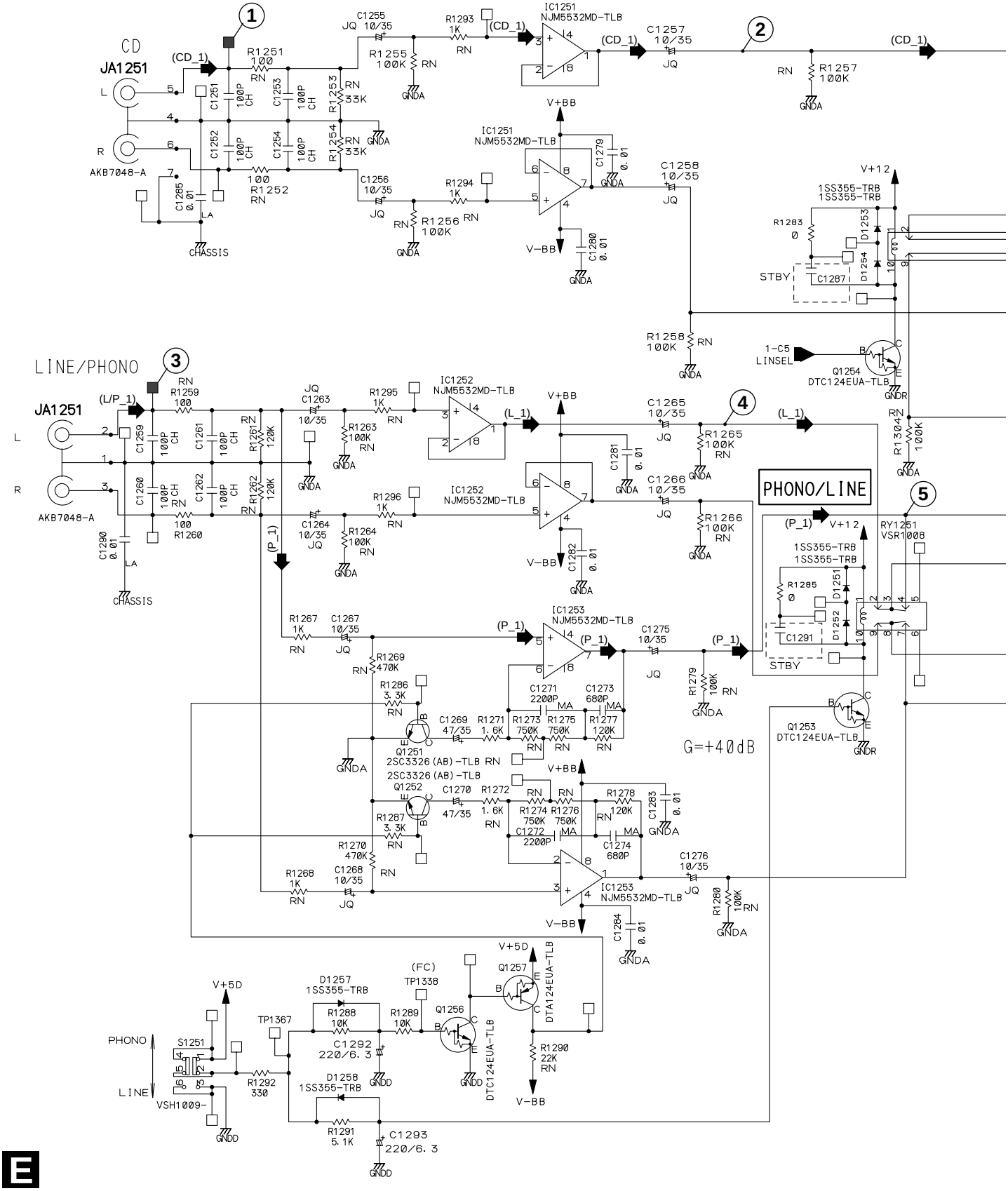

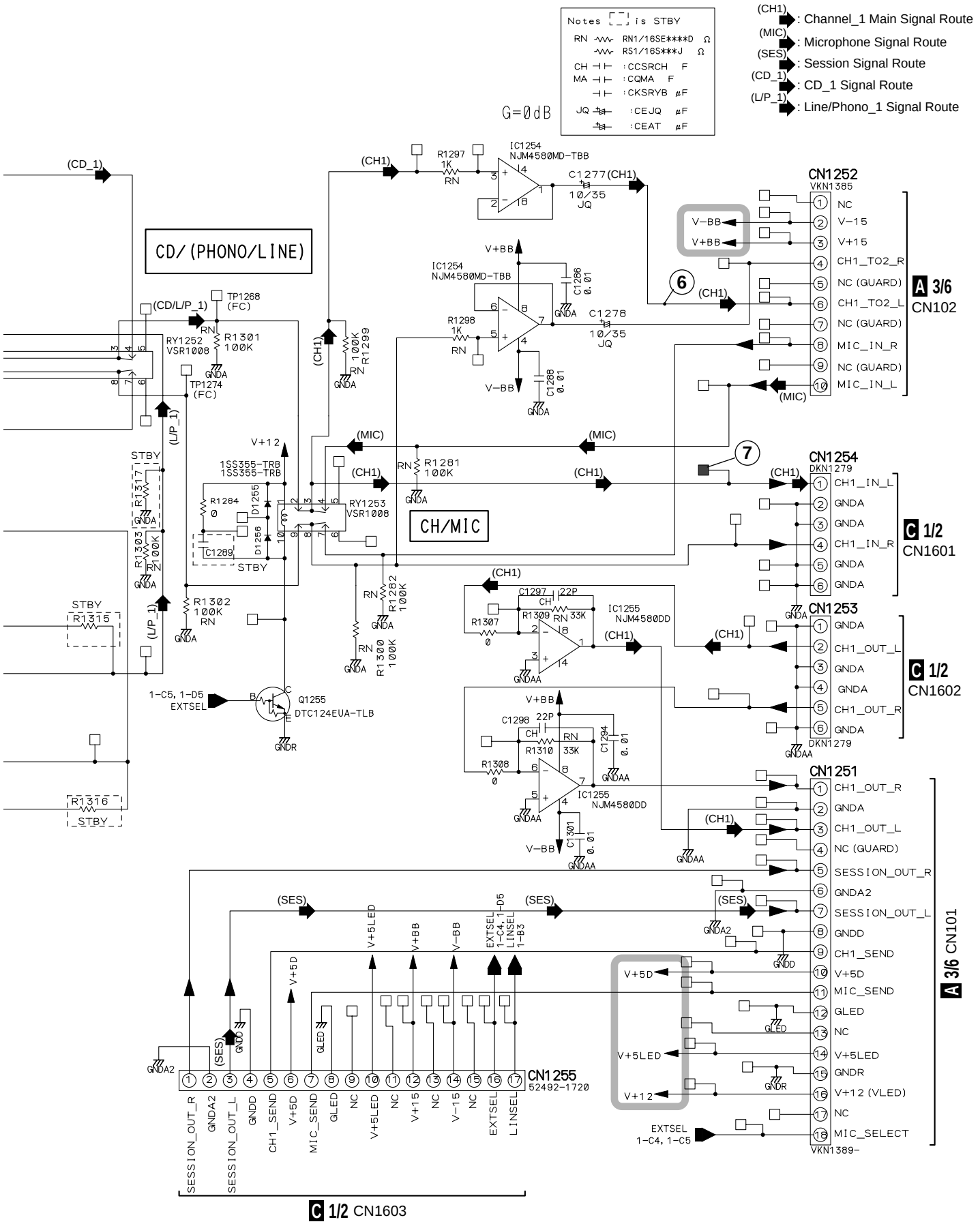
Notes [ ] is STBY
RN RN1/16SE****D Ω
RS1/16S***J Ω
CH :CCSRCH F
MA :CQMA F
:CKSRYB μF
JQ :CEJQ μF
:CEAT μF
G=0dB
(CH1): Channel_1 Main Signal Route
(MIC): Microphone Signal Route
(SES): Session Signal Route
(CD_1): CD_1 Signal Route
(L/P_1): Line/Phono_1 Signal Route
CD/(PHONO/LINE)
CH/MIC
IC1254 NJM4580MD-TBB
IC1255 NJM4580DD
CN1252 VKN1385
CN1254 DKN1279
CN1253 DKN1279
CN1251 VKN1389-
CN1255 52492-1720
A 3/6 CN102
C 1/2 CN1601
C 1/2 CN1602
A 3/6 CN101
C 1/2 CN1603
RY1252 VSR1008
RY1253 VSR1008
Q1255 DTC124EUA-TLB
1SS355-TRB
TP1268 (FC)
TP1274 (FC)
V+12
V+BB
V-BB
GNDA
GNDR
GNDD
GNDA2
GNDAA
STBY
EXTSEL 1-C4, 1-C5
EXTSEL 1-C4, 1-D5
LINSEL 1-B3
SESSION_OUT_R
SESSION_OUT_L
CH1_SEND
MIC_SEND
V+5D
V+5LED
V+15
V-15
GLED
NC
EXTSEL
LINSEL
CH1_TO2_R
CH1_TO2_L
MIC_IN_R
MIC_IN_L
CH1_IN_L
CH1_IN_R
CH1_OUT_L
CH1_OUT_R
MIC_SELECT
V+12 (VLED)

3.15 C2BF ASSY

F C2BF ASSY (DWS1329)

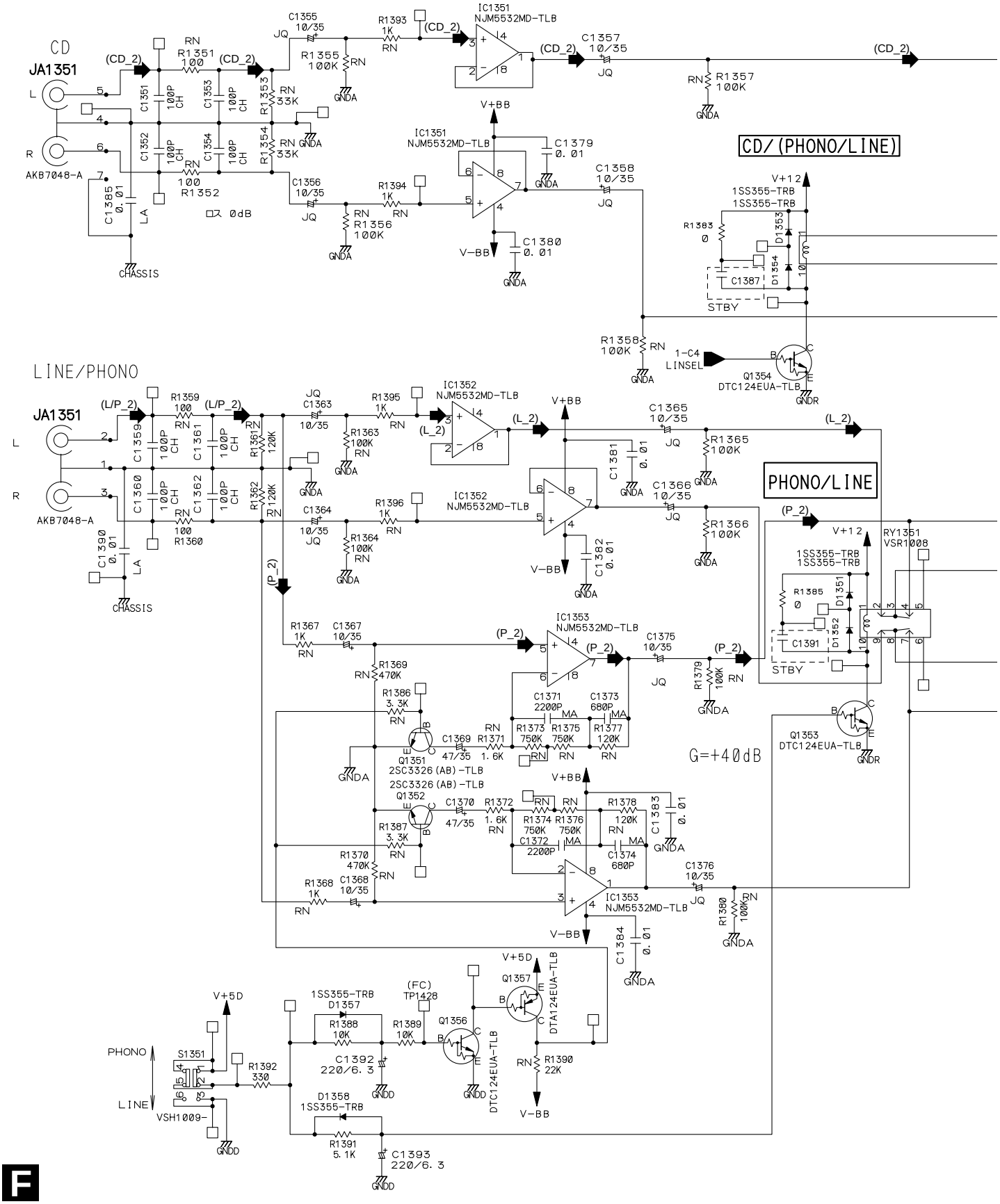

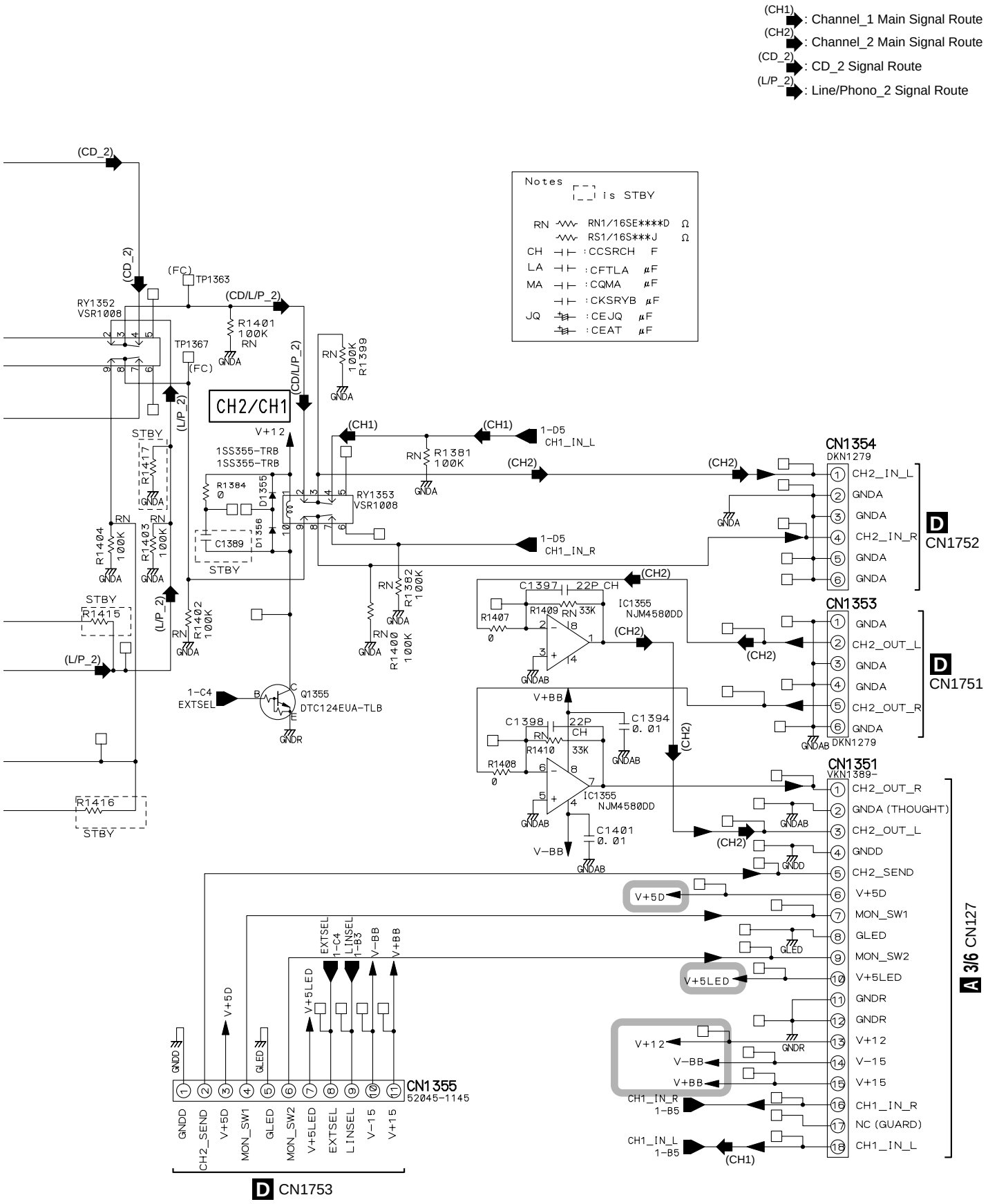
(CH1) : Channel_1 Main Signal Route
(CH2) : Channel_2 Main Signal Route
(CD_2) : CD_2 Signal Route
(L/P_2) : Line/Phono_2 Signal Route
Notes
is STBY
RN RN1/16SE****D Ω
RS1/16S***J Ω
CH :CCSRCH F
LA :CFTLA μF
MA :CQMA μF
:CKSRYB μF
JQ :CEJQ μF
:CEAT μF
CH2/CH1
CN1354
DKN1279
CN1752
CN1353
CN1751
CN1351
VKN1389-
A 3/6 CN127
CN1355
52045-1145
D CN1753
RY1352
VSR1008
RY1353
VSR1008
IC1355
NJM4580DD
Q1355
DTC124EUA-TLB
1SS355-TRB
CH2_IN_L
CH2_IN_R
CH2_OUT_L
CH2_OUT_R
GNDA (THOUGHT)
CH2_SEND
MON_SW1
MON_SW2
GLED
V+5D
V+5LED
V+12
V-15
V+15
V-BB
V+BB
CH1_IN_R
CH1_IN_L
NC (GUARD)
GNDD
GNDR
EXTSEL
LINSEL

3.16 MICB ASSY

G MICB ASSY (DWX2318)

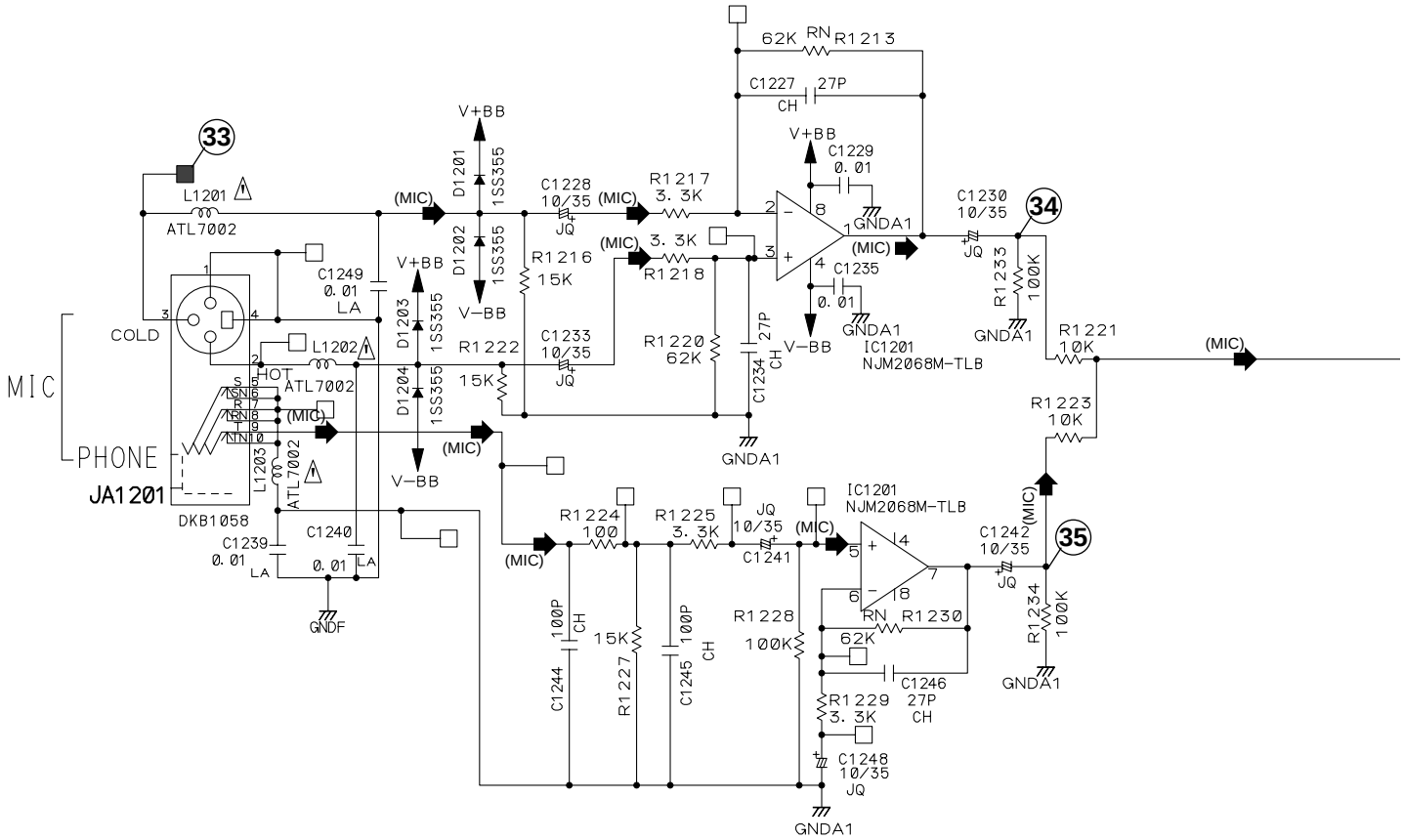

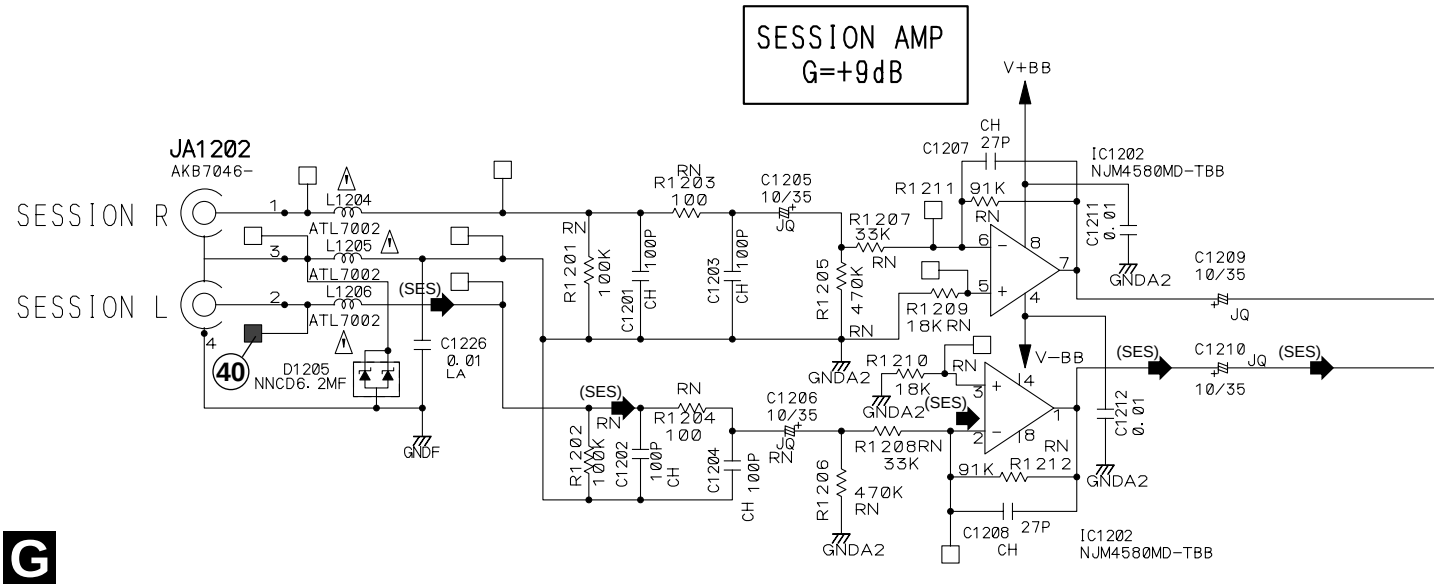

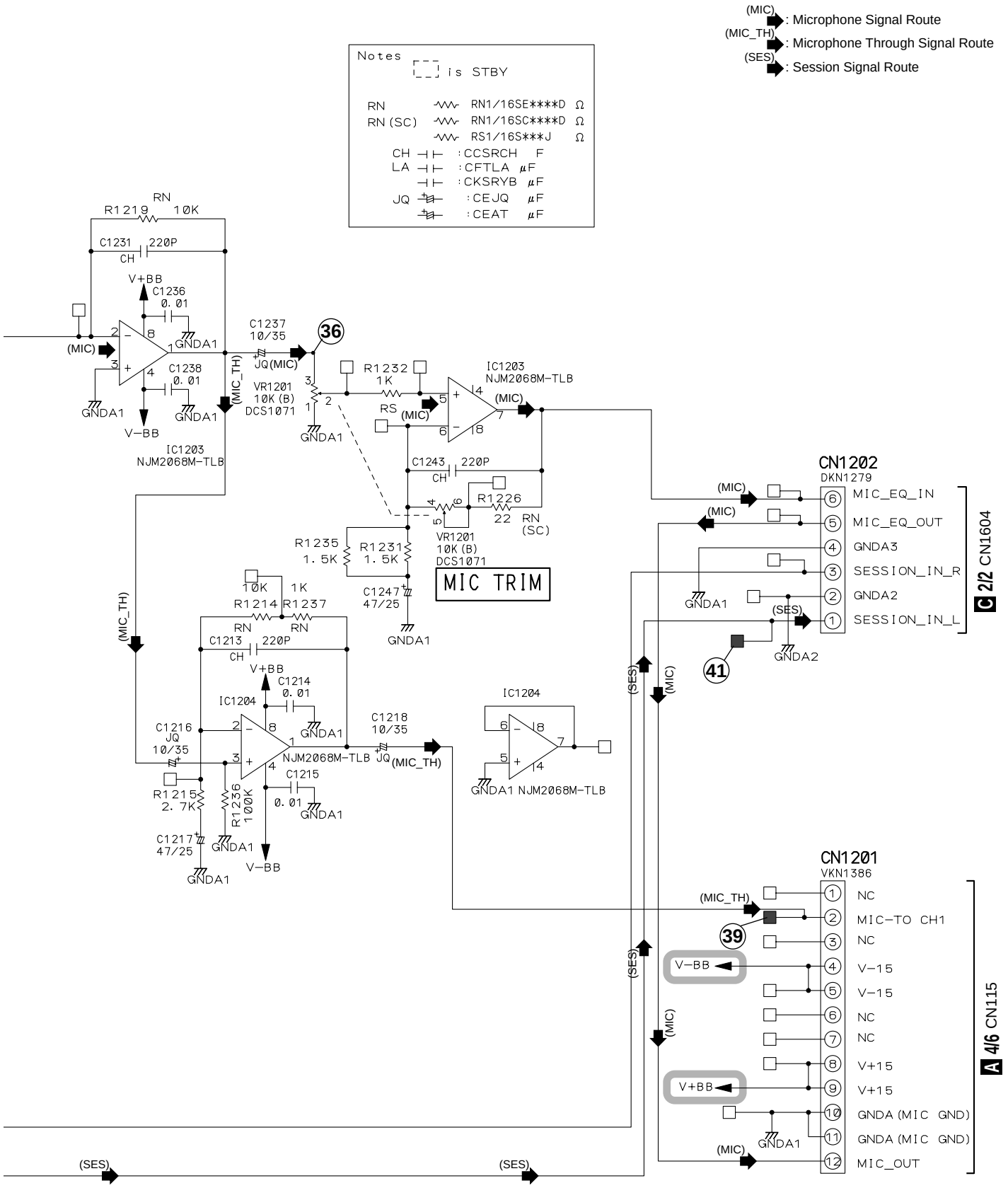
(MIC): Microphone Signal Route
(MIC_TH): Microphone Through Signal Route
(SES): Session Signal Route
Notes
is STBY
RN RN1/16SE****D Ω
RN (SC) RN1/16SC****D Ω
RS1/16S***J Ω
CH :CCSRCH F
LA :CFTLA μF
:CKSRYB μF
JQ :CEJQ μF
:CEAT μF
R1219 RN 10K
C1231 220P CH
V+BB
C1236 0.01
C1237 10/35
36
(MIC)
GNDA1
C1238 0.01
V−BB
IC1203 NJM2068M-TLB
(MIC_TH)
JQ(MIC)
VR1201 10K (B) DCS1071
R1232 1K
RS
IC1203 NJM2068M-TLB
C1243 220P CH
R1226 22 RN (SC)
R1235 1.5K
R1231 1.5K
VR1201 10K (B) DCS1071
MIC TRIM
C1247 47/25
10K 1K
R1214 R1237
RN RN
C1213 220P CH
C1214 0.01
IC1204
C1216 JQ 10/35
NJM2068M-TLB
C1218 10/35
JQ
R1215 2.7K
R1236 100K
C1215 0.01
C1217 47/25
IC1204
NJM2068M-TLB
CN1202
DKN1279
MIC_EQ_IN
MIC_EQ_OUT
GNDA3
SESSION_IN_R
GNDA2
SESSION_IN_L
C 2/2 CN1604
41
CN1201
VKN1386
NC
MIC−TO CH1
NC
V−15
V−15
NC
NC
V+15
V+15
GNDA (MIC GND)
GNDA (MIC GND)
MIC_OUT
39
V−BB
V+BB
A 4/6 CN115
(SES)

3.17 HPBO ASSY

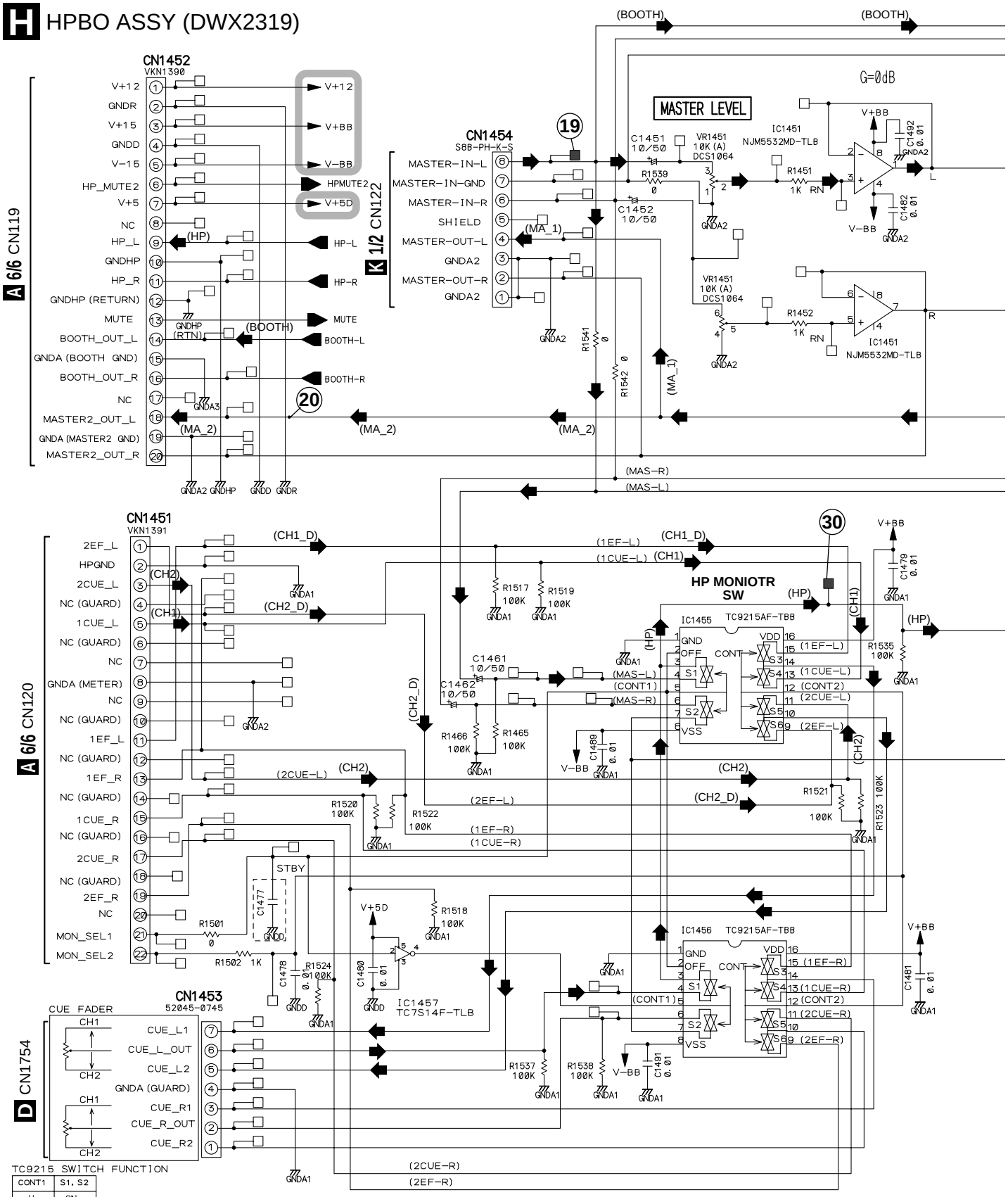

TC9215 SWITCH FUNCTION

CONT1	S1, S2
H	ON
L	OFF

CONT2	S3	S4	S5	S6
H	OFF	ON	ON	OFF
L	ON	OFF	OFF	ON

○ : SW ON × : SW OFF	IC1455						IC1455					
	S1	S2	S3	S4	S5	S6	S1	S2	S3	S4	S5	S6
MASTER	○	○	–	–	–	–	×	×	–	–	–	–
CUE	×	×	×	○	○	×	○	○	×	○	○	×
EFFECT	×	×	○	×	×	○	○	○	○	×	×	○

MICOM. CONTROL	MON-SEL1	MON-SEL2
MASTER	H	H
CUE	L	H
EFFECT	L	L

H

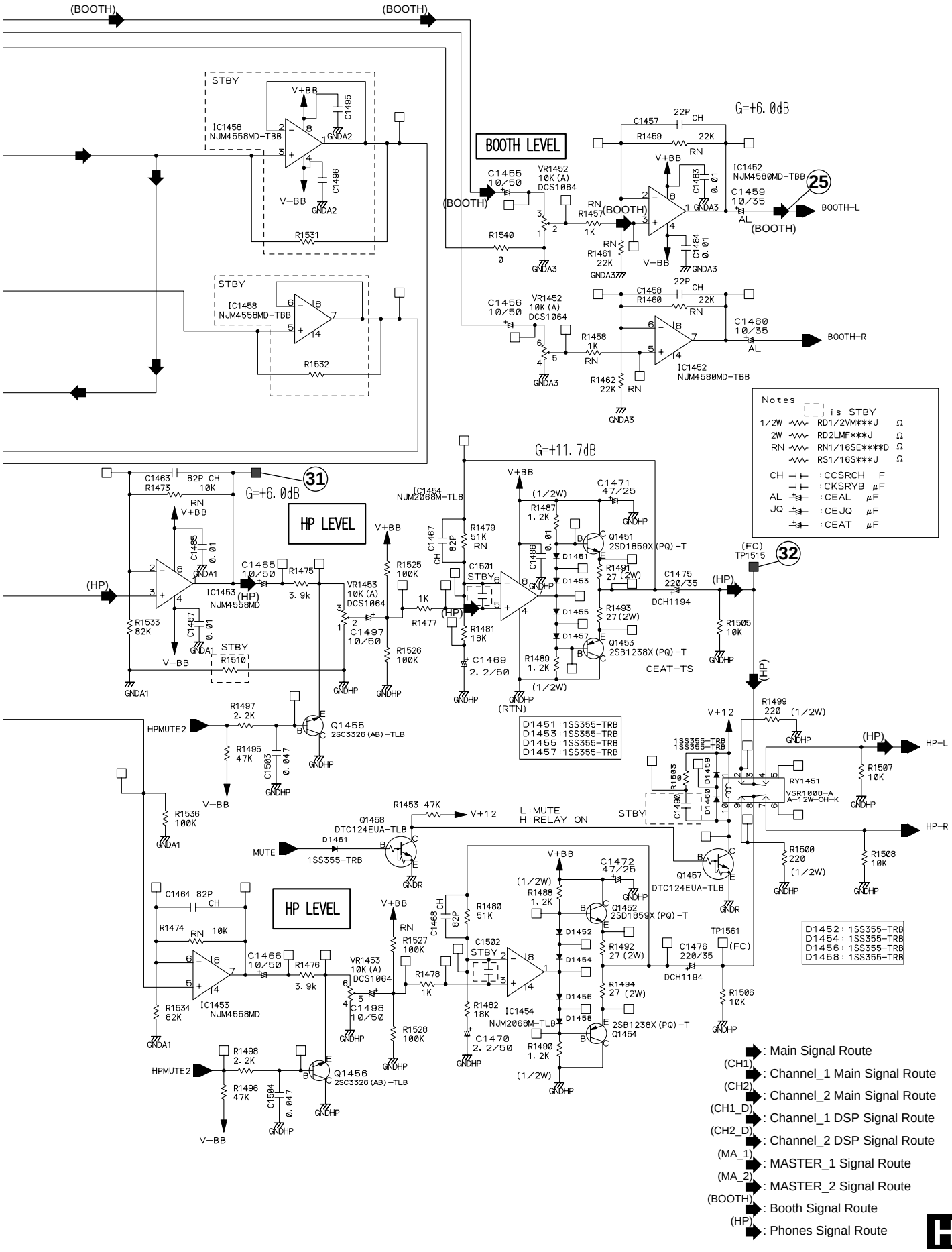
BOOTH LEVEL
HP LEVEL
HP LEVEL
G=+6.0dB
G=+11.7dB
G=+6.0dB
IC1458 NJM4558MD-TBB
IC1452 NJM4580MD-TBB
IC1453 NJM4558MD
IC1454 NJM2068M-TLB
Q1451 2SD1859X(PQ)-T
Q1453 2SB1238X(PQ)-T
Q1455 2SC3326(AB)-TLB
Q1456 2SC3326(AB)-TLB
Q1457 DTC124EUA-TLB
Q1458 DTC124EUA-TLB
Q1452 2SD1859X(PQ)-T
Q1454 2SB1238X(PQ)-T
RY1451 VSR1008-A A-12W-OH-K
TP1515
TP1561
BOOTH-L
BOOTH-R
HP-L
HP-R
HPMUTE2
MUTE
L:MUTE
H:RELAY ON
CEAT-TS
D1451:1SS355-TRB
D1453:1SS355-TRB
D1455:1SS355-TRB
D1457:1SS355-TRB
D1452:1SS355-TRB
D1454:1SS355-TRB
D1456:1SS355-TRB
D1458:1SS355-TRB
Notes
is STBY
1/2W RD1/2VM***J Ω
2W RD2LMF***J Ω
RN RN1/16SE****D Ω
RS1/16S***J Ω
CH :CCSRCH F
:CKSRYB μF
AL :CEAL μF
JQ :CEJQ μF
:CEAT μF
: Main Signal Route
(CH1) : Channel_1 Main Signal Route
(CH2) : Channel_2 Main Signal Route
(CH1_D) : Channel_1 DSP Signal Route
(CH2_D) : Channel_2 DSP Signal Route
(MA_1) : MASTER_1 Signal Route
(MA_2) : MASTER_2 Signal Route
(BOOTH) : Booth Signal Route
(HP) : Phones Signal Route

3.18 FDVR ASSY

FDVR ASSY (DWX2320)

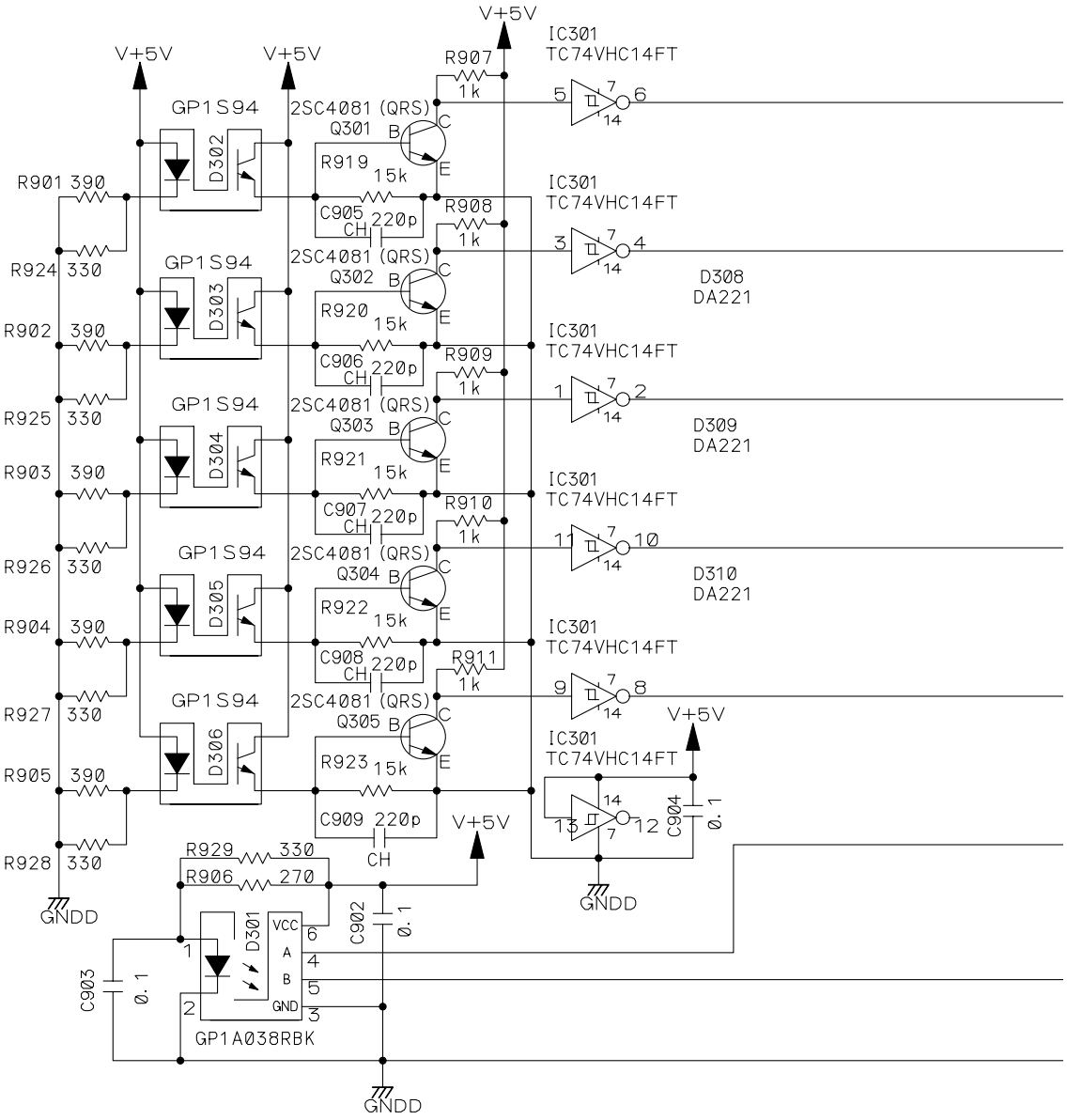

Notes

is STBY

RS1/16***J Ω

CH :CCSRCH F

:CKSRYB μF

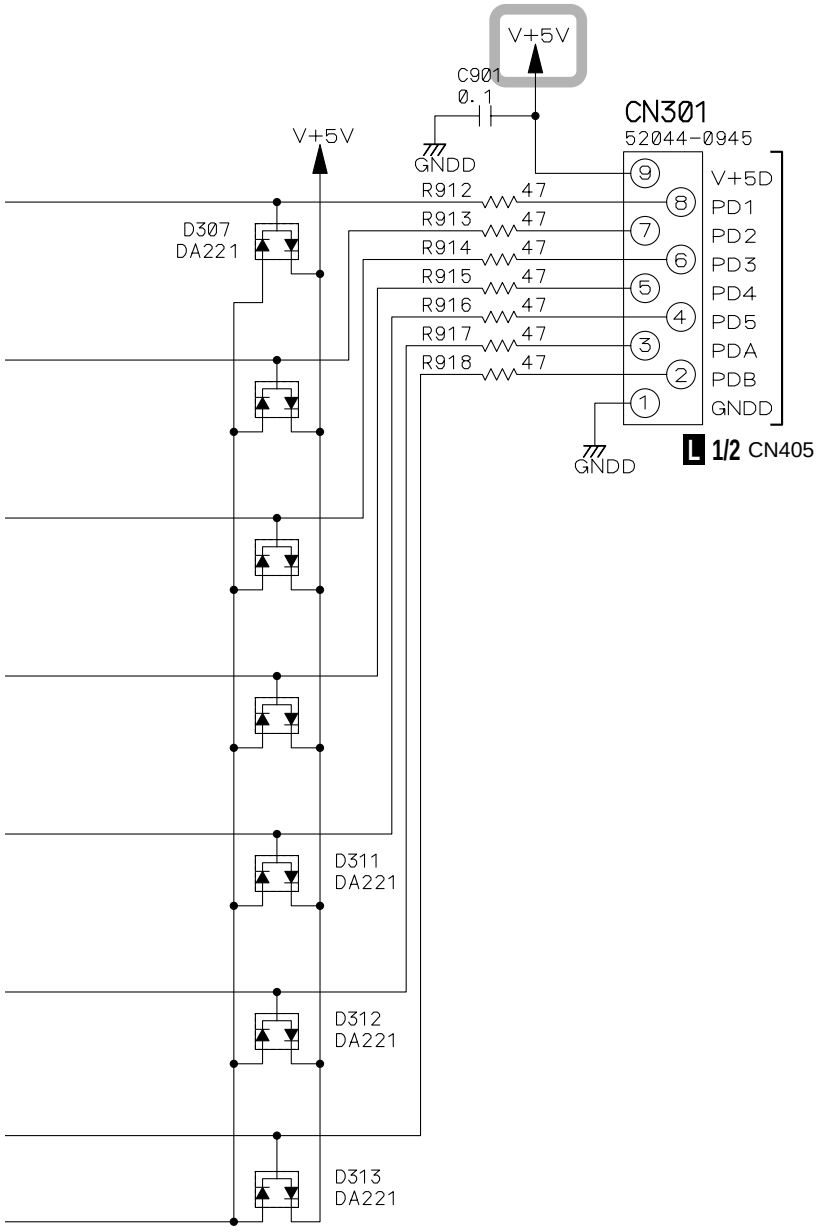
V+5V
C901
0.1
GNDD
CN301
52044-0945
V+5D
PD1
PD2
PD3
PD4
PD5
PDA
PDB
GNDD
R912 47
R913 47
R914 47
R915 47
R916 47
R917 47
R918 47
D307
DA221
D311
DA221
D312
DA221
D313
DA221
GNDD
L 1/2 CN405

3.19 SDRT ASSY

J SDRT ASSY (DWX2321)

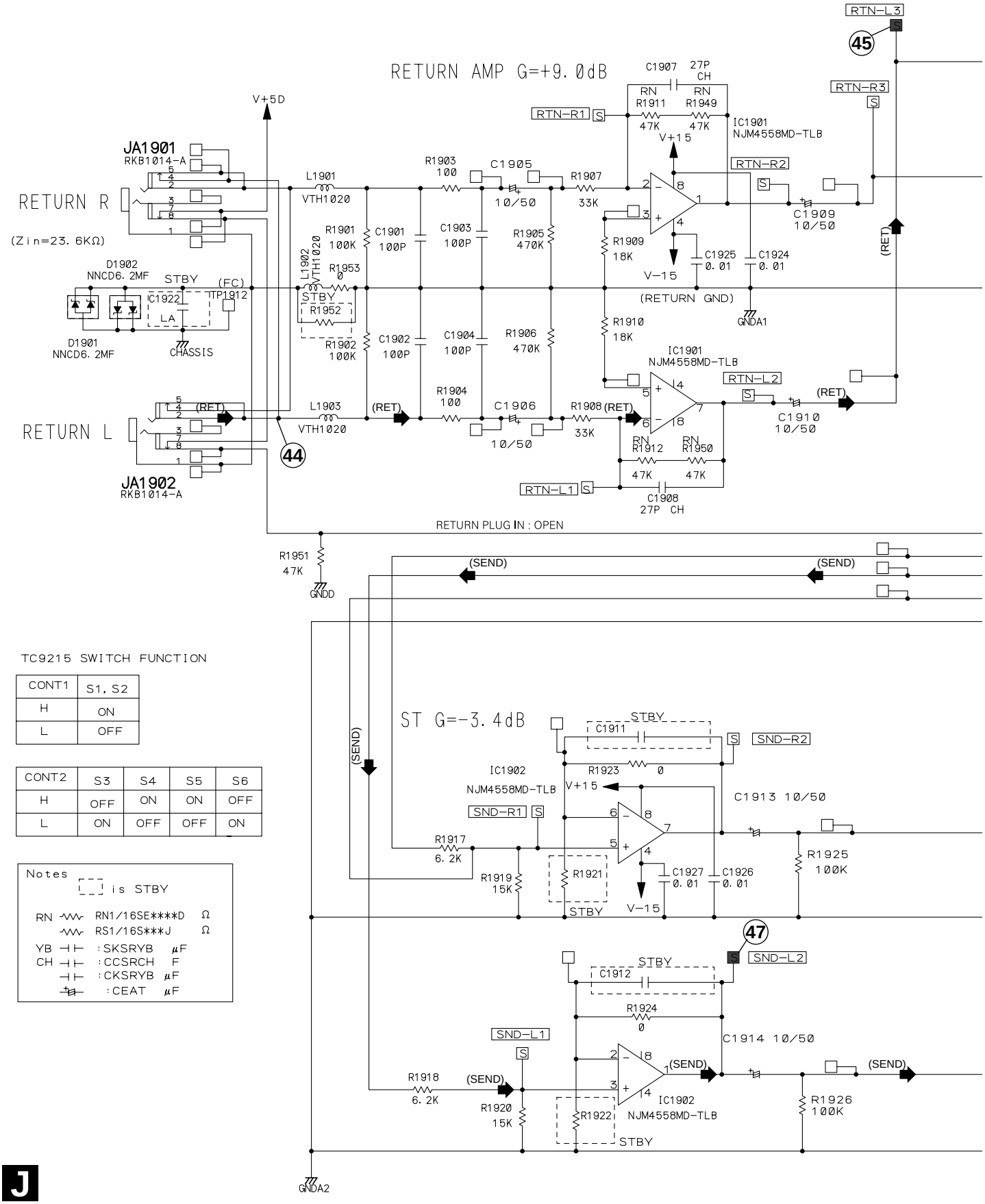

TC9215 SWITCH FUNCTION

CONT1	S1, S2
H	ON
L	OFF

CONT2	S3	S4	S5	S6
H	OFF	ON	ON	OFF
L	ON	OFF	OFF	ON

Notes
[ ] is STBY
RN RN1/16SE***D Ω
RS1/16S***J Ω
YB :SKSRYB μF
CH :CCSRCH F
:CKSRYB μF
:CEAT μF

(SEND) : Send Signal Route
(RET) : Return Signal Route

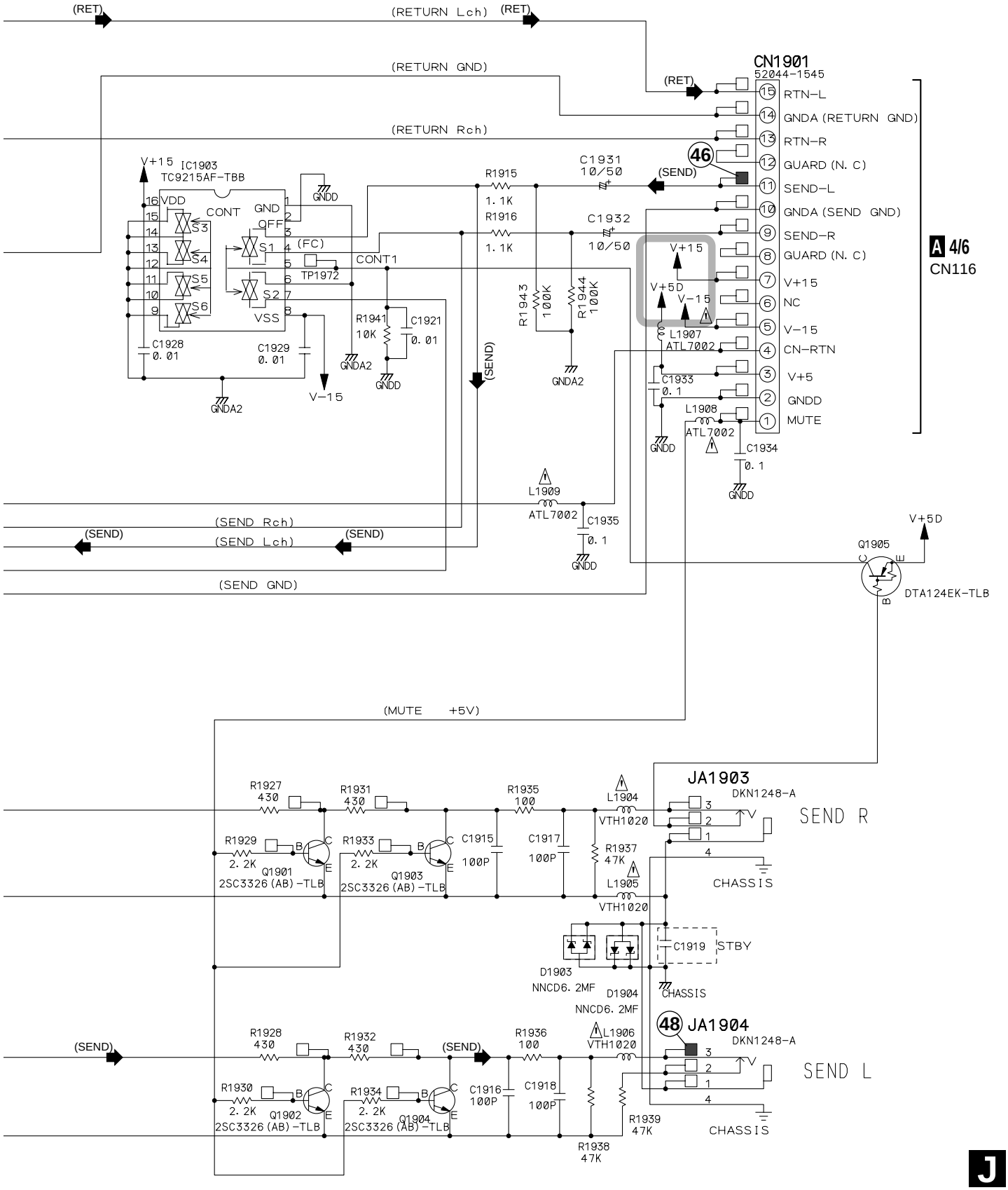

3.20 XLR ASSY (1/2)

K 1/2 XLR ASSY (DWX2322)

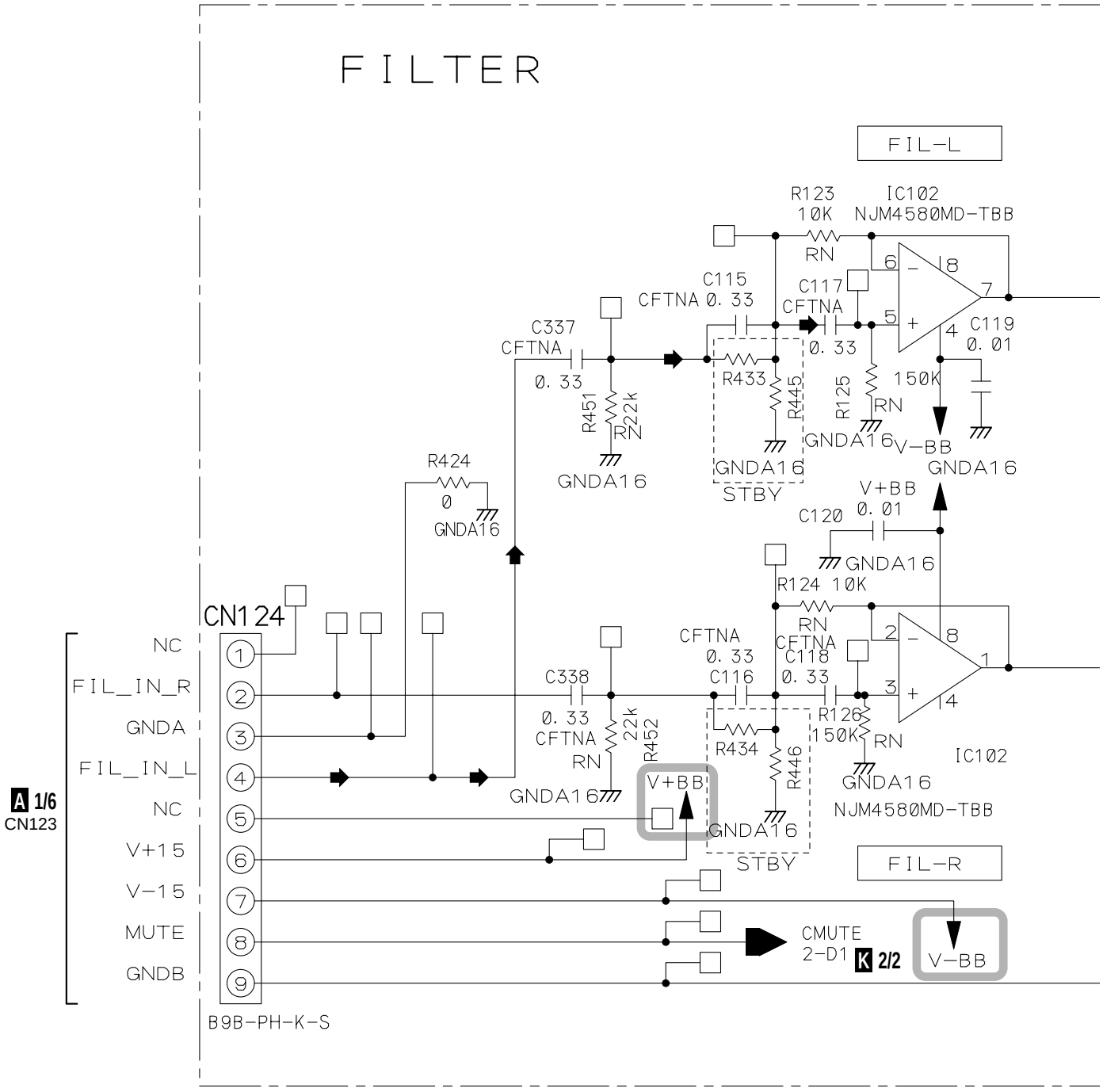

: Main Signal Route

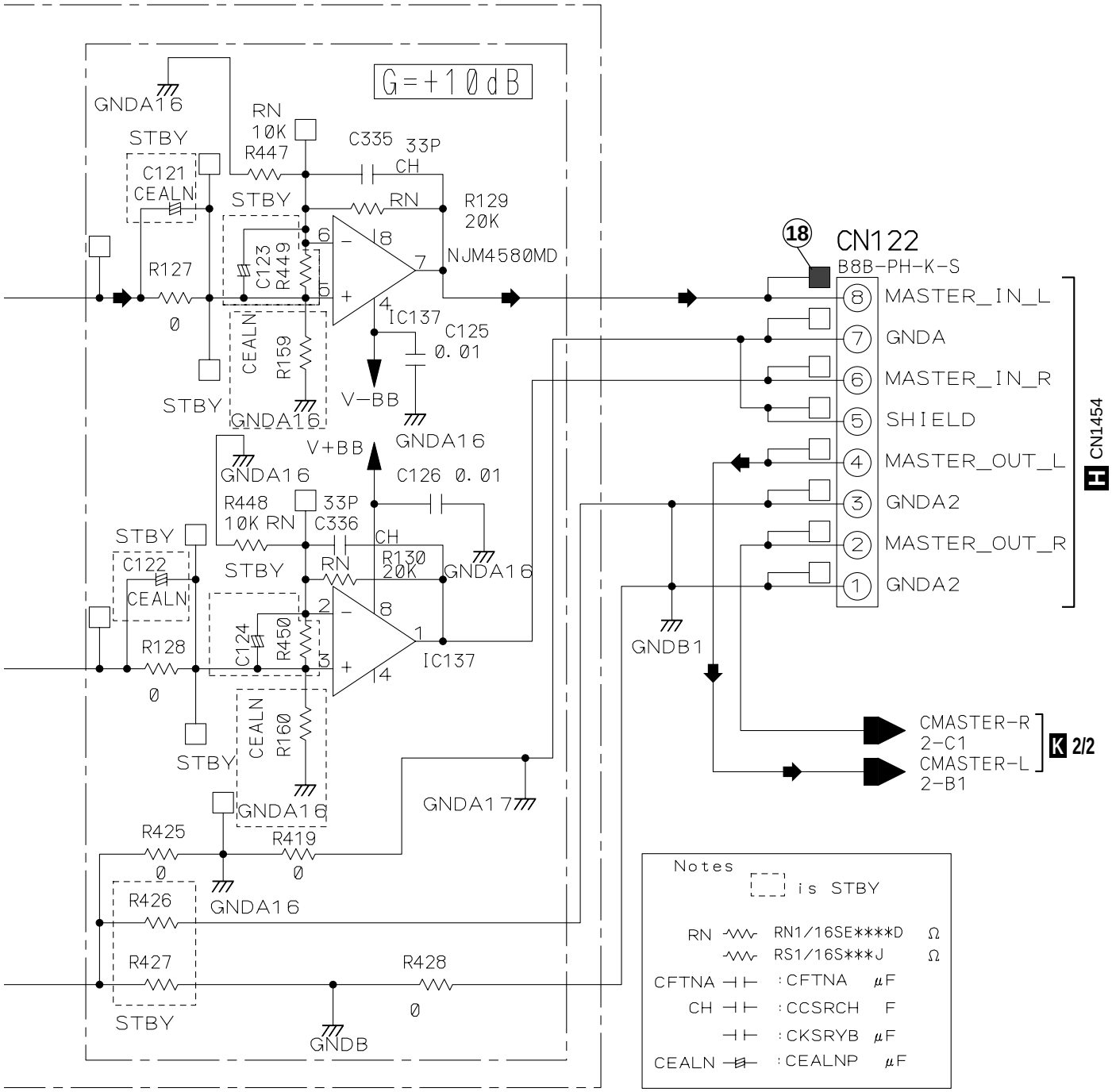

K 1/2

3.21 XLR ASSY (2/2)

K 2/2 XLR ASSY (DWX2322)

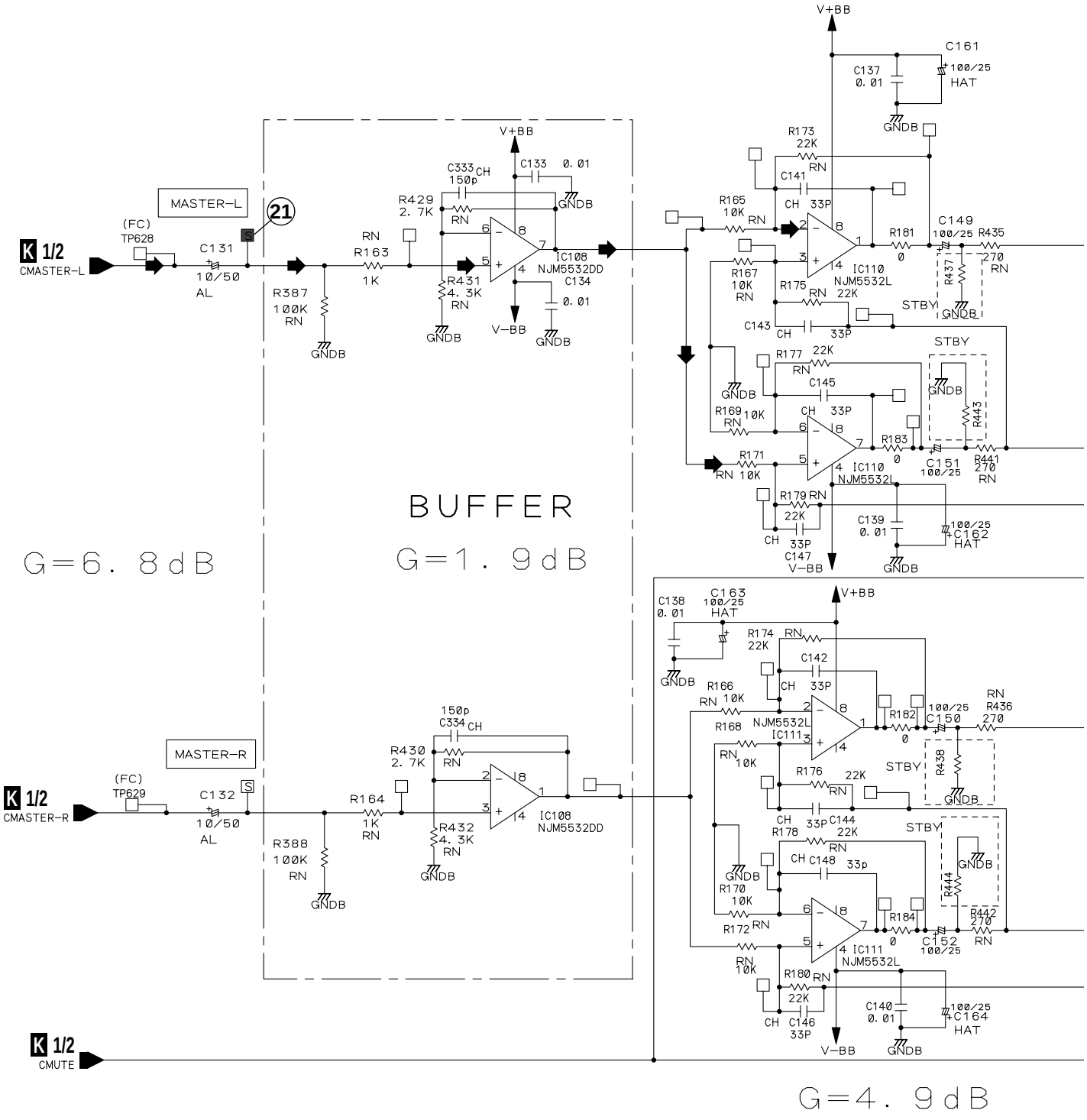

: Main Signal Route

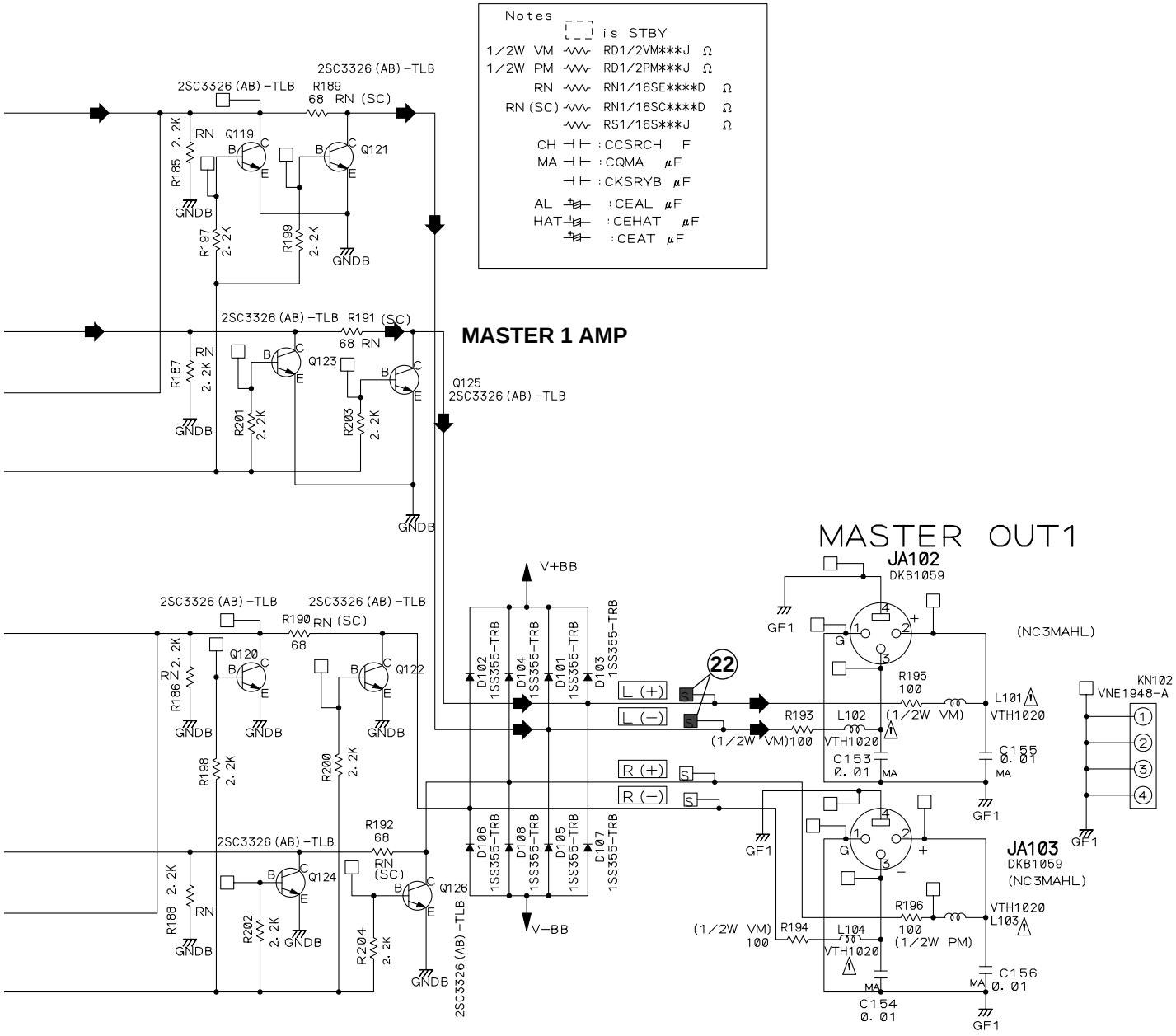

3.22 LVMR (1/2), C1TR, C2TR, FVA1 and FVA2 ASSYS

L 1/2 LVMR ASSY (DWS1330)

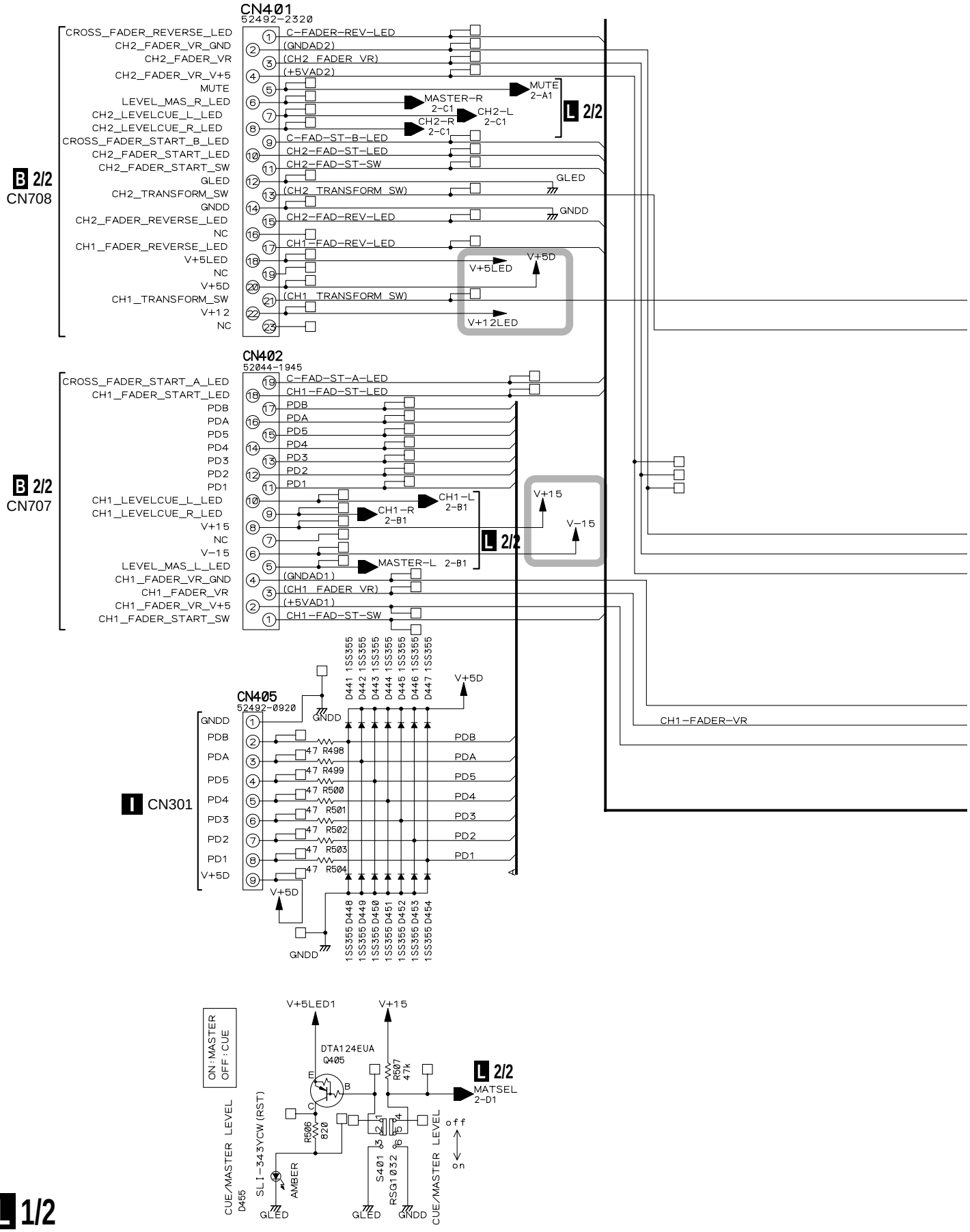

L 1/2

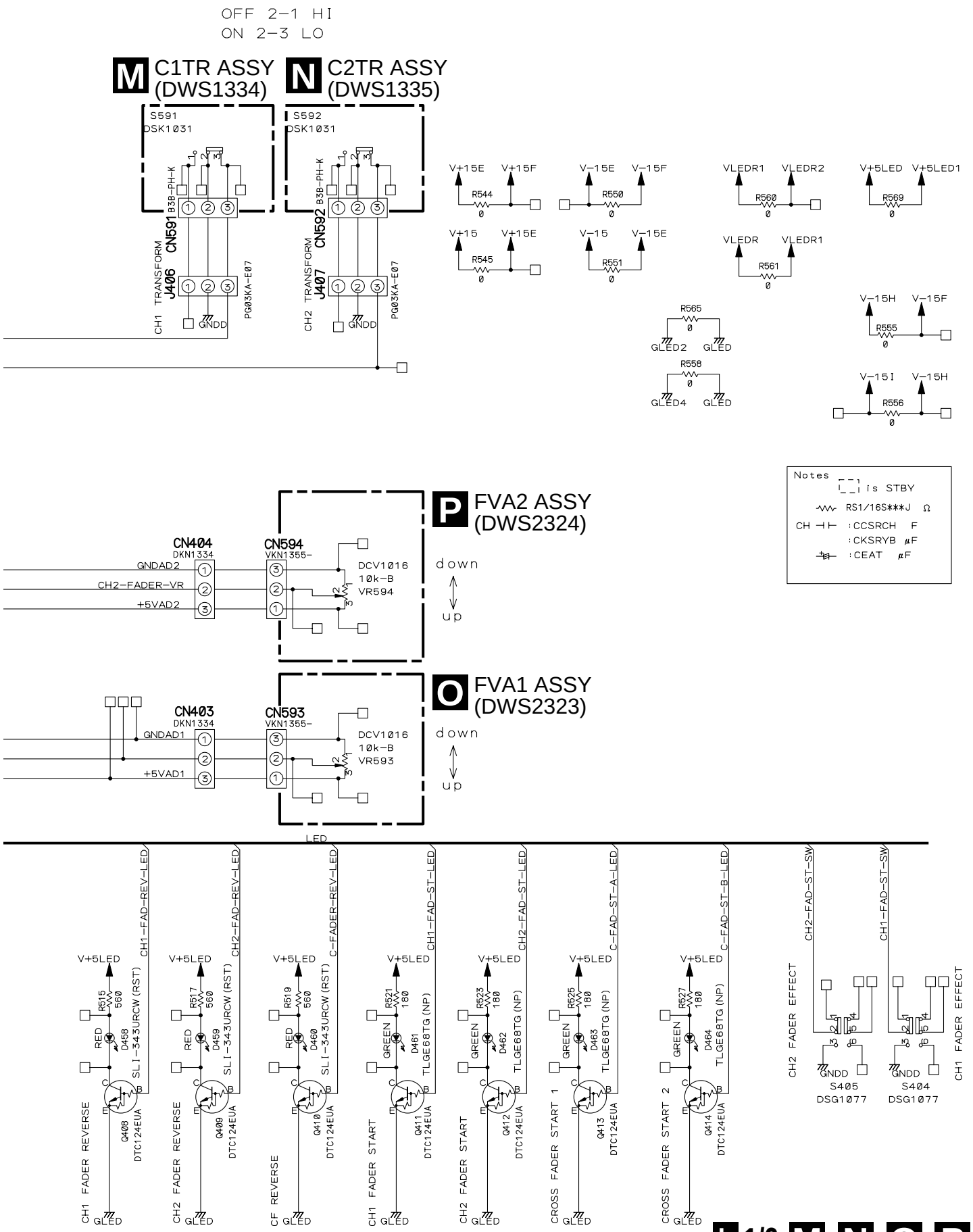
OFF 2-1 HI
ON 2-3 LO
M C1TR ASSY (DWS1334)
N C2TR ASSY (DWS1335)
S591 DSK1031
S592 DSK1031
B3B-PH-K
CN591
CN592
J406
J407
CH1 TRANSFORM
CH2 TRANSFORM
PG03KA-E07
GNDD
V+15E V+15F
V-15E V-15F
VLEDR1 VLEDR2
V+5LED V+5LED1
R544 R550 R560 R569
V+15 V+15E
V-15 V-15E
VLEDR VLEDR1
R545 R551 R561
R565
GLED2 GLED
R558
GLED4 GLED
V-15H V-15F
R555
V-15I V-15H
R556
Notes
is STBY
RS1/16S***J Ω
CH :CCSRCH F
:CKSRYB μF
:CEAT μF
P FVA2 ASSY (DWS2324)
CN404 DKN1334
CN594 VKN1355-
GNDAD2
CH2-FADER-VR
+5VAD2
DCV1016 10k-B VR594
down
up
O FVA1 ASSY (DWS2323)
CN403 DKN1334
CN593 VKN1355-
GNDAD1
+5VAD1
DCV1016 10k-B VR593
LED
V+5LED
CH1-FAD-REV-LED
CH2-FAD-REV-LED
C-FADER-REV-LED
CH1-FAD-ST-LED
CH2-FAD-ST-LED
C-FAD-ST-A-LED
C-FAD-ST-B-LED
R515 560 RED D458 SLI-343URCW (RST) Q408 DTC124EUA CH1 FADER REVERSE
R517 560 RED D459 SLI-343URCW (RST) Q409 DTC124EUA CH2 FADER REVERSE
R519 560 RED D460 SLI-343URCW (RST) Q410 DTC124EUA CF REVERSE
R521 180 GREEN D461 TLGE68TG (NP) Q411 DTC124EUA CH1 FADER START
R523 180 GREEN D462 TLGE68TG (NP) Q412 DTC124EUA CH2 FADER START
R525 180 GREEN D463 TLGE68TG (NP) Q413 DTC124EUA CROSS FADER START 1
R527 180 GREEN D464 TLGE68TG (NP) Q414 DTC124EUA CROSS FADER START 2
GLED
CH2 FADER EFFECT
CH1 FADER EFFECT
GNDD
S405 DSG1077
S404 DSG1077
L 1/2 M N O P

3.23 LVMR ASSY (2/2)

L 2/2 LVMR ASSY (DWS1330)

Mute	VLEDL	VLEDR
H	OPEN	OPEN
L	+12V	+12V

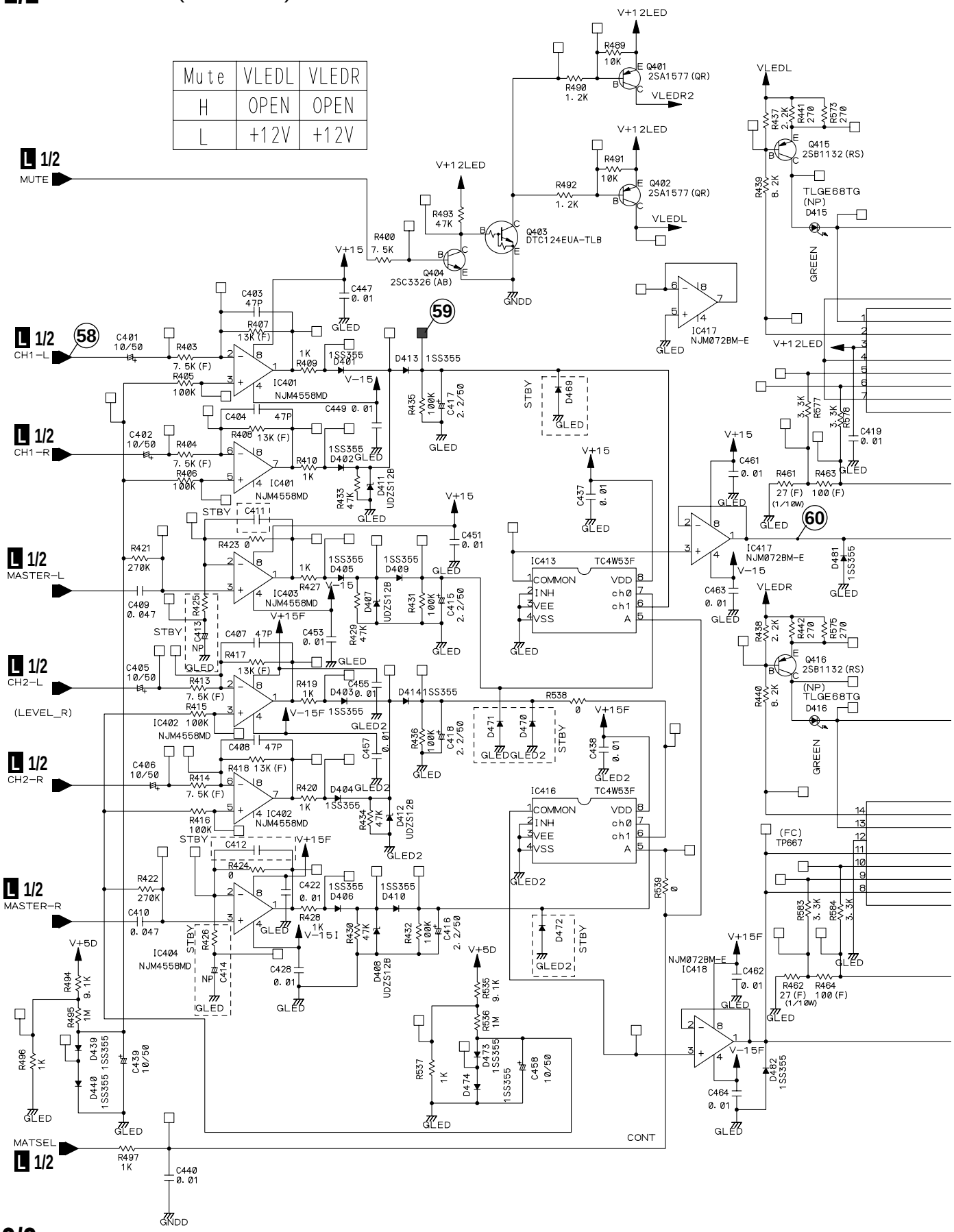

L 2/2

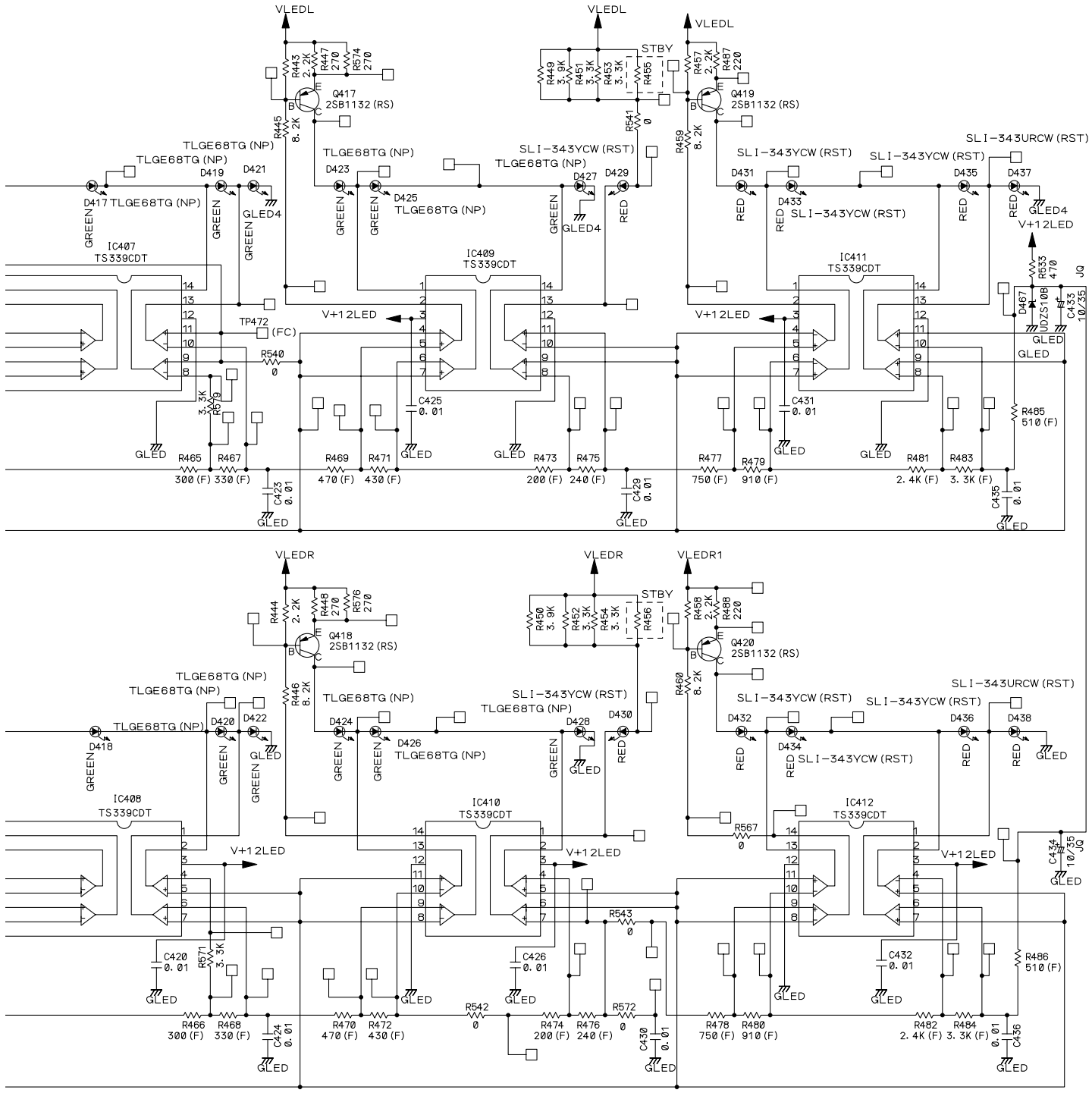

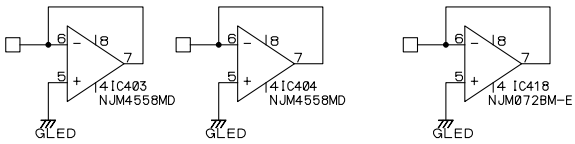

Notes

[ ] Is STBY

F	RS1/16S****F	Ω
F(1/10W)	RS1/10S****F	Ω
	RS1/16S***J	Ω
CH	:CCSRCH	F
	:CKSRYB	μF
JQ	:CEJQ	μF
	:CEAT	μF

CONT	S3	S4	S5	S6
H	OFF	ON	ON	OFF
L	ON	OFF	OFF	ON

L 2/2

3.24 CFVR, RVSW and FSSW ASSYS

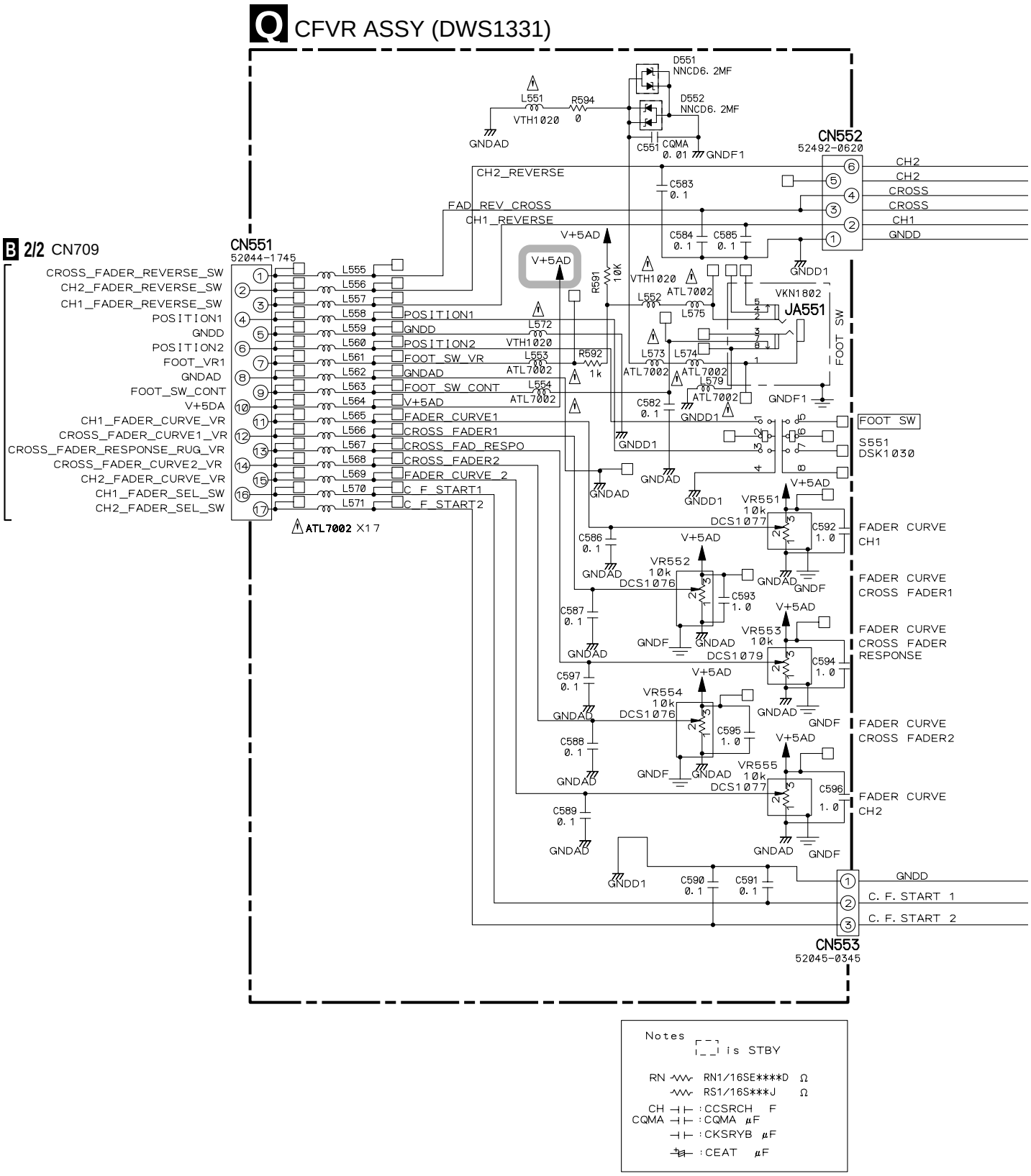

A

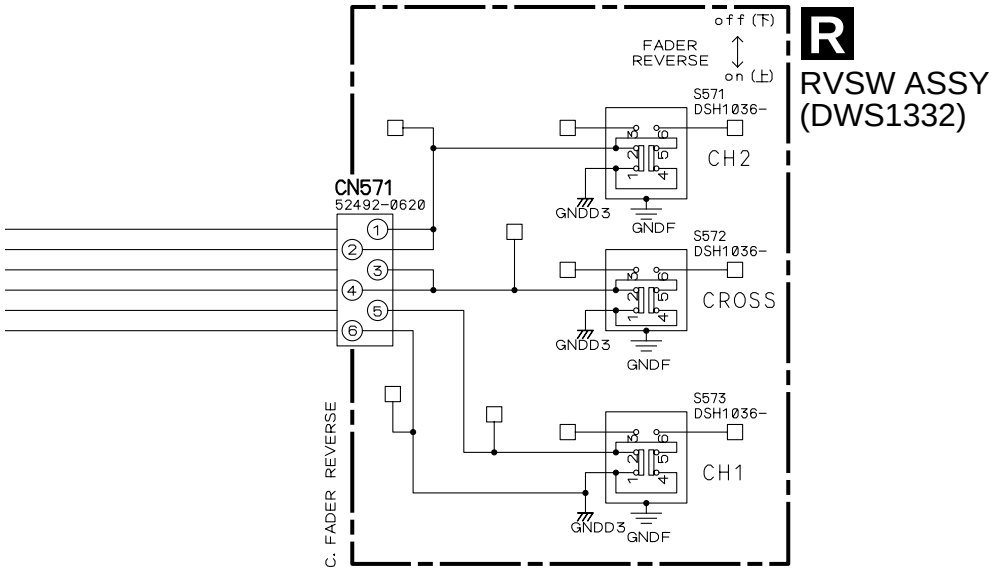

B

S551	SW POS.	SEL	Pin on	controll ch1	controll ch2
	up	ch1	4-3	L	H
	CENTER	off	4-2	H	H
	down	ch2	4-1	H	L

C

L : CH1 0dB, CH2 -∞
R : CH1 -∞, CH2 0dB

D

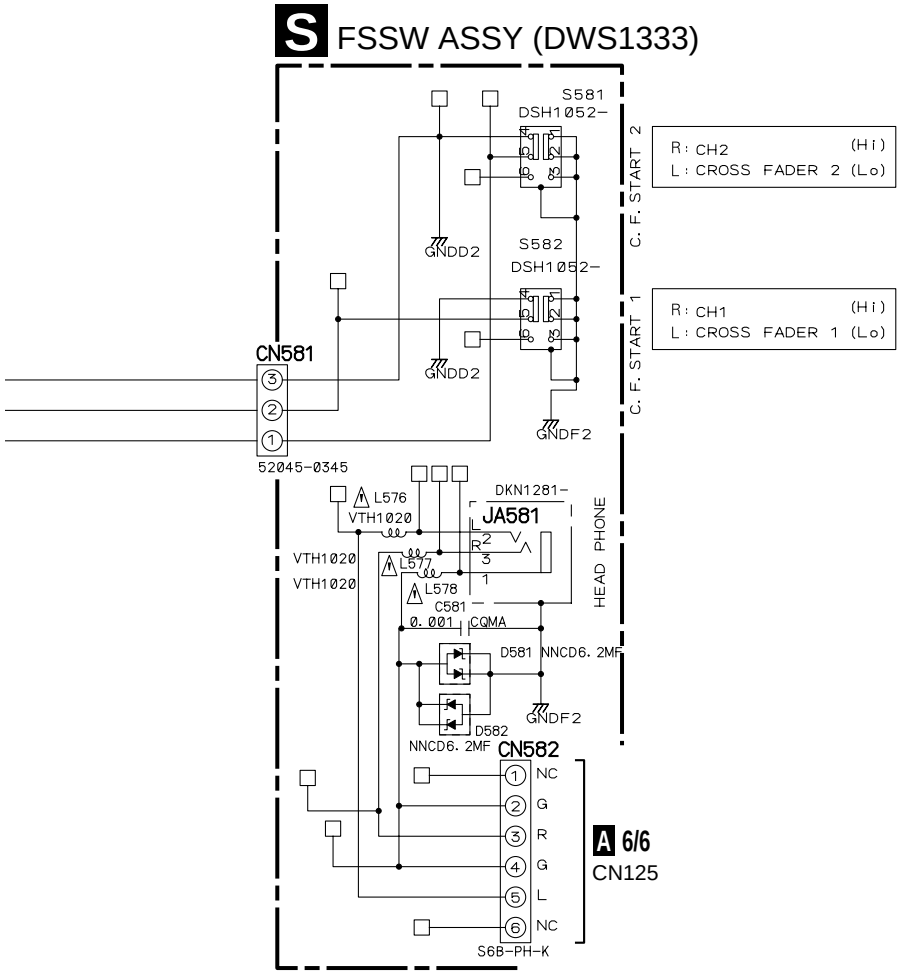

E

F

R S

3.25 LCD ASSY

T LCD ASSY (DWX2317)

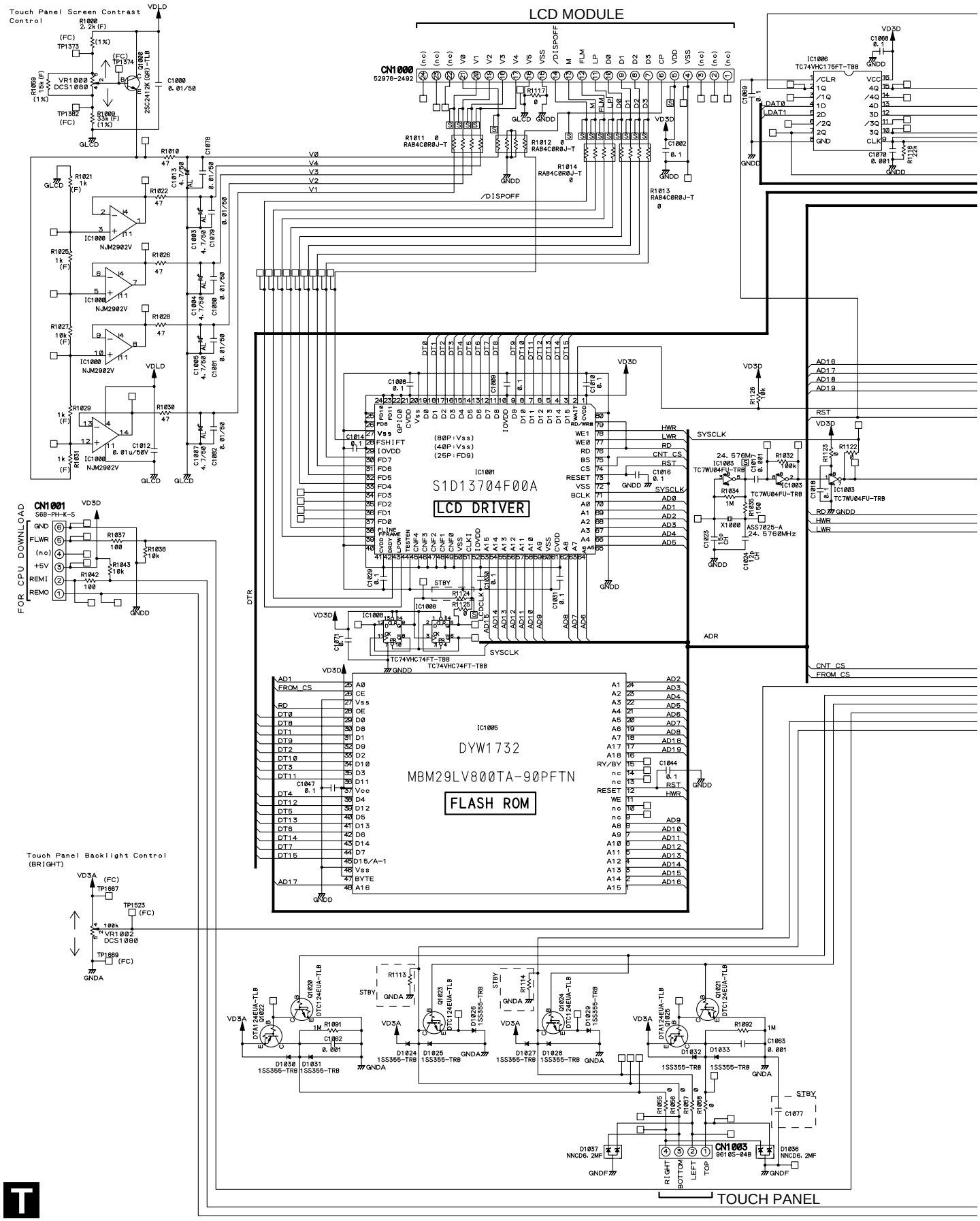

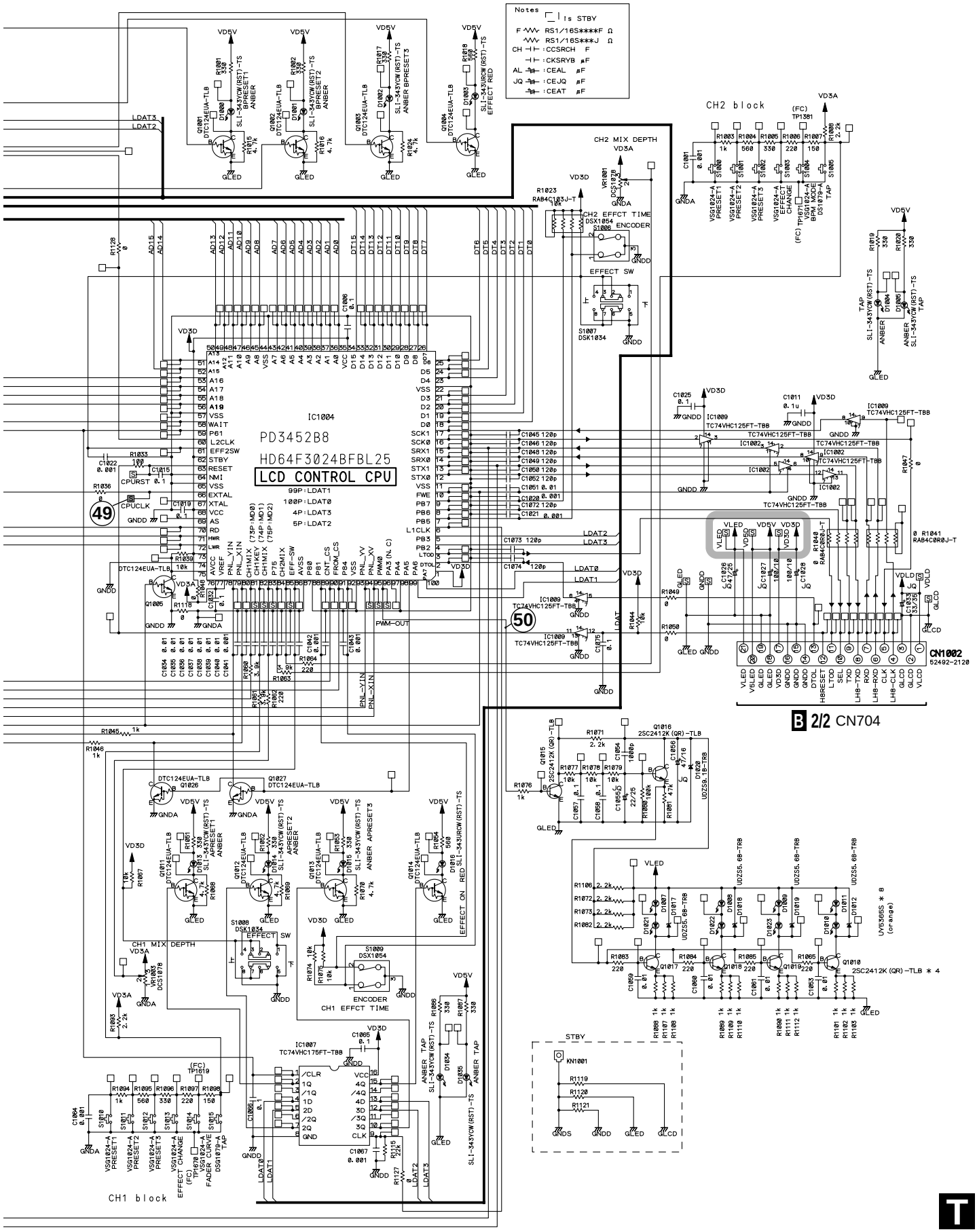
Notes
Is STBY
RS1/16S****F Ω
RS1/16S***J Ω
CCSRCH F
CKSRYB μF
CEAL μF
CEJQ μF
CEAT μF
CH2 block
CH2 MIX DEPTH
CH2 EFFCT TIME
ENCODER
EFFECT SW
IC1004
PD3452B8
HD64F3024BFBL25
LCD CONTROL CPU
99P:LDAT1
100P:LDAT0
4P:LDAT3
5P:LDAT2
CPURST
CPUCLK
CN1002
52492-2120
B 2/2 CN704
CH1 MIX DEPTH
CH1 EFFCT TIME
CH1 block
STBY

3.26 SW POWER SUPPLAY

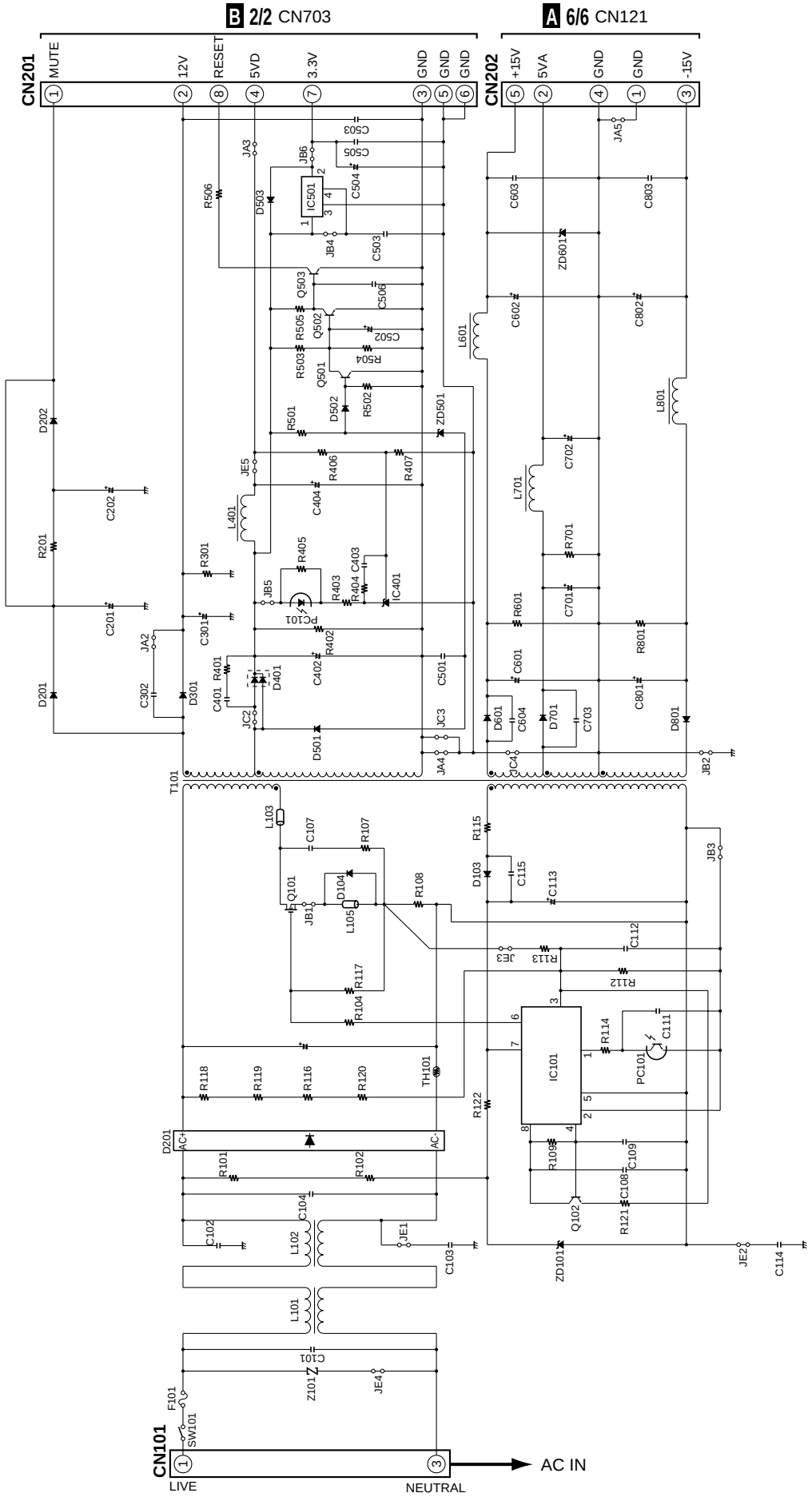

SW POWER SUPPLY (DWR1377)

- NOTE FOR FUSE REPLACEMENT

CAUTION - FOR CONTINUED PROTECTION AGAINST RISK OF FIRE. REPLACE WITH SAME TYPE AND RATINGS ONLY.

3.27 VOLTAGES

■ VOLTAGES

• Measurement condition

① **Front panel**

FADER REVERSE : All OFF
FOOT SW : OFF
FADER CURVE : Turn all knobs clockwise fully
CUT LAG : Turn it counterclockwise fully
FADER START : OFF

② **Top panel**

MIC	: MAX	CH-1 switch	: CD 1	CH-2 switch	: CD 2	MASTER	: MAX
HI	: MID	TRIM	: MAX	TRIM	: MAX	BOOTH/SESSION OUT	: MAX
LOW	: MID	HI	: MID	HI	: MID	PHONES	: MAX
MIC SEND	: OFF	MID	: MID	MID	: MID	SELECT	: MASTER
SESSION IN	: MAX	LOW	: MID	LOW	: MID	FADER	: Center
CH-1 SEND	: OFF	EQ	: OFF	EQ	: OFF	CH-2 SEND	: OFF

(CH-1) EFFECT	: OFF	(CH-2) EFFECT	: OFF
(CH-1) MIX/DEPTH	: Center	(CH-2) MIX/DEPTH	: Center
FADER START	: OFF	FADER START	: OFF
TRANSFORM	: OFF	TRANSFORM	: OFF
CH-1 Fader	: MAX	CH-2 Fader	: MAX

MASTER LEVEL : ON
Cross Fader : Center

③ **Rear panel**

PHONO/LINE switch : Set both CH-1 and CH-2 to PHONO side
SEND, RETURN : Non connection
LCD : BRIGHT is 10 (Maximum luminance), CONTRAST is the center
CD1, CD2 : 1kHz, 0dB input

A MAIN ASSY

IC101

No.	Voltage
1	2.0mV
2	1.3mV
3	0.7mV
4	-14.24V
5	0.7mV
6	0.7mV
7	3.4mV
8	14.14V

IC104

No.	Voltage
1	-0.5mV
2	1.6mV
3	1.4mV
4	-14.48V
5	1.4mV
6	1.7mV
7	0.2mV
8	14.34V

IC105

No.	Voltage
1	1.6mV
2	1.6mV
3	1.6mV
4	1.6mV
5	1.6mV
6	1.6mV
7	1.6mV
8	-14.23V
9	1.7mV
10	1.8mV
11	1.8mV
12	4.97V
13	1.8mV
14	1.8mV
15	1.7mV
16	14.11V

IC106

No.	Voltage
1	1.8mV
2	1.7mV
3	1.8mV
4	1.7mV
5	1.8mV
6	1.8mV
7	1.8mV
8	-14.25V
9	1.8mV
10	1.8mV
11	1.7mV
12	4.97V
13	1.7mV
14	1.7mV
15	1.8mV
16	14.14V

IC109

No.	Voltage
1	0.4mV
2	1.7mV
3	1.8mV
4	-14.23V
5	1.8mV
6	2.2mV
7	1.6mV
8	14.11V

IC112

No.	Voltage
1	90.4mV
2	47.8mV
3	5.9mV
4	-14.24V
5	48.3mV
6	93.5mV
7	93.8mV
8	14.15V

IC114

No.	Voltage
1	2.5mV
2	14.35V
3	1.4mV
4	3.4mV
5	-11.76V
6	3.4mV
7	2.5mV
8	6.77V
9	3.4mV
10	-14.48V
11	18.1mV
12	963mV
13	-7.5mV
14	-7.5mV
15	2.04V
16	-14.48V

IC115

No.	Voltage
1	3.4mV
2	14.35V
3	4.6mV
4	5.2mV
5	-11.76V
6	5.2mV
7	5.1mV
8	6.54V
9	3.3mV
10	-14.48V
11	18.8mV
12	956mV
13	1.3mV
14	-7.4mV
15	2.04V
16	-14.48V

IC116

No.	Voltage
1	3.3mV
2	14.34V
3	2.5mV
4	6.5mV
5	-11.73V
6	5.0mV
7	3.2mV
8	6.76V
9	4.1mV
10	-14.48V
11	26.2mV
12	961mV
13	1.3mV
14	-7.2mV
15	2.03V
16	-14.49V

IC117

No.	Voltage
1	4.0mV
2	14.34V
3	3.7mV
4	7.2mV
5	-11.77V
6	7.3mV
7	4.0mV
8	6.75V
9	4.2mV
10	-14.48V
11	26.2mV
12	953mV
13	1.3mV
14	-6.9mV
15	2.02V
16	-14.48V

IC118

No.	Voltage
1	0.8mV
2	1.8mV
3	1.8mV
4	-14.24V
5	1.8mV
6	2.1mV
7	1.2mV
8	14.11V

IC119

No.	Voltage
1	1.8mV
2	1.8mV
3	1.8mV
4	1.8mV
5	1.8mV
6	1.8mV
7	1.8mV
8	-14.24V
9	1.8mV
10	1.8mV
11	1.8mV
12	46.1mV
13	1.8mV
14	1.8mV
15	1.8mV
16	14.1V

IC124

No.	Voltage
1	3.6mV
2	3.4mV
3	3.4mV
4	-14.24V
5	3.2mV
6	3.2mV
7	3.2mV
8	14.14V

IC126

No.	Voltage
1	3.4mV
2	3.4mV
3	3.4mV
4	-14.23V
5	11.6mV
6	3.4mV
7	3.6mV
8	14.1V

IC131

No.	Voltage
1	180.4mV
2	55.2mV
3	-3.1mV
4	-14.25V
5	-3.2mV
6	55.1mV
7	180.7mV
8	14.15V

IC132

No.	Voltage
1	-6.1mV
2	-4.4mV
3	-4.5mV
4	-14.22V
5	3.9mV
6	-6.1mV
7	-6.1mV
8	14.11V

IC133

No.	Voltage
1	-6.3mV
2	-4.6mV
3	-4.6mV
4	-14.24V
5	-4.4mV
6	-4.3mV
7	-6.0mV
8	14.15V

B DSP ASSY

IC700

No.	Voltage
1	2.45V
2	2.45V
3	12.7mV
4	2.45V
5	12.7mV
6	4.9V
7	3.23V
8	12.7mV
9	1.22V
10	1.63V
11	1.59V
12	1.62V
13	3.23V
14	12.6mV
15	12.6mV
16	13.3mV

IC701

No.	Voltage
1	2.45V
2	2.45V
3	12.9mV
4	2.44V
5	12.9mV
6	4.9V
7	3.23V
8	12.9mV
9	1.22V
10	1.63V
11	1.59V
12	1.61V
13	3.23V
14	12.9mV
15	12.9mV
16	13.6mV

IC702

No.	Voltage
1	1.61V
2	14.3mV
3	1.63V
4	12.9mV
5	3.23V
6	4.89V
7	2.47V
8	2.43V
9	12.9mV
10	2.44V
11	3.23V
12	3.23V
13	2.68V
14	3.2V
15	3.23V
16	1.57V

IC703

No.	Voltage
1	1.61V
2	15.0mV
3	1.63V
4	13.3mV
5	3.23V
6	4.89V
7	2.47V
8	2.43V
9	13.3mV
10	2.45V
11	3.23V
12	3.23V
13	2.68V
14	3.2V
15	3.23V
16	1.56V

IC704

No.	Voltage
1	1.62V
2	1.63V
3	1.63V
4	12.7mV
5	3.23V
6	4.89V
7	2.47V
8	2.43V
9	12.7mV
10	2.45V
11	15.8mV
12	15.8mV
13	2.68V
14	3.2V
15	3.23V
16	1.58V

IC705

No.	Voltage
1	1.61V
2	1.62V
3	1.63V
4	13.1mV
5	3.23V
6	4.89V
7	2.47V
8	2.43V
9	13.1mV
10	2.45V
11	16.1mV
12	16.2mV
13	2.68V
14	3.2V
15	3.23V
16	1.56V

IC706

No.	Voltage	No.	Voltage
1	21.7mV	73	1.55V
2	1.63V	74	3.24V
3	3.24V	75	14.4mV
4	14.1mV	76	164.8mV
5	1.63V	77	140.8mV
6	3.24V	78	1.57V
7	13.6mV	79	14.6mV
8	3.24V	80	3.28V
9	14.4mV	81	14.4mV
10	3.23V	82	3.27V
11	1.22V	83	498mV
12	1.63V	84	494mV
13	1.63V	85	490mV
14	1.61V	86	3.28V
15	1.62V	87	14.4mV
16	1.6V	88	480mV
17	1.6V	89	467mV
18	1.81V	90	14.4mV
19	14.4mV	91	1.81V
20	3.29V	92	461mV
21	418mV	93	461mV
22	424mV	94	467mV
23	423mV	95	3.28V
24	414mV	96	14.4mV
25	3.28V	97	467mV
26	14.4mV	98	3.25V
27	418mV	99	14.6mV
28	14.4mV	100	11.5mV
29	411mV	101	11.5mV
30	411mV	102	11.4mV
31	3.28V	103	3.28V
32	403mV	104	14.4mV
33	397mV	105	11.4mV
34	404mV	106	56.6mV
35	414mV	107	56.4mV
36	432mV	108	9.2mV
37	514mV	109	57.7mV
38	3.25V	110	84.5mV
39	14.4mV	111	3.25V
40	873mV	112	14.4mV
41	878mV	113	81.6mV
42	899mV	114	82.8mV
43	872mV	115	84.5mV
44	3.23V	116	3.29V
45	1.82V	117	82.5mV
46	422mV	118	83.5mV
47	14.4mV	119	3.24V
48	774mV	120	14.4mV
49	3.24V	121	85.6mV
50	777mV	122	840mV
51	3.24V	123	830mV
52	3.24V	124	840mV
53	821 - 947mV	125	850mV
54	14.4mV	126	1.81V
55	1.61V	127	14.4mV
56	1.81V	128	830mV
57	3.24V	129	3.24V
58	14.4mV	130	14.4mV
59	740mV	131	835mV
60	770mV	132	968mV
61	14.4mV	133	2.21V
62	15.2mV	134	11.0mV
63	2.92V	135	3.28V
64	17.0mV	136	10.6mV
65	3.24V	137	3.28V
66	14.4mV	138	11.0mV
67	3.11V	139	580mV
68	3.1V	140	3.23V
69	3.24V	141	14.4mV
70	2.92V	142	3.23V
71	15.8mV	143	3.24V
72	1.77V	144	0.94 - 2.66V

IC707

No.	Voltage	No.	Voltage
1	20.8mV	73	3.28V
2	1.65V	74	3.28V
3	3.24V	75	15.8mV
4	15.8mV	76	165.7mV
5	15.8mV	77	141.7mV
6	3.24V	78	1.65V
7	15.8mV	79	15.8mV
8	3.24V	80	3.24V
9	15.8mV	81	15.8mV
10	3.24V	82	15.8mV
11	1.22V	83	15.8mV
12	1.63V	84	15.8mV
13	1.63V	85	15.8mV
14	1.61V	86	3.24V
15	1.62V	87	15.8mV
16	1.6V	88	15.8mV
17	1.63V	89	15.8mV
18	1.82V	90	15.8mV
19	15.8mV	91	1.81V
20	3.29V	92	15.8mV
21	526mV	93	15.8mV
22	528mV	94	15.8mV
23	505mV	95	3.24V
24	540mV	96	15.8mV
25	3.29V	97	15.8mV
26	15.8mV	98	3.24V
27	522mV	99	15.8mV
28	15.8mV	100	20.6mV
29	525mV	101	19.9mV
30	538mV	102	20.2mV
31	3.24V	103	3.24V
32	570mV	104	15.8mV
33	540mV	105	37.0mV
34	490mV	106	37.2mV
35	467mV	107	36.7mV
36	464mV	108	37.0mV
37	452mV	109	37.0mV
38	3.24V	110	38.1mV
39	15.8mV	111	3.24V
40	586mV	112	15.8mV
41	502mV	113	38.2mV
42	465mV	114	38.3mV
43	455mV	115	37.9mV
44	3.23V	116	38.3mV
45	1.81V	117	37.9mV
46	437mV	118	38.6mV
47	15.8mV	119	3.24V
48	340mV	120	15.8mV
49	3.24V	121	29.0 - 39.0mV
50	445mV	122	25.0 - 49.0mV
51	3.24V	123	21.9 - 49.7mV
52	3.24V	124	20.0 - 40.0mV
53	433mV	125	35.5 - 65.2mV
54	15.8mV	126	1.81V
55	1.6V	127	15.8mV
56	1.81V	128	35.7 - 65.4mV
57	3.24V	129	3.24V
58	15.8mV	130	15.8mV
59	520mV	131	36.6mV
60	547mV	132	149.8mV
61	15.8mV	133	1.37V
62	10.3mV	134	3.23V
63	3.8V	135	3.24V
64	3.28V	136	15.8mV
65	3.28V	137	3.24V
66	15.8mV	138	3.23V
67	3.28V	139	477mV
68	3.28V	140	3.22V
69	475mV	141	15.8mV
70	1.14V	142	3.22V
71	9.5mV	143	3.24V
72	3.28V	144	1.2 - 2.9V

IC708

No.	Voltage
1	3.23V
2	8.1mV
3	1.26V
4	1.81V
5	3.29V

IC709

No.	Voltage
1	3.29V
2	8.9mV
3	1.26V
4	1.84V
5	3.29V

IC710

No.	Voltage
1	1.69V
2	1.69V
3	1.78V
4	14.0mV
5	1.79V
6	1.79V
7	1.75V
8	3.28V

IC712

No.	Voltage
1	4.85V
2	15.0mV
3	809mV
4	15.0mV
5	1.26V
6	4.91V
7	4.9V
8	4.63V

IC713

No.	Voltage
1	3.24V
2	1.18V
3	3.24V
4	820mV
5	830mV
6	13.5mV
7	770mV
8	770mV
9	3.24V
10	750mV
11	860mV
12	13.5mV
13	770mV
14	3.24V
15	14.9mV
16	3.24V
17	2.81V
18	2.82V
19	14.8mV
20	14.8Ã
21	23.6mV
22	23.5Ã
23	19.2mV
24	19.2mV
25	19.2mV
26	23.7mV
27	3.24V
28	13.6mV
29	23.5mV
30	23.6mV
31	23.6mV
32	23.6mV
33	22.7Ã
34	14.8Ã
35	14.8mV
36	-82.6Ã
37	3.24V
38	1.49V
39	14.4mV
40	-325.5Ã
41	13.2mV
42	2.65V
43	3.25V
44	2.67V
45	2.68V
46	13.2mV
47	2.67V
48	2.68V
49	3.25V
50	2.72V
51	2.72V
52	13.1mV
53	2.67V
54	13.2mV

IC714

No.	Voltage	No.	Voltage	No.	Voltage
1	14.5mV	71	165.6mV	141	15.3mV
2	2.53V	72	15.3mV	142	3.24V
3	1.07V	73	1.54V	143	2.54V
4	1.34V	74	1.72V	144	3.24V
5	1.33V	75	3.1V	145	15.3mV
6	1.23V	76	2.54V	146	4.94V
7	1.19V	77	15.3mV	147	4.94V
8	1.21V	78	3.24V	148	4.94V
9	1.16V	79	15.3mV	149	3.24V
10	1.09V	80	15.3mV	150	3.24V
11	14.7mV	81	3.11V	151	60.3mV
12	3.24V	82	15.3mV	152	4.94V
13	2.53V	83	15.3mV	153	2.68V
14	15.9mV	84	1.73V	154	16.4mV
15	14.7mV	85	15.1mV	155	3.2V
16	1.37V	86	3.23V	156	3.24V
17	14.7mV	87	15.2mV	157	395mV
18	15.8mV	88	3.24V	158	15.2mV
19	14.8mV	89	15.2mV	159	2.53V
20	15.9 - 24.9mV	90	2.68V	160	4.93V
21	-46.2 - 321.3mV	91	2.54V	161	131.2mV
22	25.0mV	92	3.24V	162	4.13V
23	25.0mV	93	15.2mV	163	15.2mV
24	5.3 - 325.4mV	94	3.23V	164	4.98V
25	15.2mV	95	3.2V	165	3.22V
26	3.24V	96	1.63V	166	3.24V
27	24.8mV	97	21.3mV	167	4.98V
28	2.54V	98	1.22 - 2.88V	168	4.98V
29	3.24V	99	3.24V	169	15.3mV
30	3.24V	100	2.21V	170	3.24V
31	1.63V	101	950mV	171	2.54V
32	15.3mV	102	850mV	172	15.3mV
33	1.67V	103	3.24V	173	3.24V
34	1.59V	104	15.4mV	174	15.3mV
35	23.0mV	105	3.24V	175	4.98V
36	0.89 - 2.68V	106	3.24V	176	15.3mV
37	33.2 - 323.4mV	107	16.1mV	177	15.3mV
38	2.54V	108	880mV	178	910mV
39	3.24V	109	880mV	179	770mV
40	15.1mV	110	840mV	180	820mV
41	2.2V	111	840mV	181	960mV
42	0.5 - 323.4mV	112	840mV	182	15.3mV
43	836mV	113	77.0 - 87.0mV	183	15.3mV
44	840mV	114	83.0mV	184	3.24V
45	856mV	115	83.0mV	185	1.7V
46	846mV	116	15.4mV	186	2.54V
47	850mV	117	3.24V	187	980mV
48	826mV	118	2.54V	188	1.1V
49	85.4mV	119	80.4mV	189	1.0V
50	3.24V	120	80.4mV	190	15.5mV
51	15.1mV	121	80.0mV	191	1.03V
52	3.24V	122	81.5mV	192	16.6mV
53	3.24V	123	81.4mV	193	3.24V
54	15.2mV	124	15.4mV	194	2.82V
55	-35.9 - 317.3mV	125	16.4mV	195	2.82V
56	-30.1 - 320.4mV	126	16.3mV	196	2.54V
57	85.0mV	127	1.58V	197	3.24V
58	85.0mV	128	2.54V	198	15.5mV
59	84.0mV	129	142.1mV	199	16.4mV
60	86.0mV	130	3.24V	200	16.4mV
61	85.0mV	131	15.3mV	201	25.2mV
62	84.0mV	132	166.0mV	202	25.2 - 34.1mV
63	84.5mV	133	1.53 - 1.63V	203	20.8mV
64	15.1mV	134	1.69 - 1.79V	204	20.8mV
65	3.24V	135	3.09V	205	20.8mV
66	2.54V	136	3.11V	206	25.3mV
67	15.3mV	137	15.3mV	207	2.53V
68	15.4mV	138	1.64V	208	3.24V
69	1.64V	139	15.3mV		
70	141.6mV	140	3.23V		

IC716

No.	Voltage
1	4.97V
2	12.3mV
3	14.41V

IC717

No.	Voltage
1	12.3mV
2	-14.55V
3	-4.94V

IC719

No.	Voltage
1	14.1mV
2	664mV
3	446mV
4	10.5mV
5	25.0mV
6	28.8mV
7	10.5mV
8	10.5mV
9	10.6mV
10	4.98V
11	3.28V
12	4.99V
13	10.5mV
14	3.28V

IC720

No.	Voltage
1	4.95V
2	14.1mV
3	4.95V
4	14.1mV
5	14.1mV
6	3.24V
7	14.1mV
8	3.24V
9	14.1mV
10	3.24V
11	14.2mV
12	3.24V
13	14.2mV
14	3.24V

IC722

No.	Voltage
1	4.94V
2	4.94V
3	3.21V
4	4.13V
5	4.13V
6	2.68V
7	14.0mV
8	3.24V
9	4.99V
10	4.99V
11	14.0mV
12	14.0mV
13	14.0mV
14	3.24V

IC724

No.	Voltage
1	12.3mV
2	12.6mV
3	12.7mV
4	-14.55V
5	12.7mV
6	12.6mV
7	12.3mV
8	14.41V

IC718

No.	Voltage	No.	Voltage
1	3.21V	51	17.5mV
2	15.6mV	52	19.4mV
3	15.6mV	53	16.1mV
4	15.9mV	54	16.2mV
5	15.9mV	55	24.5mV
6	15.6mV	56	24.5mV
7	15.6mV	57	16.2mV
8	4.98V	58	16.2mV
9	16.0mV	59	16.2mV
10	15.7mV	60	16.2mV
11	15.7mV	61	16.2mV
12	4.13V	62	4.98V
13	636mV	63	4.98V
14	131mV	64	16.2mV
15	473mV	65	16.2mV
16	4.93V	66	2.59V
17	3.93V	67	2.42V
18	15.7mV	68	4.98V
19	15.7mV	69	17.2mV
20	4.97V	70	17.2mV
21	15.7mV	71	17.2mV
22	15.7mV	72	17.2mV
23	4.98V	73	4.98V
24	4.98V	74	4.98V
25	15.7mV	75	4.98V
26	15.7mV	76	4.98V
27	15.7mV	77	4.98V
28	15.7mV	78	4.98V
29	4.98V	79	4.98V
30	4.95V	80	4.98V
31	4.96V	81	4.98V
32	15.9mV	82	4.98V
33	4.98V	83	4.98V
34	4.98V	84	4.98V
35	4.98V	85	16.7mV
36	4.98V	86	16.0mV
37	4.98V	87	16.2mV
38	4.98V	88	4.98V
39	15.8mV	89	16.0mV
40	4.98V	90	3.24V
41	15.6mV	91	15.8mV
42	4.98V	92	15.8mV
43	4.98V	93	4.98V
44	15.9mV	94	4.98V
45	4.98V	95	4.98V
46	23.8mV	96	16.4mV
47	4.98V	97	4.98V
48	4.98V	98	16.4mV
49	3.22V	99	3.24V
50	3.24V	100	4.98V

IC725

No.	Voltage
1	9.4mV
2	13.0mV
3	13.1mV
4	-14.55V
5	13.1mV
6	13.0mV
7	9.3mV
8	14.41V

IC726

No.	Voltage
1	0.1mV
2	13.4mV
3	13.1mV
4	-14.55V
5	13.1mV
6	13.0mV
7	-0.5mV
8	14.41V

IC727

No.	Voltage
1	12.8mV
2	13.1mV
3	13.0mV
4	-14.55V
5	13.1mV
6	13.1mV
7	12.8mV
8	14.41V

IC728

No.	Voltage
1	10.2mV
2	13.7mV
3	13.5mV
4	-14.55V
5	13.5mV
6	13.7mV
7	10.1mV
8	14.41V

IC729

No.	Voltage
1	-0.3mV
2	13.4mV
3	13.5mV
4	-14.55V
5	13.5mV
6	13.7mV
7	0.4mV
8	14.41V

IC730

No.	Voltage
1	3.24V
2	14.2mV
3	1.27V
4	2.53V
5	3.24V

IC735

No.	Voltage
1	4.98V
2	18.9mV
3	14.0mV
4	4.99V
5	14.0mV
6	4.99V
7	14.0mV
8	4.99V
9	14.1mV
10	4.99V
11	14.1mV
12	18.9mV
13	4.98V
14	4.99V

IC736

No.	Voltage
1	21.6mV
2	21.5mV
3	21.5mV
4	-14.55V
5	28.8mV
6	28.9mV
7	28.9mV
8	14.41V

IC737

No.	Voltage
1	4.2 - 319.6mV
2	2.58V
3	14.3mV
4	2.59V
5	4.99V

C C1EQ ASSY

IC1601

No.	Voltage
1	-2.9mV
2	3.0mV
3	3.9mV
4	-14.23V
5	2.8mV
6	3.2mV
7	-2.3mV
8	14.12V

IC1607

No.	Voltage
1	3.2mV
2	3.2mV
3	2.9mV
4	-14.23V
5	2.8mV
6	3.1mV
7	3.1mV
8	14.11V

IC1602

No.	Voltage
1	8.5mV
2	8.5mV
3	8.5mV
4	-14.24V
5	8.5mV
6	8.7mV
7	8.7mV
8	14.12V

IC1610

No.	Voltage
1	1.4mV
2	2.0mV
3	1.9mV
4	-14.24V
5	1.9mV
6	1.9mV
7	1.9mV
8	14.11V

IC1603

No.	Voltage
1	9.8mV
2	9.8mV
3	8.5mV
4	-14.24V
5	9.4mV
6	9.5mV
7	9.5mV
8	14.12V

IC1604

No.	Voltage
1	-1.4mV
2	6.1mV
3	6.0mV
4	-14.23V
5	5.4mV
6	5.8mV
7	1.3mV
8	14.12V

IC1605

No.	Voltage
1	6.3mV
2	6.3mV
3	6.2mV
4	-14.24V
5	6.2mV
6	6.4mV
7	6.4mV
8	14.12V

D C2EQ ASSY

IC1748

No.	Voltage
1	1.8mV
2	2.1mV
3	1.6mV
4	-14.22V
5	1.7mV
6	1.7mV
7	1.4mV
8	14.12V

IC1753

No.	Voltage
1	9.6mV
2	9.6mV
3	9.4mV
4	-14.24V
5	9.4mV
6	9.5mV
7	9.5mV
8	14.11V

IC1749

No.	Voltage
1	1.7mV
2	2.1mV
3	1.5mV
4	-14.23V
5	1.5mV
6	1.0mV
7	1.0mV
8	14.13V

IC1754

No.	Voltage
1	-3.8mV
2	3.3mV
3	3.1mV
4	-14.25V
5	3.1mV
6	3.4mV
7	-3.7mV
8	14.14V

IC1750

No.	Voltage
1	1.9mV
2	1.9mV
3	1.8mV
4	-14.25V
5	1.8mV
6	1.9mV
7	1.9mV
8	14.14V

IC1755

No.	Voltage
1	6.8mV
2	6.8mV
3	6.6mV
4	-14.23V
5	6.6mV
6	6.8mV
7	6.8mV
8	14.12V

IC1751

No.	Voltage
1	-3.1mV
2	-4.1mV
3	-4.1mV
4	-14.23V
5	1.8mV
6	1.8mV
7	-5.5mV
8	14.12V

IC1758

No.	Voltage
1	28.0mV
2	4.96V
3	11.1mV
4	4.97V
5	4.98V

IC1759

No.	Voltage
1	23.3mV
2	11.2mV
3	11.1mV
4	11.0mV
5	4.98V

IC1752

No.	Voltage
1	7.9mV
2	7.9mV
3	7.9mV
4	-14.23V
5	7.9mV
6	7.9mV
7	7.9mV
8	14.12V

E C1BF ASSY

IC1251

No.	Voltage
1	11.4mV
2	11.4mV
3	11.4mV
4	-14.23V
5	11.7mV
6	12.8mV
7	12.8mV
8	14.14V

IC1252

No.	Voltage
1	12.7mV
2	12.7mV
3	12.8mV
4	-14.23V
5	12.8mV
6	13.1mV
7	13.1mV
8	14.14V

IC1253

No.	Voltage
1	278.8mV
2	-104.2mV
3	-100.9mV
4	-14.22V
5	-102.3mV
6	-166.5mV
7	261.8mV
8	14.13V

IC1254

No.	Voltage
1	2.9mV
2	2.9mV
3	2.7mV
4	-14.22V
5	2.7mV
6	3.1mV
7	3.1mV
8	14.14V

IC1255

No.	Voltage
1	-13.5mV
2	1.4mV
3	1.8mV
4	-14.23V
5	1.4mV
6	1.4mV
7	-13.3mV
8	14.14V

F C2BF ASSY

IC1351

No.	Voltage
1	11.2mV
2	11.2mV
3	11.1mV
4	-14.24V
5	11.1mV
6	11.3mV
7	11.3mV
8	14.16V

IC1352

No.	Voltage
1	12.7mV
2	12.7mV
3	12.3mV
4	-14.25V
5	12.1mV
6	12.6mV
7	12.6mV
8	14.14V

IC1353

No.	Voltage
1	350mV
2	-129.2mV
3	-139.2mV
4	-14.24V
5	-137.2mV
6	-133.4mV
7	329mV
8	14.14V

IC1355

No.	Voltage
1	-12.6mV
2	1.8mV
3	1.8mV
4	-14.23V
5	1.8mV
6	1.8mV
7	12.3mV
8	14.14V

G MICB ASSY

IC1201

No.	Voltage
1	-60.4mV
2	14.0mV
3	13.9mV
4	-14.22V
5	21.4mV
6	21.7mV
7	9.9mV
8	14.13V

IC1202

No.	Voltage
1	-5.0mV
2	4.0mV
3	3.6mV
4	-14.22V
5	3.6mV
6	3.9mV
7	-5.1mV
8	14.13V

IC1203

No.	Voltage
1	0.4mV
2	2.1mV
3	1.7mV
4	-14.23V
5	3.7mV
6	3.8mV
7	2.1mV
8	14.13V

IC1204

No.	Voltage
1	1.9mV
2	21.1mV
3	21.1mV
4	-14.22V
5	1.8mV
6	2.0mV
7	2.0mV
8	14.13V

H HPBO ASSY

IC1451

No.	Voltage
1	-4.3mV
2	-4.4mV
3	-4.6mV
4	-14.24V
5	-4.6mV
6	-4.6mV
7	-4.4mV
8	14.27V

IC1452

No.	Voltage
1	-0.2mV
2	1.7mV
3	1.6mV
4	-14.25V
5	1.6mV
6	1.7mV
7	-0.1mV
8	14.27V

IC1453

No.	Voltage
1	-5.1mV
2	1.5mV
3	1.6mV
4	-14.24V
5	1.5mV
6	1.8mV
7	1.6mV
8	14.27V

IC1454

No.	Voltage
1	7.15V
2	77.0mV
3	7.11V
4	5.1mV
5	7.09V
6	7.13V
7	7.13V
8	14.27V

IC1455

No.	Voltage
1	1.5mV
2	20.9mV
3	1.5mV
4	1.3mV
5	21.0mV
6	1.4mV
7	1.3mV
8	-14.26V
9	1.5mV
10	1.6mV
11	-7.2mV
12	20.9mV
13	1.6mV
14	2.0mV
15	1.9mV
16	14.24V

IC1456

No.	Voltage
1	1.5mV
2	20.5mV
3	1.5mV
4	1.6mV
5	4.98V
6	1.4mV
7	1.4mV
8	-14.25V
9	1.4mV
10	1.4mV
11	-7.0mV
12	20.6mV
13	1.4mV
14	2.0mV
15	2.0mV
16	14.24V

J SDRT ASSY

IC1901

No.	Voltage
1	0.9mV
2	2.9mV
3	2.9mV
4	-14.57V
5	2.9mV
6	3.0mV
7	0.9mV
8	14.43V

IC1902

No.	Voltage
1	2.5mV
2	2.5mV
3	2.4mV
4	-14.57V
5	2.2mV
6	2.9mV
7	2.9mV
8	14.43V

IC1903

No.	Voltage
1	2.3mV
2	15.6mV
3	2.3mV
4	2.3mV
5	4.94V
6	2.3mV
7	2.3mV
8	-14.57V
9	2.2mV
10	2.2mV
11	2.2mV
12	2.2mV
13	2.2mV
14	2.2mV
15	2.2mV
16	14.43V

K XLR ASSY

IC102

No.	Voltage
1	13.1mV
2	13.1mV
3	13.0mV
4	-14.24V
5	12.9mV
6	9.3mV
7	13.0mV
8	14.14V

IC108

No.	Voltage
1	3.4mV
2	-172.2mV
3	-188.6mV
4	-14.23V
5	-193.4mV
6	-180.1mV
7	-4.1mV
8	14.14V

IC110

No.	Voltage
1	206.7mV
2	40.3mV
3	39.3mV
4	-14.24V
5	-8.7mV
6	-10.2mV
7	-119.7mV
8	14.14V

IC111

No.	Voltage
1	180.1mV
2	44.1mV
3	43.3mV
4	-14.25V
5	-10.8mV
6	-4.2mV
7	-164.6mV
8	14.14V

IC137

No.	Voltage
1	104.0mV
2	38.0mV
3	1.5mV
4	-14.24V
5	16.4mV
6	38.1mV
7	102.3mV
8	14.14V

L LVMR ASSY

IC401

No.	Voltage
1	311.2mV
2	320.3mV
3	357mV
4	-14.55V
5	355mV
6	318mV
7	305.7mV
8	14.41V

IC402

No.	Voltage
1	311.1mV
2	321.7mV
3	358mV
4	-14.55V
5	358mV
6	317.7mV
7	306.2mV
8	14.41V

IC403

No.	Voltage
1	314.7mV
2	314.4mV
3	330.0mV
4	-14.56V
5	24.7mV
6	24.8mV
7	24.8mV
8	14.42V

IC404

No.	Voltage
1	317.7mV
2	316.8mV
3	340.0mV
4	-14.56V
5	27.3mV
6	26.9mV
7	26.9mV
8	14.41V

IC407

No.	Voltage
1	5.94V
2	53.3mV
3	12.23V
4	11.47V
5	52.1mV
6	153.4mV
7	11.48V
8	457mV
9	11.48V
10	793mV
11	11.49V
12	24.6mV
13	1.98V
14	3.94V

IC408

No.	Voltage
1	1.98V
2	3.93V
3	12.19V
4	460mV
5	11.48V
6	795mV
7	11.48V
8	1.62V
9	55.1mV
10	156.6mV
11	11.49V
12	27.9mV
13	5.9V
14	57.3mV

IC409

No.	Voltage
1	3.94V
2	55.8mV
3	12.19V
4	11.5V
5	1.27V
6	1.71V
7	11.5V
8	1.91V
9	11.51V
10	11.51V
11	2.16V
12	24.7mV
13	232.9mV
14	1.98V

IC410

No.	Voltage
1	251.6mV
2	1.98V
3	12.19V
4	1.91V
5	11.51V
6	11.51V
7	2.16V
8	11.52V
9	1.27V
10	1.71V
11	11.52V
12	28.0mV
13	3.92V
14	64.1mV

IC411

No.	Voltage
1	5.68V
2	53.7mV
3	12.19V
4	11.52V
5	2.92V
6	3.84V
7	11.52V
8	6.26V
9	11.52V
10	9.61V
11	11.52V
12	24.6mV
13	1.86V
14	3.76V

IC412

No.	Voltage
1	1.86V
2	3.77V
3	12.19V
4	6.27V
5	11.5V
6	9.61V
7	11.5V
8	11.5V
9	2.92V
10	3.85V
11	11.5V
12	27.6mV
13	5.66V
14	56.8mV

IC413

No.	Voltage
1	11.49V
2	24.7mV
3	24.7mV
4	24.7mV
5	14.34V
6	11.49V
7	11.54V
8	14.41V

IC416

No.	Voltage
1	11.49V
2	27.4mV
3	27.4mV
4	27.4mV
5	14.34V
6	11.5V
7	11.49V
8	14.41V

IC417

No.	Voltage
1	11.51V
2	11.51V
3	11.51V
4	-14.55V
5	24.8mV
6	26.2mV
7	26.1mV
8	14.41V

IC418

No.	Voltage
1	11.51V
2	11.51V
3	11.51V
4	-14.55V
5	27.4mV
6	29.2mV
7	29.2mV
8	14.41V

T LCD ASSY

IC1000

No.	Voltage
1	1.59V
2	1.59V
3	1.59V
4	27.94V
5	3.16V
6	3.16V
7	3.16V
8	18.98V
9	18.98V
10	19.0V
11	15.8mV
12	20.55V
13	20.55V
14	20.55V

IC1002

No.	Voltage
1	16.1mV
2	436mV
3	438mV
4	16.2mV
5	300.5mV
6	311.3mV
7	16.4mV
8	1.63V
9	1.61V
10	16.4mV
11	3.24V
12	3.23V
13	16.2mV
14	3.24V

IC1003

No.	Voltage
1	1.65V
2	1.65V
3	1.73V
4	15.9mV
5	1.77V
6	1.77V
7	1.64V
8	3.24V

IC1009

No.	Voltage
1	15.8mV
2	3.24V
3	3.24V
4	15.9mV
5	15.3mV
6	15.9mV
7	15.9mV
8	2.56V
9	2.55V
10	15.9mV
11	3.24V
12	4.97V
13	16.0mV
14	3.24V

IC1001

No.	Voltage	No.	Voltage
1	3.24V	41	3.24V
2	3.24V	42	1.63V
3	1.07V	43	3.24V
4	1.2V	44	15.9mV
5	1.54V	45	3.24V
6	1.26V	46	3.24V
7	1.47V	47	3.24V
8	1.29V	48	3.24V
9	1.54V	49	3.24V
10	3.24V	50	16.4mV
11	1.29V	51	1.63V
12	1.49V	52	3.24V
13	1.29V	53	1.07V
14	1.3V	54	1.37V
15	1.13V	55	2.81V
16	1.28V	56	1.32V
17	1.3V	57	1.21V
18	1.3V	58	2.13V
19	1.29V	59	2.05V
20	16.1mV	60	16.0mV
21	3.24V	61	3.24V
22	3.24V	62	1.61V
23	3.24V	63	1.14V
24	3.24V	64	1.33V
25	3.24V	65	1.66V
26	3.24V	66	1.57V
27	16.1mV	67	1.66V
28	1.44V	68	1.62V
29	3.24V	69	1.54V
30	1.59V	70	101.8mV
31	1.6V	71	1.63V
32	1.65V	72	15.7mV
33	1.52V	73	3.24V
34	17.0mV	74	3.24V
35	16.0mV	75	16.0mV
36	17.0mV	76	3.24V
37	16.0mV	77	3.24V
38	122.5mV	78	3.24V
39	34.9mV	79	3.24V
40	15.8mV	80	16.0mV

IC1004

No.	Voltage	No.	Voltage
1	3.25V	51	1.34V
2	120.0mV	52	1.05V
3	130.0mV	53	3.21V
4	18.1mV	54	882mV
5	18.1mV	55	884mV
6	3.22V	56	875mV
7	3.25V	57	0.3mV
8	1.64V	58	3.24V
9	3.24V	59	3.25V
10	0.1mV	60	3.22V
11	17.4mV	61	3.25V
12	3.24V	62	3.25V
13	413mV	63	3.25V
14	3.24V	64	14.9mV
15	632mV	65	14.9mV
16	3.25V	66	1.65V
17	2.63V	67	1.53V
18	1.23V	68	3.26V
19	1.21V	69	3.24V
20	1.21V	70	3.24V
21	1.13V	71	3.24V
22	17.3mV	72	3.24V
23	1.15V	73	3.26V
24	1.16V	74	17.4mV
25	1.18V	75	3.24V
26	1.13V	76	3.24V
27	1.35V	77	3.24V
28	1.14V	78	371mV
29	1.39V	79	344mV
30	1.13V	80	3.25V
31	1.4V	81	3.25V
32	1.19V	82	1.6V
33	1.4V	83	3.25V
34	1.14V	84	1.62V
35	3.25V	85	3.25V
36	80.7mV	86	0.04mV
37	1.53V	87	17.4mV
38	1.61V	88	3.25V
39	1.65V	89	3.24V
40	1.56V	90	3.24V
41	1.66V	91	3.25V
42	1.29V	92	16.3mV
43	1.08V	93	1.62V
44	1.08V	94	1.61V
45	1.63V	95	1.33V
46	2.05V	96	18.0mV
47	2.15V	97	16.4mV
48	1.2V	98	267.3mV
49	1.31V	99	17.1mV
50	2.82V	100	3.23V

IC1005

No.	Voltage
1	3.2V
2	1.07V
3	1.37V
4	2.81V
5	1.32V
6	1.2V
7	2.13V
8	2.04V
9	-84.2 - 313.2mV
10	30.1mV
11	-42.3 - -313.2mV
12	3.23V
13	-313.4 - 325.3mV
14	105mV
15	1.66V
16	887mV
17	885mV
18	1.61V
19	10.0mV
20	1.38V
21	1.67V
22	1.57V
23	1.66V
24	1.62V
25	1.53V
26	3.23V
27	16.4mV
28	3.23V
29	1.35V
30	1.22V
31	1.32V
32	1.35V
33	1.09V
34	1.31V
35	778mV
36	1.22V
37	3.24V
38	1.14V
39	1.21V
40	1.35V
41	1.21V
42	1.3V
43	1.26V
44	1.18V
45	1.2V
46	15.9mV
47	3.24V
48	880mV

IC1006

No.	Voltage
1	3.24V
2	3.23V
3	16.3mV
4	3.23V
5	17.3mV
6	3.24V
7	16.3mV
8	16.3mV
9	3.21V
10	16.4mV
11	3.24V
12	17.9mV
13	17.9mV
14	3.24V
15	16.4mV
16	3.24V

IC1007

No.	Voltage
1	3.24V
2	3.23V
3	3.23V
4	3.23V
5	17.4mV
6	3.24V
7	16.5mV
8	16.4mV
9	3.21V
10	16.5mV
11	3.24V
12	17.6mV
13	17.6mV
14	3.24V
15	16.5mV
16	3.24V

IC1008

No.	Voltage
1	3.24V
2	1.62V
3	1.63V
4	3.24V
5	1.63V
6	1.62V
7	16.2mV
8	1.61V
9	1.61V
10	3.24V
11	1.63V
12	1.61V
13	3.24V
14	3.24V

3.28 WAVEFORMS

■ Waveforms (1/5)

Note : The encircled numbers denote measuring point in the schematic diagram.

E C1BF ASSY

① **JA251 (CD L)**
V: 0.1V/div. H: 200uS/div.

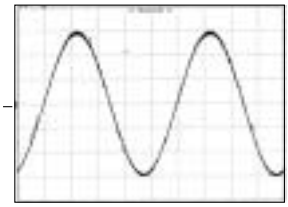

E C1BF ASSY

⑤ **RY1251 4pin (LINE L)**
V: 1V/div. H: 200uS/div.

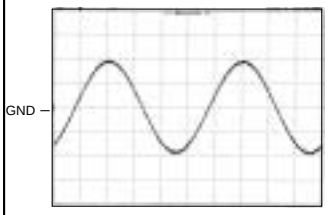

C 1/2 C1EQ ASSY

⑨ **IC1601 7 pin (BUF_L)**
V: 1V/div. H: 200uS/div.

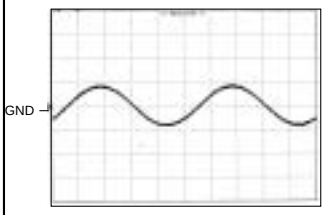

C 1/2 C1EQ ASSY
MODE: EQ- OFF (S1601)

⑫ **TP1715 (EQ_L)**
V: 1/div. H: 200uS/div.

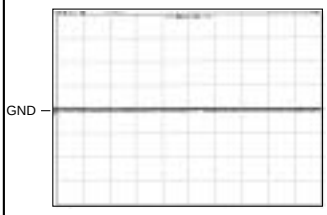

E C1BF ASSY

② **RY1252 4pin (CD L)**
V: 0.1V/div. H: 200uS/div.

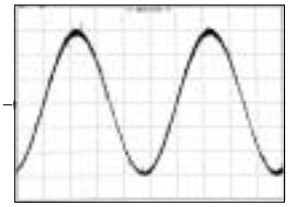

E C1BF ASSY

⑥ **CN1252 6pin (CH1_TO2_L)**
V: 0.1V/div. H: 200uS/div.

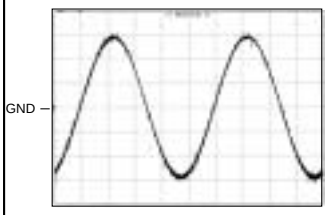

C 1/2 C1EQ ASSY

⑩ **IC1604 1pin (EQ_LOUT)**
V: 1V/div. H: 200uS/div.

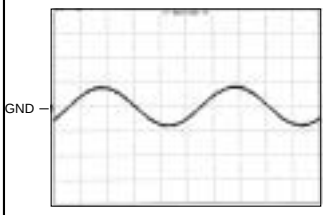

C 1/2 C1EQ ASSY
MODE: EQ- ON (S1601)

⑫ **TP1715 (EQ_L)**
V: 1V/div. H: 200uS/div.

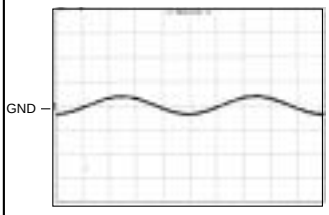

E C1BF ASSY

③ **JA1251 (LINE L)**
V: 20mV/div. H: 200uS/div.

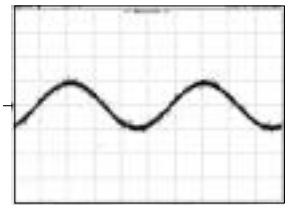

E C1BF ASSY

⑦ **CN1254 1pin (CH1_IN_L)**
V: 0.1V/div. H: 200uS/div.

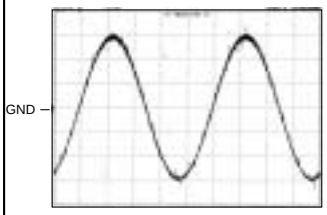

C 1/2 C1EQ ASSY
MODE: EQ- OFF (S1601)

⑪ **TP1706 (THROUGH_L)**
V: 1V/div. H: 200uS/div.

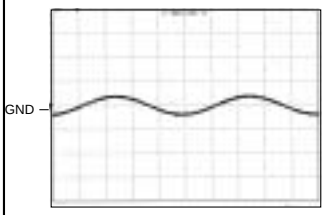

A 3/6 MAIN ASSY

⑬ **CN101 3pin (1CH_OUT_L)**
V: 1V/div. H: 200uS/div.

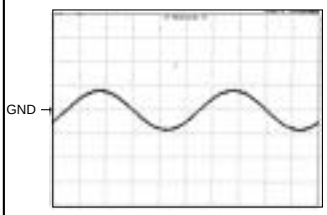

E C1BF ASSY

④ **RY1251 2pin (LINE L)**
V: 20mV/div. H: 200uS/div.

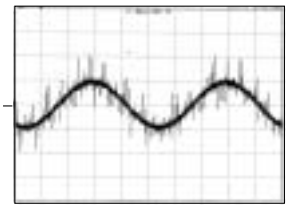

C 1/2 C1EQ ASSY

⑧ **CN1601 1pin (CH1_IN_L)**
V: 0.1/div. H: 200uS/div.

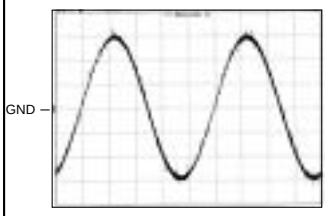

C 1/2 C1EQ ASSY
MODE: EQ- ON (S1601)

⑪ **TP1706 (THROUGH_L)**
V: 1V/div. H: 200uS/div.

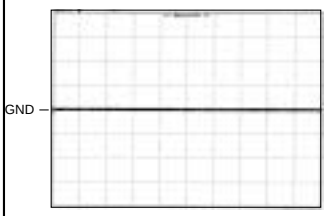

A 3/6 MAIN ASSY

⑭ **C197(NP) (+IN)**
V: 1V/div. H: 200uS/div.

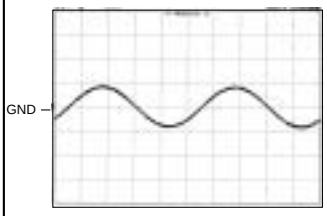

Waveforms (2/5)

A 3/6 MAIN ASSY

15 IC115 14pin (VG)
V: 1V/div. H: 200uS/div.

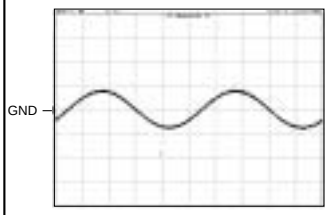

H HPBO ASSY

19 CN1454 8pin (MASTER_IN_L)
V: 1V/div. H: 200uS/div.

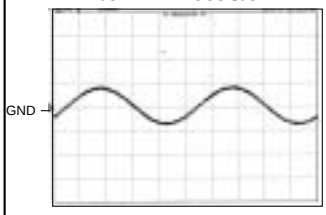

K 2/2 XLR ASSY

22 L (-) pin
V: 1V/div. H: 200uS/div.

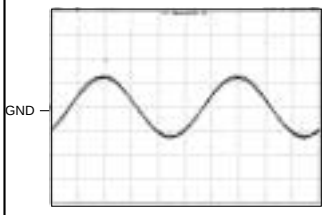

A 6/6 MAIN ASSY

26 CN119 14 pin (BOOTH_OUT_L)
V: 1V/div. H: 200uS/div.

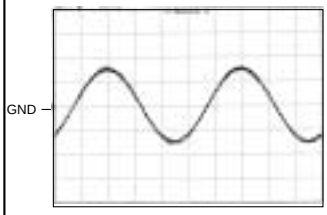

A 1/6 MAIN ASSY

16 Q101 E (CH1 VCA OUT L)
V: 0.2/div. H: 200uS/div.

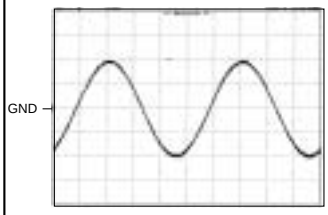

H HPBO ASSY

20 CN1452 18pin (MASTER2_OUT_L)
V: 1V/div. H: 200uS/div.

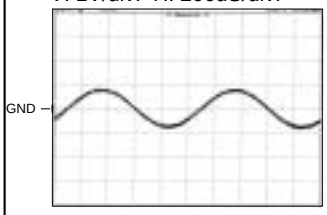

C 1/2 C1EQ ASSY

23 C329 +pin (MASTER_PIN_L)
V: 1V/div. H: 200uS/div.

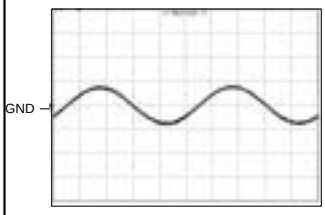

A 2/6 MAIN ASSY

27 JA101 (BOOTH_L)
V: 1V/div. H: 200uS/div.

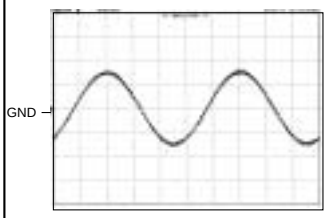

A 1/6 MAIN ASSY

17 CN123 4pin (FIL_IN_L)
V: 0.2V/div. H: 200uS/div.

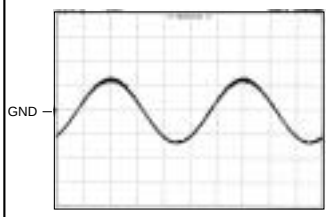

K 2/2 XLR ASSY

21 C131 pin (MASTER_L)
V: 1V/div. H: 200uS/div.

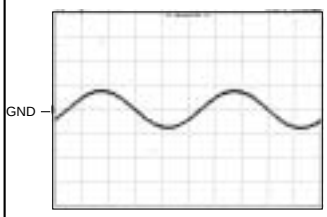

A 2/6 MAIN ASSY
MODE: EQ- OFF (S1601)

24 JA101 (MASTER OUT2_L)
V: 1V/div. H: 200uS/div.

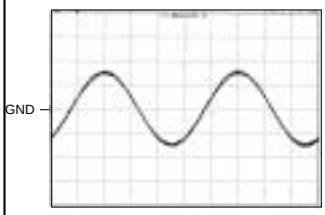

A 1/6 MAIN ASSY

28 C285 (VCA_AL)
V: 1V/div. H: 200uS/div.

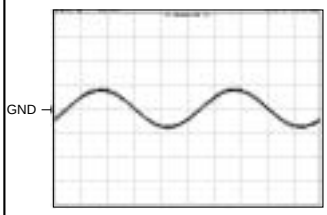

K 1/2 XLRASSY

18 CN122 8pin (MASTER_IN_L)
V: 1V/div. H: 200uS/div.

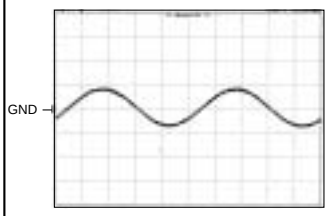

K 2/2 XLR ASSY

22 L (+) pin
V: 1V/div. H: 200uS/div.

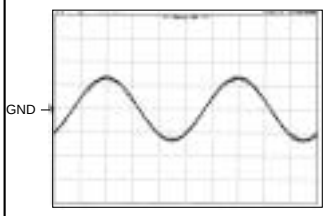

H HPBO ASSY

25 C1459 (BOOTH_L)
V: 1V/div. H: 200uS/div.

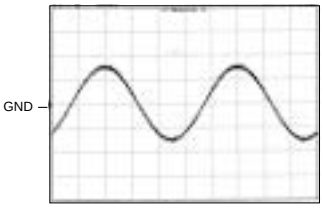

A 1/6 MAIN ASSY
MODE: SEND- OFF (S1603)

29 IC104 1pin (SEND_OUT_L)
V: 1V/div. H: 200uS/div.

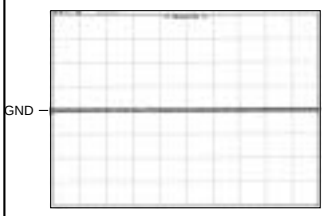

Waveforms (3/5)

A 1/6 MAIN ASSY
MODE: SEND- ON (S1603)
29 IC104 1pin (SEND_OUT_L)
V: 1V/div. H: 200us/div.

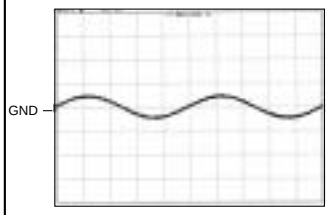

H HPBO ASSY
31 IC1453 1pin (HP_LEVEL)
V: 1V/div. H: 200uS/div.

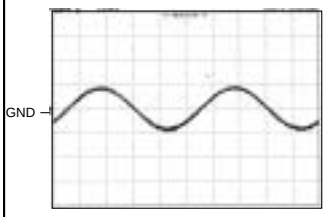

G MICB ASSY
35 C1242 pin (MIC)
V: 0.1V/div. H: 200uS/div.

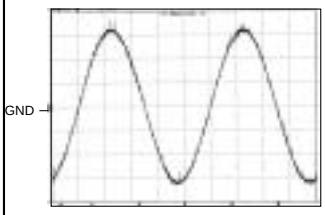

G MICB ASSY
MODE: EQ- ON (S1601)
39 CN1201 2pin (MIC_TO CH1)
V: 1V/div. H: 200uS/div.

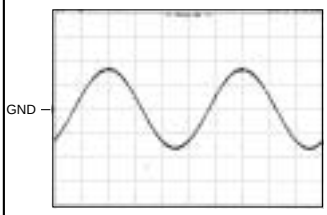

H HPBO ASSY
MODE: SELECT-MASTER(S1752)
30 IC1455 3pin (MASTER L)
V: 1Vdiv. H: 200uS/div.

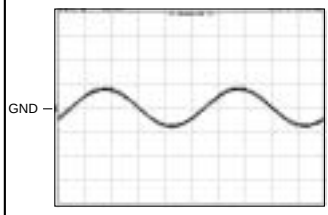

H HPBO ASSY
32 TP1515 (FC)
V: 1V/div. H: 200uS/div.

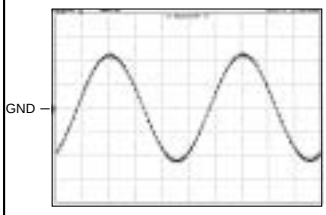

G MICB ASSY
36 C1237 pin (MIC)
V: 0.1V/div. H: 200uS/div.

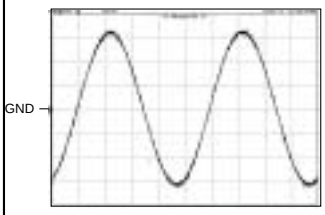

G MICB ASSY
40 JA1202 (SESSION_L)
V: 0.1V/div. H: 200uS/div.

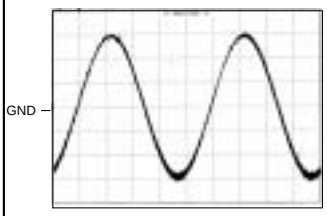

H HPBO ASSY
MODE: SELECT-EFECT(S1752)
30 IC1455 3pin (MASTER L)
V: 1V/div. H: 200uS/div.

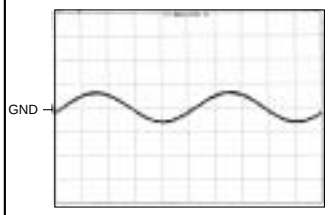

G MICB ASSY
33 JA1201 2, 3pin (MIC)
V: 20mV/div. H: 200uS/div.

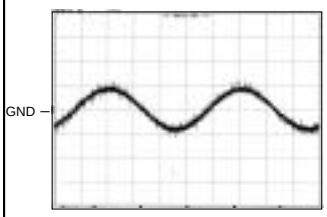

C 2/2 C1EQ ASSY
37 CN1604 (MIC_EQ_IN)
V: 5V/div. H: 200uS/div.

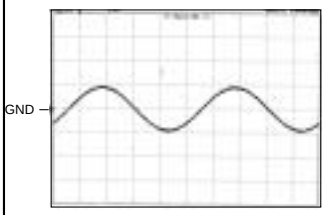

G MICB ASSY
41 CN1202 1pin (SESSION_IN_L)
V: 1V/div. H: 200uS/div.

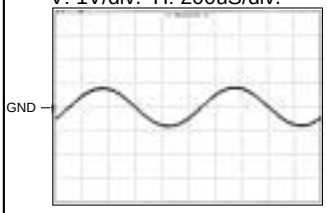

H HPBO ASSY
MODE: SELECT-CUE (S1752)
30 IC1455 3pin (MASTER L)
V: 1V/div. H: 200uS/div.

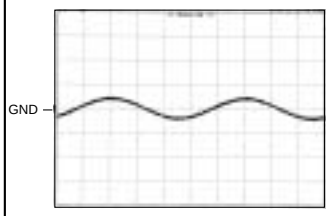

G MICB ASSY
34 C1230 pin (MIC)
V: 0.1V/div. H: 200uS/div.

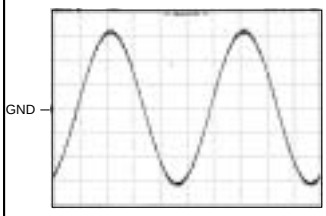

C 2/2 C1EQ ASSY
38 IC1610 1pin (MIC_OUT)
V: 5V/div. H: 200uS/div.

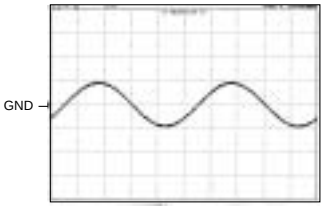

C 2/2 C1EQ ASSY
42 CN1604 1pin (SE_IN_L)
V: 1V/div. H: 200uS/div.

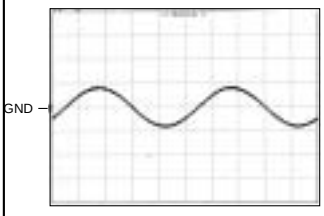

Waveforms (4/5)

C 1/2 CH1EQ ASSY

43 CN1603 15pin (SESSION_OUT_L)
V: 1V/div. H: 200uS/div.

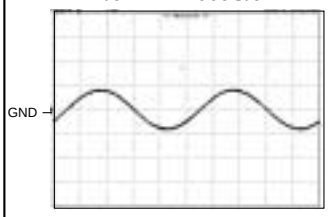

J SDRT ASSY

MODE: SEND- OFF (S1603)

47 IC1902 1pin (SND_L2)
V: 0.1V/div. H: 200uS/div.

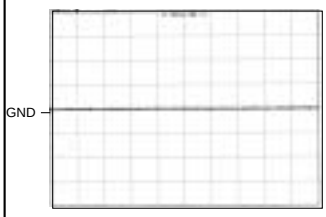

T LCD ASSY

MODE:
Knob position : 20% (VR1002)
LCD: BRIGHT 2

50 IC1004 95pin (PWM_OUT)
V: 1V/div. H: 20uS/div.

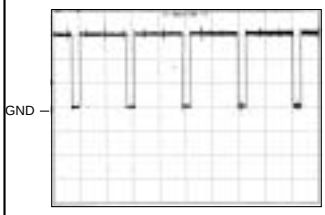

B 1/2 DSP ASSY

52 IC714 185pin (I.GCK3)
V: 0.5V/div. H: 20n/div.

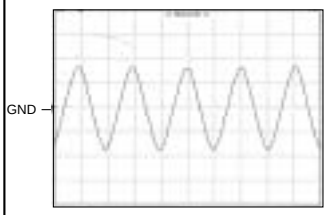

J SDRT ASSY

44 JA1902 2pin (RETURN L)
V: 0.1V/div. H: 200uS/div.

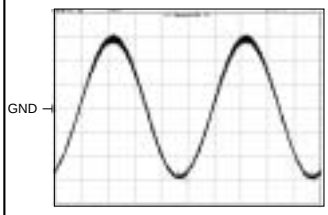

J SDRT ASSY

MODE: SEND- ON (S1603)

47 IC1902 1pin (SND_L2)
V: 0.1Vdiv. H: 200uS/div.

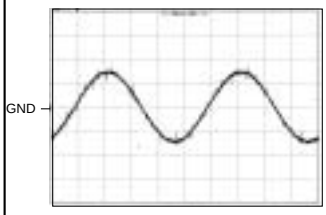

T LCD ASSY

MODE:
Knob position : 80% (VR1002)
LCD: BRIGHT 8

50 IC1004 95pin (PWM_OUT)
V: 1V/div. H: 20uS/div.

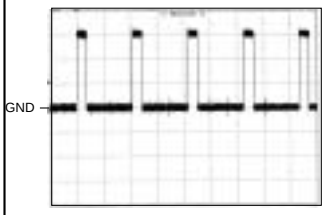

B 1/2 DSP ASSY

53 IC718 66pin (EXTAL)
V: 0.5/div. H: 20nS/div.

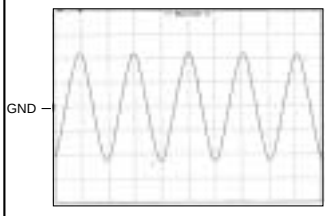

J SDRT ASSY

45 C1910 pin (RTN_L3)
V: 1V/div. H: 200uS/div.

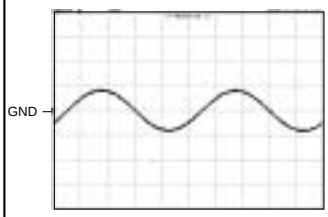

J SDRT ASSY

MODE: SEND- ON (S1603)

48 JA1904 3pin (SEND L)
V: 0.1V/div. H: 200uS/div.

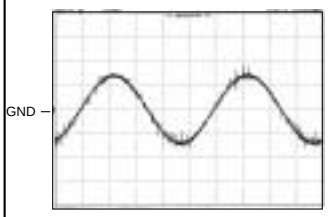

B 1/2 DSP ASSY

MODE: CH1 FADER MIN (VR593)

51 IC718 95pin (VCA1_CONT)
V: 2V/div. H: 20uS/div.

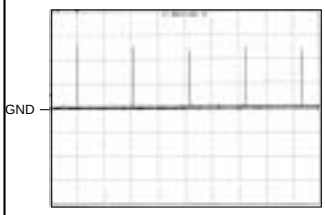

B 2/2 DSP ASSY

54 CN705 24pin (DSP 1CH _IN_L)
V: 1V/div. H: 200uS/div.

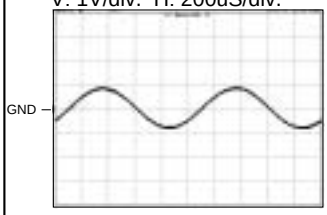

J SDRT ASSY

MODE: SEND- ON (S1603)

46 CN1901 11pin (SEND_L)
V: 1V/div. H: 200uS/div.

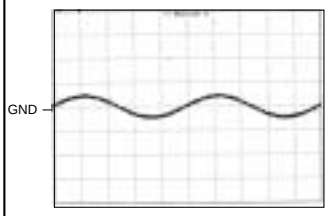

T LCD ASSY

49 IC1004 66pin (CPUCLK)
V: 0.5V/div. H: 20nS/div.

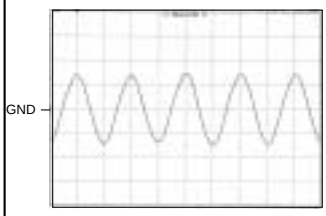

B 1/2 DSP ASSY

MODE: CH1 FADER MAX (VR593)

51 IC718 95pin (VCA1_CONT)
V: 2V/div. H: 20uS/div.

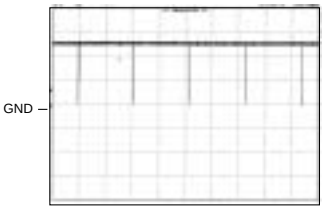

B 2/2 DSP ASSY

55 C719 pin (1ADL)
V: 1Vdiv. H: 200uS/div.

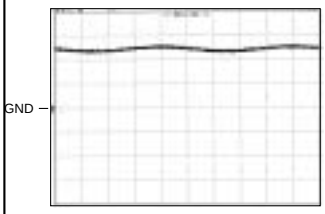

Waveforms (5/5)

B 2/2 DSP ASSY
MODE: CH1 EFFECT- OFF (S1008)
56 IC703 7pin (VOUT_L)
V: 0.5V/div. H: 200uS/div.

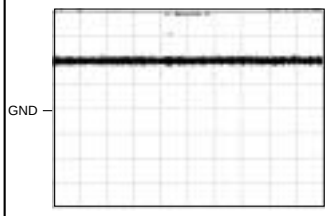

L 2/2 LVMR ASSY
59 IC413 6pin (CH1)
V: 1V/div. H: 200uS/div.

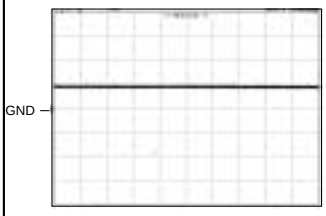

B 2/2 DSP ASSY
MODE: CH1 EFFECT- ON(S1008)
56 IC703 7pin (VOUT_L)
V: 0.5V/div. H: 200uS/div.

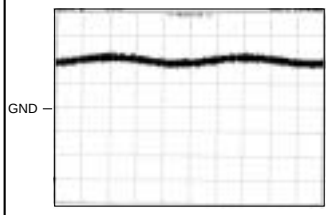

L 2/2 LVMR ASSY
MODE: MASTER LEVEL- ON (S401)
60 IC417 1pin
V: 1V/div. H: 200uS/div.

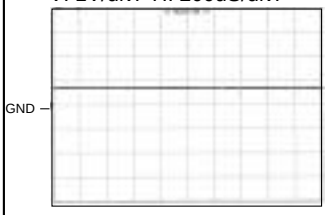

B 2/2 DSP ASSY
MODE: CH1 EFFECT- ON(S1008)
57 CN705 28pin (DSP 1CH OUT_L)
V: 1V/div. H: 200uS/div.

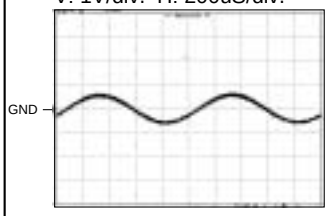

L 2/2 LVMR ASSY
MODE: MASTER LEVEL- OFF (S401)
60 IC417 1pin
V: 1V/div. H: 200uS/div.

L 2/2 LVMR ASSY
58 C401 pin (CH1_L)
V: 1V/div. H: 200uS/div.

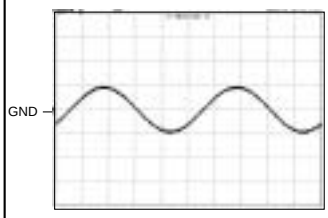

4. PCB CONNECTION DIAGRAM
4.1 MAIN ASSY

SIDE A

NOTE FOR PCB DIAGRAMS :

1. Part numbers in PCB diagrams match those in the schematic diagrams.
2. A comparison between the main parts of PCB and schematic diagrams is shown below.
3. The parts mounted on this PCB include all necessary parts for several destinations.
   For further information for respective destinations, be sure to check with the schematic diagram.
4. View point of PCB diagrams.

Symbol In PCB Diagrams	Symbol In Schematic Diagrams	Part Name
B C E	B C E B C E	Transistor
B C E	B C E B C E	Transistor with resistor
D G S	D G S D G S	Field effect transistor
		Resistor array
		3-terminal regulator

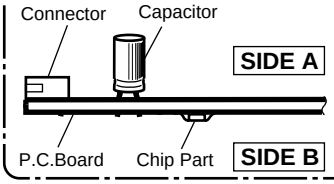

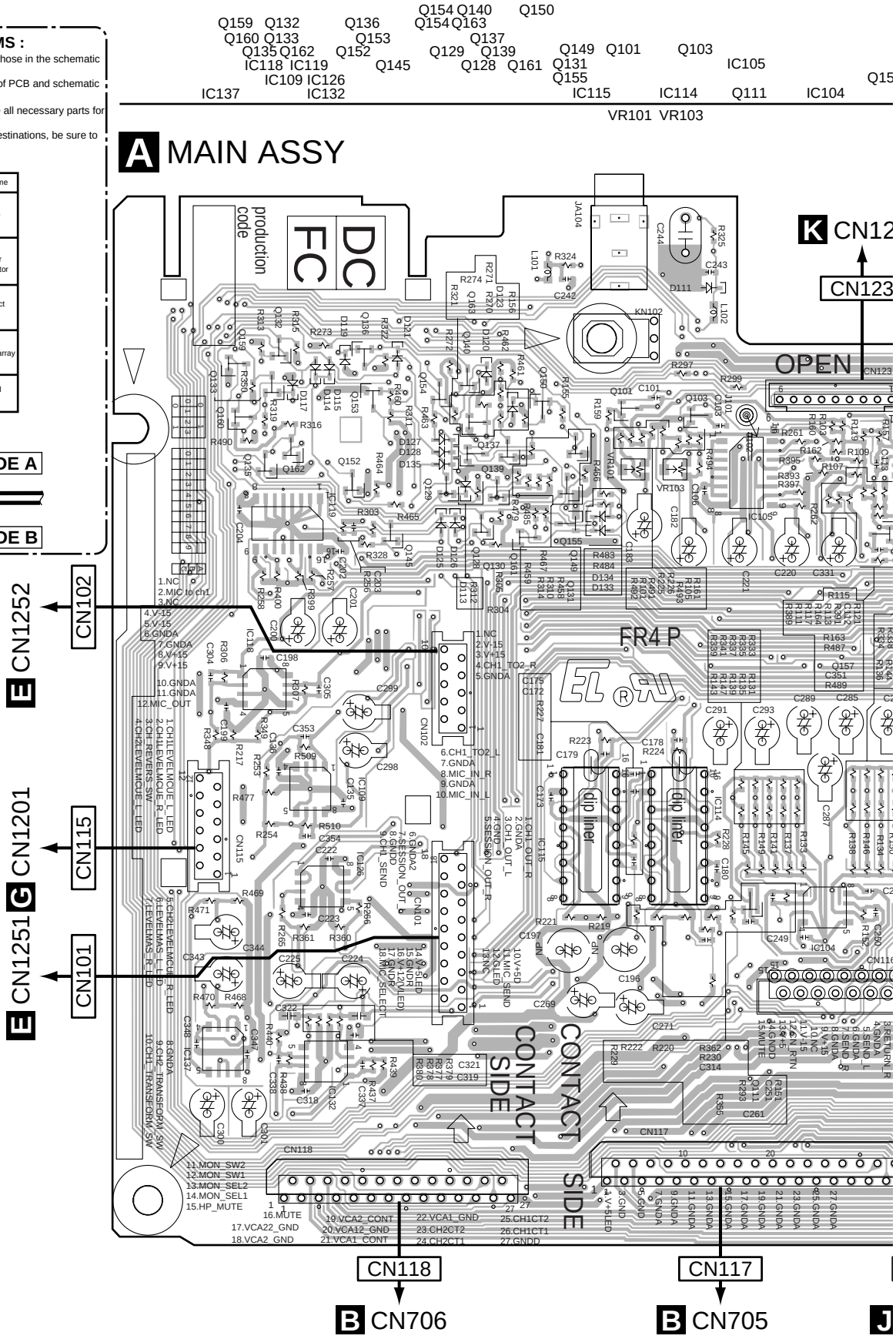

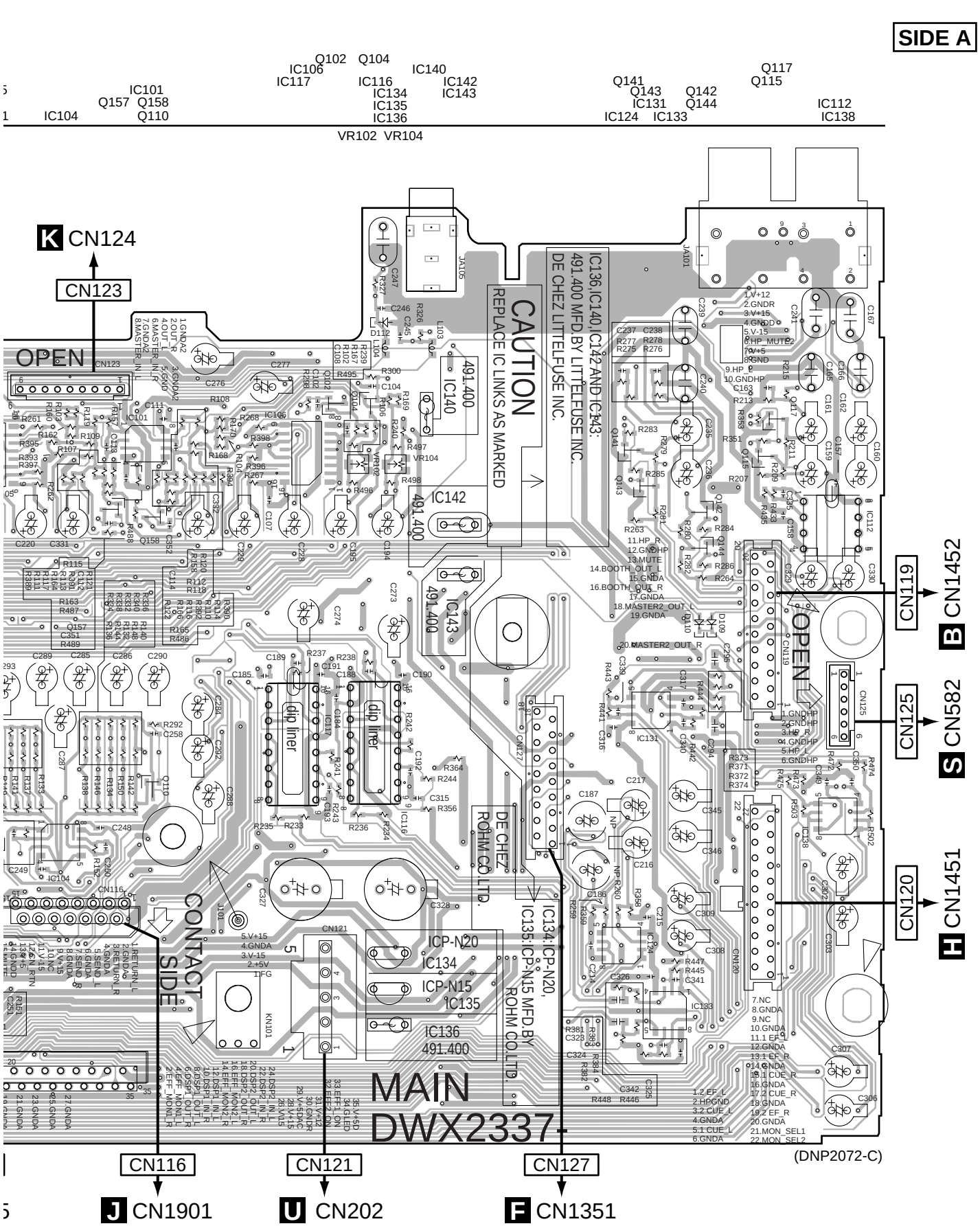
SIDE A
K CN124
CN123
OPEN
CAUTION
REPLACE IC LINKS AS MARKED
IC136,IC140,IC142 AND IC143:
491.400 MFD.BY LITTELFUSE INC.
DE CHEZ LITTELFUSE INC.
CN119
B CN1452
CN125
S CN582
CN120
H CN1451
CONTACT SIDE
DE CHEZ ROHM CO.LTD.
IC134:ICP-N20,
IC135:ICP-N15 MFD.BY
ROHM CO.LTD.
MAIN
DWX2337
(DNP2072-C)
CN116
J CN1901
CN121
U CN202
CN127
F CN1351

SIDE B

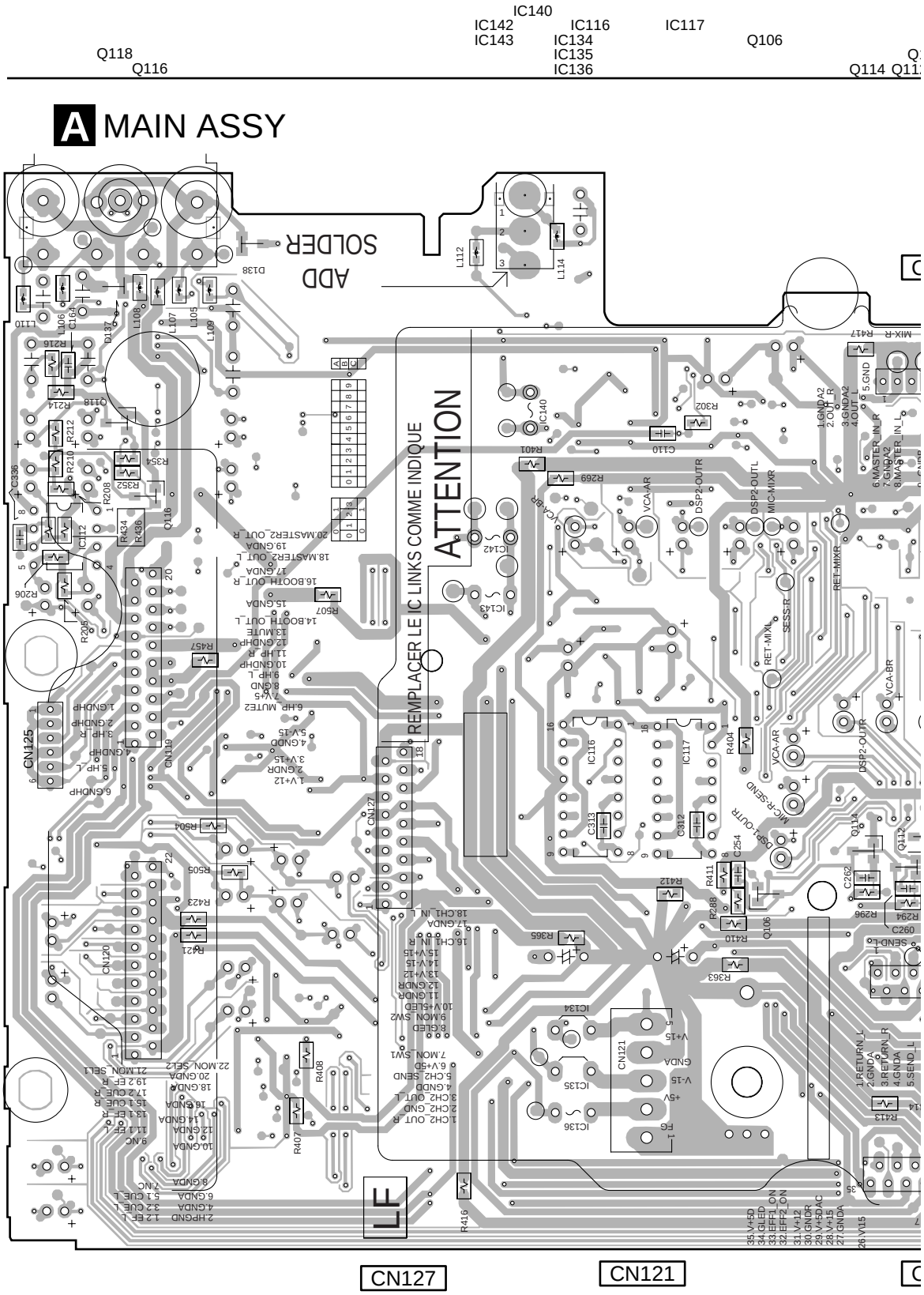
A MAIN ASSY
ADD SOLDER
ATTENTION
REMPLACER LE IC LINKS COMME INDIQUE
LF
CN119
CN125
CN120
CN127
CN121
IC140
IC142
IC143
IC116
IC117
IC134
IC135
IC136
Q118
Q116
Q106
Q114
Q112

SIDE B

Q108 Q105 Q113 IC114 IC115
Q114 Q112 Q107 Q109

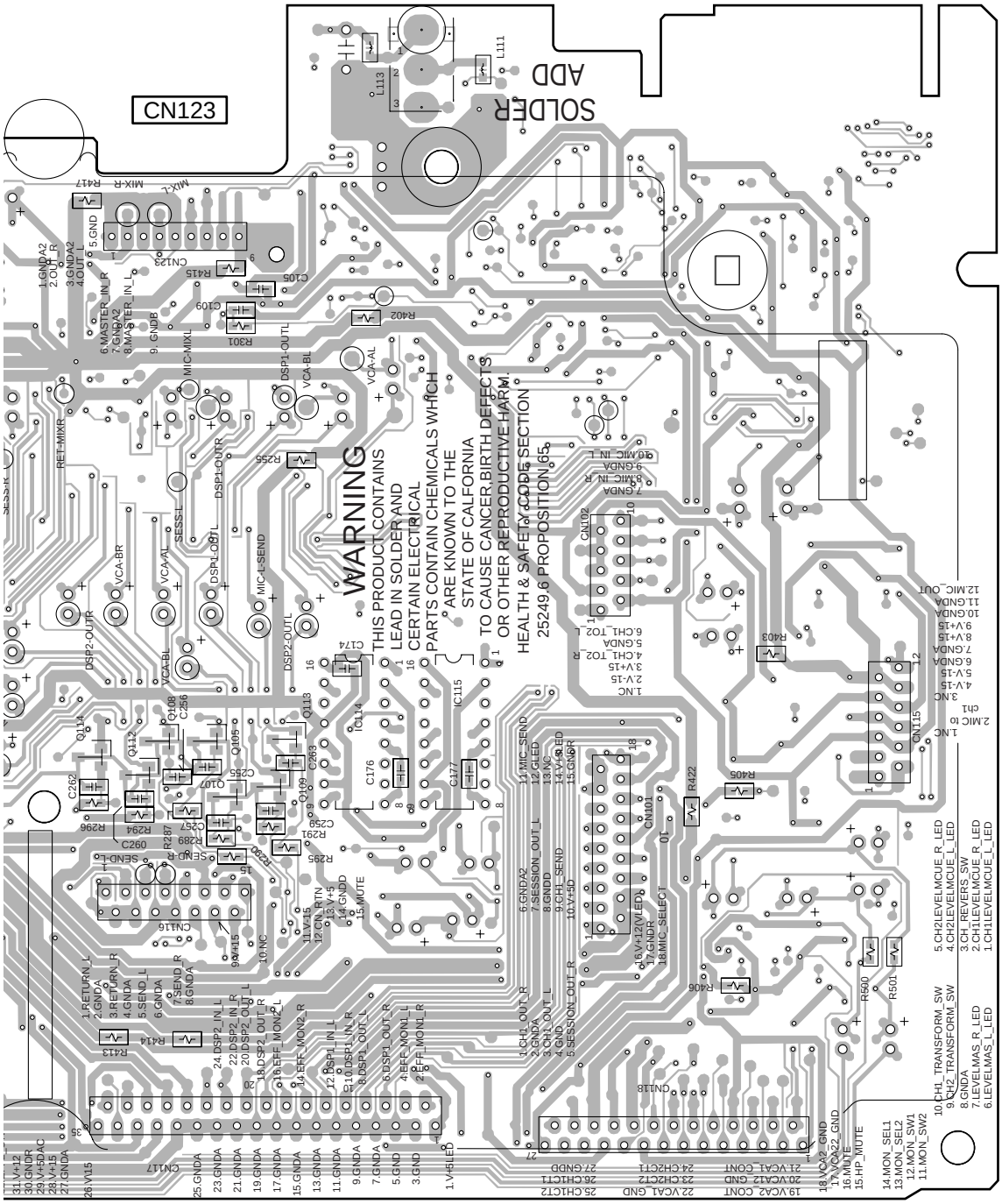

(DNP2072-C)

A

4.2 DSP ASSY

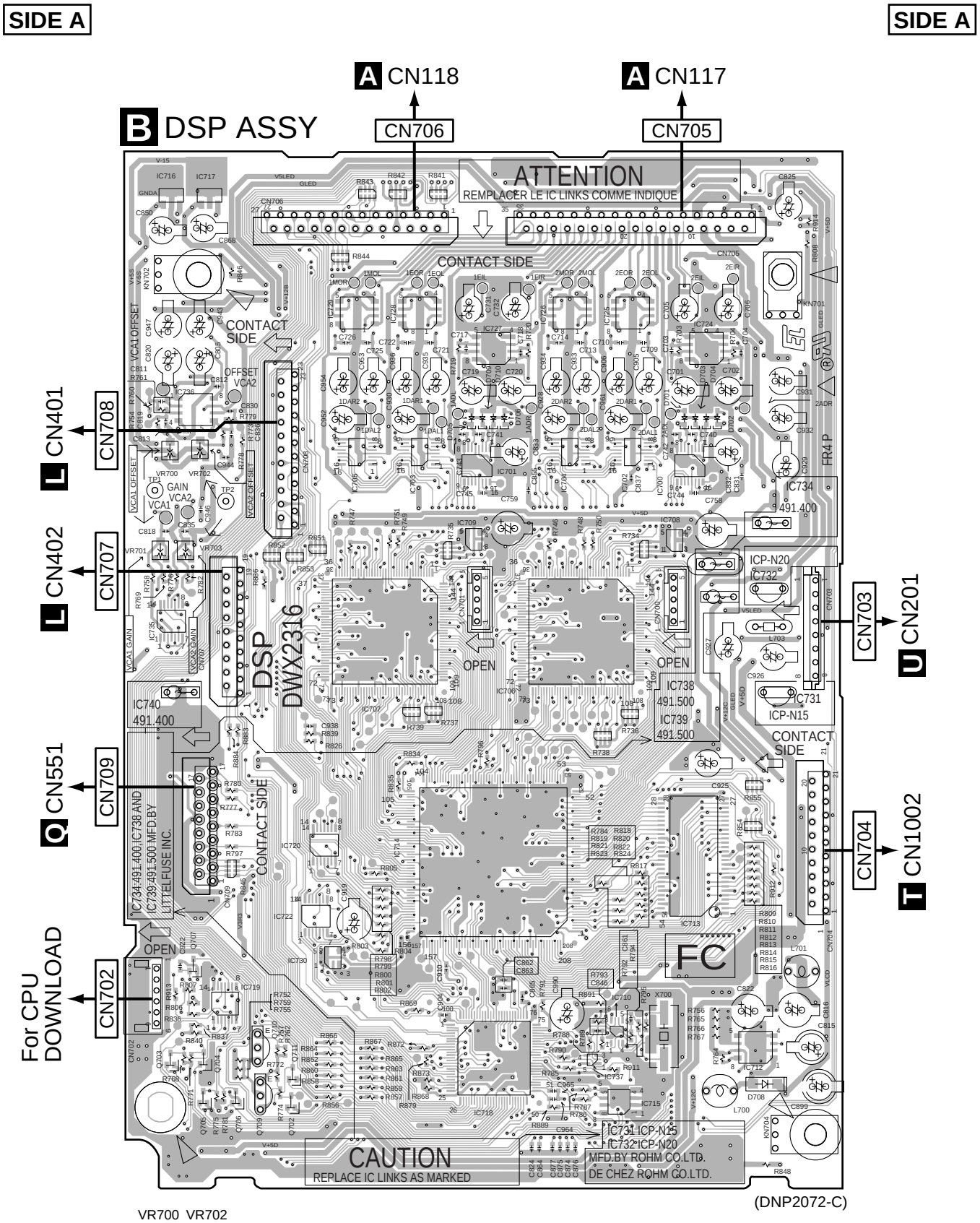

(DNP2072-C)

VR700 VR702
VR701 VR703

IC716 IC717 IC729 IC728 IC727 IC726 IC725 IC724
IC736 IC705 IC703 IC701 IC704 IC702 IC700 IC734
IC735 IC707 IC709 IC706 IC708 IC738 IC732
IC740 IC720 IC714 IC739 IC731
Q707 IC719 IC722 IC730 IC710 IC713 IC712
Q703 Q704 Q710 Q711 IC718 IC737
Q705 Q706 Q709 Q702 IC715

SIDE B

SIDE B

B DSP ASSY

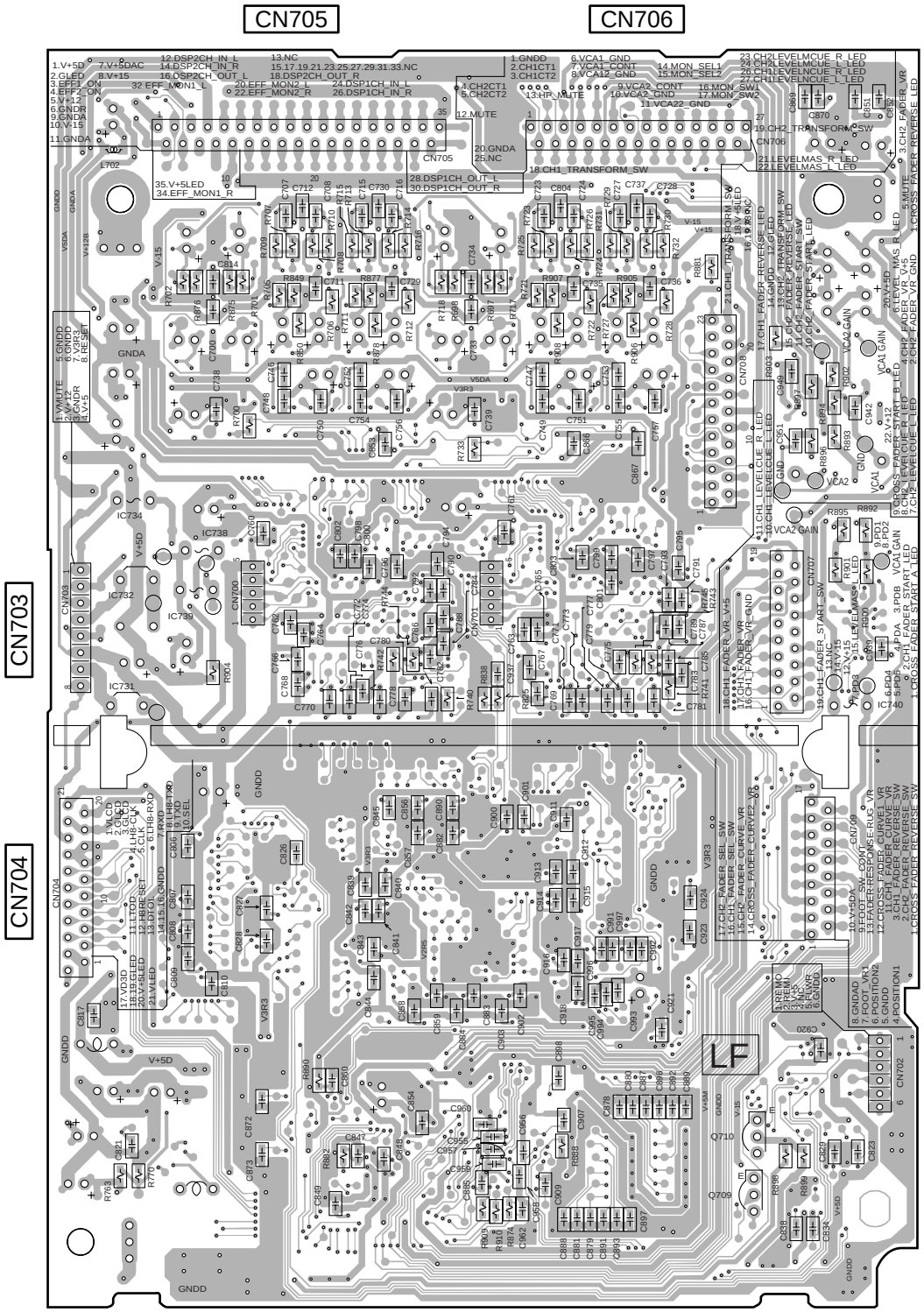

(DNP2072-C)

IC734
IC732
IC731

IC738
IC739

IC740

Q710
Q709

4.3 C1EQ ASSY

SIDE A

SIDE B

C C1EQ ASSY

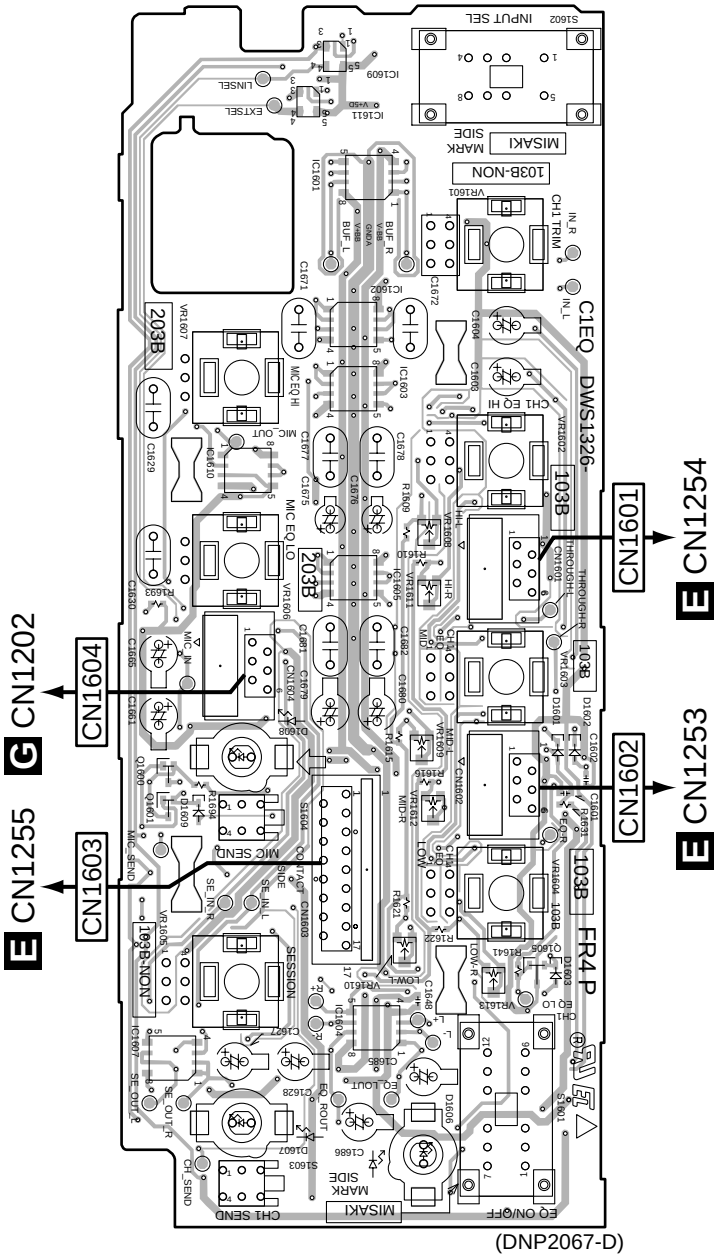

(DNP2067-D)

VR1607 VR1606 VR1608 VR1611 VR1609 VR1612 VR1605 VR1610 VR1601 VR1602 VR1603 VR1604 VR1613

IC1609 IC1611 IC1601 IC1602 IC1603 IC1605 IC1604 IC1610 IC1607

Q1600 Q1601 Q1605

C C1EQ ASSY

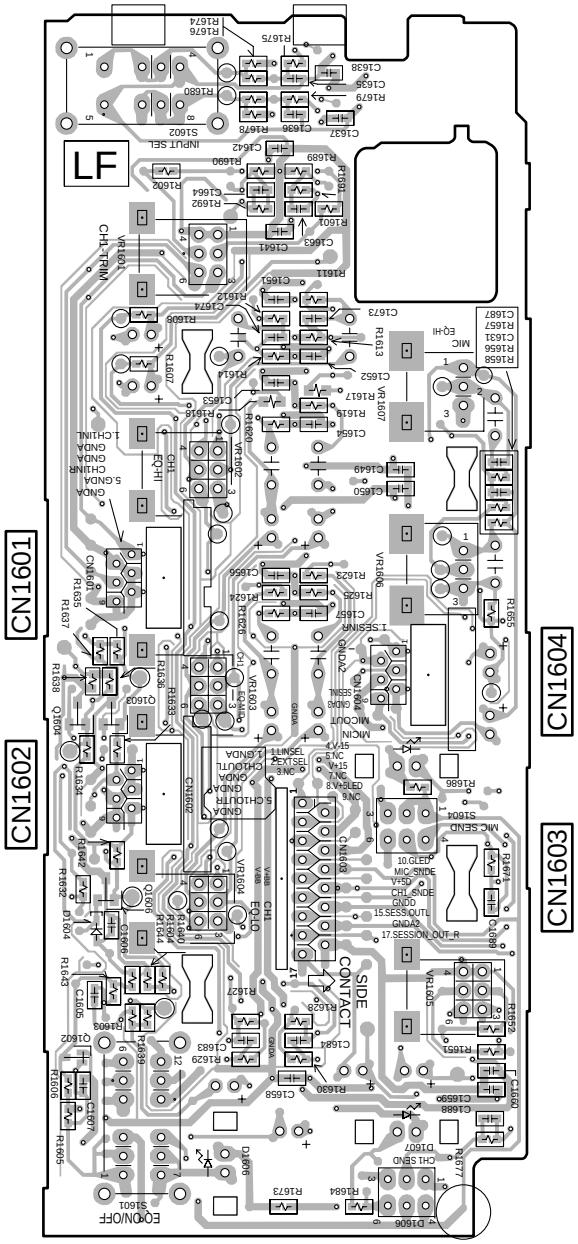

(DNP2067-D)

VR1601 VR1602 VR1603 VR1604 VR1607 VR1606 VR1605

Q1606 Q1602

4.4 C2EQ ASSY

SIDE A

SIDE B

D C2EQ ASSY

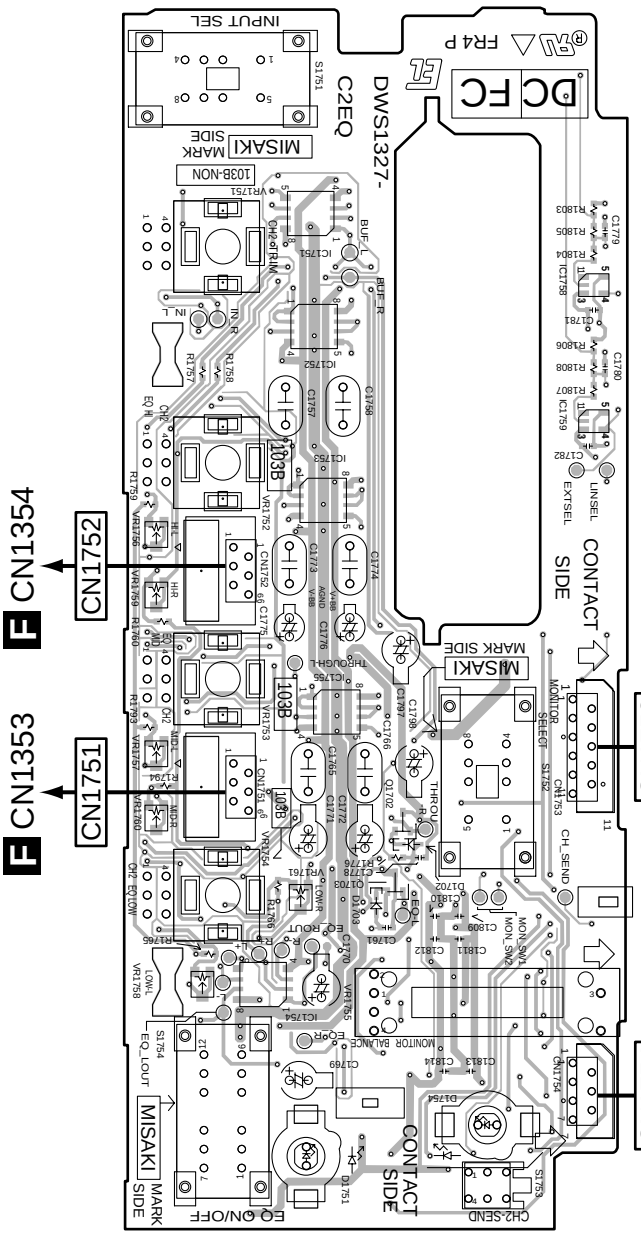

F CN1354

F CN1353

F CN1355

H CN1453

(DNP2067-D)

VR1751
VR1752
VR1756 VR1753
VR1759
VR1757 VR1754
VR1760 VR1758 VR1755

IC1751
IC1752
IC1753
IC1755 Q1702
IC1754 Q1703

IC1758
IC1759

D C2EQ ASSY

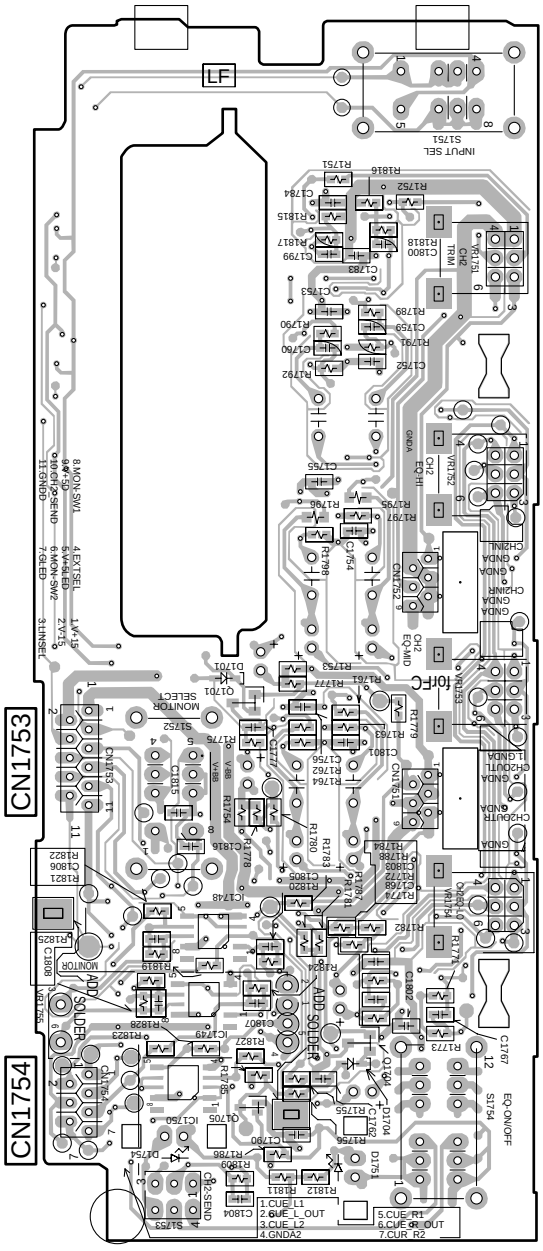

(DNP2067-D)

VR1751
VR1752
VR1753
VR1754

IC1748
IC1749 Q1701 Q1704
IC1750 Q1705

4.5 C1BF ASSY

SIDE A

SIDE B

E C1BF ASSY

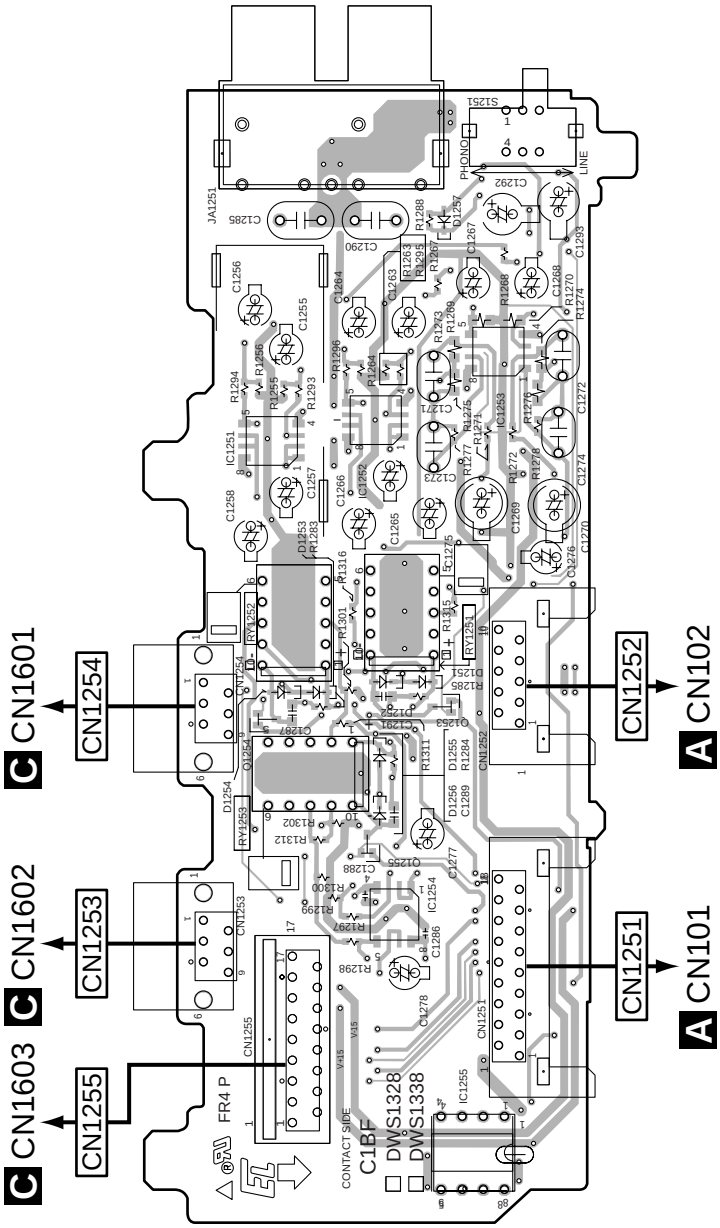

(DNP2068-C)

IC1251 IC1252 IC1253
Q1254 Q1255 Q1253
IC1254 IC1255

E C1BF ASSY

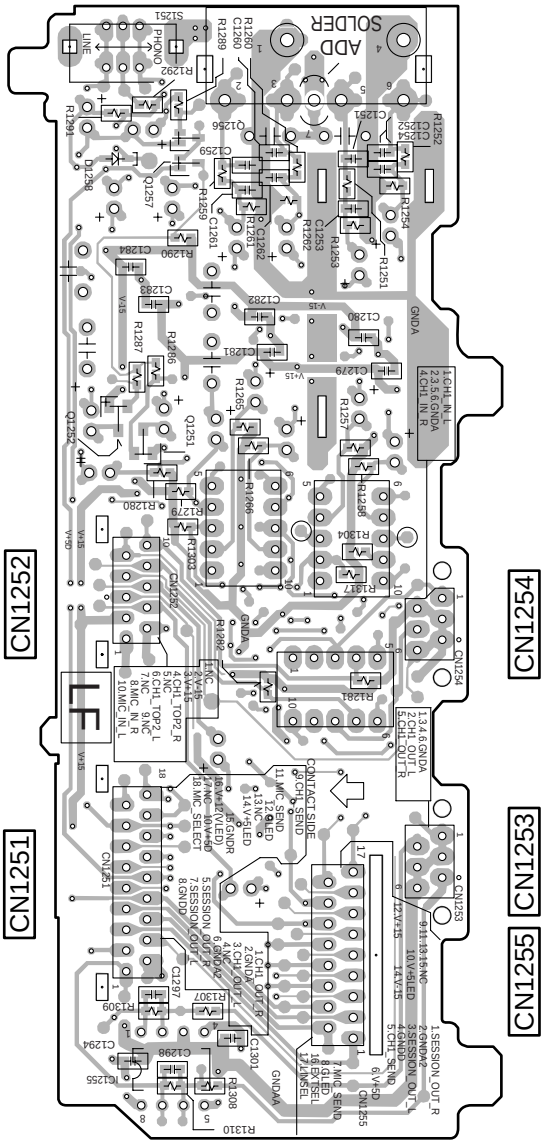

(DNP2068-C)

Q1256
Q1252 Q1257
Q1251

4.6 C2BF ASSY

SIDE A

SIDE B

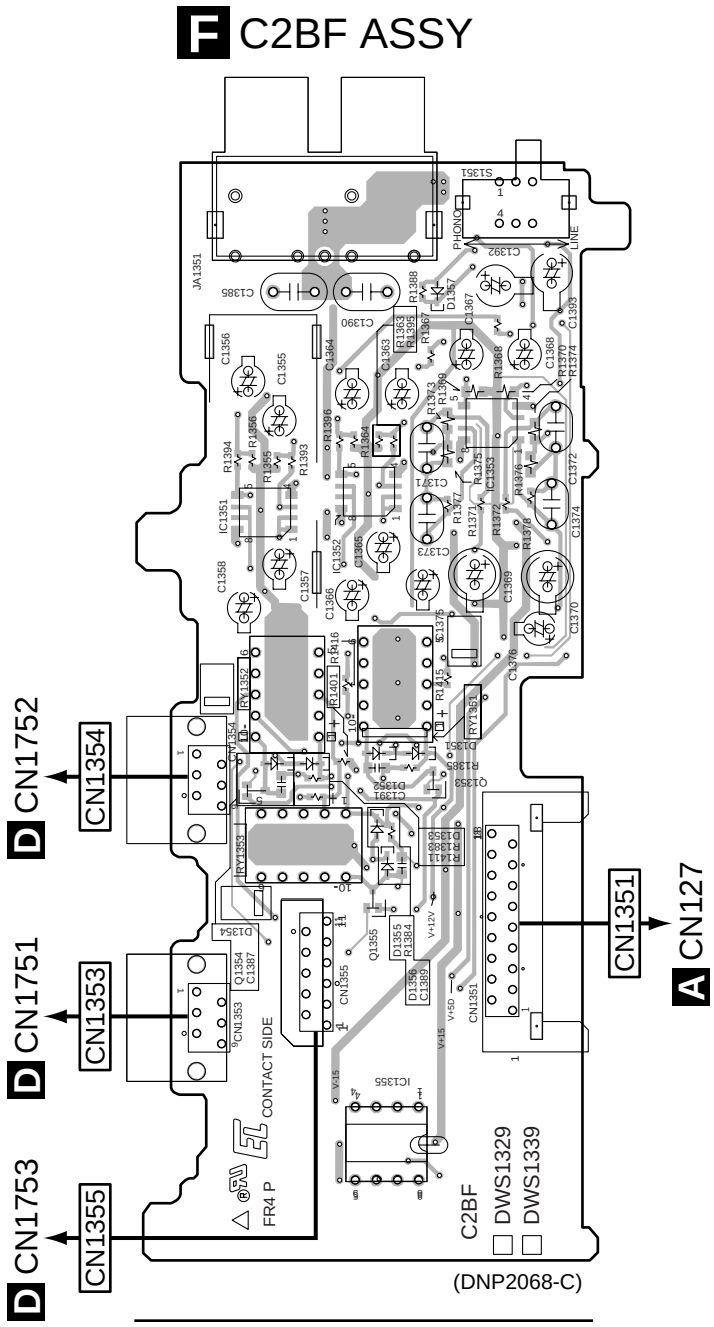

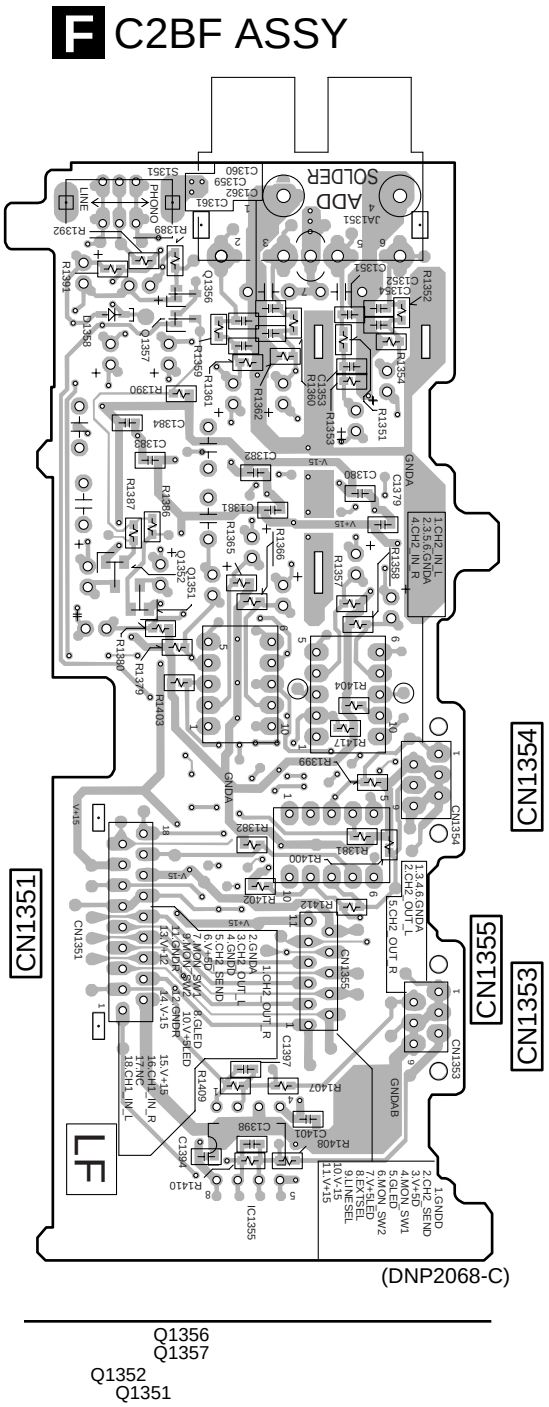

4.7 MICB ASSY

SIDE A

SIDE B

G MICB ASSY

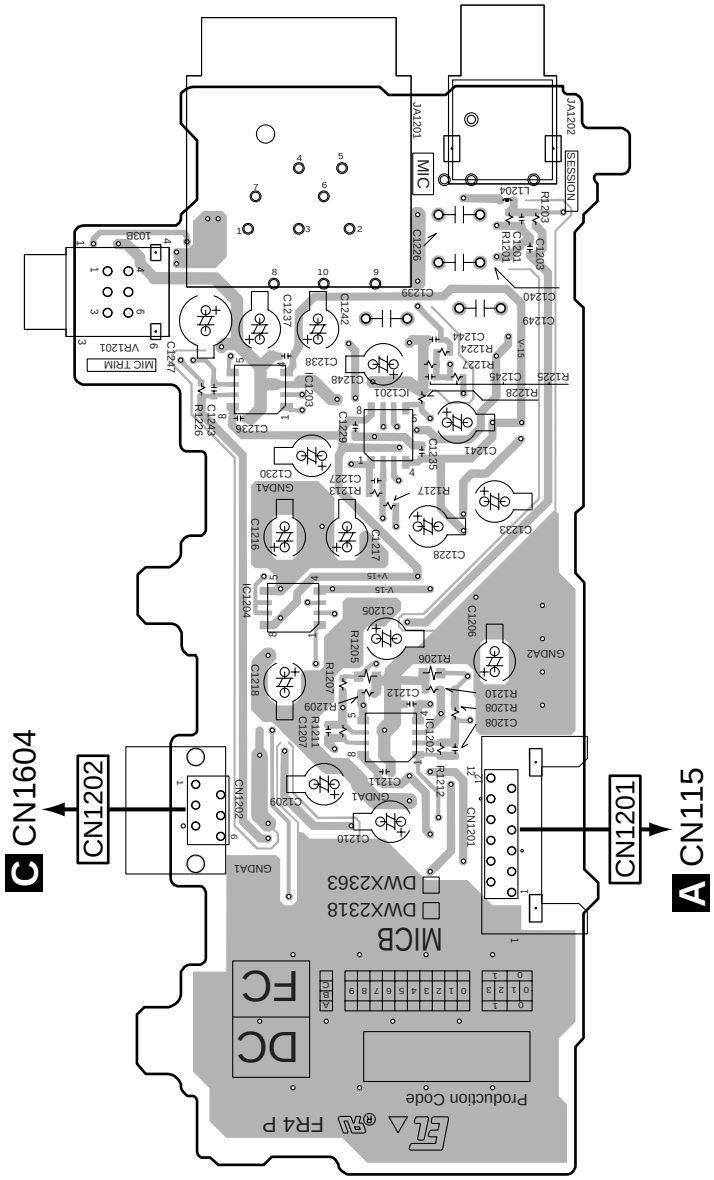

(DNP2068-C)

VR1201

IC1203 IC1204 IC1201 IC1202

G MICB ASSY

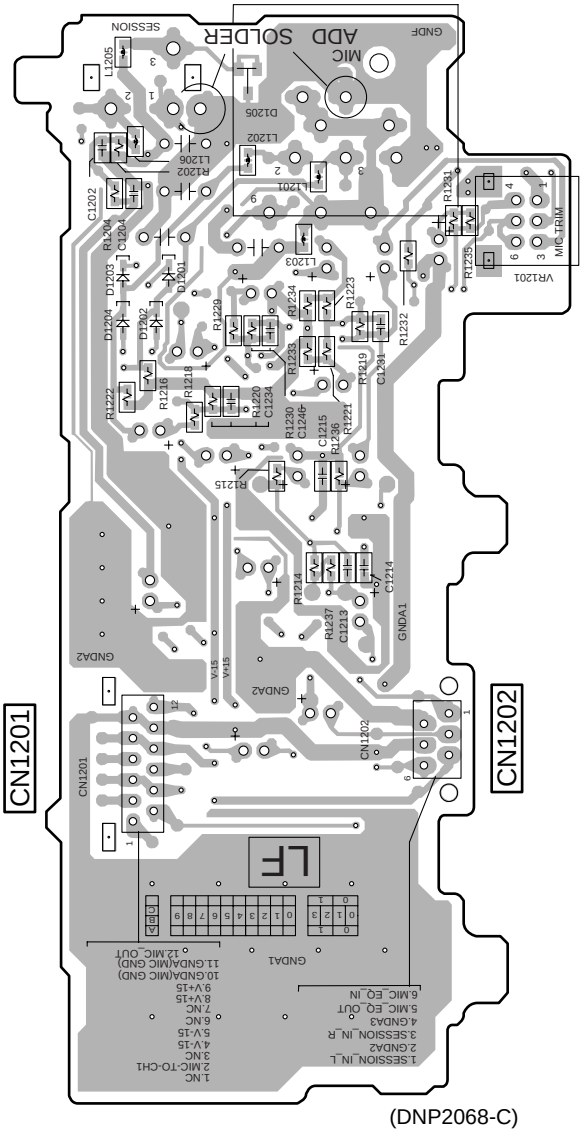

(DNP2068-C)

VR1201

4.8 HPBO ASSY

SIDE A

SIDE B

A B C D E F

H HPBO ASSY

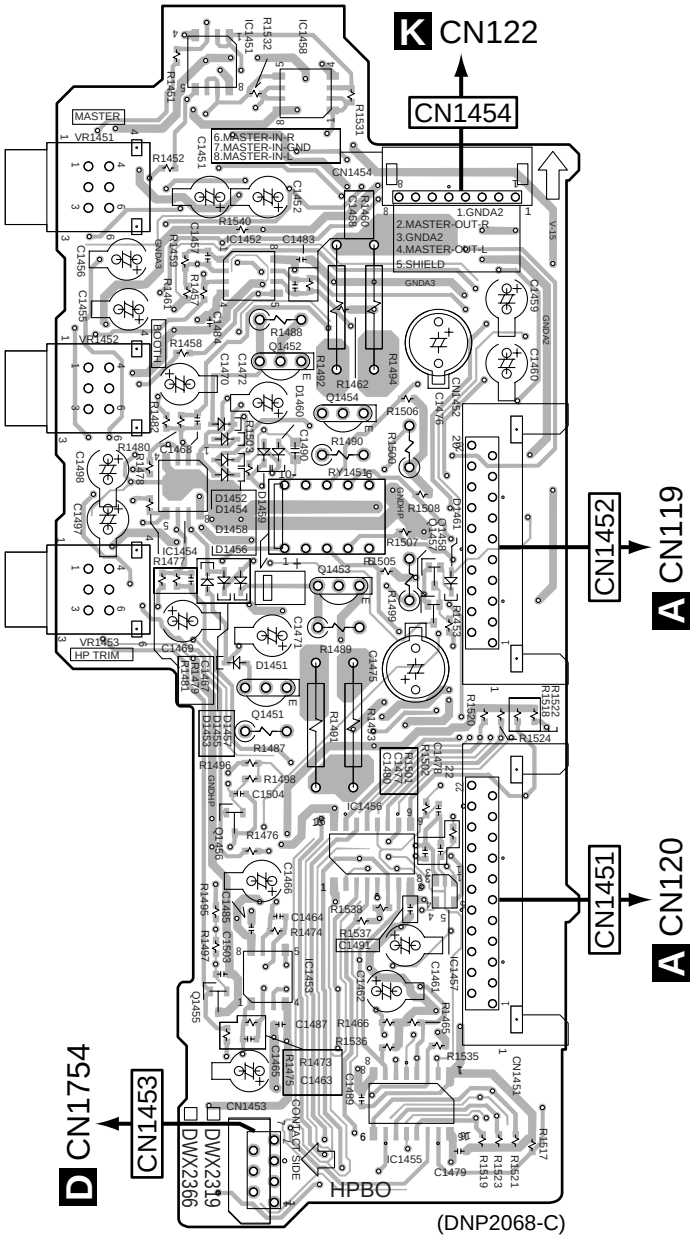

(DNP2068-C)

VR1451
VR1452
VR1453

IC1451 IC1458
IC1452
IC1454 Q1452 Q1454 Q1458
Q1451 Q1453 Q1457
Q1456 IC1456 IC1457
Q1455 IC1453 IC1455

H HPBO ASSY

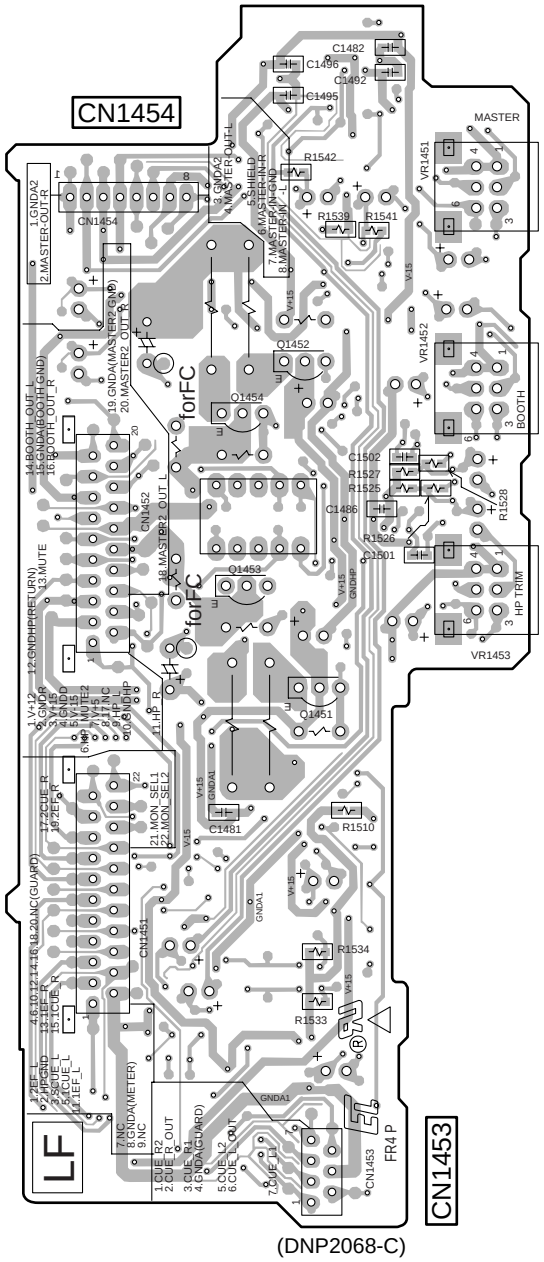

(DNP2068-C)

VR1451
VR1452
VR1453

Q1454 Q1452
Q1453 Q1451

4.9 LVMR, C1TR, C2TR, FVA1, FVA2 and FDVR ASSYS

SIDE A

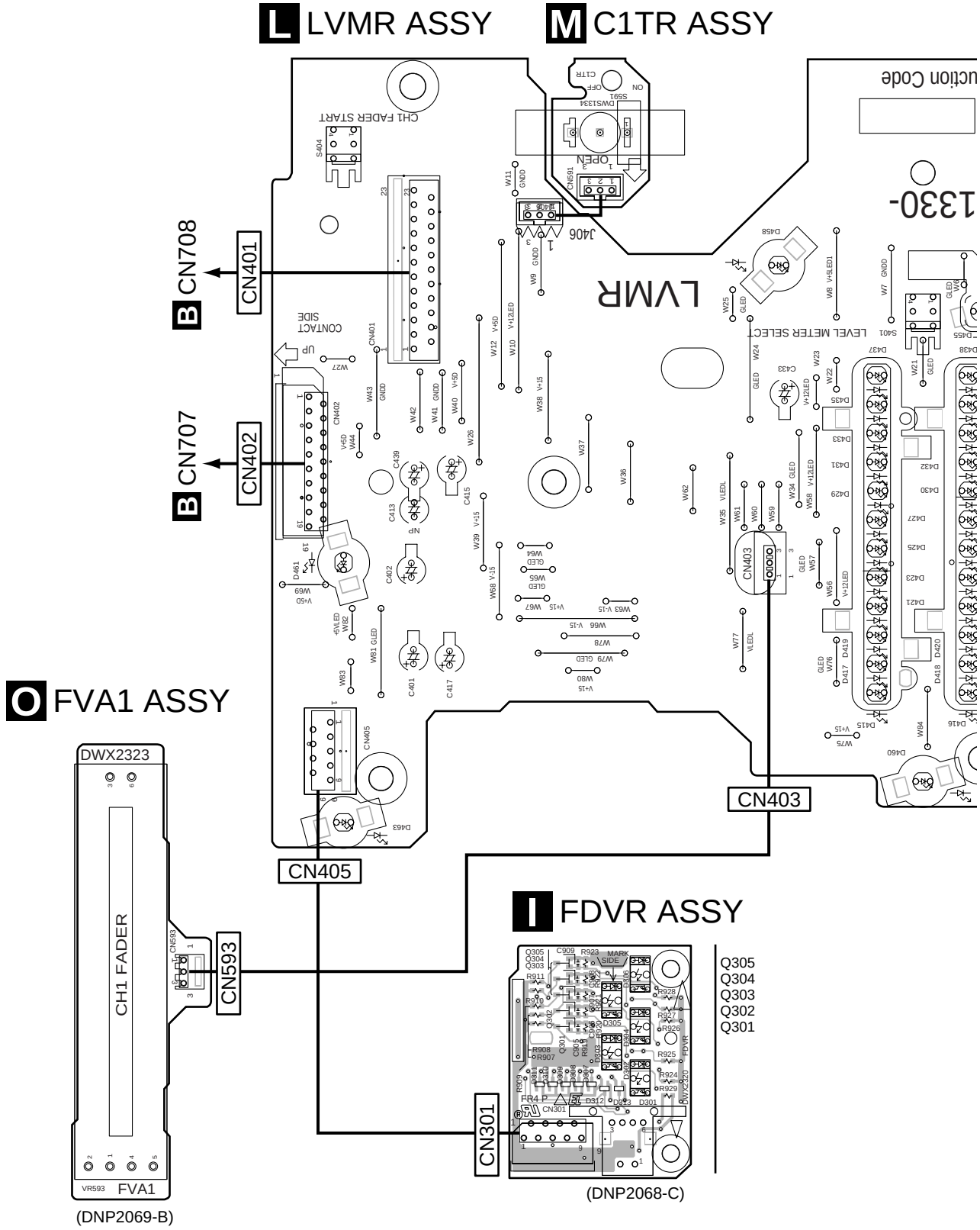

SIDE A

A

N C2TR ASSY

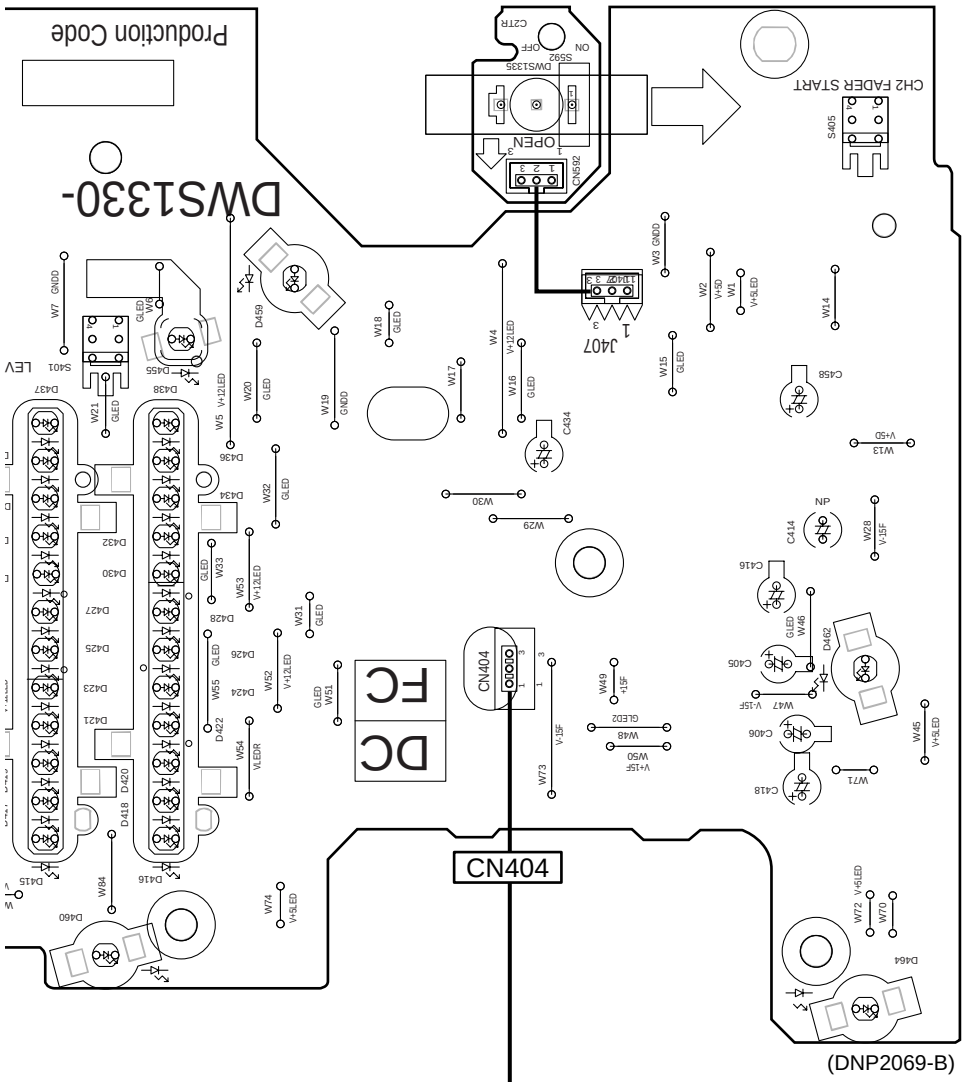

(DNP2069-B)

B

C

D

P FVA2 ASSY

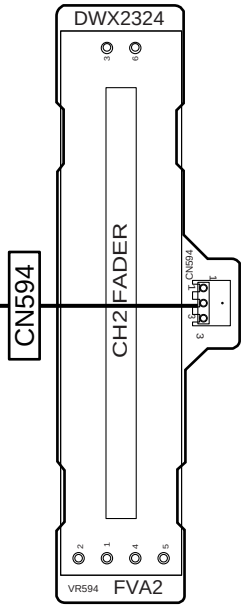

(DNP2069-B)

E

F

L N P

4.10 LVMR, C1TR, C2TR, FVA1, FVA2 and FDVR ASSYS

SIDE B

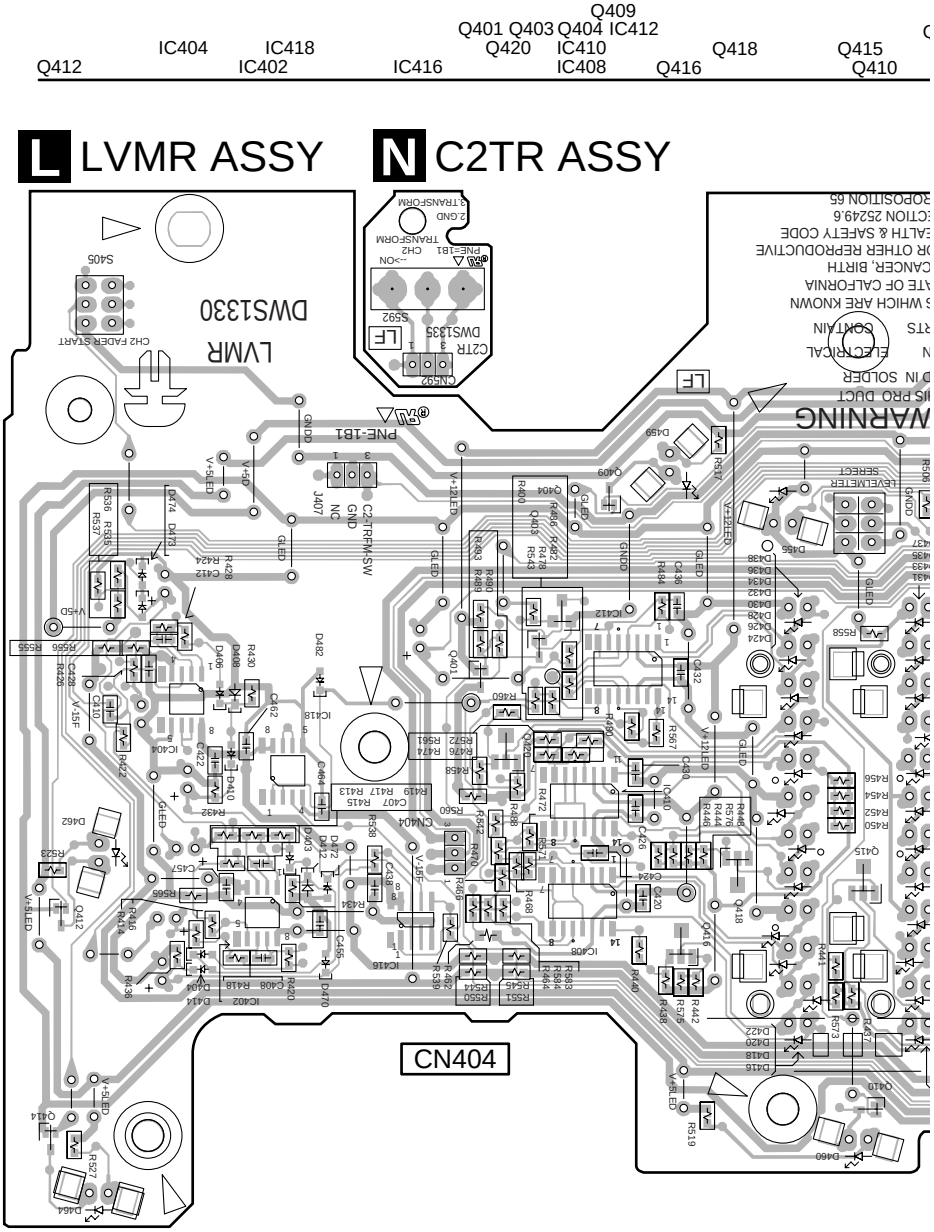

P FVA2 ASSY

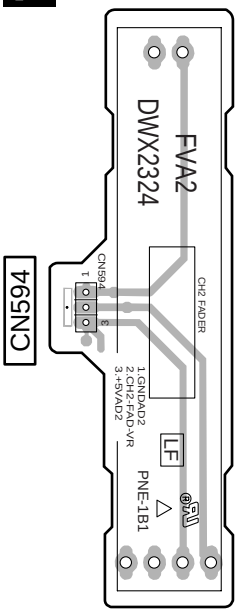

(DNP2069-B)

SIDE B

Q415 Q410 Q405 Q408 Q419 IC407 IC411 IC409 Q417 Q402 IC413 IC417 IC403 IC401 Q413 Q411

M C1TR ASSY

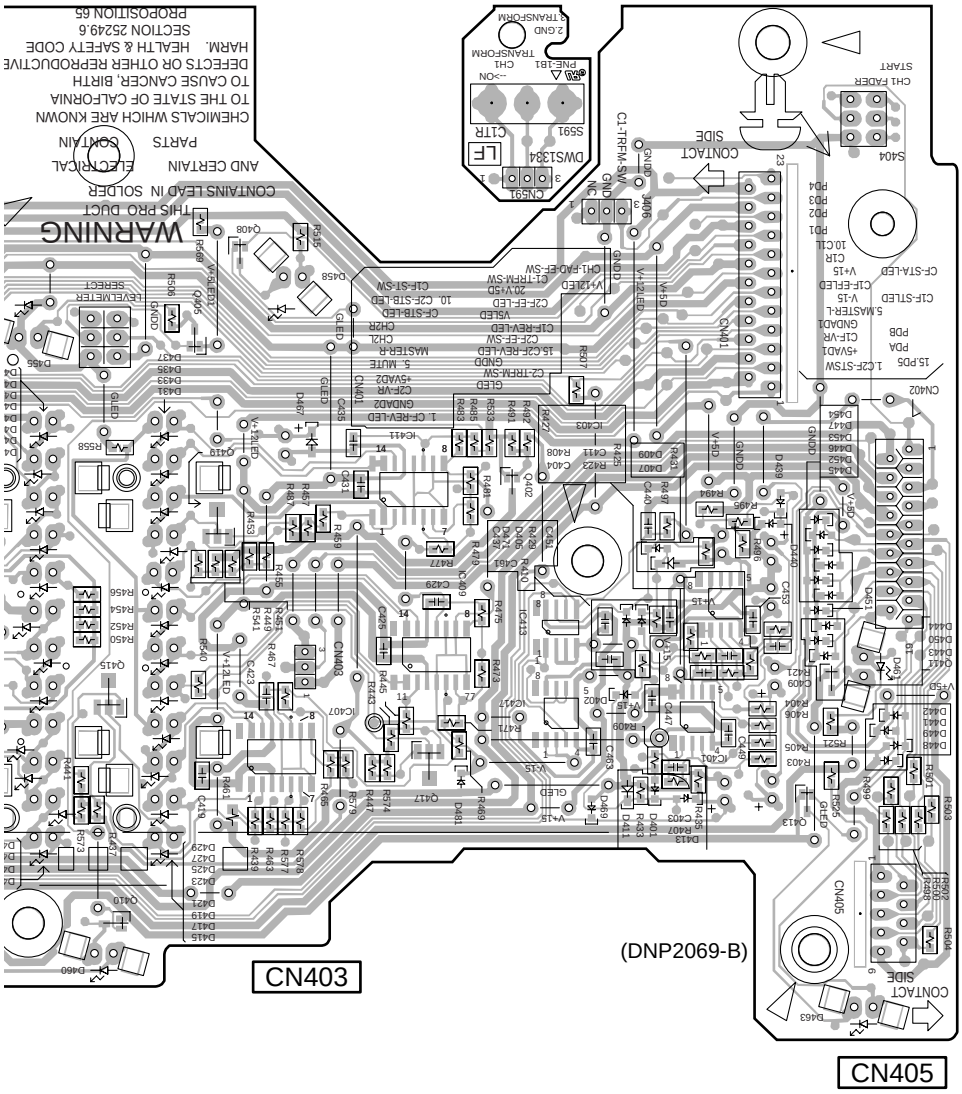

O FVA1 ASSY

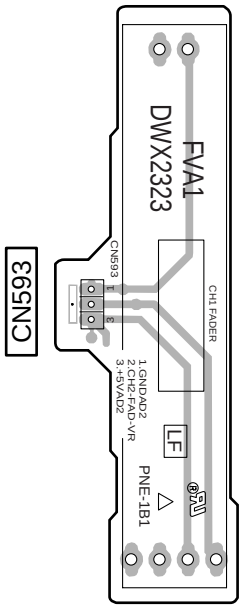

(DNP2069-B)

I FDVR ASSY

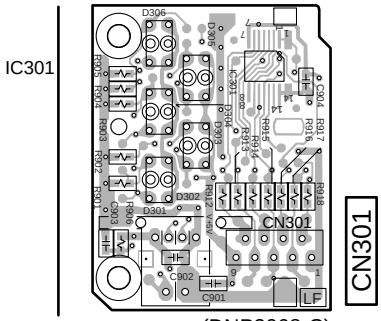

(DNP2068-C)

4.11 SDRT ASSYS

SIDE A | **SIDE B**

J SDRT ASSY

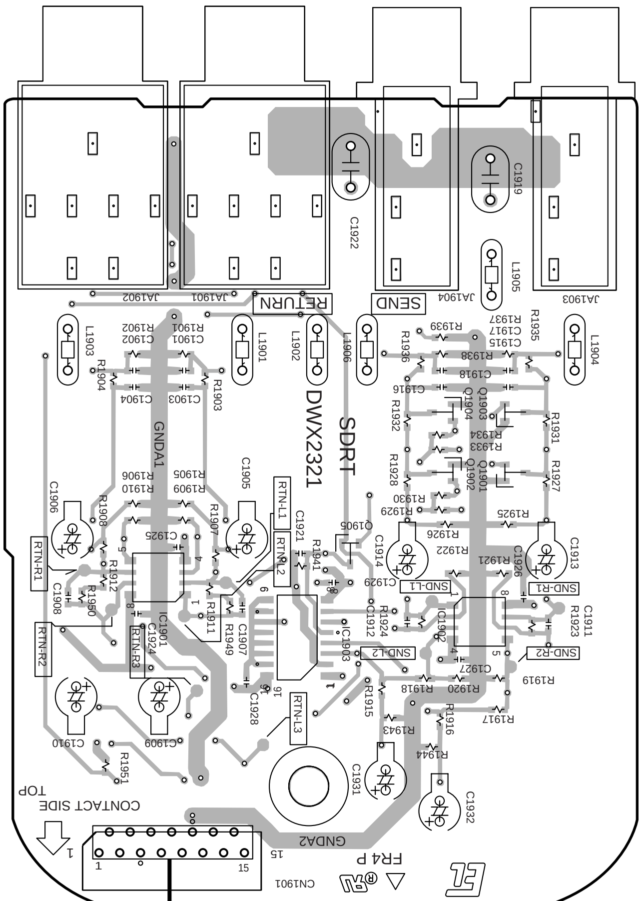

(DNP2068-C)

CN1901

A CN116

J SDRT ASSY

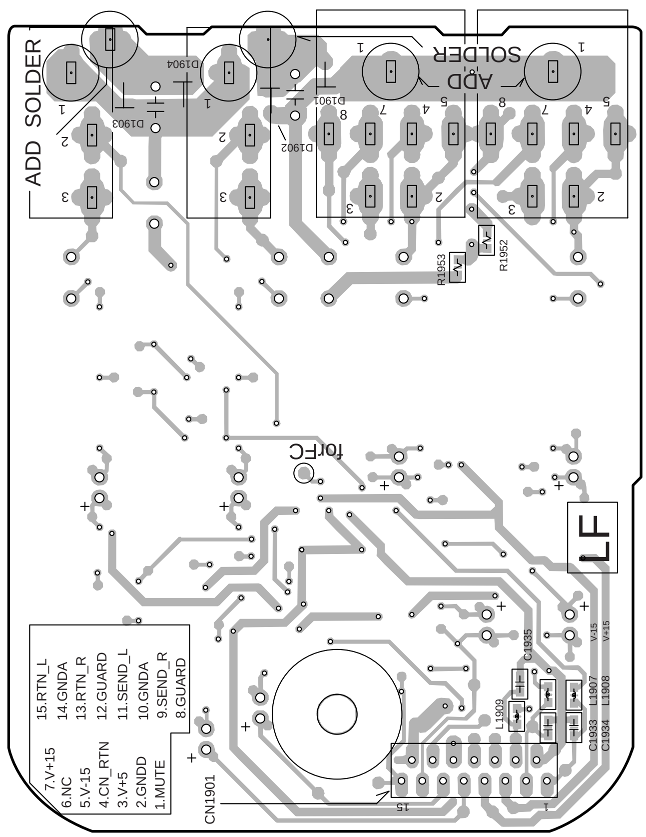

(DNP2068-C)

CN1901

		Q1904	Q1903
IC1901	Q1905	Q1902	Q1901
	IC1903	IC1902	

4.12 XLR ASSY

SIDE A

K XLR ASSY

SIDE A

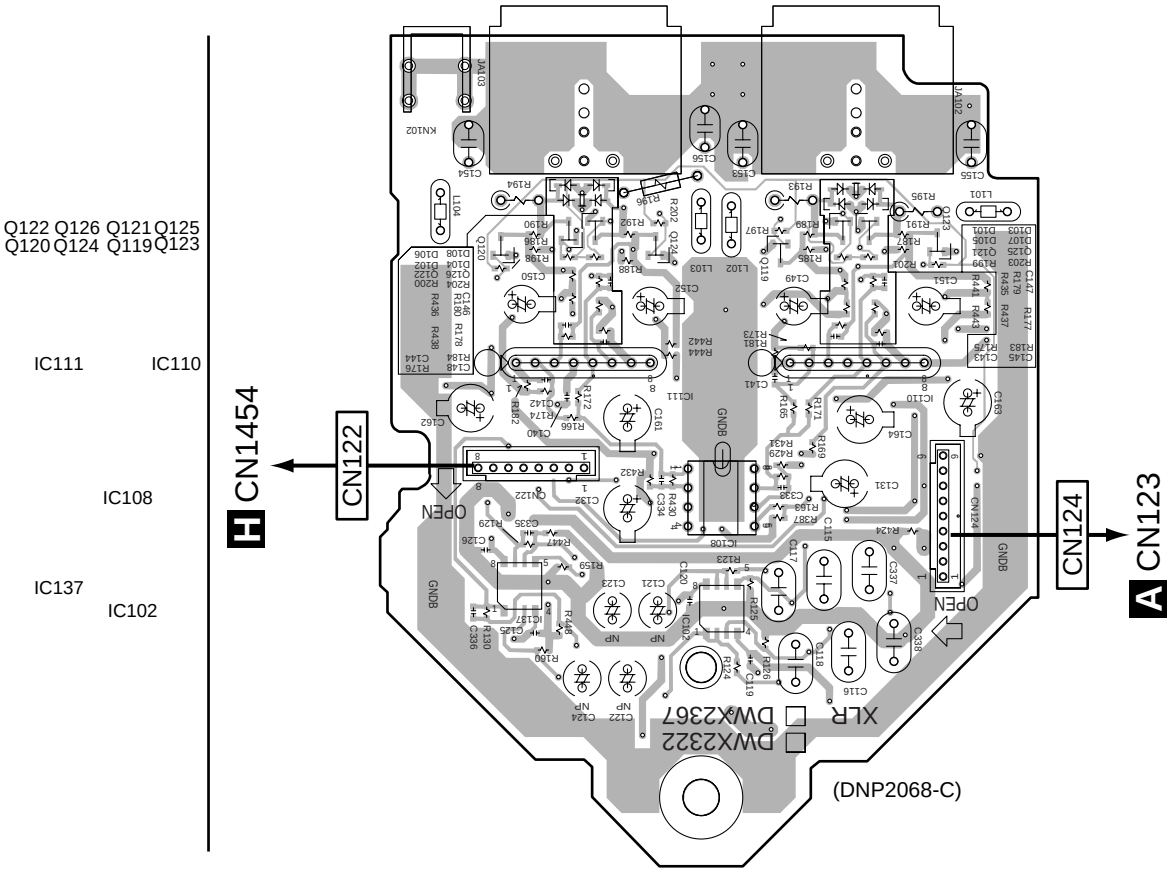

SIDE B

K XLR ASSY

SIDE B

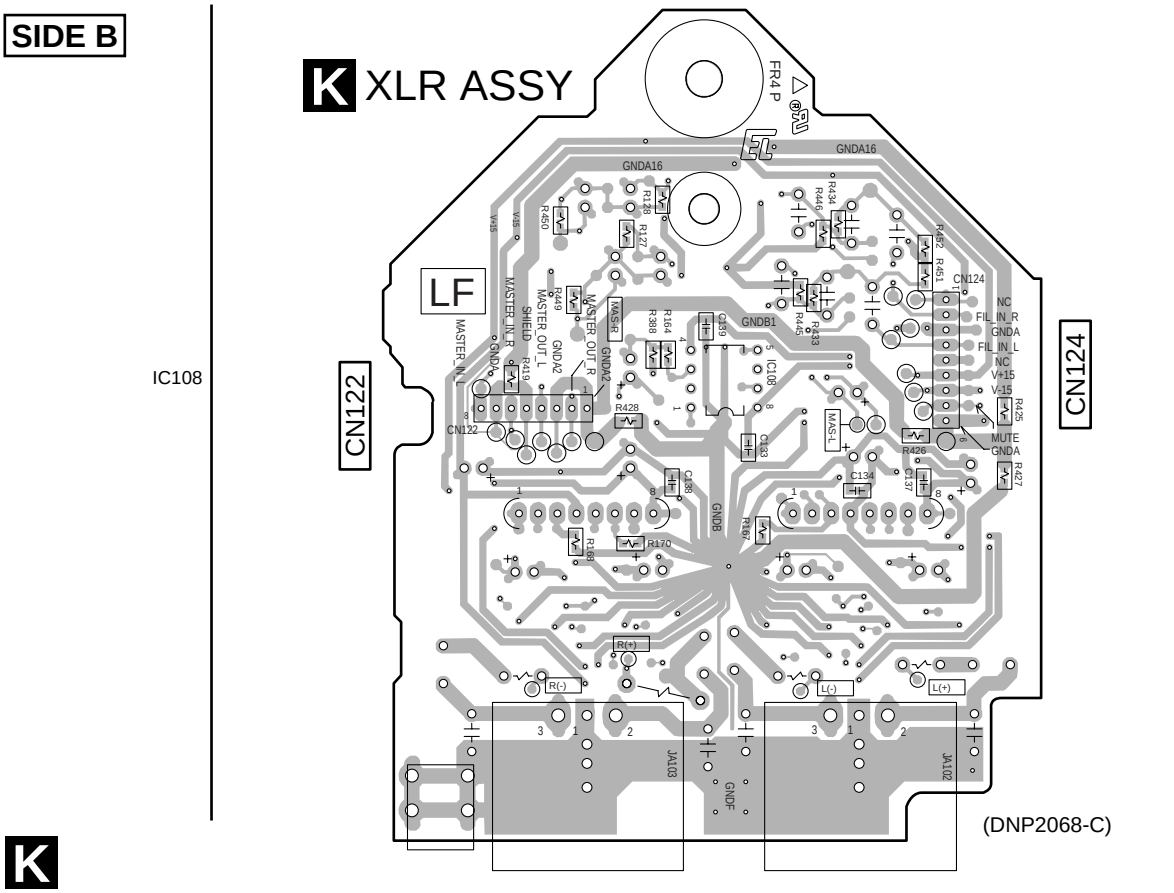

K

K

4.13 CFVR, RVSW and FSSW ASSYS

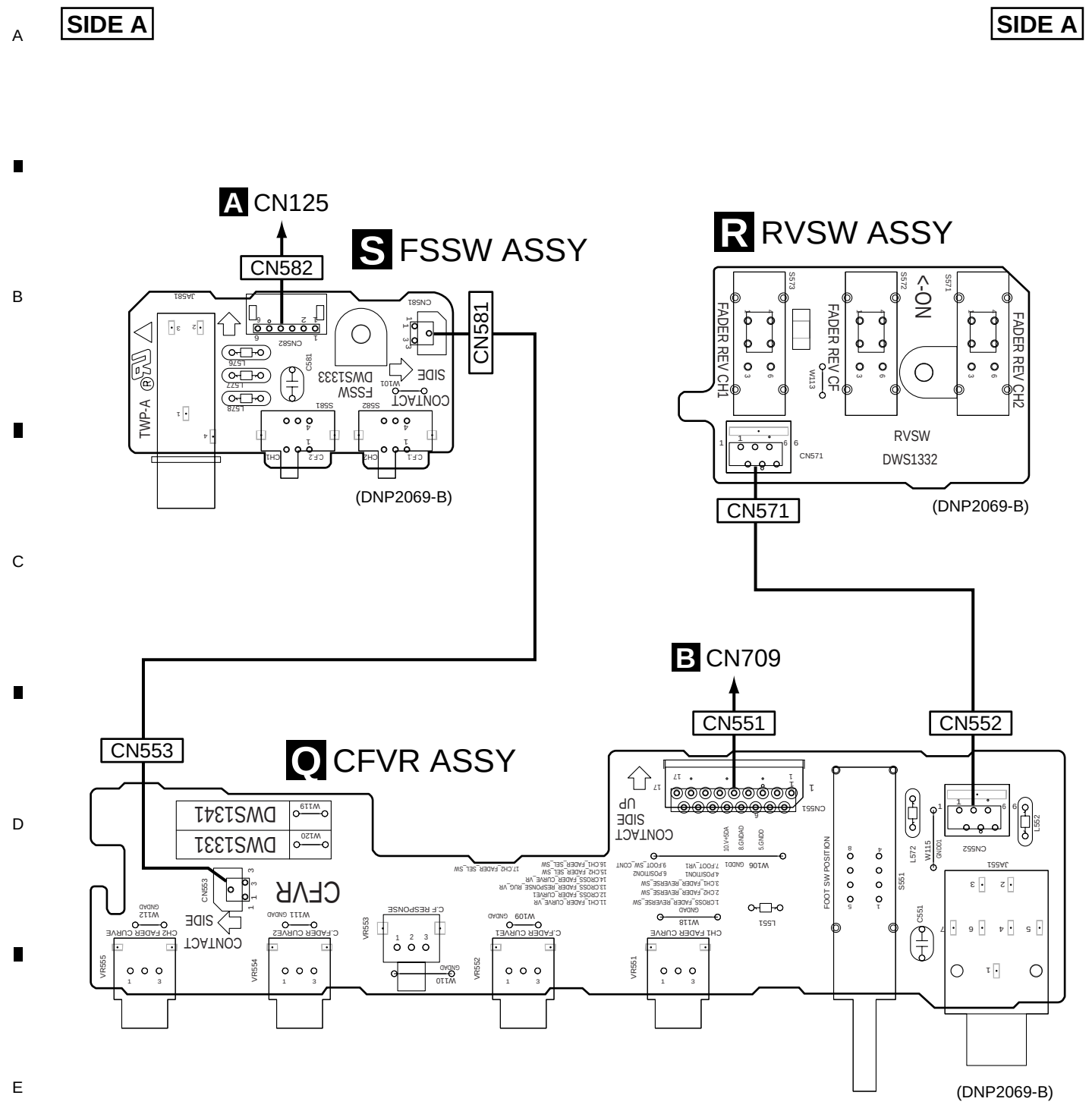

SIDE B

SIDE B

R RVSW ASSY

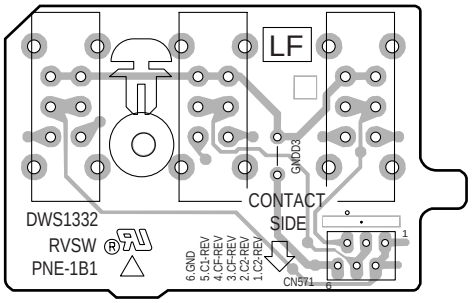

(DNP2069-B)

CN571

S FSSW ASSY

CN582

CN581

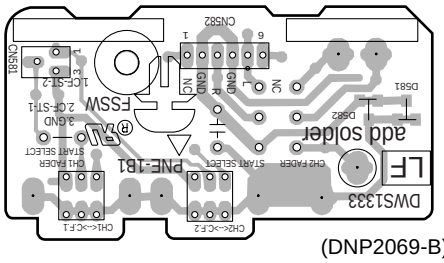

(DNP2069-B)

Q CFVR ASSY

CN552

CN551

CN553

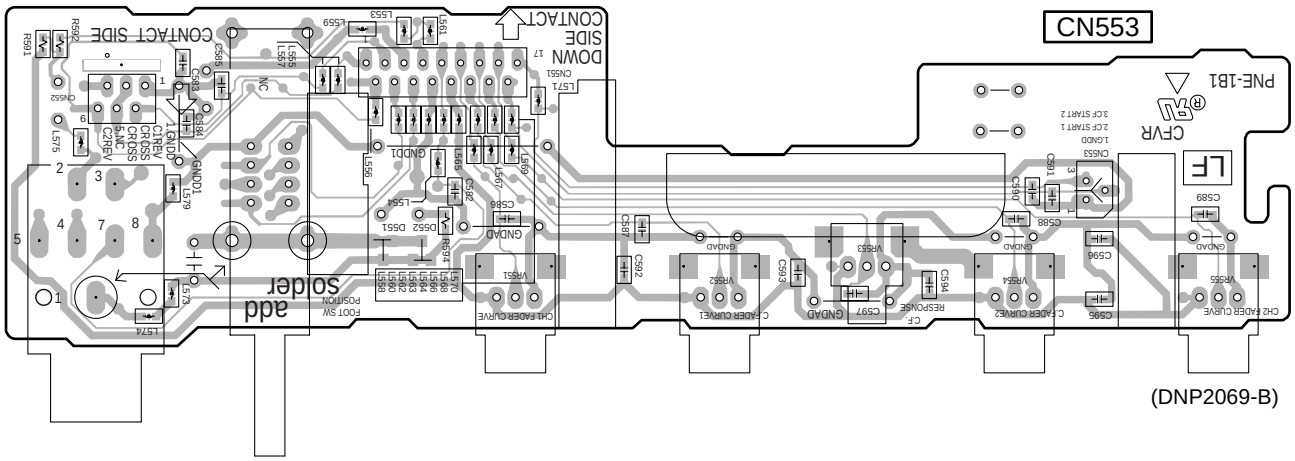

(DNP2069-B)

4.14 LCD ASSY

SIDE A

SIDE A

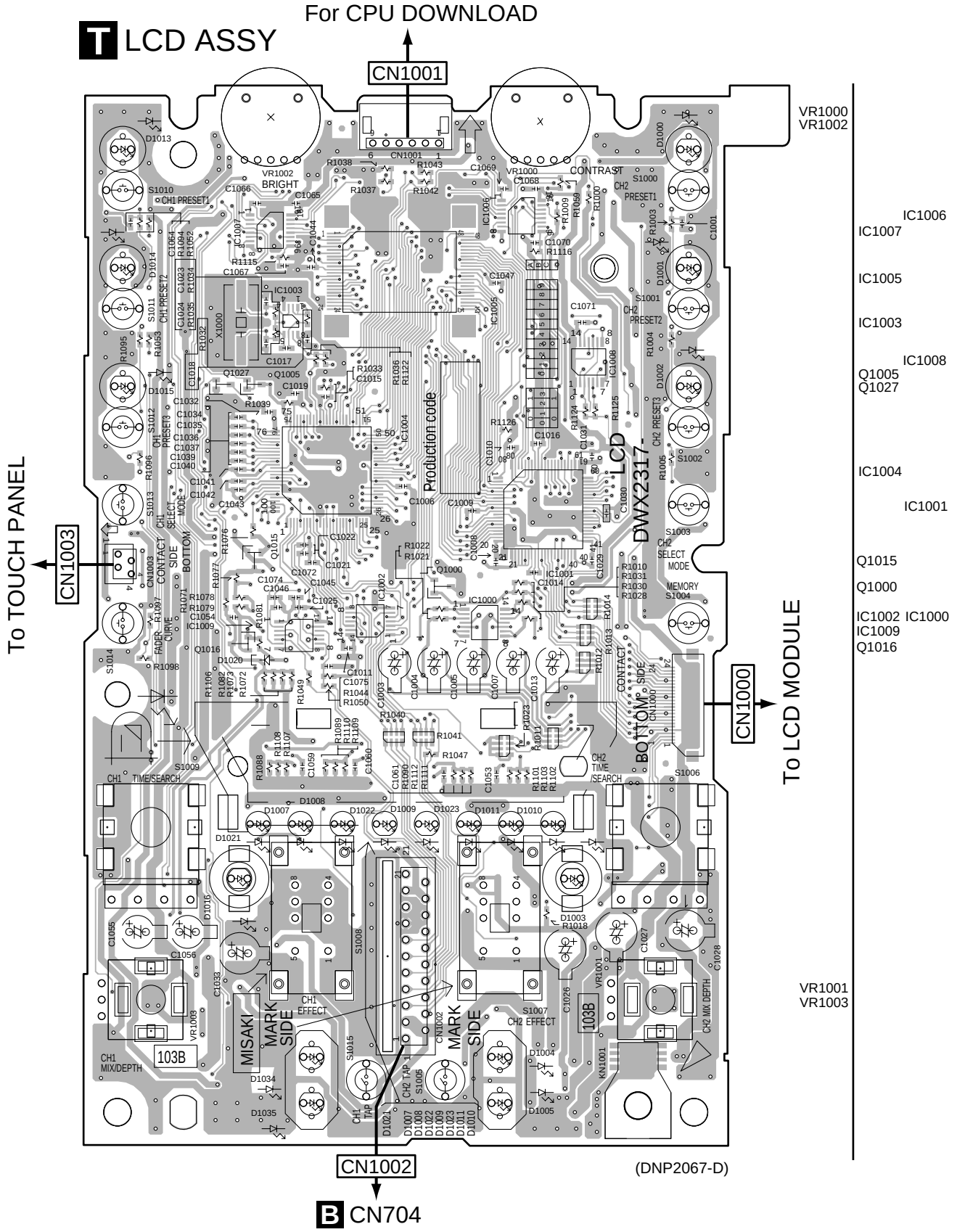

SIDE B

SIDE B

T LCD ASSY

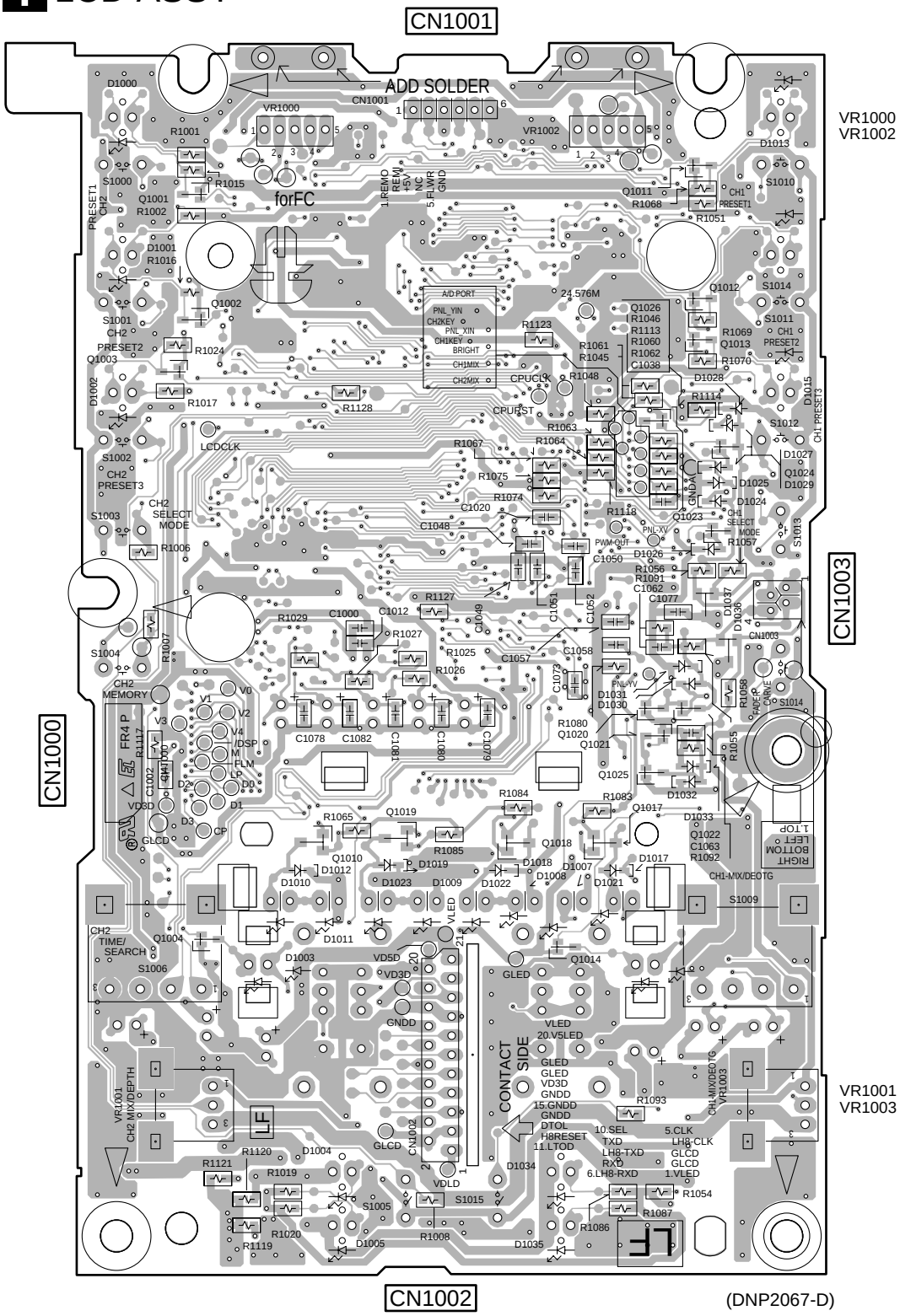

4.15 SW POWER SUPPLY

SIDE A

SIDE A

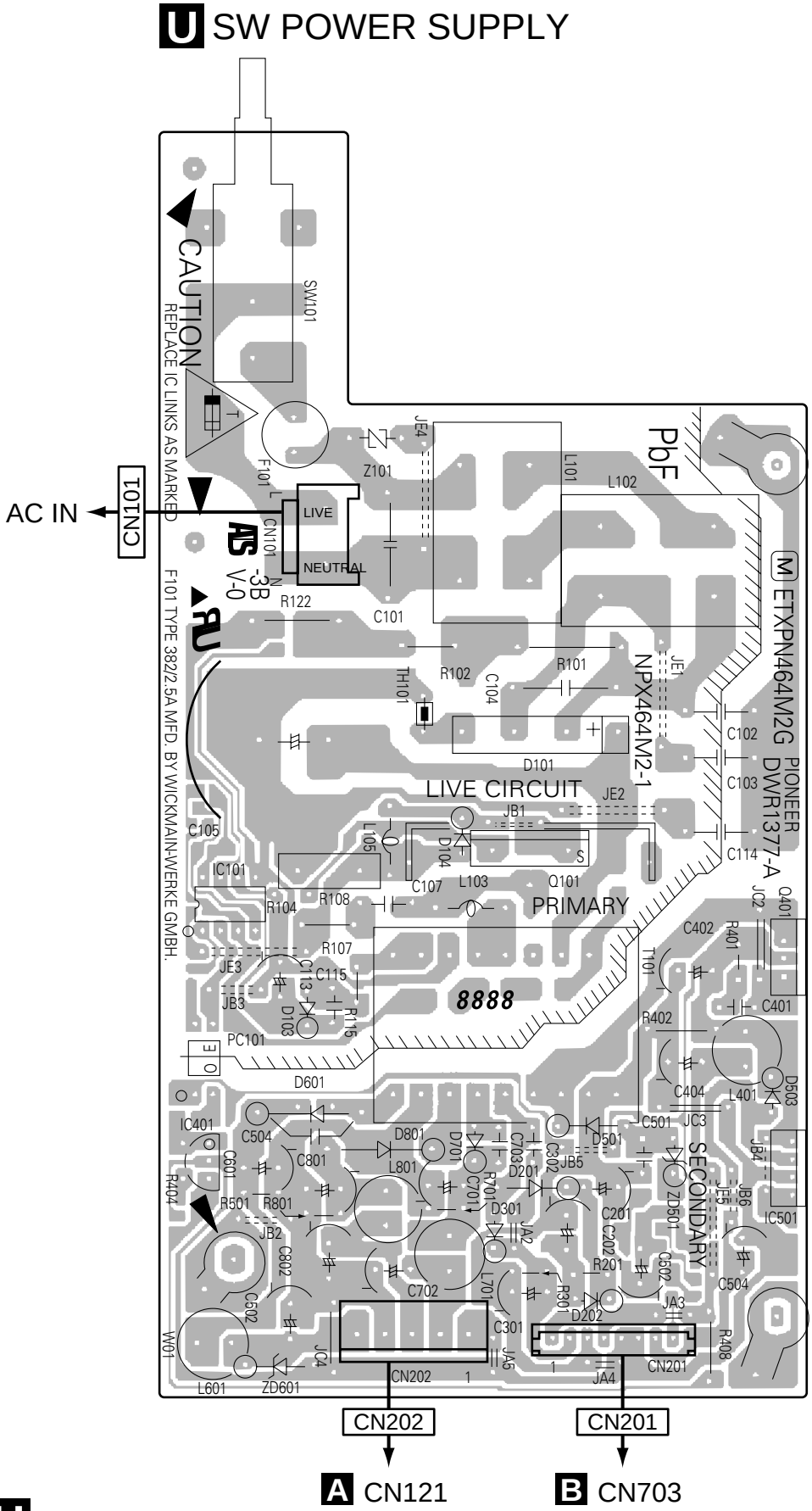

Q101

IC101

Q401

IC401

IC501

SIDE B

SIDE B

U SW POWER SUPPLY

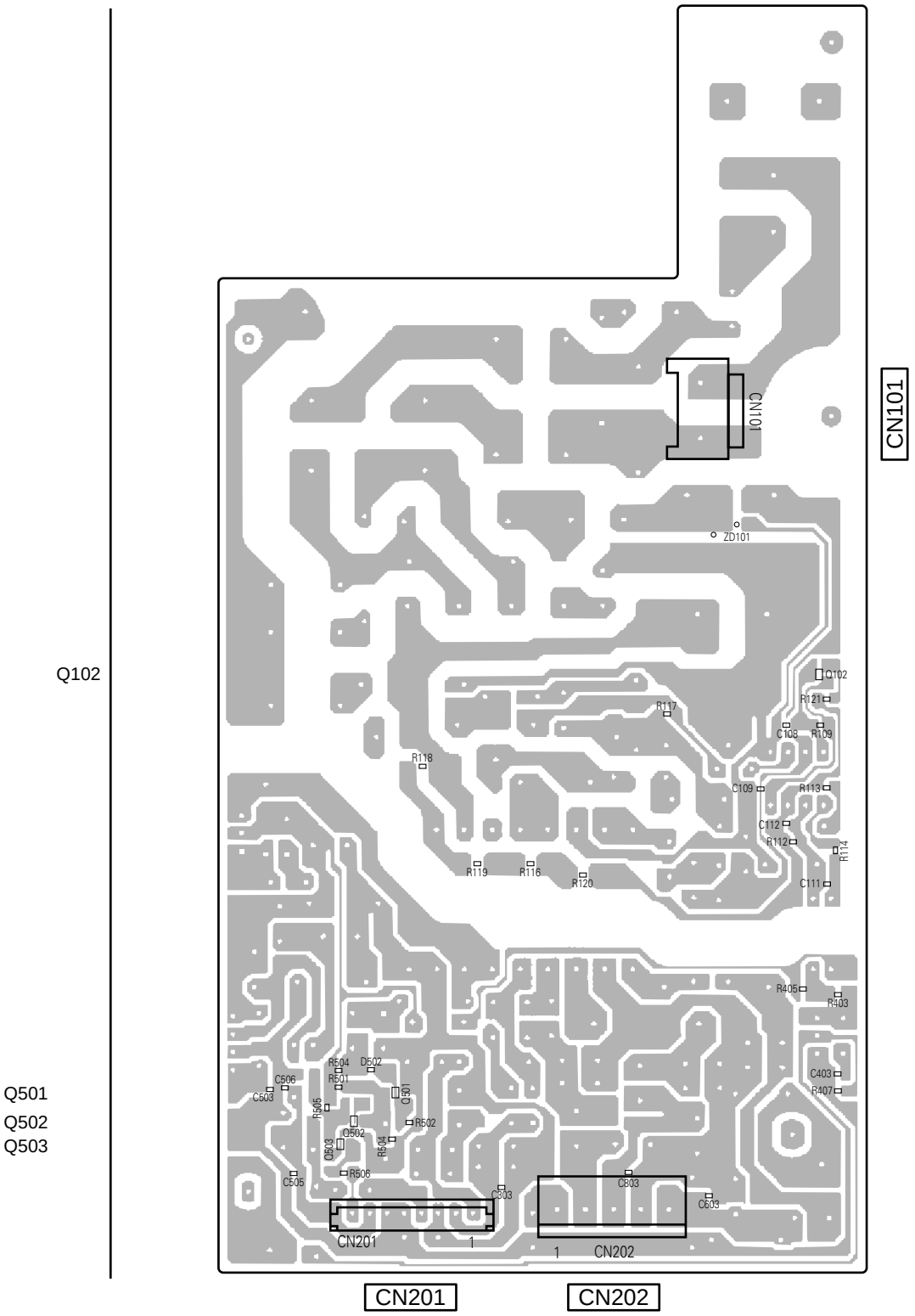

5. PCB PARTS LIST

NOTES:
- *Parts marked by "NSP" are generally unavailable because they are not in our Master Spare Parts List.*
- *The ⚠ mark found on some component parts indicates the importance of the safety factor of the part. Therefore, when replacing, be sure to use parts of identical designation.*
- *When ordering resistors, first convert resistance values into code form as shown in the following examples.*

Ex.1 When there are 2 effective digits (any digit apart from 0), such as 560 ohm and 47k ohm (tolerance is shown by J=5%, and K=10%).

560 Ω	→	56×10^1	→	561	RD1/4PU561J
47k Ω	→	47×10^3	→	473	RD1/4PU473J
0.5 Ω	→	R50			RN2HR50K
1 Ω	→	1R0			RS1P1R0K

Ex.2 When there are 3 effective digits (such as in high precision metal film resistors).

5.62k Ω	→	562×10^1	→	5621	RN1/4PC5621F

Mark	No.	Description	Part No.
LIST OF ASSEMBLIES			
NSP	1	MOTHER ASSY	DWM2173
	2	DSP ASSY	DWX2316
	2	MAIN ASSY	DWX2337
NSP	1	EQ ASSY	DWM2167
	2	C1EQ ASSY	DWS1326
	2	C2EQ ASSY	DWS1327
	2	LCD ASSY	DWX2317
NSP	1	JACK ASSY	DWM2168
	2	C1BF ASSY	DWS1328
	2	C2BF ASSY	DWS1329
	2	MICB ASSY	DWX2318
	2	HPBO ASSY	DWX2319
	2	FDVR ASSY	DWX2320
	2	SDRT ASSY	DWX2321
	2	XLR ASSY	DWX2322
NSP	1	SUB ASSY	DWM2169
	2	LVMR ASSY	DWS1330
	2	CFVR ASSY	DWS1331
	2	RVSW ASSY	DWS1332
	2	FSSW ASSY	DWS1333
	2	C1TR ASSY	DWS1334
	2	C2TR ASSY	DWS1335
	2	FVA1 ASSY	DWX2323
	2	FVA2 ASSY	DWX2324
⚠	1	SW POWER SUPPLY ASSY	DWR1377

Mark	No.	Description	Part No.
A MAIN ASSY			
SEMICONDUCTORS			
⚠		IC136,IC140,IC142,IC143 (400mA)	AEK7004
⚠		IC135	ICP-N15
⚠		IC134	ICP-N20
		IC104,IC109,IC118,IC131-IC133	NJM4558MD
		IC112	NJM4580DD
		IC124,IC126	NJM4580MD
		IC101	NJM5532MD
		IC114-IC117	SSM2018TP
		IC105,IC106,IC119	TC9215AF
		Q128-Q130,Q132,Q133	2SA1037K
		Q136,Q137,Q140,Q145,Q150	2SA1037K
		Q101-Q118,Q141-Q144	2SC3326
		Q153,Q154,Q157,Q158	2SC3326
		Q160	DTA124EK
		Q131,Q135,Q139,Q149,Q152	DTC124EK
		Q155,Q159,Q161-Q163	DTC124EK
		D109-D115,D117,D119-D121	1SS355
		D123,D125-D128,D133-D135	1SS355
		D137,D138	NNCD6.2MF
COILS AND FILTERS			
⚠		L105-L114	ATL7002
⚠		L101-L104	VTL1105
CAPACITORS			
		C163,C164,C237,C238	CCSRCH101J50
		C250,C251,C304,C305	CCSRCH220J50
		C335-C342,C353,C354	CCSRCH220J50
		C113,C114	CCSRCH270J50
		C176-C179,C188,C189	CCSRCH470J50
		C312,C313	CCSRCH470J50
		C159-C162,C182,C183	CEAL100M35
		C194,C195,C220,C221	CEAL100M35
		C224,C225,C228,C229	CEAL100M35
		C284-C293,C300-C303	CEAL100M35
		C331,C332	CEAL100M35
		C186,C187,C196,C197	CEALNP100M35
		C200,C201,C216,C217	CEAT100M50
		C235,C236,C298,C299	CEAT100M50
		C306-C309,C329,C330	CEAT100M50
		C269,C271,C273,C274	CEAT101M25
		C276,C277	CEAT101M25
		C327,C328	CEAT102M25
		C167,C241	CFTLA103J50
		C294,C295,C321-C324	CKSQYB105K16
		C105-C108,C111,C112	CKSRYB103K50
		C135,C136,C157,C158	CKSRYB103K50
		C172-C175,C184,C185	CKSRYB103K50
		C190,C191,C198,C199,C202	CKSRYB103K50
		C204,C214,C215,C222,C223	CKSRYB103K50
		C242,C243,C245,C246	CKSRYB103K50
		C248,C249,C316-C319	CKSRYB103K50
		C325,C326	CKSRYB103K50
		C314,C315	CKSRYB104K25
		C101-C104,C254-C263	CKSRYB473K50
		C351,C352	CKSRYB473K50
		C165,C166,C239,C240	CQMA152J50
		C244,C247	CQMA473J50
RESISTORS			
		R215,R216,R275,R276	RN1/16SE1000D
		R259,R260,R265,R266	RN1/16SE1001D
		R205-R208,R213,R214	RN1/16SE1003D

Mark No.	Description	Part No.
R225,R226,R239,R240		RN1/16SE1003D
R261-R264,R267,R268		RN1/16SE1003D
R277,R278,R358-R361		RN1/16SE1003D
R389-R398		RN1/16SE1003D
R119,R120,R221-R224		RN1/16SE1802D
R235-R238		RN1/16SE1802D
R433-R436		RN1/16SE2202D
R151,R152		RN1/16SE2702D
R306,R307,R509,R510		RN1/16SE3302D
R121,R122		RN1/16SE3901D
R209-R212,R279-R282		RN1/16SE4300D
R101-R110,R112,R115		RN1/16SE5602D
R117,R118,R159-R162		RN1/16SE5602D
R167-R170		RN1/16SE5602D
R157,R158		RN1/16SE6800D
R441,R442		RS1/16S2002F
R443,R444		RS1/16S8201F
Other Resistors		RS1/16S###J

OTHERS

CN116	15P FFC CONNECTOR	52045-1545
CN118	27P FFC CONNECTOR	52045-2745
CN117	35P FFC CONNECTOR	52045-3545
CN121	5P CONNECTOR	B5P-VH
CN125	KR CONNECTOR	B6B-PH-K
CN123	KR CONNECTOR	B9B-PH-K
J101	EARTH LEAD UNIT	DDF1031
JA101	4P PIN JACK	DKB1057
JA104,JA105	REMOTE CON. JACK	RKN1004
CN102	B TO B CONNECTOR 10P	VKN1398
CN115	B TO B CONNECTOR 12P	VKN1399
CN101,CN127	B TO B CONNECTOR 18P	VKN1402
CN119	B TO B CONNECTOR 20P	VKN1403
CN120	B TO B CONNECTOR 22P	VKN1404
KN102	WRAPPING TERMINAL	VNF1084

B DSP ASSY

SEMICONDUCTORS

Mark No.	Description	Part No.
⚠ IC734,IC740 (400mA)		AEK7004
⚠ IC738,IC739 (500mA)		AEK7005
IC700,IC701		AK5380VT
IC706,IC707		DSPA56367PV150
⚠ IC731		ICP-N15
⚠ IC732		ICP-N20
IC713		K4S641632F-TC75
⚠ IC712		NJM2374AM
IC708,IC709		NJM2870F18
⚠ IC730		NJM2870F25
IC726,IC729		NJM4558MD
IC724,IC725,IC727,IC728,IC736		NJM4580MD
⚠ IC716		NJM78L05UA
⚠ IC717		NJM79L05UA
IC702-IC705		PCM1742KE
IC718		PD3451B8
IC722		TC74VHC08FT
IC719		TC74VHC125FT
IC720,IC735		TC74VHC14FT
IC737		TC7SU04FU
IC710		TC7WU04FU
IC714		XC2S50-5PQ208C
Q710		2SC1740S
Q709		2SC2458
Q702,Q711		DTA124EUA
Q703-Q707		DTC124EUA
D708		EC10QS04
D701-D706,D709,D710		RB501V-40

COILS AND FILTERS

L701		LRCA101J
L700		LRCA180J
L703	FERRITE BEAD	VTH1020

CAPACITORS

C703,C704,C717,C718		CCSRCH101J50
C991-C997		CCSRCH121J50
C872,C873		CCSRCH180J50
C821		CCSRCH181J50
C707,C708,C715,C716		CCSRCH390J50
C723,C724,C727,C728		CCSRCH390J50
C709,C710,C713,C714,C721		CCSRCH681J50
C722,C725,C726		CCSRCH681J50
C805,C820,C943,C947		CEAL100M35
C701,C702,C705,C706		CEAT100M50
C719,C720,C731,C732		CEAT100M50
C832,C833,C905,C906,C928		CEAT100M50
C930,C933-C936,C952-C954		CEAT100M50
C961		CEAT100M50
C850,C868,C925,C926,C929		CEAT101M10
C931,C932		CEAT101M25
C758,C759		CEAT221M10
C825,C927		CEAT330M35
C816,C822,C919,C990		CEJQ101M10
C815,C899		CEJQ220M35
C846,C861		CKSRYB102K50
C700,C711,C712,C729,C730		CKSRYB103K50
C733-C737,C760,C761,C804		CKSRYB103K50
C806-C810,C812-C814		CKSRYB103K50
C827,C828,C831,C837		CKSRYB103K50
C839-C845,C851-C859		CKSRYB103K50
C862-C867,C869,C870		CKSRYB103K50
C878-C885,C887-C893		CKSRYB103K50
C896-C898,C900-C904,C907		CKSRYB103K50
C909-C918,C920-C924,C939		CKSRYB103K50
C944,C946		CKSRYB103K50
C738-C757,C817,C823,C829		CKSRYB104K25
C834,C838,C847,C860		CKSRYB104K25
C762-C789,C792-C803,C824		CKSRYB105K6R3
C848,C874-C877		CKSRYB105K6R3
C811,C830		CKSRYB153K50
C818,C835		CKSRYB222K50
C790,C791,C819,C836		CKSRYB682K50

RESISTORS

R841-R845,R851-R855		RAB4C0R0J
R734-R739		RAB4C223J
R697,R698,R849,R850		RN1/16SE1003D
R875,R876,R907,R908		RN1/16SE1003D
R707,R708,R723,R724		RN1/16SE7501D

Mark No.	Description	Part No.
R701,R702,R717,R718		RN1/16SE2702D
R703,R704,R719,R720		RN1/16SE3001D
R709,R710,R715,R716		RN1/16SE6202D
R725,R726,R731,R732		RN1/16SE6202D
R705,R706,R721,R722		RN1/16SE7501D
R770		RS1/16S2201F
R763		RS1/16S4702F
VR700-VR703		CCP1402
Other Resistors		RS1/16S###J
OTHERS		
CN709	17P FFC CONNECTOR	52045-1745
CN707	19P FFC CONNECTOR	52045-1945
CN704	21P FFC CONNECTOR	52045-2145
CN708	23P FFC CONNECTOR	52045-2345
CN706	27P FFC CONNECTOR	52045-2745
CN705	35P FFC CONNECTOR	52045-3545
X700	CRYSTAL RESONATOR (24MHz)	ASS7025
CN700,CN701	KR CONNECTOR	B5B-PH-K
CN703	8P TOP POST	B8B-EH
CN702	KR CONNECTOR	S6B-PH-K

C C1EQ ASSY

Mark No.	Description	Part No.
SEMICONDUCTORS		
IC1610		NJM4558MD
IC1602-IC1605,IC1607		NJM4580MD
IC1601		NJM5532MD
IC1609,IC1611		TC7S14F
Q1603-Q1606		2SC3326
Q1602		DTA124EUA
Q1600		DTC114EUA
Q1601		DTC124EUA
D1601-D1604,D1609		1SS355
D1606		SLI-343URCW(RST)
D1607,D1608		SLI-343YCW(RST)
SWITCHES AND RELAYS		
S1602		DSK1026
S1601		DSK1035
S1603,S1604		RSG1032
CAPACITORS		
C1663,C1664		CCSRCH101J50
C1631		CCSRCH270J50
C1673,C1674		CCSRCH271J50
C1683,C1684		CCSRCH330J50
C1679,C1680		CEHAR100M35
C1675,C1676		CEHARR47M50
C1603,C1604,C1661,C1665		CEJQ100M35
C1627,C1628,C1685,C1686		CEJQ100M50
C1630		CFTLA104J50
C1671,C1672		CFTNA473J50
C1681,C1682		CFTNA563J50
C1607,C1637,C1638,C1641,C1642		CKSRYB103K50
C1648-C1654,C1656-C1660		CKSRYB103K50
C1688,C1689		CKSRYB103K50
C1635,C1636		CKSRYB104K25
C1687		CKSRYB272K50
C1601,C1602,C1605,C1606		CKSRYB473K50
C1677,C1678 (5600pF/50V)		DCE1009

Mark No.	Description	Part No.
RESISTORS		
R1617,R1618		RN1/10SE1300D
R1601,R1602,R1651,R1652		RN1/16SE1001D
R1689,R1690		RN1/16SE1002D
R1603,R1604,R1637,R1638		RN1/16SE1003D
R1633,R1634,R1641,R1642		RN1/16SE1502D
R1611,R1612,R1623,R1624		RN1/16SE1800D
R1609,R1610,R1615,R1616		RN1/16SE1801D
R1621,R1622		RN1/16SE1801D
R1635,R1636,R1639,R1640		RN1/16SE1802D
R1691,R1692		RN1/16SE1802D
R1625,R1626		RN1/16SE4702D
R1607,R1608,R1627,R1628		RN1/16SE5101D
R1658		RN1/16SE5601D
R1613,R1614		RN1/16SE6202D
R1619,R1620		RN1/16SE7502D
VR1602-VR1604		DCS1065
VR1601,VR1605		DCS1073
VR1606,VR1607		DCS1074
VR1608-VR1613 (22kohm)		VCP1133
Other Resistors		RS1/16S###J
OTHERS		
CN1603	FFC CONNECTOR 17P	52492-1720
CN1601,CN1602,CN1604	B TO B CONNECTOR 6P	DKN1278

D C2EQ ASSY

Mark No.	Description	Part No.
SEMICONDUCTORS		
IC1748-IC1750		NJM4558MD
IC1752-IC1755		NJM4580MD
IC1751		NJM5532MD
IC1758,IC1759		TC7S14F
Q1701-Q1704		2SC3326
Q1705		DTA124EUA
D1701-D1704		1SS355
D1751		SLI-343URCW(RST)
D1754		SLI-343YCW(RST)
SWITCHES AND RELAYS		
S1751,S1752		DSK1026
S1754		DSK1035
S1753		RSG1032
CAPACITORS		
C1799,C1800		CCSRCH101J50
C1805-C1808		CCSRCH220J50
C1759,C1760		CCSRCH271J50
C1767,C1768		CCSRCH330J50
C1771,C1772		CEHAR100M35
C1775,C1776		CEHARR47M50
C1769,C1770,C1797,C1798		CEJQ100M50
C1757,C1758		CFTNA473J50
C1765,C1766		CFTNA563J50
C1752-C1756,C1781-C1784,C1790		CKSRYB103K50
C1801-C1804,C1809-C1816		CKSRYB103K50
C1779,C1780		CKSRYB104K25
C1761,C1762,C1777,C1778		CKSRYB473K50
C1773,C1774 (5600pF/50V)		DCE1009

Mark No.	Description	Part No.
RESISTORS		
R1795,R1796		RN1/10SE1300D
R1751,R1752		RN1/16SE1001D
R1815,R1816		RN1/16SE1002D
R1753,R1754,R1787,R1788		RN1/16SE1003D
R1779,R1780,R1783,R1784		RN1/16SE1502D
R1820,R1821,R1824,R1826		RN1/16SE1502D
R1761,R1762,R1789,R1790		RN1/16SE1800D
R1759,R1760,R1765,R1766		RN1/16SE1801D
R1793,R1794		RN1/16SE1801D
R1777,R1778,R1781,R1782		RN1/16SE1802D
R1817,R1818		RN1/16SE1802D
R1763,R1764		RN1/16SE4702D
R1757,R1758,R1771,R1772		RN1/16SE5101D
R1791,R1792		RN1/16SE6202D
R1797,R1798		RN1/16SE7502D
VR1752-VR1754		DCS1065
VR1751		DCS1073
VR1755		DCV1014
VR1756-VR1761		VCP1133
Other Resistors		RS1/16S###J
OTHERS		
CN1754	7P FFC CONNECTOR	52045-0745
CN1753	11P FFC CONNECTOR	52045-1145
CN1751,CN1752	B TO B CONNECTOR 6P	DKN1278
0	CUE FADER BRACKET	DNF1690

E C1BF ASSY

Mark No.	Description	Part No.
SEMICONDUCTORS		
IC1255		NJM4580DD
IC1254		NJM4580MD
IC1251-IC1253		NJM5532MD
Q1251,Q1252		2SC3326
Q1257		DTA124EUA
Q1253-Q1256		DTC124EUA
D1251-D1258		1SS355
SWITCHES AND RELAYS		
S1251		VSH1009
RY1251-RY1253		VSR1008
CAPACITORS		
C1251-C1254,C1259-C1262		CCSRCH101J50
C1297,C1298		CCSRCH220J50
C1292,C1293		CEAT221M6R3
C1269,C1270		CEAT470M35
C1255-C1258,C1263-C1268		CEJQ100M35
C1275-C1278		CEJQ100M35
C1285,C1290		CFTLA103J50
C1279-C1284,C1286,C1288,C1294		CKSRYB103K50
C1301		CKSRYB103K50
C1271,C1272		CQMA222J50
C1273,C1274		CQMA681J50
RESISTORS		
R1269,R1270		RN1/10SE4703D
R1273-R1276		RN1/10SE7503D
R1251,R1252,R1259,R1260		RN1/16SE1000D
R1267,R1268,R1293-R1298		RN1/16SE1001D
R1255-R1258,R1263-R1266		RN1/16SE1003D
R1279-R1282,R1299-R1304		RN1/16SE1003D
R1261,R1262,R1277,R1278		RN1/16SE1203D
R1271,R1272		RN1/16SE1601D
R1290		RN1/16SE2202D
R1286,R1287		RN1/16SE3301D
R1253,R1254,R1309,R1310		RN1/16SE3302D
Other Resistors		RS1/16S###J
OTHERS		
CN1255	FFC CONNECTOR 17P	52492-1720
JA1251	4P PIN JACK	AKB7048
CN1253,CN1254	B TO B CONNECTOR 6P	DKN1279
0	SHIELD CASE S	DNH2589
CN1252	B TO B CONNECTOR 10P	VKN1385
CN1251	B TO B CONNECTOR 18P	VKN1389

F C2BF ASSY

Mark No.	Description	Part No.
SEMICONDUCTORS		
IC1355		NJM4580DD
IC1351-IC1353		NJM5532MD
Q1351,Q1352		2SC3326
Q1357		DTA124EUA
Q1353-Q1356		DTC124EUA
D1351-D1358		1SS355
SWITCHES AND RELAYS		
S1351		VSH1009
RY1351-RY1353		VSR1008
CAPACITORS		
C1351-C1354,C1359-C1362		CCSRCH101J50
C1397,C1398		CCSRCH220J50
C1392,C1393		CEAT221M6R3
C1369,C1370		CEAT470M35
C1355-C1358,C1363-C1368		CEJQ100M35
C1375,C1376		CEJQ100M35
C1385,C1390		CFTLA103J50
C1379-C1384,C1394,C1401		CKSRYB103K50
C1371,C1372		CQMA222J50
C1373,C1374		CQMA681J50
RESISTORS		
R1369,R1370		RN1/10SE4703D
R1373-R1376		RN1/10SE7503D
R1351,R1352,R1359,R1360		RN1/16SE1000D
R1367,R1368,R1393-R1396		RN1/16SE1001D
R1355-R1358,R1363-R1366		RN1/16SE1003D
R1379-R1382,R1399-R1404		RN1/16SE1003D
R1361,R1362,R1377,R1378		RN1/16SE1203D
R1371,R1372		RN1/16SE1601D
R1390		RN1/16SE2202D
R1386,R1387		RN1/16SE3301D
R1353,R1354,R1409,R1410		RN1/16SE3302D
Other Resistors		RS1/16S###J
OTHERS		
CN1355	11P FFC CONNECTOR	52045-1145
JA1351	4P PIN JACK	AKB7048
CN1353,CN1354	B TO B CONNECTOR 6P	DKN1279
0	SHIELD CASE S	DNH2589

Mark No.	Description	Part No.
CN1351	B TO B CONNECTOR 18P	VKN1389

G MICB ASSY

SEMICONDUCTORS

IC1201,IC1203,IC1204		NJM2068M
IC1202		NJM4580MD
D1201-D1204		1SS355
D1205		NNCD6.2MF

COILS AND FILTERS

⚠ L1201-L1206	CHIP FERRITE BEAD	ATL7002

CAPACITORS

C1201-C1204,C1244,C1245		CCSRCH101J50
C1213,C1231,C1243		CCSRCH221J50
C1207,C1208,C1227,C1234,C1246		CCSRCH270J50
C1217,C1247		CEAT470M25
C1205,C1206,C1209,C1210,C1216		CEJQ100M35
C1218,C1228,C1230,C1233,C1237		CEJQ100M35
C1241,C1242,C1248		CEJQ100M35
C1226,C1239,C1240,C1249		CFTLA103J50
C1211,C1212,C1214,C1215,C1229		CKSRYB103K50
C1235,C1236,C1238		CKSRYB103K50

RESISTORS

R1205,R1206		RN1/10SE4703D
R1226		RN1/16SC22R0D
R1203,R1204		RN1/16SE1000D
R1237		RN1/16SE1001D
R1214,R1219		RN1/16SE1002D
R1201,R1202		RN1/16SE1003D
R1209,R1210		RN1/16SE1802D
R1207,R1208		RN1/16SE3302D
R1213,R1230		RN1/16SE6202D
R1211,R1212		RN1/16SE9102D
VR1201		DCS1071
Other Resistors		RS1/16S###J

OTHERS

JA1202	2P PIN JACK	AKB7046
JA1201	CANNON CONNECTOR	DKB1058
CN1202	B TO B CONNECTOR 6P	DKN1279
CN1201	B TO B CONNECTOR 12P	VKN1386

H HPBO ASSY

SEMICONDUCTORS

IC1454		NJM2068M
IC1453		NJM4558MD
IC1452		NJM4580MD
IC1451		NJM5532MD
IC1457		TC7S14F
IC1455,IC1456		TC9215AF
Q1453,Q1454		2SB1238X
Q1455,Q1456		2SC3326
Q1451,Q1452		2SD1859X
Q1457,Q1458		DTC124EUA
D1451-D1461		1SS355

SWITCHES AND RELAYS

RY1451		VSR1008

CAPACITORS

C1457,C1458		CCSRCH220J50
C1463,C1464,C1467,C1468		CCSRCH820J50
C1459,C1460		CEAL100M35
C1451,C1452,C1455,C1456		CEAT100M50
C1461,C1462,C1465,C1466		CEAT100M50
C1497,C1498		CEAT100M50
C1469,C1470		CEAT2R2M50
C1471,C1472		CEAT470M25
C1478-C1487,C1489,C1491,C1492		CKSRYB103K50
C1503,C1504		CKSRYB473K50
C1475,C1476		DCH1194

RESISTORS

R1487-R1490		RD1/2VM122J
R1499,R1500		RD1/2VM221J
R1451,R1452,R1457,R1458		RN1/16SE1001D
R1473,R1474		RN1/16SE1002D
R1459-R1462		RN1/16SE2202D
R1479,R1480		RN1/16SE5102D
R1491-R1494		RS2LMF270J
VR1451-VR1453		DCS1064
Other Resistors		RS1/16S###J

OTHERS

CN1453	7P FFC CONNECTOR	52045-0745
CN1452	B TO B CONNECTOR 20P	VKN1390
CN1451	B TO B CONNECTOR 22P	VKN1391

I FDVR ASSY

SEMICONDUCTORS

IC301		TC74VHC14FT
Q301-Q305		2SC4081
D307-D313		DA221
D301		GP1A038RBK
D302-D306		GP1S94

CAPACITORS

C905-C909		CCSRCH221J50
C901-C904		CKSRYB104K25

RESISTORS

All Resistors		RS1/16S###J

OTHERS

CN301	9P FFC CONNECTOR	52044-0945

J SDRT ASSY

SEMICONDUCTORS

IC1901,IC1902		NJM4558MD
IC1903		TC9215AF
Q1901-Q1904		2SC3326
Q1905		DTA124EK
D1901-D1904		NNCD6.2MF

COILS AND FILTERS

⚠ L1907-L1909	CHIP FERRITE BEAD	ATL7002
⚠ L1901-L1906	FERRITE BEAD	VTH1020

Mark No.	Description	Part No.
CAPACITORS		
C1901-C1904,C1915-C1918		CCSRCH101J50
C1907,C1908		CCSRCH270J50
C1905,C1906,C1909,C1910		CEAT100M50
C1913,C1914,C1931,C1932		CEAT100M50
C1921,C1924-C1929		CKSRYB103K50
C1933-C1935		CKSRYB104K25
RESISTORS		
R1911,R1912,R1949,R1950		RN1/16SE4702D
Other Resistors		RS1/16S###J
OTHERS		
CN1901	15P FFC CONNECTOR	52044-1545
JA1903,JA1904	MIC. JACK	DKN1248
JA1901,JA1902	HEADPHONE JACK	RKB1014

K XLR ASSY

Mark No.	Description	Part No.
SEMICONDUCTORS		
IC102,IC137		NJM4580MD
IC108		NJM5532DD
IC110,IC111		NJM5532L
Q119-Q126		2SC3326
D101-D108		1SS355
COILS AND FILTERS		
⚠ L101-L104	FERRITE BEAD	VTH1020
CAPACITORS		
C333,C334		CCSRCH151J50
C141-C148,C335,C336		CCSRCH330J50
C131,C132		CEAL100M50
C149-C152		CEAT101M25
C161-C164		CEHAT101M25
C115-C118,C337,C338		CFTNA334J50
C119,C120,C125,C126		CKSRYB103K50
C133,C134,C137-C140		CKSRYB103K50
C153-C156		CQMA103J50
RESISTORS		
R196		RD1/2PM101J
R193-R195		RD1/2VM101J
R189-R192		RN1/16SC68R0D
R163,R164		RN1/16SE1001D
R123,R124,R165-R172		RN1/16SE1002D
R447,R448		RN1/16SE1002D
R387,R388		RN1/16SE1003D
R125,R126		RN1/16SE1503D
R129,R130		RN1/16SE2002D
R185-R188		RN1/16SE2201D
R173-R180,R451,R452		RN1/16SE2202D
R435,R436,R441,R442		RN1/16SE2700D
R429,R430		RN1/16SE2701D
R431,R432		RN1/16SE4301D
Other Resistors		RS1/16S###J
OTHERS		
CN122	KR CONNECTOR	B8B-PH-K
CN124	KR CONNECTOR	B9B-PH-K
JA102,JA103	CANNON CONNECTOR	DKB1059
0	SCREW PLATE	VNE1948

L LVMR ASSY

Mark No.	Description	Part No.
SEMICONDUCTORS		
IC417,IC418		NJM072BM-E
IC401-IC404		NJM4558MD
IC413,IC416		TC4W53F
IC407-IC412		TS339CDT
Q401,Q402		2SA1577
Q415-Q420		2SB1132
Q404		2SC3326
Q405		DTA124EUA
Q403,Q408-Q414		DTC124EUA
D401-D406,D409,D410		1SS355
D413,D414,D439-D454		1SS355
D473,D474,D481,D482		1SS355
D437,D438,D458-D460		SLI-343URCW(RST)
D429-D436,D455		SLI-343YCW(RST)
D415-D428,D461-D464		TLGE68TG(NP)
D467		UDZS10B
D407,D408,D411,D412		UDZS12B
SWITCHES AND RELAYS		
S404,S405		DSG1077
S401		RSG1032
CAPACITORS		
C403,C404,C407,C408		CCSRCH470J50
C401,C402,C405,C406,C439		CEAT100M50
C458		CEAT100M50
C415-C418		CEAT2R2M50
C433,C434		CEJQ100M35
C419,C420,C422-C426		CKSRYB103K50
C428-C432,C435-C438,C440		CKSRYB103K50
C447,C449,C451,C453,C455		CKSRYB103K50
C457,C461-C464		CKSRYB103K50
C409,C410		CKSRYB473K50
RESISTORS		
R461,R462		RS1/10S27R0F
R463,R464		RS1/16S1000F
R407,R408,R417,R418		RS1/16S1302F
R473,R474		RS1/16S2000F
R475,R476		RS1/16S2400F
R481,R482		RS1/16S2401F
R465,R466		RS1/16S3000F
R467,R468		RS1/16S3300F
R483,R484		RS1/16S3301F
R471,R472		RS1/16S4300F
R469,R470		RS1/16S4700F
R485,R486		RS1/16S5100F
R477,R478		RS1/16S7500F
R403,R404,R413,R414		RS1/16S7501F
R479,R480		RS1/16S9100F
Other Resistors		RS1/16S###J
OTHERS		
CN402	19P FFC CONNECTOR	52044-1945
CN405	FFC CONNECTOR 9P	52492-0920
CN401	FFC CONNECTOR 23P	52492-2320
CN403,CN404	B TO B CONNECTOR 3P	DKN1334
J406,J407	CONNECTOR ASSY	PG03KA-E07

Mark No.	Description	Part No.
M C1TR ASSY		
SWITCHES AND RELAYS		
S591		DSK1031
OTHERS		
CN591	KR CONNECTOR 3P	B3B-PH-K
N C2TR ASSY		
SWITCHES AND RELAYS		
S592		DSK1031
OTHERS		
CN592	KR CONNECTOR 3P	B3B-PH-K
O FVA1 ASSY		
RESISTORS		
VR593		DCV1016
OTHERS		
CN593	B TO B CONNECTOR 3P	VKN1355
P FVA2 ASSY		
RESISTORS		
VR594		DCV1016
OTHERS		
CN594	B TO B CONNECTOR 3P	VKN1355
Q CFVR ASSY		
SEMICONDUCTORS		
D551,D552		NNCD6.2MF
COILS AND FILTERS		
⚠ L553-L571,L573-L575,L579	CHIP FERRITE BEAD	ATL7002
⚠ L551,L552,L572	FERRITE BEAD	VTH1020
SWITCHES AND RELAYS		
S551		DSK1030
CAPACITORS		
C582-C591,C597		CKSRYB104K25
C592-C596		CKSRYB105K6R3
C551		CQMA103J50
RESISTORS		
VR552,VR554		DCS1076
VR551,VR555		DCS1077
VR553		DCS1079
Other Resistors		RS1/16S###J
OTHERS		
CN551	17P FFC CONNECTOR	52044-1745
CN553	3P FFC CONNECTOR	52045-0345
CN552	6P FFC CONNECTOR	52492-0620
JA551	JACK	VKN1802

Mark No.	Description	Part No.
R RVSW ASSY		
SWITCHES AND RELAYS		
S571-S573		DSH1036
OTHERS		
CN571	FFC CONNECTOR 6P	52492-0620
S FSSW ASSY		
SEMICONDUCTORS		
D581,D582		NNCD6.2MF
COILS AND FILTERS		
⚠ L576-L578	FERRITE BEAD	VTH1020
SWITCHES AND RELAYS		
S581,S582		DSH1052
CAPACITORS		
C581		CQMA102J50
OTHERS		
CN581	3P FFC CONNECTOR	52045-0345
JA581	HEADPHONE JACK	DKN1281
CN582	KR CONNECTOR	S6B-PH-K
T LCD ASSY		
SEMICONDUCTORS		
IC1005		DYW1730
IC1000		NJM2902V
IC1004		PD3452A8
IC1001		S1D13704F00A
IC1002,IC1009		TC74VHC125FT
IC1006,IC1007		TC74VHC175FT
IC1008		TC74VHC74FT
IC1003		TC7WU04FU
Q1000,Q1010,Q1015-Q1019		2SC2412K
Q1022,Q1025		DTA124EUA
Q1001-Q1005,Q1011-Q1014		DTC124EUA
Q1020,Q1021,Q1023,Q1024		DTC124EUA
Q1026,Q1027		DTC124EUA
D1024-D1033		1SS355
D1036,D1037		NNCD6.2MF
D1003,D1016		SLI-343URCW(RST)
D1000-D1002,D1004,D1005		SLI-343YCW(RST)
D1013-D1015,D1034,D1035		SLI-343YCW(RST)
D1012,D1017-D1019		UDZS5.6B
D1020		UDZS9.1B
D1007-D1011,D1021-D1023		UY5365S
SWITCHES AND RELAYS		
S1005,S1015		DSG1079
S1007,S1008		DSK1034
S1006,S1009		DSX1054
S1000-S1004,S1010-S1014		VSG1024
CAPACITORS		
C1024		CCSRCH120J50
C1045,C1046,C1048-C1050,C1052		CCSRCH121J50
C1072-C1074		CCSRCH121J50
C1023		CCSRCH150J50
C1003-C1005,C1007,C1013		CEAL4R7M50

Mark No.	Description	Part No.
C1027,C1028		CEJQ101M10
C1055		CEJQ220M25
C1033		CEJQ330M35
C1056		CEJQ470M16
C1026		CEJQ470M25
C1001,C1017,C1020-C1022		CKSRYB102K50
C1041-C1043,C1054,C1062-C1064		CKSRYB102K50
C1067,C1070		CKSRYB102K50
C1000,C1012,C1034-C1040,C1051		CKSRYB103K50
C1053,C1059-C1061,C1078-C1082		CKSRYB103K50
C1002,C1006,C1008-C1011		CKSRYB104K25
C1014-C1016,C1018,C1019,C1025		CKSRYB104K25
C1029-C1032,C1044,C1047		CKSRYB104K25
C1057,C1058,C1065,C1066		CKSRYB104K25
C1068,C1069,C1071,C1075		CKSRYB104K25

RESISTORS

R1011-R1014,R1040,R1041		RAB4C0R0J
R1023		RAB4C103J
R1021,R1025,R1029,R1031		RS1/16S1001F
R1027		RS1/16S1002F
R1059		RS1/16S1502F
R1000		RS1/16S2201F
R1009		RS1/16S3302F
VR1001,VR1003		DCS1078
VR1000,VR1002		DCS1080
Other Resistors		RS1/16S###J

OTHERS

CN1002	FFC CONNECTOR 21P	52492-2120
CN1000	CONNECTOR	52976-2492
CN1003	04P FFC CONNECTOR	9610S-04B
X1000	CRYSTAL RESONATOR (24MHz)	ASS7025
0	LCD HOLDER	DNK4221
CN1001	KR CONNECTOR	S6B-PH-K

6. ADJUSTMENT

6.1 ADJUSTMENT REQUIRED WHEN THE SET IS REPAIRED OR REPLACED

DSP Assy

• When repaired

No adjustment required.

• When repaired

When repair and System CPU are exchanged for a VCA control circuit

- When fixing and part exchanging a Ch1 VCA control circuit → CH1 Gain Adjustment , CH1 Offset Adjustment
- When fixing and part exchanging a Ch2 VCA control circuit → CH2 Gain Adjustment , CH2 Offset Adjustment

• Adjusting Point

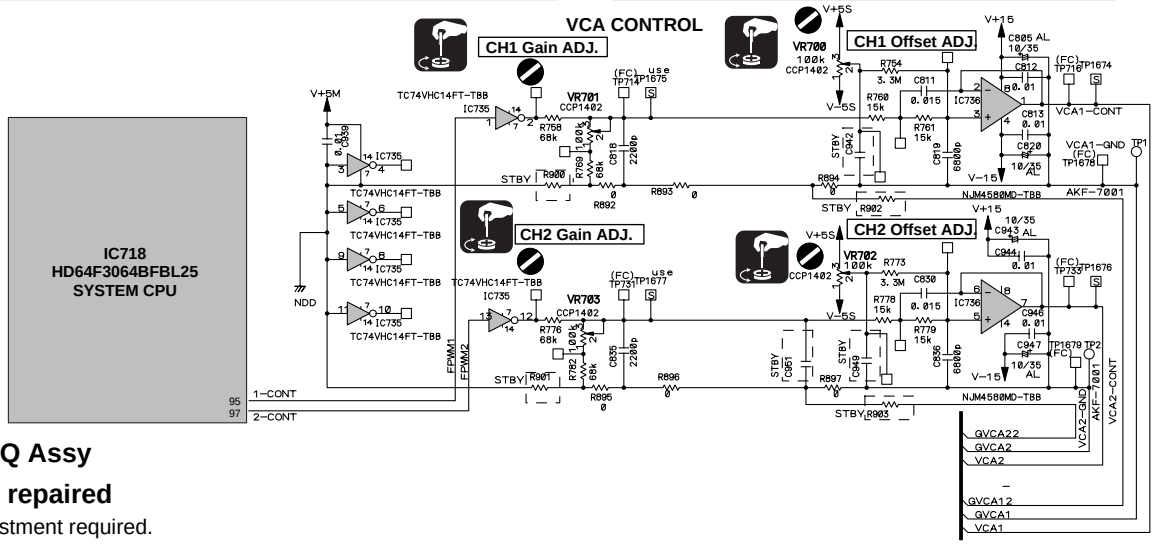

C1EQ Assy

• When repaired

No adjustment required.

• When repaired

When repair and parts are exchanged for EQ circuit

- When fixing and part exchanging a Ch1 Lch (Rch) EQ (Hi) circuit. → CH1 Lch (Rch) EQ Hi Adjustment
- When fixing and part exchanging a Ch1 Lch (Rch) EQ (Mid) circuit → CH1 Lch (Rch) EQ Mid Adjustment
- When fixing and part exchanging a Ch1 Lch (Rch) EQ (Low) circuit → CH1 Lch (Rch) EQ Low Adjustment

• Adjusting Point

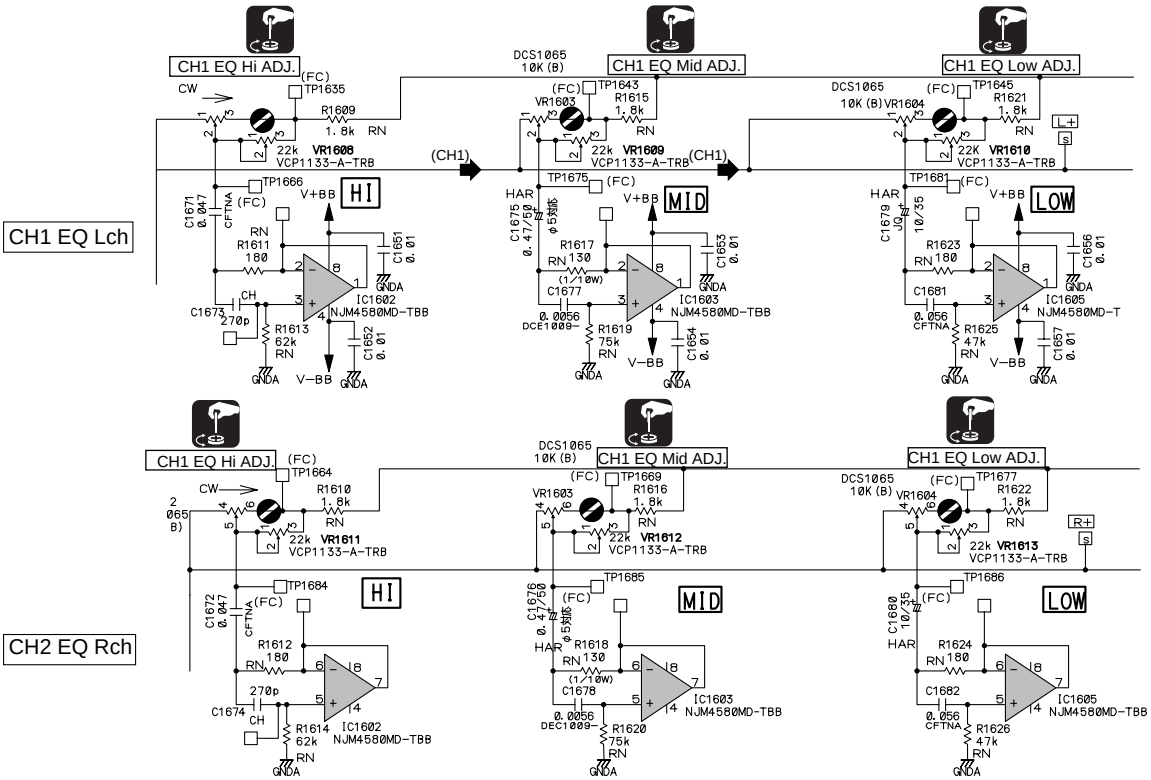

C2EQ Assy

• When repaired

No adjustment required.

• When repaired

When repair and parts are exchanged for EQ circuit

- When fixing and part exchanging a Ch2 Lch (Rch) EQ (Hi) circuit. → CH2 Lch (Rch) EQ Hi Adjustment
- When fixing and part exchanging a Ch2 Lch (Rch) EQ (Mid) circuit → CH2 Lch (Rch) EQ Mid Adjustment
- When fixing and part exchanging a Ch2 Lch (Rch) EQ (Low) circuit → CH2 Lch (Rch) EQ Low Adjustment

• Adjusting Point

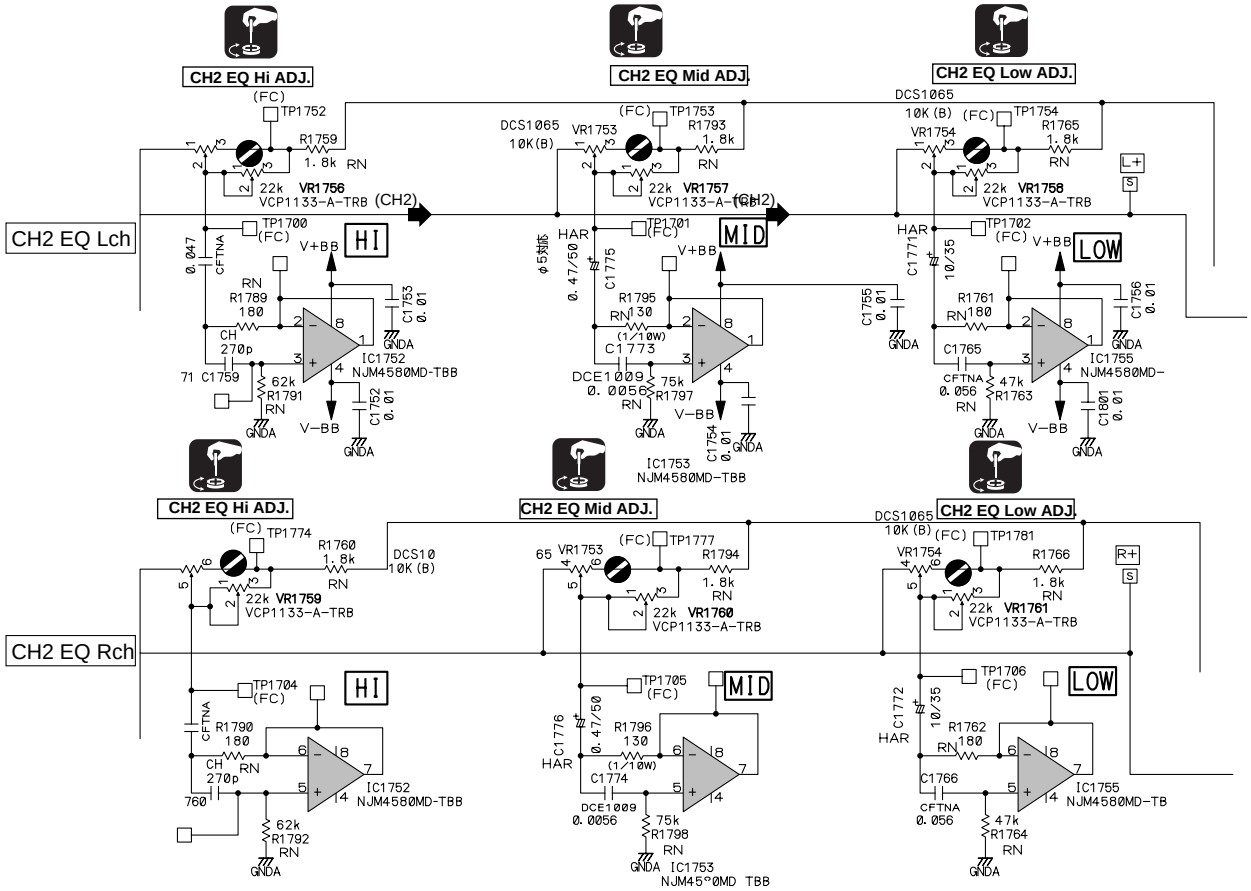

6.2 CH1 OFFSET ADJUSTMENT

■ Adjustment condition

- Power -ON state

■ Measuring instrument

- Digital multi-meter which can be measured to 0.1mV unit

■ Adjustment value / Adjustment points

- 0V ± 0.01V (VR700)

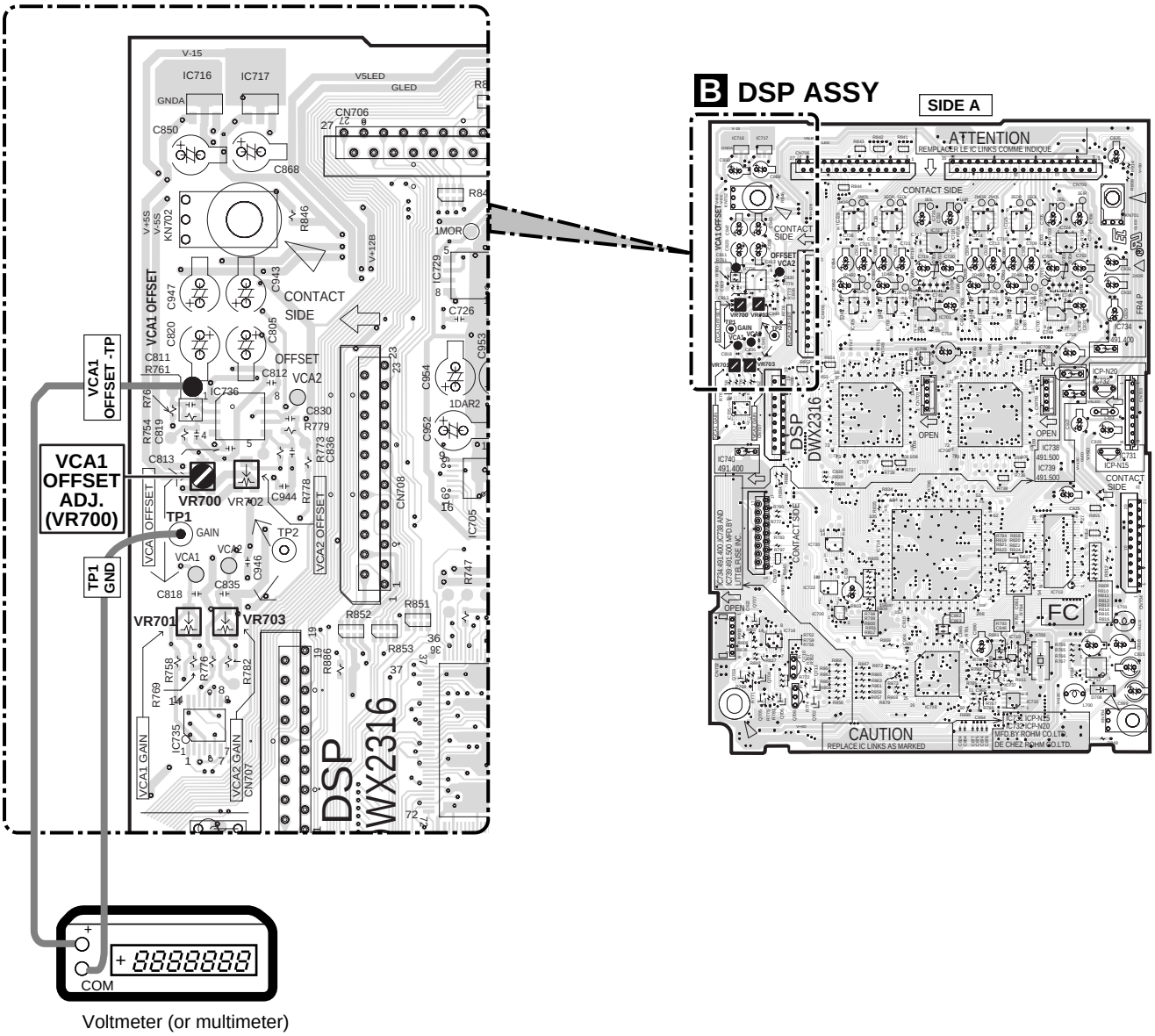

Adjustment points / Connection diagram

6.3 CH1 GAIN ADJUSTMENT

■ Adjustment condition
- Power -ON state

■ Measuring instrument
- Digital multi-meter which can be measured to 0.1mV unit

■ Adjustment value / Adjustment points
- 3V ± 0.01V (VR701)

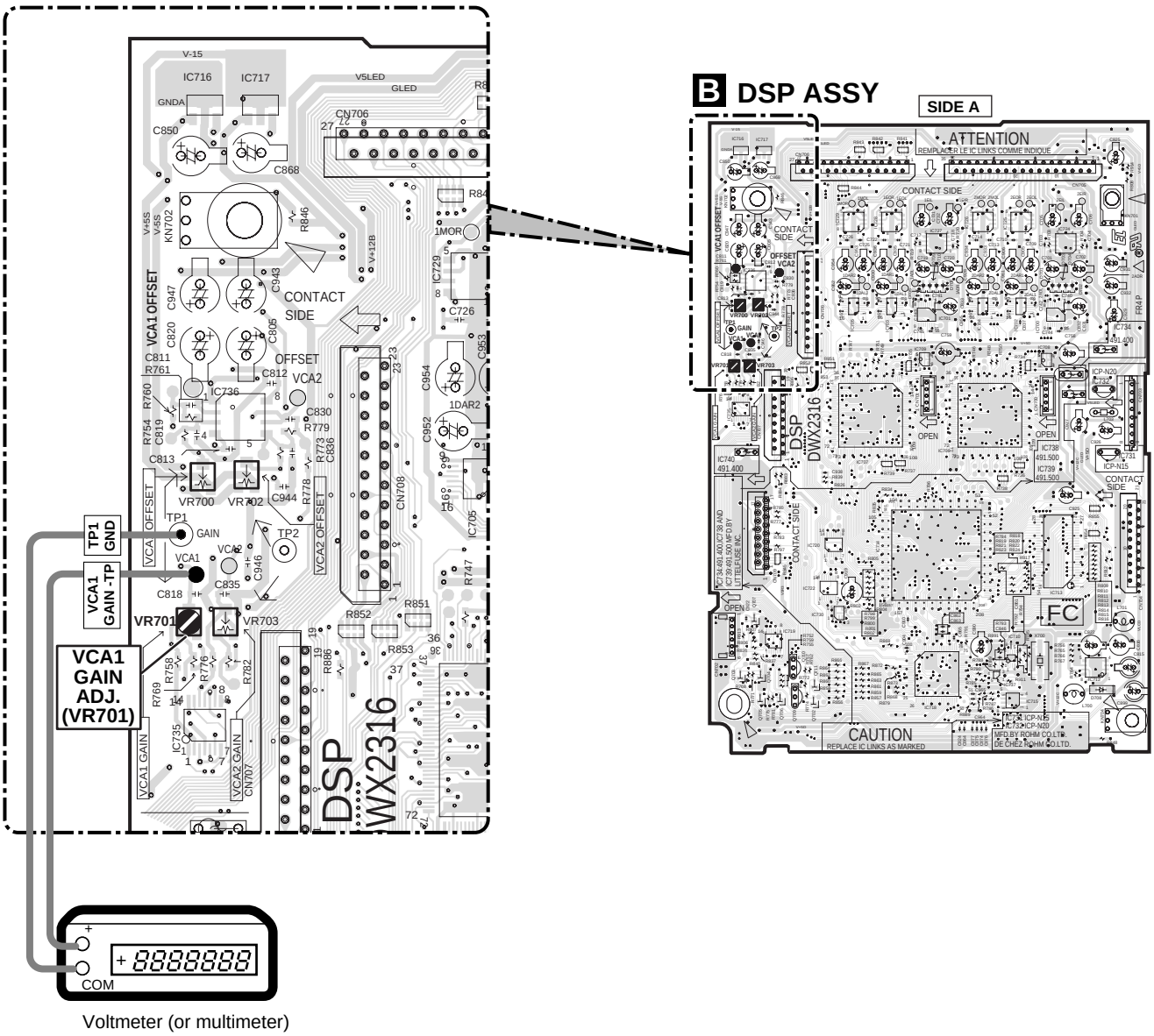

Adjustment points / Connection diagram

6.4 CH2 OFFSET ADJUSTMENT

■ Adjustment condition
- Power -ON state

■ Measuring instrument
- Digital multi-meter which can be measured to 0.1mV unit

■ Adjustment value / Adjustment points
- 0V ± 0.01V (VR702)

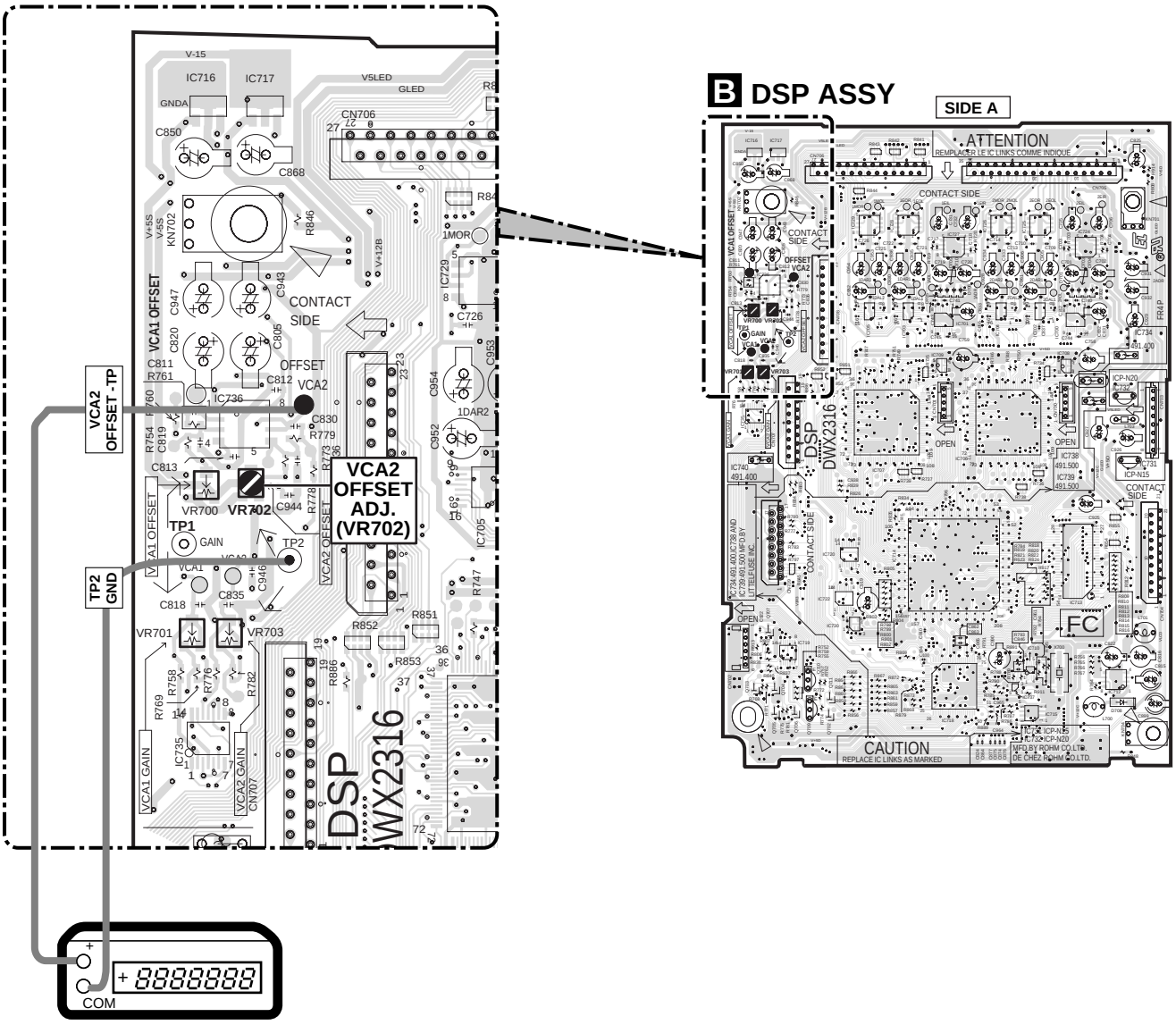

Adjustment points / Connection diagram

6.5 CH2 GAIN ADJUSTMENT

■ Adjustment condition
- Power -ON state

■ Measuring instrument
- Digital multi-meter which can be measured to 0.1mV unit

■ Adjustment value / Adjustment points
- 3V ± 0.01V (VR703)

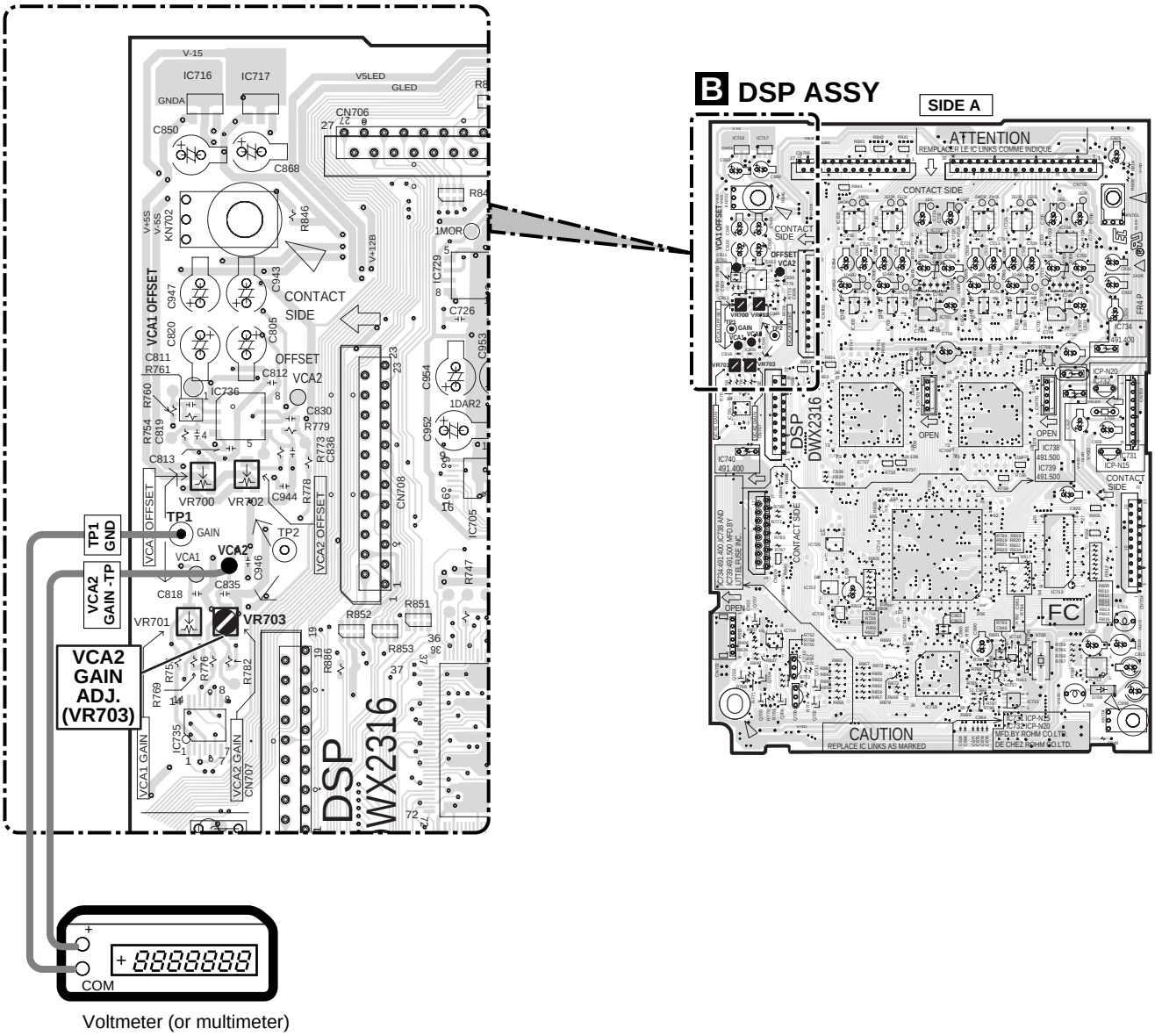

Adjustment points / Connection diagram

6.6 CH1 EQ Low ADJUSTMENT

Adjustment condition

- CH1 EQ ADJ VR [VR1604 (LOW): B, VR1603 (MID): C , VR1602 (HI) : D] : Center click
- CH1 INPUT SELECTOR: CD1 J , CH1 FADER: MAX K , CROSS FADER: 1 side L , MASTER LEVEL: MAX M
- EFFECT OFF: N , TRANSFORM: O , FADER REVERSE SW: P : All are turned OFF

Measuring instrument

- Low frequency transmitter
- Analog voltage meter which can be measured to 0.2dB unit

Adjustment method

Set the output of transmitter to 70Hz 2Vrms.

• Lch EQ Low ADJ.

1. Turn S1601 (CH1 EQ ON/OFF: A) to OFF.
2. Adjust VR1601 (CH1 TRIM: E) so that the L ch output becomes **0dBv+0.2/-0dB**.
3. Turn S1601 (CH1 EQ ON/OFF: A) to ON.
4. Adjust VR1610 (C1EQ Assy (CH1 Low Lch) : A) so that the L ch output becomes **0dBv+0.2/-0dB**.

• Rch EQ Low ADJ.

1. Turn S1601 (CH1 EQ ON/OFF: A) to OFF.
2. Adjust VR1601 (CH1 TRIM: E) so that the R ch output becomes **0dBv+0.2/-0dB**.
3. Turn S1601 (CH1 EQ ON/OFF: A) to ON.
4. Adjust VR1613 (C1EQ Assy (CH1 Low Rch) : B) so that the R ch output becomes **0dBv+0.2/-0dB**.

Adjustment value / Adjustment points

- Lch EQ Low ADJ. : 0dBv + 0.2/-0dbv (VR1610)
- Rch EQ Low ADJ. : 0dBv + 0.2/-0dbv (VR1613)

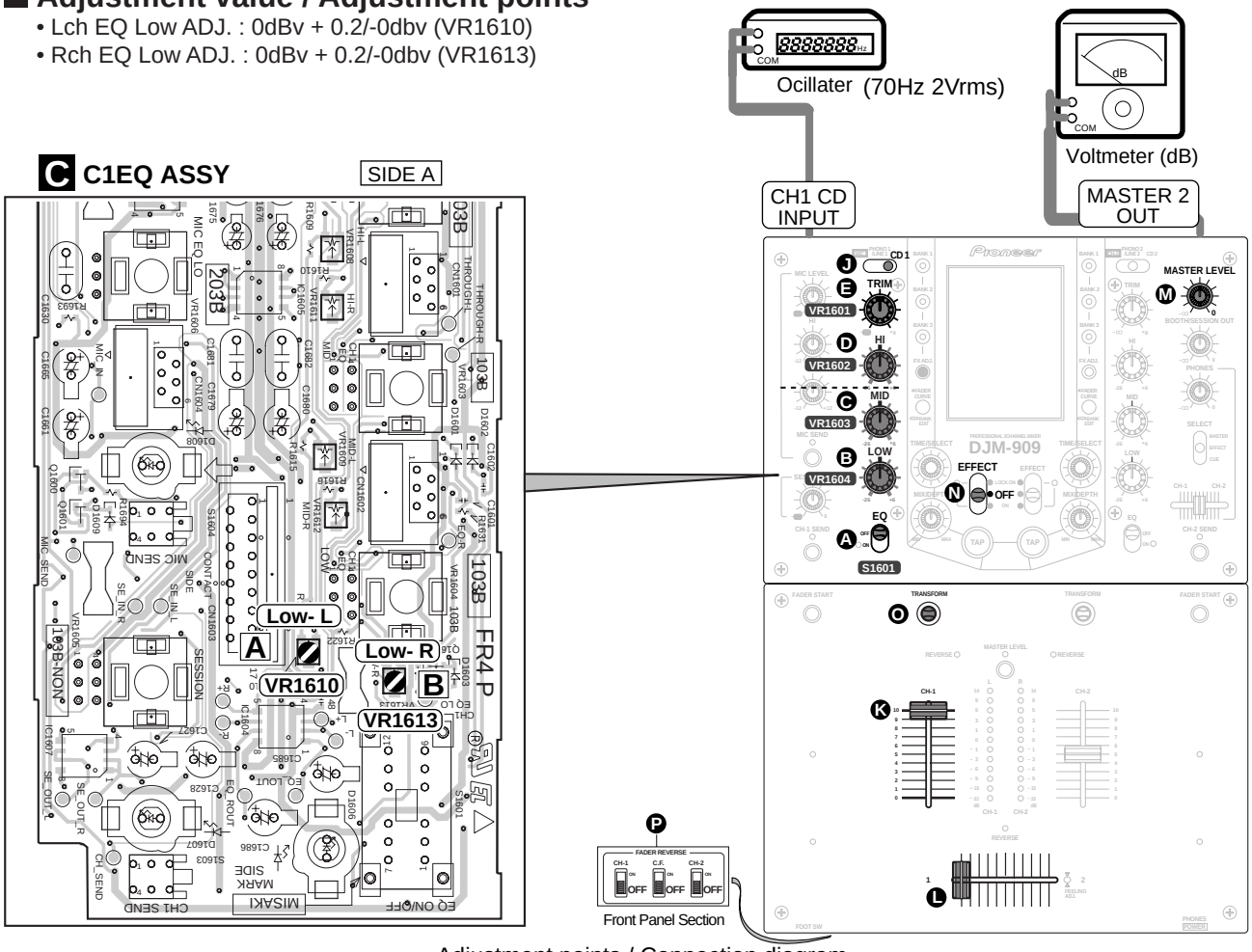

Adjustment points / Connection diagram

6.7 CH1 EQ Mid ADJUSTMENT

Adjustment condition

- CH1 EQ ADJ VR [VR1604 (LOW): B, VR1603 (MID): C , VR1602 (HI) : D] : Center click
- CH1 INPUT SELECTOR: CD1 J , CH1 FADER: MAX K , CROSS FADER: 1 side L , MASTER LEVEL: MAX M
- EFFECT OFF: N , TRANSFORM: O , FADER REVERSE SW: P : All are turned OFF

Measuring instrument

- Low frequency transmitter
- Analog voltage meter which can be measured to 0.2dB unit

Adjustment method

Set the output of transmitter to 1kHz 2Vrms.

• Lch EQ Mid ADJ.

1. Turn S1601 (CH1 EQ ON/OFF: A) to OFF.
2. Adjust VR1601 (CH1 TRIM: E) so that the L ch output becomes **0dBv+0.2/-0dB**.
3. Turn S1601 (CH1 EQ ON/OFF: A) to ON.
4. Adjust VR1609 (C1EQ Assy (CH1 Mid Lch) : C) so that the L ch output becomes **0dBv+0.2/-0dB**.

• Rch EQ Mid ADJ.

1. Turn S1601 (CH1 EQ ON/OFF: A) to OFF.
2. Adjust VR1601 (CH1 TRIM: E) so that the R ch output becomes **0dBv+0.2/-0dB**.
3. Turn S1601 (CH1 EQ ON/OFF: A) to ON.
4. Adjust VR1612 (C1EQ Assy (CH1 Mid Rch) : D) so that the R ch output becomes **0dBv+0.2/-0dB**.

Adjustment value / Adjustment points

- Lch EQ Mid ADJ. : 0dBv + 0.2/-0dbv (VR1609)
- Rch EQ Mid ADJ. : 0dBv + 0.2/-0dbv (VR1612)

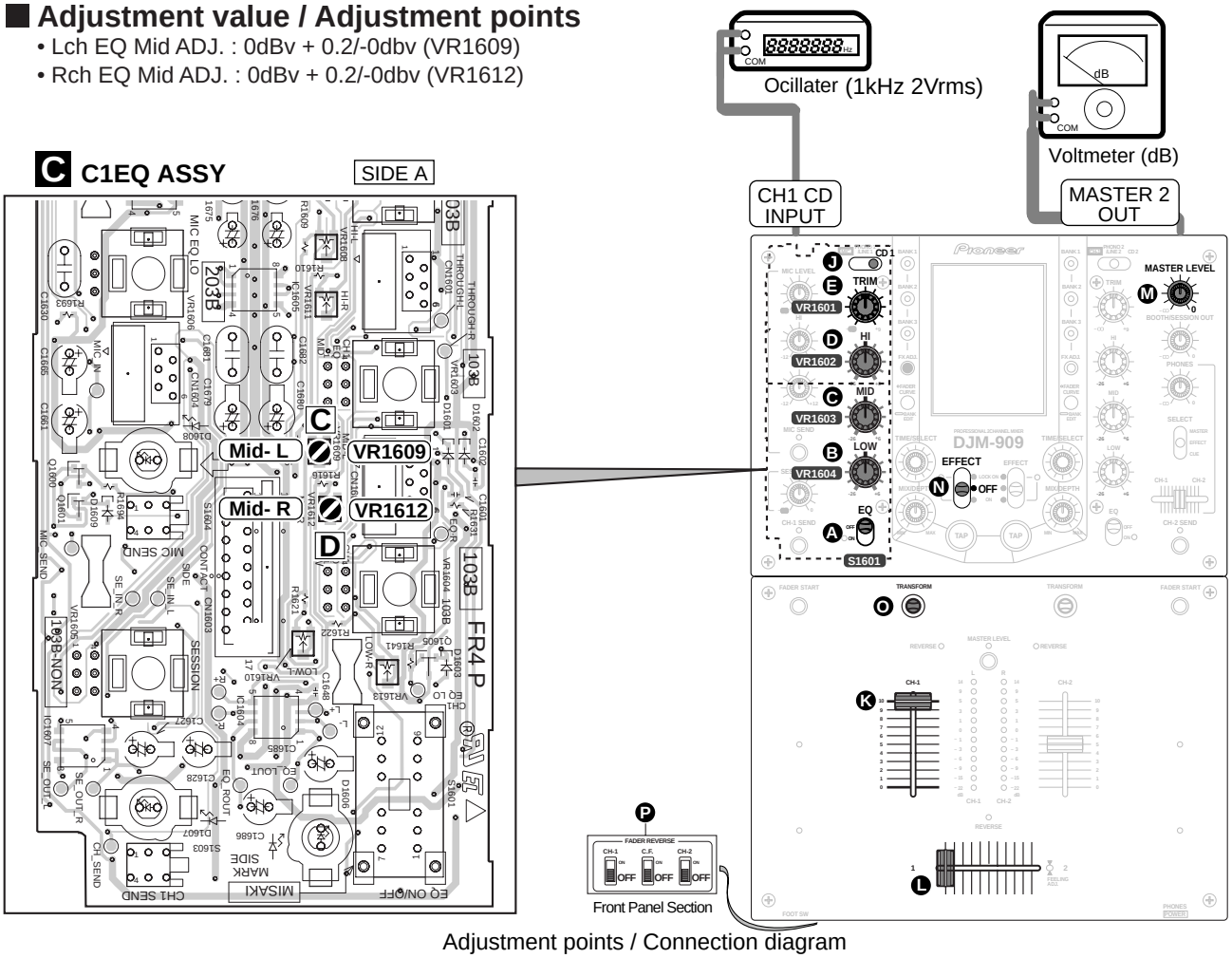

Adjustment points / Connection diagram

6.8 CH1 EQ Hi ADJUSTMENT

Adjustment condition

- CH1 EQ ADJ VR [VR1604 (LOW): B, VR1603 (MID): C, VR1602 (HI) : D] : Center click
- CH1 INPUT SELECTOR: CD1 J, CH1 FADER: MAX K, CROSS FADER: 1 side L, MASTER LEVEL: MAX M
- EFFECT OFF: N, TRANSFORM: O, FADER REVERSE SW: P : All are turned OFF

Measuring instrument

- Low frequency transmitter
- Analog voltage meter which can be measured to 0.2dB unit

Adjustment method

Set the output of transmitter to 13kHz 2Vrms.

• Lch EQ Hi ADJ.

1. Turn S1601 (CH1 EQ ON/OFF: A) to OFF.
2. Adjust VR1601 (CH1 TRIM: E) so that the L ch output becomes **0dBv+0.2/-0dB**.
3. Turn S1601 (CH1 EQ ON/OFF: A) to ON.
4. Adjust VR1608 (C1EQ Assy (CH1 Hi Lch) : E) so that the L ch output becomes **0dBv+0.2/-0dB**.

• Rch EQ Hi ADJ.

1. Turn S1601 (CH1 EQ ON/OFF: A) to OFF.
2. Adjust VR1601 (CH1 TRIM: E) so that the R ch output becomes **0dBv+0.2/-0dB**.
3. Turn S1601 (CH1 EQ ON/OFF: A) to ON.
4. Adjust VR1611 (C1EQ Assy (CH1 Hi Rch) : F) so that the R ch output becomes **0dBv+0.2/-0dB**.

Adjustment value / Adjustment points

- Lch EQ Hi ADJ. : 0dBv + 0.2/-0dbv (VR1608)
- Rch EQ Hi ADJ. : 0dBv + 0.2/-0dbv (VR1611)

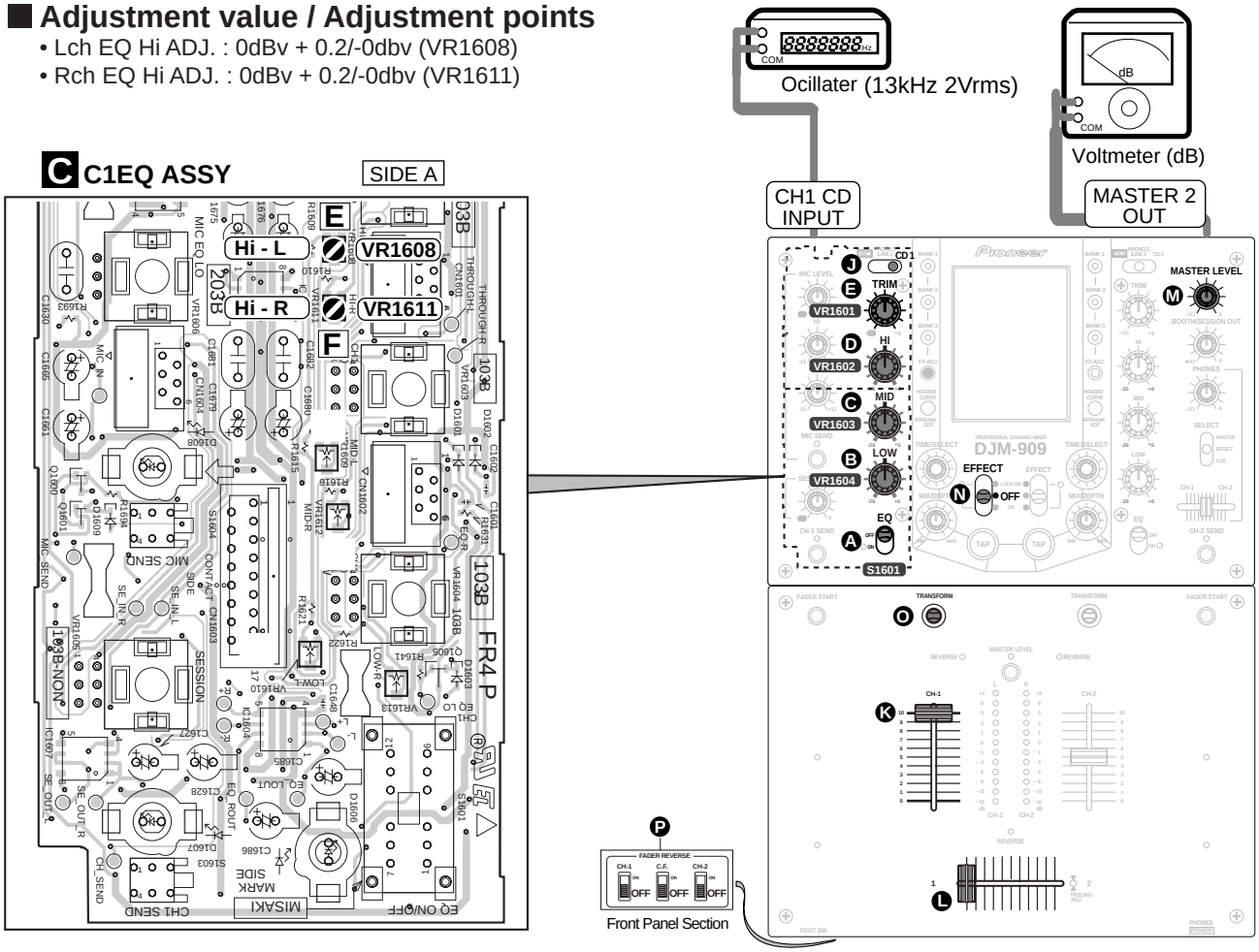

Adjustment points / Connection diagram

6.9 CH2 EQ Low ADJUSTMENT

■ Adjustment condition

- CH2 EQ ADJ VR [VR1754 (LOW): G , VR1753 (MID): H , VR1752 (HI) : I] : Center click
- CH2 INPUT SELECTOR: CD2 J , CH2 FADER: MAX K , CROSS FADER: 2 side L , MASTER LEVEL: MAX M
- EFFECT OFF: N , TRANSFORM: O , FADER REVERSE SW: P : All are turned OFF

■ Measuring instrument

- Low frequency transmitter
- Analog voltage meter which can be measured to 0.2dB unit

■ Adjustment method

Set the output of transmitter to 70Hz 2Vrms.

• Lch EQ Low ADJ.

1. Turn S1754 (CH2 EQ ON/OFF: F) to OFF.
2. Adjust VR1751 (CH2 TRIM: E) so that the L ch output becomes **0dBv+0.2/-0dB**.
3. Turn S1754 (CH2 EQ ON/OFF: F) to ON.
4. Adjust VR1758 (C2EQ Assy (CH2 Low Lch) : G) so that the L ch output becomes **0dBv+0.2/-0dB**.

• Rch EQ Low ADJ.

1. Turn S1754 (CH2 EQ ON/OFF: F) to OFF.
2. Adjust VR1751 (CH2 TRIM: E) so that the R ch output becomes **0dBv+0.2/-0dB**.
3. Turn S1754 (CH2 EQ ON/OFF: F) to ON.
4. Adjust VR1761 (C2EQ Assy (CH2 Low Rch) : H) so that the R ch output becomes **0dBv+0.2/-0dB**.

■ Adjustment value / Adjustment points

- Lch EQ Low ADJ. : 0dBv + 0.2/-0dbv (VR1758)
- Rch EQ Low ADJ. : 0dBv + 0.2/-0dbv (VR1761)

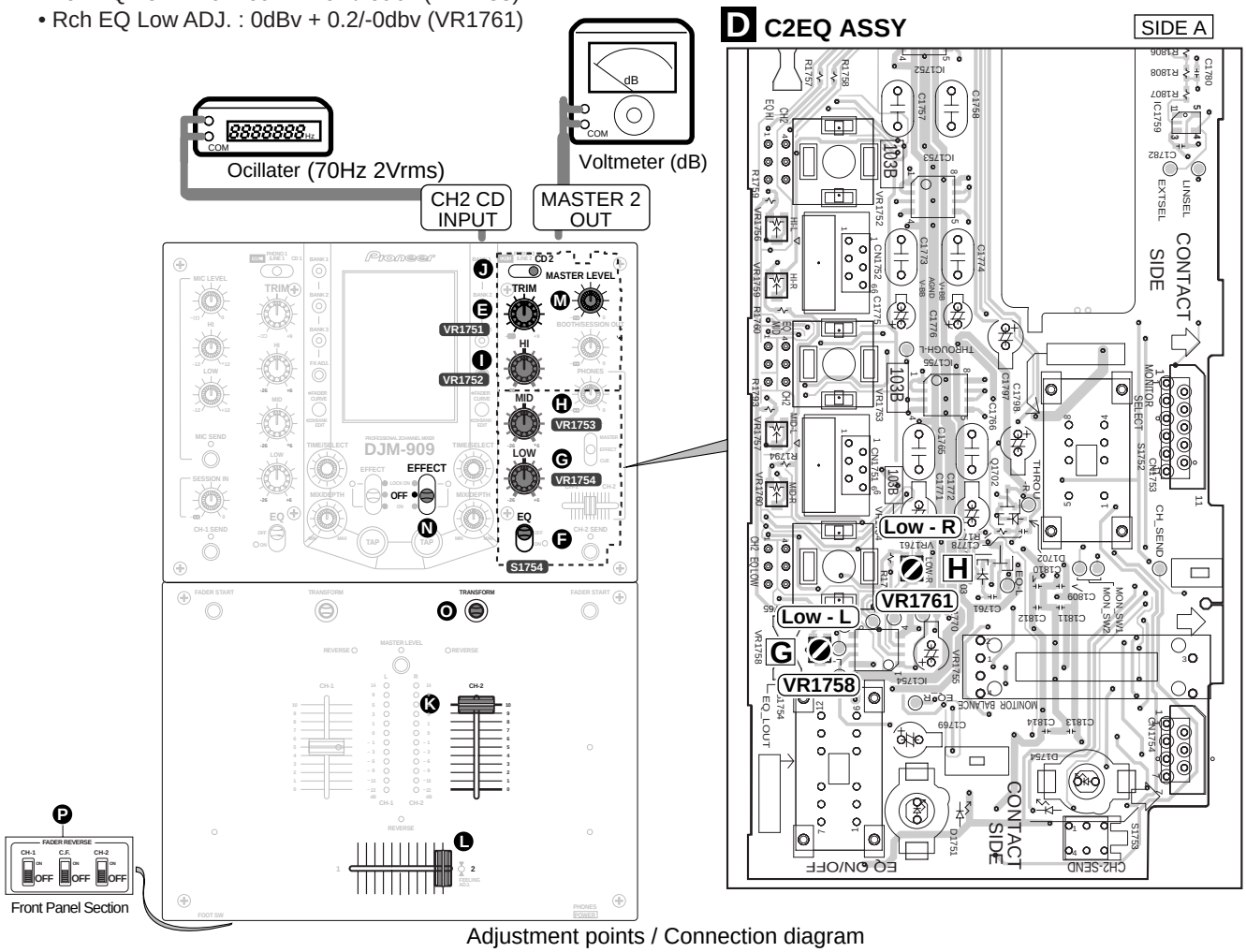

Adjustment points / Connection diagram

6.10 CH2 EQ Mid ADJUSTMENT

Adjustment condition

- CH2 EQ ADJ VR [VR1754 (LOW): G , VR1753 (MID): H , VR1752 (HI) : I] : Center click
- CH2 INPUT SELECTOR: CD2 J , CH2 FADER: MAX K , CROSS FADER: 2 side L , MASTER LEVEL: MAX M
- EFFECT OFF: N , TRANSFORM: O , FADER REVERSE SW: P : All are turned OFF

Measuring instrument

- Low frequency transmitter
- Analog voltage meter which can be measured to 0.2dB unit

Adjustment method

Set the output of transmitter to 1kHz 2Vrms.

• Lch EQ Mid ADJ.

1. Turn S1754 (CH2 EQ ON/OFF: F) to OFF.
2. Adjust VR1751 (CH2 TRIM: E) so that the L ch output becomes **0dBv+0.2/-0dB**.
3. Turn S1754 (CH2 EQ ON/OFF: F) to ON.
4. Adjust VR1757 (C2EQ Assy (CH2 Mid Lch) : I) so that the L ch output becomes **0dBv+0.2/-0dB**.

• Rch EQ Mid ADJ.

1. Turn S1754 (CH2 EQ ON/OFF: F) to OFF.
2. Adjust VR1751 (CH2 TRIM: E) so that the R ch output becomes **0dBv+0.2/-0dB**.
3. Turn S1754 (CH2 EQ ON/OFF: F) to ON.
4. Adjust VR1760 (C2EQ Assy (CH2 Mid Rch) : J) so that the R ch output becomes **0dBv+0.2/-0dB**.

Adjustment value / Adjustment points

- Lch EQ Mid ADJ. : 0dBv + 0.2/-0dbv (VR1757)
- Rch EQ Mid ADJ. : 0dBv + 0.2/-0dbv (VR1760)

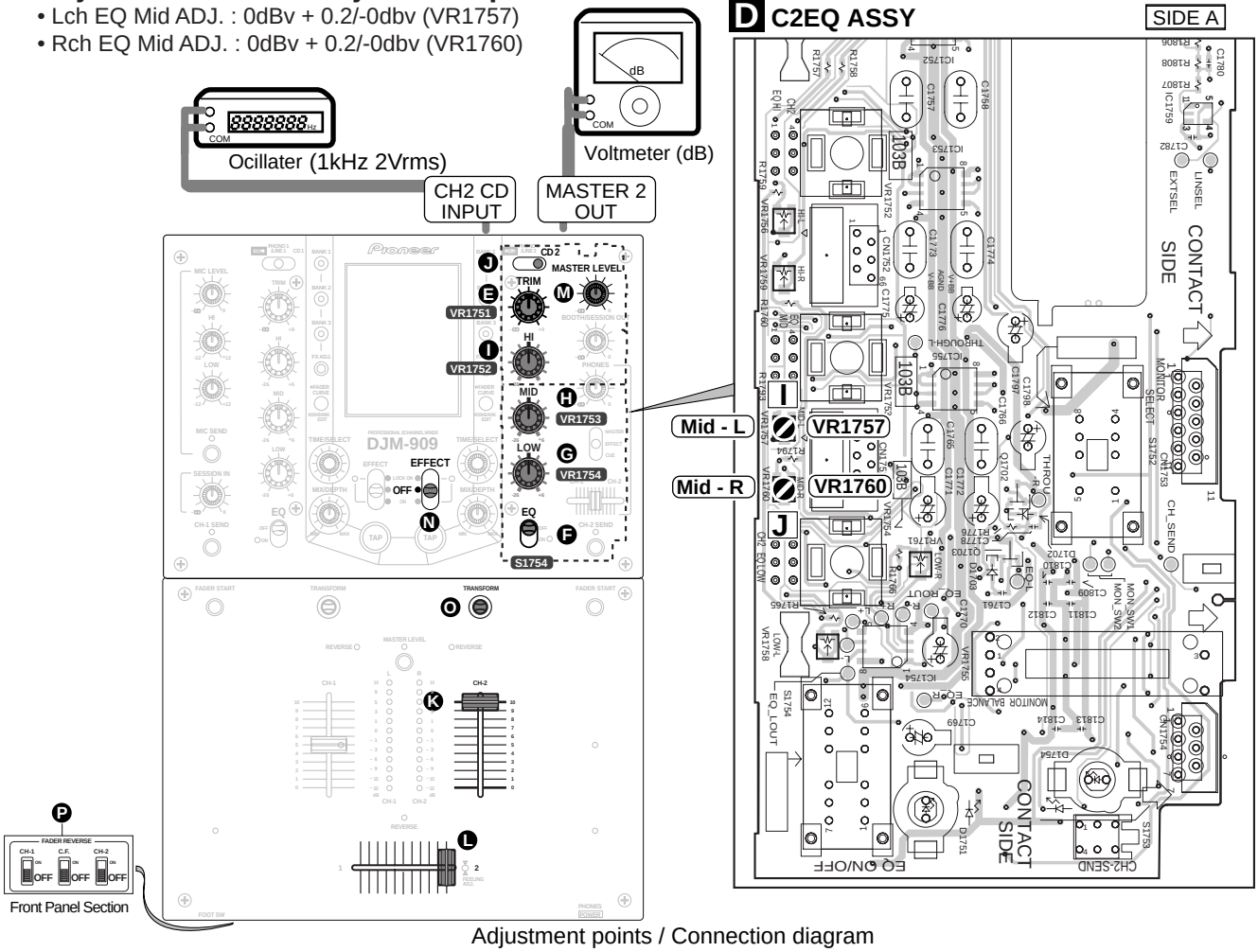

Adjustment points / Connection diagram

6.11 CH2 EQ Hi ADJUSTMENT

Adjustment condition

- CH2 EQ ADJ VR [VR1754 (LOW): G , VR1753 (MID): H , VR1752 (HI) : I] : Center click
- CH2 INPUT SELECTOR: CD2 J , CH2 FADER: MAX K , CROSS FADER: 2 side L , MASTER LEVEL: MAX M
- EFFECT OFF: N , TRANSFORM: O , FADER REVERSE SW: P : All are turned OFF

Measuring instrument

- Low frequency transmitter
- Analog voltage meter which can be measured to 0.2dB unit

Adjustment method

Set the output of transmitter to 13kHz 2Vrms.

• Lch EQ Hi ADJ.

1. Turn S1754 (CH2 EQ ON/OFF: F) to OFF.
2. Adjust VR1751 (CH2 TRIM: E) so that the L ch output becomes **0dBv+0.2/-0dB**.
3. Turn S1754 (CH2 EQ ON/OFF: F) to ON.
4. Adjust VR1756 (C2EQ Assy (CH2 Hi Lch) : K) so that the L ch output becomes **0dBv+0.2/-0dB**.

• Rch EQ Hi ADJ.

1. Turn S1754 (CH2 EQ ON/OFF: F) to OFF.
2. Adjust VR1751 (CH2 TRIM: E) so that the R ch output becomes **0dBv+0.2/-0dB**.
3. Turn S1754 (CH2 EQ ON/OFF: F) to ON.
4. Adjust VR1759 (C2EQ Assy (CH2 Hi Rch) : L) so that the R ch output becomes **0dBv+0.2/-0dB**.

Adjustment value / Adjustment points

- Lch EQ Hi ADJ. : 0dBv + 0.2/-0dbv (VR1756)
- Rch EQ Hi ADJ. : 0dBv + 0.2/-0dbv (VR1759)

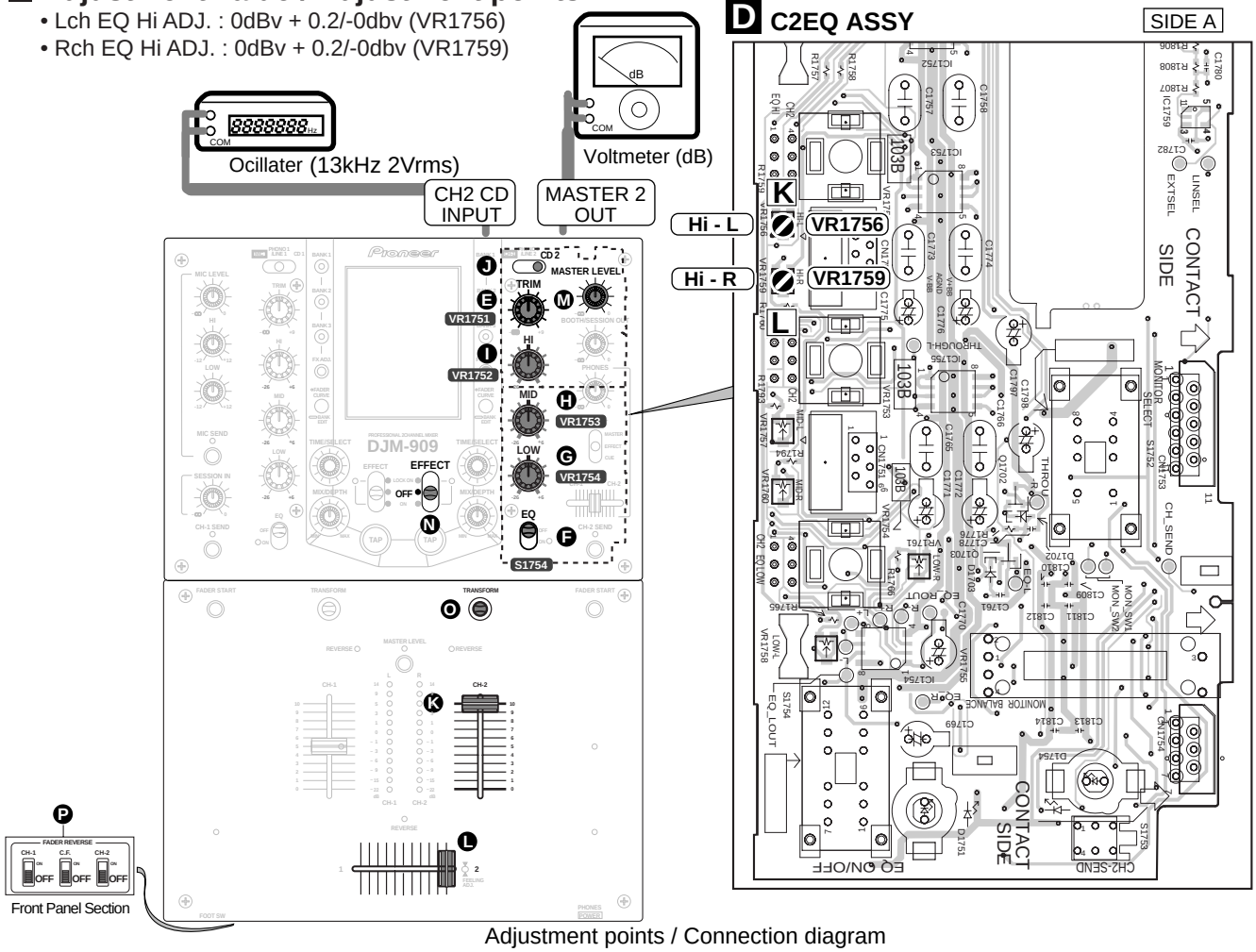

Adjustment points / Connection diagram

7. GENERAL INFORMATION

7.1 DIAGNOSIS

7.1.1 SERVICE MODE

1. Outline of Service Mode

• This unit is controlled by a system control microcomputer, which controls the whole system, and an LCD microcomputer, which processes displays and effects. Setup modes for both the system control microcomputer and the LCD microcomputer, and Test mode for the LCD microcomputer are provided.

① Display Check mode
Mode for checking button inputs and display functions

② Setup mode
Initial Setting mode for the noncontact fader, Calibration mode for the touch panel, and Factory-Preset Effect mode can be selected from this mode.

③ Initial Setting mode for the noncontact fader
Mode for initial setting of the noncontact fader.
(If this initial setting is not correctly performed, correct crossfader signals cannot be output.)
One of the modes selected from Setup mode.

Note:
After replacement of the Noncontact Fader Assy or DSP Assy or rewriting of the program for the system control microcomputer, be sure to make this initial setting.

④ Calibration mode for the touch panel
Mode for calibrating the touch panel.
(If calibration is not correctly performed, the indications on the touch panel may be shifted from the corresponding operational positions.)
One of the modes selected from Setup mode.

Note:
After replacement of the LCD Assy or the LCD microcomputer, it is necessary to calibrate the touch panel.

⑤ Factory-Preset Effect mode
Mode for resetting the effect type and parameter values to factory-preset values. One of the modes selected from Setup mode.

⑥ Version Check mode
You can check the software version of each microcomputer.

2. Display Check Mode

To enter this mode, while holding the CH1 FADER CURVE/ BANK EDIT and CH2 FADER CURVE/ BANK EDIT buttons pressed, press the POWER button.

Disply Check Mode : ON

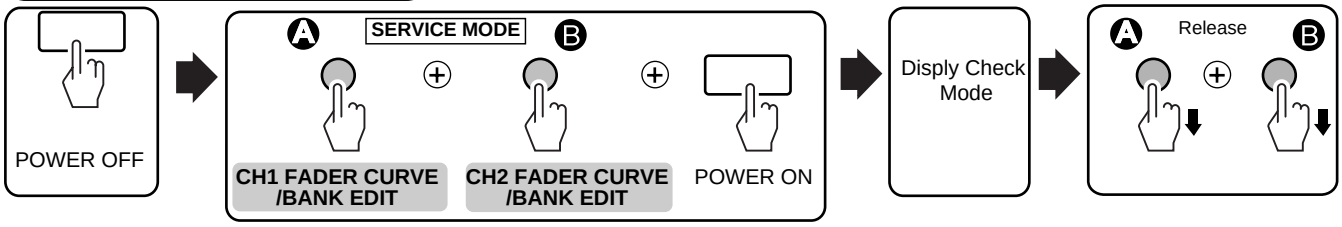

Disply Check Mode : CANCEL

- In this mode, you can check if the input to each button or VR is normal and if the display functions normally by observing the corresponding indications, as shown in the table below:

Type	Button	Indication
	CH1 BANK1	The LED for CH1 BANK1 lights up.
	CH1 BANK2	The LED for CH1 BANK2 lights up.
	CH1 BANK3	The LED for CH1 BANK3 lights up.
	CH2 BANK1	The LED for CH2 BANK1 lights up.
	CH2 BANK2	The LED for CH2 BANK2 lights up.
	CH2 BANK3	The LED for CH2 BANK3 lights up.
	CH1 FX ADJ.	The CH1 EFFECT2 indication on the LCD lights up.
	CH1 FADER CURVE/ BANK EDIT	The CH1 EFFECT3 indication on the LCD lights up.
	CH2 FX ADJ.	The CH2 EFFECT2 indication on the LCD lights up.
	CH2 FADER CURVE/ BANK EDIT	The CH2 EFFECT3 indication on the LCD lights up.
	CH1 EFFECT	The LED for CH1 EFFECT lights up.
	CH2 EFFECT	The LED for CH2 EFFECT lights up.
	CH1 TAP	The CH2 EFFECT1 indication on the LCD lights up.
	CH2 TAP	The CH2 EFFECT1 indication on the LCD lights up.
	Touch panel	The CH1 EFFECT1 indication on the LCD lights up.
	CH1 TIME/SELECT	The value of the CH1 parameter on the LCD increases as the CH1 TIME/SELECT button is turned clockwise.
	CH2 TIME/SELECT	The value of the CH2 parameter on the LCD increases as the CH2 TIME/SELECT button is turned clockwise.
	CH1 MIX/DEPTH	The value of the CH1 BPM indication on the LCD increases as the CH1 MIX/DEPTH button is turned clockwise.
	CH2 MIX/DEPTH	The value of the CH2 BPM indication on the LCD increases as the CH2 MIX/DEPTH button is turned clockwise.

3. Setup mode

To enter Setup mode, while holding both the CH1 FADER START and CH2 FADER START buttons pressed, press the POWER button.

Setup Mode : ON

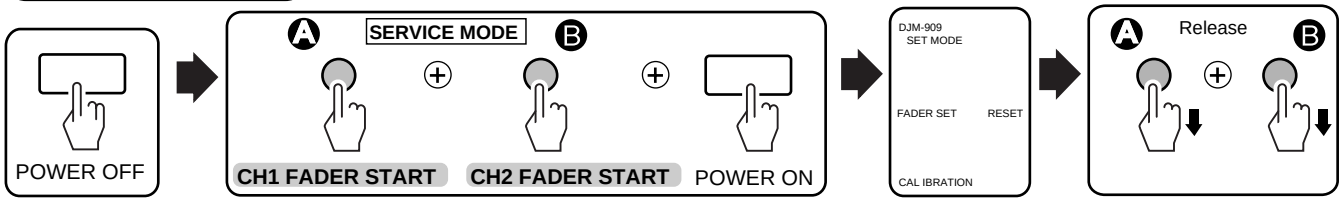

• When Setup mode is activated, "DJM-909 SETMODE" is displayed on the LCD.
During Setup mode, if the CH1 FX ADJ. button is pressed, Initial Setting mode for the noncontact fader is activated.
During Setup mode, if the CH1 FADER CURVE/ BANK EDIT button is pressed, Calibration mode for the touch panel is activated.
During Setup mode, if the CH2 FX ADJ. button is pressed, Factory-Preset Effect mode is activated.

Setup Mode : CANCEL

4. Initial Setting mode for the noncontact fader

To enter this mode, press the CH1 FX ADJ. button during Setup mode. (For details on how to enter Setup mode, see "3. Setup mode.")

Fader Setup Mode

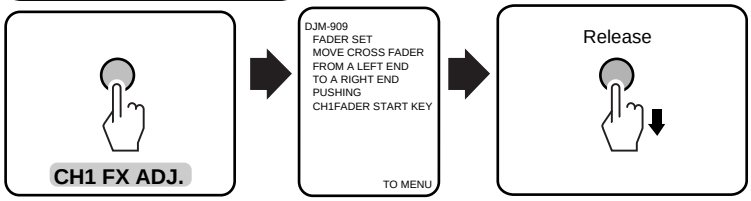

Fader Setup Mode : CANCEL

• When Initial Setting mode for the noncontact fader is activated, "DJM-909 FADER SET MOVE CROSS FADER FROM A LEFT END TO A RIGHT END PUSHING CH1 FADER START KEY" is displayed on the LCD.

How to set up

① Move the crossfader lever to the leftmost position.
② While holding the CH1 FADER START button pressed, move the crossfader lever to the rightmost position.
Move the lever at a constant speed from the leftmost to the rightmost position, taking 1.5 seconds or more.
③ Release the CH1 FADER START button.

• When the initial setting is completed, "END" is displayed on the LCD, and the CH-1 FADER START and C.F.1 FADER START indications light up.
• If the initial setting fails, "ERROR" is displayed on the LCD, and the CH-1 FADER START, C.F.1 FADER START, CH-2 FADER START, or C.F.2 FADER START indication flashes, depending on the type of error.

LED	Error
CH-1 FADER START	Start error: At the start of making the initial setting, the crossfader lever was not set to its leftmost position.
C.F.1 FADER START	Speed error: The crossfader lever was moved too quickly.
CH-2 FADER START	End error: The crossfader lever was not moved to its rightmost position.
C.F.2 FADER START	Code error: The gray codes for the crossfader could not be read.

If an error is generated, repeat from Step ① of "How to set up."

• When the initial setting for the noncontact fader is completed, press the CH2 FADER CURVE/ BANK EDIT button to return to the menu of Setup mode. You can proceed to Calibration mode for the touch panel.

5. Calibration mode for the touch panel

To enter this mode, press the CH1 FADER CURVE/ BANK EDIT button during Setup mode. (For details on how to enter Setup mode, see "3. Setup mode.")

Calibration Mode : ON

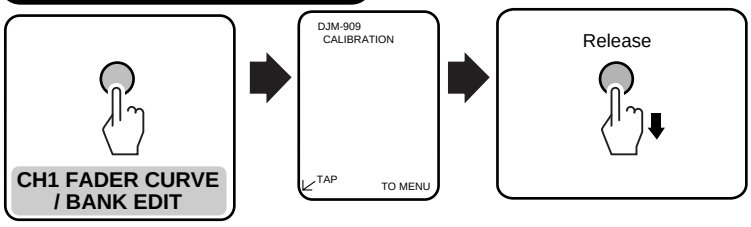

Calibration Mode : CANCEL

- When Calibration mode for the touch panel is activated, "DJM-909 CALIBRATION" is displayed at the upper center of the LCD, and "TAP" and an arrow are displayed at the lower right.

How to set up

① Tap on the tip of the arrow at the lower left of the LCD with a pointed object.
② When "TAP" and an arrow are displayed at the upper right of the LCD, tap on the tip of the arrow with the pointed object.

6. Factory-preset effect mode

To enter this mode, press the CH2 FX ADJ. button during Setup mode. (For details on how to enter Setup mode, see "3. Setup mode.")

Efect Mode : ON

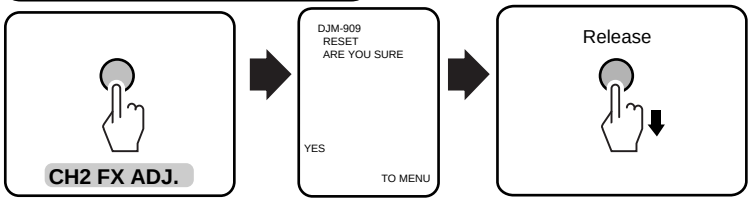

Efect Mode : CANCEL

- When Factory-Preset Effect mode is activated, "DJM-909 RESET" is displayed at the upper center of the LCD, and "ARE YOU SURE" is displayed at the lower center.

How to reset to factory-preset values

① Press the CH1 FADER CURVE/ BANK EDIT button.

7. Version Check mode

- You can check the software version of each microcomputer.

Version Mode : ON

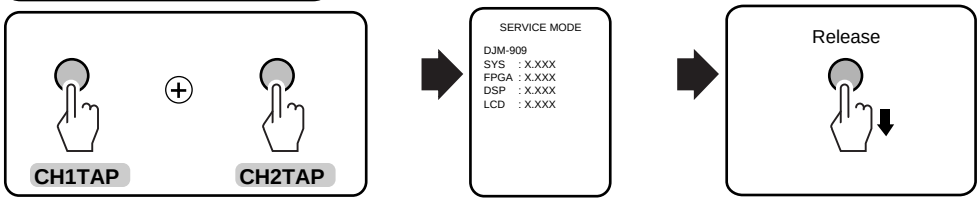

- In normal operation mode, press the CH1 TAP and CH2 TAP buttons simultaneously and hold them pressed for 10 seconds. The software version of each microcomputer is displayed on the LCD.

- To quit this mode, press any of the CH1 BANK1, CH1 BANK2, CH1 BANK3, CH2 BANK1, CH2 BANK2, CH2 BANK3, CH1 FX ADJ., CH1 FADER CURVE/ BANK EDIT, CH2 FX ADJ., or CH2 FADER CURVE/ BANK EDIT buttons.

7.1.2 Rewriting of the Software

[RS-232C Jig Schematic Diagram] : (Jig No. GGF1490)

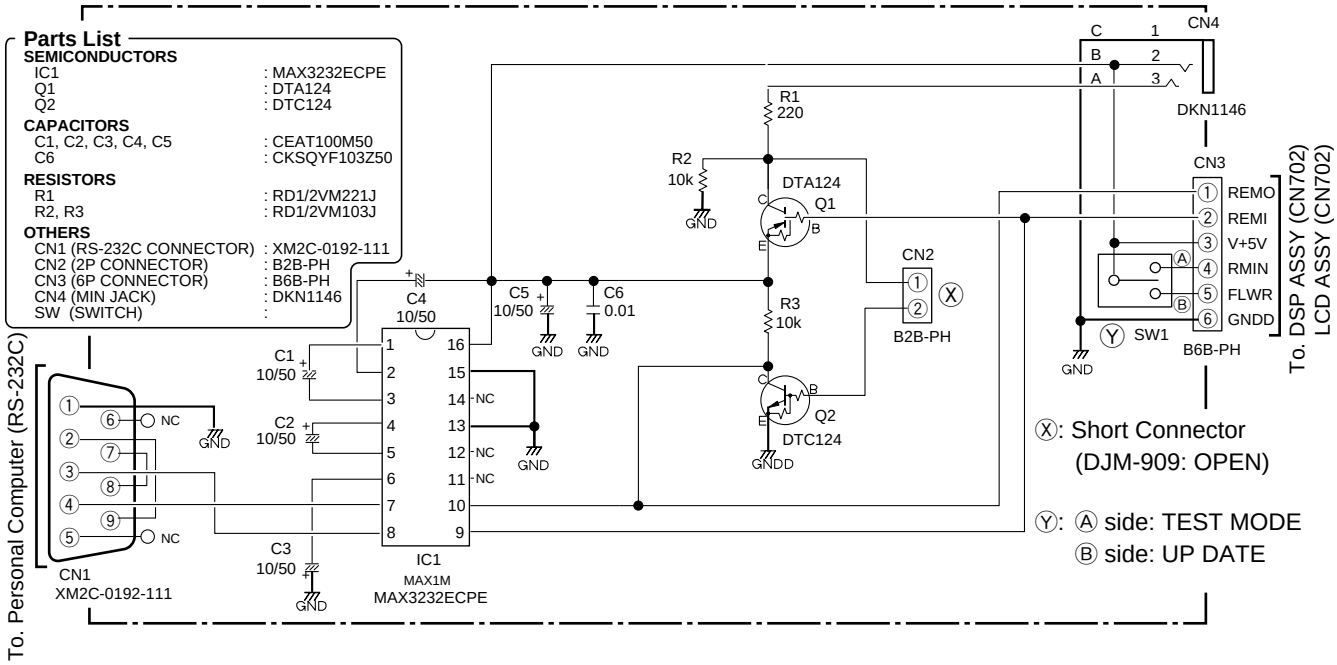

• Connection diagram of rewriting the program for the system control microcomputer

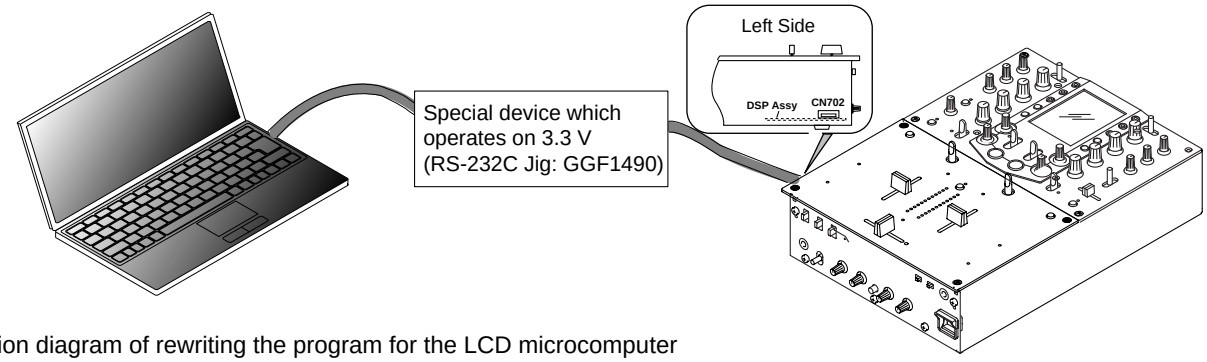

• Connection diagram of rewriting the program for the LCD microcomputer

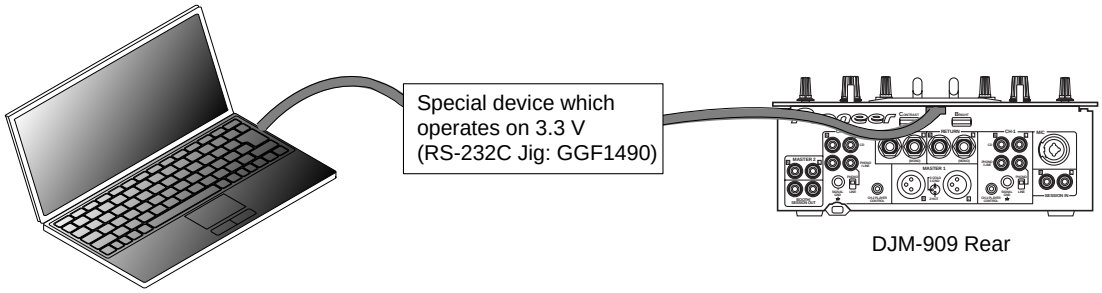

<How to rewrite software for the DJM-909>

The DJM-909 has five types of program and data blocks that can be rewritten from the outside.

A. Connector of rewriting the program for the system control microcomputer (DSP Assy: CN702)

① Program for the system control microcomputer: mixer_sys_xxxx.mot (or PD3451x8.mot)

B. Connector of rewriting the program for the LCD control microcomputer (LCD Assy: CN1001)

② Program for the LCD microcomputer: LCD_Verxxxx.mot (or PD3452x8.mot)
③ Effect program: f_upxxx_00.mot
④ Display data 1: f_upxxx_01.mot
⑤ Display data 2: f_upxxx_02.mot

Among the above-mentioned program or data blocks, programs ① and ② can be directly rewritten using the above-mentioned connectors, but the program or data blocks ③-⑤ cannot be directly rewritten, because connectors for direct rewriting are not provided. Therefore, to rewrite the program or data blocks ③-⑤, the program or data is (are) first copied to the LCD microcomputer with a program for executing rewriting, and after executing that program, rewriting will be executed. The program for performing this rewriting remains in the LCD microcomputer after the program or data blocks ③-⑤ has (have) been rewritten, and if you turn on the power in this condition, the program that performs the rewriting will run again.

Therefore, it is necessary to rewrite the program of the LCD microcomputer ② after any of the program or data blocks ③-⑤ is (are) rewritten.

Note:
If the unit is accidentally turned on without rewriting the program of the LCD microcomputer ② after any of the program or data blocks ③-⑤ was (were) rewritten, the LED of the main unit (see Fig. 1) will blink. Be sure to wait until the LED stops blinking and remains lit, then turn off the unit. If you turn off the unit while the LED is blinking, the unit will not operate properly.

- Effect program : BANK1 LED (Ⓐ)
- Display data 1 : BANK2 LED (Ⓑ)
- Display data 2 : BANK3 LED (Ⓒ)

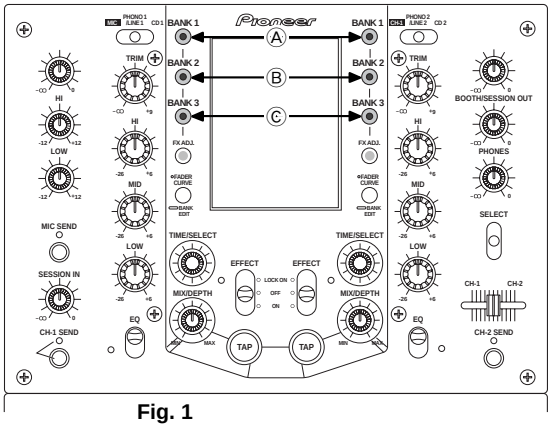

Fig. 1

• Time required for rewriting

1. Time required for transferring the rewriting control program: 5 sec
2. Time required for rewriting the program for the system control microcomputer: 2 min 30 sec
3. Time required for transferring the Effect program: 40 sec
   Time required for rewriting the program: 15 sec
4. Time required for transferring Display data 1: 1 min 15 sec
   Time required for rewriting the program: 15 sec
5. Time required for transferring Display data 2: 1 min
   Time required for rewriting the program: 15 sec
6. Time required for rewriting the program for the LCD microcomputer: 1 min 25 sec

• Notes

- Use the special device for PC connection, which operates on 3.3 V (Jig No.GGF1490).
- Be sure to rewrite the program for the LCD microcomputer after rewriting the flash ROM. If the Effect program, Display data 1, and Display data 2 are to be rewritten along with the program for the LCD microcomputer, rewrite these first then rewrite the program for the LCD microcomputer.
- If the rewriting control program is not transferred when OK is clicked on while "Set to Boot mode and restart by resetting" is displayed in the rewriting procedure below, the following causes may be suspected:
  1. The special device is not securely connected.
  2. The special device does not operate on 3.3 V.
  3. The DJM-909 is not turned on.

- **After rewriting the program for the system control microcomputer, make the initial setting for the noncontact fader (see "7.1.1 Service mode").**
- **After rewriting the program for the LCD control microcomputer, make the initial setting for the Calibration mode (touch panel) (see "7.1.1 Service mode").**

1. How to rewrite the program for the system control microcomputer

① With the DJM-909's power off, connect the DJM-909 and a PC via the special device, by connecting it to the connector for rewriting the program for the system control microcomputer.
② Turn on the DJM-909.
③ Start up [FLASH.exe.], the software for rewriting, on the PC.
④ Assign "3068F.INF" to "Device selection Flash memory block information file."

⑤ Assign 5 sec to "Timeout duration."

⑥ Assign "Boot mode" to "Mode selection."

⑦ Click on "Set".

• Operating screen

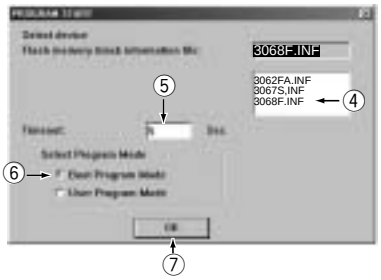

⑧ If "Set to Boot mode and restart by resetting" is displayed, click on "OK".

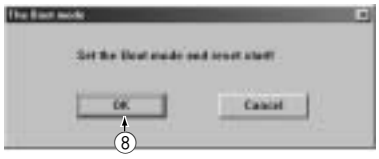

⑨ The rewriting control program is transferred in 5 seconds.

⑩ When program transfer is finished, the display in the window disappears.
Select "WRITE" at the upper left of the menu bar.

⑪ After clicking on "Reference", select "mixer_sys_xxxx.mot" (or PD3453x8.mot) for "File name."
⑫ Assign "00000000" to "Start address."
⑬ Assign "0003FFFF" to "End address."
⑭ Assign "0" to "Offset."

⑮ Click on "OK".

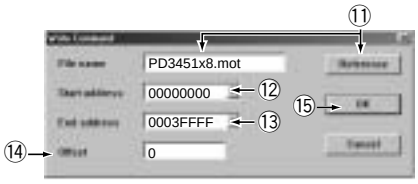

⑯ The system control computer program is transferred in 2 min 30 sec.

⑰ When program transfer is finished, the display in the window disappears.
Select File on the menu bar then Exit to exit the program.

⑱ Turn off the DJM-909.
⑲ Disconnect the special device from the DJM-909.

• After rewriting the program for the system control microcomputer, make the initial setting for the noncontact fader (see "7.1.1 Service mode").

2. How to rewrite the Effect program (rewriting the program in the flash ROM)

① With the DJM-909's power off, connect the DJM-909 and a PC via the special device by connecting it to the connector for rewriting the program for the LCD microcomputer.
② Turn on the DJM-909.
③ Start up [FLASH.exe.], the software for rewriting, on the PC.
④ Assign "3062FA.INF" to "Device selection Flash memory block information file."

• Operating screen

⑤ Assign 5 sec to "Timeout duration."

⑥ Assign "Boot mode" to "Mode selection."

⑦ Click on "Set".

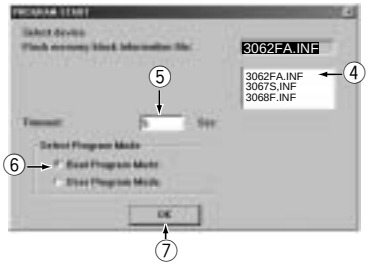

⑧ If "Set to Boot mode and restart by resetting" is displayed, click on "OK".

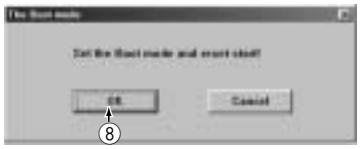

⑨ The rewriting control program is transferred in 5 seconds.

⑩ When program transfer is finished, the display in the window disappears.
Select "WRITE" at the upper left of the menu bar.

⑪ After clicking on Reference, select "f_upxxx_00.mot" for "File name."
⑫ Assign "00000000" to "Start address."
⑬ Assign "0001FFFF" to "End address."
⑭ Assign "0" to "Offset."
⑮ Click on "OK".

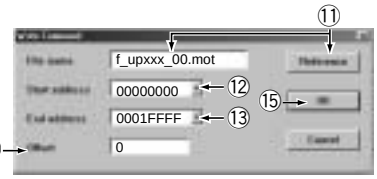

⑯ The program is transferred in 40 sec.

⑰ When program transfer is finished, the display in the window disappears.
Select File on the menu bar then "Exit" to exit the program.

⑱ Turn off the DJM-909.
⑲ Disconnect the special device from the DJM-909.
⑳ Turn on the DJM-909.
㉑ Rewriting of the flash ROM by the LCD microcomputer starts and is completed in 15 seconds. Nothing is displayed on the LCD.
㉒ Rewriting is completed when the "BANK 1" LED lights up.
㉓ Turn off the DJM-909.

Note: Be sure to rewrite the program for the LCD microcomputer after rewriting the program in the flash ROM.
If rewriting of Display data 1 and Display data 2 are also required along with the Effect program, be sure to rewrite these first then rewrite the program for the LCD microcomputer.

3. How to rewrite the Display data 1 (rewriting the data in the flash ROM)

① With the DJM-909's power off, connect the DJM-909 and a PC via the special device, by connecting it to the connector for rewriting the program for the LCD microcomputer.
② Turn on the DJM-909.
③ Start up [FLASH.exe.], the software for rewriting, on the PC.
④ Assign "3062FA.INF" to "Device selection Flash memory block information file."

• Operating screen

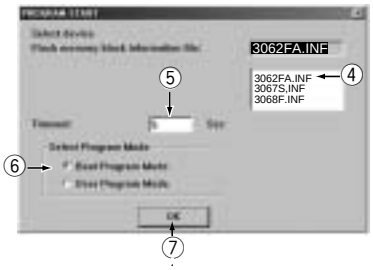

⑤ Assign 5 sec to "Timeout duration."

⑥ Assign "Boot mode" to "Mode selection."

⑦ Click on "Set".

⑧ If "Set to Boot mode and restart by resetting" is displayed, click on "OK".

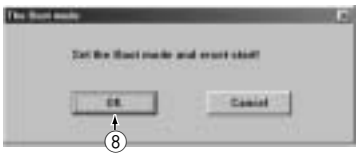

⑨ The rewriting control program is transferred in 5 seconds.

⑩ When program transfer is finished, the display in the window disappears.
Select "WRITE" at the upper left of the menu bar.

⑪ After clicking on Reference, select "f_upxxx_01.mot" for "Filename".
⑫ Assign "00000000" to "Start address."
⑬ Assign "0001FFFF" to "End address."
⑭ Assign "0" to "Offset."
⑮ Click on "OK".

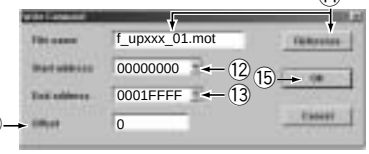

⑯ The program is transferred in 1 min 15 sec.

⑰ When program transfer is finished, the display in the window disappears.
Select File on the menu bar then Exit to exit the program.
⑱ Turn off the DJM-909.
⑲ Disconnect the special device from the DJM-909.
⑳ Turn on the DJM-909.
㉑ Rewriting of the data in the flash ROM by the LCD microcomputer starts and is completed in 15 seconds. Nothing is displayed on the LCD.
㉒ Rewriting is completed when the "BANK 2" LED lights up.
㉓ Turn off the DJM-909.

Note: Be sure to rewrite the program for the LCD microcomputer after rewriting the data in the flash ROM.
If rewriting of Effect program and Display data 2 are also required along with Display data 1, be sure to rewrite these first then rewrite the program for the LCD microcomputer.

4. How to rewrite the Display data 2 (rewriting the data in the flash ROM)

① With the DJM-909's power off, connect the DJM-909 and a PC via the special device, by connecting it to the connector for rewriting the program for the LCD microcomputer.
② Turn on the DJM-909.
③ Start up [FLASH.exe.], the software for rewriting, on the PC.

④ Assign "3062FA.INF" to "Device selection Flash memory block information file."

⑤ Assign 5 sec to "Timeout duration."

⑥ Assign "Boot mode" to "Mode selection."

⑦ Click on "Set".

• Operating screen

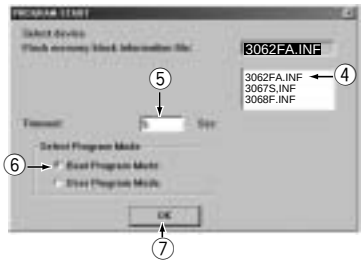

⑧ If "Set to Boot mode and restart by resetting" is displayed, click on "OK".

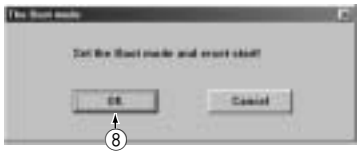

⑨ The rewriting control program is transferred in 5 seconds.

⑩ When program transfer is finished, the display in the window disappears.
Select "WRITE" at the upper left of the menu bar.

⑪ After clicking on Reference, select "f_upxxx_02.mot" for "Filename".
⑫ Assign "00000000" to "Start address."
⑬ Assign "0001FFFF" to "End address."
⑭ Assign "0" to "Offset."
⑮ Click on "OK".

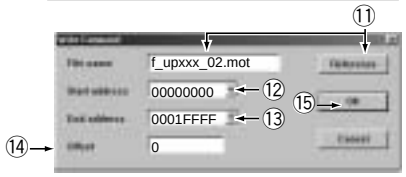

⑯ The program is transferred in 1 min.

⑰ When program transfer is finished, the display in the window disappears.
Select File on the menu bar then Exit to exit the program.
⑱ Turn off the DJM-909.
⑲ Disconnect the special device from the DJM-909.
⑳ Turn on the DJM-909.
㉑ Rewriting of the data in the flash ROM by the LCD microcomputer starts and is completed in 15 seconds. Nothing is displayed on the LCD.
㉒ Rewriting is completed when the "BANK 3" LED lights up.
㉓ Turn off the DJM-909.

Note: Be sure to rewrite the program for the LCD microcomputer after rewriting the data in the flash ROM.
If rewriting of Effect program and Display data 1 are also required along with Display data 2, be sure to rewrite these first then rewrite the program for the LCD microcomputer.

5. How to rewrite the program for the LCD microcomputer

① With the DJM-909's power off, connect the DJM-909 and a PC via the special device, by connecting it to the connector for rewriting the program for the LCD microcomputer.
② Turn on the DJM-909.
③ Start up [FLASH.exe.], the software for rewriting, on the PC.

• Operating screen

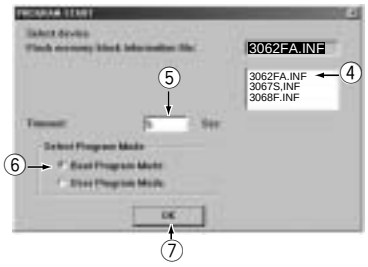

④ Assign "3062FA.INF" to "Device selection Flash memory block information file."

⑤ Assign 5 sec to "Timeout duration."

⑥ Assign "Boot mode" to "Mode selection."

⑦ Click on "Set".

⑧ If "Set to Boot mode and restart by resetting" is displayed, click on "OK".

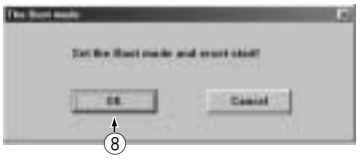

⑨ The rewriting control program is transferred in 5 seconds.

⑩ When program transfer is finished, the display in the window disappears.
Select "WRITE" at the upper left of the menu bar.

⑪ After clicking on Reference, select "LCD_Verxxxx.mot" (or "PD3452x8.mot") for "Filename".
⑫ Assign "00000000" to "Start address."
⑬ Assign "0001FFFF" to "End address."
⑭ Assign "0" to "Offset."
⑮ Click on "OK".

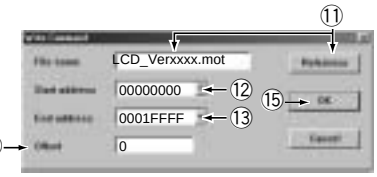

⑯ The program is transferred in 1 min 25 sec.

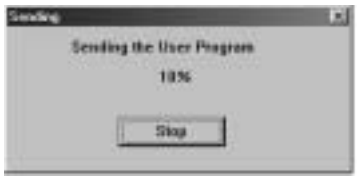

⑰ When program transfer is finished, the display in the window disappears.
Select File on the menu bar then Exit to exit the program.

⑱ Turn off the DJM-909.
⑲ Disconnect the special device from the DJM-909.

• After rewriting the program for the LCD control microcomputer, make the initial setting for the Calibration mode (touch panel) (see "7.1.1 Service mode").

7.1.3 POWER ON SEQUENCE

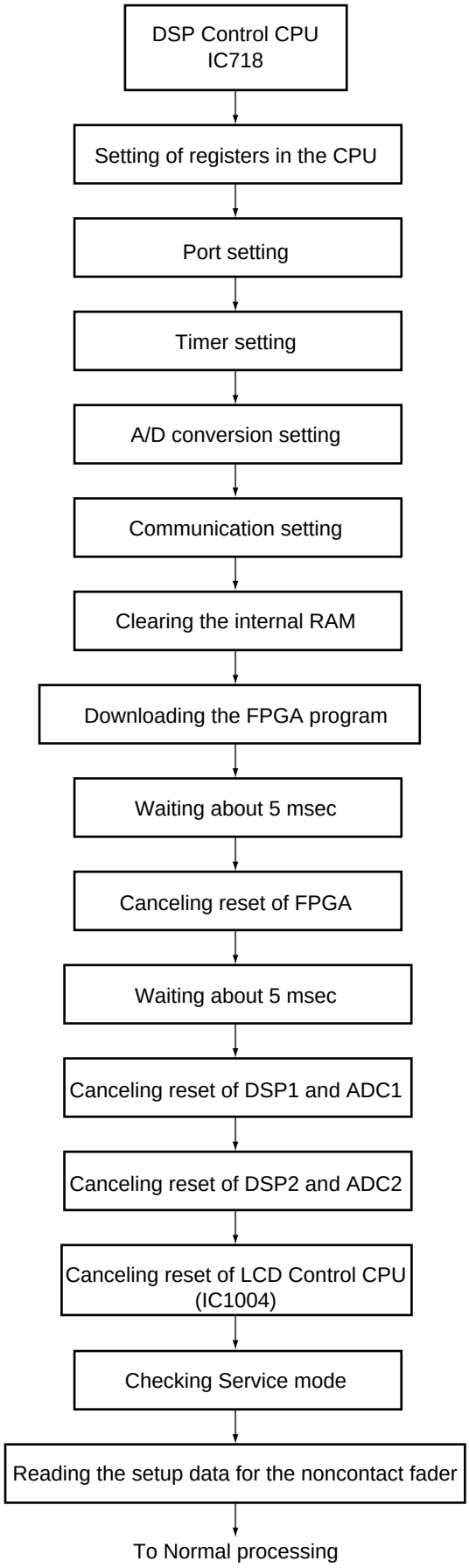

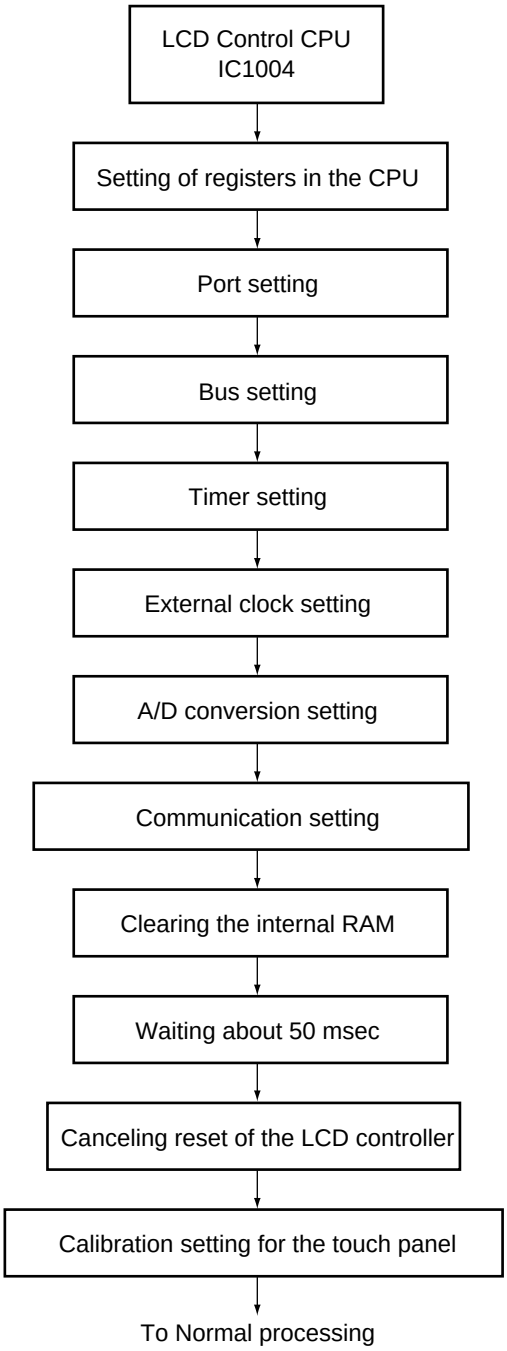

7.1.4 Table of the roles of the microcomputers

CPU	Operation Panel part	Operation position
LCD CONTROL CPU (IC1004)	Effect Operation Panel	Touch Panel CH1 BANK 1 - 3 CH2 BANK 1 - 3 CH1 FX ADJ. CH2 FX ADJ. FADER CURVE CH1 FADER CURVE/ BANK EDIT CH2 FADER CURVE/ BANK EDIT CH1 TIME/ SELECT CH2 TIME/ SELECT CH1 MIX/ DEPTH CH2 MIX/ DEPTH CH1 EFFECT ON/OFF CH2 EFFECT ON/OFF CH1 TAP CH2 TAP Touch Panel Backlight Control
	Rear Panel	
DSP CONTROL CPU (IC718)	Operation Panel	CH1 Fader Start ON/OFF CH2 Fader Start ON/OFF CH Transformer CH Transformer CH1 CH Fader CH2 CH Fader Cross Fader Monitor Select Switch
	Front Panel	CH1 Fader Reverse CH2 Fader Reverse Cross Fader Reverse Foot Switch Channel Select Switch CH1 Fader Curve CH2 Fader Curve Cross Fader 1Curve Cross Fader 2Curve Fader Cut Lag VR CH1 Fader Start Selector Switch CH2 Fader Start Selector Switch Foot SW Jack Insertion Detection
Except microcomputer operation	Operation Panel	CH1 Input Selector Switch CH2 Input Selector Switch MIC SEND ON/OFF CH1 SEND ON/OFF CH2 SEND ON/OFF CH1 EQ ON/OFF CH2 EQ ON/OFF Level Meter Change
	Rear Panel	Cross Fader Feeling ADJ. LCD Contrast ADJ. CH1 LINE/PHONO Select Switch CH2 LINE/PHONO Select Switch Return Jack Insertion Detection Send Jack Insertion Detection
Audio-signal operation sections		CH1 TRIM CH2 TRIM CH1 EQ (Hi, Mid , Lo) CH2 EQ (Hi, Mid , Lo) MIC VR MIC EQ (Hi, Lo) SESSION VR Master VR BOOTH /SESSION VR Phones VR Monitor Balance

CPU	Disply Panel	Disply Control Panel
LCD CONTROL CPU (IC1004)	Effect Operation Panel	LCD Disply LCD LED Lighting
DSP CONTROL CPU (IC718)		VCA Voice Level Control Mute Control Fader Start Signal Analog Switch Control Lighting All LED
Except LED microcomputer operation	Operation Panel	MIC SEND CH1 SEND CH2 SEND CH1 EQ ON CH2 EQ ON CH1 TAP CH2 TAP Level Meter Change

7.1.5 DISASSEMBLY

Diagnosis of MAIN Assy

To diagnose the MAIN Assy, remove the bottom plate, as shown below:

① Remove the eight screws.
② Remove the bottom plate.

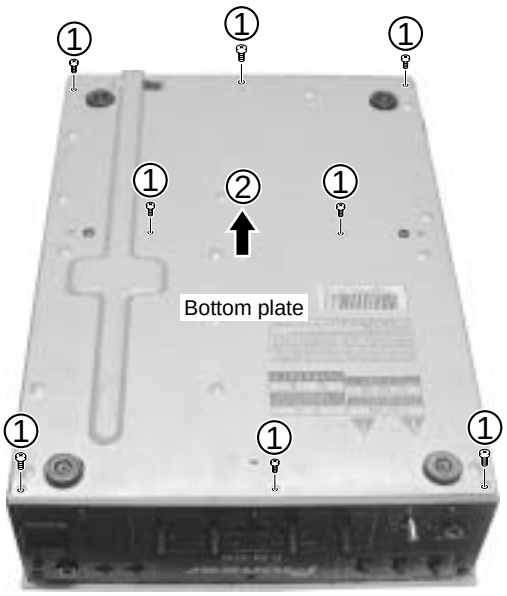

● **Bottom view**

Diagnosis

1 Diagnosis of Fader Section

① Remove the three slider knob (L)s.
② Remove the four screws.
③ Remove the control panel (D9).

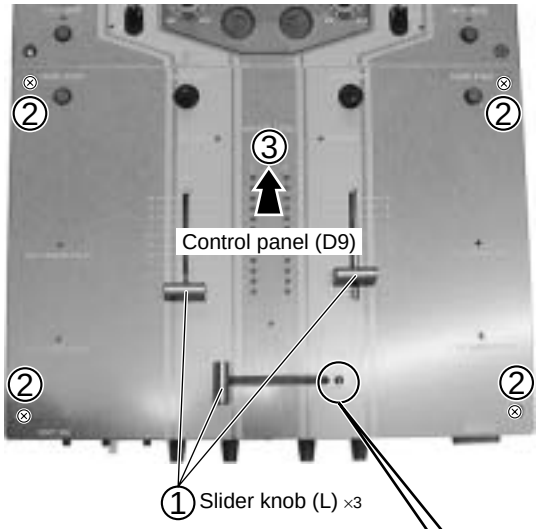

● **About the load-adjuster screw (FEELING ADJ.) for the slider**

Loading (smoothness) of the slider can be adjusted according to the user's preference.
For adjustment, use the supplied hexagonal driver.

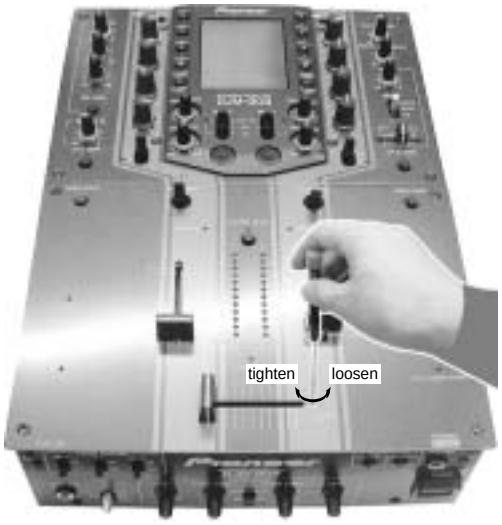

④ Remove the one screw.

⑤ Remove the panel stay (D) assy.

Note: As the control panel (U9) may easily get scratched, pull out or push in the panel stay (D) assy, slightly tilting it during disassembly or reassembly.

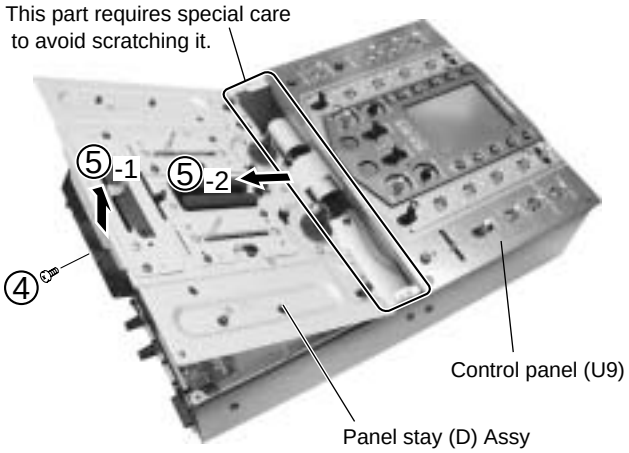

Note for removing the Front Panel block

When removing the Front Panel block from the unit, remove the screws indicated by the arrows (⇩).

⑥ Arrange the unit as shown in the photo below.

Note: As the flexible cables are short, provide a stand with a height similar to the unit's below the plate, to make your work easier.

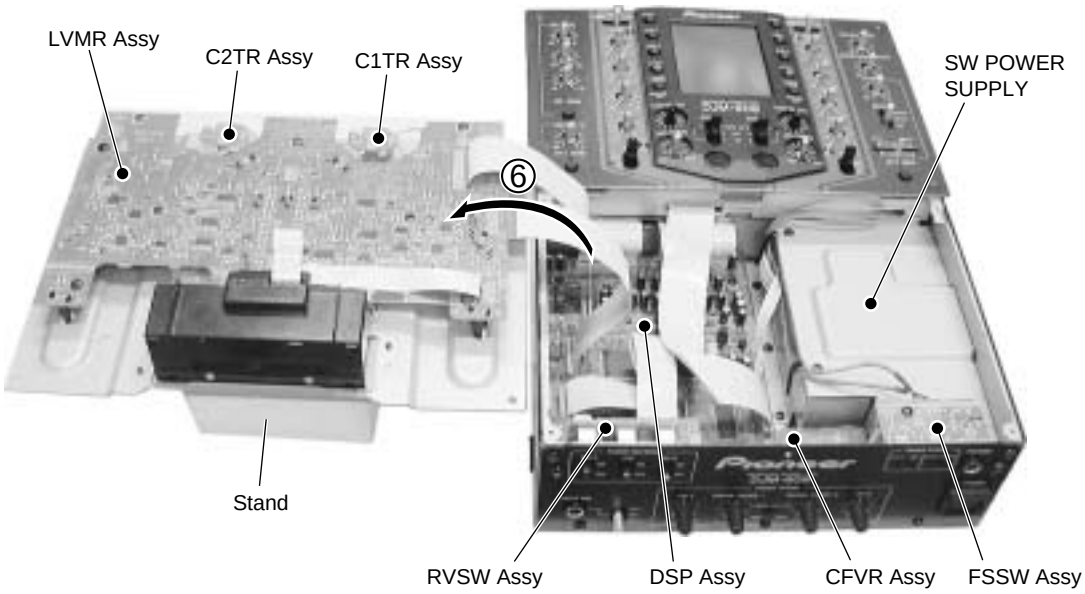

Diagnosis

⑦ Remove the six screws.
⑧ Remove the three volumes.

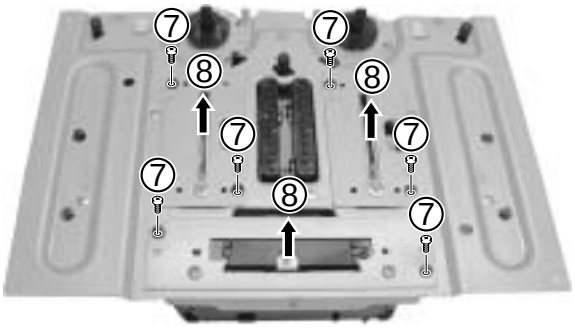

Exchange

● About the TRANSFORM ON/OFF lever

The pivot direction of the TRANSFORM ON/OFF lever can be changed by 45°, according to the user's preference.

① Remove the four screws.

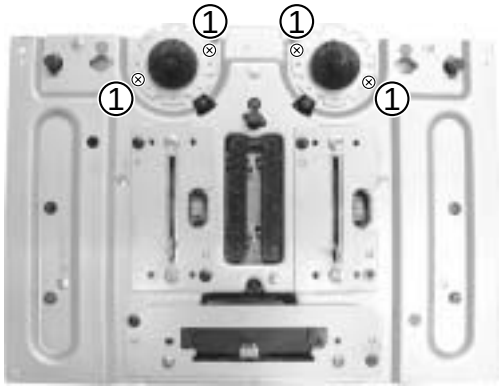

② Turn a direction.

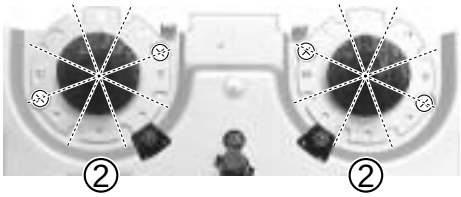

③ Reattatch the four screws.

2 Diagnosis of LCD, EQ and SEND Section

① Remove all volume knobs.
② Remove the nine screws.
③ Remove the control panel (U9).

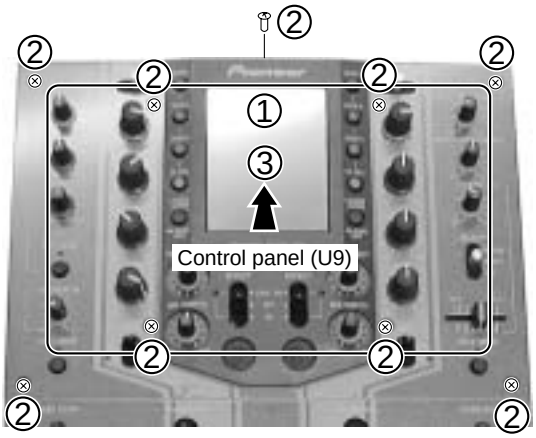

④ Remove the seven screws.
⑤ Remove the earth lead by removing the one screw.
⑥ Remove the Flexible Cable
⑦ Remove the LCD Section.

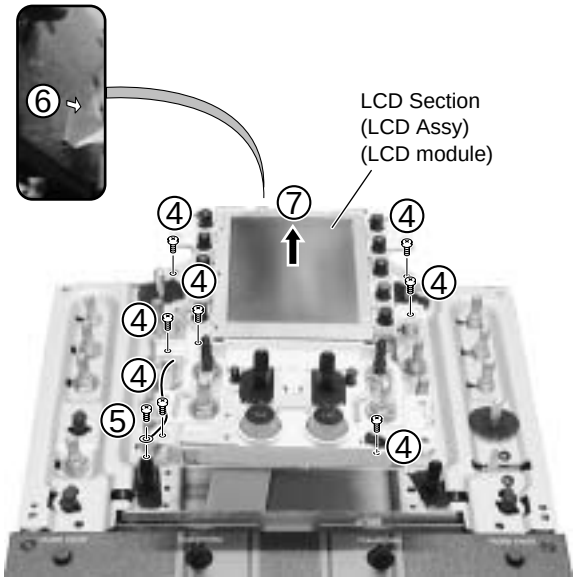

⑧ Remove the two screws.
⑨ Remove the two hexagonal nuts.
⑩ Remove the two hexagonal nuts.
⑪ Remove the panel stay (U9).

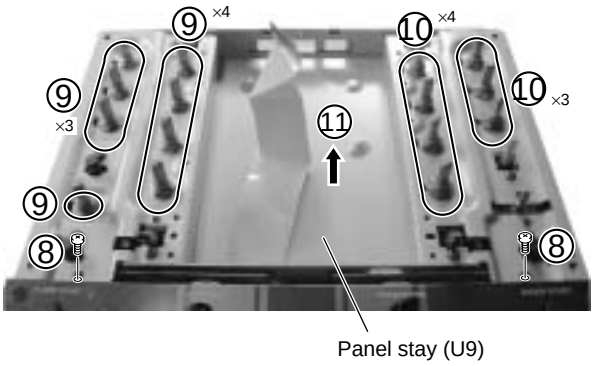

⑫ Insert the flexible-cable connector to the LCD block.

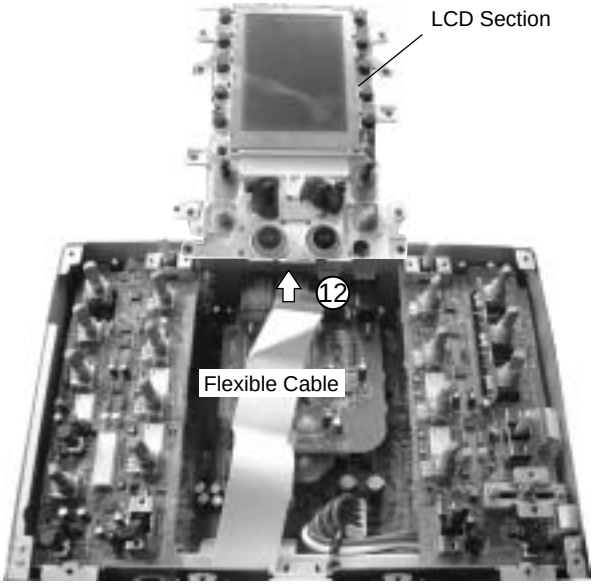

⑬ Return the LCD block to its original position.

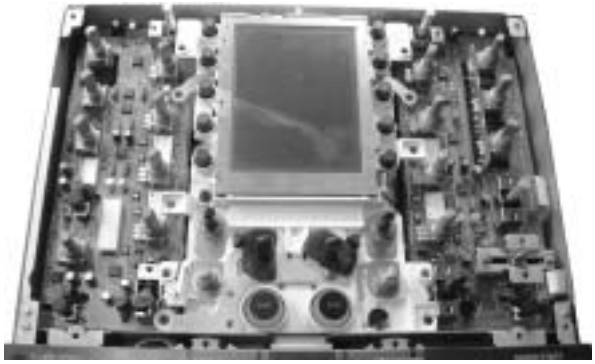

Diagnosis

3 Note for attaching the LCD Assy

When tightening the six screws ① – ⑥ , make sure that the VR Ⓐ is at the center of the attaching hole.

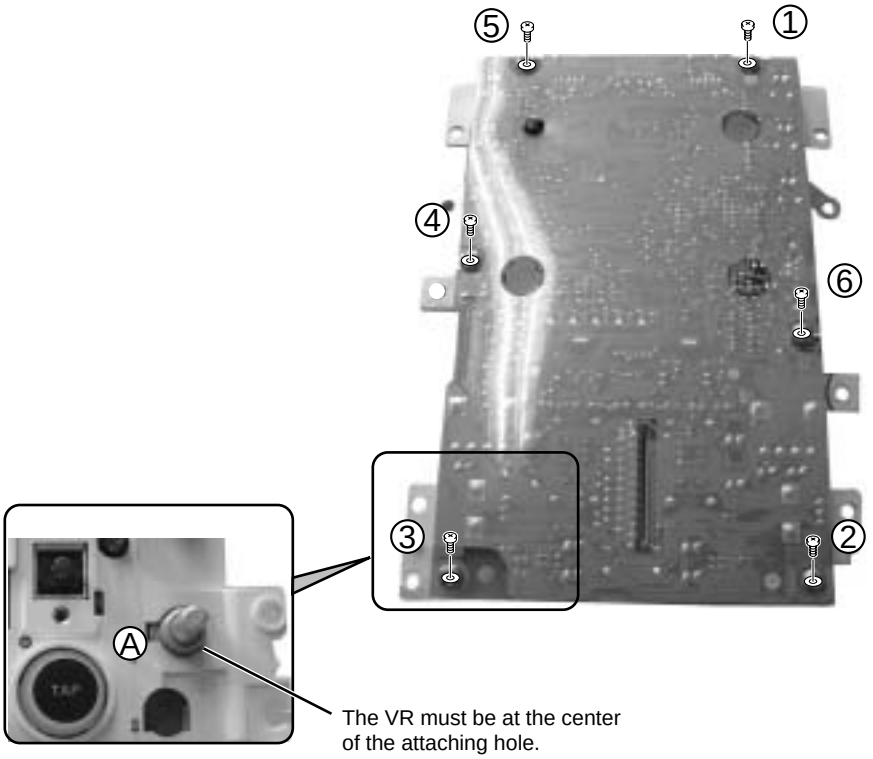

4 Note for attaching the LCD Assy to the panel stay

When tightening the six screws ① – ⑥, make sure that the positions of the two holes Ⓑ of the LCD Assy will not be shifted from the holes on the panel stay.

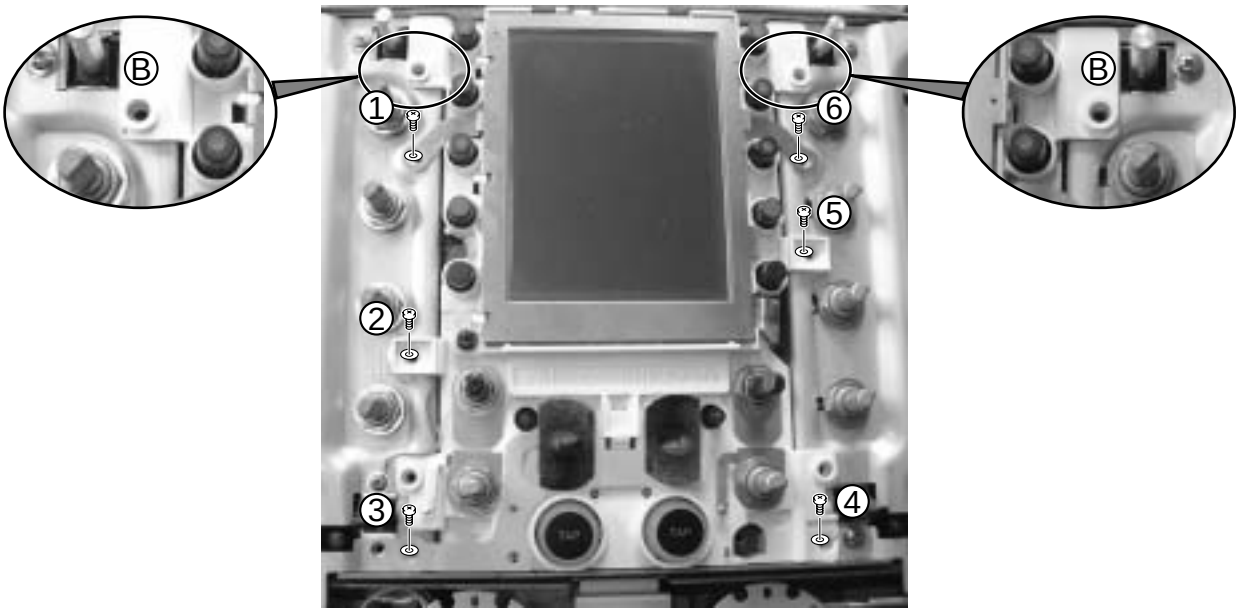

5 Note for attaching the MIC LEVEL VR

① Tighten only the nut for the MIC LEVEL VR, and leave the other nuts untightened at this point.

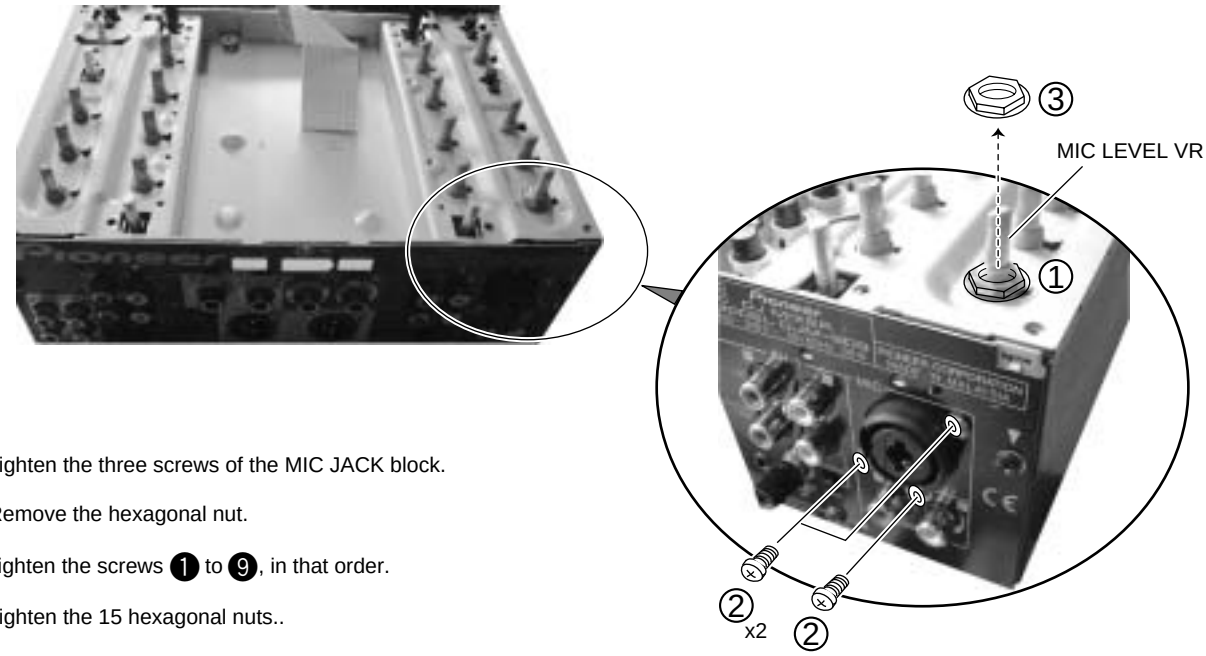

② Tighten the three screws of the MIC JACK block.

③ Remove the hexagonal nut.

④ Tighten the screws ❶ to ❾, in that order.

⑤ Tighten the 15 hexagonal nuts..

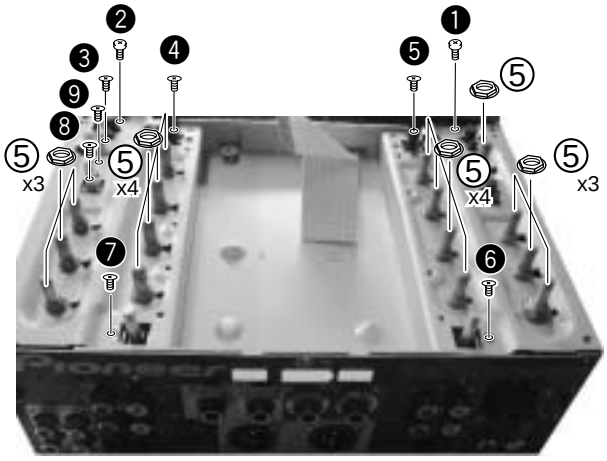

7.1.6 CONFIGURATION OF THE PC BOARD

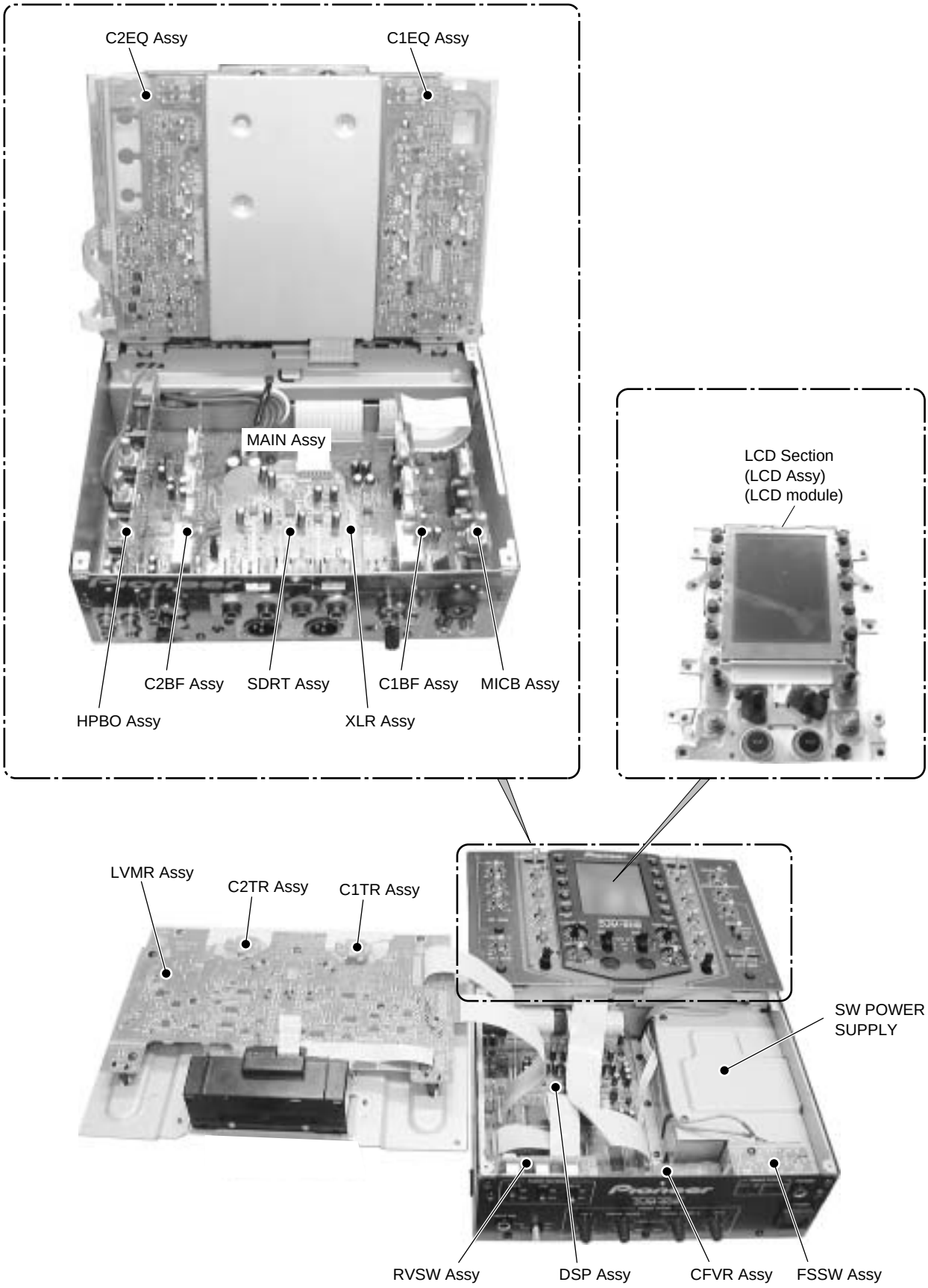

7.2 PARTS

7.2.1 IC INFORMATION

• The information shown in the list is basic information and may not correspond exactly to that shown in the schematic diagrams.

● **List of IC**

SSM2018TP, PD3451B8, PD3452B8

■ SSM2018TP (MAIN ASSY : IC114-IC117)

• Voltage Controlled Amplifiers

● **Pin Arrangement (Top view)**

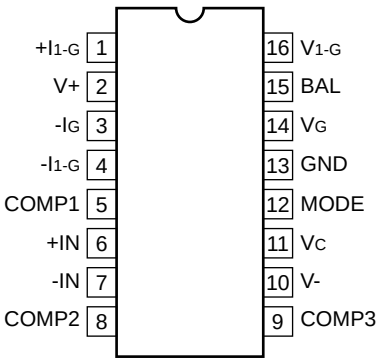

● **Block Diagram**

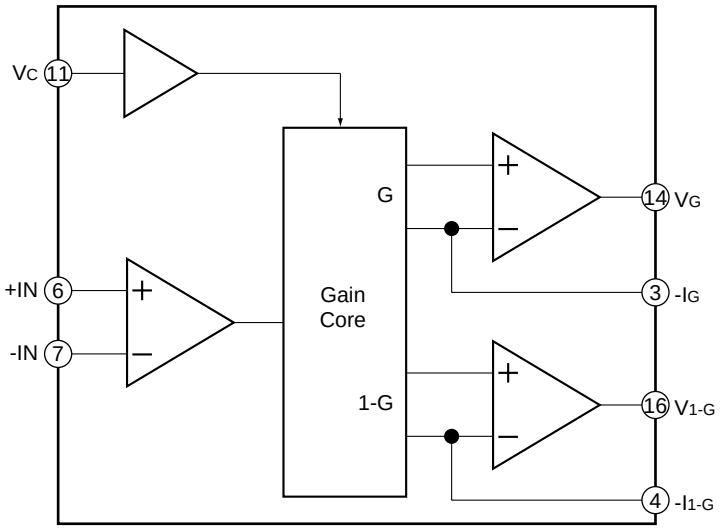

PD3451B8 (DSP ASSY : IC718)

• Main CPU

Pin Function

No.	Mark	Name	I/O	Function
1	Vcl	Vcl	O	Connect a external capacitor between this pin and GND
2	PB0/TP8/TMO0/XCS7		I	
3	PB1/TP9/TMO1/XCS6		I	
4	PB2/TP10/TMO2/XCS5	CH1_FD_R_LED	O	Fader reverse LED of CH 1
5	PB3/TP11/TMO3/XCS4	CH2_FD_R_LED	O	Fader reverse LED of CH 2
6	PB4/TP12		I	
7	PB5/TP13		I	
8	PB6/TP14	CH1_FD_ST_SW	I	Fader start switch of CH 1
9	PB7/TP15	CH2_FD_ST_LED	O	Fader start LED of CH 2
10	FEW	FLWR	I	Writing enable signal
11	Vss	Vss	I	GND
12	P90/TXD0	S2DO	I	TXD for FPGA
13	P91/TXD1	S1DO	I	TXD for CPU
14	P92/RXD0	S2DI	O	RXD for FPGA
15	P93/RXD1	S1DI	O	RXD for CPU
16	P94/SCK0/XIRQ4	S2CLK	O	CLK for FPGA
17	P95/SCK1/XIRQ5	S1CLK	I	CLK for CPU
18	P40/D0	F_WE	O	Write permission to the flash
19	P41/D1	CRS_FDB_ST_LED	O	Fader start LED of cross fader side B
20	P42/D2	H8_RST	O	Reset signal to the upper microcomputer
21	P43/D3	CRS_FD_R_LED	O	Cross fader reverse LED
22	Vss	Vss	I	GND
23	P44/D4	CH2_TRS_SW	I	Transform switch of CH 2
24	P45/D5	CH1_TRS_SW	I	Transform switch of CH 1
25	P46/D6		I	
26	P47/D7	CH1_FD_ST_LED	O	Fader start LED of CH 1
27	P30/D8	CRS_FDA_ST_LED	O	Fader start LED of cross fader side A
28	P31/D9	FT_SW_CONT	I	Foot switch CONT
29	P32/D10	FT_SW_CH2	I	Foot switch CH 2
30	P33/D11	EF2_ON	O	DSP output ON for CH 2
31	P34/D12	EF1_ON	O	DSP output ON for CH 1
32	P35/D13	FT_SW_CH1	I	Foot switch CH 1
33	P36/D14	CRS_FD_R_SW	I	Cross fader reverse switch
34	P37/D15	CH2_FD_R_SW	I	Fader reverse switch of CH 2
35	Vcc	Vcc	I	Power supply
36	P10/A0	CH2_FD_SEL_SW	I	Fader select switch of CH 2
37	P11/A1	CH1_FD_R_SW	I	Fader reverse switch of CH 1
38	P12/A2	CH1_FD_SEL_SW	I	Fader select switch of CH 1
39	P13/A3		I	
40	P14/A4	MON_SW2	I	
41	P15/A5	MON_SW1	I	
42	P16/A6	MON_SEL2	I	
43	P17/A7	MON_SEL1	I	
44	Vss	Vss	I	GND
45	P20/A8	HP_MUTE	O	Headphone MUTE
46	P21/A9	MUTE	O	Master MUTE
47	P22/A10	XPROGRAM		
48	P23/A11	FPGARST		

No.	Mark	Name	I/O	Function
49	P24/A12	XSSFPGA		
50	P25/A13	DSP2DSP1	I	
51	P26/A14	DTOL	O	Serial communication from DSP board UCOM to LCD board UCOM
52	P27/A15	LTOD	I	Serial communication from LCD board UCOM to DSP board UCOM
53	P50/A16		I	
54	P51/A17		I	
55	P52/A18	ICCK	O	
56	P53/A19	ICDT	I/O	
57	Vss	Vss	I	GND
58	P60/XWAIT		I	
59	P61/XBREQ		I	
60	P62/XBACK		I	
61	P67/ ϕ		I	
62	XSTBY	XSTBY	I	Standby Low: Standby mode
63	XRES	XRESET	I	Reset input Low: Reset
64	NMI	NMI	I	Non maskable interruption request Active Low
65	Vss	Vss	I	GND
66	EXTAL	EXTAL	I	Connect a crystal resonator
67	XTAL	XTAL	I	Connect a crystal resonator
68	Vcc	Vcc	I	Power supply
69	P63/XAS	CH2_STOP	O	CH 2 stop signal of fader start
70	P64/XRD	CH2_STAT	O	CH 2 start signal of fader start
71	P65/XHWR	CH1_STOP	O	CH 1 stop signal of fader start
72	P66/XLWR	CH1_STAT	O	CH 1 start signal of fader start
73	MD0	MD0	I	Operation mode control pin MD2 : HIGH MD1 : HIGH MD0 : HIGH mode 7 Built-in ROM and RAM are valid.
74	MD1	MD1	I	
75	MD2	MD2	I	
76	AVcc	AVcc	I	Power supply for A/D converter
77	VREF	VREF	I	Reference voltage input for A/D converter
78	P70/AN0	CH2_FD_VR	I	Fader volume of CH 2
79	P71/AN1	CH1_FD_VR	I	Fader volume of CH 1
80	P72/AN2	FT_VR	I	Foot switch volume
81	P73/AN3	CRS_FDB_CV	I	Curve volume of cross fader side B
82	P74/AN4	CRS_FDA_CV	I	Curve volume of cross fader side A
83	P75/AN5	CH2_FD_CV	I	Fader curve volume of CH 2
84	P76/AN6/DA0	CH1_FD_CV	I	Fader curve volume of CH 1
85	P77/AN7/DA1	CRS_FD_RRV	I	Cross fader response lag volume
86	AVss	Avss	I	Ground for A/D converter
87	P80/XIRQ0		I	
88	P81/XIRQ1/XCS3	XSSDAC		
89	P82/XIRQ2/XCS2		I	
90	P83/XIRQ3/XCS1/XADTRG	DGP2DSP2	I	
91	P84/XCS0		I	
92	Vss		I	GND
93	PA0/TP0/TCLKA	RESETDSP2		
94	PA1/TP1/TCLKB	RESETDSP1		
95	PA2/TP2/TIOCA0/TCLKC	VCA1_CONT	O	
96	PA3/TP3/TIOCB0/TCLKD			
97	PA4/TP4/TIOCA1	VCA2_CNT	O	
98	PA5/TP5/TIOCB1			
99	PA6/TP6/TIOCA2	DONE		
100	PA7/TP7/TIOCB2	CH2_FD_ST_SW	I	Fader start switch of CH 2

■ PD3452B8 (LCD ASSY : IC1004)

• LCD Control CPU

● Pin Function

No.	Mark	Name	I/O	Function
1	Vcl	Vcl	O	Connect a external capacitor between this pin and GND
2	PB0/TP8/TMO0/XCS7	DTOL	I	Serial communication from DSP board UCOM to LCD board UCOM
3	PB1/TP9/TMO1/XCS6	LTOD	O	Serial communication from LCD board UCOM to DSP board UCOM
4	PB2/TP10/TMO2/XCS5	LDATA3	O	Data for effect LED
5	PB3/TP11/TMO3/XCS4	LDATA2	O	Data for BANK3 LED
6	PB4/TP12	CH1_LCLK	O	LED latch clock for CH 1
7	PB5/TP13	CH2_ENC1	I	Encoder signal 1 for CH 2
8	PB6/TP14	SEL1	O	DSP chip select
9	PB7/TP15	CH2_ENC2	I	Encoder signal 2 for CH 2
10	FEW	FLWR	I	Writing enable signal of built-in flash ROM
11	Vss	Vss	I	GND
12	P90/TXD0	STX0	I	Transmit port for DSP communication
13	P91/TXD1	STX1	I	Transmit port for microcomputer communication
14	P92/RXD0	SRX0	O	Receive port for DSP communication
15	P93/RXD1	SRX1	O	Receive port for microcomputer communication
16	P94/SCK0/XIRQ4	SCK0	O	Clock for DSP communication
17	P95/SCK1/XIRQ5	SCK1	O	Clock for microcomputer communication
18	P40/D0	DT0	I/O	Data bus 0 of flash ROM
19	P41/D1	DT1	I/O	Data bus 1 of flash ROM
20	P42/D2	DT2	I/O	Data bus 2 of flash ROM
21	P43/D3	DT3	I/O	Data bus 3 of flash ROM
22	Vss	Vss	I	GND
23	P44/D4	DT4	I/O	Data bus 4 of flash ROM
24	P45/D5	DT5	I/O	Data bus 5 of flash ROM
25	P46/D6	DT6	I/O	Data bus 6 of flash ROM
26	P47/D7	DT7	I/O	Data bus 7 of flash ROM
27	P30/D8	DT8	I/O	Data bus 8 of flash ROM
28	P31/D9	DT9	I/O	Data bus 9 of flash ROM
29	P32/D10	DT10	I/O	Data bus 10 of flash ROM
30	P33/D11	DT11	I/O	Data bus 11 of flash ROM
31	P34/D12	DT12	I/O	Data bus 12 of flash ROM
32	P35/D13	DT13	I/O	Data bus 13 of flash ROM
33	P36/D14	DT14	I/O	Data bus 14 of flash ROM
34	P37/D15	DT15	I/O	Data bus 15 of flash ROM
35	Vcc	Vcc	I	Power supply
36	P10/A0	AD0	O	Address bus 0 of flash ROM
37	P11/A1	AD1	O	Address bus 1 of flash ROM
38	P12/A2	AD2	O	Address bus 2 of flash ROM
39	P13/A3	AD3	O	Address bus 3 of flash ROM
40	P14/A4	AD4	O	Address bus 4 of flash ROM
41	P15/A5	AD5	O	Address bus 5 of flash ROM
42	P16/A6	AD6	O	Address bus 6 of flash ROM
43	P17/A7	AD7	O	Address bus 7 of flash ROM
44	Vss	Vss	I	GND
45	P20/A8	AD8	O	Address bus 8 of flash ROM
46	P21/A9	AD9	O	Address bus 9 of flash ROM
47	P22/A10	AD10	O	Address bus 10 of flash ROM
48	P23/A11	AD11	O	Address bus 11 of flash ROM

No.	Mark	Name	I/O	Function
49	P24/A12	AD12	O	Address bus 12 of flash ROM
50	P25/A13	AD13	O	Address bus 13 of flash ROM
51	P26/A14	AD14	O	Address bus 14 of flash ROM
52	P27/A15	AD15	O	Address bus 15 of flash ROM
53	P50/A16	AD16	O	Address bus 16 of flash ROM
54	P51/A17	AD17	O	Address bus 17 of flash ROM
55	P52/A18	AD18	O	Address bus 18 of flash ROM
56	P53/A19	AD19	O	Address bus 19 of flash ROM
57	Vss	Vss	I	GND
58	P60/XWAIT	WAIT	I	External address access Insertion request of wait state
59	P61/XBREQ	RST	O	Reset signal to the flash ROM and LCD controller
60	P62/XBACK	CH2_LCLK	O	LED latch clock for CH 2
61	P67/ ϕ	CH2_EF_SW	I	Effect switch for CH 2
62	XSTBY	XSTBY	I	Standby Low: Standby mode
63	XRES	XRESET	I	Reset input Low: Reset
64	NMI	NMI	I	Non maskable interruption request Active Low
65	Vss	Vss	I	GND
66	EXTAL	EXTAL	I	Connect a crystal resonator
67	XTAL	XTAL	I	Connect a crystal resonator
68	Vcc	Vcc	I	Power supply
69	P63/XAS	XAS	O	Address strobe Non connection
70	P64/XRD	XRD	O	Read for LCD controller
71	P65/XHWR	XHWR	O	Hilight for LCD controller
72	P66/XLWR	XLWR	O	Lowlight for LCD controller
73	MD0	MD0	I	Operation mode control pin MD2 : HIGH MD1 : HIGH MD0 : HIGH mode 5 Bus width 8bit, 16M byte Built-in ROM and RAM are valid
74	MD1	MD1	I	
75	MD2	MD2	I	
76	AVcc	AVcc	I	Power supply for A/D converter
77	VREF	VREF	I	Reference voltage input for A/D converter
78	P70/AN0	PNL_YIN	I	Y direction input of touch panel Use A/D converter.
79	P71/AN1	PNL_XIN	I	X direction input of touch panel Use A/D converter.
80	P72/AN2	CNT_VR	I	Contrast adjustment volume Use A/D converter.
81	P73/AN3	SW1_AD	I	Switch for CH 1 Use A/D converter.
82	P74/AN4	MIX_VR1	I	Mix volume of CH 1 Use A/D converter.
83	P75/AN5	SW2_AD	I	Switch for CH 2 Use A/D converter.
84	P76/AN6/DA0	MIX_VR2	I	Mix volume of CH 2 Use A/D converter.
85	P77/AN7/DA1	CH1_EF_SW	I	Effect switch for CH 1
86	AVss	Avss	I	Ground for A/D converter
87	P80/XIRQ0		I	Not used (GND)
88	P81/XIRQ1/XCS3	CH1_ENC2	I	Encoder input 2 for CH 1
89	P82/XIRQ2/XCS2	CNT_CS	O	Chip select output for LCD controller
90	P83/XIRQ3/XCS1/XADTRG	FROM_CS	O	Chip select output for flash ROM
91	P84/XCS0	CH1_ENC1	I	Encoder input 1 for CH 1
92	Vss		I	GND
93	PA0/TP0/TCLKA	PNL_XV	O	Voltage output for X direction of touch panel
94	PA1/TP1/TCLKB	PNL_YV	O	Voltage output for Y direction of touch panel
95	PA2/TP2/TIOCA0/TCLKC	PWM0	O	PWM output 0 for backlight control
96	PA3/TP3/TIOCB0/TCLKD	NC		NC for PWM output
97	PA4/TP4/TIOCA1		I	Not used (GND)
98	PA5/TP5/TIOCB1	PA5	O	Voltage control of touch panel
99	PA6/TP6/TIOCA2	LDATA1	O	For BANK2 LED
100	PA7/TP7/TIOCB2	LDATA0	O	For BANK1 LED

8. PANEL FACILITIES AND SPECIFICATIONS

■ Top Panel (1)

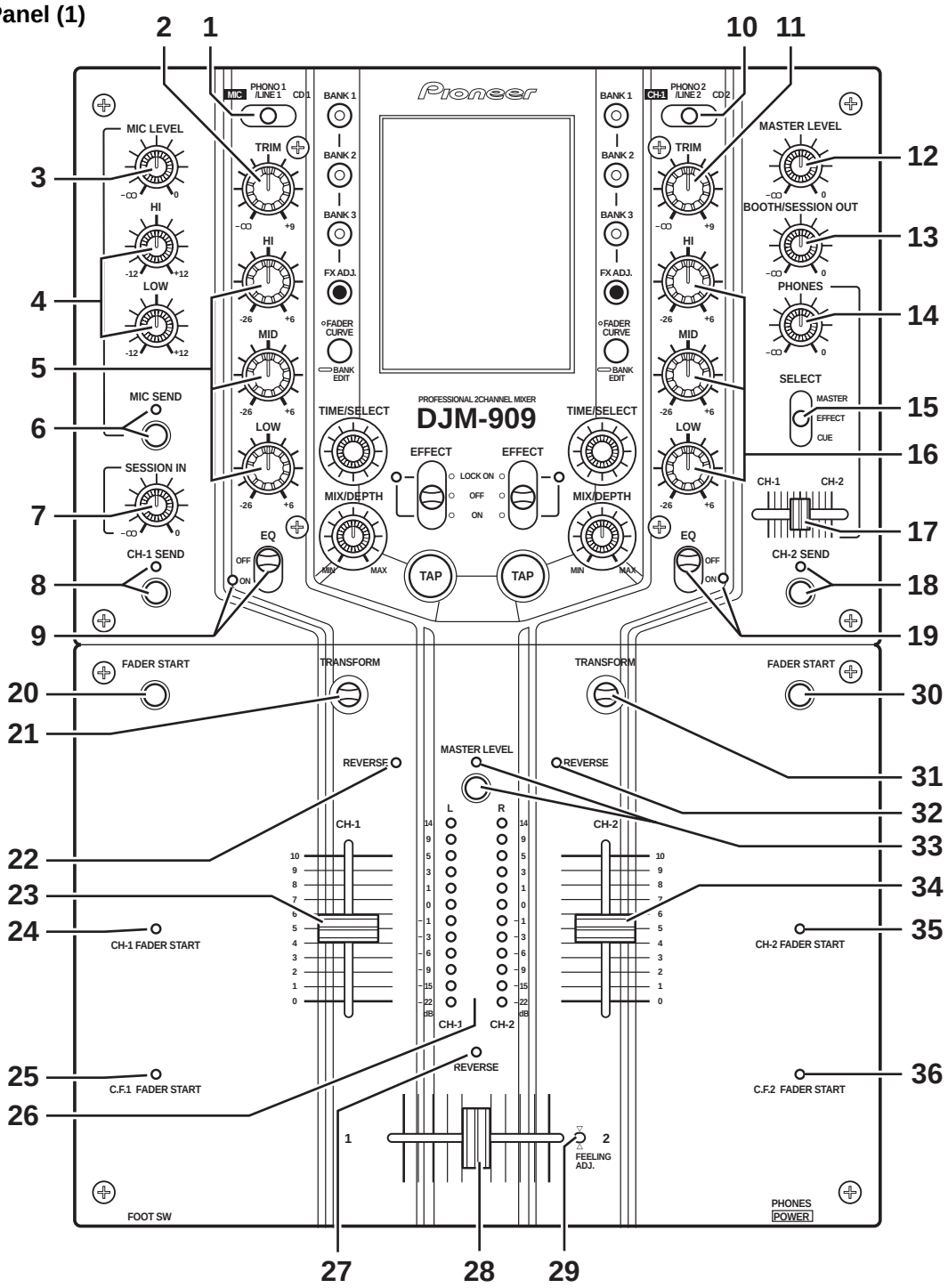

1 CH-1 input selector switch
(MIC – PHONO 1/LINE 1 – CD 1)
Use to select input signal from MIC jack, CH-1 PHONO/LINE input jacks, or CH-1 CD input jacks, and send them to the TRIM control.

* When [MIC] is selected, the MIC signals are sent directly to the TRIM section without passing through the microphone level and microphone equalizer circuits.

2 CH-1 TRIM dial
Use to adjust the CH-1 input signal level
(range of adjustment: +9 dB to –).

3 Microphone level dial (MIC LEVEL)
Use to adjust the microphone level
(range of adjustment: 0 dB to –).

4 Microphone equalizer dials (HI/LOW)
HI
Use to adjust microphone treble response
(range of adjustment: 10 kHz, ±12 dB).

LOW
Use to adjust microphone bass response
(range of adjustment: 100 Hz, ±12 dB).

5 CH-1 equalizer dials (HI/MID/LOW)

HI
Use to adjust CH-1 input treble response
(range of adjustment: 13 kHz, +6 dB to –26 dB).

MID
Use to adjust CH-1 input midrange response
(range of adjustment: 1 kHz, +6 dB to –26 dB).

LOW
Use to adjust CH-1 input bass response
(range of adjustment: 70 Hz, +6 dB to –26 dB).

6 MIC SEND button and indicator

When set to On, the indicator lights, and microphone signals are output at the SEND jacks. This function is disabled when the CH-1 input selector switch is set to [MIC].

7 Session input level dial (SESSION IN)

Use to adjust the session input volume
(range of adjustment: 0 dB to –).

8 CH-1 SEND button and indicator

When set to On, the indicator lights, and CH-1 signals are output at the SEND jacks.

9 CH-1 EQ ON/OFF switch and indicator

When set to [ON], the indicator lights and CH-1 equalizer is enabled.
When set to [OFF], the indicator goes out and the equalizer circuit is bypassed.

10 CH-2 input selector switch (CH-1 – PHONO 2/LINE 2 – CD 2)

Use to select input signal from CH-1 (component selected with CH-1 input selector switch), CH-2 PHONO/LINE input jacks, or CH-2 CD input jacks, and send them to the TRIM control.

∗ When [CH-1] is selected, signals are sent to the CH-2 TRIM control without being sent through the CH-1 TRIM control.

11 CH-2 TRIM dial

Use to adjust the CH-2 input signal level
(range of adjustment: +9 dB to –).

12 MASTER LEVEL dial

User to adjust the master output volume level
(range of adjustment: 0 dB to –).

13 Booth monitor level dial (BOOTH/SESSION OUT)

Use to adjust the volume level of signals at the BOOTH/ SESSION OUT jacks (range of adjustment: 0 dB to –).
This level can be set independently of the setting of the MASTER LEVEL dial.

14 Headphones level dial (PHONES)

Use to adjust the volume level of the headphones output
(range of adjustment: 0 dB to –).

15 Monitor SELECT switch

MASTER position
selects MASTER output. (This setting allows output regardless of the setting of the MASTER LEVEL dial.)

EFFECT position
Regardless of the [ON/OFF] setting of the EFFECT switch, the output is the signal selected with CUE, with effects added.

CUE position
selects the channel adjusted with the headphone mixing lever (17).

16 CH-2 equalizer dials (HI/MID/LOW)

HI
Use to adjust CH-2 input treble response
(range of adjustment: 13 kHz, +6 dB to –26 dB).

MID
Use to adjust CH-2 input midrange response
(range of adjustment: 1 kHz, +6 dB to –26 dB).

LOW
Use to adjust CH-2 input bass response
(range of adjustment: 70 Hz, +6 dB to –26 dB).

17 Headphone mixing lever (CH-1 – CH-2)

This lever does not function when the monitor SELECT switch (15) is set to [MASTER].
When the monitor SELECT switch (15) is set to [EFFECT] or [CUE], moving the lever to the left side produces CH-1 monitor output, while moving it to the right produces CH-2 monitor output.
Centering the lever at the center detent position produces balanced output of CH-1 and CH-2 signals.

18 CH-2 SEND button and indicator

When set to On, the indicator lights, and CH-2 signals are output at the SEND jacks.

19 CH-2 EQ ON/OFF switch and indicator

When set to [ON], the indicator lights and the CH-2 equalizer is enabled.
When set to [OFF], the indicator goes out and the equalizer circuit is bypassed.

20 CH-1 FADER START button

When this button is set to On, fader start and back cue can be performed on the CH-1 CD player.
Whether the operation is initiated by operation of the CH-1 fader lever, or by the cross fader lever is determined by the position of the front panel's FADER START selector switch; the selection is indicated by the lighting of the top panel's CH-1 FADER START indicator or C.F.1 FADER START indicator.

21 CH-1 output On/Off lever (TRANSFORM)

Use to set CH-1 output to On or Off (Mute).
The lever's setting angle can be changed in 45° increments (changing of the angle should be performed by an authorized Pioneer service technician).

22 CH-1 REVERSE indicator

When lighted, indicates that the front panel's FADER REVERSE switch has been set so that the CH-1 fader lever operates in the reverse direction (see front panel item 52).

23 CH-1 fader lever

The CH-1 fader lever is used to control the level of signals sent to the cross fader. Signal level is maximum at scale mark "10," and minimum at scale mark "0".
When the front panel CH-1 FADER REVERSE switch is set to [ON], the signal level is maximum at scale mark "0," and minimum at scale mark "10".

∗ The channel fader curve can be adjusted by means of the front panel FADER CURVE dials.

24 CH-1 FADER START indicator

Lights when the CH-1 fader start/back cue function is enabled (see also top panel item 20 and front panel item 53).

25 C.F.1 FADER START indicator

Lights when CH-1 cross-fader start/back cue function is enabled (see also top panel item 20 and front panel item 53).

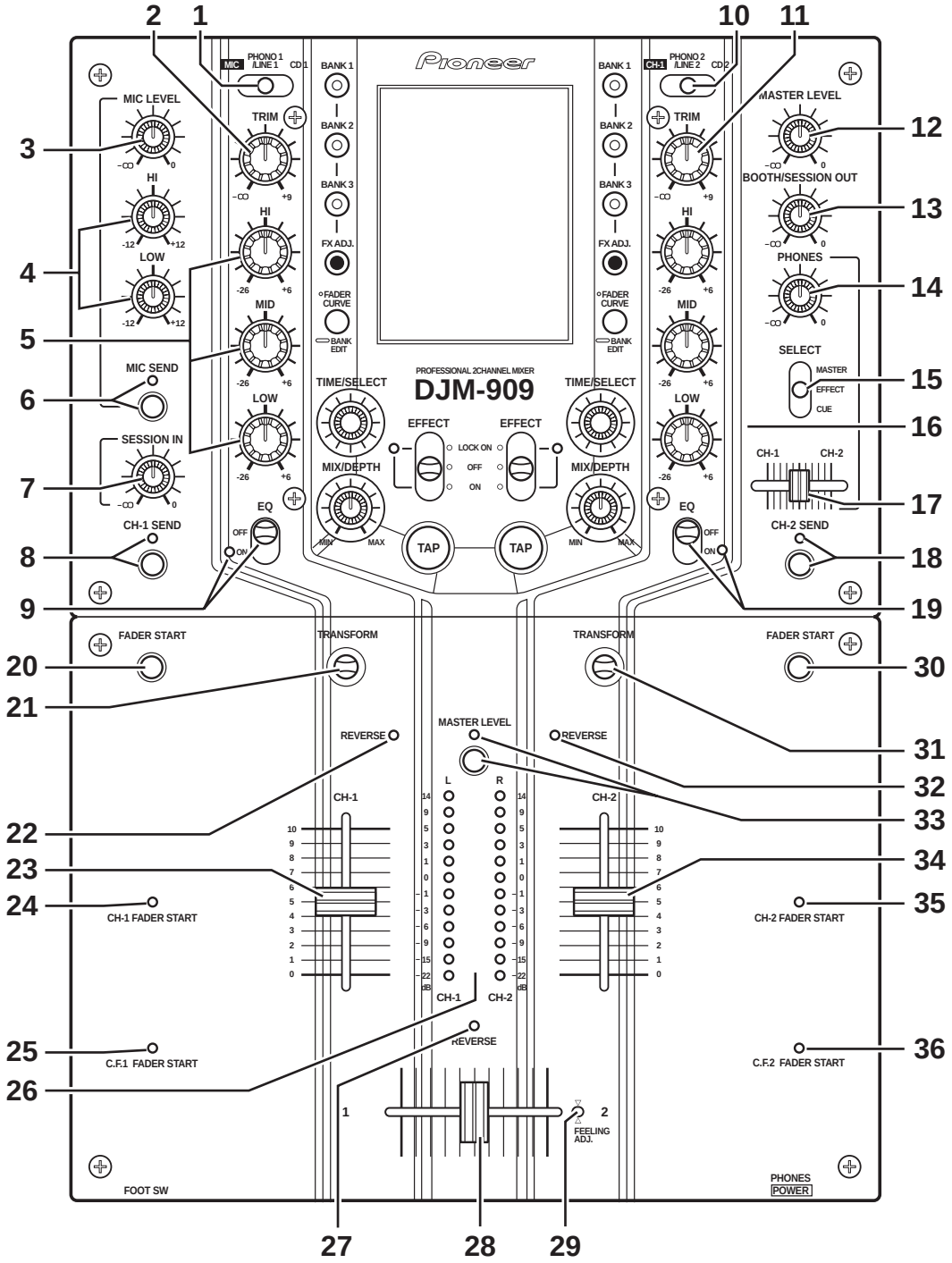

E

26 Level meters
Displays CH-1 and CH-2 peak levels or master output (stereo) peak levels (see also item 33).

27 Cross fader REVERSE indicator
Indicates that the front panel's FADER REVERSE switch has been set so that the cross fader now operates in reverse (left side is CH-2, right side is CH-1) (see also front panel item 52).

28 Cross fader lever
When the lever is moved to the left side, CH-1 is at maximum output and CH-2 is at minimum. When moved to the right side, CH-2 is at maximum output and CH-1 is at minimum.

F ∗ The cross fader curve can be adjusted individually for CH-1 and CH-2 by means of the front panel FADER CURVE dials.

29 Operating load adjust screw (FEELING ADJ.)
The hexagonal Allen screw located next to the panel's slider opening can be rotated with a hexagonal Allen driver to adjust the sliding resistance of the cross fader lever.

30 CH-2 FADER START button
When this button is set to On, fader start and back cue can be performed on the CH-2 CD player.
Whether the operation is initiated by operation of the CH-2 fader lever, or by the cross fader lever is determined by the position of the front panel's FADER START selector switch; the selection is indicated by the lighting of the top panel's CH-2 FADER START indicator or C.F.2 FADER START indicator.

31 CH-2 output On/Off lever (TRANSFORM)
Use to set CH-2 output to On or Off (Mute).
This lever's setting angle can be changed in 45° increments (changing of the angle should be performed by an authorized Pioneer service technician).

32 CH-2 REVERSE indicator
When lighted, indicates that the front panel's FADER REVERSE switch has been set so that the CH-2 fader lever operates in the reverse direction (see front panel item 52).

33 MASTER LEVEL display button and indicator
When depressed to the On position, the indicator lights and the level meters display the master output (stereo) peak levels. When turned Off, the level meters display the peak levels for CH-1 (left) and CH-2 (right) (see also item 26).

34 CH-2 fader lever
The CH-2 fader lever is used to control the level of signals sent to the cross fader. Signal level is maximum at scale mark "10," and minimum at scale mark "0".
When the front panel CH-2 FADER REVERSE switch is set to [ON], the signal level is maximum at scale mark "0," and minimum at scale mark "10".

∗ The channel fader curve can be adjusted by means of the front panel FADER CURVE dials.

35 CH-2 FADER START indicator
Lights when the CH-2 fader start/back cue function is enabled (see also top panel item 30 and front panel item 53).

36 C.F.2 FADER START indicator
Lights when CH-2 cross-fader start/back cue function is enabled (see also top panel item 30 and front panel item 53).

37 Touch Panel
Touch this screen to set effects in accordance with the displayed menus.
∗ The panel's screen contrast and backlight luminance can be adjusted (see rear panel items 61 and 63).

38 CH-1 effect bank buttons and indicators (BANK 1, 2, 3)
When one of these buttons is pressed, the indicator lights and the corresponding preset effect is enabled. Each BANK button can be recorded with three effects for CH-1 (at time of shipping, the buttons have been factory preset with typically used effects). BANK 1 is selected in the default condition bafter power is initially turned on.

39 CH-1 effect parameter adjust button (FX ADJ.)
Press to display the touch panel's CH-1 effect parameter adjust menu.

40 Fader curve display and CH-1 effect select button (FADER CURVE/BANK EDIT)
Press to display the fader curve on the touch panel. Holding the button depressed for about one second will cause the touch panel to display the CH-1 effect select menu.

41 CH-1 effect time adjust/select dial (TIME/SELECT)
Use to adjust the time parameters of effects applied to CH-1 (rotate clockwise to lengthen, counterclockwise to shorten).
When the effect select menu is displayed, causes the effects list to scroll.

42 CH-1 effect mix ratio/depth adjust dial (MIX/DEPTH)
Use to adjust the volume (amount) of effects applied to CH-1 (rotate clockwise to increase effects, counterclockwise to reduce).

43 CH-1 effect switch and indicator (EFFECT LOCK ON/OFF/ON)
To turn effects [ON], either pull switch forward (switch returns automatically to [OFF] when released) or slide to far side to the [LOCK ON] position. When effects are [ON], the indicator flashes and effects are applied to CH-1.

44 CH-1 TAP button
Under normal conditions, the automatic BPM counter operates to display the track's BPM value on the touch panel.
Automatic BPM counting may be difficult with some tracks, however. In such cases, or if you wish to deliberately set a different BPM, use the TAP button.
• The BPM value can be changed by rotating the TIME/ SELECT dial while holding the TAP button depressed.

• Tapping the button in time with the beat will cause the function to switch to the manual BPM count mode; the tapped beat will be counted and displayed as the BPM value. Returning to the auto BPM mode is performed from the effect parameter adjust screen

45 CH-2 effect bank buttons and indicators (BANK 1, 2, 3)
When one of these buttons is pressed, the indicator lights and the corresponding preset effect is enabled. Each BANK button can be recorded with three effects for CH-2 (at time of shipping, the buttons have been factory preset with typically used effects). BANK 1 is selected in the default condition after power is initially turned on.

46 CH-2 effect parameter adjust button (FX ADJ.)
Press to display the touch panel's CH-2 effect parameter adjust menu.

47 Fader curve display and CH-2 effect select button (FADER CURVE/BANK EDIT)
Press to display the fader curve on the touch panel. Holding the button depressed for about one second will cause the touch panel to display the CH-2 effect select menu.

48 CH-2 effect time adjust/select dial (TIME/SELECT)
Use to adjust the time parameters of effects applied to CH-2 (rotate clockwise to lengthen, counterclockwise to shorten).
When the effect select menu is displayed, causes the effects list to scroll.

49 CH-2 effect mix ratio/depth adjust dial (MIX/DEPTH)
Use to adjust the volume (amount) of effects applied to CH-2 (rotate clockwise to increase effects, counterclockwise to reduce).

■ Top Panel (2)

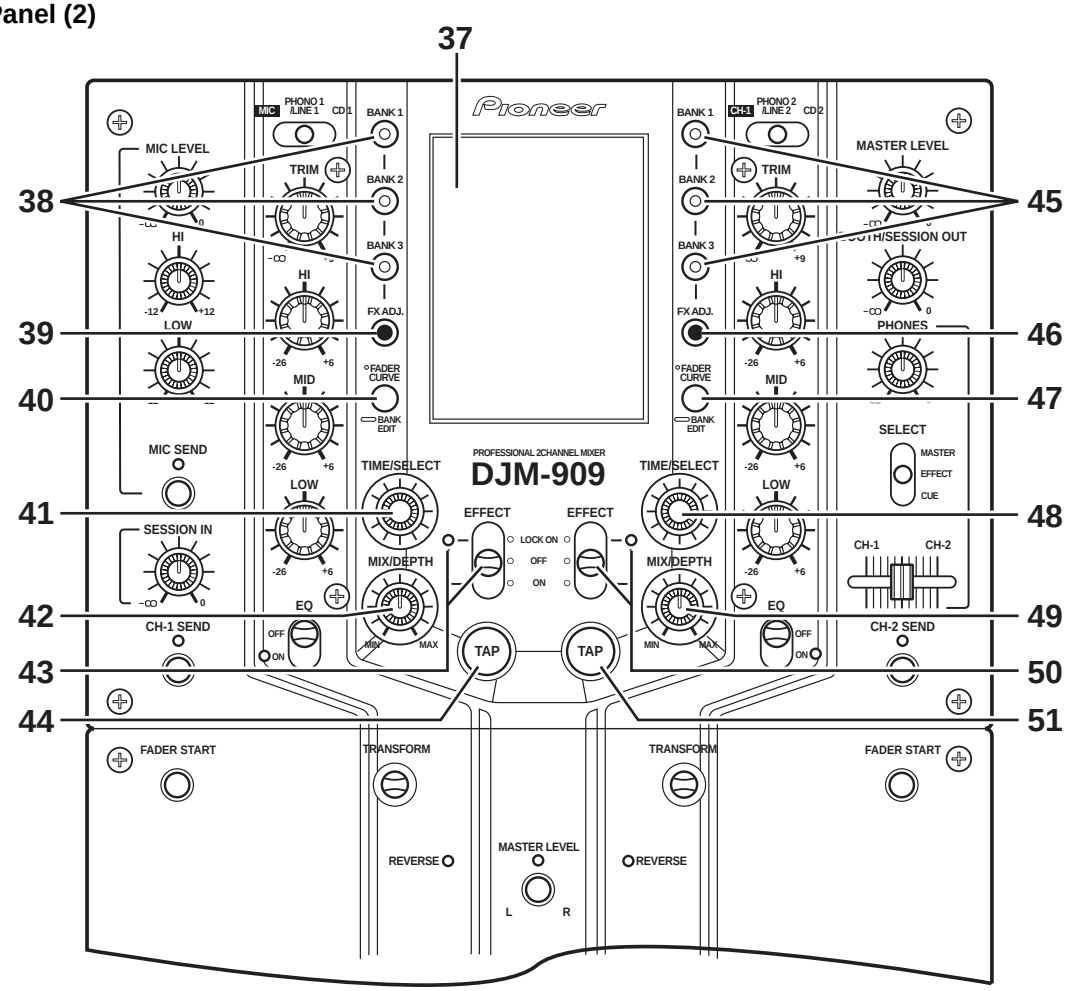

50 CH-2 effect switch and indicator (EFFECT LOCK ON/OFF/ON)

To turn effects [ON], either pull switch forward (switch returns automatically to [OFF] when released) or slide to far side to the [LOCK ON] position. When effects are [ON], the indicator flashes and effects are applied to CH-2.

51 CH-2 TAP button

Under normal conditions, the automatic BPM counter operates to display the track's BPM value on the touch panel.
Automatic BPM counting may be difficult with some tracks, however. In such cases, or if you wish to deliberately set a different BPM, use the TAP button.

- The BPM value can be changed by rotating the TIME/SELECT dial while holding the TAP button depressed.

- Tapping the button in time with the beat will cause the function to switch to the manual BPM count mode; the tapped beat will be counted and displayed as the BPM value. Returning to the auto BPM mode is performed from the effect parameter adjust screen

Front Panel

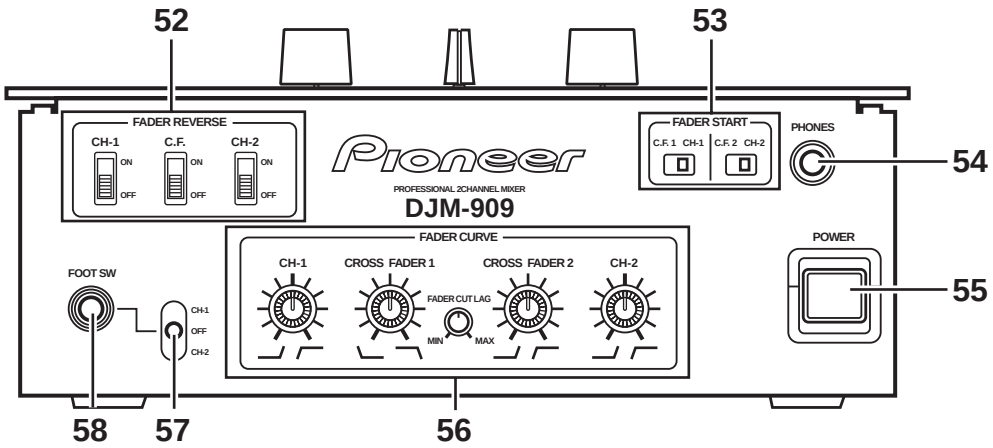

52 FADER REVERSE switches

CH-1 ON/OFF

When set to [ON], the top panel's CH-1 REVERSE indicator lights, and the CH-1 fader lever operates in the reverse direction (scale mark "0" becomes 0 dB attenuation, and "10" becomes minus infinity). The fader start function also operates in reverse.

CH-2 ON/OFF

When set to [ON], the top panel's CH-2 REVERSE indicator lights, and the CH-2 fader lever operates in the reverse direction (scale mark "0" becomes 0 dB attenuation, and "10" becomes minus infinity). The fader start function also operates in reverse.

C.F. ON/OFF

When set to [ON], the top panel's cross fader REVERSE indicator lights, and the cross fader lever operates in the reverse direction (left side becomes CH-2, and right side becomes CH-1).
The fader start function also operates in reverse.

53 FADER START selector switches

C.F.1 / CH-1

This switch determines whether the fader start operation for the CD player connected to CH-1 is activated by the cross fader lever, or by the CH-1 fader lever.
When the top panel's CH-1 FADER START button is set to On, selecting [C.F.1] causes the top panel's C.F.1 FADER START indicator to light, and selecting [CH-1] causes the top panel's CH-1 FADER START indicator to light.

C.F.2 / CH-2

This switch determines whether the fader start operation for the CD player connected to CH-2 is activated by the cross fader lever, or by the CH-2 fader lever.
When the top panel's CH-2 FADER START button is set to On, selecting [C.F.2] causes the top panel's C.F.2 FADER START indicator to light, and selecting [CH-2] causes the top panel's CH-2 FADER START indicator to light.

54 Headphone output jack (PHONES)

Accepts a 6.3 mm stereo headphones plug.

55 POWER switch

56 Fader attenuation dials (FADER CURVE)

CH-1

Use to adjust CH-1's fader attenuation curve.

CH-2

Use to adjust CH-2's fader attenuation curve.

CROSS FADER 1

Use to adjust cross fader's CH-1 attenuation curve.

CROSS FADER 2

Use to adjust cross fader's CH-2 attenuation curve.

FADER CUT LAG

Use to adjust mechanical play at both extremes of the cross fader movement (the range in which lever movement produces no effect).

57 Foot switch channel select switch (FOOT SW CH-1/OFF/CH-2)

Use to select whether the Effect On/Off foot switch function operates on channel 1 [CH-1], channel 2 [CH-2]. When the switch is in the center position, both CH-1 and CH-2 are [OFF].

58 Foot switch jack (FOOT SW)

This 6.3 mm RCA jack can be used to connect an On/Off type pedal switch used to turn effects On and Off.
Various types of foot switch are available; some turn On when pressed, some turn Off when pressed, and others have locking mechanisms (alternate On/Off with successive presses).
Select the type in accordance with your own preferences.

Rear Panel

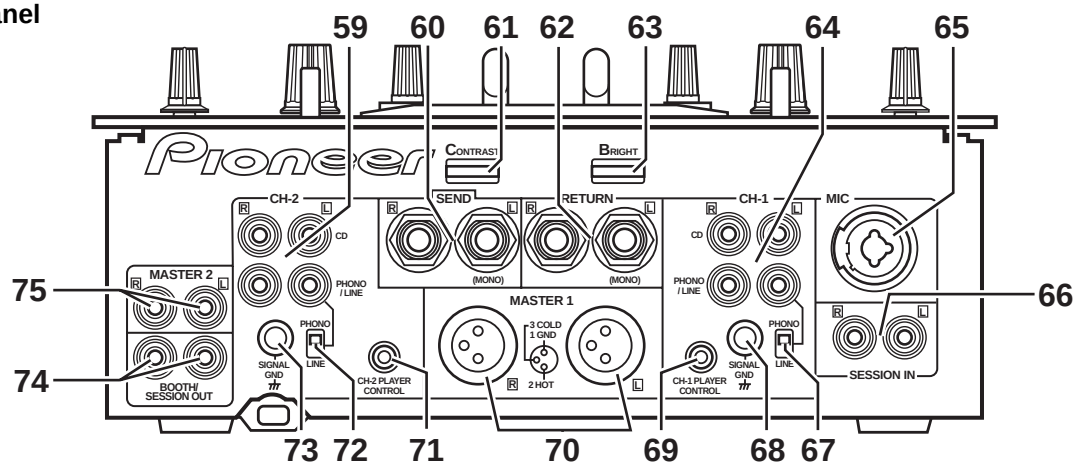

59 CH-2 input jacks

CD

Connect to audio output from CH-2 CD player.

PHONO / LINE

Connect to audio output from CH-2 analog turntable, cassette deck or other line signal level component.

60 External effector output jacks (SEND)

Connect to the input connectors of an external effector.
When the top panel switches (MIC SEND, CH-1 SEND, and CH-2 SEND) are set to On, these jacks output the MIC, CH-1, and CH-2 signals to the external effector.
When using an effector with a monaural input, connect it to the L channel output only. The signal actually sent to the effector will represent a mix of L and R signals.

61 Touch panel screen contrast control (CONTRAST)

Use to adjust the top panel's touch panel contrast.

62 External effector return jacks (RETURN)

Connect to the output connectors of the external effector.
When using an effector with monaural output, connect only to the L channel input. The signal received from the effector will be input to both L and R channels.

63 Touch panel backlight control (BRIGHT)

Use to adjust the top panel's touch panel backlight luminance.

64 CH-1 input jacks

CD

Connect to the audio output of the CH-1 CD player.

PHONO / LINE

Connect to audio output from CH-1 analog turntable, cassette deck or other line signal level component.

65 Microphone input jack (MIC)

Connect to a microphone with XLR type or PHONE type plug.
When applying effects to the microphone sound, set the top panel's CH-1 input selector switch (MIC– PHONO 1/LINE 1– CD1) to the [MIC] position.

66 Session input jacks (SESSION IN)

When using multiple mixers simultaneously, connect the other mixer outputs to these jacks.

67 CH-1 PHONO/LINE selector switch

Use to set the input sensitivity at the CH-1 PHONO/LINE connectors. The [PHONO] position supports an MM type cartridge.

∗ When no analog turntable is used, set this switch to the [LINE] side.

68 CH-1 signal ground (SIGNAL GND)

Connect to the CH-1 analog turntable's ground wire. Note that this is not meant as a safety ground.

69 CH-1 PLAYER CONTROL jack

When a Pioneer DJ CD player is connected to the CH-1 CD jacks, a special control cord can be used to connect this jack to the player's control jack, thus enabling the fader start function.

70 MASTER 1 jacks

XLR type balanced output. Connect to the power amplifier's balanced input jacks.

71 CH-2 PLAYER CONTROL jack

When a Pioneer DJ CD player is connected to the CH-2 CD jacks, a special control cord used to connect this jack to the player's control jack, thus enabling the fader start function.

72 CH-2 PHONO/LINE selector switch

Use to set the input sensitivity at the CH-2 PHONO/LINE connectors. The [PHONO] position supports an MM type cartridge.

∗ When no analog turntable is used, set this switch to the [LINE] side.

73 CH-2 signal ground (SIGNAL GND)

Connect to the CH-2 analog turntable's ground wire. Note that this is not meant as a safety ground.

74 BOOTH/SESSION OUT jacks

Connector jacks for booth monitor output. When using this unit in tandem with another mixer, connect these jacks to the other mixer's session input jacks.

75 MASTER 2 jacks

RCA type unbalanced output. Connect to the power amplifier's unbalanced input jacks.