Pioneer

Service Manual

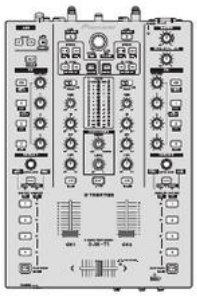

DJM-T1

ORDER NO.
RRV4196

DJ MIXER

DJM-T1

THIS MANUAL IS APPLICABLE TO THE FOLLOWING MODEL(S) AND TYPE(S).

Model	Type	Power Requirement	Remarks
DJM-T1	SYXJ8	AC 220 V to 240 V	
DJM-T1	UXJCB	AC 120 V	
DJM-T1	LXJ	AC 110 V to 120 V or 220 V to 240 V	
DJM-T1	KXJ5	AC 220 V	
DJM-T1	XJCN5	AC 220 V to 240 V	

PIONEER CORPORATION 1-1, Shin-ogura, Saiwai-ku, Kawasaki-shi, Kanagawa 212-0031, Japan
PIONEER ELECTRONICS (USA) INC. P.O. Box 1760, Long Beach, CA 90801-1760, U.S.A.
PIONEER EUROPE NV Haven 1087, Keetberglaan 1, 9120 Melsele, Belgium
PIONEER ELECTRONICS ASIACENTRE PTE. LTD. 253 Alexandra Road, #04-01, Singapore 159936

K-IZV JUNE 2011 Printed in Japan

SAFETY INFORMATION

This service manual is intended for qualified service technicians; it is not meant for the casual do-it-yourselfer. Qualified technicians have the necessary test equipment and tools, and have been trained to properly and safely repair complex products such as those covered by this manual.

Improperly performed repairs can adversely affect the safety and reliability of the product and may void the warranty. If you are not qualified to perform the repair of this product properly and safely, you should not risk trying to do so and refer the repair to a qualified service technician.

WARNING

This product may contain a chemical known to the State of California to cause cancer, or birth defects or other reproductive harm.

Health & Safety Code Section 25249.6 - Proposition 65

(FOR USA MODEL ONLY)

1. SAFETY PRECAUTIONS

The following check should be performed for the continued protection of the customer and service technician.

LEAKAGE CURRENT CHECK

Measure leakage current to a known earth ground (water pipe, conduit, etc.) by connecting a leakage current tester such as Simpson Model 229-2 or equivalent between the earth ground and all exposed metal parts of the appliance (input/output terminals, screwheads, metal overlays, control shaft, etc.). Plug the AC line cord of the appliance directly into a 120 V AC 60 Hz outlet and turn the AC power switch on. Any current measured must not exceed 0.5 mA.

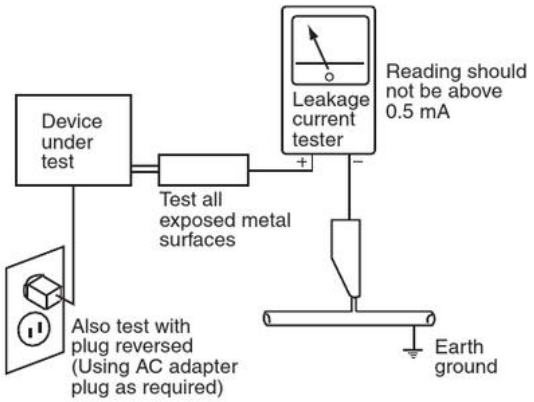

AC Leakage Test

ANY MEASUREMENTS NOT WITHIN THE LIMITS OUTLINED ABOVE ARE INDICATIVE OF A POTENTIAL SHOCK HAZARD AND MUST BE CORRECTED BEFORE RETURNING THE APPLIANCE TO THE CUSTOMER.

2. PRODUCT SAFETY NOTICE

Many electrical and mechanical parts in the appliance have special safety related characteristics. These are often not evident from visual inspection nor the protection afforded by them necessarily can be obtained by using replacement components rated for voltage, wattage, etc. Replacement parts which have these special safety characteristics are identified in this Service Manual.

Electrical components having such features are identified by marking with a ⚠ on the schematics and on the parts list in this Service Manual.

The use of a substitute replacement component which does not have the same safety characteristics as the PIONEER recommended replacement one, shown in the parts list in this Service Manual, may create shock, fire, or other hazards.

Product Safety is continuously under review and new instructions are issued from time to time. For the latest information, always consult the current PIONEER Service Manual. A subscription to, or additional copies of, PIONEER Service Manual may be obtained at a nominal charge from PIONEER.

CONTENTS

1. SERVICE PRECAUTIONS

1.1 NOTES ON SOLDERING

- For environmental protection, lead-free solder is used on the printed circuit boards mounted in this unit.
  Be sure to use lead-free solder and a soldering iron that can meet specifications for use with lead-free solders for repairs accompanied by reworking of soldering.

- Compared with conventional eutectic solders, lead-free solders have higher melting points, by approximately 40 °C.
  Therefore, for lead-free soldering, the tip temperature of a soldering iron must be set to around 373 °C in general, although the temperature depends on the heat capacity of the PC board on which reworking is required and the weight of the tip of the soldering iron.

Do NOT use a soldering iron whose tip temperature cannot be controlled.

Compared with eutectic solders, lead-free solders have higher bond strengths but slower wetting times and higher melting temperatures (hard to melt/easy to harden).

The following lead-free solders are available as service parts:
- Parts numbers of lead-free solder:
  GYP1006 1.0 in dia.
  GYP1007 0.6 in dia.
  GYP1008 0.3 in dia.

1.2 NOTES ON REPLACING

The part listed below is difficult to replace as a discrete component part.
When the part listed in the table is defective, replace whole Assy.

Assy Name	Parts that is Diffcult to Replace			
	Ref No.	Function	Part No.	Remarks
OUTPUT Assy	IC123	Multi-ch-DAC	PCM1691DCA	IC with heat-pad
	IC128	Regulator	BD9326EFJ	IC with heat-pad

1.3 NOTES ON SERVICING

On the New Noncontact Faders

Noncontact faders are provided with this product.
When replacement of the fader is required, be sure to order the CROSS FADER Assy (DXA2243) which is a parent Assy.
After replacement of the faders, adjustments are required.
For details, see “Mode 8: For adjusting the cross fader” in “6.1 TEST MODE.”

2. SPECIFICATIONS

General

Power requirements.....AC 220 V to 240 V, 50 Hz/ 60 Hz (SYXJ8)
AC 120 V, 60 Hz (UXJCB)
AC 110 V to 120 V or 220 V to 240 V, 50 Hz/ 60 Hz (LXJ)
AC 220 V, 60 Hz (KXJ5)
AC 220 V to 240 V, 50 Hz/ 60 Hz (XJCN5)
Power consumption .....25 W (SYXJ8, LXJ, XJCN5)
23 W (UXJCB)
22 W (KXJ5)
Power consumption (standby) .....0.4 W
Main unit weight..... 6.1 kg
Max. external dimensions... 265 mm (W) x 107.9 mm (H) x 403 mm (D)
Tolerable operating temperature.....+5 °C to +35 °C
Tolerable operating humidity.....5 % to 85 % (no condensation)

Audio Section

Sampling rate .....48 kHz
A/ D, D/ A converter..... 24 bits
Frequency characteristic
CD ..... 20 Hz to 20 kHz
S/ N ratio (rated output)
PHONO .....92 dB
CD .....106 dB
MIC.....84 dB
Total harmonic distortion (CD — MASTER1) .....0.004 %
Standard input level / Input impedance
PHONO .....–52 dBu/ 47 kΩ
CD .....–12 dBu/ 47 kΩ
MIC.....–52 dBu/ 47 kΩ
AUX .....–12 dBu/ 29 kΩ
Standard output level / Load impedance / Output impedance
MASTER1..... +6 dBu/ 10 kΩ/ 10 Ω or lower
MASTER2..... +2 dBu/ 10 kΩ/ 330 Ω
BOOTH..... +6 dBu/ 10 kΩ/ 10 Ω or lower
PHONES ..... +5.4 dBu/ 32 Ω/ 10 Ω or lower
Rated output level / Load impedance
MASTER1.....+24 dBu/ 10 kΩ
MASTER2.....+20 dBu/ 10 kΩ
Crosstalk (CD) .....86 dB

Channel equalizer characteristic
HI ..... –∞ to +6 dB (13 kHz)
MID..... –∞ to +6 dB (1 kHz)
LOW ..... –∞ to +6 dB (70 Hz)
Microphone equalizer characteristic
HI ..... –12 dB to +12 dB (10 kHz)
LOW ..... –12 dB to +12 dB (100 Hz)

Input / Output terminals

PHONO input terminal
RCA pin jack..... 2 sets
CD input terminal
RCA pin jack..... 2 sets
MIC input terminal
XLR connector/ phone jack (Ø 6.3 mm) ..... 1 set
AUX input terminal
RCA pin jacks..... 1 set
MASTER output terminal
XLR connector..... 1 set
RCA pin jacks..... 1 set
BOOTH output terminal
TRS phone jack (Ø 6.3 mm) ..... 1 set
PHONES output terminal
Stereo phone jack (Ø 6.3 mm) ..... 1 set
USB terminal
B type ..... 1 set

- The specifications and design of this product are subject to change without notice.
- The software screens used in these operating instructions are from the development stage and may differ from the actual screens.

Accessories

- TRAKTOR SCRATCH DUO 2 software DVD-ROM (DXX2676)
- TRAKTOR SCRATCH CONTROL CD ×2
- TRAKTOR SCRATCH CONTROL VINYL ×2
- Driver software CD-ROM (DXX2675)
- USB cable (DDE1128)
- Power cord (SYXJ8: ADG7062)(UXJCB: DDG1108)(LXJ: ADG7062)(KXJ5: ADG7115)(XJCN5: ADG7105)
- Warranty card (SYXJ8 only)
- Operating instructions (SYXJ8: DRB1557, DRB1562)(UXJCB: DRB1558)(LXJ: DRB1559)(KXJ5: DRB1560)(XJCN5: DRB1561)

3. BASIC ITEMS FOR SERVICE
3.1 CHECK POINTS AFTER SERVICING

Items to be checked after servicing

To keep the product quality after servicing, confirm recommended check points shown below.

No.	Procedures	Check points
1	Check the firmware version in Test mode.	The firmware version must be the latest one. If it is not the latest one, be sure to update it.
2	Confirm whether the customer complain has been solved. If the customer complain occurs with the specific source, such as Mic, each Input, Fader, Equalizer, and Trim, input that specific source for checking.	The customer complain must not be reappeared. Audio and operations must be normal.
3	Check the analog audio input (Check the Channel 1, 2 and MIC/AUX.) (Make the analog connections with CDJ player, analog player and MIC.)	Audio and operations must be normal.
4	Check the analog audio output (MASTER1, 2 and BOOTH.) (Make the analog connection with CDJ player.)	Audio and operations must be normal.
5	Check DVS signal route.	Make sure that PC applications function properly and that the audio signals and operations of each channel are normal.
6	Check the headphones output.	There must be no errors, such as noise, in the audio output.
7	Check playback, using the fader function. (Select the fader function then check operations of each channel with audio signals.)	There must be no errors in audio output and operations of each channel.
8	Check the connection of each interface.	
	USB B	The device must be properly recognized by the PC.
9	Check the buttons.	Make sure that all buttons on the main unit function properly.
10	Check the FL displays and LEDs.	Check that all the LEDs light in Test mode.
11	Check the user settings.	They must be returned to those set before repair.
12	Check the appearance of the product.	No scratches or dirt on its appearance after receiving it for service.

See the table below for the items to be checked regarding audio.

Item to be checked regarding audio
Distortion
Noise
Volume too low
Volume too high
Volume fluctuating
Sound interrupted

3.2 JIGS LIST

■ Jigs List

Jig Name	Part No.	Purpose of use / Remarks
USB cable	GGP1193	for PC connection, accessory

■ Lubricants and Glues List

Name	Part No.	Remarks
Silicon grease	GEM1057	Refer to "9.3 BOTTOM SECTION".
Lubricating oil	GYA1001	Refer to "9.4 FADER SECTION".

3.3 PCB LOCATIONS

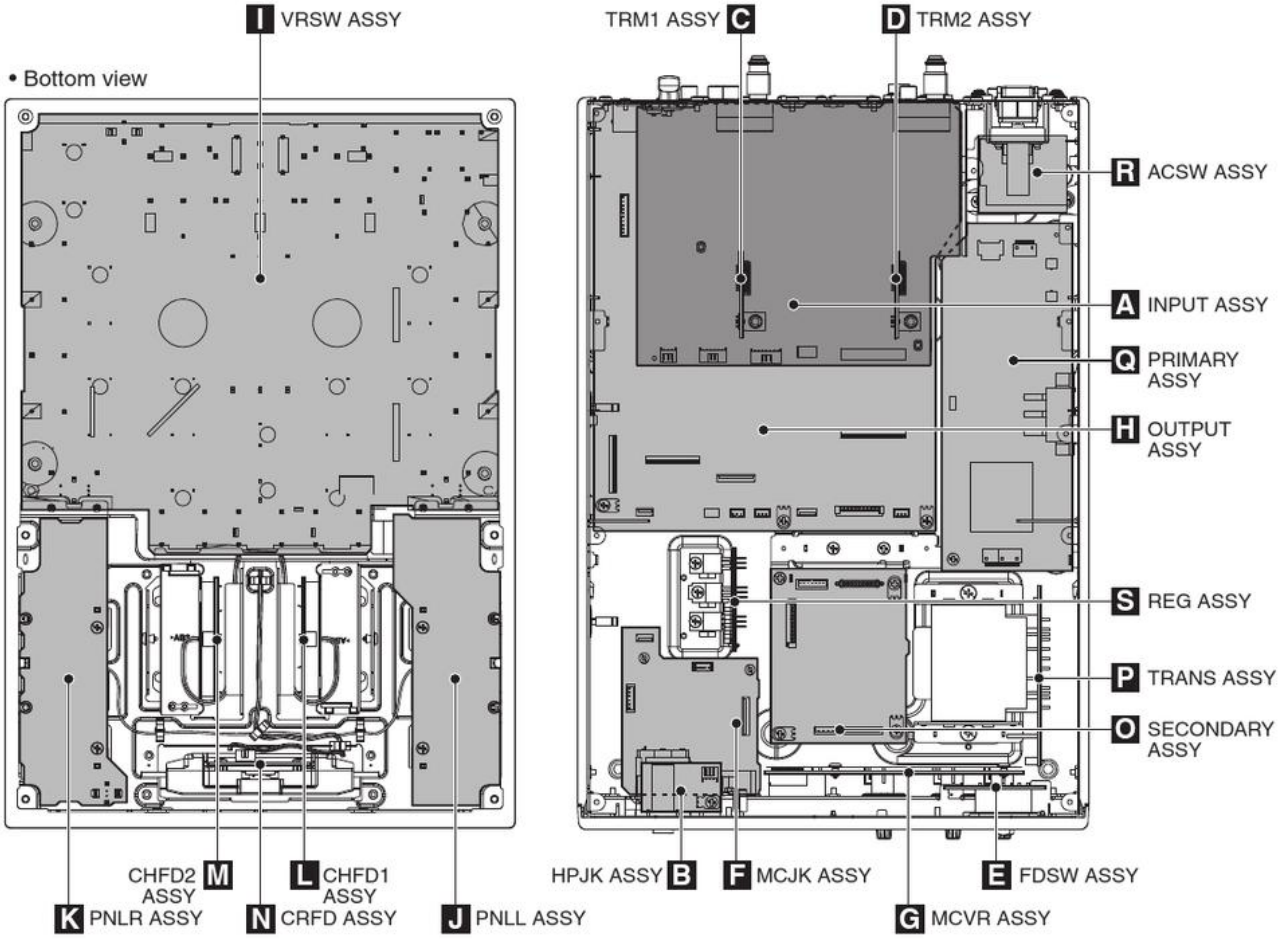

NOTES: ● *Parts marked by "NSP" are generally unavailable because they are not in our Master Spare Parts List.*
● *The ⚠ mark found on some component parts indicates the importance of the safety factor of the part. Therefore, when replacing, be sure to use parts of identical designation.*

LIST OF ASSEMBLIES

Mark	No.	Description	Part No.
NSP	1..	MAIN ASSY	DWM2437
	2..	OUTPUT ASSY	DWX3257
	2..	MCVR ASSY	DWX3264
	2..	TRM1 ASSY	DWX3268
	2..	TRM2 ASSY	DWX3269
NSP	1..	PANEL ASSY	DWM2438
	2..	VRSW ASSY	DWX3259
	2..	CHFD1 ASSY	DWX3260
	2..	CHFD2 ASSY	DWX3261
	2..	MCJK ASSY	DWX3265
	2..	FDSW ASSY	DWX3266
	2..	HPJK ASSY	DWX3267

Mark	No.	Description	Part No.
NSP	1..	POWER ASSY (SYXJ8, KXJ5,XJCN5)	DWM2440
NSP	1..	POWER ASSY (UXJCB)	DWM2442
NSP	1..	POWER ASSY (LXJ)	DWM2441
	2..	PRIMARY ASSY (SYXJ8, KXJ5,XJCN5)	DWR1496
	2..	PRIMARY ASSY (UXJCB)	DWR1498
	2..	PRIMARY ASSY (LXJ)	DWR1497
	2..	TRANS ASSY (SYXJ8, KXJ5,XJCN5)	DWR1500
	2..	TRANS ASSY (UXJCB)	DWR1501
	2..	TRANS ASSY (LXJ)	DWR1505
	2..	SECONDARY ASSY	DWR1503
	2..	REG ASSY	DWR1504
	2..	ACSW ASSY	DWS1435
	2..	PNLL ASSY	DWX3262
	2..	PNLR ASSY	DWX3263
	2..	INPUT ASSY	DWX3282
	1..	CROSS FADER ASSY	DXA2243
NSP	2..	CRFD ASSY	DWX3258

4. BLOCK DIAGRAM

4.1 OVERALL WIRING DIAGRAM

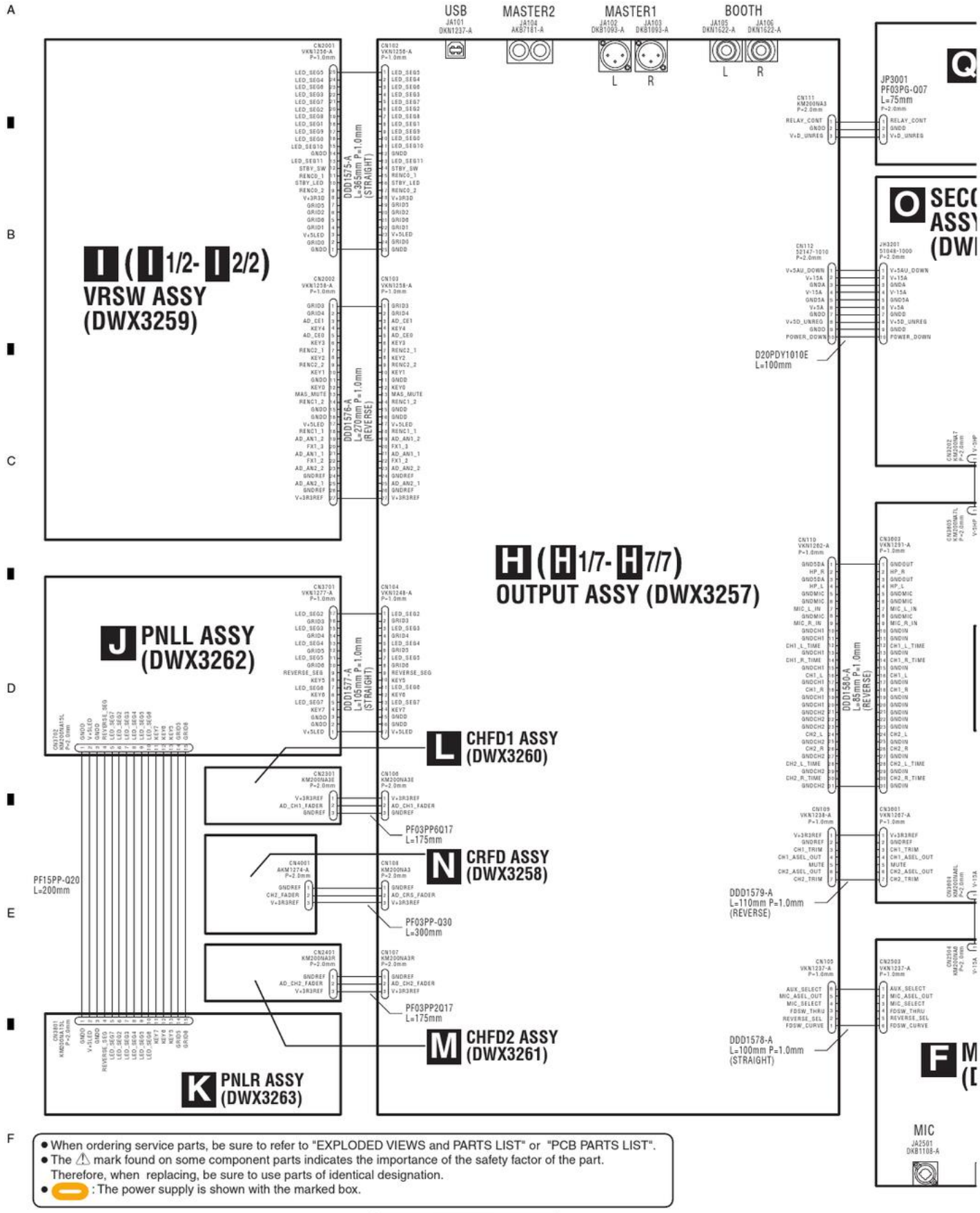

- When ordering service parts, be sure to refer to "EXPLODED VIEWS and PARTS LIST" or "PCB PARTS LIST".
- The ⚠ mark found on some component parts indicates the importance of the safety factor of the part. Therefore, when replacing, be sure to use parts of identical designation.
- : The power supply is shown with the marked box.

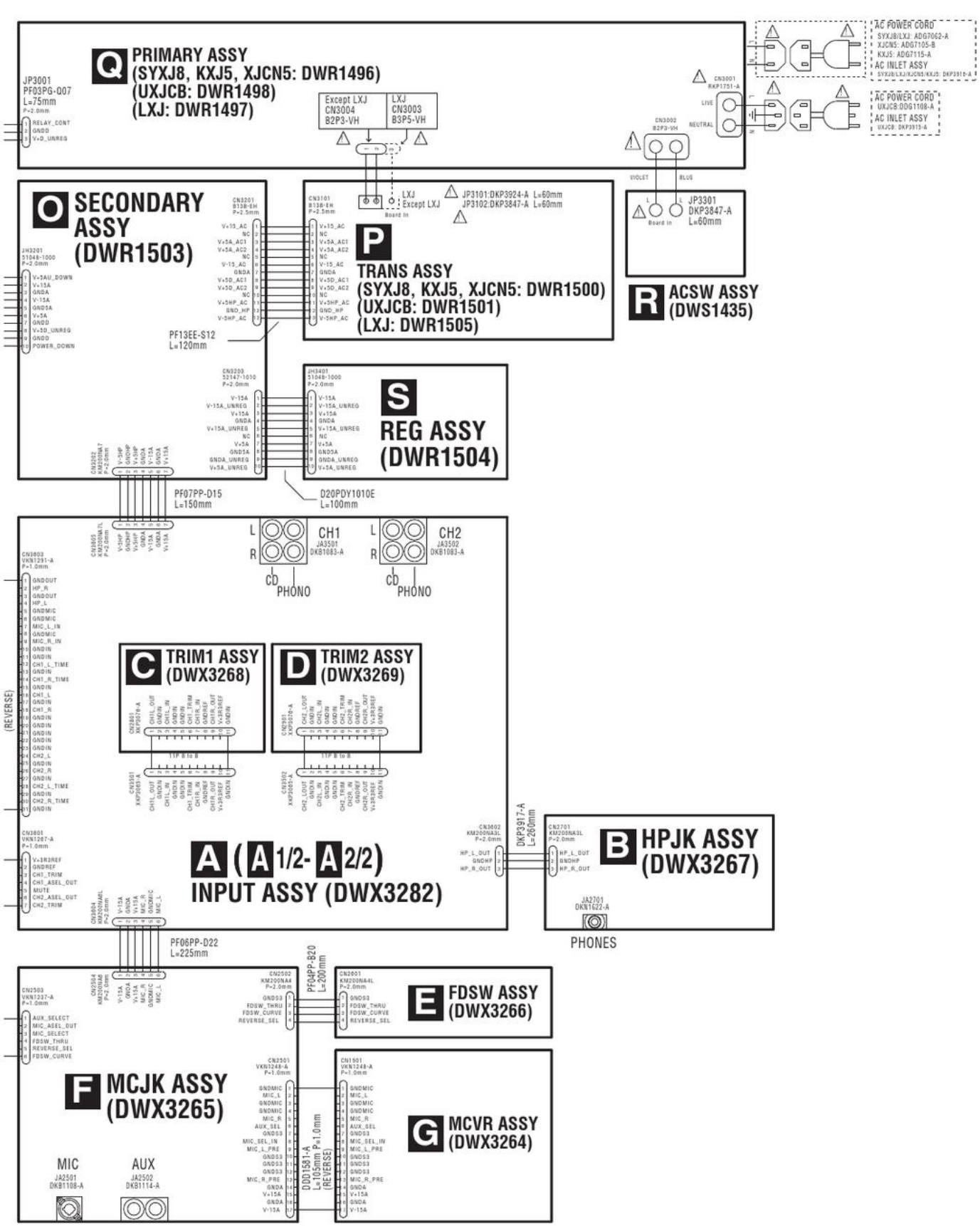
Q PRIMARY ASSY
(SYXJ8, KXJ5, XJCN5: DWR1496)
(UXJCB: DWR1498)
(LXJ: DWR1497)
JP3001
PF03PG-007
L=75mm
Except LXJ
CN3004
B2P3-VH
LXJ
CN3003
B3P5-VH
CN3001
RKP1751-A
LIVE
NEUTRAL
CN3002
B2P3-VH
AC POWER CORD
SYXJ8/LXJ: ADG7062-A
XJCN5: ADG7105-B
KXJ5: ADG7115-A
AC INLET ASSY
AC POWER CORD
UXJCB:DDG1108-A
AC INLET ASSY
UXJCB: DKP3915-A
VIOLET
BLUE
JP3101:DKP3924-A L=60mm
JP3102:DKP3847-A L=60mm
LXJ
Except LXJ
Board in
JP3301
DKP3847-A
L=60mm
R ACSW ASSY
(DWS1435)
O SECONDARY
ASSY
(DWR1503)
P
TRANS ASSY
(SYXJ8, KXJ5, XJCN5: DWR1500)
(UXJCB: DWR1501)
(LXJ: DWR1505)
PF13EE-S12
L=120mm
S
REG ASSY
(DWR1504)
PF07PP-D15
L=150mm
D20PDY1010E
L=100mm
CH1
JA3501
DKB1083-A
CH2
JA3502
DKB1083-A
CD
PHONO
(REVERSE)
C TRIM1 ASSY
(DWX3268)
D TRIM2 ASSY
(DWX3269)
A (A1/2- A2/2)
INPUT ASSY (DWX3282)
DKP3917-A
L=260mm
B HPJK ASSY
(DWX3267)
JA2701
DKN1622-A
PHONES
PF06PP-D22
L=225mm
PF04PP-B20
L=200mm
E FDSW ASSY
(DWX3266)
F MCJK ASSY
(DWX3265)
DDD1581-A
L=105mm P=1.0mm
(REVERSE)
G MCVR ASSY
(DWX3264)
MIC
JA2501
DKB1108-A
AUX
JA2502
DKB1114-A

4.2 OVERALL BLOCK DIAGRAM

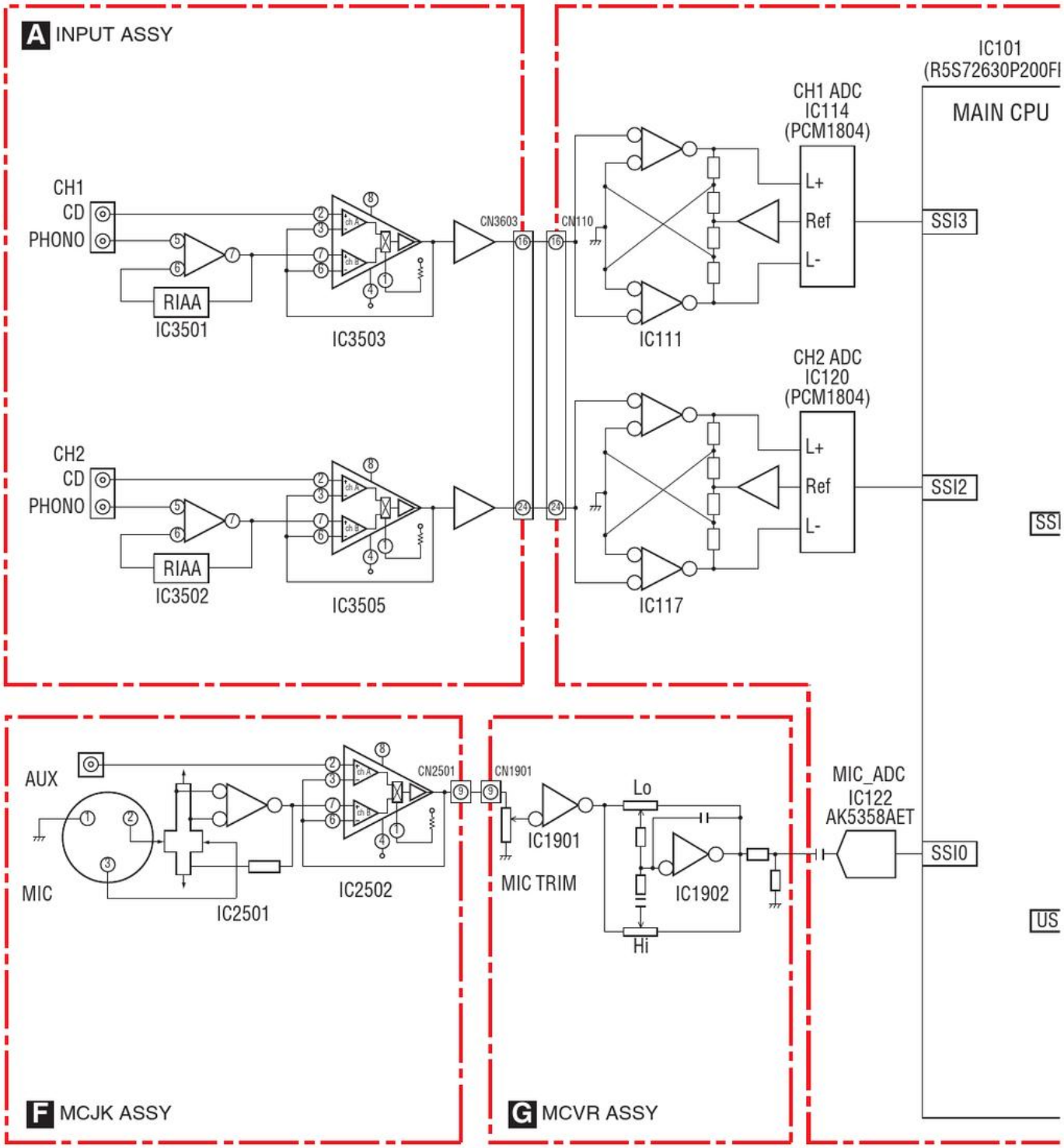

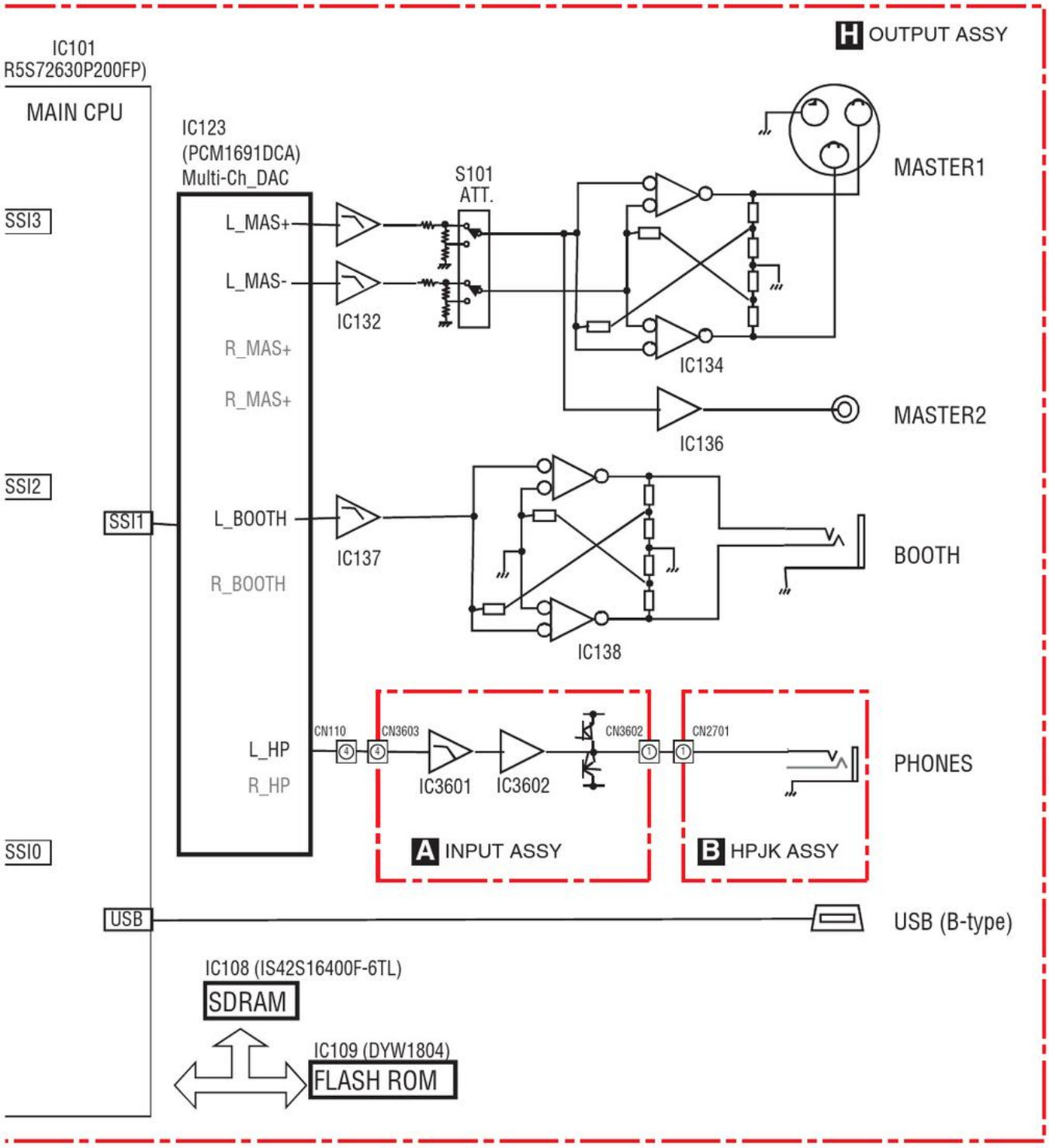
H OUTPUT ASSY
IC101
R5S72630P200FP)
MAIN CPU
IC123
(PCM1691DCA)
Multi-Ch_DAC
S101
ATT.
SSI3
L_MAS+
L_MAS-
IC132
R_MAS+
R_MAS+
IC134
MASTER1
IC136
MASTER2
SSI2
SSI1
L_BOOTH
IC137
R_BOOTH
IC138
BOOTH
CN110
CN3603
CN3602
CN2701
L_HP
R_HP
IC3601
IC3602
PHONES
A INPUT ASSY
B HPJK ASSY
SSI0
USB
USB (B-type)
IC108 (IS42S16400F-6TL)
SDRAM
IC109 (DYW1804)
FLASH ROM

4.3 POWER BLOCK DIAGRAM

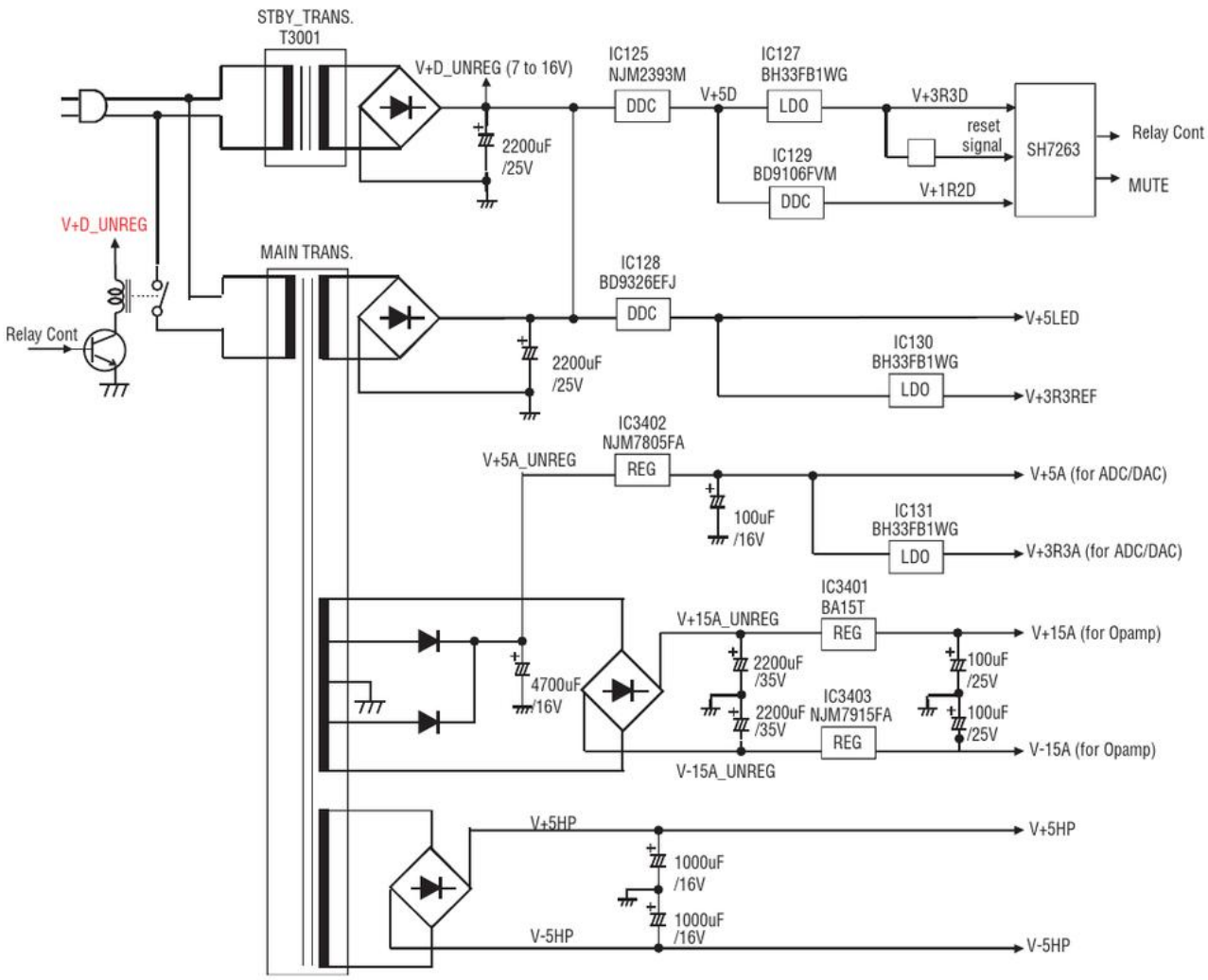

5. DIAGNOSIS
5.1 POWER ON SEQUENCE

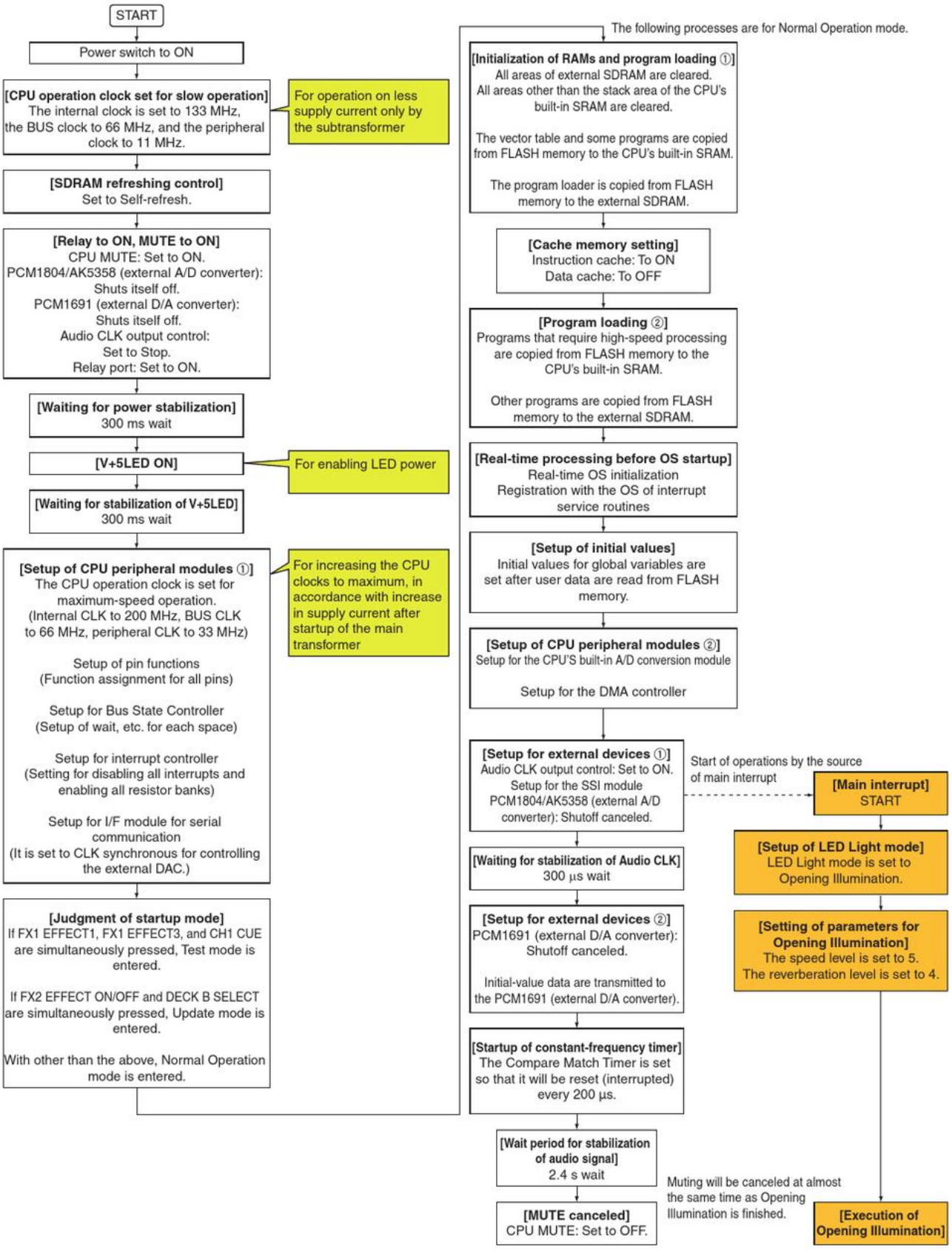

5.2 TROUBLESHOOTING

Contents

[0] Prior Confirmation

[0-1] Checking Internal Cables

No.	Cause	Diagnostics Point	Item to be Checked	Corrective Action	Reference
1	Disconnection, breakage, or loose connection of internal cables	Relevant part	Check that all the cables are securely connected. Check that there is no breakage in the cables.	Securely connect the cables. If a cable is broken, replace it.	4.1 OVERALL CONNECTION DIAGRAM

[1] Failure in Startup

[1-1] The unit dose not turn on, and all LEDs does not light

The fuse may be blowout or the MAIN CPU may be difective.

No.	Cause	Diagnostics Point	Item to be Checked	Corrective Action	Reference
1	Circuit failure Excessive power supply voltage injection	———	Check the primary side fuse.	• If blowing of the fuse is visible, go to [2]. • If blowing of the fuse is not visible, go to [3].	———
2	Power failure Wire defect	———	Check if any power IC is short-circuited to ground and if any ICP is damaged.	• If any power IC is short-circuited, repair it. • If no power IC is short-circuited, replace the fuse.	4.3 POWER BLOCK DIAGRAM
3	Power failure	OUTPUT Assy IC127 (5 pin) IC129	Check the V+3R3D and V+1R2D power.	• If the V+3R3D and V+1R2D power can be confirmed, go to [4]. • If the V+3R3D and V+1R2D power cannot be confirmed, the 3.3V REGULATOR (IC127) block may be defective. Check for the status of soldering and replace it.	4.3 POWER BLOCK DIAGRAM
4	CPU_RESET signal error	OUTPUT Assy IC103 (1 pin)	Check the CPU_RESETsignal.	• If the IC103_1 pin is high level, go to [5]. • If the IC103_1 pin is not high level, the RESET IC (IC2010) block may be defective. Check for the status of soldering and replace it.	———
5	CPU CLK error	OUTPUT Assy R149	Check the CPU_CLKsignal.	If an output signal cannot be confirmed, the crystal (X101) block may be defective. Check for the status of soldering and replace it.	———
6	MAIN_CPU diffective	OUTPUT Assy	If the symptom persists after the above corrections.	The MAIN_CPU (IC101) may be defective. Replace it.	———

[1-2] The unit does not turn on, and the UTILITY flashes (period 250 ms)

The unit is shut down in error by the Power Monitoring Circuit.

No.	Cause	Diagnostics Point	Item to be Checked	Corrective Action	Reference
1	Power failure	See "5.3 VOLTAGE MONITORING CIRCUIT."	Check for power at each point, following "5.3 VOLTAGE MONITORING CIRCUIT."	Repair the defective parts.	5.3 VOLTAGE MONITORING CIRCUIT

[2] AUDIO INPUT

[2-1] No signal is input to the CD/LINE and PHONO connectos

No.	Cause	Diagnostics Point	Item to be Checked	Corrective Action	Reference
0	Prior Confirmation	CD, PHONO, USB input selector switch /TRIM	Confirm on the screen that the selector is set properly.	———	Operating instructions
1	Loose connection /defective parts	INPUT Assy CH1: IC3503 (1 pin) CH2: IC3505 (1 pin)	Check that the signals output from the ICs are properly switched to CD or PHONO.	• If the proper signals are output, go to [2]. • If the proper signals are not output, soldering of parts at the peripheral circuits of the switching operational amplifier (IC3503, 3504, 3505, 3506) or the MUTE control transistors (Q3509, Q3510) is defective or one or more of the parts is defective. Or check for disruption somewhere in the control-signal path from IC101 to the MUTE control transistors.	10.24 WAVEFORMS ⑱
2	Loose connection /defective parts	OUTPUT Assy CD1_L: D105 CD1_R: D103 CD2_L: D111 CD2_R: D109	[Checking the ADC block] Check for an audio signal at the input connector of ADC (IC114, IC120).	If no audio signal is input to ADC, a problem in an analog circuit at the previous stage may be suspected. • If an audio signal is input, go to [3]. • If no audio signal is input, check the block where the signal is interrupted, by measuring the audio signal before and after each block, then check the soldering status and check for a defective part in the corresponding block.	10.24 WAVEFORMS ②
3	Loose connection /defective parts	OUTPUT Assy IC114 (CH1)(19 pin) IC120 (CH2)(19 pin)	Check for the RESET signal of ADC.	• If the RESET signal level is H, go to [4]. • If the RESET signal is L, soldering of the R141 or IC101 is defective, or the resistor or IC itself is defective.	10.24 WAVEFORMS ⑦
4	Loose connection /defective parts	OUTPUT Assy IC114 (CH1) IC120 (CH2) ACLK (18 pin) AD_48k (17 pin) AD_6R144M (16 pin)	Check for the CLK signal of ADC.	• If no CLK signal is input, go to [5]. • If the ACLK signal is not input, check the soldering status and check for a defective part at the periphery of the ACLK (X103, IC105, IC106, IC107). • If the AD_48k signal is not input, check the soldering status and check for a defective part at the periphery of the AD_48k (IC104). • If the AD_6R144M signal is not input, check the soldering status and check for a defective part at the periphery of the AD_6R144M (IC102).	10.24 WAVEFORMS ④, ⑤, ⑥
5	defective parts	OUTPUT AAssy CH1_DATA: R248 CH2_DATA: R288	[Checking the ADC block] Check for an audio signal at the output connector of ADC (IC114, IC120).	If no signal is output from the ADC, the AD converter ICs (IC114, IC120) may be defective. Check the soldering status. If soldering is OK, replace the defective part. • If a signal is output from the ADC, soldering of the IC101 or the IC itself is defective.	10.24 WAVEFORMS ③

[2-2] No signal input to the MIC/AUX connectors

No.	Cause	Diagnostics Point	Item to be Checked	Corrective Action	Reference
0	Prior Confirmation	INPUT SELECT switch (MIC, OFF, AUX)	Confirm on the screen that the selector is set properly.	———	Operating instructions
1	Loose connection /defective parts	INPUT Assy IC2502 (1pin)	Check that the signal output from the IC is properly switched to AUX or MIX.	• If the proper signal is output, go to [2]. • If the proper signal is not output, soldering of parts at the peripheral circuits of the switching operational amplifier (IC2502, 2503) or the MUTE control transistor (Q2503) is defective or one or more of the parts is defective. Or check for disruption somewhere in the control-signal path from IC101 to the MUTE control transistors.	10.24 WAVEFORMS ⑱
2	Loose connection /defective parts	OUTPUT Assy AUX_L: D114 AUX_R: D113	[Checking the ADC block] Check for an audio signal at the input connector of ADC (IC122).	If no audio signal is input to ADC, a problem in an analog circuit at the previous stage may be suspected. • If an audio signal is input, go to [3]. • If no audio signal is input, check the block where the signal is interrupted, by measuring the audio signal before and after each block, then check the soldering status and check for a defective part in the corresponding block.	10.24 WAVEFORMS ②
3	Loose connection /defective parts	OUTPUT Assy IC122 (AUX)(13 pin)	Check for the RESET signal of ADC.	• If the RESET signal level is H, go to [4]. • If the RESET signal is L, soldering of the IC122 or IC101 or either of the ICs itself is defective. Distinguish which IC (IC101 or IC122) is defective, by removing either R247 (for CH 1) or R287 (for CH 2) at a time.	10.24 WAVEFORMS ⑦

No.	Cause	Diagnostics Point	Item to be Checked	Corrective Action	Reference
4	Loose connection /defective parts	OUTPUT Assy IC122 (AUX) ACLK (11 pin) AD_48k (10 pin) AD_6R144M (12 pin)	Check for the CLK signal of ADC.	• If no CLK signal is input, go to [5]. • If the ACLK signal is not input, check the soldering status and check for a defective part at the periphery of the R151 (ACLK_CONT) and ACLK (X103, IC105, IC106, IC107). • If the AD_48k signal is not input, check the soldering status and check for a defective part at the periphery of the AD_48k (IC104). • If the AD_6R144M signal is not input, check the soldering status and check for a defective part at the periphery of the AD_6R144M (IC102).	10.24 WAVEFORMS ④, ⑤, ⑥
5	defective parts	OUTPUT Assy MIC_DATA: R299 (9 pin)	[Checking the ADC block] Check for an audio signal at the output connector of ADC (IC122).	If no signal is output from the ADC, the AD converter (IC122) may be defective. Check the soldering status. If soldering is OK, replace the defective part. • If a signal is output from the ADC, soldering of the IC101 or the IC itself is defective.	10.24 WAVEFORMS ③

[3] AUDIO OUTPUT

[3-1] No signal is output to the MASTER1/MASTER2/BOOTH/PHONES connectors

No.	Cause	Diagnostics Point	Item to be Checked	Corrective Action	Reference
1	Prior Confirmation	MASTER1 / MASTER2 / BOOTH / PHONES	Identify the connector(s) that do(es) not output signals.	• If no connectors output, go to [2] • If neither MASTER 1 nor 2 connector outputs, go to [7]. • If only the MASTER 1 connector does not output, go to [8]. • If only the MASTER 2 connector does not output, go to [14]. • If only the BOOTH connector does not output, go to [15]. • If only the PHONE connector does not output, go to [17].	Operating instructions
2	Loose connection /defective parts	OUTPUT Assy IC123	[Checking the DAC block] Check for the DA converter (IC123) signal output.	• If the DAC output signal is normal, the MUTE circuit is activated. Go to [11]. • If no signal is output from the DAC output, go to [3].	10.24 WAVEFORMS ⑬
3	Loose connection /defective parts	OUTPUT Assy IC123 (8, 9, 10, 11 pin)	[Checking the DAC block] Check that a signal is output from the OUT_DATA.	• If a signal is output, go to [4]. • If no signal is output, the IC101 must be improperly soldered or defective.	10.24 WAVEFORMS ⑫
4	Loose connection /defective parts	OUTPUT Assy IC123 (18 pin)	[Checking the DAC block] Check for the AMUTEI signal (IC123_18 pin).	• If it is H, go to [5]. • If it is L, the R620 or IC123 must be improperly soldered or defective.	———
5	Loose connection /defective parts	OTUPUT Assy IC123 (15 pin)	[Checking the DAC block] Check that the DA_RESET signal level isHigh.	• If it is H, go to [6]. • If it is L, the IC101 or IC123 must beimproperly soldered or defective. Distinguish which IC (IC101 or IC123) is defective, by removing R302.	10.24 WAVEFORMS ⑧
6	Loose connection /defective parts	OUTPUT Assy IC123 ACLK_OUIT (14 pin) DA_48k (6 pin) DA_12R288M (7pin)	[Checking the DAC block] Check for the CLK signal of DA converter (IC123). ACLK_OUT, DA_48k, DA_12R288M	• If the CLK signal is output, soldering of the IC123 or the IC itself is defective. • If the ACLK signal is not input, check the soldering status and check for a defective part at the periphery of the R151 (ACLK_CONT) and ACLK (X103, IC105, IC106, IC107). • If either the DA_48k or DA_12R288M signal is not output, check the soldering status of R144, R145, and IC101 and check if any of these parts are defective.	10.24 WAVEFORMS ⑨, ⑩, ⑪
7	Loose connection /defective parts	OUTPUT Assy S101 (1COM, 2COM, 3COM, 4COM) IC123 (37, 39, 41, 43 pin) IC132/IC133 (1 pin, 7 pin)	[Checking the MASTER_Shaping Noise Filter] Check for the DAC differential audio signal output. Check for Shaping Noise Filter signal output.	• If a signal is output from the S101, go to [8] and [14]. • If no signal is output from the S101 although signals are output from Pins 1 and 7 of IC132/IC133, soldering of the S101 or the S101 itself is defective. • If signals are output from the DAC (Pins 37, 39, 41, and 43 of IC123) but not from Pins 1 and 7 of IC132/IC133, soldering of the Shaping Noise Filter block or some part in the block is defective. • If no signal is output from the DAC (Pins 37, 39, 41, and 43 of IC123), go to [3].	10.24 WAVEFORMS ⑬

No.	Cause	Diagnostics Point	Item to be Checked	Corrective Action	Reference
8	Loose connection /defective parts	OUTPUT Assy IC134 1, 7 pin IC135 1, 7 pin	[Checking the Balanced Output AMP] Check the waveforms of the signals from the output pins of IC134/135.	• If no signal is output, soldering of the IC134/IC135 is defective or the ICs themselves are defective. • If signals are output, soldering of the output capacitors (C530, C531, C532, C533) or the ICPs (P103, P104) is defective or the capacitors or ICPs themselves are defective. Or the MUTE circuited is activated. • If the MUTE circuited is activated, go to [9].	10.24 WAVEFORMS ⑭
9	Loose connection /defective parts	OUTPUT Assy CN103 (13 pin)	[Checking the MASTER_VR_MUTE] Check that the MASTER_VR_MUTE signal (CN103_13 pin) level is Low (MUTE_OFF).	• If it is H, go to [10]. • If it is L, go to [11].	———
10	Loose connection /defective parts	VRSW Assy IC2201 (1 pin)	[Checking the MASTER_VR_MUTE] Check that the IC2201 1 pin level is High (MUTE_OFF).	• If it is H, Q2201 must be improperly soldered or defective. • If it is L, IC2201 or VR2203 or peripheral parts must be improperly soldered or defective.	———
11	Loose connection /defective parts	OUTPUT Assy CN109 (5 pin)	[Checking the MUTE] Check that the MUTE signal (CN109_5 pin) level is Low (MUTE_OFF).	• If it is L, MUTE circuit (D117, Q120 to Q123, Q128 to Q131) or peripheral parts must be improperly soldered or defective. • If it is H, go to [12].	———
12	Loose connection /defective parts	OUTPUT Assy IC101 (152 pin)	[Checking the MUTE] Check that the CPU_MUTE signal level is High (MUTE_ON).	• If it is H, go to [13]. • If it is L, Q113, Q114, and Q115 or peripheral parts must be improperly soldered or defective.	———
13	Loose connection /defective parts	OUTPUT Assy DETECT FLAG	[Checking the MUTE] Check that the DETECT FLAG test pin is Low (voltage failure).	• If it is L, a power failure was generated. Go to [1-2]. • If it is H, soldering of the IC101 or the IC itself is defective.	———
14	Loose connection /defective parts	OUTPUT Assy IC136 1, 7 pin	[Checking the MASTER2] Check the waveform of IC136 output pin.	• If no signal is output, soldering of the IC136 or the IC itself is defective. • If signals are output, soldering of the output capacitors (C452, C453), R126, or Q127 is defective or one or more of those parts is defective.	10.24 WAVEFORMS ⑮
15	Loose connection /defective parts	OUTPUT Assy IC123 (33 pin, 35 pin) IC138/139 (1 pin, 7 pin)	[Checking the BOOTH_Shaping Noise Filter] Check the DAC audio signal output. Check the Shaping Noise Filter output.	• If signals are output from Pins 1 and 7 of IC137, go to [16]. • If signals are output from the DAC (Pins 33 and 35 of IC123) but not from Pins 1 and 7 of IC138/IC139, soldering of C328, C329, or the Shaping Noise Filter block is defective or one or more of those parts is defective. • If no signal is output from the DAC (Pins 33 and 35 of IC123), go to [3].	10.24 WAVEFORMS ⑬
16	Loose connection /defective parts	OUTPUT Assy IC138 1, 7 pin IC139 1, 7 pin	[Checking the Output AMP] Check the waveform of IC138/IC139 output pins.	• If no signal is output, soldering of the IC138/IC139 is defective or the ICs themselves are defective. • If signals are output, soldering of the output capacitors (C534, C535, C536, C537) is defective or one or more of those capacitors is defective. Or soldering of parts at the periphery of the BOOTH_MUTE circuit (Q145, Q146, Q132–Q139) is defective or one or more of those parts is defective.	10.24 WAVEFORMS ⑭
17	Loose connection /defective parts	OUTPUT Assy IC123 (29 pin, 31 pin) INPUT Assy IC3601 (1 pin, 7 pin)	[Checking the HP_Shaping Noise Filter] Check the DAC audio signal output. Check the Shaping Noise Filter output.	• If signals are output from Pins 1 and 7 of IC3601, go to [18]. • If signals are output from the DAC (Pins 33 and 35 of IC123) but not from Pins 1 and 7 of IC3601, soldering of the Shaping Noise Filter block or some part in the block is defective. • If no signal is output from the DAC (Pins 33 and 35 of IC123), go to [3].	10.24 WAVEFORMS ⑯
18	Loose connection /defective parts	OUTPUT Assy IC138 1, 7 pin IC139 1, 7 pin	[Checking the HP Output AMP] Check the audio signal between IC3602 and HP_JACK.	Check the block where the signal is interrupted, by measuring the audio signal before and after each block, then check the soldering status and check for a defective part in the corresponding block.	10.24 WAVEFORMS ⑰

[4] DVS

[4-1] No analog timecode signal input to the mixer.

No.	Cause	Diagnostics Point	Item to be Checked	Corrective Action	Reference
0	Prior Confirmation	CD, PHONO, USB input selector switch /Setting of PC	• Check that the selector switch is set to USB. • Check that the settings for the DJM-T1 Utility of the PC are correct. • When using a DJ player (when using a control CD,) check that the DJ player is connected via the CD connector. When using a turntable (when using a control VINYL,) check that the turntable is connected via the PHONO connector.	If the switch is set to a position other than USB, set it to USB.	Operating instructions
1	Incorrect setting	PC Setting Utility ① (at the CD input)	Start up the Setup Utility that has been installed on the customer's PC then click on the MIXER OUTPUT tab. Check that CH* Timecode CD is selected.	If CH* Timecode PHONO is selected, set it to CH* Timecode CD.	Operating instructions
2	Incorrect setting	PC Setting Utility ② (at the PHONO input)	Start up the Setup Utility that has been installed on the customer's PC then click on the MIXER OUTPUT tab. Check that CH* Timecode PHONO is selected.	If CH* Timecode CD is selected, set it to CH* Timecode PHONO.	Operating instructions
3	Incorrect setting	DECK mode of TRAKTOR2	Start up TRAKTOR2 that has been installed on the customer's PC then check that two record icons are displayed next to the Play button on the track deck. (If a record icon is displayed, the unit is in Scratch Control mode, which signifies that the DVS can be used.) See Screens ① and ② in [Reference for the DVS].	If CUE and CUP are displayed next to the Play button on the track deck (in Internal Playback mode), switch to Scratch Control mode. To switch modes, click on ▼ beneath [A] or [B] on the deck GUI. See Screen ③ in [Reference for the DVS].	Operating instructions TRAKTOR2 manual
4	Incorrect setting	Playback Tracking mode of TRAKTOR2	Check that one of the two record icons next to the Play button on the track deck is lit.	If both their icons are unlit, set TRAKTOR2 to Playback Tracking mode, by simultaneously pressing the SHIFT and PLAY/PAUSE buttons or the SHIFT and CUE buttons. (Simultaneous pressing on the SHIFT and PLAY/PAUSE buttons sets it to Relative mode, and on the SHIFT and CUE buttons sets it to Absolute mode.)	Operating instructions TRAKTOR2 manual
5	Incorrect setting	Timecode signal input	Select Preferences, Timecode Setup, then Timecode Inputs on TRAKTOR2, then check that the double circle is displayed for the channel to which the timecode signal is input. (The double circle for VINYL is displayed somewhat distorted. The shapes of the double circles for the outer and inner tracks are different.) Perform this check only when a timecode control CD or VINYL (media on which timecodes are recorded) is available. See Screens ④ and ⑤ in [Reference for the DVS].	If no double circle is displayed, possible reasons are as follows: ① The channel for USB AUDIO output of the DJM-T1 and that for USB AUDIO input of TRAKTOR2 do not match. → Check the channel setting on the Input Routing screen in the Preferences window of TRAKTOR2 and that of the PC Setup Utility. ② Connection between the external device (DJ player, turntable) and the DJM-T1 is not properly made. → Check the connection and check if the RCA cables are broken. ③ The driver software dedicated for the DJM-T1 has not been installed. → Install the dedicated driver software. ④ USB connection has not been properly made. → Check if the USB cable is broken.	Operating instructions

[Reference for the DVS]

Screen ①

With these icons lit, the unit is in Scratch Control mode. With the left record icon lit, the unit is in Relative mode, and with the right record icon lit, the unit is in Absolute mode.

Screen ②

With these icons lit, the unit is in Internal Playback mode.

To switch between Internal Playback and Scratch Control modes, click on this sign.

Screen ③

Screen ④

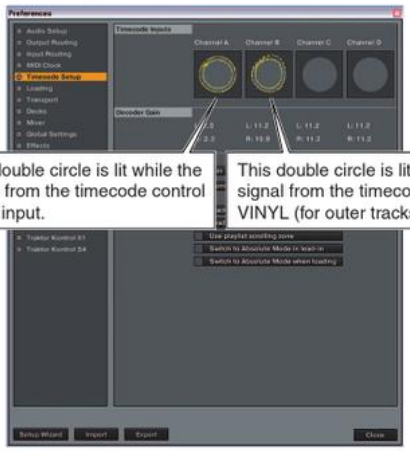

This double circle is lit while the signal from the timecode control CD is input.

This double circle is lit while the signal from the timecode control VINYL (for outer tracks) is input.

Screen ⑤

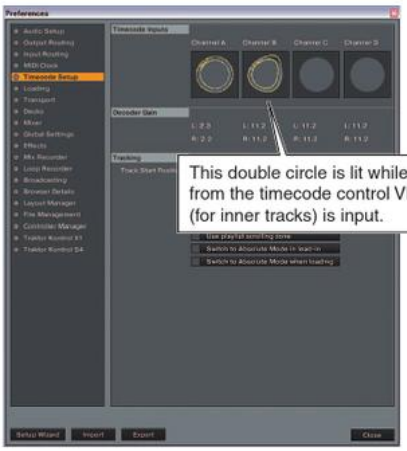

This double circle is lit while the signal from the timecode control VINYL (for inner tracks) is input.

[4-2] No signal is input to and output from the USB connector.

• Input

No.	Cause	Diagnostics Point	Item to be Checked	Corrective Action	Reference
0	Incorrect setting	CD, PHONO, USB input selector switch	Check that the selector switch is set to USB.	If the switch is set to a position other than USB, set it to USB.	Operating instructions
1	Incorrect setting	Output Routing of TRAKTOR2 (when TRAKTOR2 is used)	Check the settings for each deck on the Output Routing screen in the Preferences window of TRAKTOR2. → Check the settings only when TRAKTOR2 is used. → See Screen ⑥ in [Reference for the USB].	Perform the settings for each deck on the Output Routing screen of TRAKTOR2, referring to Screen ⑥ in [Reference for the USB].	———
2	Incorrect setting	Driver software	Check that the UTILITY/WAKE UP indicator is unlit when this unit is connected with the customer's PC via a USB cable.	If the driver software is not installed, the UTILITY/WAKE UP indicator flashes at intervals of 4 seconds. Install the driver software.	———

• Output

No.	Cause	Diagnostics Point	Item to be Checked	Corrective Action	Reference
0	Incorrect setting	CD, PHONO, USB input selector switch	Check that the selector switch is set to USB.	If the switch is set to a position other than USB, set it to USB.	Operating instructions
1	Incorrect setting	Input Routing of TRAKTOR2 (when TRAKTOR2 is used)	Check the settings for each deck on the Input Routing screen in the Preferences window of TRAKTOR2. → Check the settings only when TRAKTOR2 is used. → See Screen ⑦ in [Reference for the USB].	Perform the settings for each deck on the Input Routing screen of TRAKTOR2, referring to Screen ⑦ in [Reference for the USB].	———
2	Incorrect setting	PC Setting Utility	Start up the PC Setup Utility then click on the MIXER OUTPUT tab. Check that the signal to be output via the USB ports is selected. → See Screen ⑧ in [Reference for the USB].	Select the signal to be output via the USB ports.	Operating instructions
3	Incorrect setting	Driver software	Check that the UTILITY/WAKE UP indicator is unlit when this unit is connected with the customer's PC via a USB cable.	If the driver software is not installed, the UTILITY/WAKE UP indicator flashes at intervals of 4 seconds. Install the driver software.	———

[Reference for the USB]

Screen ⑥

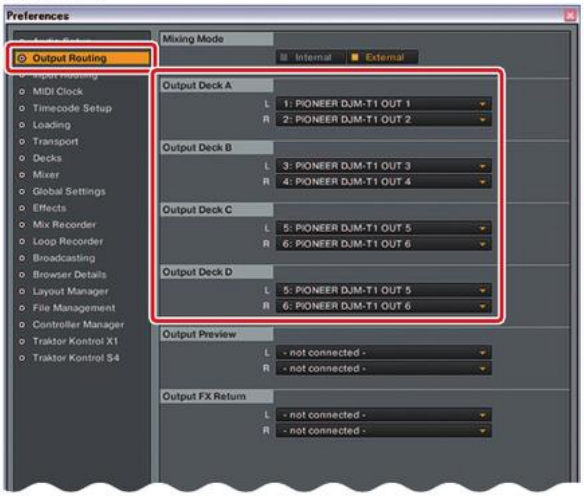

Screen ⑦

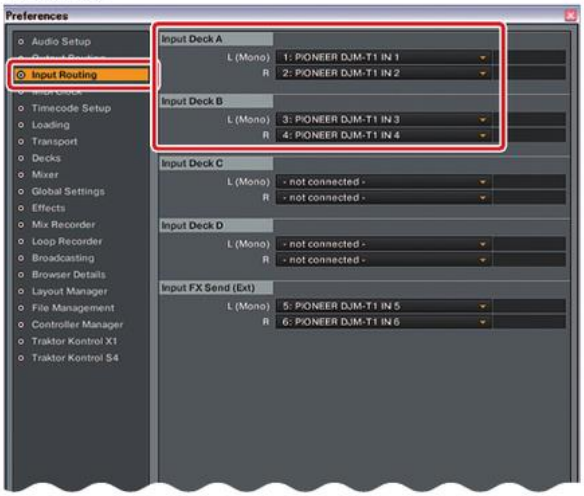

Screens ⑥ and ⑦ are those of TRAKTOR2 for Windows.
For screens for Macintosh, the USB channels' numbers are different.
Example 1: For Windows: 1: PIONEER DJM-T1 OUT1
For Macintosh: 1: PIONEER DJM-T1 Out0
Example 2: For Windows: 1: PIONEER DJM-T1 IN1
For Macintosh: 1: PIONEER DJM-T1 In0

Screen ⑧

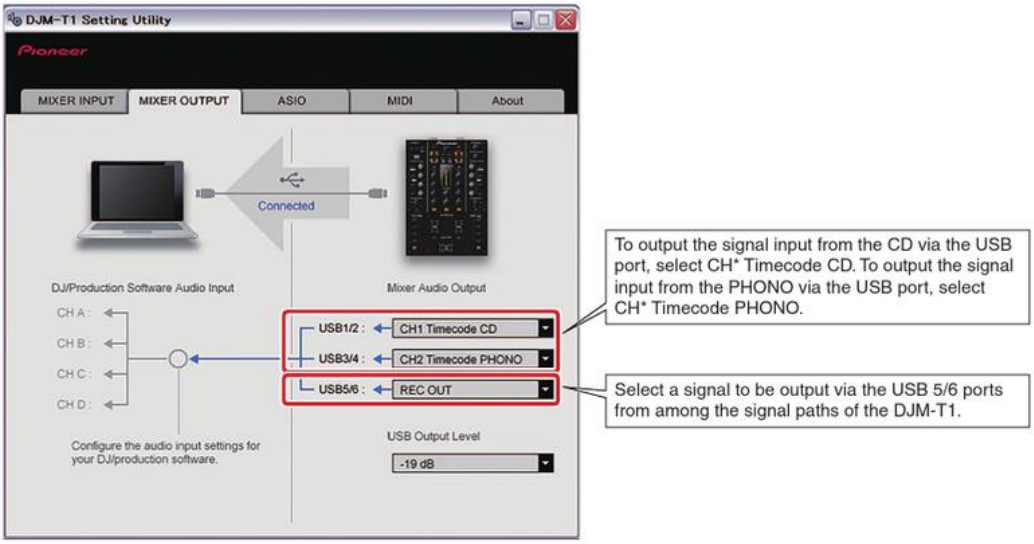

[5] LED

[5-1] The LED does not light.

No.	Cause	Diagnostics Point	Item to be Checked	Corrective Action	Reference
1	Power failure	See "5.3 VOLTAGE MONITORING CIRCUIT."	Check for power at each point, following "5.3 VOLTAGE MONITORING CIRCUIT."	Repair the defective parts.	5.3 VOLTAGE MONITORING CIRCUIT
2	Short-circuiting of adjacent pins/ defective part	Connector, Control Transistor	Check for the control signal of the corresponding location.	• If there is a control signal, soldering of the control transistor or the corresponding LED is defective, or the transistor or the LED itself is defective. • If there is no control signal, adjacent pins of the connector are short-circuited. Or soldering of IC101 or the IC itself is defective.	———

[6] Channel Fader/Cross Fader

[6-1] The Channel Fader does not work

No.	Cause	Diagnostics Point	Item to be Checked	Corrective Action	Reference
0	Prior Confirmation	CHFD1 Assy CHFD2 Assy	Check that the connections are properly made for the CH1 FADER and CH2 FADER.	———	4.1 OVERALL WIRING DIAGRAM
1	Part defective	CHFD1 Assy CHFD2 Assy	Check the AD_CH1_FADER signal or AD_CH2_FADER signal.	• If the output signal is normal, soldering of the signal path or some part on the signal path is defective. Or soldering of IC101 or the IC itself is defective. • If the output signal is abnormal, soldering of the VR2301 or VR2401 is defective, or one or both VRs is defective. Check that the proper screws are used for securing the VR2301 and VR2401 to the VR stays. (Using improper screws may damage the VR2301/ VR2401.)	———

[6-2] The Cross Fader does not work

No.	Cause	Diagnostics Point	Item to be Checked	Corrective Action	Reference
1	Part defective	CRFD Assy	Check the IC4001 output signal.	• If the output signal is normal, soldering of the signal path or some part on the signal path is defective. Or soldering of IC101 or the IC itself is defective. • If there is no output signal, replace the CROSS FADER Assy (DXA2243).	———

5.3 VOLTAGE MONITORING CIRCUIT

This unit monitors the voltages of the main power-supply ICs, using the DETECTION_FLG signal.
The DETECTION_FLG signal is detected by the MAIN CPU (IC101). Its level is high during normal operation but becomes low if any error in voltage is generated.

Product behavior when an error is generated

If power failure is detected with the DETECTION_FLG signal, the MAIN CPU will stop supplying the primary source of power to the main transformer, setting the RelayCont signal to low and interrupting the relay RY3001.
The MAIN CPU also indicates power failure by making the UTILITY/WAKE UP button flash.

Diagnostic procedure

If any voltage is abnormal, that error will be detected by the voltage-monitoring program after it is started after a usual startup of the unit. Then the power supply to the main transformer will be stopped. For this reason, power will be supplied for about 3 sec after startup.
Identify which power-supply IC is defective, by turning the unit OFF then back ON while monitoring each voltage with an oscilloscope. Check the value of each voltage immediately before stopping power supply.

Note: Each time before turning the unit ON, make sure that each power-supply IC is not short-circuited to GND.

Circuit diagram of the voltage-monitoring section

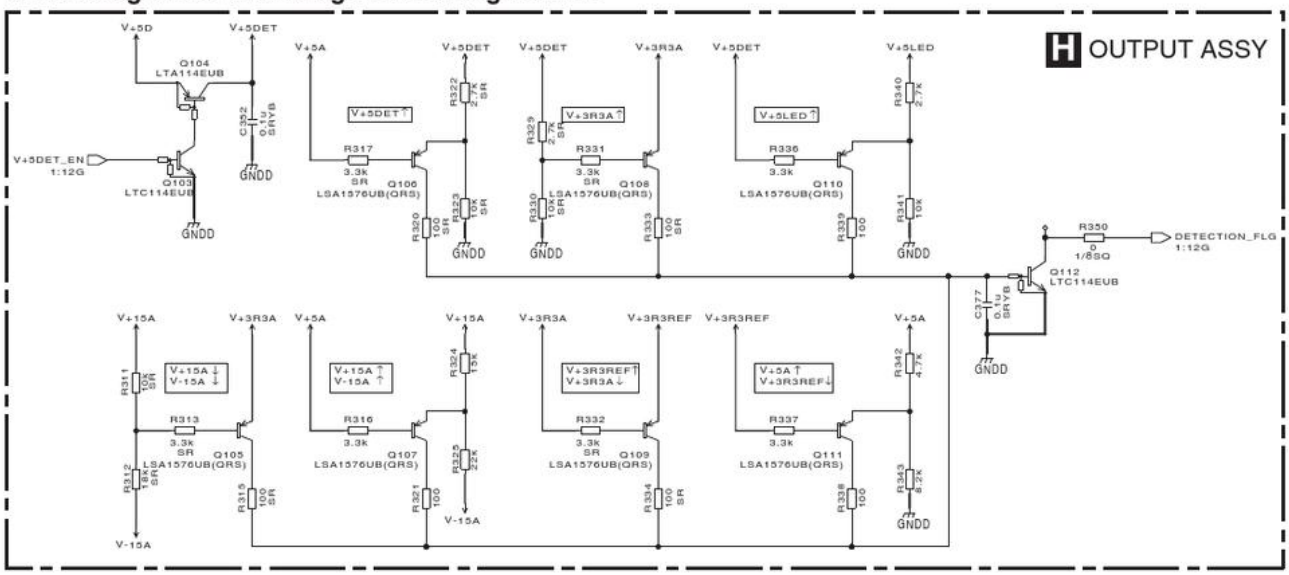

Power	Over voltage / Under voltage	Threshold		Cause of error detection
		Detection range in consideration of variations	Center value	
V+15A	+	17.45 to 22.10 V	19.65 V	Short-circuiting at regulator IN/OUT
	–	11.50 to 13.72 V	12.53 V	Short-circuiting to GND
V-15A	+	-5.43 to -11.64 V	-8.19 V	Short-circuiting to GND
	–	-15.76 to -23.57 V	-19.44 V	Short-circuiting at regulator IN/OUT
V+5A	+	5.72 to 6.79 V	6.18 V	Short-circuiting at regulator IN/OUT
V+3R3A	+	4.13 to 4.65 V	4.38 V	Short-circuiting at regulator IN/OUT
	–	2.567 to 2.833 V	2.7 V	Short-circuiting to GND
V+5DET	+	6.59 to 7.66 V	7.11 V	Short-circuiting at D/D converter IN/OUT
V+5LED	+	6.48 to 7.28 V	6.87 V	Short-circuiting at D/D converter IN/OUT
V+3R3REF	+	3.767 to 4.033 V	3.93 V	Short-circuiting at LDO IN/OUT
	–	2.24 to 2.92 V	2.58 V	Short-circuiting to GND

5.4 ABOUT PROTECTOR

In addition to the voltage-monitoring circuit, ICPs (IC protectors) are also provided with this unit for voltage monitoring of the main power.
If the specified power or signal from the MASTER 1 connectors (XLR) is not properly output, check if any ICP is activated.

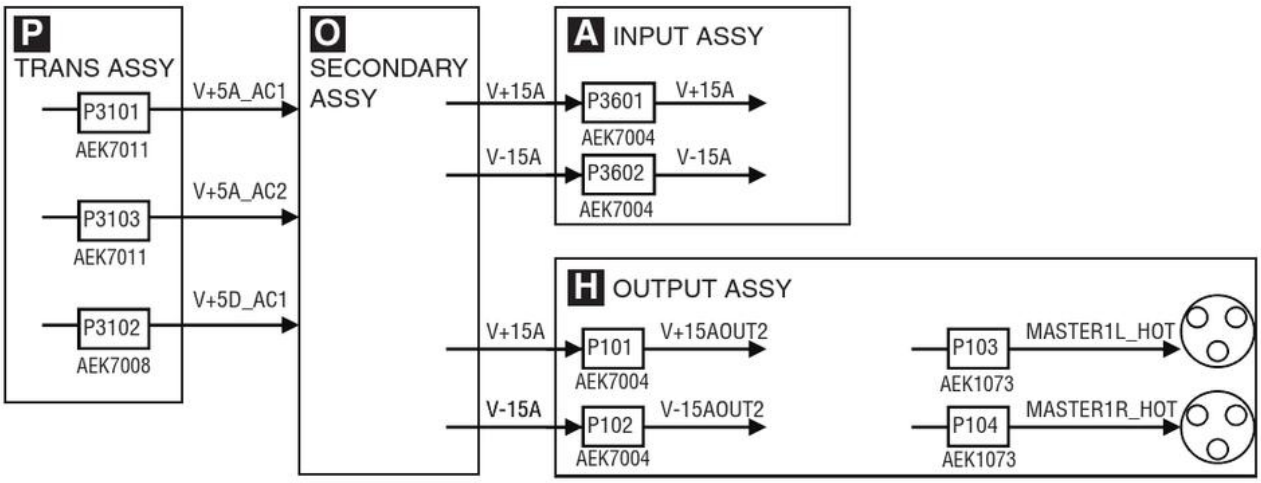

Diagnostic procedures when the wire for an ICP is broken

1. Unplug the AC power cord.
2. Check for any error, such as short-circuiting or defective parts, in the circuits subsequent to the ICP.
3. Repair the defective part.
4. Replace the ICP.

5.5 CONNECTION CHECK WITH USB

USB (USB B connector)

Whether communication between the PC connected via the USB B connector and this unit is properly performed or not can be confirmed on the PC.
Note: The driver software of the DJM-T1 must be installed beforehand.

Confirming USB connection status with the LEDs of this unit

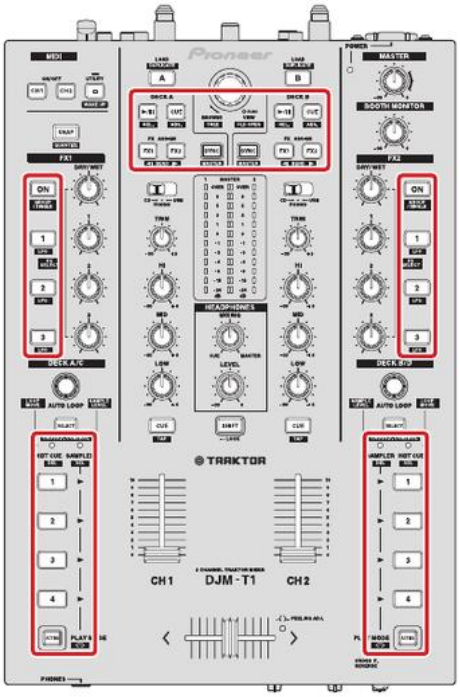

After a USB electrical connection is established on the DJM-T1, the LEDs that are indicated with red frames in the figure will go dark. Then they will light brightly for several seconds then go dim if TRAKTOR2 is not started. Note that this sequence does not necessarily indicate that communication with the PC has been established. Also note that the LEDs indicated with red frames are unlit if USB electrical connection is not established.

If the UTILITY/WAKE UP indicator flashes at intervals of 4 seconds, the dedicated driver for this unit has not been installed on the connected PC.

Use Device Manager for checking.

If the PC and this unit are properly connected, the components of this unit are added in Device Manager (under Hardware) as devices.
If all components are properly displayed, USB communication between the PC and this unit is ready.

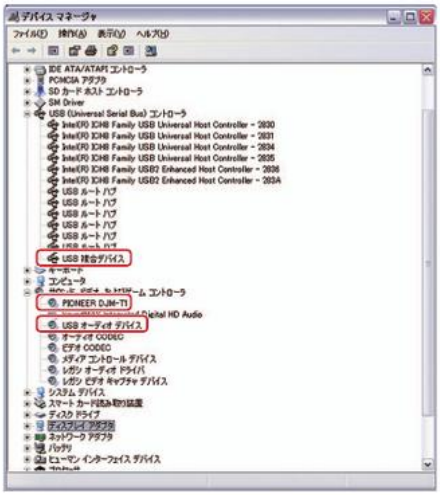

In a case of Windows XP:

Start, Control Panel, System, Hardware, then Device Manager
Devices to be added:

- Universal Serial Bus controllers
  USB Composite Device
- Under “Sound, video and game controllers”
  PIONEER DJM-T1
  USB Audio Device

* A communication check may be easily performed if connection is made with Device Manager displayed on the PC screen.
* To display [System] in the [Control Panel] window, click on “Classic View.”

5.6 DVS SIGNAL ROUTE CONFIRMATION METHOD

What is the DVS (Digital Vinyl System)?

The Digital Vinyl System (DVS) enables control of DJ software with normal DJ's operations of the CDJs or turntables, with use of a control CD or VINYL supplied with DJ software that supports the DVS. A control disc contains timecodes for controlling DJ software, which enable playback of music files stored on the PC from an assigned playback position at an assigned playback speed.

Note: For checking operations as the DVS, a control CD (CD on which timecodes are recorded) is required. However, assuming a case where no control CD is available, a simple check procedure using a music CD is explained here.

Necessary Items

- USB AUDIO driver dedicated for the DJM-T1 and a PC with TRAKTOR SCRATCH PRO2 or TRAKTOR SCRATCH DUO2 installed (the demo versions of TRAKTOR 2 will suffice)
- CDJ player
- Music CD to be used for operation check

Check Procedures

1. Connect this unit and a PC, using the USB cable.
2. Connect the output connector of the CDJ player and the CH1 CD input connector of this unit, using an RCA cable.
3. Set the CD/PHONO/USB selector switch to USB.
4. For details on PC settings, see “Settings for the Driver” and “Settings on TRAKTOR2.”
5. Load a Music CD into the CDJ player that is connected with this unit then play it back.
   - Select Preferences then Input Routing on TRAKTOR2 and check that the volume indicator for Input Deck A is oscillating along with the sound from the music CD.
     [Comment] With this step, you can check that the audio or timecode signals output from the CDJ are input to the PC, passing through this unit via USB connection.
   - Check that the volume indicator located on the left of the indication “MAIN” on the Status Indicator section of TRAKTOR2 is oscillating along with the sound from the music CD.
     [Comment] In normal DVS operations, music files on the PC are played back, using DJ software. However, in the above step, in order to facilitate confirmation of the signal route, a signal from a music CD is output, using DJ software.
   - Check that the CH1 level indicator of this unit is oscillating. (If the oscillation is small, perform TRIM adjustment.)
   - Check that music of music CD is output from the MASTER output of this unit.
     (Adjust the fader MASTER LEVEL control, as required.)
     Or check that music of music CD is output from the HEADPHONES output.
6. Perform the same procedure for CH2.

[Input Routing]

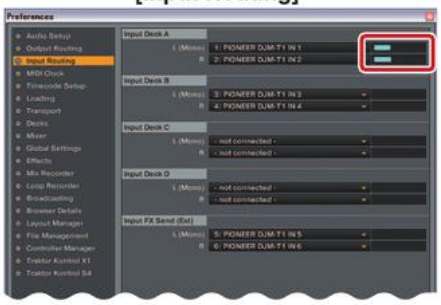

[Status Indicator MAIN]

[Connection Diagram (When the CDJ Player is Connected to CH1 CD Input)]

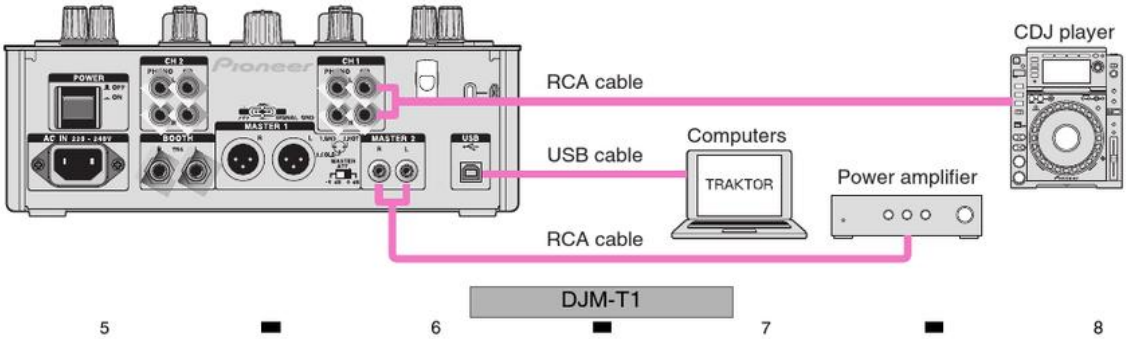

Settings for the Driver

Start up the "DJM-T1 Settings Utility".

- For Windows
  Click [Start] menu → [All Programs] → [Pioneer] → [DJM-T1] → [DJM-T1 Settings Utility].

[MIXER INPUT]

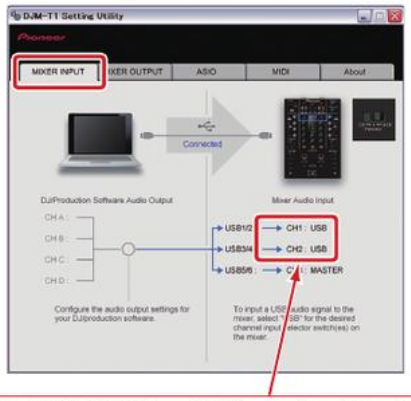

When the CD, PHONO, and USB selectors of the this unit are set to USB, "USB" must be displayed on the PC screen.

[MIXER OUTPUT]

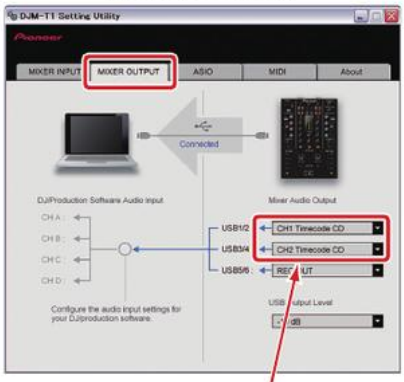

Set the CH* Timecode CD.

Settings on TRAKTOR2

① Click on the ▼ symbol beneath A to B then select "Live Input" from the pulldown menu.

***Note:**

For normal DVS operations where music files on the PC are to be played back, "Track Deck" must be selected as the input mode. However, in this step, as a signal from a music CD is used in order to facilitate confirmation of the signal route, "Live Input" is selected as the input mode.

② Check the items for Audio Device of TRKTOR2.
Select Preferences then Audio Setup, then check that PIONEER DJM-T1 ASIO is selected for Audio Device and that Sample Rate is set to 48000 Hz.

③ Check the items for Output Routing of TRAKTOR2.
Select Preferences then Output Routing, then check that the following settings are properly made:
Mixing Mode: External
Output Deck A:
L: 1: PIONEER DJM-T1 OUT 1
R: 2: PIONEER DJM-T1 OUT 2
Output Deck B:
L: 3: PIONEER DJM-T1 OUT 3
R: 4: PIONEER DJM-T1 OUT 4

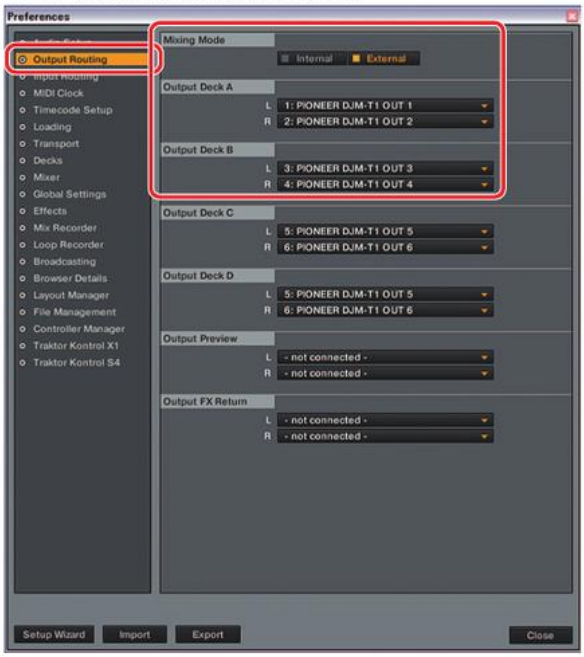

④ Check the items for Input Routing of TRAKTOR2.
Select Preferences then Input Routing, then check that the following settings are properly made:
Input Deck A:
L (Mono): 1: PIONEER DJM-T1 IN 1
R: 2: PIONEER DJM-T1 IN 2
Input Deck B:
L (Mono): 3: PIONEER DJM-T1 IN 3
R: 4: PIONEER DJM-T1 IN 4

The screenshots shown on this page are those of TRAKTOR2 for Windows. For screens for Macintosh, the USB channels' numbers are different.
Example 1:
For Windows: 1: PIONEER DJM-T1 OUT1
For Macintosh: 1: PIONEER DJM-T1 Out0
Example 2:
For Windows: 1: PIONEER DJM-T1 IN1
For Macintosh: 1: PIONEER DJM-T1 In0

(Reference) Image of signal flow for the DVS

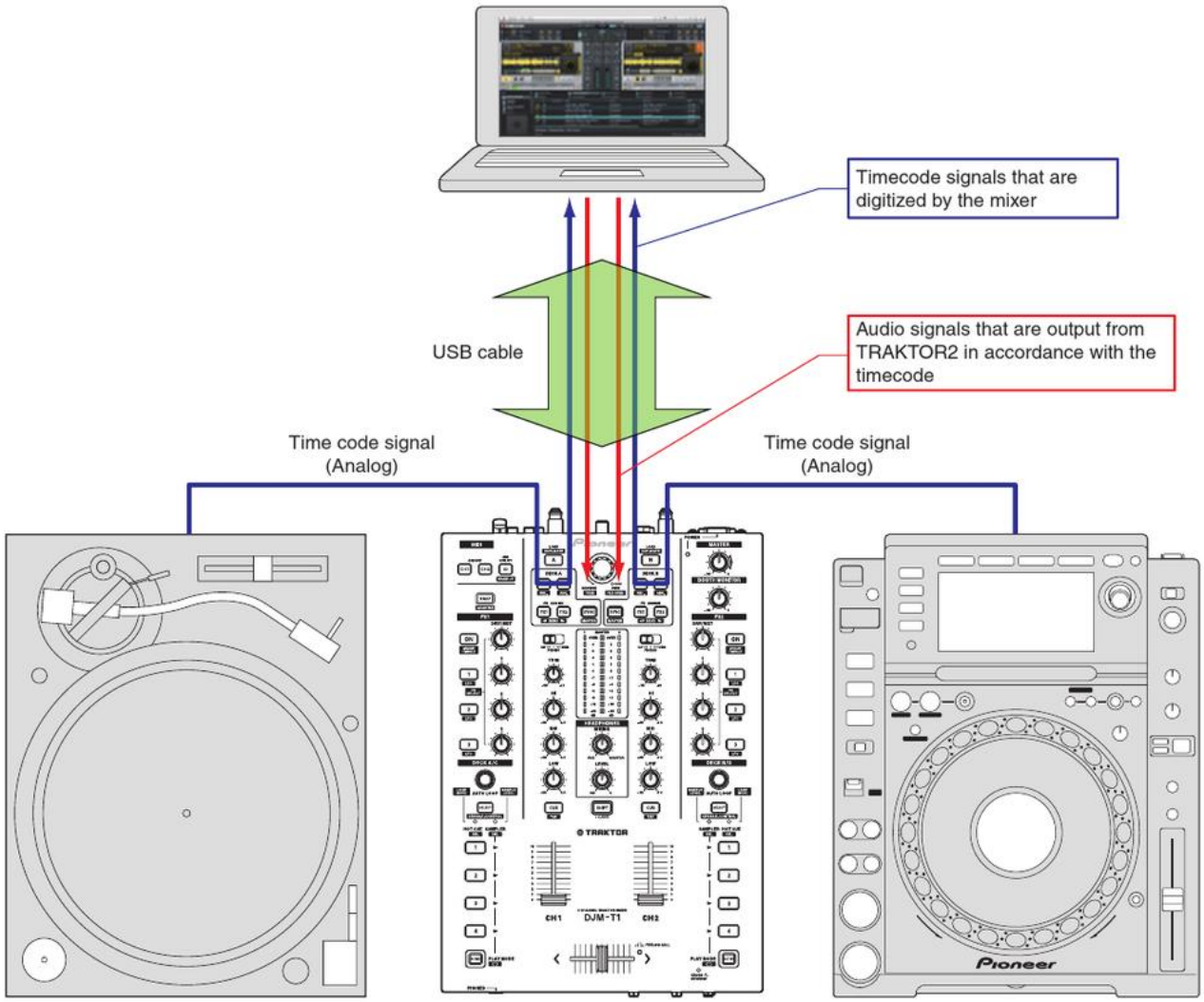

6. SERVICE MODE
6.1 TEST MODE

Testable Areas

The testable operating elements are shown in the shaded portions in the figure below.

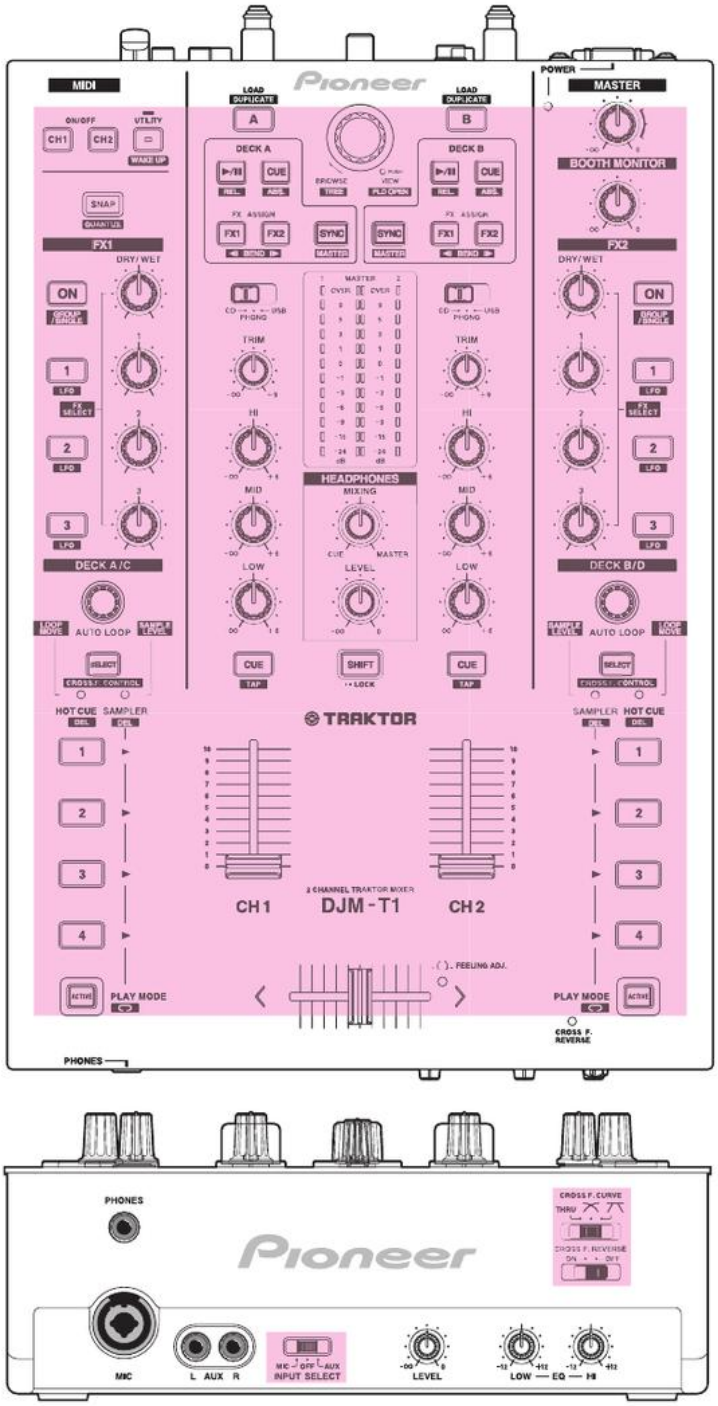

Note: The LEVEL and EQ (HI, LOW) controls are not subjects of testing.

Basic Operation Method

Operating elements that are used for basic operations in Test mode

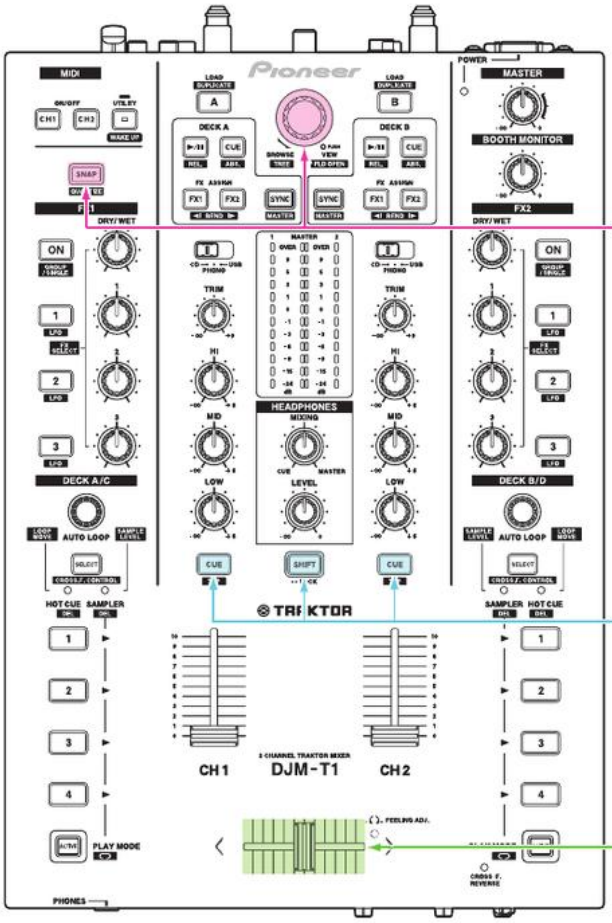

For switching modes in Test mode
The rotary selector is used for selecting a rotary VR whose changing value is to be checked in Test mode 6, as well as for switching modes.

For selecting the current LED of the level indicators to be lit in Test mode 7
They are also used to start cross-fader adjustment or to store data in nonvolatile memory in Test mode 8.

For reading the minimum and maximum values for the cross fader in Test mode 8

[Basic operations in Test mode]

- To switch modes in Test mode, while holding the SNAP button pressed, turn the rotary selector.
- To change modes in ascending order (Mode 0, Mode 1, Mode 2, etc.), turn the rotary selector clockwise.
- To change modes in descending order (Mode 0, Mode 8, Mode 7, Mode 6, etc.), turn the rotary selector counterclockwise.
- Usually, the mode No. is not displayed in Test mode. Only while the rotary selector is held pressed is the mode No. displayed.

[Basic operations in Mode 6 (For confirmation of changing values of the VRs)]

- For selecting a VR whose changing value is to be checked, turn the rotary selector clockwise or counterclockwise.
- To start monitoring a changing value, press the rotary selector.
- To reset the result of changed value, also press the rotary selector.

[Basic operations in Mode 7 (For confirmation of lighting of the individual level-indicator LEDs)]

- Each time the CH1 CUE (TAP) button is pressed, the current LED of the CH1 level indicator to be lit changes upward, one after another.
  If the button is pressed while the uppermost LED is lit, the bottom LED will be lit.
- Each time the CH2 CUE (TAP) button is pressed, the current LED of the CH2 level indicator to be lit changes upward, one after another.
  If the button is pressed while the uppermost LED is lit, the bottom LED will be lit.
- Each time the SHIFT button is pressed, the current LED of the MASTER level indicator to be lit changes upward, one after another.
  If the button is pressed while the uppermost LED is lit, the bottom LED will be lit.

[Basic operations in Mode 8 (For adjusting the cross fader)]

- To start adjusting the cross fader, press the CH1 CUE (TAP), SHIFT, and CH2 CUE (TAP) buttons simultaneously in Test mode 8.
- To determine the minimum value of the cross fader, after starting cross fader adjustment, slide the cross fader to the leftmost position then press the ACTIVE button on Deck A.
- To determine the maximum value of the cross fader, slide the cross fader to the rightmost position then press the ACTIVE button on Deck B.
- To store the minimum and maximum values of the cross fader in the nonvolatile memory, after determining both values, press the CH1 CUE (TAP), SHIFT, and CH2 CUE (TAP) buttons simultaneously again.
  While the data are being stored in the nonvolatile memory, the ACTIVE buttons on Decks A and B flash in green, and after storage is completed, they are lit in green.
- If the cross fader has not been adjusted, after normal startup of the unit the ACTIVE buttons on Decks A and B flash alternately in green and amber.

Flowchart of Mode Shifting in Test Mode

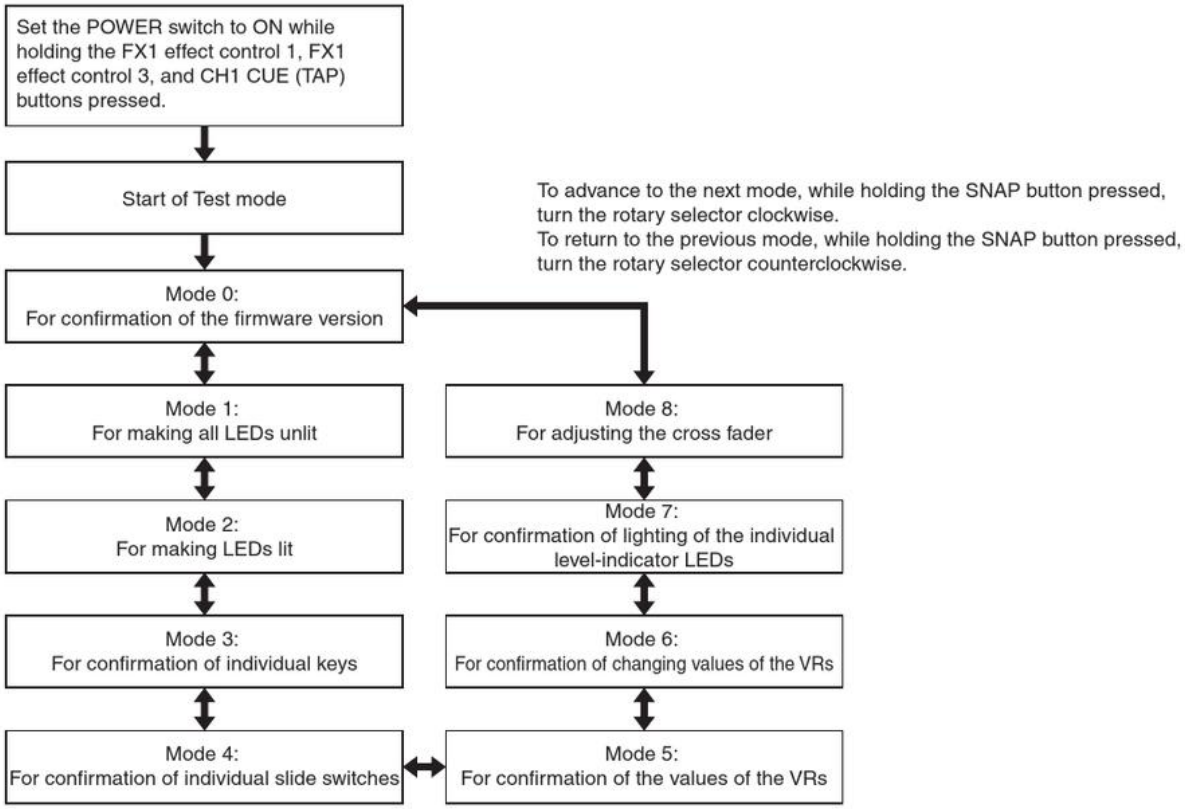

Details on Each Mode in Test Mode

1 Mode 0: For confirmation of the firmware version

[Outline of the test]

The firmware version is displayed, using the level indicators.
The firmware version is a 3-digit number, and the highest-order digit is expressed with the LEDs of the CH1 level indicator.
The second-higher-order and the lowest-order digits are expressed with the LEDs of the MASTER and CH2 level indicators, respectively.

0: No LEDs of a level indicator are lit.
1: The lowermost LED of a level indicator is lit.
2: The two LEDs from the bottom of a level indicator are lit.
3: The three LEDs from the bottom of a level indicator are lit.
4: The four LEDs from the bottom of a level indicator are lit.
5: The five LEDs from the bottom of a level indicator are lit.
6: The six LEDs from the bottom of a level indicator are lit.
7: The seven LEDs from the bottom of a level indicator are lit.
8: The eight LEDs from the bottom of a level indicator are lit.
9: The nine LEDs from the bottom of a level indicator are lit.

Example of a version display: Ver. 108

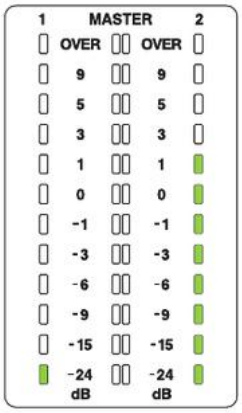

Example of a version display: Ver. 920

2 Mode 1: For making all LEDs unlit

[Outline of the test]

This mode is for testing if any LED lights erroneously, by making all the LEDs used for the keys, status indicators, and level indicators unlit.

[Subjects of the test]

- All LEDs used for lighting keys and level indicators
- All LEDs, except for the POWER indicator

3 Mode 2: For making LEDs lit

[Outline of the test]

This mode is for testing if any LED has color or luminance variations, by making the LEDs used for the keys, status indicators, and level indicators lit.

[Subjects of the test]

- All LEDs used for lighting keys and level indicators
- All LEDs, except for the POWER indicator, CROSS F. REVERSE indicator, and the LED for the UTILITY (WAKE UP) button

[Details on the test]

① There are 5 modes in LED Lighting mode. These modes can be changed by turning the rotary selector clockwise or counterclockwise.
- LED lighting status 1: All the LEDs are lit.
  The green and amber LEDs for the HOT CUE/SAMPLER 1, 2, 3, 4, and ACTIVE buttons on Decks A and B are lit.
  In addition, the green and amber indicators beneath the SELECT button are also lit.
- LED lighting status 2: The amber LEDs for the HOT CUE/SAMPLER 1, 2, 3, 4, and ACTIVE buttons on Decks A and B are lit.
  Only the amber indicator beneath the SELECT button is lit (the green indicator remains unlit).
  All the LEDs other than the above are lit.
- LED lighting status 3: The green LEDs for the HOT CUE/SAMPLER 1, 2, 3, 4, and ACTIVE buttons on Decks A and B are lit.
  Only the green indicator beneath the SELECT button is lit (the amber indicator remains unlit).
  All the LEDs other than the above are lit.
- LED lighting status 4: The amber LEDs for the HOT CUE/SAMPLER 1, 2, 3, 4, and ACTIVE buttons on Decks A and B are lit dimly.
  Only the amber indicator beneath the SELECT button is lit dimly (the green indicator remains unlit).
  All the LEDs other than the above are lit dimly.
- LED lighting status 5: The green LEDs for the HOT CUE/SAMPLER 1, 2, 3, 4, and ACTIVE buttons on Decks A and B are lit dimly.
  Only the green indicator beneath the SELECT button is lit dimly (the amber indicator remains unlit).
  All the LEDs other than the above are lit dimly.

② LED lighting status 1 is entered immediately after Mode 2 is entered from other modes.
From that status, you can switch LED lighting status to status 2, 3, 4, then to 5, by turning the rotary selector clockwise.
You can switch LED lighting status from status 1 to status 5, 4, 3, then to 2, by turning the rotary selector counterclockwise.

Note: The POWER indicator is always lit while power is on, because lighting of that indicator is controlled by hardware.
The CROSS F. REVERSE indicator and the LED for the UTILITY (WAKE UP) button are lit brightly when they light, because they cannot be lit dimly.

4 Mode 3: For confirmation of individual keys

[Outline of the test]

This mode is for testing if pressing on the push keys and rotary encoders can be correctly recognized.

[Subjects of the test]

All push keys and rotary encoders

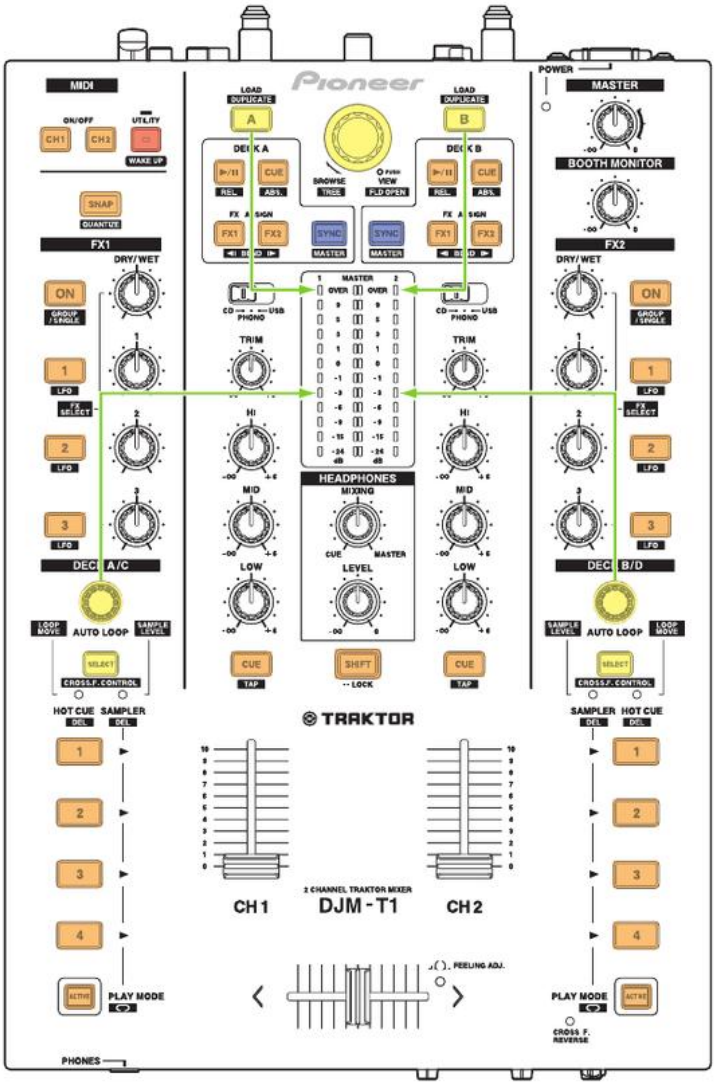

[Details on the test]

① Test of pressing on the rotary encoders

You can check if pressing on a rotary encoder is correctly recognized, with lighting of the level indicators.

- Pressing on the rotary selector: Test Mode No. will be displayed with the level indicator.
- Pressing on the AUTO LOOP (LOOP MOVE/SAMPLE VOLUME) control on Deck A: The 5th LED of the CH1 level indicator lights.
- Pressing on the AUTO LOOP (LOOP MOVE/SAMPLE VOLUME) control on Deck B: The 5th LED of the CH2 level indicator lights.

② Operation test of keys that do not light

You can check if pressing on a key (except for the SELECT button) is correctly recognized, with lighting of the level indicators.

- Pressing on the LOAD (DUPLICATE) button on Deck A: The topmost LED of the CH1 level indicator lights.
- Pressing on the LOAD (DUPLICATE) button on Deck B: The topmost LED of the CH2 level indicator lights.
- Pressing on the SELECT button: The HOT CUE and SAMPLER indicators beneath the SELECT button light simultaneously.

③ Operation test of lighting keys with small openings of light

You can check if pressing on a key is correctly recognized, with lighting of that key and level indicators.
(The HOT CUE/SAMPLER buttons on Decks A and B light in green.)

- Pressing on the MIDI CH1 button: The 11th LED from the bottom of the CH1 level indicator lights.
- Pressing on the MIDI CH2 button: The 11th LED from the bottom of the CH1 level indicator lights.
- Pressing on the UTILITY (WAKE UP) button: The 11th LED from the bottom of the MASTER level indicator lights.
- Pressing on the SYNC (MASTER) button on Deck A: The 10th LED from the bottom of the CH1 level indicator lights.
- Pressing on the SYNC (MASTER) button on Deck B: The 10th LED from the bottom of the CH2 level indicator lights.
- Pressing on the FX1 ON (GROUP/SINGLE) button: The 9th LED from the bottom of the CH1 level indicator lights.
- Pressing on the FX1 effect control 1 button: The 8th LED from the bottom of the CH1 level indicator lights.
- Pressing on the FX1 effect control 2 button: The 7th LED from the bottom of the CH1 level indicator lights.
- Pressing on the FX1 effect control 3 button: The 6th LED from the bottom of the CH1 level indicator lights.
- Pressing on the FX2 ON (GROUP/SINGLE) button: The 9th LED from the bottom of the CH2 level indicator lights.
- Pressing on the FX2 effect control 1 button: The 8th LED from the bottom of the CH2 level indicator lights.
- Pressing on the FX2 effect control 2 button: The 7th LED from the bottom of the CH2 level indicator lights.
- Pressing on the FX2 effect control 3 button: The 6th LED from the bottom of the CH2 level indicator lights.
- Pressing on the HOT CUE/SAMPLER 1 button on Deck A: The 4th LED from the bottom of the CH1 level indicator lights.
- Pressing on the HOT CUE/SAMPLER 2 button on Deck A: The 3rd LED from the bottom of the CH1 level indicator lights.
- Pressing on the HOT CUE/SAMPLER 3 button on Deck A: The 2nd LED from the bottom of the CH1 level indicator lights.
- Pressing on the HOT CUE/SAMPLER 4 button on Deck A: The lowermost LED of the CH1 level indicator lights.
- Pressing on the HOT CUE/SAMPLER 1 button on Deck B: The 4th LED from the bottom of the CH2 level indicator lights.
- Pressing on the HOT CUE/SAMPLER 2 button on Deck B: The 3rd LED from the bottom of the CH2 level indicator lights.
- Pressing on the HOT CUE/SAMPLER 3 button on Deck B: The 2nd LED from the bottom of the CH2 level indicator lights.
- Pressing on the HOT CUE/SAMPLER 4 button on Deck B: The lowermost LED of the CH2 level indicator lights.

④ Operation test of lighting keys with large openings of light

- Pressing on the A ►/II (REL.) button on Deck A: The key lights.
- Pressing on the CUE (ABS.) button on Deck A: The key lights.
- Pressing on the FX ASSIGN (◄I BEND I►) 1 button on Deck A: The key lights.
- Pressing on the FX ASSIGN (◄I BEND I►) 2 button on Deck A: The key lights.
- Pressing on the ►/II (REL.) button on Deck B: The key lights.
- Pressing on the CUE (ABS.) button on Deck B: The key lights.
- Pressing on the FX ASSIGN (◄I BEND I►) 1 button on Deck B: The key lights.
- Pressing on the FX ASSIGN (◄I BEND I►) 2 button on Deck B: The key lights.
- Pressing on the CH1 CUE (TAP) button: The key lights.
- Pressing on the CH2 CUE (TAP) button: The key lights.
- Pressing on the ACTIVE button on Deck A: The key lights in green.
- Pressing on the ACTIVE button on Deck B: The key lights in green.
- Pressing on the SHIFT button: The key lights.
- Pressing on the SNAP button: The key lights.

5 Mode 4: For confirmation of individual slide switches

[Outline of the test]

This mode is for testing if the position of each slide switch can be correctly recognized.

[Subjects of the test]

All slide switches (operating elements shaded in blue in the figure below)

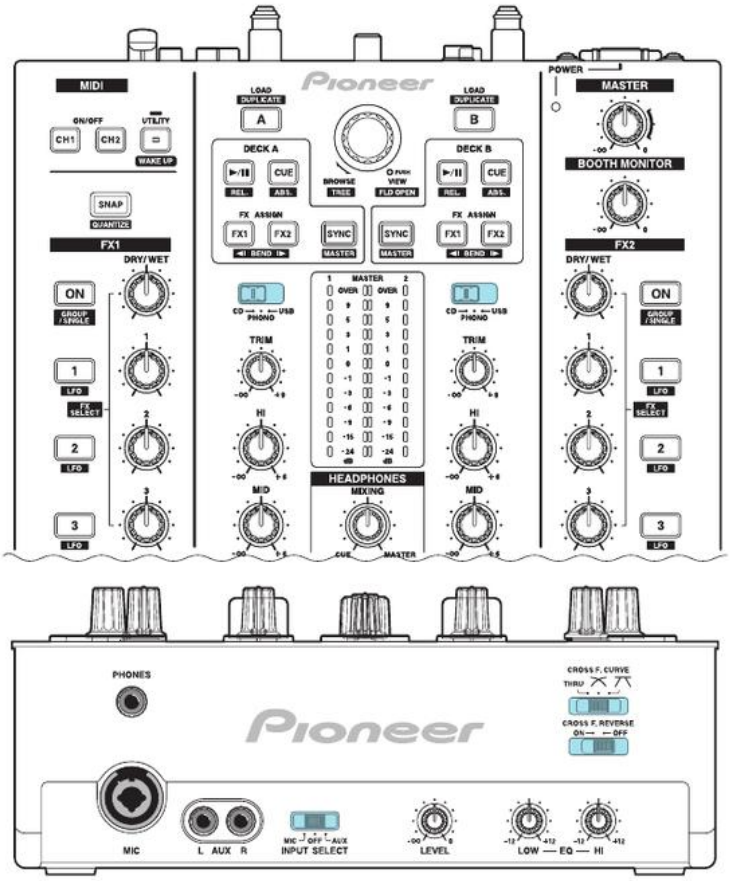

[Details on the test]

① Which slide switch is being tested is indicated with the LEDs of a level indicator.
Which LED corresponds to which slide switch is shown below:

- CH1 CD/PHONO/USB selector: The 11th LED from the bottom of a level indicator
- CH2 CD/PHONO/USB selector: The 10th LED from the bottom of a level indicator
- INPUT SELECT switch: The 9th LED from the bottom of a level indicator
- CROSS F. CURVE (THRU, ⌅, ⌆) selector: The 8th LED from the bottom of a level indicator
- CROSS F. REVERSE switch: The 7th LED from the bottom of a level indicator

② The position of each slide switch is indicated by which level indicator' s LED is lit.

- If an LED for the CH1 level indicator is lit, the slide switch position is left.
- If an LED for the MASTER level indicator is lit, the slide switch position is center.
- If an LED for the CH2 level indicator is lit, the slide switch position is right.

Note: For a 2-position slide switch, the LEDs of the MASTER level indicator are not used.

6 Mode 5: For confirmation of the values of the VRs

[Outline of the test]

This mode is for indicating changes in voltages (A/D conversion values) that are obtained from the faders and rotary VRs with the level indicators in order to test if these operating elements operate properly. This mode is also used for testing if the rotary encoder operates properly.

[Subjects of the test]

Operating elements shaded in blue in the figure below

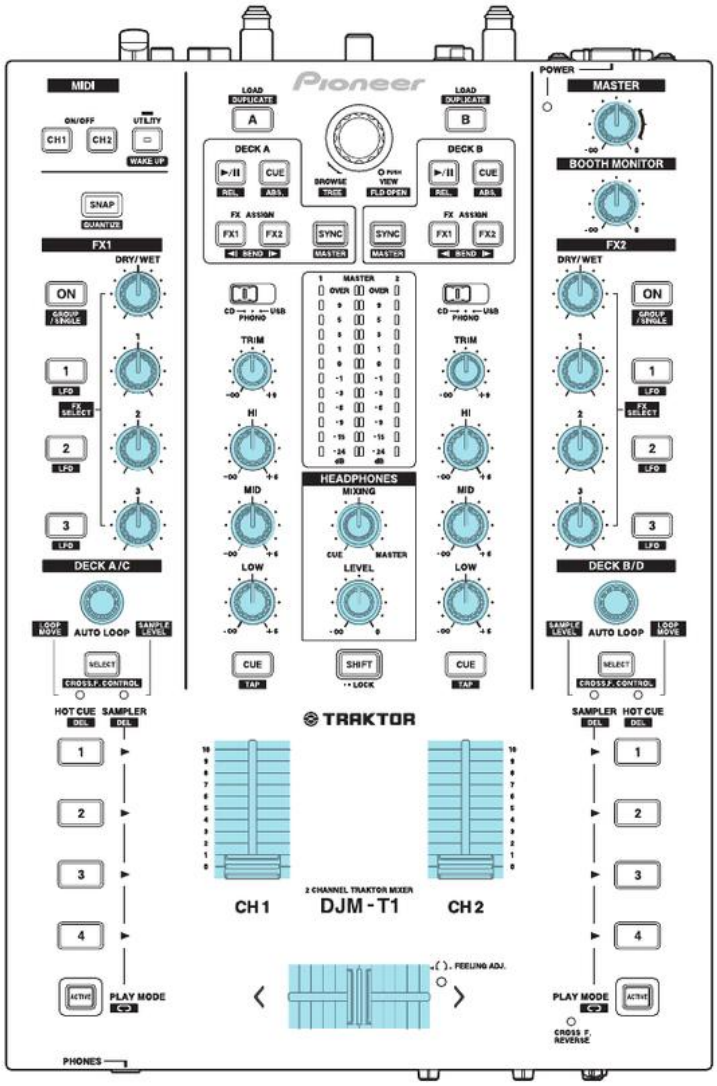

[Details on tests for controls and faders]

① All LEDs of the MASTER level indicator are unlit immediately after Mode 5 is entered.

② If you turn or slide a subject operating element, the A/D conversion values corresponding to that operating element that are divided into 1024 levels will be converted into those with 12 levels and indicated with the LEDs of the MASTER level indicator.

③ Then, if you turn or slide another operating element, the status of the previous operating element is cleared and the A/D conversion values for the new operating element will be converted in the same manner as mentioned above and indicated with the LEDs of the MASTER level indicator.

④ Position data of each control and fader are reflected not only by the number of LEDs lit of the MASTER level indicator but also on the luminance of the LEDs lit of the CH1 and CH2 level indicators. (For the minimum A/D value they are unlit, and for the maximum A/D value their luminance becomes highest.)
Each operating element is linked with either the CH1 or CH2 level indicator, depending on its position (see the table below).

Operating element	LED to be lit
FX1 DRY/WET control	The topmost LED of the CH1 level indicator
FX1 effect control 1	The 11th LED from the bottom of the CH1 level indicator
FX1 effect control 2	The 10th LED from the bottom of the CH1 level indicator
FX1 effect control 3	The 9th LED from the bottom of the CH1 level indicator
CH1 TRIM control	The 8th LED from the bottom of the CH1 level indicator
CH1 EQ (HI) control	The 7th LED from the bottom of the CH1 level indicator
CH1 EQ (MID) control	The 6th LED from the bottom of the CH1 level indicator
CH1 EQ (LOW) control	The 5th LED from the bottom of the CH1 level indicator
HEADPHONES MIXING control	The 4th LED from the bottom of the CH1 level indicator
HEADPHONES LEVEL control	The 3rd LED from the bottom of the CH1 level indicator
CH1 fader	The 2nd LED from the bottom of the CH1 level indicator
FX2 DRY/WET control	The topmost LED of the CH2 level indicator
FX2 effect control 1	The 11th LED from the bottom of the CH2 level indicator
FX2 effect control 2	The 10th LED from the bottom of the CH2 level indicator
FX2 effect control 3	The 9th LED from the bottom of the CH2 level indicator
CH2 TRIM control	The 8th LED from the bottom of the CH2 level indicator
CH2 EQ (HI) control	The 7th LED from the bottom of the CH2 level indicator
CH2 EQ (MID) control	The 6th LED from the bottom of the CH2 level indicator
CH2 EQ (LOW) control	The 5th LED from the bottom of the CH2 level indicator
MASTER LEVEL control	The 4th LED from the bottom of the CH2 level indicator
BOOTH MONITOR control	The 3rd LED from the bottom of the CH2 level indicator
CH2 fader	The 2nd LED from the bottom of the CH2 level indicator
Cross fader	The lowermost LEDs of the CH1 and CH2 level indicators

[Details on the rotary encoder test]

① Press the rotary encoder (AUTO LOOP [LOOP MOVE/SAMPLE VOLUME] control).
All LEDs of the MASTER level indicator are unlit.

② Check that the lowermost LED of the MASTER level indicator lights when you start turning the rotary encoder clockwise and that the number of LEDs lit increases upward as you turn the rotary encoder farther clockwise.
If you turn the rotary encoder farther clockwise when all 12 LEDs are lit, lighting status will not change.

③ If you turn the rotary encoder counterclockwise, the number of LEDs lit decreases from top to bottom as you turn the rotary encoder.
If you turn the rotary encoder farther counterclockwise when all 12 LEDs are unlit, lighting status will not change.

Note 1: During the rotary encoder test, lighting status of the CH1 and CH2 level indicators does not change.

Note 2: Before performing a rotary encoder test, be sure to fully turn all the controls counterclockwise.

[Use of this mode during repair]

- For failure judgment of the VRs and rotary encoders
- For operation check of a VR or rotary encoder after replacement

7 Mode 6: For confirmation of changed values of the VRs

[Outline of the test]

This mode is for testing changes in voltages (A/D conversion values) that are obtained from the faders and rotary VRs, using the level indicators.

[Subjects of the test]

Operating elements shaded in blue in the figure below

To select an operating element to be tested, turn the rotary selector clockwise or counterclockwise.

To start monitoring or resetting A/D conversion values, press the rotary selector.

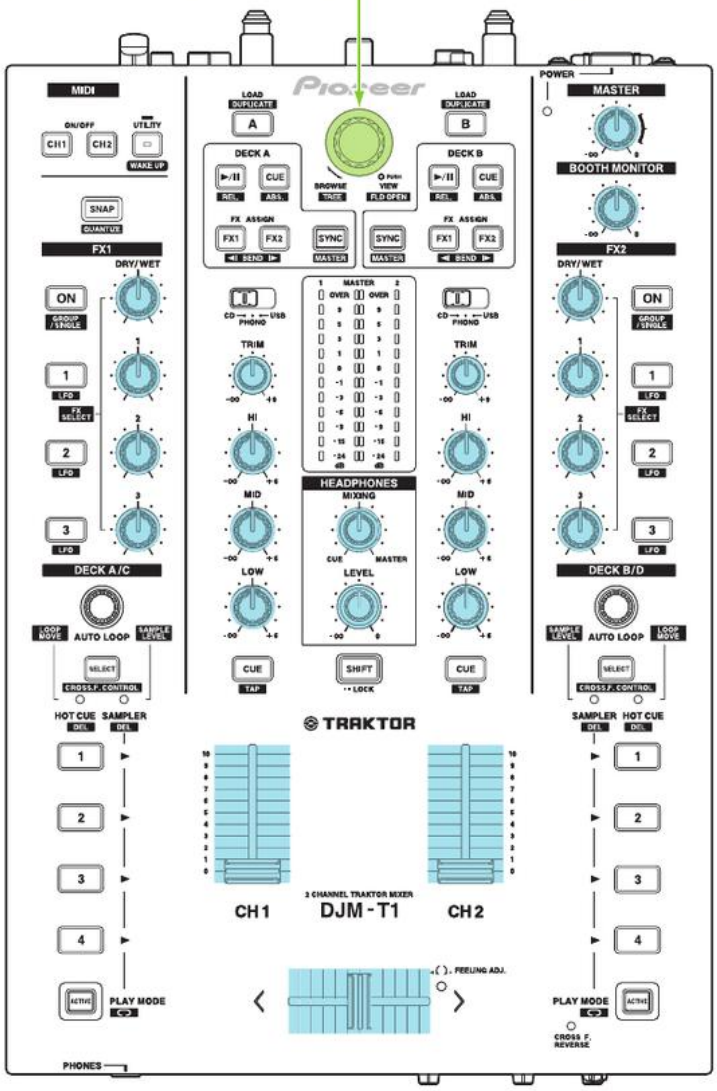

A **[Details on the test]**

① Select an operating element to be tested, by turning the rotary selector clockwise or counterclockwise.
Be sure not to turn the rotary selector while holding the SNAP button pressed, as this will change Mode 6 to other modes.

② Which operating element is selected is indicated by flashing of an LED of the CH1 and CH2 level indicators.

Operating element	LED to be lit
FX1 DRY/WET control	The topmost LED of the CH1 level indicator
FX1 effect control 1	The 11th LED from the bottom of the CH1 level indicator
FX1 effect control 2	The 10th LED from the bottom of the CH1 level indicator
FX1 effect control 3	The 9th LED from the bottom of the CH1 level indicator
CH1 TRIM control	The 8th LED from the bottom of the CH1 level indicator
CH1 EQ (HI) control	The 7th LED from the bottom of the CH1 level indicator
CH1 EQ (MID) control	The 6th LED from the bottom of the CH1 level indicator
CH1 EQ (LOW) control	The 5th LED from the bottom of the CH1 level indicator
HEADPHONES MIXING control	The 4th LED from the bottom of the CH1 level indicator
HEADPHONES LEVEL control	The 3rd LED from the bottom of the CH1 level indicator
CH1 fader	The 2nd LED from the bottom of the CH1 level indicator
FX2 DRY/WET control	The topmost LED of the CH2 level indicator
FX2 effect control 1	The 11th LED from the bottom of the CH2 level indicator
FX2 effect control 2	The 10th LED from the bottom of the CH2 level indicator
FX2 effect control 3	The 9th LED from the bottom of the CH2 level indicator
CH2 TRIM control	The 8th LED from the bottom of the CH2 level indicator
CH2 EQ (HI) control	The 7th LED from the bottom of the CH2 level indicator
CH2 EQ (MID) control	The 6th LED from the bottom of the CH2 level indicator
CH2 EQ (LOW) control	The 5th LED from the bottom of the CH2 level indicator
MASTER LEVEL control	The 4th LED from the bottom of the CH2 level indicator
BOOTH MONITOR control	The 3rd LED from the bottom of the CH2 level indicator
CH2 fader	The 2nd LED from the bottom of the CH2 level indicator
Cross fader	The lowermost LEDs of the CH1 and CH2 level indicators

③ After selecting an operating element to be tested, press the rotary selector to start monitoring the A/D conversion value. The A/D conversion value obtained immediately after a monitoring start will be a reference value. All LEDs of the MASTER level indicator are unlit.
Note: A/D conversion values to be monitored are data before hysteresis processing is performed.

④ After monitoring starts, A/D conversion values of that operating element are monitored, and the LEDs of the MASTER level indicator will light according to monitored values, as follows:
- A monitored A/D conversion value is greater than the reference value by 1: The 7th LED from the bottom of the MASTER level indicator lights.
- A monitored A/D conversion value is greater than the reference value by 2: The 7th and 8th LEDs from the bottom of the MASTER level indicator light.
- A monitored A/D conversion value is greater than the reference value by 3: The 7th to 9th LEDs from the bottom of the MASTER level indicator light.
- A monitored A/D conversion value is greater than the reference value by 4: The 7th to 10th LEDs from the bottom of the MASTER level indicator light.
- A monitored A/D conversion value is greater than the reference value by 5: The 7th to 11th LEDs from the bottom of the MASTER level indicator light.
- A monitored A/D conversion value is greater than the reference value by 6: The 7th to 12th LEDs from the bottom of the MASTER level indicator light.
- A monitored A/D conversion value is greater than the reference value by 7 or more: The 12th LED from the bottom of the MASTER level indicator lights.
- A monitored A/D conversion value is smaller than the reference value by 1: The 6th LED from the bottom of the MASTER level indicator lights.
- A monitored A/D conversion value is smaller than the reference value by 2: The 5th and 6th LEDs from the bottom of the MASTER level indicator light.
- A monitored A/D conversion value is smaller than the reference value by 3: The 4th to 6th LEDs from the bottom of the MASTER level indicator light.
- A monitored A/D conversion value is smaller than the reference value by 4: The 3th to 6th LEDs from the bottom of the MASTER level indicator light.
- A monitored A/D conversion value is smaller than the reference value by 5: The 2nd to 6th LEDs from the bottom of the MASTER level indicator light.
- A monitored A/D conversion value is smaller than the reference value by 6: The 1st to 6th LEDs from the bottom of the MASTER level indicator light.
- A monitored A/D conversion value is smaller than the reference value by 7 or more: The lowermost LED of the MASTER level indicator lights.

Note: A/D values both greater and smaller than a reference value remain indicated on the MASTER level indicator.

⑤ To reset past changed values while monitoring A/D conversion values, press the rotary selector.

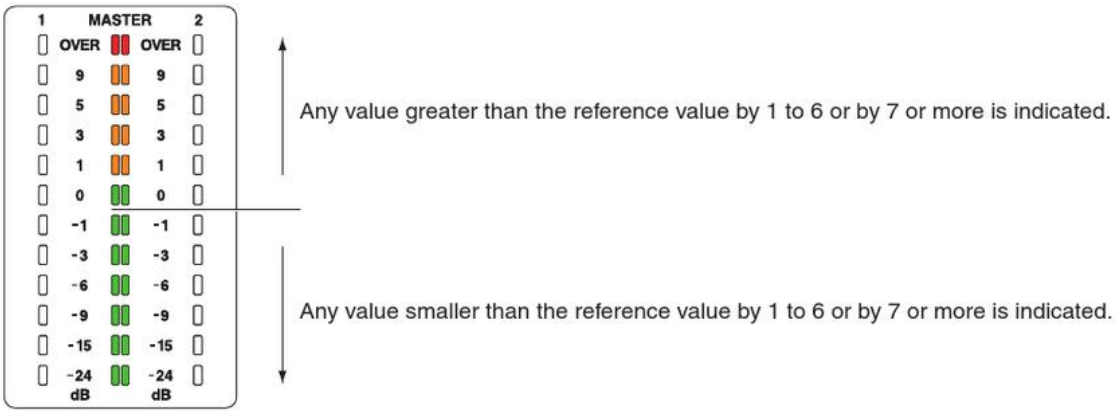

[Use of this mode during repair]

• For failure judgment of the rotary VRs

As a guide, amplitude values higher than +4 or lower than -4 may be judged as failure.

The VRs can be set to any position during measurement. Possible symptoms are shown below.

• The volume changes arbitrarily.

• Interrupted sound leakage occurs even if the volume is decreased to the minimum at the Master or Booth Monitor.

• The MIDI signal is output even if the corresponding VR is not operated.

• For operation check of a rotary VR after replacement

8 Mode 7: For confirmation of lighting of the individual level-indicator LEDs

[Outline of the test]

This mode is for testing if lighting of the LEDs of the level indicators is properly controlled.

[Subjects of the test]

Level indicators

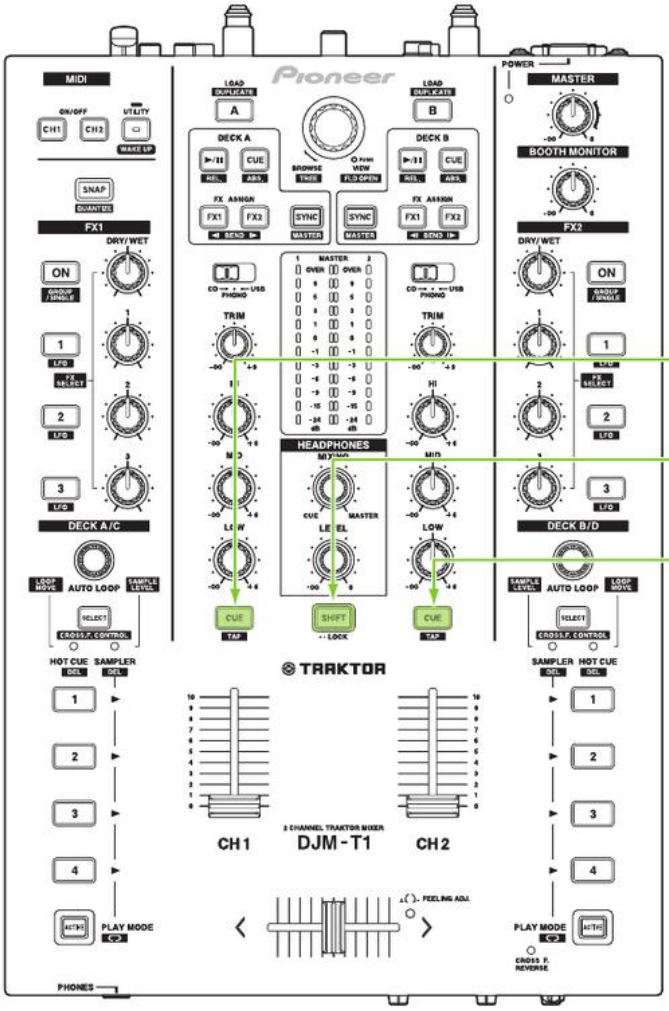

[Details on the test]

① Each time the CH1 CUE (TAP) button is pressed, the current LED to be lit of the CH1 level indicator changes upward, one after another.
If the button is pressed while the uppermost LED is lit, the lowermost LED will be lit.

② Each time the CH2 CUE (TAP) button is pressed, the current LED to be lit of the CH2 level indicator changes upward, one after another.
If the button is pressed while the uppermost LED is lit, the lowermost LED will be lit.

③ Each time the SHIFT button is pressed, the current LED to be lit of the MASTER level indicator changes upward, one after another
If the button is pressed while the uppermost LED is lit, the lowermost LED will be lit.

9 Mode 8: For adjusting the cross fader

[Outline]

This mode is for compensating for variations in individual cross faders and for storing the compensation results in nonvolatile memory.

[Operating elements to be used for adjustment]

- CH1 CUE (TAP), SHIFT, and CH2 CUE (TAP) buttons: To start adjustment and storing of data in the nonvolatile memory
- ACTIVE buttons on Decks A and B: To start reading the minimum and maximum values of the cross fader

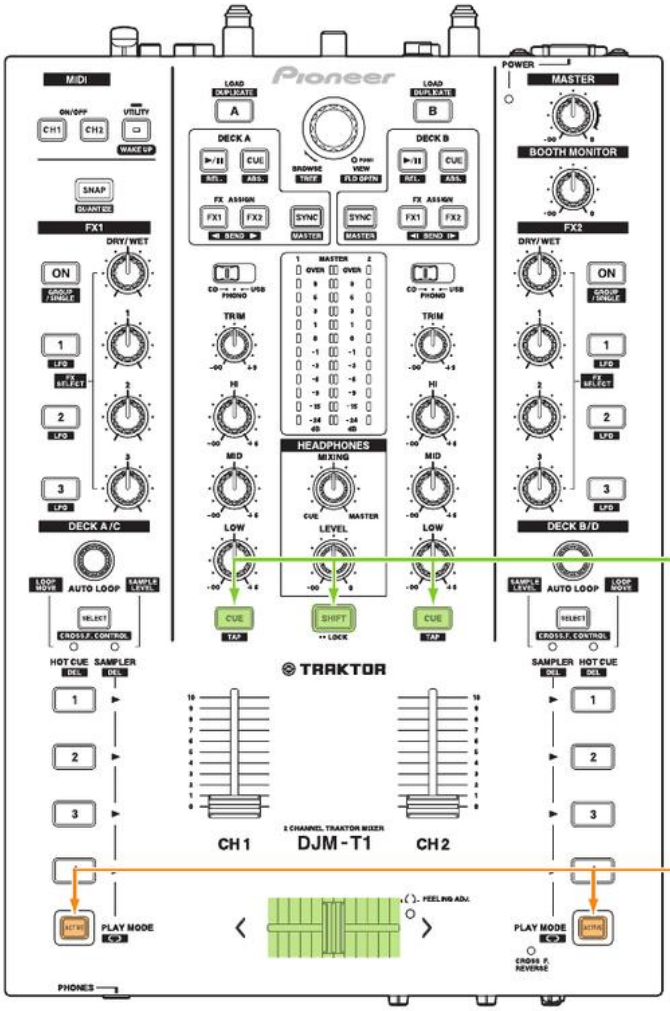

Simultaneous pressing on the CH1 CUE (TAP), SHIFT, and CH2 CUE (TAP) buttons starts adjustment and storing of data in the nonvolatile memory.

After adjustment is started, these buttons start flashing in amber at intervals of 500 ms.
When the minimum cross fader value is determined, the button on Deck A lights in amber.
When the maximum cross fader value is determined, the button on Deck B lights in amber.
While data are being stored in the nonvolatile memory, these buttons flash in green at intervals of 250 ms.
When data storage in the nonvolatile memory is completed, these buttons light in green.

[Details on adjustment mode]

① Immediately after Mode 8 (For adjusting the cross fader) is entered, all LEDs are unlit.

② To start adjustment, simultaneously press the CH1 CUE (TAP), SHIFT, and CH2 CUE (TAP) buttons.
The ACTIVE buttons on Decks A and B start flashing in amber at intervals of 500 ms to indicate that adjustment has started.

③ Slide the cross fader to its leftmost position then press the ACTIVE button on Deck A.
A/D conversion values are obtained for 1 sec after the button is pressed, and the maximum value among them is determined as the cross-fader minimum value.
Once this cross-fader minimum value is determined, flashing of the ACTIVE button on Deck A turns to lighting in amber.

④ Slide the cross fader to its rightmost position then press the ACTIVE button on Deck B.
A/D conversion values are obtained for 1 sec after the button is pressed, and the minimum value among them is determined as the cross-fader maximum value.
Once this cross-fader maximum value is determined, flashing of the ACTIVE button on Deck B turns to lighting in amber.

⑤ After the cross-fader minimum and maximum values are determined in Steps ③ and ④, store those data in the nonvolatile memory by simultaneously pressing the CH1 CUE (TAP), SHIFT, and CH2 CUE (TAP) buttons.
The ACTIVE buttons on Decks A and B flash in green at intervals of 250 ms while data are being stored then turn to being lit in green after storage is completed.

[Notes on Adjustment mode]

- The cross-fader minimum and maximum values cannot be stored in the nonvolatile memory unless those data are determined.
  (Storage in the nonvolatile memory cannot be performed if the ACTIVE buttons on Decks A and B are unlit or flashing.)
- If the cross-fader minimum or maximum value cannot be determined within 30 sec after adjustment is started, the ACTIVE buttons on Decks A and B go dark and adjustment start is canceled.
- If the CROSS FADER REVERSE function is ON, adjustment cannot be started.

[Special instructions]

- The mixer keeps track of the cross-fader adjustment history, and if there is no adjustment history at normal startup, it notifies of it by flashing the ACTIVE buttons on Decks A and B alternately in amber and green at intervals of 500 ms.
  (However, if the cross fader is replaced after adjustment, the mixer cannot recognize it and behaves as if adjustment were performed.)
- If the cross fader has not been adjusted, after normal startup of the mixer, audio volume cannot be changed even if the position of the cross fader is changed, for notification of such status.
- If the minimum or maximum value of the cross fader obtained during adjustment is substantially out of range of the specifications, when you attempt to store such data in the nonvolatile memory by simultaneously pressing the CH1 CUE (TAP), SHIFT, and CH2 CUE (TAP) buttons, the ACTIVE buttons on Decks A and B start flashing alternately in amber and green at intervals of 500 ms to notify that the obtained data are erroneous.
- Cross Fader Adjustment mode is provided for compensating for variations in individual cross faders that are mounted in the unit. This mode cannot change the characteristics of the cross fader curve.

6.2 ABOUT THE DEVICE

Device Name	Function	Part No.	Reference No.	Assy
MAIN CPU	Audio Processing and LED, USB, KEY and VR control	R5S72630P200FP	IC101	OUTPUT Assy
FLASH (8 Mbit)	Memory for UCOM	DYW1804	IC109	OUTPUT Assy
SDRAM (64 Mbit)	Memory for UCOM	IS42S16400F-6TL	IC108	OUTPUT Assy
Sensor Device (with Hall Element Inside)	Sensor device for detection of cross fader position	EM-3242	IC4001	CRFD Assy

6.3 DEFAULT SETTING

Options settings	Flashing position of [CH 1] channel level indicator	Setting value	Default value	Descriptions
Cross Fader Cut Lag	Very top	**0** to **52**	**6**	Adjusts the play at the edges of the crossfader (the cut lag). The cut lag can be adjusted between 0.74 mm and 5.94 mm, in 0.1 mm units.[1]
Cross Fader Curve Slow A	Second from top	**0** to **32**	**16**	Adjusts the [**CH 1**] side attenuation curve characteristics when the [**CROSS F. CURVE** (**THRU**, ⅄, ⅄)] switch is set to [⅄].[2]
Cross Fader Curve Slow B	Third from top	**0** to **32**	**16**	Adjusts the [**CH 2**] side attenuation curve characteristics when the [**CROSS F. CURVE** (**THRU**, ⅄, ⅄)] switch is set to [⅄].[2]
Cross Fader Curve Fast A	Fourth from top	**0** to **32**	**32**	Adjusts the [**CH 1**] side attenuation curve characteristics when the [**CROSS F. CURVE** (**THRU**, ⅄, ⅄)] switch is set to [⅄] [2]
Cross Fader Curve Fast B	Fifth from top	**0** to **32**	**32**	Adjusts the [**CH 2**] side attenuation curve characteristics when the [**CROSS F. CURVE** (**THRU**, ⅄, ⅄)] switch is set to [⅄] [2]
Generic Controller Mode	Sixth from top	**ON/OFF**	**OFF**	Turns on and off the function for selecting effects using the effect control buttons. When off, the LFO CONTROL and CROSS FADER CONTROL functions can be used.
Mic Output To Booth Monitor	Seventh from top	**ON/OFF**	**ON**	Sets whether or not to output the microphone's audio signals from [**BOOTH**] terminals.
Auto Standby	Eighth from top	**ON/OFF**	**ON**	Turns the auto standby function on and off.

[1] If the setting value is extremely small, the sound may not be completely muted even when the crossfader is positioned at the very edge.
[2] Attenuation has a gentle curve characteristic when the setting value is small, an abrupt curve characteristic when the setting value is large.

7. DISASSEMBLY

Note: Even if the unit shown in the photos and illustrations in this manual may differ from your product, the procedures described here are common.

Knobs and Volumes Location

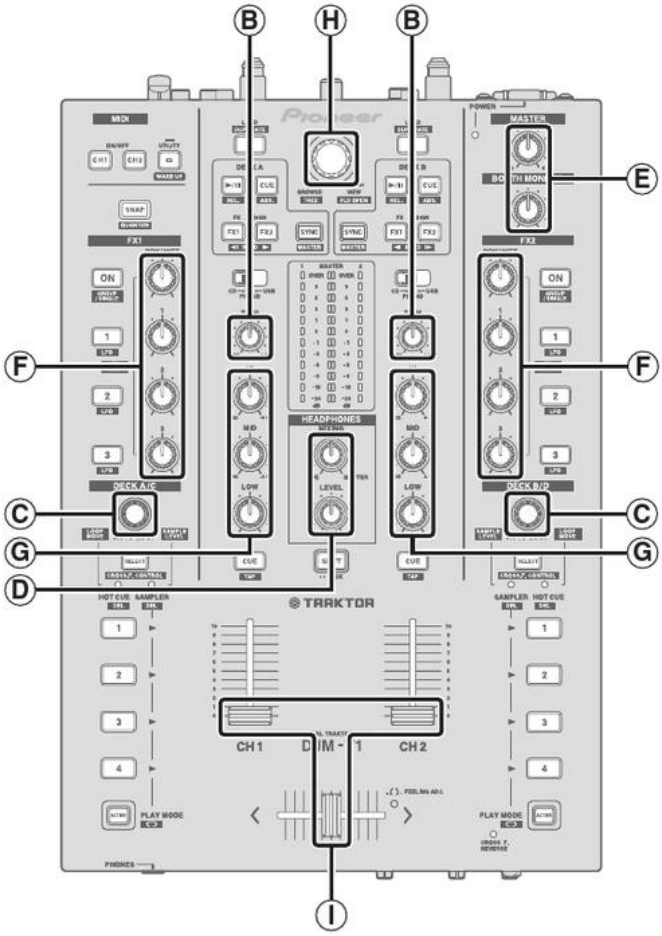

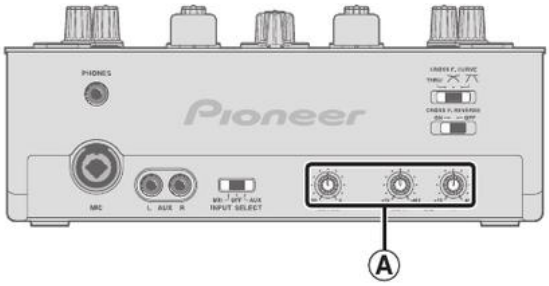

Ⓐ Rotary Knob (SS) (DAA1164) ×3

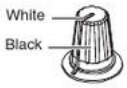

Ⓑ Rotary VR Knob (DAA1276) ×2

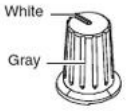

Ⓒ Dial Knob (DAA1277) ×2

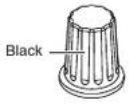

Ⓓ Rotary VR Knob (DAA1278) ×2

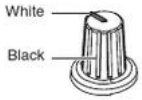

Ⓔ Rotary VR Knob (B) (DAA1183) ×2

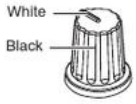

Ⓕ Rotary VR Knob (G) (DAA1280) ×8

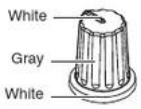

Ⓖ Rotary VR Knob (B) (DAA1279) ×6

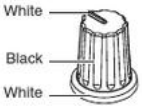

Ⓗ Knob (DAA1281) ×1

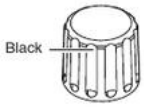

Ⓘ Slider Knob 1 (DAC2684) ×3 + Slider Knob 2 (DAC2685) ×3 + Slider Knob Stopper (DNK5888) ×3

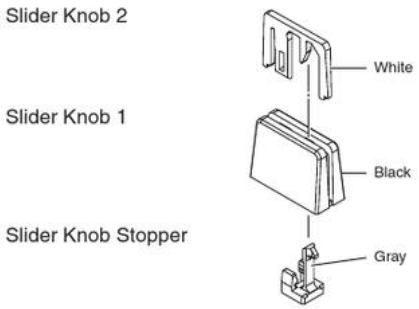

Disassembly

[1] Control Panel Section, Fader Section

[1-1] Exterior section

(1) Remove the six screws. (BBZ30P080FTB)
(2) Pull out side panel L and R to the rear, and remove it.
(3) Remove the three rotary knobs (SS).
(4) Remove the five screws. (BBZ30P080FTB)
(5) Unhook the two hooks.
(6) Remove the front panel.

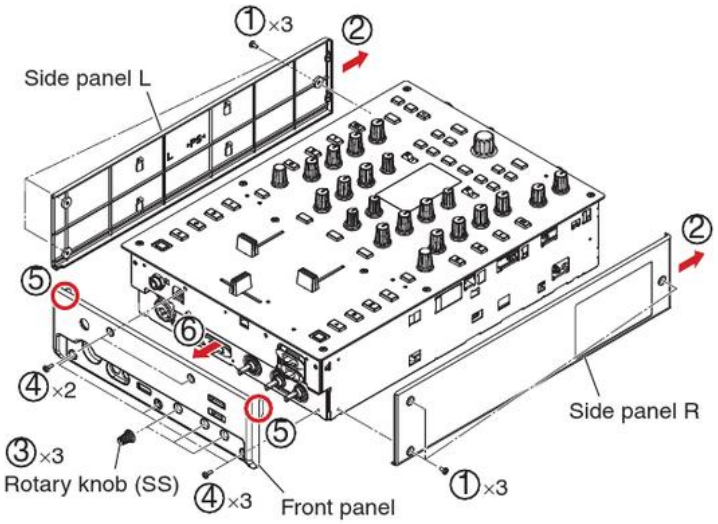

Screw tightening order

The other screws are random order.

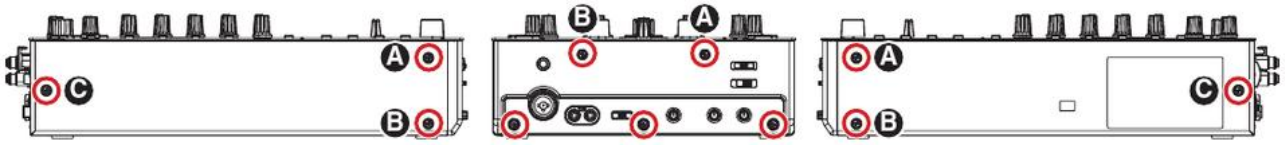

[1-2] Control panel section

* When you remove a Control panel section, You do not need to remove Front panel and Side panels.

(1) Remove the two rotary VR knobs.
(2) Remove the three silider knobs 2, three slider knobs 1, three slider knob stoppers. (See next page.)
(3) Remove the eight screws. (DBA1290)

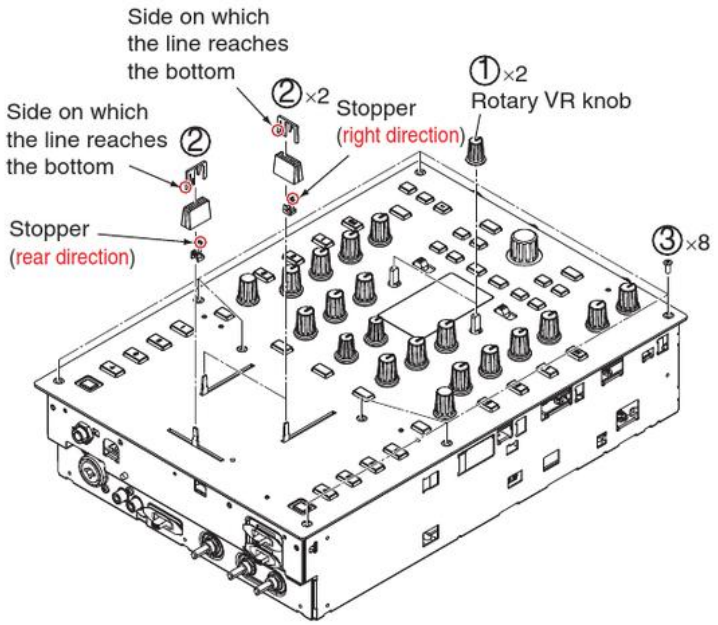

Note: Assemble Slider knob necessarily in directions in the figure.

Screw tightening order

The other screws are random order.

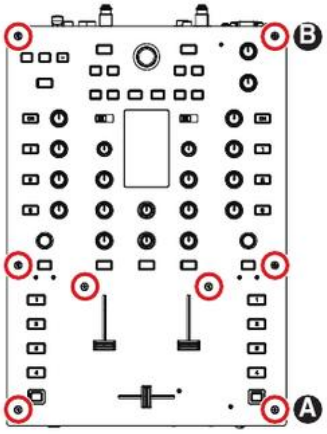

• Disassembly of the slider knob

The new slider knob adopted by this product is designed so that it is not pulled out easily.
Therefore, the method for removing the slider knob is different from the conventional method; it can only be pulled out after slider knob 2 is removed.

① Find the side on which the line reaches the bottom.

② Insert a pair of tweezers etc. beneath the line then push the slider knob 2 upward. To protect the panel from being scratched, use protective material.

③ Remove the slider knob 2.

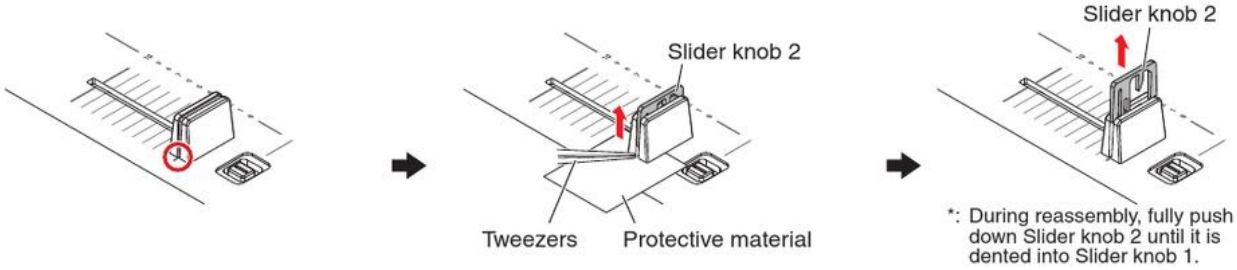

④ Remove the slider knob 1.

⑤ Remove the slider knob stopper.

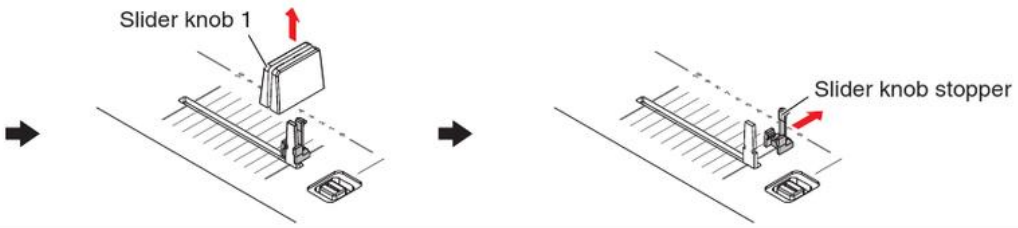

(4) Remove the control panel section.

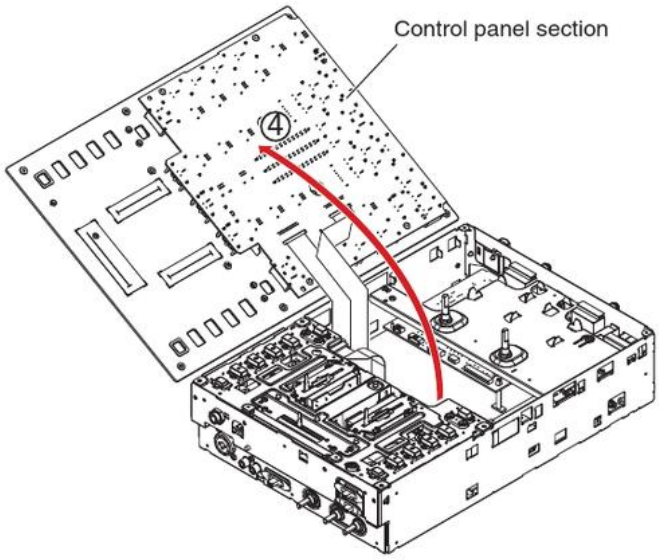

[1-3] Fader section

(1) Disconnect the one flexible cable and three connectors. (CN104, CN106 to CN108)
(2) Remove the fader section.

• Connectors color

Match the color of a connected connector.

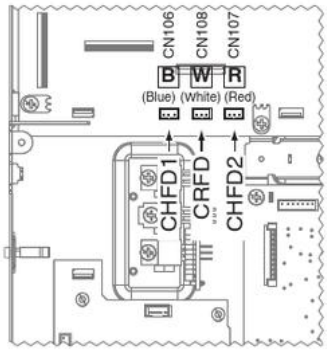

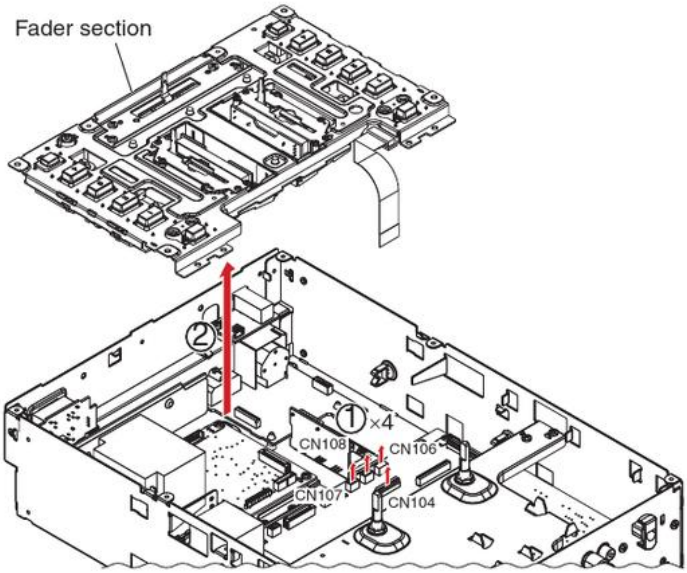

[2] INPUT Assy

(1) Disconnect the four short pin plugs.
(2) Remove the two screws. (BPZ30P080FTB)
(3) Remove the two screws. (BBZ30P060FTB)

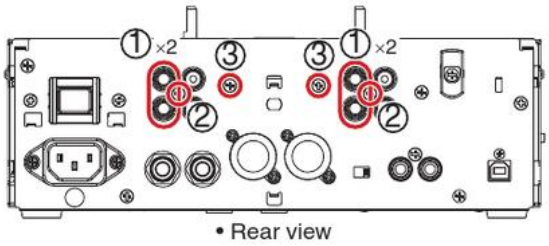

(4) Remove the four screws. (BBZ30P060FTB)
(5) Release the two PCB spacers.

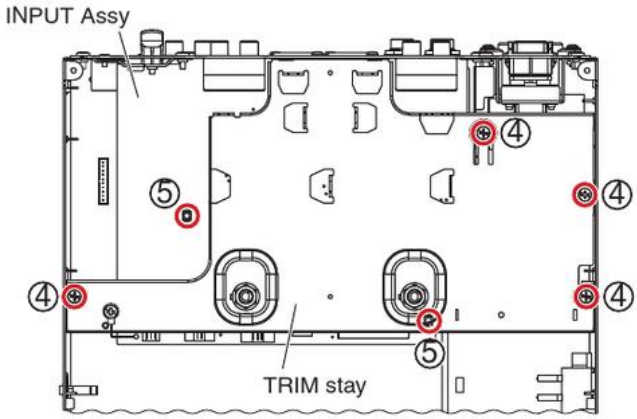

Screw tightening order

The other screws are random order.

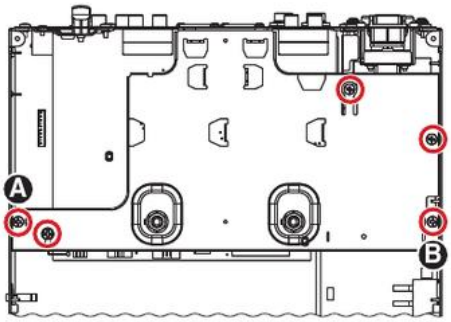

(6) Lift up the INPUT Assy to a front direction.

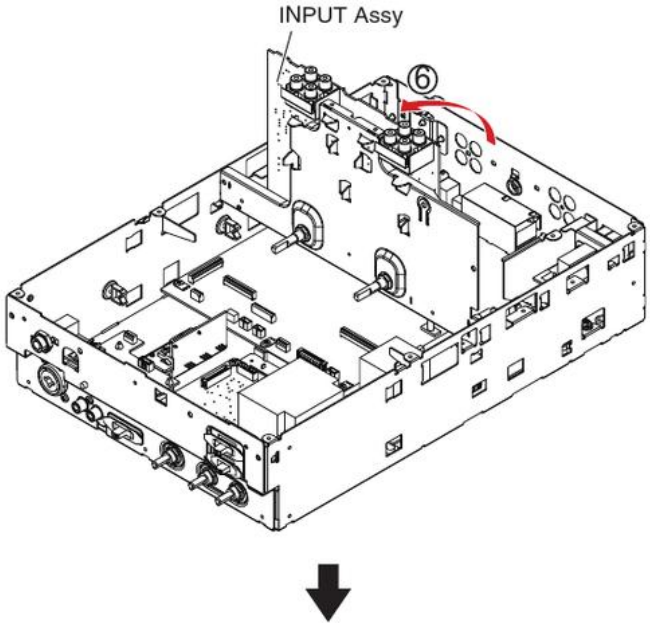

(7) Reassemble the fader section in the fig below.
(Reconnect the connectors.)

Diagnosis

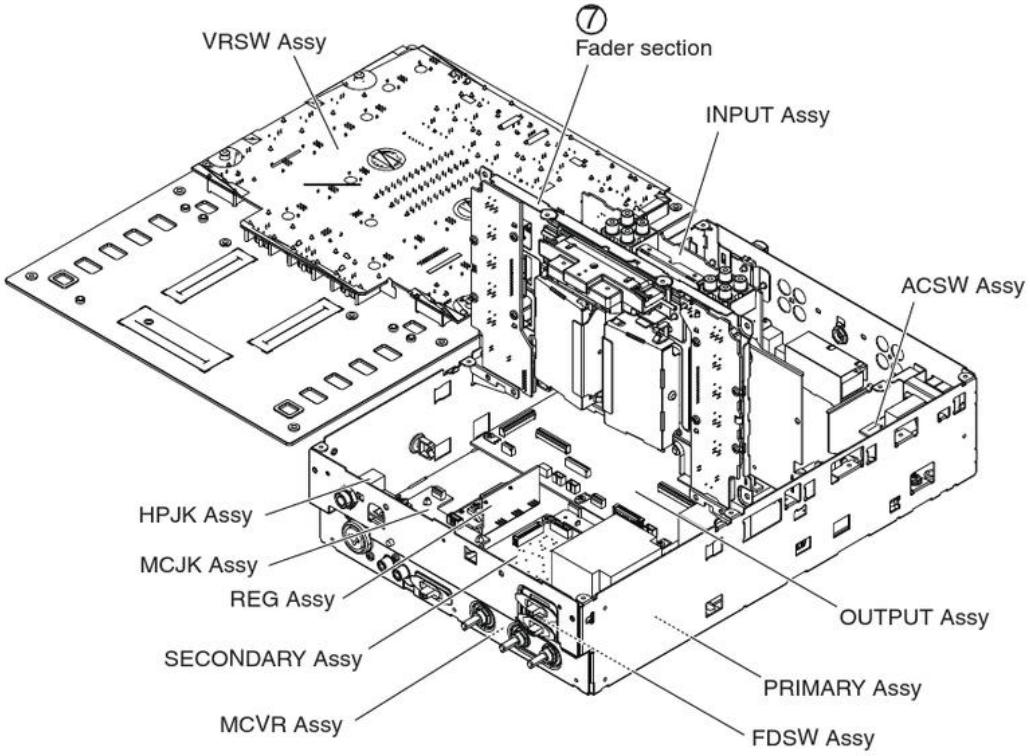

Jumper wire styling

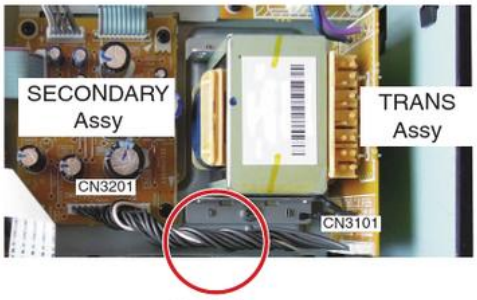

3 rotations.
(For improving sound quality)

Reference information

Screw tightening order (FDSW Assy)

The other screws are random order.

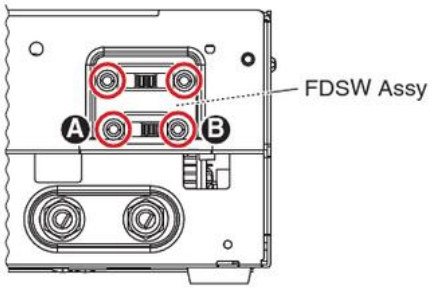

Screw tightening order (Cannon connector)

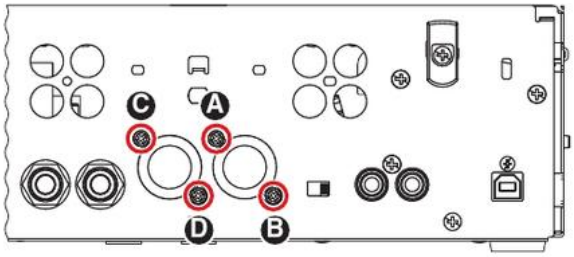

Screw tightening order (Bracket PSW)

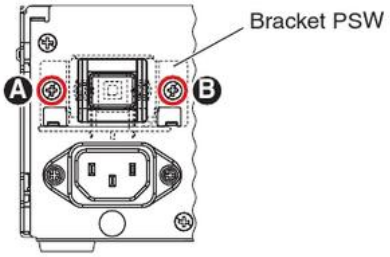

Screw tightening order (ACSW Assy)

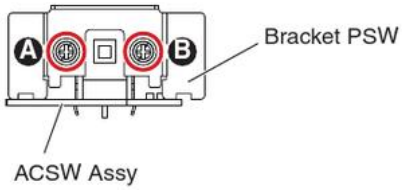

[3] Fader

[3-1] CROSS FADER Assy

(1) Remove the two screws. (BBZ30P060FTB)
(2) Remove the cross fader section.
(3) Disconnect the one connector. (CN4001)

Screw tightening order

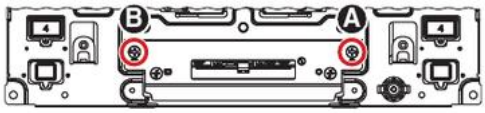

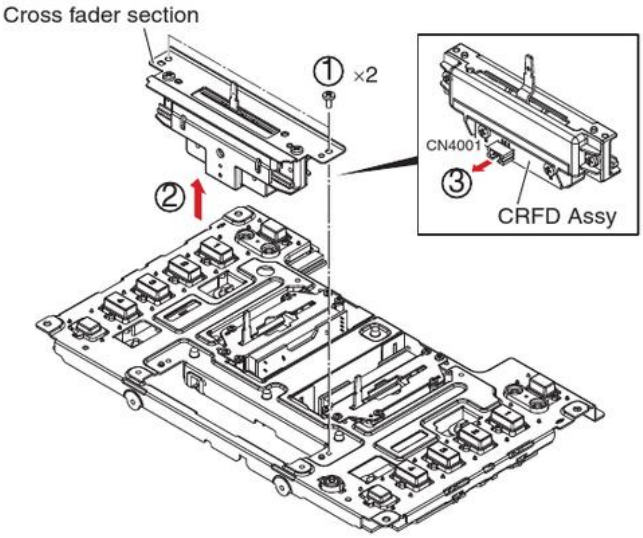

• Note on Removal of the CROSS FADER Assy

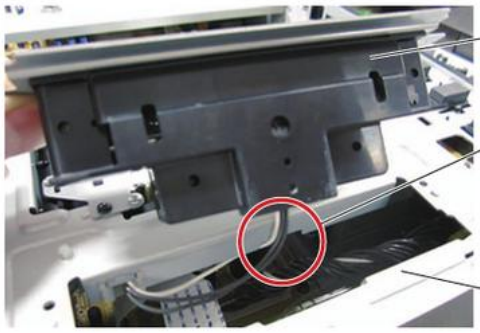

CROSS FADER Assy

When the CROSS FADER Assy is detached from the panel stay, the cables from the Assy may be caught by the cutout of the panel stay. In such a case, if you continue to pull out the Assy with the cables caught, they may be damaged and broken. So, be careful when you remove the Assy.

Panel stay

(4) Remove the two screws. (BPZ30P080FTB)
(5) Remove the CRF stay.
(6) Remove the two screws.
(7) Remove the CRFD Assy.

Screw tightening order

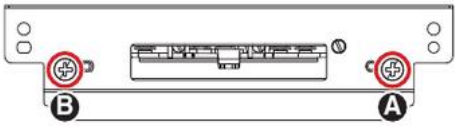

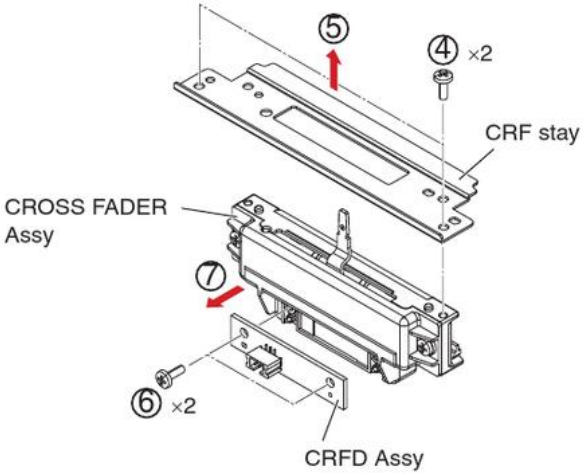

[3-2] CHFD1, 2 Assy

(1) Remove the four screws. (BSZ20P040FTB)
(2) Remove the CHFD1 and 2 sections.
(3) Disconnect the two connectors.
(CN2301, 2401)

Screw tightening order

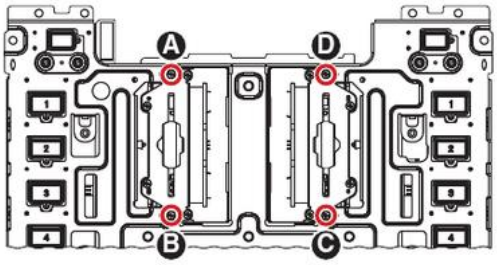

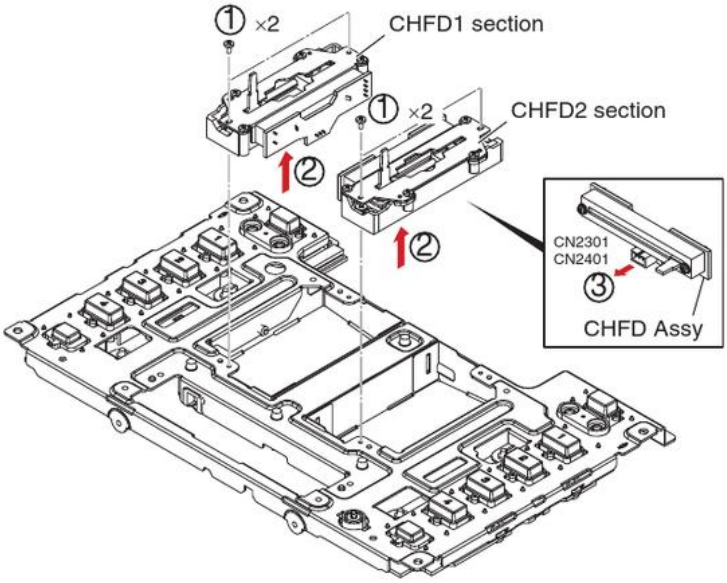

(4) Remove the four screws. (BPZ20P060FTC)
(5) Remove the CHFD Assy with VR stay.
(6) Remove th two screws. (PMH20P040FTC)
(7) Remove the CHFD Assy.
(8) Remove the two screws and remove the guide shaft (S) and slider base section. (CPZ26P080FTC)
(9) Remove the slider section from guide shaft (S).
(10) Remove the two screws and remove the lever plate. (BPZ20P060FTC)

Screw tightening order

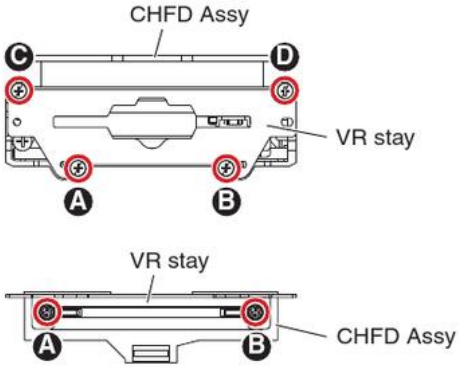

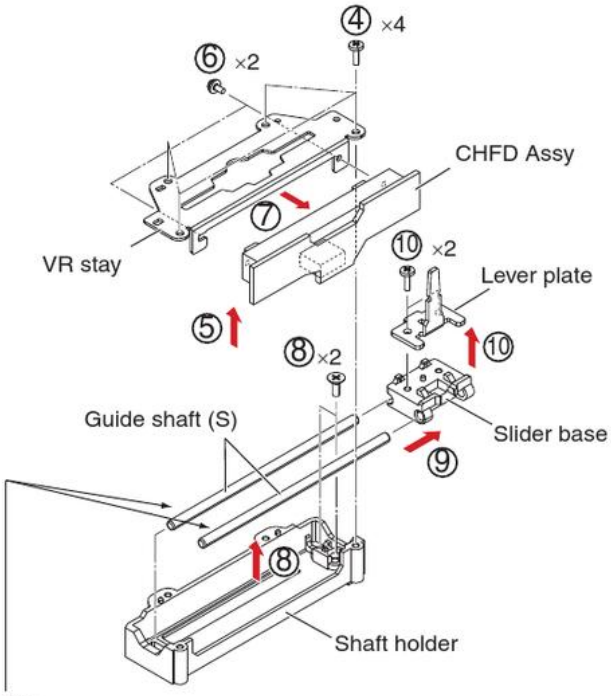

Note:
The grease application position when you assemble guide shaft(S) refer to "9.4 FADER SECTION."

[3-3] PNLL, PNLR Assy

(1) Remove the eight screws. (BBZ30P060FTB)
(2) Release the jumper wire from the holder.
(3) Remove the PNLL and PNLR Assys.
(4) Disconnect the two connectors.
(CN3702, 3801)

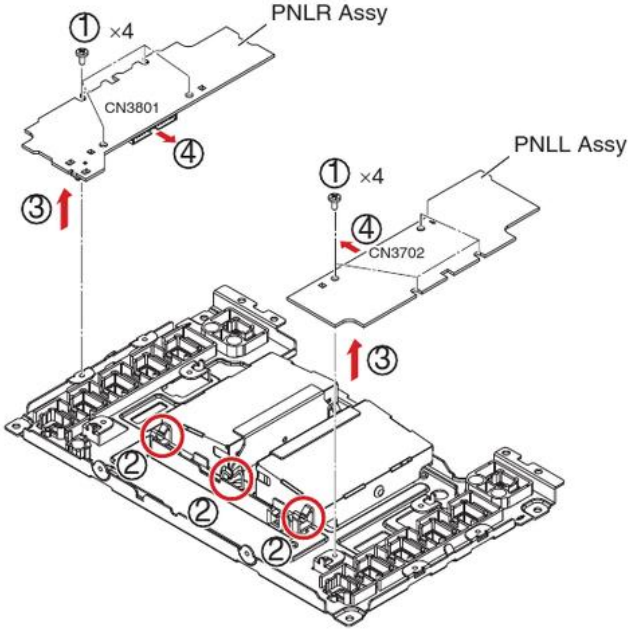

• Bottom view

[4] VRSW Assy

(1) Remove the all knobs.

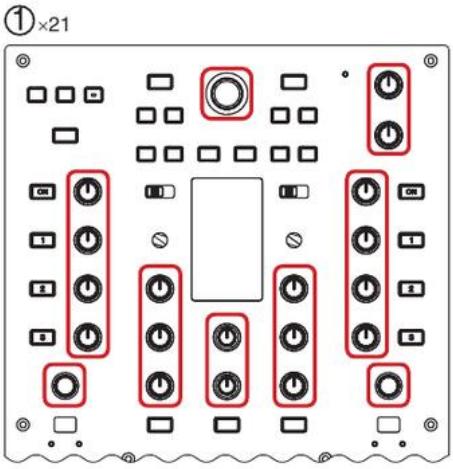

(2) Remove the all nuts and washers.

Screw tightening order

The other screws are random order.

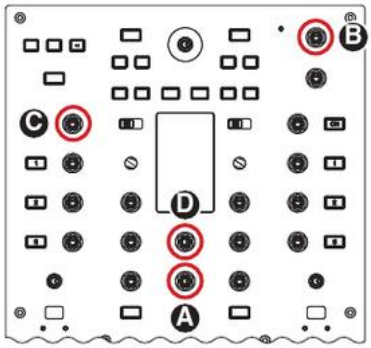

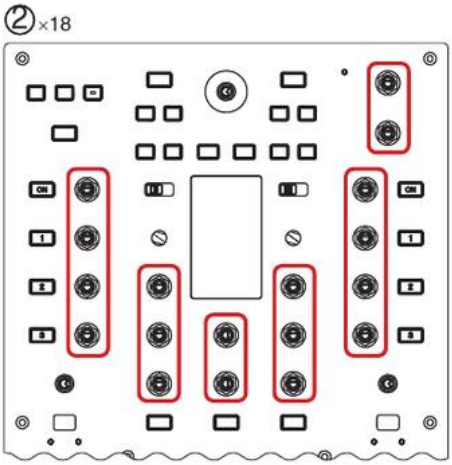

(3) Remove the control panel.
(4) Remove the all buttons.
(5) Release the flexible cable.
(6) Remove the four rivets and remove the shield sheet A.

Rivet tightening order

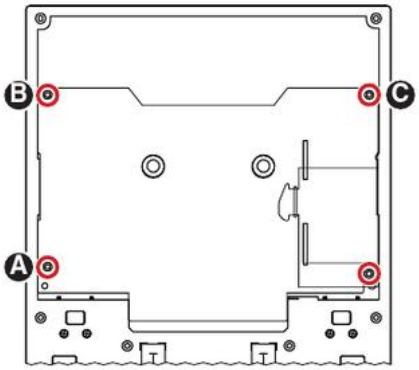

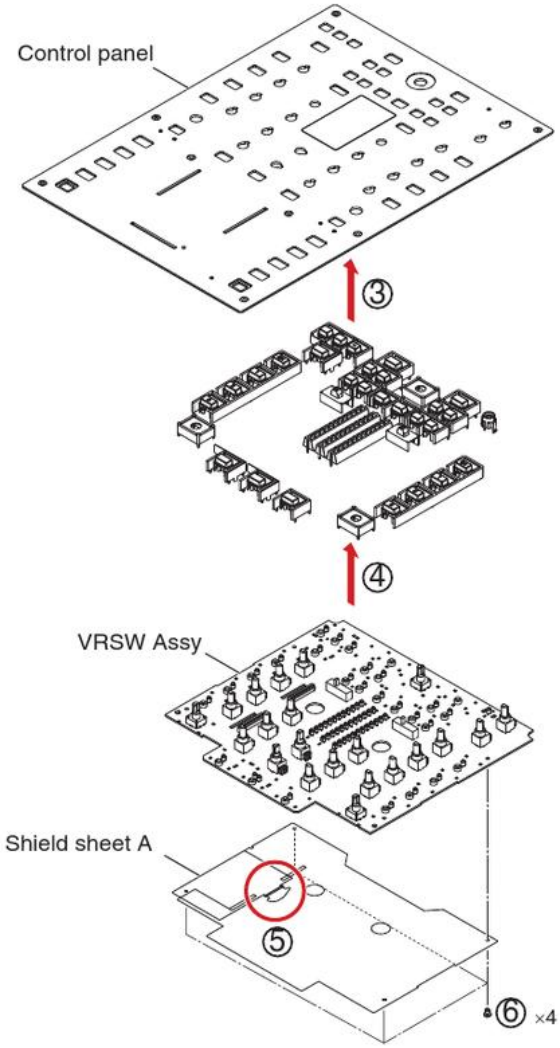

8. EACH SETTING AND ADJUSTMENT

8.1 NECESSARY ITEMS TO BE NOTED

After repairing, be sure to check the version of the firmware, and if it is not the latest one, update to the latest version.
Perform the each item when the following parts are replaced.

- OUTPUT Assy (MAIN CPU: IC101) ⟹ • Confirmation of the version of the firmware
  • Updating to the latest version of the firmware
- Cross fader ⟹ After replacement, adjustment is required.
  For details, see “Mode 8: For adjusting the cross fader” in “6.1 TEST MODE.”

8.2 UPDATING OF THE FIRMWARE

* Updating of the firmware following the procedures shown below will rewrite data in the program area.
(Data in the boot area cannot be updated.)
* Available OS: Windows XP/Windows Vista/Windows 7

Procedure

① Turn off the power of DJM-T1.
Then connect USB cable with PC and DJM-T1.

② Start up DJM-T1 for "update mode".
Keep pushing the "FX2 EFFECT ON/OFF"button and "SELECT(Deck B&D side)" button. Then turn on the power of DJM-T1.

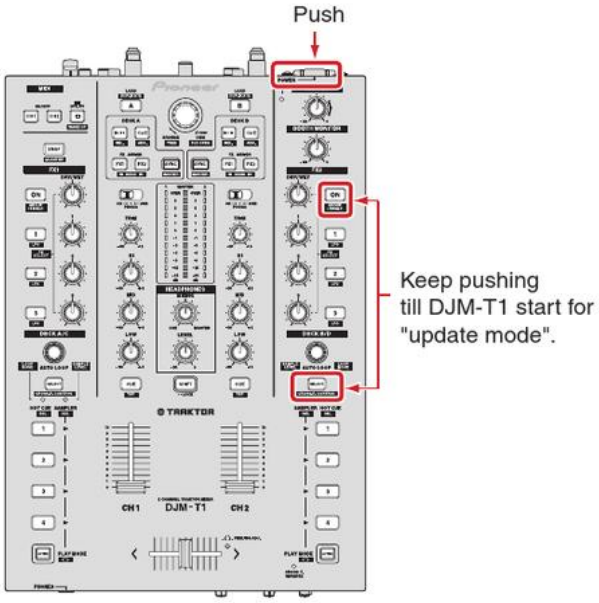

③ Putting the "update file", "dll file" and "update program" to optional folder on PC.
- Update Program: DJMT1UpdateProgram.exe
- DLL: pcupdate.dll
- Update File: DJMT1MAIN.upd

④ Start the "update program" on PC.
Double click the DJMT1UpdateProgram.exe.

⑤ Select a language.
Select a language. Then click [OK].

⑥ Confirm a firmware version.
Click [Start].

⑦ Screen of update.
Please wait till the update is completing.

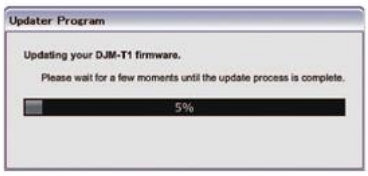

⑧ Screen of complete.
Click [OK].
The DJM-T1's "CH1 LEVEL METERS" and "CH2 LEVEL METERS" is lighting all LEDs.

⑨ Turn off the power of DJM-T1.

[Reference information]
The time required for updating is approximately 5 minutes for Windows XP and approximately 1 minute for other operating systems.

Indications by the level indicators during updating

Function outline

Indications by the level indicators during updating is described here.
You can confirm updating status with the progress bar of the PC application and the level indicators of the mixer.

• CH1 level indicator:
Error-indicating segments: Indications change, depending on errors.

• CH2 level indicator:
Progress-indicating segments: Progress of updating is indicated.
Mode-indicating segment: This segment flashes at intervals of 500 msec until the updating process is completed then is lit after updating is completed.

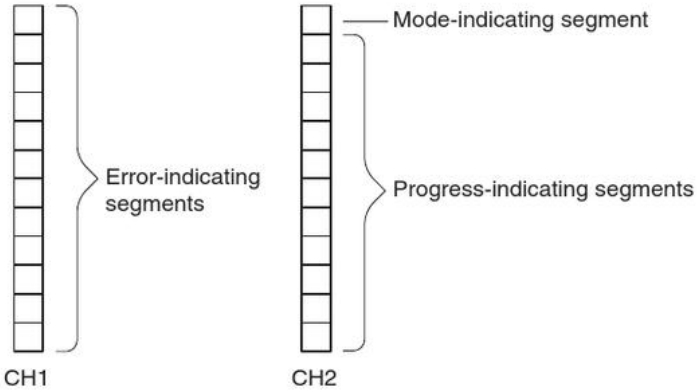

Indications of the CH2 Level Indicator (Progress and Mode Indications)

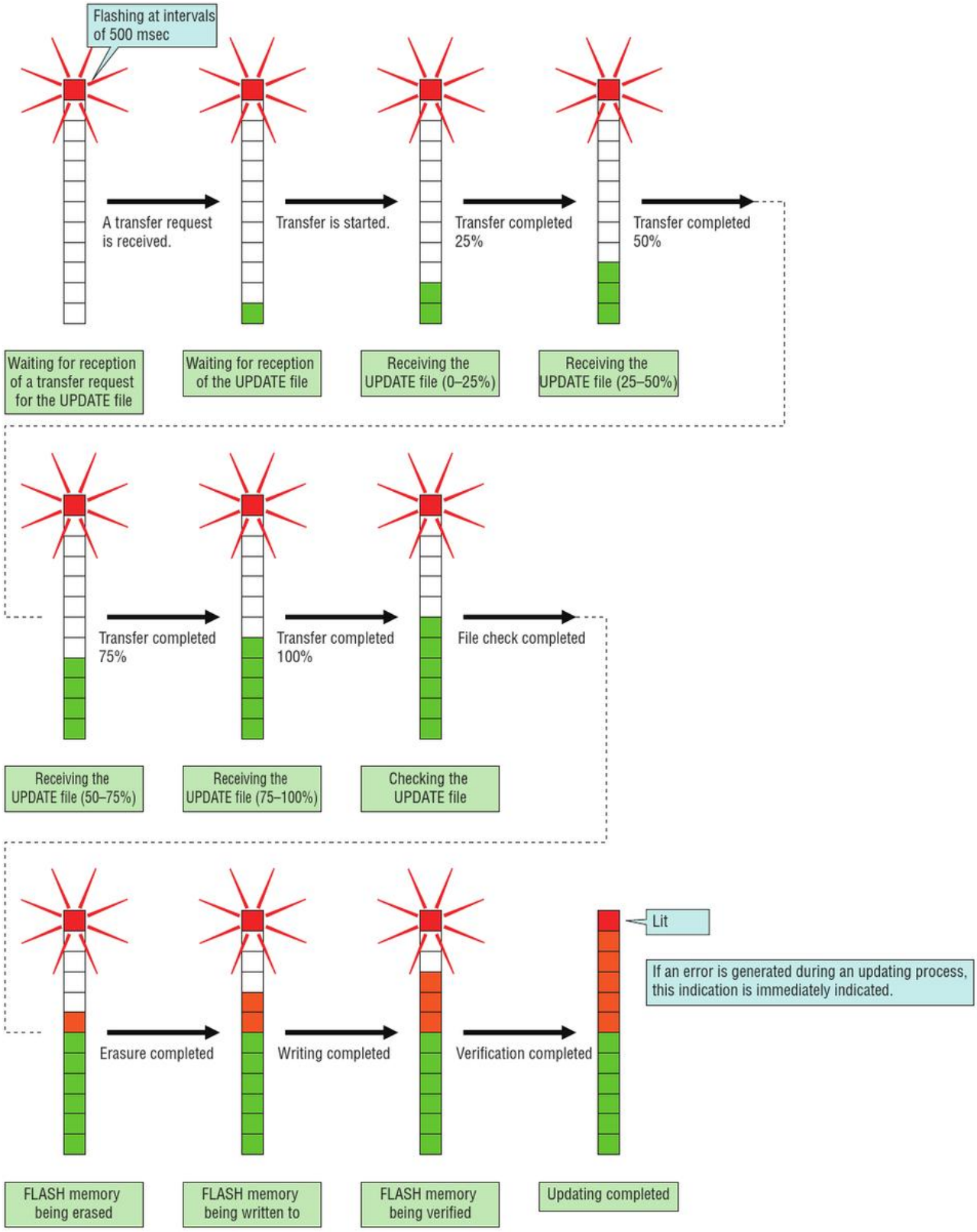

Indications of the CH1 Level Indicator (Error Indications)

Updating being properly processed

Timeout of updating processes

Checksum error

Verification error of the UPDATE file

FLASH memory erasure error

FLASH memory writing error

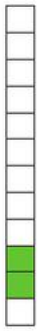

FLASH memory verification error

Updating properly completed

8.3 USER SETTABLE ITEMS

Setting Item	CH1 Level Indicator flashing position	Setting Area	Initial Value (Factory settings)	Parts	Content to be Stored
Cross Fader Cut Lag	The topmost LED	0 to 52	6	Flash ROM IC109: DYW1804 (OUTPUT Assy)	UTILITY setting
Cross Fader Curve Slow A	The 2nd LED from the top	0 to 32	16		
Cross Fader Curve Slow B	The 3rd LED from the top	0 to 32	16		
Cross Fader Curve Fast A	The 4th LED from the top	0 to 32	32		
Cross Fader Curve Fast B	The 5th LED from the top	0 to 32	32		
Generic Controller Mode	The 6th LED from the top	ON/OFF	OFF		
Mic Output To Booth Monitor	The 7th LED from the top	ON/OFF	ON		
Auto Standby	The 8th LED from the top	ON/OFF	ON		

Check Procedures of the UTILITY Settings

1. Hold the UTILITY (WAKE UP) button pressed for at least 1 sec then check that the UTILITY (WAKE UP) indicator and the CH 1 channel level indicator flash.
2. To check the setting value of each item, use the LOAD (DUPLICATE) B button to advance or the LOAD (DUPLICATE) A button to go back.

Note: For details, refer to the operation manual of the unit.

Note: This model does not have the division of USER SETUP and CLUB SETUP.

9. EXPLODED VIEWS AND PARTS LIST

NOTES:
- *Parts marked by "NSP" are generally unavailable because they are not in our Master Spare Parts List.*
- *The ⚠ mark found on some component parts indicates the importance of the safety factor of the part. Therefore, when replacing, be sure to use parts of identical designation.*
- *Screws adjacent to ▼ mark on product are used for disassembly.*
- *For the applying amount of lubricants or glue, follow the instructions in this manual. (In the case of no amount instructions, apply as you think it appropriate.)*

9.1 PACKING SECTION

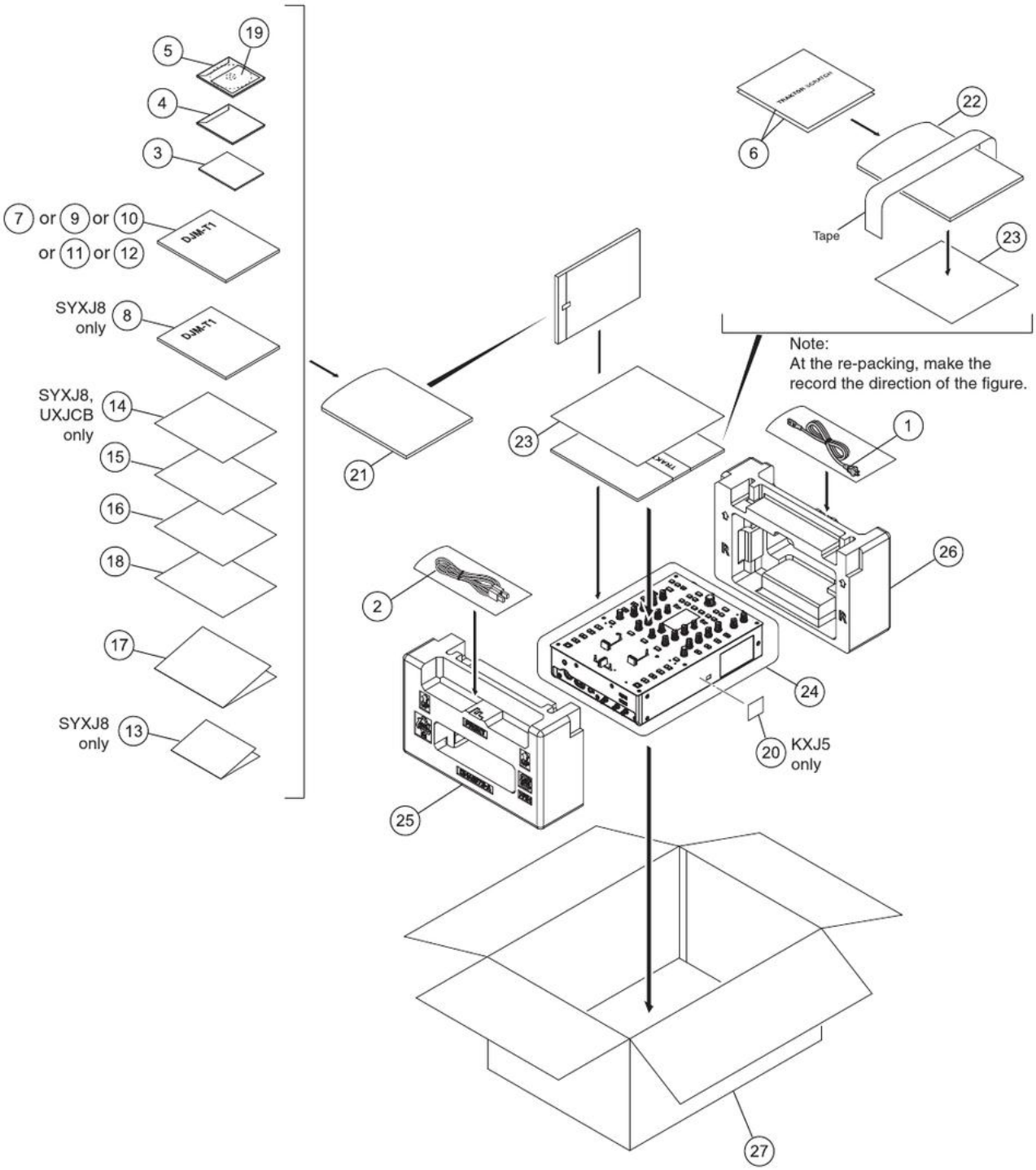

(1) PACKING SECTION PARTS LIST

Mark	No.	Description	Part No.
⚠	1	Power Cord	See Contrast table (2)
	2	USB Cable	DDE1128
NSP	3	TRAKTOR SCRATCH CONTROL CD	DXX2673
	4	Driver Software CD-ROM	DXX2675
	5	TRAKTOR SCRATCH DUO 2 Software DVD-ROM	DXX2676
NSP	6	TRAKTOR SCRATCH CONTROL VINYL	DXX2677
	7	Operating Instructions	See Contrast table (2)
	8	Operating Instructions	See Contrast table (2)
	9	Operating Instructions	See Contrast table (2)
	10	Operating Instructions	See Contrast table (2)
	11	Operating Instructions	See Contrast table (2)
	12	Operating Instructions	See Contrast table (2)
NSP	13	Warranty Card (WY)	See Contrast table (2)
	14	Leaflet/TRK	See Contrast table (2)
	15	Leaflet/A	DRM1358
	16	Leaflet/B	DRM1359
	17	Leaflet/C	DRM1360
	18	Leaflet/D	DRM1361
NSP	19	License Key Label Assy	DXA2244
NSP	20	Label/RCY	See Contrast table (2)
NSP	21	Polyethylene Bag	AHG7117
NSP	22	Polyethylene Bag	AHG7082
	23	Packing Board	DHB1002
	24	Sheet	RHX1006
	25	Pad F	DHA1873
	26	Pad R	DHA1874
	27	Packing Case	See Contrast table (2)

(2) CONTRAST TABLE

DJM-T1/SYXJ8, UXJCB, LXJ, KXJ5 and XJCN5 are constructed the same except for the following:

Mark	No.	Symbol and Description	DJM-T1/ SYXJ8	DJM-T1/ UXJCB	DJM-T1/ LXJ	DJM-T1/ KXJ5	DJM-T1/ XJCN5
⚠	1	Power Cord	ADG7062	DDG1108	ADG7062	ADG7115	ADG7105
	7	Operating Instructions (En, Fr, De)	DRB1557	Not used	Not used	Not used	Not used
	8	Operating Instructions (It, Nl, Es, Ru)	DRB1562	Not used	Not used	Not used	Not used
	9	Operating Instructions (En)	Not used	DRB1558	Not used	Not used	Not used
	10	Operating Instructions (En, Es, ZHtw)	Not used	Not used	DRB1559	Not used	Not used
	11	Operating Instructions (Ko)	Not used	Not used	Not used	DRB1560	Not used
	12	Operating Instructions (En, Zhcn)	Not used	Not used	Not used	Not used	DRB1561
NSP	13	Warranty Card (WY)	ARY7107	Not used	Not used	Not used	Not used
	14	Leaflet/TRK	DRM1357	DRM1357	Not used	Not used	Not used
NSP	20	Label/RCY	Not used	Not used	Not used	DRW2487	Not used
	27	Packing Case	DHG3019	DHG3020	DHG3022	DHG3023	DHG3024

9.2 EXTERIOR SECION

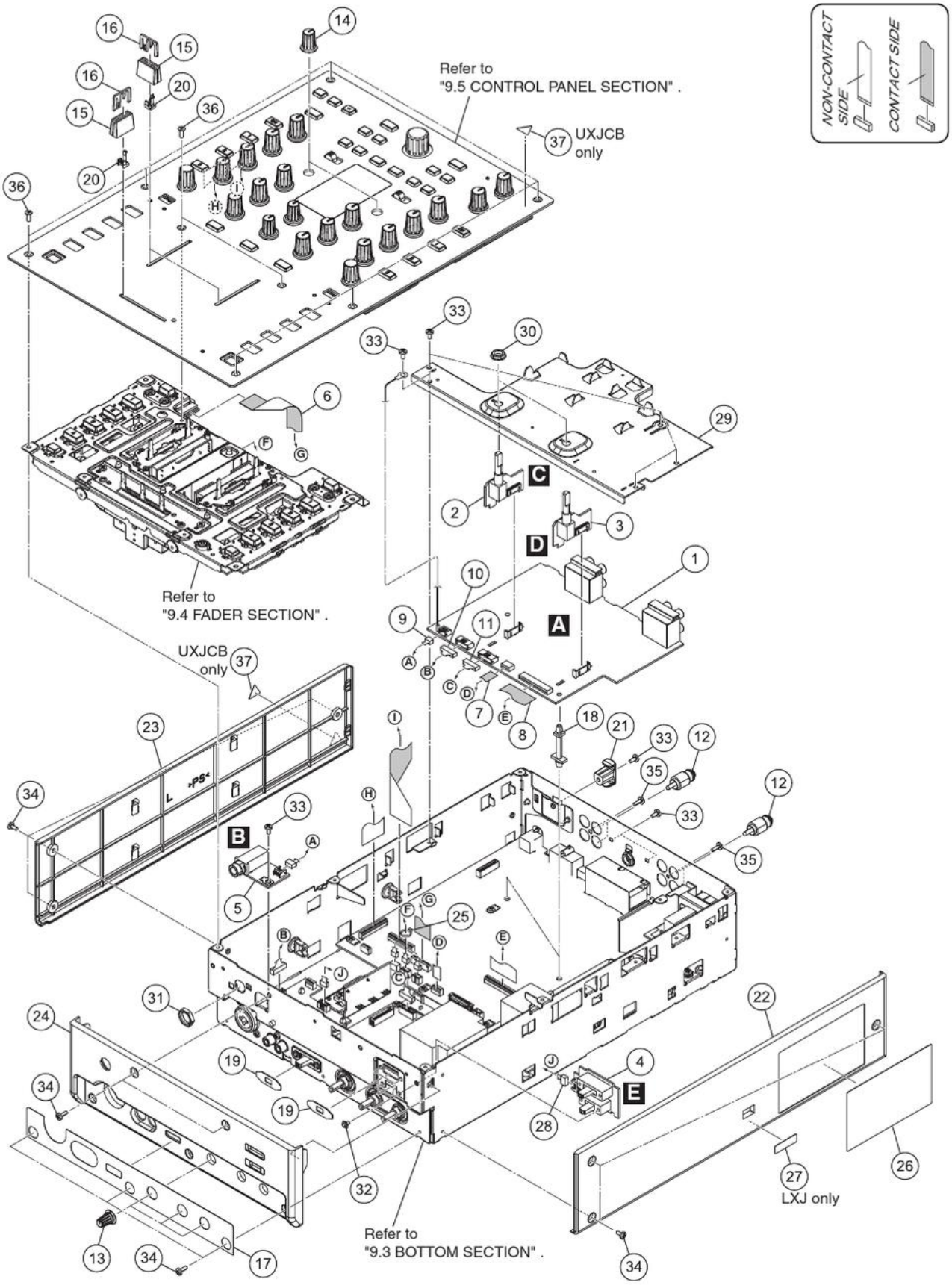

(1) EXTERIOR SECION SECTION PARTS LIST

Mark	No.	Description	Part No.
	1	INPUT Assy	DWX3282
	2	TRM1 Assy	DWX3268
	3	TRM2 Assy	DWX3269
	4	FDSW Assy	DWX3266
	5	HPJK Assy	DWX3267
	6	FFC/17P	DDD1577
	7	FFC/7P	DDD1579
	8	FFC/31P	DDD1580
	9	Crimp Connector/3P	DKP3917
	10	Connector Assy 6P	PF06PP-D22
	11	Connector Assy	PF07PP-D15
	12	Short Pin Plug	AKM7008
	13	Rotary Knob (SS)	DAA1164
	14	Rotary VR Knob	DAA1276
	15	Slider Knob 1	DAC2684
	16	Slider Knob 2	DAC2685
	17	Front Sheet	DAK1002
NSP	18	PCB Spacer	DEC1389
	19	Packing/SW	DEC3378
	20	Slider Knob Stopper	DNK5888
	21	Cord Hook	DNK5928
⚠	22	Side Panel R	See Contrast table (2)
⚠	23	Side Panel L	DNK5942
⚠	24	Front Panel	DNK5943
	25	Binder	ZCA-SKB90BK
NSP	26	Label	See Contrast table (2)
NSP	27	V Select Label	See Contrast table (2)
	28	Connector Assy	PF04PP-B20
	29	TRIM Stay	DNF1878
	30	Flange Nut M7	DBN1011
	31	Nut M12	DBN1018
	32	Screw	AMZ26P040FTC
	33	Screw	BBZ30P060FTB
	34	Screw	BBZ30P080FTB
	35	Screw	BPZ30P080FTB
	36	Screw (FE)	DBA1290
NSP	37	Label	See Contrast table (2)

(2) CONTRAST TABLE

DJM-T1/SYXJ8, UXJCB, LXJ, KXJ5 and XJCN5 are constructed the same except for the following:

Mark	No.	Symbol and Description	DJM-T1/ SYXJ8	DJM-T1/ UXJCB	DJM-T1/ LXJ	DJM-T1/ KXJ5	DJM-T1/ XJCN5
⚠	22	Side Panel R	DNK5941	DNK5941	DNK5946	DNK5941	DNK5941
NSP	26	Label	DAL1181	DAL1182	DAL1184	DAL1185	DAL1186
NSP	27	V Select Label	Not used	Not used	DRW2349	Not used	Not used
NSP	37	Label	Not used	DRW1975	Not used	Not used	Not used

9.3 BOTTOM SECTION

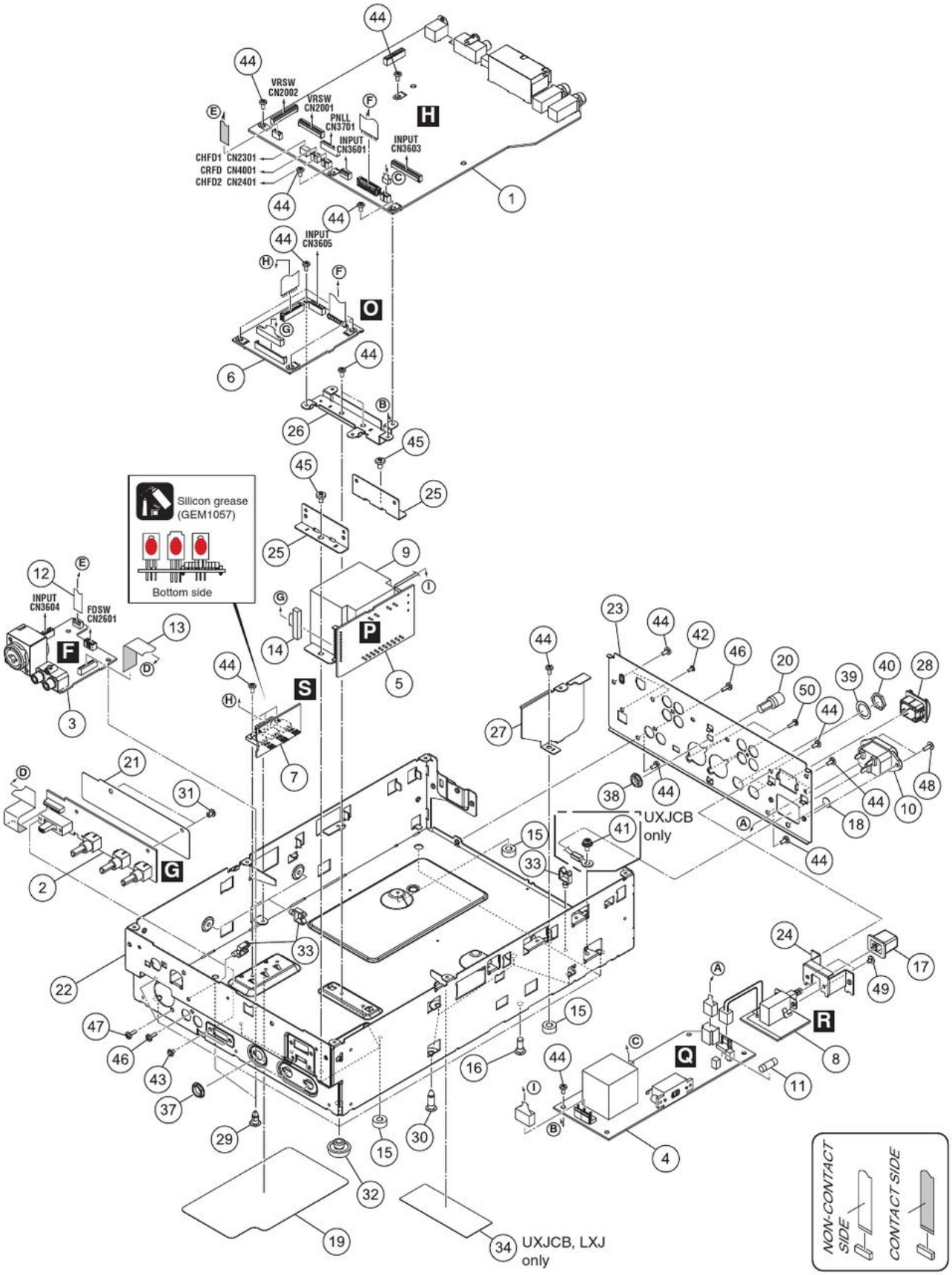

(1) BOTTOM SECTION PARTS LIST

Mark	No.	Description	Part No.
	1	OUTPUT Assy	DWX3257
	2	MCVR Assy	DWX3264
	3	MCJK Assy	DWX3265
	4	PRIMARY Assy	See Contrast table (2)
	5	TRANS Assy	See Contrast table (2)
	6	SECONDARY Assy	DWR1503
	7	REG Assy	DWR1504
	8	ACSW Assy	DWS1435
⚠	9	Power Transformer (T3101)	See Contrast table (2)
⚠	10	AC Inlet	See Contrast table (2)
⚠	11	Fuse (FU1901: T500 mA)	AEK1051
	12	FFC/6P	DDD1578
	13	FFC/17P	DDD1581
	14	Connector Assy	PF13EE-S12
NSP	15	Spacer	AEB7092
	16	PCB Holder	AEC7057
	17	Power Knob	DAC2306
	18	Blind Label	DEC2928
	19	Bottom Sheet	DEC3365
	20	Terminal Screw	DKE1014
	21	Shield Sheet C	DMR1003
	22	Chassis	DNA1430
	23	Rear Panel	See Contrast table (2)
	24	Bracket PSW	DNF1759
	25	Trans Stay	DNF1839
	26	MAIN Stay	DNF1879
	27	Shield Plate/PW	DNF1886
	28	Power Knob Guard	DNK4534
NSP	29	PCB Holder	PNW1706
	30	PCB Holder	PNW2029
	31	Rivet (Plastic)	RBM-003
	32	Foot (Rubber)	REC-434
	33	Holder	VEC1355
NSP	34	FCC Label	See Contrast table (2)
	35	•••••	
	36	•••••	
	37	Flange Nut M9	DBN1008
	38	Flange Nut M7	DBN1011
	39	Washer	DEC2920
	40	Nut (M12)	NKX2FNI
	41	Screw	See Contrast table (2)
	42	Screw (M3x5)	DBA1340
	43	Screw	AMZ26P040FTC
	44	Screw	BBZ30P060FTB
	45	Screw	BBZ40P060FTC
	46	Screw	BPZ30P080FTB
	47	Screw	BPZ30P120FTB
	48	Screw	IBZ30P080FTB
	49	Screw	IMZ30P040FTC
	50	Screw	PPZ30P080FTB

(2) CONTRAST TABLE

DJM-T1/SYXJ8, UXJCB, LXJ, KXJ5 and XJCN5 are constructed the same except for the following:

Mark	No.	Symbol and Description	DJM-T1/ SYXJ8	DJM-T1/ UXJCB	DJM-T1/ LXJ	DJM-T1/ KXJ5	DJM-T1/ XJCN5
	4	PRIMARY Assy	DWR1496	DWR1498	DWR1497	DWR1496	DWR1496
	5	TRANS Assy	DWR1500	DWR1501	DWR1505	DWR1500	DWR1500
⚠	9	Power Transformer (T3101)	DTT1225	DTT1226	DTT1225	DTT1225	DTT1225
⚠	10	AC Inlet/2P	DKP3916	Not used	DKP3916	DKP3916	DKP3916
⚠	10	AC Inlet/3P	Not used	DKP3915	Not used	Not used	Not used
	23	Rear Panel	DNC2055	DNC2056	DNC2058	DNC2059	DNC2060
NSP	34	FCC,CLASS B Label	Not used	DRW2300	Not used	Not used	Not used
NSP	34	FCC Label	Not used	Not used	DRW2299	Not used	Not used
	41	Screw	Not used	PMH40P080FTC	Not used	Not used	Not used

9.4 FADER SECTION

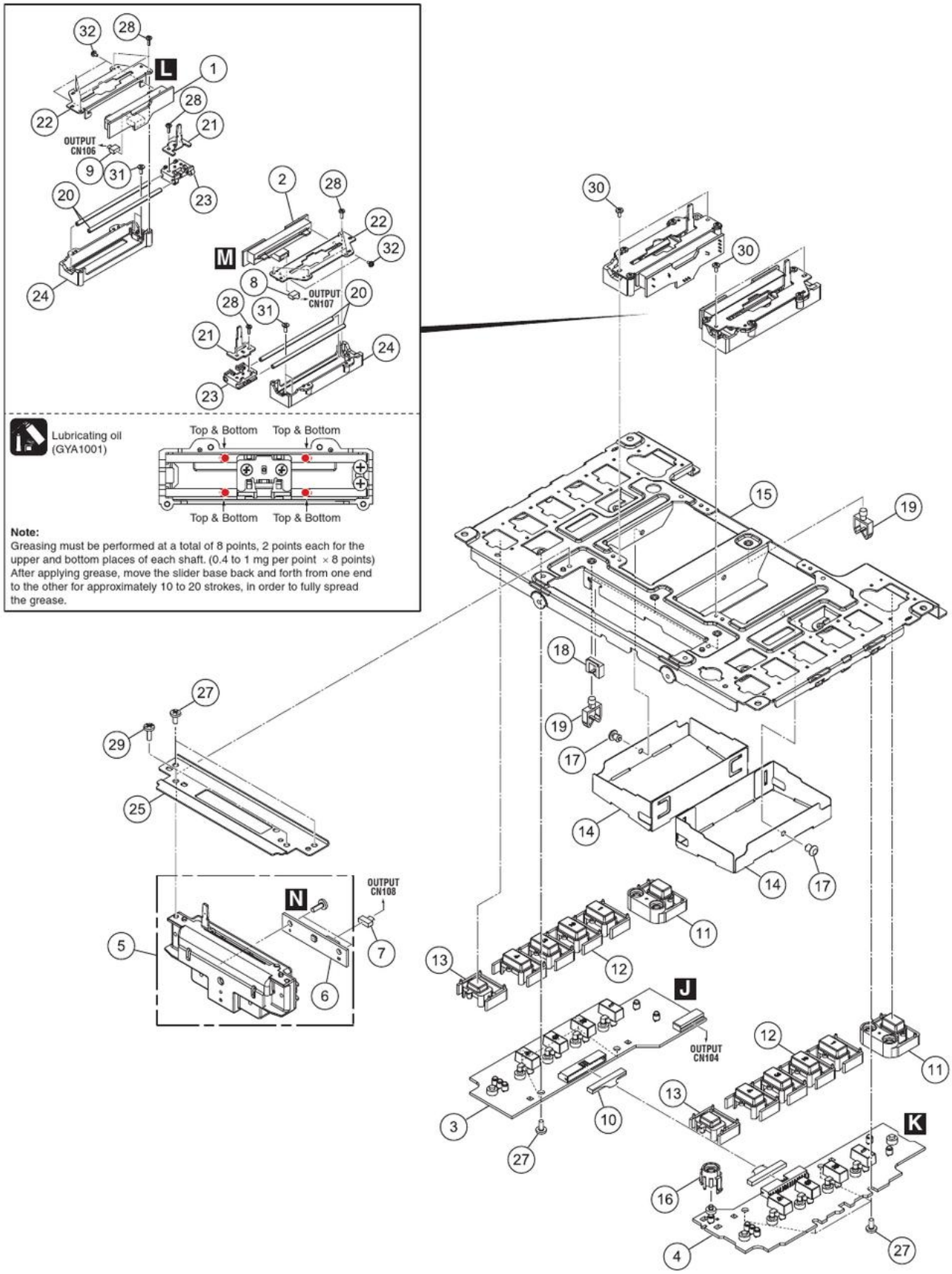

FADER SECTION PARTS LIST

Mark	No.	Description	Part No.
	1	CHFD1 Assy	DWX3260
	2	CHFD2 Assy	DWX3261
	3	PNLL Assy	DWX3262
	4	PNLR Assy	DWX3263
	5	1..CROSS FADER Assy	DXA2243
NSP	6	2..CRFD Assy	DWX3258
	7	Connector Assy	PF03PP-Q30
	8	Connector Assy	PF03PP2Q17
	9	Connector Assy	PF03PP6Q17
	10	Connector Assy	PF15PP-Q20
	11	Button MODE	DAC2759
	12	Button HOT CUE	DAC2762
	13	Button/ACT	DAC2775
	14	Shield Sheet B	DMR1002
	15	Panel Stay	DNF1880
	16	Holder/LED	DNK5973
	17	Rivet (Plastic)	RBM-003
	18	Edge Saddle	DEC1807
	19	Holder	VEC1355
NSP	20	Guide Shaft (S)	DLA1918
	21	Lever Plate	DNH2954
	22	VR Stay	DNH2955
	23	Slider Base	DNK5851
	24	Shaft Holder	DNK5852
	25	CRF Stay	DNF1874
	26	•••••	
	27	Screw	BBZ30P060FTB
	28	Screw	BPZ20P060FTC
	29	Screw	BPZ30P080FTB
	30	Screw	BSZ20P040FTB
	31	Screw	CPZ26P080FTC
	32	Screw	PMH20P040FTC

9.5 CONTROL PANEL SECTION

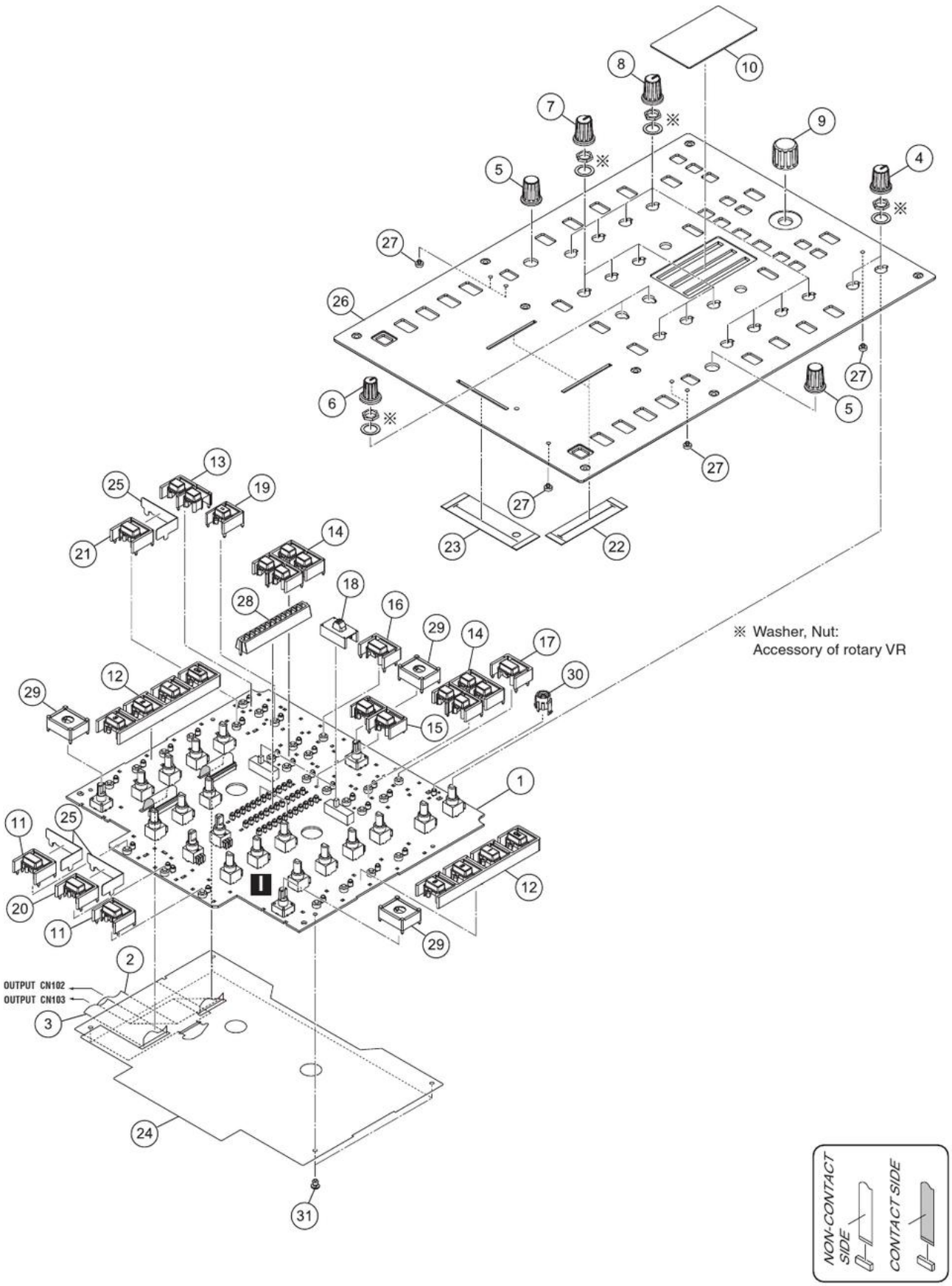

CONTROL PANEL SECTION PARTS LIST

Mark	No.	Description	Part No.
	1	VRSW Assy	DWX3259
	2	FFC/25P	DDD1575
	3	FFC/27P	DDD1576
	4	Rotary VR Knob (B)	DAA1183
	5	Dial Knob	DAA1277
	6	Rotary VR Knob	DAA1278
	7	Rotary VR Knob (B)	DAA1279
	8	Rotary VR Knob (G)	DAA1280
	9	Knob	DAA1281
	10	Level Plate	DAH2855
	11	Button CUE	DAC2758
	12	Button FX	DAC2760
	13	Button MIDI	DAC2761
	14	Button DECK	DAC2763
	15	Button SYNC	DAC2765
	16	Button LOAD A	DAC2766
	17	Button LOAD B	DAC2767
	18	Cap/MIC	DAC2773
	19	Button/UTI	DAC2776
	20	Button/SFT	DAC2778
	21	Button/SNP	DAC2779
	22	Fader Packing	DEC2903
	23	Packing/FAD	DEC3377
⚠	24	Shield Sheet A	DMR1001
	25	Shield Sheet/D	DMR1004
	26	Control Panel	DNB1191
	27	Lens	DNK4532
	28	Level Meter Holder	DNK5940
	29	Spacer	DNK5944
	30	Holder/LED	DNK5973
	31	Rivet (Plastic)	RBM-003

10. SCHEMATIC DIAGRAM
10.1 INPUT ASSY (1/2)

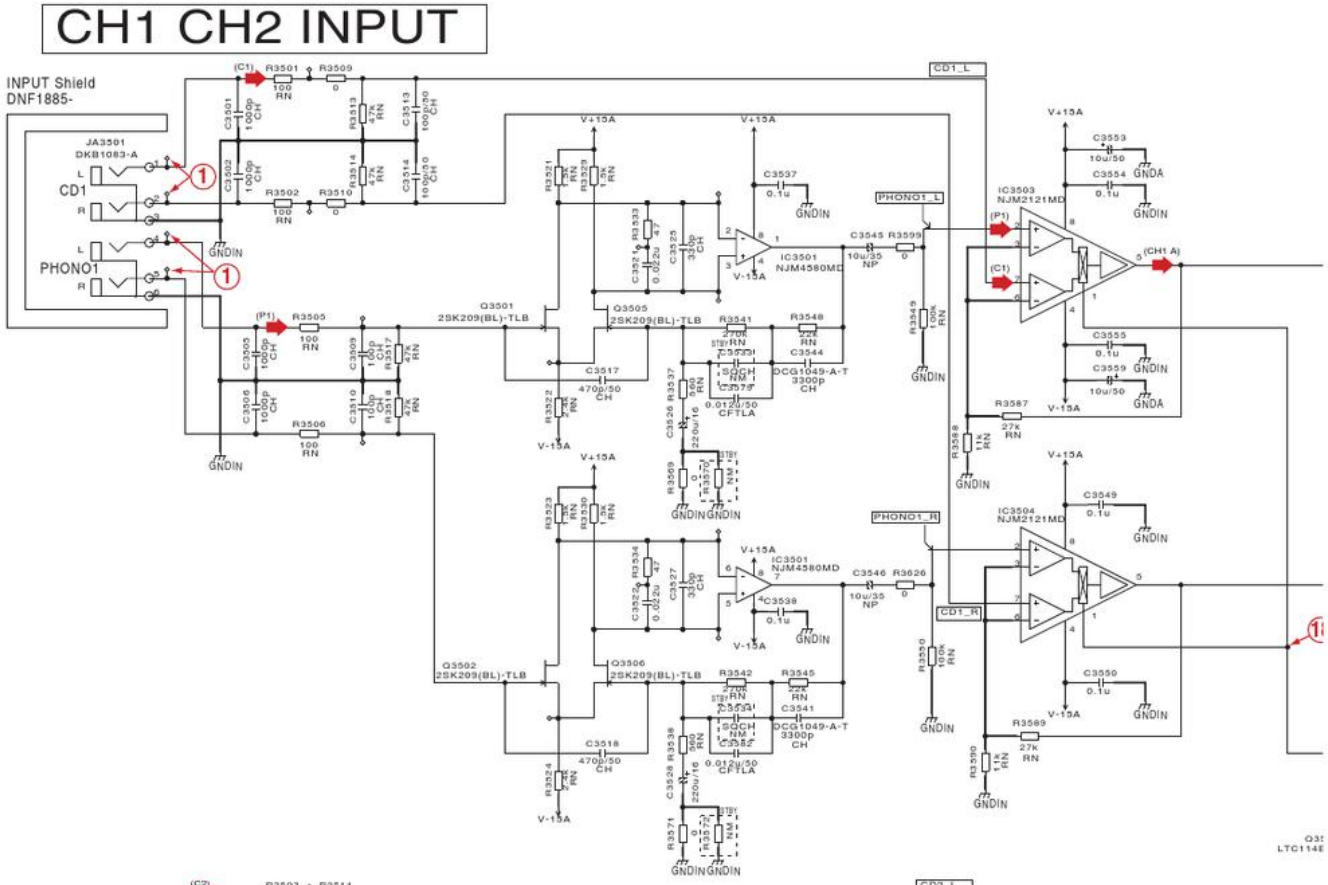

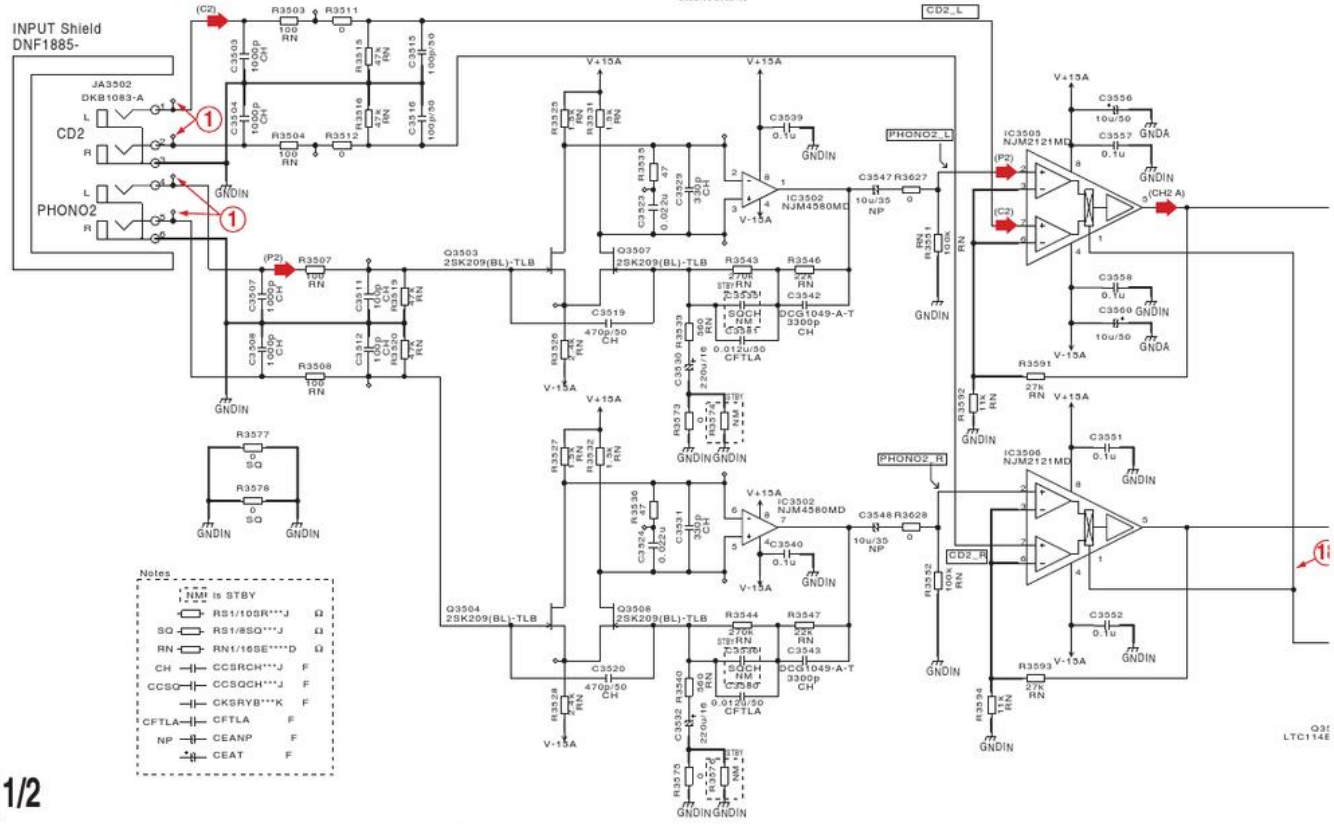

A 1/2

A 1/2 INPUT ASSY (DWX3282)

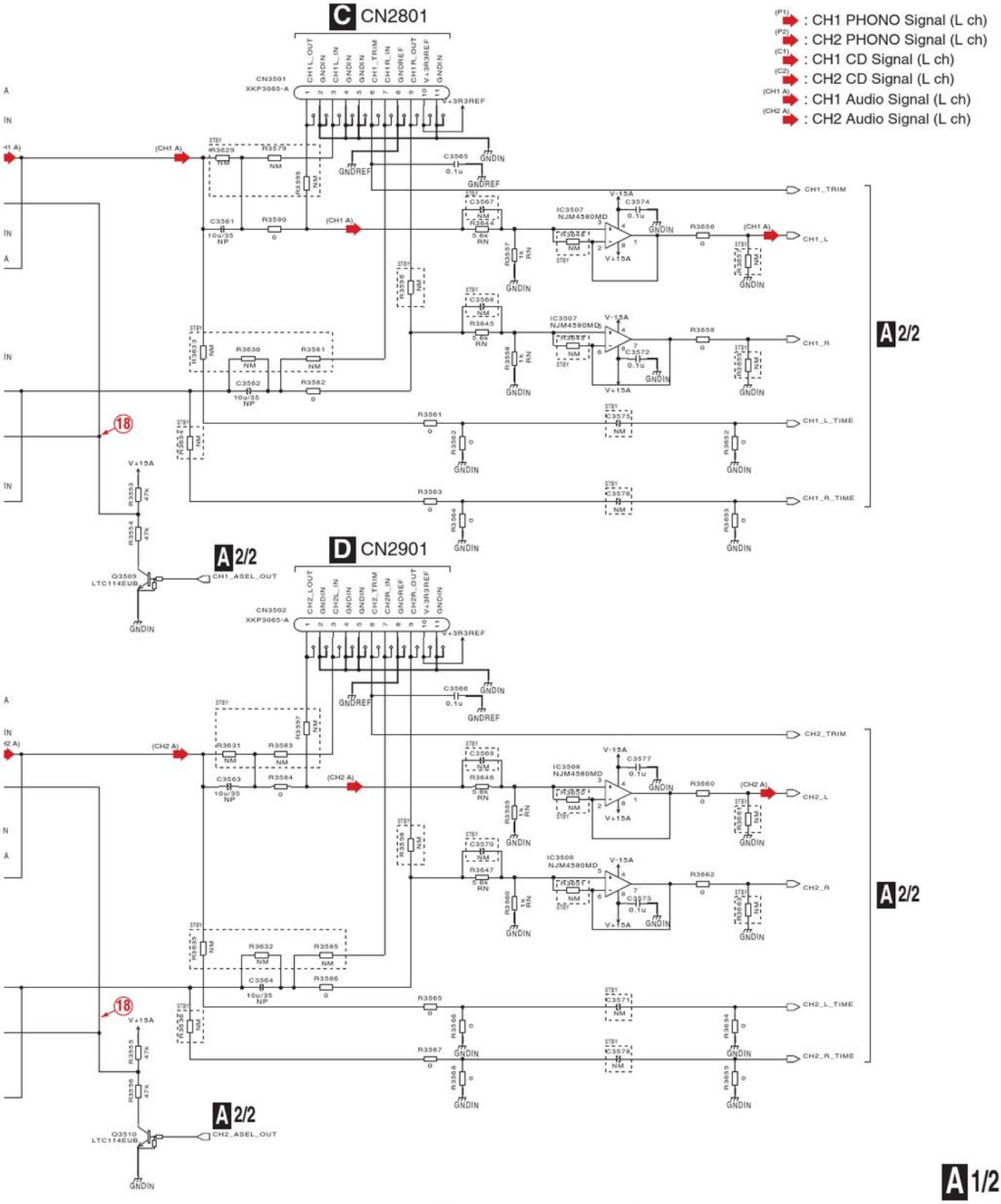

10.2 INPUT (2/2) and HPJK ASSYS

A 2/2 INPUT ASSY (DWX3282)

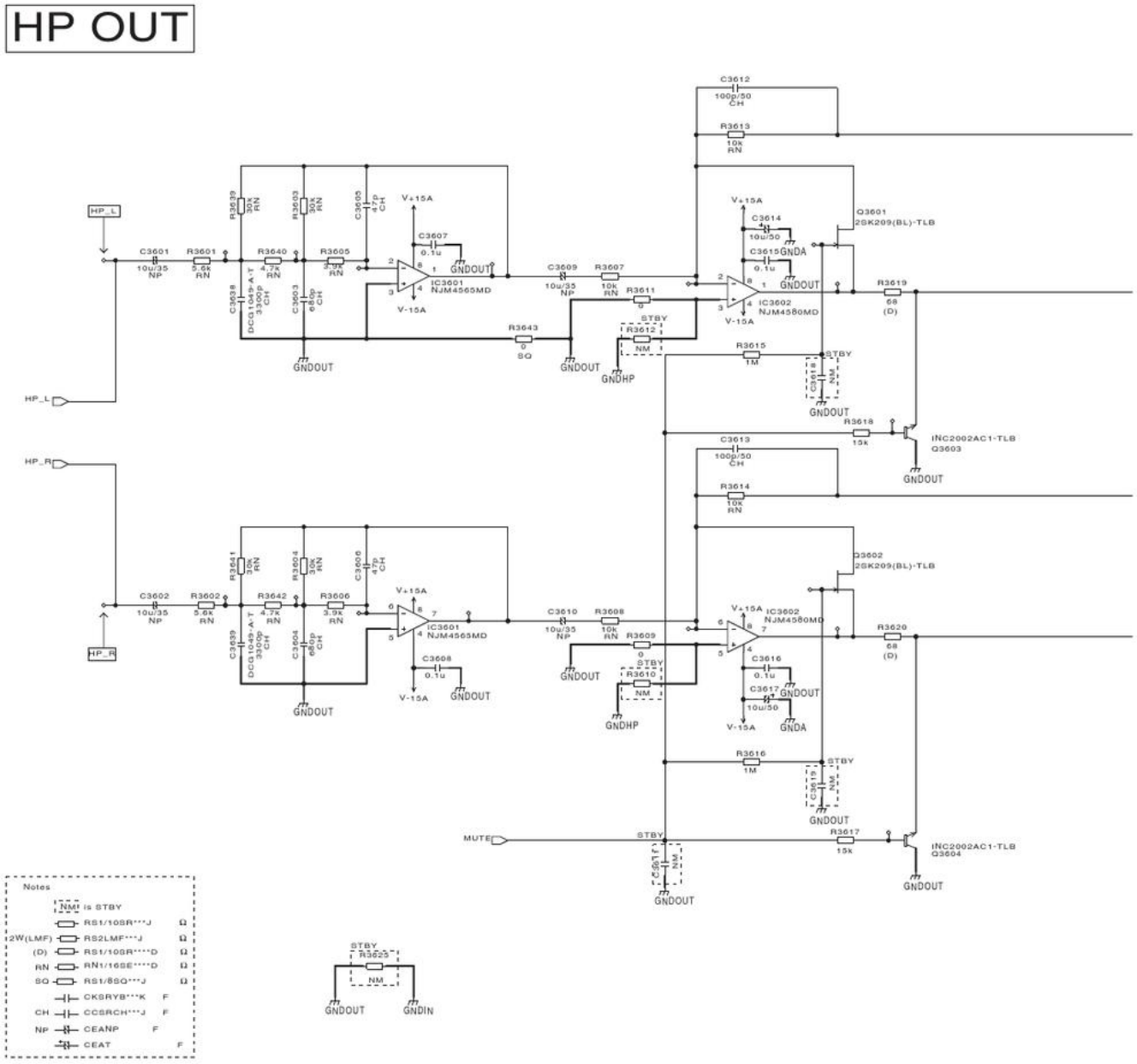

A 2/2

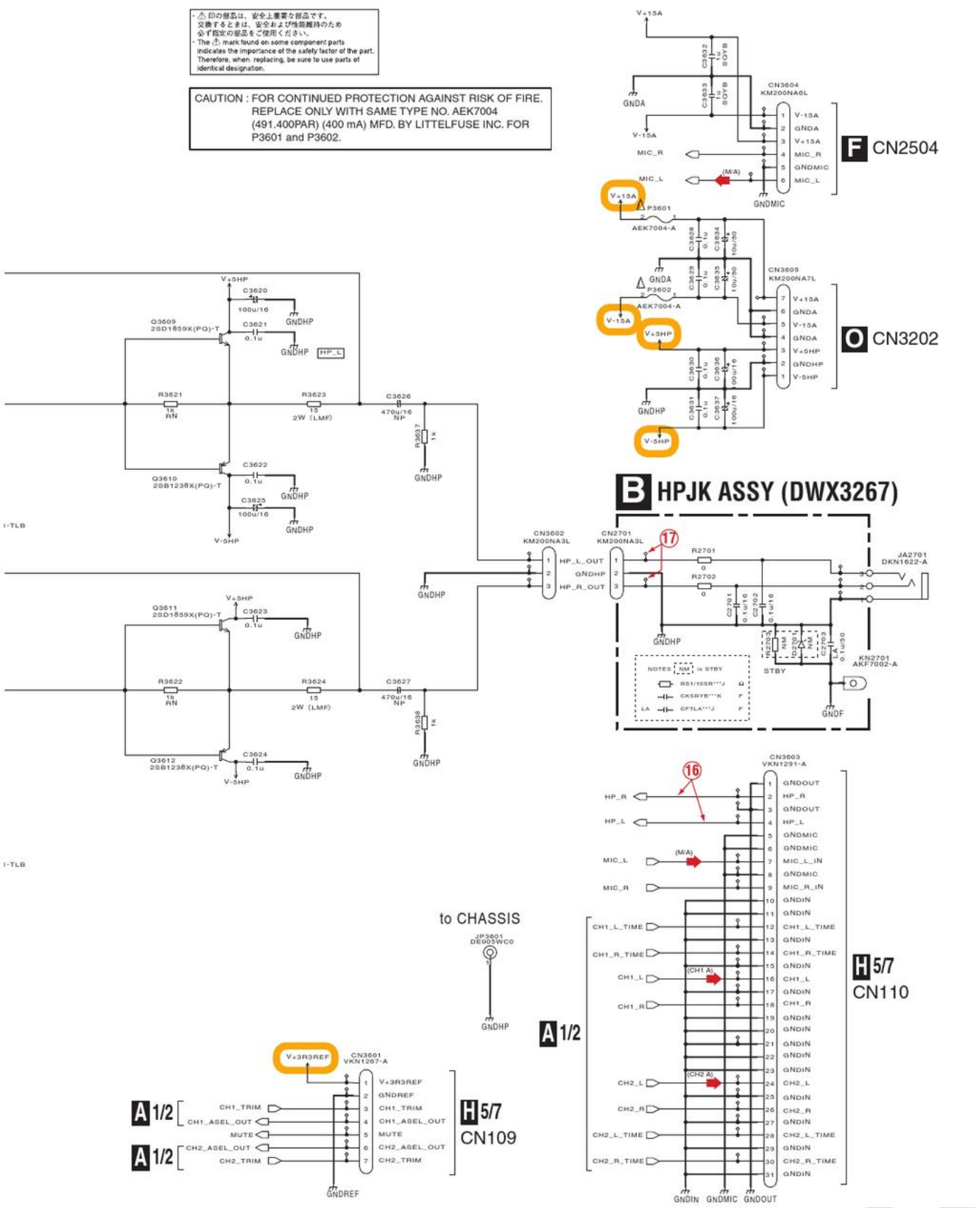
CAUTION : FOR CONTINUED PROTECTION AGAINST RISK OF FIRE. REPLACE ONLY WITH SAME TYPE NO. AEK7004 (491.400PAR) (400 mA) MFD. BY LITTELFUSE INC. FOR P3601 and P3602.
F CN2504
O CN3202
B HPJK ASSY (DWX3267)
H 5/7 CN110
H 5/7 CN109
A 1/2
A 2/2
to CHASSIS
CN3604 KM200NA6L
CN3605 KM200NA7L
CN3602 KM200NA3L
CN2701 KM200NA3L
CN3603 VKN1291-A
CN3601 VKN1267-A
JA2701 DKN1622-A
KN2701 AKF7002-A
P3601 AEK7004-A
P3602 AEK7004-A
Q3609 2SD1859X(PQ)-T
Q3610 2SB1238X(PQ)-T
Q3611 2SD1859X(PQ)-T
Q3612 2SB1238X(PQ)-T
HP_L_OUT
HP_R_OUT
GNDHP
GNDA
GNDMIC
GNDOUT
GNDIN
GNDREF
GNDF
STBY
MIC_L
MIC_R
CH1_L_TIME
CH1_R_TIME
CH2_L_TIME
CH2_R_TIME
CH1_TRIM
CH1_ASEL_OUT
MUTE
CH2_ASEL_OUT
CH2_TRIM
V+3R3REF

10.3 TRM1 and TRM2 ASSYS

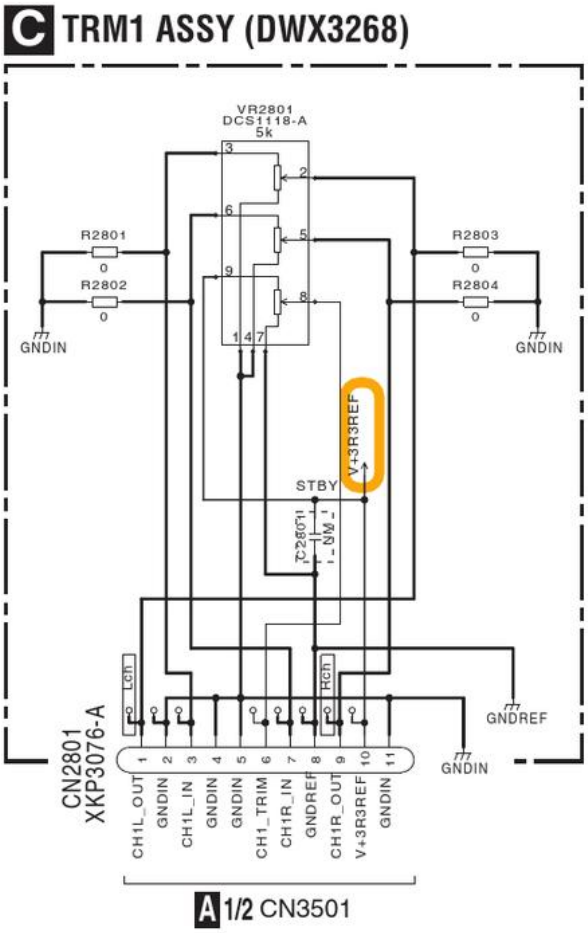

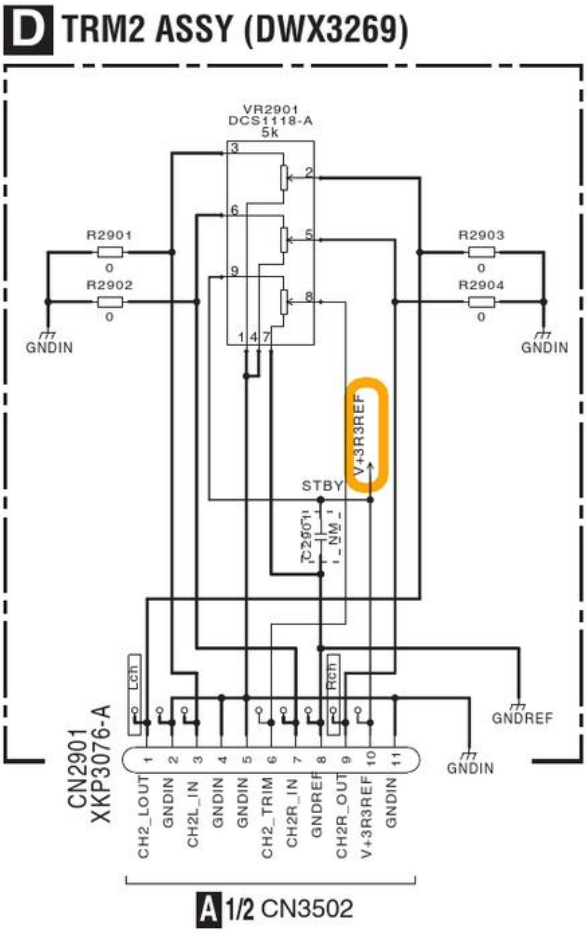

Notes

NM	is STBY	
	RS1/16SS***J	Ω
	CKSRYB***K	F

C D

10.4 FDSW ASSY

E FDSW ASSY (DWX3266)

FADER CURVE SW

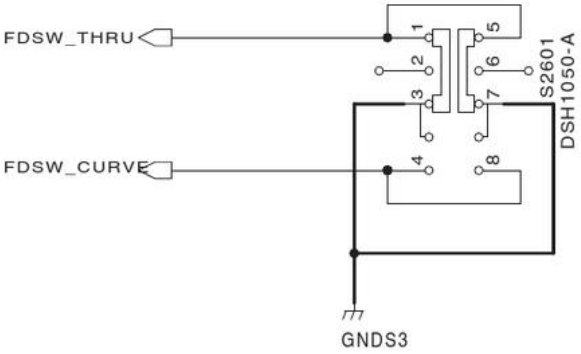

FADER REVERSE ON/OFF

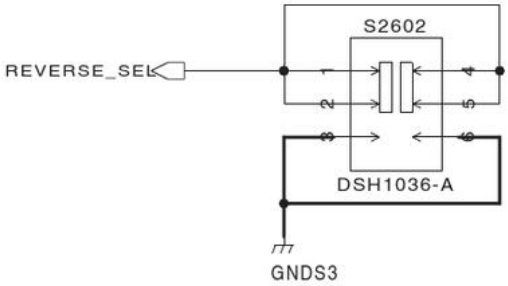

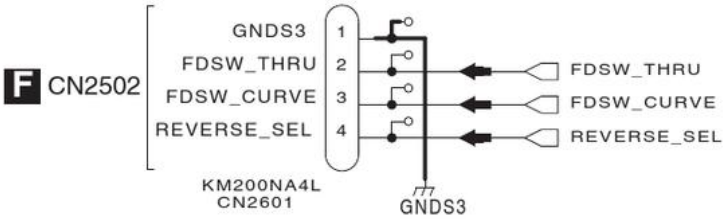

10.5 MCJK ASSY

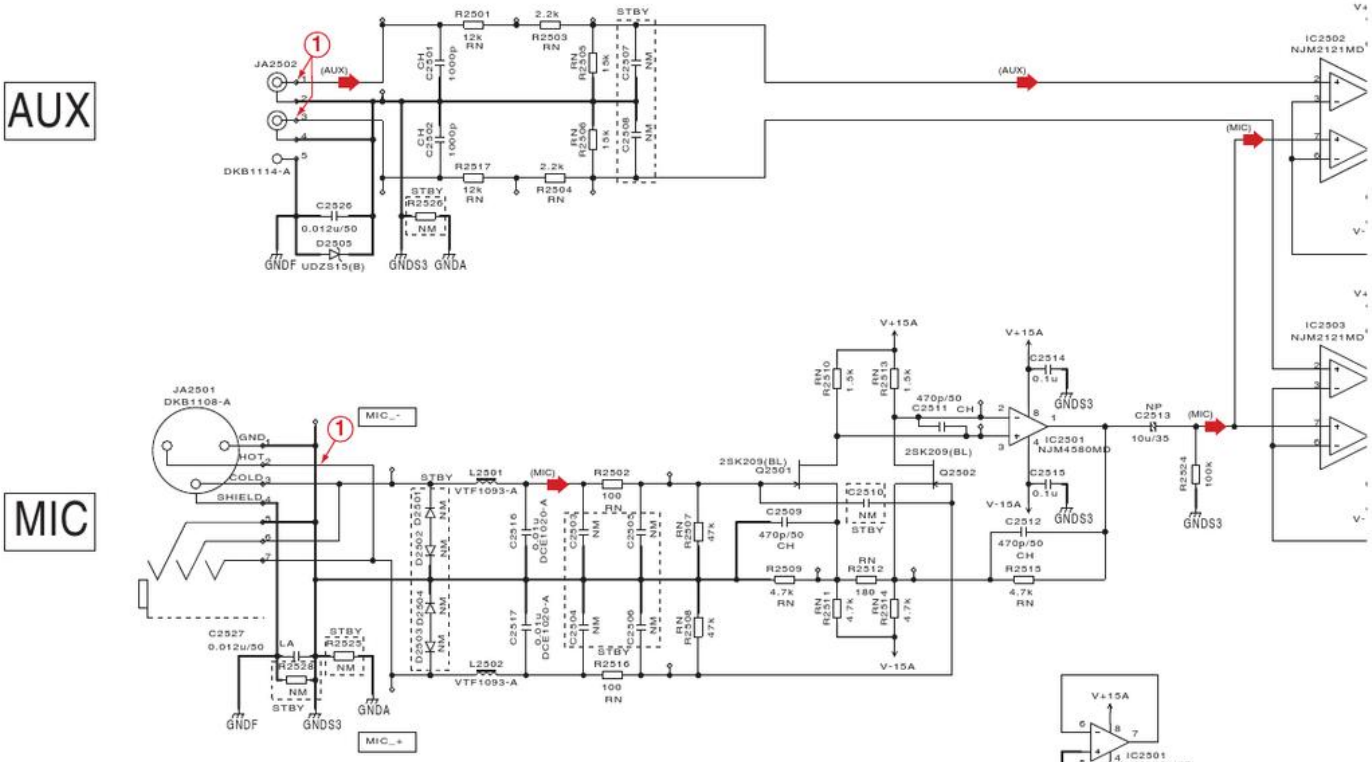

F MCJK ASSY (DWX3265)

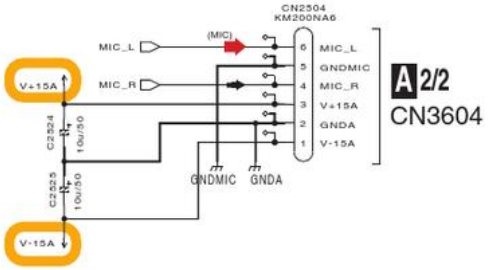

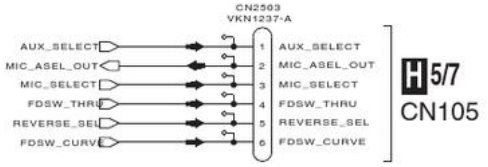

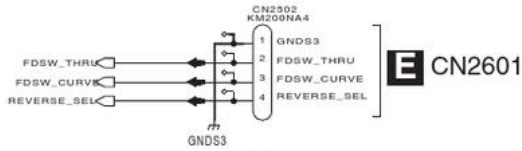

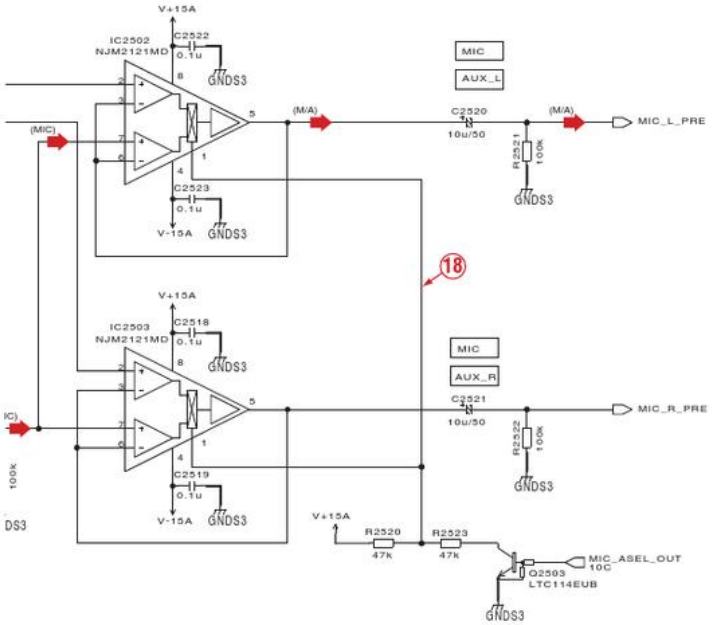

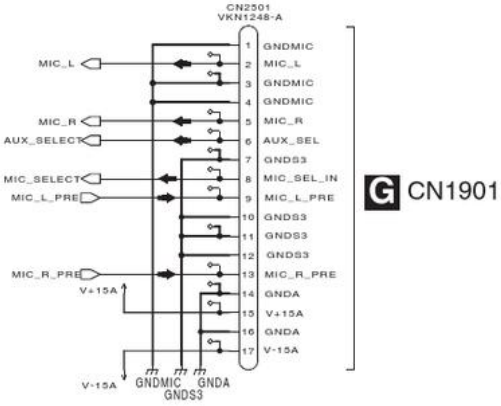

(AUX) : AUX Signal (L ch)
(MIC) : MIC Signal
(M/A) : MIC/AUX Signal (L ch)

10.6 MCVR ASSY

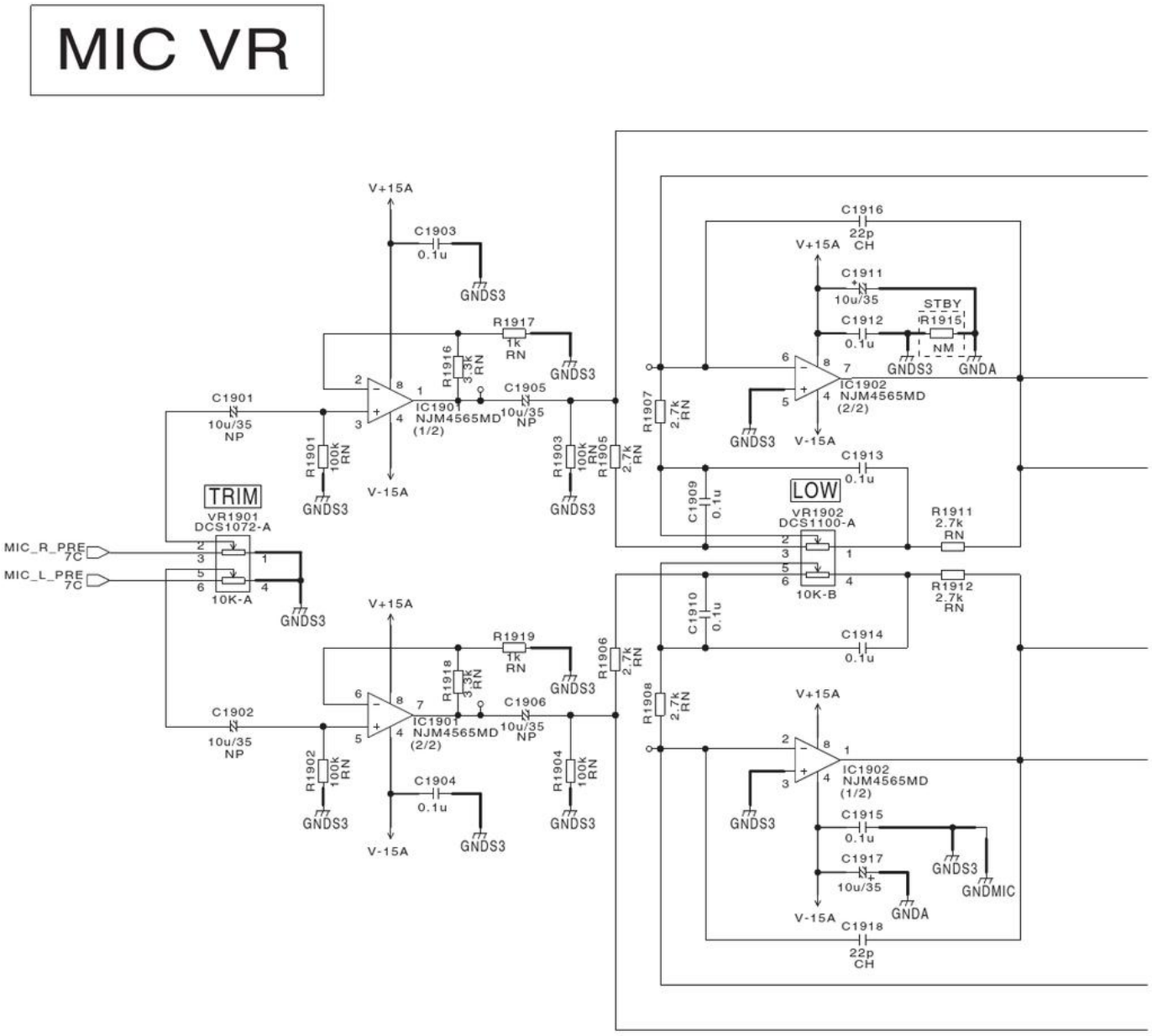

Notes

	NM	is STBY	
		RS1/10SR***J	Ω
RN		RN1/16SE****D	Ω
		CKSRYB***K	F
CH		CCSRCH***J	F
		CEJQ***M	F
NP		CEJQNP***M	F

G

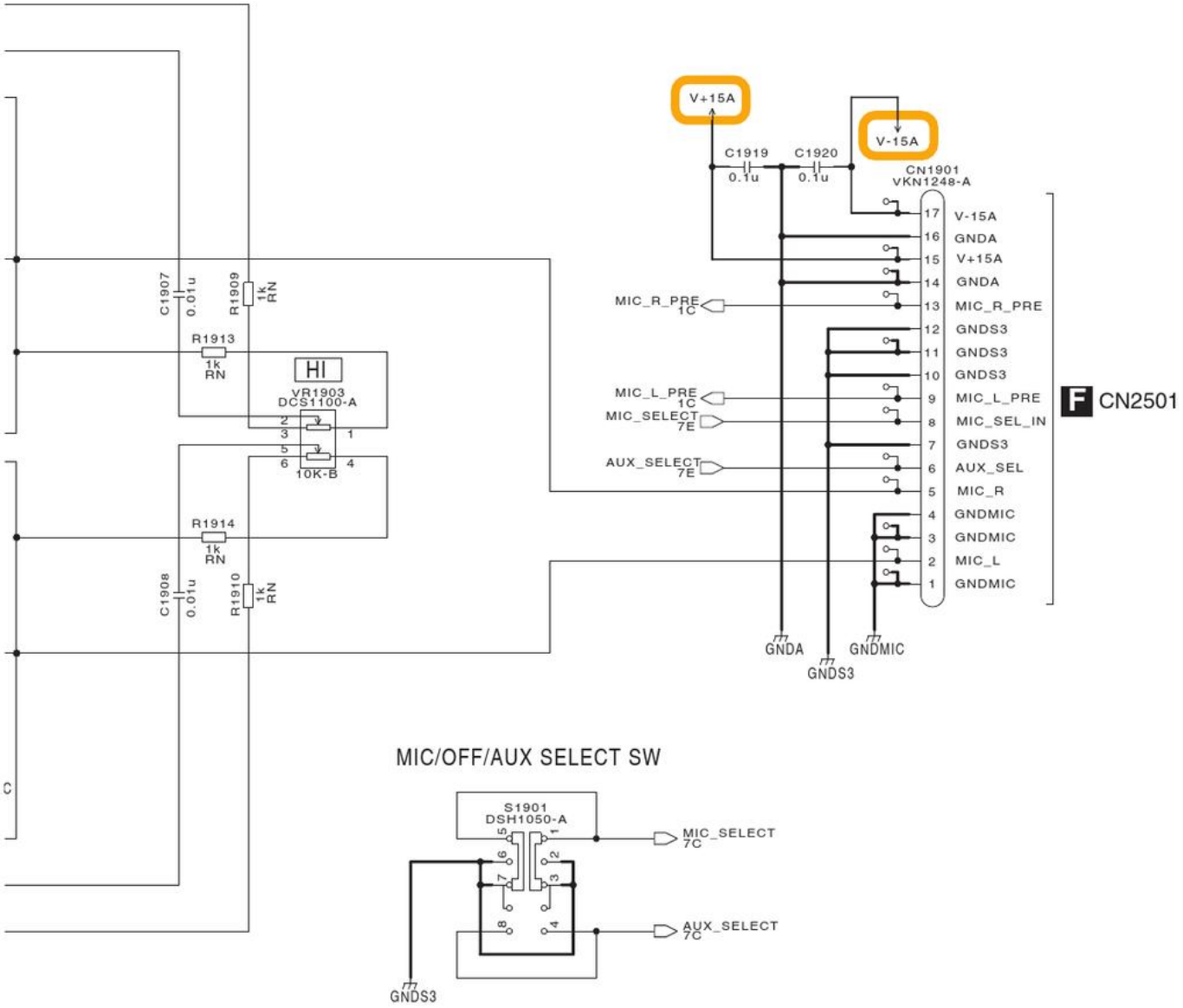

MIC/OFF/AUX SELECT SW

10.7 OUTPUT ASSY (1/7)

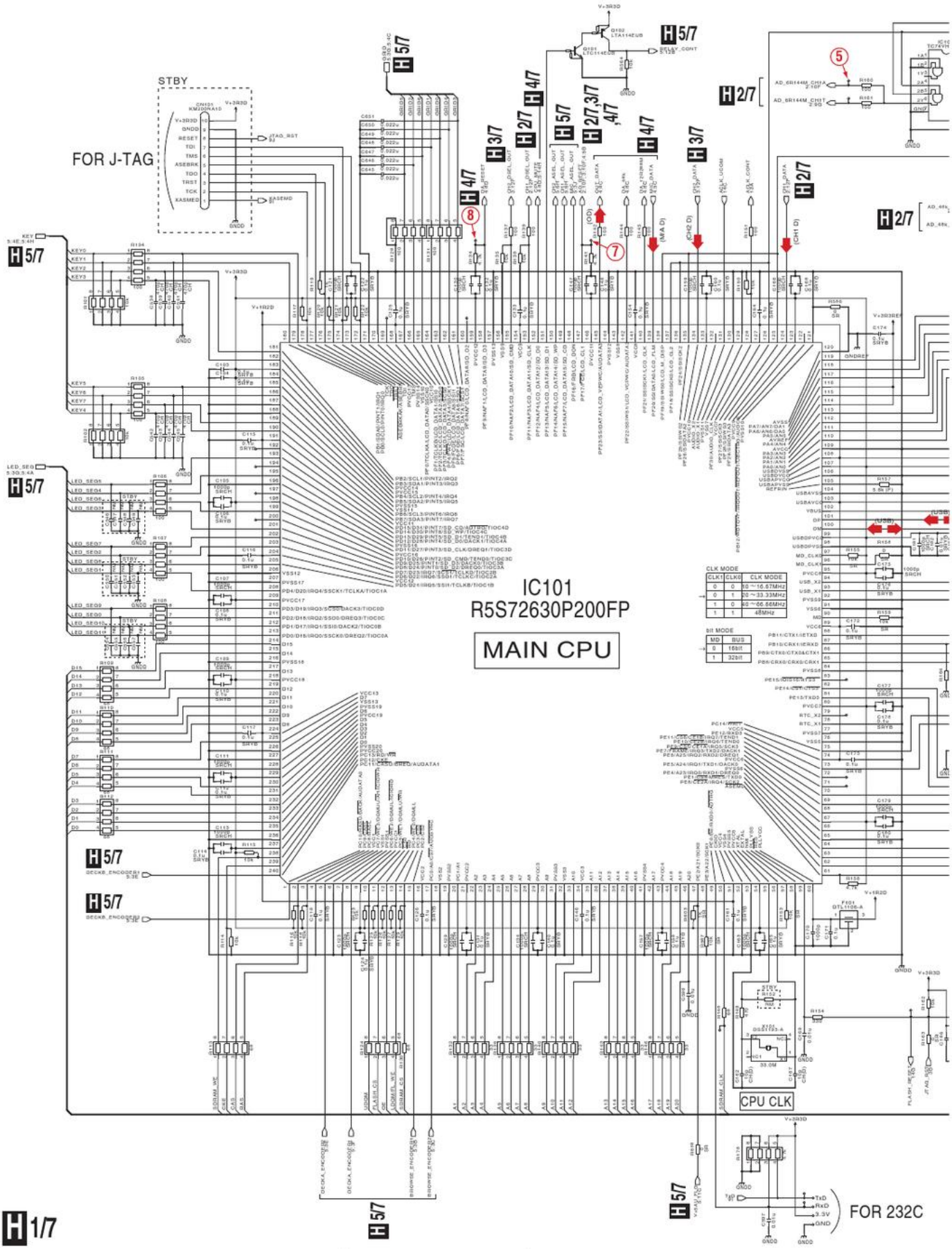

H 1/7 OUTPUT ASSY (DWX3257)

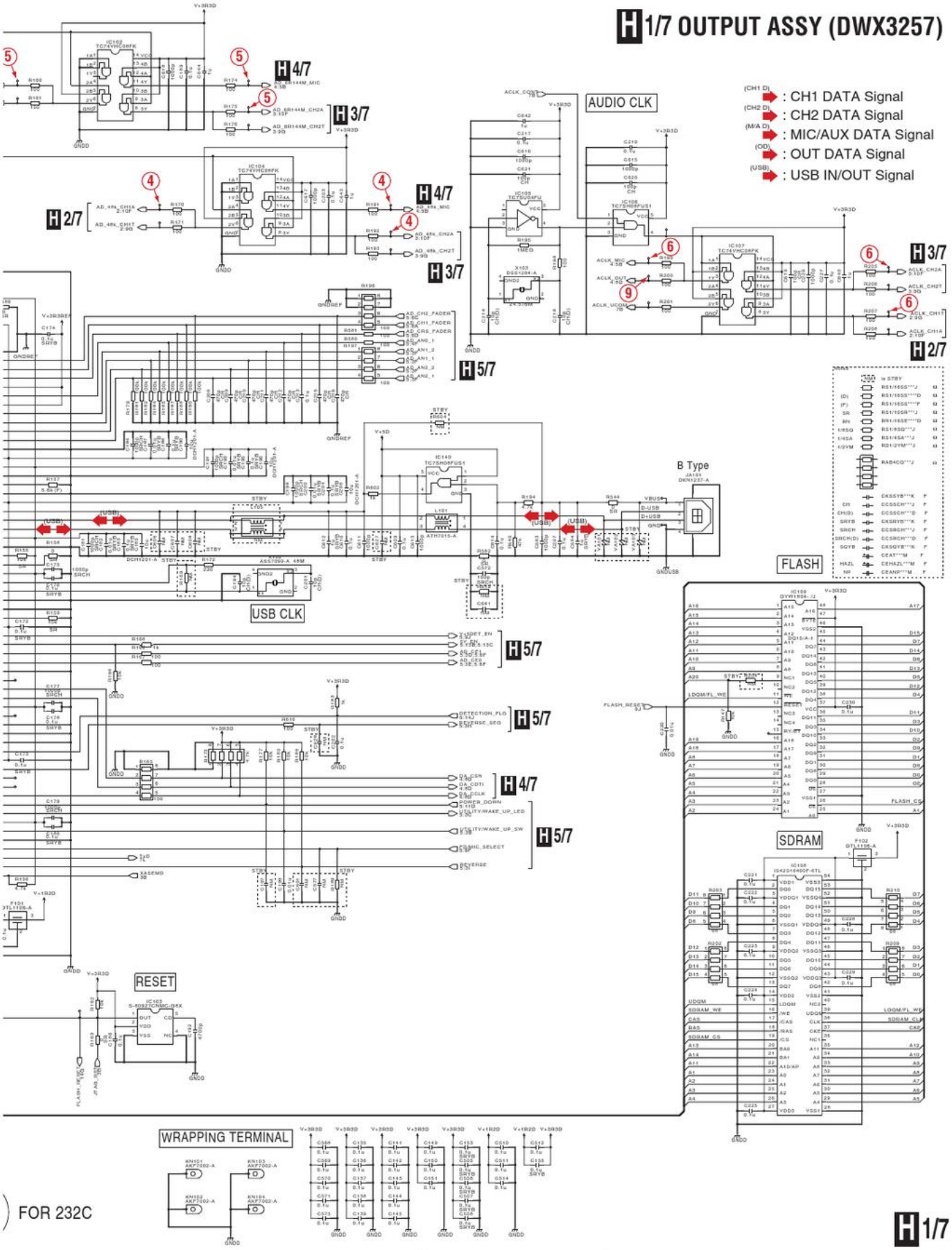

10.8 OUTPUT ASSY (2/7)

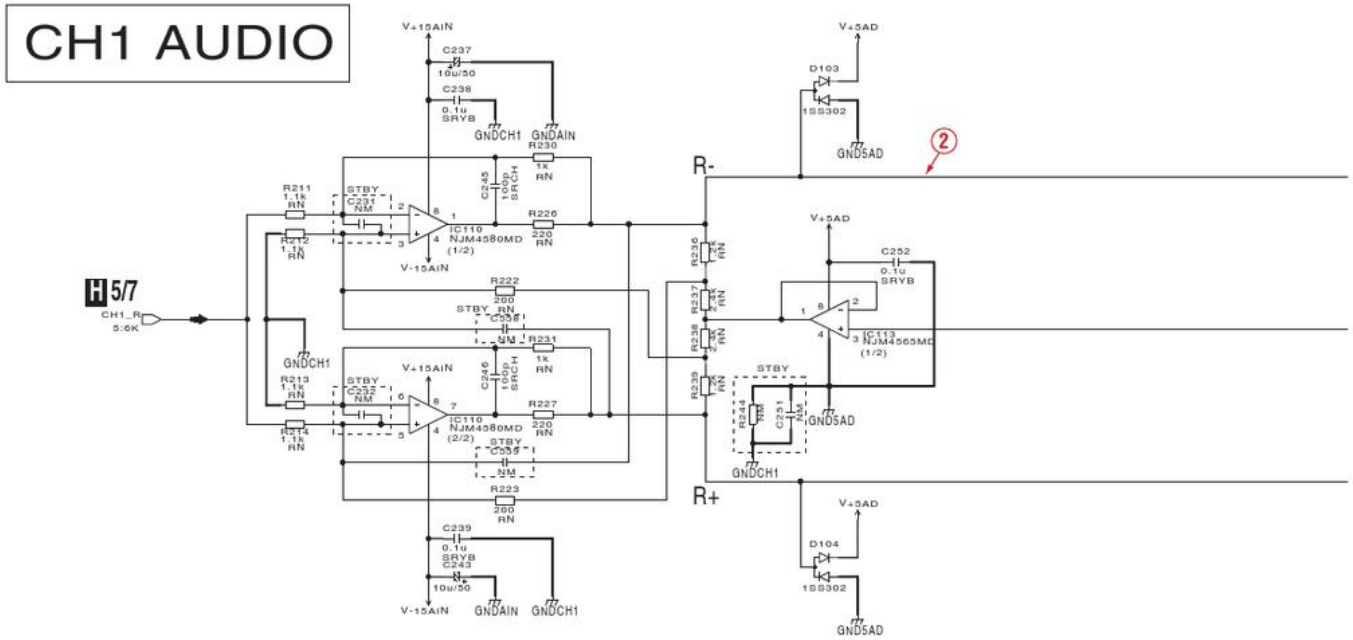

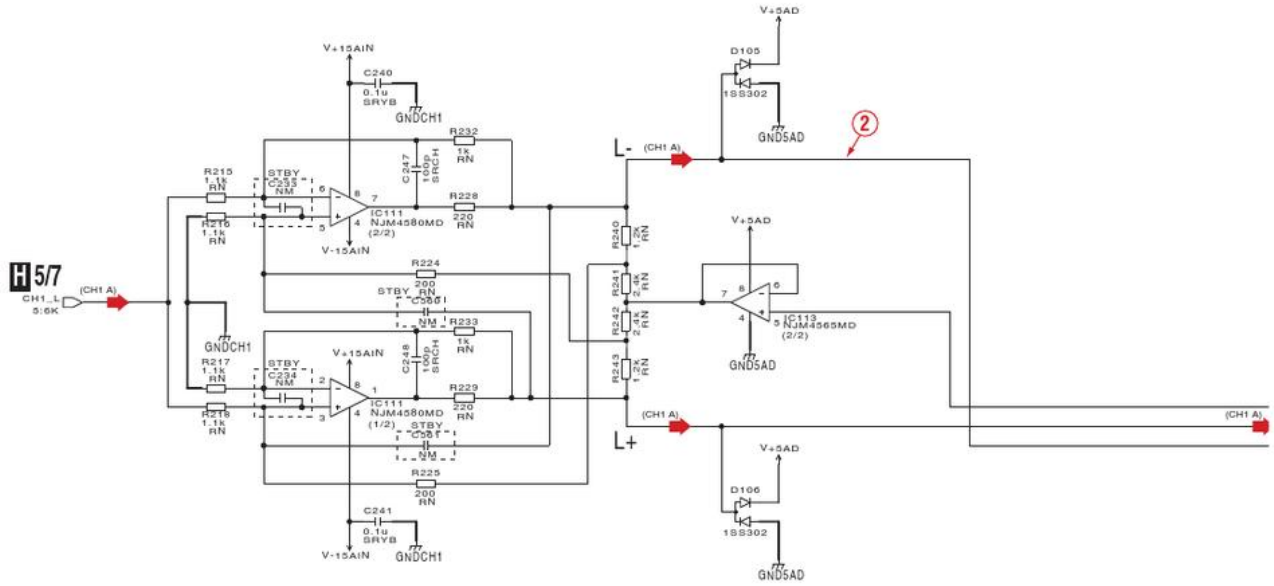

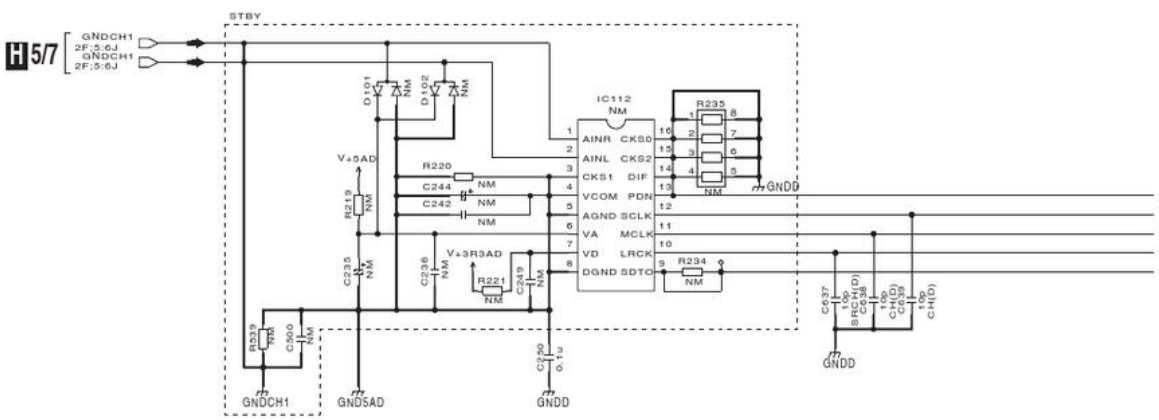

H 2/7

H 2/7 OUTPUT ASSY (DWX3257)

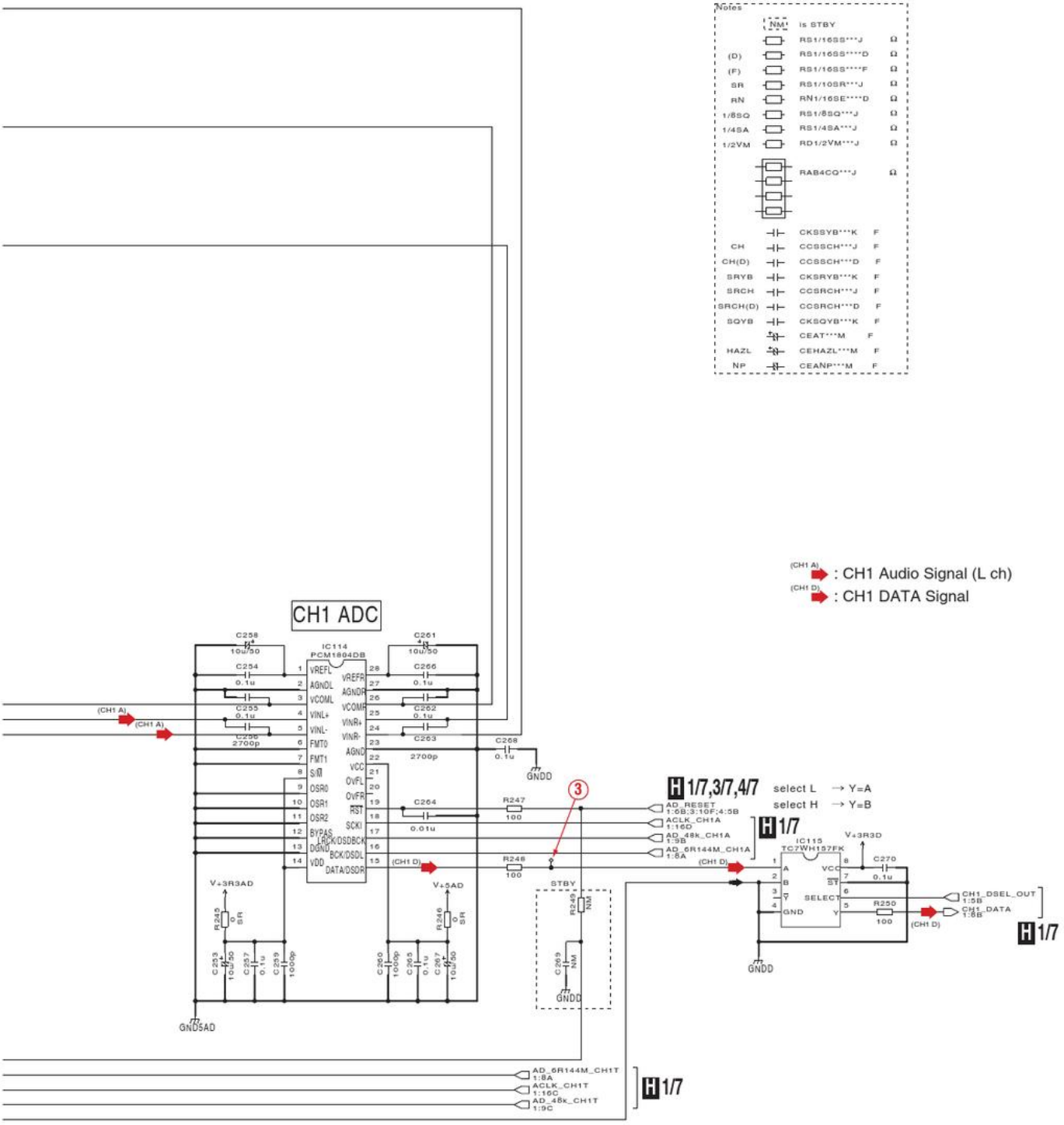

H 2/7

10.9 OUTPUT ASSY (3/7)

CH2 AUDIO

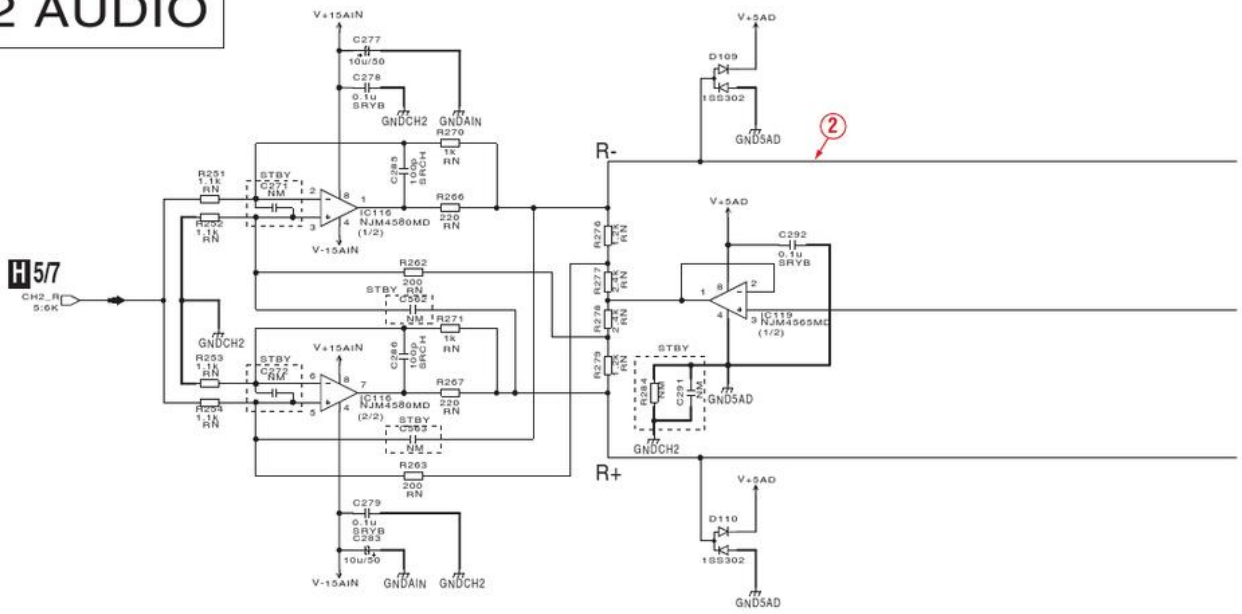

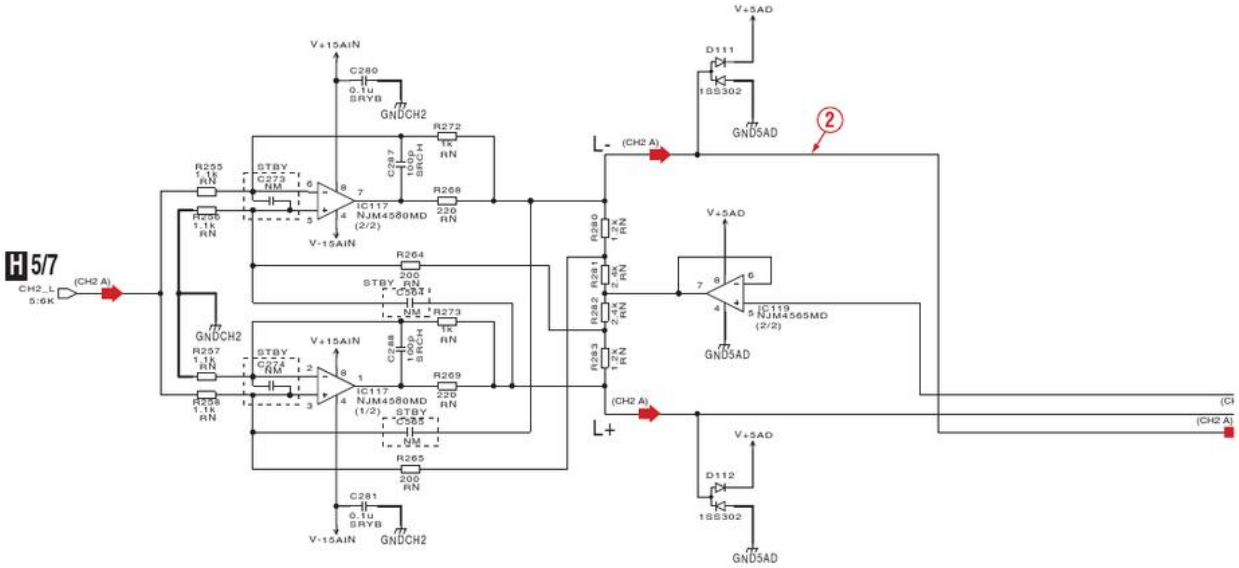

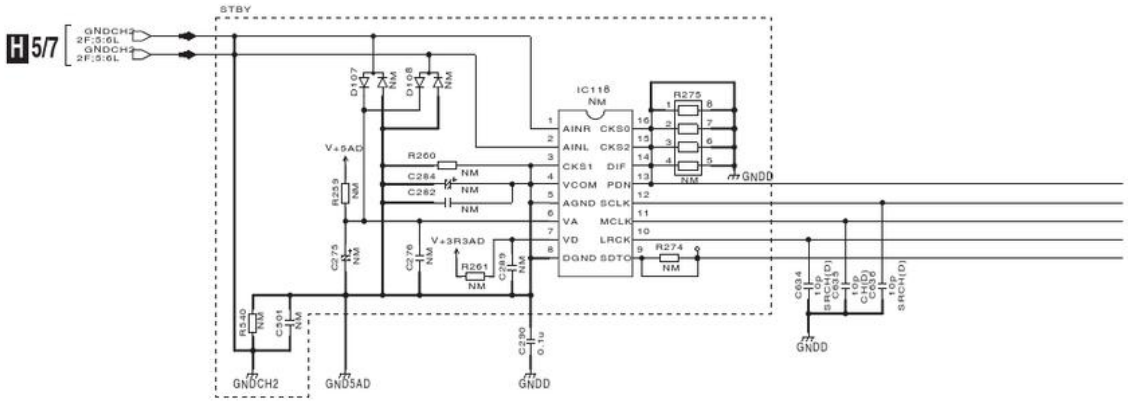

H 3/7

H 3/7 OUTPUT ASSY (DWX3257)

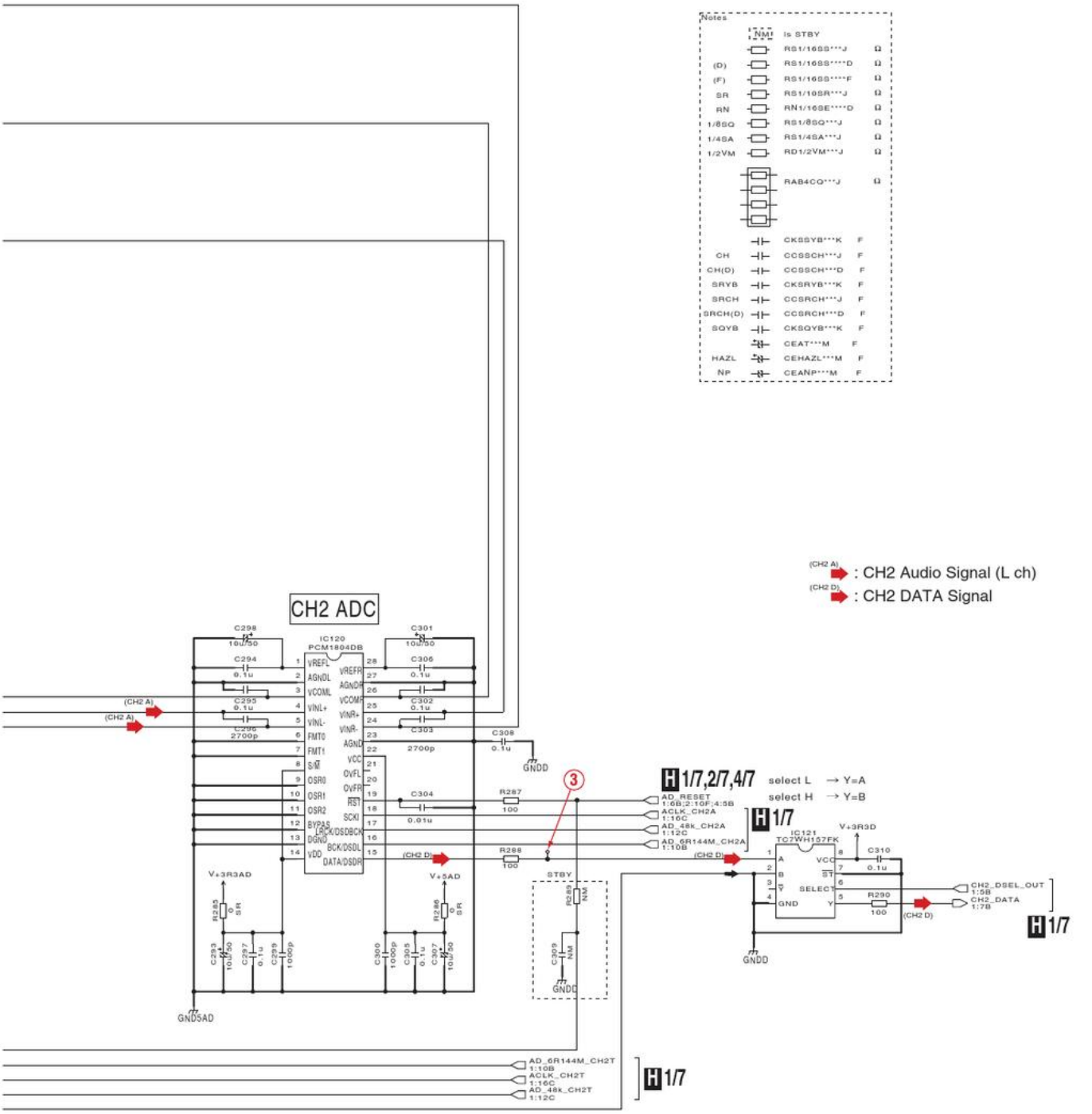

10.10 OUTPUT ASSY (4/7)

A

MIC/AUX AUDIO

B

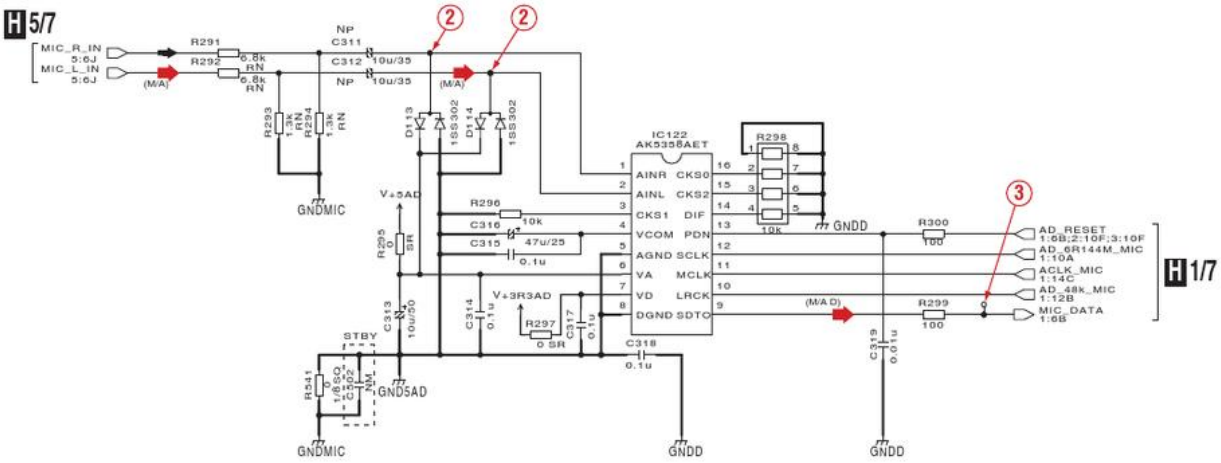

C

D

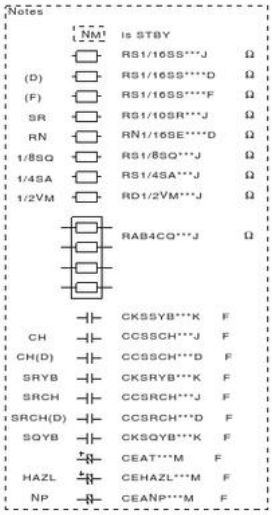

E

F

H 4/7

DAC

(M/A) : MIC/AUX Signal (L ch)
(M/A D) : MIC/AUX DATA Signal
(OD) : OUT DATA Signal
(MA O) : MASTER OUT Signal (L ch)
(BO O) : BOOTH OUT Signal (L ch)

MODE	MCLK	SCLK	LRCK
SPI VDD	512fs 24.576MHz	256fs 12.288MHz	48kHz

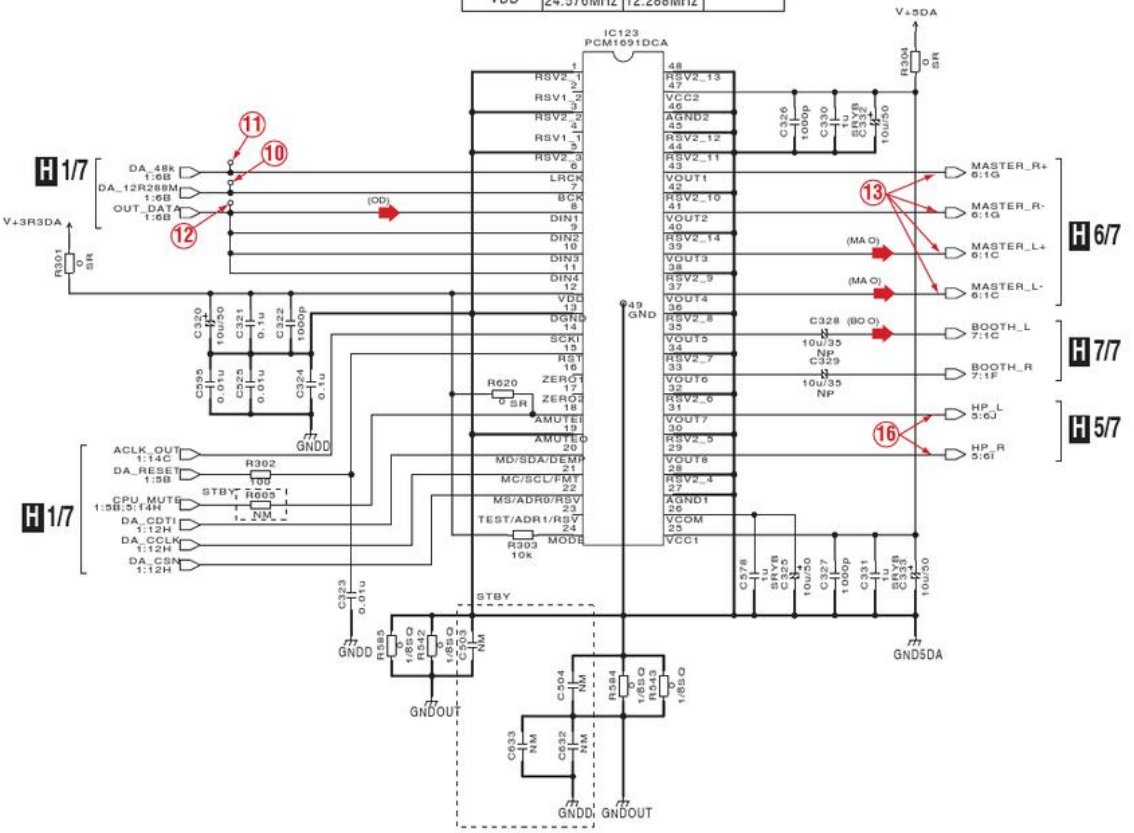

10.11 OUTPUT ASSY (5/7)

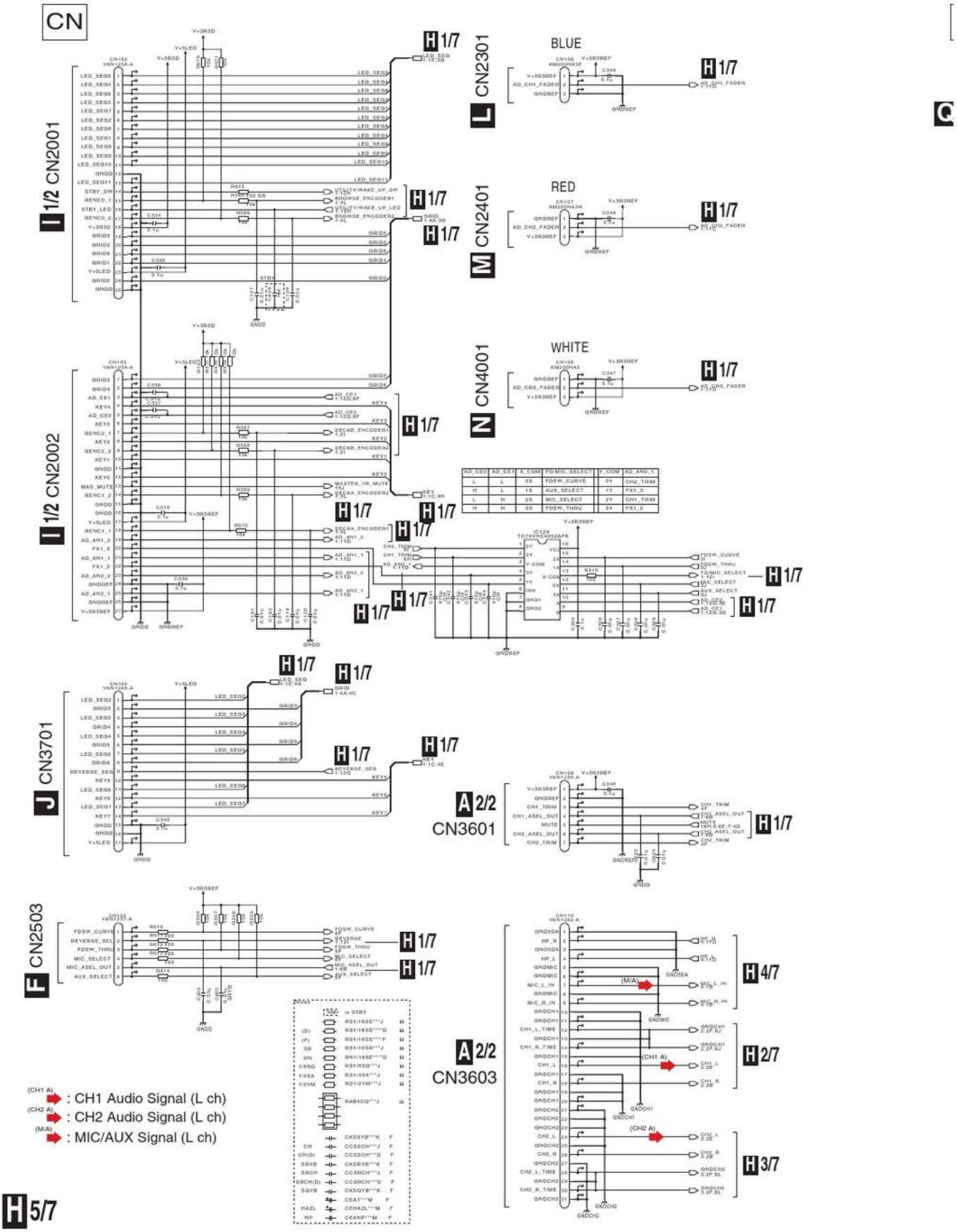

AD_CE0	AD_CE1	X_COM	FDSW_SELECT	Y_COM	AD_AN0_1
L	L	0X	FDSW_CURVE	0Y	CH2_TRIM
H	L	1X	AUX_SELECT	1Y	FX1_3
L	H	2X	MIC_SELECT	2Y	CH1_TRIM
H	H	3X	FDSW_THRU	3Y	FX1_2

H 5/7 OUTPUT ASSY (DWX3257)

POWER

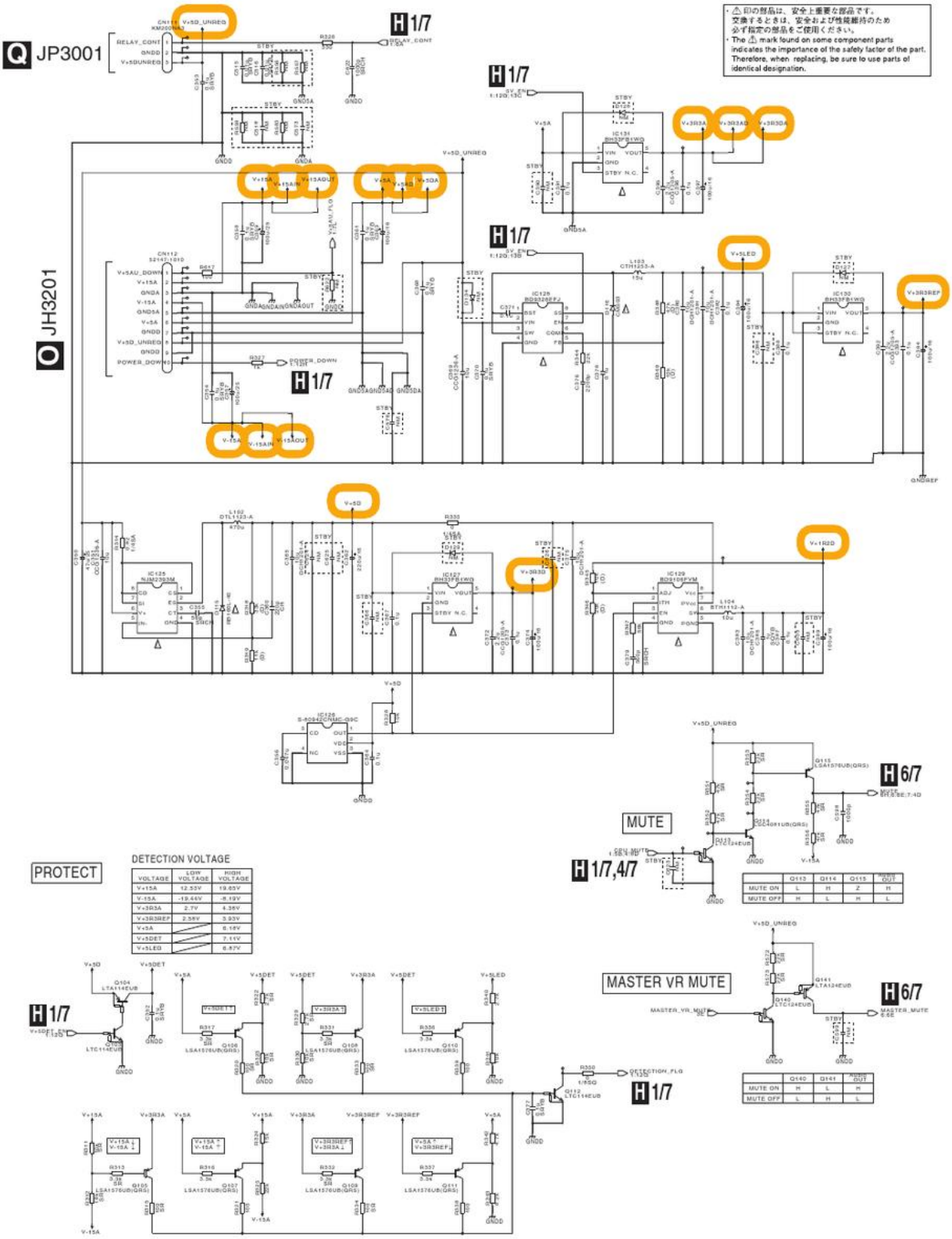

VOLTAGE	LOW VOLTAGE	HIGH VOLTAGE
V+15A	12.53V	19.85V
V-15A	-19.44V	-8.19V
V+3R3A	2.7V	4.35V
V+3R3REF	2.58V	3.93V
V+5A		6.18V
V+5DET		7.11V
V+5LED		6.87V

	Q113	Q114	Q115	MUTE OUT
MUTE ON	L	H	Z	H
MUTE OFF	H	L	H	L

	Q140	Q141	MUTE OUT
MUTE ON	H	L	H
MUTE OFF	L	H	L

H 5/7

10.12 OUTPUT ASSY (6/7)

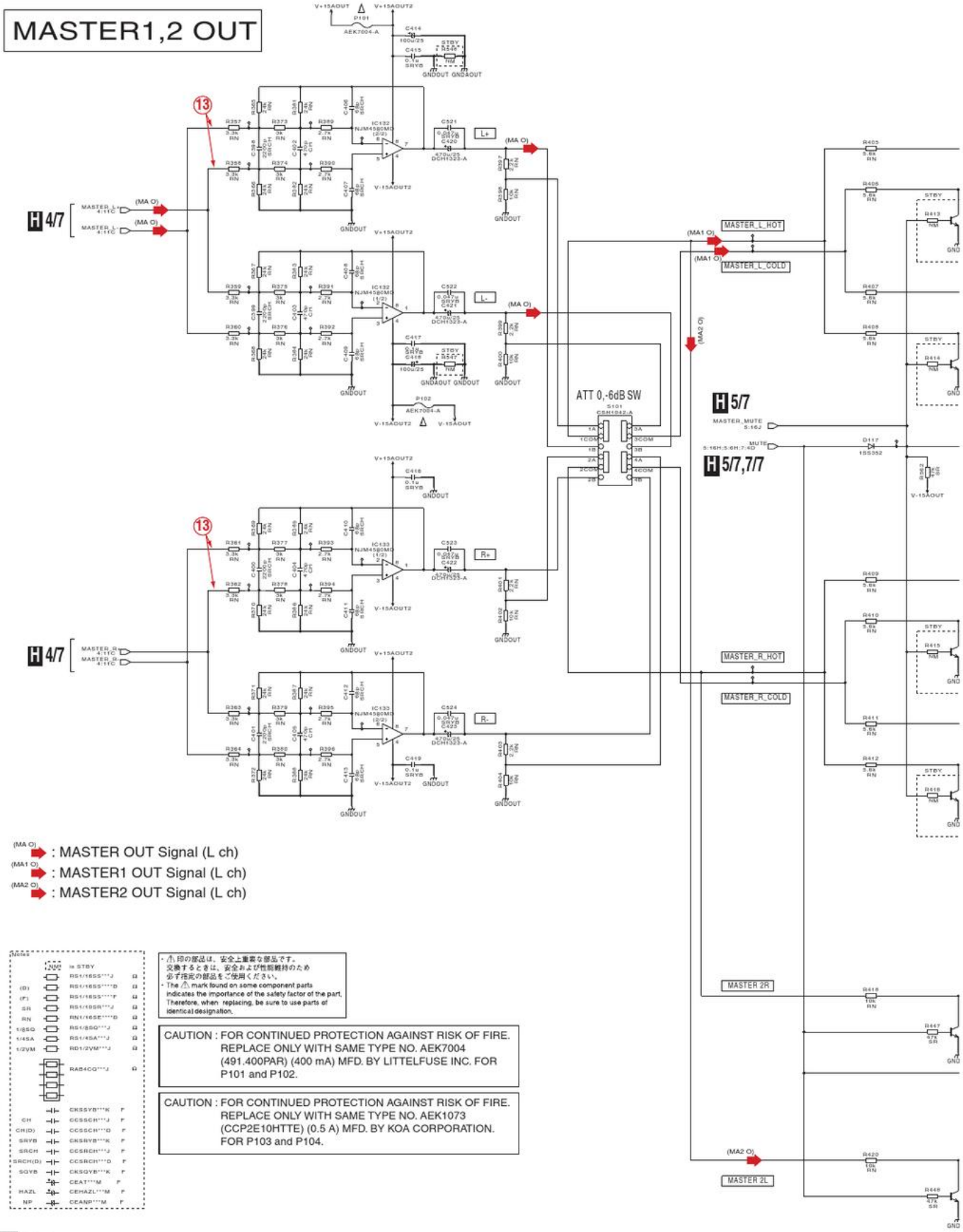

NOTES

	NM	is STBY	
		RS1/16SS***J	Ω
(D)		RS1/16SS****D	Ω
(F)		RS1/16SS****F	Ω
SR		RS1/10SR***J	Ω
RN		RN1/16SE****D	Ω
1/8SQ		RS1/8SQ***J	Ω
1/4SA		RS1/4SA***J	Ω
1/2VM		RD1/2VM***J	Ω
		RA84CQ***J	Ω
		CKSSYB***K	F
CH		CCSSCH***J	F
CH(D)		CCSSCH***D	F
SRYB		CKSRYB***K	F
SRCH		CCSRCH***J	F
SRCH(D)		CCSRCH***D	F
SQYB		CKSQYB***K	F
		CEAT***M	F
HAZL		CEHAZL***M	F
NP		CEANP***M	F

・⚠印の部品は、安全上重要な部品です。
交換するときは、安全および性能維持のため
必ず指定の部品をご使用ください。
・The ⚠ mark found on some component parts
indicates the importance of the safety factor of the part.
Therefore, when replacing, be sure to use parts of
identical designation.

CAUTION : FOR CONTINUED PROTECTION AGAINST RISK OF FIRE.
REPLACE ONLY WITH SAME TYPE NO. AEK7004
(491.400PAR) (400 mA) MFD. BY LITTELFUSE INC. FOR
P101 and P102.

CAUTION : FOR CONTINUED PROTECTION AGAINST RISK OF FIRE.
REPLACE ONLY WITH SAME TYPE NO. AEK1073
(CCP2E10HTTE) (0.5 A) MFD. BY KOA CORPORATION.
FOR P103 and P104.

H 6/7

H 6/7 OUTPUT ASSY (DWX3257)

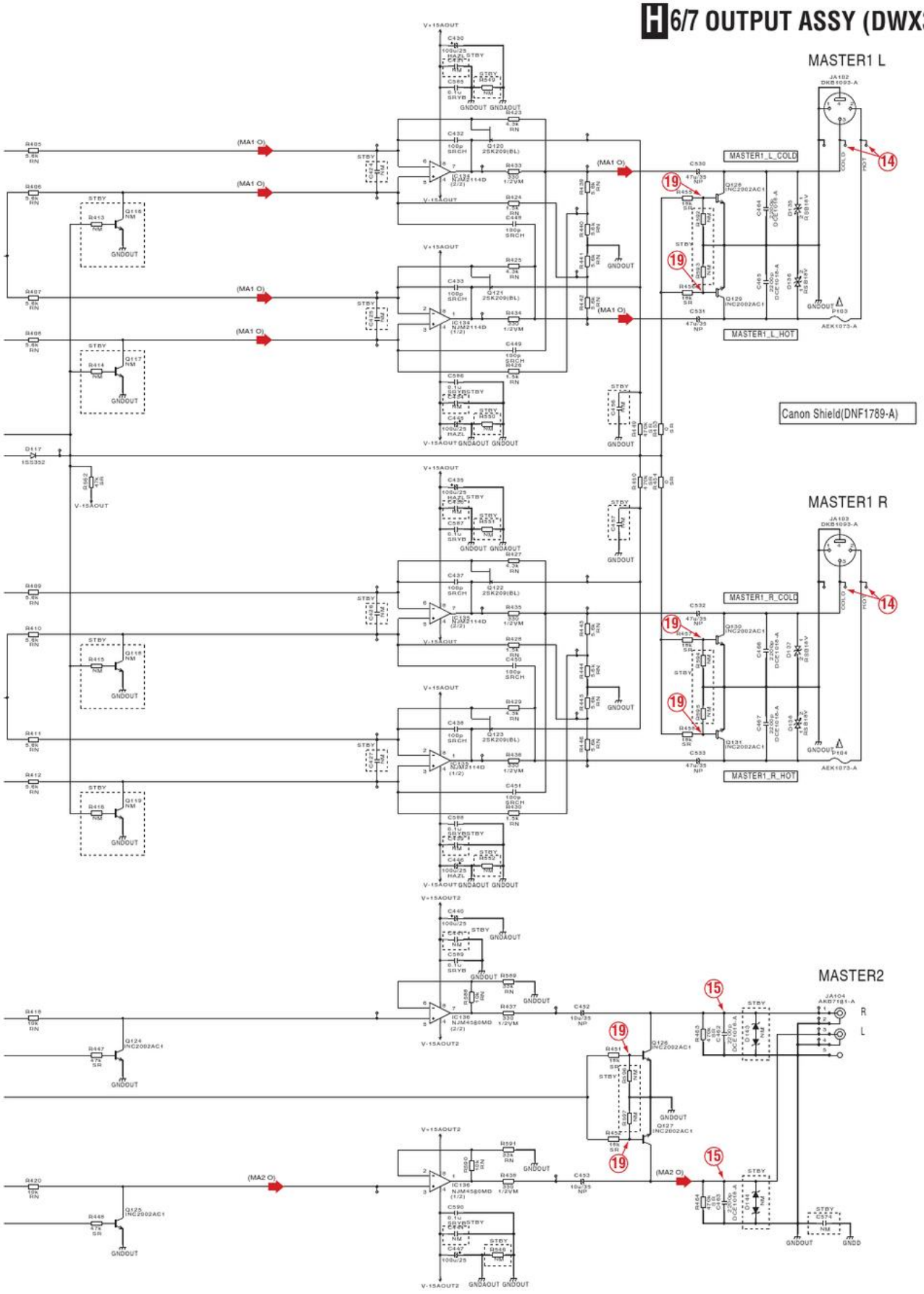

10.13 OUTPUT ASSY (7/7)

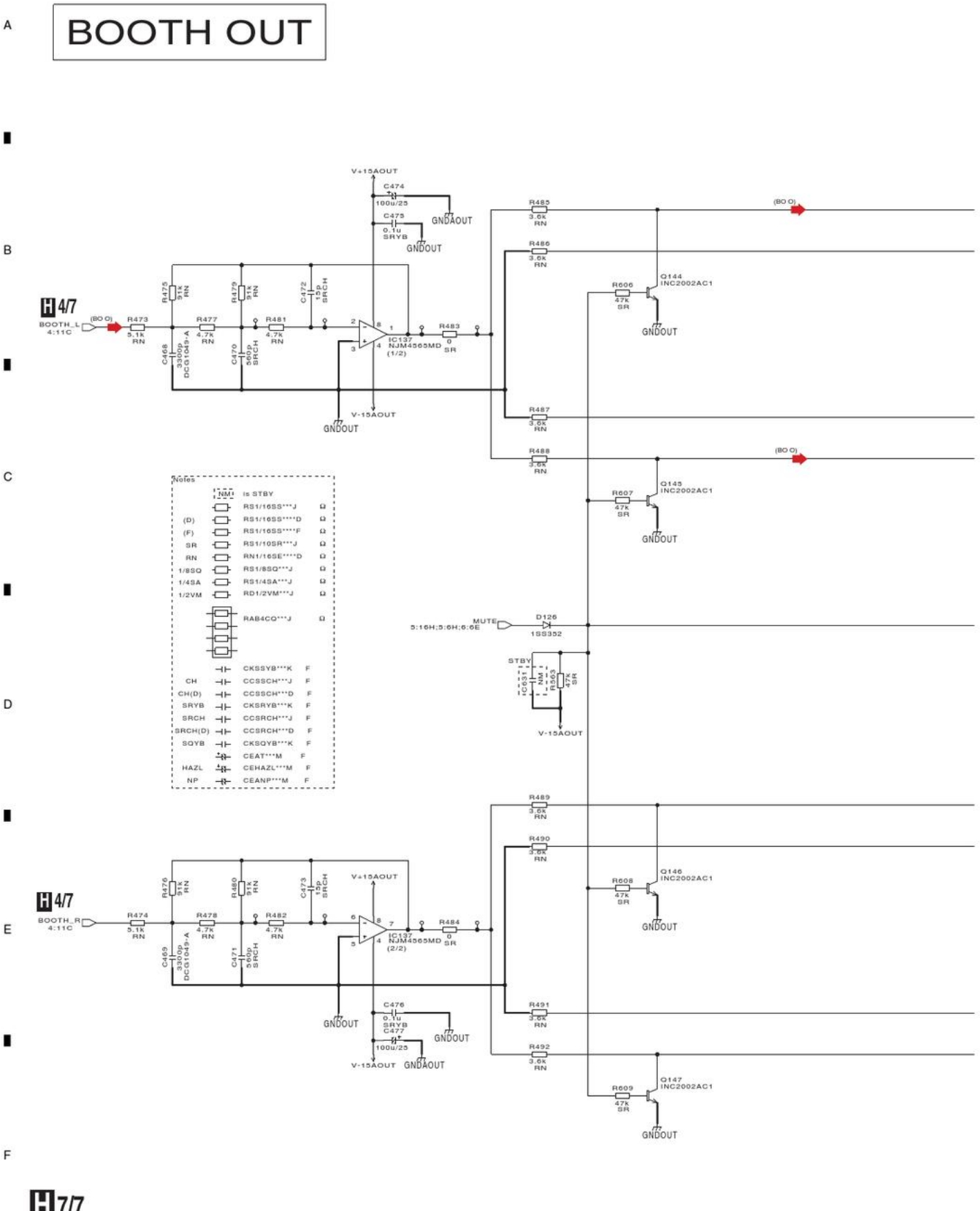

H 7/7

H 7/7 OUTPUT ASSY (DWX3257)

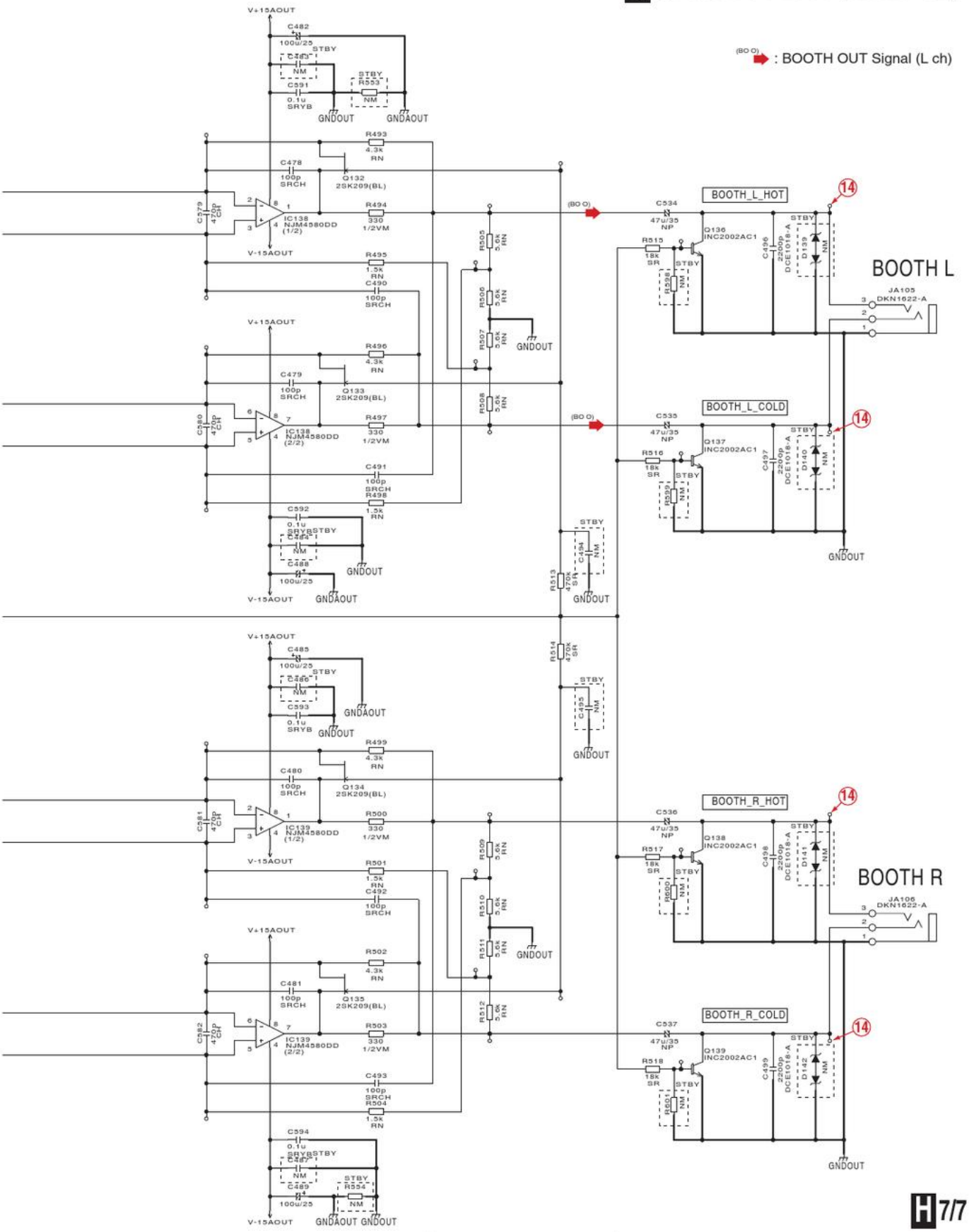

H 7/7

10.14 VRSW ASSY (1/2)

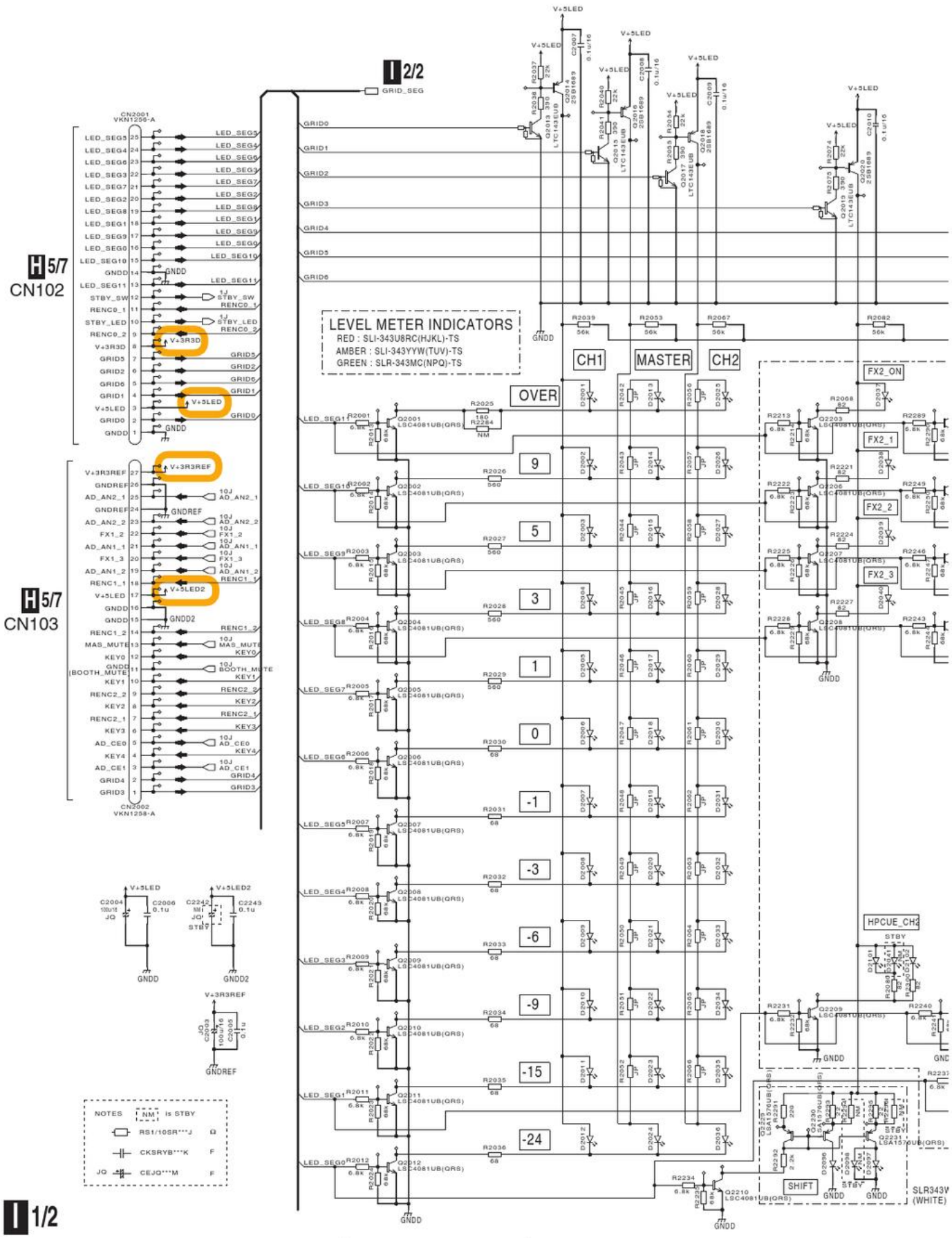

1/2 VRSW ASSY (DWX3259)

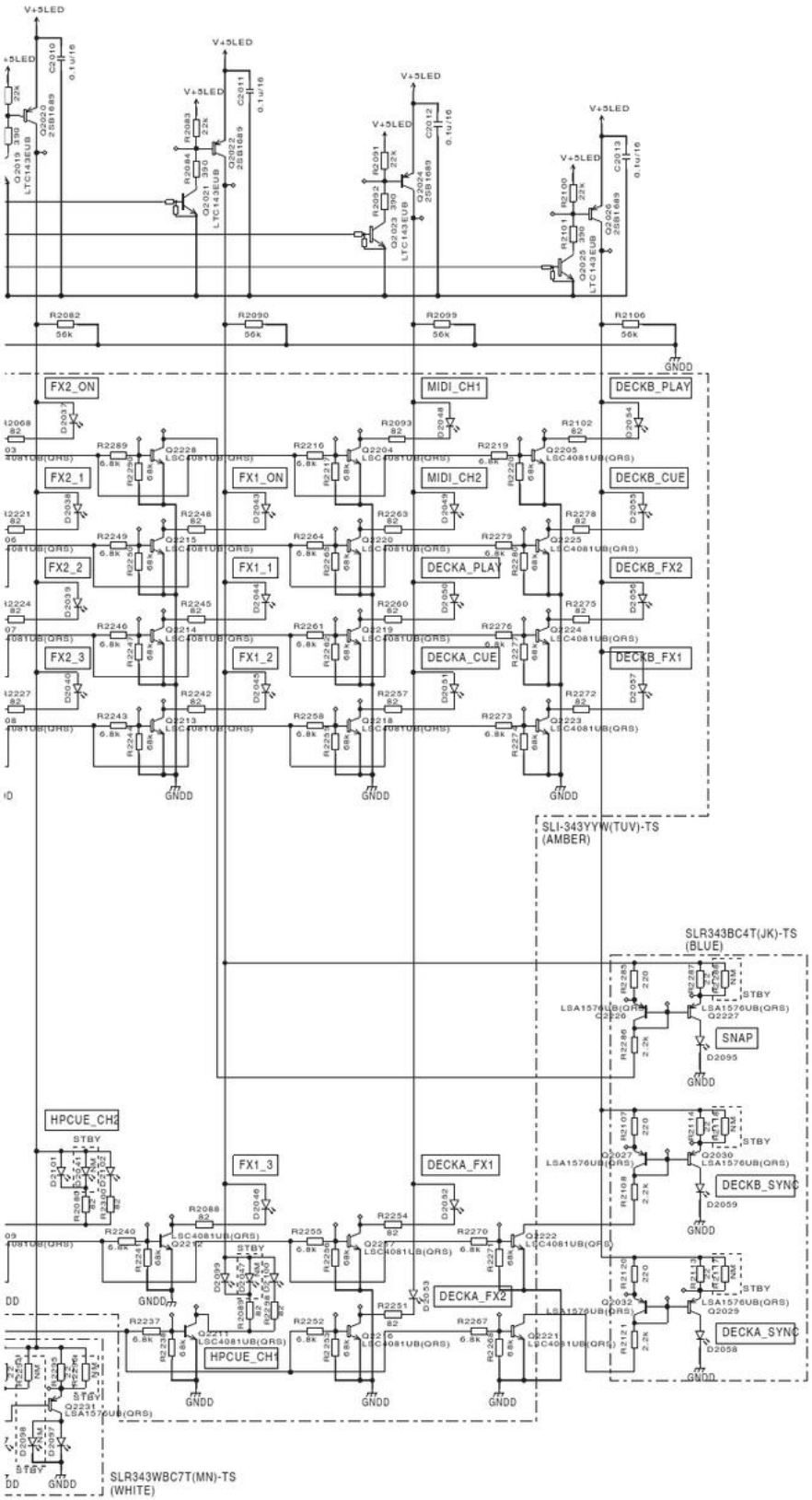

POWER ON LED

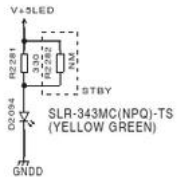

STBY LED

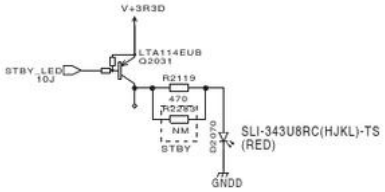

STBY SW(UTILITY)

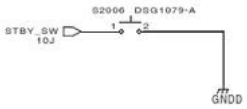

1/2

10.15 VRSW ASSY (2/2)

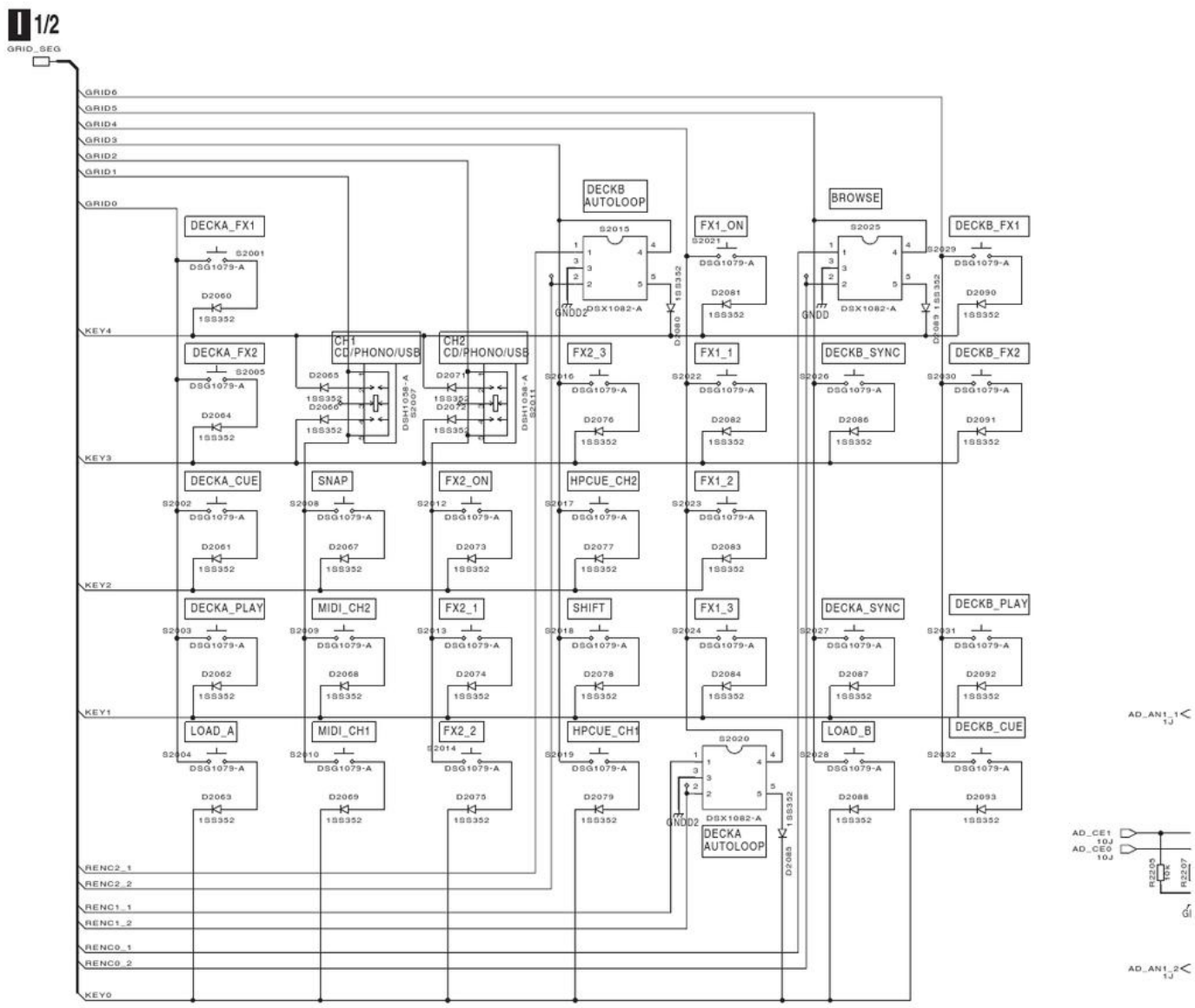

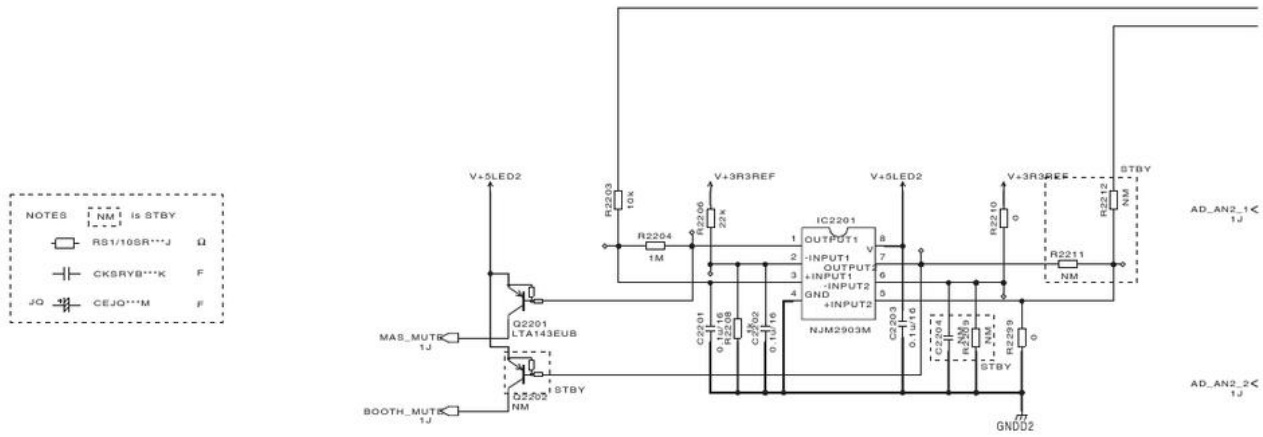

2/2

2/2 VRSW ASSY (DWX3259)

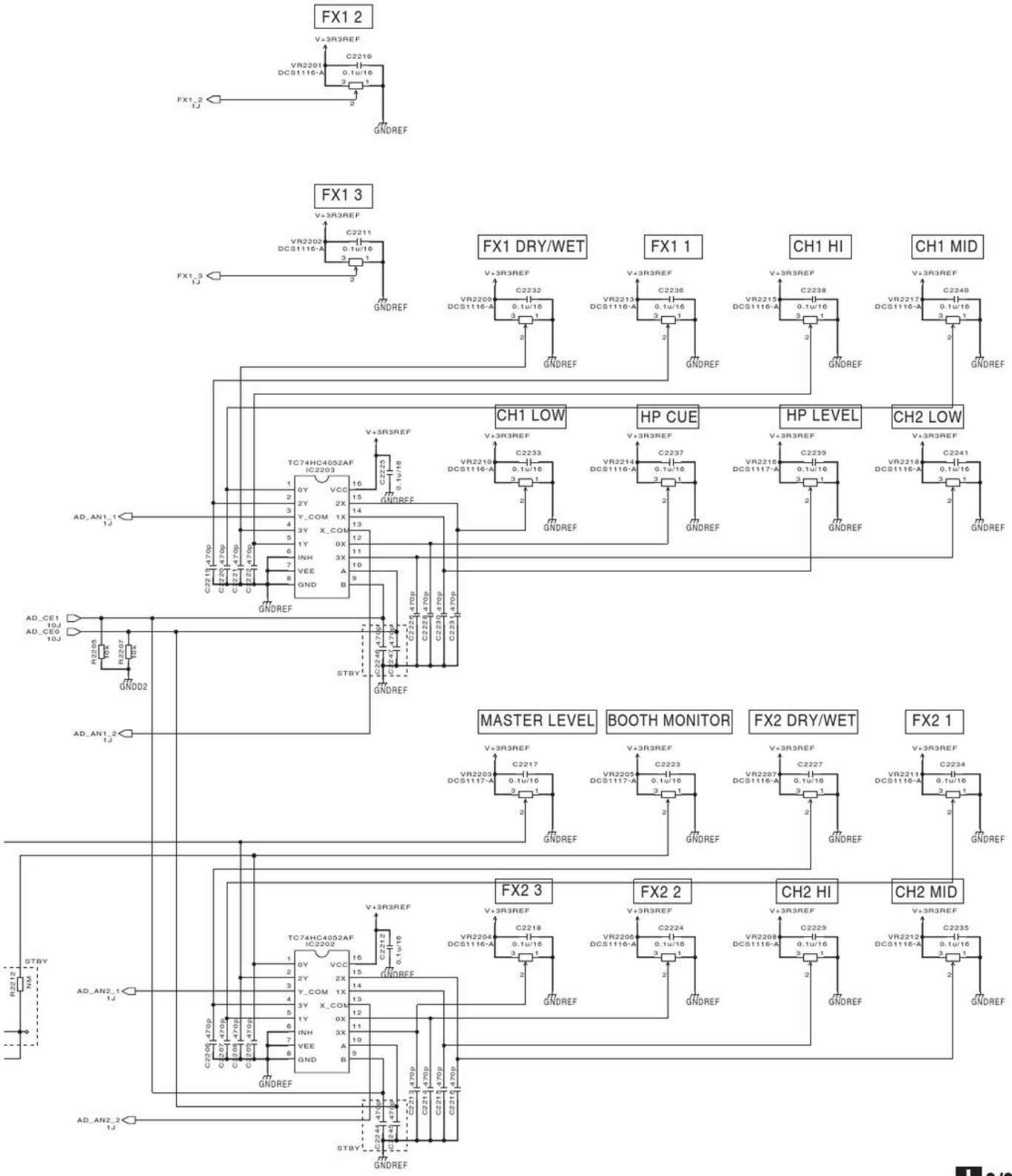

2/2

10.16 PNLL ASSY

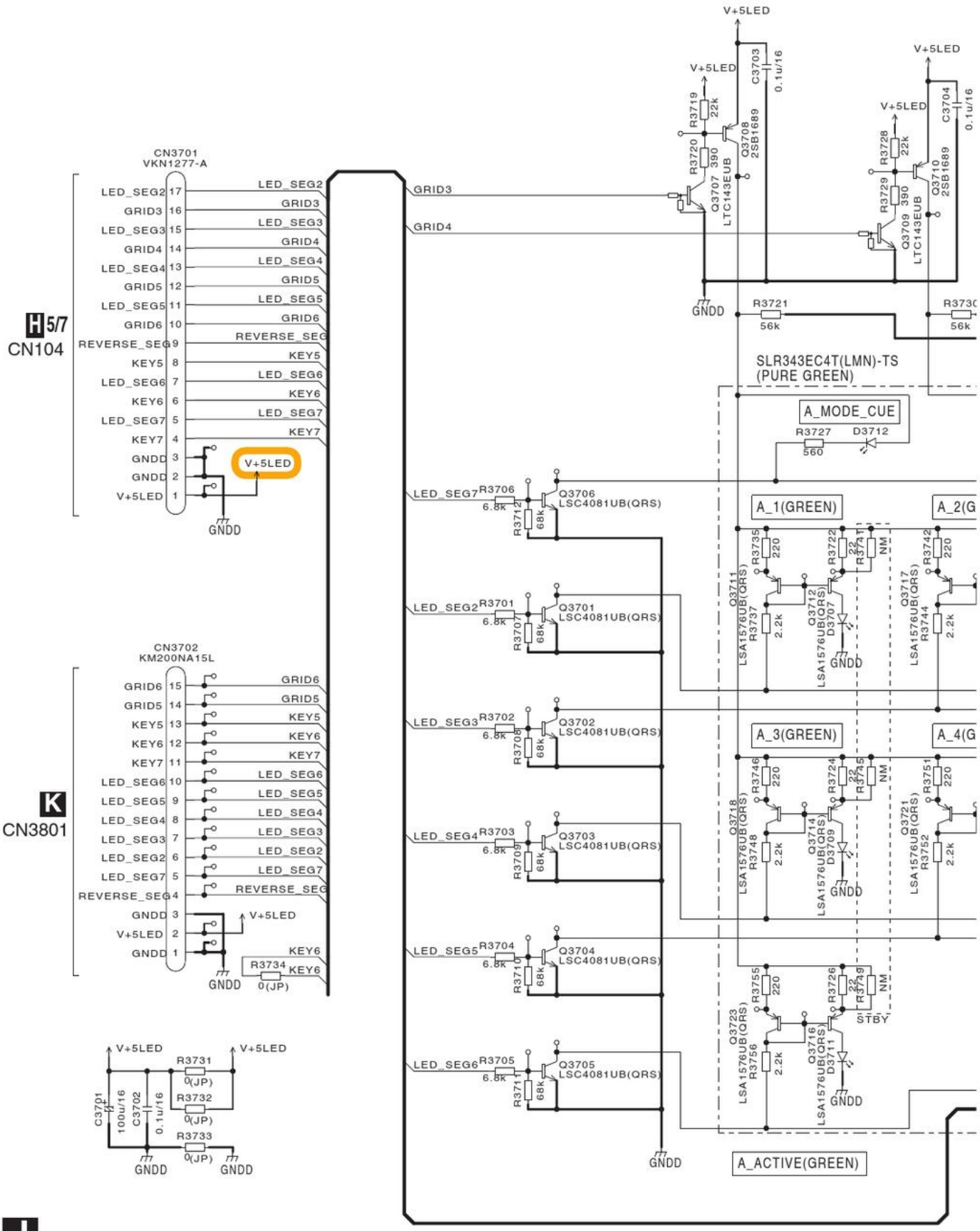

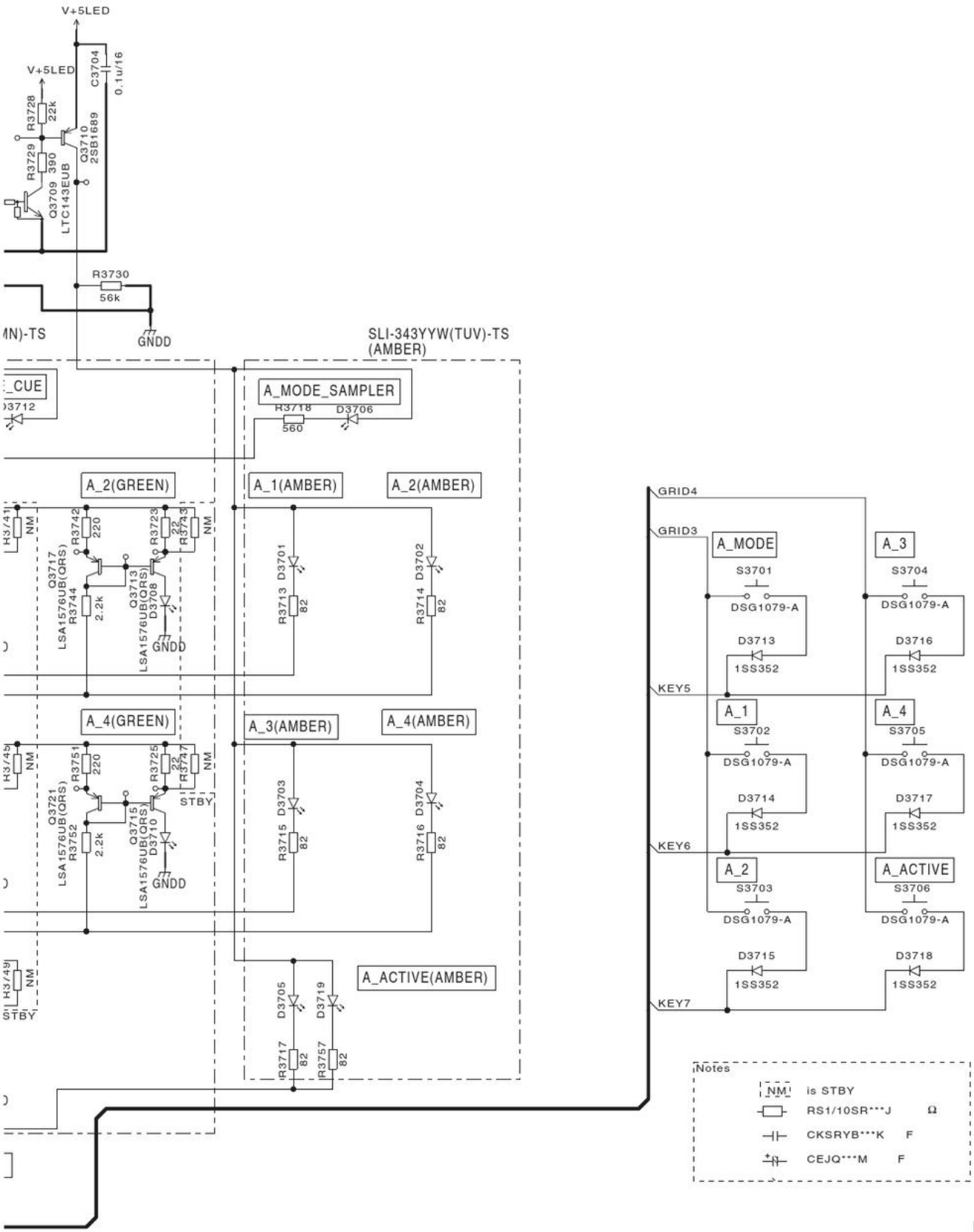
V+5LED
V+5LED
C3704
0.1u/16
R3728
22k
R3729
390
Q3710
2SB1689
Q3709
LTC143EUB
R3730
56k
GNDD
SLI-343YYW(TUV)-TS
(AMBER)
A_MODE_SAMPLER
R3718
560
D3706
A_2(GREEN)
A_1(AMBER)
A_2(AMBER)
R3742
220
R3723
22
R3743
NM
Q3717
LSA1576UB(QRS)
R3744
2.2k
Q3713
LSA1576UB(QRS)
D3708
GNDD
R3713
D3701
82
R3714
D3702
82
A_4(GREEN)
A_3(AMBER)
A_4(AMBER)
R3751
220
R3725
22
R3747
NM
STBY
Q3721
LSA1576UB(QRS)
R3752
2.2k
Q3715
LSA1576UB(QRS)
D3710
GNDD
R3715
D3703
82
R3716
D3704
82
A_ACTIVE(AMBER)
D3705
D3719
R3717
82
R3757
82
GRID4
GRID3
A_MODE
A_3
S3701
S3704
DSG1079-A
D3713
D3716
1SS352
KEY5
A_1
A_4
S3702
S3705
D3714
D3717
KEY6
A_2
A_ACTIVE
S3703
S3706
D3715
D3718
KEY7
Notes
NM is STBY
RS1/10SR***J Ω
CKSRYB***K F
CEJQ***M F

10.17 PNLR ASSY

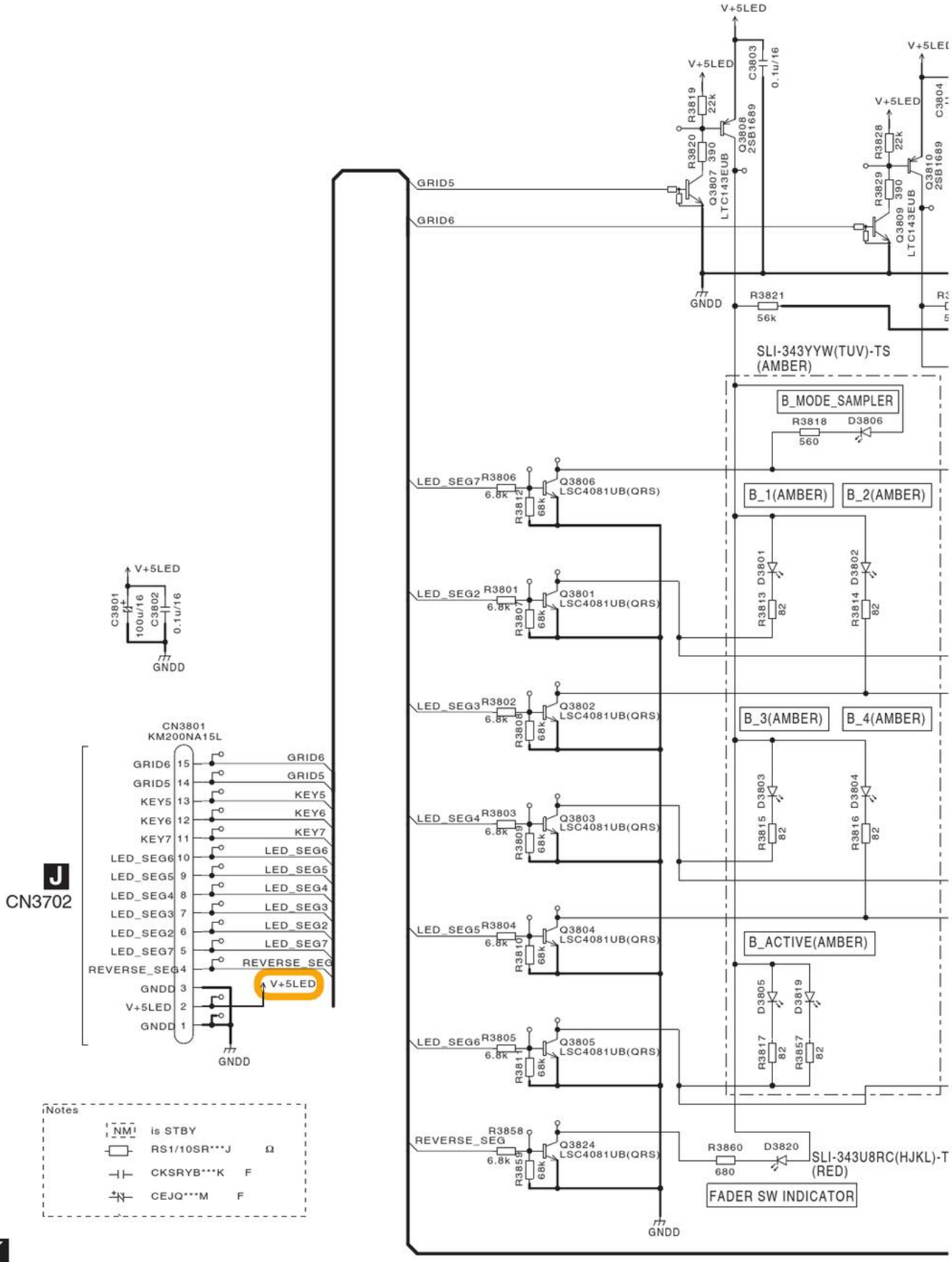

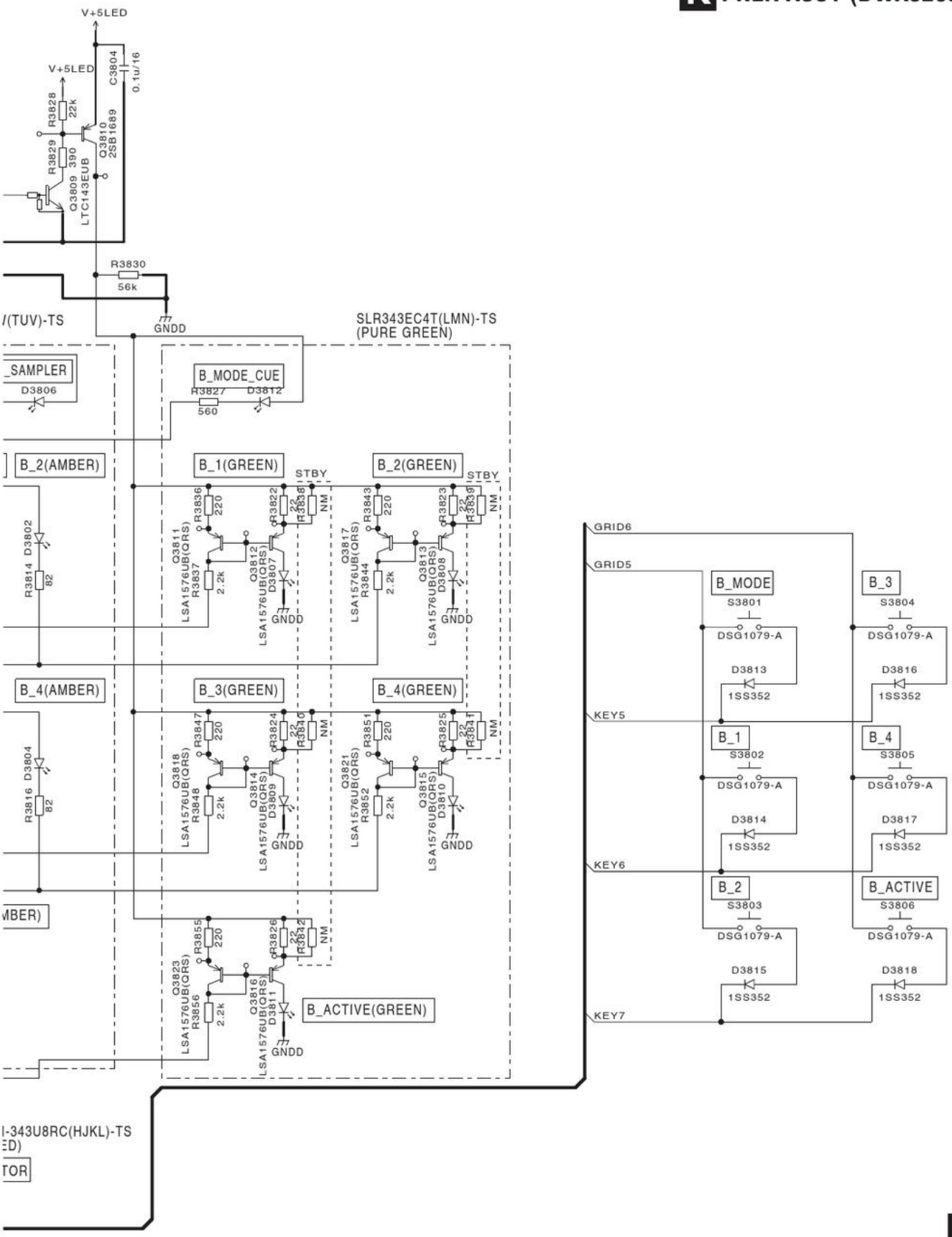
V+5LED
V+5LED
C3804
0.1u/16
R3828
22k
R3829
390
Q3810
2SB1689
Q3809
LTC143EUB
R3830
56k
GNDD
/(TUV)-TS
SLR343EC4T(LMN)-TS
(PURE GREEN)
_SAMPLER
D3806
B_MODE_CUE
R3827
560
D3812
B_2(AMBER)
B_1(GREEN)
B_2(GREEN)
STBY
STBY
R3836
220
R3822
22
R3838
NM
R3843
220
R3823
22
R3839
NM
Q3811
LSA1576UB(QRS)
R3837
2.2k
Q3812
LSA1576UB(QRS)
D3807
GNDD
Q3817
LSA1576UB(QRS)
R3844
2.2k
Q3813
LSA1576UB(QRS)
D3808
GNDD
D3802
R3814
82
B_4(AMBER)
B_3(GREEN)
B_4(GREEN)
R3847
220
R3824
22
R3840
NM
R3851
220
R3825
22
R3841
NM
Q3818
LSA1576UB(QRS)
R3848
2.2k
Q3814
LSA1576UB(QRS)
D3809
GNDD
Q3821
LSA1576UB(QRS)
R3852
2.2k
Q3815
LSA1576UB(QRS)
D3810
GNDD
D3804
R3816
82
MBER)
R3855
220
R3826
22
R3842
NM
Q3823
LSA1576UB(QRS)
R3856
2.2k
Q3816
LSA1576UB(QRS)
D3811
GNDD
B_ACTIVE(GREEN)
I-343U8RC(HJKL)-TS
ED)
TOR
GRID6
GRID5
KEY5
KEY6
KEY7
B_MODE
S3801
DSG1079-A
D3813
1SS352
B_3
S3804
DSG1079-A
D3816
1SS352
B_1
S3802
DSG1079-A
D3814
1SS352
B_4
S3805
DSG1079-A
D3817
1SS352
B_2
S3803
DSG1079-A
D3815
1SS352
B_ACTIVE
S3806
DSG1079-A
D3818
1SS352

10.18 CHFD1 and CHFD2 ASSYS

L CHFD1 ASSY (DWX3260)

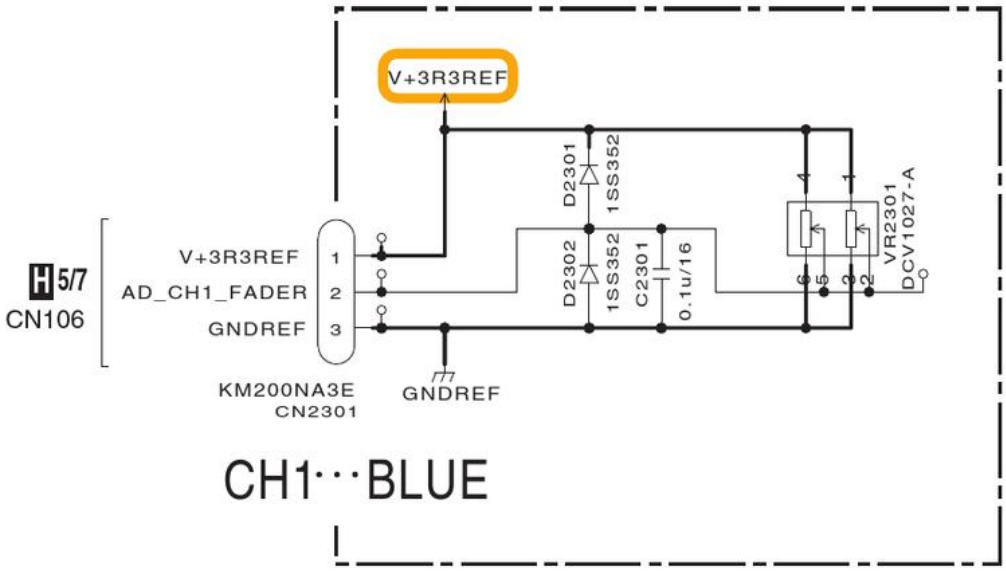

M CHFD2 ASSY (DWX3261)

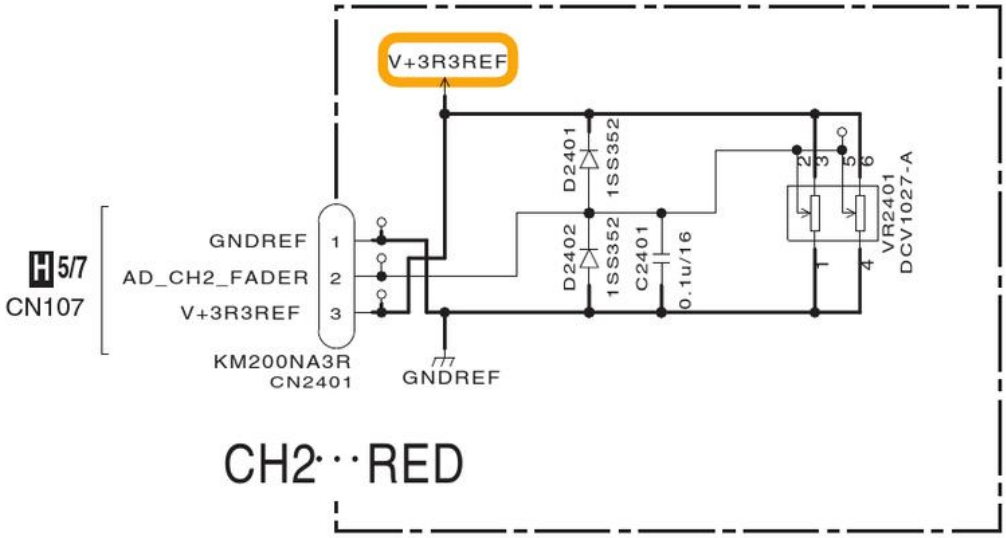

NOTES

CKSRYB***K F

10.19 CRFD ASSY

N CRFD ASSY (DWX3258)

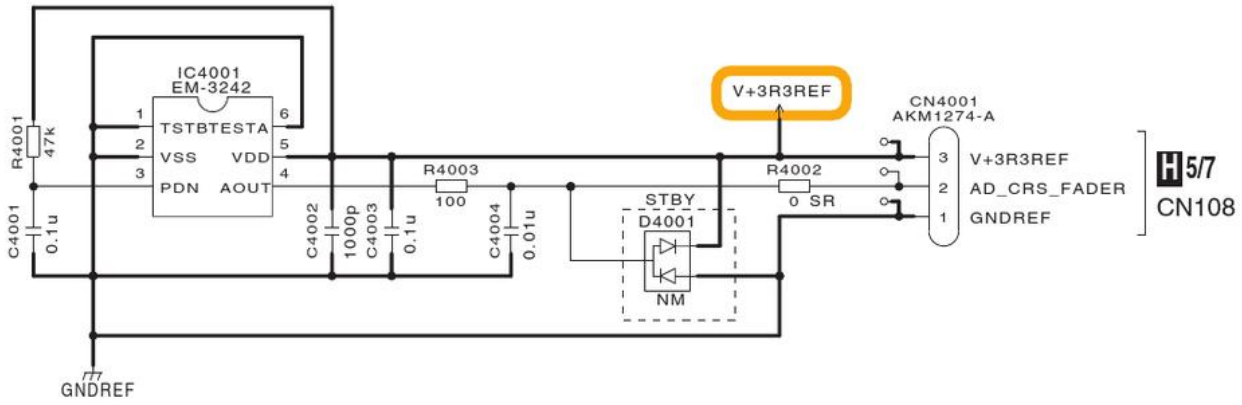

Notes

	NM	is STBY	
		RS1/16SS***J	Ω
SR		RS1/10SR***J	Ω
		CKSSYB***K	F

10.20 SECONDARY ASSY

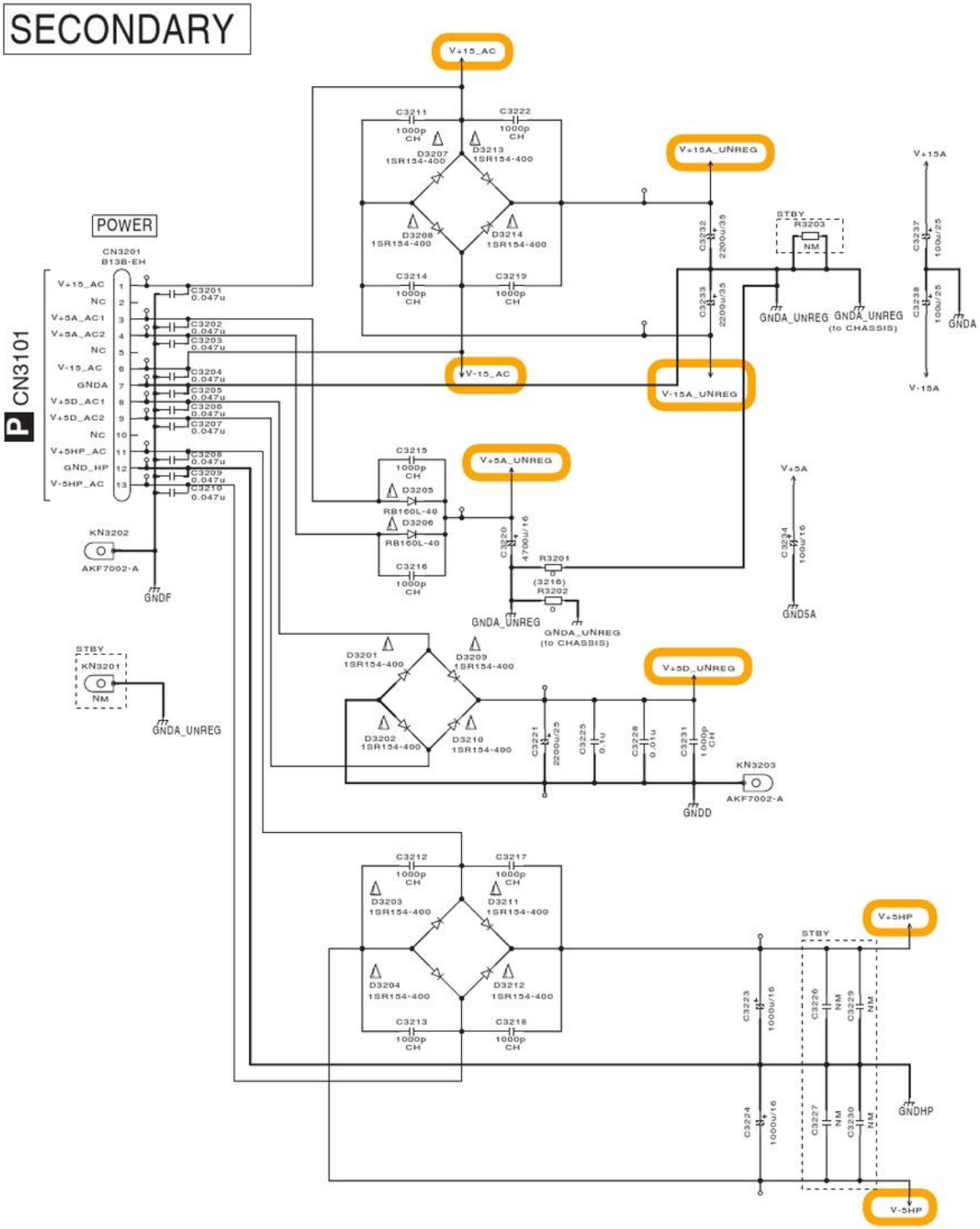

O SECONDARY ASSY (DWR1503)

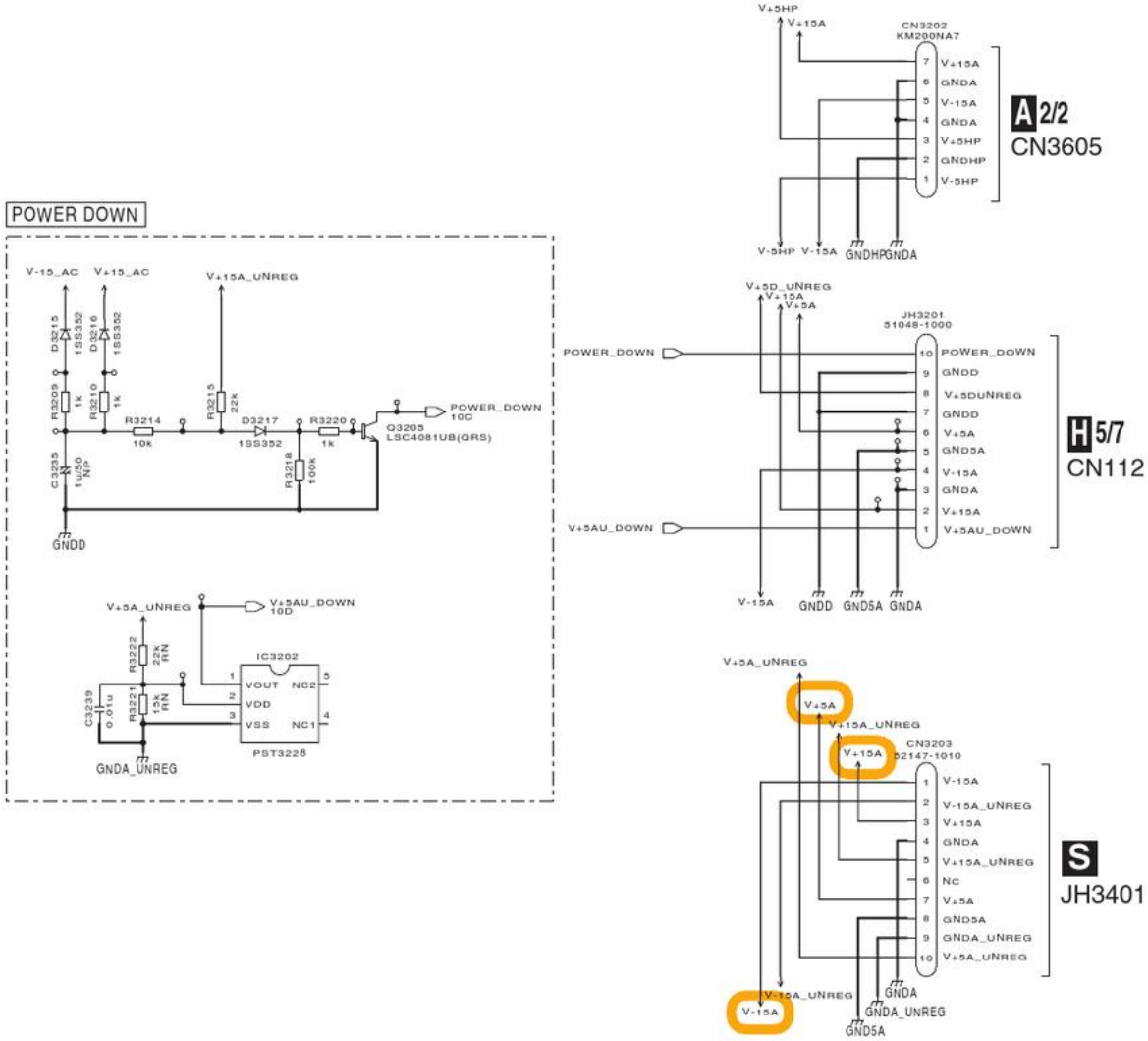

Notes

NM	is STBY	
	RS1/10SR***J	Ω
(3216)	RS1/4SA0R0J	Ω
RN	RN1/16SE****D	Ω
CH	CCSRCH***J	F
	CKSRYB***K	F
NP	CEANP	F
	CEAT	F

- ⚠印の部品は、安全上重要な部品です。
交換するときは、安全および性能維持のため
必ず指定の部品をご使用ください。
- The ⚠ mark found on some component parts
indicates the importance of the safety factor of the part.
Therefore, when replacing, be sure to use parts of
identical designation.

10.21 TRANS ASSY

TRANS

FOR SYXJ8, UXJCB, KXJ5, XJCN5

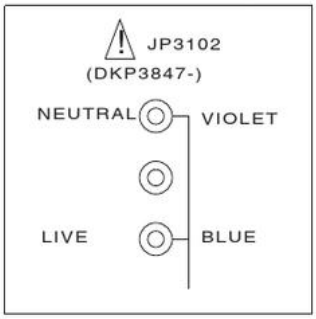

FOR LXJ

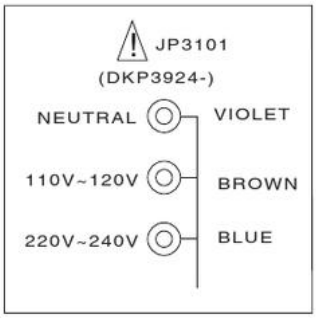

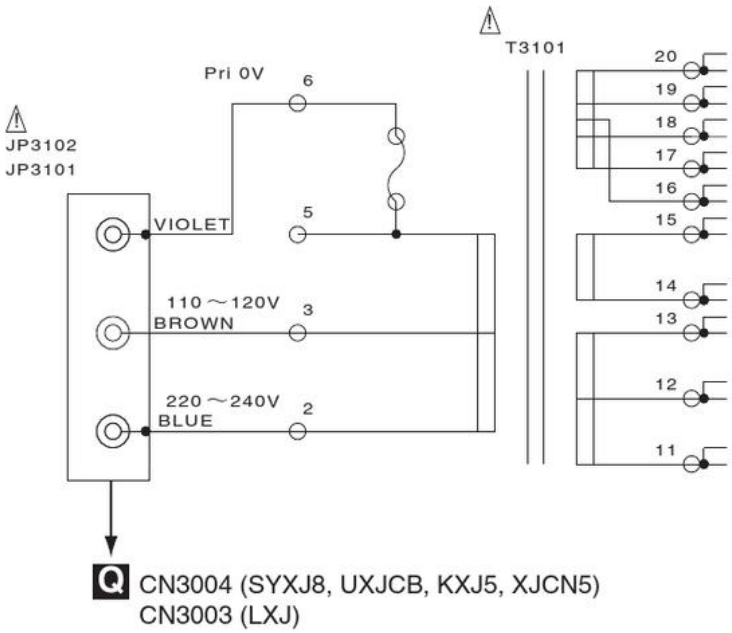

	TRANS	JP3101	JP3102
SYXJ8 KXJ5 XJCN5	DTT1225	NO USE	DKP3847
UXJCB	DTT1226	NO USE	DKP3847
LXJ	DTT1225	DKP3924	NO USE

P TRANS ASSY
(SYXJ8, KXJ5, XJCN5: DWR1500)
(UXJCB: DWR1501)
(LXJ: DWR1505)

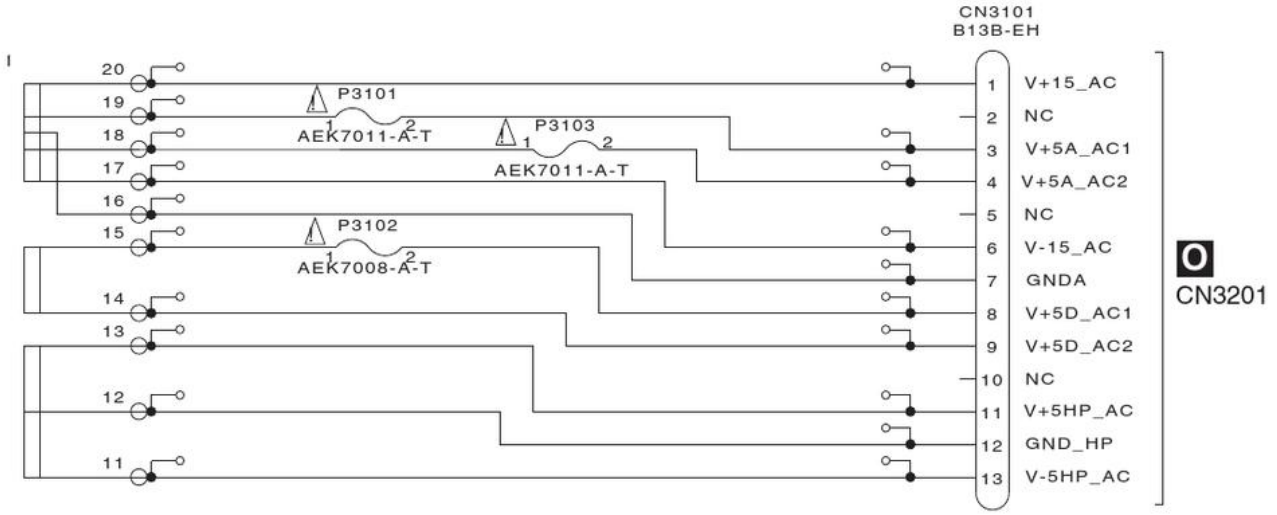

N5)

CAUTION : FOR CONTINUED PROTECTION AGAINST RISK OF FIRE. REPLACE ONLY WITH SAME TYPE NO. AEK7011 (49101.5PAR) (1.5 A) MFD. BY LITTELFUSE INC. FOR P3101 and P3103.

CAUTION : FOR CONTINUED PROTECTION AGAINST RISK OF FIRE. REPLACE ONLY WITH SAME TYPE NO. AEK7008 (491.800PAR) (800 mA) MFD. BY LITTELFUSE INC. FOR P3102.

・⚠ 印の部品は、安全上重要な部品です。
交換するときは、安全および性能維持のため
必ず指定の部品をご使用ください。
・The ⚠ mark found on some component parts
indicates the importance of the safety factor of the part.
Therefore, when replacing, be sure to use parts of
identical designation.

10.22 PRIMARY and ACSW ASSYS

PRIMARY

• NOTE FOR FUSE REPLACEMENT

CAUTION - FOR CONTINUED PROTECTION AGAINST RISK OF FIRE, REPLACE WITH SAME TYPE NO. AEK1051 (218.500) (500 mA) MFD. BY LITTELFUSE FOR FU1901.

・⚠印の部品は、安全上重要な部品です。
交換するときは、安全および性能維持のため
必ず指定の部品をご使用ください。
・The ⚠ mark found on some component parts indicates the importance of the safety factor of the part. Therefore, when replacing, be sure to use parts of identical designation.

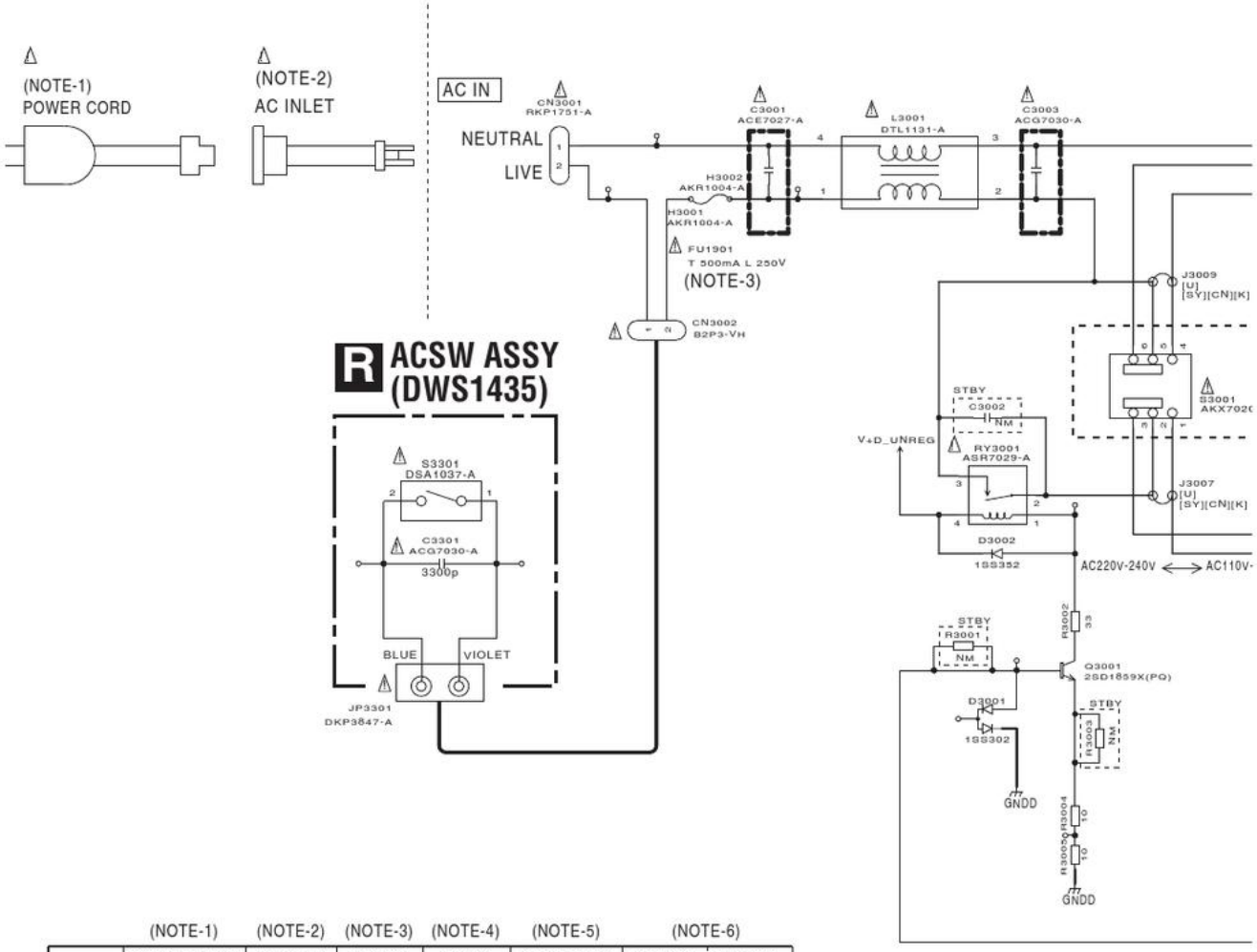

	(NOTE-1)	(NOTE-2)	(NOTE-3)	(NOTE-4)	(NOTE-5)	(NOTE-6)	
	POWER CORD	AC INLET	FU1901	S3001	SUB TRANS	CN3003	CN3004
SYXJ8	ADG7062	DKP3916	AEK1051	NO USE	DTT1245	NO USE	B2P3-VH
UXJCB	DDG1108	DKP3915	AEK1051	NO USE	DTT1255	NO USE	B2P3-VH
LXJ	ADG7062	DKP3916	AEK1051	AKX7020	DTT1242	B3P5-VH	NO USE
KXJ5	ADG7115	DKP3916	AEK1051	NO USE	DTT1245	NO USE	B2P3-VH
XJCN5	ADG7105	DKP3916	AEK1051	NO USE	DTT1245	NO USE	B2P3-VH

Q R

Q PRIMARY ASSY
(SYXJ8, KXJ5, XJCN5: DWR1496)
(UXJCB: DWR1498)
(LXJ: DWR1497)

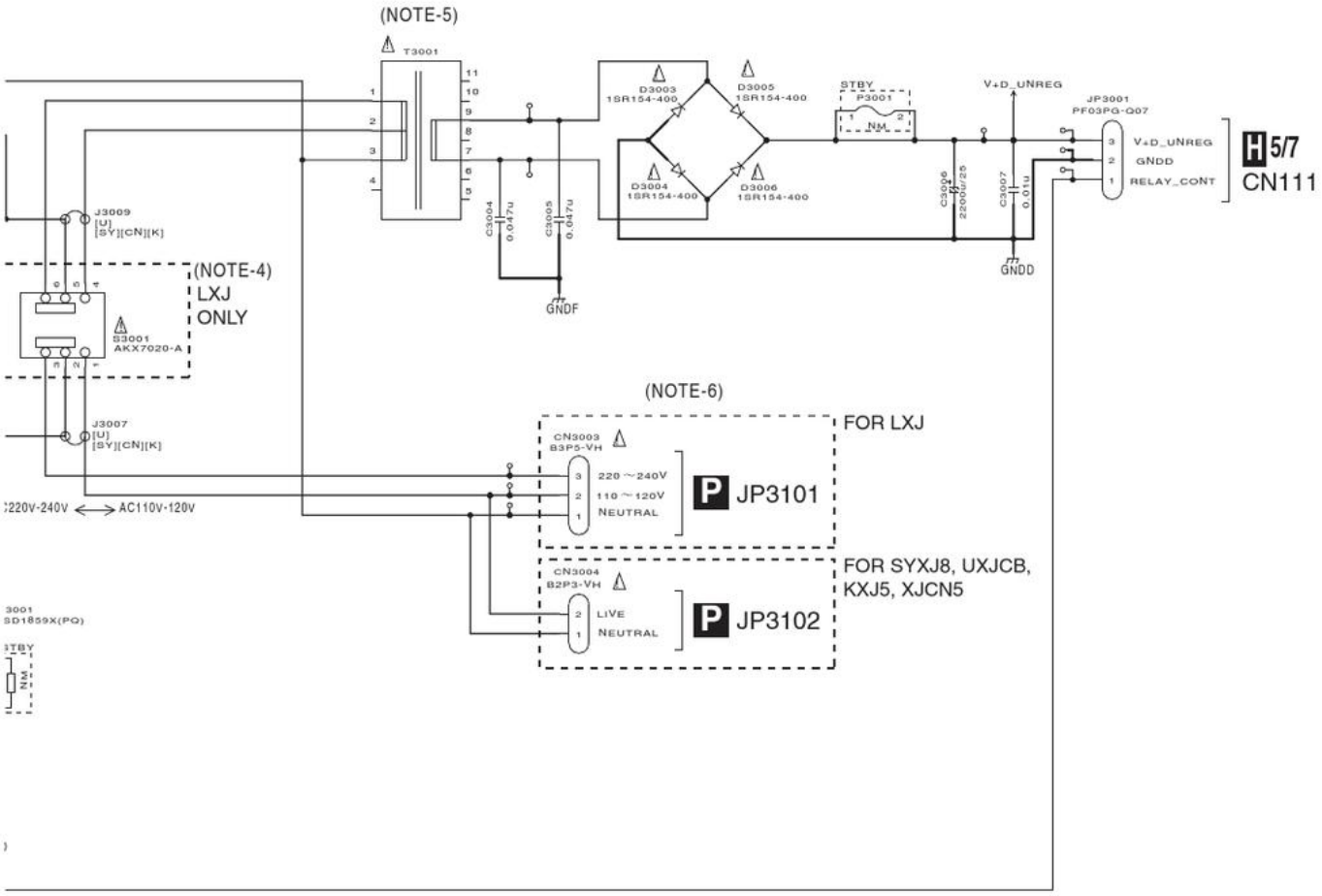

10.23 REG ASSY

S REG ASSY (DWR1504)

REG

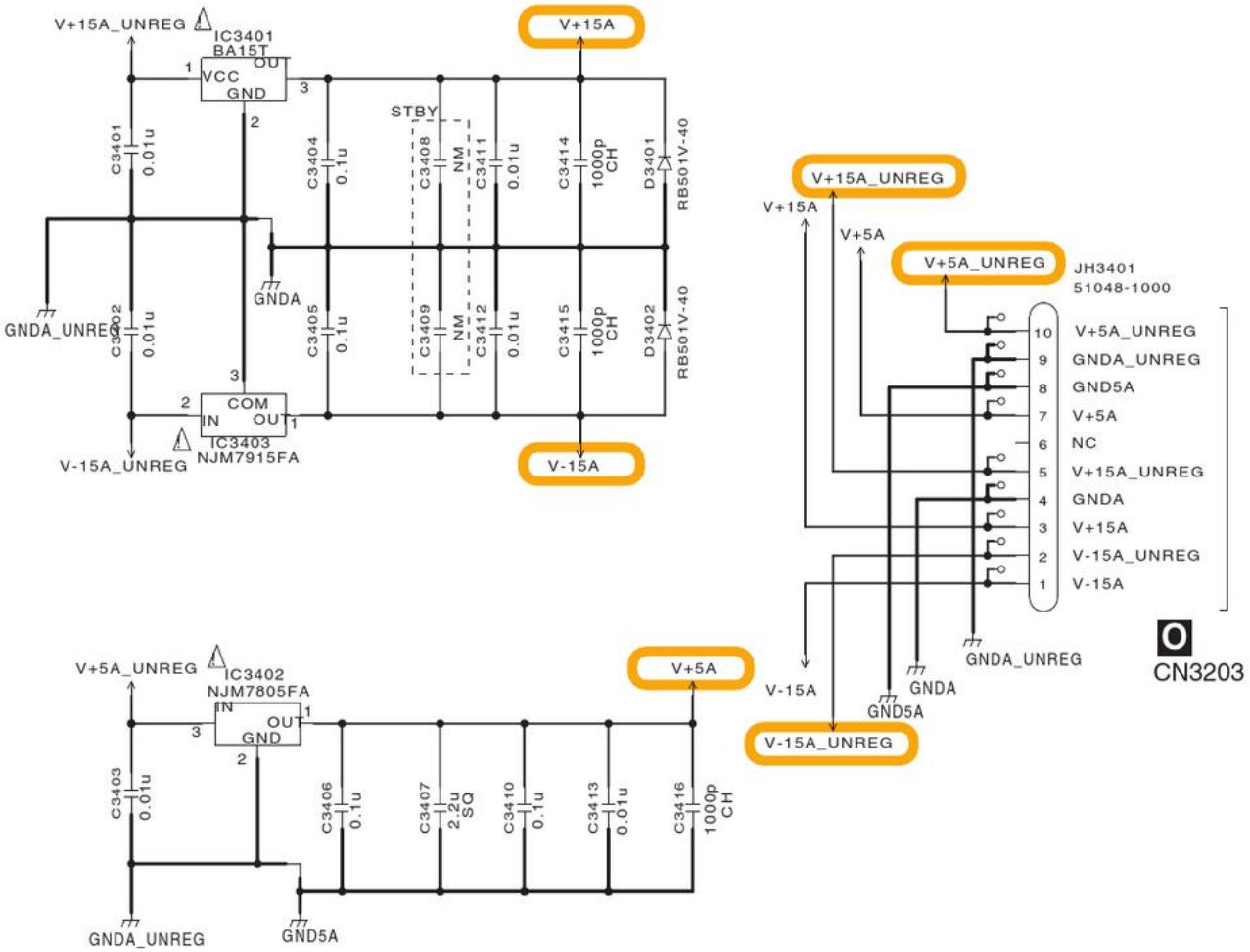

Notes

NM is STBY

CH	⊣⊢	CCSRCH***J	F
SQ	⊣⊢	CKSQYB***K	F
	⊣⊢	CKSRYB***K	F

S

10.24 WAVEFORMS

Setting

TRIM, MASTER LEVEL, BOOTH LEVEL, CF FADER: MAX
other VRs (included HP_LEVEL): center
MASTER_ATT: 0dB
CROSS F. CURVE: "THRU"
CD input signal, AUX input signal: 0dB
Phono input signal, MIC input signal: –40dB signal

① Input terminal

CD1_L: JA3501-pin 1 (INPUT Assy)
CD1_R: JA3501-pin 2 (INPUT Assy)
CD2_L: JA3502-pin 1 (INPUT Assy)
CD2_R: JA3502-pin 3 (INPUT Assy)
AUX_L: JA2502-pin 1 (MCJK Assy)
AUX_R: JA2501-pin 3 (MCJK Assy)

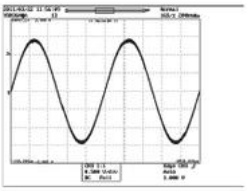

① Input terminal

PHONO1_L: JA3501-pin 4 (INPUT Assy)
PHONO1_R: JA3501-pin 5 (INPUT Assy)
PHONO2_L: JA3502-pin 4 (INPUT Assy)
PHONO2_R: JA3502-pin 5 (INPUT Assy)
MIC: JA2501-pin 2 (MCJK Assy)

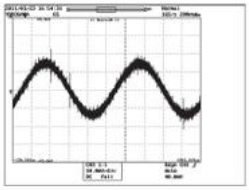

② ADC input

CD1_L: D105 (OUTPUT Assy)
CD1_R: D103 (OUTPUT Assy)
CD2_L: D111 (OUTPUT Assy)
CD2_R: D109 (OUTPUT Assy)
AUX_L: D114 (OUTPUT Assy)
AUX_R: D113 (OUTPUT Assy)

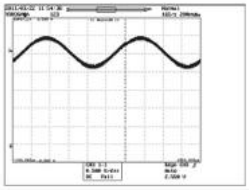

③ ADC output

CH1_DATA: R248 (OUTPUT Assy)
CH2_DATA: R288 (OUTPUT Assy)
AUX_DATA: R299 (OUTPUT Assy)

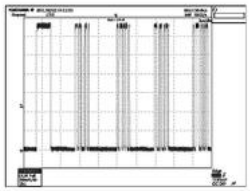

④ AD_48K

TP (OUTPUT Assy)

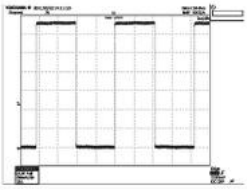

⑤ AD_6R144M

TP (OUTPUT Assy)

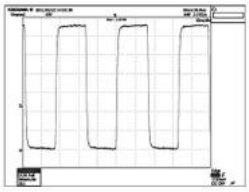

⑥ Audio_CLK

TP (OUTPUT Assy)

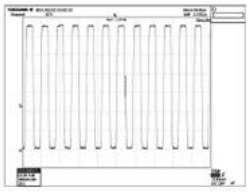

⑦ AD_RESET

TP (OUTPUT Assy)

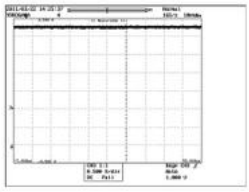

⑧ DA_RESET

TP (OUTPUT Assy)

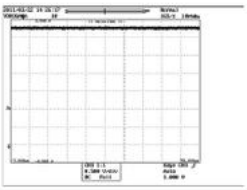

⑨ ACLK_OUT

TP (OUTPUT Assy)

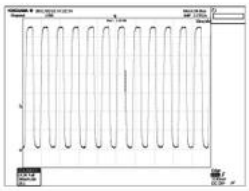

⑩ DA12R128M

TP (OUTPUT Assy)

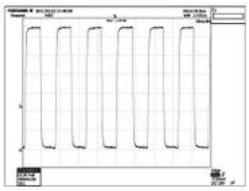

⑪ DA48K

TP (OUTPUT Assy)

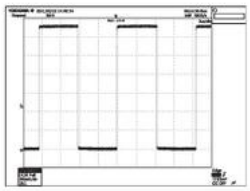

⑫ DAC input

TP (OUTPUT Assy)

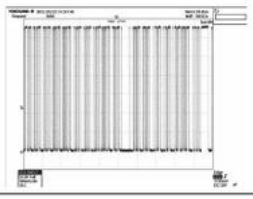

⑬ DAC output (MASTER)

MASTER_L-: R357 (OUTPUT Assy)
MASTER_L+: R358 (OUTPUT Assy)
MASTER_R-: R361 (OUTPUT Assy)
MASTER_R+: R362 (OUTPUT Assy)

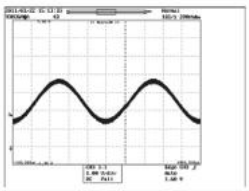

⑭ MASTER1/BOOTH output

MAS1_L: JA102-pin 2/pin 3 (OUTPUT Assy)
MAS1_R: JA103-pin 2/pin 3 (OUTPUT Assy)
BOOTH_L: JA105-pin 2/pin 3 (OUTPUT Assy)
BOOTH_R: JA106-pin 2/pin 3 (OUTPUT Assy)

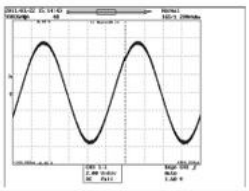

⑮ MASTER2 output

MASTER2_L: JA104-pin 3 (OUTPUT Assy)
MASTER2_R: JA104-pin 1 (OUTPUT Assy)

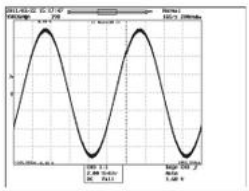

(16) DAC output (HP)

HP_L: CN3603-pin 4 (INPUT Assy)
HP_R: CN3603-pin 2 (INPUT Assy)

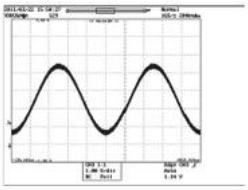

(17) HP output

HP_L: CN2701-pin 1 (HPJK Assy)
HP_R: CN2701-pin 3 (HPJK Assy)

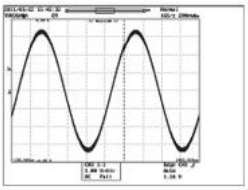

(18) Input switch control signal (CD)

CH1CD_L: IC3503-pin 1 (INPUT Assy)
CH2CD_L: IC3505-pin 1 (INPUT Assy)
AUX: IC2502-pin 1 (MCJK Assy)

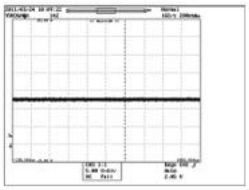

(18) Input switch control signal (phono)

CH1CD_L: IC3503-pin 1 (INPUT Assy)
CH2CD_L: IC3505-pin 1 (INPUT Assy)
AUX: IC2502-pin 1 (MCJK Assy)

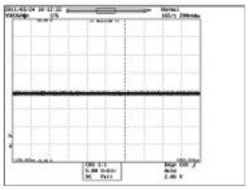

(19) MUTE control signal (mute_off)

MAS1_L: Q128, Q129 (Base terminal)
MAS1_R: Q130, Q131 (Base terminal)
MAS2: Q126, Q127 (Base terminal)

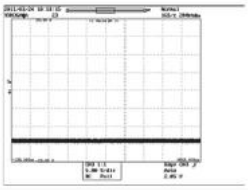

(19) MUTE control signal (mute_on)

MAS1_L: Q128, Q129 (Base terminal)
MAS1_R: Q130, Q131 (Base terminal)
MAS2: Q126, Q127 (Base terminal)

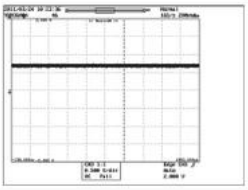

11. PCB CONNECTION DIAGRAM
11.1 INPUT and HPJK ASSYS

SIDE A

NOTE FOR PCB DIAGRAMS :

1. The parts mounted on this PCB include all necessary parts for several destinations. For further information for respective destinations, be sure to check with the schematic diagram.

2. View point of PCB diagrams.

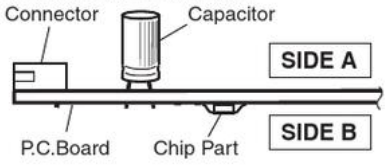

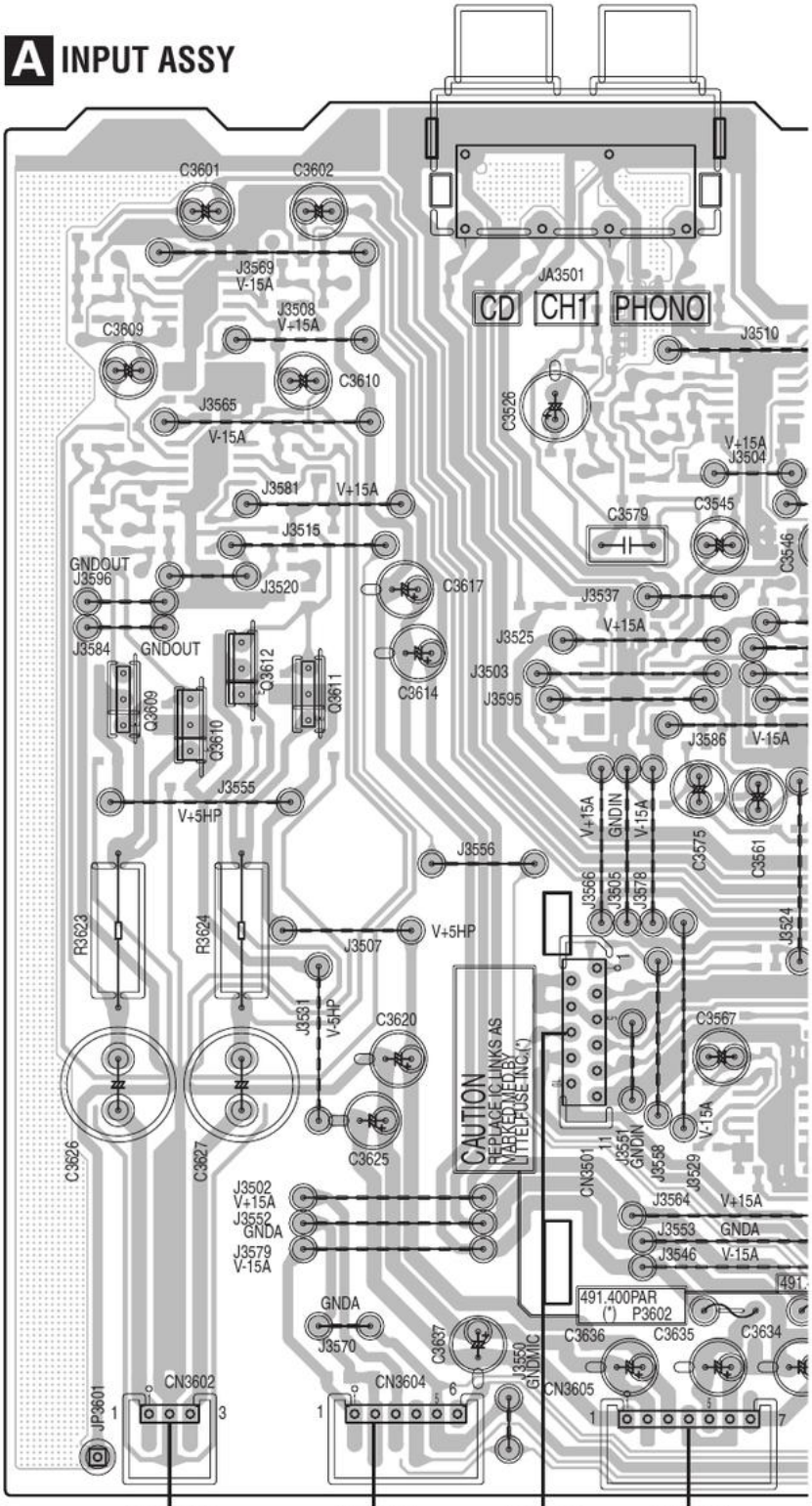

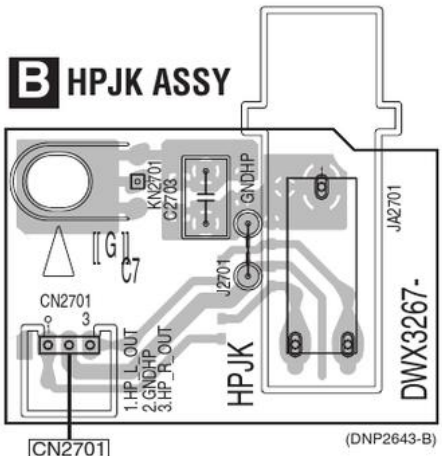

CN2701 — CN3602 — CN3604 — CN3505 — CN3604

F CN2504 — C CN2801 — O CN3202

A B

SIDE A

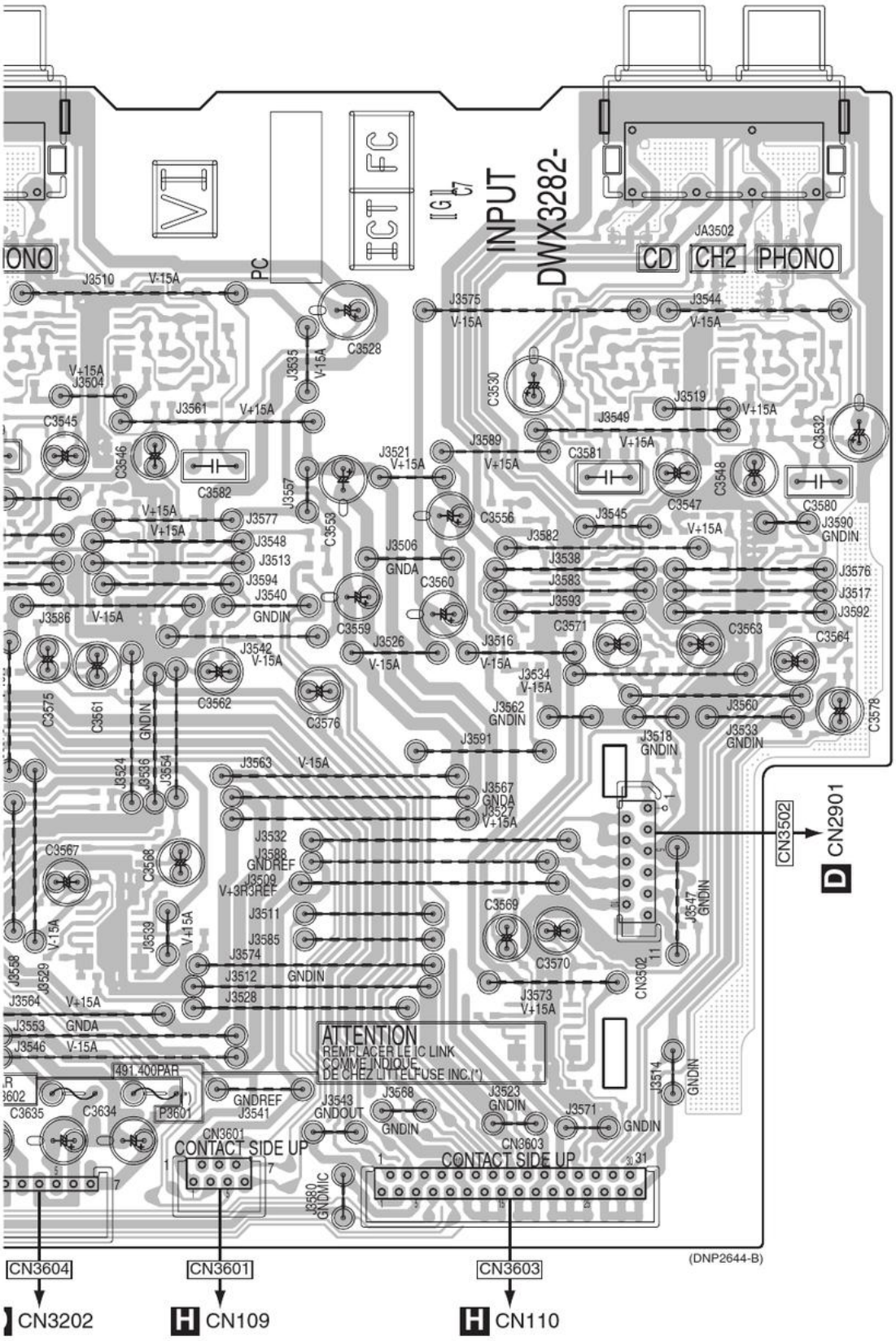

Q3609-Q3612

P3602 P3601

SIDE B

A INPUT ASSY

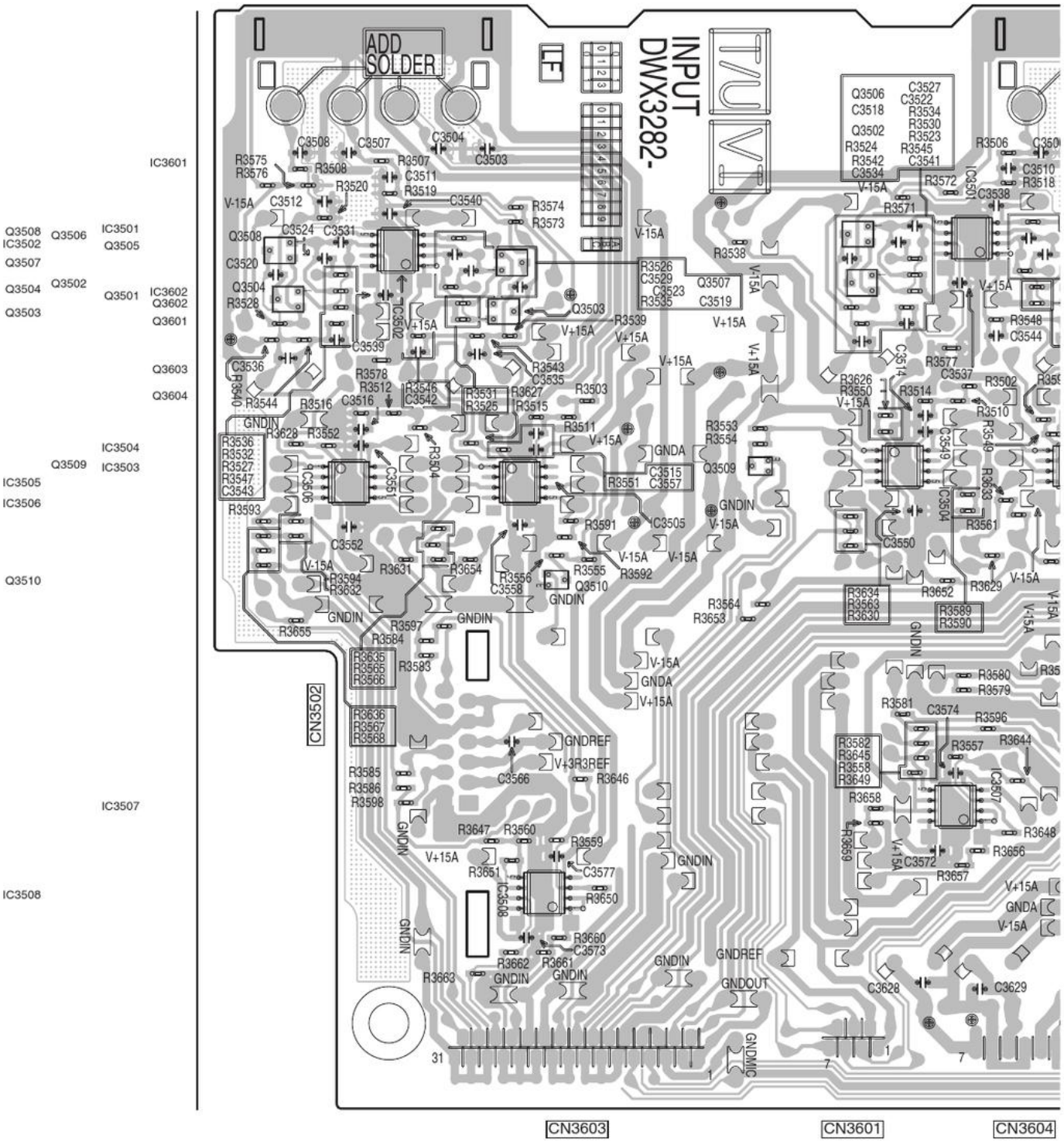

A

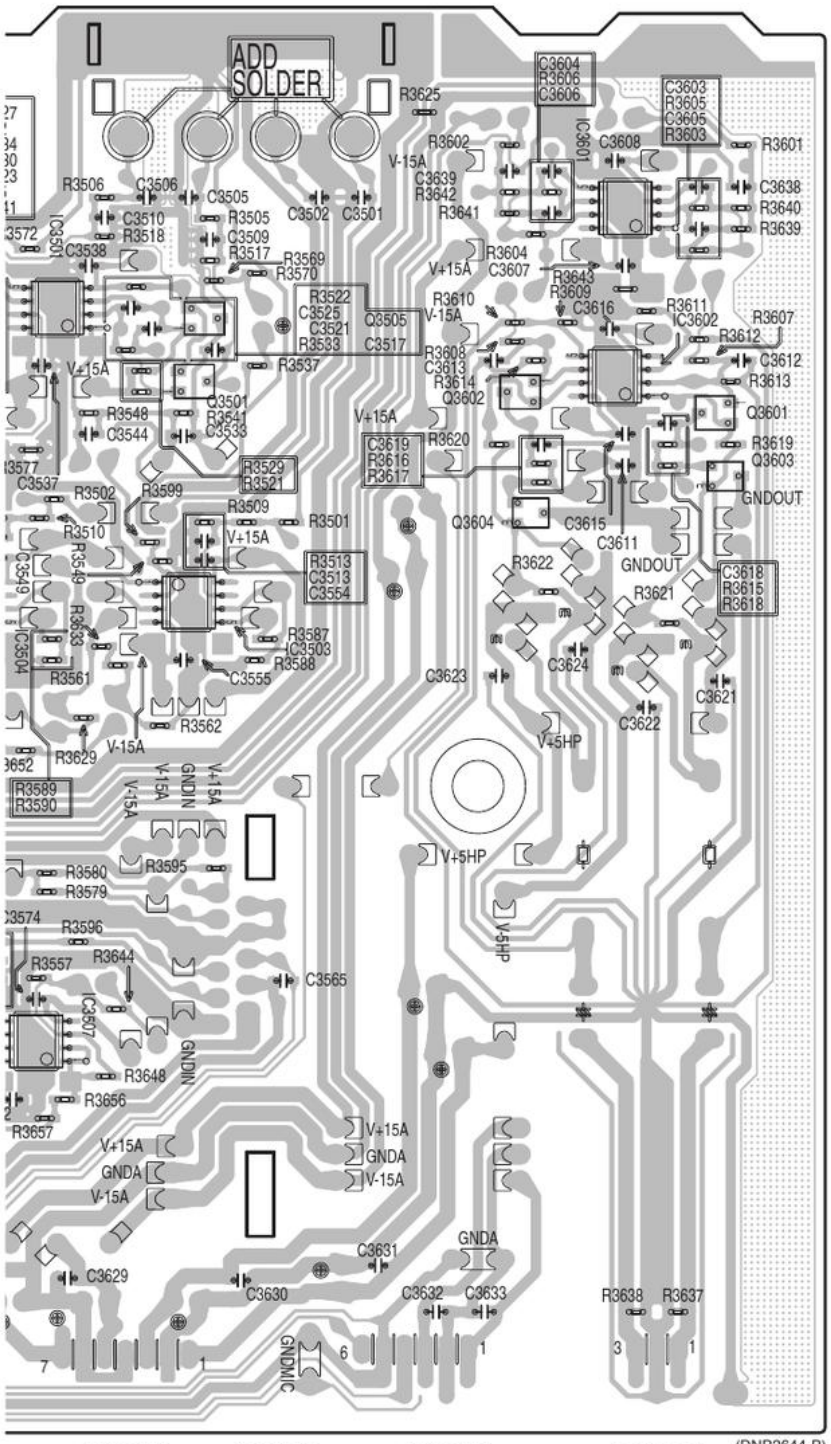
ADD SOLDER
C3604 R3606 C3606
C3603 R3605 C3605 R3603
IC3601
C3608
R3601
R3625
R3602
V-15A
C3639 R3642
R3641
C3638
R3640
R3639
R3506
C3506
C3505
C3502
C3501
C3510
R3518
R3505
C3509
R3517
R3569
R3570
C3538
IC3501
R3604
C3607
V+15A
R3643
R3609
C3616
R3610
V-15A
R3611
IC3602
R3607
R3612
C3612
R3613
R3522 C3525 C3521 R3533
Q3505
C3517
R3537
R3608 C3613
R3614
Q3602
V+15A
Q3601
R3619
Q3603
GNDOUT
Q3501
R3541
C3533
R3548
C3544
C3619 R3616 R3617
R3620
Q3604
C3615
C3611
GNDOUT
C3618 R3615 R3618
R3529 R3521
C3537
R3502
R3599
R3509
R3501
R3510
R3549
C3549
R3513 C3513 C3554
R3622
R3621
R3633
C3504
R3587
IC3503
R3588
C3555
R3561
C3623
C3624
C3621
C3622
R3562
V+5HP
R3629
V-15A
R3589 R3590
GNDIN
V+15A
V-15A
V+5HP
R3595
R3580
R3579
R3596
R3557
R3644
C3565
IC3507
GNDIN
R3648
R3656
R3657
V+15A
GNDA
V-15A
GNDA
C3631
C3629
C3630
C3632
C3633
R3638
R3637
GNDMIC
CN3604
CN3505
CN3604
CN3602
(DNP2644-B)

B HPJK ASSY

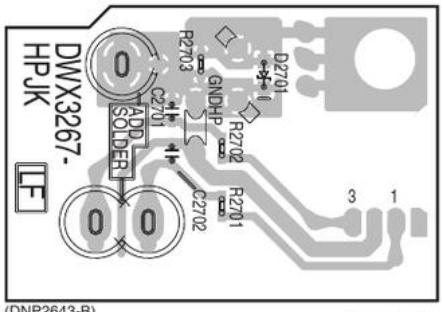
DWX3267-
HPJK
LF
ADD SOLDER
R2703
D2701
GNDHP
R2702
C2701
C2702
R2701
(DNP2643-B)
CN2701

11.2 TRM1 and TRM2 ASSYS

SIDE A

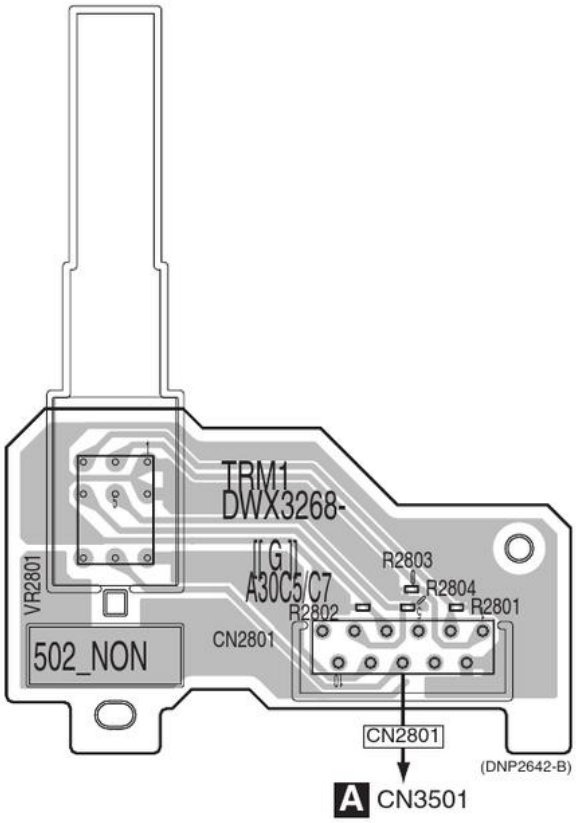

SIDE A

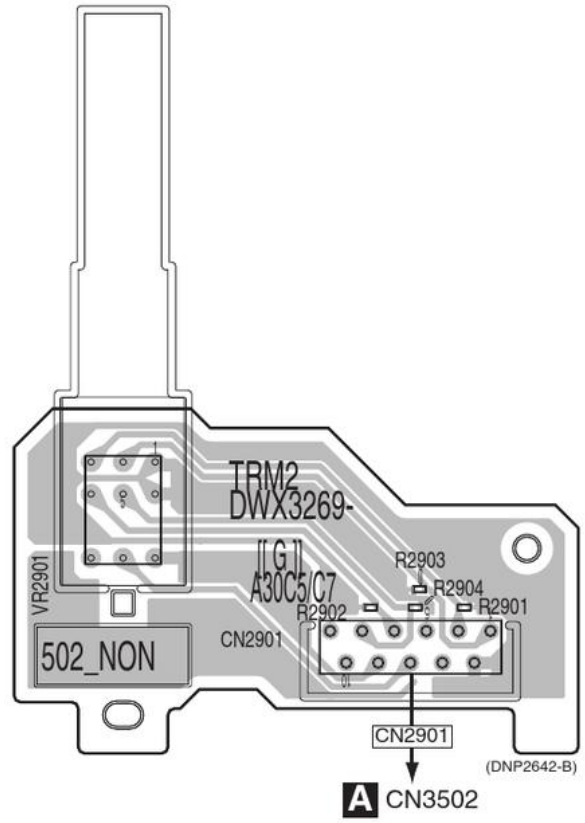

SIDE B

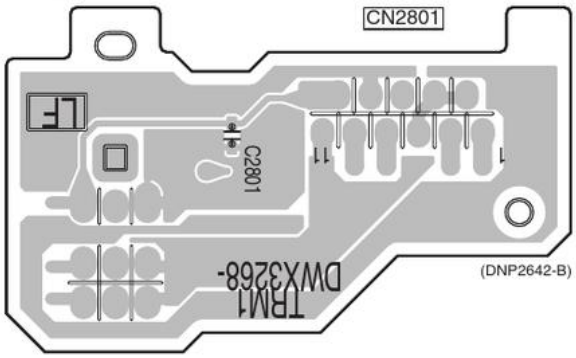

SIDE B

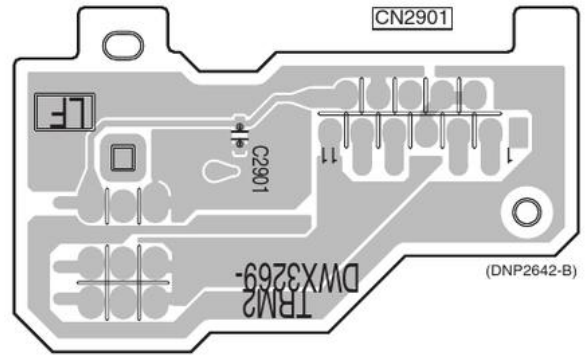

C D

11.3 FDSW ASSY

SIDE A

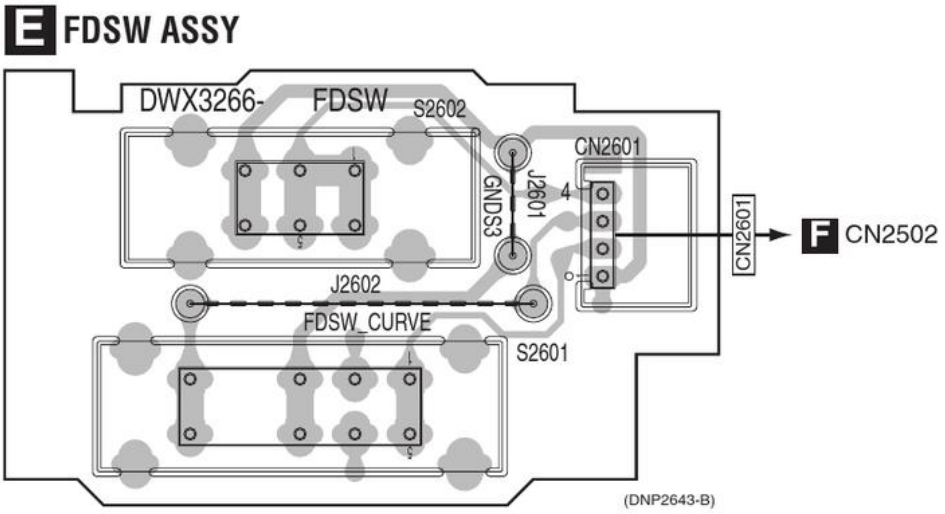

SIDE B

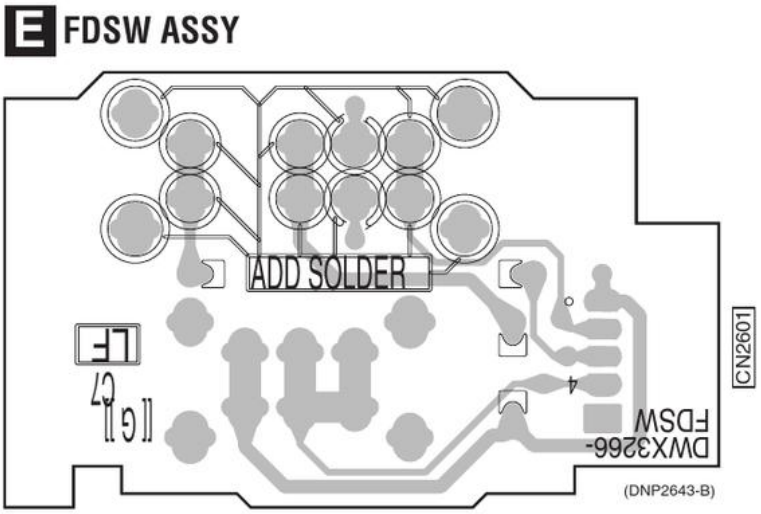

11.4 MCJK ASSY

SIDE A

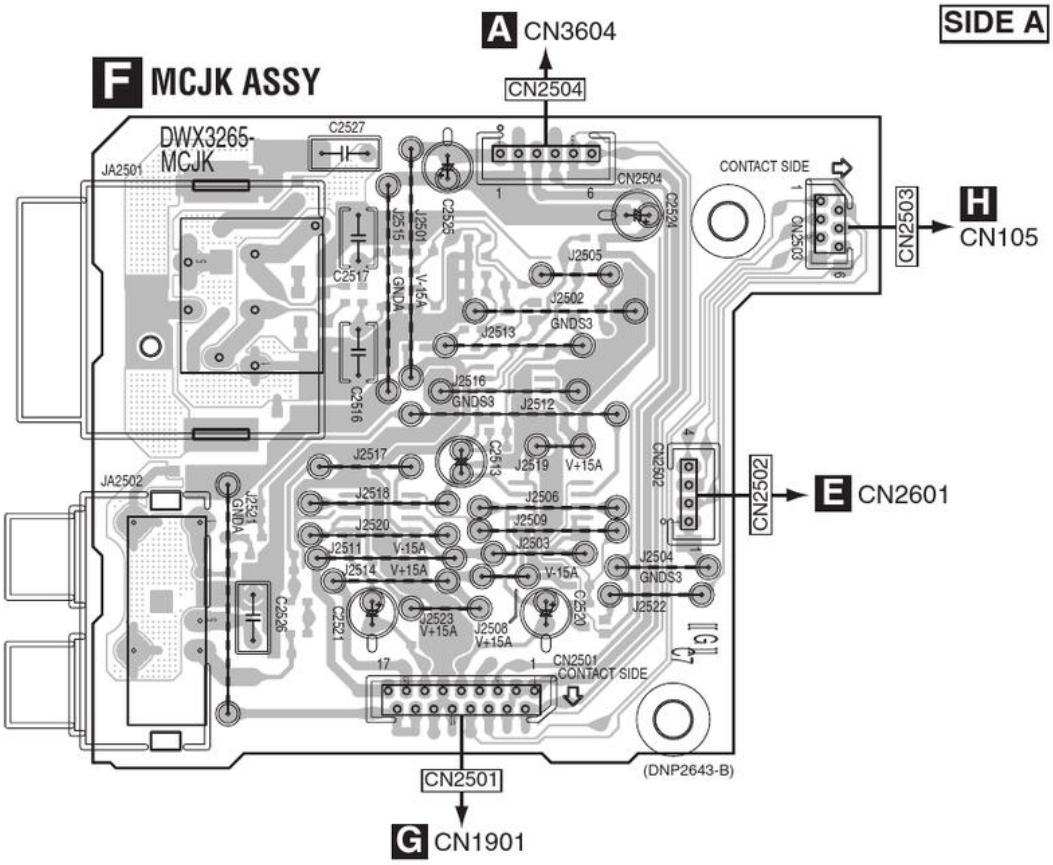

SIDE B

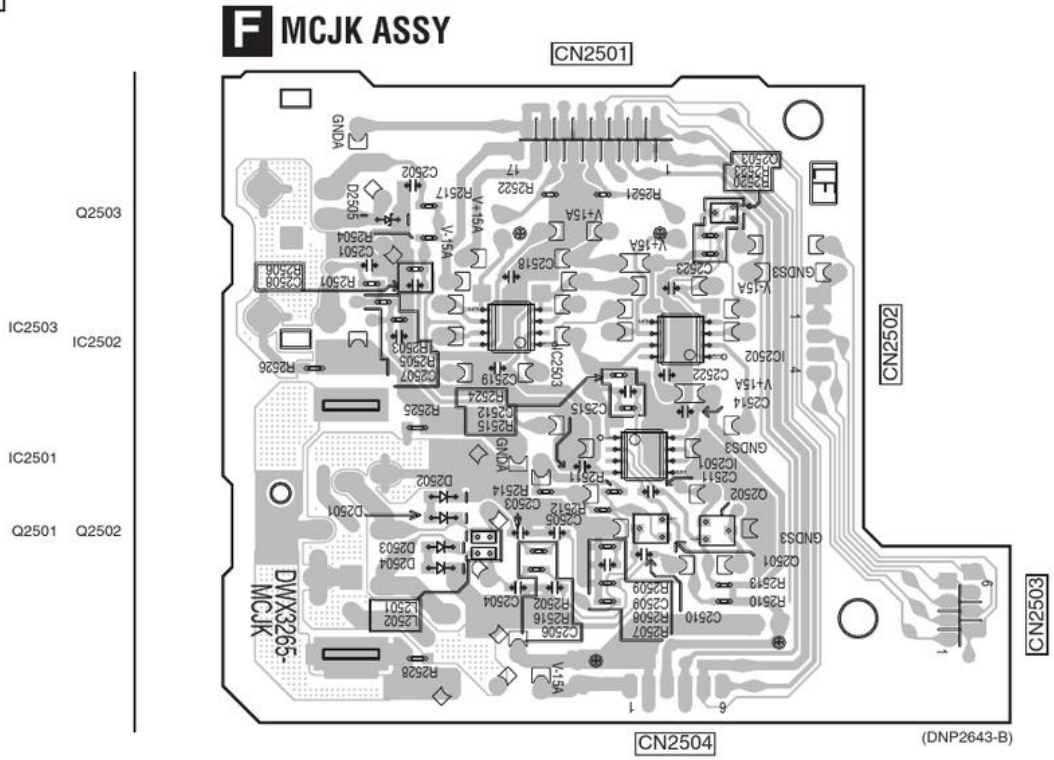

11.5 MCVR ASSY

SIDE A

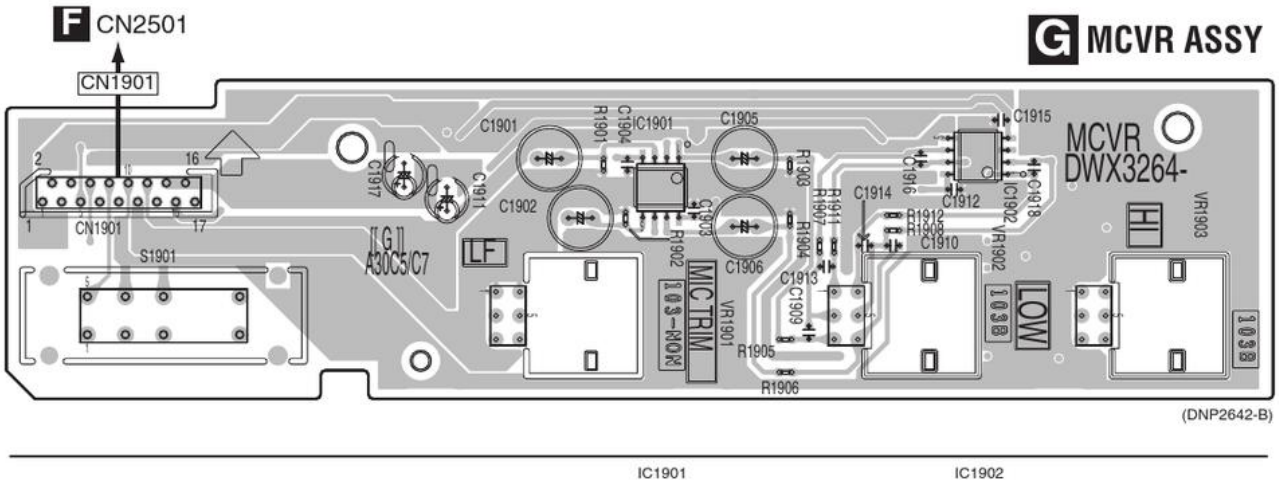

IC1901 IC1902

SIDE B

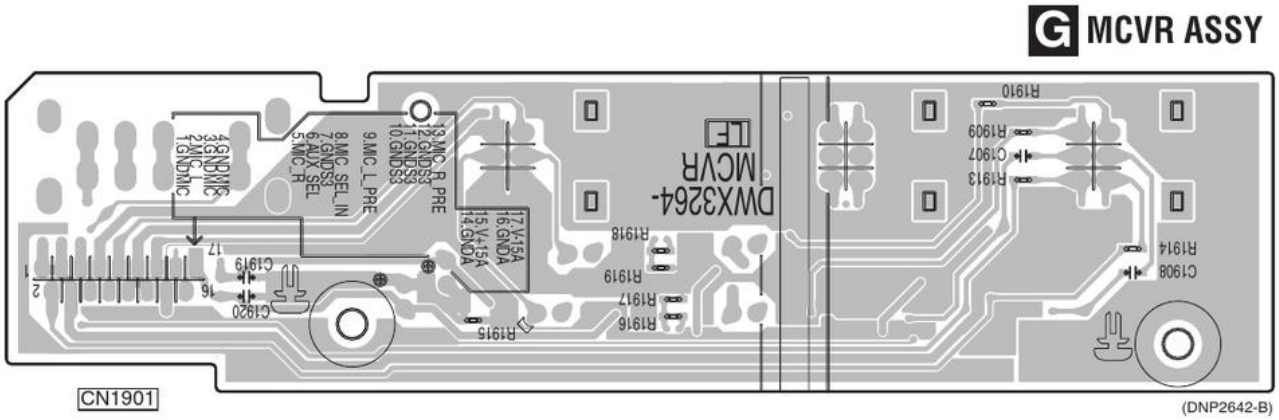

11.6 OUTPUT ASSY

SIDE A

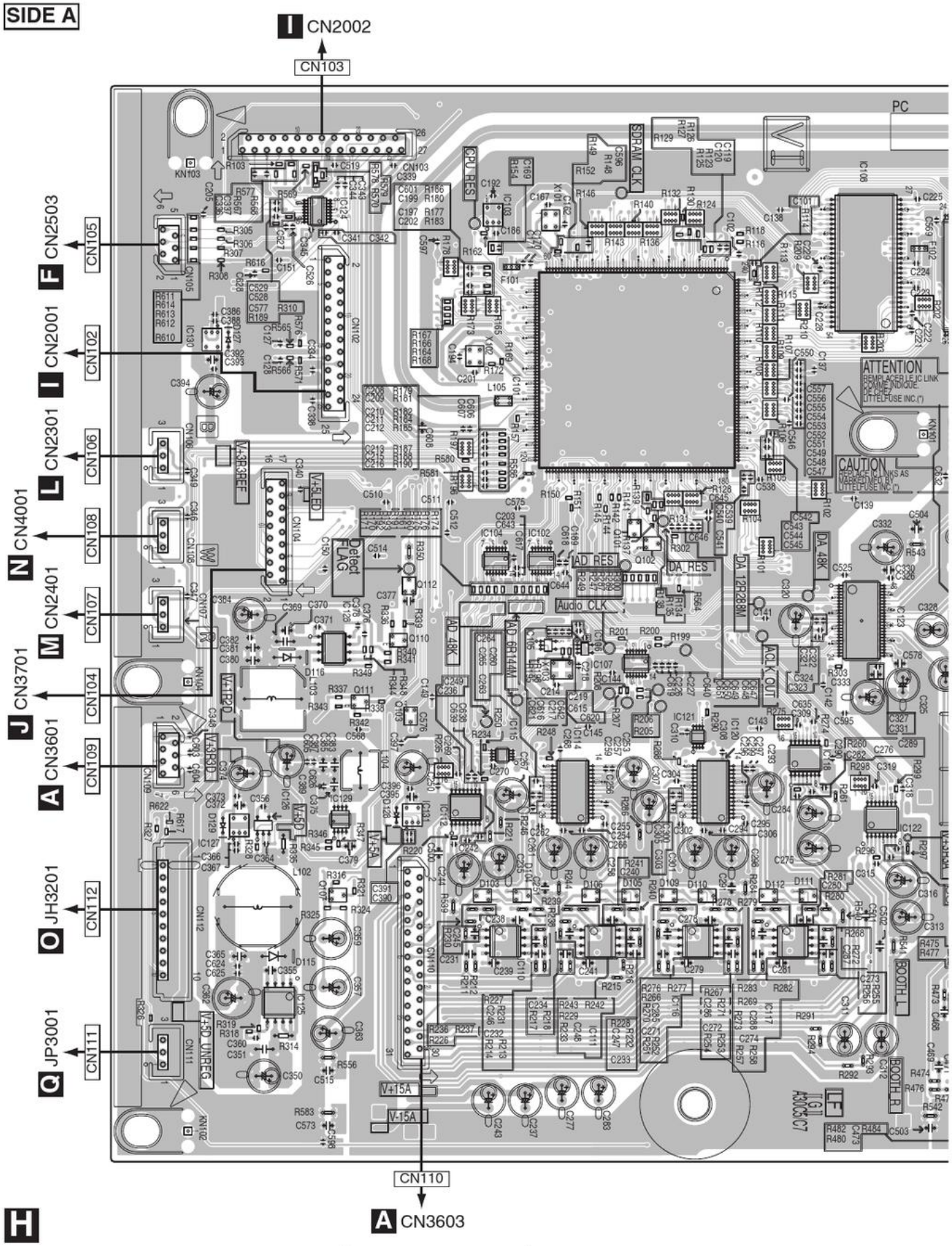

H

H OUTPUT ASSY

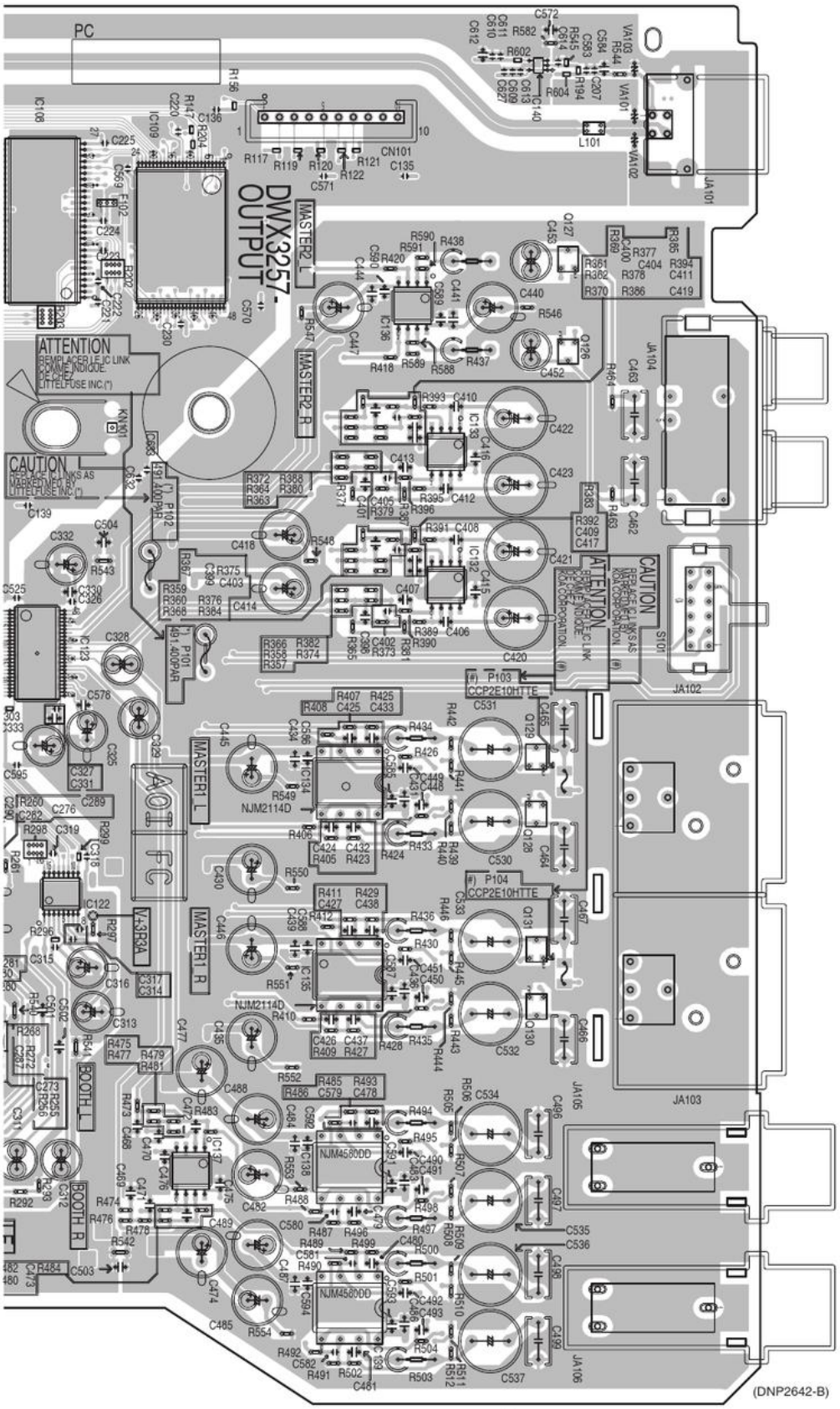

IC124
IC103
IC108
IC109
Q127
IC136
IC130
IC101
Q126
IC133
P102
Q107
Q102
IC104
IC102
IC132
Q112
IC123
P101
Q110
IC128
IC105
P103
IC106
IC107
Q111
Q129
Q103
IC134
IC121
IC115
IC118
Q128
IC120
IC129
IC114
IC131
IC112
IC122
P104
IC127
IC126
Q131
IC135
Q107
Q130
IC116
IC110
IC117
IC111
IC125
IC137
IC138
IC139

SIDE B

H OUTPUT ASSY

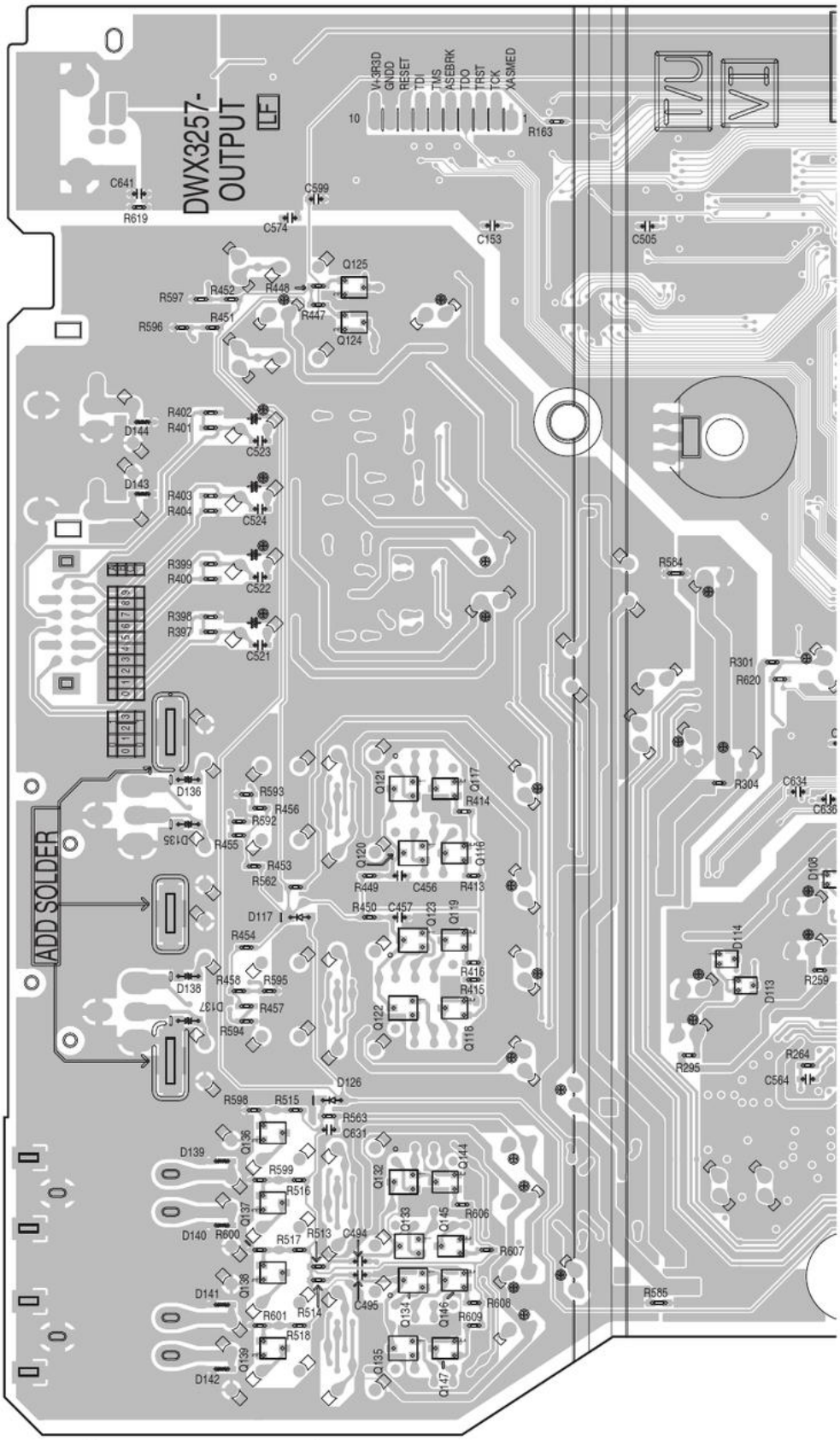

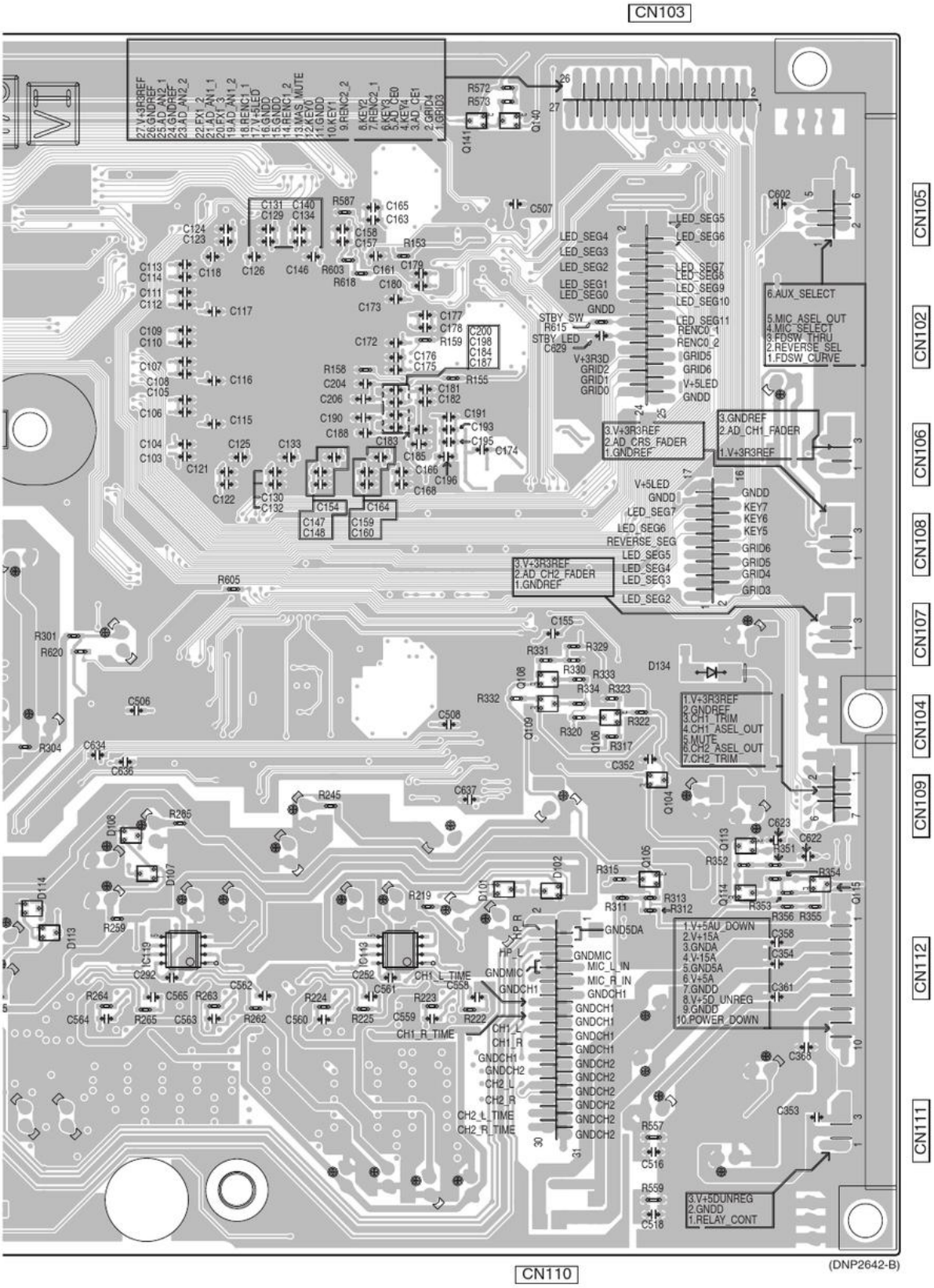
CN103
CN105
CN102
CN106
CN108
CN107
CN104
CN109
CN112
CN111
CN110
(DNP2642-B)

11.7 VRSW ASSY

SIDE A

SIDE A

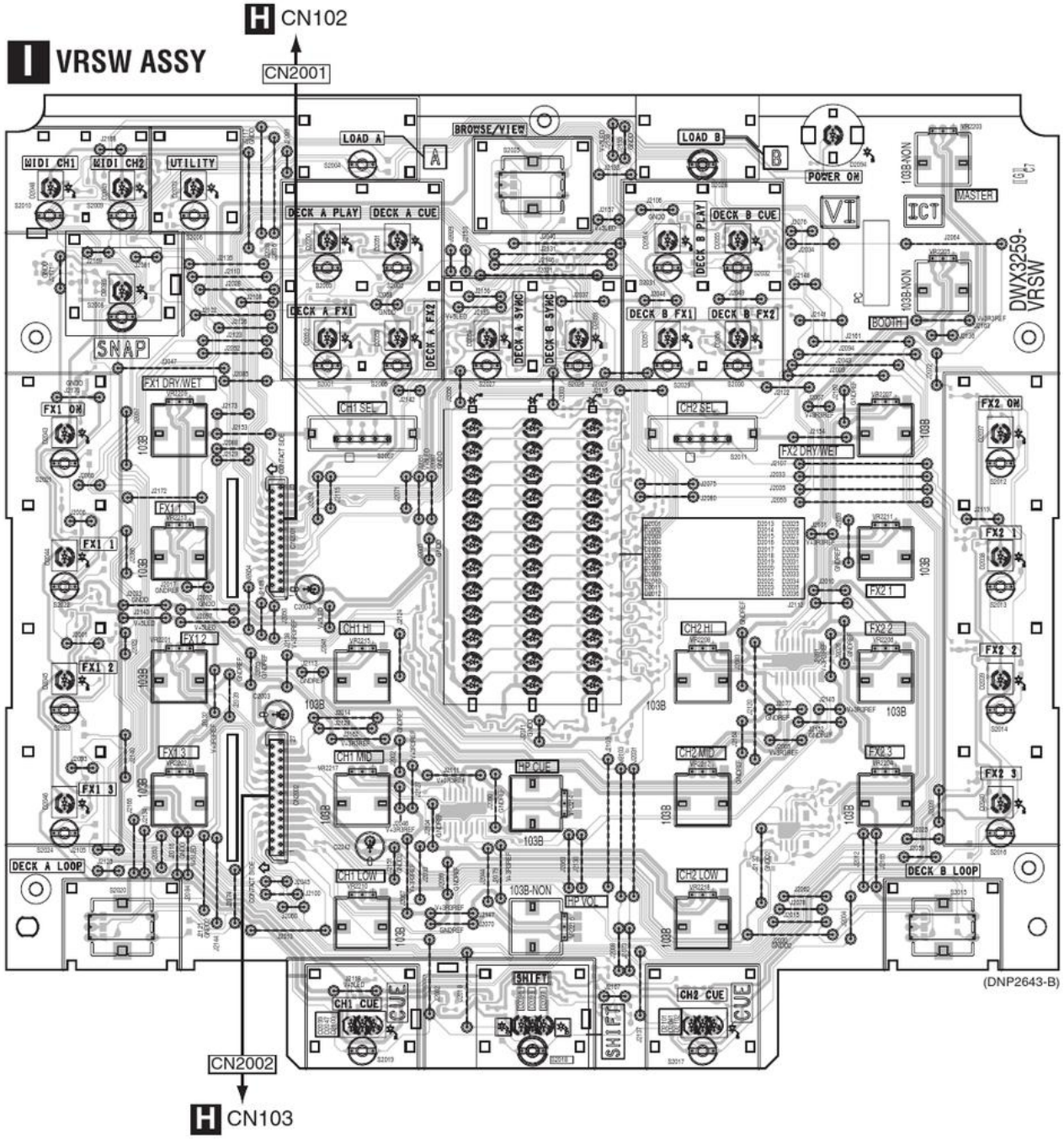

SIDE B

SIDE B

I VRSW ASSY

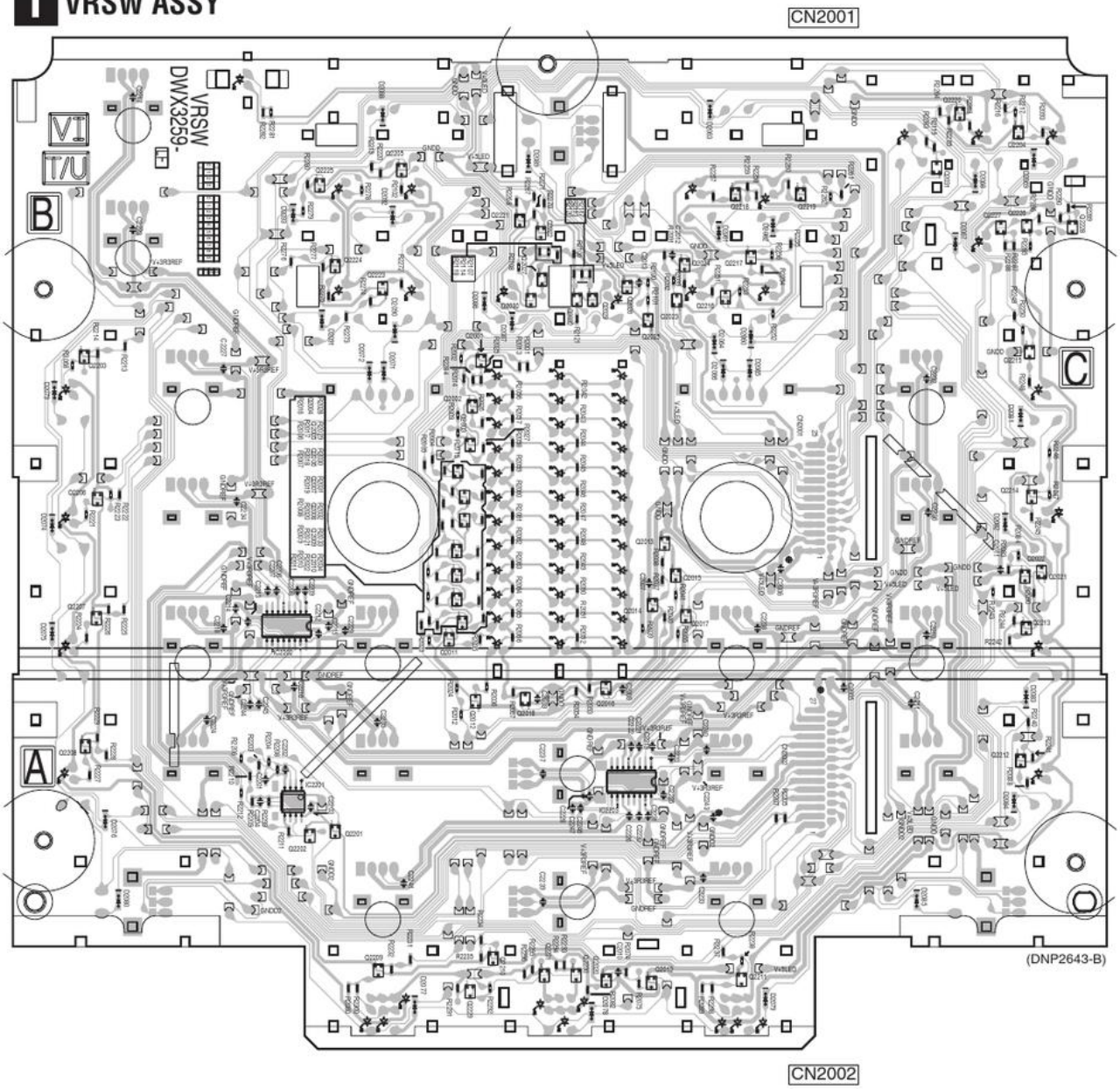

Q2203
Q2206
Q2207
Q2208

Q2225 Q2205 Q2221 Q2222
Q2224 Q2223 Q2030 Q2027
IC2202 Q2002 Q2001
IC2201 Q2004 Q2003
Q2202 Q2201 Q2006 Q2005
Q2007 Q2008
Q2009 Q2010 Q2018
Q2011 Q2012 Q2231 Q2230
Q2209 Q2229 Q2210

Q2218 Q2217 Q2219
Q2026 Q2024 Q2216
Q2032 Q2029 Q2025 Q2023
Q2013 Q2015
Q2014 Q2017
Q2016
IC2203
Q2020 Q2019 Q2211

Q2031 Q2220 Q2204
Q2227 Q2226 Q2228
Q2215
Q2214
Q2022 Q2021
Q2213
Q2212

I

11.8 PNLL ASSY

SIDE A

SIDE A

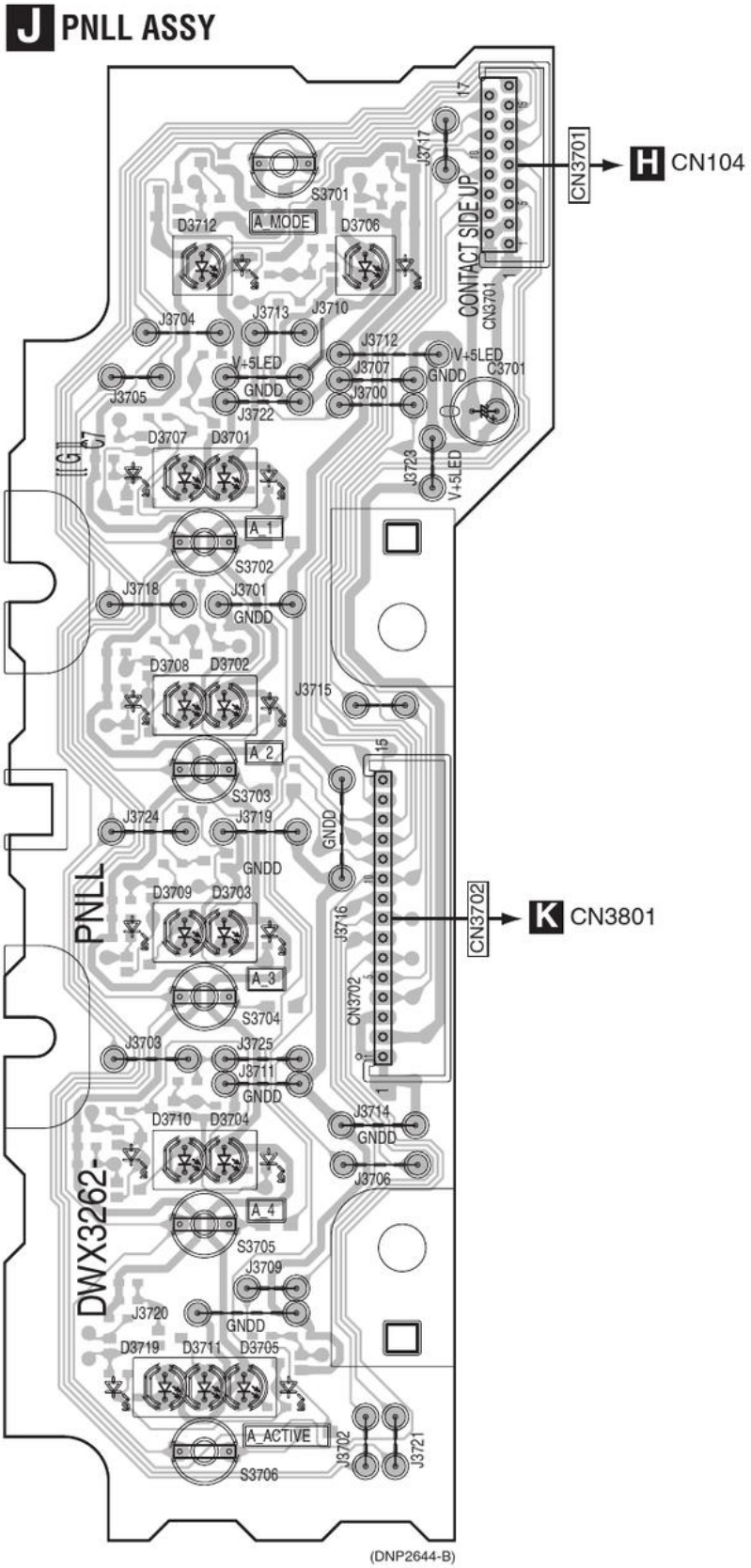

J

SIDE B

J PNLL ASSY

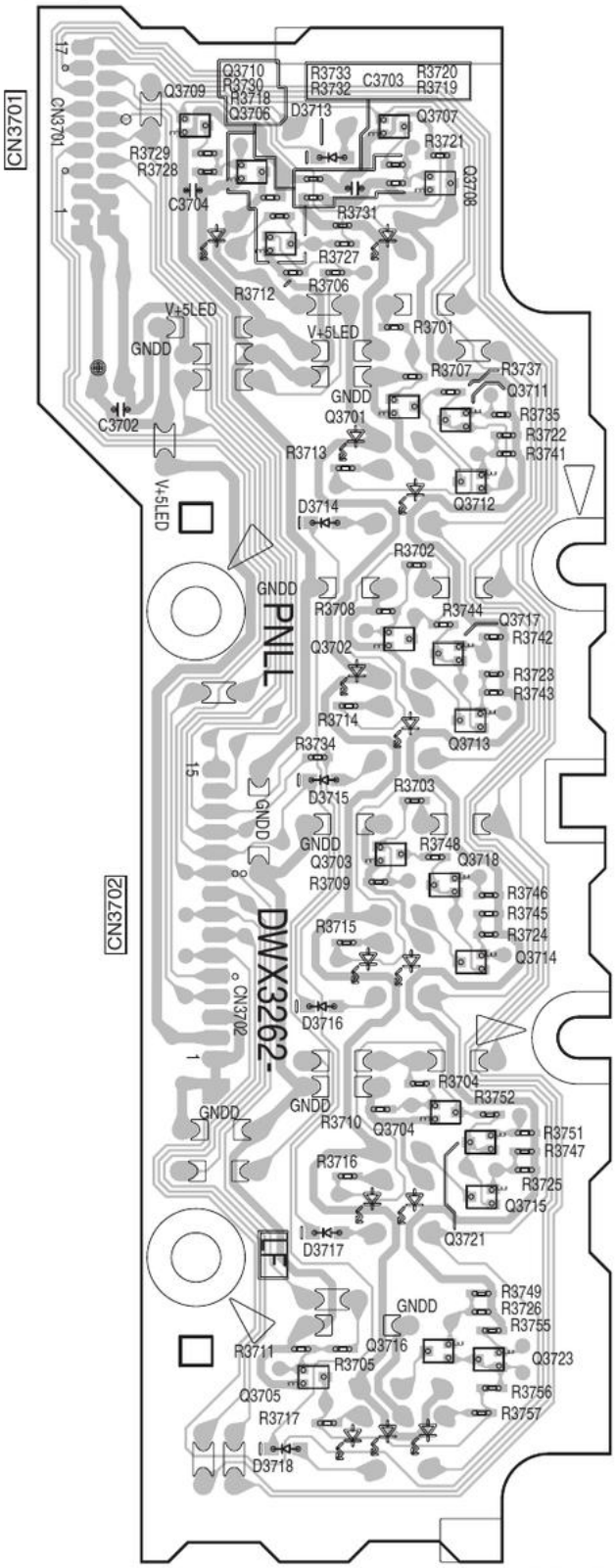

Q3709 Q3707
Q3710 Q3708
Q3706
Q3701 Q3711
Q3712
Q3702 Q3717
Q3713
Q3703
Q3718
Q3714
Q3704
Q3721
Q3715
Q3716
Q3705 Q3723

(DNP2644-B)

11.9 PNLR ASSY

SIDE A

SIDE A

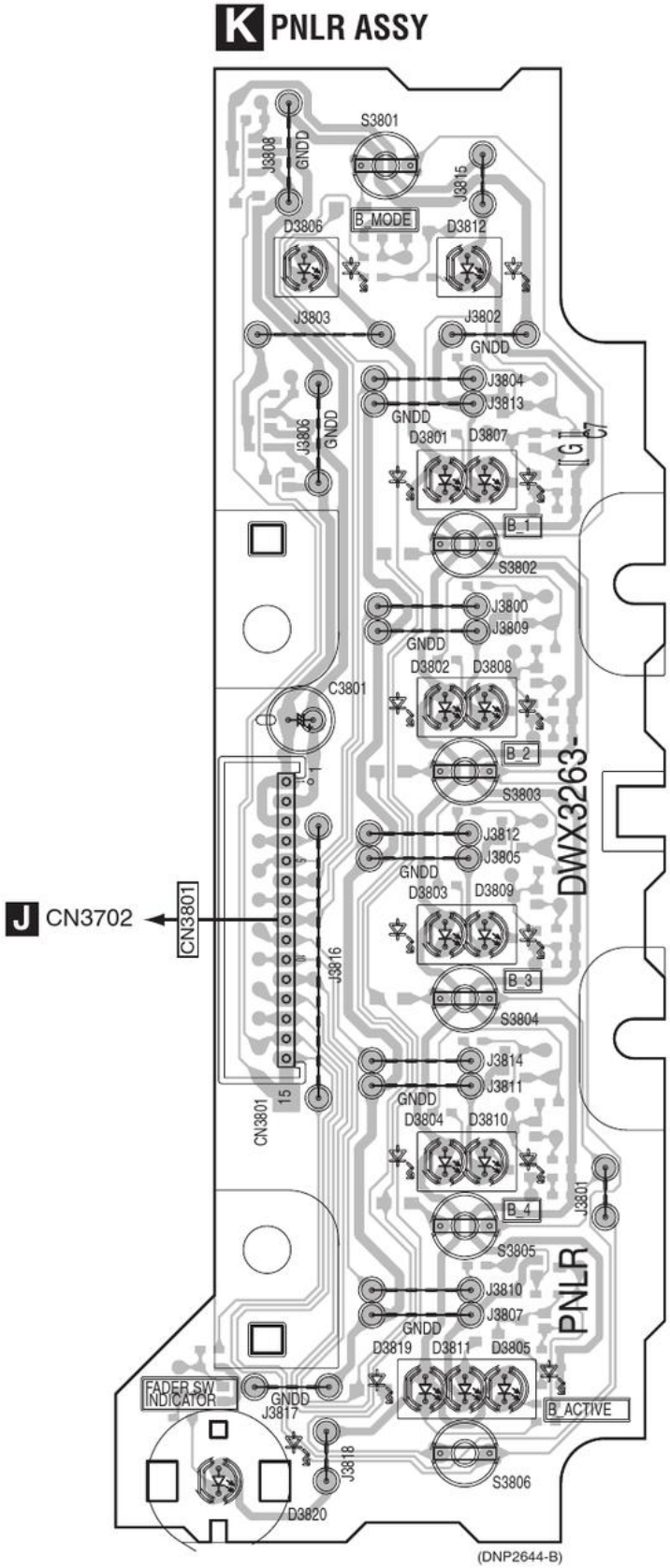

SIDE B

SIDE B

K PNLR ASSY

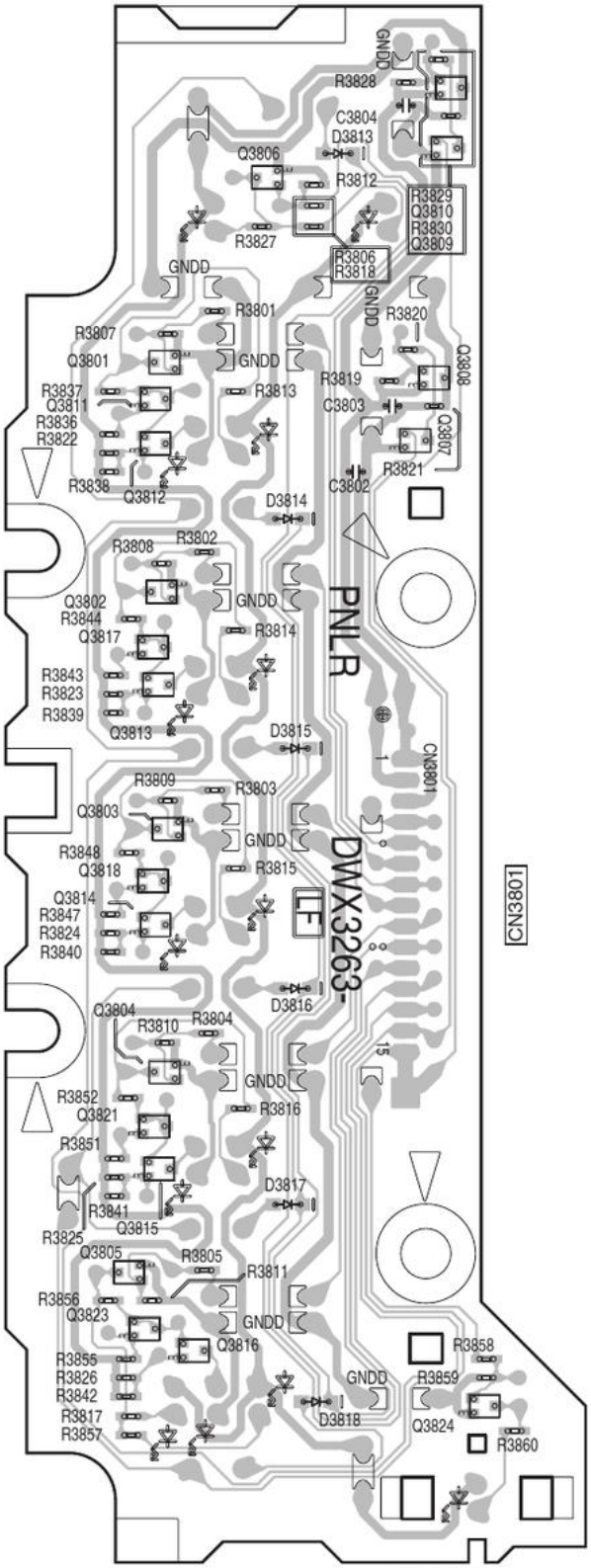

(DNP2644-B)

11.10 CHFD1, CHFD2 and CRFD ASSYS

SIDE A

SIDE A

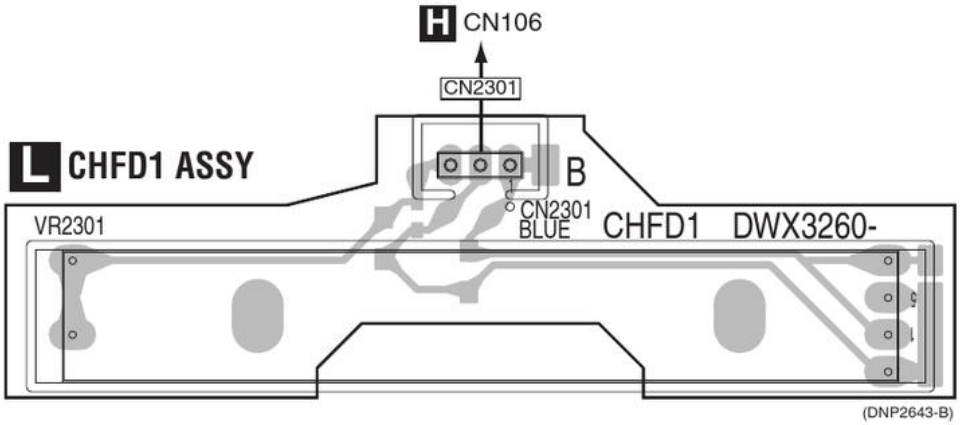

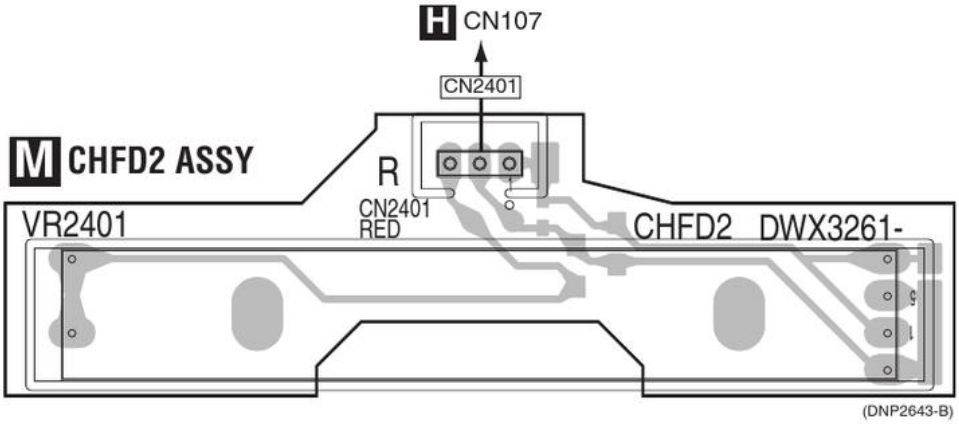

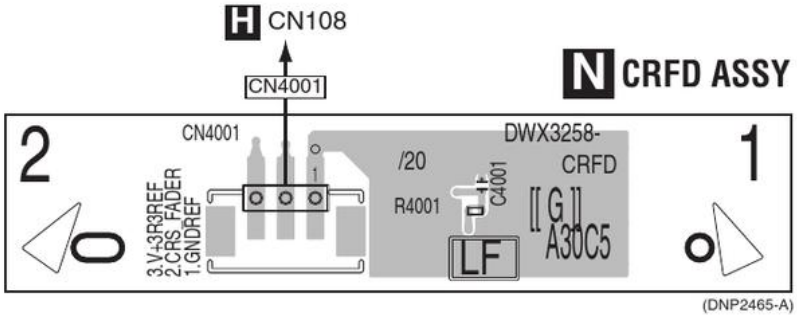

L M N

SIDE B

SIDE B

L CHFD1 ASSY

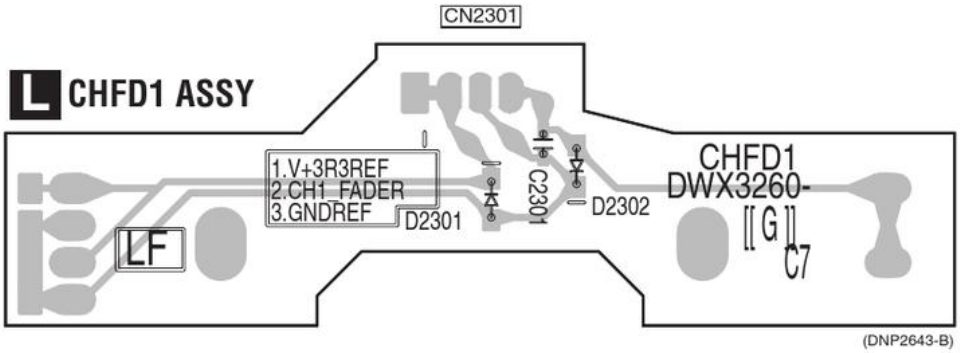

M CHFD2 ASSY

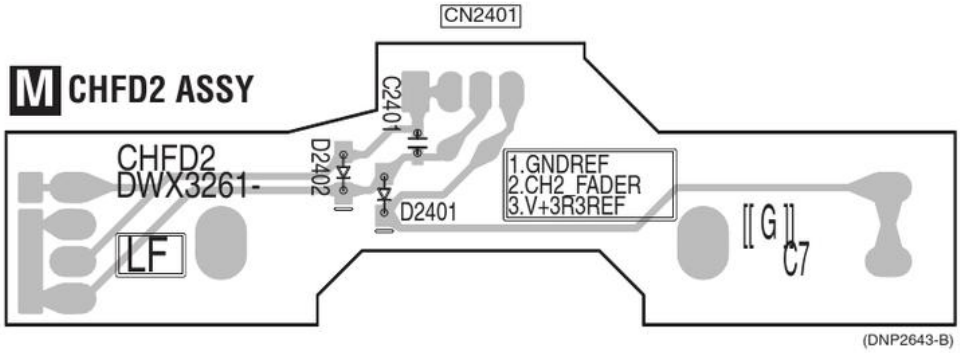

N CRFD ASSY

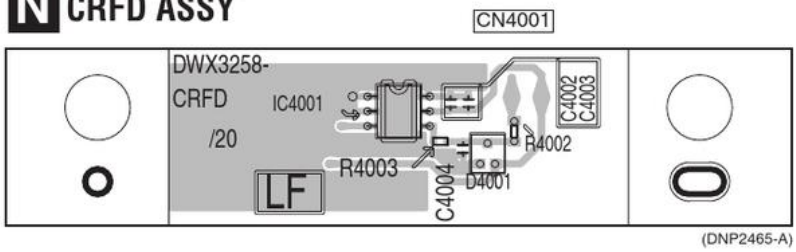

L M N

11.11 SECONDARY ASSY

SIDE A

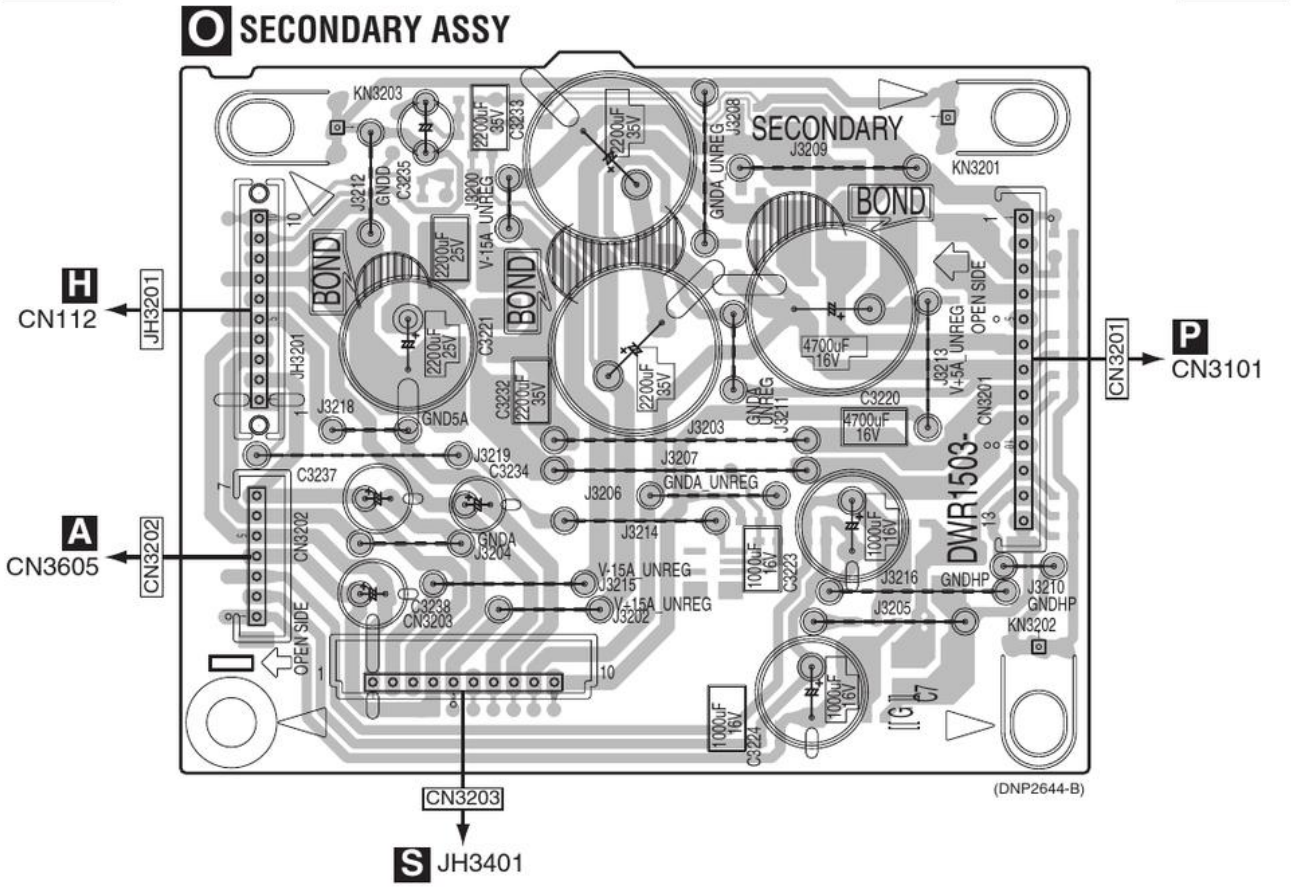

SIDE B

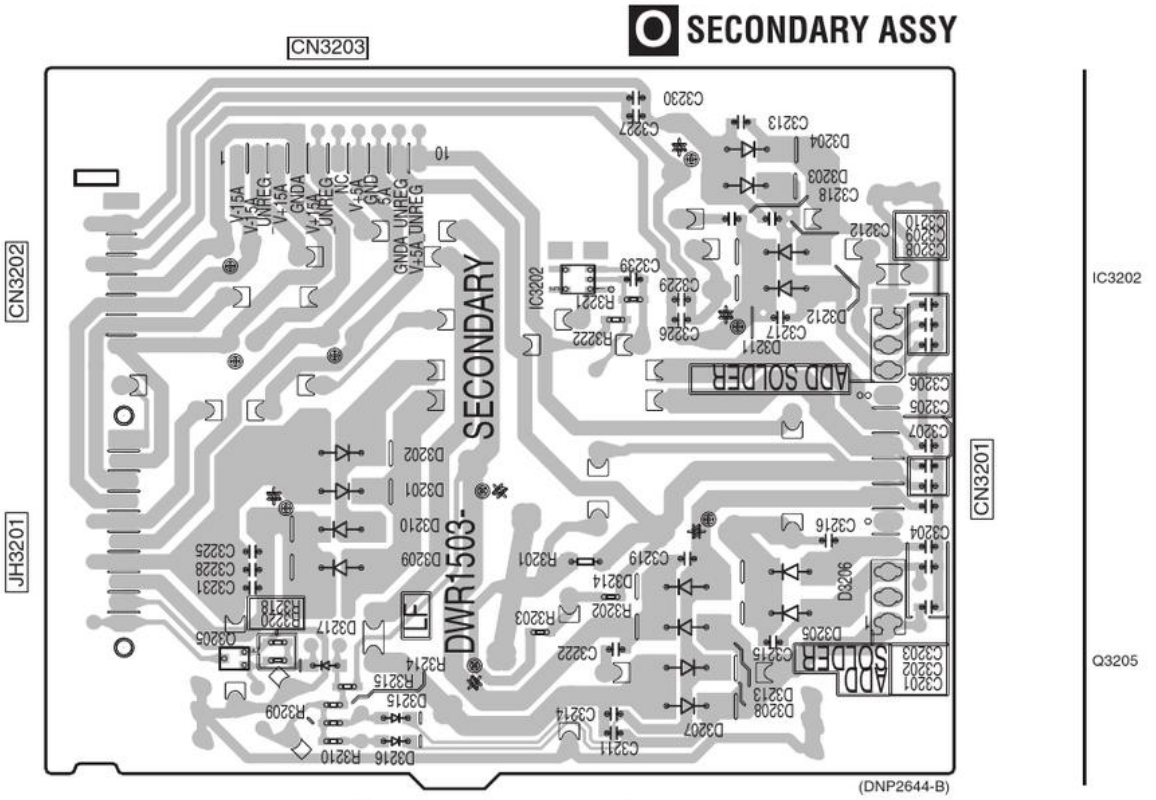

11.12 TRANS ASSY

SIDE A

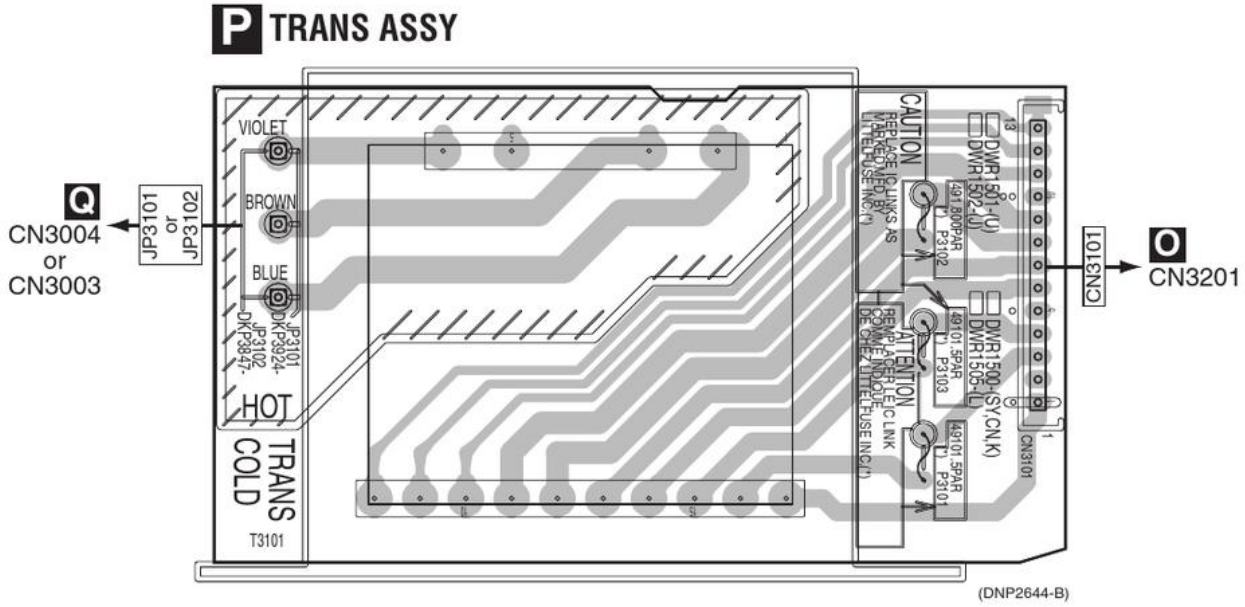

SIDE B

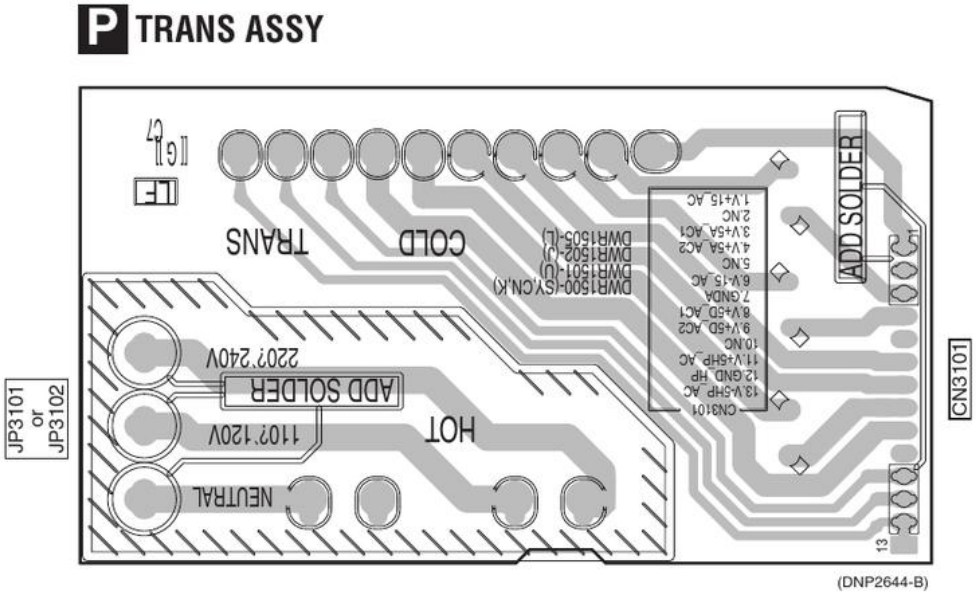

SIDE B

11.13 PRIMARY and ACSW ASSYS

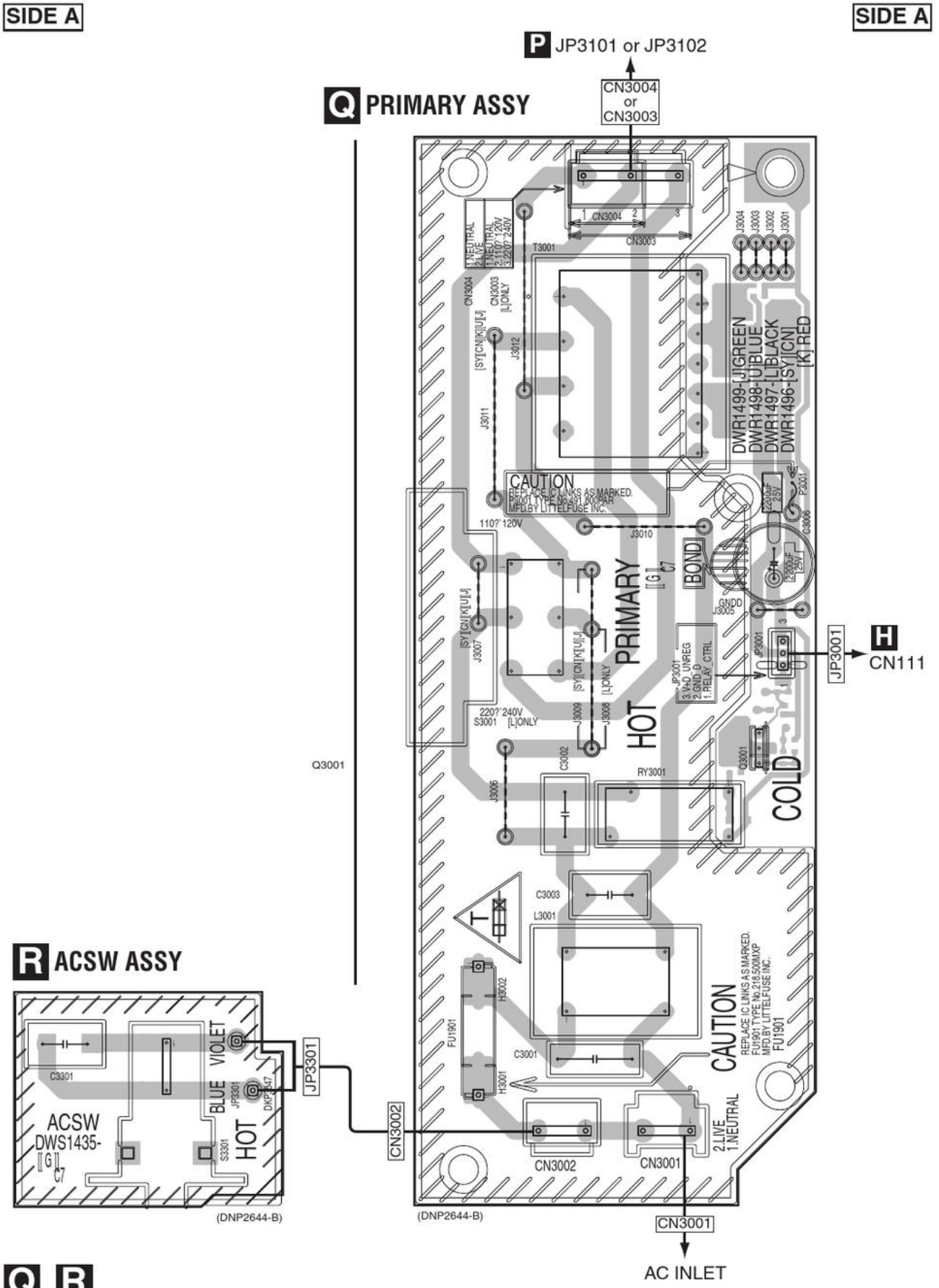

Q R

SIDE B

SIDE B

Q PRIMARY ASSY

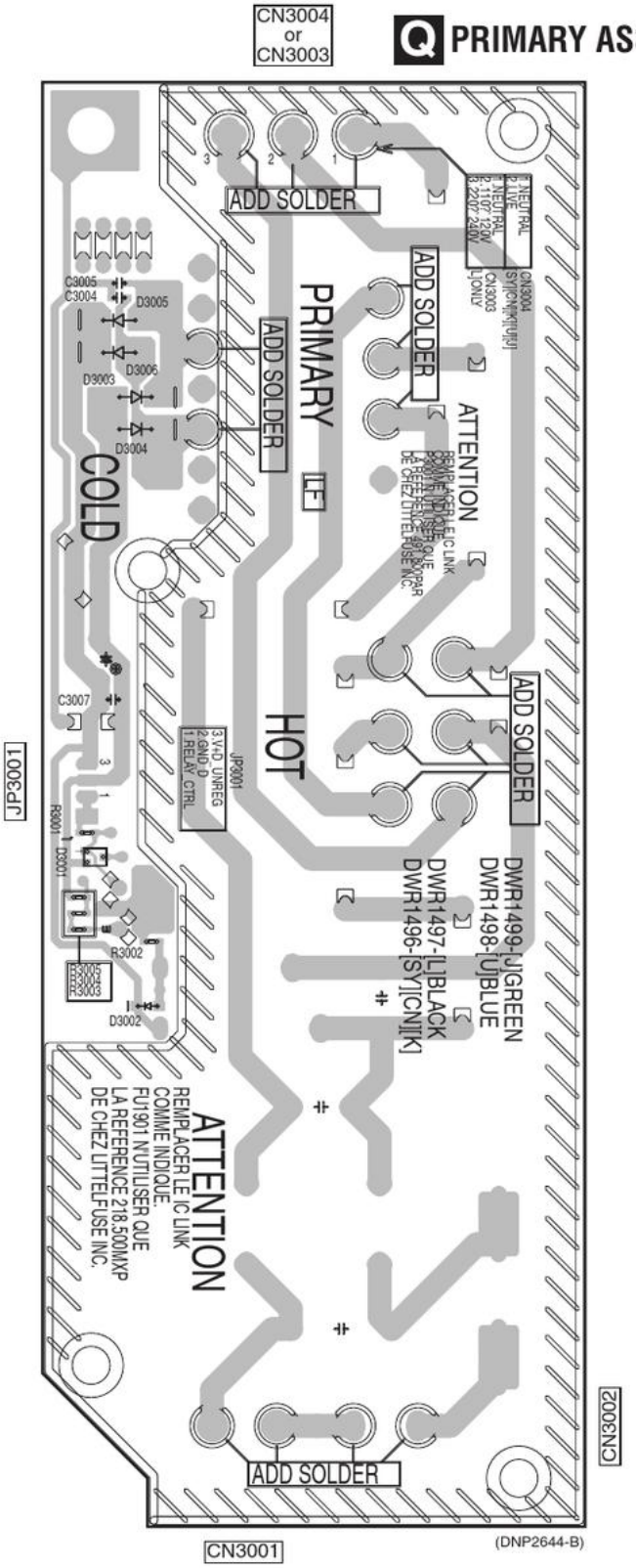

R ACSW ASSY

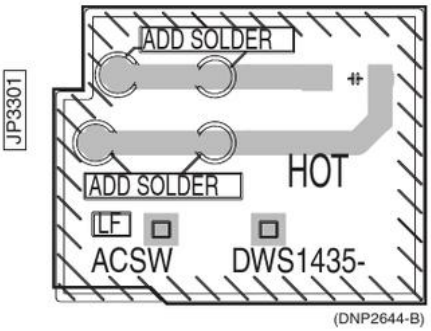

Q R

11.14 REG ASSY

SIDE A

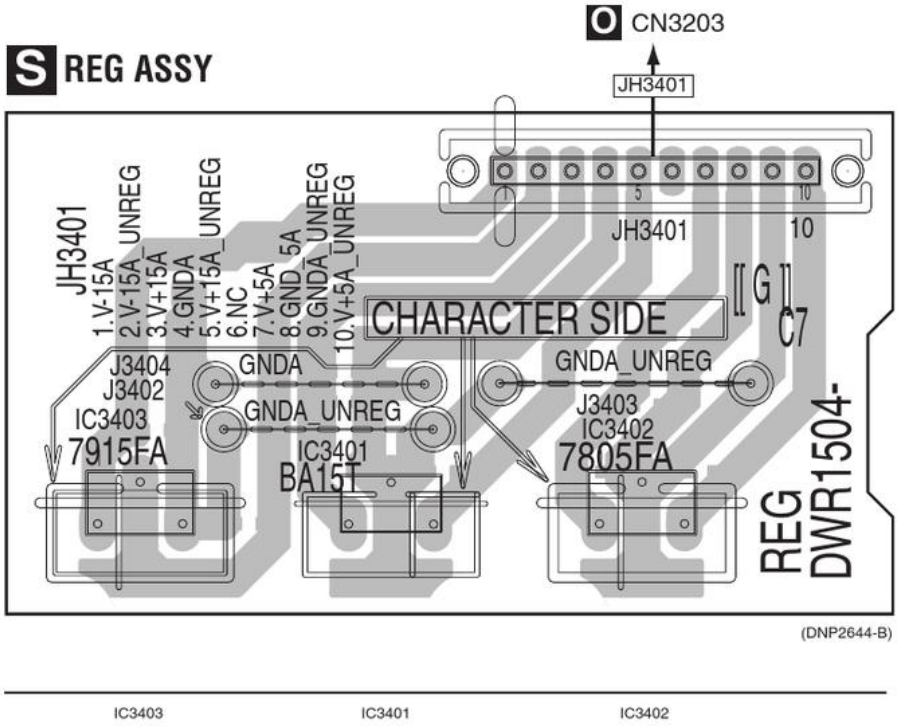

SIDE B

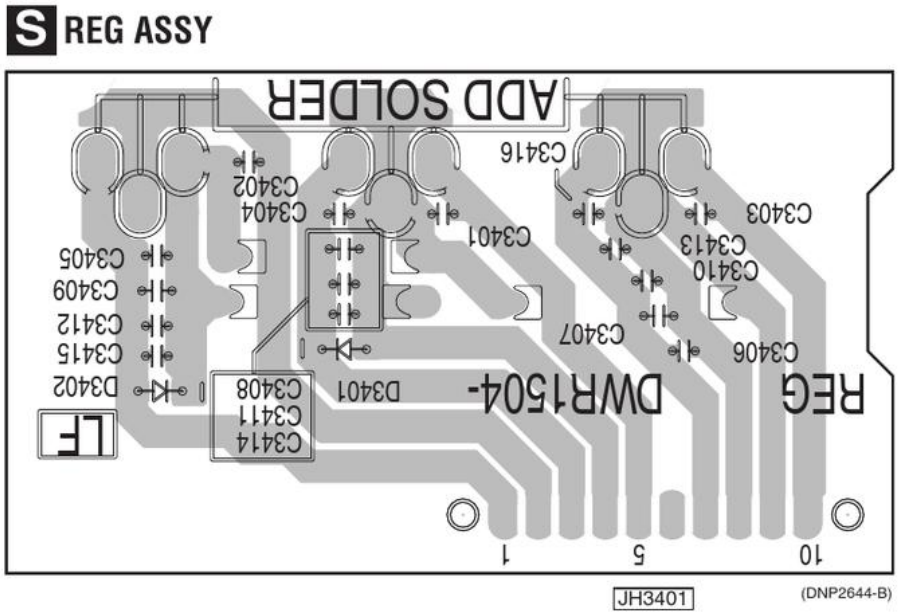

S

12. PCB PARTS LIST

NOTES: ● *Parts marked by "NSP" are generally unavailable because they are not in our Master Spare Parts List.*
● *The ⚠ mark found on some component parts indicates the importance of the safety factor of the part. Therefore, when replacing, be sure to use parts of identical designation.*
● *When ordering resistors, first convert resistance values into code form as shown in the following examples.*
Ex.1 When there are 2 effective digits (any digit apart from 0), such as 560 ohm and 47 k ohm (tolerance is shown by J = 5%, and K = 10%).

560 Ω	→	56×10^1	→	561	RD1/4PU 5 6 1 J
47 kΩ	→	47×10^3	→	473	RD1/4PU 4 7 3 J
0.5 Ω	→	R50			RN2H R 5 0 K
1 Ω	→	1R0			RS1P 1 R 0 K

Ex.2 When there are 3 effective digits (such as in high precision metal film resistors).

5.62 kΩ	→	562×10^1	→	5621	RN1/4PC 5 6 2 1 F

● *Meaning of the figures and others in the parentheses in the parts list.*
Example) IC 301 is on the point (face A, 91 of x-axis, and 111 of y-axis) of the corresponding PC board.
IC 301 (A, 91, 111) IC NJM2068V

LIST OF ASSEMBLIES

Mark	No.	Description	Part No.
NSP	1..	MAIN ASSY	DWM2437
	2..	OUTPUT ASSY	DWX3257
	2..	MCVR ASSY	DWX3264
	2..	TRM1 ASSY	DWX3268
	2..	TRM2 ASSY	DWX3269
NSP	1..	PANEL ASSY	DWM2438
	2..	VRSW ASSY	DWX3259
	2..	CHFD1 ASSY	DWX3260
	2..	CHFD2 ASSY	DWX3261
	2..	MCJK ASSY	DWX3265
	2..	FDSW ASSY	DWX3266
	2..	HPJK ASSY	DWX3267
NSP	1..	POWER ASSY (SYXJ8, KXJ5, XJCN5)	DWM2440
NSP	1..	POWER ASSY (UXJCB)	DWM2442
NSP	1..	POWER ASSY (LXJ)	DWM2441
	2..	PRIMARY ASSY (SYXJ8, KXJ5, XJCN5)	DWR1496
	2..	PRIMARY ASSY (UXJCB)	DWR1498
	2..	PRIMARY ASSY (LXJ)	DWR1497
	2..	TRANS ASSY (SYXJ8, KXJ5, XJCN5)	DWR1500
	2..	TRANS ASSY (UXJCB)	DWR1501
	2..	TRANS ASSY (LXJ)	DWR1505
	2..	SECONDARY ASSY	DWR1503
	2..	REG ASSY	DWR1504
	2..	ACSW ASSY	DWS1435
	2..	PNLL ASSY	DWX3262
	2..	PNLR ASSY	DWX3263
	2..	INPUT ASSY	DWX3282
	1..	CROSS FADER ASSY	DXA2243
NSP	2..	CRFD ASSY	DWX3258

CONTRAST OF PCB ASSEMBLIES

P TRANS ASSY

DWR1500, DWR1501 and DWR1505 are constructed the same except for the following:

Mark	Symbol and Description	DWR1500	DWR1501	DWR1505
⚠	JP3101 Board in Jumper/3P	Not used	Not used	DKP3924
⚠	JP3102 Connector Assy 2P	DKP3847	DKP3847	Not used

Q PRIMARY ASSY

DWR1496, DWR1498 and DWR1497 are constructed the same except for the following:

Mark	Symbol and Description	DWR1496	DWR1498	DWR1497
⚠	CN3004 Connector	B2P3-VH	B2P3-VH	Not used
⚠	CN3003 Connector (VH)	Not used	Not used	B3P5-VH
⚠	T3001 Transfomer	DTT1245	DTT1255	DTT1242
⚠	S3001 Voltage Selector	Not used	Not used	AKX7020

Mark	No.	Description	Part No.

PARTS LIST (DJM-T1/SYXJ8)

A INPUT ASSY

SEMICONDUCTORS

	IC	3501,3502,3507,3508	NJM4580MD
	IC	3503-3506	NJM2121MD
	IC	3601	NJM4565MD
	IC	3602	NJM4580MD
	Q	3501-3508,3601,3602	2SK209
	Q	3509,3510	LTC114EUB
	Q	3603,3604	INC2002AC1
	Q	3609,3611	2SD1859X
	Q	3610,3612	2SB1238X

MISCELLANEOUS

	JA	3501,3502 JACK	DKB1083
	CN	3501,3502 11P PLUG	XKP3065
	CN	3601 7P CONNECTOR	VKN1267
	CN	3602 L-PLUG (3P)	KM200NA3L
	CN	3603 31P CONNECTOR	VKN1291
	CN	3604 L-PLUG (6P)	KM200NA6L
	CN	3605 L-PLUG (7P)	KM200NA7L
	0	SHIELD CASE/PIN	DNF1885
⚠	P	3601,3602 PROTECTOR (400 mA)	AEK7004

RESISTORS

	R	3501-3508	RN1/16SE1000D
	R	3513-3520	RN1/16SE4702D
	R	3521,3523,3525,3527	RN1/16SE1501D
	R	3522,3524,3526,3528	RN1/16SE2401D
	R	3529-3532	RN1/16SE1501D
	R	3537-3540	RN1/16SE5600D
	R	3541-3544	RN1/16SE2703D
	R	3545-3548	RN1/16SE2202D
	R	3549-3552	RM1/16SE1003D
	R	3557-3560,3621,3622	RN1/16SE1001D
	R	3577,3578,3643	RS1/8SQ0R0J
	R	3587,3589,3591,3593	RN1/16SE2702D
	R	3588,3590,3592,3594	RN1/16SE1102D
	R	3599,3626-3628	RS1/10SR0R0J
	R	3601,3602,3644-3647	RN1/16SE5601D
	R	3603,3604,3639,3641	RN1/16SE3002D
	R	3605,3606	RN1/16SE3901D
	R	3607,3608,3613,3614	RN1/16SE1002D
	R	3619,3620	RS1/10SR68R0D
	R	3623,3624	RS2LMF150J
	R	3640,3642	RN1/16SE4701D
	Other Resistors		RS1/10SR###J

CAPACITORS

	C	3501-3508	CCSRCH102J50
	C	3509-3516,3612,3613	CCSRCH101J50
	C	3517-3520	CCSRCH471J50
	C	3521-3524	CKSRYB223K50
	C	3525,3527,3529,3531	CCSRCH331J50
	C	3526,3528,3530,3532	CEAT221M16
	C	3537-3540,3549-3552	CKSRYB104K25
	C	3541-3544,3638,3639	DCG1049
	C	3545-3548,3561-3564	CEANP100M35
	C	3553,3556,3559,3560	CEAT100M50
	C	3554,3555,3557,3558	CKSRYB104K25
	C	3565,3566,3572-3574	CKSRYB104K25
	C	3577,3607,3608,3615	CKSRYB104K25
	C	3579-3582	CFTLA123J50
	C	3601,3602,3609,3610	CEANP100M35
	C	3603,3604	CCSRCH681J50
	C	3605,3606	CCSRCH470J50
	C	3614,3617,3634,3635	CEAT100M50
	C	3616,3628,3629	CKSRYB104K25
	C	3620,3625,3636,3637	CEAT101M16
	C	3621-3624,3630,3631	CKSRYB104K16
	C	3626,3627	CEANP471M16
	C	3632,3633	CKSQYB105K25

B HPJK ASSY

MISCELLANEOUS

	JA	2701 HEADPHONE JACK	DKN1622
	KN	2701 EARTH TERMINAL	AKF7002
	CN	2701 L-PLUG (3P)	KM200NA3L

RESISTORS

	All Resistors		RS1/10SR###J

CAPACITORS

	C	2701,2702	CKSRYB104K16
	C	2703	CFTLA104J50

C TRM1 ASSY

MISCELLANEOUS

	VR	2801 ROTARY VR	DCS1118
	CN	2801 11P SOCKET	XKP3076

RESISTORS

	All Resistors		RS1/16SS###J

D TRM2 ASSY

MISCELLANEOUS

	VR	2901 ROTARY VR	DCS1118
	CN	2901 11P SOCKET	XKP3076

RESISTORS

	All Resistors		RS1/16SS###J

E FDSW ASSY

MISCELLANEOUS

	S	2601 SLIDE SWITCH	DSH1050
	S	2602 SLIDE SWITCH	DSH1036
	CN	2601 L-PLUG (4P)	KM200NA4L

F MCJK ASSY

SEMICONDUCTORS

	IC	2501	NJM4580MD
	IC	2502,2503	NJM2121MD
	Q	2501,2502	2SK209
	Q	2503	LTC114EUB
	D	2505	UDZS15(B)

MISCELLANEOUS

	L	2501,2502 FERRITE CORE	VTF1093
	JA	2501 CANON CONNECTOR	DKB1108

Mark	No.	Description	Part No.
	JA 2502	RCA JACK/2P	DKB1114
	CN 2501	17P CONNECTOR	VKN1248
	CN 2502	PLUG (4P)	KM200NA4
	CN 2503	6P CONNECTOR	VKN1237
	CN 2504	PLUG (6P)	KM200NA6
	0	MIC SHIELD	DNF1849
RESISTORS			
	R 2501,2517		RN1/16SE1202D
	R 2502,2516		RN1/16SE1000D
	R 2503,2504		RN1/16SE2201D
	R 2505,2506		RN1/16SE1502D
	R 2507,2508		RN1/16SE4702D
	R 2509,2511,2514,2515		RN1/16SE4701D
	R 2510,2513		RN1/16SE1501D
	R 2512		RN1/16SE1800D
	Other Resistors		RS1/10SR###J
CAPACITORS			
	C 2501,2502		CCSRCH102J50
	C 2509,2511,2512		CCSRCH471J50
	C 2513		CEANP100M35
	C 2514,2515,2518,2519		CKSRYB104K25
	C 2516,2517		DCE1020
	C 2520,2521,2524,2525		CEAT100M50
	C 2522,2523		CKSRYB104K25
	C 2526,2527		CFTLA123J50

G MCVR ASSY

Mark	No.	Description	Part No.
SEMICONDUCTORS			
	IC 1901,1902		NJM4565MD
MISCELLANEOUS			
	VR 1901	ROTARY VR	DCS1072
	VR 1902,1903	VARIABLE RESISTOR	DCS1100
	S 1901	SLIDE SWITCH	DSH1050
	CN 1901	17P CONNECTOR	VKN1248
RESISTORS			
	R 1901-1904		RN1/16SE1003D
	R 1905-1908,1911,1912		RN1/16SE2701D
	R 1909,1910,1913,1914		RN1/16SE1001D
	R 1916,1918		RN1/16SE3301D
	R 1917,1919		RN1/16SE1001D
CAPACITORS			
	C 1901,1902,1905,1906		CEJQNP100M35
	C 1903,1904,1909,1910		CKSRYB104K25
	C 1907,1908		CKSRYB103K50
	C 1911,1917		CEJQ100M35
	C 1912-1915,1919,1920		CKSRYB104K25
	C 1916,1918		CCSRCH220J50

H OUTPUT ASSY

Mark	No.	Description	Part No.
SEMICONDUCTORS			
	IC 101		R5S72630P200FP
	IC 102,104,107		TC74VHC08FK
	IC 103		S-80927CNMC-G8X
	IC 105		TC7SU04FU
	IC 106,140		TC7SH08FUS1
	IC 108		IS42S16400F-6TL
	IC 109		DYW1804
	IC 110,111,116,117		NJM4580MD
	IC 113,119,137		NJM4565MD
	IC 114,120		PCM1804DB
	IC 115,121		TC7WH157FK
	IC 122		AK5358AET
	IC 123		PCM1691DCA
	IC 124		TC74VHC4052AFK
⚠	IC 125		NJM2393M
	IC 126		S-80942CNMC-G9C
⚠	IC 127,130,131		BH33FB1WG
⚠	IC 128		BD9326EFJ
⚠	IC 129		BD9106FVM
	IC 132,133,136		NJM4580MD
	IC 134,135		NJM2114D
	IC 138,139		NJM4580DD
	Q 101,103,112		LTC114EUB
	Q 102,104		LTA114EUB
	Q 105-111,115		LSA1576UB
	Q 113,140		LTC124EUB
	Q 114		LSC4081UB
	Q 120-123,132-135		2SK209
	Q 124-131,136-139		INC2002AC1
	Q 141		LTA124EUB
	Q 144-147		INC2002AC1
	D 103-106,109-114		1SS302
⚠	D 115		RB160L-40
⚠	D 116		CMS03
	D 117,126		1SS352
	D 135-138		RSB18V
MISCELLANEOUS			
	L 101	COIL	ATH7015
	L 102	INDUCTOR (470 UH)	DTL1123
	L 103	INDUCTOR	CTH1253
	L 104	INDUCTOR	BTH1112
	F 101,102	EMI FILTER	DTL1106
	JA 101	USB CONNECTOR	DKN1237
	JA 102,103	CANON CONNECTOR	DKB1093
	JA 104	PIN JACK (2P)	AKB7181
	JA 105,106	HEADPHONE JACK	DKN1622
	KN 101-104	EARTH TERMINAL	AKF7002
	S 101	SLIDE SWITCH	CSH1042
	X 101	CRYSTAL (33 MHz)	DSS1193
	X 102	CRYSTAL (48 MHz)	ASS7099
	X 103	CRYSTAL (24.576 MHz)	DSS1204
	CN 102	25P CONNECTOR	VKN1256
	CN 103	27P CONNECTOR	VKN1258
	CN 104	17P CONNECTOR	VKN1248
	CN 105	6P CONNECTOR	VKN1237
	CN 106	PLUG (3P)	KM200NA3E
	CN 107	PLUG (3P)	KM200NA3R
	CN 108,111	PLUG (3P)	KM200NA3
	CN 109	7P CONNECTOR	VKN1238
	CN 110	31P CONNECTOR	VKN1262
	CN 112	10PJUMPER CONNECTOR	52147-1010
	0	CANON SHIELD	DNF1789
⚠	P 101,102	PROTECTOR (400 mA)	AEK7004
⚠	P 103,104	PROTECTOR (1 A)	AEK1073

Mark	No. Description	Part No.
RESISTORS		
	R 101,102,298	RAB4CQ103J
	R 104-108,128,131	RAB4CQ101J
A	R 109-113,124,202	RAB4CQ680J
	R 132,136,140,143	RAB4CQ330J
	R 146	RAB4CQ330J
	R 153,155,159,311	RS1/10SR103J
	R 157	RS1/16SS5601F
	R 158,163,245,246	RS1/10SR0R0J
	R 165,196,197	RAB4CQ101J
	R 173,178	RAB4CQ472J
	R 203,209,210	RAB4CQ680J
	R 211-218,251-258	RN1/16SE1101D
B	R 222-225,262-265	RN1/16SE2000D
	R 226-229,266-269	RN1/16SE2200D
	R 230-233,270-273	RN1/16SE1001D
	R 236,239,240,243	RN1/16SE1201D
	R 237,238,241,242	RN1/16SE2401D
	R 276,279,280,283	RN1/16SE1201D
	R 277,278,281,282	RN1/16SE2401D
	R 285,286,295,297	RS1/10SR0R0J
	R 291,292	RN1/16SE6801D
	R 293,294	RN1/16SE1301D
	R 301,304,453,454	RS1/10SR0R0J
C	R 312,451,452	RS1/10SR183J
	R 313,317,331,332	RS1/10SR332J
	R 314	RS1/4SAR82J
	R 315,320,333,334	RS1/10SR101J
	R 318	RS1/16SS3302D
	R 319	RS1/16SS1102D
	R 322,329	RS1/10SR272J
	R 323,330,587	RS1/10SR103J
	R 335	RS1/4SA0R0J
	R 345,349	RS1/16SS1002D
	R 346	RS1/16SS2002D
D	R 348	RS1/16SS4702D
	R 350,541-543,584	RS1/8SQ0R0J
	R 351,352,355,356	RS1/10SR473J
	R 353,354,572,573	RS1/10SR223J
	R 357-364	RN1/16SE3301D
	R 365-372,381-388	RN1/16SE2402D
	R 373-380	RN1/16SE3001D
	R 389-396	RN1/16SE2701D
	R 397,399,401,403	RN1/16SE2201D
	R 398,400,402,404	RN1/16SE1002D
	R 405-412,439-446	RN1/16SE5601D
E		
	R 418,420,588,590	RN1/16SE1002D
	R 423,425,427,429	RN1/16SE4301D
	R 424,426,428,430	RN1/16SE1501D
	R 433-438,494,497	RD1/2VM331J
	R 447,448,562,563	RS1/10SR473J
	R 449,450,463,464	RS1/10SR474J
	R 455-458,515-518	RS1/10SR183J
	R 473,474	RN1/16SE5101D
	R 475,476,479,480	RN1/16SE9102D
	R 477,478,481,482	RN1/16SE4701D
F	R 483,484,544,582	RS1/10SR0R0J
	R 485-492	RN1/16SE3601D
	R 493,496,499,502	RN1/16SE4301D
	R 495,498,501,504	RN1/16SE1501D

Mark	No. Description	Part No.
	R 500,503	RD1/2VM331J
	R 505-512	RN1/16SE5601D
	R 513,514	RS1/10SR474J
	R 585	RS1/8SQ0R0J
	R 586,618,620	RS1/10SR0R0J
	R 589,591	RN1/16SE3302D
	R 603	RS1/10SR102J
	R 606-609	RS1/10SR473J
	R 615	RS1/10SR101J
	Other Resistors	RS1/16SS###J
CAPACITORS		
	C 101,102,119,120	CKSSYB103K16
	C 103,104,106,108	CKSRYB104K16
	C 105,107,109,111	CCSRCH102J50
	C 110,112,114-118	CKSRYB104K16
	C 113,121,123,129	CCSRCH102J50
	C 122,124-126	CKSRYB104K16
	C 127,128,169,199	CKSSYB103K16
	C 130,134,147,157	CCSRCH102J50
	C 131-133,140,146	CKSRYB104K16
	C 135-139,141-145	CKSSYB104K10
	C 148,153-155,158	CKSRYB104K16
	C 149-151,171,186	CKSSYB104K10
	C 159,163,166,175	CCSRCH102J50
	C 160,161,164,165	CKSRYB104K16
	C 162,167,194,201	CCSSCH100D50
	C 168,172-174,176	CKSRYB104K16
	C 170,226,259,260	CKSSYB102K50
	C 177,179,181,184	CCSRCH102J50
	C 178,180,183,188	CKSRYB104K16
	C 182,187,193,200	CKSRYB103K50
	C 185,190,196,206	DCH1201
	C 189,202,203,207	CKSSYB104K10
	C 191,198,622	CCSRCH102J50
	C 192	CKSSYB472K50
	C 195,204,252,292	CKSRYB104K16
	C 205,220,264,304	CKSSYB103K16
	C 208-212,215,216	CCSSCH471J50
	C 213,217,219	CKSSYB104K10
	C 214,218,635,638	CCSSCH100D50
	C 221-225,227-230	CKSSYB104K10
	C 237,243,253,258	CEAT100M50
	C 238-241,278-281	CKSRYB104K25
	C 245-248,285-288	CCSRCH101J50
	C 250,254,255,257	CKSSYB104K10
	C 256,263,296,303	CKSSYB272K50
	C 261,267,277,283	CEAT100M50
	C 262,265,266,268	CKSSYB104K10
	C 270,290,294,295	CKSSYB104K10
	C 293,298,301,307	CEAT100M50
	C 297,302,305,306	CKSSYB104K10
	C 299,300,322,326	CKSSYB102K50
	C 308,310,314,315	CKSSYB104K10
	C 311,312,328,329	CEANP100M35
	C 313,320,325,332	CEAT100M50
	C 316,350	CEAT470M25
	C 317,318,321,324	CKSSYB104K10
	C 319,323,336,337	CKSSYB103K16
	C 327,583,598,611	CKSSYB102K50

Mark	No.	Description	Part No.
	C	330,331,578,584	CKSRYB105K10
	C	333	CEAT100M50
	C	334,338-340	CKSSYB104K10
	C	341-344,402-405	CCSSCH471J50
	C	345-349,364,367	CKSSYB104K10
	C	351,369	CCG1236
	C	352,361,377	CKSRYB104K16
	C	353,354,358,368	CKSRYB104K25
	C	355	CCSRCH560J50
	C	356	CKSSYB473K16
	C	357,359,414,418	CEAT101M25
	C	360	CCSSCH221J50
	C	362	CEAT221M16
	C	363,374,384,389	CEAT101M16
	C	365,375,380,381	DCH1201
	C	370,415-417,419	CKSRYB104K25
	C	371,373,378,382	CKSSYB104K10
	C	372,392,395	CCG1205
	C	376	CKSSYB222K50
	C	379,470,471	CCSRCH561J50
	C	383	DCH1201
	C	385	CKSQYB105K25
	C	387,388,391,393	CKSSYB104K10
	C	394,397	CEAT101M16
	C	396,510-512,514	CKSSYB104K10
	C	398-401	CCSRCH222J50
	C	406-413	CCSRCH680J50
	C	420-423	DCH1323
	C	430,435,445,446	CEHAZL101M25
	C	432,433,437,438	CCSRCH101J50
	C	440,447,474,477	CEAT101M25
	C	448-451,478-481	CCSRCH101J50
	C	452,453	CEANP100M35
	C	462-467,496-499	DCE1018
	C	468,469	DCG1049
	C	472,473	CCSRCH150J50
	C	475,476,585-594	CKSRYB104K25
	C	482,485,488,489	CEAT101M25
	C	490-493,572	CCSRCH101J50
	C	505-508	CKSRYB104K16
	C	515,516,602	CKSRYB103K50
	C	519,568-571,575	CKSSYB104K10
	C	521-524	CKSRYB473K50
	C	525-529,595-597	CKSSYB103K16
	C	530-537	CEANP470M35
	C	538-545,579-582	CCSSCH471J50
	C	603,604	CKSSYB103K16
	C	609,610,614	CKSSYB104K10
	C	612	CKSRYB105K10
	C	613,615-618	CKSSYB102K50
	C	619-621	CCSSCH101J50
	C	634,636,637	CCSRCH100D50
	C	639	CCSSCH100D50
	C	640,642-644	CKSSYB105K6R3
	C	645-651	CKSSYB223K16

I VRSW ASSY

SEMICONDUCTORS

Mark	No.	Description	Part No.
	IC	2201	NJM2903M
	IC	2202,2203	TC74HC4052AF
	Q	2001-2012,2203-2225	LSC4081UB
	Q	2013,2015,2017,2019	LTC143EUB
	Q	2014,2016,2018,2020	2SB1689
	Q	2021,2023,2025	LTC143EUB
	Q	2022,2024,2026	2SB1689
	Q	2027,2029,2030,2032	LSA1576UB
	Q	2031	LTA114EUB
	Q	2201	LTA143EUB
	Q	2226,2227,2229-2231	LSA1576UB
	Q	2228	LSC4081UB
	D	2001,2013,2025,2070	SLI-343U8RC(HJKL)
	D	2002-2005,2014-2017	SLI-343YYW(TUV)
	D	2006-2012,2018-2024	SLR-343MC(NPQ)
	D	2026-2029,2037-2040	SLI-343YYW(TUV)
	D	2030-2036,2094	SLR-343MC(NPQ)
	D	2043-2046,2048-2057	SLI-343YYW(TUV)
	D	2058,2059,2095	SLR343BC4T(JK)
	D	2060-2069,2071-2093	1SS352
	D	2096,2097	SLR343WBC7T(MN)
	D	2099-2102	SLI-343YYW(TUV)

MISCELLANEOUS

Mark	No.	Description	Part No.
	VR	2201,2202,2204 ROTARY VR	DCS1116
	VR	2203,2205,2216 ROTARY VR	DCS1117
	VR	2206-2215,2217,2218 ROTARY VR	DCS1116
	S	2001-2006,2008-2010 TACT SWITCH	DSG1079
	S	2007,2011 SLIDE SWITCH	DSH1058
	S	2012-2014,2016-2019 TACT SWITCH	DSG1079
	S	2015,2020,2025 ENCODER	DSX1082
	S	2021-2024,2026-2032 TACT SWITCH	DSG1079
	CN	2001 25P CONNECTOR	VKN1256
	CN	2002 27P CONNECTOR	VKN1258

RESISTORS

Mark	No.	Description	Part No.
		All Resistors	RS1/10SR###J

CAPACITORS

Mark	No.	Description	Part No.
	C	2003,2004	CEJQ101M16
	C	2005-2013,2201-2203	CKSRYB104K16
	C	2206-2209,2213-2216	CKSRYB471K50
	C	2210-2212,2217,2218	CKSRYB104K16
	C	2219-2222,2226,2228	CKSRYB471K50
	C	2223-2225,2227,2229	CKSRYB104K16
	C	2230,2231	CKSRYB471K50
	C	2232-2241,2243	CKSRYB104K16

J PNLL ASSY

SEMICONDUCTORS

Mark	No.	Description	Part No.
	Q	3701-3706	LSC4081UB
	Q	3707,3709	LTC143EUB
	Q	3708,3710	2SB1689
	Q	3711-3718,3721,3723	LSA1576UB
	D	3701-3706,3719	SLI-343YYW(TUV)
	D	3707-3712	SLR343EC4T(LMN)
	D	3713-3718	1SS352

Mark	No.	Description	Part No.
		MISCELLANEOUS	
	S 3701-3706	TACT SWITCH	DSG1079
	CN 3701	17P CONNECTOR	VKN1277
	CN 3702	L-PLUG (15P)	KM200NA15L
		RESISTORS	
	All Resistors		RS1/10SR###J
		CAPACITORS	
	C 3701		CEJQ101M16
	C 3702-3704		CKSRYB104K16

K PNLR ASSY

Mark	No.	Description	Part No.
		SEMICONDUCTORS	
	Q 3801-3806,3824		LSC4081UB
	Q 3807,3809		LTC143EUB
	Q 3808,3810		2SB1689
	Q 3811-3818,3821,3823		LSA1576UB
	D 3801-3806,3819		SLI-343YYW(TUV)
	D 3807-3812		SLR343EC4T(LMN)
	D 3813-3818		1SS352
	D 3820		SLI-343U8RC(HJKL)
		MISCELLANEOUS	
	S 3801-3806	TACT SWITCH	DSG1079
	CN 3801	L-PLUG (15P)	KM200NA15L
		RESISTORS	
	All Resistors		RS1/10SR###J
		CAPACITORS	
	C 3801		CEJQ101M16
	C 3802-3804		CKSRYB104K16

L CHFD1 ASSY

Mark	No.	Description	Part No.
		SEMICONDUCTORS	
	D 2301,2302		1SS352
		MISCELLANEOUS	
	VR 2301	SLIDE VR	DCV1027
	CN 2301	PLUG (3P)	KM200NA3E
		CAPACITORS	
	C 2301		CKSRYB104K16

M CHFD2 ASSY

Mark	No.	Description	Part No.
		SEMICONDUCTORS	
	D 2401,2402		1SS352
		MISCELLANEOUS	
	VR 2401	SLIDE VR	DCV1027
	CN 2401	PLUG (3P)	KM200NA3R
		CAPACITORS	
	C 2401		CKSRYB104K16

N CRFD ASSY

* When replacement of the CRFD Assy is required, be sure to order the CROSS FADER Assy (DXA2243) which is a parent Assy.

O SECONDARY ASSY

Mark	No.	Description	Part No.
		SEMICONDUCTORS	
	IC 3202		PST3228
	Q 3205		LSC4081UB
⚠	D 3201-3204,3207-3214		1SR154-400
⚠	D 3205,3206		RB160L-40
	D 3215-3217		1SS352
		MISCELLANEOUS	
	J 3201	10PJUMPER WIRE	D20PDY1010E
	KN 3202,3203	EARTH TERMINAL	AKF7002
	CN 3201	CONNECTOR	B13B-EH
	CN 3202	PLUG (7P)	KM200NA7
	CN 3203	10PJUMPER CONNECTOR	52147-1010
	JH 3201	10P CABLE HOLDER	51048-1000
		RESISTORS	
	R 3201		RS1/4SA0R0J
	R 3221		RN1/16SE1502D
	R 3222		RN1/16SE2202D
	Other Resistors		RS1/10SR###J
		CAPACITORS	
	C 3201-3210		CKSRYB473K50
	C 3211-3219,3222,3231		CCSRCH102J50
	C 3220		CEAT472M16
	C 3221		CEAT222M25
	C 3223,3224		CEAT102M16
	C 3225		CKSRYB104K25
	C 3228,3239		CKSRYB103K50
	C 3232,3233		CEAT222M35
	C 3234		CEAT101M16
	C 3235		CEANP1R0M50
	C 3237,3238		CEAT101M25

P TRANS ASSY

Mark	No.	Description	Part No.
		MISCELLANEOUS	
	CN 3101	CONNECTOR	B13B-EH
⚠	JP 3102	CONNECTOR ASSY 2P	DKP3847
⚠	P 3101,3103	PROTECTOR (1.5 A)	AEK7011
⚠	P 3102	PROTECTOR (800 mA)	AEK7008

Q PRIMARY ASSY

Mark	No.	Description	Part No.
		SEMICONDUCTORS	
	Q 3001		2SD1859X
	D 3001		1SS302
	D 3002		1SS352
⚠	D 3003-3006		1SR154-400
		MISCELLANEOUS	
⚠	L 3001	FILTER	DTL1131
	H 3001,3002	FUSE CLIP	AKR1004
⚠	RY 3001	RELAY	ASR7029
⚠	T 3001	TRANSFOMER (SY)	DTT1245
⚠	CN 3001	AC CODE SOCKET	RKP1751
⚠	CN 3002,3004	CONNECTOR	B2P3-VH
		RESISTORS	
	All Resistors		RS1/10SR###J

Mark	No.	Description	Part No.
MISCELLANEOUS			
	JP 3001	CONNECTOR ASSY	PF03PG-Q07
CAPACITORS			
⚠	C 3001		ACE7027
⚠	C 3003		ACG7030
	C 3004,3005		CKSRYB473K50
	C 3006		CEAT222M25
	C 3007		CKSRYB103K50

R ACSW ASSY

Mark	No.	Description	Part No.
MISCELLANEOUS			
⚠	S 3301	SWITCH	DSA1037
⚠	JP 3301	CONNECTOR ASSY 2P	DKP3847
CAPACITORS			
⚠	C 3301		ACG7030

S REG ASSY

Mark	No.	Description	Part No.
SEMICONDUCTORS			
⚠	IC 3401		BA15T
⚠	IC 3402		NJM7805FA
⚠	IC 3403		NJM7915FA
	D 3401,3402		RB501V-40
MISCELLANEOUS			
	J 3401	10PJUMPER WIRE	D20PDY1010E
	JH 3401	10P CABLE HOLDER	51048-1000
CAPACITORS			
	C 3401-3403,3411-3413		CKSRYB103K50
	C 3404-3406,3410		CKSRYB104K16
	C 3407		CKSQYB225K10
	C 3414-3416		CCSRCH102J50