PIONEER

Service Manual

CIRCUIT DESCRIPTIONS REPAIR & ADJUSTMENTS

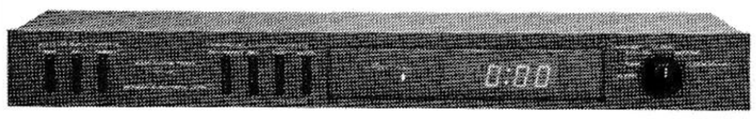

ORDER NO.
ARP-137-0

AUDIO DIGITAL TIMER

DT-32

MODEL DT-32 COMES IN FOUR VERSIONS DISTINGUISHED AS FOLLOWS:

Type	Voltage	Remarks
S	110V, 120V, 220V and 240V (Switchable)	General export model
S/G	110V, 120V, 220V and 240V (Switchable)	U.S. military model
YB	240V only	United kingdom model
NE	220V only	Europe model

- **This service manual is applicable to the DT-32/NE. When repairing the DT-32/S, S/G and YB, please see page 11.**

CONTENTS

1. SPECIFICATIONS 2
2. PARTS LOCATIONS 2
3. FRONT PANEL FACILITIES 3
4. EXPLODED VIEW 4
5. P.C. BOARD CONNECTION DIAGRAM 5
6. SCHEMATIC DIAGRAMS 7
7. PARTS LIST 9
8. PACKING 10

ADDITIONAL SERVICE MANUAL

1. CONTRAST OF MISCELLANEOUS PARTS .. 11
2. SPECIFICATIONS 11
3. PARTS LIST 12
4. SCHEMATIC DIAGRAM 13
5. P.C. BOARD PATTERNS 15

PIONEER ELECTRONIC CORPORATION 4-1, Meguro 1-Chome, Meguro-ku, Tokyo 153, Japan
PIONEER ELECTRONICS [USA] INC. 1925 E. Dominguez St., Long Beach, California 90810 U.S.A.
PIONEER ELECTRONIC [EUROPE] N.V. Luithagen-Haven 9, 2030 Antwerp, Belgium
PIONEER ELECTRONICS AUSTRALIA PTY. LTD. 178-184 Boundary Road, Braeside, Victoria 3195, Australia

Printed in Japan

www.hifiengine.com

1. SPECIFICATIONS

Time display ..... Digital display with fluorescent display tube
Timer type ..... 24-hour type (24-hour display)
Timer setting .....Only one ON/OFF time setting in mininum units of minutes within a 24-hour period
Sleep timer .....Setting in minimum units of minutes up to 1 hour 59 minutes
Time accuracy .....Synchronized with line frequency
Timer accuracy .....Within ± 0.1 sec. of time displayed
Sleep timer accuracy .....Within 59 sec. of set time

Power section, others

Power requirements ..... a.c. 220 Volts~, 50 Hz
AC outlet capacity power ..... 500 W max. (inductive load)
Power consumption ..... 6 W

Other functions

- AC OUTLET "on" display (red LED lights)
- Timer operation display (green LED lights)
- Power failure display (time display winks)

Dimensions ..... 420 (W) x 50 (H) x 144 (D) mm
16-9/16 (W) x 2 (H) x 5-11/16 (D) in
Weight ..... 1.7 kg (3 lb 12 oz)

Accessories

Operating Instructions (English/German/French/Italian) 1

NOTE:
Specifications and design are subject to possible modification without notice due to improvements.

2. PARTS LOCATIONS

NOTES:

- *The ⚠ mark found on some component parts indicates the importance of the safety factor of the part. Therefore, when replacing, be sure to use parts of identical designation.*
- *For your Parts Stock Control, the fast moving items are indicated with the marks ★★ and ★.*
  ★★ GENERALLY MOVES FASTER THAN ★
  This classification shall be adjusted by each distributor because it depends on model number, temperature, humidity, etc.

Front Panel

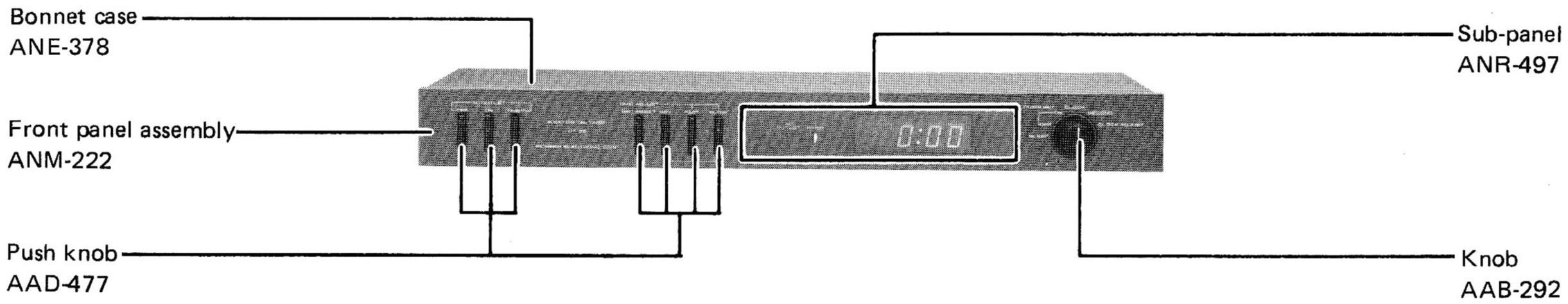

Rear Panel

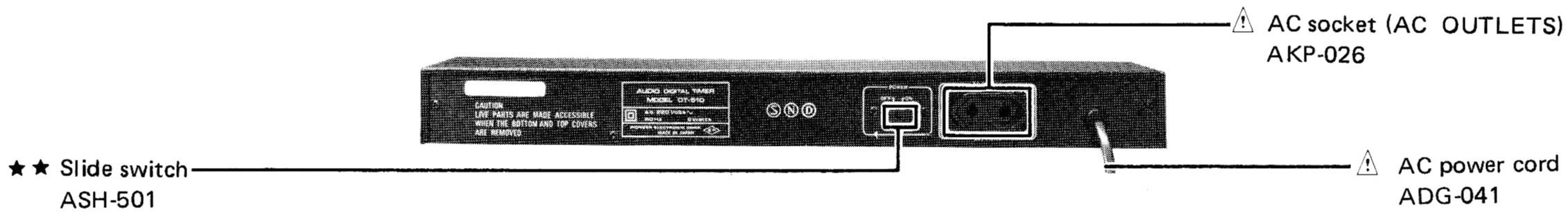

Top View with Bonnet Removed

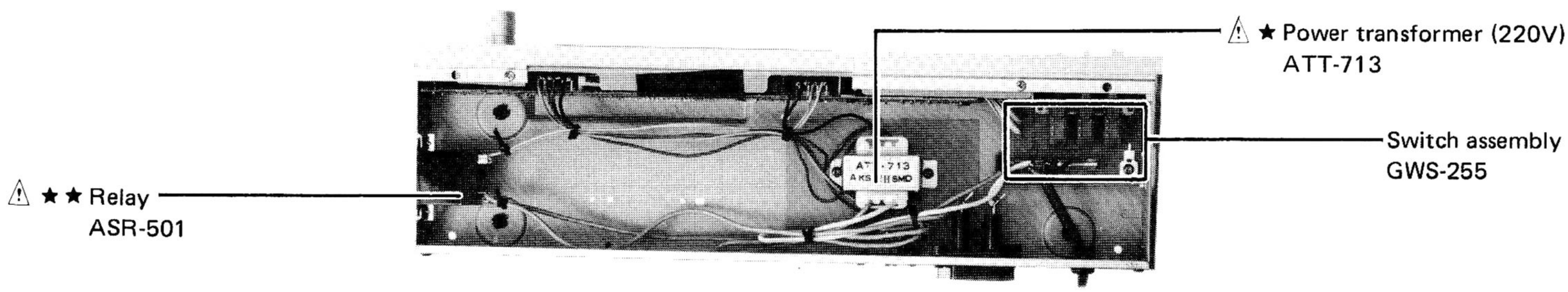

3. FRONT PANEL FACILITIES

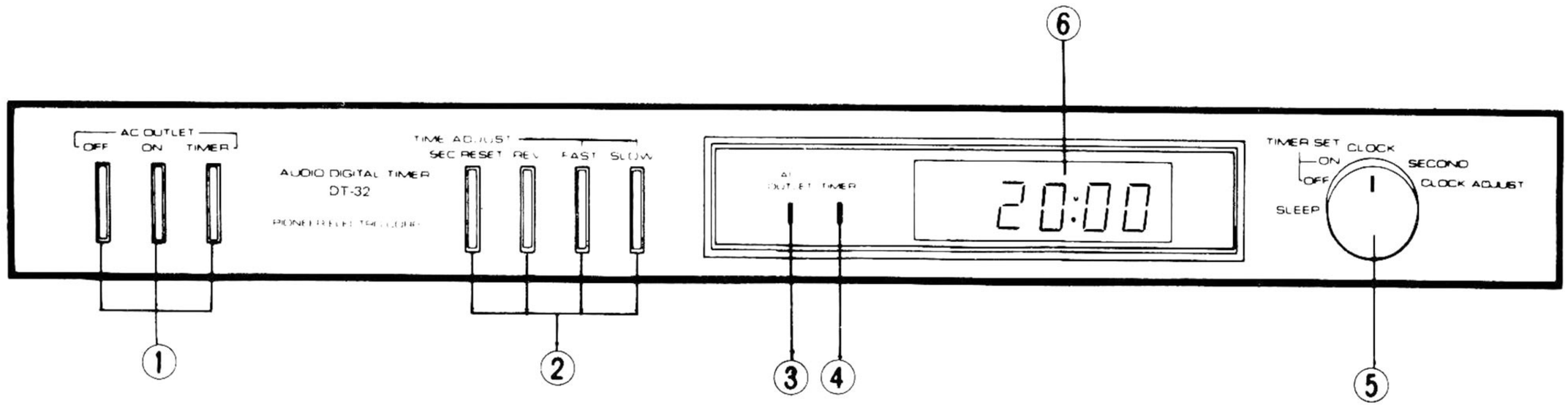

① AC OUTLET SELECTORS

These switch on and off the power flowing to the rear panel AC OUTLET.

OFF: Used to switch off the power of the connected audio components regardless of the timer operation.

ON: Used to switch on the power of the connected audio components regardless of the timer operation.

TIMER: Used to switch ON and OFF the power of the connected audio components with the timer operation.

② TIME ADJUST SWITCHES

These are used to adjust the time/displayed times in line with the setting of the mode selector.

SEC RESET: When this switch is depressed with the mode selector in the SECOND position, the second display of the present time is reset to 8:00 and when released the seconds are counted up from 8:00 → 8:01 → 8:02 → etc., and the rightmost minute digit and seconds are displayed.

REV: When the FAST or SLOW switch is depressed while this switch is in the depressed position, the displayed time is reversed rapidly or slowly. (This function does not work when the sleep timer function is set.)

FAST: When this switch is depressed, the displayed time is forwarded rapidly.

SLOW: When this switch is depressed, the displayed time is forwarded slowly.

③ AC OUTLET INDICATOR (red)

This lights when power is being supplied to the AC OUTLET on the rear panel.

④ TIMER INDICATOR (green)

This lights when the AC OUTLET-TIMER selector is depressed.

⑤ MODE SELECTOR

This is used to select the timer's function.

SLEEP: Used to set the operating time (1 minute to 1 hour 59 minutes) until the power of the audio components operating is to be set OFF.

TIMER SET-OFF: Used to set the time at which the power to the connected audio components is set OFF.

TIMER SET-ON: Used to set the time at which the power to the connected audio component is set ON.

CLOCK: Used to display the present time (hours & minutes).

SECOND: Used to adjust the seconds of the present time and check the seconds of the present time.

CLOCK ADJUST: Used to adjust the clock to the present time.

⑥ TIME DISPLAY

The time is displayed as it relates to the mode selector or TIME ADJUST switch settings in the following table.

Display	Example of display	Mode selector	TIME ADJUST switch
Time until sleep operation is due to go OFF.	1:30 1 hr 30 min.	SLEEP	FAST SLOW
Display of OFF time set by timer.	8:00	TIMER SET-OFF	FAST SLOW REV
Display of ON time set by timer	7:30	TIMER SET-ON	FAST SLOW REV
Display of present time	17:38	CLOCK	—
Display of seconds and rightmost digit of present time minute	8:25 8 min. 25 sec.	SECOND	—
Display for adjusting seconds correctly of present time	5:00 5 min. 00 sec.		SEC RESET
Display for adjusting hours and minutes of present time	12:05	CLOCK ADJUST	FAST SLOW REV

NOTE:
When the unit's power plug is connected to a household AC outlet, the "0:00" time display will wink. It also winks when there has been a power failure while the unit was working and the power has been restored.

www.hifiengine.com

4. EXPLODED VIEW

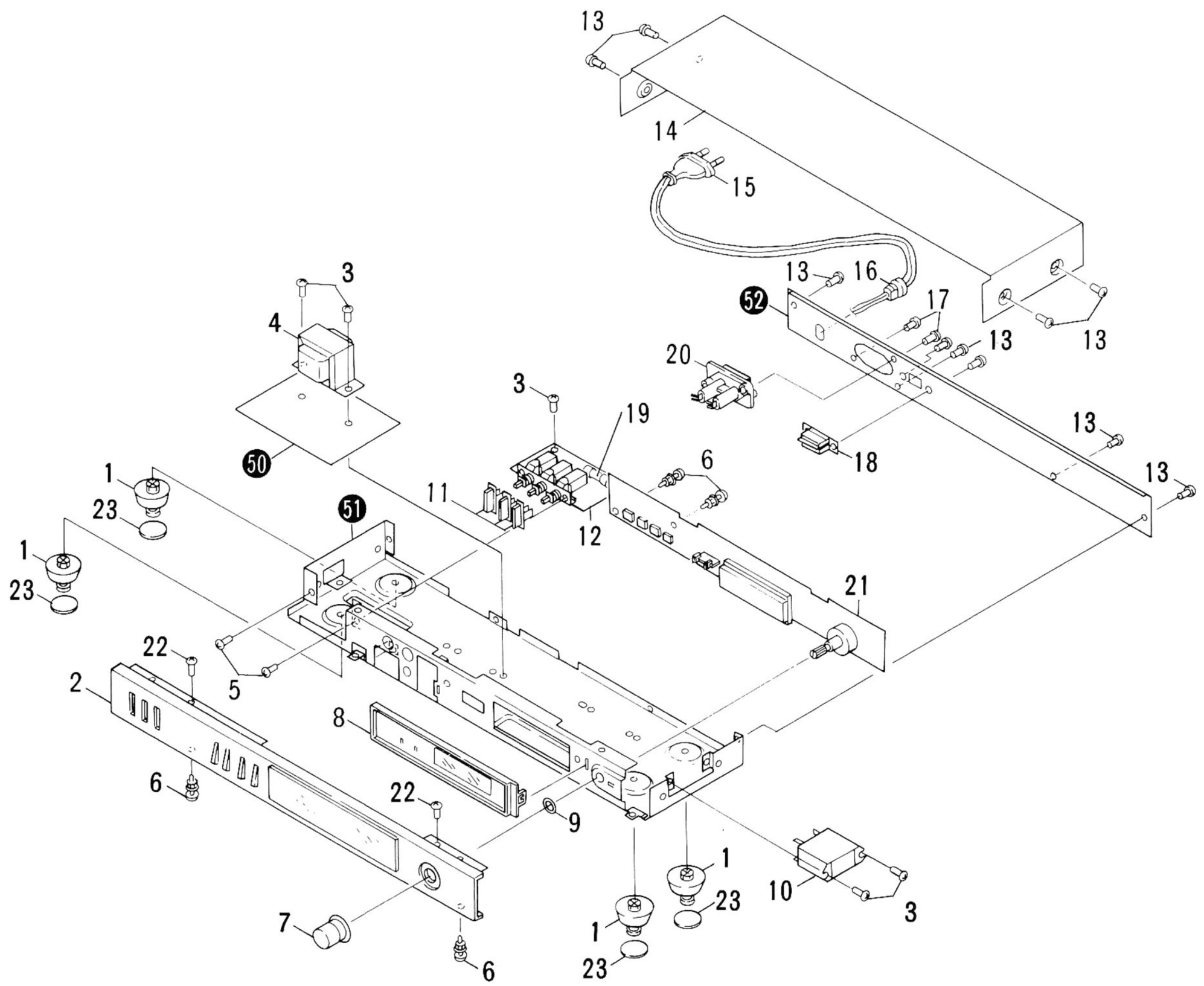

NOTES:

- *Parts without part number cannot be supplied.*
- *The ⚠ mark found on some component parts indicates the importance of the safety factor of the part. Therefore, when replacing, be sure to use parts of identical designation.*
- *For your Parts Stock Control, the fast moving items are indicated with the marks ★★ and ★.*
  ★★ GENERALLY MOVES FASTER THAN ★
  This classification shall be adjusted by each distributor because it depends on model number, temperature, humidity, etc.

Parts List

Mark	No.	Part No.	Description
	1.	AEC-609	Foot assembly
	2.	ANM-222	Front panel assembly
	3.	VBZ30P060FMC	Screw
⚠ ★	4.	ATT-713	Power transformer (220V)
	5.	PMZ30P060FZB	Screw
	6.	AEC-510	Nylon rivet
	7.	AAB-292	Knob
	8.	ANR-497	Sub-panel
	9.	NK90FUC	Nut
⚠ ★★	10.	ASR-501	Relay
	11.	AAD-477	Push knob
	12.	GWS-255	Switch assembly
	13.	BBT30P080FZK	Screw
	14.	ANE-378	Bonnet case
⚠	15.	ADG-041	AC power cord

Mark	No.	Part No.	Description
	16.	AEC-327	Strain relief
	17.	MTZ30P100FZK	Screw
⚠ ★★	18.	ASH-501	Slide switch
⚠ ★★	19.	AEK-403	Fuse
⚠	20.	AKP-026	AC socket (AC OUTLETS)
	21.	GWX-525	Timer assembly
	22.	BCZ30P080FMC	Screw
	23.	AEA-055	Rubber assembly
	50.		Plate
	51.		Chassis
	52.		Rear panel

www.hifiengine.com

5. P.C.BOARD CONNECTION DIAGRAM

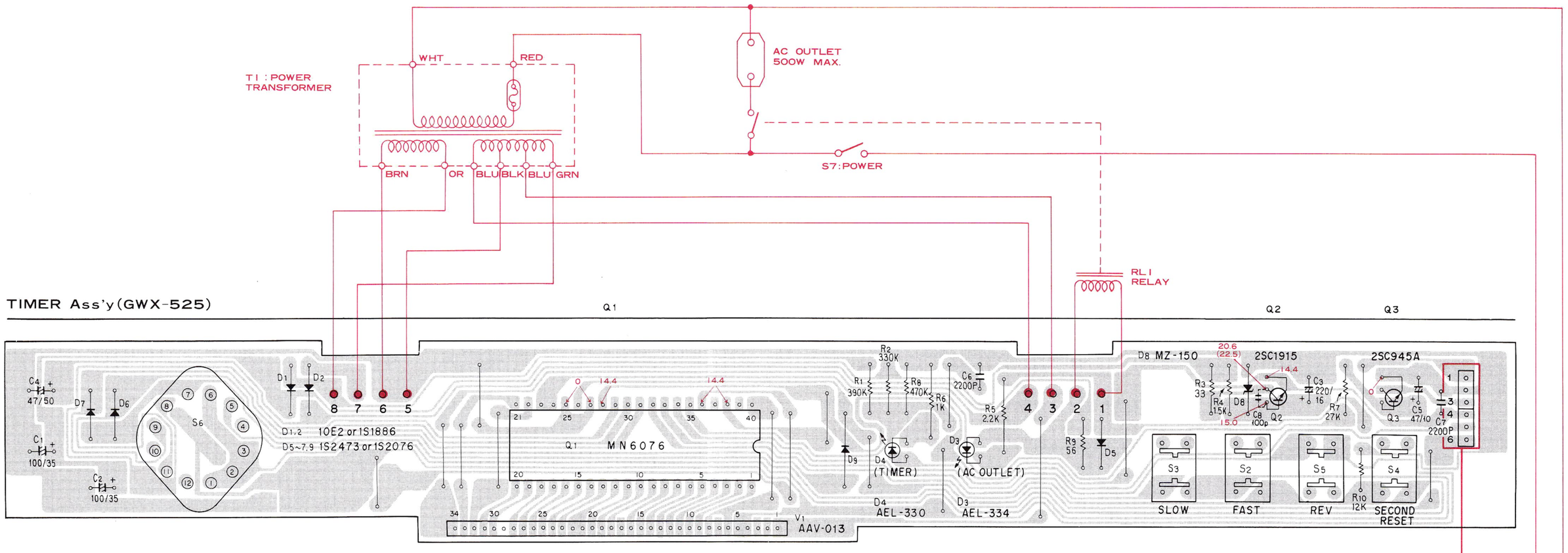

MN6076 BLOCK DIAGRAM

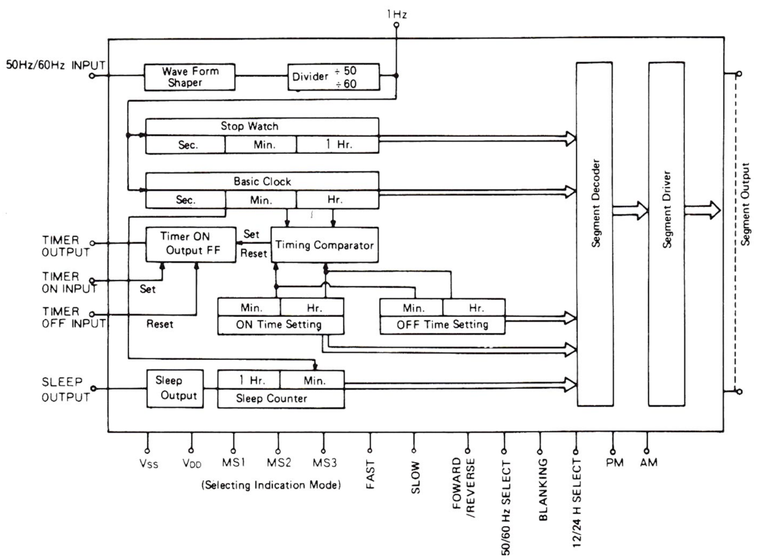

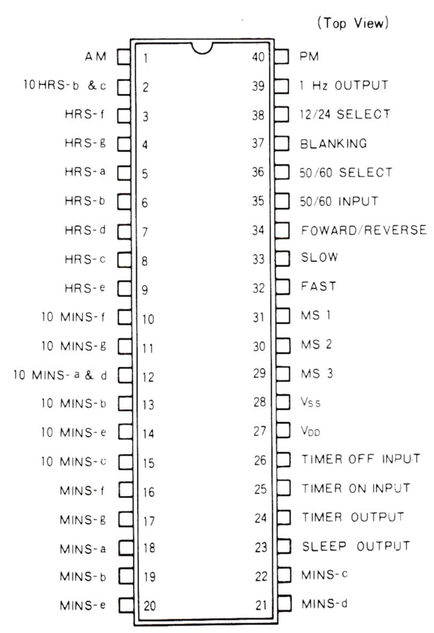

6. SCHEMATIC DIAGRAMS

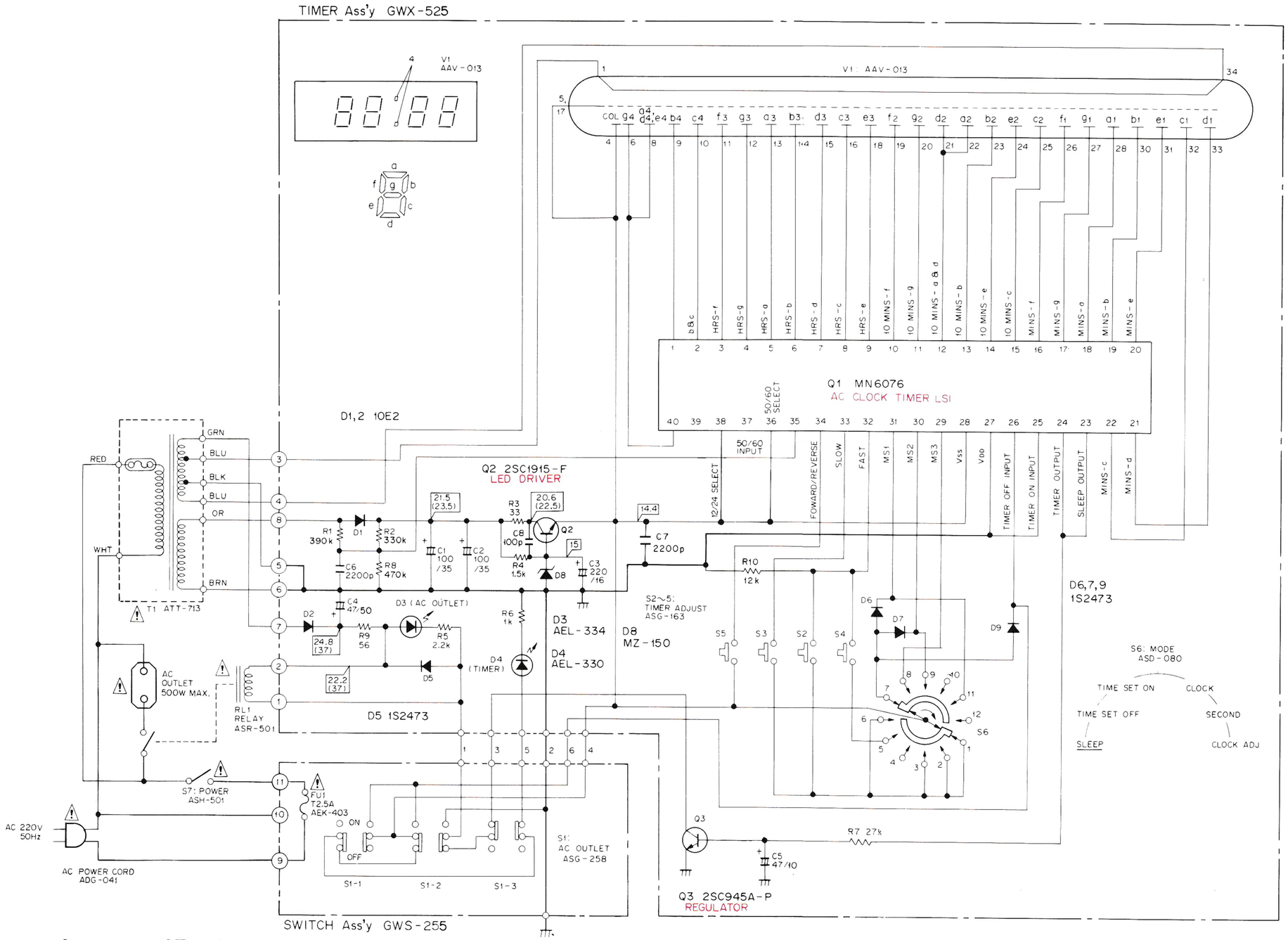

1. RESISTORS:
Indicated in Ω, ¼W, ±5% tolerance unless otherwise noted k : kΩ, M : MΩ, (F) : ±1%, (G) : ±2%, (K) : ±10%tolerance

2. CAPACITORS:
Indicated in capacity (μF)/voltage (V) unless otherwise noted p : pF
Indication without voltage is 50V except electrolytic capacitor.

3. VOLTAGE
: DC voltage (V) at TIMER, RELAY ON.
Value in ( ) is DC voltage at AC OUTLET OFF.

4. OTHERS:
The ⚠ mark found on some component parts indicates the importance of the safety factor of the part. Therefore, when replacing, be sure to use parts of identical designation.

SWITCHES:

S1-1 : AC OUTLET (OFF) ON – OFF
S1-2 : AC OUTLET (ON) ON – OFF
S1-3 : AC OUTLET (TIMER) ON – OFF
S2 : TIME ADJUST (FAST) ON – OFF
S3 : TIME ADJUST (SLOW) ON – OFF
S4 : TIME ADJUST (SEC RESET) ON – OFF
S5 : TIME ADJUST (REV) ON – OFF
S6 : MODE
SLEEP – TIMER SET OFF – TIMER SET ON – CLOCK – SECOND – CLOCK ADJUST
S7 : POWER ON – OFF

The underlined indicates the switch position.

This is the basic schematic diagram, but the actual circuit may vary due to improvements in design.

POWER SUPPLY CIRCUIT FOR YB MODEL

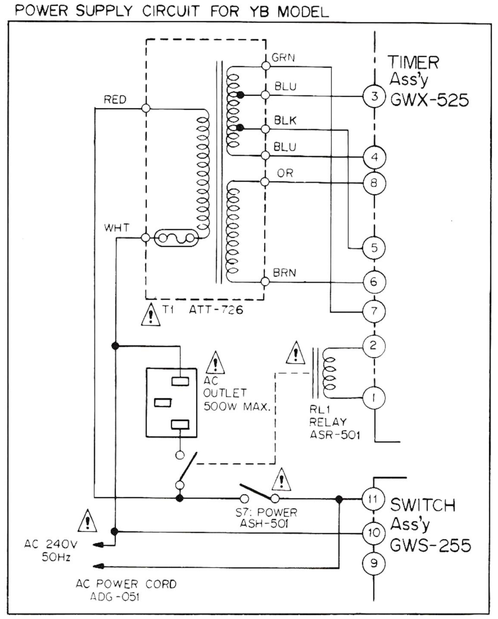

Appearance of Transistors and ICs

MN6076

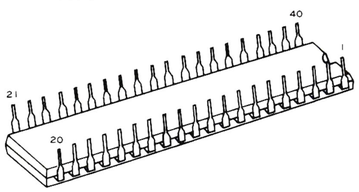

2SC1915

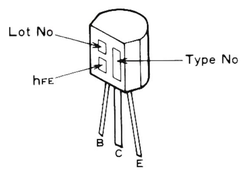

2SC945A

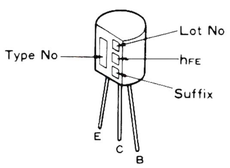

NOTE:
The indicated semiconductors are representative ones only. Other alternative semiconductors may be used and are listed in the parts list.

7. PARTS LIST

NOTES:

- *When ordering resistors, first convert resistance values into code form as shown in the following examples.*

  Ex. 1 When there are 2 effective digits (any digit apart from 0), such as 560 ohm and 47k ohm (tolerance is shown by J=5%, and K=10%).

560Ω	*56 × 10¹*	*561 ..... RD¼PS* 5 6 1 *J*
47kΩ	*47 × 10³*	*473 ..... RD¼PS* 4 7 3 *J*
0.5Ω	*0R5*	*..... RN2H* 0 R 5 *K*
1Ω	*010*	*..... RS1P* 0 1 0 *K*

  Ex. 2 When there are 3 effective digits (such as in high precision metal film resistors).

5.62kΩ	*562 × 10¹*	*5621 .... RN¼SR* 5 6 2 1 *F*

- *The ⚠ mark found on some component parts indicates the importance of the safety factor of the part. Therefore, when replacing, be sure to use parts of identical designation.*
- *For your Parts Stock Control, the fast moving items are indicated with the marks ★★ and ★ .*

  ★★ GENERALLY MOVES FASTER THAN ★

  This classification shall be adjusted by each distributor because it depends on model number, temperature, humidity, etc:

7.1 TIMER ASSEMBLY (GWX-525)

SWITCHES

Mark	Part No.	Symbol & Description	
★★	ASG-163	S2–S5	Tact switch
★★	ASD-080	S6	Rotary switch

CAPACITORS

Mark	Part No.	Symbol & Description
	CEA 101M 35L	C1, C2
	CEA 221M 16L	C3
	CEA 470M 50L	C4
	CEA 470M 25L	C5
	CKDYB 222K 50	C6, C7
	CCDSL 101J 50	C8

RESISTORS

NOTE: When ordering resistors, convert the resistance value into code form, and then rewrite the part no. as before.

Mark	Part No.	Symbol & Description
	RD¼PM □□□J	R1–R10

SEMICONDUCTORS

Mark	Part No.	Symbol & Description
★★	MN6076	Q1
★★	2SC1915	Q2
★★	2SC945A	Q3
★	10E2 (1S1886)	D1, D2
★	AEL-334	D3
★	AEL-330	D4
★	1S2473 (1S2076)	D5–D7, D9
★	MZ-150 (WZ-150)	D8

OTHERS

Mark	Part No.	Symbol & Description	
★	AAV-013	V1	Fluorescent indicator tube

7.2 SWITCH ASSEMBLY (GWS-255)

Mark	Part No.	Symbol & Description	
★★	ASG-258	S1	Push switch

www.hifiengine.com

8. PACKING

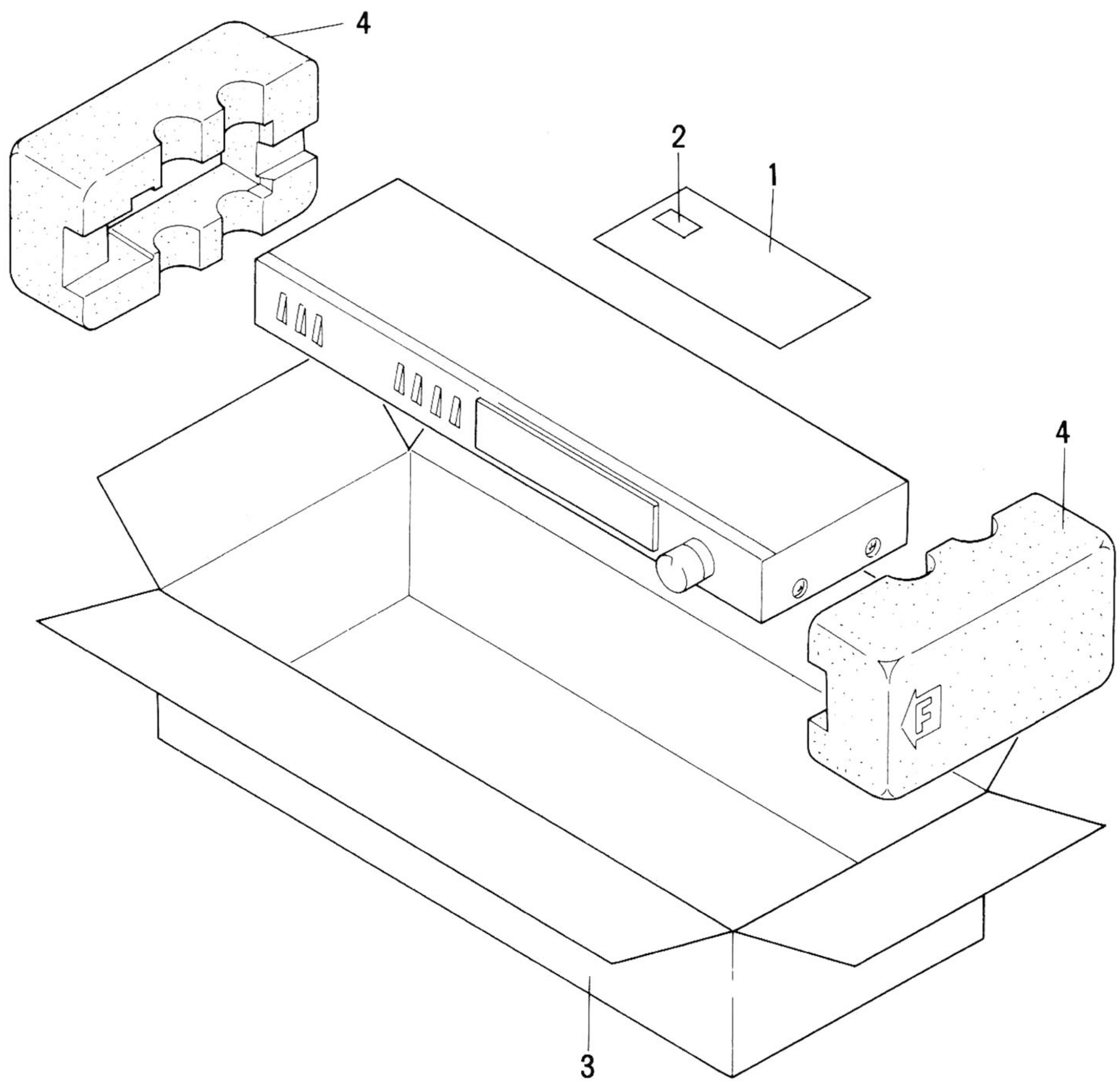

Parts list

Mark	No.	Part No.	Description
	1.	ARE-044	Operating instructions
	2.	AEA-055	Rubber assembly
	3.	AHE-058	Packing case
	4.	AHA-256	Side pad

■ SPECIFICATIONS (S,S/G)

Time display ..... Digital display with fluorescent display tube
Timer type ..... 24-hour type (AM/PM, 12-hour display)
Timer setting .....Only one ON/OFF time setting in mininum units of minutes within a 24-hour period
Sleep timer .....Setting in minimum units of minutes up to 1 hour 59 minutes
Time accuracy .....Synchronized with line frequency
Timer accuracy .....Within ± 0.1 sec. of time displayed
Sleep timer accuracy .....Within 59 sec. of set time

Power section, others

Power requirements .....AC 110 V/120 V/220 V/240 V (switchable) 50 Hz/60 Hz (switchable)
AC outlets ..... Total of 2 outlets, 500 W max, (inductive load)
Power consumption ..... 6 W

Other functions

- AC OUTLET "on" display (red LED lights)
- Timer operation display (green LED lights)
- Power failure display (time display winks)

Dimensions ..... 420 (W) x 50 (H) x 144 (D) mm
16-9/16 (W) x 2 (H) x 5-11/16 (D) in
Weight ..... 1.7 kg (3 lb 12 oz)

Accessory

Operating Instructions 1

NOTE:
Specifications and design are subject to possible modification without notice due to improvements.

www.hifiengine.com