Service Manual

AUDIO DIGITAL TIMER

DT-500

MODEL DT-500 COMES IN SIX VERSIONS DISTINGUISHED AS FOLLOWS:

Type	Voltage	Remarks
KU	120V only	U.S.A. model
KC	120V only	Canada model
S	110V, 120V, 220V and 240V (Switchable)	General export model
S/G	110V, 120V, 220V and 240V (Switchable)	U.S. Military model
YB	240V only	United Kingdom model
NE	220V only	Europe model

- **This service manual is applicable to the DT-500/S,S/G. When repairing the DT-500/KU, please see page 11, and for the other types, please refer to the additional service manuals.**

CONTENTS

1. SPECIFICATIONS 2
2. PARTS LOCATIONS 2
3. FRONT PANEL FACILITIES 3
4. EXPLODED VIEW 4
5. SCHEMATIC DIAGRAMS 5
6. P.C. BOARD CONNECTION DIAGRAM 7
7. PARTS LIST 9
8. PACKING 10

ADDITIONAL SERVICE MANUAL (For KU model)
1. SPECIFICATIONS 11
2. CONTRAST OF MISCELLANEOUS PARTS 11
3. PARTS LIST 12
4. SCHEMATIC DIAGRAMS 13
5. P.C. BOARD PATTERNS 15

PIONEER ELECTRONIC CORPORATION 4-1, Meguro 1-Chome, Meguro-ku, Tokyo 153, Japan
U.S. PIONEER ELECTRONICS CORPORATION 85 Oxford Drive, Moonachie, New Jersey 07074, U.S.A.
PIONEER ELECTRONIC (EUROPE) N.V. Luithagen-Haven 9, 2030 Antwerp, Belgium
PIONEER ELECTRONICS AUSTRALIA PTY. LTD. 178-184 Boundary Road, Braeside, Victoria 3195, Australia
<ART-564-0>

MAY 1980 Printed in Japan

www.hifiengine.com

1. SPECIFICATIONS

Timer Section

Display of Time . . . . . Digital display of fluorescent display tube
Timer Type . . .24-hour type (12-hour display and AM/PM)
Timer Set . . . Only one ON/OFF time setting in minimum units of minutes within a 24-hour period
Timer Setting Interval . . . . . 1 minute
Sleep Timer Type . . . . . On time duration; 1 minute to 1 hour 59 minutes
Accuracy of Time . . . . . Synchronized with line frequency
Accuracy of Timer . . . . . ON time accuracy; Delay time to displayed time Max. +0.1 second
Accuracy of Sleep Timer . . . . . Delay time for OFF to displayed time; No more than 59 second

Miscellaneous

AC outlets Capacity Power . . . 500W max. (inductive load)
Power Requirements . . . . S, S/G models; AC 110V/120V/220V/240V (switchable) 50Hz/60Hz (switchable)
Power Consumption 6W
Dimensions . . . . . 420(W) x 144(D) x 50(H) mm 16-9/16(W) x 5-11/16(D) x 2(H) in
Weight (without package) . . . . . 1.7 kg (3 lb 12 oz)

Furnished Parts

Operating Instructions 1

NOTE:
Specifications and the design subject to possible modifications without notice due to improvements.

2. PARTS LOCATIONS

These parts locations are applicable to the DT-500/KU.

- *The ⚠ mark found on some component parts indicates the importance of the safety factor of the part. Therefore, when replacing, be sure to use parts of identical designation.*

Front Panel

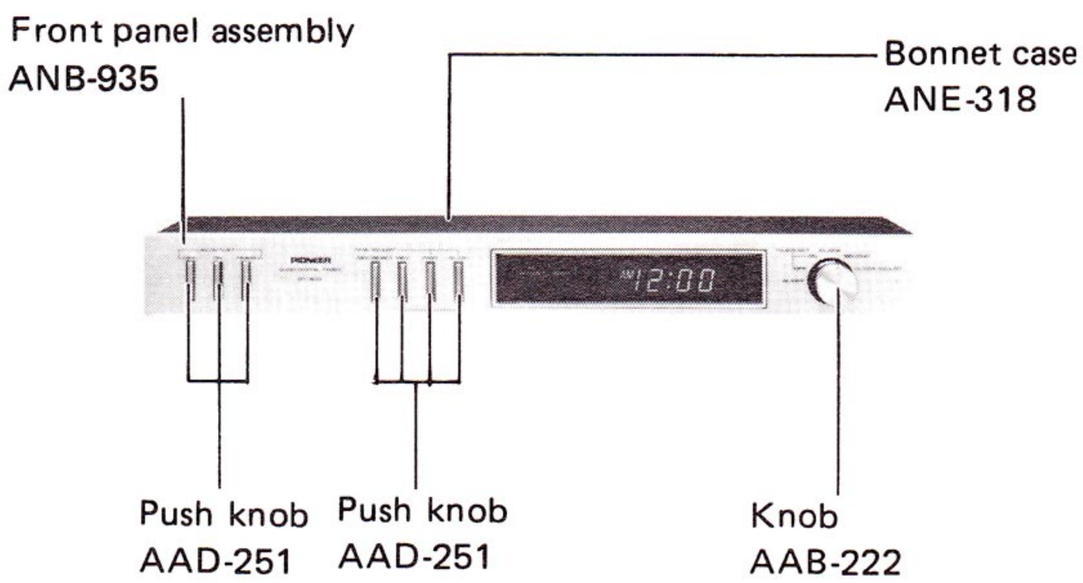

Front View with Panel Removed

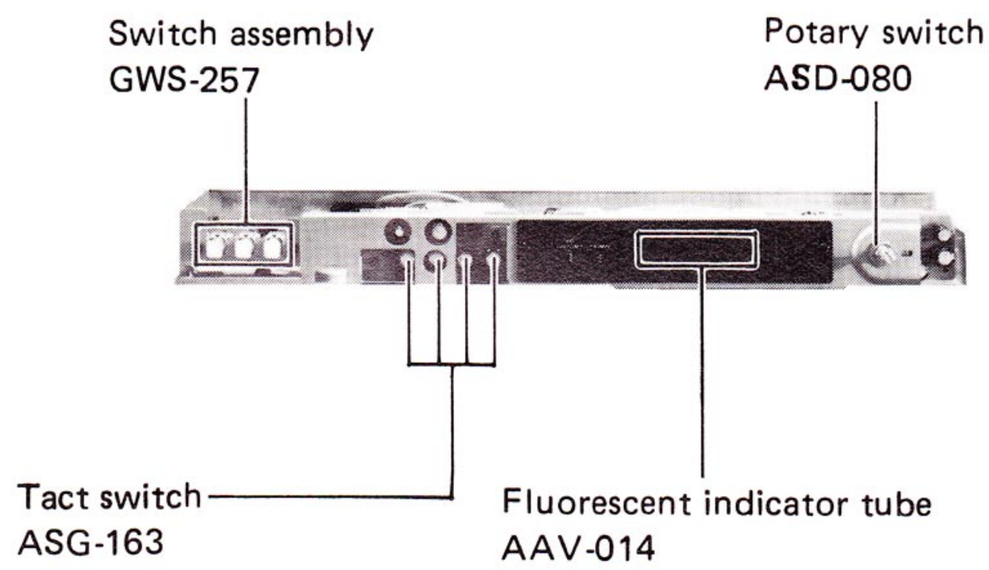

Top View with Bonnet Removed

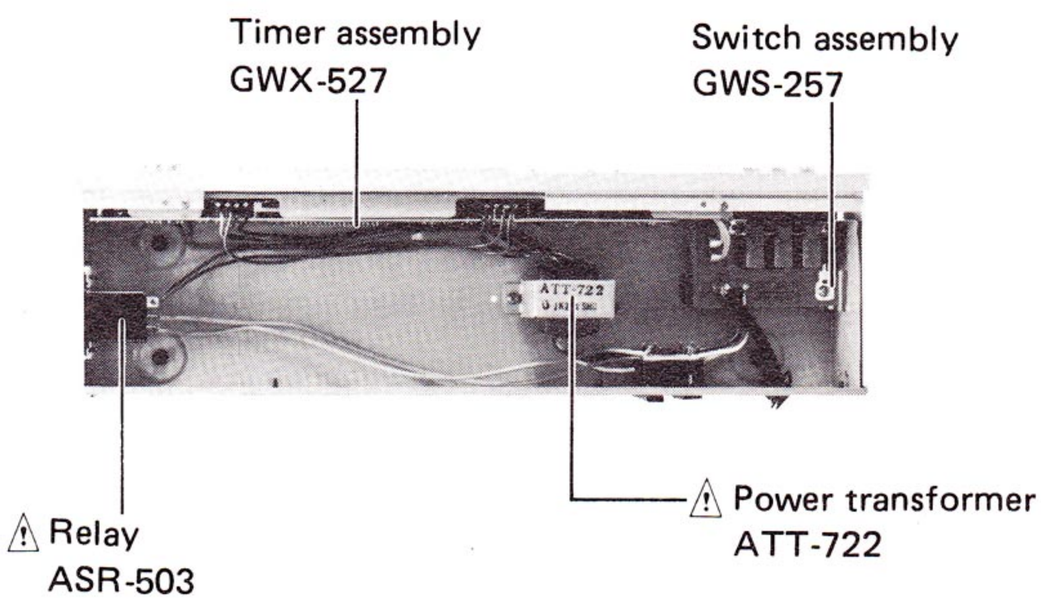

Rear Panel

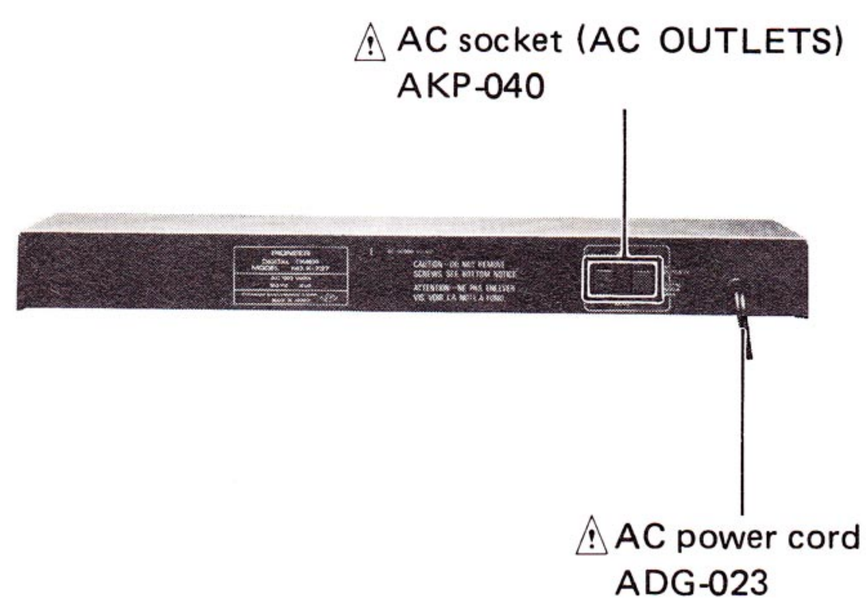

www.hifiengine.com

3. FRONT PANEL FACILITIES

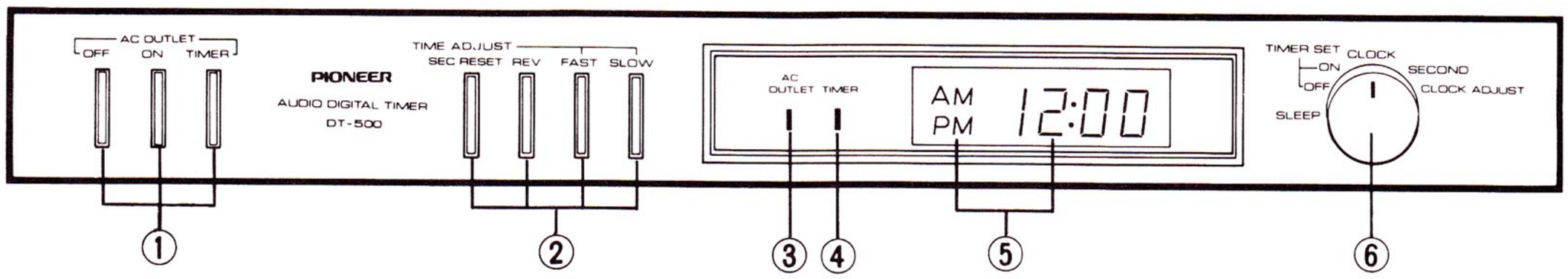

① AC OUTLET SELECTOR (OFF/ON/TIMER)

The AC OUTLET selectors are used when switching on and off the power to the components connected to the timer and thereby activating the timer, and also when giving priority to the timer function and switching on and off the power manually.

OFF: When this switch is depressed, the power being supplied to the connected components is switched off.

ON: When this switch is depressed, the power to the connected components is switched on.

TIMER: When this switch is depressed, the power being supplied to the connected components can be switched on and off by the timer switch function.

② TIME ADJUST SWITCHES

These switches are operated when setting the present clock time, the timer switch ON-OFF times and the sleep timer OFF time.

SEC RESET:

This switch works when the mode selector has been set to the SECOND position. When it is depressed, "0:00" appears on the display and when the switch is released, the seconds are counted ("0:00" – "0:01" – "0:02").

REV: When this switch is depressed together with the FAST or SLOW switch, the displayed time is put into reverse. The switch does not work when the mode selector has been set to the SLEEP or SECOND position.

FAST: When this switch is depressed, the displayed time is forwarded quickly.

SLOW: When this switch is depressed, the displayed time is forwarded slowly.

③ AC OUTLET INDICATOR

This indicator lights when power is being supplied to the AC outlet on the rear panel.

④ TIMER INDICATOR

This indicator lights when the AC OUTLET-TIMER switch has been depressed.

⑤ TIME DISPLAY

The following displays appear in line with the position of the mode selector.

MODE SELECTOR	TIME DISPLAY
SLEEP	Time remaining until the sleep timer goes OFF.
TIMER SET-OFF	Time set for the timer switch to go OFF.
TIMER SET-ON	Time set for the timer switch to come ON.
CLOCK	Present time in hours, minutes, AM or PM.
SECOND	Rightmost minute digit and second display.
CLOCK ADJUST	When the clock is set to the present time, the time is displayed in accordance with the operation of the time adjust switches.

NOTE:
"AM 12:00" or "0:00" may flash on the time display when the timer's power plug has been connected to a household AC outlet or when the power is restored after a power failure during actual operation.

⑥ MODE SELECTOR

This is used to select the timer switch functions.

SLEEP: Set here to set the sleep time.

TIMER SET-OFF: Set here to set the time at which the power to the connected components is to be switched off by the timer.

TIMER SET-ON: Set here to set the time at which the power to the connected components is to be switched on by the timer.

CLOCK: The present time is indicated on the time display. The mode selector is normally set to this position.

SECOND: Set here to set seconds of the present time correctly. Also set here to check the rightmost minute digit of the present time and the second display.

CLOCK ADJUST: Set here for setting the present time.

www.hifiengine.com

4. EXPLODED VIEW

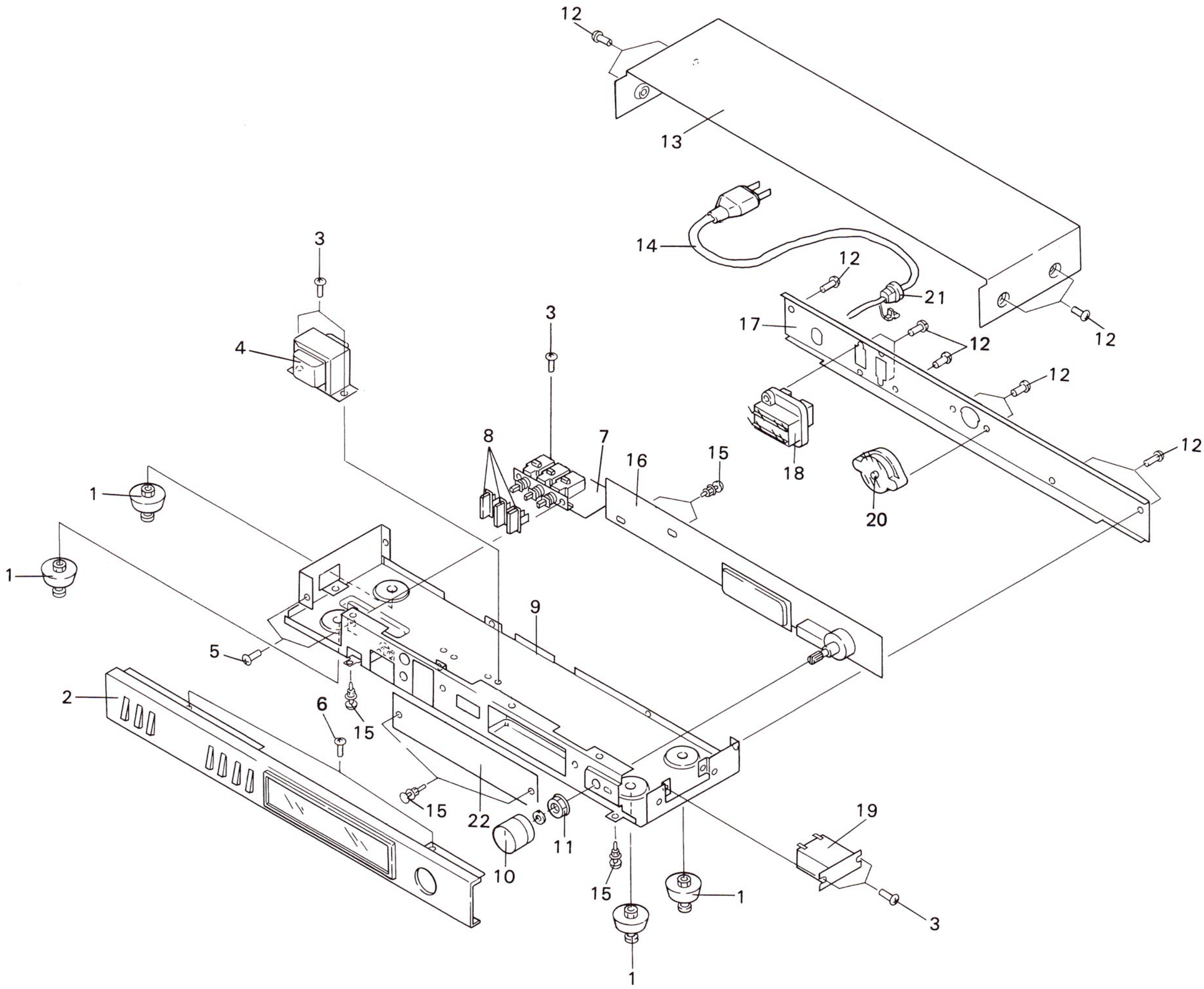

NOTES:

- *Parts without part number cannot be supplied.*
- *The ⚠ mark found on some component parts indicates the importance of the safety factor of the part. Therefore, when replacing, be sure to use parts of identical designation.*

Parts list

Key No.	Part No.	Description
1.	AEC-609	Foot assembly
2.	ANB-935	Front panel assembly
3.	VBZ30P060FMC	Screw
⚠ 4.	ATT-724	Power transformer
5.	PMZ30P060FZB	Screw
6.	BCZ30P080FMC	Screw
7.	GWS-256	Switch assembly
8.	AAD-251	Push knob
9.		Chassis
10.	AAB-222	Knob
11.	ABN-024	Nut
12.	BBT30P080FZK	Screw
13.	ANE-313	Bonnet case
⚠ 14.	ADG-046	AC power cord
15.	AEC-384	Nylon rivet
16.	GWX-526	Timer assembly
17.		Rear panel
18.	AKP-040	AC socket (AC OUTLETS)
⚠ 19.	ASR-502	RL1 Relay
⚠ 20.	AKX-063	S9 Line voltage selector
21.	AEC-327	Strain relief
22.	AEC-725	Acrylic filter

www.hifiengine.com

5. SCHEMATIC DIAGRAMS

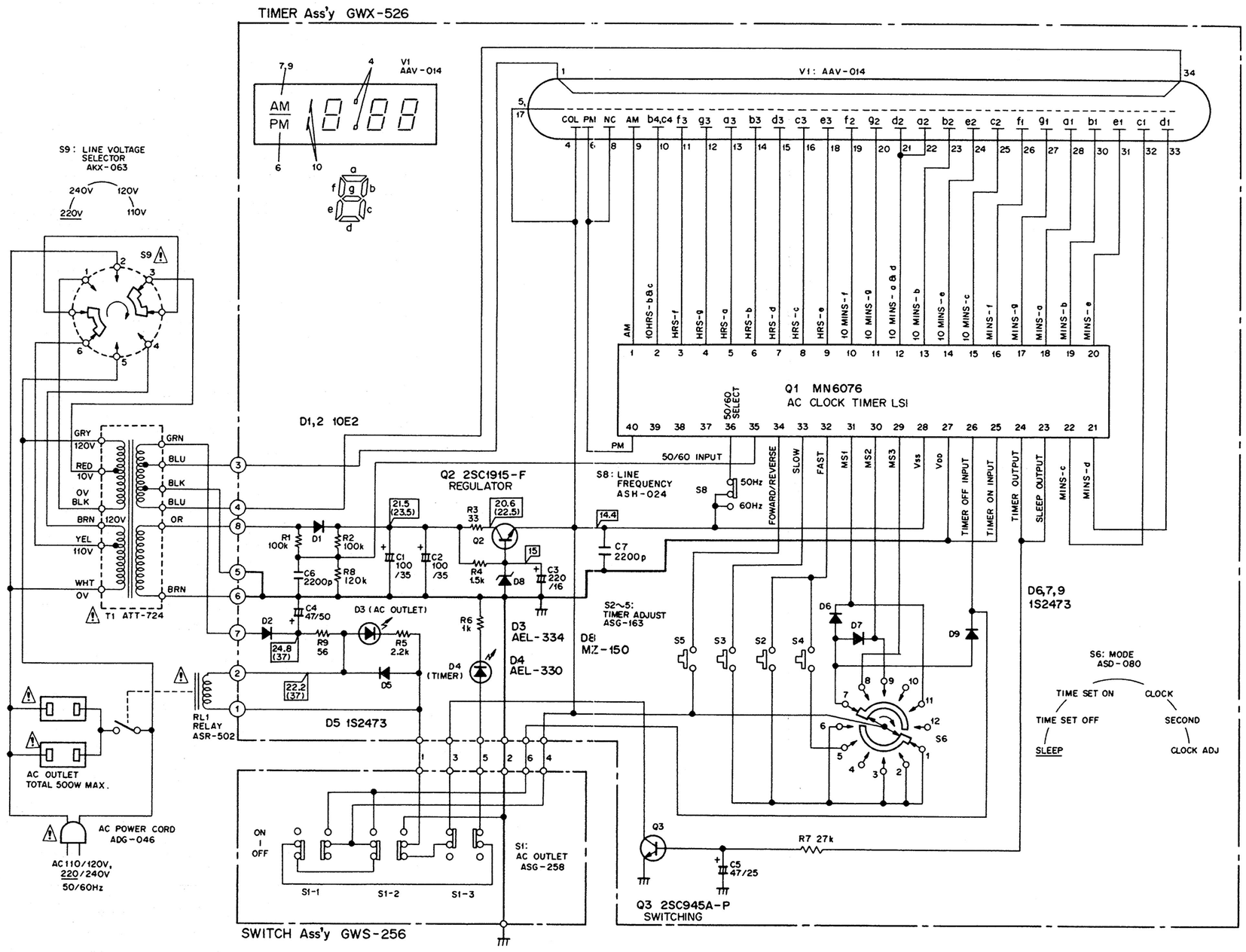

1. RESISTORS:
Indicated in Ω, ¼W, ±5% tolerance unless otherwise noted k : kΩ, M : MΩ, (F) : ±1%, (G) : ±2%, (K) : ±10%tolerance

2. CAPACITORS:
Indicated in capacity (μF)/voltage (V) unless otherwise noted p : pF
Indication without voltage is 50V except electrolytic capacitor.

3. VOLTAGE
: DC voltage (V) at TIMER, RELAY ON.
Value in ( ) is DC voltage at AC OUTLET OFF.

4. OTHERS:
The ⚠ mark found on some component parts indicates the importance of the safety factor of the part. Therefore, when replacing, be sure to use parts of identical designation.

SWITCHES:

S1-1 : AC OUTLET(OFF) ON – OFF
S1-2 : AC OUTLET (ON) ON – OFF
S1-3 : AC OUTLET (TIMER) ON – OFF
S2 : TIME ADJUST (FAST) ON – OFF
S3 : TIME ADJUST (SLOW) ON – OFF
S4 : TIME ADJUST (SEC RESET) ON – OFF
S5 : TIME ADJUST (REV) ON – OFF
S6 : MODE
SLEEP – TIMER SET OFF – TIMER SET ON – CLOCK – SECOND – CLOCK ADJUST
S8 : LINE FREQUENCY 50Hz – 60Hz
S9 : LINE VOLTAGE SELECTOR
110V – 120V – 220V – 240V

The underlined indicates the switch position.

This is the basic schematic diagram, but the actual circuit may vary due to improvements in design.

Appearance of Transistors and ICs

MN6076

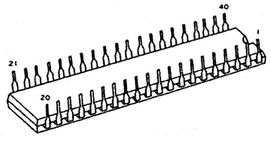

2SC1915

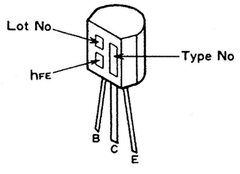

2SC945A

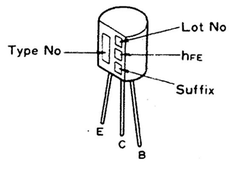

6. P.C.BOARD CONNECTION DIAGRAM

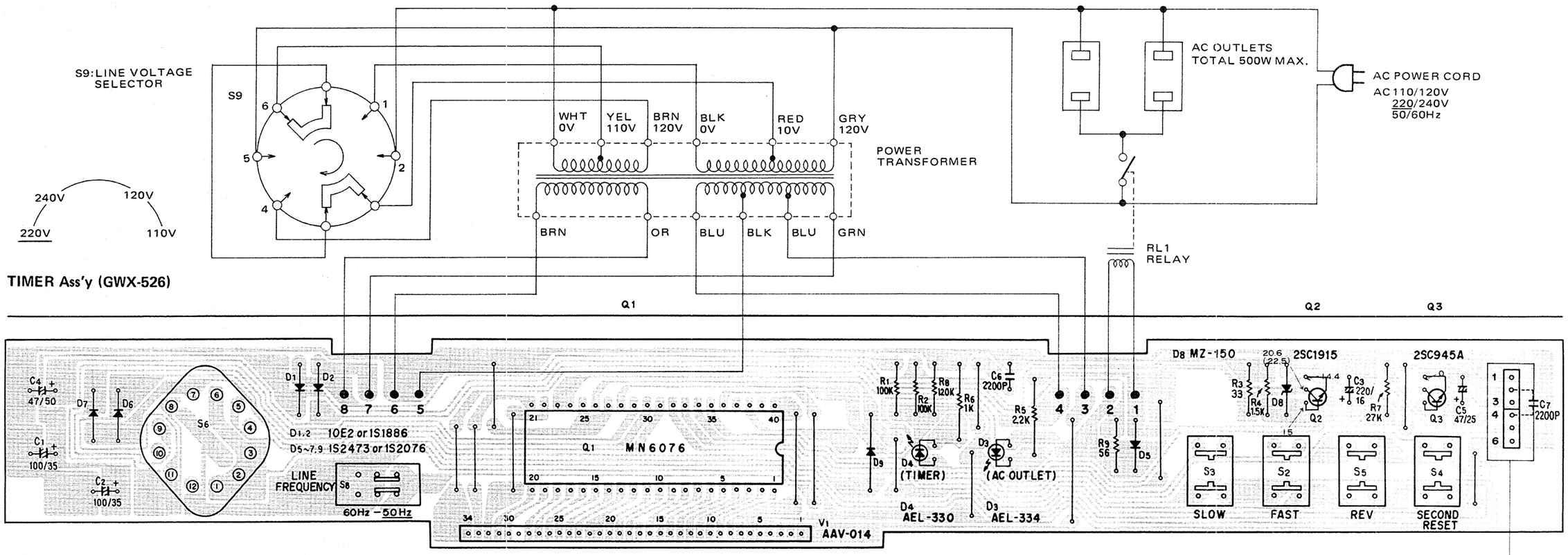

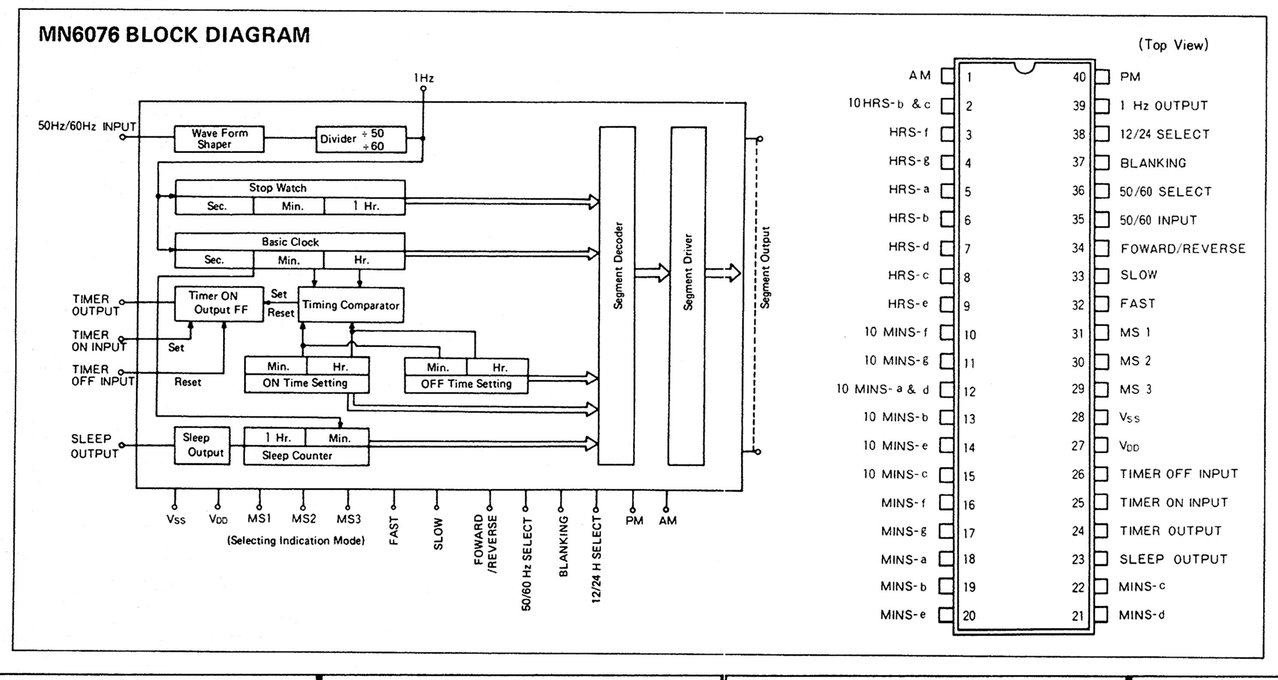

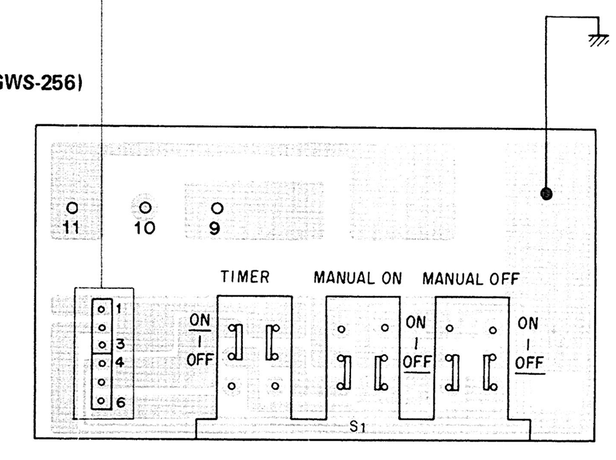

7. PARTS LIST

NOTE:

- *When ordering resistors, first convert resistance values into code form as shown in the following examples.*

Ex. 1 *When there are 2 effective digits (any digit apart from 0), such as 560 ohm and 47k ohm (tolerance is shown by J = 5%, and K = 10%).*

560Ω —— 56 ×10¹ —— 561 . . . . . RD¼PS 5 6 1 J
47kΩ —— 47 ×10³ —— 473 . . . . . RD¼PS 4 7 3 J
0.5Ω —— 0R5 . . . . . RN2H 0 R 5 K
1Ω —— 010 . . . . . RS1P 0 1 0 K

Ex. 2 *When there are 3 effective digits (such as in high precision metal film resistors).*

5.62kΩ 562 × 10¹ 5621 . . . . . RN¼SR 5 6 2 1 F

- *The ⚠ mark found on some component parts indicates the importance of the safety factor of the part. Therefore, when replacing, be sure to use parts of identical designation.*

7.1 TIMER ASSEMBLY (GWX-526)

SWITCHES

Part No.	Symbol & Description	
ASG-163	S2–S5	Tact switch
ASD-080	S6	Rotary switch
ASH-024	S8	Slide switch

CAPACITORS

Part No.	Symbol & Description
CEA 101M 35L	C1, C2
CEA 221M 16L	C3
CEA 470M 50L	C4
CEA 470M 25L	C5
CKDYB 222K 50	C6, C7

Note: When ordering resistors, convert the resistance value into code form, and then rewrite the part no. as before.

RESISTORS

Part No.	Symbol & Description
RD¼PM □□□ J	R1–R9

SEMICONDUCTORS

Part No.	Symbol & Description
MN6076	Q1
2SC1915	Q2
2SC945A	Q3
10E2 (1S1886)	D1, D2
AEL-334	D3
AEL-330	D4
1S2473 (1S2076)	D5–D7, D9
MZ-150 (WZ-150)	D8

OTHER

Part No.	Symbol & Description	
AAV-014	V1	Fluorescent indicator tube

7.2 SWITCH ASSEMBLY (GWS-256)

Part No.	Symbol & Description	
ASG-258	S1	Push switch

www.hifiengine.com

8. PACKING

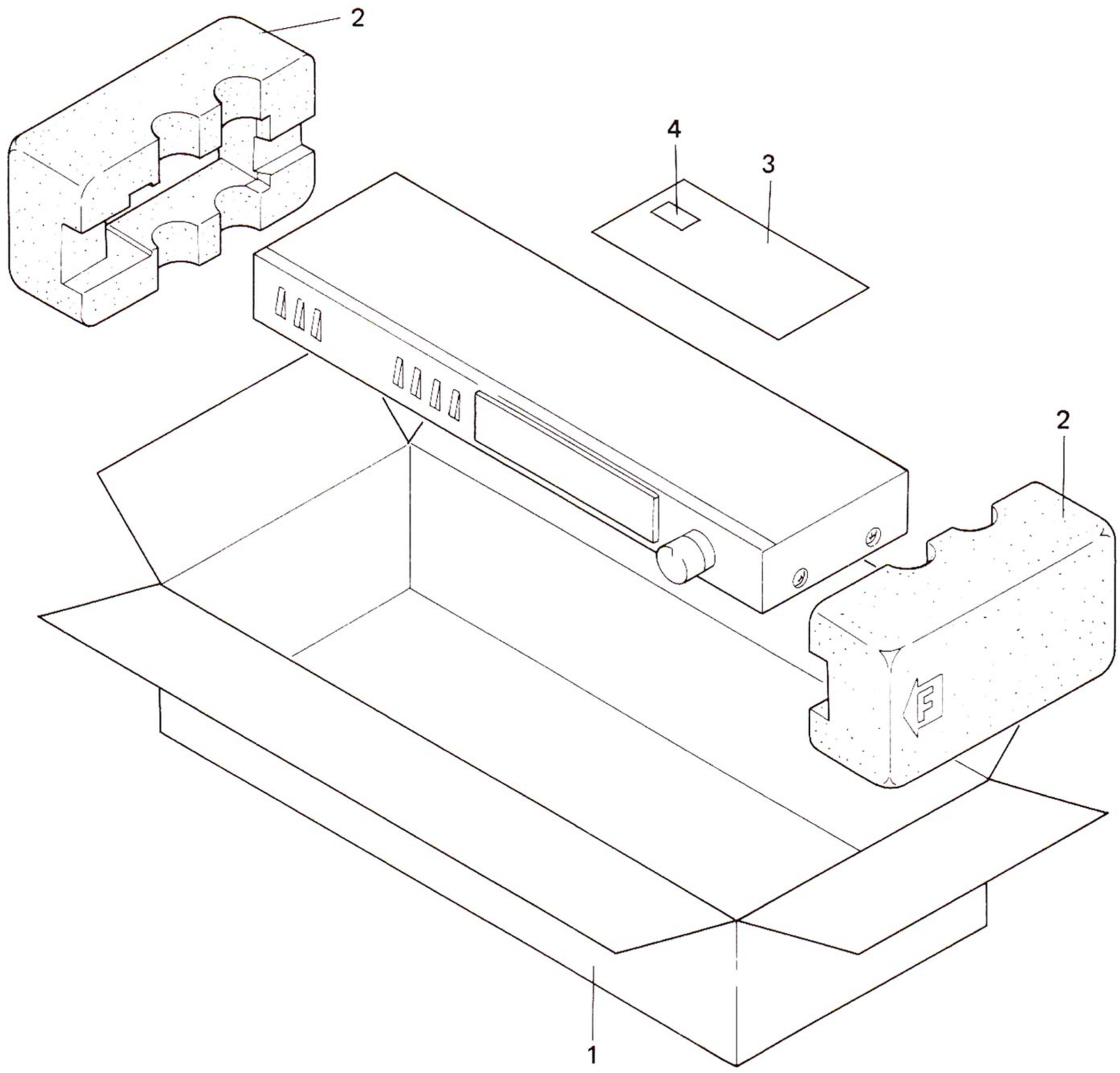

Parts list

Key No.	Part No.	Description
1.	AHD-841	Packing case
2.	AHA-256	Side pad
3.	ARB-383	Operating instructions
4.	AEA-049	Rubber cushion assembly

www.hifiengine.com

ADDITIONAL

Service Manual

AUDIO DIGITAL TIMER

DT-500 KU

1. SPECIFICATIONS

The specifications for KU type is the same as the S type except for following sections.

Miscellaneous

AC outlets Capacity Power . . . . Total of two AC outlets 500W max. (inductive load)

Power Requirements . . . . . AC 120V, 60Hz

2. CONTRAST OF MISCELLANEOUS PARTS

NOTES:

- *Parts without part number cannot be supplied.*
- *The ⚠ mark found on some component parts indicates the importance of the safety factor of the part. Therefore, when replacing, be sure to use parts of identical designation.*

Symbol	Description	Part No.			Remarks
		S type	S/G type	KU type	
	Timer assembly	GWX-526	GWX-526	GWX-527	
	Switch assembly	GWS-256	GWS-256	GWS-257	
⚠ RL1	Relay	ASR-502	ASR-502	ASR-503	
⚠ S9	Line voltage selector	AKX-063	AKX-063	. . . . .	
⚠ T1	Power transformer	ATT-724	ATT-724	ATT-722	
⚠	AC power cord	ADG-046	ADG-046	ADG-023	
	Operating instructions	ARB-383	ARB-383	ARB-385	

www.hifiengine.com

3. PARTS LIST

NOTES:

- *When ordering resistors, first convert resistance values into code form as shown in the following examples.*

  Ex. 1 When there are 2 effective digits (any digit apart from 0), such as 560 ohm and 47k ohm (tolerance is shown by J = 5%, and K = 10%).

  560Ω —— 56 × 10¹ —— 561 . . . . . RD¼PS 5 6 1 J
  47kΩ —— 47 × 10³ —— 473 . . . . . RD¼PS 4 7 3 J
  0.5Ω —— 0R5 . . . . . RN2H 0 R 5 K
  1Ω —— 010 . . . . . RS1P 0 1 0 K

  Ex. 2 When there are 3 effective digits (such as in high precision metal film resistors).

  5.62kΩ 562 × 10¹ 5621 . . . . . RN¼SR 5 6 2 1 F

- *The ⚠ mark found on some component parts indicates the importance of the safety factor of the part. Therefore, when replacing, be sure to use parts of identical designation.*

3.1 TIMER ASSEMBLY (GWX-527)

SWITCHES

Part No.	Symbol & Description	
ASG-163	S2–S5	Tact switch
ASD-080	S6	Roatry switch

CAPACITORS

Part No.	Symbol & Description
CEA 101M 35L	C1, C2
CEA 221M 16L	C3
CKDYB 222K 50	C6, C7
CEA 470M 25L	C5
CEA 470M 50L	C4

RESISTORS

Part No.	Symbol & Description
FD¼PM □□□J	R1–R9

SEMICONDUCTORS

Part No.	Symbol & Description
MN6076	Q1
2SC1915	Q2
2SC945A	Q3
10E2 (1S1886)	D1, D2
AEL-334	D3
AEL-330	D4
1S2473 (1S2076)	D5–D7, D9
MZ-150 (WZ-150)	D8

OTHER

Part No.	Symbol & Description	
AAV-014	V1	Fluorescent indicator tube

3.2 SWITCH ASSEMBLY (GWS-257)

Part No.	Symbol & Description	
ASG-258	S1	Push switch

www.hifiengine.com

4. SCHEMATIC DIAGRAMS

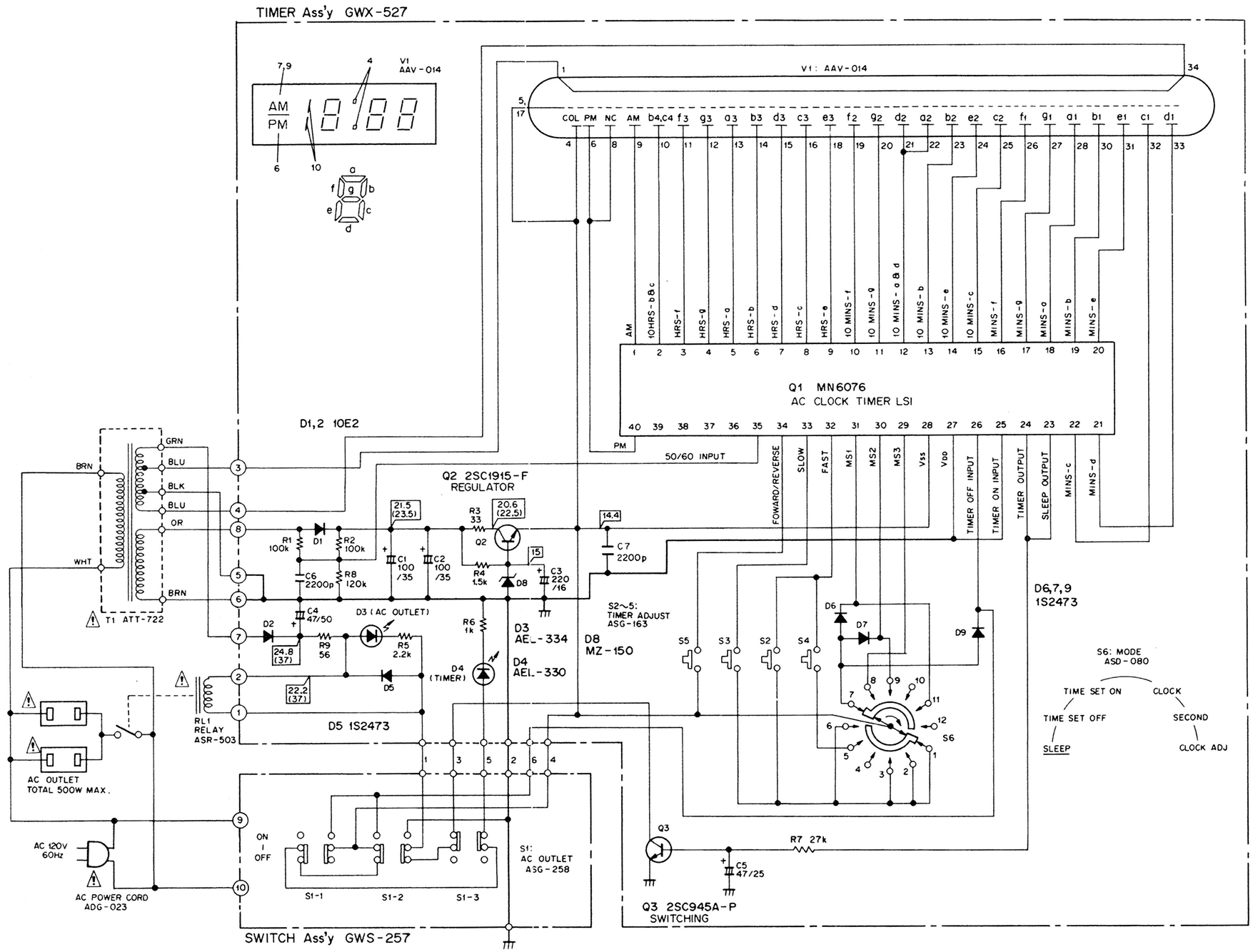

1. RESISTORS:
Indicated in Ω, ¼W, ±5% tolerance unless otherwise noted k : kΩ, M : MΩ, (F) : ±1%, (G) : ±2%, (K) : ±10%tolerance

2. CAPACITORS:
Indicated in capacity (μF)/voltage (V) unless otherwise noted p : pF
Indication without voltage is 50V except electrolytic capacitor.

3. VOLTAGE
: DC voltage (V) at TIMER, RELAY ON.
Value in ( ) is DC voltage at AC OUTLET OFF.

4. OTHERS:
The ⚠ mark found on some component parts indicates the importance of the safety factor of the part. Therefore, when replacing, be sure to use parts of identical designation.

SWITCHES:

S1-1 : AC OUTLET(OFF) ON – OFF
S1-2 : AC OUTLET (ON) ON – OFF
S1-3 : AC OUTLET (TIMER) ON – OFF
S2 : TIME ADJUST (FAST) ON – OFF
S3 : TIME ADJUST (SLOW) ON – OFF
S4 : TIME ADJUST (SEC RESET) ON – OFF
S5 : TIME ADJUST (REV) ON – OFF
S6 : MODE
SLEEP – TIMER SET OFF – TIMER SET ON – CLOCK – SECOND – CLOCK ADJUST

The underlined indicates the switch position.

This is the basic schematic diagram, but the actual circuit may vary due to improvements in design.

5. P.C.BOARD PATTERNS

5.1 TIMER ASSEMBLY (GWX-527)

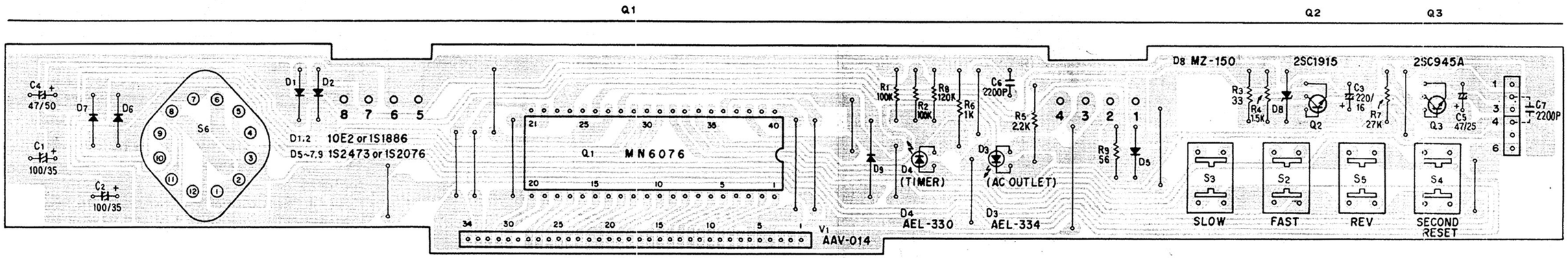
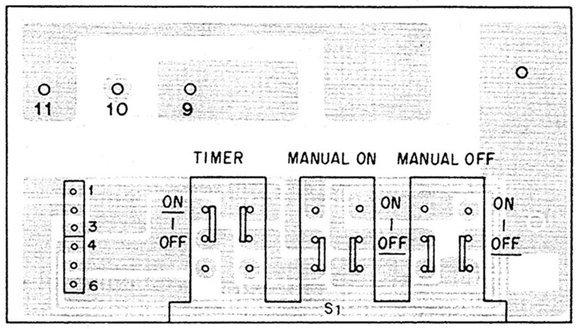
5.2 SWITCH ASSEMBLY (GWS-257)