ADDITIONAL

Service Manual

PIONEER®
The future of sound and vision.

ORDER NO.
ARZ 1821

FM/AM DIGITAL SYNTHESIZER TUNER

F-445 KUC

CIRCUIT DIAGRAMS &
PATTERN LAYOUTS
WITH MICROFICHE

PIONEER ELECTRONIC CORPORATION 4-1, Meguro 1-Chome, Meguro-ku, Tokyo 153, Japan
PIONEER ELECTRONICS SERVICE INC. P.O. Box 1760, Long Beach, California 90801 U.S.A.
PIONEER ELECTRONICS OF CANADA, INC. 505 Cochrane Drive, Markham, Ontario L3R 8E3 Canada
PIONEER ELECTRONIC [EUROPE] N.V. Keetberglaan 1, 2740 Beveren, Belgium
PIONEER ELECTRONICS AUSTRALIA PTY. LTD. 178-184 Boundary Road, Braeside, Victoria 3195, Australia TEL: [03] 580-9911

FV APR. 1989 Printed in Japan

2. CONTRAST OF MISCELLANEOUS PARTS

NOTES:

- *Parts without part number cannot be supplied.*
- *The ⚠ mark found on some component parts indicates the importance of the safety factor of the part. Therefore, when replacing, be sure to use parts of identical designation.*
- *Parts marked by "◉" are not always kept in stock. Their delivery time may be longer than usual or they may be unavailable.*

The F-445/KUC type is the same as the F-443L/HE type with the exception of the following sections.

Mark	Symbol & Description	Part No.		Remarks
		F-443L/HE	F-445/KUC	
	Power knob	AAD1343	AAD1535	
	Panel base assembly	AMD1026	AMD1032	
	Front panel assembly	ANB1202	ANB1279	
	Insulator assembly	AMR1350	AMR1434	
	Insulator assembly	AMR1353	AMR1435	
	Display panel	AAK1516	AAK1517	
	FL filter	AAK1481	AAK1574	
	Packing case	AHD1404	AHD1605	
	Operating instructions (8L)	ARE1079	. . .	
	Operating instructions (English)	ARB1172		
	Operating instructions (German)	. . .	. . .	
	FM antenna assembly	. . .	. . .	
	Loop antenna assembly	. . .	. . .	
	Connection cord with mini plug	. . .	ADE-085	
⚠	AC power cord	ADG1021	ADG-088	
⚠	Fuse (FU301)	AEK-407	AEK-136	
	Main assembly	AWZ1928	AWZ2405	
	LED assembly	Non Supply	Non Supply	
	Power SW assembly	Non Supply	Son Supply	
	Power IND. assembly	Non Supply	Non Supply	
	Name Plate	Non Supply	Non Supply	
	Rear Panel	Non Supply	Non Supply	

3. ELECTRICAL PARTS LIST

NOTES:

- *Parts without part number cannot be supplied.*
- *Parts marked by "◉" are not always kept in stock. Their delivery time may be longer than usual or they may be unavailable.*
- *The ⚠ mark found on some component parts indicates the importance of the safety factor of the part. Therefore, when replacing, be sure to use parts of identical designation.*
- *When ordering resistors, first convert resistance values into code form as shown in the following examples.*

Ex. 1 When there are 2 effective digits (any digit apart from 0), such as 560 ohm and 47k ohm (tolerance is shown by J = 5%, and K = 10%).

560Ω	*56 × 10¹*	*561*	*RD1/4PS 5 6 1 J*
47kΩ	*47 × 10³*	*473*	*RD1/4PS 4 7 3 J*
0.5Ω	*0R5*		*RN2H 0 R 5 K*
1Ω	*010*		*RS1P 0 1 0 K*

Ex. 2 When there are 3 effective digits (such as in high precision metal film resistors).

5.62kΩ	*562 × 10¹*	*5621*	*RN1/4SR 5 6 2 1 F*

Miscellaneous Parts

Mark	Symbol & Description		Part No.
		Main assembly	AWZ2405
		Front panel assembly	
		Power IND assembly	
		LED assembly	
		Power SW assembly	
⚠	FU301	Fuse (400mA/125V)	AEK-136
⚠		AC power cord	ADG-088

Main Assembly (AWZ2405)

SEMICONDUCTORS

Mark	Symbol & Description	Part No.
	IC501	AN7470P
	IC301	HA11225
	IC201	LA1247
	IC401	LM7001
	IC403, IC404	M5223P
	IC601	NJM78M13A
	IC701	PD5076-C
	IC402	μPD4040BC
	IC405	μPD4066BC
	Q401, Q403, Q404	DTA143ES
	Q301 – Q303, Q408, Q410, Q502, Q701, Q704, Q705	DTC124ES
	Q413, Q506, Q702	2SA933S
	Q203 – Q205, Q411, Q412, Q414, Q501, Q503, Q504, Q703, Q706, Q707	2SC1740S
	Q406	2SC1740SLN
	Q103, Q104	2SC2668
	Q102	2SC2786
	Q601	2SD880
	Q105	2SK161
	Q101	2SK241
	Q405, Q407	2SK246
	D101, D102	ITT310
	D403	RD5.1ESB2
	D605	RD6.2ESB2
	D201, D203	SVC321C2
	D741	RD12ESB1
	D601 – D604	S5566
	D301 – D303, D407, D501 – D507, D701, D702, D704 – D709, D713, D715, D720 – D726, D740	1SS252
	D204, D205	1SS85
	D742	RD2.0ESB

SWITCH

Mark	Symbol & Description		Part No.
	S501	Slide switch	ASH1006

TRANSFORMERS, COILS AND FILTERS

Mark	Symbol & Description		Part No.
	T201		ATB-095
	T102		ATC-194
	T101		ATE-063
⚠	T601	Power transformer	ATT1096
	L201		ATB-100
	L104		ATC1003
	L302		ATE-074
	L103, L301, L402		LAU2R2M
	L701		LAU220K
	F103		ATF-107
	F102		ATF-119
	F101		ATF-155
	F201		ATF1042

CAPACITORS

Mark	Symbol & Description	Part No.
	TC201, TC203	ACM-015
	C705 (22000/5.5)	ACH1023
	C106	CCDCH010C50
	C105	CCDCH020C50
	C103	CCDRH180J50

Mark	Symbol & Description	Part No.
	C303	CCDSL221J50
	C125	CCDTH150J50
	C101	CCMCH040C50
	C211	CCMCH070D50
	C124	CCMCH080D50
	C121, C126, C403, C404	CCMCH150J50
	C123	CCMCH330J50
	C221	CCMCH470J50
	C107, C706	CCMSL101J50
	C512	CEASR22M50
	C304, C310, C401, C412, C418, C707	CEAS010M50
	C511	CEAS1R5M50
	C504	CEAS101M16
	C419	CEAS471M16
	C708	CEAS2R2M50
	C236	CEAS221M10
	C602	CEAS322M35
	C222, C223, C235, C309, C501, C508 – C510, C702	CEAS4R7M50
	C415, C416, C603, C606	CEAS470M10
	C127, C226, C231, C311, C313, C402, C406, C410, C417, C430, C503, C505, C604	CEAS470M16
	C408	CFTXA224J50
	C237, C407	CKDYB103K50
	C102, C104, C108, C109, C120, C122, C201, C220, C224, C232, C405, C413	CKDYF103Z50
	C202, C212, C213, C227, C301, C302, C305 – C308, C312, C409, C513	CKDYF223Z50
	C230, C420, C502, C601, C605, C704	CKDYF473Z50
	C234	CKDYX104M25
	C233	CKDYX153M25
	C225, C414	CKDYX473M25
	C128, C229	CKMYB102K50
	C515, C516	CKDYB222K50
	C506, C507	CKMYB152K50
	C228	CKMYF102Z50
	C210	CQSA431J50
	C514	CQSA471J50

RESISTORS

Mark	Symbol & Description		Part No.
	VR502	Semi-fixed (4.7k.Ω)	VRTB6VS472
	R699		ACN-208
	R601	Fuseble	RFA1/4PS390J
	R430 – R453		RN1/4PC□□□□F
	R126, R226, R229, R303, R401, R502, R504 – R508, R511, R512, R523 – R526		RD1/4PM□□□J
		Other resistors	RD1/8PM□□□J

OTHERS

Mark	Symbol & Description		Part No.
	X201	Ceramic resonator	ATF1027
	X401	Crystal resonator	ASS1005
	X701	Ceramic resonator	ASS1018
		4P antenna terminal	AKA1009
		2P pin jack	AKB1039
		Mini jack	AKN-207

Front panel Assembly

SEMICONDUCTORS

Mark	Symbol & Description	Part No.
	IC702	PD0012A
	D731 – D733	1SS252

SWITCHES

Mark	Symbol & Description	Part No.
	S701 – S707, S711 – S717, S721 – S727	ASG-711
	Tact switch SILENT SERVO, UP, DOWN, CCTS, BAND, SLG, AM SERVO, FM-MONO, MEMORY, 1/13 – 12/24	

RESISTORS

Mark	Symbol & Description		Part No.
		All resistors	RD1/8P333J

OTHERS

Mark	Symbol & Description		Part No.
	V701	Fluorescent tube	AAV1031

Power IND Assembly

SEMICONDUCTORS

Mark	Symbol & Description		Part No.
	D804	LED assembly	AEL1004

LED Assembly

Mark	Symbol & Description		Part No.
	D801	LED assembly	AEL1004
	D802, D803	LED assembly	AEL1015

Power SW Assembly

SWITCH

Mark	Symbol & Description		Part No.
	S601	Push switch (POWER)	ASG-413

4. SCHEMATIC DIAGRAM

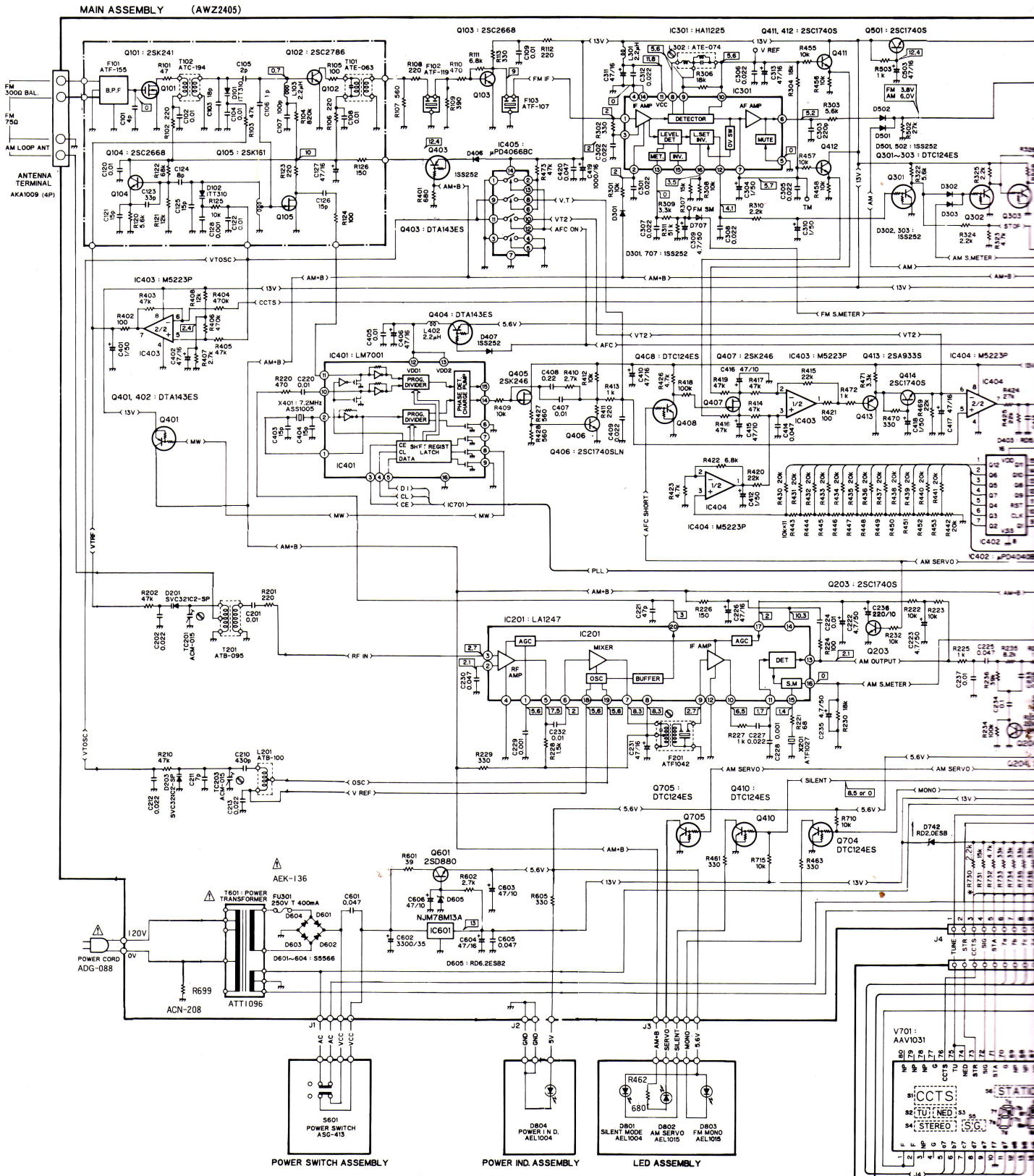

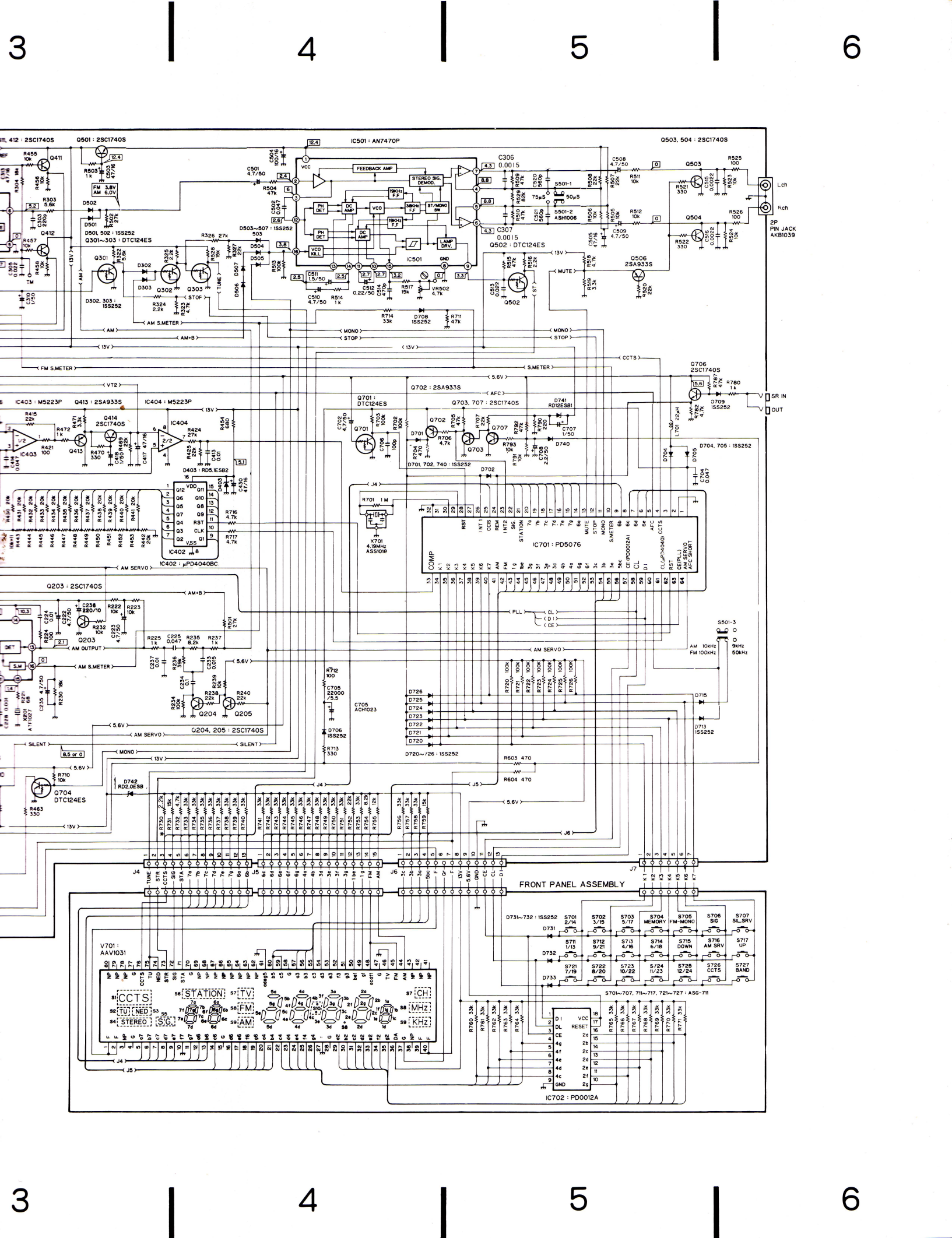
3
4
5
6
IC501 : AN7470P
FEEDBACK AMP
STEREO SIG. DEMOD.
PH. DET
DC AMP
VCO
19KHz F.P.
38KHz F.P.
ST/MONO SW
VCO KILL
LAMP DRV.
IC501
Q501 : 2SC1740S
Q502 : DTC124ES
Q503, 504 : 2SC1740S
Q506 2SA933S
Q701 : DTC124ES
Q702 : 2SA933S
Q703, 707 : 2SC1740S
Q706 2SC1740S
Q203 : 2SC1740S
Q204, 205 : 2SC1740S
Q704 DTC124ES
IC403 : M5223P
IC404 : M5223P
Q413 : 2SA933S
Q414 2SC1740S
IC402 : μPD4040BC
IC701 : PD5076
COMP
X701 4.19MHz ASS1018
S501-1
S501-2 ASH1006
S501-3
9kHz 50kHz
AM 10kHz FM 100kHz
2P PIN JACK AKB1039
Lch
Rch
SR IN
OUT
FRONT PANEL ASSEMBLY
V701 : AAV1031
CCTS
TU
NED
STEREO
S/G
STATION
TV
FM
AM
CH
MHz
KHz
S701 2/14
S702 3/15
S703 5/17
S704 MEMORY
S705 FM-MONO
S706 SIG
S707 SIL.SRV
S711 1/13
S712 9/21
S713 4/16
S714 6/18
S715 DOWN
S716 AM SRV
S717 UP
S721 7/19
S722 8/20
S723 10/22
S724 11/23
S725 12/24
S726 CCTS
S727 BAND
IC702 : PD0012A
J4
J5
J6
J7
3
4
5
6

4. SCHEMATIC DIAGRAM

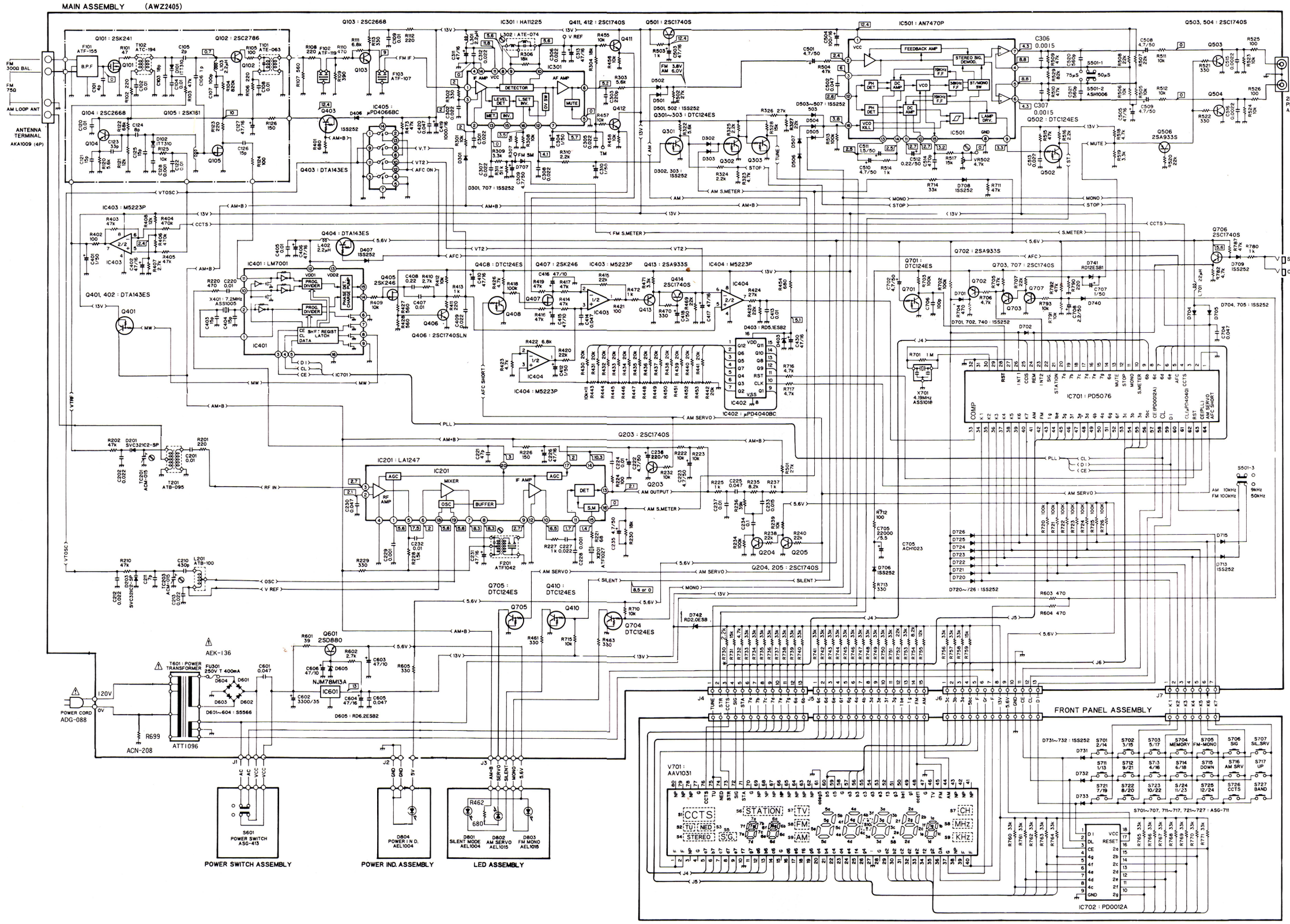

NOTE

1. This P.C.B connection diagram is viewed from the parts mounted side.
2. The parts which have been mounted on the board can be replaced with those shown with the corresponding wiring symbols listed in the following Table.

P.C.B. pattern diagram indication	Corresponding part symbol	Part Name
Q504 E	E or E	Transistor
Q215	or	Radiator type transistor
D203	D203	Diode
R237	R237	Resistor
C513	+	Capacitor (Polarity)
C518		Capacitor (Non-polarity)

Others

P.C.B. pattern diagram indication	Part Name
IC	IC
S	Switch
RY	Relay
L	Coil
F	Filter
VR	Variable resistor or Semi-fixed resistor

3. The capactor terminal marked with (double circles) shows negatine termianl.
4. The diode terminal marked with (double circles) shows cathode side.
5. The transistor terminal to which E is affixed shows the emitter.

1. RESISTORS:
Indicated in Ω, 1/8, 1/6, 1/4 W, ±5% tolerance unless otherwise noted k; kΩ, M; MΩ, (F); ±1%, (G); ±2%, (K); ±10%, (M); ±20% tolerance.

2. CAPACTIORS:
Indicated in capacity (μF)/voltage (V) unless otherwise noted p; pF.
Indication without voltage is 50 V except electrolytic capacitor.

3. VOLTAGE CURRENT:
; DC voltage (V) at no input signal.
Value in ( ) is DC voltage at rated power.
mA; DC current at no input signal.
mV ; Signal voltage at FM 400 Hz ±75 Hz DEV.

4. OTHERS
; Signal route.
; Adjusting point.
The ⚠ mark found on some companent parts indicates the importance of the safty factor of the part.
Therefore, when replacing, be sure to use parts of identical designation.
* marked capacitor and resistor have parts number.
This is the basic schematic diagram, but the actual circuit may vary due to improvements in design.

5. P.C. BOARD PATTERNS

Main Assembly (AWZ2405)

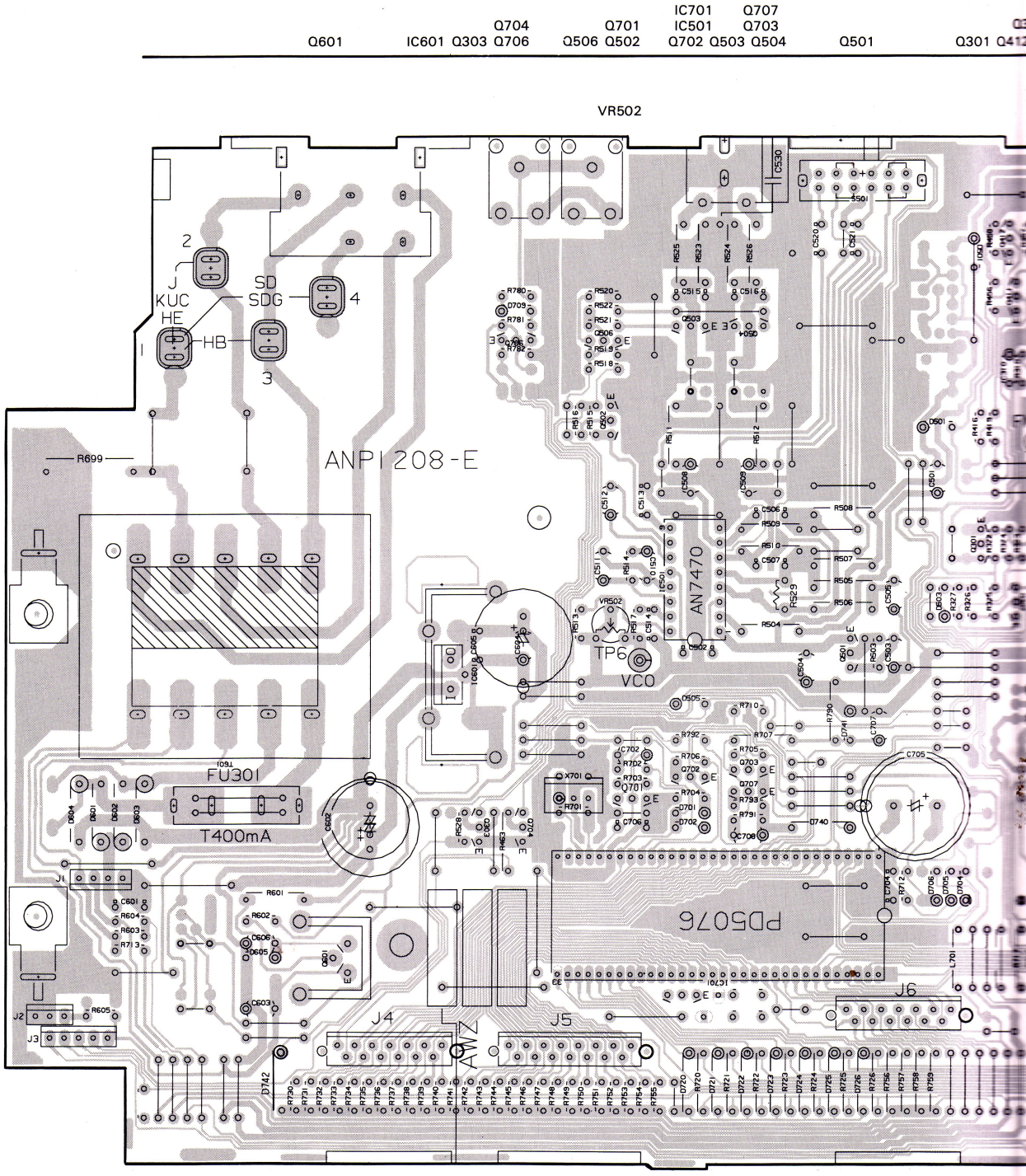

4 5 6

Q302
Q301 Q412 Q411 IC402 IC301

Q413 Q408 Q414 IC404
Q103 IC405 Q407 Q705 IC403 Q105

Q101 Q404
Q204 Q406
Q403 Q401 Q405 IC201
Q410 Q104 Q205 IC401

Q203

TC203
T201 TC201
L201

L302

T101

T102

A

B

C

D

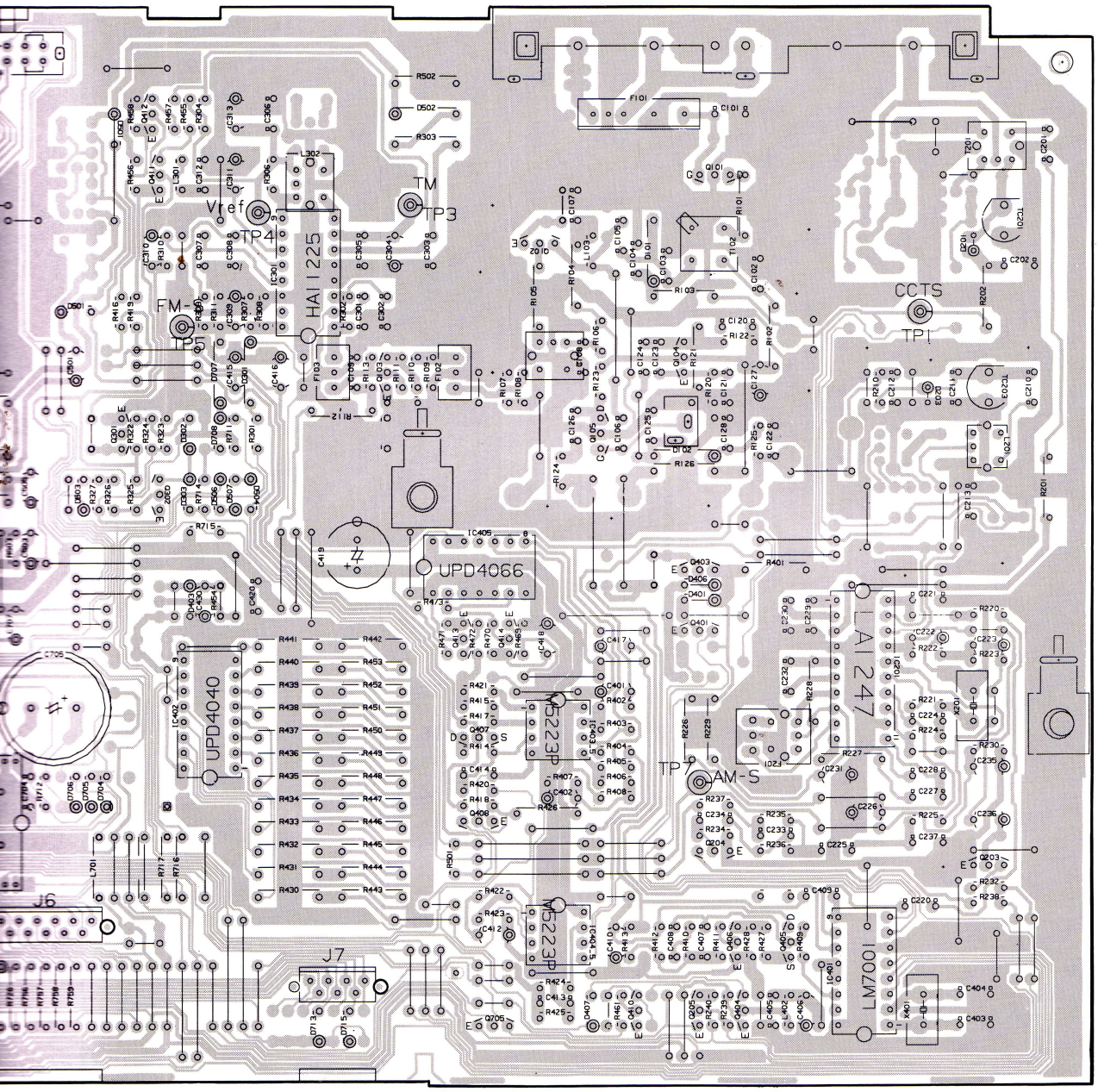

4 5 6

5. P.C. BOARD PATTERNS

Main Assembly (AWZ2405)

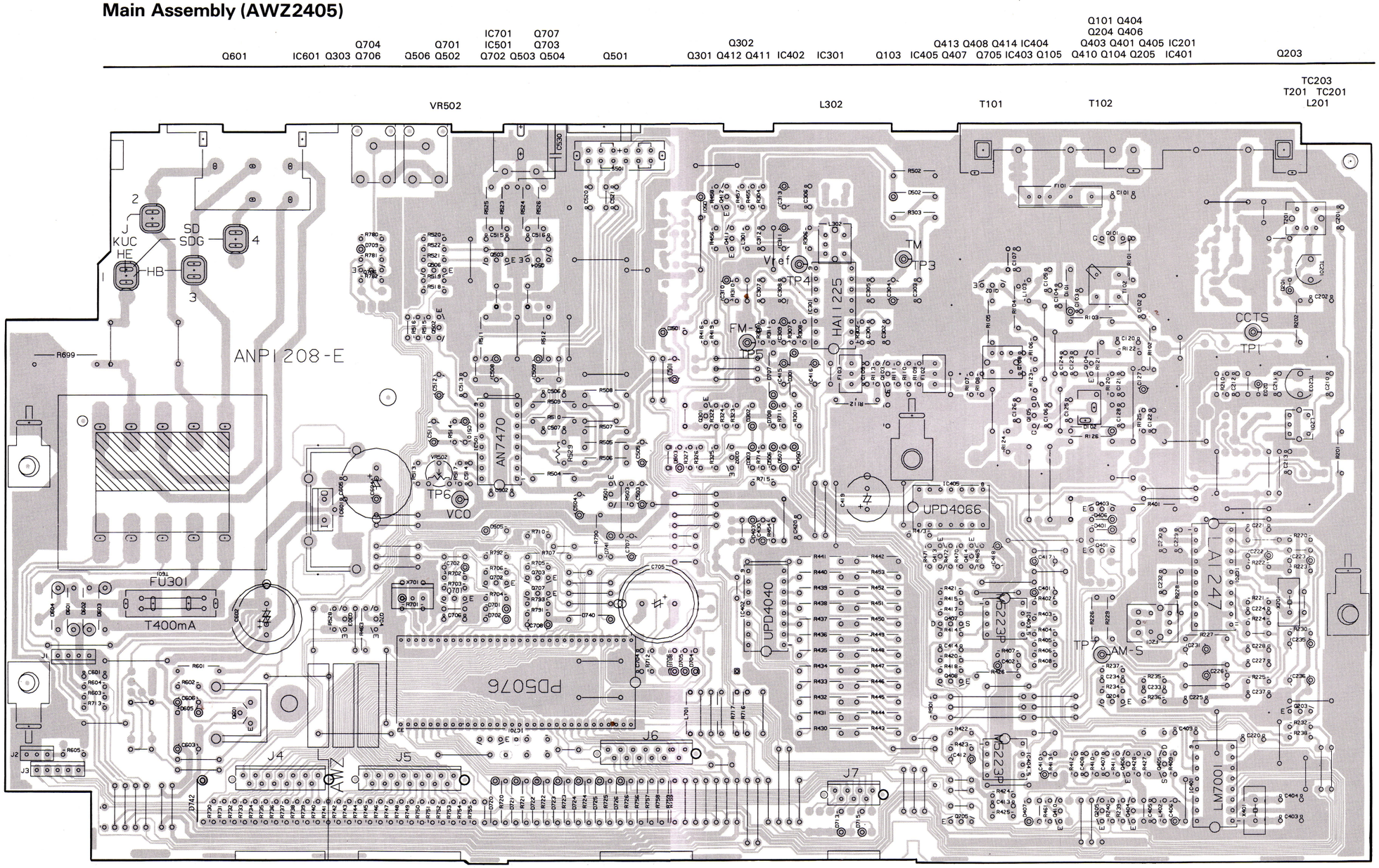

This P.C.B. connection diagram is viewed from the foil side.

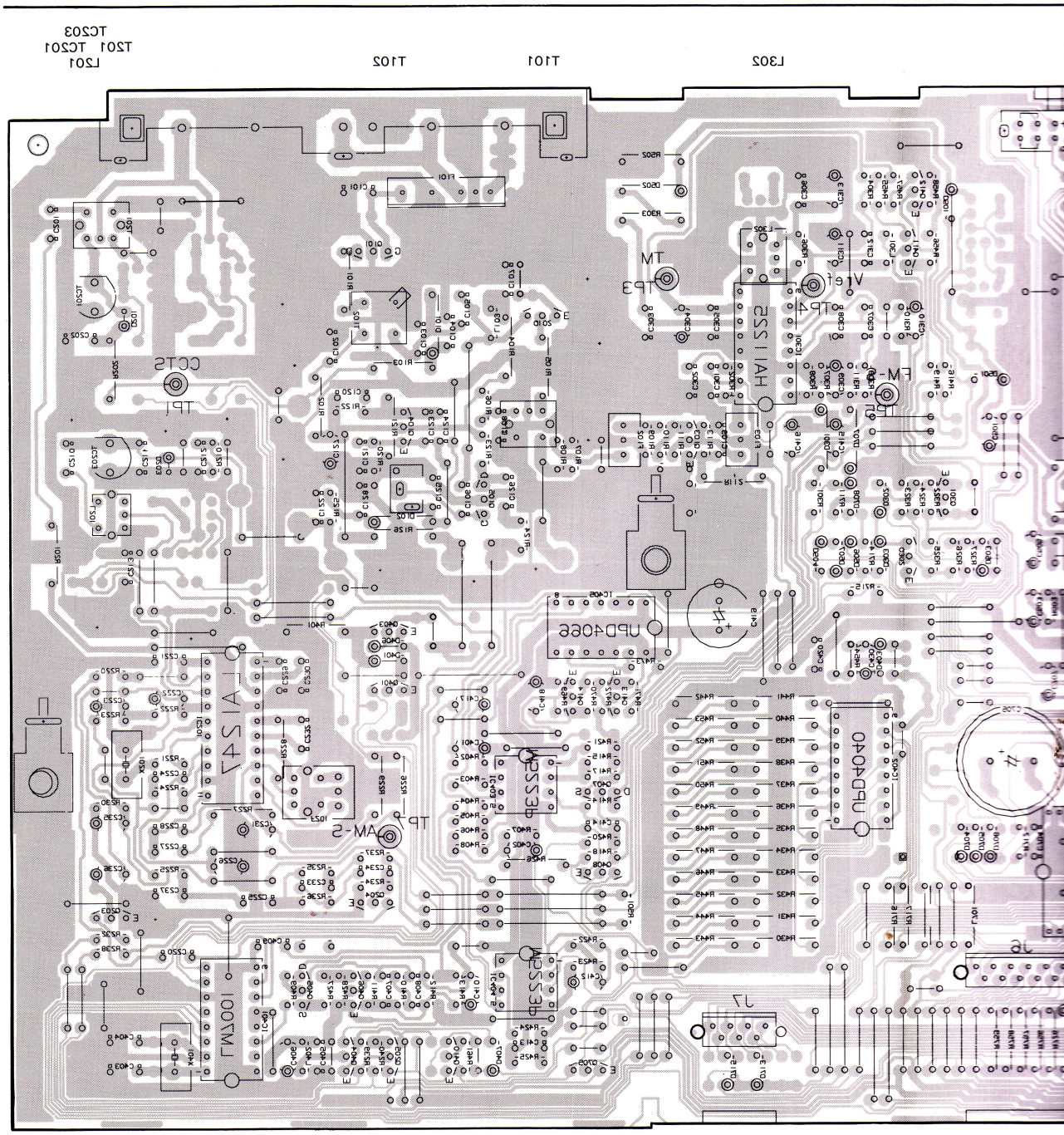

5. P.C. BOARD PATTERNS

Main Assembly (AWZ2405)

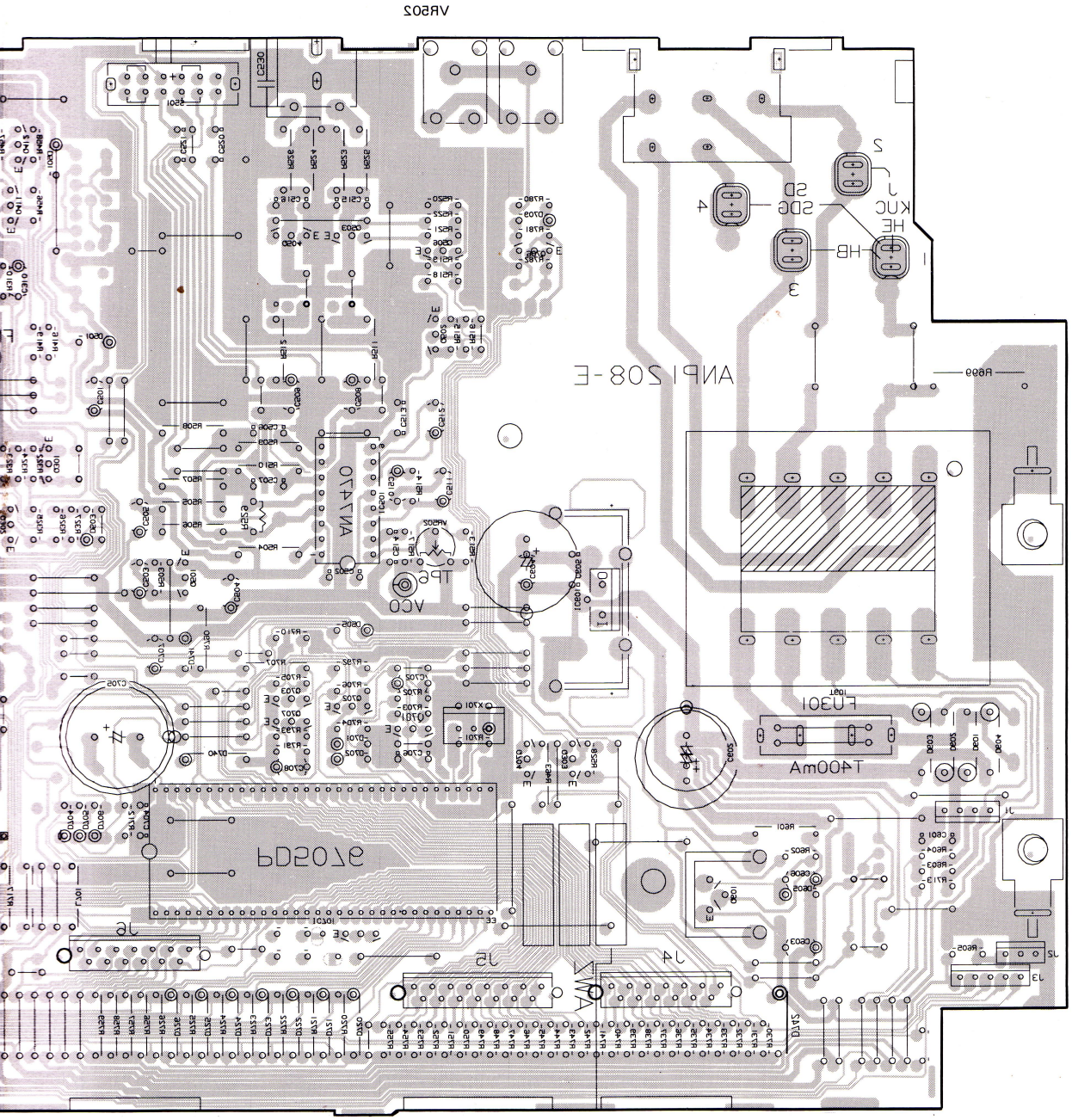

5. P.C. BOARD PATTERNS

Main Assembly (AWZ2405)

This P.C.B. connection diagram is viewed from the foil side.