PIONEER®
The future of sound and vision.

Service Manual

ORDER NO.
ARP1948

COMPACT DISC PLAYER

PD-5500
PD-5500-S
PD-4550
PD-4550-S
PD-4500
PD-4500-S

PD-5500, PD-5500-S, PD-4550, PD-4550-S, PD-4500 AND PD-4500-S HAVE FOLLOWING VERSIONS :

Type	Applicable model				Power requirement	Export destination
	PD-5500	PD-5500-S PD-4550-S	PD-4550 PD-4500	PD-4500-S		
KU	○	—	○	—	AC 120V only	U.S.A
KC	○	—	○	—	AC 120V only	Canada
KUXJ	○	—	○	—	AC 120V only	U.S.A
KCXJ	○	—	○	—	AC 120V only	Canada
HEMXJ	○	—	○	—	AC 220V, 240V (switchable) *	European continent
HBXJ	○	—	○	○	AC 220V, 240V (switchable) *	United Kingdom
HEWMXJ	—	○	—	○	AC 220V, 240V (switchable) *	European continent
SD	—	—	○	—	AC 110V, 120V–127V, 220V, 240V (switchable)	Kingdom of Saudi Arabia and General market
HPW	—	—	○	—	AC 220V, 240V (switchable) *	Australia

* Change the primary wiring of the power transformer.

PIONEER ELECTRONIC CORPORATION 4-1, Meguro 1-Chome, Meguro-ku, Tokyo 153, Japan
PIONEER ELECTRONICS SERVICE INC. P.O. Box 1760, Long Beach, California 90801 U.S.A.
PIONEER ELECTRONICS OF CANADA, INC. 505 Cochrane Drive, Markham, Ontario L3R 8E3 Canada
PIONEER ELECTRONIC [EUROPE] N.V. Keetberglaan 1, 2740 Beveren, Belgium
PIONEER ELECTRONICS AUSTRALIA PTY. LTD. 178-184 Boundary Road, Braeside, Victoria 3195, Australia TEL: [03] 580-9911

IFO MAR. 1990 Printed in Japan

- This manual is applicable to the PD-5500/KU, KC, KUXJ, KCXJ, HEMXJ, HBXJ, PD-5500-S/HEWMXJ, PD-4550/KU, KC, KUXJ, KCXJ, HEMXJ, HBXJ, PD-4550-S/HEWMXJ, PD-4500/KU, KC, KUXJ, KCXJ, HEMXJ, HBXJ, PD-4500-S/HBXJ and HEWMXJ types.
- As to the PD-5500/KC, KUXJ, KCXJ, HEMXJ, HBXJ and PD-5500-S/HEWMXJ types, refer to pages 61 – 63.
- As to the PD-4550/KC, KUXJ, KCXJ, HEMXJ, HBXJ and PD-4550-S/HEWMXJ types, refer to pages 63 – 66.
- As to the PD-4500/KC, KUXJ, KCXJ, HEMXJ, HBXJ, PD-4500-S/HBXJ and HEWMXJ types, refer to pages 65 – 67.
- As to the other types, refer to applicable service manuals.
- As to the adjustments, refer to the single CD model (PD-5500) section of the ADJUSTMENT FOR CD PLAYERS. VOL.1 (ORDER NO. ARP2000).

CONTENTS

This service manual is intended for qualified service technicians; it is not meant for the casual do-it-yourselfer. Qualified technicians have the necessary test equipment and tools, and have been trained to properly and safely repair complex products such as those covered by this manual.
Improperly performed repairs can adversely affect the safety and reliability of the product and may void the warranty. If you are not qualified to perform the repair of this product properly and safely, you should not risk trying to do so and refer the repair to a qualified service technician.

WARNING
Lead in solder used in this product is listed by the California Health and Welfare agency as a known reproductive toxicant which may cause birth defects or other reproductive harm (California Health & Safety Code, Section 25249.5).
When servicing or handling circuit boards and other components which contain lead in solder, avoid unprotected skin contact with the solder. Also, when soldering do not inhale any smoke or fumes produced.

1. SAFETY INFORMATION

(FOR USA MODEL ONLY)

1. SAFETY PRECAUTIONS

The following check should be performed for the continued protection of the customer and service technician.

LEAKAGE CURRENT CHECK

Measure leakage current to a known earth ground (water pipe, conduit, etc.) by connecting a leakage current tester such as Simpson Model 229-2 or equivalent between the earth ground and all exposed metal parts of the appliance (input/output terminals, screwheads, metal overlays, control shaft, etc.). Plug the AC line cord of the appliance directly into a 120V AC 60Hz outlet and turn the AC power switch on. Any current measured must not exceed 0.5mA.

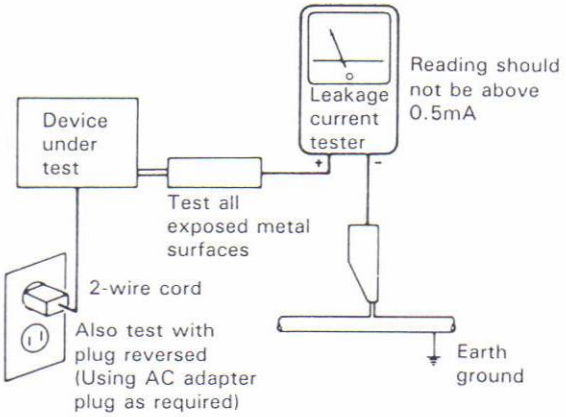

AC Leakage Test

ANY MEASUREMENTS NOT WITHIN THE LIMITS OUTLINED ABOVE ARE INDICATIVE OF A POTENTIAL SHOCK HAZARD AND MUST BE CORRECTED BEFORE RETURNING THE APPLIANCE TO THE CUSTOMER.

2. PRODUCT SAFETY NOTICE

Many electrical and mechanical parts in the appliance have special safety related characteristics. These are often not evident from visual inspection nor the protection afforded by them necessarily can be obtained by using replacement components rated for voltage, wattage, etc. Replacement parts which have these special safety characteristics are identified in this Service Manual.

Electrical components having such features are identified by marking with a ⚠ on the schematics and on the parts list in this Service Manual.
The use of a substitute replacement component which dose not have the same safety characteristics as the PIONEER recommended replacement one, shown in the parts list in this Service Manual, may create shock, fire, or other hazards.

Product Safety is continuously under review and new instructions are issued from time to time. For the latest information, always consult the current PIONEER Service Manual. A subscription to, or additional copies of, PIONEER Service Manual may be obtained at a nominal charge from PIONEER.

(FOR EUROPEAN MODEL ONLY)

VARO!
AVATTAESSA JA SUOJALUKITUS OHITETTAESSA OLET ALTTIINA NÄKYMÄTTÖMÄLLE LASERSÄTEILYLLE. ÄLÄ KATSO SÄTEESEEN.

ADVERSEL:
USYNLIG LASERSTRÅLING VED ÅBNING NÅR SIKKERHEDSAFBRYDERE ER UDE AF FUNKTION UNDGÅ UDSAETTELSE FOR STRÅLING.

VARNING!
OSYNLIG LASERSTRÅLNING NÄR DENNA DEL ÄR ÖPPNAD OCH SPÄRREN ÄR URKOPPLAD. BETRAKTA EJ STRÅLEN.

LASER
Kuva 1
Lasersateilyn varoitusmerkki

WARNING!
DEVICE INCLUDES LASER DIODE WHICH EMITS INVISIBLE INFRARED RADIATION WHICH IS DANGEROUS TO EYES. THERE IS A WARNING SIGN ACCORDING TO PICTURE 1 INSIDE THE DEVICE CLOSE TO THE LASER DIODE.

IMPORTANT
THIS PIONEER APPARATUS CONTAINS LASER OF HIGHER CLASS THAN 1. SERVICING OPERATION OF THE APPARATUS SHOULD BE DONE BY A SPECIALLY INSTRUCTED PERSON.

LASER DIODE CHARACTERISTICS
MAXIMUM OUTPUT POWER: 5 mw
WAVELENGTH: 780-785 nm

LASER
Picture 1
Warning sign for laser radiation

LABEL CHECK (SINGLE type)

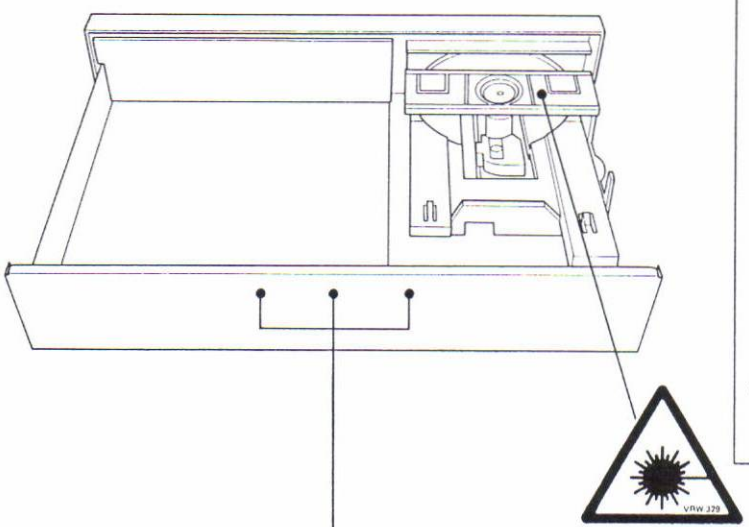

HEMXJ and HBXJ types

Additional Laser Caution

1. Laser Interlock Mechanism
   The position of the switch (S601) for detecting loading completion is detected by the system microprocessor, and the design prevents laser diode oscillation when the switch (S601) is not in $\overline{\text{CLMP}}$ terminal side (when the mechanism is not clamped and $\overline{\text{CLMP}}$ signal is high level).
   Thus, the interlock will no longer function if the switch (S601) is deliberately set to $\overline{\text{CLMP}}$ terminal side (if $\overline{\text{CLMP}}$ signal is low level).
   In the test mode,* the interlock mechanism will not function.
   Laser diode oscillation will continue if pins 2 and 3 of CXA1471S (IC101) are connected to ground or pin 20 is connected to high level (ON) or the terminals of Q101 are shorted to each other (fault condition).
2. When the cover is opened, close viewing of the objective lens with the naked eye will cause exposure to a Class 1 or higher laser beam.

* Refer to Service manual ARP2000, FOR CD PLAYERS ADJUSTMENT VOL.1.

CAUTION
INVISIBLE LASER RADIATION WHEN OPEN, AVOID EXPOSURE TO BEAM
PRW1018

HBXJ type

ADVARSEL
USYNLIG LASERSTRÅLING VED ÅBNING NÅR SIKKERHED SAFBRYDERE ER UDE AF FUNKTION.
UNDGÅ UDSÆTTELSE FOR STRÅLING.
VORSICHT!
UNSICHTBARE LASER-STRAHLUNG TRITT AUS, WENN DECKEL (ODER KLAPPE) GEÖFFNET IST! NICHT DEM STRAHL AUSSETZEN!
VRW1094

HEMXJ type

CLASS 1
LASER PRODUCT
VRW-328

HEMXJ and HBXJ types

2. DISASSEMBLY

● REMOVING THE BONNET

① Remove six screws to the bonnet.
② Remove the bonnet by pulling up it in the vertically direction of arrow (Fig. 2-1).

Note : If you pull up the rear base of the bonnet to remove it as in the conventional manner, the hooks shown in Fig. 2-1 may be caught and the hooks on the front panel side may be deformed.

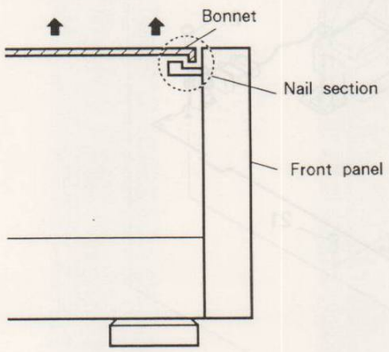

Fig. 2-1

● REMOVING THE TRAY

① Turn the POWER switch ON, and open the tray by the OPEN/CLOSE key. (Refer to the Note 1 when opening the tray by hand-operated.)
② Pull out the tray slowly by pushing the nail of the tray section from two holes Ⓒ and Ⓓ of the clamp holder (Fig. 2-2). (It is necessary to push the nail of the tray section at the front panel portion.)

Note 1 : How to open the tray by hand-operated

● REMOVING THE FRONT PANEL

① Remove five screws Ⓐ (Upper side is two screws and under side is three screws.) to the front panel.
② Remove a screw Ⓑ to the Headphone board assembly (Fig. 2-2).
③ Disconnect two connectors CN351 and CN401 from the Mother board assembly (Fig. 2-2).
④ Remove the front panel and the Headphone board assembly together.

CAUTION : When CN351 is connected and disconnected, be sure to disconnect the AC power cord from the AC outlet. If not, microcomputer (IC351) may be destroyed.

① Turn the gear B slowly in the direction of arrow by ⊖ screwdriver with care not to damage the gear B (Fig. 2-2).
② Turn gear B until the tray starts to move in the direction of the OPEN position.
③ Move the tray to the OPEN position by hand.

Note : When attaching the tray, be sure attach it when the servo mechanism assembly is in the completely lowered position (when the rack has been moved all the way back). Otherwise, the upward and downward movements of the servo mechanism assembly may not synchronize with the movements of the tray. If the tray has been incorrectly attached, re-attach it as follows.

① Remove the tray following Step 2 of "REMOVING THE TRAY".
② Move the rack all the way back by hand
③ Install the tray.

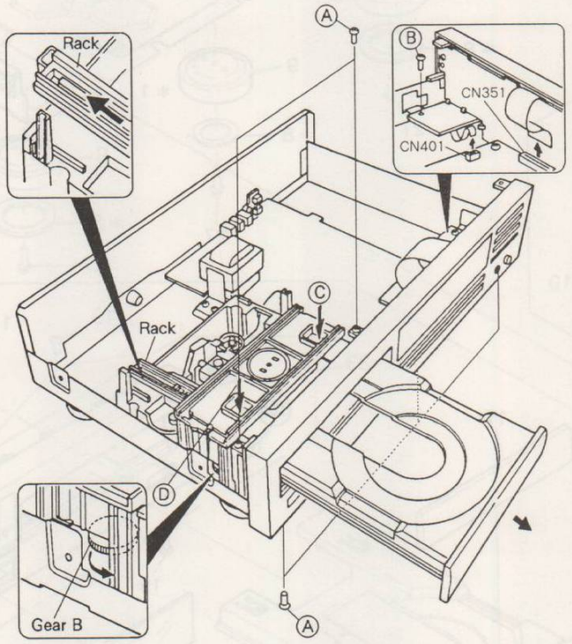

Fig. 2-2

● REMOVING THE SERVO MECHANISM ASSEMBLY

① Remove the tray. (Refer to the "REMOVING THE TRAY".)
② Remove the four screws Ⓔ and one screw Ⓕ with the servo mechanism assembly lowered (to the tray-open position). (Fig. 2-3)
③ To move the rack by hand, gear A and the gear section of the rack must be engaged at section Ⓖ (see Fig. 2-3). Otherwise, the rack may not move. In this case, move gear B with a ⊖ screwdriver from the side and fit gear B and the gear section of the rack at the engaging section Ⓖ.

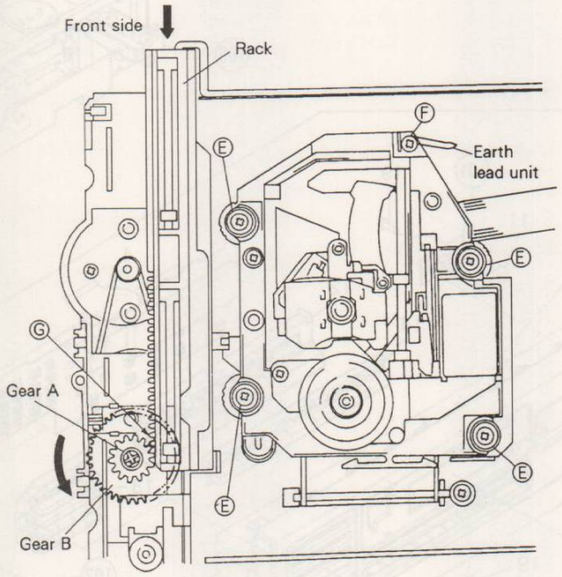

Fig. 2-3

④ Push the slide bushing at the front left with a thin implement such as a ⊖ screwdriver (Fig. 2-4).
⑤ Pull up the rear side Ⓗ of the servo mechanism assembly. (Arrow ① in Fig. 2-4)
⑥ To release the engagement at section Ⓙ of the servo mechanism assembly, turn the assembly counterclockwise on the slide bushing Ⓘ (Arrow ② in Fig. 2-4)

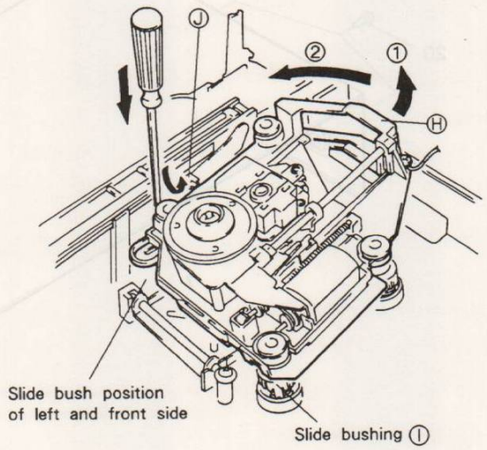

Fig. 2-4

● REMOVING THE SWING LEVER

① Move the rack manually so that section Ⓚ of the swing lever reaches the inclined part Ⓛ of a groove on the rack. (see Fig. 2-5)
② Remove screw Ⓜ which holds the shaft.
③ Slightly pull up the right side of the shaft (the side of screw Ⓜ) and pull the shaft outward in the direction of arrow ③.

● REMOVING THE SLIDE BUSHING

① Compress the slide bushing from three directions as shown in Fig. 2-5.
② Remove the bushing by turning it in the direction of the arrow ④.

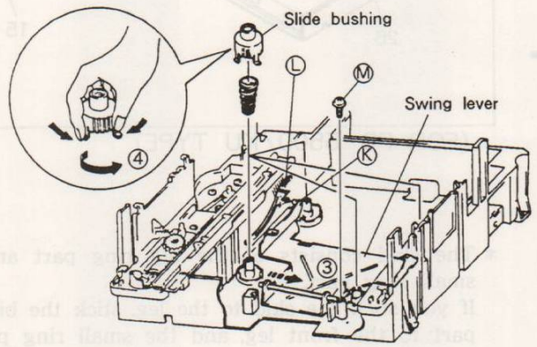

Fig. 2-5

3. EXPLODED VIEWS AND PARTS LIST

3.1 Exterior

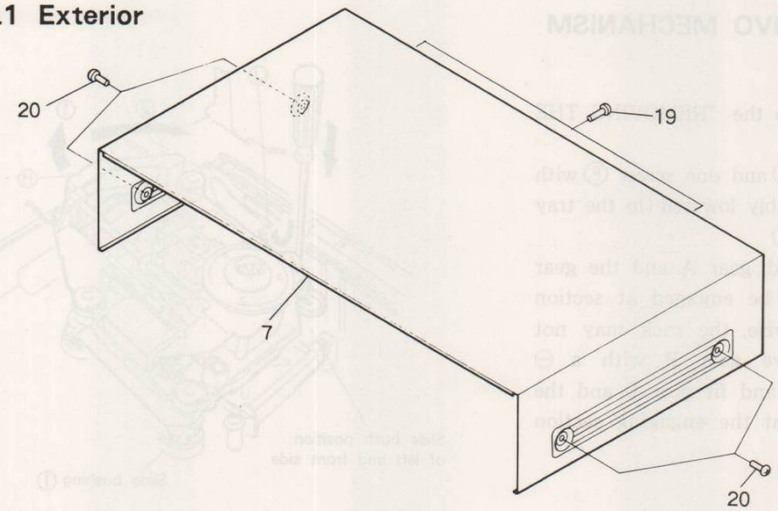

Note : When the model is KU or KUXJ types, fix the AC power cord by using a binder or a UL cord holder.

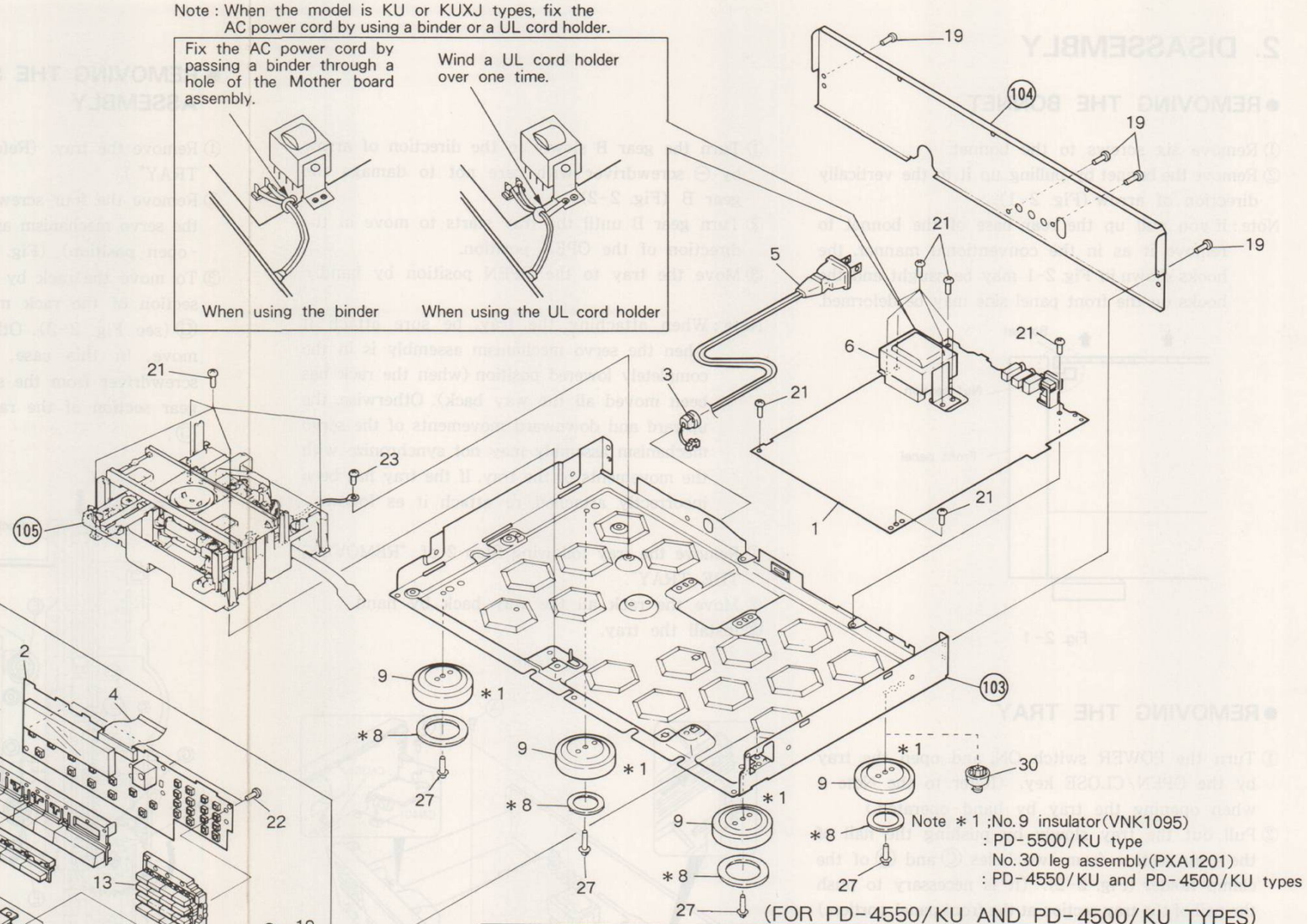

(FOR PD-4550/KU AND PD-4500/KU TYPES)

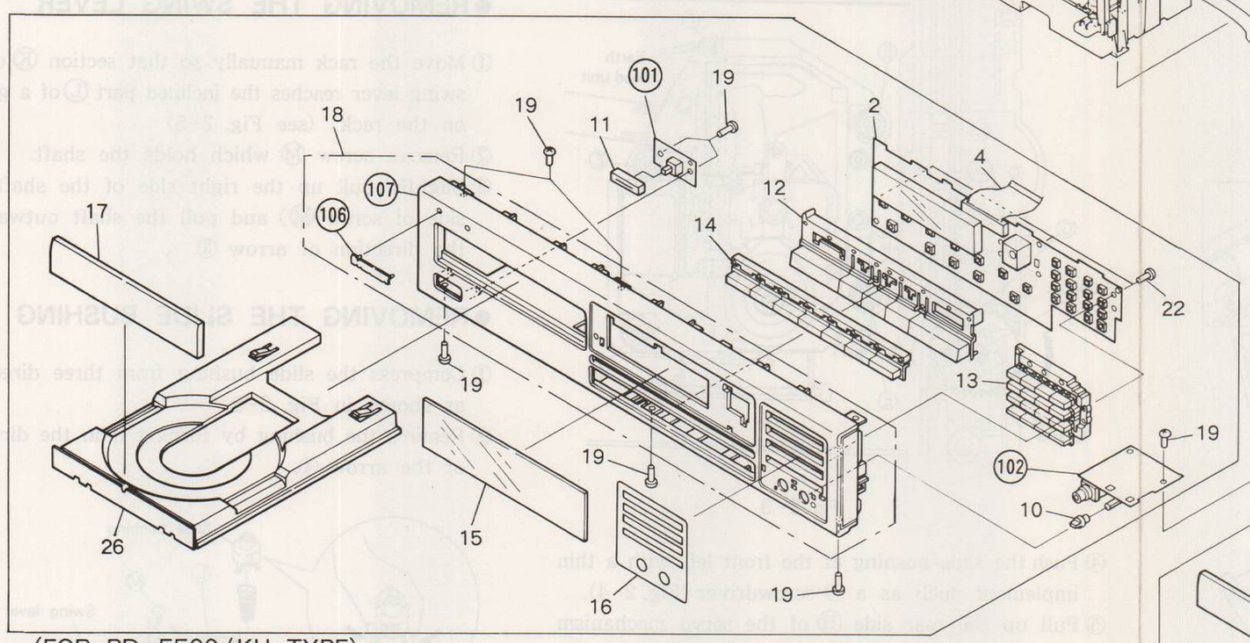

(FOR PD-5500/KU TYPE)

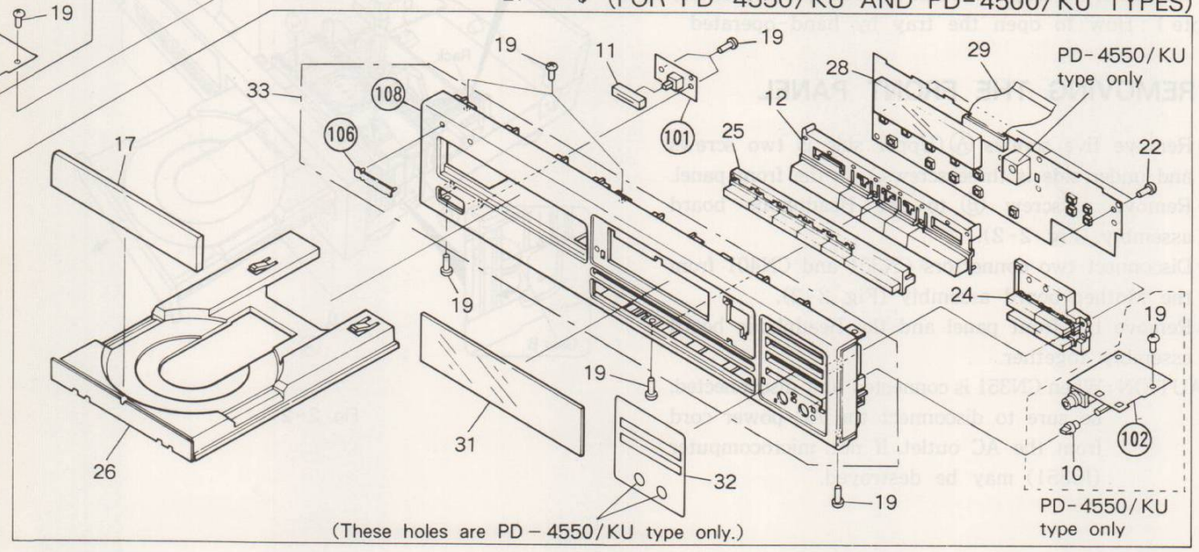

* The skid consists of the big ring part and the small ring part.
If you stick the skid to the leg, stick the big ring part to the front leg, and the small ring part to the rear leg.

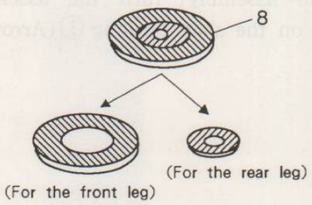

NOTES :
- Parts without part number cannot be supplied.
- The ⚠ mark found on some component parts indicates the importance of the safety factor of the part. Therefore, when replacing, be sure to use parts of identical designation.
- Parts marked by "◉" are not always kept in stock. Their delivery time may be longer than usual or they may be unavailable.

Parts List of Exterior Section

Mark	No.	Part No.	Description
◉	1	PWM1269	Mother board assembly (PD-5500/KU and PD-4550/KU types)
◉	1	PWM1266	Mother board assembly (PD-4500/KU type)
◉	2	PWZ1804	Function board assembly (PD-5500/KU type)
⚠	3	CM-22C	Strain relief
	4	PDD1041	Flexible cable (32P)
⚠	5	PDG1002	AC power cord
⚠	6	PTT1124	Power transformer (AC120V)
	7	PYY1129	Bonnet
	8	PNM1070	Skid (PD-5500/KU type)
	9	VNK1095	Insulator (PD-5500/KU type)
	10	PAC1370	Headphone knob
	11	PAC1438	Power button
	12	PAC1439	Play button
	13	PAC1440	Select button
	14	PAC1441	Time button A
	15	PAM1362	Display window B
	16	PAM1365	Headphone name plate C
	17	PNW1625	Tray name plate
	18	PEA1039	Function panel assembly
	19	BBZ30P080FZK	Screw
	20	FBT40P080FZK	Screw
	21	BBZ30P060FMC	Screw
	22	BBZ30P120FMC	Screw
	23	PDZ30P050FMC	Screw
	24	PAC1446	Program button (PD-4550/KU and PD-4500/KU types)
	25	PAC1447	Time button B
	26	PNW1672	Tray
	27	IBZ30P080FCC	Screw
◉	28	PWZ1803	Function board assembly (PD-4550/KU type)
◉	28	PWZ1802	Function board assembly (PD-4500/KU type)
	29	PDD1041	Flexible cable (32P) (PD-4550/KU type)
	29	PDD1049	Flexible cable (30P) (PD-4500/KU type)
	30	PXA1201	Leg assembly (PD-4550/KU and PD-4500/KU types)
	31	PAM1362	Display window B (PD-4550/KU type)
	31	PAM1357	Display window A (PD-4500/KU type)
	32	PAM1364	Headphone name plate B (PD-4550/KU type)
	32	PAM1356	Headphone name plate A (PD-4500/KU type)
	33	PEA1038	Function panel assembly (PD-4550/KU type)
	33	PEA1037	Function panel assembly (PD-4500/KU type)
	101		Switch board assembly
	102		Headphone board assembly
	103		Under base
	104		Rear base (PD-5500/KU type)
	104		Rear base (PD-4550/KU type)
	104		Rear base (PD-4500/KU type)
	105		Single mechanism assembly
	106		PIONEER badge
	107		Function panel C
	108		Function panel B (PD-4550/KU type)
	108		Function panel A (PD-4500/KU type)

3.2 MECHANISM SECTION

Parts List of Mechanism Section

Mark No.	Part No.	Description
1	DSK1001	Lever switch (CLAMP)
2	PBA1042	Screw
3	PBH1085	Coil spring
4	PEB1127	Rubber belt
5	PNW1634	Motor pulley
6	PNW1673	Clamper base
7	PNW1674	Rack
8	PNW1675	Synchronized plate
9	PNW1676	Gear A
10	PNW1677	Gear B
11	PNW1678	Gear Pulley
12	PNW1679	Sensor head
13	PNW1680	Slide bush
14	PXM1010	D. C. motor (0.75W) (LOADING)
15	PEB1014	Floating rubber
16	PEB1132	Floating rubber
17	BPZ26P080FMC	Screw
18	IPZ30P080FMC	Screw
19	PMZ26P040FMC	Screw
20	WT26D047D050	Washer
21	PBH1009	Earth spring
22	PBH1084	Drive spring
23	PBK1057	Plate spring
24	PEB1072	Belt
25	PLA1003	Drive screw
26	PLA1071	Guide bar
27	PNW1066	Pulley
28	PNW1605	Harf nut
29	PNW1608	Disc table
30	PNW1634	Motor pulley
31	PSH1003	Slide switch (INSIDE)
32	PBZ30P080FMC	Screw
33	PXM1013	D. C. motor (1.7W) (CARRIAGE)
34	BPZ20P080FMC	Screw
35	JFZ20P025FMC	Screw
36	PMZ20P030FMC	Screw
37	PEA1028	D. C. motor assembly (SPINDLE)
38	PEA1030	Pickup assembly
39	PCP1008	Variable resistor (VR1)
40	CKSYF105Z16	Chip capasitor (C1001)
41	WA62D095D013	Washer
101		2mm pitch connector assembly (5P)
102		Shaft
103		Magnet
104		Yoke
105		Swing lever
106		Clamper S
107		Loading base
108		Servo mechanism assembly
109		2mm pitch connector assembly (6P)
110		Motor base
111		Earth lead unit (300V)
112		Mechanism base
113		Mechanism shassis

• How to install the disc table

1 Use nippers or other tool to cut the two sections marked Ⓐ in figure 1. Then remove the spacer.

2 While supporting the spindle motor shaft with the stopper, put spacer on top of the motor base (angled so it doesn't touch section Ⓑ), and stick the disc table on top (takes about 9kg pressure). Take off the spacer.

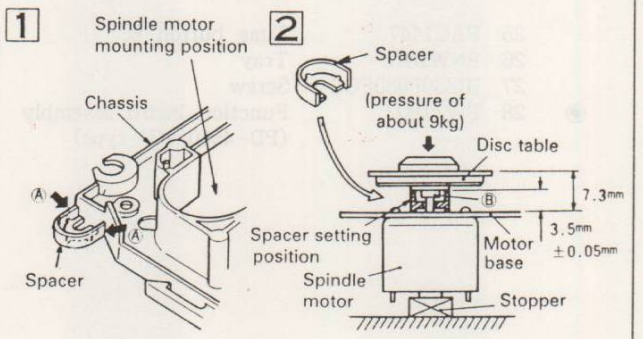

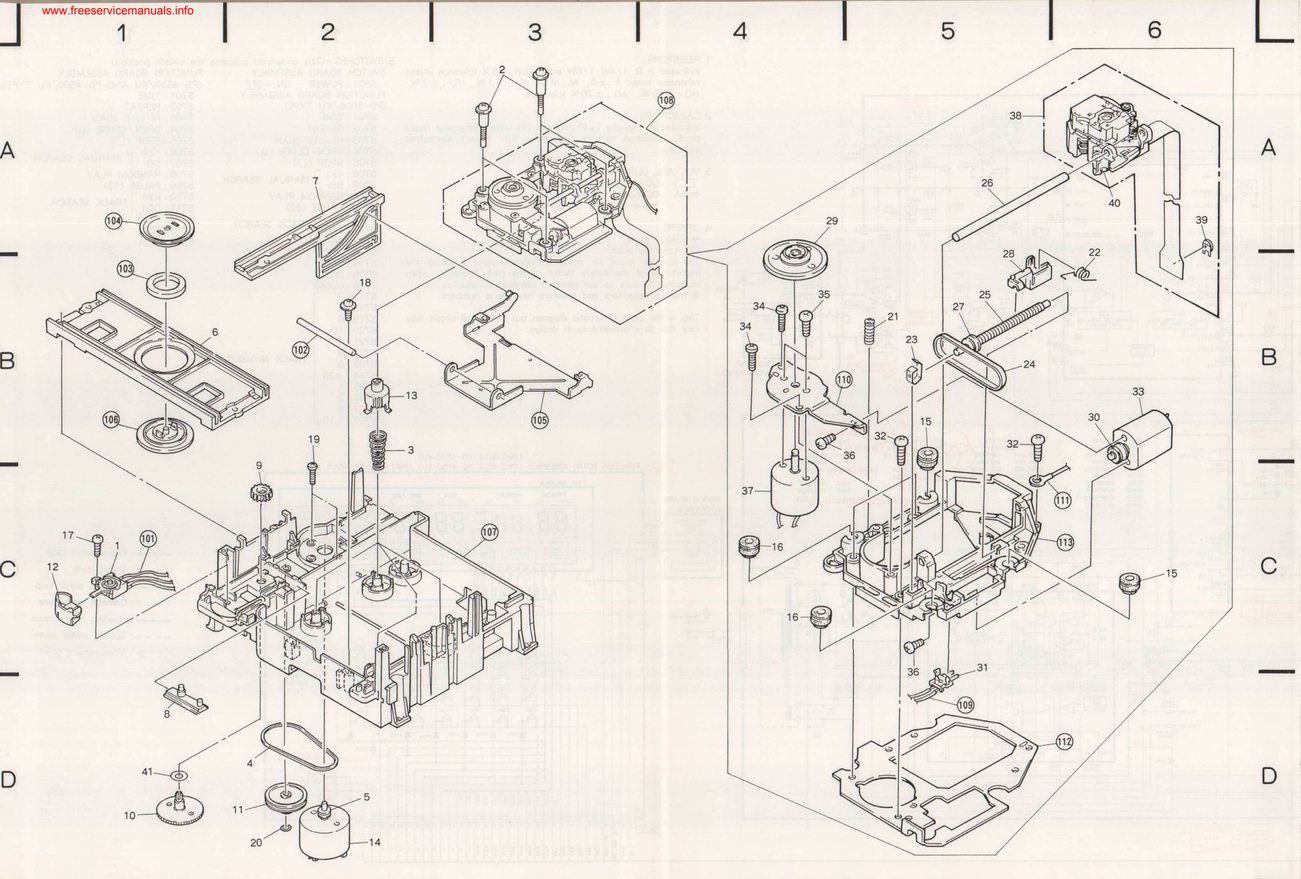

4. PACKING

Parts List

Mark	No.	Part No.	Description
	1	PDE-319	Connection cord with mini plug
	2	PDE1001	Connection cord with pin plug
	3	PRB1114	Operating instructions (English)
	4	PWW1047	Remote control unit (PD-5500/KU and PD-4550/KU types)
	5	PHA1116	Protector F
	6	PHA1117	Protector R
	7	PHG1506	CD packing case (PD-5500/KU type)
	7	PHG1496	CD packing case (PD-4550/KU type)
	7	PHG1396	CD packing case (PD-4500/KU type)
	8	Z23-007	Mirror mat sheet
	9	VNK-634	Case (C) (PD-5500/KU and PD-4550/KU types)
	51		Battery (UM-4)

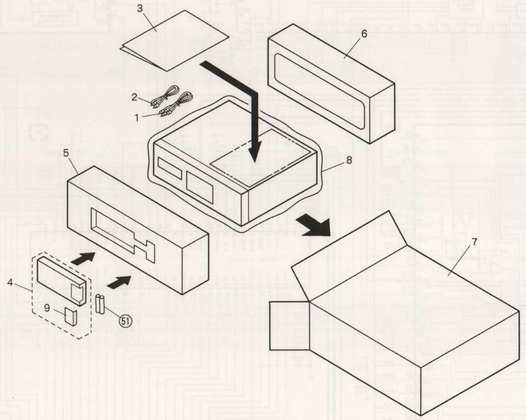

5. SCHEMATIC DIAGRAM

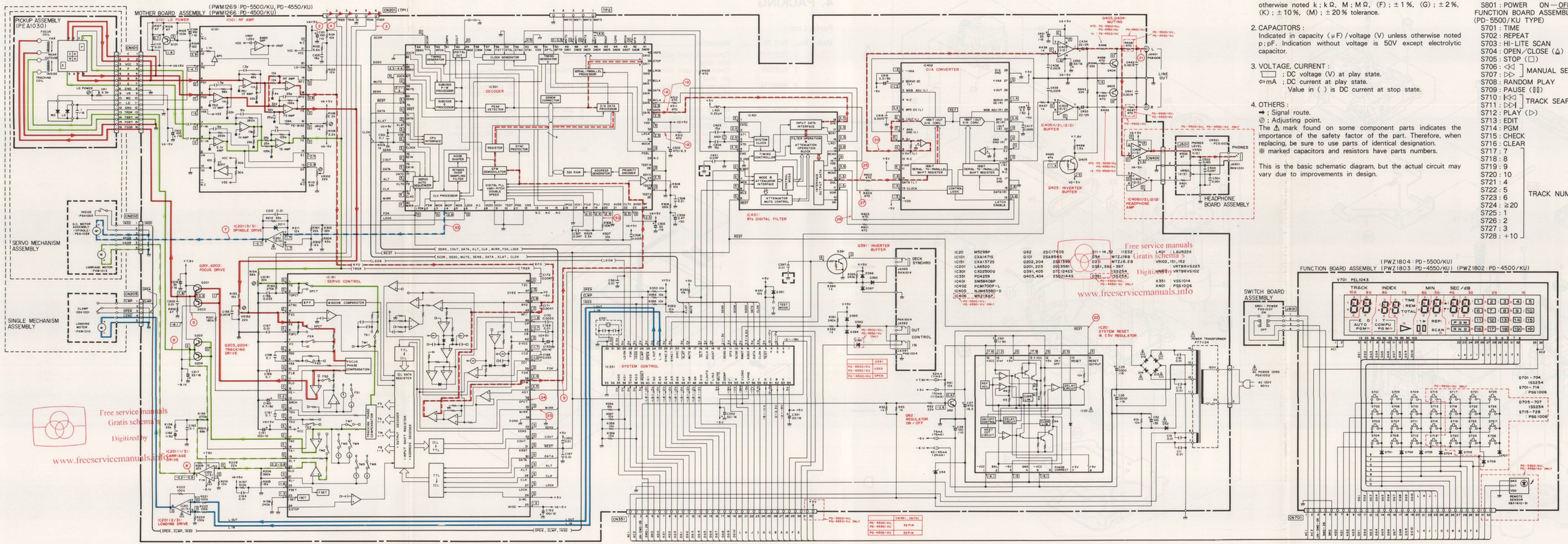

1. RESISTORS :
Indicated in Ω, 1/4W, 1/6W and 1/8W, ±5% tolerance unless otherwise noted k : kΩ, M : MΩ, (F) : ±1%, (G) : ±2%, (K) : ±10%, (M) : ±20% tolerance.

2. CAPACITORS :
Indicated in capacity (μF) / voltage (V) unless otherwise noted p : pF. Indication without voltage is 50V except electrolytic capacitor.

3. VOLTAGE, CURRENT :
[ ] : DC voltage (V) at play state.
⇦mA : DC current at play state.
Value in ( ) is DC current at stop state.

4. OTHERS :
➡ : Signal route.
⊘ : Adjusting point.
The ⚠ mark found on some component parts indicates the importance of the safety factor of the part. Therefore, when replacing, be sure to use parts of identical designation.
※ marked capacitors and resistors have parts numbers.

This is the basic schematic diagram, but the actual circuit may vary due to improvements in design.

5. SWITCHES : (The underlined indicates the switch position)

SWITCH BOARD ASSEMBLY
S801 : POWER ON—OFF

FUNCTION BOARD ASSEMBLY (PD-5500/KU TYPE)
S701 : TIME
S702 : REPEAT
S703 : HI-LITE SCAN
S704 : OPEN/CLOSE (⏏)
S705 : STOP (□)
S706 : ◁◁] MANUAL SEARCH
S707 : ▷▷]
S708 : RANDOM PLAY
S709 : PAUSE (❚❚)
S710 : ⏮◁] TRACK SEARCH
S711 : ▷⏭]
S712 : PLAY (▷)
S713 : EDIT
S714 : PGM
S715 : CHECK
S716 : CLEAR
S717 : 7] TRACK NUMBER
S718 : 8
S719 : 9
S720 : 10
S721 : 4
S722 : 5
S723 : 6
S724 : ≥20
S725 : 1
S726 : 2
S727 : 3
S728 : +10

FUNCTION BOARD ASSEMBLY (PD-4550/KU AND PD-4500/KU TYPES)
S701 : TIME
S702 : REPEAT
S703 : HI-LITE SCAN
S704 : OPEN/CLOSE (⏏)
S705 : STOP (□)
S706 : ◁◁] MANUAL SEARCH
S707 : ▷▷]
S708 : RANDOM PLAY
S709 : PAUSE (❚❚)
S710 : ⏮◁] TRACK SEARCH
S711 : ▷⏭]
S712 : PLAY (▷)
S713 : EDIT
S714 : PGM

6. P.C.BOARDS CONNECTION DIAGRAM

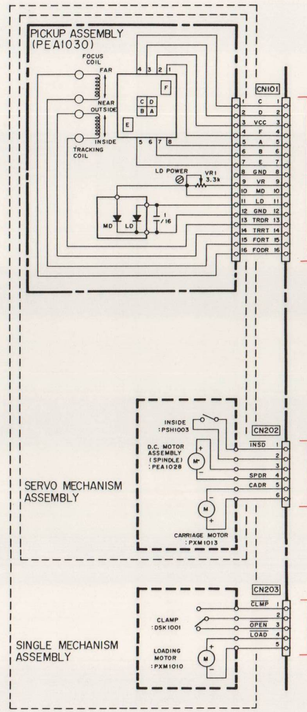

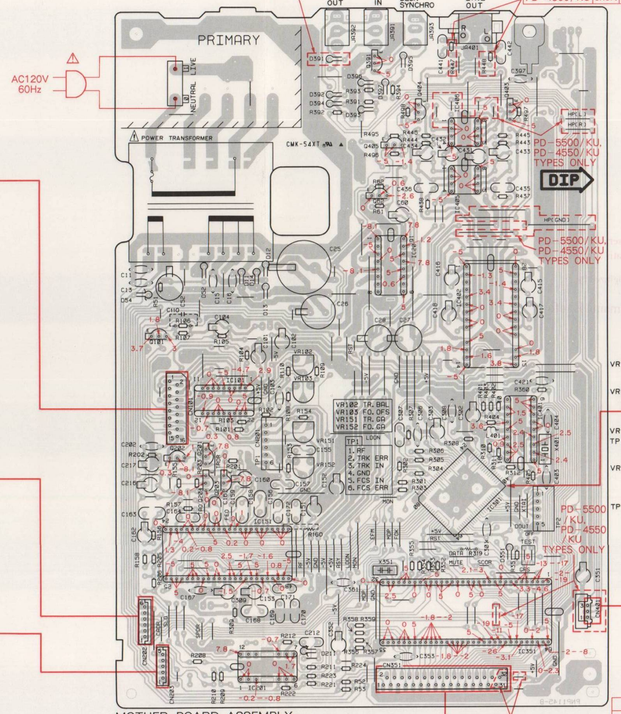

MOTHER BOARD ASSEMBLY
(PWM1269 : PD-5500/KU, PD-4550/KU)
(PWM1266 : PD-4500/KU)

PD-5500/KU, PD-4550/KU TYPES ONLY

	R447	R448
PD-5500/KU PD-4550/KU	used	used
PD-4500/KU	short	short

	CN351,CN701
PD-5500/KU PD-4550/KU	32pin
PD-4500/KU	30pin

Pin No.	Voltage	Pin No.	Voltage
1	5	41	N.C
2	N.C	42	5
3	5	43	N.C
4	2.6	44	N.C
5	N.C	45	N.C
6	5	46	4.4
7	N.C	47	0
8	N.C	48	0
9	0	49	0~0.3
10	0	50	N.C
11	N.C	51	N.C
12	0	52	0
13	N.C	53	2.5
14	N.C	54	N.C
15	N.C	55	0
16	N.C	56	N.C
17	0	57	N.C
18	2.5	58	N.C
19	2.4	59	0
20	2.4	60	N.C
21	0	61	N.C
22	2.5	62	N.C
23	5	63	0
24	2.5	64	N.C
25	N.C	65	0
26	0	66	3.3~4.6
27	2.5	67	5
28	0	68	0
29	N.C	69	2.1~3
30	0	70	5
31	1.3~2.2	71	5
32	2.5	72	5
33	5	73	5
34	2.5	74	5
35	2.5	75	5
36	N.C	76	0
37	N.C	77	5
38	N.C	78	5
39	N.C	79	5
40	N.C	80	0

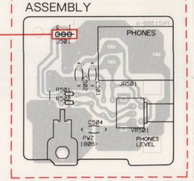

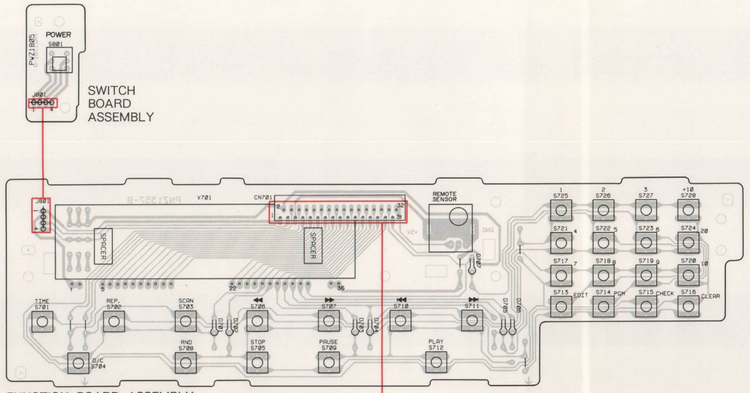

FUNCTION BOARD ASSEMBLY
(PWZ1804 : PD-5500/KU)

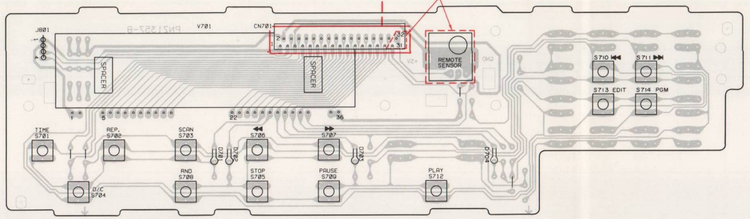

FUNCTION BOARD ASSEMBLY
(PWZ1803 : PD-4550/KU)
(PWZ1802 : PD-4500/KU)

P.C.B. pattern diagram indication	Corresponding part symbol	Part name	P.C.B. pattern diagram indication	Corresponding part symbol	Part name
		Transistor			Ceramic capacitor
		FET			Mylar capacitor
		Diode			Styrol capacitor
					Electrolytic capacitor (Non polarized)
					Electrolytic capacitor (Noseless)
		Zenner diode			Electrolytic capacitor (Polarized)
					Electrolytic capacitor (Polarized)
		LED			Power capacitor
		Varactor			Semi-fixed resistor
		Tact switch			Resistor array
		Inductor			Resistor
		Coil			Resonator
		Transformer			Thermistor
		Filter			

1. This P.C.B. connection diagram is viewed from the parts mounted side.
2. The parts which have been mounted on the board can be replaced with those shown with the corresponding wiring symbols listed in the above Table.
3. The capacitor terminal marked with ▭ shows negative terminal.
4. The diode marked with O shows cathode side.
5. The transistor terminal marked with ▭ shows emitter.

6. P.C.BOARDS CONNECTION DIAGRAM

This P.C.B. connection diagram is viewed from the foil side.

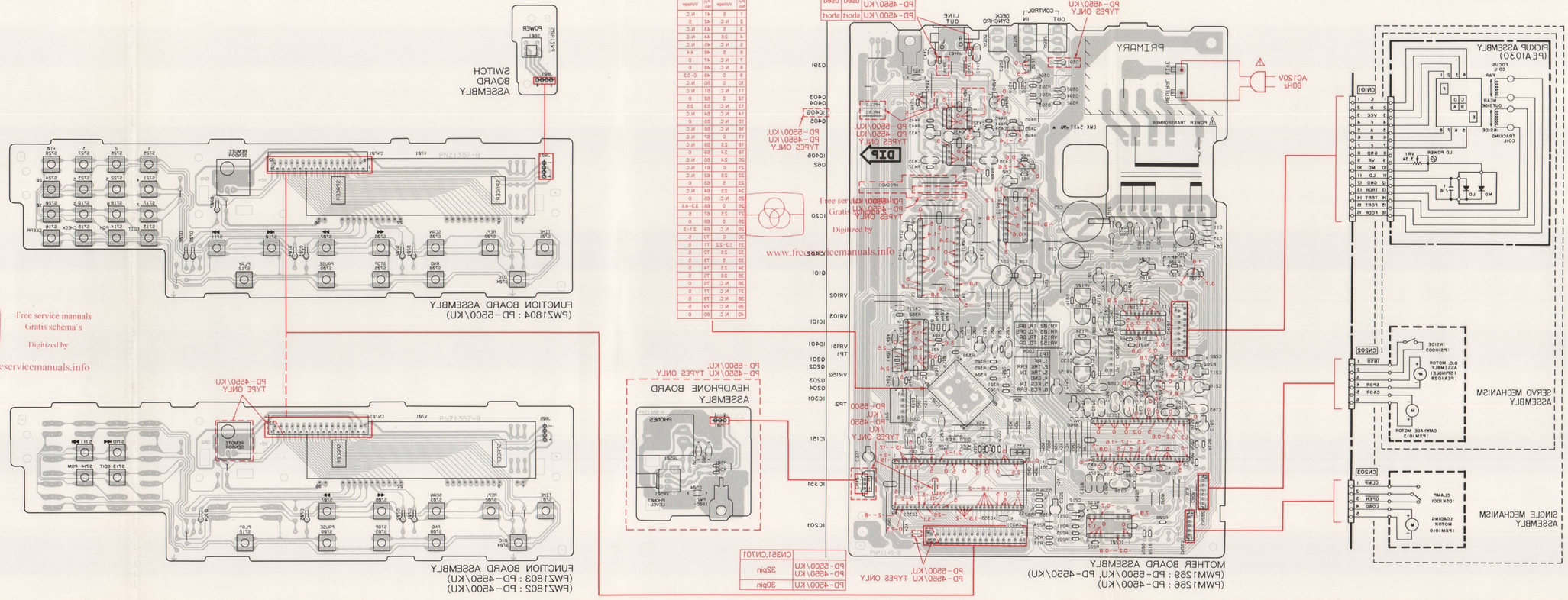

Wave Forms

Note: The encircled numbers denote measuring points in the schematic diagram.

*1 50T-JUMP: After switching to the pause mode, press the manual search key.
*2 FOCUS-IN: Press the key without loading a disc.
*3 POWER ON : Plug AC cord into AC wall socket.
*4 POWER OFF: Unplug AC cord from AC wall socket.

② TP1-Pin 1: PLAY MODE (RF)
500mV/div 500nsec/div

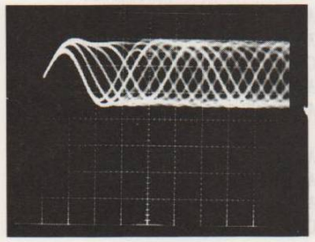

– GND

② TP1-Pin 1: TRACK SEARCH MODE (RF)
500mV/div 200μsec/div

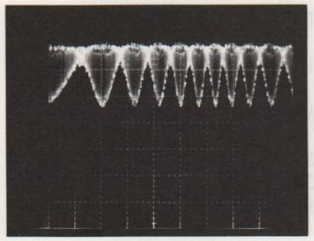

– GND

③ TP1-Pin 6: PLAY MODE (FOER)
100mV/div 10msec/div

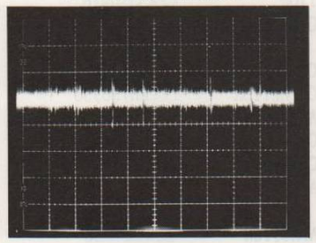

– GND

④ TP1-Pin 2: PLAY MODE (TRER)
1V/div 10msec/div

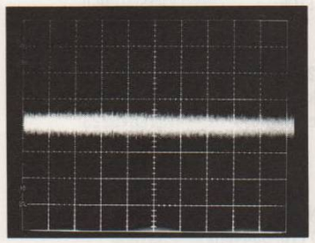

– GND

④ TP1-Pin 2: 50T-JUMP (*1) MODE (TRER)
1V/div 1msec/div

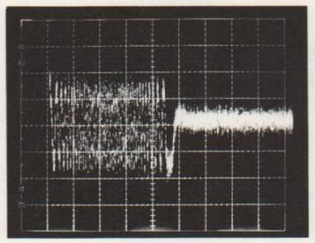

– GND

⑤ Q201 Emitter: FOCUS-IN (*2) MODE (FODR)
1V/div 200msec/div

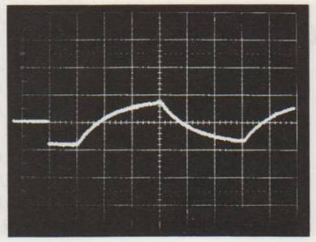

– GND

⑤ Q201 Emitter: PLAY MODE (FODR)
1V/div 1msec/div

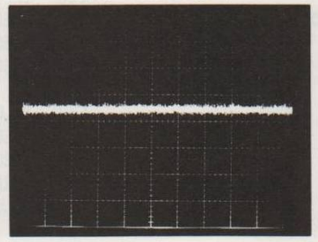

– GND

⑥ Q203 Emitter: PLAY MODE (TRDR)
500mV/div 1msec/div

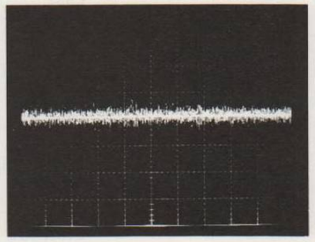

– GND

⑥ Q203 Emitter: 50T-JUMP (*1) MODE (TRDR)
500mV/div 1msec/div

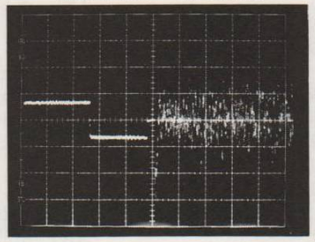

– GND

⑦ IC201-Pin 9: PLAY MODE (SPDR)
1V/div 50msec/div

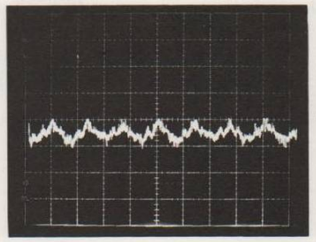

– GND

⑦ IC201-Pin 9: TRACK SEARCH MODE (SPDR)
2V/div 50msec/div

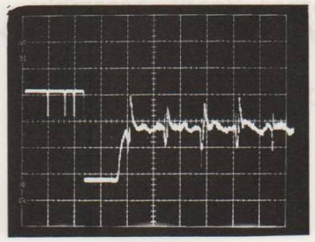

– GND

⑧ IC201-Pin 3: PLAY MODE (CADR)
1V/div 2S/div

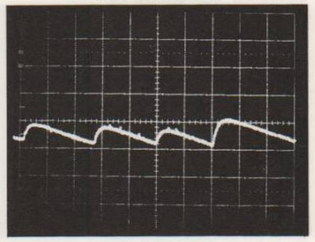

– GND

⑧ IC201-Pin 3: TRACK SEARCH MODE (CADR)
2V/div 200msec/div

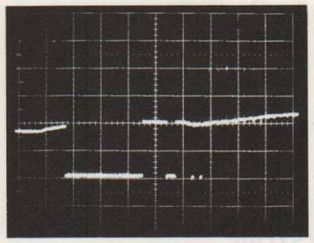

– GND

⑨ IC151-Pin 38: PLAY MODE (EFM)
2V/div 500nsec/div

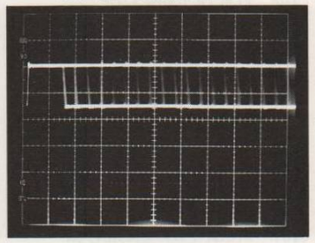

– GND

⑯ IC301-Pin 35: PLAY MODE (1kHz) (BCLK)
2V/div 500nsec/div

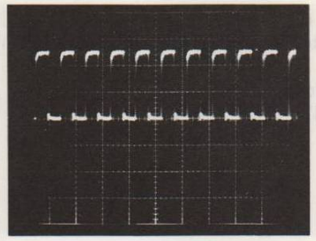

– GND

⑱ IC301-Pin 32: PLAY MODE (1kHz) (LRCK)
2V/div 10μsec/div

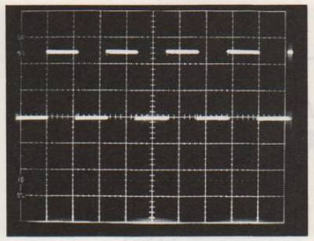

– GND

⑲ IC301-Pin 34: PLAY MODE (1kHz) (DATA)
2V/div 500nsec/div

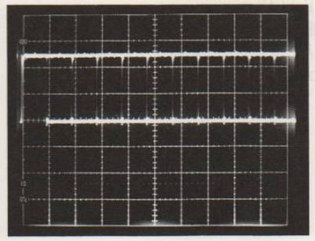

– GND

⑳ IC402-Pin 9: PLAY MODE (1kHz) (D/A OUT)
1V/div 200μsec/div

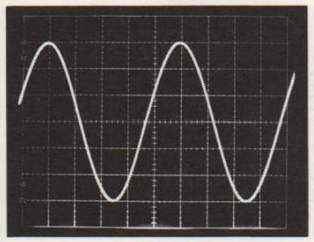

– GND

㉑ Pin -OUTPUT: PLAY MODE (1kHz)
1V/div 200μsec/div

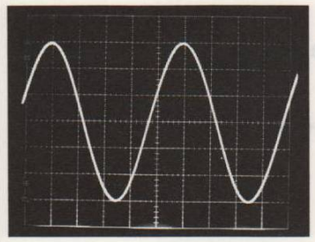

– GND

㉒ IC20-Pin 9: POWER SWITCH-ON (RST)
2V/div 100msec/div

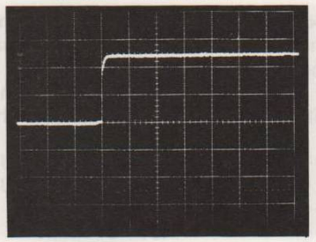

– GND

㉒ IC20-Pin 9: POWER SWITCH-OFF (RST)
2V/div 100msec/div

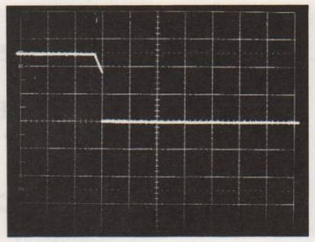

– GND

㉓ : TRACK SEARCH MODE
Upper: TP1-Pin 1 (RF) 1V/div
Lower: IC151-Pin 35 (MIRR)
2V/div 200μsec/div

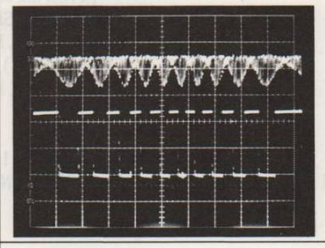

– GND
– GND

㉔ : PLAY MODE
Upper: TP1-Pin 1 (RF) 1V/div
Lower: IC151-Pin 36 (DFCT)
5V/div 200μsec/div

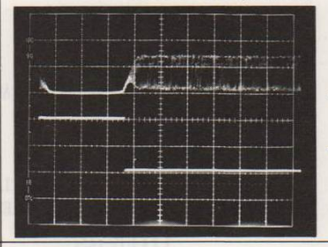

– GND
– GND

㉕ IC401-Pin 12: PLAY MODE (1kHz) (DIG.FIL.DATA)
2V/div 100nsec/div

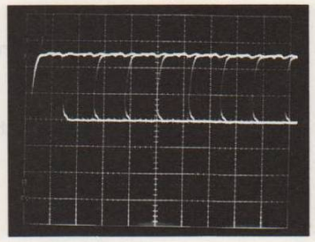

– GND

㉖ IC401-Pin 13: PLAY MODE (1kHz) (DIG.FIL.WDCK)
2V/div 1μsec/div

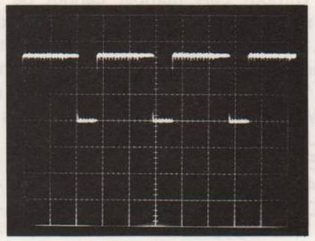

– GND

㉗ IC401-Pin 15: PLAY MODE (1kHz) (DIG.FIL.BCLK)
2V/div 1μsec/div

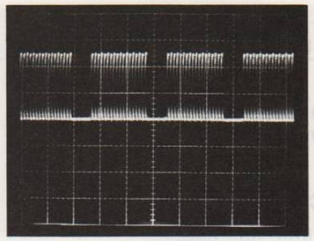

– GND

㉘

㉝ IC301-Pin 4: PLAY MODE (MDP)
2V/div 2μsec/div

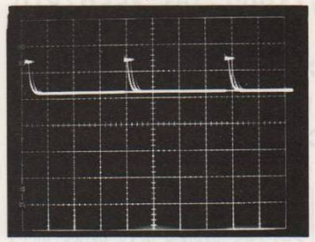

– GND

㊸ IC301-Pin 20: PLAY MODE (PCO)
2V/div 10μsec/div

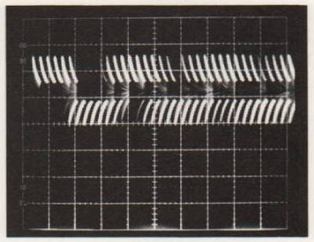

– GND

7. P. C. B's PARTS LIST

NOTES :

- Parts without part number cannot be supplied.
- Parts marked by "◉" are not always kept in stock. Their delivery time may be longer than usual or they may be unavailable.
- The ⚠ mark found on some component parts indicates the importance of the safety factor of the part. Therefore, when replacing, be sure to use parts of identical designation.
- When ordering resistors, first convert resistance values into code form as shown in the following examples.

Ex.1 When there are 2 effective digits (any digit apart from 0), such as 560 ohm and 47k ohm (tolerance is shown by J = 5%, and K = 10%).

560 Ω → 56 × 10¹ → 561 ····· RD1/4PS 5 6 1 J
47k Ω → 47 × 10³ → 473 ····· RD1/4PS 4 7 3 J
0.5 Ω → 0R5 ····· RN2H 0 R 5 K
1 Ω → 010 ····· RS1P 0 1 0 K

Ex.2 When there are 3 effective digits (such as in high precision metal film resistors).

5.62k Ω → 562 × 10¹ → 5621 ····· RN1/4SR 5 6 2 1 F

Mark	NO	Description	Part NO.
		◉ Function Board Assembly (PWZ1804 : PD-5500/KU)	
		SEMICIONDUCTORS	
		D701-707 DIODE	1SS254
		SWITCHES	
		S701-728 Tact switch (TIME, REPEAT, HI-LITE SCAN, OPEN/CLOSE(⏏), STOP(□), ◁◁, ▷▷, RANDOM PLAY, PAUSE(▯▯), ⏮, ⏭, PLAY(▷), EDIT, PGM, CHECK, CLEAR, 1-10, +10, ≧20)	PSG1006
		OTHERS	
		V701 FL INDICATOR TUBE	PEL1043
		REMOTE SENSOR	SBX1610-51
		CN701 CONNECTOR	HLEM32R-1
		◉ Function Board Assembly (PWZ1803 : PD-4550/KU)	
		SEMICIONDUCTORS	
		D701-704 DIODE	1SS254
		SWITCHES	
		S701-714 Tact switch (TIME, REPEAT, HI-LITE SCAN, OPEN/CLOSE(⏏), STOP(□), ◁◁, ▷▷, RANDOM PLAY, PAUSE(▯▯), ⏮, ⏭, PLAY(▷), EDIT, PGM)	PSG1006
		OTHERS	
		V701 FL INDICATOR TUBE	PEL1043
		REMOTE SENSOR	SBX1610-51
		CN701 CONNECTOR	HLEM32R-1

Mark	NO	Description	Part NO.
		◉ Function Board Assembly (PWZ1802 : PD-4500/KU)	
		SEMICONDUCTORS	
		D701-704 DIODE	1SS254
		SWITCHES	
		S701-714 Tact switch (TIME, REPEAT, HI-LITE SCAN, OPEN/CLOSE(⏏), STOP(□), ◁◁, ▷▷, RANDOM PLAY, PAUSE(▯▯), ⏮, ⏭, PLAY(▷), EDIT, PGM)	PSG1006
		OTHERS	
		V701 FL INDICATOR TUBE	PEL1043
		CN701 CONNECTOR	HLEM30R-1
		Headphone Board Assembly (PD-5500/KU and PD-4550/KU types only)	
		CAPACITORS	
		C501, 502 CERAMIC CAPACITOR	CKCYB102K50
		C504 CERAMIC CAPACITOR	CKCYF473Z50
		RESISTORS	
		R501, 502 CARBONFILM RESISTOR	RD1/6PM470J
		VR501 VARIABLE RESISTOR (PHONES LEVEL)	PCS1003
		OTHERS	
		JA501 JACK(PHONES)	RKN1001
		Switch Board Assembly	
		SWITCH	
		S801 Push switch(POWER)	PSG1007

Mark	NO	Description	Part NO.
		◉ Mother Board Assembly (PWM1269 : PD-5500/KU, PD-4550/KU)	
		SEMICONDUCTORS	
	IC101	PRE AMP IC	CXA1471S
	IC151	SERVO IC	CXA1372S
⚠	IC20	REGULATOR IC	M5298P
⚠	IC201	POWER OP-AMP	LA6520
	IC301	EFM DEMODULATION IC	CXD2500Q
	IC351	MICROCOMPUTER	PD4259
	IC401	DIGITAL FILTER, IC	SM5840BP
	IC402	DA CONVERTER, IC	PCM1700P-L
	IC405	OP-AMP IC	NJM4558D-D
	IC406		M5218AP
	Q101	TRANSISTOR	2SA854S
	Q201	TRANSISTOR	2SC3581
	Q202	TRANSISTOR	2SA1399
	Q203	TRANSISTOR	2SC3581
	Q204	TRANSISTOR	2SA1399
	Q391	TRANSISTOR	DTC124ES
	Q403, 404	TRANSISTOR	2SD2144S
	Q405	TRANSISTOR	DTC124ES
	Q62	TRANSISTOR	2SC1740S
⚠	D11-14	DIODE	11ES2
	D211	ZENNER DIODE	MTZJ6.2B
	D351	DIODE	1SS254
	D391-397	DIODE	1SS254
⚠	D52	DIODE	11ES2
	D54	ZENNER DIODE	MTZJ18B
		COIL	
	L401(0.22 μH)		LAUR22K
		CAPACITORS	
	C101, 102	ELECTR. CAPACITOR	CEAS101M10
	C103	CERAMIC CAPACITOR	CCCCH180J50
	C104	ELECTR. CAPACITOR	CEAS101M10
	C109	CERAMIC CAPACITOR	CKCYB152K50
	C11, 13	CERAMIC CAPACITOR	CKCYF103Z50
	C110	CERAMIC CAPACITOR	CKDYF103Z50
	C15	CERAMIC CAPACITOR	CKCYF103Z50
	C151-153	ELECTR. CAPACITOR	CEAS101M10
	C155	MYLOR FILM CAPACITOR	CQMA182J50
	C156	MYLOR FILM CAPACITOR	CQMA333K50
	C157	MYLOR FILM CAPACITOR	CQMA103K50
	C158, 159	MYLOR FILM CAPACITOR	CQMA104K50
	C16	CERAMIC CAPACITOR	CKCYF103Z50
	C160	ELECTR. CAPACITOR	CEAS4R7M50
	C161	MYLOR FILM CAPACITOR	CQMA104K50

Mark	NO	Description	Part NO.
	C162	ELECTR. CAPACITOR	CEAS010M50
	C163	MYLOR FILM CAPACITOR	CQMA104K50
	C164	MYLOR FILM CAPACITOR	CQMA103K50
	C167	CERAMIC CAPACITOR	CKCYF103Z50
	C168	MYLOR FILM CAPACITOR	CQMA333K50
	C169	MYLOR FILM CAPACITOR	CQMA103K50
	C170	MYLOR FILM CAPACITOR	CQMA332J50
	C171	MYLOR FILM CAPACITOR	CQMA472J50
	C172	MYLOR FILM CAPACITOR	CQMA472K50
	C202	CERAMIC CAPACITOR	CKCYF103Z50
	C212	MYLOR FILM CAPACITOR	CQMA103K50
	C216, 217	ELECTR. CAPACITOR	CEAS330M16
	C25	ELECTR. CAPACITOR	CEAS332M16
	C26	ELECTR. CAPACITOR	CEAS222M16
	C27	ELECTROLYTIC CAPACIT	CEAS471M6R3
	C28	ELECTR. CAPACITOR	CEAS101M10
	C301	MYLOR FILM CAPACITOR	CQMA104K50
	C302	ELECTROLYTIC CAPACIT	CEAS471M6R3
	C303	ELECTR. CAPACITOR	CEAS330M16
	C306	CERAMIC CAPACITOR	CKCYB152K50
	C307	MYLOR FILM CAPACITOR	CQMA473J50
	C308	MYLOR FILM CAPACITOR	CQMA103K50
	C309	ELECTR. CAPACITOR	CEASR47M50
	C351	ELECTROLYTIC CAPACIT	CEAS471M6R3
	C352	ELECTR. CAPACITOR	CEAS330M16
	C353, 361	CERAMIC CAPACITOR	CKCYF103Z50
	C397	CERAMIC CAPACITOR	CKCYF103Z50
	C403, 404	CERAMIC CAPACITOR	CCCCH150J50
	C415, 416	ELECTR. CAPACITOR	CEAS3R3M50
	C417, 418	CERAMIC CAPACITOR	CKCYB152K50
	C421	CERAMIC CAPACITOR	CKCYF473Z50
	C431, 432	ELECTR. CAPACITOR	CEAS330M16
	C433, 434	ELECTR. CAPACITOR	CEAS220M25
	C435, 436	MYLOR FILM CAPACITOR	CQMA152J50
	C441, 442	MYLOR FILM CAPACITOR	CQMA152J50
	C52	ELECTR. CAPACITOR	CEAS101M35
	C60	ELECTR. CAPACITOR	CEAS010M50
		RESISTORS	
	VR102	Semi fixed(22kΩ)	VRTB6VS223
	VR103	Semi fixed(1kΩ)	VRTB6VS102
	VR151, 152	Semi fixed(22kΩ)	VRTB6VS223
	Other resistors		RD1/6PM□□□J
		OTHERS	
	X351	CERAMIC RESONATOR(4.19MHz)	VSS1014
	X401	XTAL RES(OSC)(16.9344MHz)	PSS1006
	CN101	CONNECTOR	52045-1610
	CN351	CONNECTOR	HLEM32S-1
	JA391, 392	JACK/12V (CONTROL IN/OUT)	PKN1004
	JA393	Mini jack(DECK SYNCHRO)	RKN1014
	JA401	2P pinjack(LINE OUT)	PKB1009

Mark	NO	Description	Part NO.

◉Mother Board Assembly (PWM1266 : PD-4500/KU)

SEMICONDUCTORS

	IC101	PRE AMP IC	CXA1471S
	IC151	SERVO IC	CXA1372S
⚠	IC20	REGULATOR IC	M5298P
⚠	IC201	POWER OP-AMP	LA6520
	IC301	EFM DEMODULATION IC	CXD2500Q
	IC351	MICROCOMPUTER	PD4259
	IC401	DIGITAL FILTER, IC	SM5840BP
	IC402	DA CONVERTER, IC	PCM1700P-L
	IC405	OP-AMP IC	NJM4558D-D
	Q101	TRANSISTOR	2SA854S
	Q201	TRANSISTOR	2SC3581
	Q202	TRANSISTOR	2SA1399
	Q203	TRANSISTOR	2SC3581
	Q204	TRANSISTOR	2SA1399
	Q391	TRANSISTOR	DTC124ES
	Q403, 404	TRANSISTOR	2SD2144S
	Q405	TRANSISTOR	DTC124ES
	Q62	TRANSISTOR	2SC1740S
⚠	D11-14	DIODE	11ES2
	D211	ZENNER DIODE	MTZJ6. 2B
	D351	DIODE	1SS254
	D392-397	DIODE	1SS254
⚠	D52	DIODE	11ES2
	D54	ZENNER DIODE	MTZJ18B

COIL

	L401(0. 22 μH)		LAUR22K

CAPACITORS

	C101, 102	ELECTR. CAPACITOR	CEAS101M10
	C103	CERAMIC CAPACITOR	CCCCH180J50
	C104	ELECTR. CAPACITOR	CEAS101M10
	C109	CERAMIC CAPACITOR	CKCYB152K50
	C11, 13	CERAMIC CAPACITOR	CKCYF103Z50
	C110	CERAMIC CAPACITOR	CKDYF103Z50
	C15	CERAMIC CAPACITOR	CKCYF103Z50
	C151-153	ELECTR. CAPACITOR	CEAS101M10
	C155	MYLOR FILM CAPACITOR	CQMA182J50
	C156	MYLOR FILM CAPACITOR	CQMA333K50
	C157	MYLOR FILM CAPACITOR	CQMA103K50
	C158, 159	MYLOR FILM CAPACITOR	CQMA104K50
	C16	CERAMIC CAPACITOR	CKCYF103Z50
	C160	ELECTR. CAPACITOR	CEAS4R7M50
	C161	MYLOR FILM CAPACITOR	CQMA104K50
	C162	ELECTR. CAPACITOR	CEAS010M50
	C163	MYLOR FILM CAPACITOR	CQMA104K50
	C164	MYLOR FILM CAPACITOR	CQMA103K50
	C167	CERAMIC CAPACITOR	CKCYF103Z50
	C168	MYLOR FILM CAPACITOR	CQMA333K50
	C169	MYLOR FILM CAPACITOR	CQMA103K50
	C170	MYLOR FILM CAPACITOR	CQMA332J50
	C171	MYLOR FILM CAPACITOR	CQMA472J50
	C172	MYLOR FILM CAPACITOR	CQMA472K50
	C202	CERAMIC CAPACITOR	CKCYF103Z50
	C212	MYLOR FILM CAPACITOR	CQMA103K50
	C216, 217	ELECTR. CAPACITOR	CEAS330M16
	C25	ELECTR. CAPACITOR	CEAS332M16
	C26	ELECTR. CAPACITOR	CEAS222M16
	C27	ELECTROLYTIC CAPACIT	CEAS471M6R3
	C28	ELECTR. CAPACITOR	CEAS101M10
	C301	MYLOR FILM CAPACITOR	CQMA104K50
	C302	ELECTROLYTIC CAPACIT	CEAS471M6R3
	C303	ELECTR. CAPACITOR	CEAS330M16
	C306	CERAMIC CAPACITOR	CKCYB152K50
	C307	MYLOR FILM CAPACITOR	CQMA473J50
	C308	MYLOR FILM CAPACITOR	CQMA103K50
	C309	ELECTR. CAPACITOR	CEASR47M50
	C351	ELECTROLYTIC CAPACIT	CEAS471M6R3
	C352	ELECTR. CAPACITOR	CEAS330M16
	C353, 361	CERAMIC CAPACITOR	CKCYF103Z50
	C397	CERAMIC CAPACITOR	CKCYF103Z50
	C403, 404	CERAMIC CAPACITOR	CCCCH150J50
	C415, 416	ELECTR. CAPACITOR	CEAS3R3M50
	C417, 418	CERAMIC CAPACITOR	CKCYB152K50
	C421	CERAMIC CAPACITOR	CKCYF473Z50
	C431, 432	ELECTR. CAPACITOR	CEAS330M16
	C433, 434	ELECTR. CAPACITOR	CEAS220M25
	C435, 436	MYLOR FILM CAPACITOR	CQMA152J50
	C441, 442	MYLOR FILM CAPACITOR	CQMA152J50
	C52	ELECTR. CAPACITOR	CEAS101M35
	C60	ELECTR. CAPACITOR	CEAS010M50

RESISTORS

	VR102	Semi fixed(22kΩ)	VRTB6VS223
	VR103	Semi fixed(1kΩ)	VRTB6VS102
	VR151, 152	Semi fixed(22kΩ)	VRTB6VS223
	Other resistors		RD1/6PM□□□J

OTHERS

	X351	CERAMIC RESONATOR(4. 19MHz)	VSS1014
	X401	XTAL RES(OSC)(16. 9344MHz)	PSS1006
	CN101	CONNECTOR	52045-1610
	CN351	CONNECTOR	HLEM30S-1
	JA391, 392 (CONTROL IN/OUT)	JACK/12V	PKN1004
	JA393	Mini jack(DECK SYNCHRO)	PKN1014
	JA401	2P pinjack(LINE OUT)	PKB1009

8. IC INFORMATION

■ CXD2500Q

● Pin functions

No.	Pin name	I/O	Function
1	FOK	I	Focus OK input. Use for SENS output and servo auto sequence.
2	FSW	O	Switching output of output filter of spindle motor
3	MON		ON – OFF control output of spindle motor
4	MDP		Servo control of spindle motor
5	MDS		Servo control of spindle motor
6	LOCK		Perform sampling with 460Hz of GFS signal and if it is "H", outputs "H". If it is "L" consecutively 8 times, outputs "L".
7	NC	—	
8	VCOO	O	VCO output for analog EFM PLL
9	VCOI	I	VCO input for analog EFM PLL (f_{LOCK} = 8.6436MHz)
10	TEST		TEST terminal (Connect to GND)
11	PDO	O	Charge pump output for analog EFM PLL
12	Vss		GND
13	NC	—	
14	NC	—	
15	NC	—	
16	VPCO	O	PLL charge pump output for variable pitch
17	VCKI		Clock input from VCO for variable pitch (fccenter = 16.9344MHz)
18	FILO		Filter output for master PLL (Slave = digital PLL)
19	FILI	I	Filter input for master PLL
20	PCO	O	Charge pump output for master PLL
21	AVss		Analog GND
22	CLTV	I	VCO control voltage input for master
23	AV_{DD}		Analog power supply voltage (+5V)
24	RF	I	EFM signal input
25	TEST2		TEST terminal
26	TEST3		TEST terminal (Connect to GND)
27	ASYO	O	EFM full-swing output (L = Vss, H = V_{DD})
28	TEST4	I	TEST terminal (Connect to GND)
29	NC	—	
30	PSSL	I	Mode switching input of audio data output (L : serial output, H : parallel output)
31	WDCK	O	D/A interface for 48 bit slot. Word clock f = 2Fs
32	LRCK		D/A interface for 48 bit slot. LR clock f = Fs
33	V_{DD}	—	Power supply voltage (+5V)
34	DA16	O	DA16 (MSB) output at PSSL = 1. Serial data of 48 bit slot at PSSL = 0 (2's COMP, MSB first)
35	DA15		DA15 output at PSSL = 1. Bit clock of 48 bit slot at PSSL = 0
36	DA14		DA14 output at PSSL = 1. Serial data of 64 bit slot at PSSL = 0 (2's COMP, LSB first)
37	DA13		DA13 output at PSSL = 1. Bit clock of 64 bit slot at PSSL = 0
38	DA12		DA12 output at PSSL = 1. LR clock of 64 bit slot at PSSL = 0
39	DA11		DA11 output at PSSL = 1. GTOP output at PSSL = 0
40	DA10		DA10 output at PSSL = 1. XUGF output at PSSL = 0

No.	Pin name	I/O	Function
41	DA09	O	DA09 output at PSSL = 1. XPLCK output at PSSL = 0.
42	DA08		DA08 output at PSSL = 1. GFS output at PSSL = 0.
43	DA07		DA07 output at PSSL = 1. RFCK output at PSSL = 0.
44	DA06		DA06 output at PSSL = 1. C2P0 output at PSSL = 0.
45	DA05		DA05 output at PSSL = 1. XRAOF output at PSSL = 0.
46	DA04		DA04 output at PSSL = 1. MNT3 output at PSSL = 0.
47	DA03		DA03 output at PSSL = 1. MNT2 output at PSSL = 0.
48	DA02		DA02 output at PSSL = 1. MNT1 output at PSSL = 0.
49	DA01		DA01 output at PSSL = 1. MNT0 output at PSSL = 0.
50	APTR		Control output for aperture correction. "H" at R ch.
51	APTL		Control output for aperture correction. "H" at L ch.
52	Vss		GND
53	XTAI	I	Crystal oscillating circuit input. f = 16.9344MHz or f = 33.8688MHz
54	XTAO	O	Crystal oscillating circuit output. f = 16.9344MHz
55	XTSL	I	Crystal selection input. "L"at f = 16.9344MHz, "H" at f = 33.8688MHz.
56	FSTT	O	2/3 demultiplier output of pins 53 and 54.
57	C4M		4.2336MHz output
58	C16M		16.9344MHz output
59	MD2	I	ON/OFF control of Digital-out. "H" = ON, "L" = OFF
60	DOUT	O	Digital-out output
61	EMPH		When the emphasis is existed in playback disc, "H" outputs.It is not existed, "L" outputs.
62	WFCK		WFCK (Write Frame Clock) output
63	SCOR		"H" output when detecting the subcode Sync. signal S0 or S1.
64	SBSO		Serial output of Sub P through W.
65	EXCK	I	Clock input for SBSO read out.
66	SQSO	O	SubQ 80 bit output and level data 16 bit output of PCM peak.
67	SQCK	I	Clock input for SQSO read out.
68	MUTE		Mute at "H" and release at "L".
69	SENS	——	SENS output to CPU.
70	XRST	I	System reset. Reset at "L".
71	DATA		Serial data input from CPU.
72	XLAT		Latch input from CPU. Latches the serial data at fall edge of clock.
73	V_{DD}		+ 5V power supply
74	CLOK	I	Serial data transfer clock input from the CPU.
75	SEIN		Sense input from SSP.
76	CNIN		Track jump count pulse input
77	DATO	O	Serial data output to the SSP.
78	XLTO		Serial data output to the SSP. Latches the serial data at fall edge of clock.
79	CLKO		Serial data transfer clock output to the SSP.
80	MIRR	I	Mirror signal input. Auto sequence control so that it uses to jump over 128 tracks.

■ CXA1471S

● Pin functions

No.	Pin name	I/O	Function	No.	Pin name	I/O	Function
1	——		Not used	12	——		Not used
2	LD	O	APC amplifier output	13	EO	O	Output for monitor of I-V amplifier E.
3	PD	I	APC amplifier input	14	EI	—	Pin for gain adjustment of I-V amplifier E.
4	PD1	I	Inversion input of RF I-V amplifier. Connect to A+C and B+D of the photo diode, and current input.	15	TE	O	Output of tracking error amplifier
5	PD2			16	FE-BIAS	I	Pin for bias adjustment of non-inverting side of the focus error amplifier.
6	VEE		−5V power supply	17	FE	O	Output of focus error amplifier.
7	F-IN	I	Inversion input of F and E I-V amplifier. Connect to F and E of the photo diode, and current input.	18	RFO		Output of RF amplifier
8	E-IN			19	RFI	I	Input of inverting side of the RF amplifier. RF amplifier's gain is decided by resistor which connecting between RFI (pin 19) and RFO (pin 18).
9	VR	O	DC voltage output of $(V_{CC}+V_{EE})/2$.				
10	VC	I	Centering voltage of VC input. When using the +5V and −5V power supply,connect to GND. When using the +5V power supply, connect to VR (pin 9) pin.	20	LD-ON		ON/OFF switching pin of the APC amplifier. ON at Vcc and OFF at GND.
11	——		Not used	21	Vcc		+5V power supply

■ SM5840BP

● Pin functions

No.	Pin name	I/O	Function	No.	Pin name	I/O	Function
1	$\overline{CKSL}$	ip **	Selection of oscillation and input frequency. (384fs at $\overline{CKSL}$ ="H") * (256fs at $\overline{CKSL}$ ="L") *	10	DG	O	Deglitch output at 8fs LR parallel output mode.* Deglitch output at 4fs LR alternate output mode. *
2	XTI	I	Oscillating circuit input (Frequency is selected by $\overline{CKSL}$).	11	DOR		R ch data output at 8fs LR parallel output mode. * LR clock output at 4fs LR alternate output mode. *
3	XTO	O	Oscillating circuit output	12	DOL		L ch data output at 8fs LR parallel output mode. * L ch/R ch data output at 4fs LR alternate output mode.*
4	CKO		Oscillating circuit output clock (Frequency is same as XTI pin).				
5	VSS	—	GND	13	WCKO		Word clock output
6	MDT	ip **	Mode set data — Set the digital attenuator and mode flag regisiter.	14	VDD	—	+5V power supply
7	MCK		Mode set clock	15	BCKO	O	Bit clock output
8	$\overline{MLE}$		Mode set latch enable	16	LRCI	ip **	Sample rate (fs) clock of input data. *
				17	BCKI		Bit clock input
9	$\overline{RST}$		System reset (initialize)	18	DIN		Data input

* : fs means sample frequency of the input data.
** : ip is input pins with pull-up resistor. Therefore,don't mind that pins are opened at setting the H level.

■ CXA1372S

● Pin functions

No.	Pin name	I/O	Function
1	TE	I	Tracking error input
2	TDFCT	I	Capacitor connect pin for time constant at the defect.
3	ATSC	I	Window comparator input for ATSC detection.
4	FZC	I	Focus and zerocross comparator input.
5	FE	I	Focus error input.
6	FDFCT	I	Capacitor connect pin for time-constant at the defect.
7	VC	I	Center voltage input. (GND at two power supply, (Vcc+GND) /2 at single power supply)
8	FGD	I	Connect a capacitor between FGD (pin 8) and ATSC (pin 3) when high-pass gain of focus servo is dropped.
9	FS3	I	Switching the high-frequency gain of the focus servo by ON/OFF of FS3.
10	FLB	I	Time constant connect pin for boosts low of focus servo.
11	FEO	O	Focus drive output
12	FE-	I	Inverting input of focus amplifier
13	SRCH	I	Time constant connect pin for making the focus search waveform.
14	TGU	I	Time constant connect pin for switching the tracking high-frequency gain.
15	TG2	I	Time constant connect pin for switching the tracking high-frequency gain.
16	AVCC	—	Analog +5V power supply
17	TAO	O	Tracking drive output
18	TA −	I	Inverting input of tracking amplifier.
19	SL +	I	Non-inverting input of sled amplifier.
20	SLO	O	Sled drive output
21	SL-	I	Inverting input of sled amplifier
22	FSET	I	Pin for peak setting of phase compensation of the focus tracking.
23	ISET	I	Current flows for set the height of focus search, track jump and sled kick.
24	SSTOP	I	Pin for detect ON/OFF signal of the limit switch for detecting inner side of the disc.
25	AVEE	—	Analog −5V power supply
26	DIRC	I	Use at one track jump. (With 47kohms pull-up resistor)
27	LOCK	I	Sled protection circuit is worked at "L". (with 47kohms pull-up resistor)
28	CLK	I	Serial data transfer clock input from the CPU. (Pull-up resistor is nothing.)
29	XLT	I	Latch input from the CPU. (Pull-up resistor is nothing.)
30	DATA	I	Serial data input from the CPU. (Pull-up resistor is nothing.)
31	XRST	I	Reset input (reset at "L"). (Pull-up resistor is nothing.)
32	C.OUT	O	Signal output for count the track
33	SENS	O	FZC, AS, TZC and SSTOP outputs from the CPU.
34	D GND	—	Digital GND
35	MIRR	O	MIRR comparator output. (DC voltage : connect 10kohms load resistor)
36	DFCT	O	DEFECT comparator output. (DC voltage : connect 10kohms load resistor)
37	ASY	I	Auto asymmetrical control input
38	EFM	O	EFM comparator output. (DC voltage : connect 10kohms load resistor)
39	FOK	O	Focus OK comparator output. (DC voltage : connect 10kohms load resistor)
40	CC1	I	DEFECT bottom hold output
41	CC2	O	Input pin so that DEFECT bottom hold output signal is input by coupling capacitor.
42	DVCC	—	Digital +5V power supply
43	CB	I	Capacitor connect pin for the DEFECT bottom hold.
44	CP	I	Capacitor connect pin for the MIRR hold. Non-inverting input of the MIRR comparator.
45	RFI	I	Input terminal so that RF summing amplifier output signal is input by coupling capacitor.
46	RFO	O	RF summing amplifier output.Check point of the eye pattern.
47	DVEE	—	Digital −5V power supply
48	TZC	I	Tracking zerocross comparator input.

9. OPTICAL PATH IN THE PICKUP

9.1 OPTICAL SYSTEM OF PICKUP MODEL THE '90

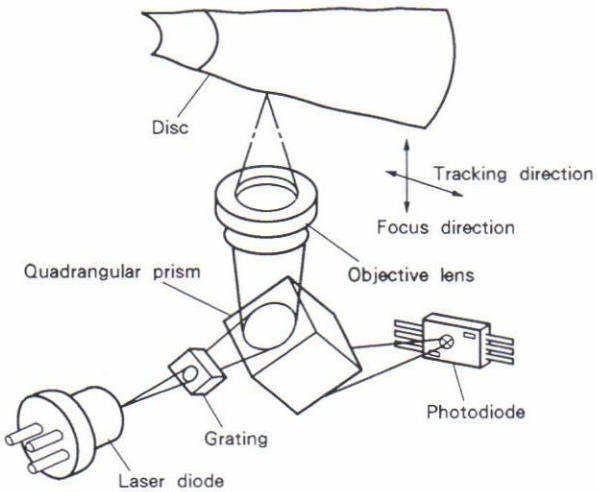

Fig. 9-1 Optical path and parts

Fig. 9-1 shows the configuration of this pickup's optical parts.
The wavelength of the light emitted from the laser diode is between 780 and 790nm. The light is barely visible. This light source is spread into an ellipse from an ultra-small emission point. The light expands at a set angle. The emitted light goes through a grating and is divided into three beams of 0 step and ±1 step.
The other beams of ±2, 3 and n steps are also present, but are lost and not used. When the light reaches the quadrangular prism, 50% is reflected. The remaining light permeates the quadrangular prism and is lost. The light then goes to the objective lens (finite type). Since this pickup's objective lens uses a finite system (finite because the convergence distance for the LD to objective lens pass-way is finite), a collimator lens is unnecessary. The light that is converged on an ultra-small diameter spot by these objective lenses is reflected by the disc and returns to the objective lens. Then it goes through the quadrangular prism where 50% of it returns to the laser diode. The remaining 50% of light goes through the quadrangular prism and reaches the photodiode.
This has been a general outline of the optical path. The feature of each part are explained in the following section.

9.2 FEATURE OF EACH SECTION

(1) Laser diode (LD)
The size of previously-used LDs is 5.6mmϕ. This has resulted in a compact and lightweight optical path.

(2) Objective lens
The collimator lens has been superseded by the finite objective lens which has a finite convergence distance for the LD to obejective lens pass-way. A much brighter low-magnification finite objective lens preserving high performance is newly employed for this player in place of the finite lens used in our previous models.

(3) Simple optical path mad possible by the newly-developed quadrangular prism (Fig. 9-1)
The above-mentioned objective lens and the newly developed optical path permit the number of optical parts to be decreased. This results in yielding a higher reliability.
As the first model to employ the bright finite objective lens, this CD player succeeded in eliminating the necessity of the conventional photo IC (photo diode with an output amplifier). Therefore, this photo IC is replaced a photodiode, high performance can be obtained at low cost. This replacement is accompanied by a change in the output format of the pickup block to the electric current-output type.

(4) Actuator of the wire-suspension system (Fig. 9-2)
There are generally two types of actuators for pickup; axis-sliding type and wire-suspension type. The '90 pickup models have employed the latter type.
This realizes an actuator with stable and invariable characteristics.

(5) Super engineering-plastic body

By further developing the computer-simulated body resinification technology cultivated with the '87 and '88 models, a more reliable body has been produced.

(6) Clean playback by skew adjustment in both tangential and radial directions (Fig. 9-2)

The beam converging on pits has an uneven factor (aberration) of intensity distribution depending on the aberration of the optical path, which may cause signal degradation and affect performance. A factor in the aberration depending on the inclination of the optical axis is called "coma". As is broadly known, it can be canceled by adjusting the inclination of the objective lens. While this adjustment has been conventionally performed only in the tangential direction, this CD player has employed a system to adjust it in both the tangential and radial directions. This results in a ideal form for the converging beam with very little aberration, and stable reproduciton with a minimum of jitter is enabled with any compact disc.

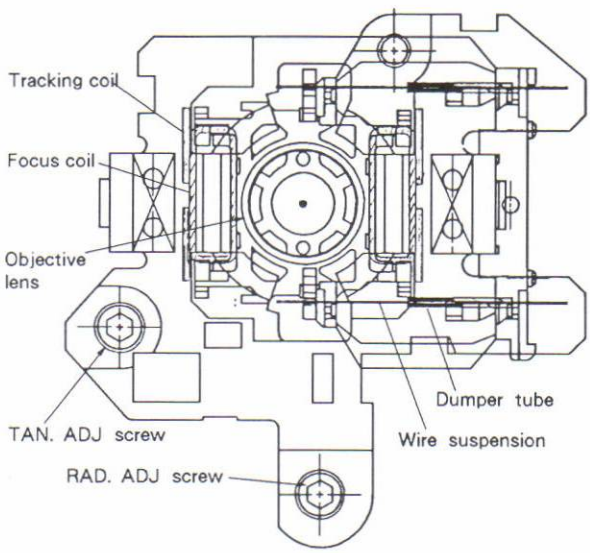

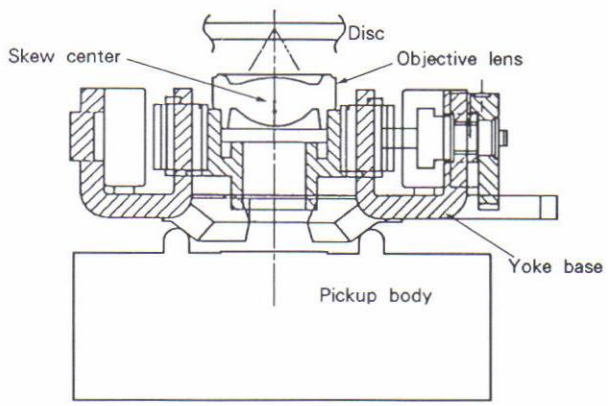

Fig. 9-2 Structure of actuator

(7) RF and servo signal

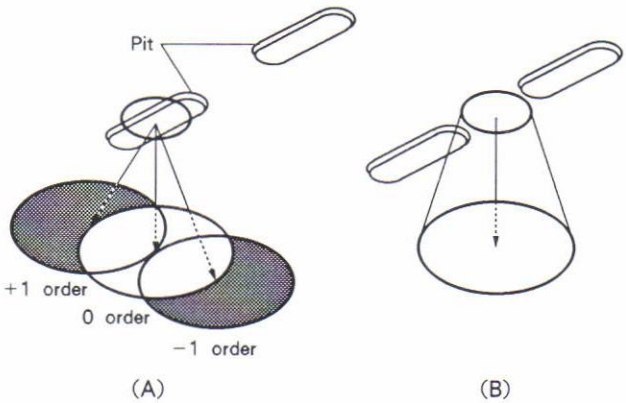

Fig. 9-3
Axis beam reflection at the disc surface

The beam, which has been reduced to an extremely small spot by the objective lens, now strikes the disc side on which the signal is located. Part of the beam is then reflected back to the objective lens and photo diode. A diagram showing how this beam is reflected off the disc is shown in Fig. 9-3.

(A) shows what happens when the concentrated beam is directed at a pit and (B) shows the same beam when reflected from a space between pits.

In case (A), the beam is diffracted, so the dark part of the beam does not return to the objective lens. Instead, only the center of the beam passes through the objective lens and reaches the photodiode.

In case (B), there is no diffraction because the beam does not strike a pit. Therefore, the entire beam is reflected back to the photodiode, producing brighter beam than case (A).

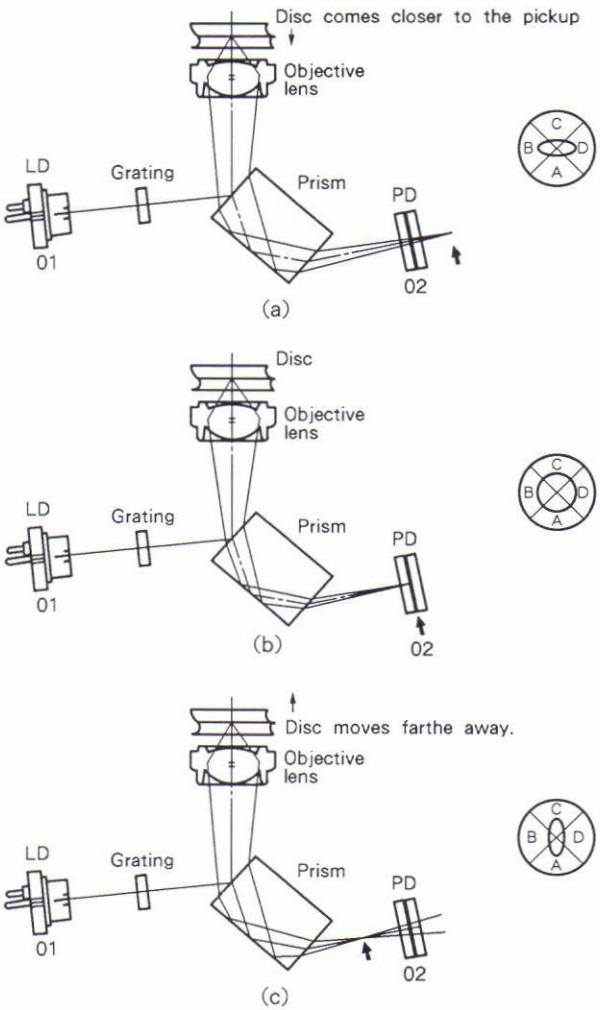

Fig. 9-4
Focuses (indicated by arrows in the figures) and beam forms on the photo diode depending on the disc positions.

In this system, the data on the disc, which is represented by pits, is converted into an electrical signal at the photodiode according to the intensit (brightness) of the reflected beam. The RF signal is then produced from this electrical signal by the arithmetic-logic circuit. Fig. 9-4 shows how the focus signal is detected.
(b) is when the beam from the laser diode is accurately focused on the disc by the objective lens.
(a) shows what happens when the disc comes closer to the pickup and (c) shows what happens when the disc moves farther away.
In case (b), the beam emanating from point 01 is reflected and diffracted on the disc surface to produce a convergence in point 02. In case (a), the beam is directed at a point farther than point 02.
In case (c), the beam is directed at a point near than point 02.

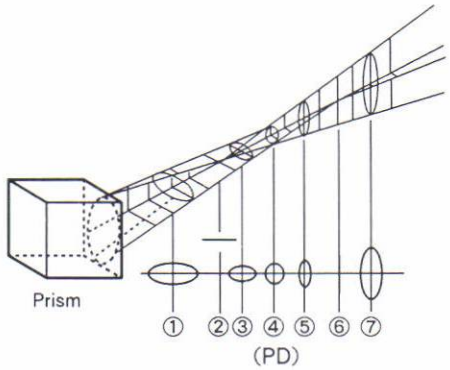

Fig. 9-5 Quadrangular prism

Fig. 9-5 shows the characteristics of the quadrangular prism.
If functions as a lens in the vertical direction in the figure, but not in the horizontal direction.
① through ⑦ shows the shape of the beam at each point. Between points ② and ⑥, which are in a straight line, the beam is circular at point ④. If we assume that Fig. 9-5 shows mode (b) of Fig. 9-4, that means the beam is circular because the photo diode is located at point ④.
In mode (a) of Fig. 9-4, the location of the photo diode is closer to the quadrangular prism than it was in Fig. 9-5. That means the shape of the beam is the same as that of point ③ (an ellipse that has a longer width than height). In mode (c) of Fig. 9-4, the shape of the beam is that of point ⑤, an ellipse that has a longer height than width.

10. CIRCUIT DESCRIPTIONS

10.1 PRE-AMP

Pre-amp section processes the output signal received from the pickup and then sends signals to the servo section.
Its primary component is an IC CXA1471S (IC101).
A description of each section follows.
The internal configuration of CXA1471S is shown in Fig. 10-1.

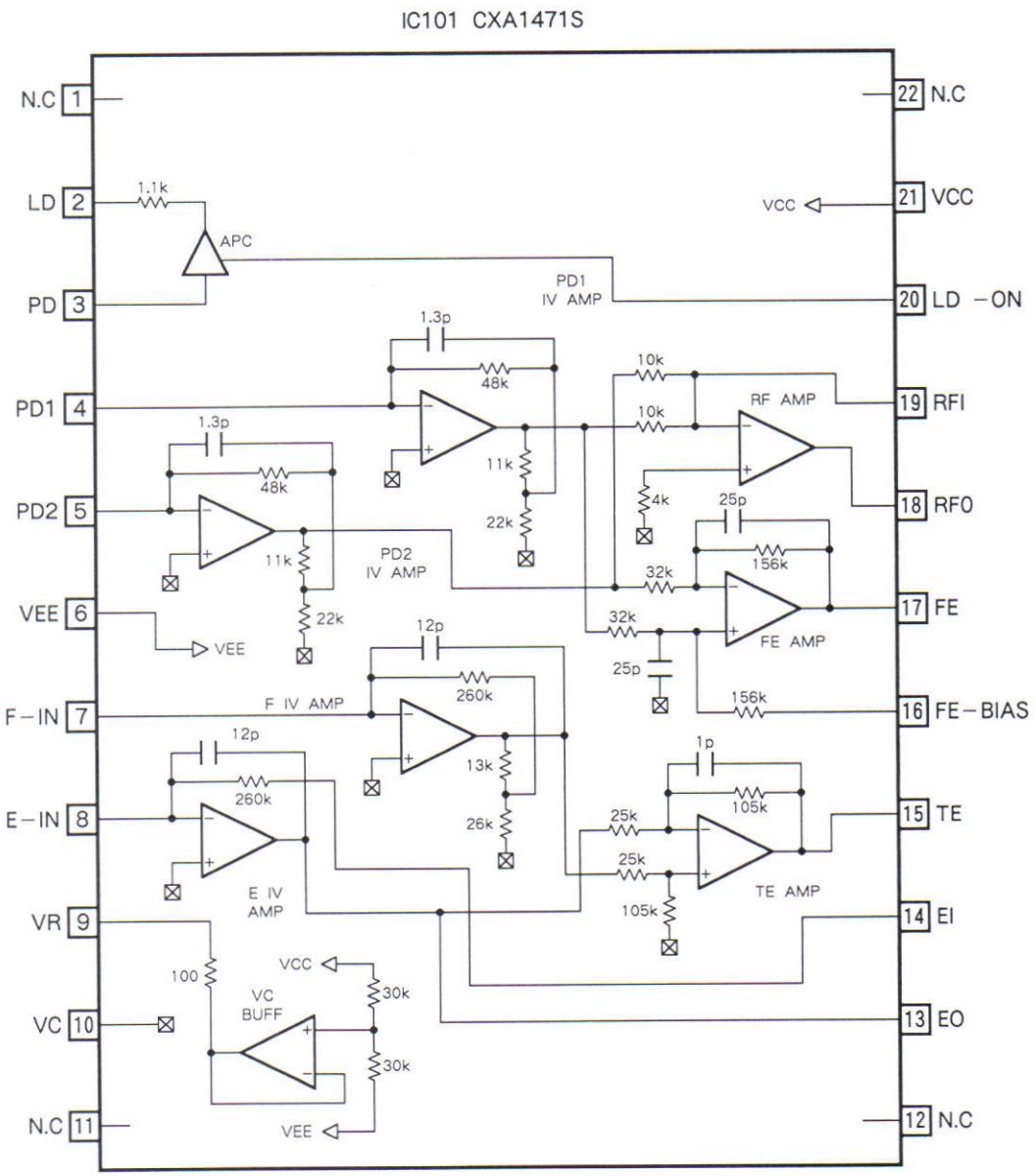

Fig. 10-1

10.1.1 RF amp

The output of the photodiode that is input to the input pins (PD1 and PD2) is respectively subjected to I-V conversion into a 83kΩ equivalent resistor at the RF I-V amps (1) and (2). Furthermore, addition is performed at the RF summing amp so that the output voltage which has been converted from the currents of the photodiodes (A + B + C + D) is output from Pin RFO. An eye pattern check can be performed at this pin.
C103 and R101 through R103 raise the high-range gain characteristics (above 1MHz) of the RF amp inside the IC. As a result, the amplitude of high range signals such as 3T of RF is raised.
So, signal is detected more accurately.

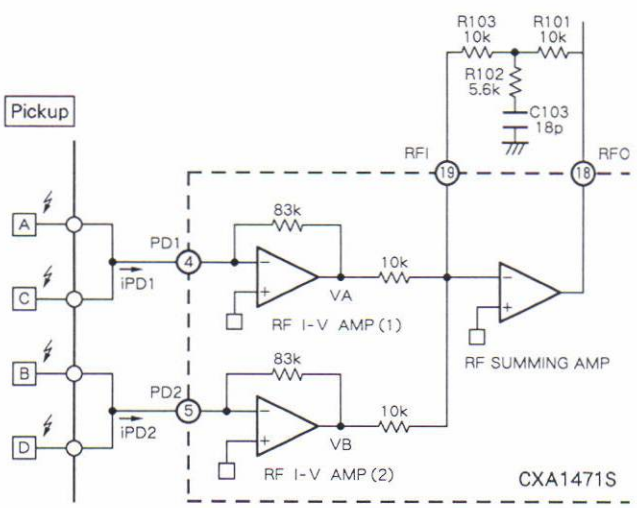

Fig. 10-2

The low-frequency component of the RFO output voltage V_{RFO} is as follows:

$$V_{RFO} = 2.0 \times (V_A + V_B)$$
$$= 166k \times (i_{PD1} + i_{PD2})$$

10.1.2 Focus Error Amp

This amp obtains the difference between the output (V_A) of the RF I-V Amp (1) and the output (V_B) of the RF I-V Amp (2), then outputs the voltage which has been converted from the currents of the photodiodes [A + C − (B + D)].
The FE output voltage (low frequency) is as follows:

$$V_{FE} = 4.9 \times (V_A - V_B)$$
$$= 400k \times (i_{PD1} - i_{PD2})$$

This output corresponds to the sum and difference of the opposite angles of the 4-division detector which cause a focus error (what is called S curve).

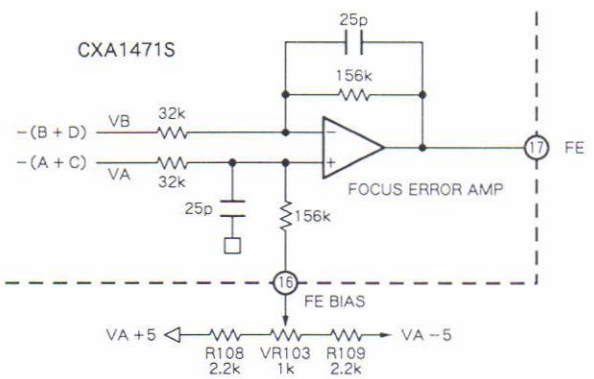

Fig. 10-3

10.1.3 Tracking Error Amp

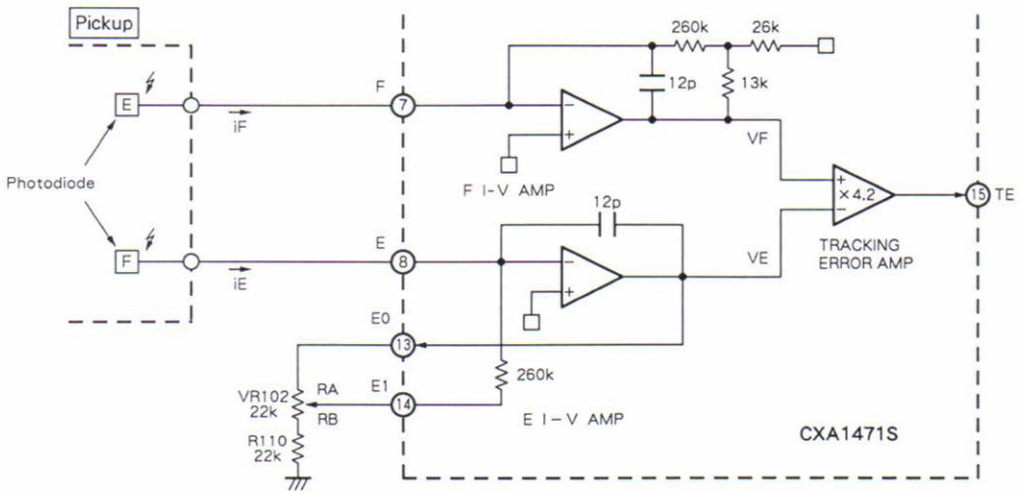

Fig. 10-4

The output of photodiodes for the side spots input to pins E and F are respectively subjected to I-V conversion at the E I-V and F I-V amps. That is:

$V_F = 403k\Omega \times i_F$

$V_E = [260k\Omega \times RA/(RB+22k\Omega)+(RA+260k\Omega)] \times i_E$

Furthermore, the output difference between the E I-V amp and FI-V amp is obtained at the Tracking Error Amp. The output voltage V_{TE} that has been converted from currents of the photodiodes (E-F) as follows:

$V_{TE} = (V_E - V_F) \times 4.2$

$= (i_E - i_F) \times 403k\Omega \times 4.2$

10.1.4 APC Circuit (Automatic Power Control)

The laser diode (LD) has negative thermal characteristics to increase the optical output when driven with a fixed current. It is necessary to control the current at the monitor photodiode (MD) so that a fixed output is obtained. The APC circuit is provided for this purpose.

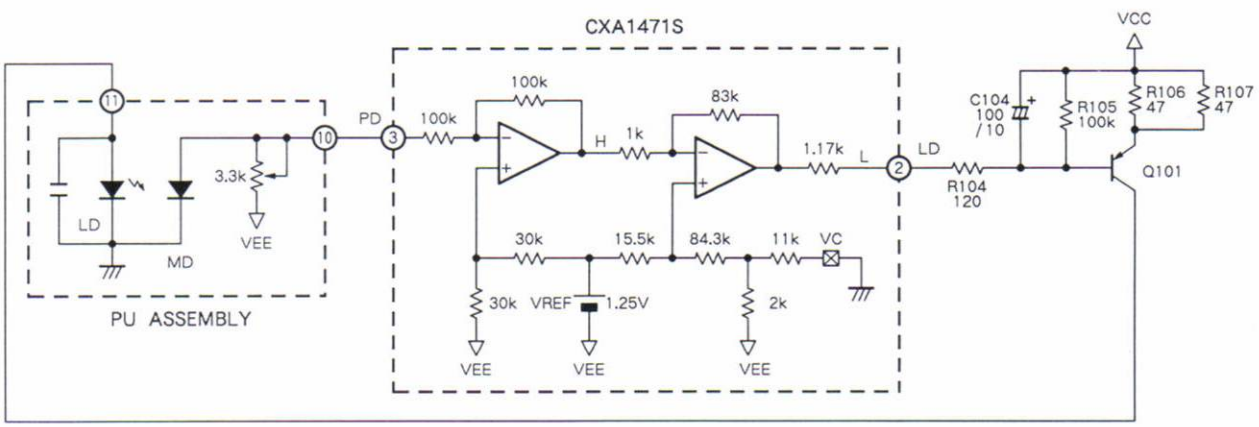

Fig. 10-5

10.2 SERVO SECTION

All servo control is performed using the system control signal. The primary servo control systems of the CD player are listed below.

1. Focus servo
2. Tracking servo
3. Carriage servo
4. Spindle servo
5. EFM-PLL servo
6. Focus in
7. Track jump

In this system, the servo section includes FOK, MIRR and DFCT circuits which have been conventionally used in the RF amplifier.

Its primary component are two ICs CXA1372S (IC151) and CXD2500Q (IC301). A description of each section follows.

The internal configuration of CXA1372S is shown in Fig. 10-6.

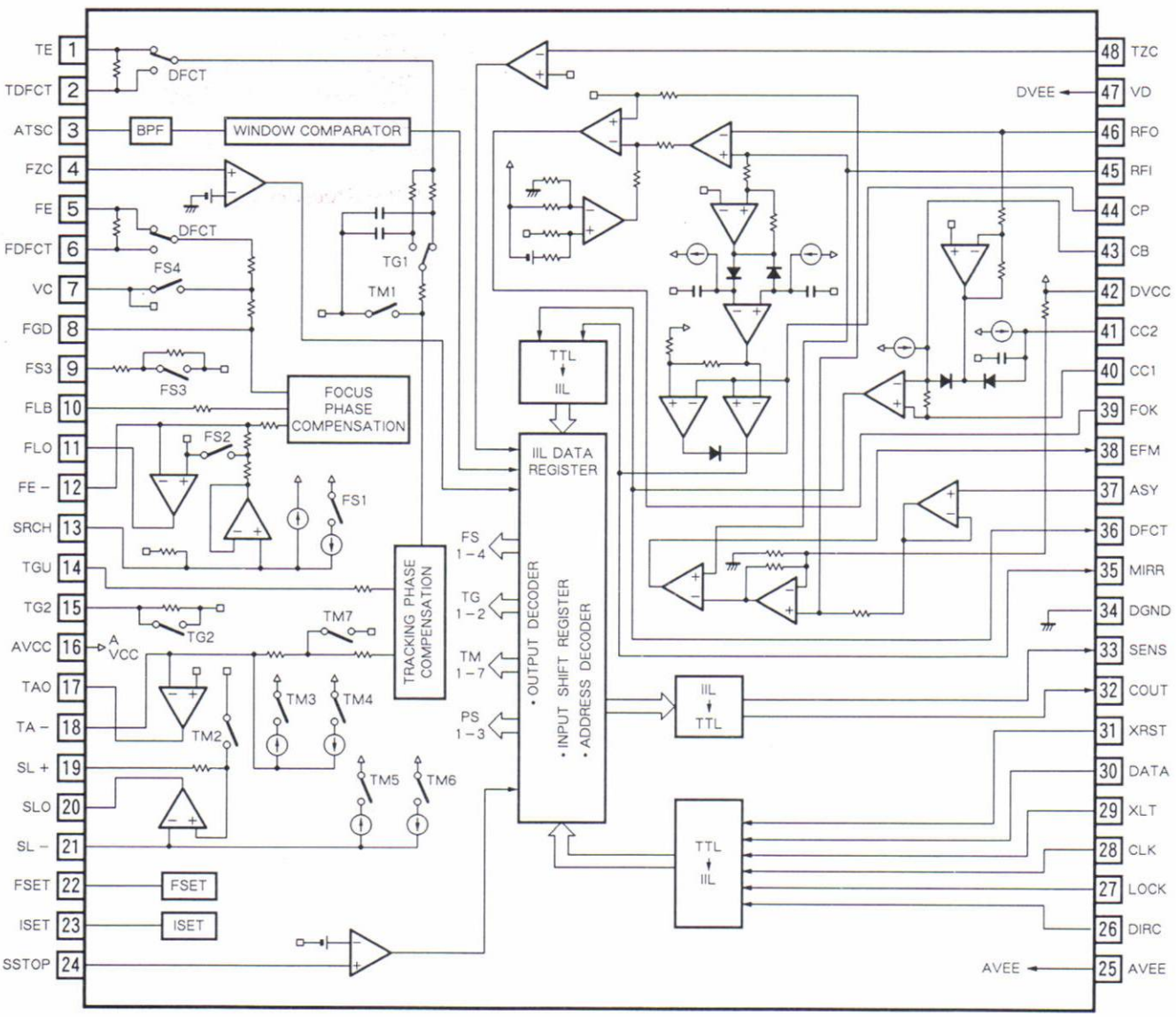

Fig. 10-6 IC151 CXA1372S

10.2.1 Focus OK Circuit

The Focus OK circuit functions to create the window for the timing of switching ON the Focus Servo from Focus Search status.
RF signal is input to pin 46 and the signal which passes through the HPF is input to pin 45. These signals pass throuth the Focus OK Amp and the Focus OK Comparator, and are output as the Focus OK signal from pin 39.
The Focus OK output is inverted in the case below:
$V_{RFI} - V_{RFO} \fallingdotseq -0.37V$

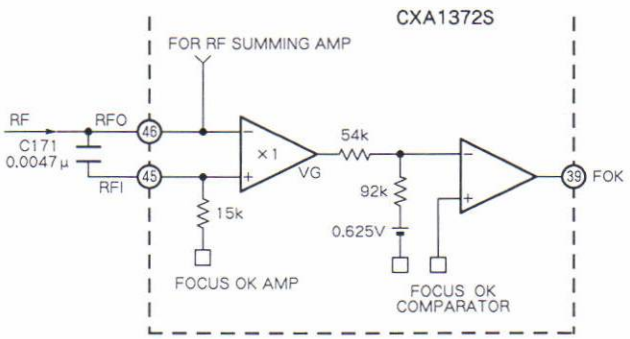

Fig. 10-7

10.2.2 EFM Comparator

The EFM comparator functions to convert the RF signals into binary signals. The asymmetry caused by variance during disc manufacture cannot be eliminated merely by AC coupling. Consequently, the reference voltage of the EFM comparator is controlled by exploiting the respective 50% probability of a 1 or 0 occurring as the value of a binary-coded EFM signal. Note that since this EFM comparator is of power-current SW type, its H and L levels will not equal the supply voltage, feedback is applied through the decoder C-MOS (CXD2500Q) buffer.
R308, R309, C308 and C309 serve as a LPF for obtaining the DC component of the EFM signal.

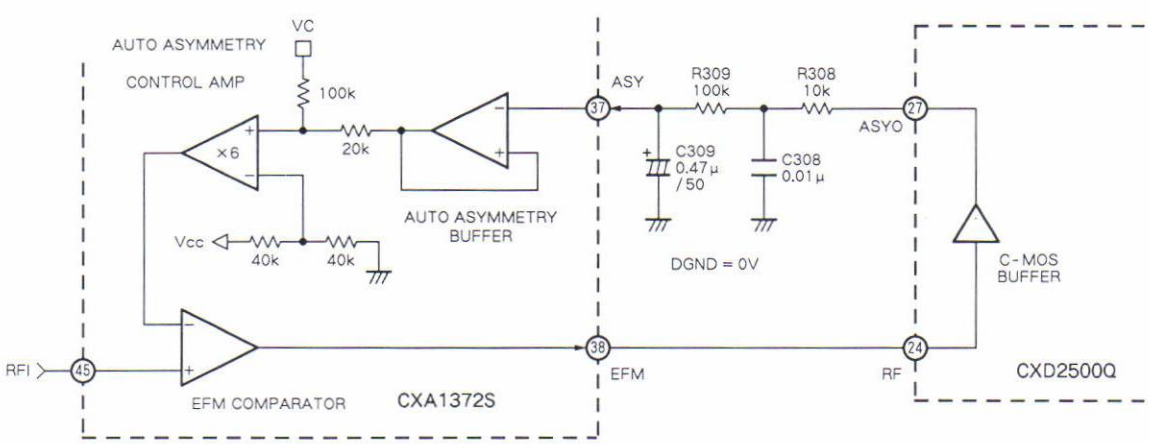

Fig. 10-8

10.2.3 Mirror Circuit

After amplifying the RFI signal (This signal is for detecting ON Track or OFF Track of the pickup's beam. Output of pin 35 is "H" at OFF Track), the Mirror circuit performs Peak Hold and Bottom Hold. Peak Hold will hold the peak value at a time constant that is capable of tracking even a 30kHz Traverse signal, whereas Bottom Hold will hold the bottom value at a time constant that is capable of tracking even the envelope fluctuations of revolving cycles.

The DC-replayed Envelope signal J is obtained from the differential amplitude of these Peak and Bottom Hold signals, H and I. The Mirror output is obtained by comparing this signal J with the signal K which has been held at level that is two-thirds that of the peak value, using large time constant. In other words, the Mirror output is "L" upon a disc track or "H" between disc tracks (the mirror section). Moreover, the Mirror output is also "H" when a defect has been detected.

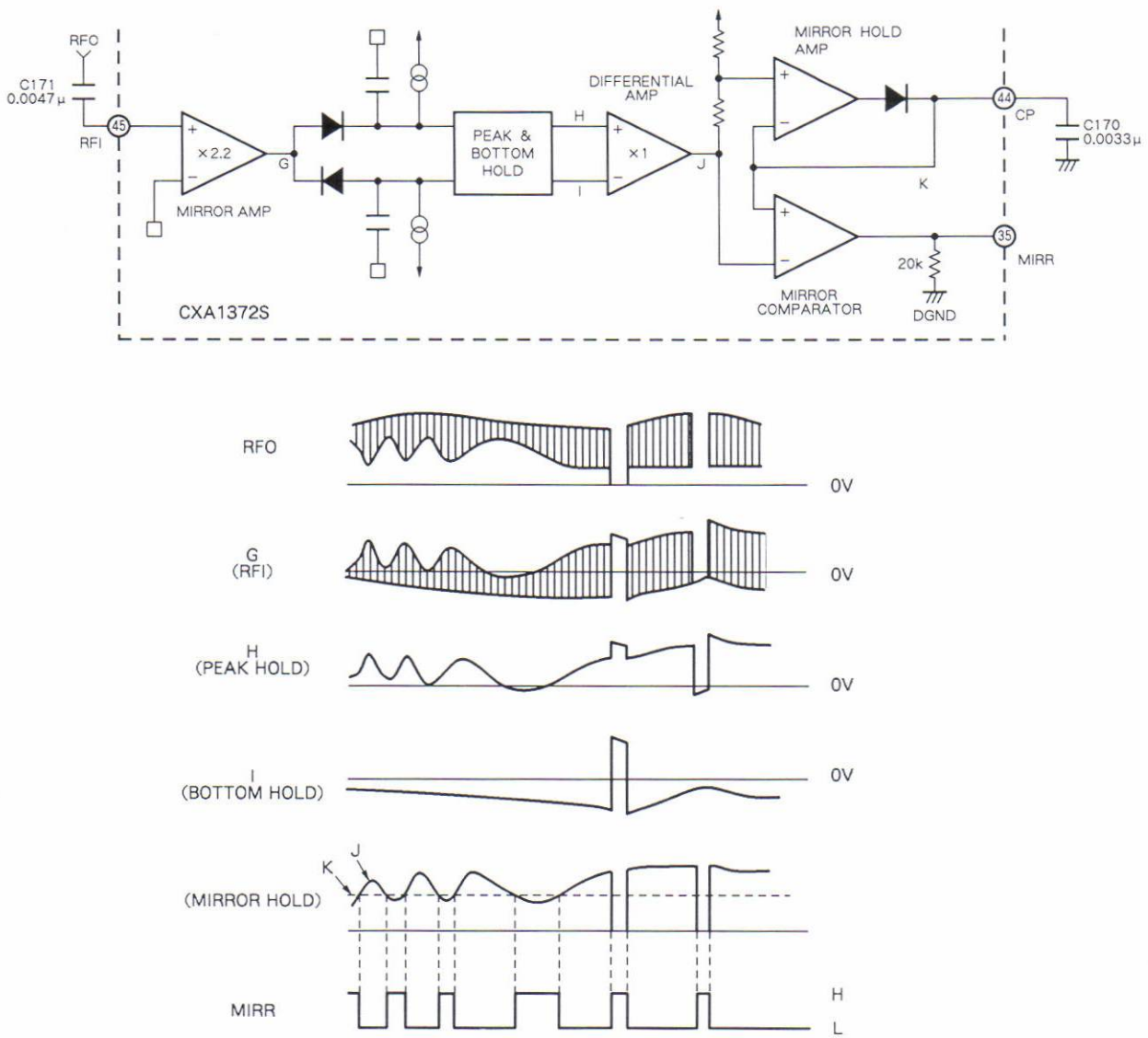

Fig. 10-9

10.2.4 Defect Circuit

After inverting the RFI signal, the defect circuit performs bottom hold using two time constants, one long and one short. The bottom hold performed by the short time constant sends a response at a mirror-surface defect on the disc that is 0.1ms or longer. The bottom hold performed using the longer time constant continues holding the mirror surface at the level preceding the defect. These signals are respectively differentiated by use of C coupling and their level are shifted. Then, the signal which might result from a possible defect in the disc's mirror surface is generated by comparing the aforementioned signals. This signal is used to control the tracking and focus servo loops when the DEFECT output is "H" to improve the playability.

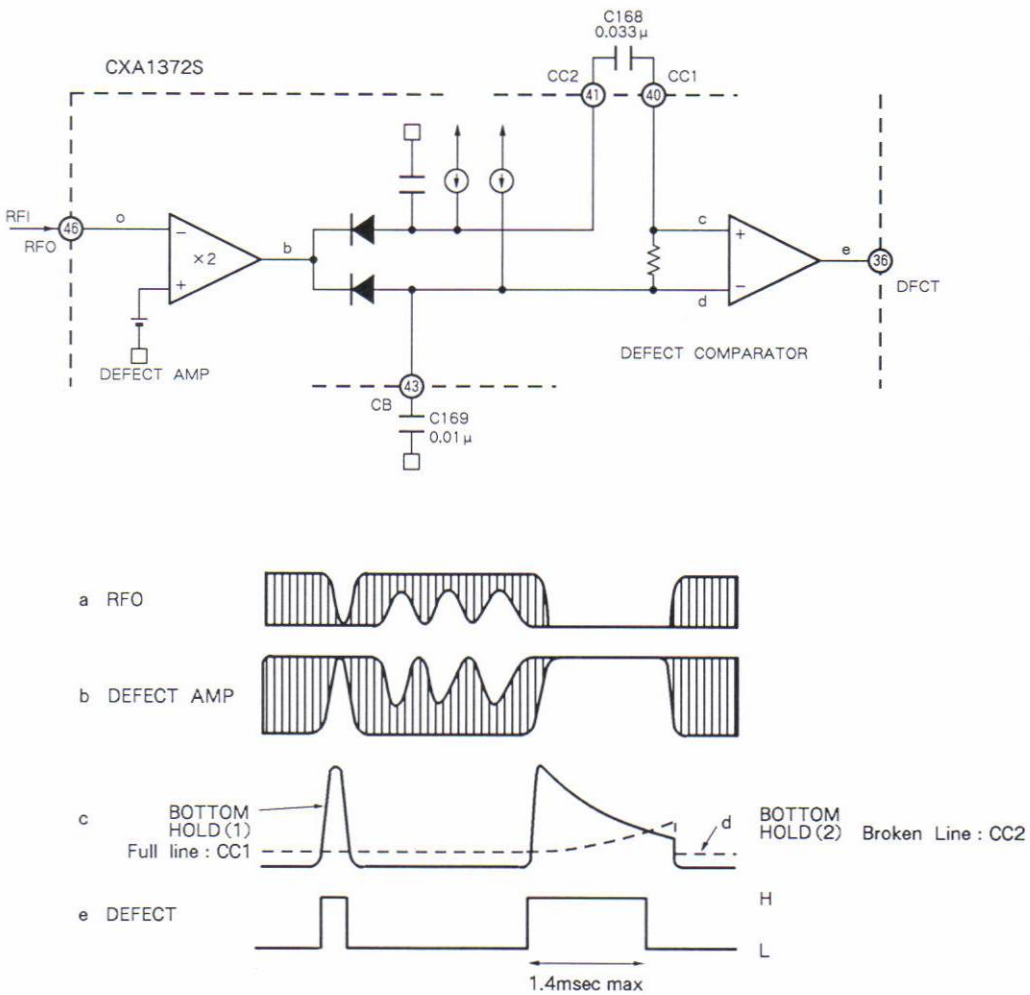

Fig. 10-10

10.2.5 CPU INTERFACE

Servo control in this CD player is performed transferring the serial data from the CPU (system control micro-computer) PD4259 (IC351) to the DSP CXD2500Q (IC301).
The serial data is transfered to the SSP CXA1372S (IC151) via CXD2500Q. The connections of serial interface is shown in Fig. 10-11.
The serial data consists of 4-through 16-bit data and 4-bit address and is transferred in sequence from the LSB of data, sending DATA, CLK and XLAT signals. Also, a SENS signal is supplied to CPU PD4259 from SSP and DSP, showing the various servo statuses. The timing chart of serial interface is shown in Fig. 11-12. The command instruction of the system control data and SENS output correspond to it address are shown in Table 10-1.

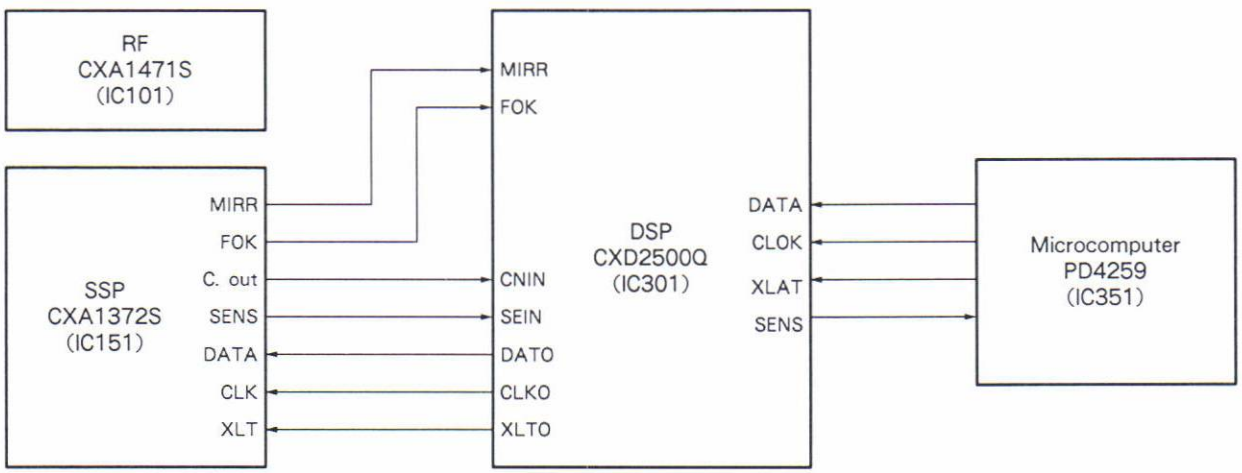

Fig. 10-11

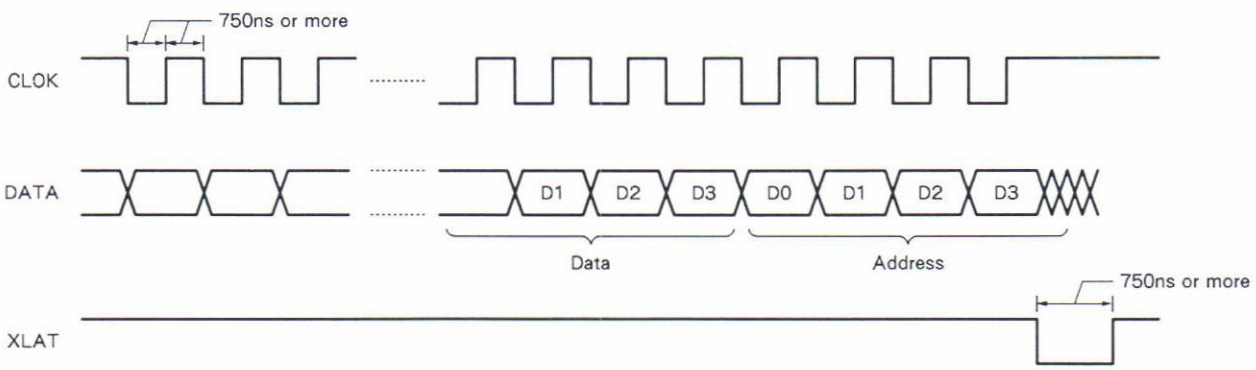

Fig. 10-12

— : Don't Care

	Command	Address				Data 1				Data 2				Data 3				Data 4				SENS
		D3	D2	D1	D0	D3	D2	D1	D0	D3	D2	D1	D0	D3	D2	D1	D0	D3	D2	D1	D0	
$0	Focus Control	0	0	0	0	FS4 Focus ON	FS3 Gain Down	FS2 Search ON	FS1 Search Up													FZC
$1	Tracking Control	0	0	0	1	Anti Shock	Brake ON	TG2 Gain Set	TG1													A.S
$2	Tracking Mode	0	0	1	0	Tracking Mode		Carriage Mode														TZC
$4	Auto-sequence	0	1	0	0	AS3	AS2	AS1	AS0													$\overline{\text{XBUSY}}$
$5	Blind (A,E), Overflow (C)	0	1	0	1	0.18ms	0.09ms	0.045ms	0.022ms													FOK
	Brake (B)					0.36ms	0.18ms	0.09ms	0.045ms													
$6	KICK (D)	0	1	1	0	11.6ms	5.8ms	2.9ms	1.45ms													Hi-Z
$7	Auto-sequencer (N) setting track jumps.	0	1	1	1	32,768	16,384	8,192	4,096	2,048	1,024	512	256	128	64	32	16	8	4	2	1	"L"
$8	———	—	—	—	—	—	—	—	—	—	—	—	—	—	—	—	—	—	—	—	—	
$9	Func setting	1	0	0	1	D CLV 011-OFF	0	A SEQ ON-OFF	D PLL ON-OFF	0	0	0	—	—	—	—	—	—	—	—	—	"L"
$A	Audio CTRL	1	0	1	0	0	0	Mute	ATT	0	0	—	—	—	—	—	—	—	—	—	—	GFS
$B	Traverse monitor counter setting	1	0	1	1	32,768	16,384	8,192	4,096	2,048	1,024	512	256	278	64	32	16	8	4	2	1	COMP
$C	Servo coefficient setting	1	1	0	0	Gain MDP1	Gain MDP0	Gain MDS1	Gain MDS0	—	—	—	—	—	—	—	—	—	—	—	—	COUT
$D	CLV CTRL	1	1	0	1	DCLV PWM MD	1	0	CLVS Gain	—	—	—	—	—	—	—	—	—	—	—	—	"L"
$E	CLV Mode	1	1	1	0	CM3	CM2	CM1	CMO	—	—	—	—	—	—	—	—	—	—	—	—	$\overline{\text{OV64}}$

Table. 10-1 Command instruction

10.2.6 The meaning of SENS signal

The meaning of SENS signal is shown in the table below.

Description of the SENS signal

SENS output	Meaning
FZC	When focus error is more than 0V, outputs "H", and when it is less than 0V, outputs "L" at Focus IN. This signal shows the timing of servo ON at Focus IN.
ATSC	Outputs "H" when detecting anti-shocked. This CD player is fixed "L".
T.Z.C	When tracking error is more than 0V, outputs "H", and when it is less than 0V, outputs "L".
$\overline{\text{XBUSY}}$	When auto sequencer during operation, outputs "L", and when it completes operation, outputs "H".
FOK	Output the input signal of FOK terminal. Output "H" when Focus OK.
GFS	Outputs "H" when the reproduced frame sync is obtained with proper timing.
COMP	Counts the number of tracks defined by $B and outputs "H" when latched to $B or $C and outputs "L" when CNIN is input up to the number of $B.
COUT	Counts the number of tracks defined by $B and outputs "H" when latched to $B or $C and toggles each time when CNIN is input up to the number of $B.
$\overline{\text{OV64}}$	Outputs "L" when the EFM signal has been prolonged over sixty-four channel clocks after passing the sync detection filter.

10.2.7 Meaning of the instruction code

Meaning of the instruction code is described in the below.

$ 2 Tracking Mode

	D3	D2
OFF	0	0
Servo ON	0	1
FWD JUMP	1	0
REV JUMP	1	1

Carriage Mode

	D1	D0
OFF	0	0
Servo ON	0	1
FWD MOVE	1	0
REV MOVE	1	1

$ 4 Auto sequence

Command	AS3	AS2	AS1	AS0
CANCEL	0	0	0	0
FOCUS – ON	0	1	1	1
1 TRACK JUMP	1	0	0	RXF
10 TRACK JUMP	1	0	1	RXF
2N TRACK JUMP	1	1	0	RXF
N TRACK MOVE	1	1	1	RXF

RXF = 0 FORWARD
RXF = 1 REVERSE

When the CXD2500Q receives this command, a series of operations including auto focus and track jump is automatically performed whthout commands from the system microcomputer.
A description of each operation follows. Registers $5 through $7 define the conditions for this automatic sequence.

$ 9 FUNC setting

Command	Data 1			
	D3	D2	D1	D0
Func setting	DCLV ON – OFF	0	A. SEQ ON – OFF	D. PLL ON – OFF

D3

Command bit	CLV mode	Contents		
DCLV ON – OFF = 0 (D3 = 0)	Usual CLV servo	———		
DCLV ON – OFF = 1 (D3 = 1)	Digital CLV servo	D3 DCLV of $D PWM MD	1	MDS = PWM Polarity signal MDP = PWM Absolute signal (Two values)
		0		MDS = Z MDP = Three value PWM output (*)

D1 Auto sequence ON when D1 (A.SEQ) = 1.
* : Use this setting for this CD player.

D0

Command bit	Meaning
DPLL = 0	RFPLL becomes analog. Use PDO, VCOI and VCOO.
DPLL = 1	RFPLL becomes digital. PDO becomes Z. (*)

* : Use this setting for this CD player.

$ A

Command	Data 1			
	D3	D2	D1	D0
Audio CTRL	0	0	Mute	ATT

D1

Command bit	Meaning
Mute = 0	Set Mute OFF if other muting conditions are not defined.
Mute = 1	Mute ON

D0

Command bit	Meaning
ATT = 0	Attenuation OFF
ATT = 1	− 12dB

$ C Spindle servo coefficient setting

Command	D3	D2	D1	D0
Servo coefficient setting	Gain MDP1	Gain MDP0	Gain MDS1	Gain MDS0
CLV CTRL ($ DX)	———			Gain CLVS

Perform the external setting of the spindle servo gain when DCLV = 1. ($ 9D3)

• Gain setting of the CLVS mode : GCLVS

Gain MDS1	Gain MDS0	Gain CLVS	GCLVS	
0	0	0	− 18dB	
0	0	1	− 6dB	
0	1	0	− 12dB	
0	1	1	0dB	
1	0	0	− 6dB	
1	0	1	+ 6dB	← *

• Gain setting of the CLVP mode : GMDP : GMDS

Gain MDP1	Gain MDP0	GMDP	
0	0	− 6dB	
0	1	0dB	← *
1	0	+ 6dB	

Gain MDS1	Gain MDS0	GMDS	
0	0	− 6dB	
0	1	0dB	
1	0	+ 6dB	← *

* : Use this setting for this CD player.

$ D

Command	D3	D2	D1	D0
CLV CTRL	DCLV PWM MD	1	0	CLVS Gain
	↑ Refer to $9			↑ Refer to $C

$ E Spindle servo control

Command	D3	D2	D1	D0
CLV mode	CM3	CM2	CM1	CM0

CM3	CM2	CM1	CM0	Mode
0	0	0	0	STOP
1	0	0	0	KICK
1	0	1	0	BRAKE
1	1	1	0	CLVS
1	1	0	0	CLVH
1	1	1	1	CLVP
0	1	1	0	CLVA

STOP : This mode is stopped to the spindle motor.
KICK : This mode is forward rotated to the spindle motor.
BRAKE : This mode is reverse rotated to the spindle motor.
CLVS : Rough servo mode. Used to pull disc rotation into the capture range of RF-PLL when RF-PLL is unlocked.
CLVP : PLL servo mode.
CLVA : Automatic exchang of the CLVS and CLVP modes. The player is set in this mode during normal playback.

10.2.8 Focus servo system

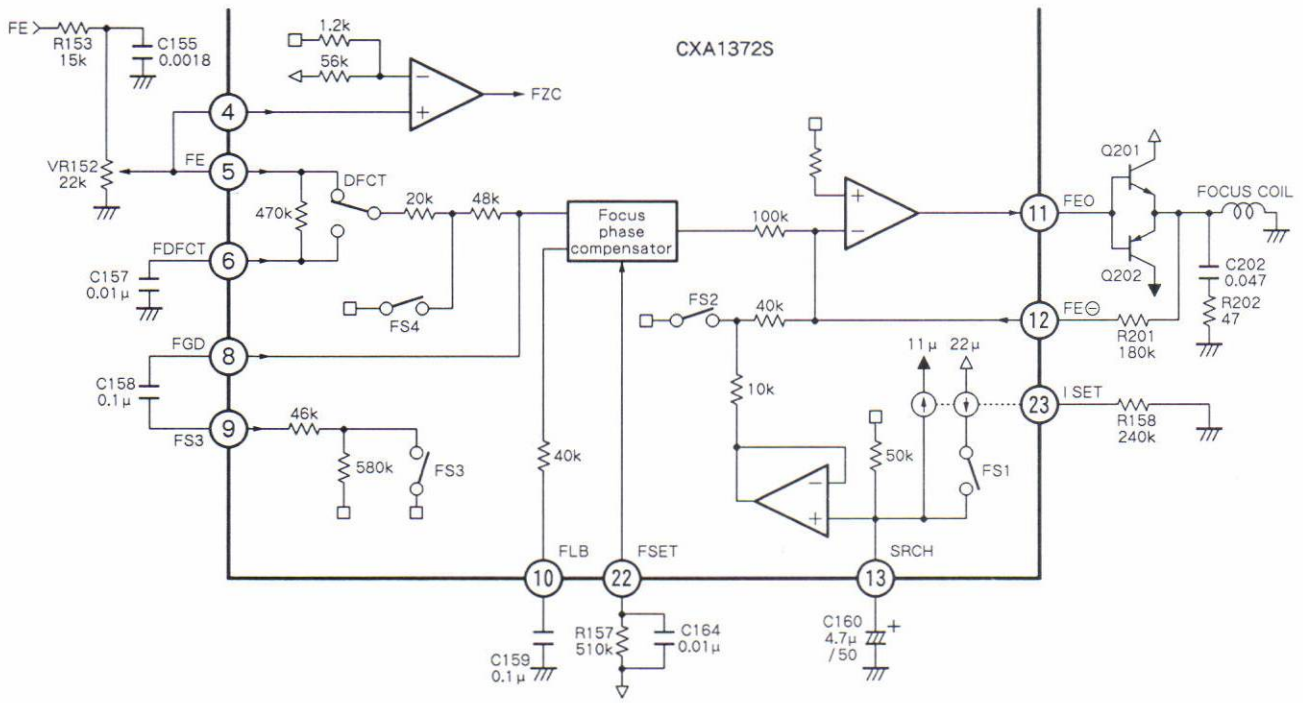

Fig. 10-13

Fig. 10-13 is a block diagram of the Focus Servo System.

The FE signal is normally input to the focus phase compensator circuit through resistors of 20 and 48 kΩ. When DFCT is detected, it is switched to the route passing through a low-pass filter formed by capacitor (C157) connected to a built-in 470kΩ reisitor and pin 6.

FS3 is ON at normal play, the high-cut filter that formed the low-range time constant by the operation of the capacitor connected between pins 8 and 9 and the internal resistor drops the high-range gain.

The capacitor C159 (0.1μF) is a time constant that boost the low-range frequency during normal play mode.

The peak frequency of the Focus Phase Compensator is in proportion to the value of the resistor connected to pin 22, and its peak value is approximately 1.2kHz in case of 510kΩ resistance value.

The height of the focus search is approximately ± 0.9V in case of the time constants shown in the Fig. 10-13. This height is inverse proportion to the value of the resistor connected between pin 22 (ISET) and GND. When the value of the resistor connected to pin 22 is changed, the track jump and the height of the sled kick will also concurrently changed.

The inverted input level of the FZC comparator is set to a value that is 2% (approx.100mV) of difference between Vcc and GND (pin 7).

(a) Focus-in sequence

In the focus-in sequence, the lens is driven close to the focal point on the disc surface and the servo loop is closed at the center of Focus S-curve. This sequence uses the automatic sequence function built into the CXD2500Q (auto focus, Fig. 10-15) as shown in Fig. 10-14. When focus-in is not possible at one time, the lens will be lowered again after its upward movement is completed, and the sequence will be repeated.

Auto focus (Auto sequence of CXD2500Q and CXA1372S)

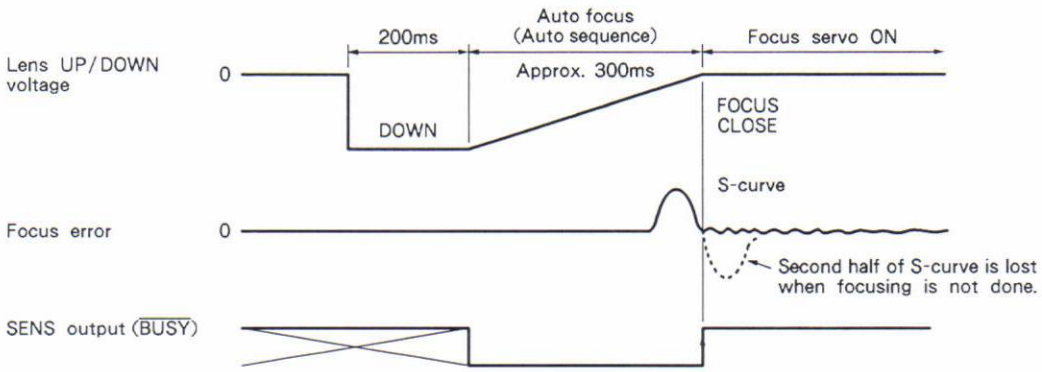

Fig. 10-14

Timing chart

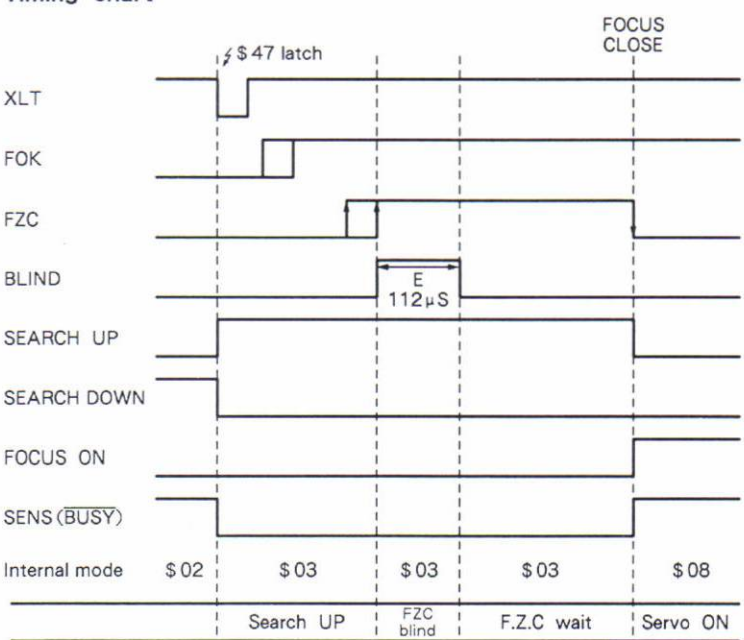

Note : Time control E is made by the system control microcomputer setting $5.

Fig. 10-15

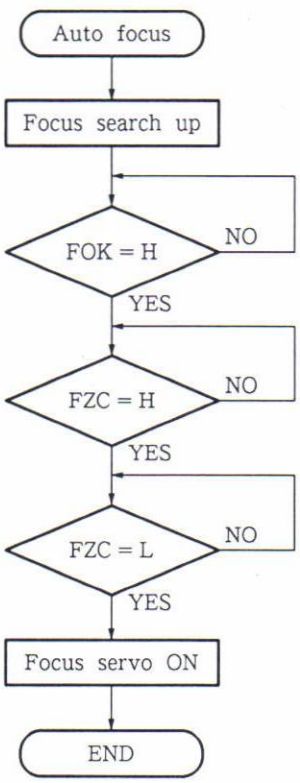

Flow chart of Auto focus.

10.2.9 Tracking and carriage servo system

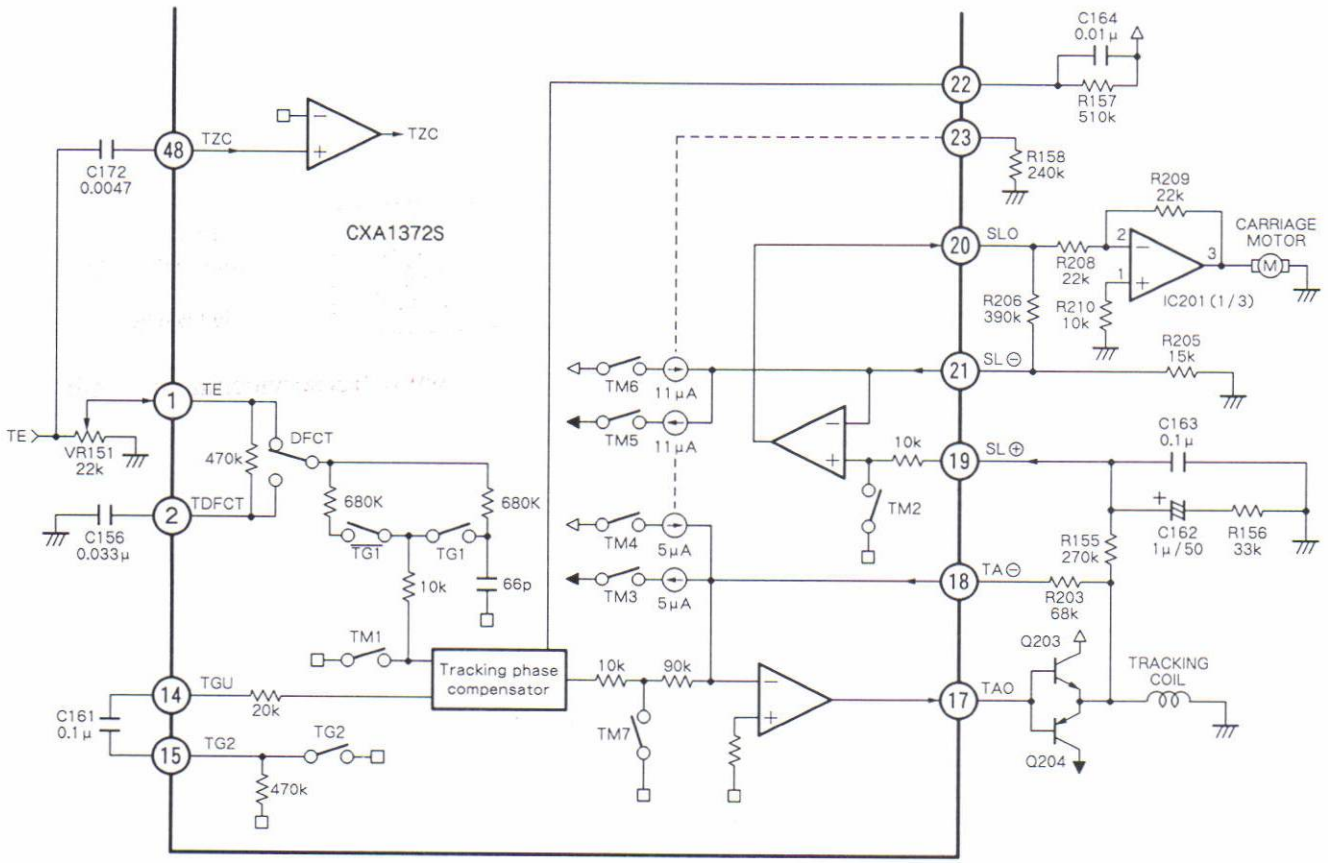

Fig. 10-16

Fig. 10-16 is a block diagram of the tracking and carriage servo system.

The capacitor (C161) connected between pins 14 and 15 is a time constant that functions to drop the high-range gain at normal play. The peak frequency of the Tracking phase compensator is fixed the resistor R157 (510kΩ) connected to pin 22, and its peak value is approximately 1.2kHz.

TM3 or TM4 is switched ON in order to make a tracking jump in the FWD (forward) or REV (reverse) direction, respectively. The peak voltage to be applied to the tracking coil at this time is determined by the current value of TM3 or TM4 and the feedback resistor from pin 18 ; that is :

Track Jump Peak Voltage =

TM3 (TM4) current value × feedback resistance value ≒ 400mV

A FWD or REV carriage kick is performed by switching TM5 or TM6 to ON, respectively. The peak voltage to be applied to the carriage motor at this time is determined by the current value of TM5 or TM6 and the feedback resistor from pin 21 ; that is :

Carriage Jump Peak Voltage =

TM5 (TM6) current value × feedback resistance value ≒ 4V

The current value at each SW is determined by the value of the resistor (R158) connected to pin 23 and GND. When its resistance value is 240kΩ, the respective current values will be as follows :

TM3, TM4 = ±5.5μA TM5, TM6 = ±11μA

Similar to the FE signal, the TE signal is switched for DFCT to the route passing through a low-pass filter formed by capacitor (C156) connected to pin 2 and a built-in reisitor (470kΩ).

(a) Track jump

An access operation, such as track search, is performed with a track count jump to roughly move the carriage and a track jump to kick the tracking carriage by using TM3 through TM5 as described above.
The track jump uses 1-track jump, 10-track jump and 2N (N = 24 or 48) track jump functions of the automatic sequence in the CXD2500Q. (Fig. 10-17, -18, -19)

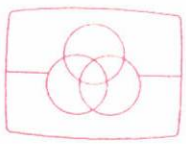

Auto sequence timing chart

1 Track jump

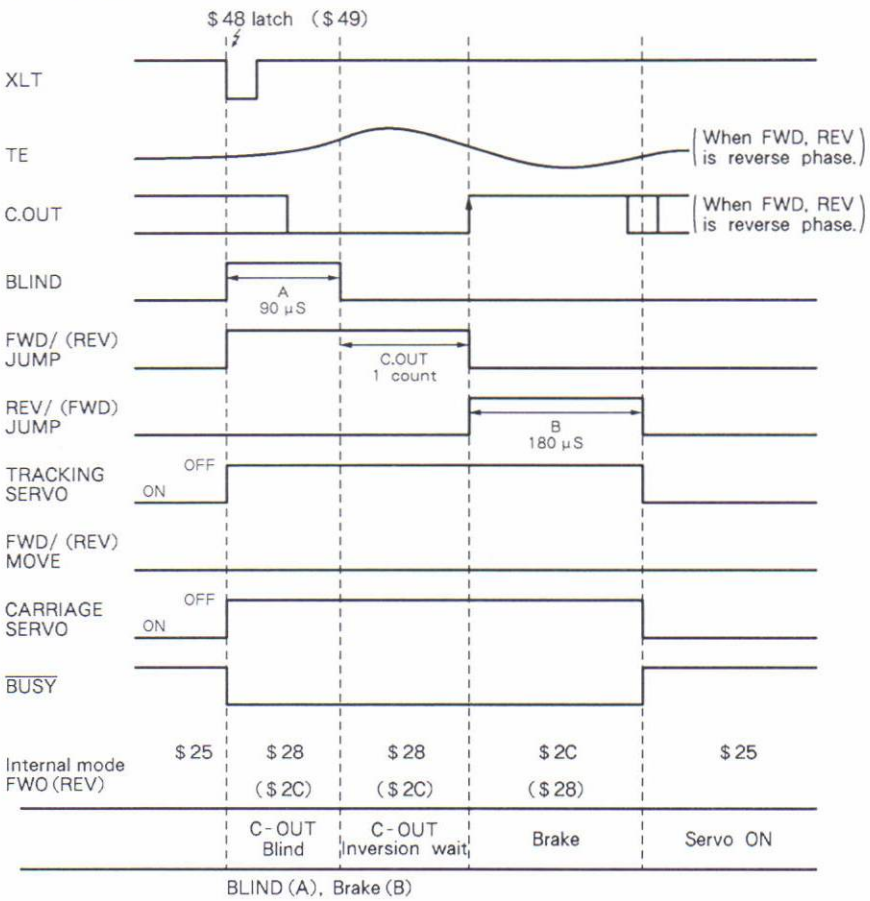

Note : Time control of A and B are made by system control microcomputer setting $5.

Fig. 10-17

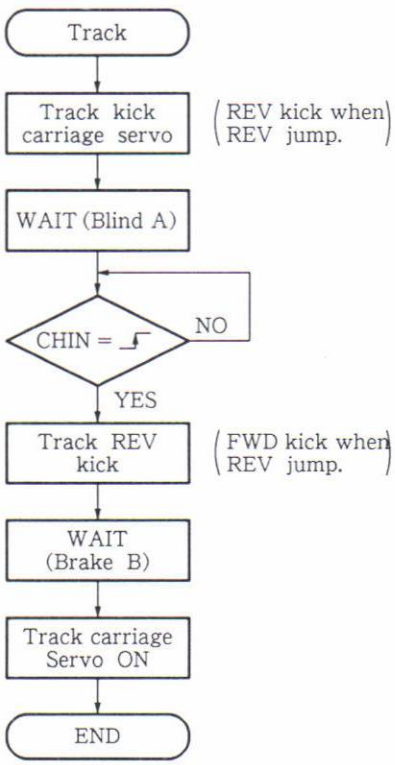

Flow chart of 1 track jump

10 Track jump

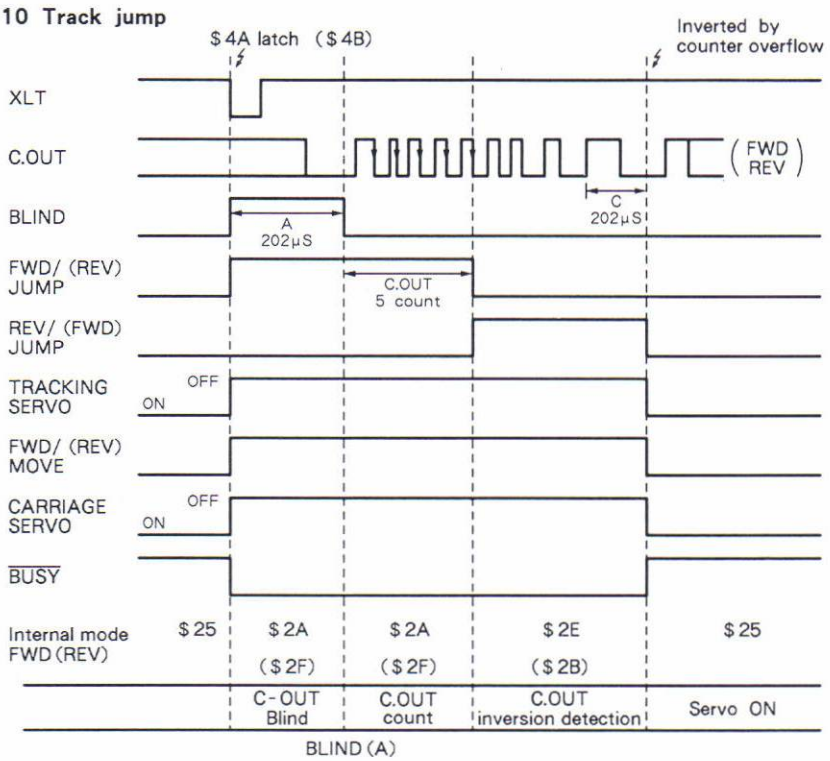

Note : Time control of A and C are made by system control microcomputer setting $5.

Fig. 10-18

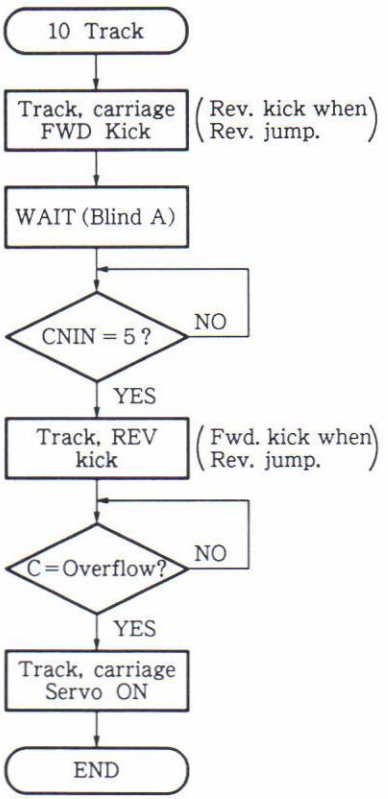

Flow chart of 10 track jump

2N Track jump (N = 24, 48)

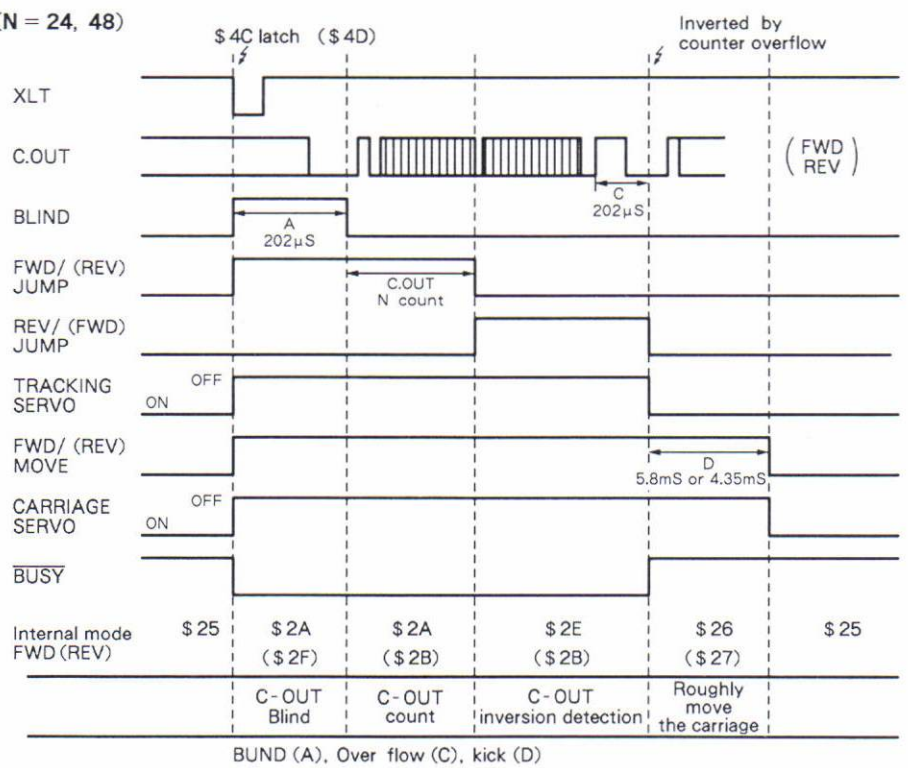

Note : Time control of A and C are made by system control microcomputer setting $5, and that of D and N are respectively made by its $6 and $7.

Fig. 10-19

(b) Brake mode circuit

The brake mode circuit is provided to make possible the smooth closing of tracking when the lens (pickup) and track (disc) are moving in relation to each other after performing the track jump, etc.

The directions of lens and track movement are detected using the phase relationship between the envelope of RF signal and tracking error. Switching is conducted in such a way that the accelerating side of the tracking error is cut. Consequently, only the decelerating side is used. This, operation, called the brake mode. A block diagram and waveforms are shown in Fig. 10-20.

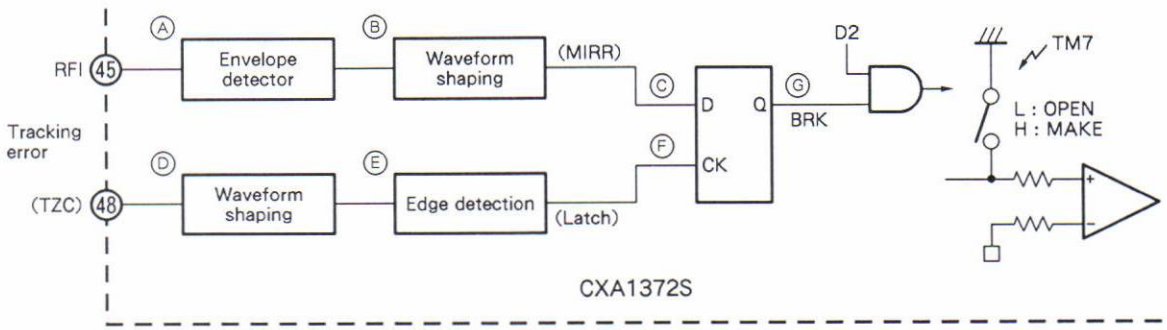

TM7 Operation (Brake circuit)

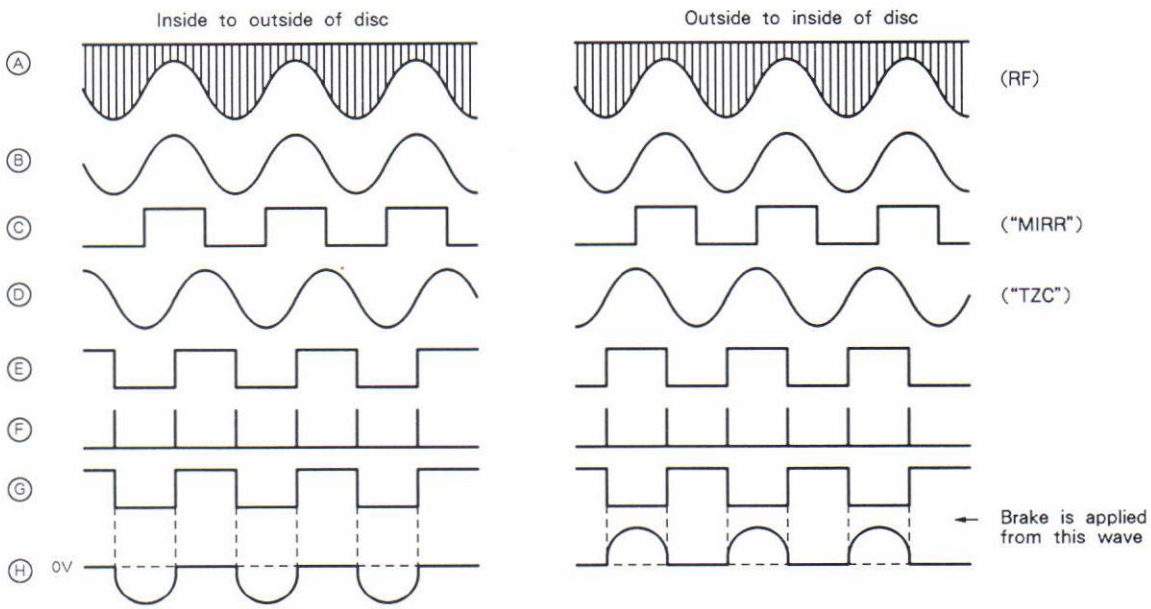

Each waveforms

Fig. 10-20

10.2.10 Demodulator section

The demodulator section is composed primary of LSI CXD2500Q (IC301) ; is also includes a small amount of added-on circuits. A block diagram is shown in Fig. 10-21. Its functions are :

1. Built-in 32k RAM is included.
2. Bit clock regeneration using the digital PLL for the EFM signal is strobed.
3. Demodulation of the EFM data.
4. Detection, protection and internal extension of the EFM frame sync signal.
5. Thorough error detection and correction.
   C1 : double correction C2 : fourth correction
6. Reduce the noise generation when track is jumped.
7. Mute of the audio data.
8. Demodulation of the sub-code and error detection for sub-code Q.
9. Digital spindle servo (built-in over-sampling filter).
10. 16-bit tracking counter.
11. CPU interface using the serial bus.
12. Built-in servo auto-sequencer.
13. Output for the digital audio interface. (This CD player is not output.)

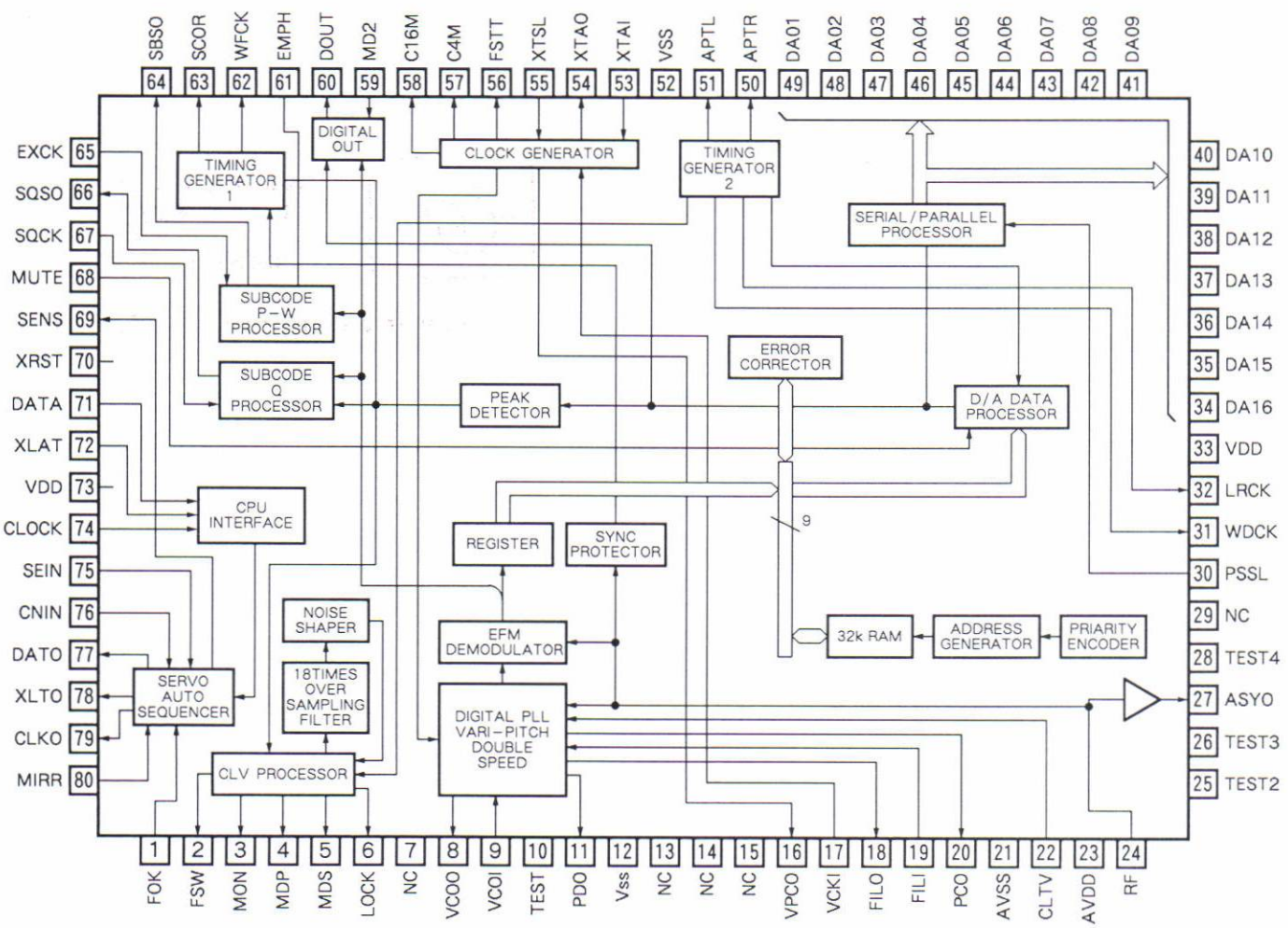

Fig. 10-21 Block diagram of CXD2500Q

10.2.11 Spindle servo system (CLV servo)

The CLV servo controls the rotation of the spindle for the frame sync signals in the EFM signal. Of this CLV servo, three types are available ; rough servo CLV-S for tracking opening, etc., CLV-H for accessing and CLV-P for lock. In addition, there is CLV-A for automatic switching between CLV-S and CLV-P. According to the condition, the appropriate servo is activated by system control (serial).

The operations are described here taking CLV-A as an example. With CLV-S, CLV servo is activated so that the pulse width of the frame sync signal becomes 22T (when defining a cycle of 8.4672MHz as T) and the disc speed becomes almost equal to that at the PLL lock. When the clock for EFM signals on the disc reaches the specified frequency, permitting the frame sync signal to be obtained, the servo is automatically switched from CLV-S to CLV-P inside IC CXD2500Q. With CLV-P, the servo functions so that WFCK which generated by VCO to synchronize with EFM signals is compared and equalized with RFCK from a crystal oscillator. If CLV-P lock is released during playback, the servo is immediately switched to CLV-S and follows the above-mentioned sequence.

This CD player has employed a digital servo in place of the conventional external analog servo as its spindle servo. The circuit is designed so that the CXD2500Q converts a digital servo signal to an analog signal with PWM conversion and outputs it from the MDP terminal. This output and that form the MON terminal which shows the motor ON/OFF status are processed at the power OP amplifier LA6520 (IC201) for amplification, level shift and carrier cancellation, and then output to the spindle motor. The circuit diagram is shown in Fig. 10-22.

The internal blocks of the CXD2500Q are shown in Fig. 10-23. The basic configuration and characteristics are the same as those of the conventional ones. The only difference is that a fourth over-sampling digital filter has been inserted in the MDP error loop and an 18th over-sampling filter has been inserted after the MDP error loop is mixed with the MDS error loop, increasing the carrier frequency to 132.3kHz. The MDP output will be one of three values "H", "L" or "Hi-Z". The speed is accelerated at "H" and decelerated at "L". The MON and MDP outputs for each operation mode are shown in Fig. 10-24.

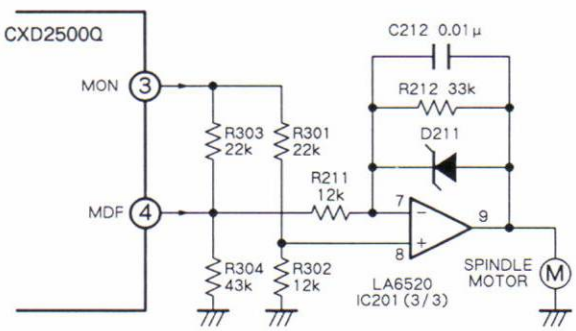

Fig. 10-22

Digital CLV

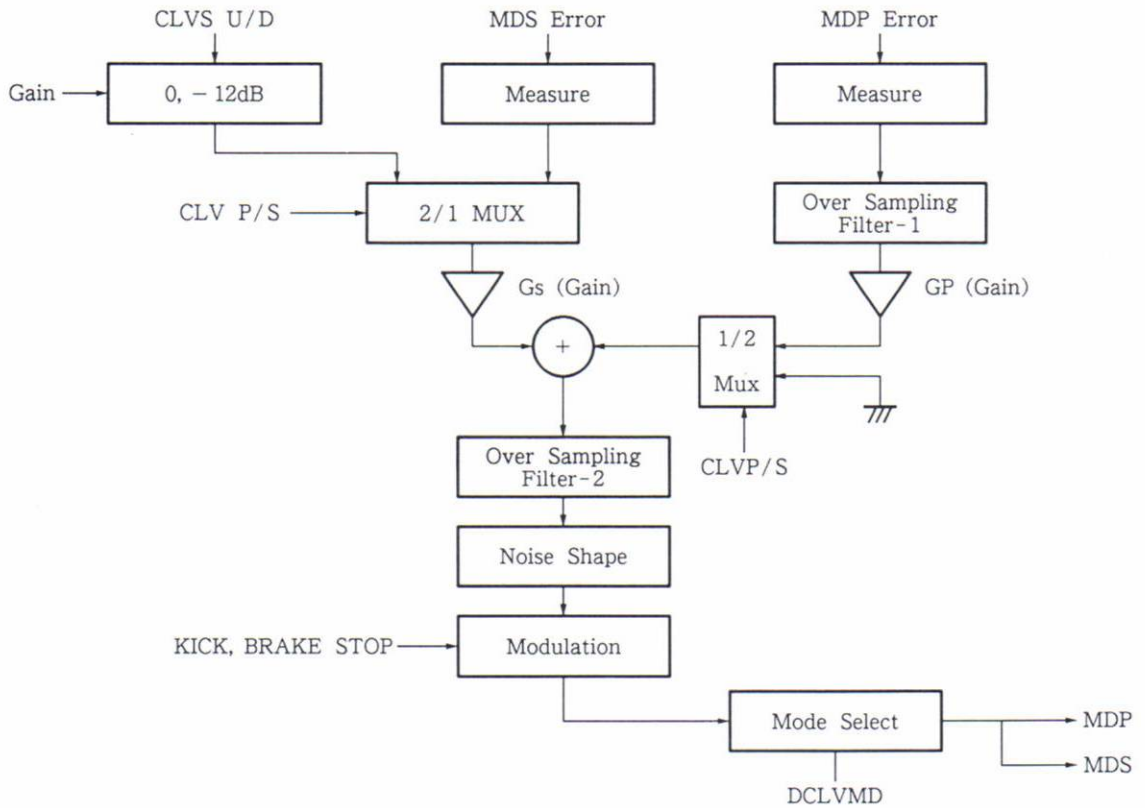

Fig. 10-23 Block diagram

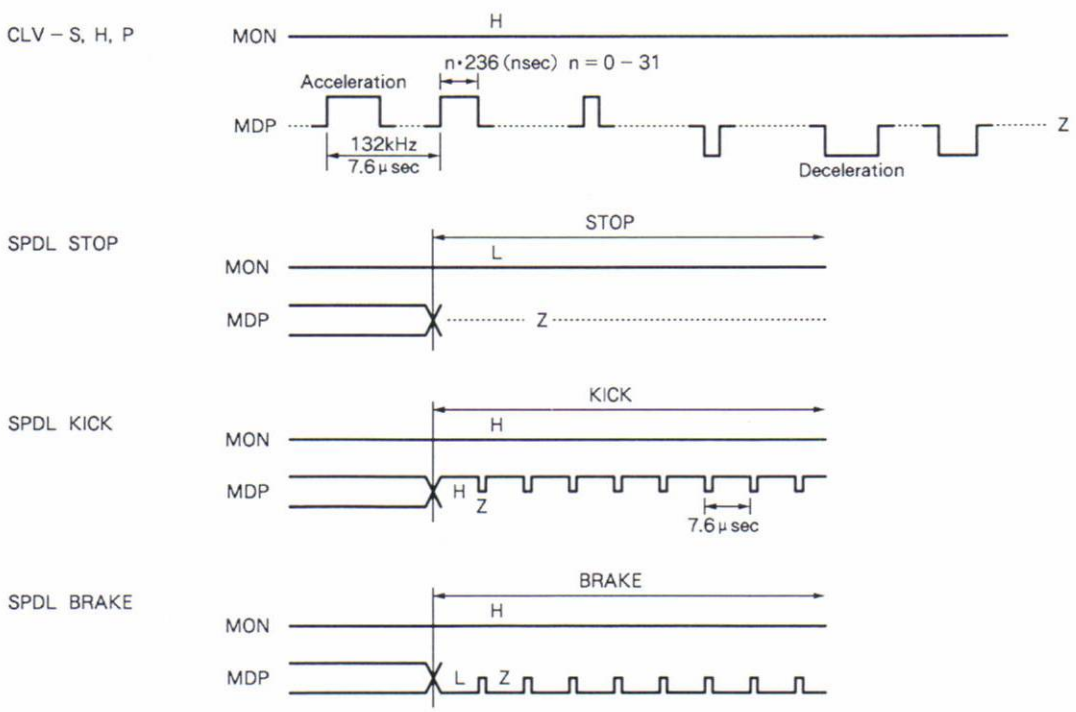

Fig. 10-24 MON and MDP outputs for each operation

10.2.12 Channel clock reproduction by the digital PLL circuit

To demodulate the EFM signal reproduced by the optical system, a channel clock is required. Defining the channel clock frequency as T, EFM signals are modulated to 3T through 11T (integral multiples of T). To read the information of EFM signals, these integral values must be correctly read out. For this, "T" or a channel clock is required.

In actual CD players, as the rotation irregularity of the spindle changes the pulse width of EFM signals, a PLL circuit is required to activate the channel clock. The block diagram of this PLL circuit is shown in Fig. 10-25. The CXD2500Q has PLL in two stages as shown in the block diagram.

- PLL in the first stage generates a high-frequency clock required for the digital PLL in the second stage.
- The digital PLL in the second stage reproduces the actual channel clock and has a capture range of more than ± 150kHz (under normal conditions.)

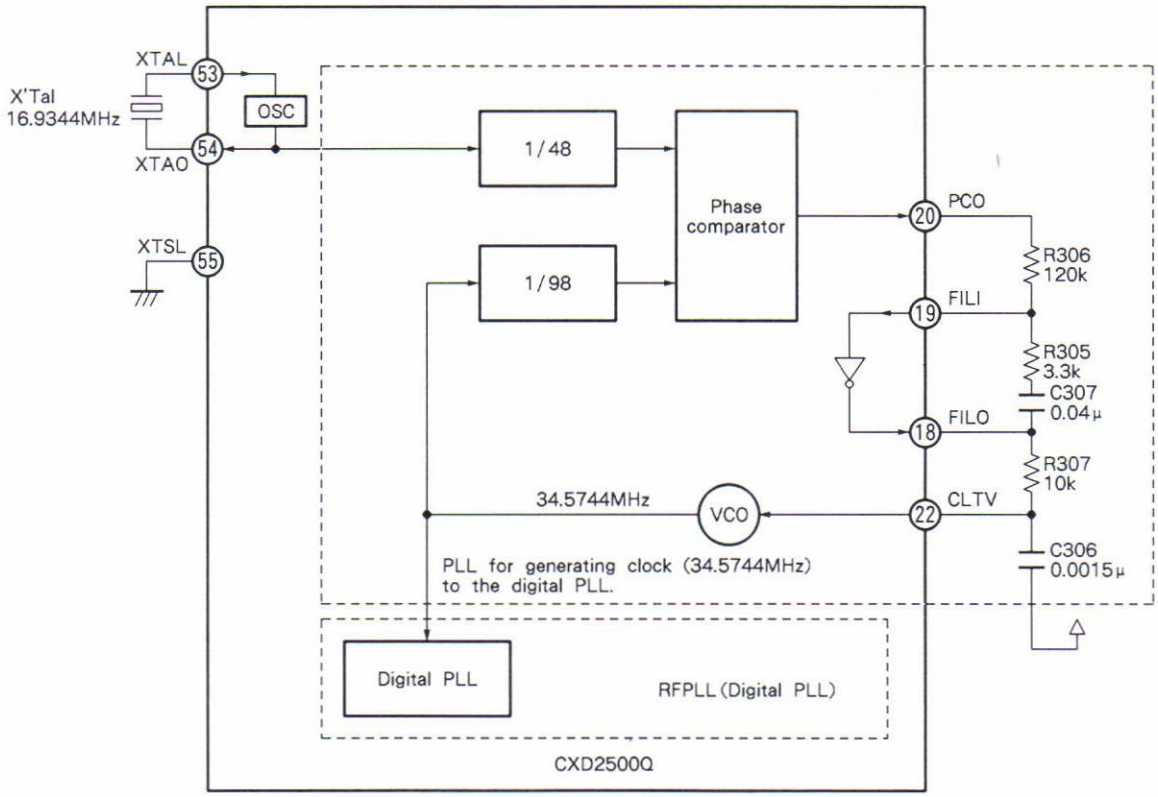

Fig. 10-25

11. FOR PD-5500/KC, KUXJ, KCXJ, HEMXJ, HBXJ, PD-5500-S/HEWMXJ, PD-4550/KC, KUXJ, KCXJ, HEMXJ, HBXJ, PD-4550-S/HEWMXJ, PD-4500/KC, KUXJ, KCXJ, HEMXJ, HBXJ, PD-4500-S/HBXJ AND HEWMXJ TYPES

NOTES :
- Parts without part number cannot be supplied.
- The ⚠ mark found on some component parts indicates the importance of the safety factor of the part. Therefore, when replacing, be sure to use parts of identical designation.
- Parts marked by "◉" are not always kept in stock. Their delivery time may be longer than usual or they may be unavailable.

11.1 FOR PD-5500/KC, KUXJ, KCXJ HEMXJ, HBXJ AND PD-5500-S/HEWMXJ TYPES

CONTRAST OF MISCELLANEOUS PARTS
The PD-5500/KC, KUXJ, KCXJ, HEMXJ, HBXJ and PD-5500-S/HEWMXJ types are the same as the PD-5500/KU type with the exception of the following sections.

Mark	Symbol & Description	Part No.							Remarks
		PD-5500 /KU type	PD-5500 /KC type	PD-5500 /KUXJ type	PD-5500 /KCXJ type	PD-5500 /HEMXJ type	PD-5500 /HBXJ type	PD-5500-S /HEWMXJ type	
◉	Mother board assembly	PWM1269	PWM1269	PWM1269	PWM1269	PWM1289	PWM1289	PWM1289	
⚠	Strain relief	CM-22C	CM-22C	CM-22C	CM-22C	CM-22B	CM-22B	CM-22B	
⚠	AC powr cord	PDG1002	PDG1002	PDG1002	PDG1002	PDG1008	PDG1009	PDG1008	
⚠	Power transformer (AC120V)	PTT1124	PTT1124	PTT1124	PTT1124	・・・・・	・・・・・	・・・・・	
⚠	Power transformer (AC220, 240V)	・・・・・	・・・・・	・・・・・	・・・・・	PTT1125	PTT1125	PTT1125	
	Display window B	PAM1362	PAM1362	PAM1362	PAM1362	・・・・・	・・・・・	・・・・・	
	Display window D	・・・・・	・・・・・	・・・・・	・・・・・	PAM1405	PAM1405	PAM1405	
	CD packing case	PHG1506	PHG1506	PHG1468	PHG1468	PHG1468	PHG1468	PHG1472	For packing
	Connection cord with mini plug	PDE-319	PDE-319	PDE-319	PDE-319	・・・・・	・・・・・	・・・・・	
	Headphone knob	PAC1370	PAC1370	PAC1370	PAC1370	PAC1370	PAC1370	PAC1402	
	Power button	PAC1438	PAC1438	PAC1438	PAC1438	PAC1438	PAC1438	PAC1481	
	Play button	PAC1439	PAC1439	PAC1439	PAC1439	PAM1439	PAM1439	PAC1472	
	Select button	PAC1440	PAC1440	PAC1440	PAC1440	PAC1440	PAC1440	PAC1473	
	Time button A	PAC1441	PAC1441	PAC1441	PAC1441	PAC1441	PAC1441	PAC1474	
	Headphone name plate C	PAM1365	PAM1365	PAM1365	PAM1365	PAM1365	PAM1365	PAM1413	
	Skid	PNM1070	PNM1070	PNM1098	PNM1098	PNM1098	PNM1098	PNM1098	
	Function panel assembly	PEA1039	PEA1039	PEA1039	PEA1039	PEA1039	PEA1039	PEA1041	
	Tray name plate	PNW1625	PNW1625	PNW1625	PNW1625	PNW1625	PNW1625	PNW1720	
	Bonnet	PYY1129	PYY1129	PYY1129	PYY1129	PYY1129	PYY1129	PYY1130	
	Single mechanism assembly	Non supply	Non supply	Non supply	Non supply	Non supply	Non supply	Non supply	
	Operating instructions (English)	PRB1114	・・・・・	PRB1114	・・・・・	・・・・・	PRB1114	・・・・・	
	Operating instrucitons (English/French)	・・・・・	PRE1112	・・・・・	PRE1112	PRE1112	・・・・・	・・・・・	
	Operating instructions (German/Italian/Dutch/Swedish /Spanish/Portuguese)	・・・・・	・・・・・	・・・・・	・・・・・	PRF1030	・・・・・	PRF1030	

MOTHER BOARD ASSEMBLY (PWM1289)

The mother board assembly (PWM1289) is the same as the mother board assembly (PWM1269) with the exception of the following sections.

Mark	Symbol & Description	Part No.		Remarks
		PWM1269	PWM1289	
⚠	IC30	• • • • •	ICP-N10	
⚠	D11 – D14	11ES2	• • • • •	
⚠	D25	• • • • •	2W02-5008-L	
	D391 – D394	1SS254	• • • • •	
	C321	• • • • •	CGCYX104K25	
	C323	• • • • •	CKCYF473Z50	
	C324	• • • • •	CCCCH100D50	
	R321	• • • • •	RD1/6PM102J	
	R391	RD1/6PM244J	• • • • •	
	R392	RD1/6PM102J	• • • • •	
	JA301 (DIGITAL OUT)	• • • • •	TOTX178	
	JA391,JA392 (CONTROOL IN/OUT)	PKN1004	• • • • •	

11.2 FOR PD-4550/KC, KUXJ, KCXJ HEMXJ, HBXJ AND PD-4550-S/HEWMXJ TYPES

CONTRAST OF MISCELLANEOUS PARTS

The PD-4550/KC, KUXJ, KCXJ, HEMXJ, HBXJ and PD-4550-S/HEWMXJ types are the same as the PD-4550/KU type with the exception of the following sections.

Mark	Symbol & Description	Part No.							Remarks
		PD-4550 /KU type	PD-4550 /KC type	PD-4550 /KUXJ type	PD-4550 /KCXJ type	PD-4550 /HEMXJ type	PD-4550 /HBXJ type	PD-4550-S /HEWMXJ type	
◉	Mother board assembly	PWM1269	PWM1269	PWM1269	PWM1269	PWM1271	PWM1271	PWM1271	
⚠	Power transformer (AC120V)	PTT1124	PTT1124	PTT1124	PTT1124	• • • • •	• • • • •	• • • • •	
⚠	Power transformer (AC220, 240V)	• • • • •	• • • • •	• • • • •	• • • • •	PTT1125	PTT1125	PTT1125	
⚠	AC power cord	PDG1002	PDG1002	PDG1002	PDG1002	PDG1008	PDG1009	PDG1008	
⚠	Strain relief	CM-22C	CM-22C	CM-22C	CM-22C	CM-22B	CM-22B	CM-22B	
	Connection cord with mini plug	PDE-319	PDE-319	PDE-319	PDE-319	• • • • •	• • • • •	• • • • •	
	CD packing case	PHG1496	PHG1496	PHG1504	PHG1504	PHG1504	PHG1504	PHG1426	For packing
	Skid	• • • • •	• • • • •	• • • • •	• • • • •	PNM1098	PNM1098	PNM1098	
	Leg assembly	PXA1201	PXA1201	PXA1201	PXA1201	• • • • •	• • • • •	• • • • •	
	Insulator	• • • • •	• • • • •	• • • • •	• • • • •	VNK1095	VNK1095	VNK1095	
	Display window B	PAM1362	PAM1362	PAM1362	PAM1362	• • • • •	• • • • •	• • • • •	
	Display window D	• • • • •	• • • • •	• • • • •	• • • • •	PAM1405	PAM1405	PAM1405	
	Headphone knob	PAC1370	PAC1370	PAC1370	PAC1370	PAC1370	PAC1370	PAC1402	
	Power button	PAC1438	PAC1438	PAC1438	PAC1438	PAC1438	PAC1438	PAC1481	
	Play button	PAC1439	PAC1439	PAC1439	PAC1439	PAC1439	PAC1439	PAC1472	
	Program button	PAC1446	PAC1446	PAC1446	PAC1446	PAC1446	PAC1446	PAC1476	
	Time button B	PAC1447	PAC1447	PAC1447	PAC1447	PAC1447	PAC1447	PAC1475	
	Headphone name plate B	PAM1364	PAM1364	PAM1364	PAM1364	PAM1364	PAM1364	PAM1412	
	Function panel assembly	PEA1038	PEA1038	PEA1038	PEA1038	PEA1038	PEA1038	PEA1040	
	Tray name plate	PNW1625	PNW1625	PNW1625	PNW1625	PNW1625	PNW1625	PNW1720	
	Bonnet	PYY1129	PYY1129	PYY1129	PYY1129	PYY1129	PYY1129	PYY1130	
	Single mechanism assembly	Non supply	Non supply	Non supply	Non supply	Non supply	Non supply	Non supply	
	Operating instructions (English)	PRB1114	• • • • •	PRB1114	• • • • •	• • • • •	PRB1114	• • • • •	
	Operating instructions (English/French)	• • • • •	PRE1112	• • • • •	PRE1112	PRE1112	• • • • •	• • • • •	
	Operating instructions (German/Italian/Dutch/Swedish /Spanish/Portuguese)	• • • • •	• • • • •	• • • • •	• • • • •	PRF1030	• • • • •	PRF1030	

MOTHER BOARD ASSEMBLY (PWM1271)
The mother board assembly (PWM1271) is the same as the mother board assembly (PWM1269) with the exception of the following sections.

Mark	Symbol & Description	Part No.		Remarks
		PWM1269	PWM1271	
⚠	IC30	• • • • •	ICP-N10	
⚠	D11 – D14	11ES2	• • • • •	
⚠	D25	• • • • •	2W02-5008-L	
	D391 – D394	1SS254	• • • • •	
	R391	RD1/6PM244J	• • • • •	
	R392	RD1/6PM102J	• • • • •	
	JA391,JA392 (CONTROL IN/OUT)	PKN1004	• • • • •	

11.3 FOR PD-4500/KC, KUXJ, KCXJ HEMXJ, HBXJ PD-4500-S/HBXJ AND HEWMXJ TYPES

CONTRAST OF MISCELLANEOUS PARTS
The PD-4500/KC, KUXJ, KCXJ, HEMXJ, HBXJ, PD-4550-S/HBXJ, HEWMXJ types are the same as the PD-4500/KU type with the exception of the following sections.

Mark	Symbol & Description	Part No.								Remarks
		PD-4500 /KU type	PD-4500 /KC type	PD-4500 /KUXJ type	PD-4500 /KCXJ type	PD-4500 /HEMXJ type	PD-4500 /HBXJ type	PD-4500-S /HBXJ type	PD-4500-S /HEWMXJ type	
◉	Mother board assembly	PWM1266	PWM1266	PWM1266	PWM1266	PWM1268	PWM1268	PWM1268	PWM1268	
	Headphone board assembly	• • • • •	• • • • •	• • • • •	• • • • •	Non supply	Non supply	Non supply	Non supply	
⚠	AC power cord	PDG1002	PDG1002	PDG1002	PDG1002	PDG1008	PDG1009	PDG1009	PDG1008	
⚠	Power transformer (AC120V)	PTT1124	PTT1124	PTT1124	PTT1124	• • • • •	• • • • •	• • • • •	• • • • •	
⚠	Power transformer (AC220, 240V)	• • • • •	• • • • •	• • • • •	• • • • •	PTT1125	PTT1125	PTT1125	PTT1125	
⚠	Strain relief	CM-22C	CM-22C	CM-22C	CM-22C	CM-22B	CM-22B	CM-22B	CM-22B	For packing
	CD packing case	PHG1396	PHG1396	PHG1460	PHG1460	PHG1460	PHG1460	PHG1464	PHG1464	
	Skid	• • • • •	• • • • •	• • • • •	• • • • •	PNM1098	PNM1098	PNM1098	PNM1098	
	Leg assembly	PXA1201	PXA1201	PXA1201	PXA1201	• • • • •	• • • • •	• • • • •	• • • • •	
	Insulator	• • • • •	• • • • •	• • • • •	• • • • •	VNK1095	VNK1095	VNK1095	VNK1095	
	Bonnet	PYY1129	PYY1129	PYY1129	PYY1129	PYY1129	PYY1129	PYY1130	PYY1130	
	Headphone knob	• • • • •	• • • • •	• • • • •	• • • • •	PAC1370	PAC1370	PAC1402	PAC1402	
	Headphone name plate A	PAM1356	PAM1356	PAM1356	PAM1356	• • • • •	• • • • •	• • • • •	• • • • •	
	Headphone name plate B	• • • • •	• • • • •	• • • • •	• • • • •	PAM1364	PAM1364	PAM1412	PAM1412	
	Display window A	PAM1357	PAM1357	PAM1357	PAM1357	• • • • •	• • • • •	• • • • •	• • • • •	
	Display window C	• • • • •	• • • • •	• • • • •	• • • • •	PAM1404	PAM1404	PAM1404	PAM1404	
	Function panel assembly	PEA1037	PEA1037	PEA1037	PEA1037	PEA1037	PEA1037	PEA1045	PEA1045	
	Tray name plate	PNW1625	PNW1625	PNW1625	PNW1625	PNW1625	PNW1625	PNW1720	PNW1720	
	Power button	PAC1438	PAC1438	PAC1438	PAC1438	PAC1438	PAC1438	PAC1481	PAC1481	
	Play button	PAC1439	PAC1439	PAC1439	PAC1439	PAC1439	PAC1439	PAC1472	PAC1472	
	Program button	PAC1446	PAC1446	PAC1446	PAC1446	PAC1446	PAC1446	PAC1476	PAC1476	
	Time button B	PAC1447	PAC1447	PAC1447	PAC1447	PAC1447	PAC1447	PAC1475	PAC1475	
	Operating instructions (English)	PRB1114	• • • • •	PRB1114	• • • • •	• • • • •	PRB1114	• • • • •	• • • • •	
	Operating instructions (English/French)	• • • • •	PRE1112	• • • • •	PRE1112	PRE1112	• • • • •	• • • • •	• • • • •	
	Operating instructions (German/Italian/Dutch/Swedish/Spanish/Portuguese)	• • • • •	• • • • •	• • • • •	• • • • •	PRF1030	• • • • •	• • • • •	PRF1030	

MOTHER BOARD ASSEMBLY (PWM1268)
The mother board assembly (PWM1268) is the same as the mother board assembly (PWM1266) with the exception of the following sections.

Mark	Symbol & Description	Part No.		Remarks
		PWM1266	PWM1268	
⚠	IC30	• • • • •	ICP-N10	
⚠	D11 – D14	11ES2	• • • • •	
⚠	D25	• • • • •	2W02-5008-L	
	IC406	• • • • •	M5218AP	
	R445,R446	RD1/6PM102J	RD1/6PM471J	
	R447,R448	• • • • •	RD1/6PM471J	

HEADPHONE BOARD ASSEMBLY
The Headphone board assemblies of PD-4500/HEMXJ, HBXJ, PD-4500-S/HBXJ and HEWMXJ types are the same as that of PD-5500/KU and PD-4500/KU types.
(See page 29.)

11.4 PACKING FOR XJ TYPE

XJ type is the same as the other types with the exception of the packing case's style.

Type	Part No.	Type	Part No.	Type	Part No.
PD-5500/KUXJ	PHG1468	PD-4550/KUXJ	PHG1504	PD-4500/KUXJ	PHG1460
PD-5500/KCXJ	PHG1468	PD-4550/KCXJ	PHG1504	PD-4500/KCXJ	PHG1460
PD-5500/HEMXJ	PHG1468	PD-4550/HEMXJ	PHG1504	PD-4500/HEMXJ	PHG1460
PD-5500/HBXJ	PHG1468	PD-4550/HBXJ	PHG1504	PD-4500/HBXJ	PHG1460
PD-5500-S/HEWMXJ	PHG1472	PD-4550-S/HEWMXJ	PHG1426	PD-4500-S/HBXJ	PHG1464
				PD-4500-S/HEWMXJ	PHG1464

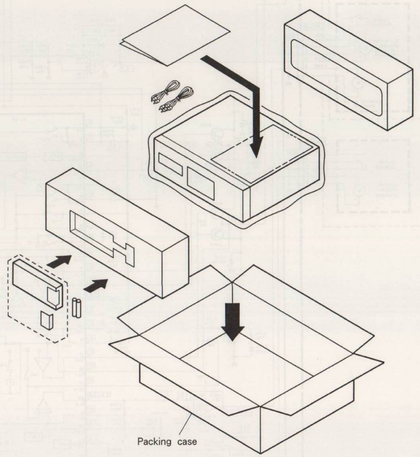

11.5 SCHEMATIC DIAGRAM OF HEMXJ, HBXJ AND HEWMXJ TYPES

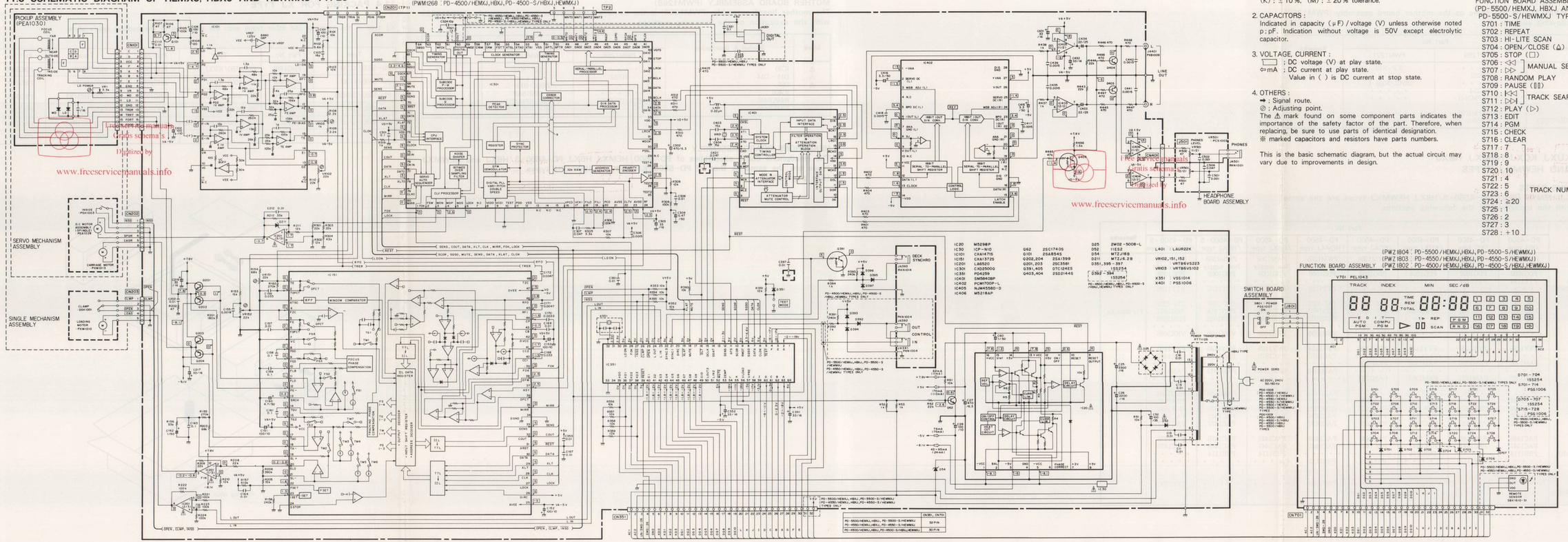

1. RESISTORS :
Indicated in Ω, 1/4W, 1/6W and 1/8W, ±5% tolerance unless otherwise noted k : kΩ, M : MΩ, (F) : ±1%, (G) : ±2%, (K) : ±10%, (M) : ±20% tolerance.

2. CAPACITORS :
Indicated in capacity (μF) / voltage (V) unless otherwise noted p : pF. Indication without voltage is 50V except electrolytic capacitor.

3. VOLTAGE, CURRENT :
▭ ; DC voltage (V) at play state.
⇦mA ; DC current at play state.
Value in ( ) is DC current at stop state.

4. OTHERS :
➡ : Signal route.
◎ : Adjusting point.
The ⚠ mark found on some component parts indicates the importance of the safety factor of the part. Therefore, when replacing, be sure to use parts of identical designation.
※ marked capacitors and resistors have part numbers.

This is the basic schematic diagram, but the actual circuit may vary due to improvements in design.

5. SWITCHES : (The underlined indicates the switch position)

SWITCH BOARD ASSEMBLY
S801 : POWER ON — OFF

FUNCTION BOARD ASSEMBLY (PD-5500/HEMXJ, HBXJ AND PD-5500-S/HEWMXJ TYPES)
S701 : TIME
S702 : REPEAT
S703 : HI-LITE SCAN
S704 : OPEN/CLOSE (⏏)
S705 : STOP (□)
S706 : ◁◁ } MANUAL SEARCH
S707 : ▷▷
S708 : RANDOM PLAY
S709 : PAUSE (❚❚)
S710 : ⏮ } TRACK SEARCH
S711 : ⏭
S712 : PLAY (▷)
S713 : EDIT
S714 : PGM
S715 : CHECK
S716 : CLEAR
S717 : 7
S718 : 8
S719 : 9
S720 : 10
S721 : 4
S722 : 5
S723 : 6
S724 : ≧20
S725 : 1
S726 : 2
S727 : 3
S728 : +10
} TRACK NUMBER

FUNCTION BOARD ASSEMBLY (PD-4550/HEMXJ, HBXJ, PD-4550-S/HEWMXJ, PD-4500/HEMXJ, HBXJ, PD-4500-S/HBXJ AND HEWMXJ TYPES)
S701 : TIME
S702 : REPEAT
S703 : HI-LITE SCAN
S704 : OPEN/CLOSE (⏏)
S705 : STOP (□)
S706 : ◁◁ } MANUAL SEARCH
S707 : ▷▷
S708 : RANDOM PLAY
S709 : PAUSE (❚❚)
S710 : ⏮ } TRACK SEARCH
S711 : ⏭
S712 : PLAY (▷)
S713 : EDIT
S714 : PGM

11.6 P.C.BOARD PATTERN OF HEMXJ, HBXJ AND HEWMXJ TYPES

LINE VOLTAGE SELECTION

Line voltage can be changed with the following steps.

1. Disconnect the AC power cord.
2. Remove the bonnet.
3. Change the position of the jumper Ⓐ as follows. (Refer to the Mother board assembly.)

Voltage	Jumper Ⓐ position
220V	①
240V	②

4. Stick the line voltage label on the rear panel.

Part No.	Description
AAX-193	220V label
AAX-192	240V label

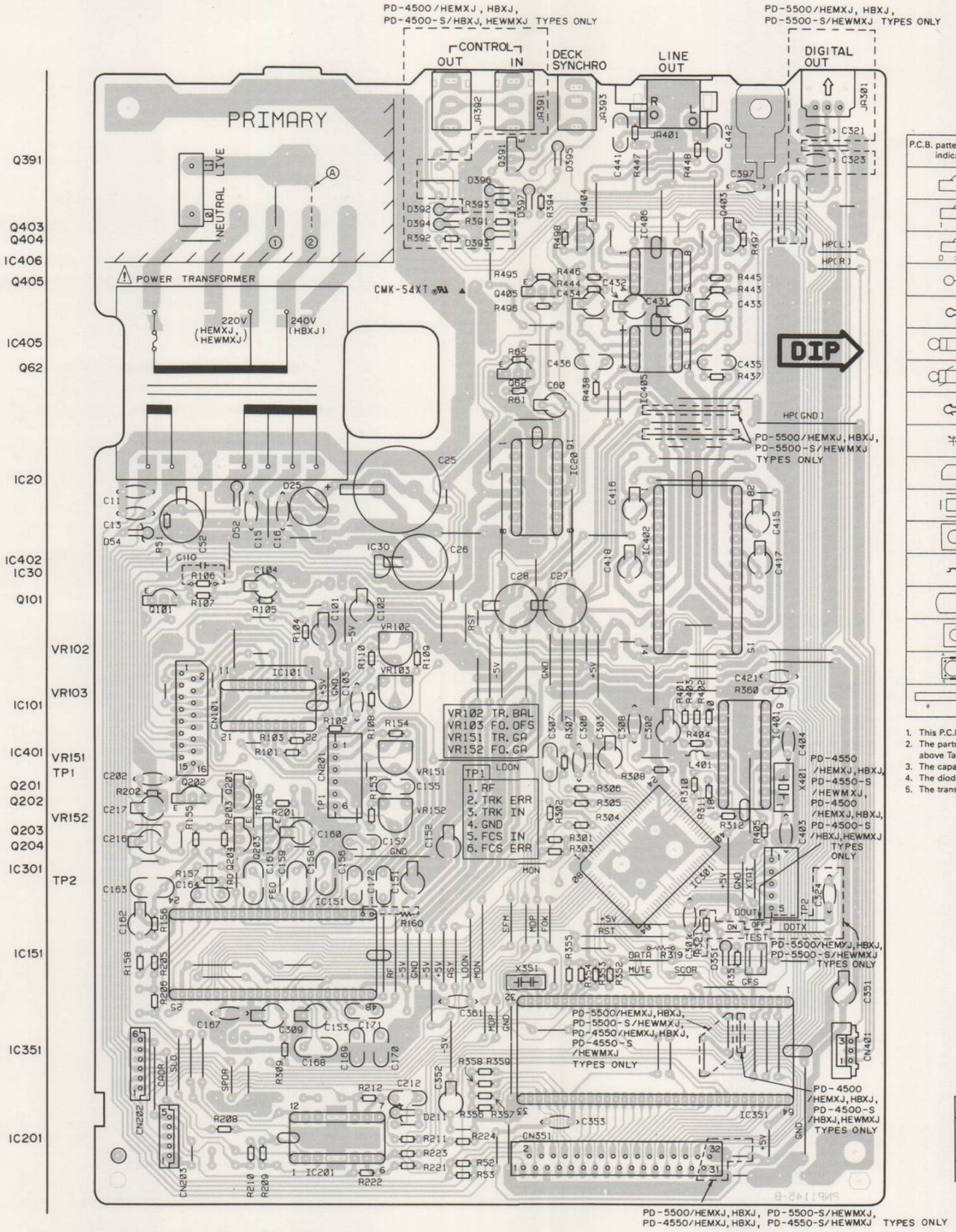

P.C.B. pattern diagram indication	Corresponding part symbol	Part name	P.C.B. pattern diagram indication	Corresponding part symbol	Part name
		Transistor			Ceramic capacitor
		FET			Mylar capacitor
		Diode			Styrol capacitor
					Electrolytic capacitor (Non polarized)
					Electrolytic capacitor (Noiseless)
		Zenner diode			Electrolytic capacitor (Polarized)
					Electrolytic capacitor (Polarized)
		LED			Power capacitor
		Varactor			Semi-fixed resistor
		Tact switch			Resistor array
		Inductor			Resistor
		Coil			Resonator
		Transformer			Thermistor
		Filter			

1. This P.C.B. connection diagram is viewed from the parts mounted side.
2. The parts which have been mounted on the board can be replaced with those shown with the corresponding wiring symbols listed in the above Table.
3. The capacitor terminal marked with ▭ shows negative terminal.
4. The diode marked with O shows cathode side.
5. The transistor terminal marked with ▭ shows emitter.

	CN351
PD-5500/HEMXJ,HBXJ,PD-5500-S/HEWMXJ PD-4550/HEMXJ,HBXJ,PD-4550-S/HEWMXJ	32pin
PD-4500/HEMXJ,HBXJ,PD-4500-S/HBXJ,HEWMXJ	30pin

MOTHER BOARD ASSEMBLY
(PWM1289 : PD-5500/HEMXJ, HBXJ, PD-5500-S/HEWMXJ TYPES)
(PWM1271 : PD-4550/HEMXJ, HBXJ, PD-4550-S/HEWMXJ TYPES)
(PWM1268 : PD-4500/HEMXJ, HBXJ, PD-4500-S/HBXJ, HEWMXJ TYPES)

11.6 P.C.BOARD PATTERN OF HEMXJ, HBXJ AND HEMWXJ TYPES

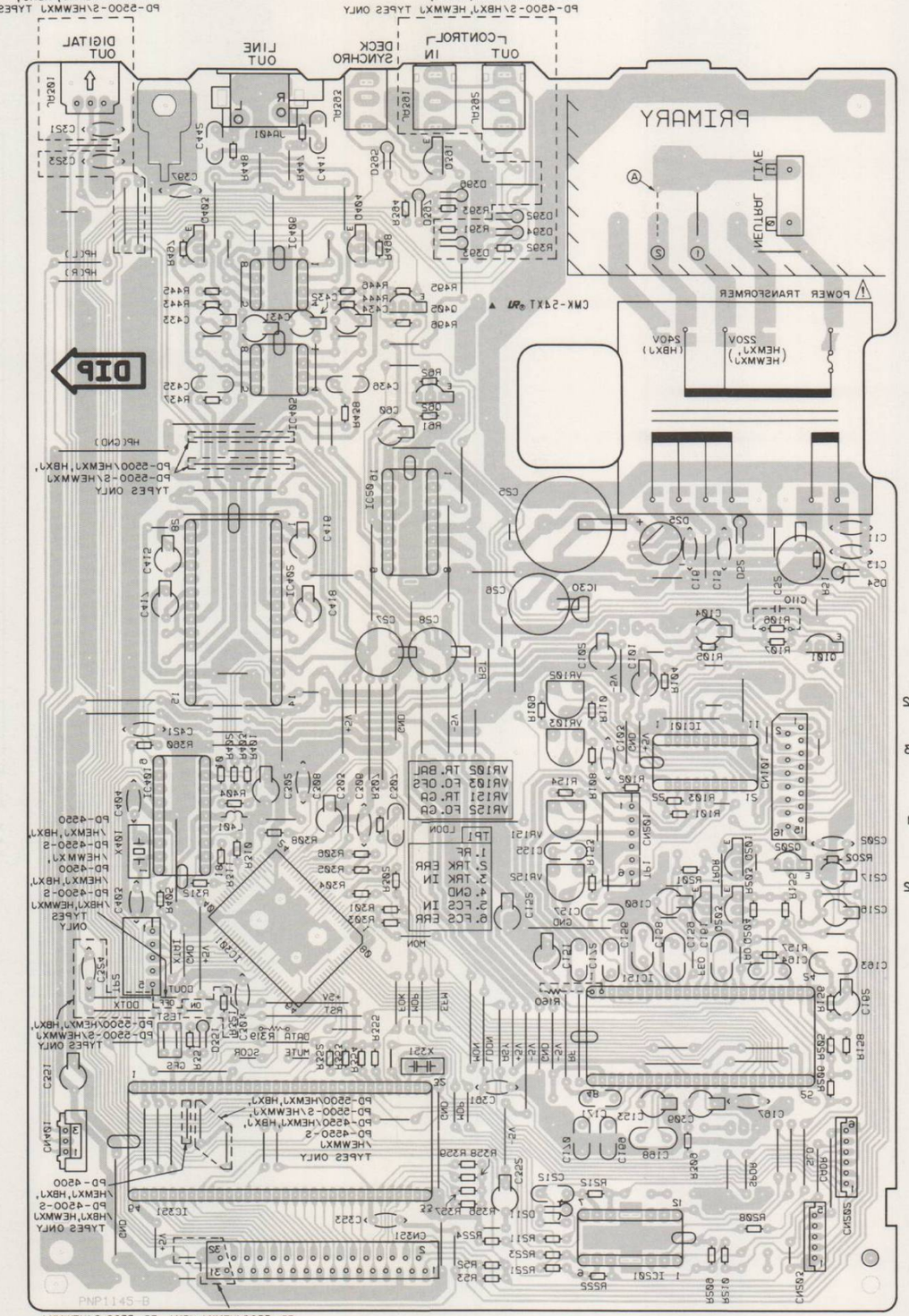

This P. C. B. connection diagram is viewed from the foil side.

CN351	
32pin	PD-5500\HEMXJ,HBXJ,PD-5500-S\HEMWXJ PD-4550\HEMXJ,HBXJ,PD-4550-S\HEMWXJ
30pin	PD-4500\HEMXJ,HBXJ,PD-4500-S\HEMXJ,HEMWXJ

MOTHER BOARD ASSEMBLY
(PWM1289 : PD-5500\HEMXJ, HBXJ, PD-5500-S\HEMWXJ TYPES)
(PWM1271 : PD-4550\HEMXJ, HBXJ, PD-4550-S\HEMWXJ TYPES)
(PWM1268 : PD-4500\HEMXJ, HBXJ, PD-4500-S\HEMXJ, HEMWXJ TYPES)

12. PANEL FACILITIES

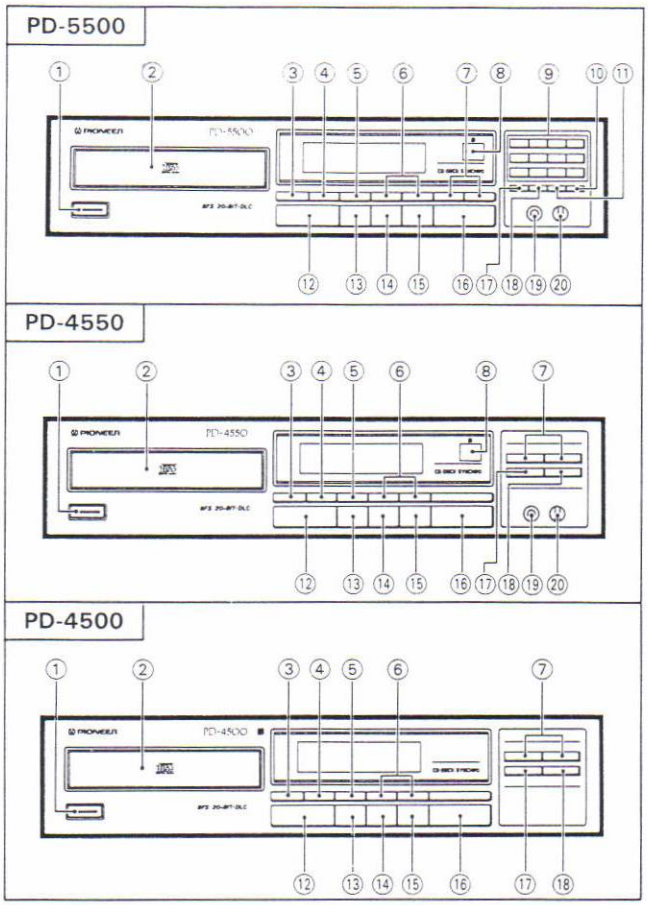

FRONT PANEL

① POWER STANDBY/ON switch
Press to turn power ON and STANDBY. If the power is turned ON when a disc is already loaded, the player will automatically enter the play mode (timer start function).
② Disc tray
③ TIME button
④ REPEAT button
⑤ HI-LITE SCAN button
⑥ MANUAL SEARCH button
⑦ TRACK SEARCH button
⑧ Remote sensor
⑨ TRACK NUMBER buttons (1—10, +10, ≧20)
⑩ CLEAR button
⑪ CHECK button
⑫ OPEN/CLOSE button
⑬ RANDOM PLAY button
⑭ STOP button (■)
⑮ PAUSE button (❚❚)
⑯ PLAY button (▶)
⑰ Program edit button (EDIT)
(■ AUTO PGM/ ■■ COMPU PGM)
⑱ Program button (PGM)
⑲ Headphones jack (PHONES)
⑳ Headphones volume control (PHONES LEVEL)

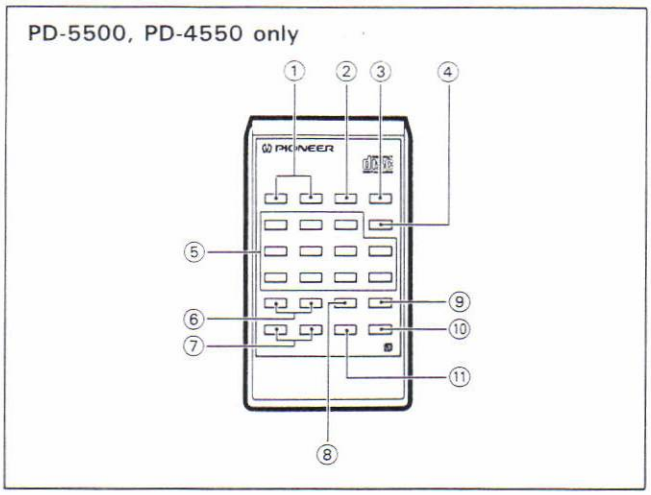

REMOTE CONTROL UNIT

Buttons listed here but not accompanied with explanations have the same functions as the corresponding front-panel buttons.

① OUTPUT LEVEL button
② Hi-lite scan button (HI-LITE SCAN)
③ Program edit button (EDIT)
(■ AUTO/ ■■ COMPU)
④ Program button (PGM)
⑤ Track number buttons (1-10, >10)
⑥ Track search buttons (TRACK ⏮, ⏭)
⑦ Manual search buttons (MANUAL ◀◀, ▶▶)
⑧ RANDOM PLAY button
⑨ PLAY button (▶)
⑩ STOP/CLEAR button (■)
⑪ PAUSE button (❚❚)

NOTE:
Items ⑲ and ⑳ are included on the U.K. and European models of the PD-4500.

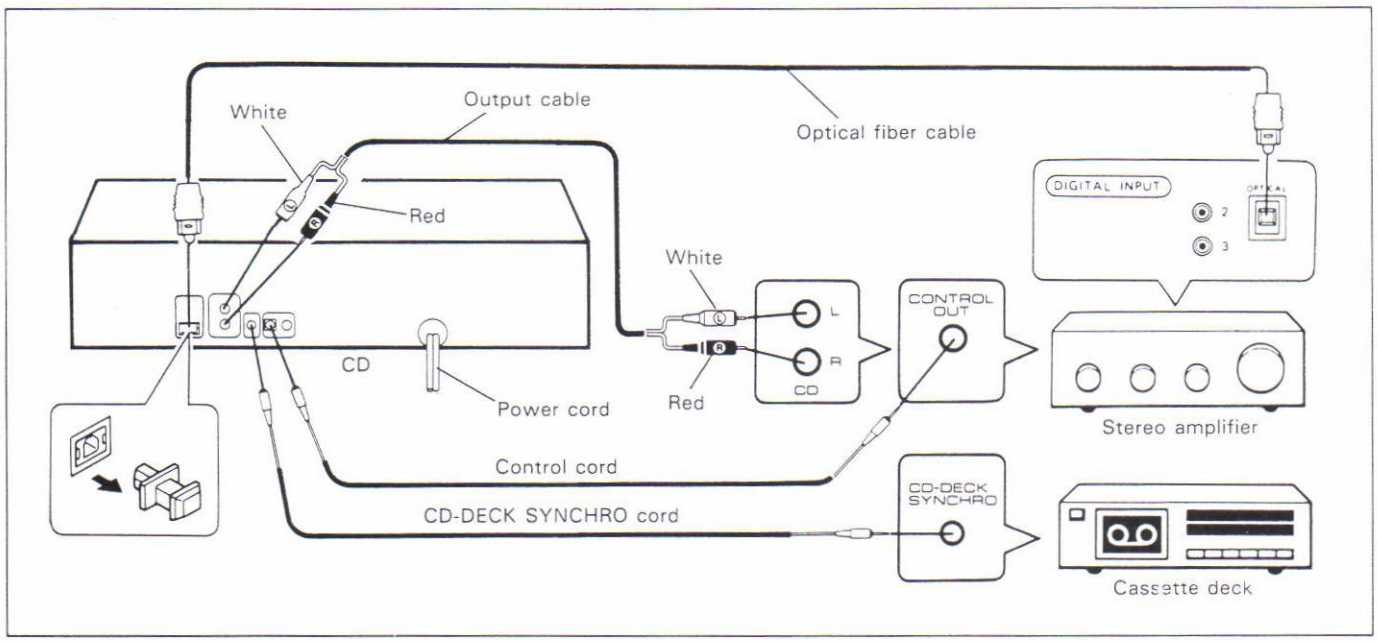

CONNECTING THE OUTPUT CABLE:

Connect the plugs on one end of the cable to your amplifier's input terminals (CD or AUX), and those on the other end to the output terminals on this CD player.

- When connecting the cord, insert the white plugs into the left (L) channel, and the red plugs to the right (R) channel.
- Be sure to connect all plugs fully into their terminals.
- Never connect the CD player to your amplifier's turntable (PHONO) terminals, since sound will be distorted and proper playback will not be possible.

CONNECTING THE POWER CORD:

Insert the power cord's plug into an accessory AC outlet on your amplifier, or into a normal household outlet.

CONNECTING THE OPTICAL FIBER CABLE:

Applicable models: PD-5500 (U.K. and European models)

NOTE:

- *The sound volume control cannot be done through the digital output terminal.*

Handling precautions for the optical fiber cable (sold separately)

- Do not bend the cable at sharp angles. Doing so may damage the cable. When installing in a rack, take special care. When storing the cable for storage, coil with 5-15/16 in (15 cm) diameter or larger.
- When connecting, insert the plug fully. Avoid an incomplete connection.
- Use an optical fiber cable 10 feet (3 m) or less.
- Avoid the optical fiber cable plug being scratched or exposed to dust. If there is dust, wipe off with a soft cloth.
- When an optical fiber cable is not connected, place the dust cap on the optical terminal (OPTICAL).

REMOTE CONTROL AMPLIFIER OPERATION:

Applicable models: PD-4500
PD-4550 (U.S. and Canadian models),
PD-5500 (U.S. and Canadian models).

If your amplifier features the SR mark, connect the accessory control cord between the Amplifier's CONTROL OUT terminal and the CD player's CONTROL IN terminal.

- You can then use the remote control unit furnished with your amplifier to perform PLAY, PAUSE, STOP and TRACK operations on the CD player.
- For details regarding connection and operation, consult the Operating Instructions accompanying your stereo amplifier.
- These terminals do not need to be connected if you do not intend to use this function.

NOTE:

- *When the control cord is connected to the CONTROL IN terminal, the remote control unit cannot be used to control the player directly. The remote control unit must be pointed at the amplifier's remote sensor.*
- *Be sure to connect both of the control cord's plugs securely to the CONTROL IN and CONTROL OUT terminals. Do not connect only one end of the cable.*

About the CD-DECK SYNCHRO recording function:

- This function facilitates edit recording from CD to cassette tape when the CD player is connected to a Pioneer cassette deck equipped with a CD-DECK SYNCHRO terminal. For details, consult the Operating Instructions accompanying the cassette deck featuring the CD-DECK SYNCHRO mark.

13. SPECIFICATIONS

1. General

Type ..... Compact disc digital audio system
Usable discs ..... Compact Disc
Power requirements
U.K. and Australian models ..... AC 240V, 50/60Hz
European model ..... AC 220V, 50/60Hz
U.S. and Canadian models ..... AC 120V, 60Hz
Power consumption 10W
Operating temperature ..... +5°C – +35°C (+41°F – +95°F)
Weight 3.6kg (7lb, 15oz)
External dimensions
PD-4500: U.K. and European models,
PD-4550: U.K. and European models,
PD-5500: All models ..... 420(W) × 276(D) × 101(H)mm
16-9/16(W) × 10-7/8(D) × 3-31/32(H) in.
Other models ..... 420(W) × 276(D) × 96(H)mm
16-9/16(W) × 10-7/8(D) × 3-25/32(H) in.

2. Audio section

Frequency response .....2Hz – 20kHz
S/N ..... 106dB or more (EIAJ)
Dynamic range ..... 96dB or more (EIAJ)
Channel separation ..... 98dB or more (EIAJ)
Total harmonic distortion ..... 0.004% or less (EIAJ)
Output voltage 2.0V
Wow and flutter ..... Limit of measurement (±0.001% W.PEAK) or less (EIAJ)
Number of channels ..... 2 channels (stereo)

3. Output terminal

- Audio line output terminals
- CD-DECK SYNCHRO terminal
- Control input/output terminals
  (PD-4500: All models,
  PD-4550: U.S. and Canadian models only,
  PD-5500: U.S. and Canadian models only)
- Headphone jack (with volume control)
  (PD-4500: U.K. and European models only,
  PD-4550: All models,
  PD-5500: All models)
- Optical digital output terminal
  (PD-5500: U.K. and European models only)

4. Functions

- Play
- Pause
- Stop
- Manual search
- Track search
- Hi-lite scan
- Direct selection
  (PD-5500: Main unit control and remote control
  PD-4550: Remote control only)
- Single track repeat
- All track repeat
- Programmed repeat
- Random play repeat
- Programmed random play repeat
- Programmed playback (up to 24 tracks)
- Pause program
- Program check (PD-5500)
- Program correction (PD-5500)
- Program clear (PD-5500)
- Auto program edit
- Compu program edit
- Digital level control (PD-5500/PD-4550: Remote control only)
- Random play
- Programmed random play
- Timer start
- CD-deck synchro

5. Accessories

- Remote control unit (PD-5500, PD-4550) 1
- Size AAA/R03 dry cell batteries (PD-5500, PD-4550) 2
- Output cable 1
- Control cord
  (PD-5500: U.S. and Canadian models)
  (PD-4550: U.S. and Canadian models)
  (PD-4500: All models) 1
- Operating instructions 1

NOTE:
The specifications and design of this product are subject to change without notice, due to improvements.

ADDITIONAL

Service Manual

PIONEER®
The Art of Entertainment

ORDER NO.
ARP2161

COMPACT DISC PLAYER

PD-5500

PD-5500-S PD-4550
PD-4550-S PD-4500
PD-4500-S

• Refer to the service manual ARP1948, PD-5500 series.

• As to the countries of origin and serial numbers of the applicable models, see the table below.

Unit's type		Country of origin	Serial No.	Unit's type		Country of origin	Serial No.
PD-5500	KUXJ	Singapore	3609001—	PD-4550	HBXJ	Singapore	8503001—
	KCXJ	Singapore	3403701—	PD-4550-S	HEWMXJ	Singapore	8403801—
	HEMXJ	Singapore	8410701—	PD-4500	KUXJ	Singapore	3633001—
	HBXJ	Singapore	8503601—		KCXJ	Singapore	3405101—
PD-5500-S	HEWMXJ	Singapore	8403901—		HEMXJ	Singapore	8420001—
PD-4550	KUXJ	Singapore	3612001—		HBXJ	Singapore	8503801—
	KCXJ	Singapore	3403101—	PD-4500-S	HBXJ	Singapore	8403201—
	HEMXJ	Singapore	8417701—		HEWMXJ	Singapore	8504201—

• The system control IC (IC351) of the above models was changed starting with a certain production lot. This manual shows the schematic diagram, P.C. boards diagram and P.C.B's parts list corresponding to the change.
As to items not mentioned in this manual, refer to the ARP1948 service manual.
• Accompanying the change of the system control IC (IC351), the Mother board assembly was changed (the part number was also changed). The new Moter board assembly, however, has compatibility with the previous Mother board assembly.

PIONEER ELECTRONIC CORPORATION 4-1, Meguro 1-Chome, Meguro-ku, Tokyo 153, Japan
PIONEER ELECTRONICS SERVICE INC. P.O. Box 1760, Long Beach, California 90801 U.S.A.
PIONEER ELECTRONICS OF CANADA, INC. 505 Cochrane Drive, Markham, Ontario L3R 8E3 Canada
PIONEER ELECTRONIC [EUROPE] N.V. Keetberglaan 1, 2740 Beveren, Belgium
PIONEER ELECTRONICS AUSTRALIA PTY. LTD. 178-184 Boundary Road, Braeside, Victoria 3195, Australia TEL: [03] 580-9911

IFQ JAN. 1991 Printed in Japan

• This manual is applicable to the following types.

Type	Applicable model				Power requirement	Export destination
	PD-5500	PD-5500-S PD-4550-S	PD-4550 PD-4500	PD-4500-S		
KUXJ	○	—	○	—	AC 120V only	U.S.A
KCXJ	○	—	○	—	AC 120V only	Canada
HEMXJ	○	—	○	—	AC 220V, 240V (switchable) *	European continent
HBXJ	○	—	○	○	AC 220V, 240V (switchable) *	United Kingdom
HEWMXJ	—	○	—	○	AC 220V, 240V (switchable) *	European continent

* Change the primary wiring of the power transformer.

CONTENTS

1. P.C.B's PARTS LIST

NOTES :
- Parts without part number cannot be supplied.
- Parts marked by "◉" are not always kept in stock. Their delivery time may be longer than usual or they may be unavailable.
- The ⚠ mark found on some component parts indicates the importance of the safety factor of the part. Therefore, when replacing, be sure to use parts of identical designation.
- When ordering resistors, first convert resistance values into code form as shown in the following examples.

Ex.1 When there are 2 effective digits (any digit apart from 0), such as 560 ohm and 47k ohm (tolerance is shown by J = 5%, and K = 10%).
560 Ω → 56 × 10^1 → 561 ····· RD1/4PS 5 6 1 J
47k Ω → 47 × 10^3 → 473 ····· RD1/4PS 4 7 3 J
0.5 Ω → 0R5 ····· RN2H 0 R 5 K
1 Ω → 010 ····· RS1P 0 1 0 K

Ex.2 When there are 3 effective digits (such as in high precision metal film resistors).
5.62k Ω → 562 × 10^1 → 5621 ····· RN1/4SR 5 6 2 1 F

Mark	NO	Description	Part NO.
◉ **Function Board Assembly (PWZ1804 : PD-5500/KUXJ)**			
SEMICIONDUCTORS			
	D701-707	DIODE	1SS254
SWITCHES			
	S701-728	Tact switch (TIME, REPEAT, HI-LITE SCAN, OPEN/CLOSE(⏏), STOP(□), ◁◁, ▷▷, RANDOM PLAY, PAUSE(▯▯), ◁◁, ▷▷, PLAY(▷), EDIT, PGM, CHECK, CLEAR, 1-10, +10, ≧20)	PSG1006
OTHERS			
	V701	FL INDICATOR TUBE	PEL1043
	REMOTE SENSOR		SBX1610-51
	CN701	CONNECTOR	HLEM32R-1
◉ **Function Board Assembly (PWZ1803 : PD-4550/KUXJ)**			
SEMICIONDUCTORS			
	D701-704	DIODE	1SS254
SWITCHES			
	S701-714	Tact switch (TIME, REPEAT, HI-LITE SCAN, OPEN/CLOSE(⏏), STOP(□), ◁◁, ▷▷, RANDOM PLAY, PAUSE(▯▯), ◁◁, ▷▷, PLAY(▷), EDIT, PGM)	PSG1006
OTHERS			
	V701	FL INDICATOR TUBE	PEL1043
	REMOTE SENSOR		SBX1610-51
	CN701	CONNECTOR	HLEM32R-1

Mark	NO	Description	Part NO.
◉ **Function Board Assembly (PWZ1802 : PD-4500/KUXJ)**			
SEMICIONDUCTORS			
	D701-704	DIODE	1SS254
SWITCHES			
	S701-714	Tact switch (TIME, REPEAT, HI-LITE SCAN, OPEN/CLOSE(⏏), STOP(□), ◁◁, ▷▷, RANDOM PLAY, PAUSE(▯▯), ◁◁, ▷▷, PLAY(▷), EDIT, PGM)	PSG1006
OTHERS			
	V701	FL INDICATOR TUBE	PEL1043
	CN701	CONNECTOR	HLEM30R-1
Headphone Board Assembly (PD-5500/KUXJ and PD-4550/KUXJ types only)			
CAPACITORS			
	CS01, 502	CERAMIC CAPACITOR	CKCYB102K50
	CS04	CERAMIC CAPACITOR	CKCYF473Z50
RESISTORS			
	RS01, 502	CARBONFILM RESISTOR	RD1/6PM470J
	VR501	VARIABLE RESISTOR (PHONES LEVEL)	PCS1003
OTHERS			
	JA501	JACK(PHONES)	RKN1001
Switch Board Assembly (PD-5500/KUXJ, PD-4550/KUXJ and PD-4500/KUXJ)			
SWITCH			
	S801	Push switch (POWER)	PSG1007

Mark	No.	Description	Part No.
◉ **Mother Board Assembly (PWM1329 : PD-5500/KUXJ, PD-4550/KUXJ)**			
SEMICONDUCTORS			
	IC101	PRE AMP IC	CXA1471S
	IC151	SERVO IC	CXA1372S
⚠	IC20	REGULATOR IC	M5298P
⚠	IC201	POWER OP-AMP	LA6520
	IC301	EFM DEMODULATION IC	CXD2500Q
	IC351	MICROCOMPUTER	PD4281A
	IC401	DIGITAL FILTER, IC	SM5840BP
	IC402	DA CONVERTER, IC	PCM1700P-L
	IC405	OP-AMP IC	NJM4558D-D
	IC406		M5218AP
	Q101	TRANSISTOR	2SA854S
	Q201	TRANSISTOR	2SC3581
	Q202	TRANSISTOR	2SA1399
	Q203	TRANSISTOR	2SC3581
	Q204	TRANSISTOR	2SA1399
	Q391	TRANSISTOR	DTC124ES
	Q403, 404	TRANSISTOR	2SD2144S
	Q405	TRANSISTOR	DTC124ES
	Q62	TRANSISTOR	2SC1740S
⚠	D11-14	DIODE	11ES2
	D211	ZENNER DIODE	MTZJ6.2B
	D351	DIODE	1SS254
	D391-397	DIODE	1SS254
⚠	D52	DIODE	11ES2
	D54	ZENNER DIODE	MTZJ18B
COIL			
	L401	(0.22 μH)	LAUR22K
CAPACITORS			
	C101, 102	ELECTR. CAPACITOR	CEAS101M10
	C103	CERAMIC CAPACITOR	CCCCH200J50
	C104	ELECTR. CAPACITOR	CEAS101M10
	C11, 13	CERAMIC CAPACITOR	CKCYF103Z50
	C110	CERAMIC CAPACITOR	CKCYF103Z50
	C15	CERAMIC CAPACITOR	CKCYF103Z50
	C151-153	ELECTR. CAPACITOR	CEAS101M10
	C155	MYLOR FILM CAPACITOR	CQMA182J50
	C156	MYLOR FILM CAPACITOR	CQMA333K50
	C157	MYLOR FILM CAPACITOR	CQMA103K50
	C158, 159	MYLOR FILM CAPACITOR	CQMA104K50
	C16	CERAMIC CAPACITOR	CKCYF103Z50
	C160	ELECTR. CAPACITOR	CEAS4R7M50
	C161	MYLOR FILM CAPACITOR	CQMA104K50
	C162	ELECTR. CAPACITOR	CEAS010M50
	C163	MYLOR FILM CAPACITOR	CQMA104K50
	C164	MYLOR FILM CAPACITOR	CQMA103K50
	C167	CERAMIC CAPACITOR	CKCYF103Z50
	C168	MYLOR FILM CAPACITOR	CQMA333K50
	C169	MYLOR FILM CAPACITOR	CQMA103K50
	C170	MYLOR FILM CAPACITOR	CQMA332J50
	C171	MYLOR FILM CAPACITOR	CQMA472J50
	C172	MYLOR FILM CAPACITOR	CQMA472K50
	C202	CERAMIC CAPACITOR	CKCYF103Z50
	C212	MYLOR FILM CAPACITOR	CQMA103K50
	C216, 217	ELECTR. CAPACITOR	CEAS330M16
	C25	ELECTR. CAPACITOR	CEAS332M16
	C26	ELECTR. CAPACITOR	CEAS222M16
	C27	ELECTROLYTIC CAPACIT	CEAS471M6R3
	C28	ELECTR. CAPACITOR	CEAS101M10
	C301	MYLOR FILM CAPACITOR	CQMA104K50
	C302	ELECTROLYTIC CAPACIT	CEAS471M6R3
	C303	ELECTR. CAPACITOR	CEAS330M16
	C306	CERAMIC CAPACITOR	CKCYB152K50
	C307	MYLOR FILM CAPACITOR	CQMA473J50
	C308	MYLOR FILM CAPACITOR	CQMA103K50
	C309	ELECTR. CAPACITOR	CEASR47M50
	C351	ELECTROLYTIC CAPACIT	CEAS471M6R3
	C352	ELECTR. CAPACITOR	CEAS330M16
	C353, 361	CERAMIC CAPACITOR	CKCYF103Z50
	C397	CERAMIC CAPACITOR	CKCYF103Z50
	C403, 404	CERAMIC CAPACITOR	CCCCH150J50
	C415, 416	ELECTR. CAPACITOR	CEAS33M50
	C417, 418	CERAMIC CAPACITOR	CKCYB152K50
	C421	CERAMIC CAPACITOR	CKCYF473Z50
	C431, 432	ELECTR. CAPACITOR	CEAS330M16
	C433, 434	ELECTR. CAPACITOR	CEAS220M25
	C435, 436	MYLOR FILM CAPACITOR	CQMA152J50
	C441, 442	MYLOR FILM CAPACITOR	CQMA152J50
	C52	ELECTR. CAPACITOR	CEAS101M35
	C60	ELECTR. CAPACITOR	CEAS010M50
RESISTORS			
	VR102	Semi fixed(22kΩ)	VRTB6VS223
	VR103	Semi fixed(1kΩ)	VRTB6VS102
	VR151, 152	Semi fixed(22kΩ)	VRTB6VS223
	Other resistors		RD1/6PM□□□J
OTHERS			
	X351	CERAMIC RESONATOR(4.19MHz)	VSS1014
	X401	XTAL RES(OSC)(16.9344MHz)	PSS1006
	CN101	CONNECTOR	52045-1610
	CN351	CONNECTOR	HLEM30S-1
	JA391, 392	JACK/12V (CONTROL IN/OUT)	PKN1004
	JA393	Mini jack(DECK SYNCHRO)	RKN1014
	JA401	2P pinjack(LINE OUT)	PKB1009

Mark	No.	Description	Part No.
◉ **Mother Board Assembly (PWM1326 : PD-4500/KUXJ)**			
SEMICONDUCTORS			
	IC101	PRE AMP IC	CXA1471S
	IC151	SERVO IC	CXA1372S
⚠	IC20	REGULATOR IC	M5298P
⚠	IC201	POWER OP-AMP	LA6520
	IC301	EFM DEMODULATION IC	CXD2500Q
	IC351	MICROCOMPUTER	PD4281A
	IC401	DIGITAL FILTER, IC	SM5840BP
	IC402	DA CONVERTER, IC	PCM1700P-L
	IC405	OP-AMP IC	NJM4558D-D
	Q101	TRANSISTOR	2SA854S
	Q201	TRANSISTOR	2SC3581
	Q202	TRANSISTOR	2SA1399
	Q203	TRANSISTOR	2SC3581
	Q204	TRANSISTOR	2SA1399
	Q391	TRANSISTOR	DTC124ES
	Q403, 404	TRANSISTOR	2SD2144S
	Q405	TRANSISTOR	DTC124ES
	Q62	TRANSISTOR	2SC1740S
⚠	D11-14	DIODE	11ES2
	D211	ZENNER DIODE	MTZJ6.2B
	D351	DIODE	1SS254
	D392-397	DIODE	1SS254
⚠	D52	DIODE	11ES2
	D54	ZENNER DIODE	MTZJ18B
COIL			
	L401	(0.22 μH)	LAUR22K
CAPACITORS			
	C101, 102	ELECTR. CAPACITOR	CEAS101M10
	C103	CERAMIC CAPACITOR	CCCCH200J50
	C104	ELECTR. CAPACITOR	CEAS101M10
	C11, 13	CERAMIC CAPACITOR	CKCYF103Z50
	C110	CERAMIC CAPACITOR	CKCYF103Z50
	C15	CERAMIC CAPACITOR	CKCYF103Z50
	C151-153	ELECTR. CAPACITOR	CEAS101M10
	C155	MYLOR FILM CAPACITOR	CQMA182J50
	C156	MYLOR FILM CAPACITOR	CQMA333K50
	C157	MYLOR FILM CAPACITOR	CQMA103K50
	C158, 159	MYLOR FILM CAPACITOR	CQMA104K50
	C16	CERAMIC CAPACITOR	CKCYF103Z50
	C160	ELECTR. CAPACITOR	CEAS4R7M50
	C161	MYLOR FILM CAPACITOR	CQMA104K50
	C162	ELECTR. CAPACITOR	CEAS010M50
	C163	MYLOR FILM CAPACITOR	CQMA104K50
	C164	MYLOR FILM CAPACITOR	CQMA103K50
	C167	CERAMIC CAPACITOR	CKCYF103Z50
	C168	MYLOR FILM CAPACITOR	CQMA333K50
	C169	MYLOR FILM CAPACITOR	CQMA103K50
	C170	MYLOR FILM CAPACITOR	CQMA332J50
	C171	MYLOR FILM CAPACITOR	CQMA472J50
	C172	MYLOR FILM CAPACITOR	CQMA472K50
	C202	CERAMIC CAPACITOR	CKCYF103Z50
	C212	MYLOR FILM CAPACITOR	CQMA103K50
	C216, 217	ELECTR. CAPACITOR	CEAS330M16
	C25	ELECTR. CAPACITOR	CEAS332M16
	C26	ELECTR. CAPACITOR	CEAS222M16
	C27	ELECTROLYTIC CAPACIT	CEAS471M6R3
	C28	ELECTR. CAPACITOR	CEAS101M10
	C301	MYLOR FILM CAPACITOR	CQMA104K50
	C302	ELECTROLYTIC CAPACIT	CEAS471M6R3
	C303	ELECTR. CAPACITOR	CEAS330M16
	C306	CERAMIC CAPACITOR	CKCYB152K50
	C307	MYLOR FILM CAPACITOR	CQMA473J50
	C308	MYLOR FILM CAPACITOR	CQMA103K50
	C309	ELECTR. CAPACITOR	CEASR47M50
	C351	ELECTROLYTIC CAPACIT	CEAS471M6R3
	C352	ELECTR. CAPACITOR	CEAS330M16
	C353, 361	CERAMIC CAPACITOR	CKCYF103Z50
	C397	CERAMIC CAPACITOR	CKCYF103Z50
	C403, 404	CERAMIC CAPACITOR	CCCCH150J50
	C415, 416	ELECTR. CAPACITOR	CEAS33M50
	C417, 418	CERAMIC CAPACITOR	CKCYB152K50
	C421	CERAMIC CAPACITOR	CKCYF473Z50
	C431, 432	ELECTR. CAPACITOR	CEAS330M16
	C433, 434	ELECTR. CAPACITOR	CEAS220M25
	C435, 436	MYLOR FILM CAPACITOR	CQMA152J50
	C441, 442	MYLOR FILM CAPACITOR	CQMA152J50
	C52	ELECTR. CAPACITOR	CEAS101M35
	C60	ELECTR. CAPACITOR	CEAS010M50
RESISTORS			
	VR102	Semi fixed(22kΩ)	VRTB6VS223
	VR103	Semi fixed(1kΩ)	VRTB6VS102
	VR151, 152	Semi fixed(22kΩ)	VRTB6VS223
	Other resistors		RD1/6PM□□□J
OTHERS			
	X351	CERAMIC RESONATOR(4.19MHz)	VSS1014
	X401	XTAL RES(OSC)(16.9344MHz)	PSS1006
	CN101	CONNECTOR	52045-1610
	CN351	CONNECTOR	HLEM30S-1
	JA391, 392	JACK/12V (CONTROL IN/OUT)	PKN1004
	JA393	Mini jack(DECK SYNCHRO)	RKN1014
	JA401	2P pinjack(LINE OUT)	PKB1009

PD-5500/KUXJ
PD-4550/KUXJ
PD-4500/KUXJ

2. SCHEMATIC DIAGRAM

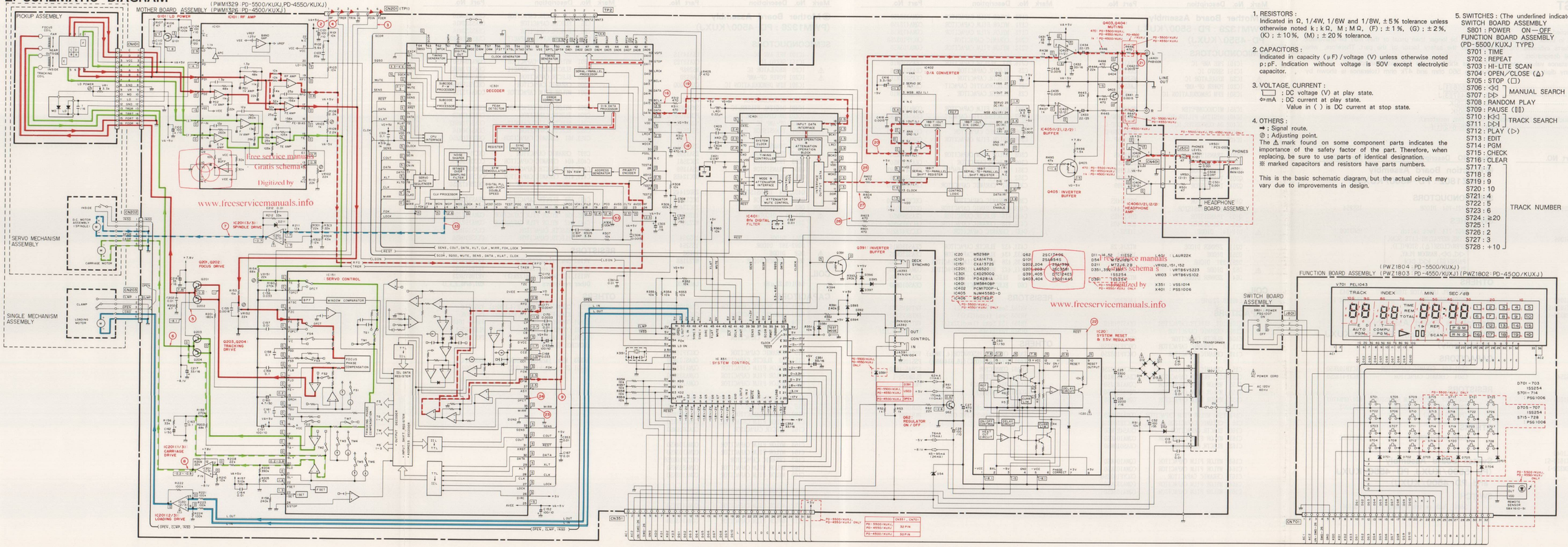

1. RESISTORS :
Indicated in Ω, 1/4W, 1/6W and 1/8W, ±5% tolerance unless otherwise noted k ; kΩ, M ; MΩ, (F) ; ±1%, (G) ; ±2%, (K) ; ±10%, (M) ; ±20% tolerance.

2. CAPACITORS :
Indicated in capacity (μF) / voltage (V) unless otherwise noted p ; pF. Indication without voltage is 50V except electrolytic capacitor.

3. VOLTAGE, CURRENT :
▭ ; DC voltage (V) at play state.
⇦mA ; DC current at play state.
Value in ( ) is DC current at stop state.

4. OTHERS :
➡ ; Signal route.
⊘ ; Adjusting point.
The ⚠ mark found on some component parts indicates the importance of the safety factor of the part. Therefore, when replacing, be sure to use parts of identical designation.
※ marked capacitors and resistors have parts numbers.

This is the basic schematic diagram, but the actual circuit may vary due to improvements in design.

5. SWITCHES : (The underlined indicates the switch position)

SWITCH BOARD ASSEMBLY
S801 : POWER ON — OFF

FUNCTION BOARD ASSEMBLY (PD-5500/KUXJ TYPE)
S701 : TIME
S702 : REPEAT
S703 : HI-LITE SCAN
S704 : OPEN/CLOSE (⏏)
S705 : STOP (□)
S706 : ◁◁] MANUAL SEARCH
S707 : ▷▷
S708 : RANDOM PLAY
S709 : PAUSE (❚❚)
S710 : ⏮] TRACK SEARCH
S711 : ⏭
S712 : PLAY (▷)
S713 : EDIT
S714 : PGM
S715 : CHECK
S716 : CLEAR
S717 : 7] TRACK NUMBER
S718 : 8
S719 : 9
S720 : 10
S721 : 4
S722 : 5
S723 : 6
S724 : ≥20
S725 : 1
S726 : 2
S727 : 3
S728 : +10

FUNCTION BOARD ASSEMBLY (PD-4550/KUXJ AND PD-4500/KUXJ TYPES)
S701 : TIME
S702 : REPEAT
S703 : HI-LITE SCAN
S704 : OPEN/CLOSE (⏏)
S705 : STOP (□)
S706 : ◁◁] MANUAL SEARCH
S707 : ▷▷
S708 : RANDOM PLAY
S709 : PAUSE (❚❚)
S710 : ⏮] TRACK SEARCH
S711 : ⏭
S712 : PLAY (▷)
S713 : EDIT
S714 : PGM

: Focus servo loop
: Signal route
: Tracking servo loop
: Carriage servo loop
: Loading motor route
: Spindle motor route
▶ : Measurement point

3. P.C. BOARDS CONNECTION DIAGRAM

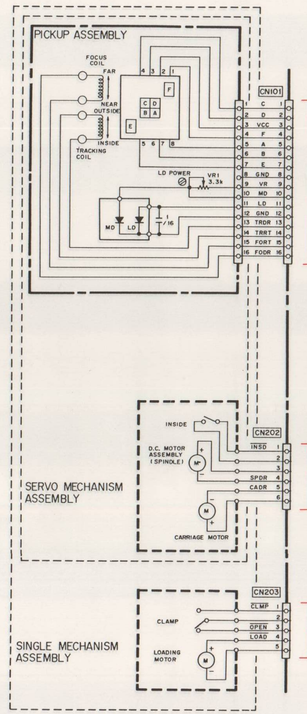

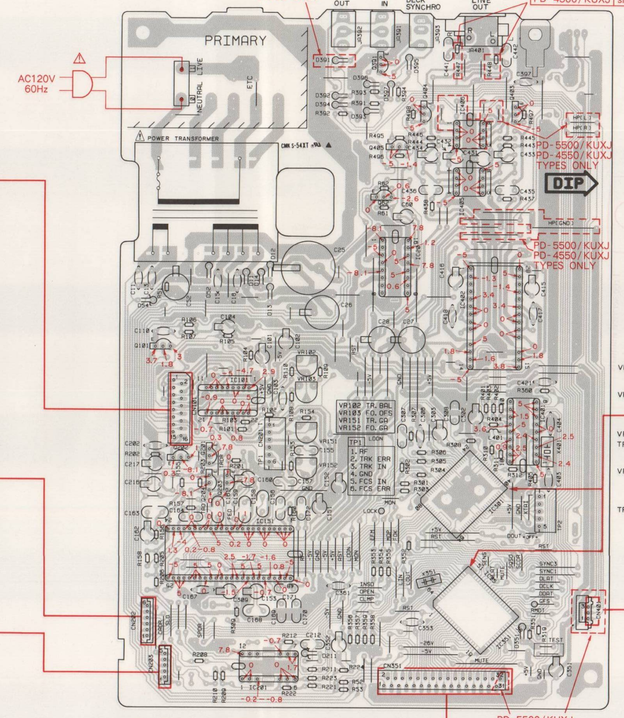

MOTHER BOARD ASSEMBLY
(PWM1329 : PD-5500/KUXJ, PD-4550/KUXJ)
(PWM1326 : PD-4500/KUXJ)

	R447	R448
PD-5500/KUXJ PD-4550/KUXJ	used	used
PD-4500/KUXJ	short	short

	CN351,CN701
PD-5500/KUXJ PD-4550/KUXJ	32 pin
PD-4500/KUXJ	30 pin

IC301 (CXD2500Q)

Pin No.	Voltage	Pin No.	Voltage
1	5	41	N.C
2	N.C	42	5
3	5	43	N.C
4	2.6	44	N.C
5	N.C	45	N.C
6	5	46	4.4
7	N.C	47	0
8	N.C	48	0
9	0	49	0~0.3
10	0	50	N.C
11	N.C	51	N.C
12	0	52	0
13	N.C	53	2.5
14	N.C	54	N.C
15	N.C	55	0
16	N.C	56	N.C
17	0	57	N.C
18	2.5	58	N.C
19	2.4	59	0
20	2.4	60	N.C
21	0	61	N.C
22	2.5	62	N.C
23	5	63	0
24	2.5	64	N.C
25	N.C	65	0
26	0	66	3.3~4.6
27	2.5	67	5
28	0	68	0
29	N.C	69	2.1~3
30	0	70	5
31	1.3~2.2	71	5
32	2.5	72	5
33	5	73	5
34	2.5	74	5
35	2.5	75	5
36	N.C	76	0
37	N.C	77	5
38	N.C	78	5
39	N.C	79	5
40	N.C	80	0

IC351 (PD4281A)

Pin No.	Voltage	Pin No.	Voltage
1	5	33	5
2	1.6~2	34	3.3~4.6
3	1.6~2	35	5
4	1.6~2	36	0
5	1.6~2	37	5
6	1.6~2	38	2.1~3
7	1.6~2	39	N.C
8	1.6~2	40	5
9	1.6~2	41	5
10	1.6~2	42	5
11	1.6~2	43	N.C
12	N.C	44	0
13	N.C	45	5
14	5	46	N.C
15	N.C	47	5
16	~19	48	5
17	~11	49	0
18	~26	50	0
19	~5	51	5
20	~17	52	0
21	~3.1	53	5
22	8~11	54	5
23	0~2	55	5
24	0~2.3	56	2.5
25	~2~0	57	2.5
26	5	58	0
27	N.C	59	0
28	~2~19	60	N.C
29	10~17	61	0
30	13~17	62	0
31	5	63	0
32	5	64	0

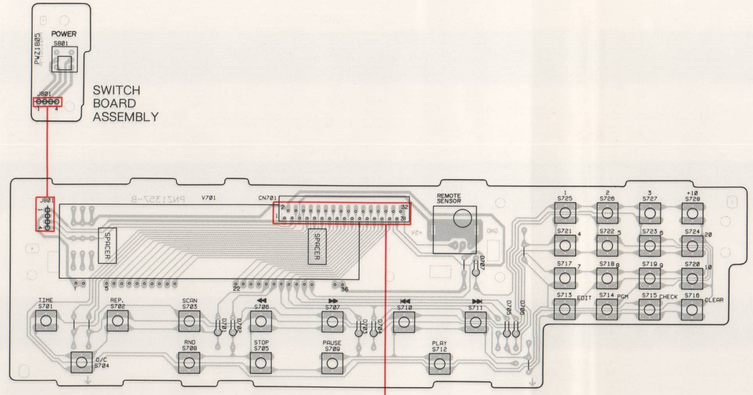

FUNCTION BOARD ASSEMBLY
(PWZ1804 : PD-5500/KUXJ)

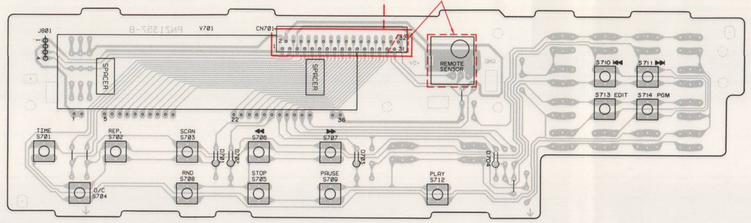

FUNCTION BOARD ASSEMBLY
(PWZ1803 : PD-4550/KUXJ)
(PWZ1802 : PD-4500/KUXJ)

P.C.B. pattern diagram indication	Corresponding part symbol	Part name	P.C.B. pattern diagram indication	Corresponding part symbol	Part name
		Transistor			Ceramic capacitor
		FET			Mylar capacitor
		Diode			Styrol capacitor
		Zener diode			Electrolytic capacitor (Non polarized)
		LED			Electrolytic capacitor (Noiseless)
		Varactor			Electrolytic capacitor (Polarized)
		Tact switch			Electrolytic capacitor (Polarized)
		Inductor			Power capacitor
		Coil			Semi-fixed resistor
		Transformer			Resistor array
		Filter			Resistor
					Resonator
					Thermistor

1. This P.C.B. connection diagram is viewed from the parts mounted side.
2. The parts which have been mounted on the board can be replaced with those shown with the corresponding wiring symbols listed in the above Table.
3. The capacitor terminal marked with ▭ shows negative terminal.
4. The diode marked with ○ shows cathode side.
5. The transistor terminal marked with ▭ shows emitter.

3. P.C. BOARDS CONNECTION DIAGRAM

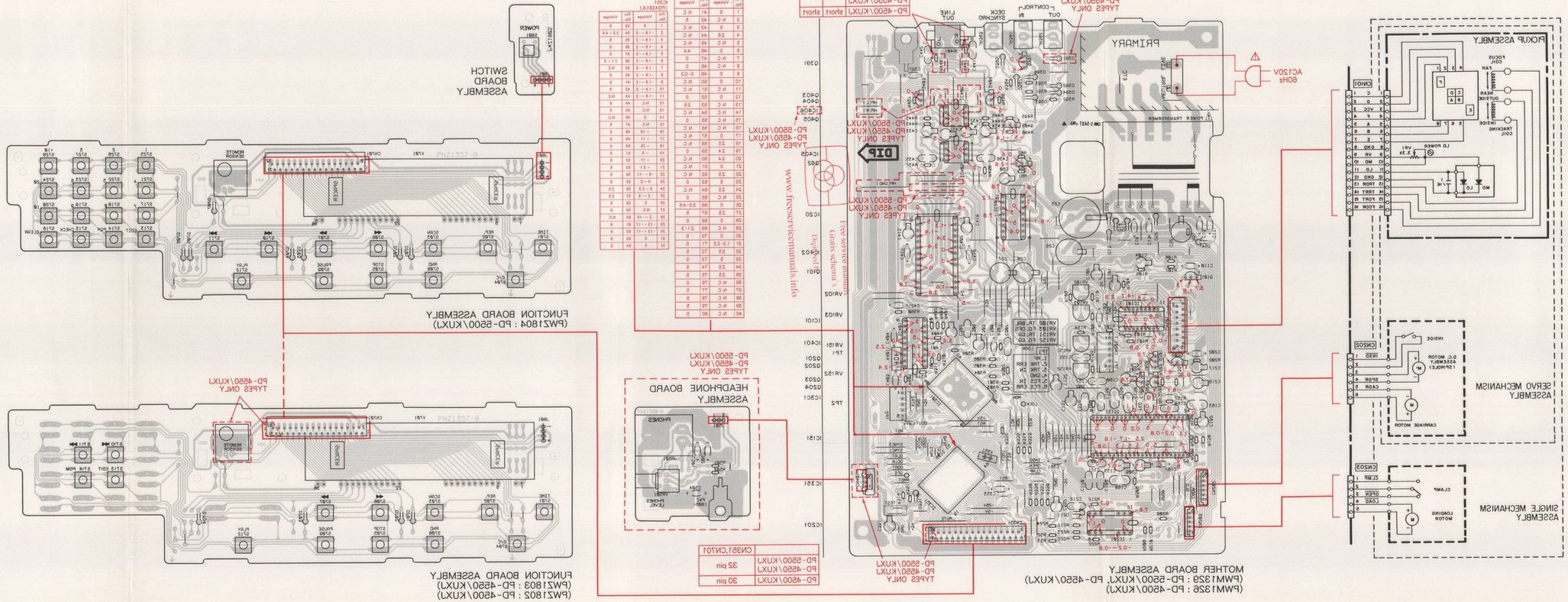

This P.C.B. connection diagram is viewed from the foil side.

4. FOR PD-5500/KCXJ, HEMXJ, HBXJ, PD-5500-S/HEWMXJ, PD-4550/KCXJ, HEMXJ, HBXJ, PD-4550-S/HEWMXJ, PD-4500/KCXJ, HEMXJ, HBXJ, PD-4500-S/HBXJ AND HEWMXJ TYPES

NOTES :
- Parts without part number cannot be supplied.
- The ⚠ mark found on some component parts indicates the importance of the safety factor of the part. Therefore, when replacing, be sure to use parts of identical designation.
- Parts marked by "◉" are not always kept in stock. Their delivery time may be longer than usual or they may be unavailable.

4.1 FOR PD-5500/KCXJ, HEMXJ, HBXJ AND PD-5500-S/HEWMXJ TYPES

CONTRAST OF P.C. BOARD ASSEMBLIES

Mark	Symbol & Description	Part No.					Remarks
		PD-5500 /KUXJ type	PD-5500 /KCXJ type	PD-5500 /HEMXJ type	PD-5500 /HBXJ type	PD-5500-S /HEWMXJ type	
◉	Mother board assembly	PWM1329	PWM1329	PWM1333	PWM1333	PWM1333	
◉	Function board assembly	PWZ1804	PWZ1804	PWZ1804	PWZ1804	PWZ1804	
	Switch board assembly	Non supply	Non supply	Non supply	Non supply	Non supply	
	Headphone board assembly	Non supply	Non supply	Non supply	Non supply	Non supply	

- The Switch board assemblies and Headphone board assemblies of PD-5500/KCXJ, HEMXJ, HBXJ and PD-5500-S/HEWMXJ types are the same as those of PD-5500/KUXJ type.

MOTHER BOARD ASSEMBLY (PWM1333)

The Mother board assembly (PWM1333) is the same as the Mother board assembly (PWM1329) with the exception of the following sections.

Mark	Symbol & Description	Part No.		Remarks
		PWM1329	PWM1333	
⚠	IC30	• • • • •	ICP-N10	
⚠	D11 – D14	11ES2	• • • • •	
⚠	D25	• • • • •	2W02-5008-L	
	D391 – D394	1SS254	• • • • •	
	C321	• • • • •	CGCYX104K25	
	C323	• • • • •	CKCYF473Z50	
	C324	• • • • •	CCCCH100D50	
	R321	• • • • •	RD1/6PM102J	
	R391	RD1/6PM244J	• • • • •	
	R392	RD1/6PM102J	• • • • •	
	JA301 (DIGITAL OUT)	• • • • •	TOTX178	
	JA391,JA392 (CONTROL IN/OUT)	PKN1004	• • • • •	

4.2 FOR PD-4550/KCXJ, HEMXJ, HBXJ AND PD-4550-S/HEWMXJ TYPES

CONTRAST OF P.C. BOARD ASSEMBLIES

Mark	Symbol & Description	Part No.					Remarks
		PD-4550 /KUXJ type	PD-4550 /KCXJ type	PD-4550 /HEMXJ type	PD-4550 /HBXJ type	PD-4550-S /HEWMXJ type	
◉	Mother board assembly	PWM1329	PWM1329	PWM1331	PWM1331	PWM1331	
◉	Function board assembly	PWZ1803	PWZ1803	PWZ1803	PWZ1803	PWZ1803	
	Switch board assembly	Non supply	Non supply	Non supply	Non supply	Non supply	
	Headphone board assembly	Non supply	Non supply	Non supply	Non supply	Non supply	

- The Switch board assemblies and Headphone board assemblies of PD-4550/KCXJ, HEMXJ, HBXJ and PD-4550-S/HEWMXJ types are the same as those of PD-4550/KUXJ type.

MOTHER BOARD ASSEMBLY (PWM1331)

The Mother board assembly (PWM1331) is the same as the Mother board assembly (PWM1329) with the exception of the following sections.

Mark	Symbol & Description	Part No.		Remarks
		PWM1329	PWM1331	
⚠	IC30	• • • • •	ICP-N10	
⚠	D11 – D14	11ES2	• • • • •	
⚠	D25	• • • • •	2W02-5008-L	
	D391 – D394	1SS254	• • • • •	
	R391	RD1/6PM244J	• • • • •	
	R392	RD1/6PM102J	• • • • •	
	JA391,JA392 (CONTROL IN/OUT)	PKN1004	• • • • •	

4.3 FOR PD-4500/KCXJ, HEMXJ, HBXJ, PD-4500-S/HBXJ AND HEWMXJ TYPES

CONTRAST OF P.C. BOARD ASSEMBLIES

Mark	Symbol & Description	Part No.						Remarks
		PD-4500 /KUXJ type	PD-4500 /KCXJ type	PD-4500 /HEMXJ type	PD-4500 /HBXJ type	PD-4500-S /HBXJ type	PD-4500-S /HEWMXJ type	
◉	Mother board assembly	PWM1326	PWM1326	PWM1328	PWM1328	PWM1328	PWM1328	
◉	Function board assembly	PWZ1802	PWZ1802	PWZ1802	PWZ1802	PWZ1802	PWZ1802	
	Switch board assembly	Non supply	Non supply	Non supply	Non supply	Non supply	Non supply	
	Headphone board assembly	• • • • •	• • • • •	Non supply	Non supply	Non supply	Non supply	

- The Switch board assemblies of PD-4500/KCXJ, HEMXJ, HBXJ, PD-4500-S/HBXJ and HEWMXJ types are the same as that of PD-4500/KUXJ type.
- The Headphone board assemblies of PD-4500/HEMXJ, HBXJ, PD-4500-S/HBXJ and HEWMXJ types are the same as that of PD-5500/KUXJ and PD-4550/KUXJ types.

MOTHER BOARD ASSEMBLY (PWM1328)

The Mother board assembly (PWM1328) is the same as the Mother board assembly (PWM1326) with the exception of the following sections.

Mark	Symbol & Description	Part No.		Remarks
		PWM1326	PWM1328	
⚠	IC30	• • • • •	ICP-N10	
⚠	D11 – D14	11ES2	• • • • •	
⚠	D25	• • • • •	2W02-5008-L	
	IC406	• • • • •	M5218AP	
	R445,R446	RD1/6PM102J	RD1/6PM471J	
	R447,R448	• • • • •	RD1/6PM471J	
	CN401 (3 pin jumper connector)	• • • • •	Non supply	For the Headphone board assembly

4.4 SCHEMATIC DIAGRAM OF HEMXJ, HBXJ AND HEWMXJ TYPES

MOTHER BOARD ASSEMBLY
(PWM1333 : PD-5500/HEMXJ,HBXJ,PD-5500-S/HEWMXJ)
(PWM1331 : PD-4550/HEMXJ,HBXJ,PD-4550-S/HEWMXJ)
(PWM1328 : PD-4500/HEMXJ,HBXJ,PD-4500-S/HBXJ,HEWXJ)

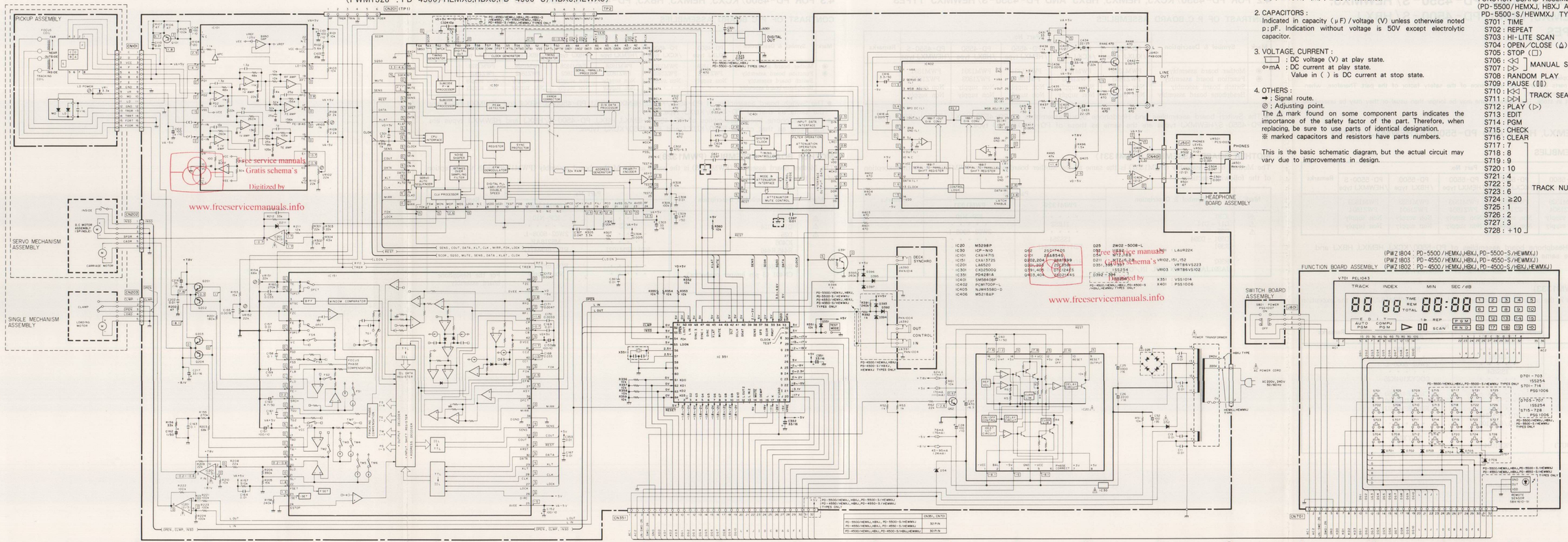

1. RESISTORS :
Indicated in Ω, 1/4W, 1/6W and 1/8W, ±5% tolerance unless otherwise noted k : kΩ, M : MΩ, (F) : ±1%, (G) : ±2%, (K) : ±10%, (M) : ±20% tolerance.

2. CAPACITORS :
Indicated in capacity (μF) / voltage (V) unless otherwise noted p : pF. Indication without voltage is 50V except electrolytic capacitor.

3. VOLTAGE, CURRENT :
▭ : DC voltage (V) at play state.
⇨mA : DC current at play state.
Value in ( ) is DC current at stop state.

4. OTHERS :
➡ : Signal route.
⊘ : Adjusting point.
The ⚠ mark found on some component parts indicates the importance of the safety factor of the part. Therefore, when replacing, be sure to use parts of identical designation.
※ marked capacitors and resistors have parts numbers.

This is the basic schematic diagram, but the actual circuit may vary due to improvements in design.

5. SWITCHES : (The underlined indicates the switch position)

SWITCH BOARD ASSEMBLY
S801 : POWER ON — OFF

FUNCTION BOARD ASSEMBLY (PD-5500/HEMXJ, HBXJ AND PD-5500-S/HEWMXJ TYPES)
S701 : TIME
S702 : REPEAT
S703 : HI-LITE SCAN
S704 : OPEN/CLOSE (⏏)
S705 : STOP (□)
S706 : ⏮] MANUAL SEARCH
S707 : ⏭]
S708 : RANDOM PLAY
S709 : PAUSE (❚❚)
S710 : ⏮] TRACK SEARCH
S711 : ⏭]
S712 : PLAY (▷)
S713 : EDIT
S714 : PGM
S715 : CHECK
S716 : CLEAR
S717 : 7] TRACK NUMBER
S718 : 8
S719 : 9
S720 : 10
S721 : 4
S722 : 5
S723 : 6
S724 : ≧20
S725 : 1
S726 : 2
S727 : 3
S728 : +10

FUNCTION BOARD ASSEMBLY
(PD-4550/HEMXJ, HBXJ, PD-4550-S/HEWMXJ, PD-4500/HEMXJ, HBXJ, PD-4500-S/HBXJ AND HEWMXJ TYPES)
S701 : TIME
S702 : REPEAT
S703 : HI-LITE SCAN
S704 : OPEN/CLOSE (⏏)
S705 : STOP (□)
S706 : ⏮] MANUAL SEARCH
S707 : ⏭]
S708 : RANDOM PLAY
S709 : PAUSE (❚❚)
S710 : ⏮] TRACK SEARCH
S711 : ⏭]
S712 : PLAY (▷)
S713 : EDIT
S714 : PGM

4.5 P.C. BOARD PATTERN OF HEMXJ, HBXJ AND HEWMXJ TYPES

LINE VOLTAGE SELECTION

Line voltage can be changed with the following steps.

1. Disconnect the AC power cord.
2. Remove the bonnet.
3. Change the position of the jumper Ⓐ as follows. (Refer to the Mother board assembly.)

Voltage	Jumper Ⓐ position
220V	①
240V	②

4. Stick the line voltage label on the rear panel.

Part No.	Description
AAX-193	220V label
AAX-192	240V label

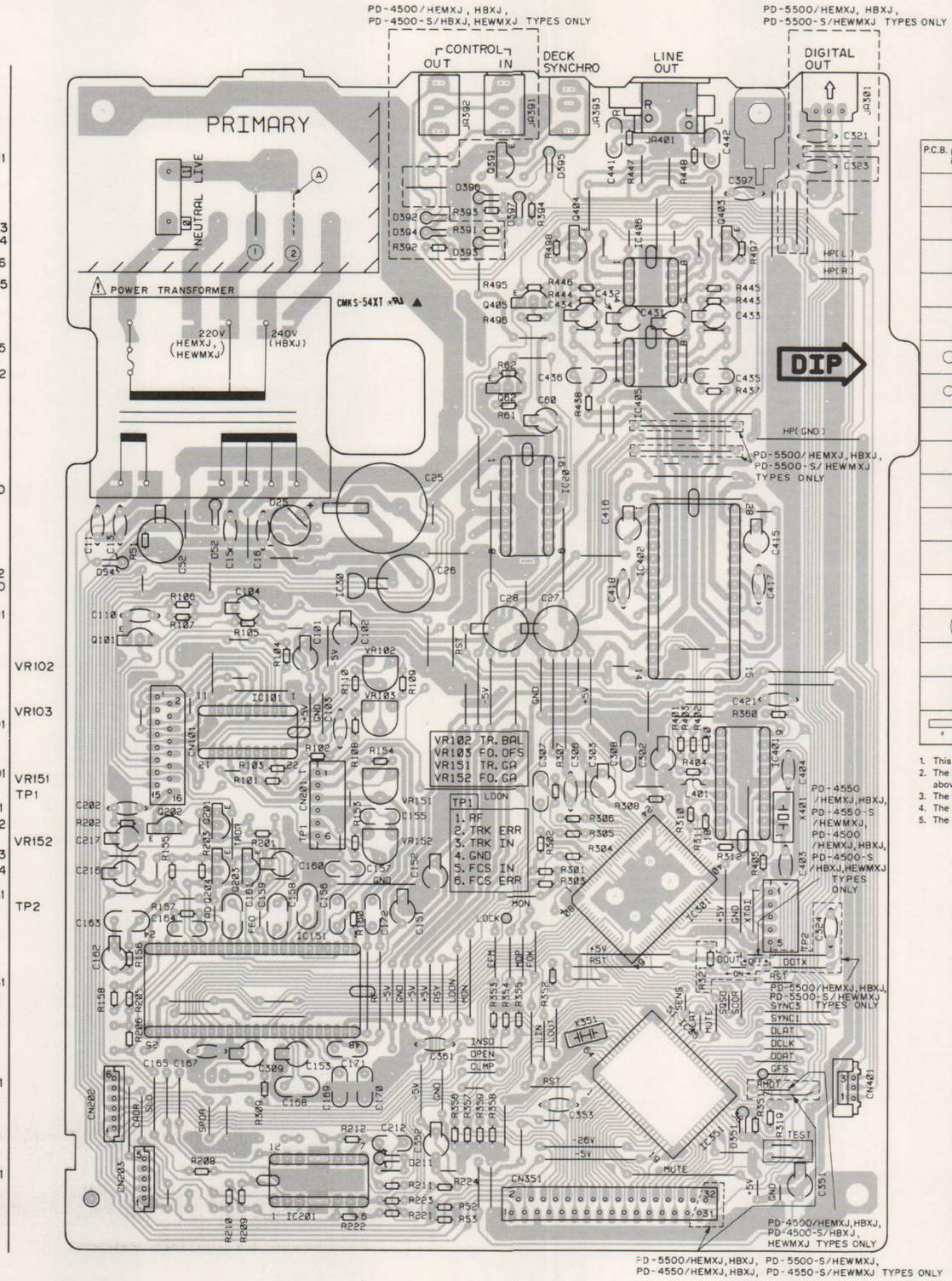

P.C.B. pattern diagram indication	Corresponding part symbol	Part name	P.C.B. pattern diagram indication	Corresponding part symbol	Part name
		Transistor			Ceramic capacitor
		FET			Mylar capacitor
		Diode			Styrol capacitor
					Electrolytic capacitor (Non polarized)
					Electrolytic capacitor (Noiseless)
		Zenner diode			Electrolytic capacitor (Polarized)
					Electrolytic capacitor (Polarized)
		LED			Power capacitor
		Varactor			Semi-fixed resistor
		Tact switch			Resistor array
		Inductor			Resistor
		Coil			Resonator
		Transformer			Thermistor
		Filter			

1. This P.C.B. connection diagram is viewed from the parts mounted side.
2. The parts which have been mounted on the board can be replaced with those shown with the corresponding wiring symbols listed in the above Table.
3. The capacitor terminal marked with ▭ shows negative terminal.
4. The diode marked with ○ shows cathode side.
5. The transistor terminal marked with ▭ shows emitter.

	CN351
PD-5500/HEMXJ,HBXJ,PD-5500-S/HEWMXJ PD-4550/HEMXJ,HBXJ,PD-4550-S/HEWMXJ	32pin
PD-4500/HEMXJ,HBXJ,PD-4500-S/HBXJ,HEWMXJ	30pin

MOTHER BOARD ASSEMBLY
(PWM1333 : PD-5500/HEMXJ,HBXJ,PD-5500-S/HEWMXJ TYPES)
(PWM1331 : PD-4550/HEMXJ,HBXJ,PD-4550-S/HEWMXJ TYPES)
(PWM1328 : PD-4500/HEMXJ,HBXJ,PD-4500-S/HBXJ,HEWXJ TYPES)

4.5 P.C. BOARD PATTERN OF HEMXJ, HBXJ AND HEWMXJ TYPES

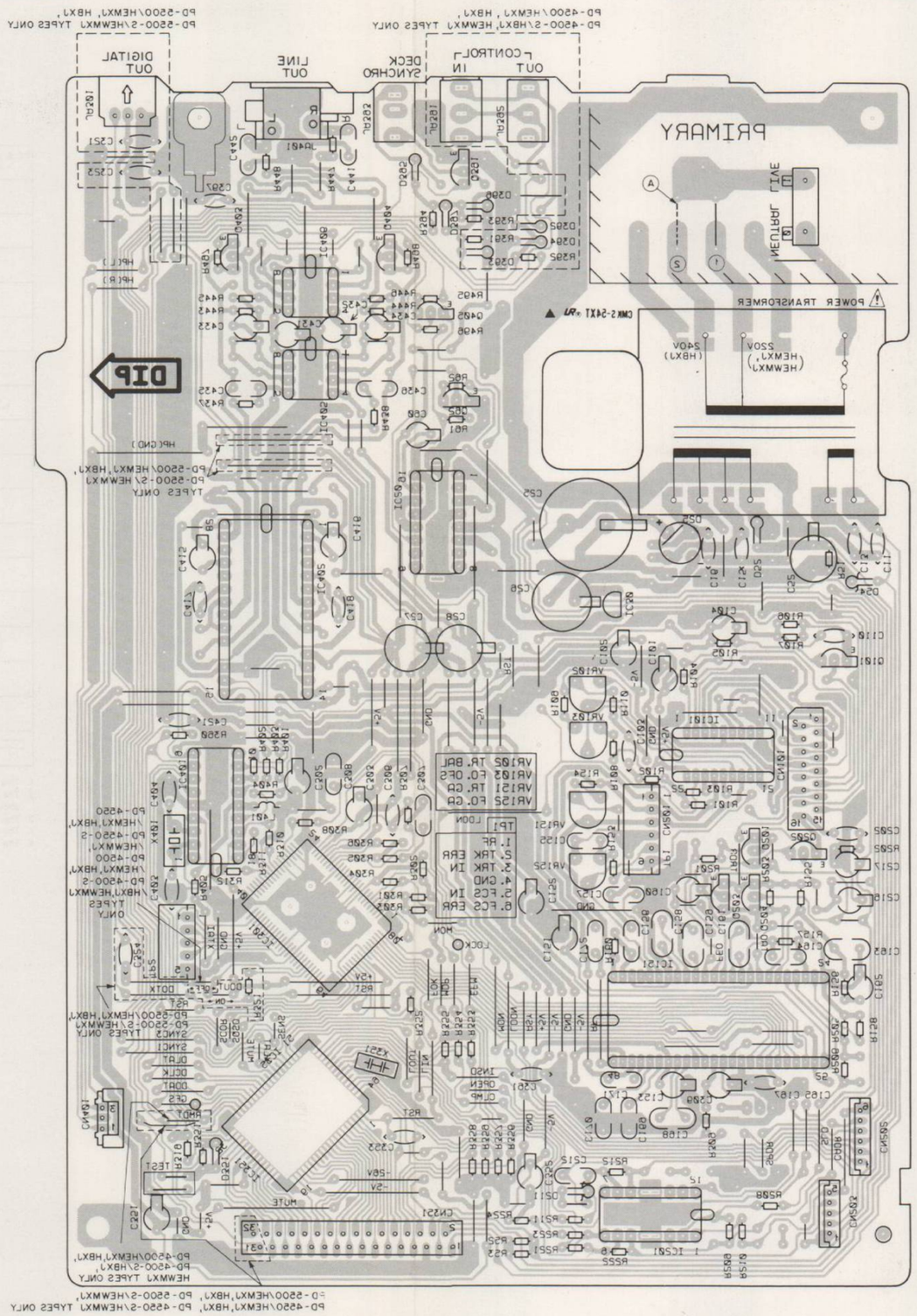

LINE VOLTAGE SELECTION

Line voltage can be changed with the following steps.

1. Disconnect the AC power cord.
2. Remove the bonnet.
3. Change the position of the jumper Ⓐ as follows.
   (Refer to the Mother board assembly.)

Voltage	Jumper Ⓐ position
220V	①
240V	②

4. Stick the line voltage label on the rear panel.

Part No.	Description
AAX-193	220V label
AAX-192	240V label

This P. C. B. connection diagram is viewed from the foil side.

PD-5500\HEMXJ,HBXJ,PD-5500-S\HEWMXJ PD-4550\HEMXJ,HBXJ,PD-4550-S\HEWMXJ	32pin
PD-4500\HEMXJ,HBXJ,PD-4500-S\HBXJ,HEWMXJ	30pin
CN351	

MOTHER BOARD ASSEMBLY
(PWM1333 : PD-5500\HEMXJ,HBXJ,PD-5500-S\HEWMXJ TYPES)
(PWM1331 : PD-4550\HEMXJ,HBXJ,PD-4550-S\HEWMXJ TYPES)
(PWM1328 : PD-4500\HEMXJ,HBXJ,PD-4500-S\HBXJ,HEWXJ TYPES)