Service Manual

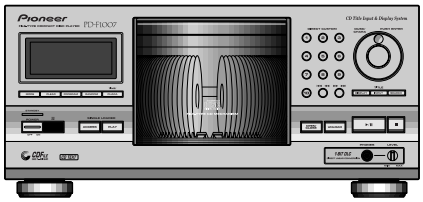

ORDER NO.
RRV2001

FILE-TYPE CD PLAYER

PD-F1007

THIS MANUAL IS APPLICABLE TO THE FOLLOWING MODEL(S) AND TYPE(S).

Type	Model	Power Requirement	Remarks
	PD-F1007		
KU	○	AC120V	

CONTENTS

1. SAFETY INFORMATION 2
2. EXPLODED VIEWS AND PARTS LIST 3
3. SCHEMATIC DIAGRAM 10
4. PCB CONNECTION DIAGRAM 22
5. PCB PARTS LIST 30
6. ADJUSTMENT 34
7. GENERAL INFORMATION 44
   7.1 PARTS 44
      7.1.1 IC 44
      7.1.2 DISPLAY 47
   7.2 DIAGNOSIS 48
      7.2.1 DISASSEMBLY 48
      7.2.2 ERROR CCHECK DISPLAY 51
      7.2.3 EXPLANATION OF DISC DETECTION 52
   7.3 BLOCK DIAGRAM 54
8. PANEL FACILITIES AND SPECIFICATIONS 55

PIONEER ELECTRONIC CORPORATION 4-1, Meguro 1-Chome, Meguro-ku, Tokyo 153-8654, Japan
PIONEER ELECTRONICS SERVICE, INC. P.O. Box 1760, Long Beach, CA 90801-1760, U.S.A.
PIONEER ELECTRONIC (EUROPE) N.V. Haven 1087, Keetberglaan 1, 9120 Melsele, Belgium
PIONEER ELECTRONICS ASIACENTRE PTE. LTD. 501 Orchard Road, #10-00 Wheelock Place, Singapore 238880

© PIONEER ELECTRONIC CORPORATION 1998

T–DZE AUG. 1998 Printed in Japan

1. SAFETY INFORMATION

This service manual is intended for qualified service technicians; it is not meant for the casual do-it-yourselfer. Qualified technicians have the necessary test equipment and tools, and have been trained to properly and safely repair complex products such as those covered by this manual.
Improperly performed repairs can adversely affect the safety and reliability of the product and may void the warranty. If you are not qualified to perform the repair of this product properly and safely, you should not risk trying to do so and refer the repair to a qualified service technician.

WARNING
This product contains lead in solder and certain electrical parts contain chemicals which are known to the state of California to cause cancer, birth defects or other reproductive harm.

Health & Safety Code Section 25249.6 – Proposition 65

NOTICE
(FOR CANADIAN MODEL ONLY)
Fuse symbols (fast operating fuse) and/or (slow operating fuse) on PCB indicate that replacement parts must be of identical designation.

REMARQUE
(POUR MODÈLE CANADIEN SEULEMENT)
Les symboles de fusible (fusible de type rapide) et/ou (fusible de type lent) sur CCI indiquent que les pièces de remplacement doivent avoir la même désignation.

(FOR USA MODEL ONLY)

1. SAFETY PRECAUTIONS

The following check should be performed for the continued protection of the customer and service technician.

LEAKAGE CURRENT CHECK

Measure leakage current to a known earth ground (water pipe, conduit, etc.) by connecting a leakage current tester such as Simpson Model 229-2 or equivalent between the earth ground and all exposed metal parts of the appliance (input/output terminals, screwheads, metal overlays, control shaft, etc.). Plug the AC line cord of the appliance directly into a 120V AC 60 Hz outlet and turn the AC power switch on. Any current measured must not exceed 0.5 mA.

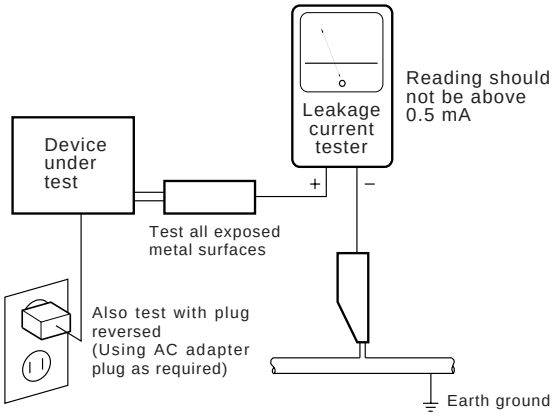

AC Leakage Test

ANY MEASUREMENTS NOT WITHIN THE LIMITS OUTLINED ABOVE ARE INDICATIVE OF A POTENTIAL SHOCK HAZARD AND MUST BE CORRECTED BEFORE RETURNING THE APPLIANCE TO THE CUSTOMER.

2. PRODUCT SAFETY NOTICE

Many electrical and mechanical parts in the appliance have special safety related characteristics. These are often not evident from visual inspection nor the protection afforded by them necessarily can be obtained by using replacement components rated for voltage, wattage , etc. Replacement parts which have these special safety characteristics are identified in this Service Manual.

Electrical components having such features are identified by marking with a ⚠ on the schematics and on the parts list in this Service Manual.
The use of a substitute replacement component which does not have the same safety characteristics as the PIONEER recommended replacement one, shown in the parts list in this Service Manual, may create shock, fire, or other hazards.

Product Safety is continuously under review and new instructions are issued from time to time. For the latest information, always consult the current PIONEER Service Manual. A subscription to, or additional copies of, PIONEER Service Manual may be obtained at a nominal charge from PIONEER.

2. EXPLODED VIEWS AND PARTS LIST

NOTES :
- *Parts marked by " NSP " are generally unavailable because they are not in our Master Spare Parts List.*
- *The ⚠ mark found on some component parts indicates the importance of the safety factor of the part. Therefore, when replacing, be sure to use parts of identical designation.*
- *Screw adjacent to ▼ mark on the product are used for disassembly.*

2.1 PACKING

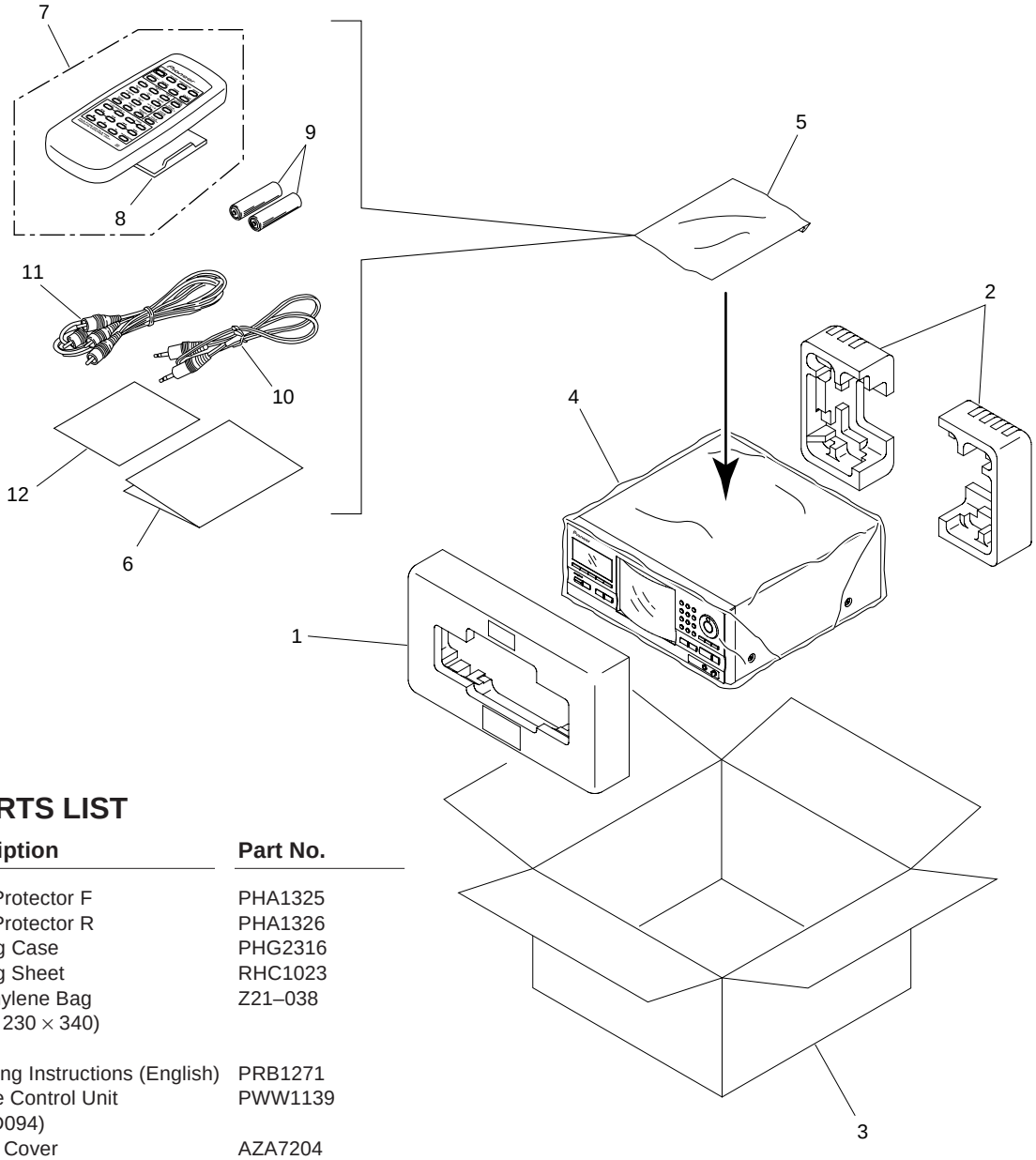

PACKING PARTS LIST

Mark	No.	Description	Part No.
	1	Styrol Protector F	PHA1325
	2	Styrol Protector R	PHA1326
	3	Packing Case	PHG2316
	4	Packing Sheet	RHC1023
	5	Polyethylene Bag (0.03 × 230 × 340)	Z21–038
	6	Operating Instructions (English)	PRB1271
	7	Remote Control Unit (CD-PD094)	PWW1139
	8	Battery Cover	AZA7204
NSP	9	Dry Cell Batteries (R6P, AA)	VEM–013
	10	Control Cable (L=1 m)	PDE1247
	11	Audio Cable (L=1 m)	PDE1248
NSP	12	Warranty Card	ARY7023

2.2 EXTERIOR (1/2)

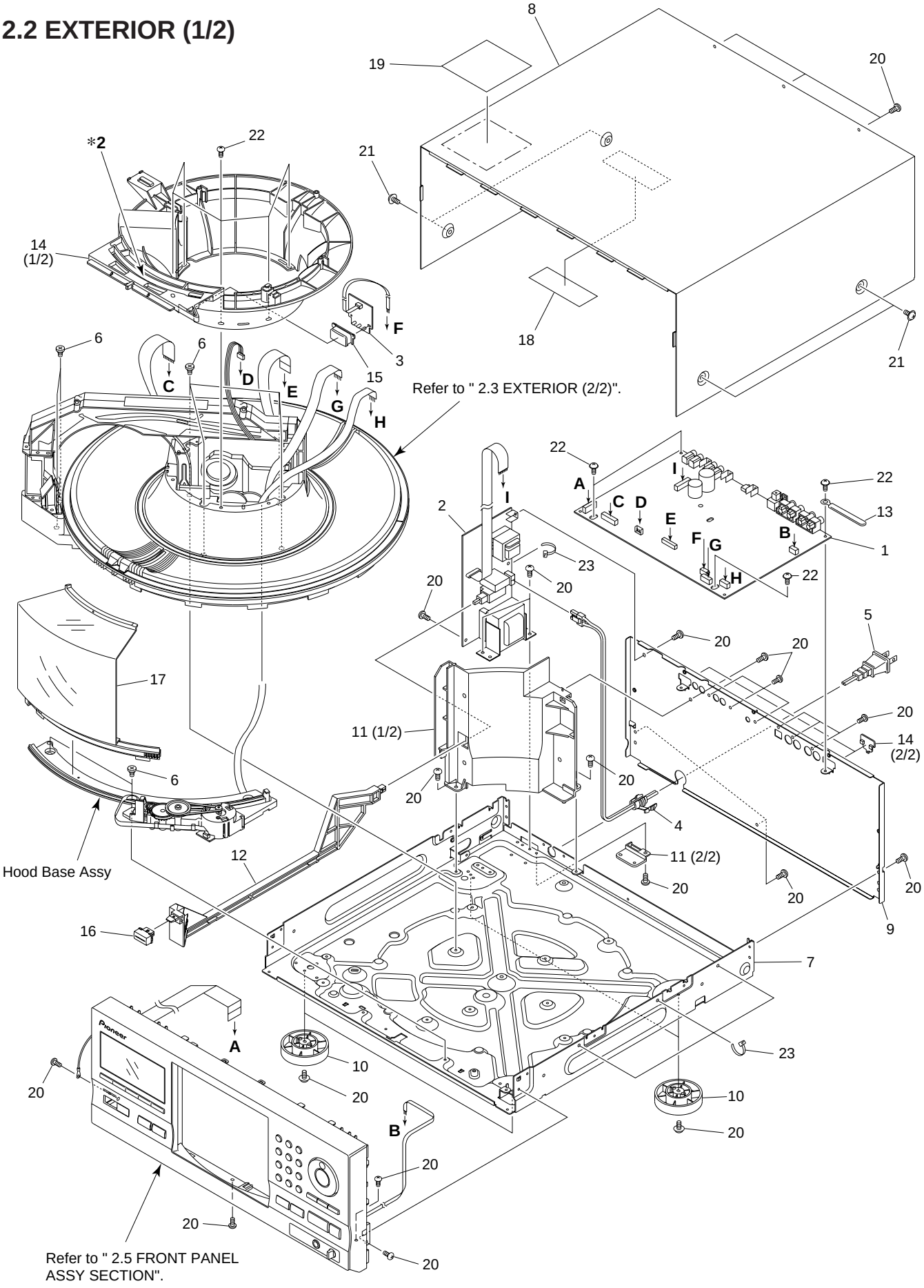

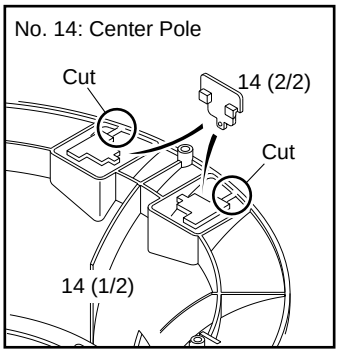

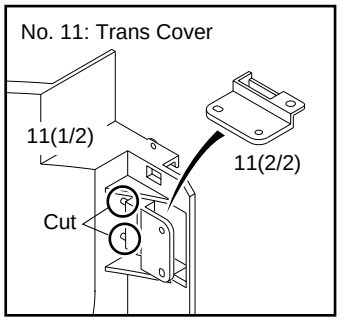

■ Hood Base Assy Section

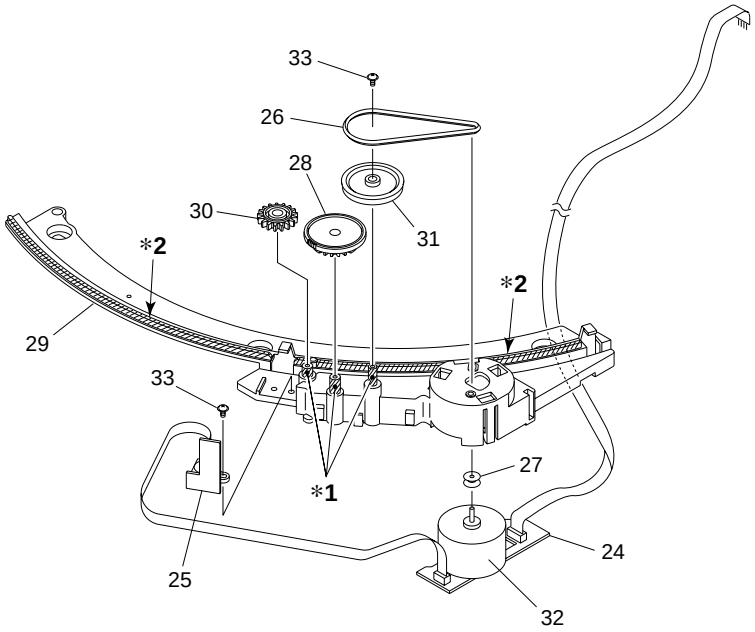

EXTERIOR (1/2) PARTS LIST

Mark	No.	Description	Part No.
	1	MAIN BOARD ASSY	PWZ3822
	2	POWER BOARD ASSY	PWZ3852
NSP	3	LED BOARD ASSY	PWZ3867
⚠	4	Strain Relief	CM–22C
⚠	5	AC Power Cord	VDG1057
	6	Screw C	PBA1106
NSP	7	Under Base	PNA2421
	8	Bonnet Case	PYY1255
	9	Rear Base	PNA2424
	10	Insulator	PNW2766
	11	Trans Cover	PNW2802
	12	Joint	PNW2805
	13	Cord Clamper	RNH–184
	14	Center Pole	PNW2792
	15	CR Lens	PNW2816
	16	POWER Button	PAC1884
	17	Hood	PNW2793
	18	65 Label	ORW1069
	19	Caution Label	PRW1517
	20	Screw	BBZ30P080FZK
	21	Screw	FBT40P080FZK
	22	Screw	IBZ30P080FMC
	23	Binder	ZCA–SKB90BK
	*2	Ha Narl PN955R (for service)	GEM1016

Mark	No.	Description	Part No.
■ Hood Base Assy Section			
NSP	24	DOOR MOTOR BOARD ASSY	PWZ3863
NSP	25	DOOR SW BOARD ASSY	PWZ3865
	26	Belt	PEB1300
	27	Motor Pulley	PNW1634
	28	Gear	PNW2641
	29	Hood Base	PNW2791
	30	Gear M1	PNW2800
	31	Gear Pulley	VNL1662
	32	Slider Motor	VXM1033
	33	Screw	IPZ20P080FMC
	*1	Froil 397 (for service)	GYA1001
	*2	Ha Narl PN955R (for service)	GEM1016

2.3 EXTERIOR (2/2)

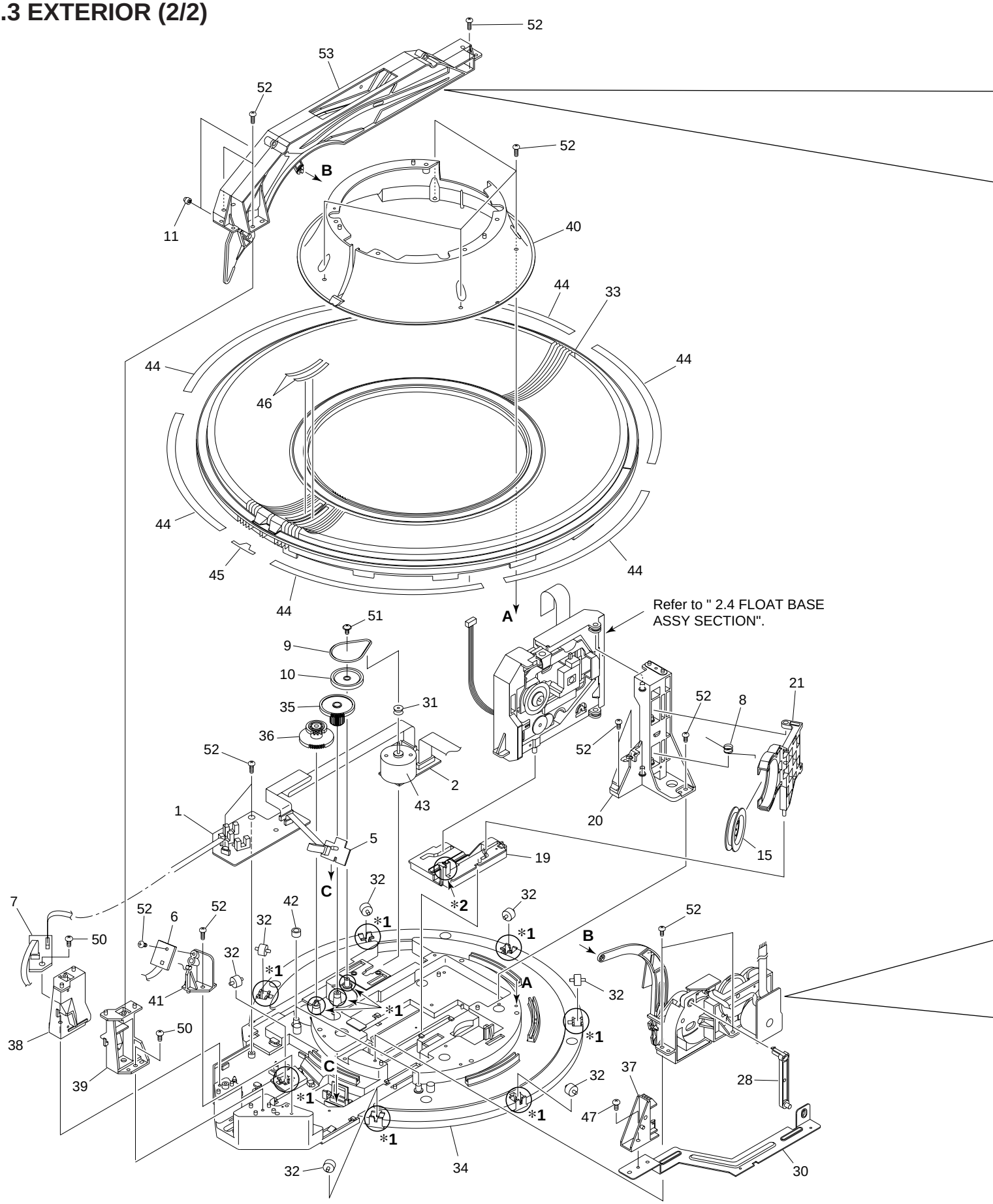

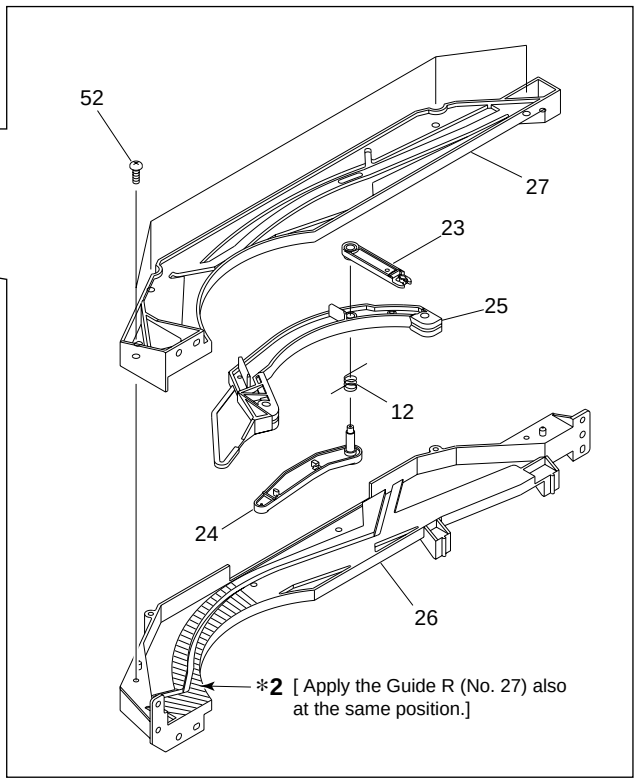

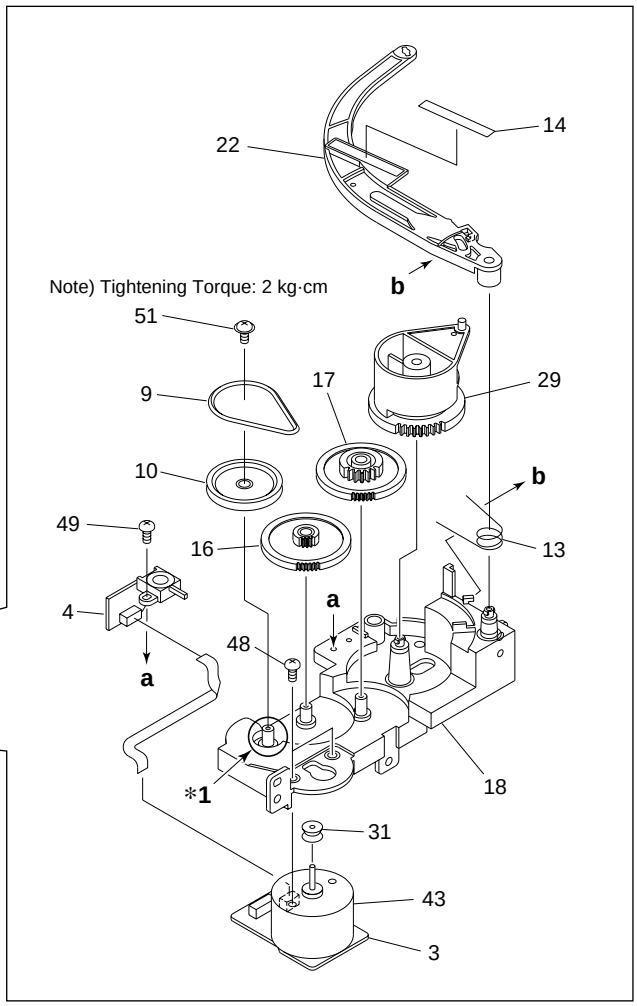

EXTERIOR (2/2) PARTS LIST

Mark	No.	Description	Part No.
NSP	1	SENSOR BOARD ASSY	PWZ3781
NSP	2	SELECT BOARD ASSY	PWZ3785
NSP	3	LOADING BOARD ASSY	PWZ3788
NSP	4	LOADING SW BOARD ASSY	PWZ3790
NSP	5	RADIATE BOARD ASSY	PWZ3791
NSP	6	RECEIVE BOARD ASSY	PWZ3792
	7	VOLUME BOARD ASSY	PWZ3866
	8	Clamp Spring	ABH7107
	9	Loading Belt	AEB7029
	10	Gear Pulley B	ANW7062
	11	Roller B	ANW7075
	12	Arm Spring	PBH1225
	13	D Arm Spring	PBH1226
	14	Sheet	PED1028
	15	Clamper	PNW2743
	16	Gear 1	PNW2819
	17	Gear 2	PNW2820
	18	Gear Holder	PNW2822
	19	Slider Cam	PNW2823
	20	Clamp Support	PNW2826
	21	Clamp Holder	PNW2827
	22	Drive Arm	PNW2829
	23	Link	PNW2830
NSP	24	L Slider	PNW2831
NSP	25	L Arm	PNW2832
	26	Guide L	PNW2833
	27	Guide R	PNW2834
	28	Link L	PNW2844
	29	Drive Cam	PNW2873
	30	Lock Plate	PNA2438
	31	Motor Pulley	PNW1634
	32	Roller	PNW2647
	33	Disc Rack	PNW2790
	34	Rack Base	PNW2835
	35	ST Gear 0.6	PNW2836
	36	ST Gear 1.0	PNW2837
	37	Disc Divider	PNW2838
	38	Guide Support L	PNW2839
	39	Guide Support R	PNW2840
	40	Disc Guard	PNW2841
	41	Sensor Stay	PNW2842
	42	Guide Roller	PNW2843
	43	Slider Motor	VXM1033
	44	Rack Label	PAM1770
	45	S Label	PAM1771
	46	+1 Label	PRW1507
	47	Screw	BBZ30P080FZK
	48	Screw	BMZ26P040FZK
	49	Screw	BPZ26P060FMC
	50	Screw	BPZ30P100FCU
	51	Screw	IPZ20P080FMC
	52	Screw	PPZ30P080FMC
	53	Arm Assy	PXA1615
	*1	Froil 397 (for service)	GYA1001
	*2	Ha Narl PN955R (for service)	GEM1016

2.4 FLOAT BASE ASSY SECTION

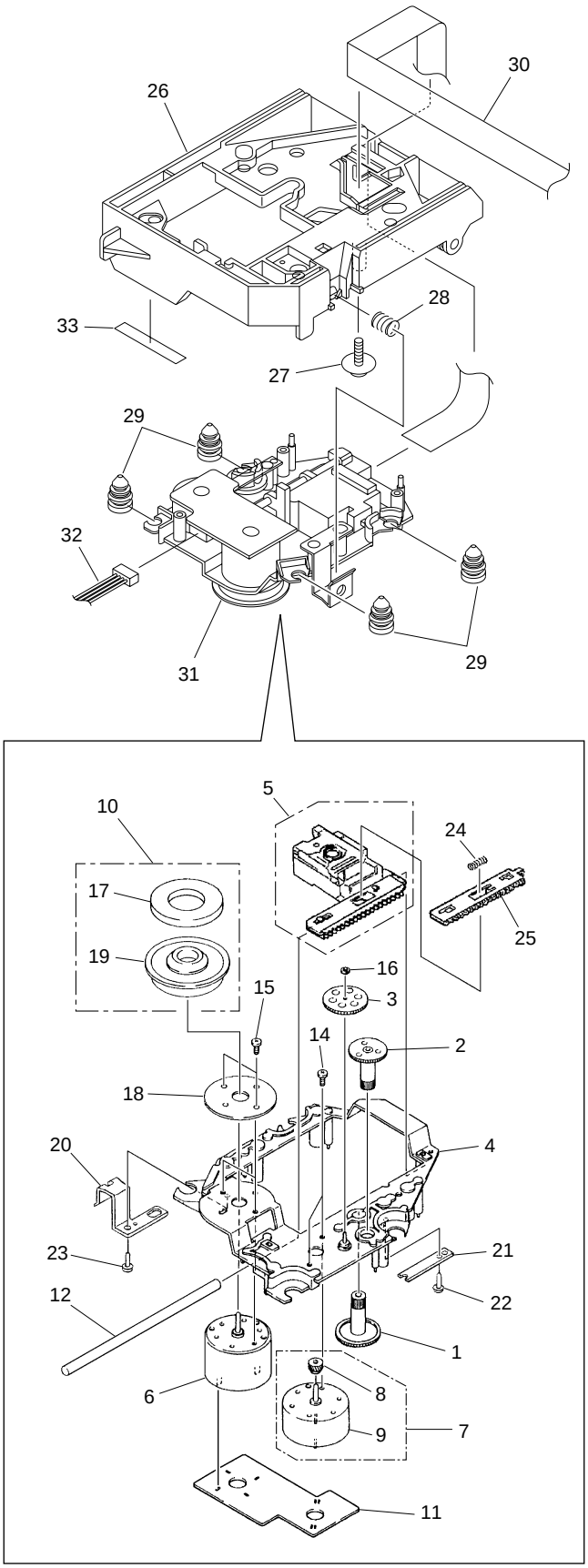

FLOAT BASE ASSY SECTION PARTS LIST

Mark	No.	Description	Part No.
	1	Gear 1	PNW2052
	2	Gear 2	PNW2053
	3	Gear 3	PNW2054
	4	Carriage Base	PNW2699
	5	Pickup Assy - S	PEA1335
	6	D.C. Motor Assy (SPINDLE)	PEA1235
	7	Carriage DC Motor Assy	PEA1246
	8	Pinion Gear	PNW2055
	9	Carriage DC Motor/0.3W	PXM1027
	10	Disc Table Assy	PEA1314
	11	Mechanism Board Assy	PWX1192
	12	Guide Bar	PLA1094
	13	……	
	14	Screw	JFZ17P025FZK
	15	Screw	JFZ20P040FMC
	16	Washer	WT12D032D025
	17	Clamp Magnet	PMF1014
	18	Yoke M	PNB1312
NSP	19	Disc Table	PNW2410
NSP	20	Float Angle	ANB7020
	21	Gear Stopper	PNB1303
	22	Screw	BPZ20P060FMC
	23	Screw	BPZ26P100FMC
	24	PU Rack Spring	ABH7077
	25	Rack Holder	PNW2056
	26	Float Base	PNW2828
	27	Screw	ABA7009
	28	Float Spring	ABH7049
	29	Float Rubber	AEB7028
	30	16P F·F·C/30V	PDD1185
NSP	31	Servo Mechanism Assy GM	PXA1591
	32	Connector Assy (4P)	RDE1043
	33	Sheet	PED1028

● How to Install the Disc Table

1 Use nipper or other tool to cut the three sections marked Ⓐ in figure 1. Then remove the spacer

2 While supporting the spindle motor shaft with the stopper, put spacer on top of the yoke M, and stick the disc table on top (takes about 9kg pressure). Detach the spacer.

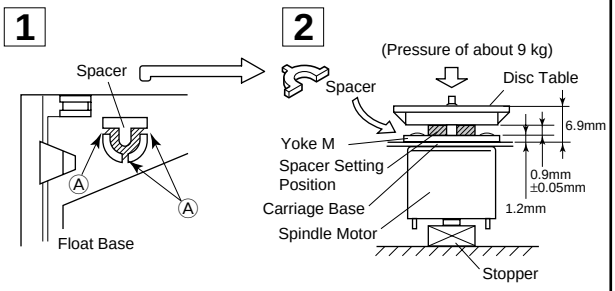

2.5 FRONT PANEL ASSY SECTION

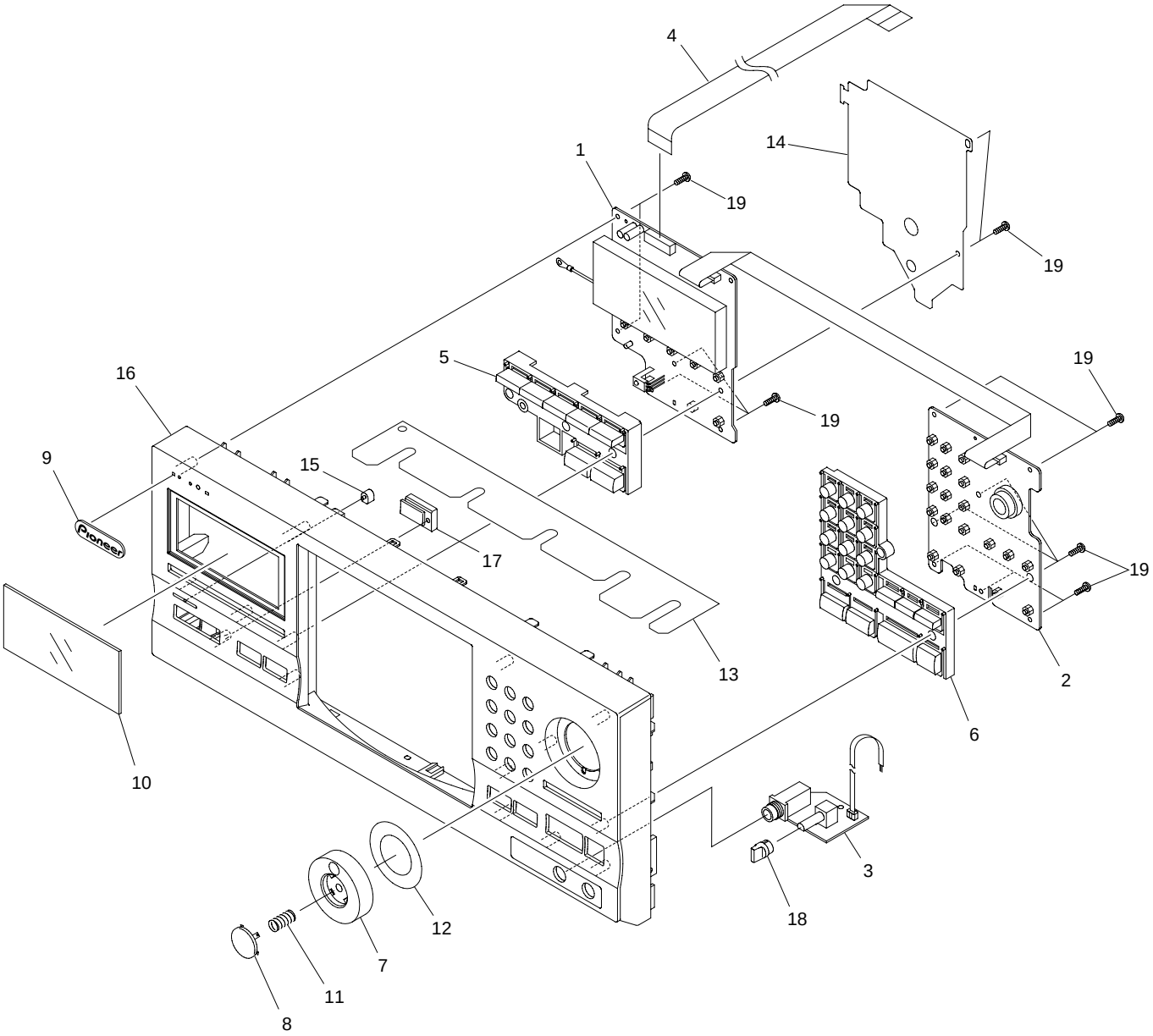

FRONT PANEL ASSY SECTION PARTS LIST

Mark	No.	Description	Part No.
	1	DISPLAY BOARD ASSY	PWZ3839
NSP	2	FUNCTION BOARD ASY	PWZ3847
NSP	3	HEADPHONE BOARD ASSY	PWZ3860
	4	16P F·F·C/30V	PDD1189
	5	MODE Button	PAC1880
	6	PLAY Button	PAC1881
	7	Jog Dial	PAC1882
	8	ENTER Button	PAC1883
	9	Name Plate	PAM1776
	10	Display Window	PAM1782
	11	Enter Spring	PBH1228
	12	Jog Sheet	PEC1042
	13	FC Cover	PNM1323
	14	PCB Cover	PNM1324
	15	LED Lens	PNW2019
	16	Operation Panel	PNW2794
	17	Sensor Lens	PNW2804
	18	Rotary Knob	RAC1903
	19	Screw	PPZ30P100FMC

3. SCHEMATIC DIAGRAM

Note : When ordering service parts, be sure to refer to "EXPLODED VIEWS and PARTS LIST" or "PCB PARTS LIST".

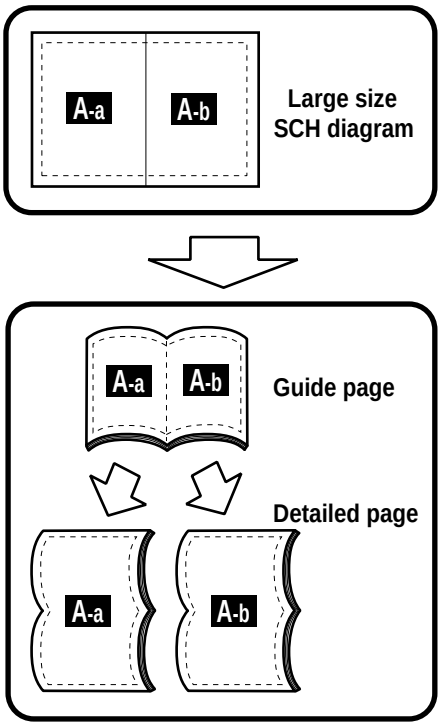

3.1 MECHANISM BOARD, DOOR MOTOR BOARD, DOOR SW BOARD, LED BOARD and PICKUP ASSEMBLIES

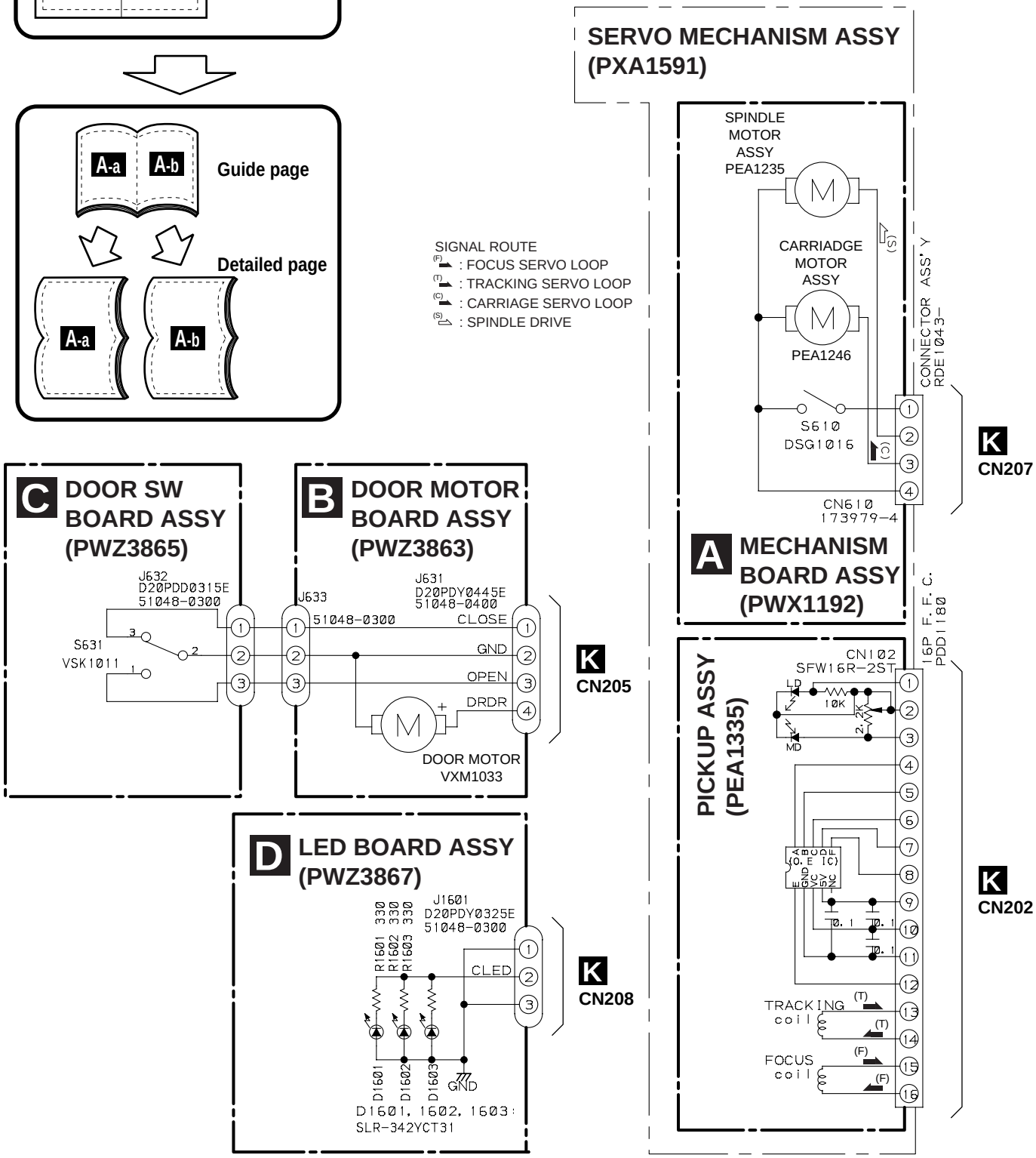

3.2 LOADING SW, LOADING BOARD, SENSOR BOARD, RECIEVE BOARD, RADIATE BOARD and SELECT BOARD ASSEMBLIES

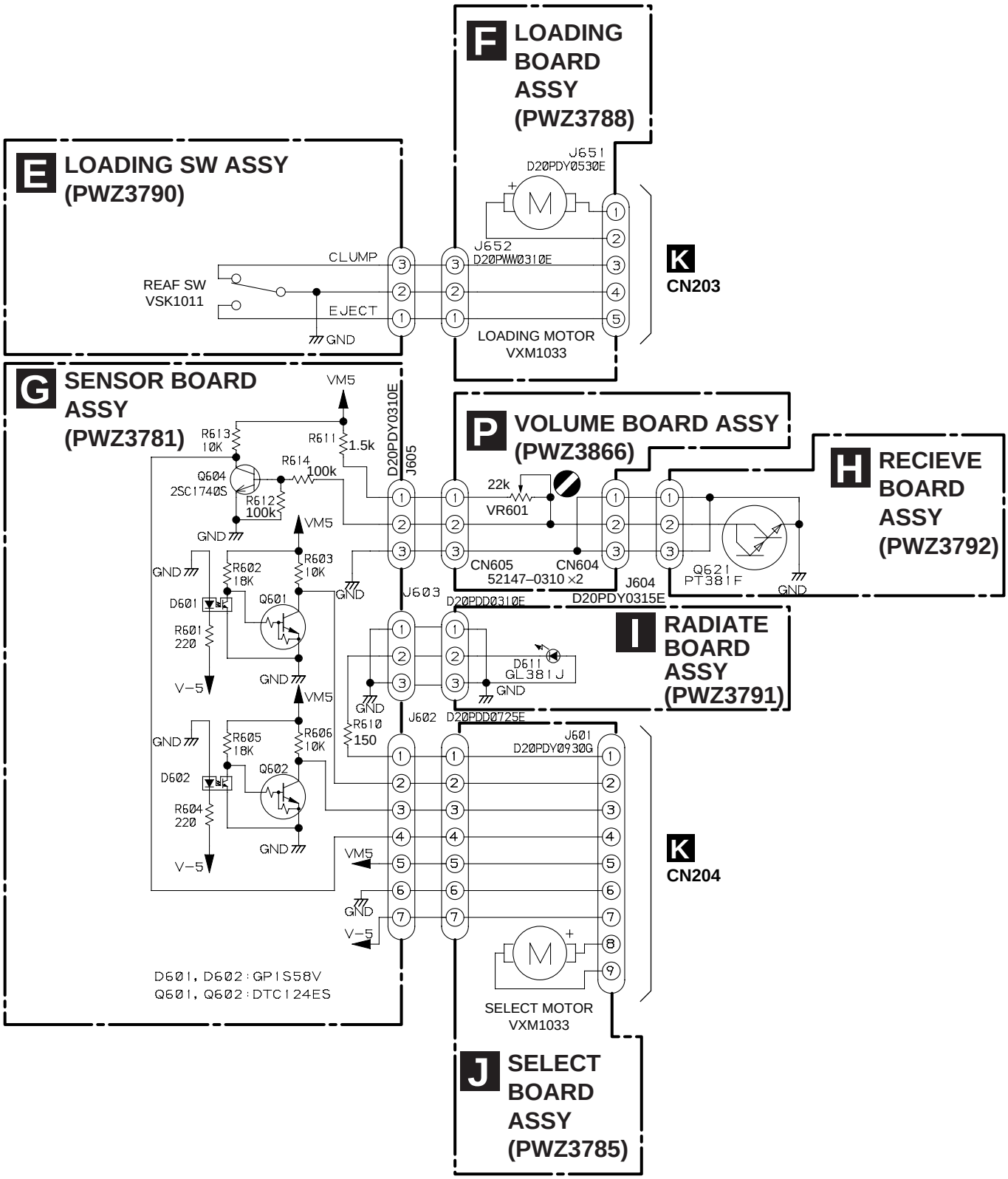

K-a

3.3 MAIN BOARD ASSY

CAUTION : FOR CONTINUED PROTECTION AGAINST RISK OF FIRE, REPLACE ONLY WITH SAME TYPE NO. ICP-N10, MFD BY ROHM CO., FOR IC35 AND IC36.

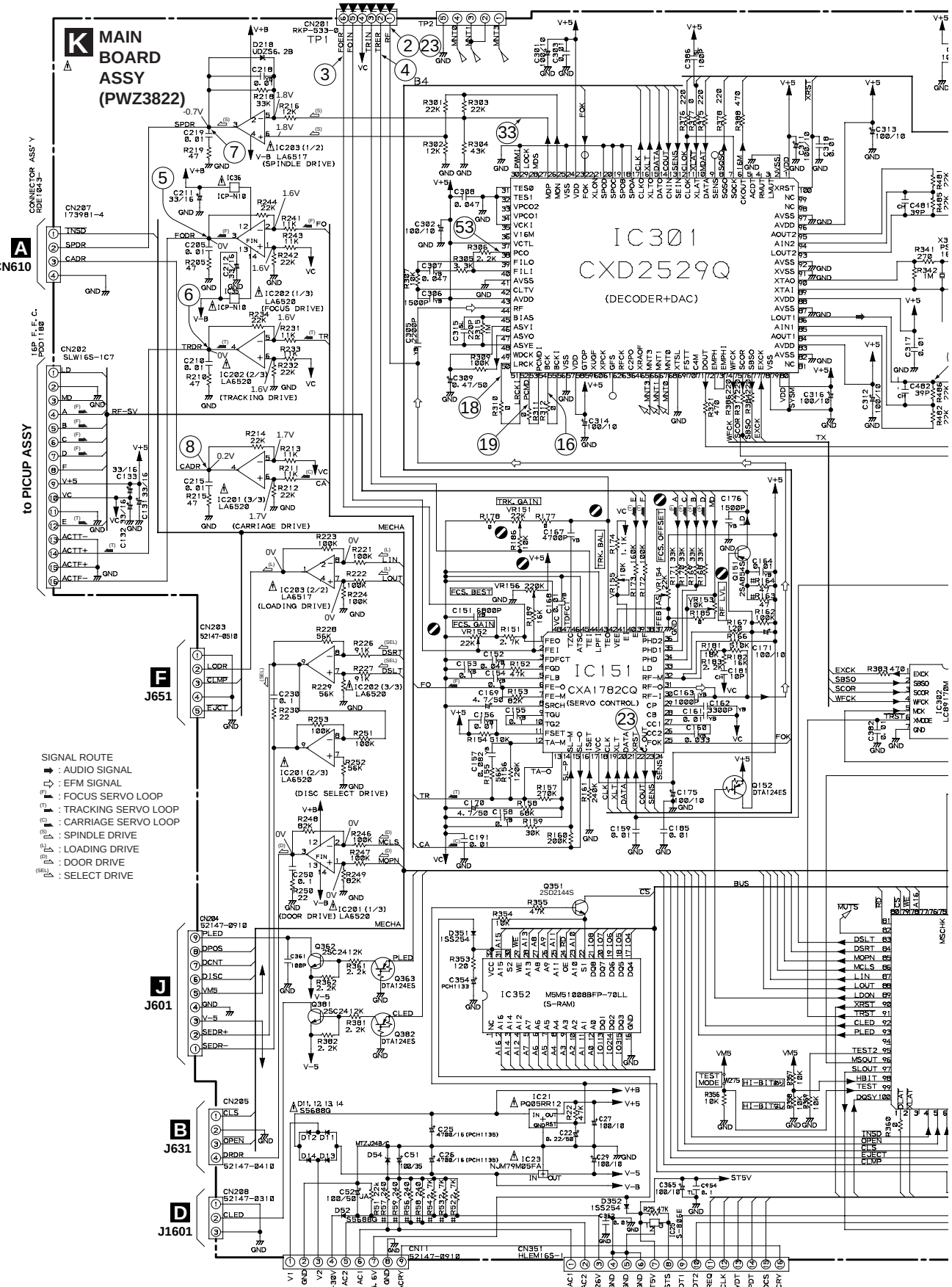

K-b

IC301(CXD2529Q) :PLAY MODE

PIN No.	1	2	3 - 4	7	8	9	10	11	12	13	14	16	17	23	24	25
Voltage(V)	5	0	0	4.7	1.2-1.3	1.2-1.4	4.4	5	4.7	4.7	0.05	5	4.7	5	5	0

PIN No.	26	27	38	39	40	41	42	43	44	45	46	47	48	50-55	56	57
Voltage(V)	5	2.6-2.7	2.5	3.1	2.5	0	3.1	5	2.5	0.9	2.5	2.5	5	2.5	0	5

PIN No.	61	71	75	78	79	82	83	84-86	87	88	89-90	91-92	93-95	96	97	100
Voltage(V)	5	2.5	0	0	5	0	5	2.5	0	5	2.5	0	2.5	5	0	5

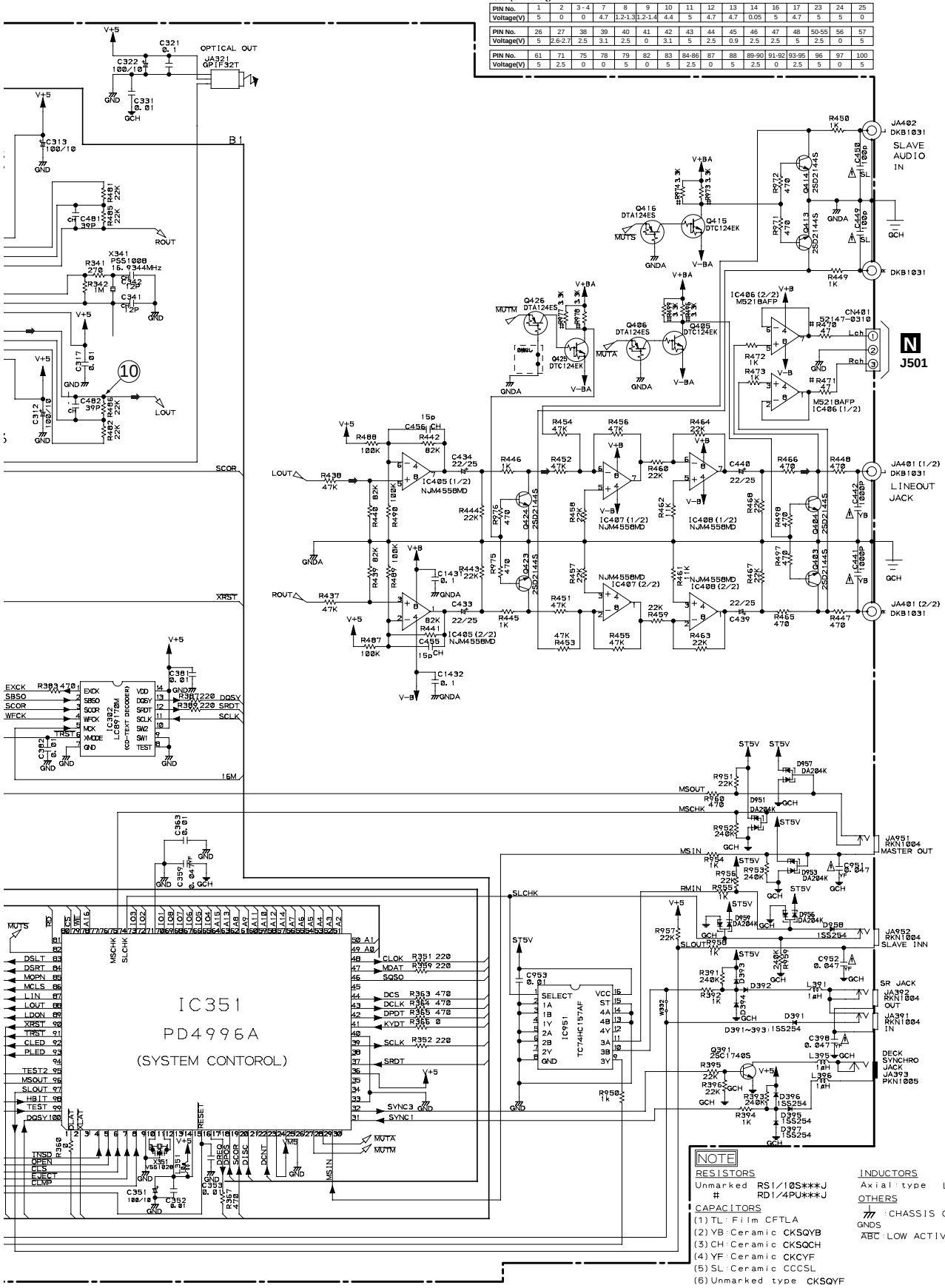

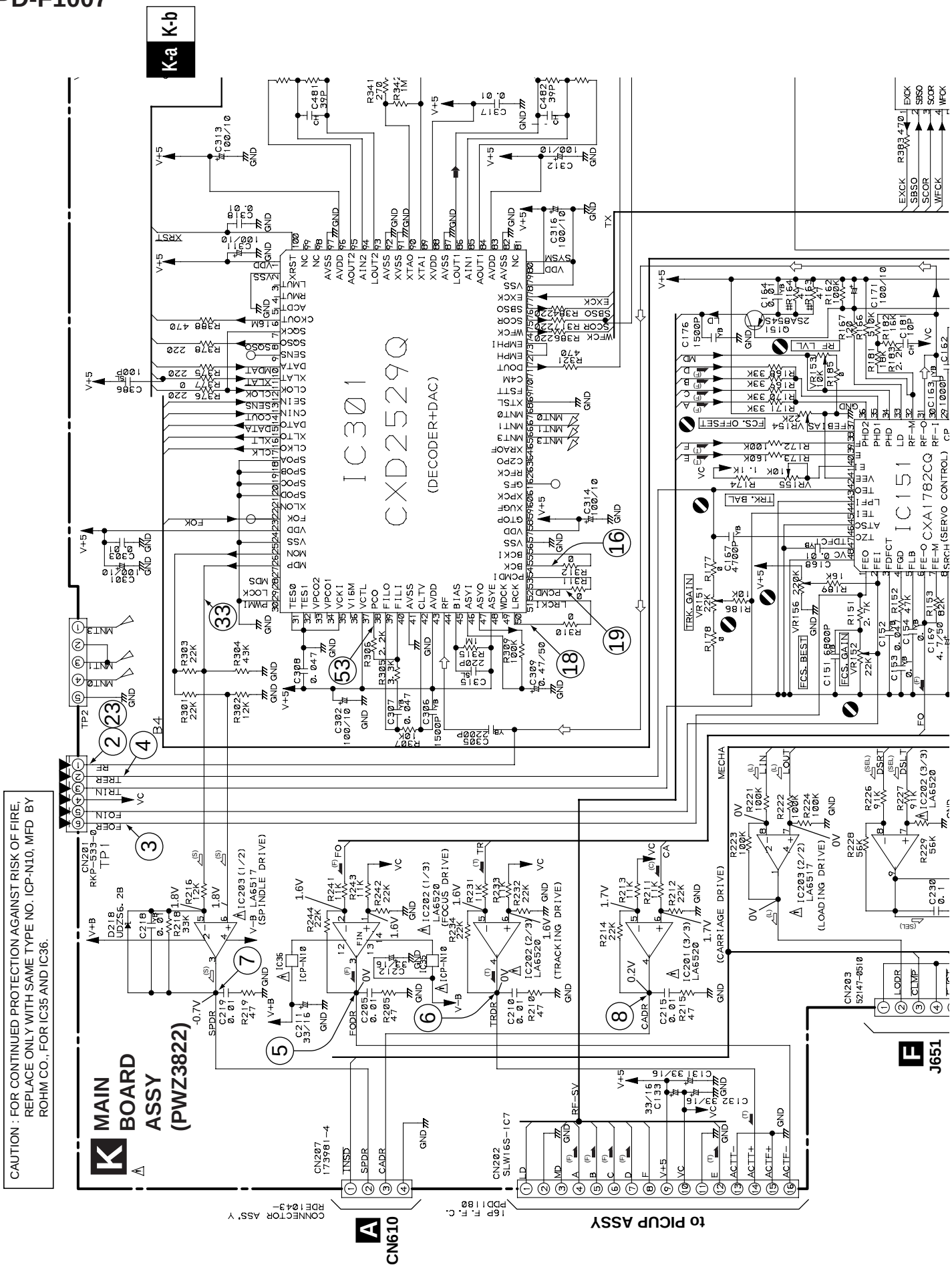
K-a K-b
IC301
CXD2529Q
(DECODER+DAC)
IC151
CXA1782CQ
(SERVO CONTROL)
K MAIN BOARD ASSY (PWZ3822)
CAUTION : FOR CONTINUED PROTECTION AGAINST RISK OF FIRE, REPLACE ONLY WITH SAME TYPE NO. ICP-N10, MFD BY ROHM CO., FOR IC35 AND IC36.
CN201 RKP-533-0
TP1
CN207 173981-4
CN202 SLW16S-IC7
CN203 52147-0510
CN610
CONNECTOR ASS'Y RDE1043-
16P F.F.C. PDD1180
to PICUP ASSY
J651
IC202 (1/3) LA6520 (FOCUS DRIVE)
IC202 (2/3) LA6520 (TRACKING DRIVE)
IC201 (3/3) LA6520 (CARRIAGE DRIVE)
IC203 (1/2) LA6517 (SPINDLE DRIVE)
IC203 (2/2) LA6517 (LOADING DRIVE)
IC202 (3/3) LA6520
MECHA

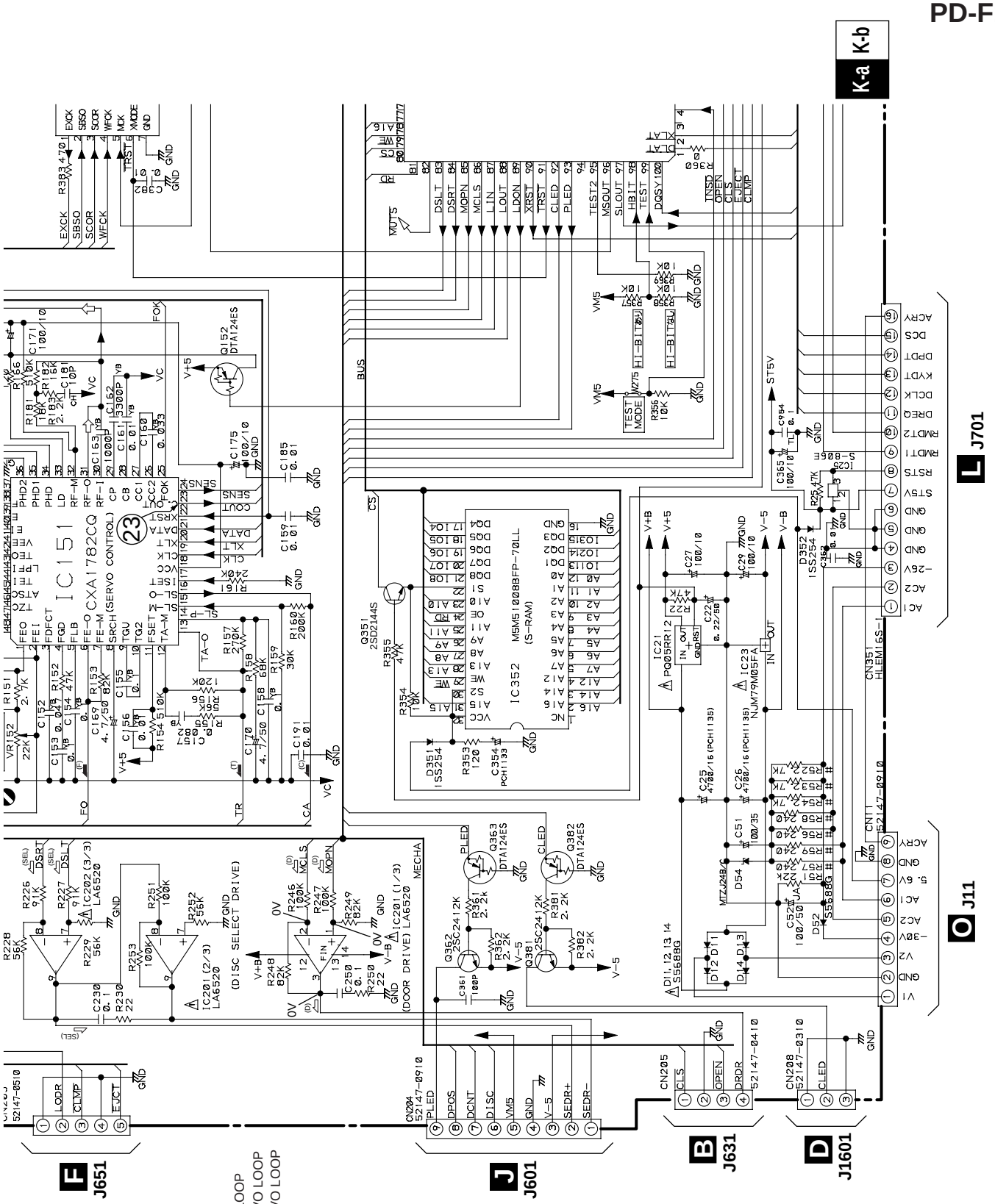

SIGNAL ROUTE
: AUDIO SIGNAL
: EFM SIGNAL
: FOCUS SERVO LOOP
: TRACKING SERVO LOOP
: CARRIAGE SERVO LOOP
: SPINDLE DRIVE
: LOADING DRIVE
: DOOR DRIVE
: SELECT DRIVE

K-a K-b

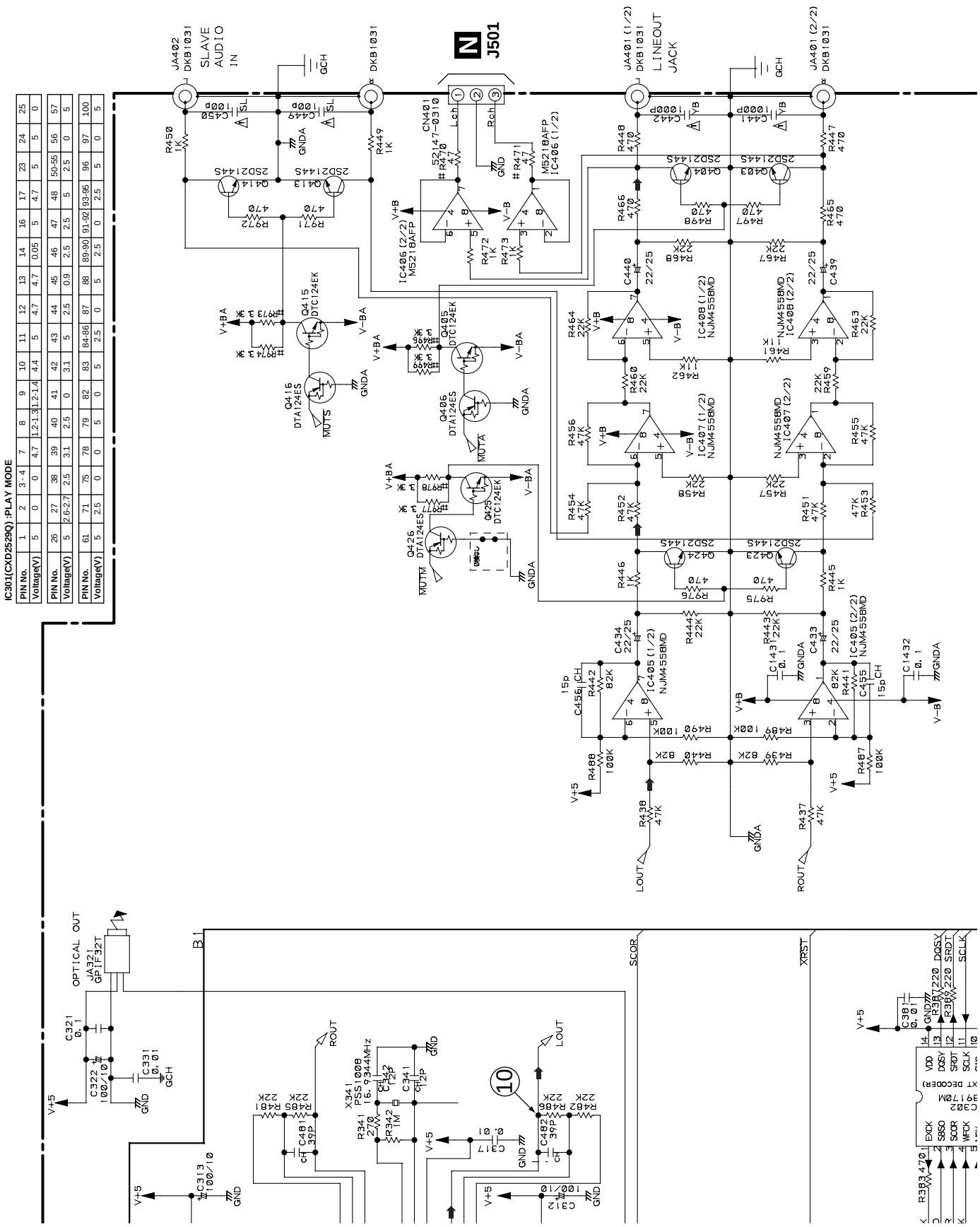
J501
SLAVE AUDIO IN
LINEOUT JACK
OPTICAL OUT
JA402 DKB1031
JA401 (1/2) DKB1031
JA401 (2/2) DKB1031
JA321 GP1F32T
CN401 52147-0310
IC405 (2/2) M5218AFP
IC406 (1/2) M5218AFP
IC408 (1/2) NJM4558MD
IC408 (2/2) NJM4558MD
IC407 (1/2) NJM4558MD
IC407 (2/2) NJM4558MD
IC405 (1/2) NJM4558MD
IC405 (2/2) NJM4558MD
Q415 DTC124EK
Q405 DTC124EK
Q406 DTA124ES
Q416 DTA124ES
Q426 DTA124ES
Q425 DTC124EK
Q413 2SD2144S
Q414 2SD2144S
Q403 2SD2144S
Q404 2SD2144S
Q423 2SD2144S
Q424 2SD2144S
MUTS
MUTA
MUTM
LOUT
ROUT
SCOR
XRST
EXCK
SBSO
SCOR
WFCK
VDD
DQSY
SPDT
SCLK
DQSY
SRDT
SCLK
C302 391703M (DIGITAL DECODER)
X341 PSS1008 16.9344MHz
IC312 C312 100/10
IC313 C313 100/10
IC317 C317 0.01
IC482 C482 39P
IC481 C481 39P
IC442 C442 1000P
IC441 C441 1000P
IC449 C449 100P
IC450 C450 100P
IC432 C432 0.1
IC143 C143 0.1
IC321 C321 0.1
IC322 C322 100/10
IC331 C331 0.01
IC341 C341 12P
IC342 C342 12P
IC343 C343 1M
IC381 C381 0.01
IC434 C434 22/25
IC433 C433 22/25
IC440 C440 22/25
IC439 C439 22/25
IC456 C456 15p
IC455 C455 15p
IC441 R441 82K
IC442 R442 82K
IC443 R443 22K
IC444 R444 22K
IC445 R445 1K
IC446 R446 1K
IC447 R447 470
IC448 R448 470
IC449 R449 1K
IC450 R450 1K
IC451 R451 47K
IC452 R452 47K
IC453 R453 47K
IC454 R454 47K
IC455 R455 47K
IC456 R456 47K
IC457 R457 22K
IC458 R458 22K
IC459 R459 22K
IC460 R460 22K
IC461 R461 1K
IC462 R462 1K
IC463 R463 22K
IC464 R464 22K
IC465 R465 470
IC466 R466 470
IC467 R467 470
IC468 R468 470
IC469 R469 470
IC470 R470 47
IC471 R471 47
IC472 R472 1K
IC473 R473 1K
IC485 R485 22K
IC486 R486 22K
IC487 R487 100K
IC488 R488 100K
IC489 R489 100K
IC490 R490 100K
IC437 R437 47K
IC438 R438 47K
IC439 R439 82K
IC440 R440 82K
IC381 R381 22K
IC382 R382 220
IC383 R383 470
IC971 R971 470
IC972 R972 470
IC973 R973 470
IC974 R974 3K
IC975 R975 470
IC976 R976 470
IC977 R977 470
IC978 R978 470
IC979 R979 470
IC980 R980 470
IC981 R981 470
IC982 R982 470
IC983 R983 470
IC984 R984 470
IC985 R985 470
IC986 R986 470
IC987 R987 470

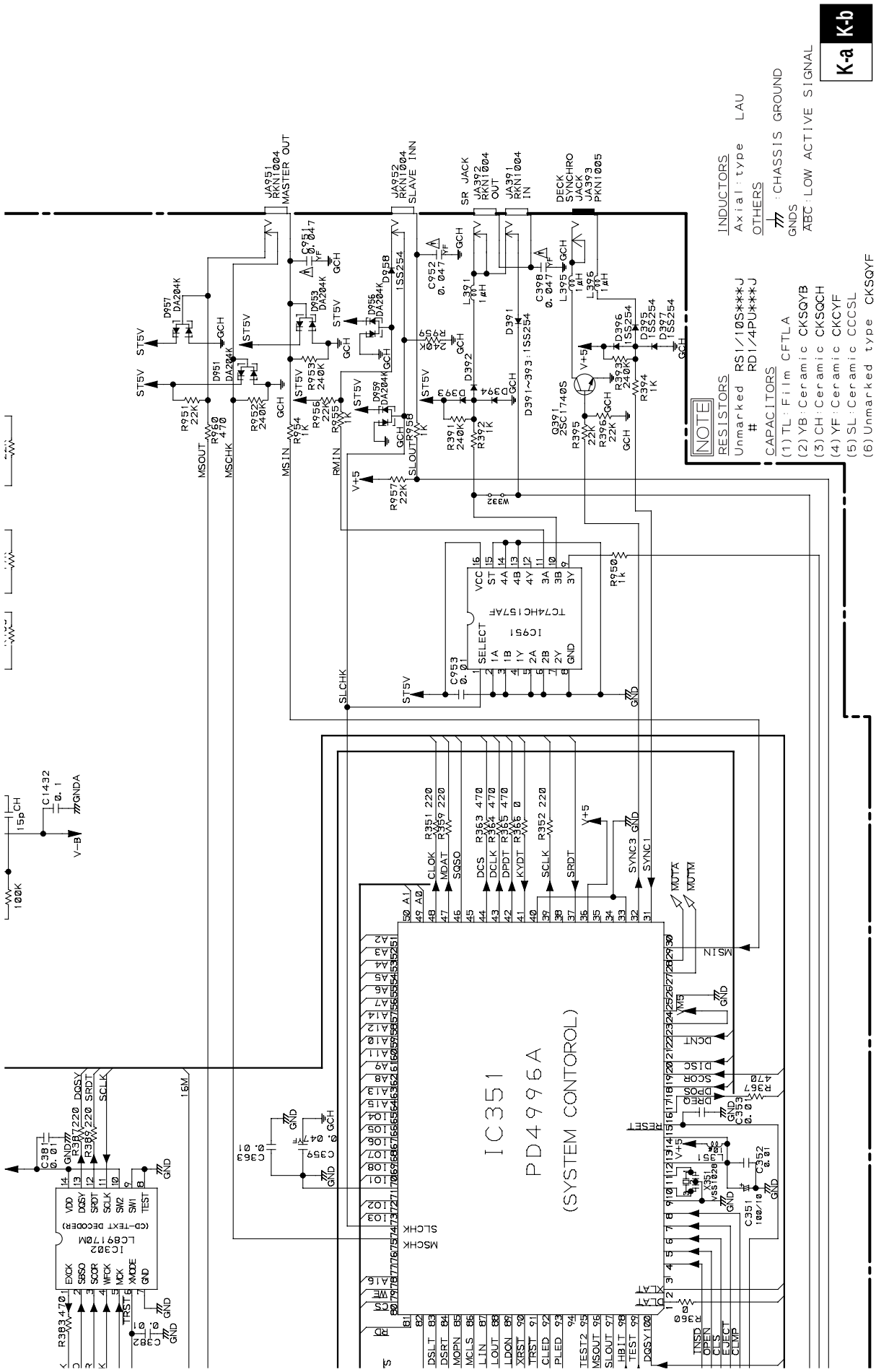
K-a K-b
INDUCTORS
Axial type LAU
OTHERS
:CHASSIS GROUND
GNDS
ABC:LOW ACTIVE SIGNAL
NOTE
RESISTORS
Unmarked RS1/10S**J
RD1/4PU**J
CAPACITORS
(1) TL:Film CFTLA
(2) YB:Ceramic CKSQYB
(3) CH:Ceramic CKSQCH
(4) YF:Ceramic CKCYF
(5) SL:Ceramic CCCSL
(6) Unmarked type CKSQYF
(7) Unmarked CEAT
IC351
PD4996A
(SYSTEM CONTOROL)
IC1951
TC74HC157AF
IC3021
LC89170M
(CD-TEXT DECODER)
JA951 RKN1004 MASTER OUT
JA952 RKN1004 SLAVE INN
JA392 RKN1004 OUT
JA391 RKN1004 IN
DECK SYNCHRO JACK JA393 PKN1005
Q391 2SC1740S

Waveforms

Note: The encircled numbers denote measuring point in the schematic diagram.

∗1 50T-JUMP: After switching to the pause mode, press the manual search key.
∗2 FOCUS-IN: Press the play key without loading a disc.

2 TP1-Pin 1: PLAY MODE (RF)
500mV/div 500nsec/div

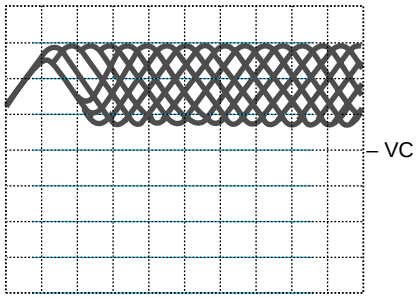

4' TP1-Pin 2: 50T - JUMP (*1) MODE (TRER)
200mV/div 1msec/div

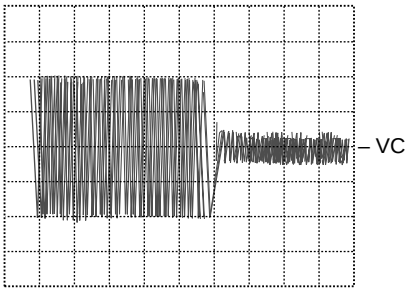

6' IC202-Pin 4: 50T - JUMP (*1) MODE (TRDR)
500mV/div 1msec/div

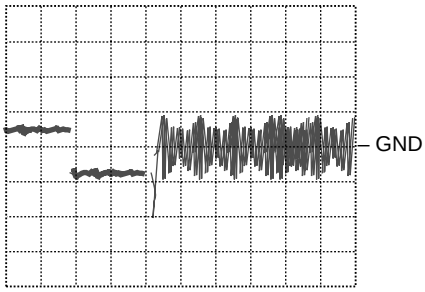

2 TP1-Pin 1: TRACK SEARCH MODE (RF)
500 mV/div 200 µsec/div

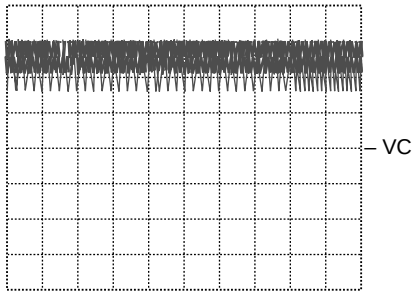

5 IC202-Pin 3: FOCUS-IN (*2) MODE (FODR)
1V/div 200msec/div

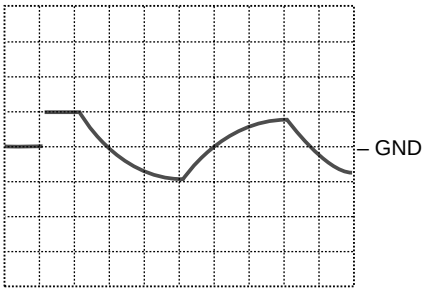

7 IC203-Pin 3: PLAY MODE (SPDR)
1V/div 50msec/div

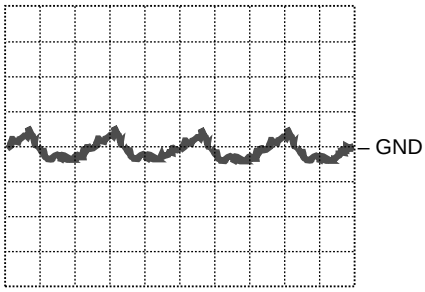

3 TP1-Pin 6: PLAY MODE (FOER)
100mV/div 10msec/div

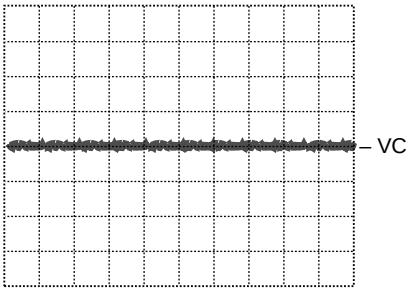

5 IC202-Pin 3: PLAY MODE (FODR)
1V/div 1msec/div

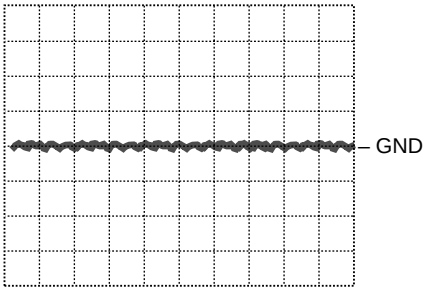

7 IC203-Pin 3: TRACK SEARCH MODE (SPDR)
2V/div 50msec/div

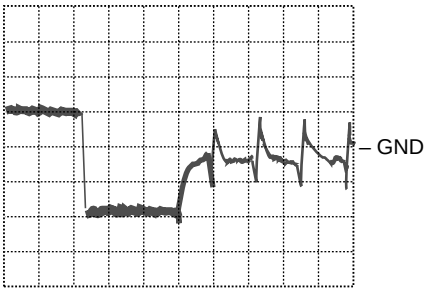

4 TP1-Pin 2: PLAY MODE (TRER)
200mV/div 1msec/div

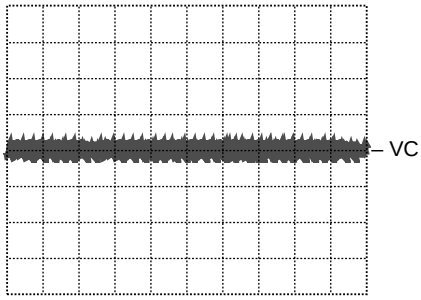

6 IC202-Pin 4: PLAY MODE (TRDR)
500mV/div 1msec/div

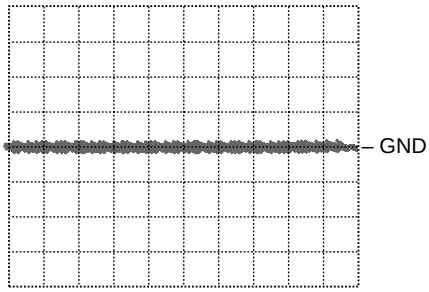

8 IC202-Pin 9: PLAY MODE (CADR)
0.2V/div 2sec/div

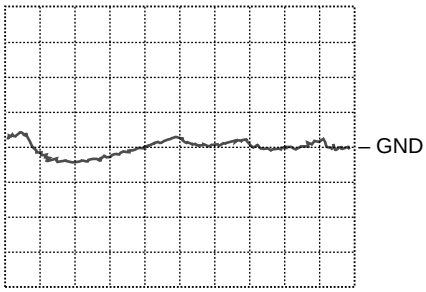

8 IC202-Pin 9: TRACK SEARCH MODE (CADR)
2V/div 200msec/div

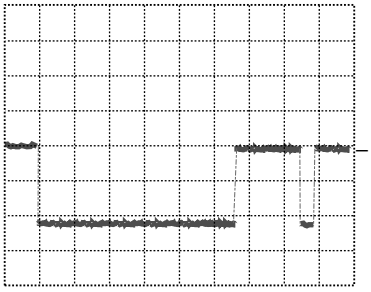

16 IC301-Pin 54 : PLAY MODE (1kHz) (BCK)
2V/div 500nsec/div

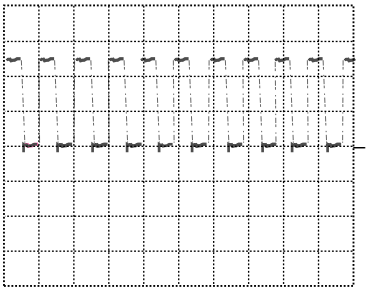

18 IC301-Pin 50 : PLAY MODE (1kHz) (LRCK)
2V/div 10 µsec/div

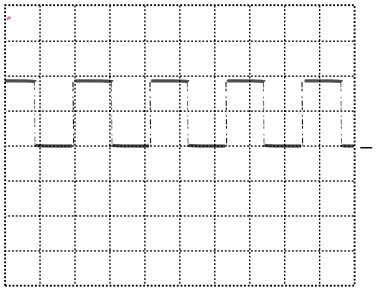

33 IC301-Pin 27 : PLAY MODE (MDP)
2V/div 2 µsec/div

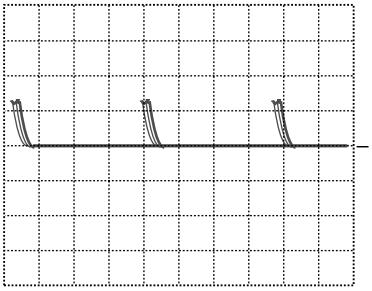

10 IC301-Pin 86 : PLAY MODE (1kHz) (LOUT 1)
1V/div 200msec/div

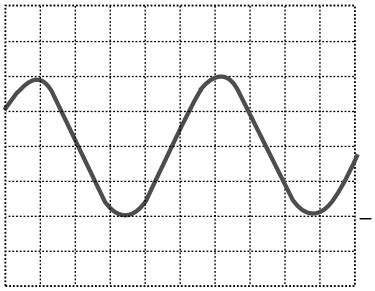

19 IC301-Pin 52 : PLAY MODE (1kHz) (PCMD)
2V/div 500nsec/div

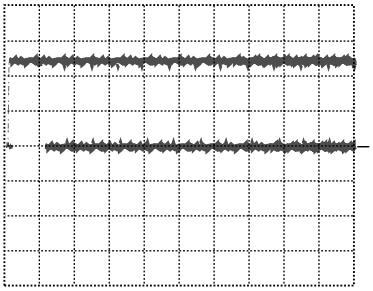

53 IC301-Pin 38 : PLAY MODE (PCO)
2V/div 10 µsec/div

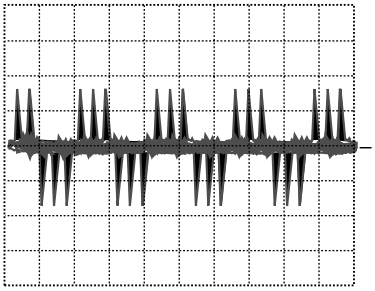

23 TRACK SEARCH MODE
Upper : TP1-Pin 1 (RF) 1V/div
Lower : IC151-Pin 23 (C.OUT)
2V/div 50 µsec/div

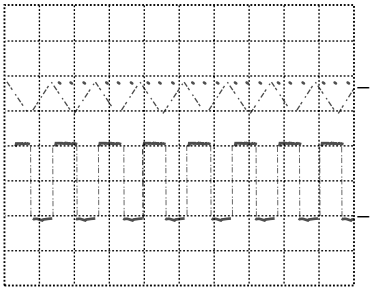

3.4 DISPLAY BOARD, FUNCTION BOARD, HEADPHONE BOARD and POWER BOARD ASSEMBLIES

DISPLAY BOARD ASSY
S701 : MODE
S702 : CLEAR
S703 : PROGRAM
S704 : RANDOM
S705 : TIME/CHARA
S706 : POWER
S707 : SINGLE LOADER ACCESS
S708 : SINGLE LOADER PLAY

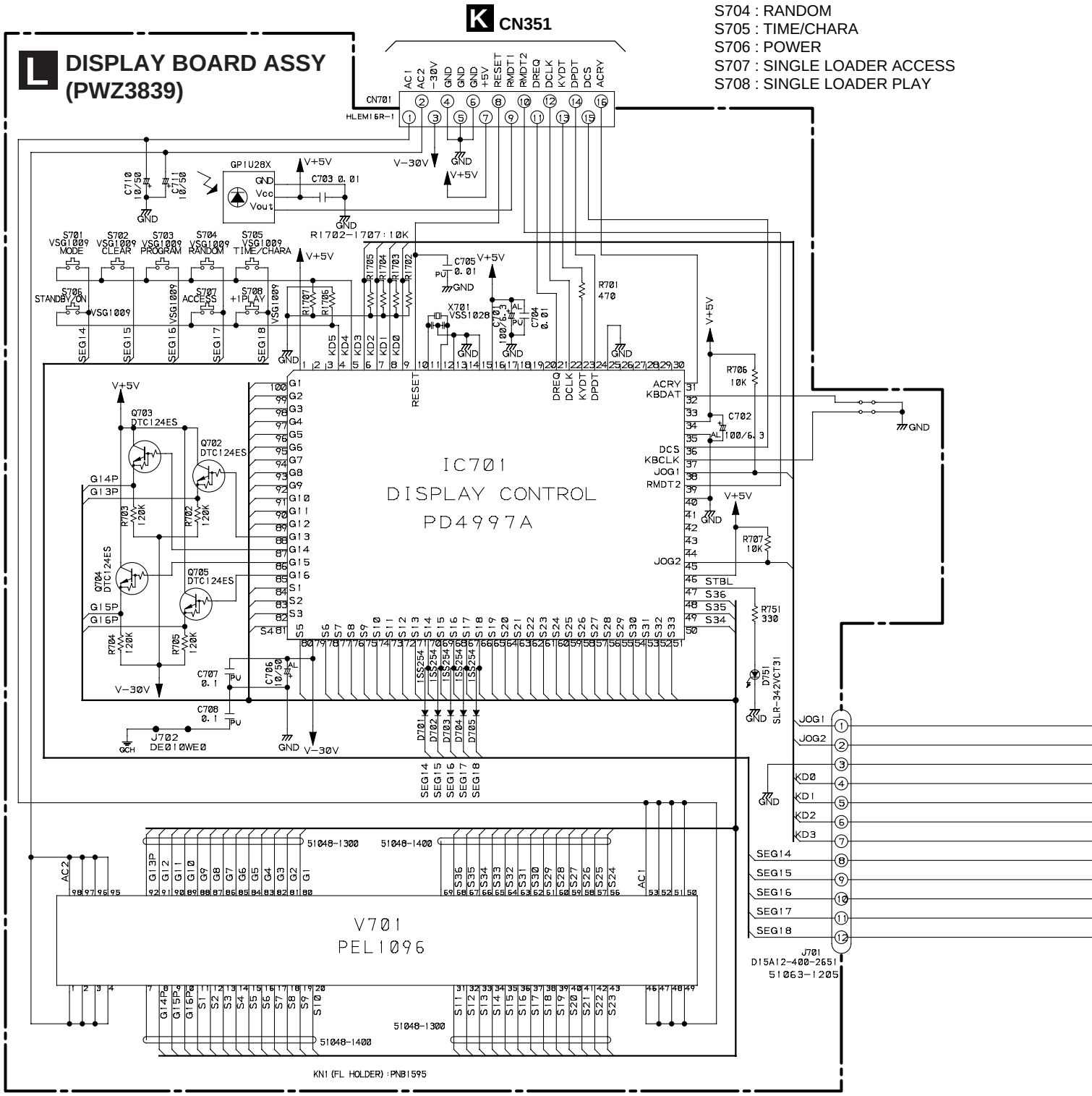

O POWER BOARD ASSY (PWZ3852)

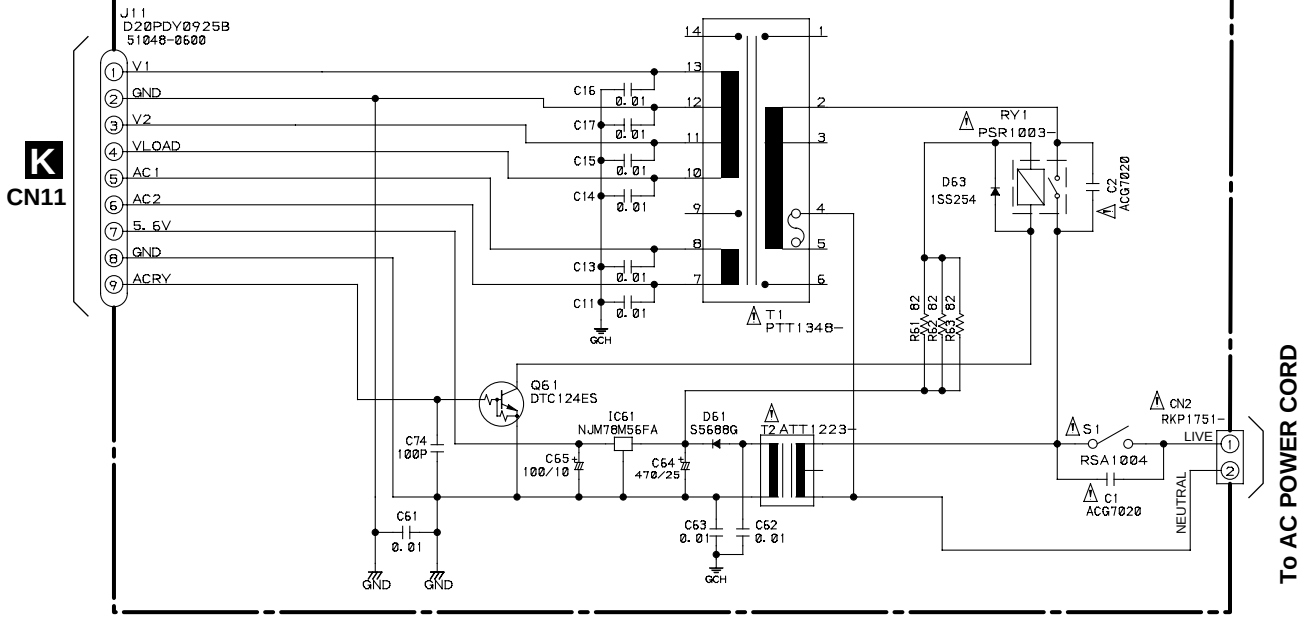

N HEADPHONE BOARD ASSY (PWZ3860)

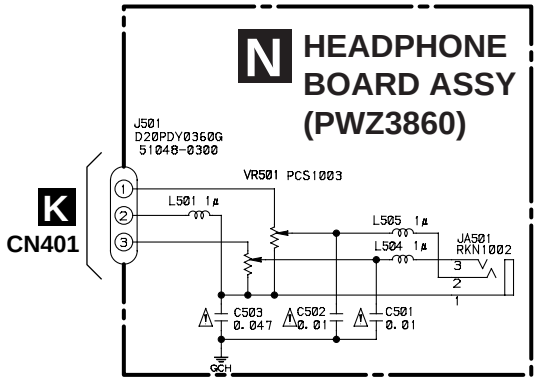

NOTE

RESISTORS

Unmarked RS1/10S***J
RD1/4PU***J

CAPACITORS

(1) TL : Film CFTLA
(2) YB : Ceramic CKSQYB
(3) CH : Ceramic CKSQCH
(4) YF : Ceramic CKCYF
(5) SL : Ceramic CCCSL
(6) Unmarked type CKSQYF
(7) Unmarked CEAT

INDUCTORS

Axial : type LAU

OTHERS

⏚ : CHASSIS GROUND

GNDS

$\overline{ABC}$: LOW ACTIVE SIGNAL

M FUNCTION BOARD ASSY (PWZ3847)

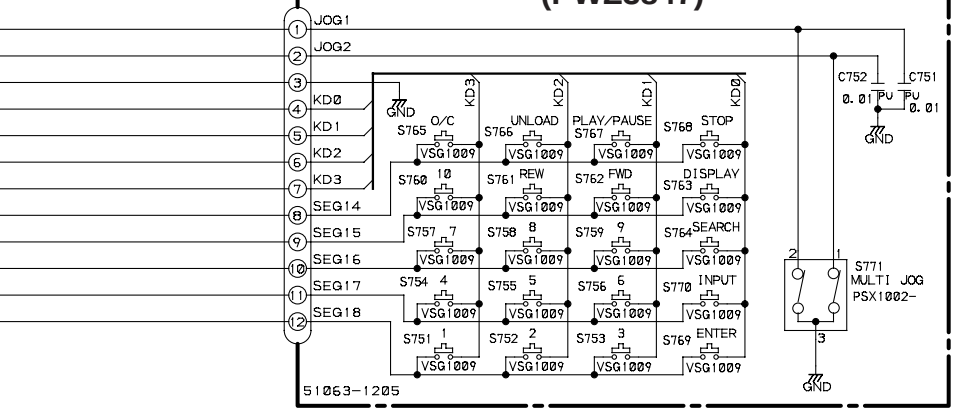

FUNCTION BOARD ASSY
S751–S760 : DIRECT CUSTOM (1–10)
S761 : Track/Manual search (reverse direction)
S762 : Track/Manual search (forward direction)
S763 : TITLE/DISPLAY
S764 : TITLE/SEARCH
S765 : OPEN/CLOSE
S766 : UNLOAD
S767 : Play/Pause
S768 : Stop
S769 : ENTER
S770 : TITLE/INPUT
S771 : Jog dial

4. PCB CONNECTION DIAGRAM

4.1 MECHANISM BOARD, DOOR MOTOR BOARD, DOOR SW BOARD and LED BOARD ASSEMBLIES

NOTE FOR PCB DIAGRAMS:

1. Part numbers in PCB diagrams match those in the schematic diagrams.
2. A comparison between the main parts of PCB and schematic diagrams is shown below.

Symbol in PCB Diagrams	Symbol in Schematic Diagrams	Part Name
B C E	B C E B C E	Transistor
B C E	B C E B C E	Transistor with resistor
D G S	D G S D G S	Field effect transistor
		Resistor array
		3-terminal regulator

3. The parts mounted on this PCB include all necessary parts for several destination.
   For further information for respective destinations, be sure to check with the schematic diagram.

4. Viewpoint of PCB diagrams

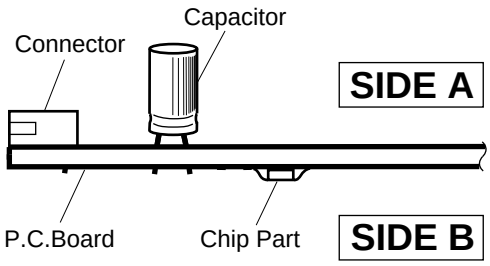

SIDE A

A MECHANISM BOARD ASSY

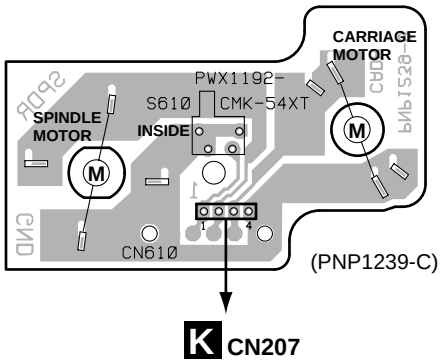

B DOOR MOTOR BOARD ASSY

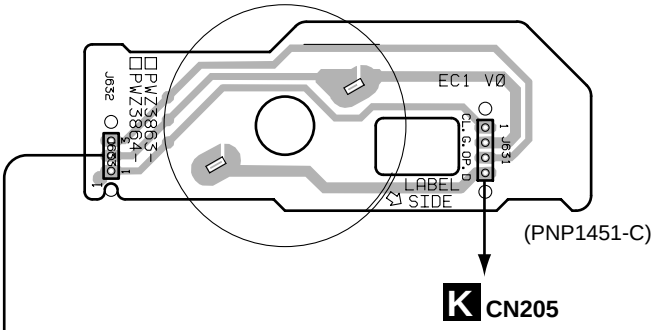

C DOOR SW BOARD ASSY

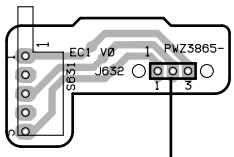

(PNP1451-C)

D LED BOARD ASSY

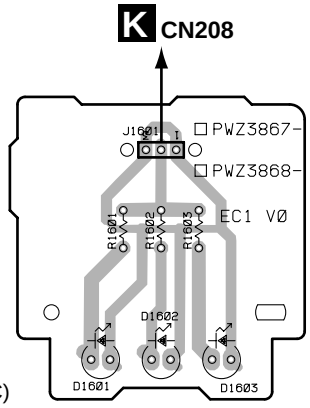

(PNP1451-C)

4.2 LOADING SW, LOADING BOARD, SENSOR BOARD, RECIEVE BOARD, RADIATE BOARD, SELECT BOARD and VOLUME BOARD ASSEMBLIES

SIDE A

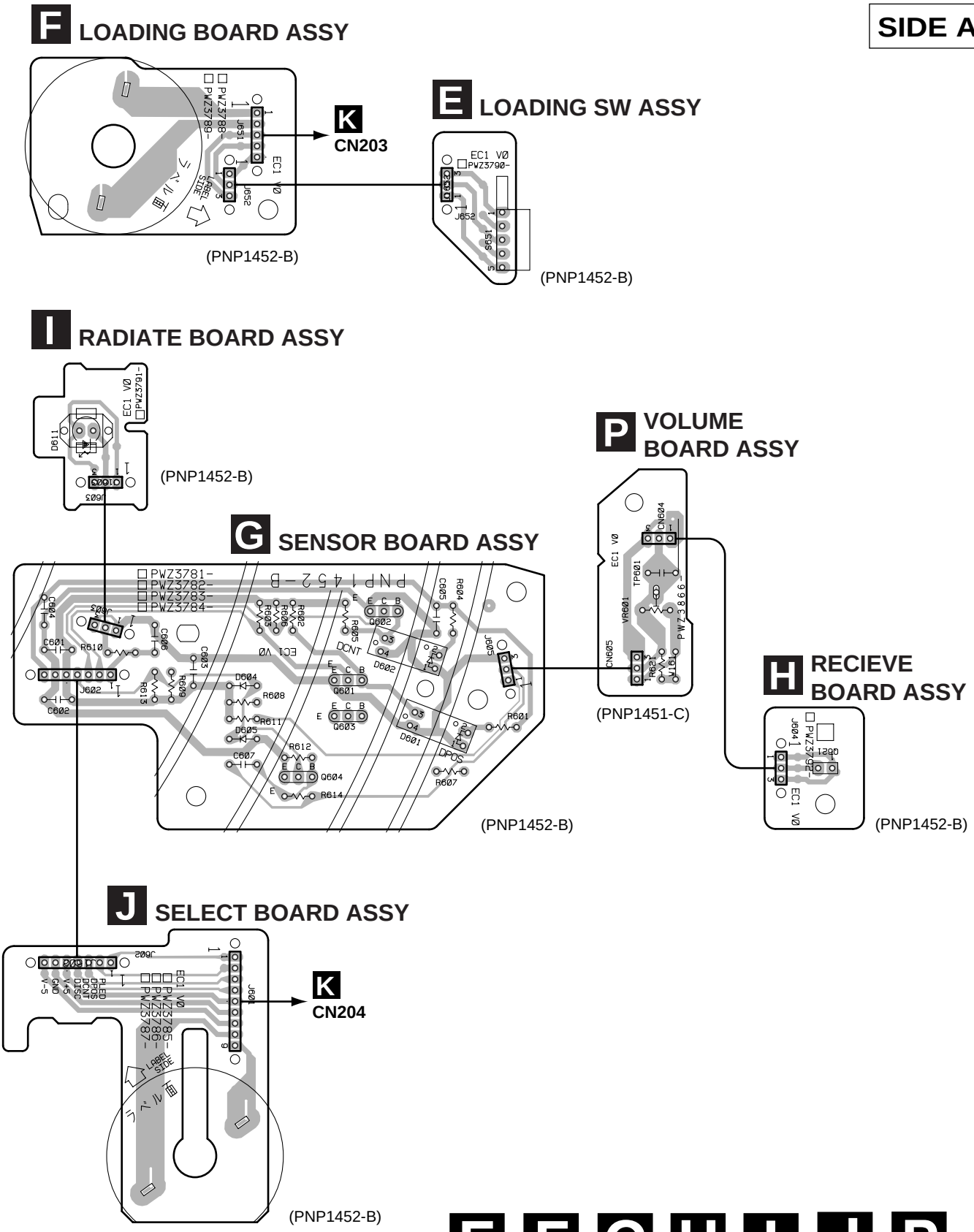

4.3 MAIN BOARD ASSY

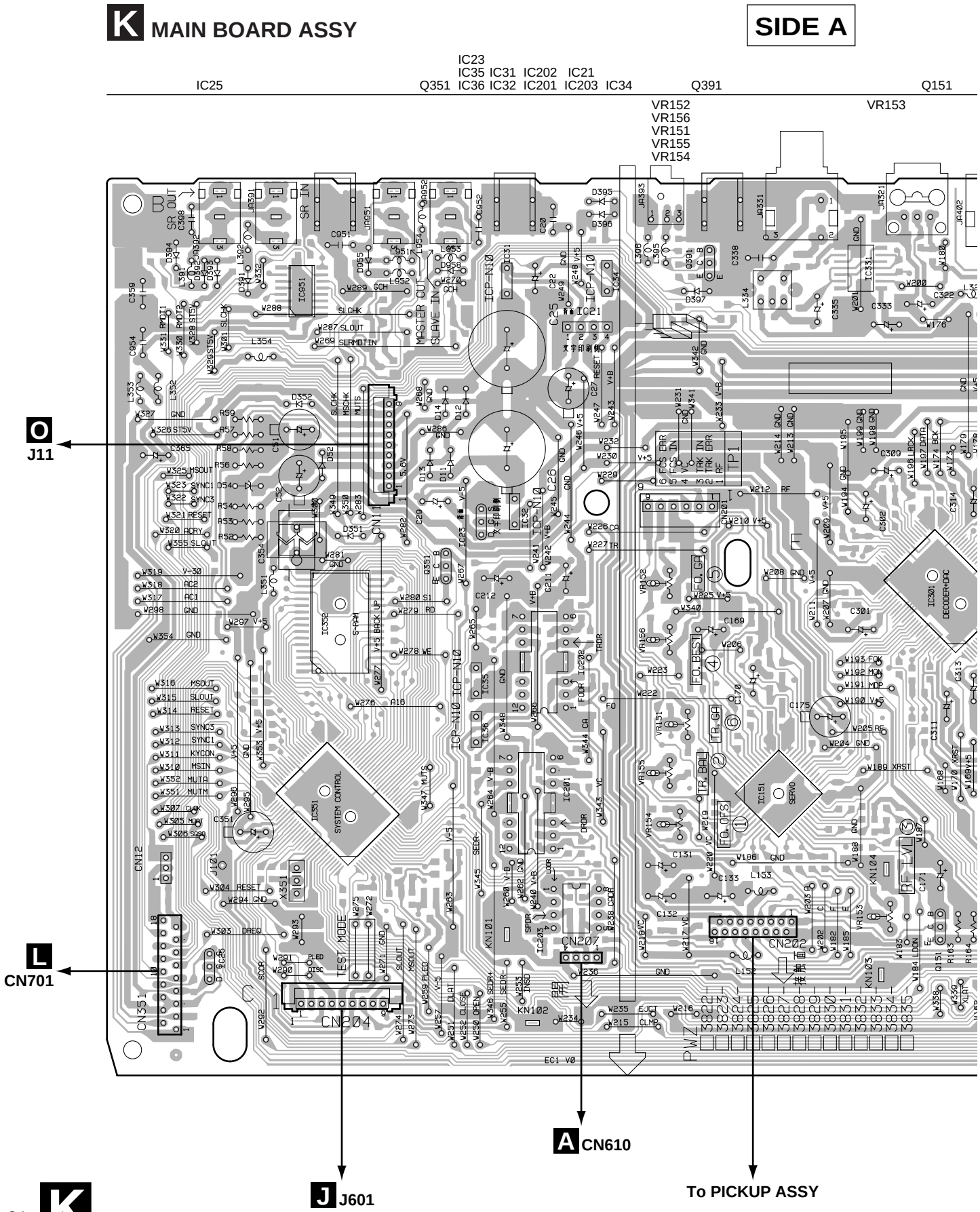

SIDE A

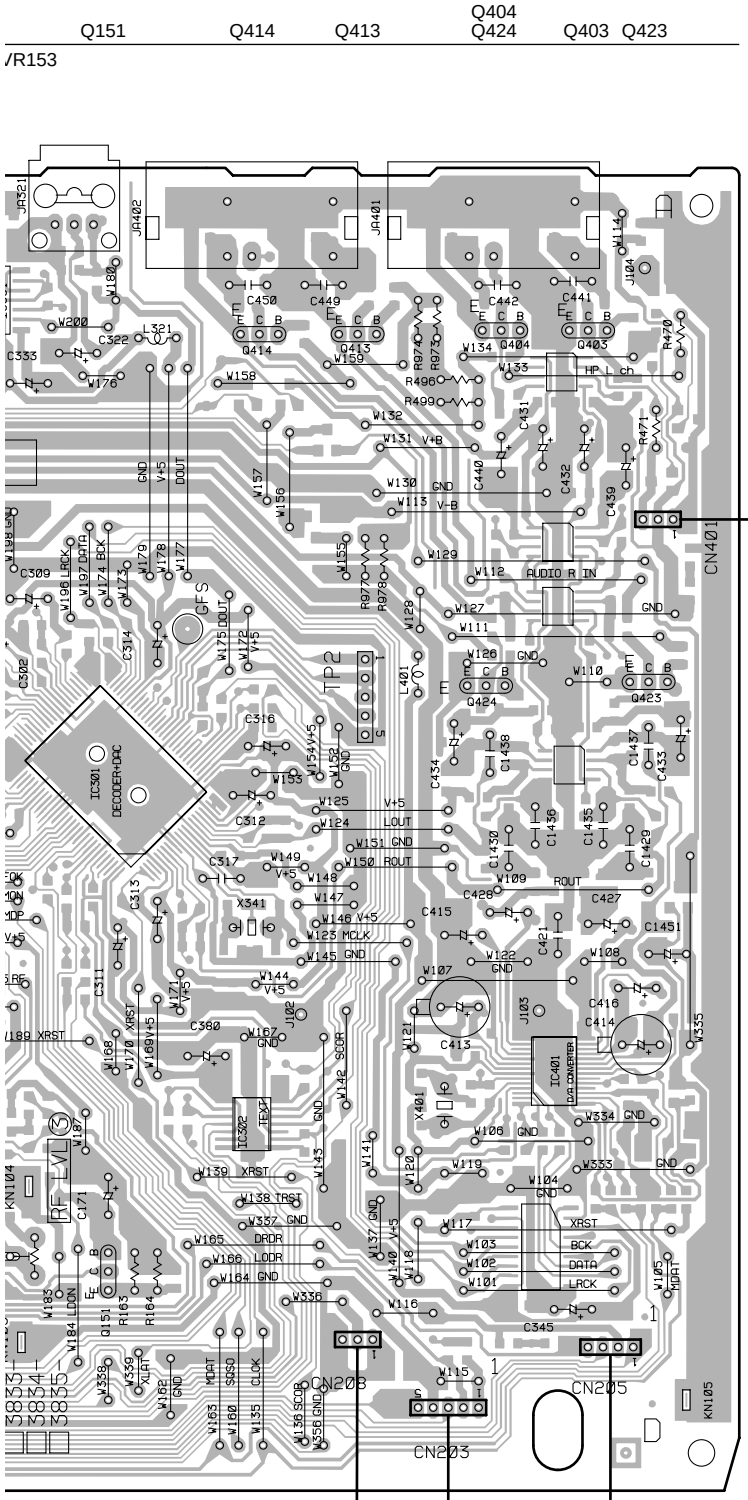

(PNP1450-A)

N HEADPHONE BOARD ASSY

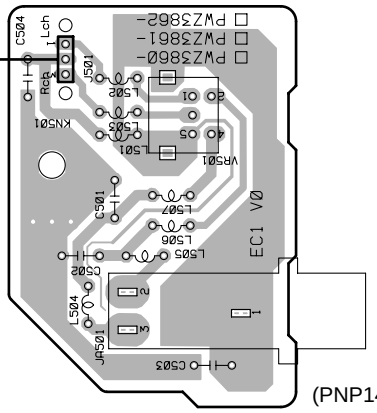

(PNP1451-C)

D J1601

F J651

B J631

K MAIN BOARD ASSY

SIDE B

	IC406				
	IC408				
	IC407				
Q470	IC405				
Q471	IC401	Q426			
Q451	IC341	Q425 Q405 Q415	IC301	Q152	I

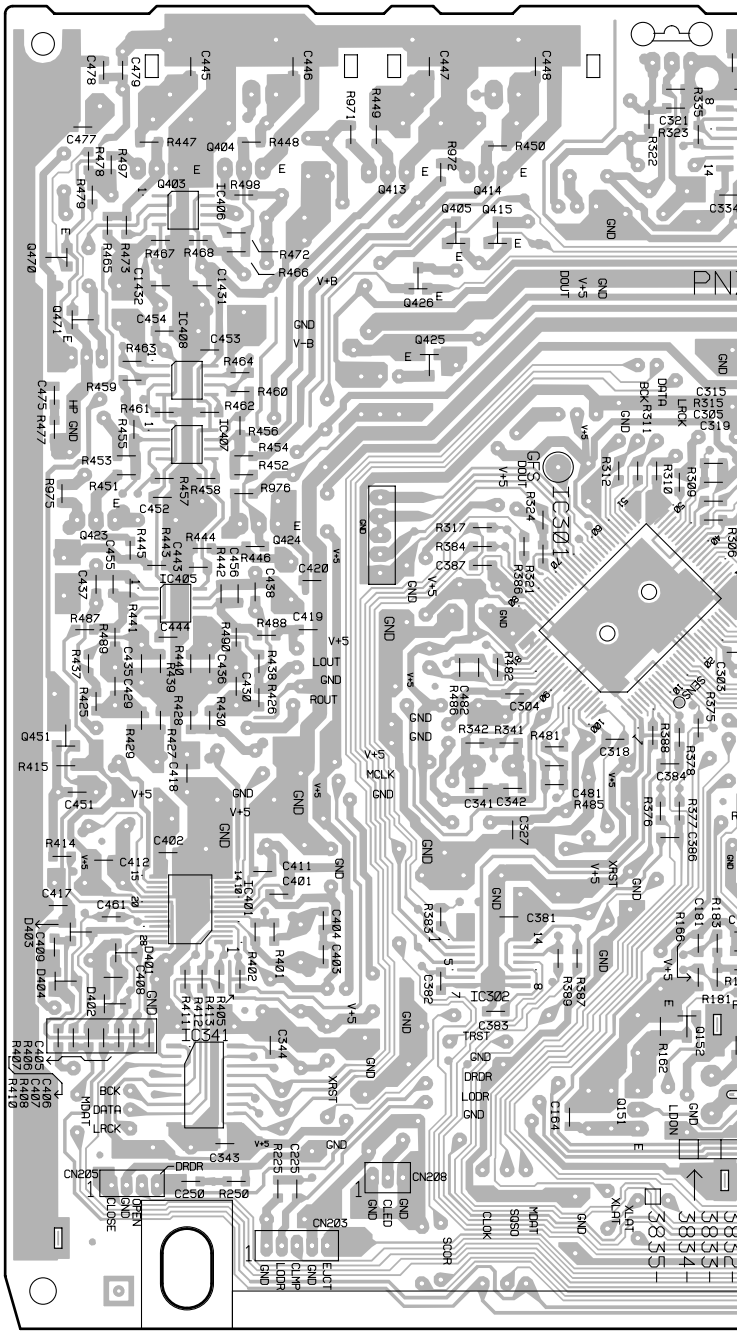

(PNP1450-A)

SIDE B

IC301 Q152 IC331 IC151 Q406 Q416 Q382 Q363 Q381 Q362 IC352 IC351

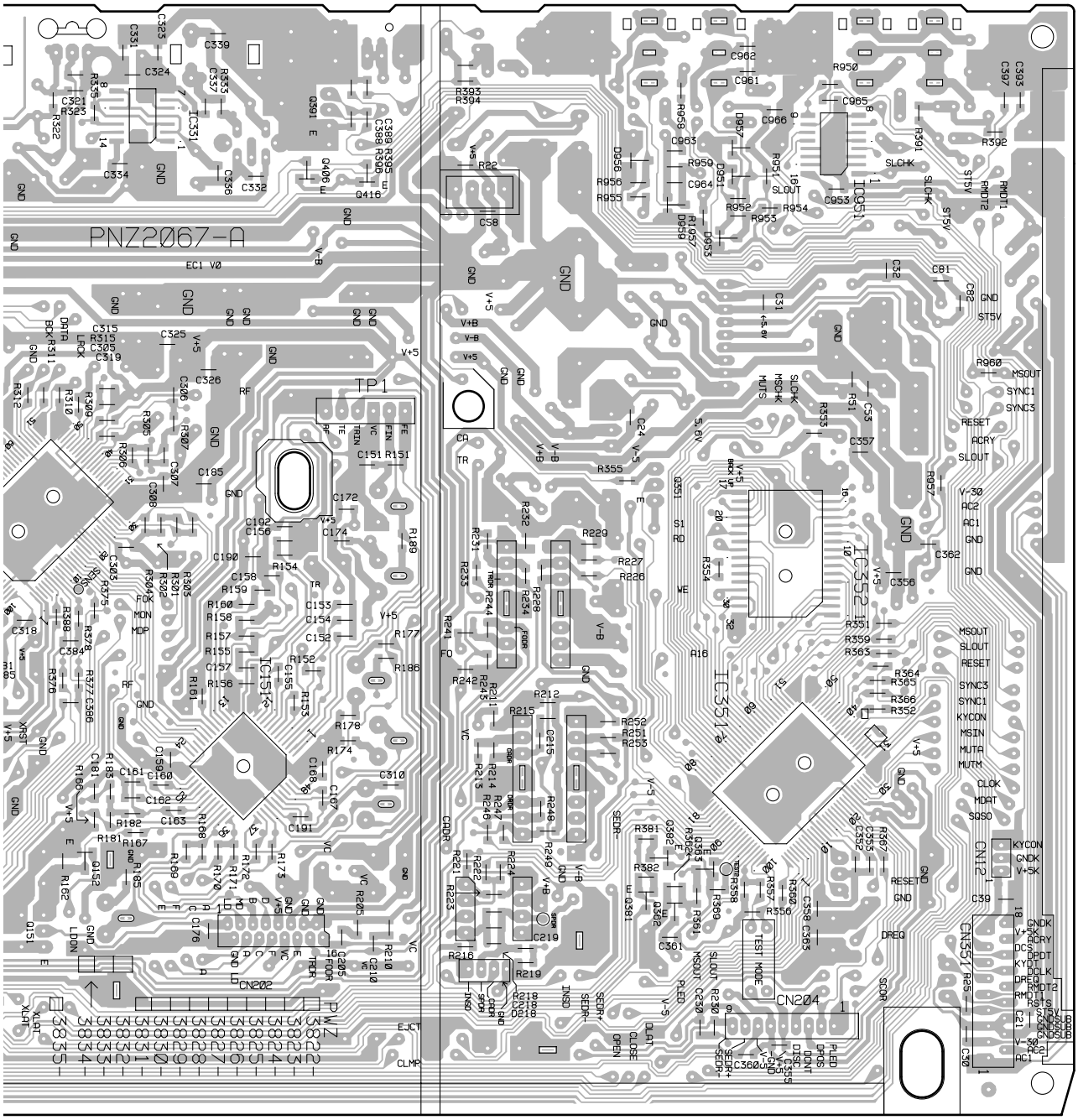

4.4 DISPLAY BOARD and FUNCTION BOARD ASSEMBLIES

L DISPLAY BOARD ASSY

SIDE A

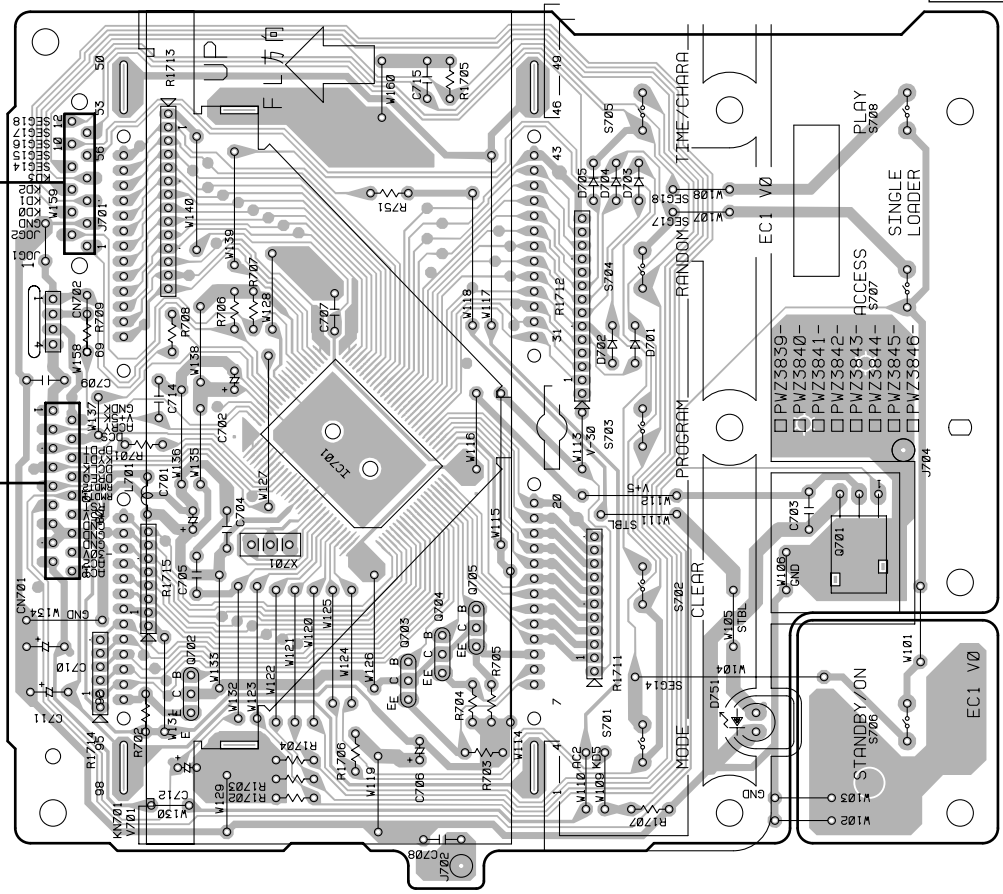

M FUNCTION BOARD ASSY

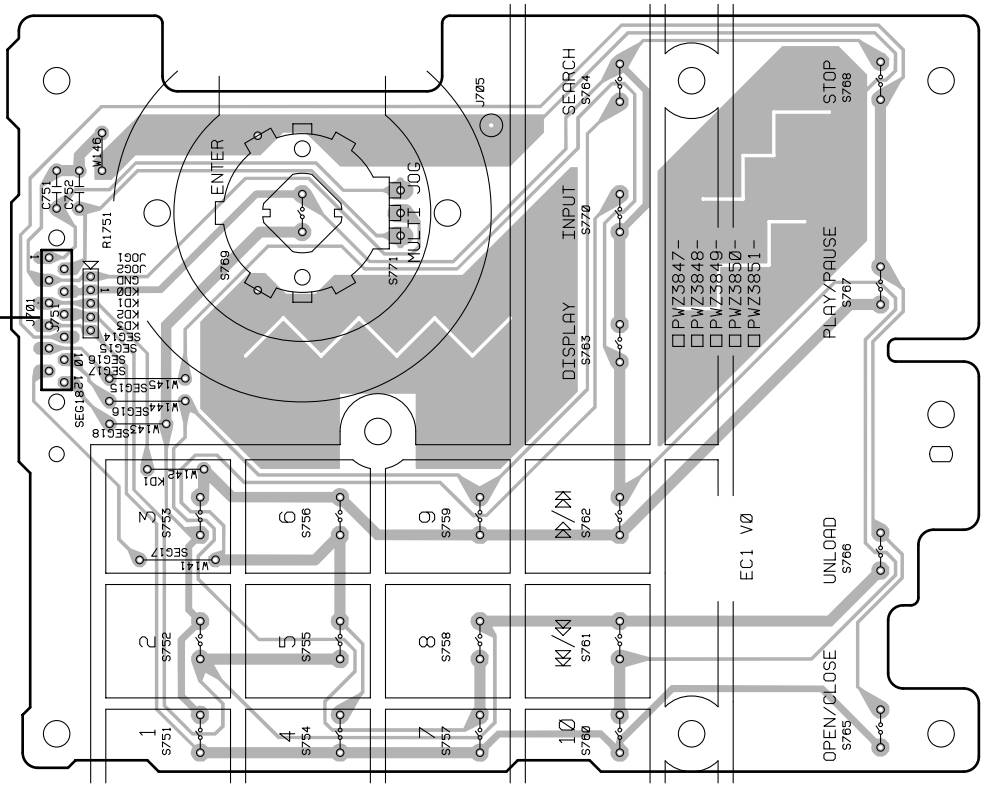

4.5 POWER BOARD ASSY

O POWER BOARD ASSY

SIDE A

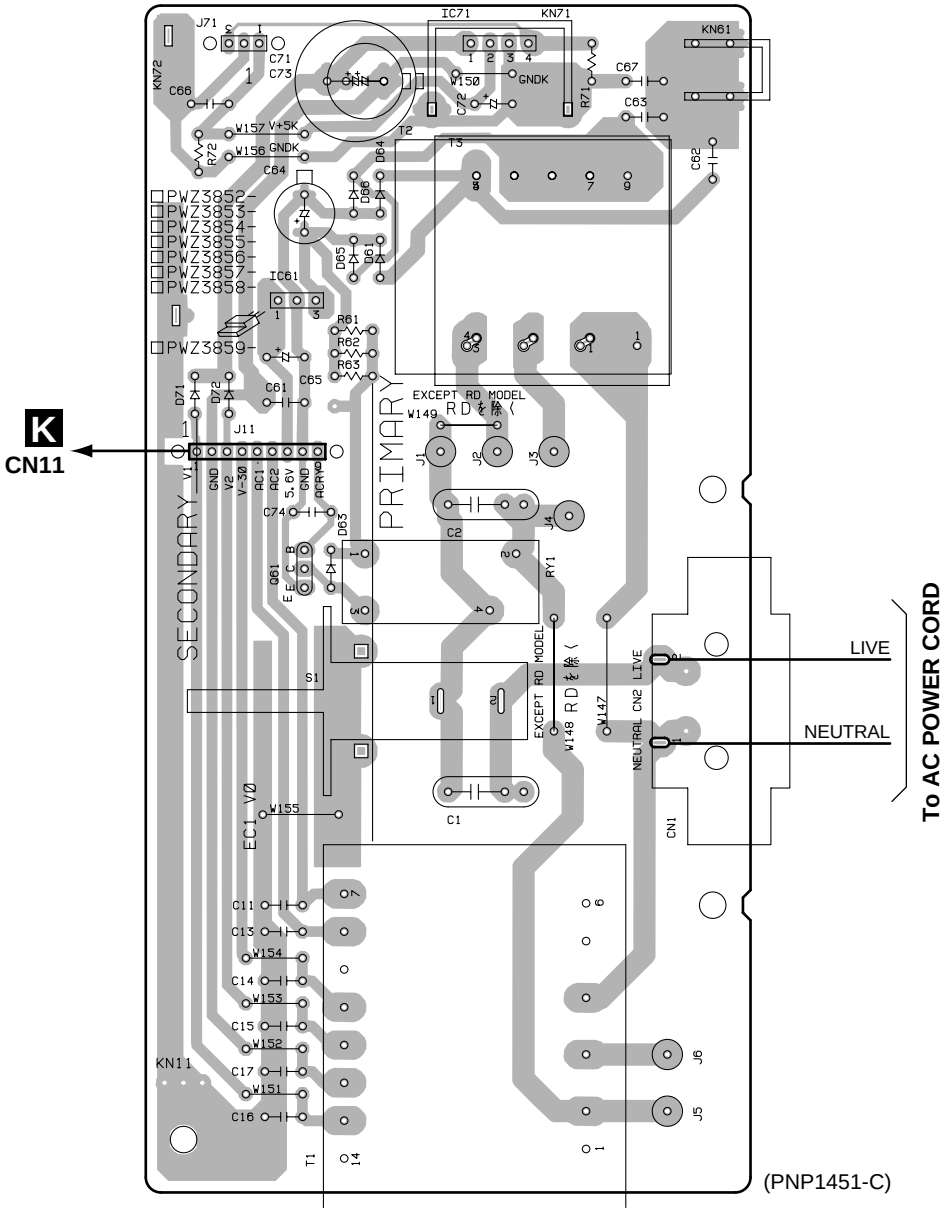

5. PCB PARTS LIST

NOTES:
- *Parts marked by "NSP" are generally unavailable because they are not in our Master Spare Parts List.*
- *The ⚠ mark found on some component parts indicates the importance of the safety factor of the part. Therefore, when replacing, be sure to use parts of identical designation.*
- *When ordering resistors, first convert resistance values into code form as shown in the following examples.*

Ex.1 When there are 2 effective digits (any digit apart from 0), such as 560 ohm and 47k ohm (tolerance is shown by J=5%, and K=10%).

560	→	*56 x 10^1*	→	*561*	*RD1/4PU 5 6 1 J*
47k	→	*47 x 10^3*	→	*473*	*RD1/4PU 4 7 3 J*
0.5	→	*R50*			*RN2H R 5 0 K*
1	→	*1R0*			*RS1P 1 R 0 K*

Ex.2 When there are 3 effective digits (such as in high precision metal film resistors).

5.62k	→	*562 x 10^1*	→	*5621*	*RN1/4PC 5 6 2 1 F*

Mark	No.	Description	Part No.

LIST OF PCB ASSEMBLIES

⚠NSP	MOTHER BOARD ASSY	PWM2252
	└ MAIN BOARD ASSY	PWZ3822
NSP	MECHANISM BOARD ASSY	PWX1572
NSP	├ SENSOR BOARD ASSY	PWZ3781
NSP	├ SELECT BOARD ASSY	PWZ3785
NSP	├ LOADING BOARD ASSY	PWZ3788
NSP	├ LOADING SW BOARD ASSY	PWZ3790
NSP	├ RADIATE BOARD ASSY	PWZ3791
NSP	└ RECIEVE BOARD ASSY	PWZ3792
⚠NSP	SUB BOARD ASSY	PWX1576
	├ DISPLAY BOARD ASSY	PWZ3839
NSP	├ FUNCTION BOARD ASSY	PWZ3847
	├ POWER BOARD ASSY	PWZ3852
NSP	├ HEADPHONE BOARD ASSY	PWZ3860
NSP	├ DOOR MOTOR BOARD ASSY	PWZ3863
NSP	├ DOOR SW BOARD ASSY	PWZ3865
	├ VOLUME BOARD ASSY	PWZ3866
NSP	└ LED BOARD ASSY	PWZ3867
NSP	SERVO MECHANISM ASSY GM	PXA1591
	└ MECHANISM BOARD ASSY	PWX1192

A MECHANISM BOARD ASSY

SWITCHES AND RELAYS

	S610		DSG1016

OTHERS

	CN610	MT CONNECTOR	173979-4

G SENSOR BOARD ASSY

SEMICONDUCTORS

	Q604		2SC1740S
	Q601, Q602		DTC124ES
	D601, D602		GP1S58V

RESISTORS

	All Resistors		RD1/4PU □□□ J

OTHERS

		CABLE HOLDER	51048-0300
		CABLE HOLDER	51048-0700
	J603	3P JUMPER WIRE	D20PDD0310E
	J602	7P JUMPER WIRE	D20PDD0725E
	J605	3P JUMPER WIRE	D20PDY0310E

J SELECT BOARD ASSY

OTHERS

		CABLE HOLDER	51048-0700
		CABLE HOLDER	51048-0900
	J601	9P JUMPER WIRE	D20PDY0930G

F LOARDING BOARD ASSY

OTHERS

		CABLE HOLDER	51048-0300
		CABLE HOLDER	51048-0500
	J652	3P JUMPER WIRE	D20PDD0310E
	J651	5P JUMPER WIRE	D20PDY0530E

E LOARDING SW BOARD ASSY

OTHERS

		CABLE HOLDER	51048-0300
		REAF SWITCH	VSK1011

I RADIATE BOARD ASSY

SEMICONDUCTORS

	D611		GL381J

OTHERS

		CABLE HOLDER	51048-0300
		L.E.D. HOLDER	RNK1795

Mark	No.	Description	Part No.

H RECIEVE BOARD ASSY

SEMICONDUCTORS

	Q621		PT381FBC

OTHERS

		CABLE HOLDER	51048-0300
	J604	3P JUMPER WIRE	D20PDY0315E

K MAIN BOARD ASSY

SEMICONDUCTORS

	IC151		CXA1782CQ
	IC301		CXD2529Q
⚠	IC35, IC36		ICP-N10
⚠	IC203		LA6517
⚠	IC201, IC202		LA6520
	IC302		LC89170M
	IC406		M5218AFP
	IC352		M5M51008BFP-70LL
	IC405, IC407, IC408		NJM4558MD
⚠	IC23		NJM79M05FA
	IC351		PD4996A
⚠	IC21		PQ05RR12
	IC25		S-806E
	IC951		TC74HC157AF
	Q151		2SA854S
	Q391		2SC1740S
	Q362, Q381		2SC2412K
	Q351, Q403, Q404, Q413, Q414		2SD2144S
	Q423, Q424		2SD2144S
	Q152, Q363, Q382, Q406, Q416		DTA124EK
	Q426		DTA124EK
	Q405, Q415, Q425		DTC124EK
	D351, D352, D391–D397, D958		1SS254
	D951, D953, D956, D957, D959		DA204K
	D54		MTZJ24B
⚠	D11–D14, D52		S5688G
	D218		UDZS6.2B

COILS AND FILTERS

	L351		LAU100J
	L391, L395, L396		LAU1R0J

CAPACITORS

	C449, C450		CCCSL101J50
	C181		CCSQCH100D50
	C361, C386		CCSQCH101J50
	C341, C342		CCSQCH120J50
	C435, C436, C455, C456		CCSQCH150J50
	C315		CCSQCH221J50
	C481, C482		CCSQCH390J50
	C171, C175, C27, C29		CEAT101M10
	C301, C302, C311–C314, C316		CEAT101M10
	C322, C351, C365		CEAT101M10
	C51		CEAT101M35
	C52		CEAT101M50
	C433, C434, C439, C440		CEAT220M25
	C131–C133, C211, C212		CEAT330M16
	C169, C170		CEAT4R7M50
	C22		CEATR22M50
	C309		CEATR47M50
	C954		CFTLA104J50
	C441, C442		CKCYB102K50
	C317		CKCYF103Z50
	C359, C398, C951, C952		CKCYF473Z50
	C163		CKSQYB102K50
	C156, C161, C164, C168, C218		CKSQYB103K50
	C153–C155, C158, C230, C250		CKSQYB104K25
	C176, C306		CKSQYB152K50
	C305		CKSQYB222K50
	C162		CKSQYB332K50
	C160		CKSQYB333K25
	C167		CKSQYB472K50
	C152, C307		CKSQYB473K25
	C151		CKSQYB682K50
	C157		CKSQYB823K25
	C159, C185, C191, C205, C210		CKSQYF103Z50
	C215, C219, C303, C308, C318		CKSQYF103Z50
	C331, C352, C353, C362, C363		CKSQYF103Z50
	C381, C382, C411, C412, C953		CKSQYF103Z50
	C1431, C1432, C321		CKSQYF104Z50
	C354	(0.1F/5.5V)	PCH1133
	C25, C26	(4700µF/16V)	PCH1135

RESISTORS

	R56–R59		RD1/4PU241J
	R52–R54		RD1/4PU272J
	R496, R499, R973, R974		RD1/4PU332J
	R977, R978		RD1/4PU332J
	R163, R164, R470, R471		RD1/4PU470J
	VR153, VR155	(10kΩ)	VCP1156
	VR151, VR152, VR154	(22kΩ)	VCP1158
	VR156	(220kΩ)	VCP1164
	Other Resistors		RS1/10S □□□J

OTHERS

	CN207	MT 4P CONNECTOR	173981-4
	CN208, CN401	3P JUMPER CONNECTOR	52147-0310
	CN205	4P JUMPER CONNECTOR	52147-0410
	CN203	5P JUMPER CONNECTOR	52147-0510
	CN11, CN204	9P JUMPER CONNECTOR	52147-0910
	JA401, JA402	JACK	DKB1031
	JA321	OPTICAL LINK OUT	GP1F32T
	CN351	CONNECTOR	HLEM16S-1
	JA393	JACK	PKN1005
	X341	XTAL. RES. (16.9344MHz)	PSS1008

Mark	No.	Description	Part No.
	JA391, JA392, JA951, JA952	JACK	RKN1004
	CN201	CONNECTOR 6P	RKP-533
	CN202	CONNECTOR	SLW16S-1C7
		PCB BINDER	VEF1040
		SCREW PLATE	VNE1948
	X351	CERAMIC RES.(4.19MHz)	VSS1028

L DISPLAY BOARD ASSY

SEMICONDUCTORS

	IC701		PD4997A
	Q702–Q705		DTC124ES
	D701–D705		1SS254
	D751		SLR-342VCT31

SWITCHES AND RELAYS

	S701–S705, S707, S708		VSG1009

CAPACITORS

	C706		CEAL100M50
	C701, C702		CEAL101M6R3
	C710, C711		CEAT100M50
	C703		CKCYF103Z50
	C704, C705		CKPUYF103Z25
	C707, C708		CKPUYF104Z50

RESISTORS

	All Resistors		RD1/4PU □□□ J

OTHERS

		CABLE HOLDER	51048-1300
		CABLE HOLDER(12P)	51063-1205
	J701	JUMPER WIRE	D15A12-400-2651
		REMOTE RECEIVER UNIT	GP1U28X
	CN701	CONNECTOR 16P	HLEM16R-1
	V701	FL INDICATOR TUBE	PEL1096
	X701	CERAMIC RES.(4.19MHz)	VSS1028

M FUNCTION BOARD ASSY

SWITCHES AND RELAYS

	S771		PSX1002
	S751–S770		VSG1009

CAPACITORS

	C751, C752		CKPUYF103Z25

OTHERS

		CABLE HOLDER(12P)	51063-1205

Mark	No.	Description	Part No.

O POWER BOARD ASSY

SEMICONDUCTORS

⚠	IC61		NJM78M56FA
	Q61		DTC124ES
	D63		1SS254
⚠	D61		S5688G

SWITCHES AND RELAYS

⚠	S1		RSA1001
⚠	RY1		PSR1003

CAPACITORS

⚠	C1, C2	(10000pF/250V)	ACG7020
	C74		CCCSL101J50
	C65		CEAT101M10
	C64		CEAT471M25
	C11, C13–C17, C61–C63		CKCYF103Z50

RESISTORS

	All Resistors		RD1/4PU □□□ J

OTHERS

		CABLE HOLDER	51048-0900
⚠	T2	POWER TRANSFORMER	ATT1223
	J11	JUMPER WIRE	D20PDY0925B
⚠	T1	POWER TRANSFOMER	PTT1348
⚠	CN2	AC CORD SOCKET	RKP1751
		SCREW PLATE	VNE1948
	KN11	EARTH METAL FITTING	VNF1084

N HEADRHONE BOARD ASSY

COILS AND FILTERS

⚠	L501, L504, L505		LAU1R0J

CAPACITORS

⚠	C501, C502		CKCYF103Z50
⚠	C503		CKCYF473Z50

RESISTORS

	VR501	(0.5kΩ(B))	PCS1003

OTHERS

		CABLE HOLDER	51048-0300
	J501	JUMPER WIRE	D20PDY0355G
	JA501	JACK	RKN1002

B DOOR MOTOR BOARD ASSY

OTHERS

		CABLE HOLDER	51048-0300
		CABLE HOLDER	51048-0400
	J631	JUMPER WIRE	D20PDY0445G

Mark	No.	Description	Part No.

C DOOR SW BOARD ASSY

OTHERS

	CABLE HOLDER	51048-0300
J632	3P JUMPER WIRE	D20PDD0315E
	REAF SWITCH	VSK1011

P VOLUME BOARD ASSY

RESISTORS

VR601	(22kΩ)	VCP1158

OTHERS

CN604, CN605	3P JUMPER CONNECTOR	52147-0310
KN601	JUMPER TERMINAL	PKX1001

D LED BOARD ASSY

SEMICONDUCTORS

D1601–D1603		SLR-342YCT31

RESISTORS

All Resistors		RD1/4PU □□□ J

OTHERS

	CABLE HOLDER	51048-0300
J1601	JUMPER WIRE	D20PDY0325E

6. ADJUSTMENT

6.1 PREPARATIONS

6.1.1 Jigs and Measuring Instruments

8 cm DISC (With at last about 20 minutes recording)	CD TEST DISC (YEDS-7)	⊖ screwdriver (small)	⊕ screwdriver (medium)	⊕ screwdriver (large)
⊖ Precise screwdriver	Ball point hexagon wrench (size: 1.5mm) GGK1002	Low-frequency oscillator	Dual-trace oscilloscope (10 : 1 probe)	Digital multi meter
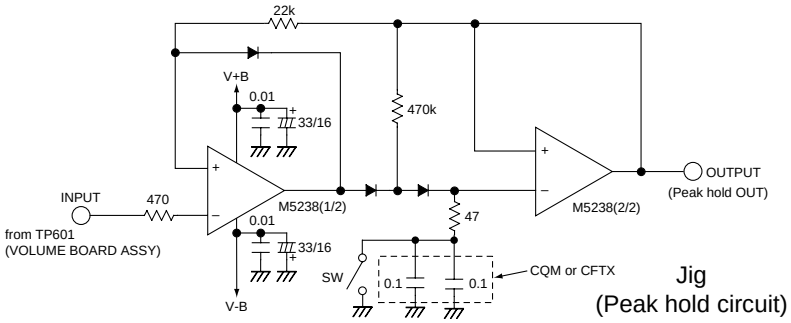 Jig (Peak hold circuit)			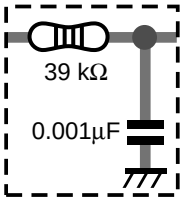 Low pass filter ① (39 kΩ + 0.001μF)	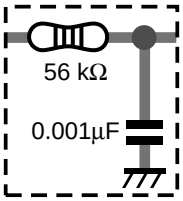 Low pass filter ② (56 kΩ + 0.001μF)

6.1.2 Necessary Adjustment Points

When	Adjustment points
Exchange PICKUP	1.2.3.4.5.6.7.8. 9.10.11.12.13 → Page 36 - 43
Exchange MAIN BOARD ASSY	2.4.6.7.8.9. 10.11.12.13 → Page 38 - 43
Exchange SERVO MECH ASSY	1.2.3.4.5.6.7.8. 9.10.11.12.13 → Page 36 - 43
Exchange SPINDLE MOTOR	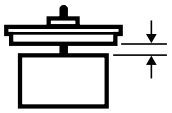 ADJ → Page 8 1. → Page 36 - 37
Remove FRONT PANEL ASSY	1. → Page 36 - 37

6.2 ADJUSTMENT

6.2.1 How to Start/Cancel Test Mode

TEST MODE : ON

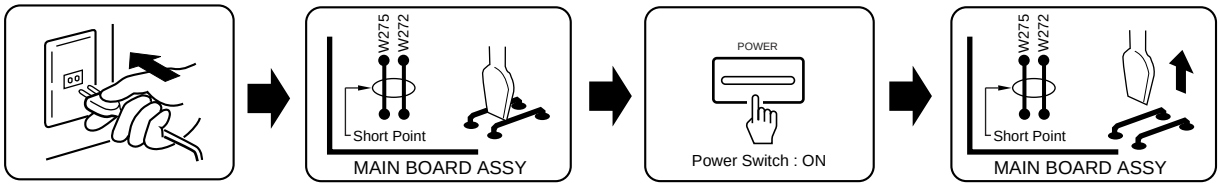

TEST MODE : PLAY

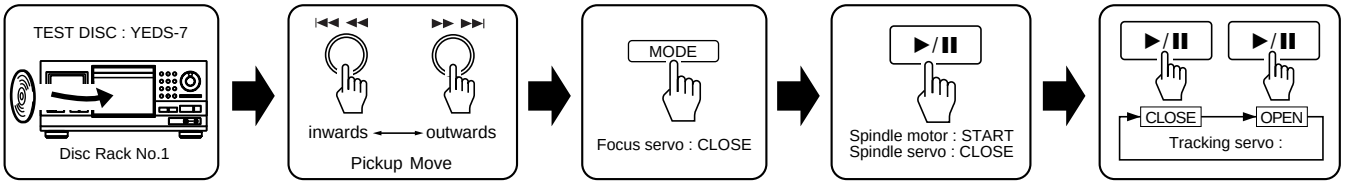

TEST MODE : STOP → CANCEL

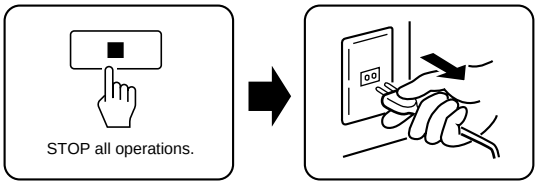

6.2.2 Adjustment Location

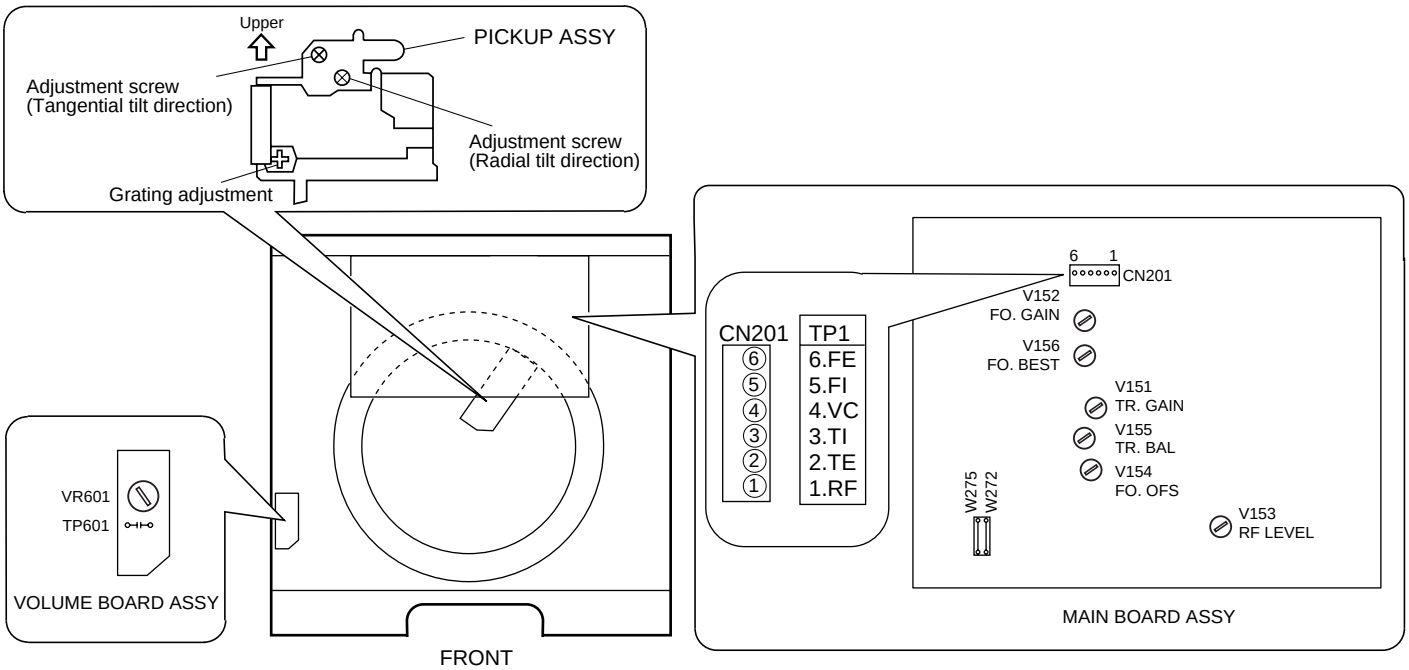

6.2.3 Check and Adjustment

1. Disc-detect Circuit Adjustment

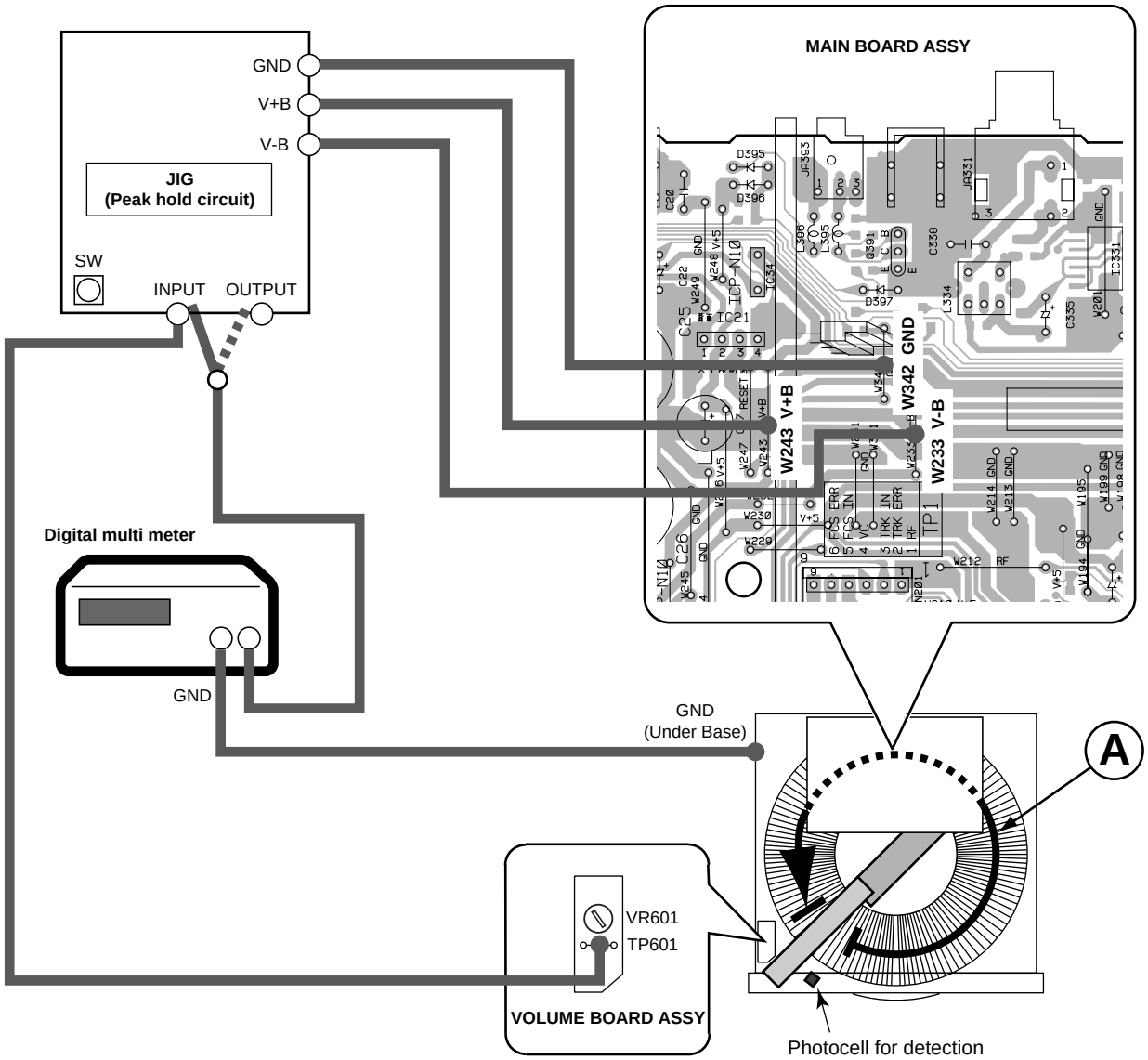

Peak hold voltage (mV)	Revised voltage (mV)
to 840	+20
840 to 860	+10
860 to 900	+ 5
900 to 1150	OK
1150 to 1290	- 5
1290 to 1500	-10
1500 to 1820	-20
1820 to 2200	-30
2200 to	-40

Step 1: Connect all equipment as shown in the diagram.

Step 2: Turn on the power of the CD player. Put the test disc in the no. 1 disc slot.

Step 3: Turn the test mode on.

Step 4: Press the MODE key.

Step 5: Turn the VR601 on the VOLUME BOARD ASSY until the meter on the Digital Multi Meter reads 800± 5mV.

Step 6: Turn off the power of the CD player.

Step 7: Switch the connector that goes from the Digital Multi Meter to the Jig from input to output.

Step 8: Turn on the power of the CD player.

Step 9: Press the OPEN/CLOSE key twice. The 300 CD rack will spin around once.

Step 10: While the test disc is spinning around(Ⓐ section), press the switch on the jig and look at the Digital Multi Meter and record the number it is registering. After the CD rack has made a full rotation it will continue on slightly and return to the starting position. A second number will appear on the Digital Multi Meter, but you can ignore this number. If the number that appears on the meter while the rack is moving (the first number) is the important one. If it is between **900-1150 mV** you can stop the process, no correction is necessary.

Step 11: Switch the connection input between the Digital Multi Meter and the Jig back to input.

Step 12: Turn the test mode on.

Step 13: Press the MODE key.

Step 14: Turn the VR601 on the VOLUME BOARD ASSY to match the first number on the Digital Multi Meter with the chart provided below.

Step 15: Do steps 6-10 again. In step 10, the number that appears on the Digital Multi Meter should be between **900-1150 mV**. If it is you have completed the correction.

2. Focus Offset Adjustment

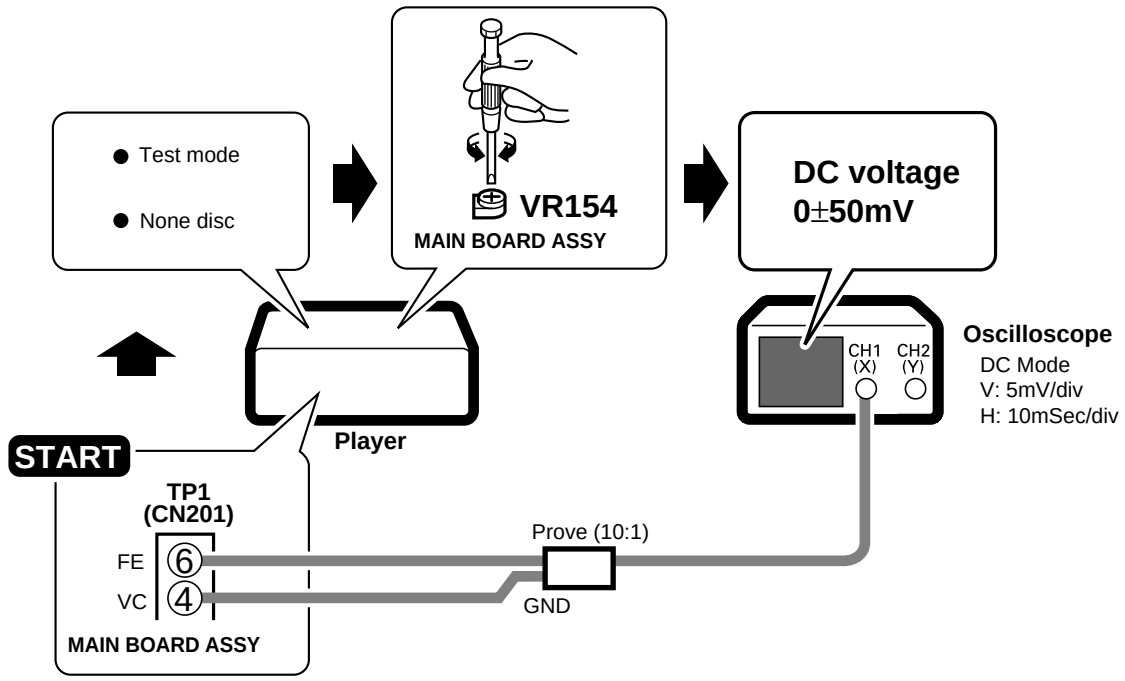

3. Grating Adjustment

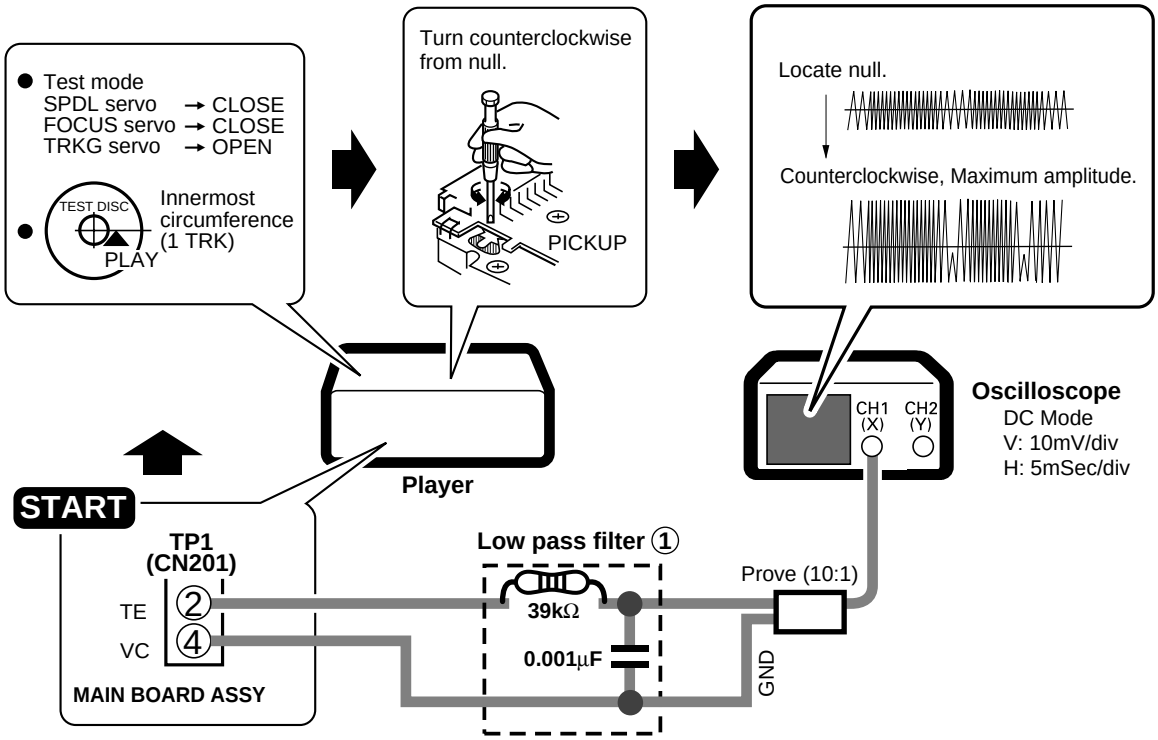

4. Tracking Error Barance Adjustment

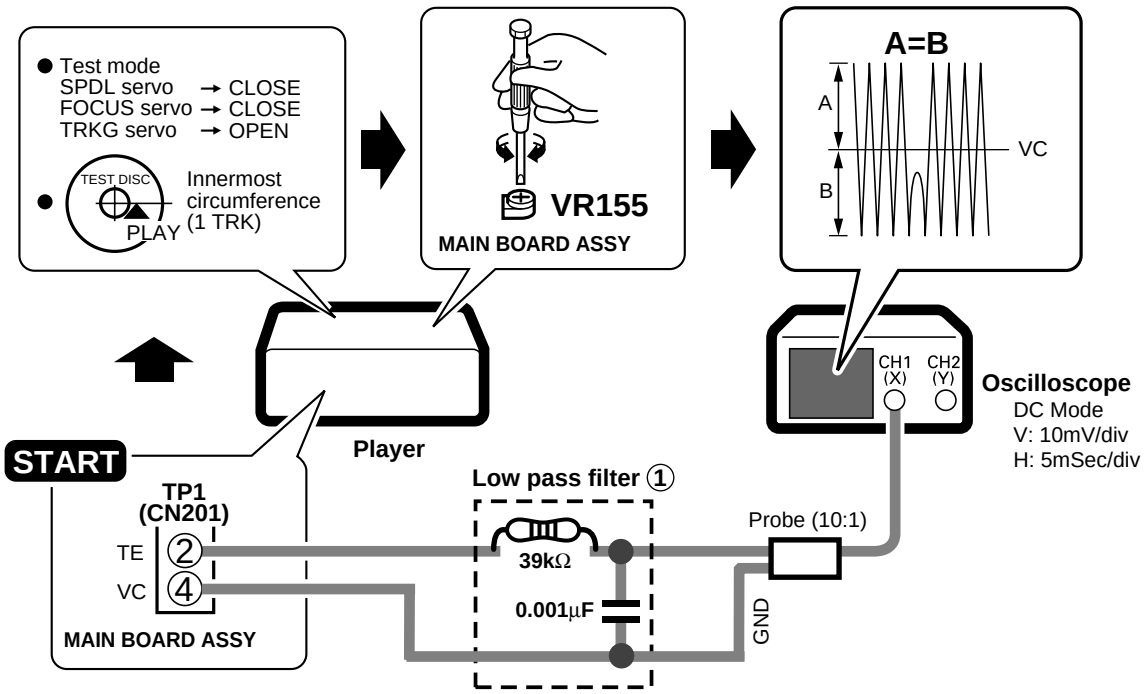

5. Pickup ①Radial/ ②Tangential Direction Tilt Adjustment

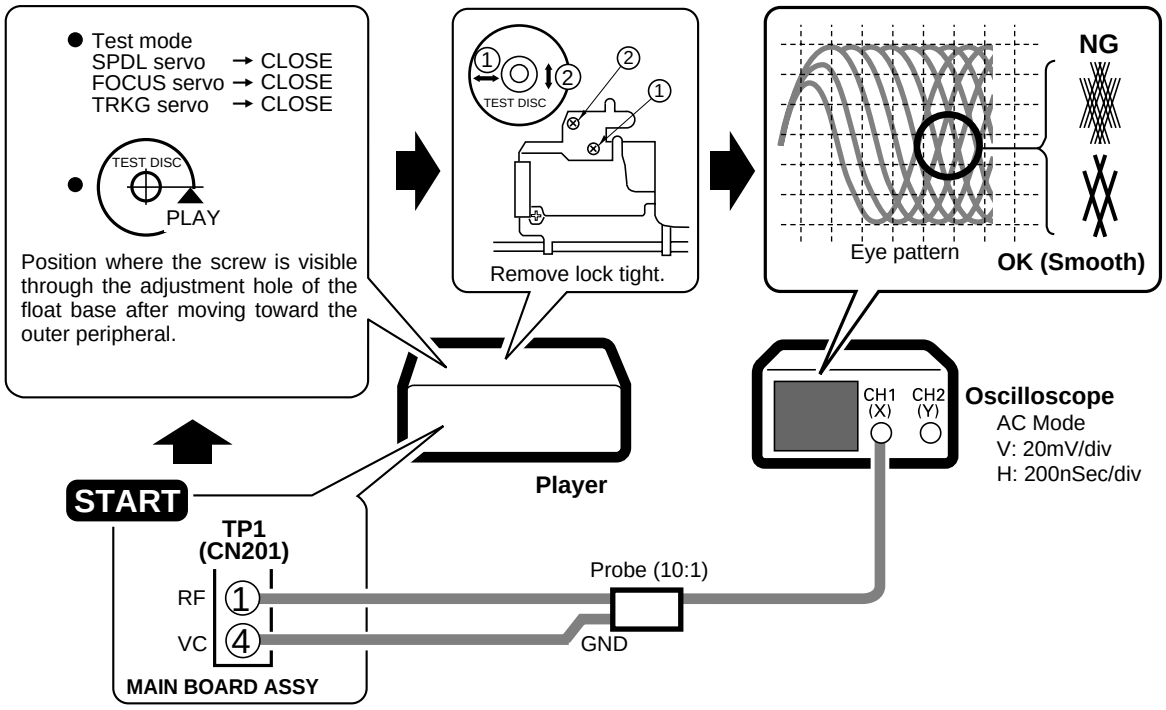

6. RF Level Adjustment Ⅰ

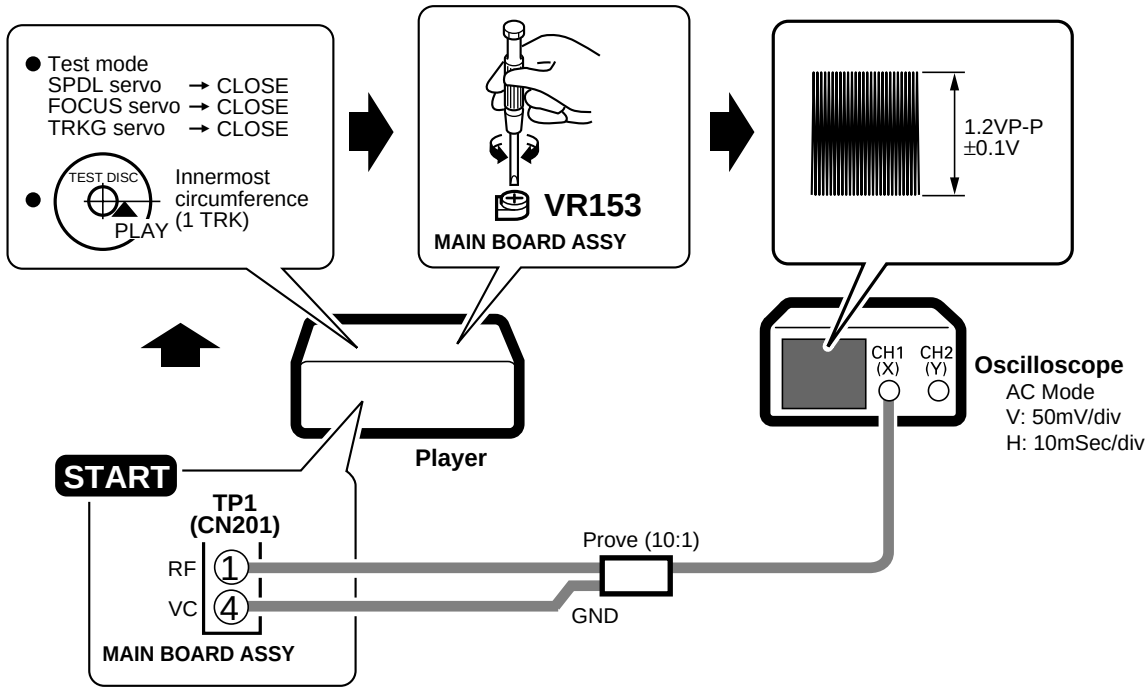

7. Focus Best Adjustment Ⅰ

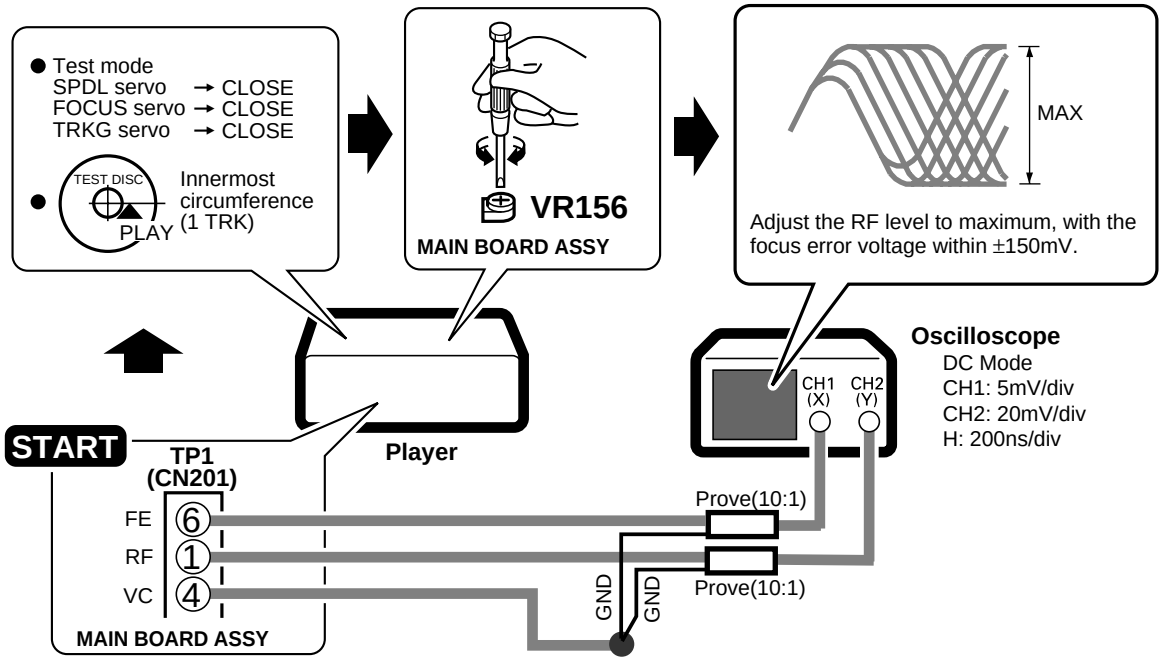

8. RF Level Adjustment Ⅱ

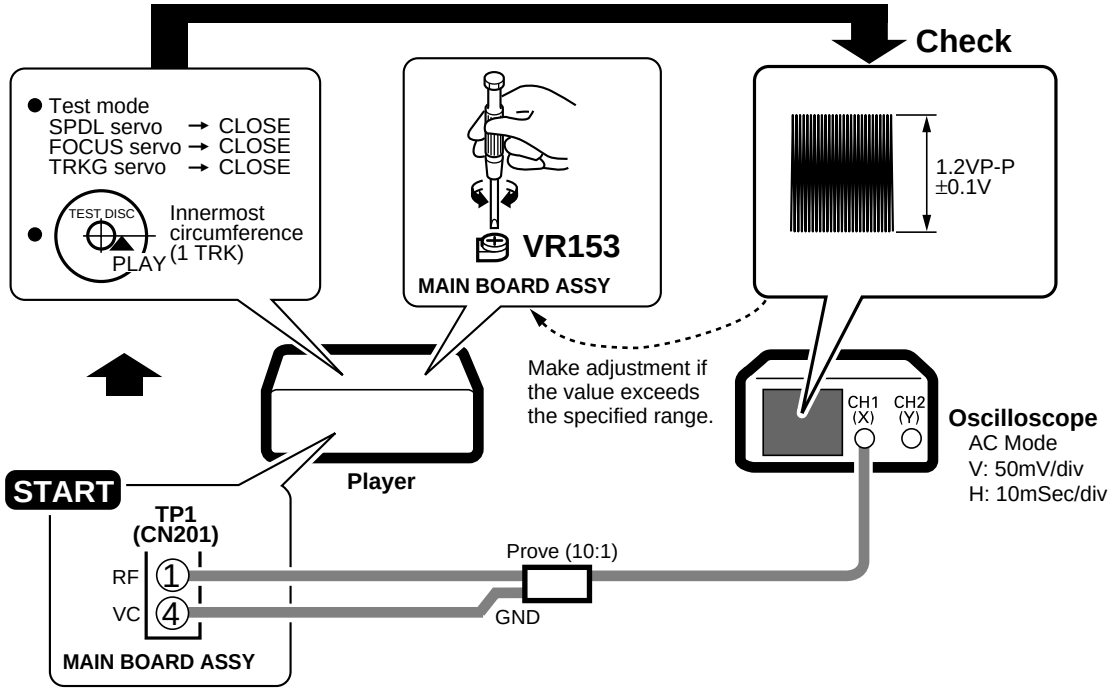

9. Focus Servo Loop Gain Adjustment Ⅰ

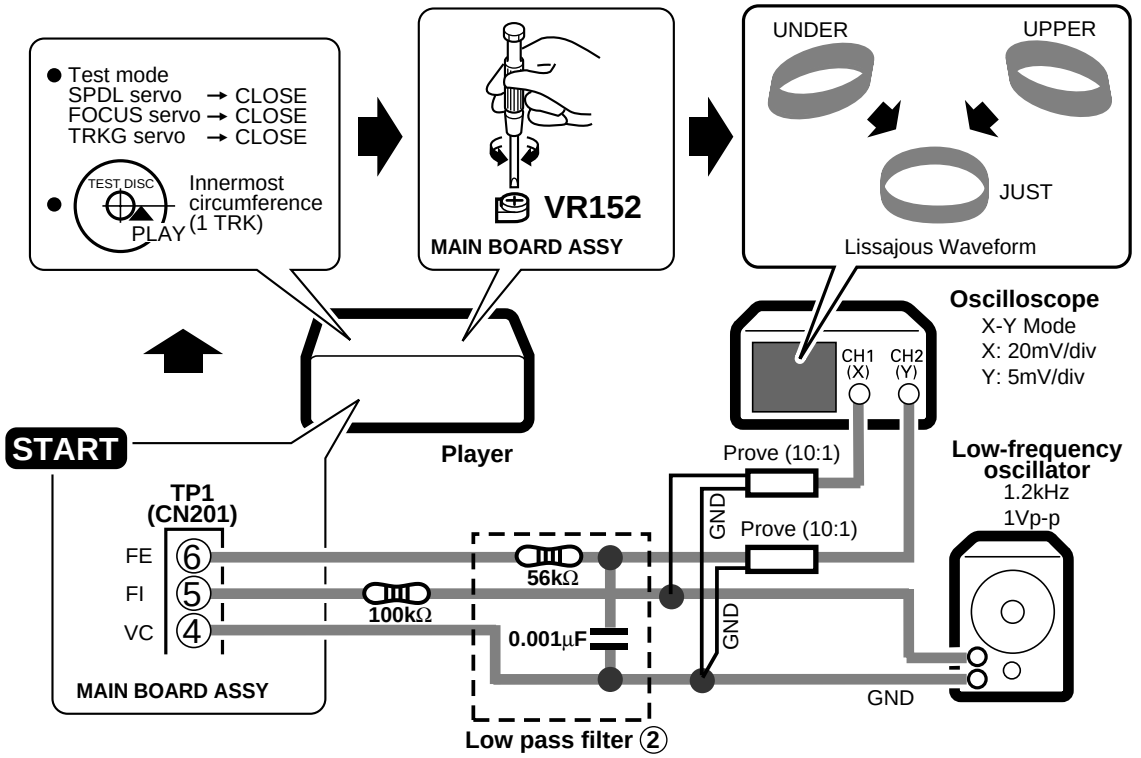

10. Focus Best Adjustment Ⅱ

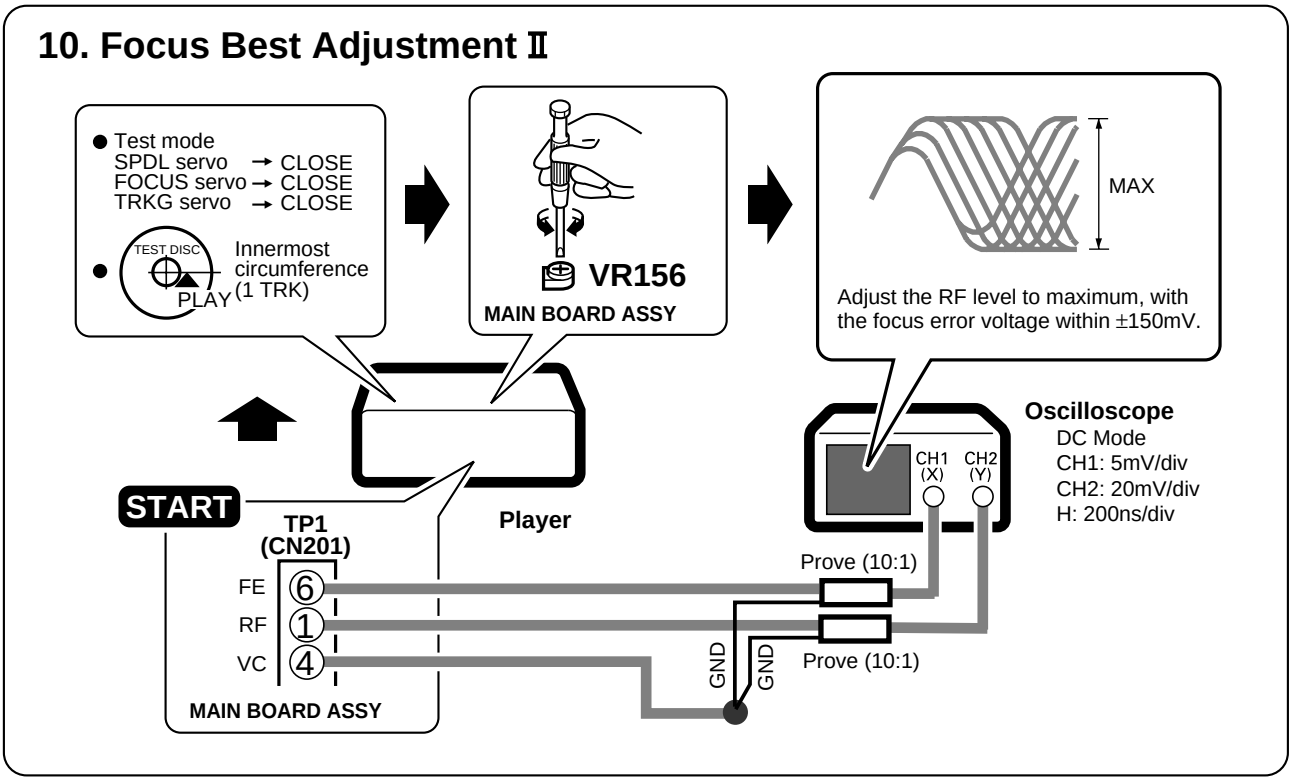

11. Focus Servo Loop Gain Adjustment Ⅱ

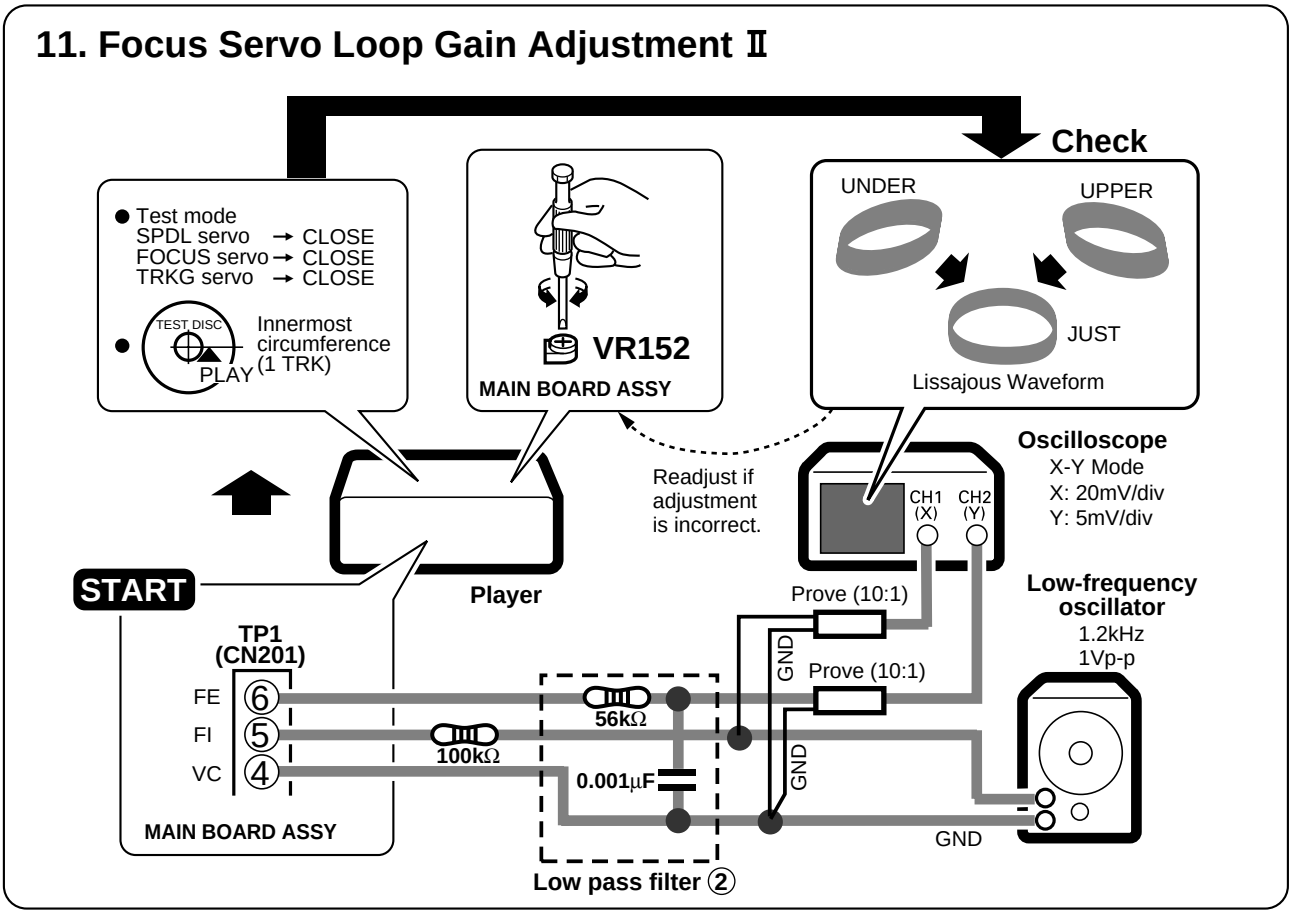

12. Focus Best Adjustment Ⅲ

Adjust this point only if adjustment was made in item 10.

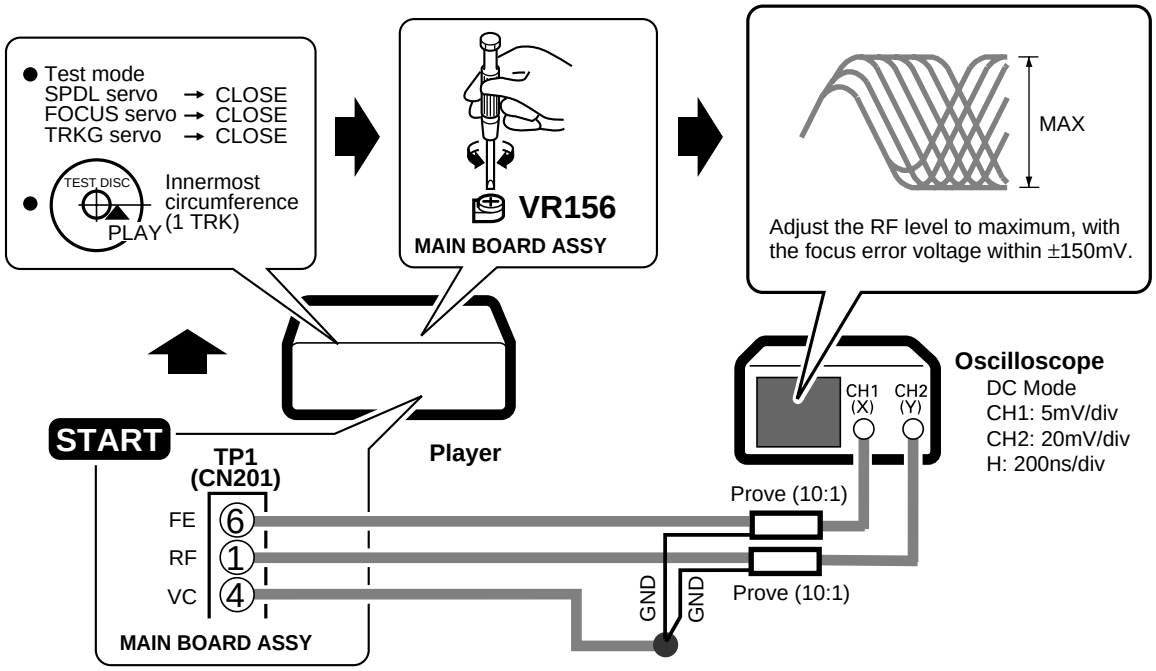

13. Tracking Servo Loop Gain Adjustment

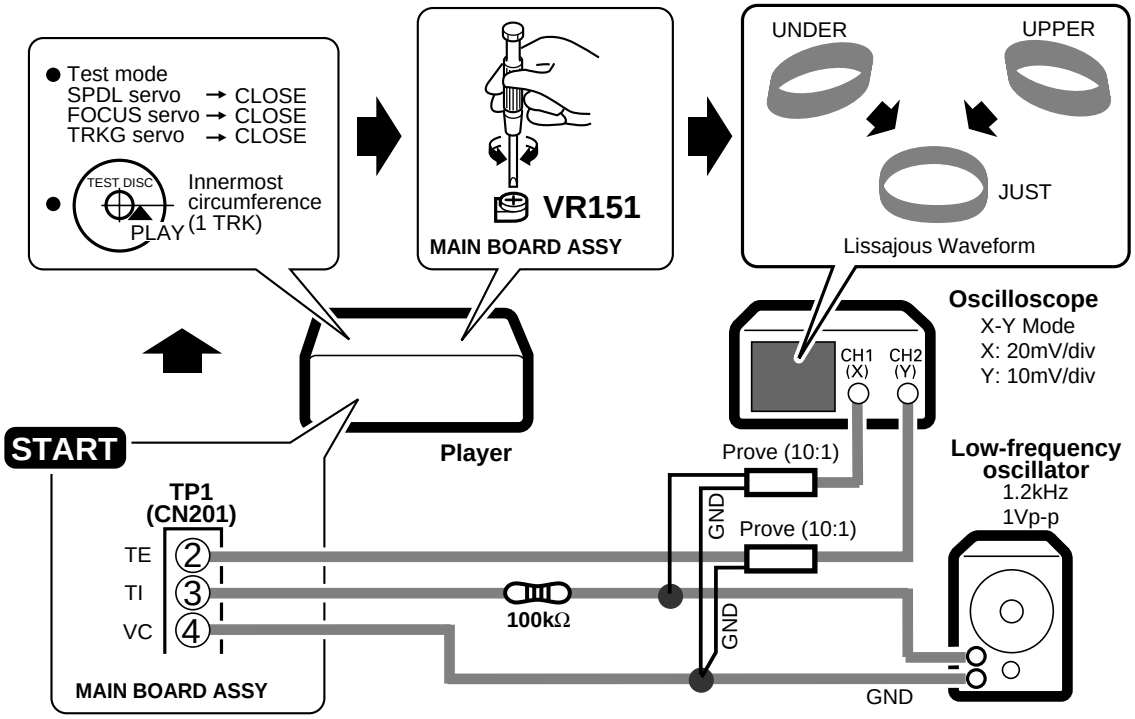

7. GENERAL INFORMATION

7.1 PARTS

7.1.1 IC

■ PD4997A (IC701: DISPLAY BOARD ASSY)

● Display Control Micro-computer

● The information shown in the list is basic information and may not correspond exactly to that shown in the schematic diagrams.

● Pin Function

No.	Symbol	Name	I/O	Description
1	VDD	VDD	–	+5V
2	P37	Not used	O	Open
3	P36/BUZ	Not used	O	
4	P35/PCL	KD5	I	Key data input
5	P34/TI2	KD4	I	
6	P33/TI1	KD3	I	
7	P32/TO2	KD2	I	
8	P31/TO1	KD1	I	
9	P30TO0	KD0	I	
10	$\overline{\text{RESET}}$	$\overline{\text{RESET}}$	I	CPU reset (L: Reset)
11	X2	X2	–	Connected to System clock oscillator (4.19 MHz)
12	X1	X1	–	
13	IC	IC	–	GND
14	XT2	XT2	–	Not Connect (open)
15	P04/XT1	Not used	O	Only for input: Input of GND
16	VDD	VDD	–	+5V
17	P27/$\overline{\text{SCK0}}$	Not used	O	Open
18	P26/SO0/SB1	Not used	O	
19	P25/SI0/SB0	Not used	O	
20	P25/BUSY	Not used	O	
21	P23/STB	DREQ	O	Completion of transmission setting to the main microcomputer
22	P22/$\overline{\text{SCK1}}$	DCLK	I	Clock input for serial communication with the main microcomputer
23	P21/SO1	KYDT	O	Serial data output to the main micro-computer
24	P20/SI1	DPDT	I	Serial data input from the main micro-computer
25	AVSS	AVSS	–	GND
26 | 30	P17/ANI7 | P13/ANI3	Not used	O	OPEN
31	P12/ANI2	ACRY	O	Main microcomputer power ON/OFF

No.	Symbol	Name	I/O	Description
32	P11/ANI1	KBDAT	I	Keyboard communication data transmission and reception
33	P10/ANI0	Not used	O	Open
34	AVDD	AVDD	–	+5V
35	AVREF	AVREF	–	GND
36	P03/INTP3	DCS	I	Serial communication timing input from the main microcomputer
37	P02/INTP2	KBCLK	I	Keyboard communication data clock input
38	P01/INTP0	JOG1	I	JOG input 1
39	P00/INTP0/TI0	RMDT	I	Remote control data input
40	VSS	VSS	–	GND
41 | 44	P74 | P71	Not used	O	OPEN
45	P70	JOG2	I	JOG input 2
46	VDD	VDD	–	+5V
47	P127/FIP52	STBL	O	STANDBY–LED
48 | 54	P126/FIP51 | P120/FIP45	S36 | S30	O	Segment output for FL drive
55 | 62	P117/FIP44 | P110/FIP37	S29 | S22	O	
63 | 70	P107/FIP36 | P100/FIP29	S21 | S14	O	
71 | 78	P97/FIP28 | P90/FIP21	S13 | S6	O	
79	VLOAD	VLOAD	–	–30V
80 | 84	P87/FIP20 | P84/FIP16	S5 | S1	O	Segment output for FL drive
85 | 87	P83/FIP15 | P80/FIP13	G16 | G14	O	DIGIToutput for FL drive
88 | 100	FIP12 | FIP0	G13 | G1	O	

■ PD4996A (IC351: MAIN BOARD ASSY)

● System Control Micro-computer

● Pin Function

No.	Symbol	Name	I/O	Description
1	P120/RTP0	$\overline{\text{DLAT}}$	O	DAC control data, latch pulse output
2	P121/RTP1	$\overline{\text{XLAT}}$	O	LSI control data, latch pulse output
3	P122/RTP2	Not used	O	Output of "L"
4	P123/RTP3	$\overline{\text{INSD}}$	I	Slider INSIDE switch input (L: INSIDE)
5	P124/RTP4	$\overline{\text{OPEN}}$	I	Hood open switch input (L: Opening completed)
6	P125/RTP5	$\overline{\text{CLS}}$	I	Hood close switch input (L: Closing completed)
7	P126/RTP6	$\overline{\text{EJCT}}$	I	Loading out switch input (L: Ejection completed)
8	P127/RTP7	$\overline{\text{CLMP}}$	I	Loading mechanism clamping switch input (L: Clamping completed)
9	IC	IC	–	GND
10	X2	X2	–	Connected to System clock oscillator (4.19 MHz)
11	X1	X1		
12	VDD	VDD	–	+5V
13	XT2	XT2	–	Not Connect (open)
14	P07/XT1	Not used	I	Input of 5 V (only for input)
15	$\overline{\text{RESET}}$	$\overline{\text{RESET}}$	I	CPU reset (L: Reset)
16	P00/INTP0/TI00	DREQ	I	Communication start request input from the SUD microcomputer (L: Communication start)
17	P01/INTP1/TI01	Not used	O	Output of "L"
18	P02/INTP2	DPOS	I	Pulse input for disc position detection
19	P03/INTP3	SCOR	I	Subcode synchronization S0 + S1 input
20	P04/INTP4	DISC	I	Disc detection pulse input (L: Disc present)
21	P05/INTP5	Not used	O	Not used
22	P06/INTP6	DCNT2	I	Disc count pulse input 2
23	AVdd	AVdd	–	VDD
24	AVref0	AVref0	–	GND
25	P10/ANI0	Not used	O	Output of "L"
26	P11/ANI1	MUTM	O	Master side mute output (L: Mute)
27	P12/ANI2	MUTA	O	Audio muting output (L: Mute)
28	P13/ANI3	Not used	O	Output of "L"
29	P14/ANI4	MSIN	I	Master input (response from the slave)
30	P15/ANI5	KYCON	O	Keyboard power supply control (H: Power ON)

No.	Symbol	Name	I/O	Description
31	P16/ANI6	SYNC1	I	Synchronization input (pull-up required)
32	P17/ANI7	SYNC3	O	Synchronization output
33	AVSS	AVSS	–	GND
34	P130/AN00	Not used	O	Output of "L"
35	P131/AN01	Not used		
36	AVref1	AVref1	–	VDD
37	P70/SI2/RxD	SRDT	I	CD TEXT data input
38	P71/SO2/TxD	Not used	O	Output of "L"
39	P71/$\overline{\text{SCK2}}$/ASCK	SCLK	O	CD TEXT data fetch clock output
40	Vss	Vss	–	GND
41	P20/SI1	KYDT	I	Communication data input in regard to the SUB microcomputer
42	P21/SO1	DPDT	O	Communication data output in regard to the SUB microcomputer
43	P22/$\overline{\text{SCK1}}$	DCLK	O	Communication clock in regard to the SUB microcomputer
44	P23/STB	DCS	O	Communication request output in regard to the SUB microcomputer (H → L: Communication request)
45	P24/BUSY	Not used	O	Output of "L"
46	P25/SI0/SB0	SQSO	I	Q data serial input (combined use for FCOK/GFS/SENS)
47	P26/SO0/SB1	MDAT	O	LSI control data serial output
48	P27/$\overline{\text{SCK0}}$	CLOK	O	Serial clock
49 | 56	P80/A0 | P87/A7	A0 | A7	O	External RAM address line
57	P40/AD0	A4	O	
58	P41/AD1	A12	O	
59	P42/AD2	A10	O	
60	P43/AD3	A11	O	
61	P44/AD4	A9	O	
62	P45/AD5	A8	O	
63	P46/AD6	A13	O	
64	P47/AD7	A15	O	
65 | 69	P50/A8 | P54/A12	IO4 | IO8	O	External RAM data Input/Output
70	P55/A13	IO1	O	

No.	Symbol	Name	I/O	Description
71	Vss	Vss	–	GND
72	P56/A14	IO2	O	External RAM data Input/Output
73	P57/A15	IO3		
74	P60	SCHK	I	Input for slave judgment (L: Slave)
75	P61	MCHK	I	Input for master judgment (L: Master)
76	P62	Not used	O	Output of "L"
77	P63	Not used		
78	P64/$\overline{RD}$	A16	O	External RAM address line
79	P65/$\overline{WR}$	$\overline{WE}$	O	Write control output (L: Write)
80	P66/$\overline{WAIT}$	$\overline{CS}$	O	External RAM chip selection output (H: Standby)
81	P67/ASTB	$\overline{RD}$	O	Read control output (L: Read)
82	P100/TI5/TO5	MUTS	O	Slave side mute output (L: Mute)
83	P101/TI6/TO6	DSLT	O	Selector output Count-up (DSRT: L, DSLT: H) Count-down (DSRT: H, DSLT: L) Stopped (DSRT: L, DSLT: L)
84	P102	DSRT	O	
85	P103	MOPN	O	Door motor output Open (MOPN: H, MCLS: L) Close (MOPN: L, MCLS: H) Stop (MOPN: L, MCLS: L)
86	P30/TO0	MCLS	O	

No.	Symbol	Name	I/O	Description
87	P31/TO1	LIN	O	Output for loading motor IN (LIN: H, LOUT: L) OUT (LIN: L, LOUT: H) Stop (LIN: L, LOUT: L)
88	P32/TO2	LOUT	O	
89	P33/TI1	LDON	O	Laser diode output (H: ON, L: OFF)
90	P34/TI2	$\overline{XRST}$	O	Reset output for each LSI
91	P35/PCL	TRST	O	CD TEXT decoder IC reset output (L: Reset)
92	P36/BUZ	CLED	O	Center LED lighting control (H: Lit)
93	P37	PLED	O	Sensor output for disc detection (H: Lit)
94	P90	Not used	O	Output of "L"
95	P91	TRST	I	Test mode input for checker (H: Test)
96	P92	MSOT	O	Master control output (control of the slave)
97	P93	SLOT	O	Slave output (response to the master)
98	P94	HBIT	I	Hi-bit correspondence switching input (H: Hi-bit correspondence)
99	P95	TEST	I	Test mode switching input (H: Test mode)
100	P96	DQSY	I	CD TEXT data timing input

■ M5M51008BFP–70LL (IC352: MAIN BOARD ASSY)

● S-RAM

● Block Diagram

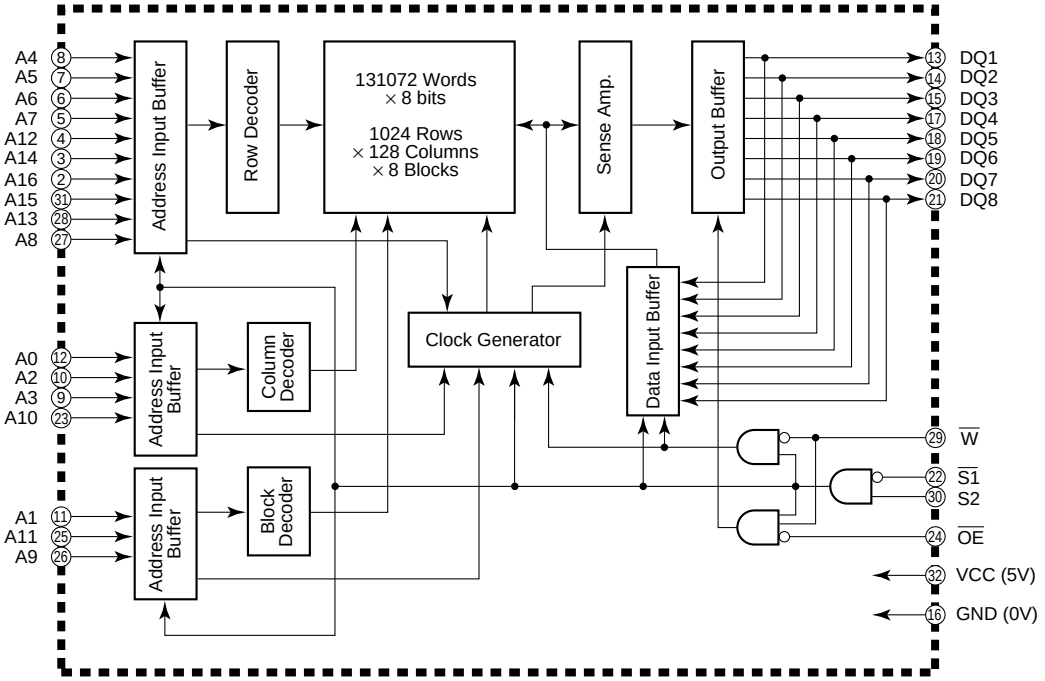

7.1.2 DISPLAY

■ PEL1096 (V701: DISPLAY BOARD ASSY)

● Vacuum Fluorescent Display

● Pin Assignment

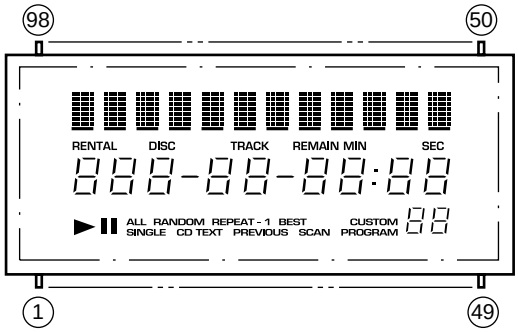

● Pin Connection

PIN NO.	98	97	96	95	94	93	92	91	90	89	88	87	86	85	84	83	82	81	80	79	78	77	76	75	74	73	72	71	70	69	68	67	66
CONNECTION	F1	F1	F1	F1	NP	NP	13G	12G	11G	10G	9G	8G	7G	6G	5G	4G	3G	2G	1G	NX	NX	NX	NX	NX	NX	NX	NX	NX	NX	NC	P36	P35	P34

PIN NO.	65	64	63	62	61	60	59	58	57	56	55	54	53	52	51	50	49	48	47	46	45	44	43	42	41	40	39	38	37	36	35	34	33
CONNECTION	P33	P32	P31	P30	P29	P28	P27	P26	P25	P24	NP	NP	F2	F2	F2	F2	F2	F2	F2	F2	NP	NP	P23	P22	P21	P20	P19	P18	P17	P16	P15	P14	P13

PIN NO.	32	31	30	29	28	27	26	25	24	23	22	21	20	19	18	17	16	15	14	13	12	11	10	9	8	7	6	5	4	3	2	1
CONNECTION	P12	P11	NX	NX	NX	NX	NX	NX	NX	NX	NX	NX	P10	P9	P8	P7	P6	P5	P4	P3	P2	P1	16G	15G	14G	IC	NP	NP	F1	F1	F1	F1

Note 1) F1, F2 ..... Filament
2) NP ..... No Pin
3) NX ..... No extend Pin
4) NC ..... No Connection
5) DL ..... Datum Line
6) 1G to 16G ..... Grid
7) IC ..... Internal Connection

● Grid Assignment

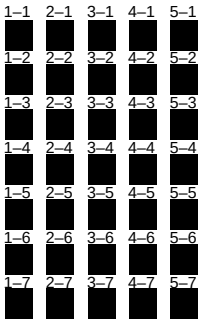

(1G to 12G)

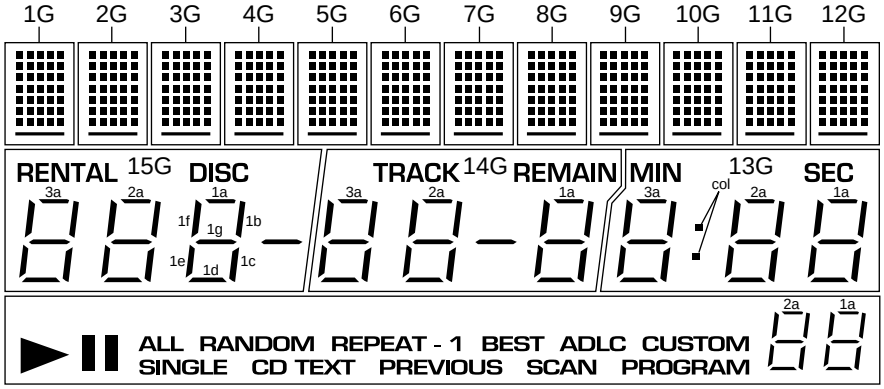

● Anode Connection

	1G to 12G	13G	14G	15G	16G
P1	1–1	1d	1d	1d	▶
P2	2–1	1e	1e	1e	❚❚
P3	3–1	1c	1c	1c	ALL
P4	4–1	1g	1g	1g	SINGLE
P5	5–1	1f	1f	1f	RANDOM
P6	1–2	1b	1b	1b	CD TEXT
P7	2–2	1a	1a	1a	REPEAT
P8	3–2	col	▬	▬	►1
P9	4–2	2d	2d	2d	PREVIOUS
P10	5–2	2e	2e	2e	BEST
P11	1–3	2c	2c	2c	ADLC
P12	2–3	2g	2g	2g	SCAN
P13	3–3	2f	2f	2f	CUSTOM
P14	4–3	2b	2b	2b	PROGRAM
P15	5–3	2a	2a	2a	—
P16	1–4	SEC	REMAIN	DISC	—
P17	2–4	3d	3d	3d	2d
P18	3–4	3e	3e	3e	2e

	1G to 12G	13G	14G	15G	16G
P19	4–4	3c	3c	3c	2c
P20	5–4	3g	3g	3g	2g
P21	1–5	3f	3f	3f	2f
P22	2–5	3b	3b	3b	2b
P23	3–5	3a	3a	3a	2a
P24	4–5	MIN	TRACK	RENTAL	—
P25	5–5	—	—	—	1d
P26	1–6	—	—	—	1e
P27	2–6	—	—	—	1c
P28	3–6	—	—	—	1g
P29	4–6	—	—	—	1f
P30	5–6	—	—	—	1b
P31	1–7	—	—	—	1a
P32	2–7	—	—	—	—
P33	3–7	—	—	—	—
P34	4–7	—	—	—	—
P35	5–7	—	—	—	—
P36	▬	—	—	—	—

7.2 DIAGNOSIS

7.2.1 DISASSEMBLY

■ Removal of the Servo Mechanism Assy GM

① Remove the Bonnet. (Left and right side: ×2, rear side: ×3)
② Remove the wires from the MAIN BOARD Assy. (9 places)
③ Remove the screws Ⓐ (10 screws), and remove the MAIN BOARD Assy.

Note) When the screws (6 screws) are removed in this condition, the mechanical unit can be removed as one entity. Refer to "2. EXPLODED VIEWS AND PARTS LIST".

④ Open the Hood, remove the screws Ⓑ (5 screws), disconnect the hooks of Front Panel Assy and Hood (3 places), and remove the Center Pole.
⑤ Remove the screws Ⓒ (3 screws), remove the link section Ⓓ, and remove the Arm Assy.

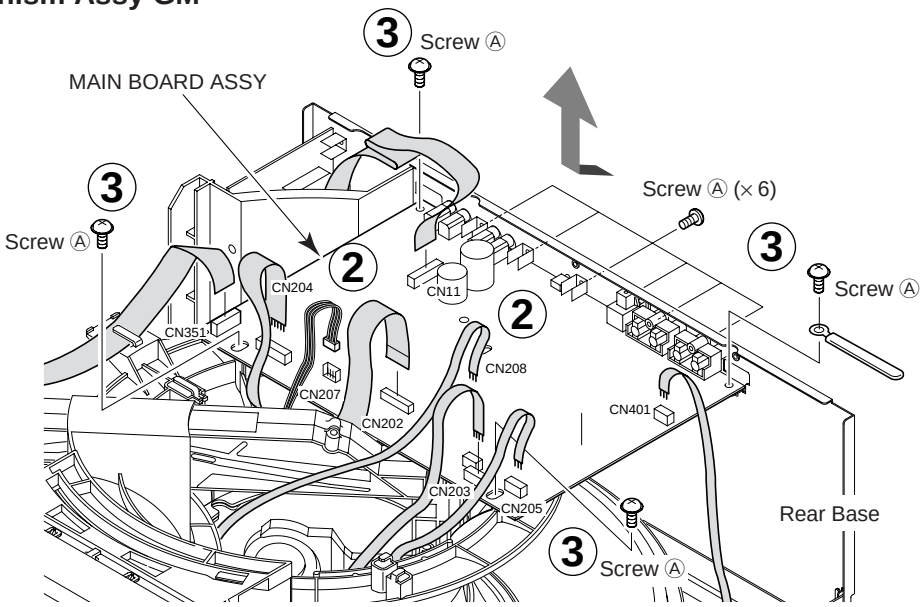

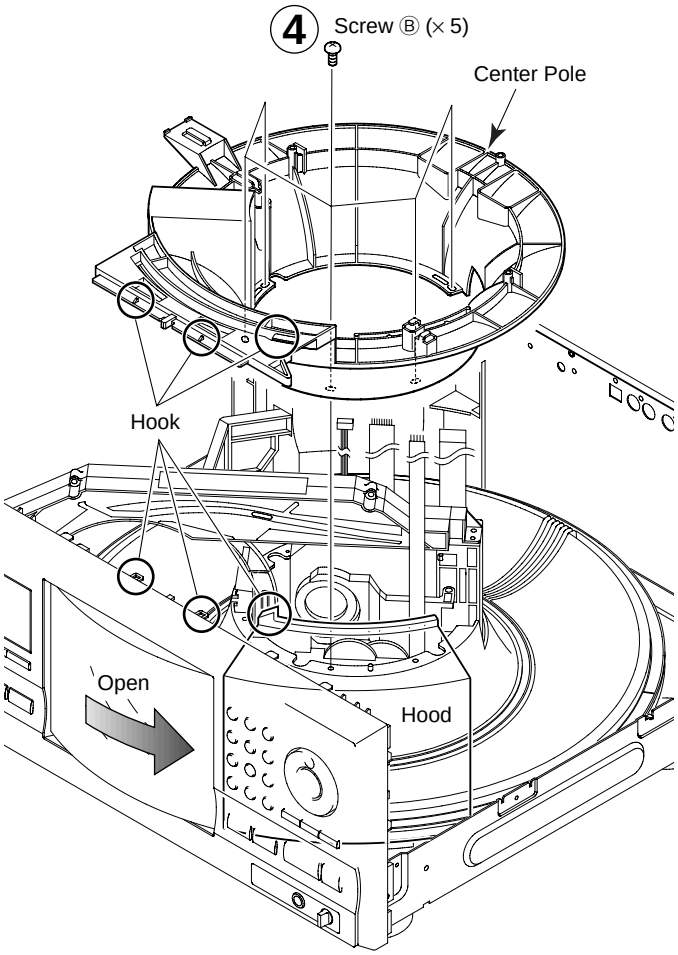

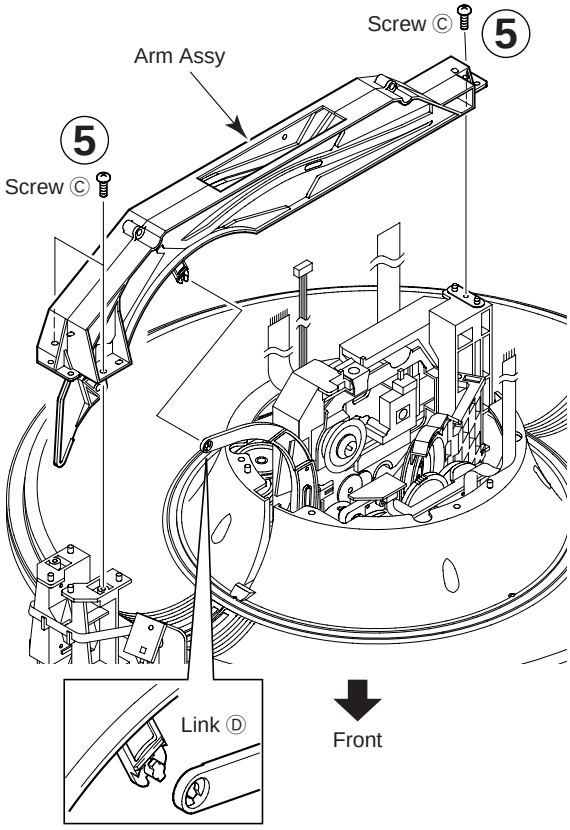

⑥ Remove the screws Ⓔ (4 screws), and then remove the Disc Guard.
⑦ Remove the Float Base Assy and Clamp Holder.

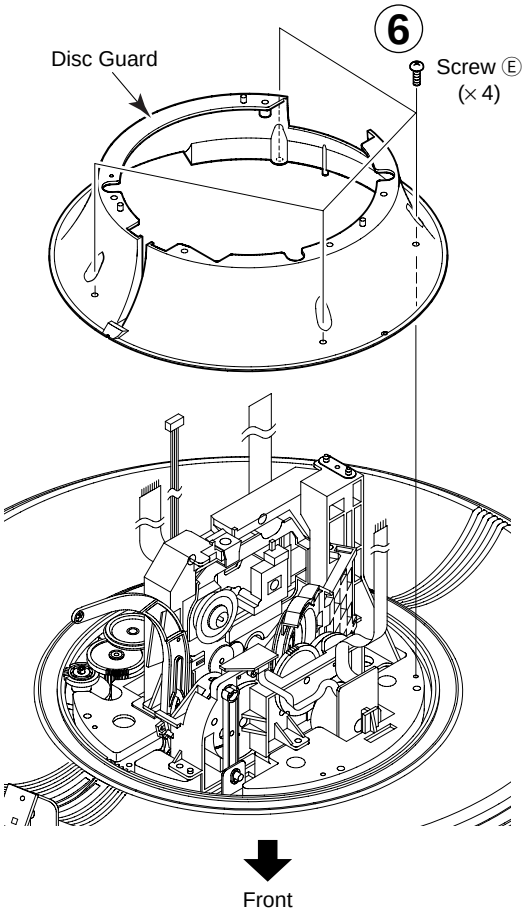

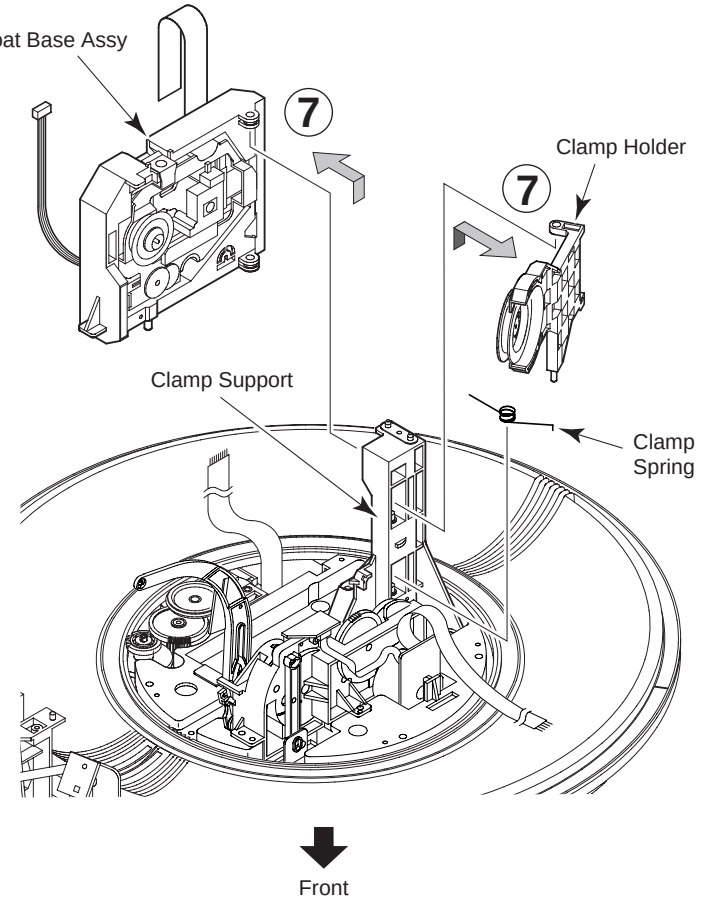

⑧ Remove the Flexible Flat Cable and the Connector Assy (4P) from the Float Base.
⑨ Remove the screw G.
⑩ Remove the float spring.
(To install this part, line up the float angle side of the Servo Mechanism ASSY GM first, and press down on the float base side.)
⑪ Remove the float rubber from the Servo Mechanism ASSY GM. At this time the Float Rubber should remain on the Float Base side. (To install it on the Float Base when it has been removed, push it into place with a thin cylindrical object.

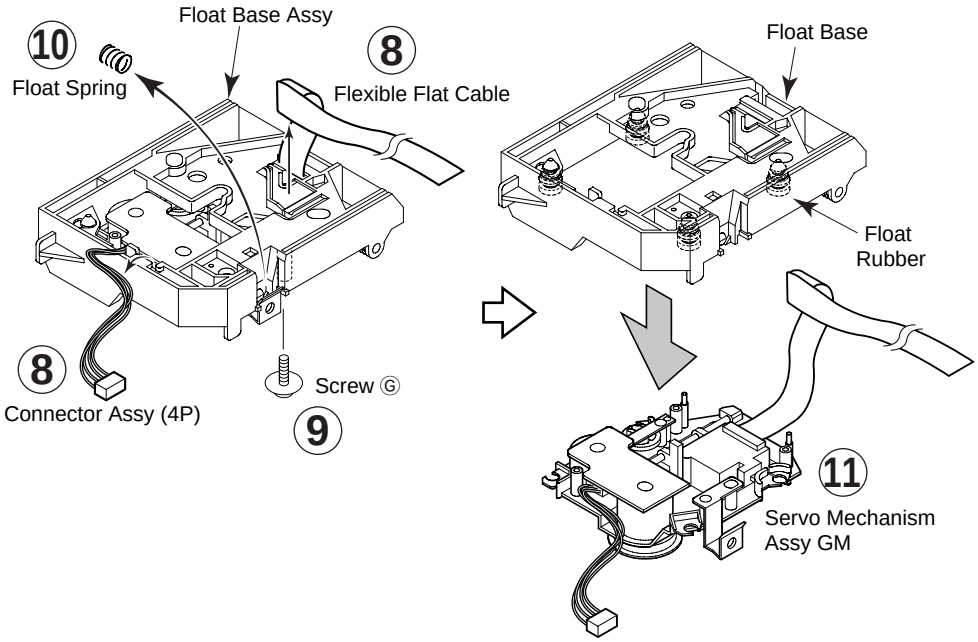

■ Removal of the Gear Holder Assy and the Disc Rack

① Perform the steps ① to ⑥ of " ■ Removal of the Servo Mechanism Assy GM ".
② Remove the screws Ⓐ (2 screws), and then remove the Gear Holder Assy.
③ Remove the Disc Rack.

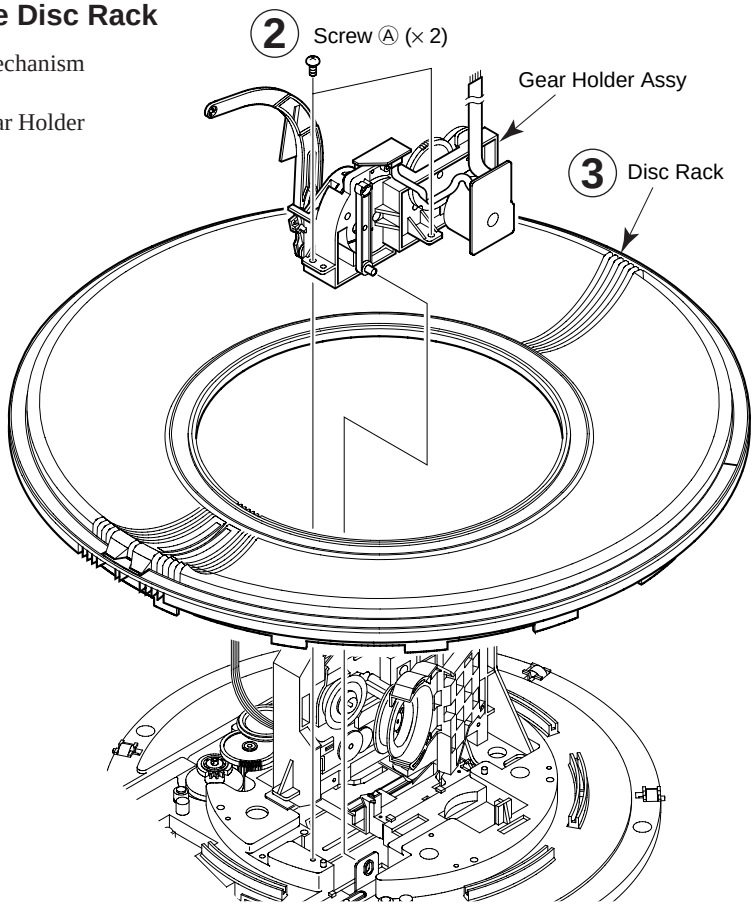

■ Removal of the Hood and Hood Base Assy

① Perform the steps ① to ⑥ of " ■ Removal of the Servo Mechanism Assy GM ". and the steps ② and ③ of " ■ Removal of the Gear Holder Assy and the Disc Rack".
② Remove the screws Ⓑ (3 screws), and then remove the Front Panel Assy.
③ Slide the Hood to the left side and remove it.
④ Remove the screws Ⓒ (2 screws) and remove the Hood Base Assy.

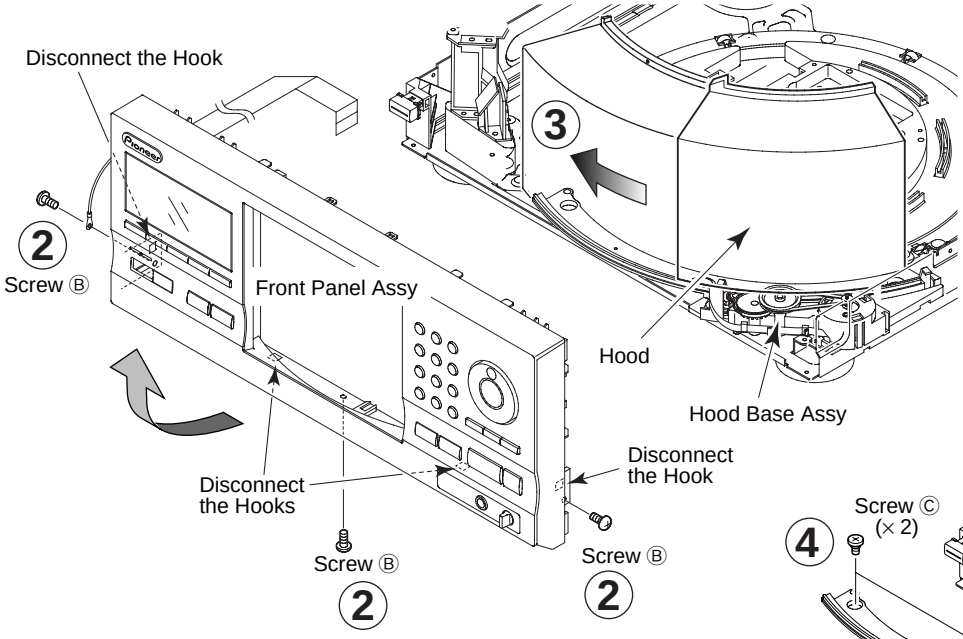

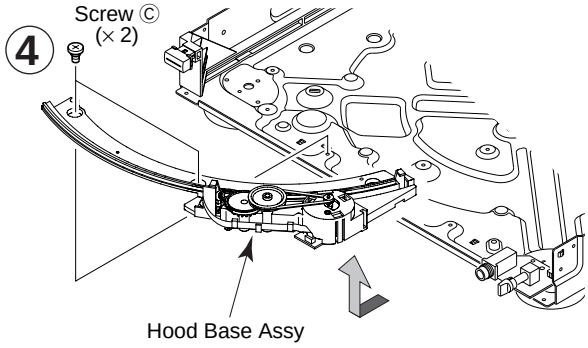

7.2.2 ERROR CHECK DISPLAY

Error check mode (display of the error history for the last 16 times) is entered when the "TIME/CHARA" button is pressed in test mode. By looking at this display, it can be seen in which status the microcomputer has stopped.

(1) Explanation of the display

Disc No. = Error code
Track No. = Error history
Min : sec = Error occurrence mode

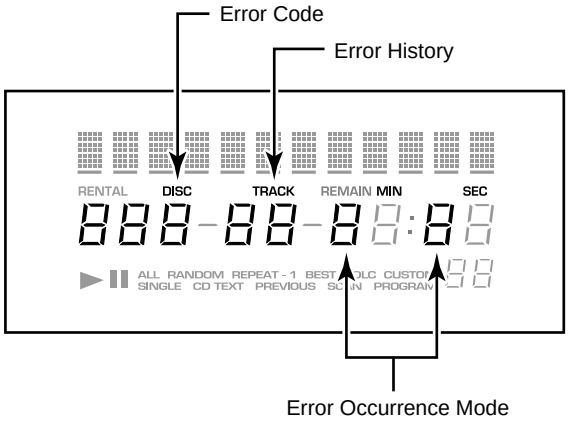

Press the "TIME/CHARA" button again to check past error codes. This switches the display. The contents of each display are as follows.

① Track No.: Error History

Display is possible from 1 to 16. The smaller numbers have occurred more recently. Accordingly, the error No. 1 is the error which has occurred most recently.

② Min : sec: Error Occurrence Mode

The internal mode at the time of occurrence of the displayed error is displayed. With Min : sec, the meaning is provided by the first digit.

Minutes digits

Display	Contents
0	During spindle stop operation
1	During disc return
2	During disc selection (during clamping operation at the time of 26)
3	During setup
4	During CDR setup operation
5	During TOC reading
6	During search operation on the disc
7	During play operation
8	During pause operation
9	During manual search

Seconds digits

Display	Contents
0	During hood closing operation and closed condition
1	During hood opening operation and open condition

③ Disc No.: Error Code Details

Note: A used display is displayed only when return to normal operation after error occurrence is not possible even when failsafe operation is performed.

<<< Rack Section >>>

User Display	Display	Contents
None	A0	• Disc playing was tried after loading, but the disc could not be detected because there was no disc, the disc was upside down, the disc was dirty, disc loading had not been completed, etc. • Focus was lost during disc playing because of disc scratches, dirt, etc.
None	A1	• At the time of track selection during play, or when trying to play, the servo mechanism could not move to the position of the intended track within a fixed time.
U1	A3	• Disc loading was tried, but loading was not possible within a fixed time. (The disc was not brought from the rack.)
	A4	• It was tried to return the disc to the rack, but the disc could not be returned within a fixed time.
U2	A2	• At the time of disc selection during play, or at the start of play from stopped condition, the selection mechanism could not move to the position of the intended disc within a fixed time.
	A5	• After initialization of the selection mechanism, after selection mechanism NG, etc., forced rack section position detection is performed for the selection mechanism, but detection was not possible within a fixed time.
None	A6	• Playing was tried after disc loading, but normal disc rotation was not possible because the disc was upside down, the disc was dirty, disc loading had not been completed, etc. • During play normal rotation was not possible because of disc scratches, dirt, etc.

<<< Rack section >>>

User Display	Display	Contents
None	A7	• When the position of the selection mechanism just before switching to disc selection operation os DCNT terminal = "L". (Normally, DCNT terminal = "H" exists when the selection mechanism is stopped, so that it can be assumed that the position of the mechanism has deviated for some reason. There is the possibility that a position deviation of the mechanism can cause a defect of the mechanism.)
None	A8	• At the time of movement of the selection mechanism, a deviation has occurred between the present position of the disc and the disc position according to position detection. (It can be assumed that the waveform at the DCNT terminal and/or at the DPOS terminal has been miscounted. When a miscount occurs, a discrepancy occurs between the displayed disc No. and the counted disc position.)
None	A9	• When the position of the mechanism became DCNT terminal = "L" during disc loading. (Normally, DCNT terminal = "H" exists when the selection mechanism is stopped, so that it can be assumed that the position of the mechanism has deviated for some reason. There is the possibility that a position deviation of the mechanism can cause a defect of the mechanism.)
None	AA	• At the time of shifting to a different disc after play completion, the pickup does not return to the innermost circumference.

<<< Hood Section >>>

User Display	Display	Contents
U3	P0	The hood did not open within a fixed time. The hood switch was broken.
	P1	The hood did not close within a fixed time. The hood switch was broken.
None	P2	It was tried to force the closed hood open. The hood switch was broken.

7.2.3 EXPLANATION OF DISC DETECTION

1. Detection of the rack position

There are two types of slits on the rear of the rack, and their combination is used to find which disc has been selected during rack rotation. The input ports (DCNT, DPOS) are as follows.

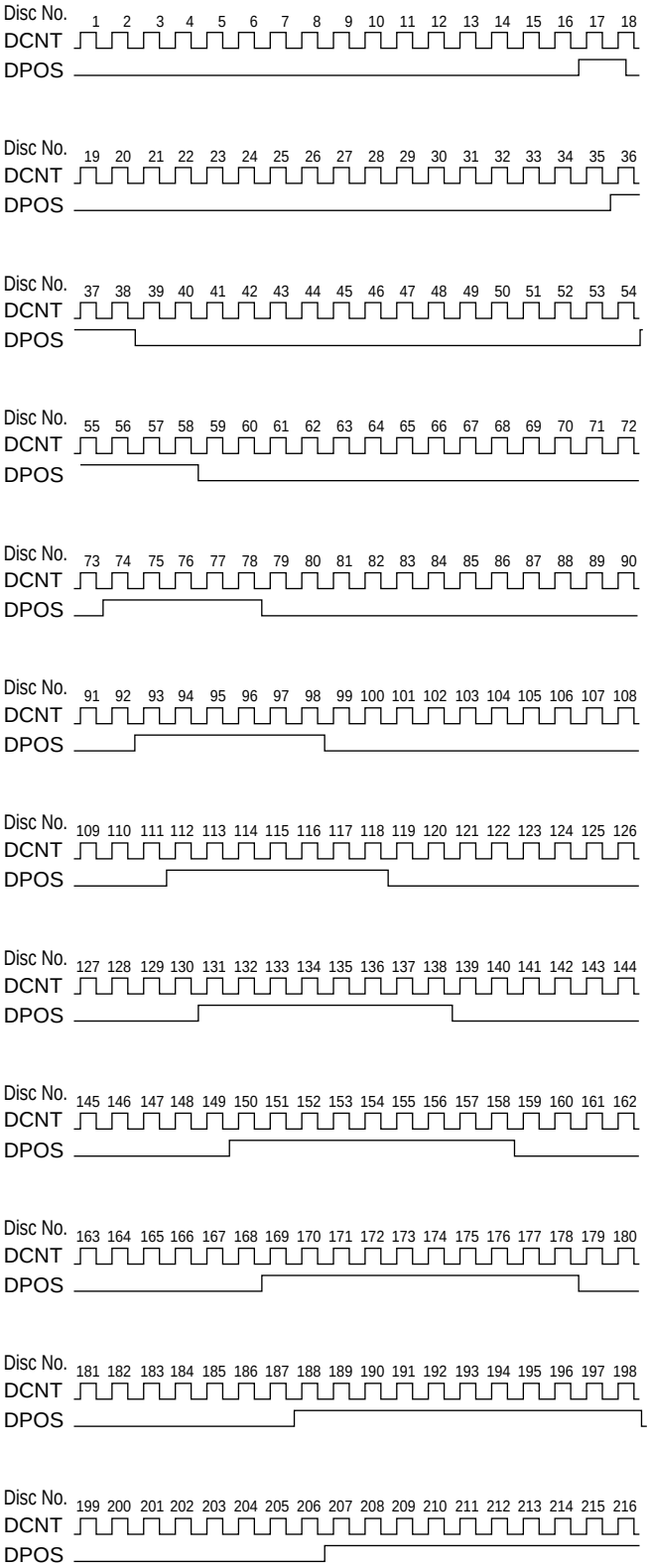

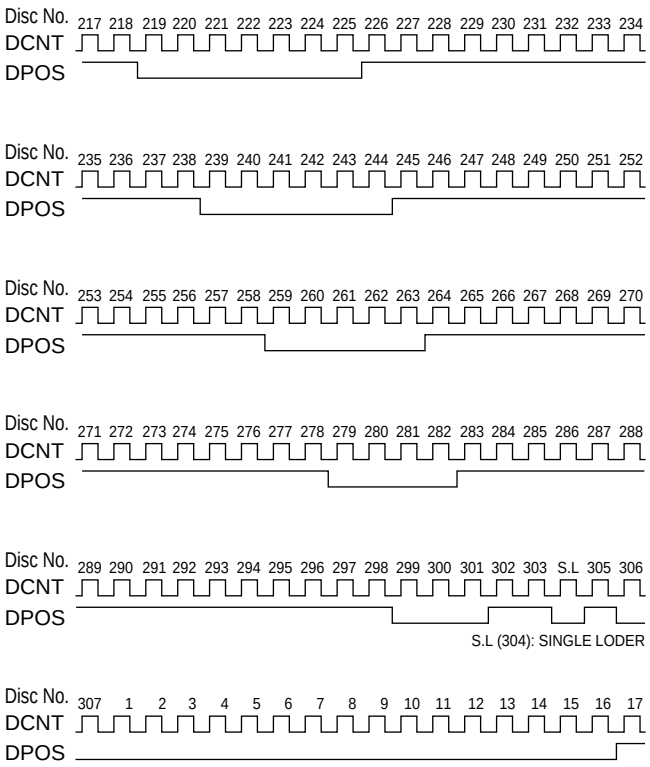

Relation between input port DCNT, DPOS and position of the mechanism

2. Position relation between position of the rack mechanism and photocell for disc detection

The relation between these two positions is as follows.

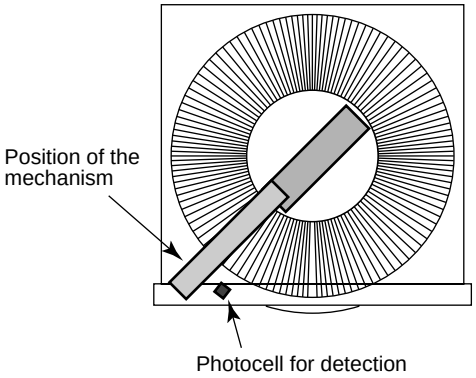

Fig.: The rack seen from above

The position of the mechanism and the photocell for detection are offset by a distance corresponding to 9 discs. Accordingly, the photocell for detection sees the disc number 9 discs before the position of the mechanism.

Example: Disc No. at the rack position : Disc No. 100
Disc No. seen by the photocell for detection : Disc No. 91

Note: The rack has 307 slits, but the slits 301 to 303 and 304 to 307 are the space for the side of the single loader and are not used. Disc detection also is not performed for them.

3. Disc Detection Method

3-1 In Regard to the Disc Detection Method

- Disc detection is performed after stabilization of the rotation speed after rack rotation start and completion of acceleration. (After start of rotation, detection starts after feed of 20 discs.)
- The input ports DCNT and DISC of the microcomputer are used for disc detection.

Port Explanation : DCNT : As described above.
DISC : Input of the disc detection result by the photocell for disc detection.
Input value "H" : No disc,
"L" : Disc present

3-2 In Regard to the Disc Detection Timing

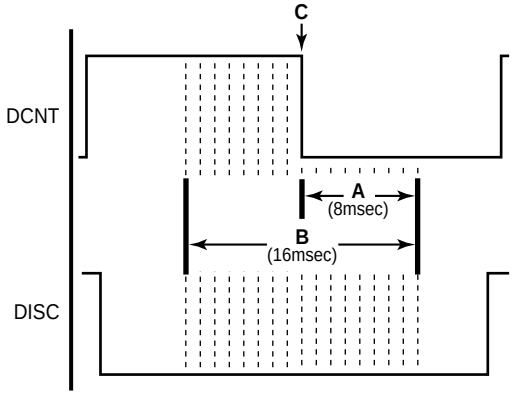

① The microcomputer looks every 1 msec at the status (H or L) of the two inputs DCNT and DISC.
② 8 msec (A in the figure) after the drop of DCNT (C in the figure), the last 17 DISC inputs (B in the figure) are checked.
A disc is assumed to be resent when even one of them is "L".
③ No disc is assumed when DISC was "H" all 17 times (B in the figure) in ②.

Note: In regard to the drop ( ) of DCNT
For looking at the drop or rise of DCNT, it is necessary to check DCNT every 1 msec for "H" or "L".
"H" → "L" means a drop ( ).
"L" → "H" means a rise ( ).

For the timing, either one of the following A and B can be assumed. Accordingly, the point where a drop is found differs by max. 1 msec for A and B.
Thus, using the above figure, it can be said that the time from finding that a drop has occurred until starting to check for disc presence (A in the above figure) becomes 8 to 9 msec.

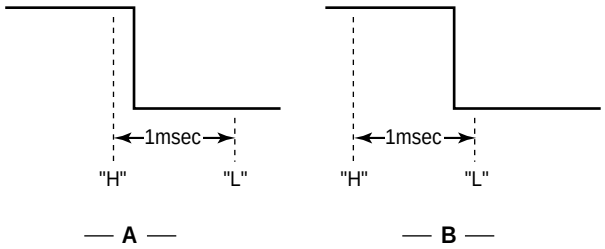

7.3 BLOCK DIAGRAM

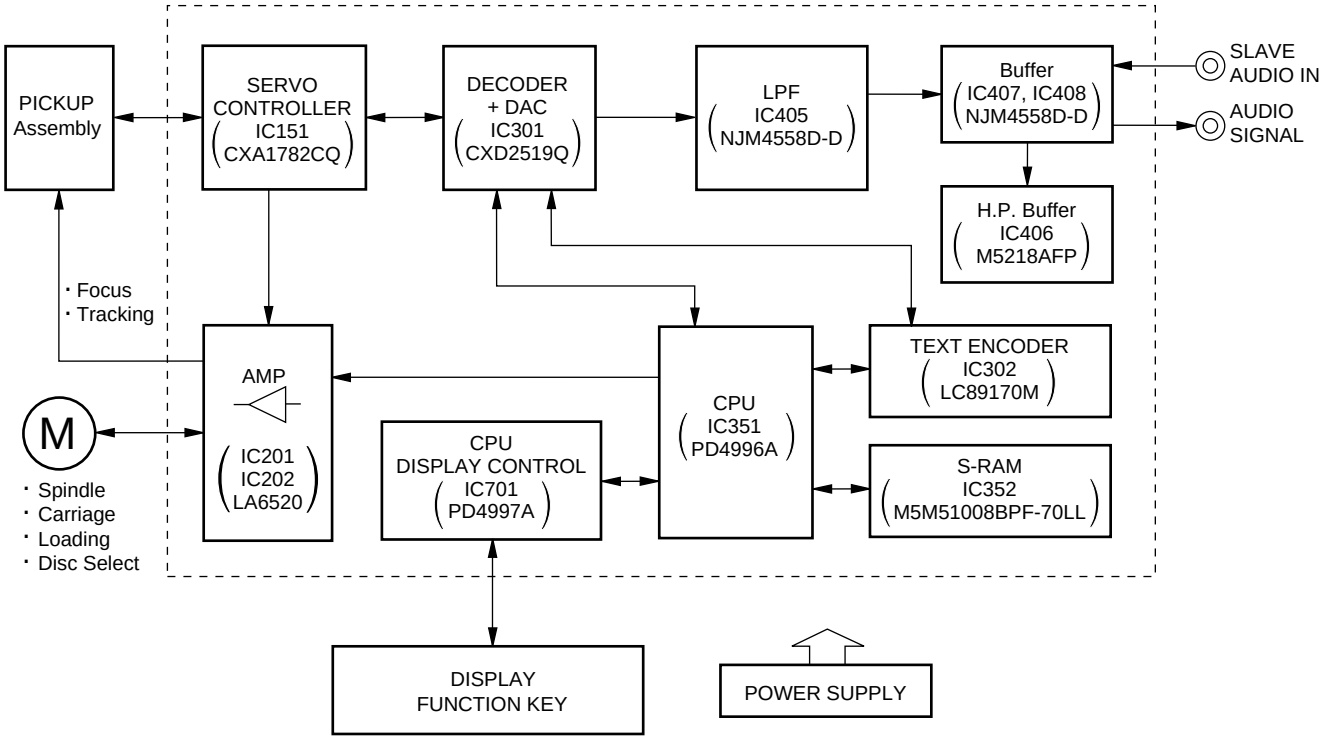

8. PANEL FACILITIES AND SPECIFICATIONS

■ PANEL FACILITIES

FRONT PANEL

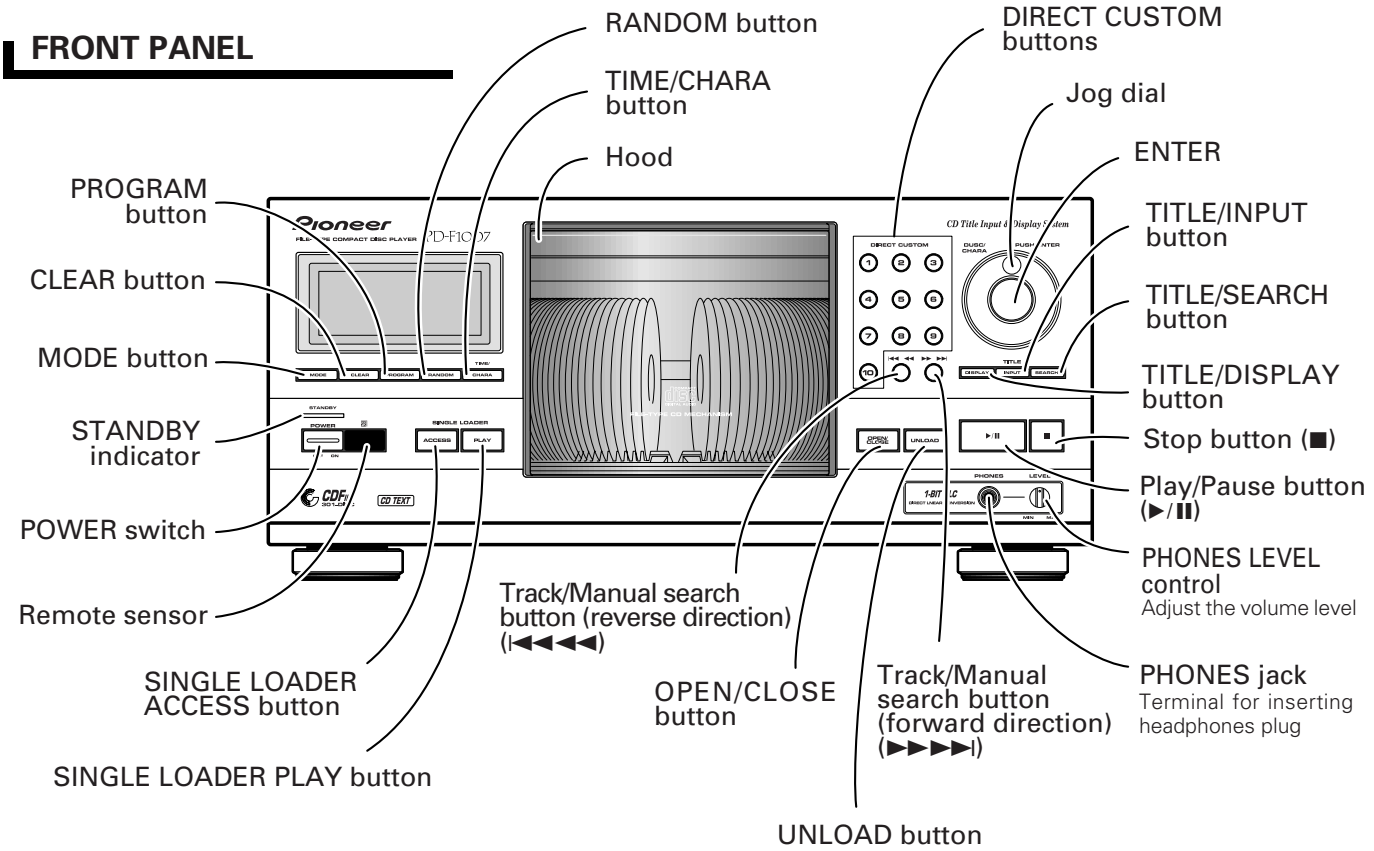

DISPLAY

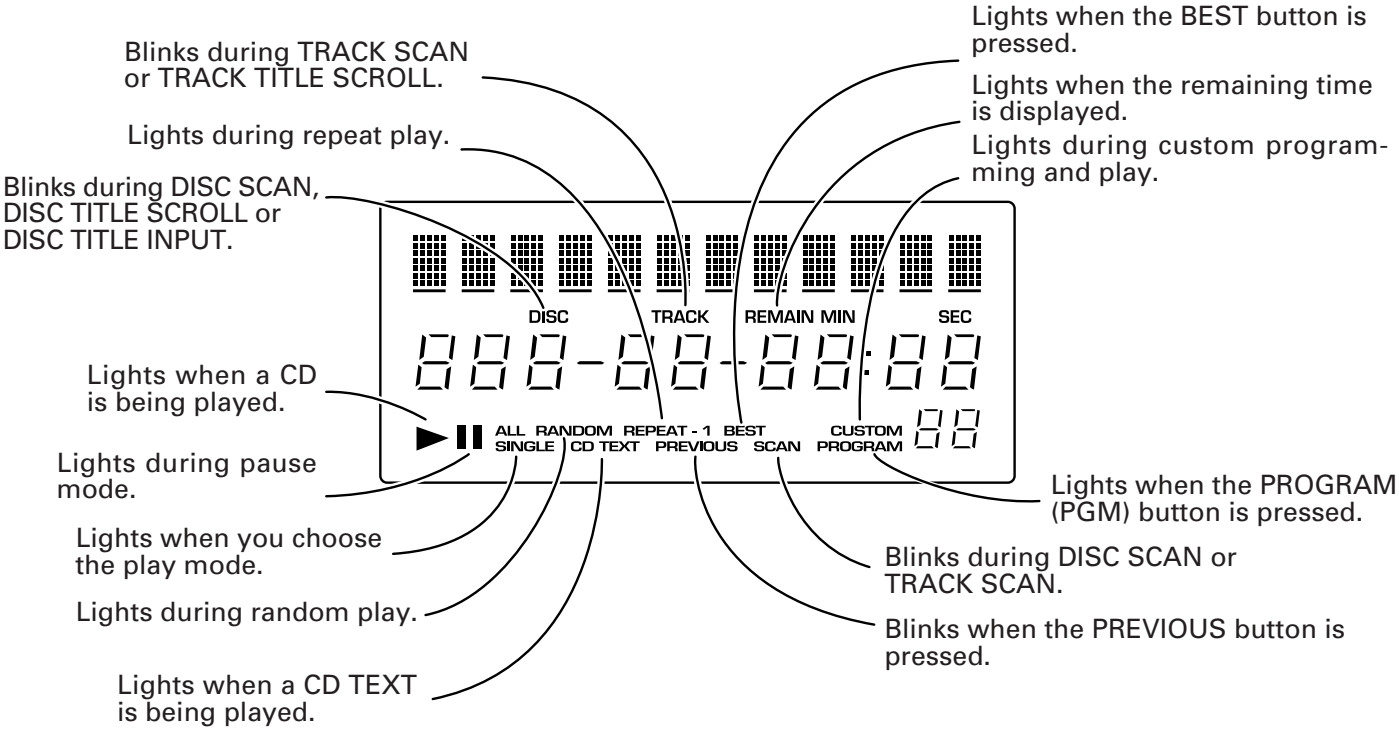

■ SPECIFICATIONS

1. General

Type ..... Compact disc digital audio system
Power requirements ..... AC 120V, 60 Hz
Power consumption 15W
Power consumption in standby mode 2W
Operating temperature ..... +5°C - +35°C (+41°F - +95°F)
Weight (without package) ..... 8.0 kg (17 lb 6 oz.)
External dimensions ..... 420(W) X 433(D) X 193(H) mm 16-9/16(W) X 17-1/16(D) X 7-5/8(H) in.

2. Audio section

Frequency response ..... 2 Hz - 20 kHz
S/N ratio ..... 98 dB or more (EIAJ)
Dynamic range ..... 96 dB or more (EIAJ)
Harmonic distortion ..... 0.003 % or less (EIAJ)
Level difference between channels ..... 1.0 dB or less (EIAJ)
Output voltage ..... 2 ± 0.3 Vrms (EIAJ)
Wow and flutter ..... less than ±0.001 % (W.PEAK) (below measurable level) (EIAJ)
Channels ..... 2-channel (stereo)

4. INPUT Output terminal

Audio line output
Control input/output jacks
CD-DECK SYNCHRO jack
Optical digital output jack
Headphone jack with volume control
MASTER/SLAVE Control input/output jack
SLAVE Audio input

5. Accessories

- Remote control unit 1
- Size AA/R6P dry cell batteries 2
- Audio cable 1
- Control cable 1
- Operating instructions 1

Note!!
Specifications and design subject to possible modification without notice, due to improvements.

Accessories

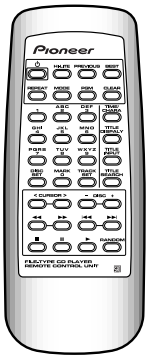

Remote control unit x 1
(CD-PD094)
(PWW1139)

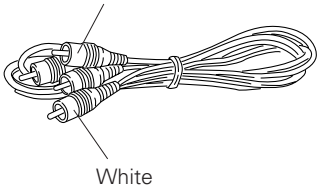

Audio cable x 1
(PDE1248) (L=1 m)

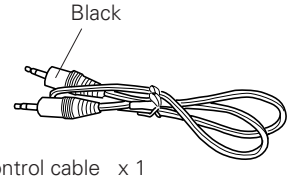

Control cable x 1
(PDE1247) (L=1 m)

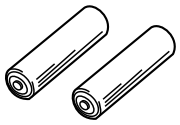

Size AA/R6P dry cell batteries x 2
(VEM–013)

Other included items
- Warranty card
- Operating Instructions

Service Manual

Pioneer

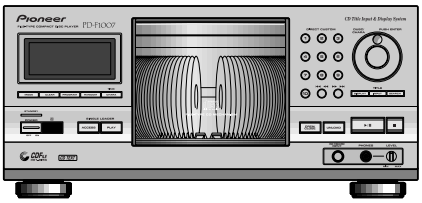

ORDER NO.
RRV2105

FILE-TYPE COMPACT DISC PLAYER

PD-F1007

THIS MANUAL IS APPLICABLE TO THE FOLLOWING MODEL(S) AND TYPE(S).

Type	Model	Power Requirement	Remarks
	PD-F1007		
MY	○	AC220-230V	

CONTENTS

1. SAFETY INFORMATION 2
2. EXPLODED VIEWS AND PARTS LIST 3
3. SCHEMATIC DIAGRAM 10
4. PCB CONNECTION DIAGRAM 22
5. PCB PARTS LIST 30
6. ADJUSTMENT 34
7. GENERAL INFORMATION 44
   7.1 PARTS 44
      7.1.1 IC 44
      7.1.2 DISPLAY 47
   7.2 DIAGNOSIS 48
      7.2.1 DISASSEMBLY 48
      7.2.2 ERROR CCHECK DISPLAY 51
      7.2.3 EXPLANATION OF DISC DETECTION 52
   7.3 BLOCK DIAGRAM 54
8. PANEL FACILITIES AND SPECIFICATIONS 55

PIONEER ELECTRONIC CORPORATION 4-1, Meguro 1-Chome, Meguro-ku, Tokyo 153-8654, Japan
PIONEER ELECTRONICS SERVICE, INC. P.O. Box 1760, Long Beach, CA 90801-1760, U.S.A.
PIONEER ELECTRONIC (EUROPE) N.V. Haven 1087, Keetberglaan 1, 9120 Melsele, Belgium
PIONEER ELECTRONICS ASIACENTRE PTE. LTD. 253 Alexandra Road, #04-01, Singapore 159936

© PIONEER ELECTRONIC CORPORATION 1999

T–ZZR FEB. 1999 Printed in Japan

1. SAFETY INFORMATION

This service manual is intended for qualified service technicians; it is not meant for the casual do-it-yourselfer. Qualified technicians have the necessary test equipment and tools, and have been trained to properly and safely repair complex products such as those covered by this manual.
Improperly performed repairs can adversely affect the safety and reliability of the product and may void the warranty. If you are not qualified to perform the repair of this product properly and safely, you should not risk trying to do so and refer the repair to a qualified service technician.

IMPORTANT

THIS PIONEER APPARATUS CONTAINS LASER OF CLASS 1.
SERVICING OPERATION OF THE APPARATUS SHOULD BE DONE BY A SPECIALLY INSTRUCTED PERSON.

LASER DIODE CHARACTERISTICS

MAXIMUM OUTPUT POWER: 7 mw
WAVELENGTH: 780 – 785 nm

LABEL CHECK

PD-F1007/MY

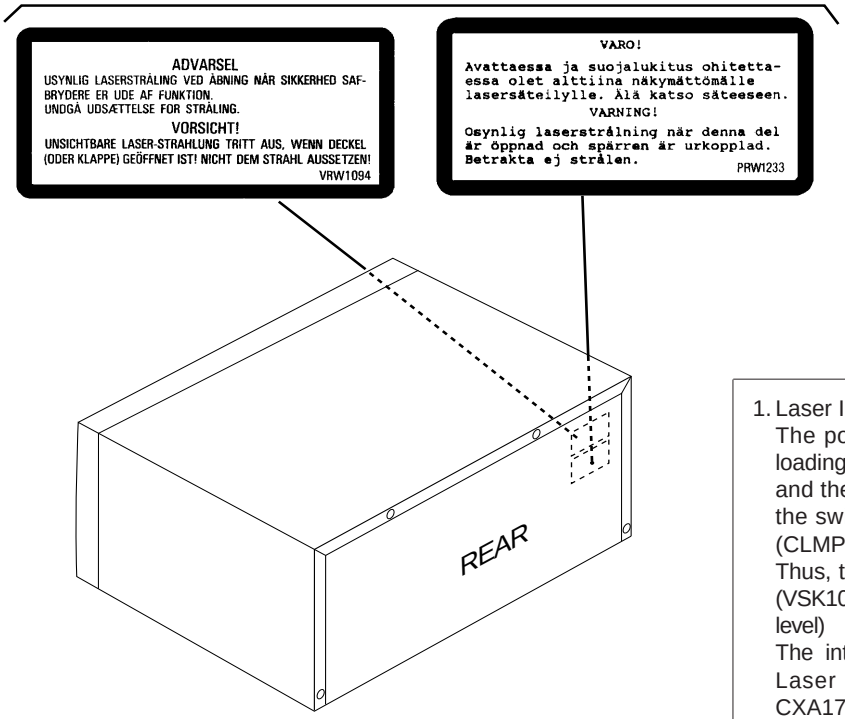

Additional Laser Caution

1. Laser Interlock Mechanism
   The position of the switch (VSK1011) for detecting loading state is detected by the system microprocessor, and the design prevents laser diode oscillation when the switch (VSK1011) is not on CLMP terminal side (CLMP signal is OFF or high level).
   Thus, the interlock will no longer function if the switch (VSK1011) is deliberatery set to CLMP terminal side. (low level)
   The interlock also does not function in the test mode *.
   Laser diode oscillation will continue, if pin 33 of CXA1782CQ (IC151) on the MOTHER BOARD ASSY is connected to GND, or pin 89 of IC351 (LDON) is connected to low level (ON), or else the terminals of Q151 are shorted to each other (fault condition).

2. When the cover is opened, close viewing of the objective lens with the naked eye will cause exposure to a Class 1 laser beam.

* Refer to page 35 .

2. EXPLODED VIEWS AND PARTS LIST

NOTES :
- *Parts marked by " NSP " are generally unavailable because they are not in our Master Spare Parts List.*
- *The ⚠ mark found on some component parts indicates the importance of the safety factor of the part. Therefore, when replacing, be sure to use parts of identical designation.*
- *Screw adjacent to ▼ mark on the product are used for disassembly.*

2.1 PACKING

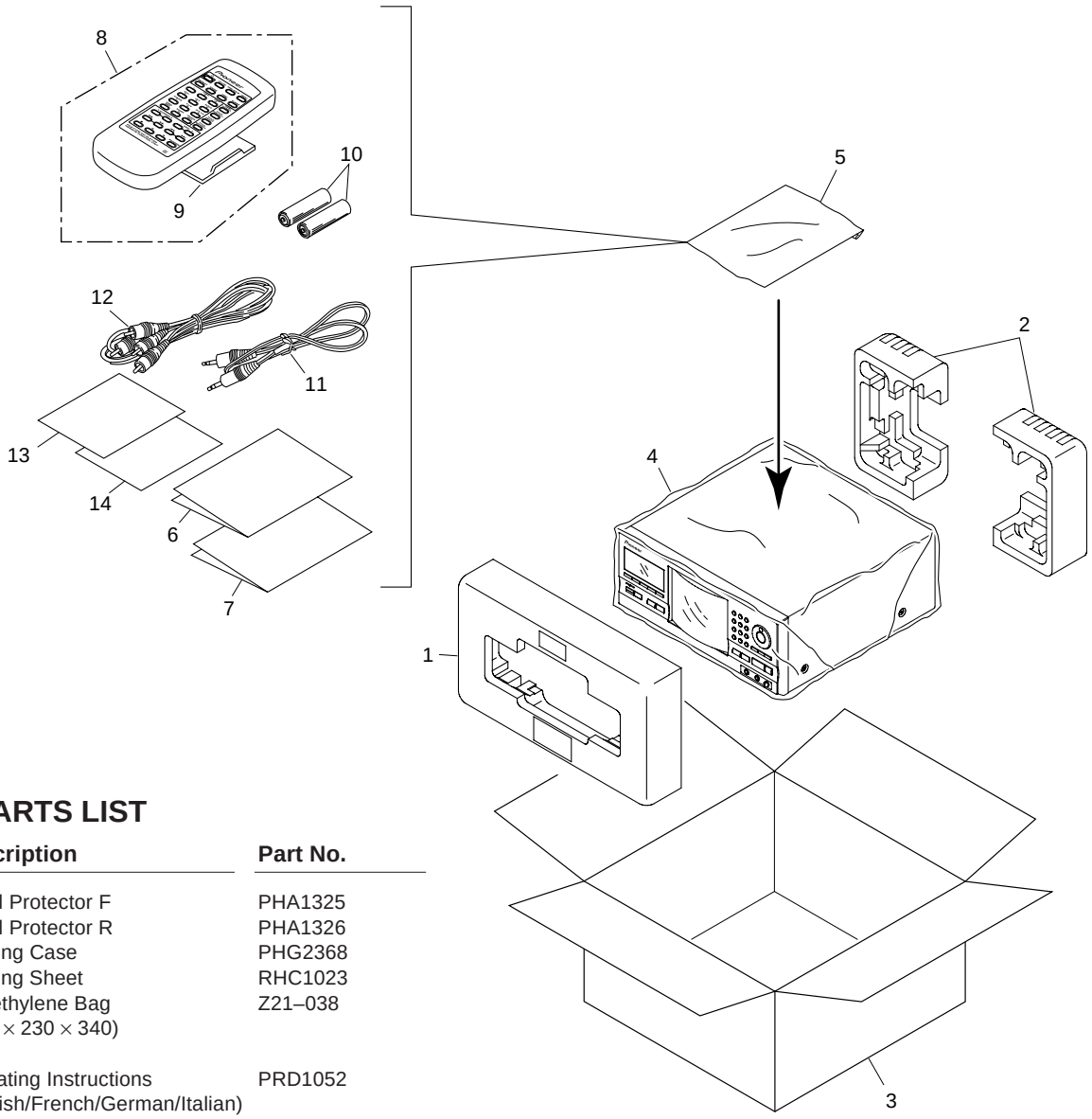

PACKING PARTS LIST

Mark	No.	Description	Part No.
	1	Styrol Protector F	PHA1325
	2	Styrol Protector R	PHA1326
	3	Packing Case	PHG2368
	4	Packing Sheet	RHC1023
	5	Polyethylene Bag (0.03 × 230 × 340)	Z21–038
	6	Operating Instructions (English/French/German/Italian)	PRD1052
	7	Operating Instructions (Dutch/Swedish/Spanish/Portuguese)	PRE1279
	8	Remote Control Unit (CD-PD094)	PWW1139
	9	Battery Cover	AZA7204
NSP	10	Dry Cell Batteries (R6P, AA)	VEM–013
	11	Control Cable (L=1 m)	PDE1247
	12	Audio Cable (L=1 m)	PDE1248
NSP	13	Warranty Card	ARY7022
	14	KEY Board Label	PRW1527

2.2 EXTERIOR (1/2)

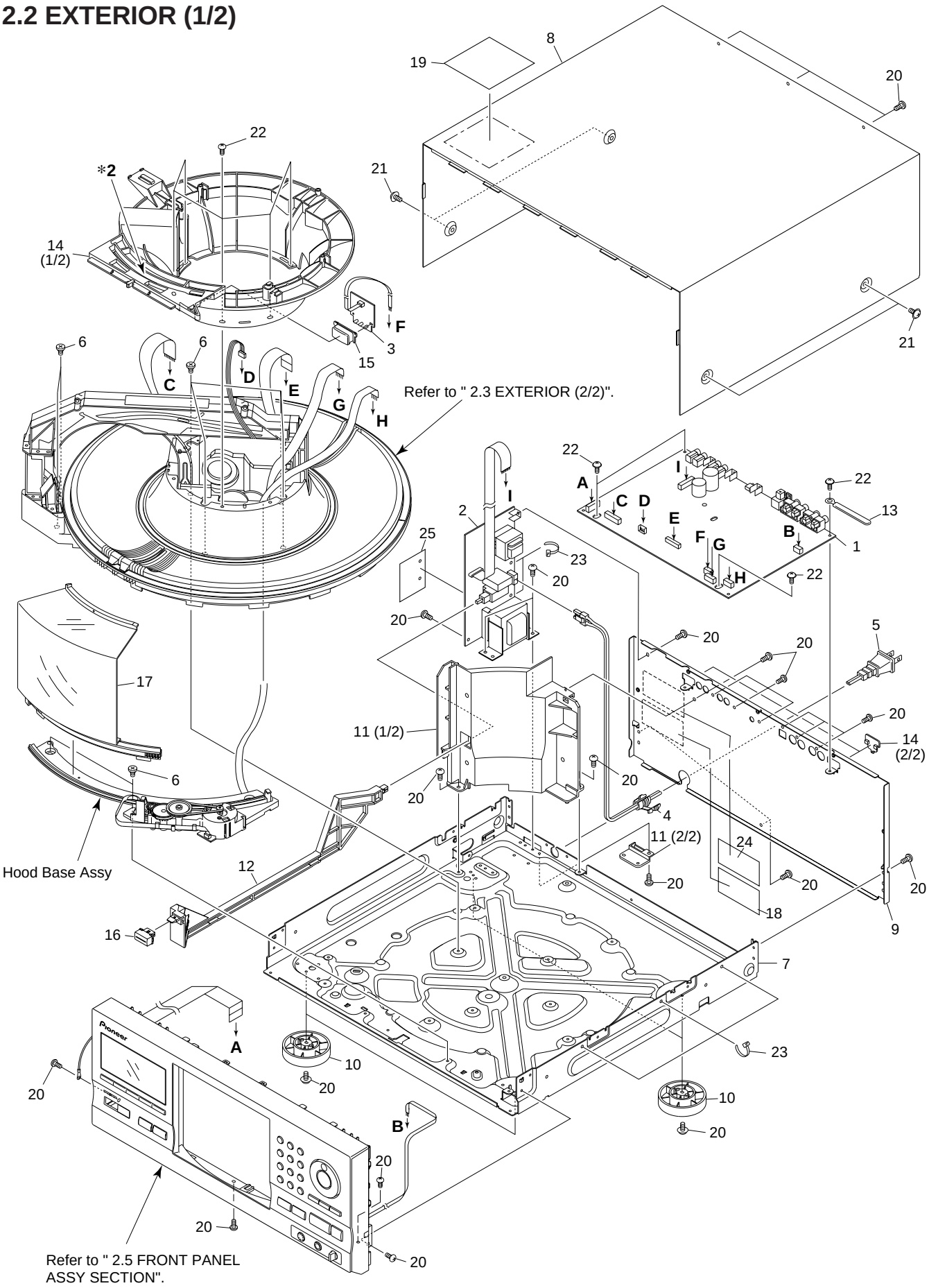

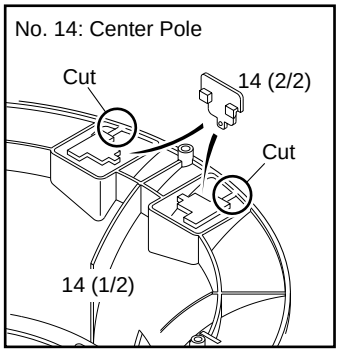

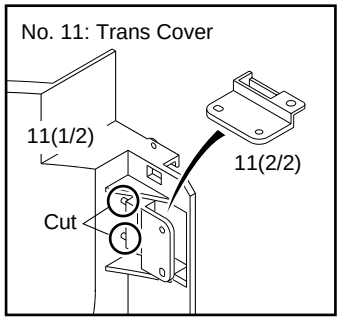

■ Hood Base Assy Section

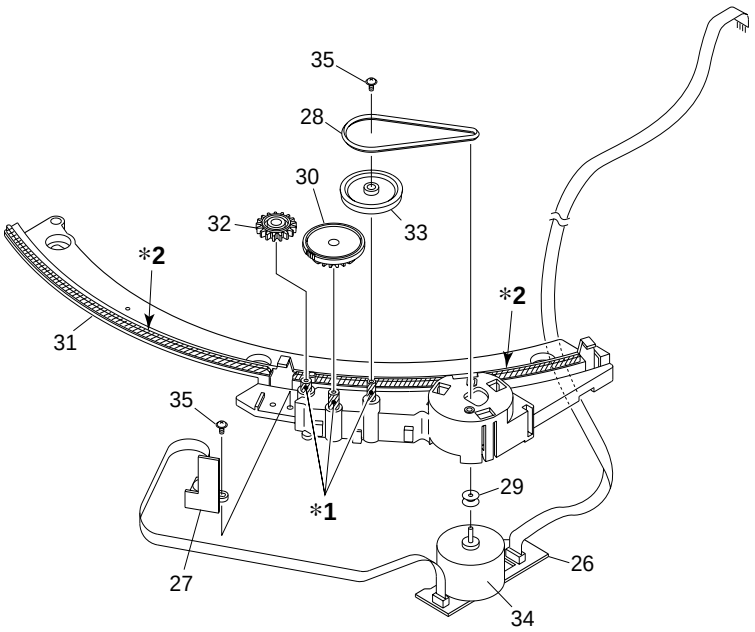

EXTERIOR (1/2) PARTS LIST

Mark	No.	Description	Part No.
	1	MAIN BOARD ASSY	PWZ3823
	2	POWER BOARD ASSY	PWZ3853
NSP	3	LED BOARD ASSY	PWZ3867
⚠	4	Strain Relief	CM–22B
⚠	5	AC Power Cord	VDG1061
	6	Screw C	PBA1106
NSP	7	Under Base	PNA2421
	8	Bonnet Case	PYY1255
	9	Rear Base	PNA2491
	10	Insulator	PNW2766
	11	Trans Cover	PNW2802
	12	Joint	PNW2805
	13	Cord Clamper	RNH–184
	14	Center Pole	PNW2792
	15	CR Lens	PNW2816
	16	POWER Button	PAC1884
	17	Hood	PNW2793
	18	Caution Label (HE)	PPW1233
	19	Caution Label	PRW1517
	20	Screw	BBZ30P080FZK
	21	Screw	FBT40P080FZK
	22	Screw	IPZ30P080FMC
	23	Binder	ZCA–SKB90BK
	24	Caution Label	VRW1094
	25	Screw Cover	PNM1340
	∗2	Ha Narl PN955R (for service)	GEM1016

Mark	No.	Description	Part No.
■ Hood Base Assy Section			
NSP	26	DOOR MOTOR BOARD ASSY	PWZ3863
NSP	27	DOOR SW BOARD ASSY	PWZ3865
	28	Belt	PEB1300
	29	Motor Pulley	PNW1634
	30	Gear AW	PNW2906
	31	Hood Base	PNW2791
	32	Gear M1	PNW2800
	33	Gear Pulley	VNL1662
	34	Slider Motor	VXM1033
	35	Screw	IPZ20P080FMC
	∗1	Froil 397 (for service)	GYA1001
	∗2	Ha Narl PN955R (for service)	GEM1016

2.3 EXTERIOR (2/2)

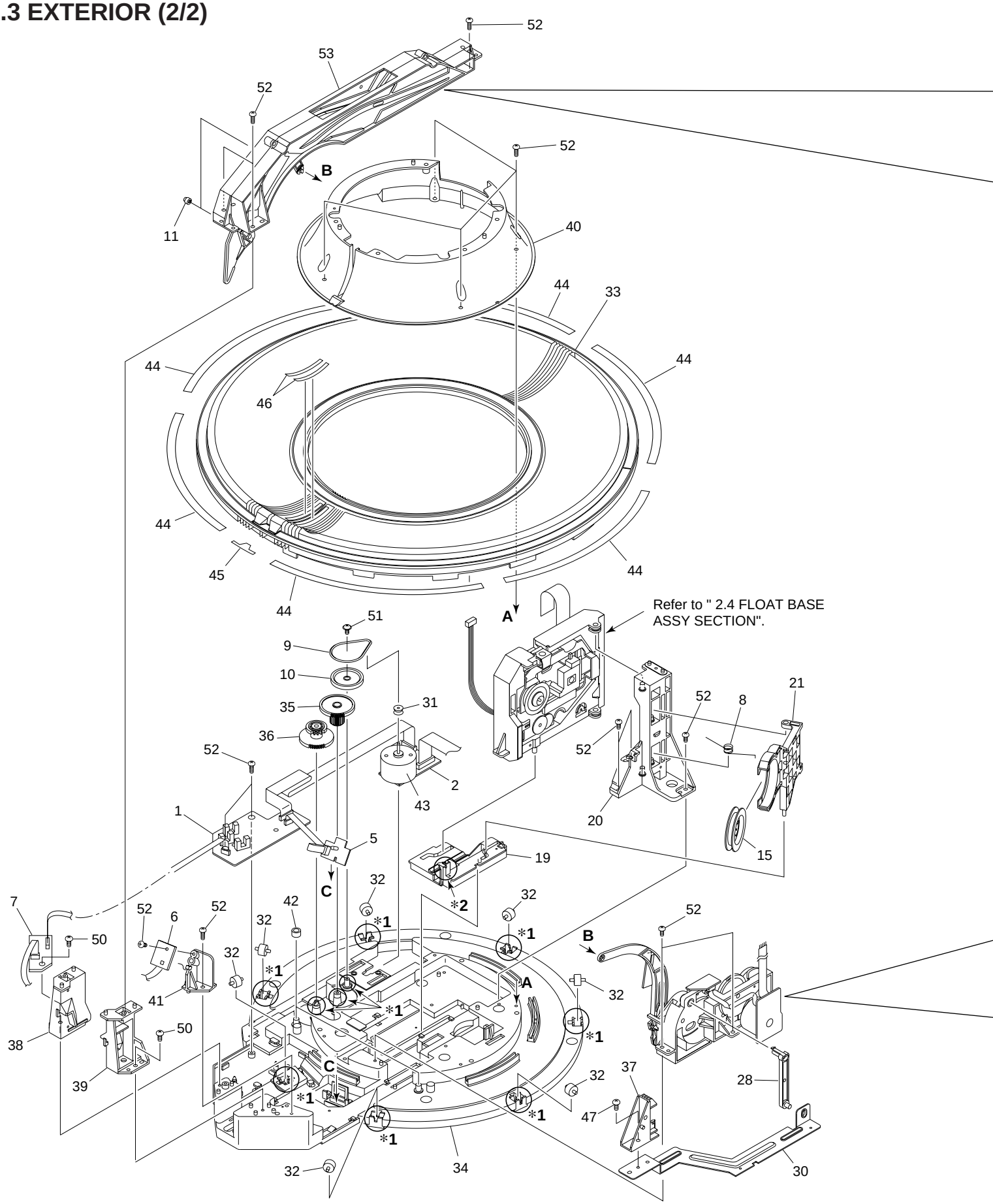

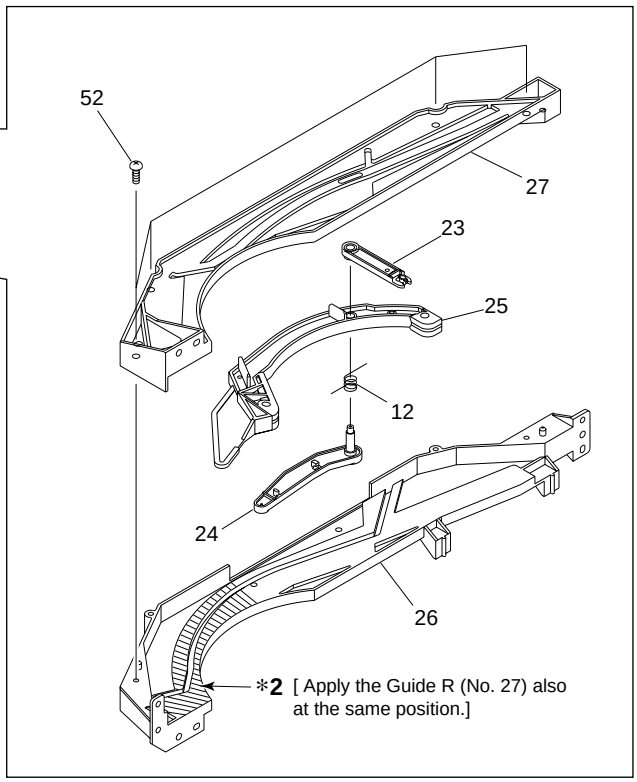

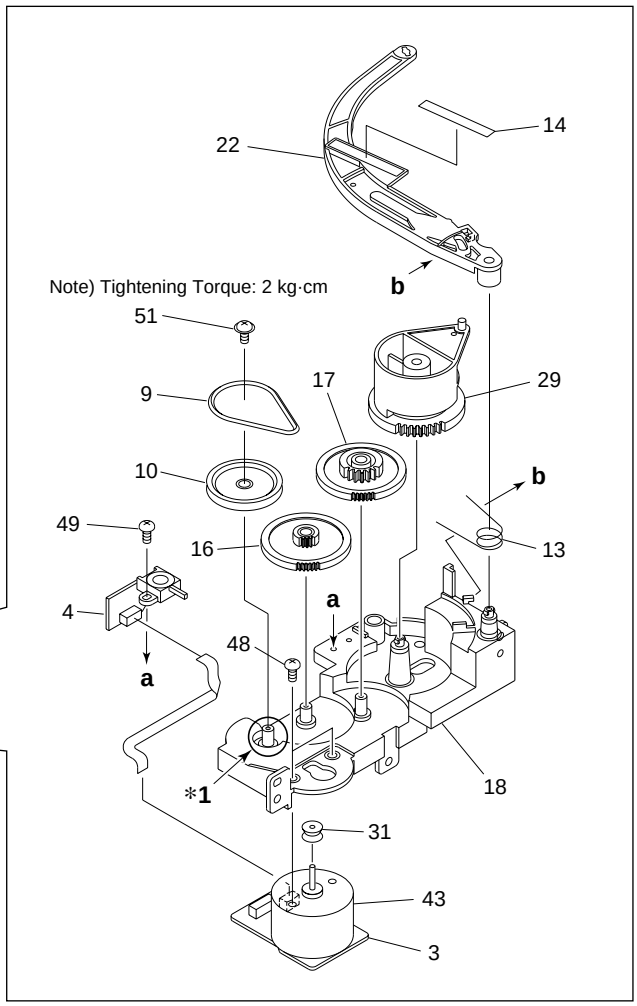

EXTERIOR (2/2) PARTS LIST

Mark	No.	Description	Part No.
NSP	1	SENSOR BOARD ASSY	PWZ3781
NSP	2	SELECT BOARD ASSY	PWZ3785
NSP	3	LOADING BOARD ASSY	PWZ3788
NSP	4	LOADING SW BOARD ASSY	PWZ3790
NSP	5	RADIATE BOARD ASSY	PWZ3791
NSP	6	RECEIVE BOARD ASSY	PWZ3792
NSP	7	VOLUME BOARD ASSY	PWZ3866
	8	Clamp Spring	ABH7107
	9	Loading Belt	AEB7029
	10	Gear Pulley B	ANW7062
	11	Roller B	ANW7075
NSP	12	Arm Spring	PBH1225
	13	L Arm Spring	PBH1226
	14	Sheet	PED1028
	15	Clamper	PNW2743
	16	Gear 1	PNW2819
	17	Gear 2	PNW2820
	18	Gear Holder	PNW2822
	19	Slider Cam	PNW2823
	20	Clamp Support	PNW2826
	21	Clamp Holder	PNW2827
	22	Drive Arm	PNW2829
NSP	23	Link	PNW2830
NSP	24	L Slider	PNW2831
NSP	25	L Arm	PNW2832
	26	Guide L	PNW2833
	27	Guide R	PNW2834
	28	Link L	PNW2844
	29	Drive Cam	PNW2873
	30	Lock Plate	PNA2438
	31	Motor Pulley	PNW1634
	32	Roller	PNW2647
	33	Disc Rack	PNW2790
	34	Rack Base	PNW2835
	35	ST Gear 0.6	PNW2836
	36	ST Gear 1.0	PNW2837
	37	Disc Divider	PNW2838
	38	Guide Support L	PNW2839
	39	Guide Support R	PNW2840
	40	Disc Guard	PNW2841
	41	Sensor Stay	PNW2842
	42	Guide Roller	PNW2843
	43	Slider Motor	VXM1033
	44	Rack Label	PAM1770
	45	S Label	PAM1771
	46	+1 Label	PRW1507
	47	Screw	BBZ30P080FZK
	48	Screw	BMZ26P040FZK
	49	Screw	BPZ26P060FMC
	50	Screw	BPZ30P100FCU
	51	Screw	IPZ20P080FMC
	52	Screw	PPZ30P080FMC
	53	Arm Assy	PXA1615
	*1	Froil 397 (for service)	GYA1001
	*2	Ha Narl PN955R (for service)	GEM1016

2.4 FLOAT BASE ASSY SECTION

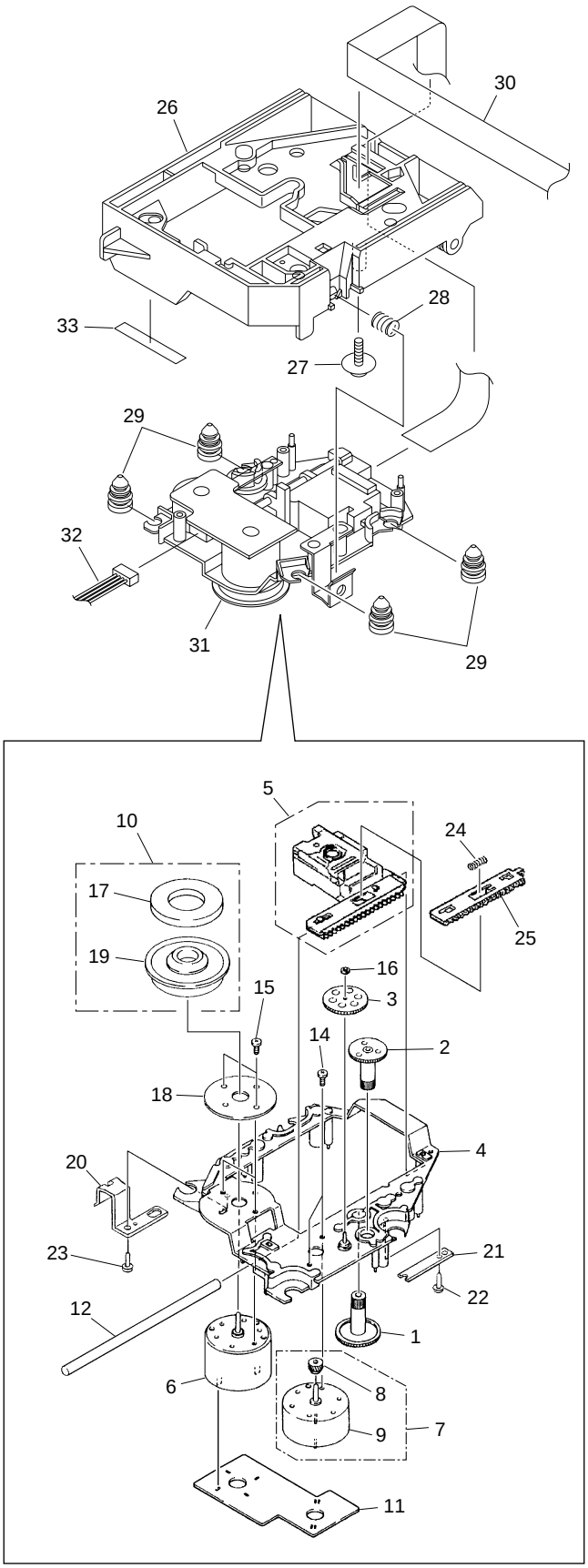

FLOAT BASE ASSY SECTION PARTS LIST

Mark	No.	Description	Part No.
	1	Gear 1	PNW2052
	2	Gear 2	PNW2053
	3	Gear 3	PNW2054
	4	Carriage Base	PNW2699
	5	Pickup Assy - S	PEA1335
	6	D.C. Motor Assy (SPINDLE)	PEA1235
	7	Carriage DC Motor Assy	PEA1246
	8	Pinion Gear	PNW2055
	9	Carriage DC Motor/0.3W	PXM1027
	10	Disc Table Assy	PEA1314
	11	Mechanism Board Assy	PWX1192
	12	Guide Bar	PLA1094
	13	……	
	14	Screw	JFZ17P025FZK
	15	Screw	JFZ20P040FMC
	16	Washer	WT12D032D025
	17	Clamp Magnet	PMF1014
	18	Yoke M	PNB1312
NSP	19	Disc Table	PNW2410
NSP	20	Float Angle	ANB7020
	21	Gear Stopper	PNB1303
	22	Screw	BPZ20P060FMC
	23	Screw	BPZ26P100FMC
	24	PU Rack Spring	ABH7077
	25	Rack Holder	PNW2056
	26	Float Base	PNW2828
	27	Screw	ABA7009
	28	Float Spring	ABH7049
	29	Float Rubber	AEB7028
	30	16P F·F·C/30V	PDD1185
NSP	31	Servo Mechanism Assy GM	PXA1591
	32	Connector Assy (4P)	RDE1043
	33	Sheet	PED1028

● How to Install the Disc Table

1 Use nipper or other tool to cut the three sections marked Ⓐ in figure 1. Then remove the spacer

2 While supporting the spindle motor shaft with the stopper, put spacer on top of the yoke M, and stick the disc table on top (takes about 9kg pressure). Detach the spacer.

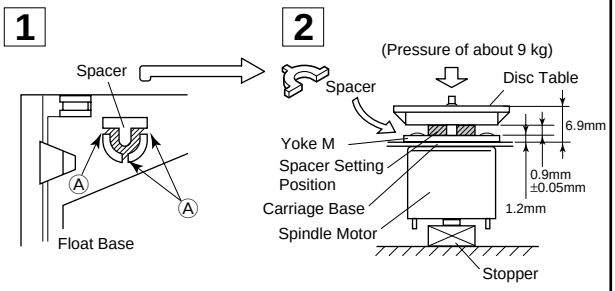

2.5 FRONT PANEL ASSY SECTION

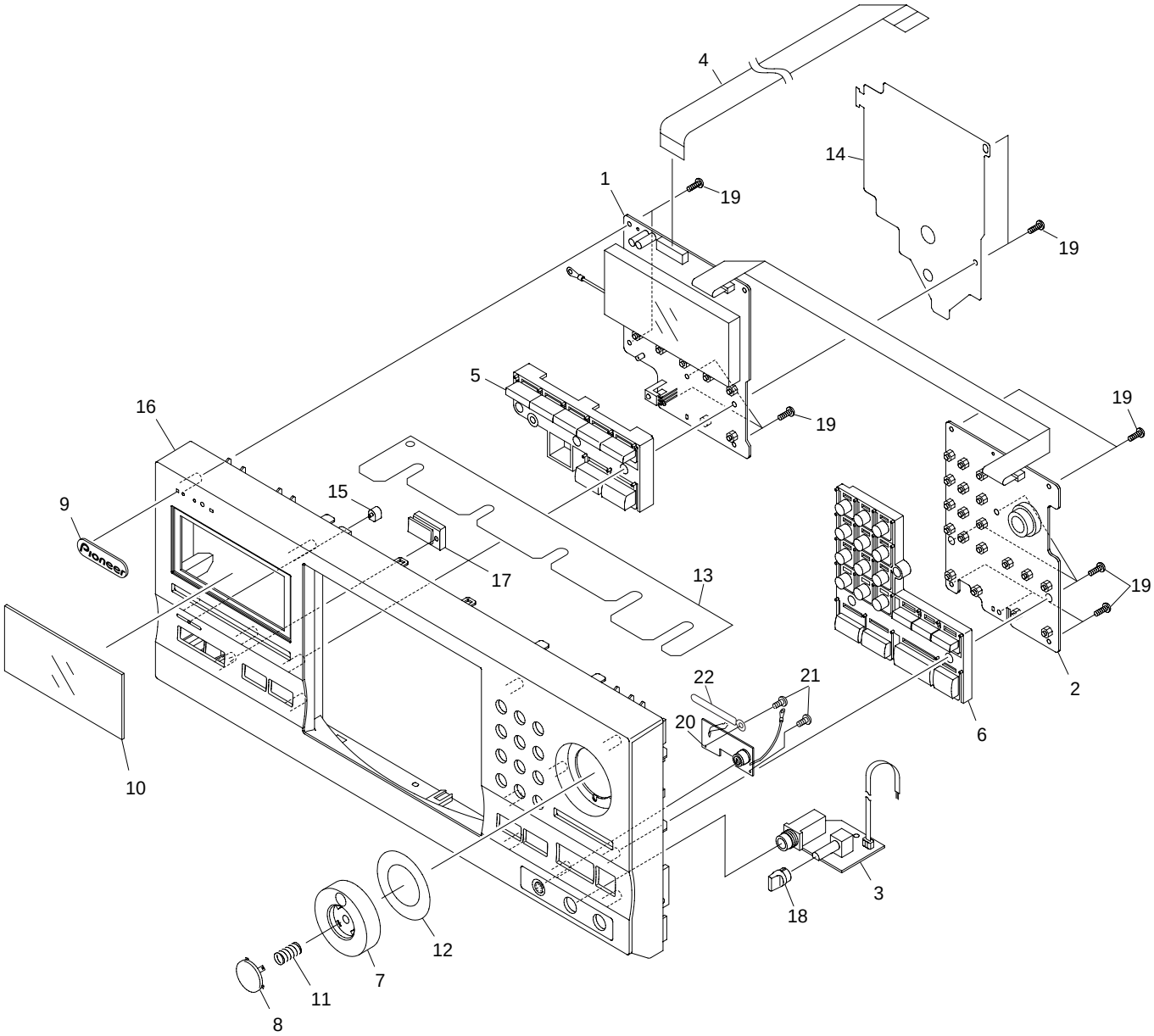

FRONT PANEL ASSY SECTION PARTS LIST

Mark	No.	Description	Part No.
	1	DISPLAY BOARD ASSY	PWZ3840
NSP	2	FUNCTION BOARD ASY	PWZ3847
NSP	3	HEADPHONE BOARD ASSY	PWZ3860
	4	18P F·F·C/30V	PDD1188
	5	MODE Button	PAC1880
	6	PLAY Button	PAC1881
	7	Jog Dial	PAC1882
	8	ENTER Button	PAC1883
	9	Name Plate	PAM1776
	10	Display Window	PAM1796
	11	Enter Spring	PBH1228
	12	Jog Sheet	PEC1042

Mark	No.	Description	Part No.
	13	FC Cover	PNM1323
	14	PCB Cover	PNM1324
	15	LED Lens	PNW2019
	16	Operation Panel	PNW2909
	17	Sensor Lens	PNW2804
	18	Rotary Knob	RAC1903
	19	Screw	PPZ30P100FMC
	20	KEY BOARD ASSY	PWZ3836
	21	Screw	PPZ30P050FMC
	22	Cord clamper	RNH-184

3. SCHEMATIC DIAGRAM

Note : When ordering service parts, be sure to refer to "EXPLODED VIEWS and PARTS LIST" or "PCB PARTS LIST".

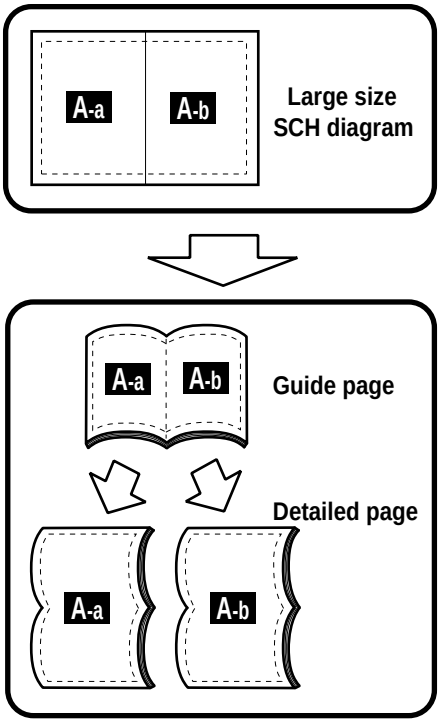

3.1 MECHANISM BOARD, DOOR MOTOR BOARD, DOOR SW BOARD, LED BOARD and PICKUP ASSEMBLIES

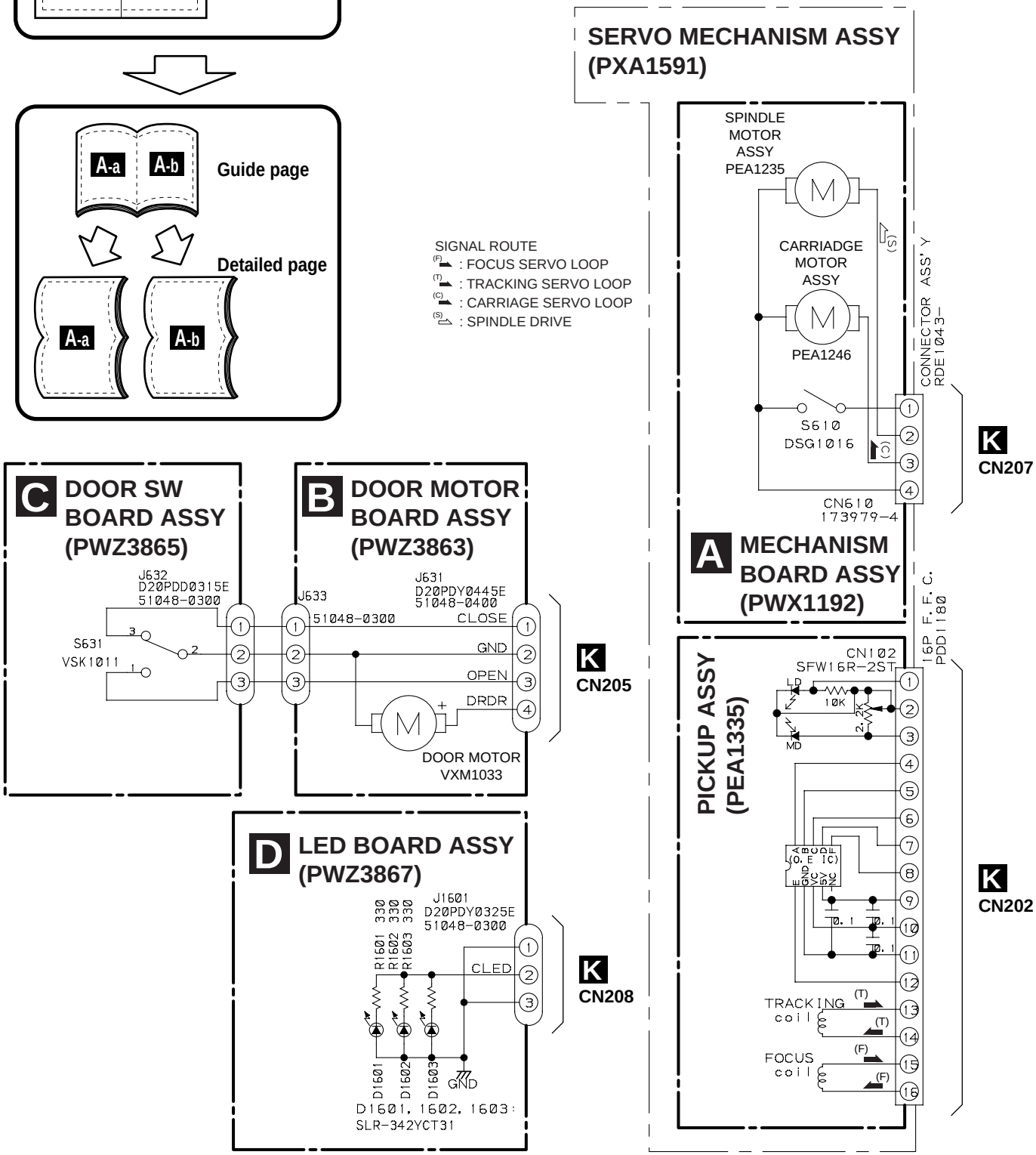

3.2 LOADING SW, LOADING BOARD, SENSOR BOARD, RECIEVE BOARD, RADIATE BOARD and SELECT BOARD ASSEMBLIES

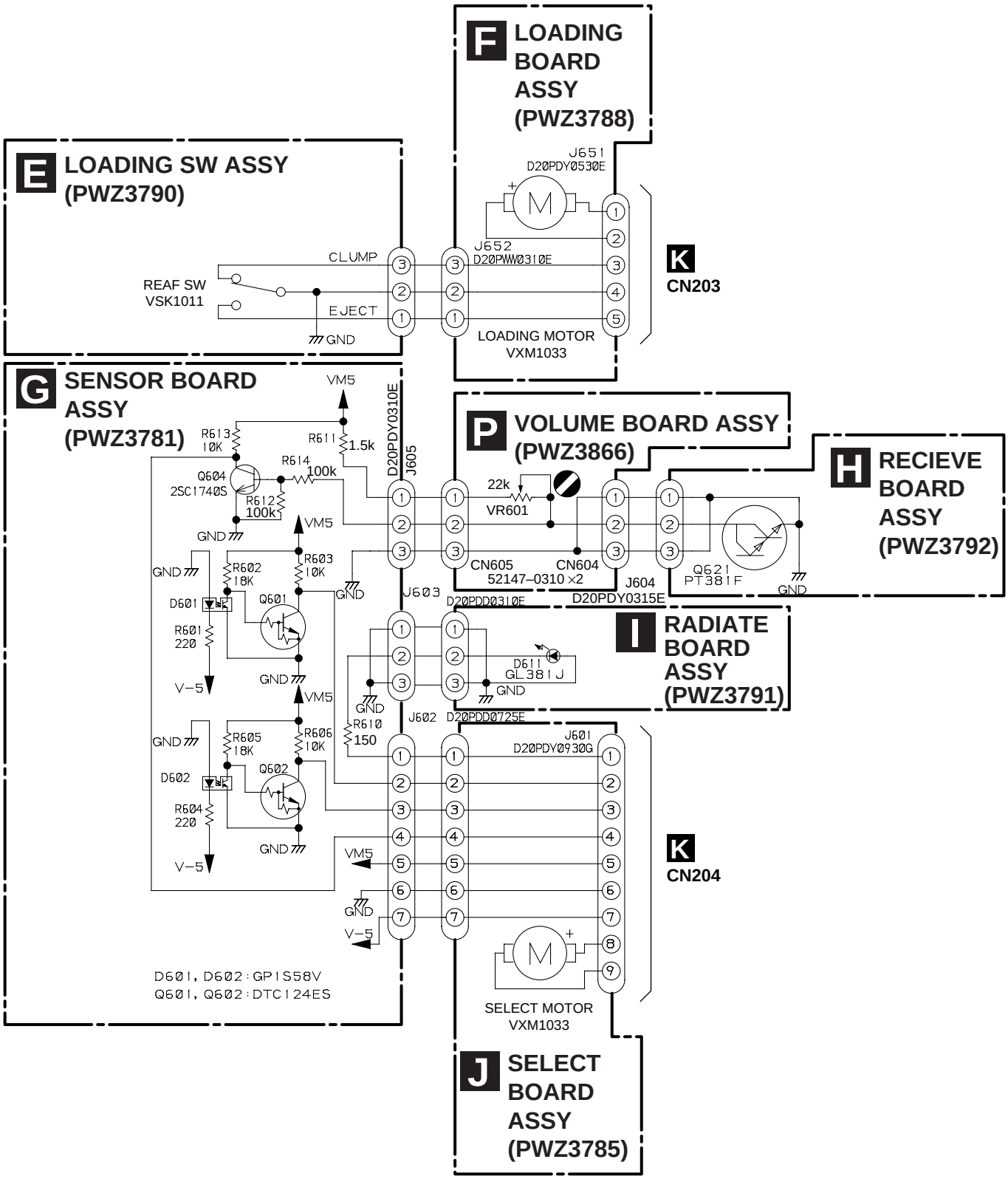

3.3 MAIN BOARD ASSY

K-a

CAUTION : FOR CONTINUED PROTECTION AGAINST RISK OF FIRE, REPLACE ONLY WITH SAME TYPE NO. ICP-N10, MFD BY ROHM CO., FOR IC35 AND IC36.

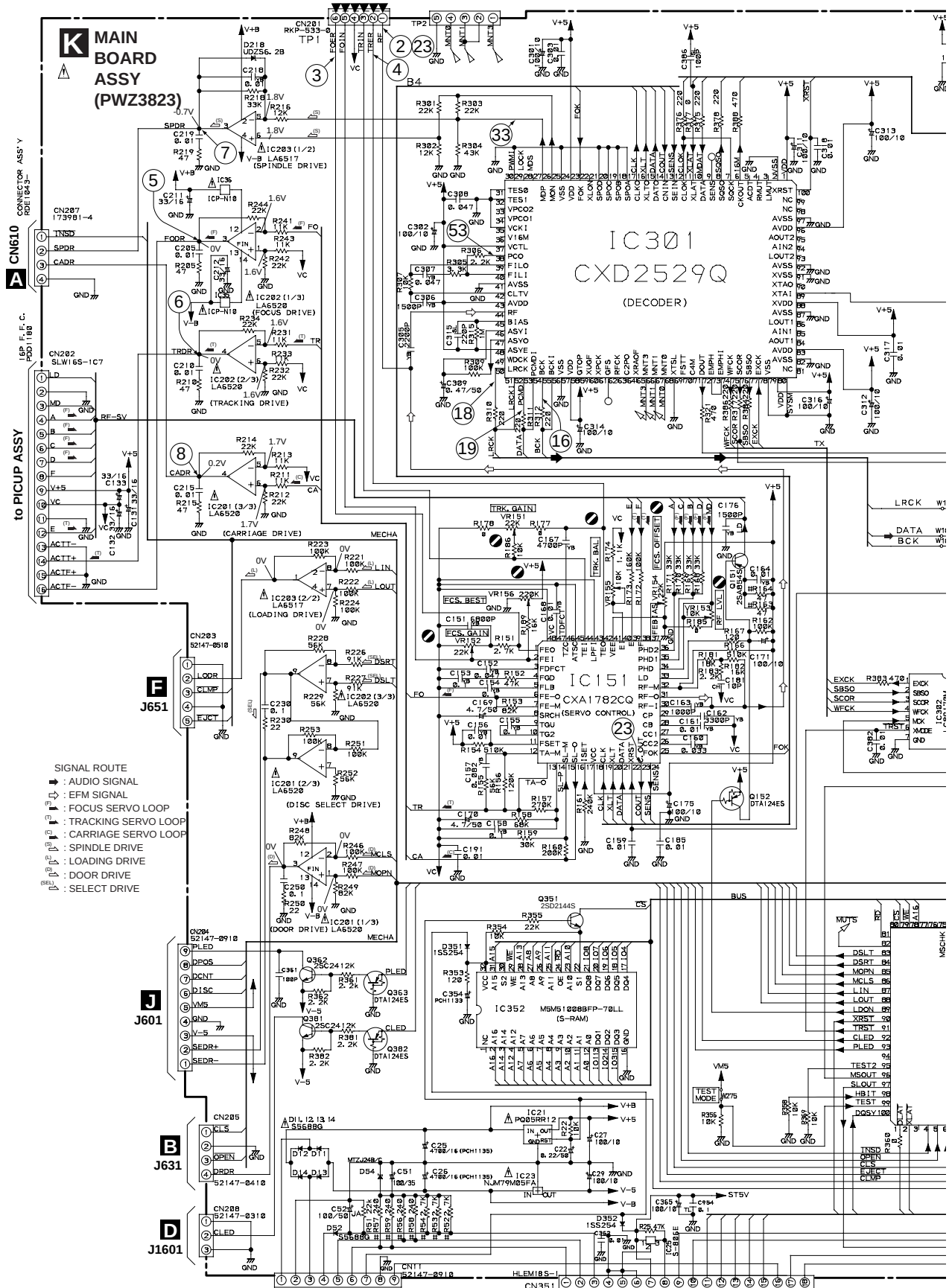

K-b

IC301(CXD2529Q) :PLAY MODE

PIN No.	1	2	3 - 4	7	8	9	10	11	12	13	14	16	17	23	24	25
Voltage(V)	5	0	0	4.7	1.2-1.3	1.2-1.4	4.4	5	4.7	4.7	0.05	5	4.7	5	5	0

PIN No.	26	27	38	39	40	41	42	43	44	45	46	47	48	50-55	56	57
Voltage(V)	5	2.6-2.7	2.5	3.1	2.5	0	3.1	5	2.5	0.9	2.5	2.5	5	2.5	0	5

PIN No.	61	71	75	78	79	82	83	84-86	87	88	89-90	91-92	93-95	96	97	100
Voltage(V)	5	2.5	0	0	5	0	5	2.5	0	5	2.5	0	2.5	5	0	5

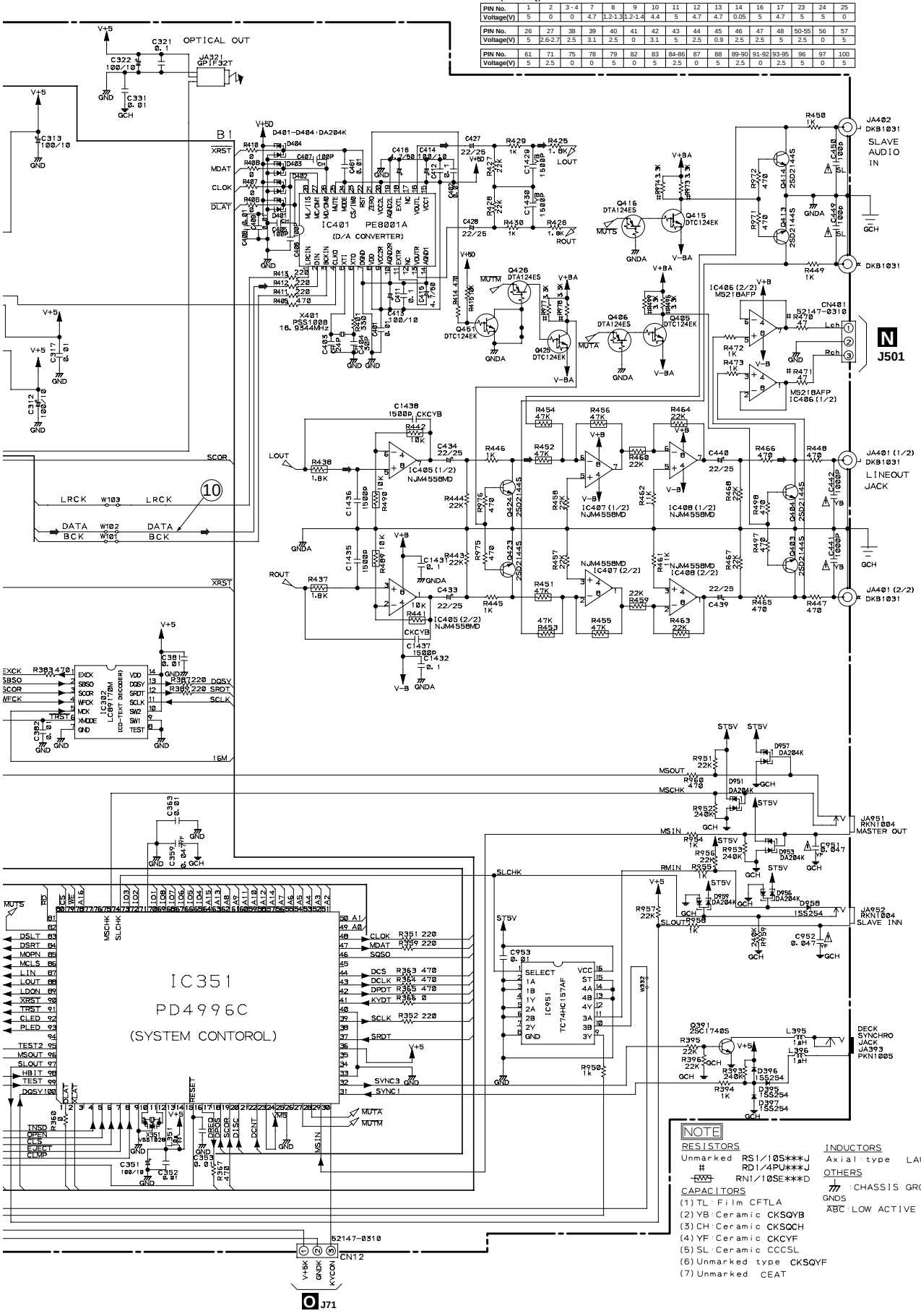

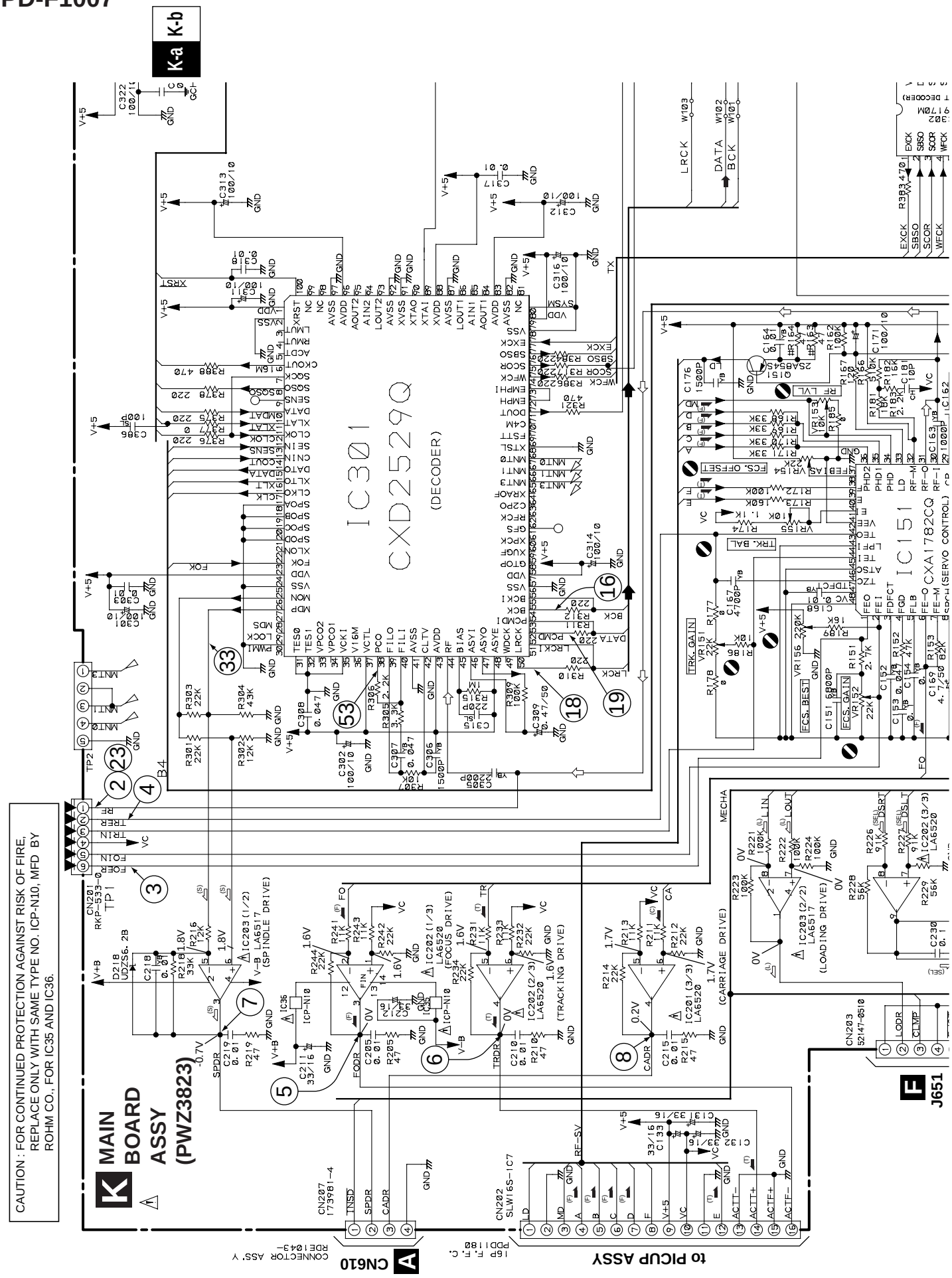
K-a
K-b
IC301
CXD2529Q
(DECODER)
IC151
CXA1782CQ
(SERVO CONTROL)
K
MAIN
BOARD
ASSY
(PWZ3823)
CAUTION : FOR CONTINUED PROTECTION AGAINST RISK OF FIRE,
REPLACE ONLY WITH SAME TYPE NO. ICP-N10, MFD BY
ROHM CO., FOR IC35 AND IC36.
CN610
CONNECTOR ASS'Y
to PICUP ASSY
J651
MECHA
(CARRIAGE DRIVE)
(LOADING DRIVE)
(TRACKING DRIVE)
(FOCUS DRIVE)
(SPINDLE DRIVE)

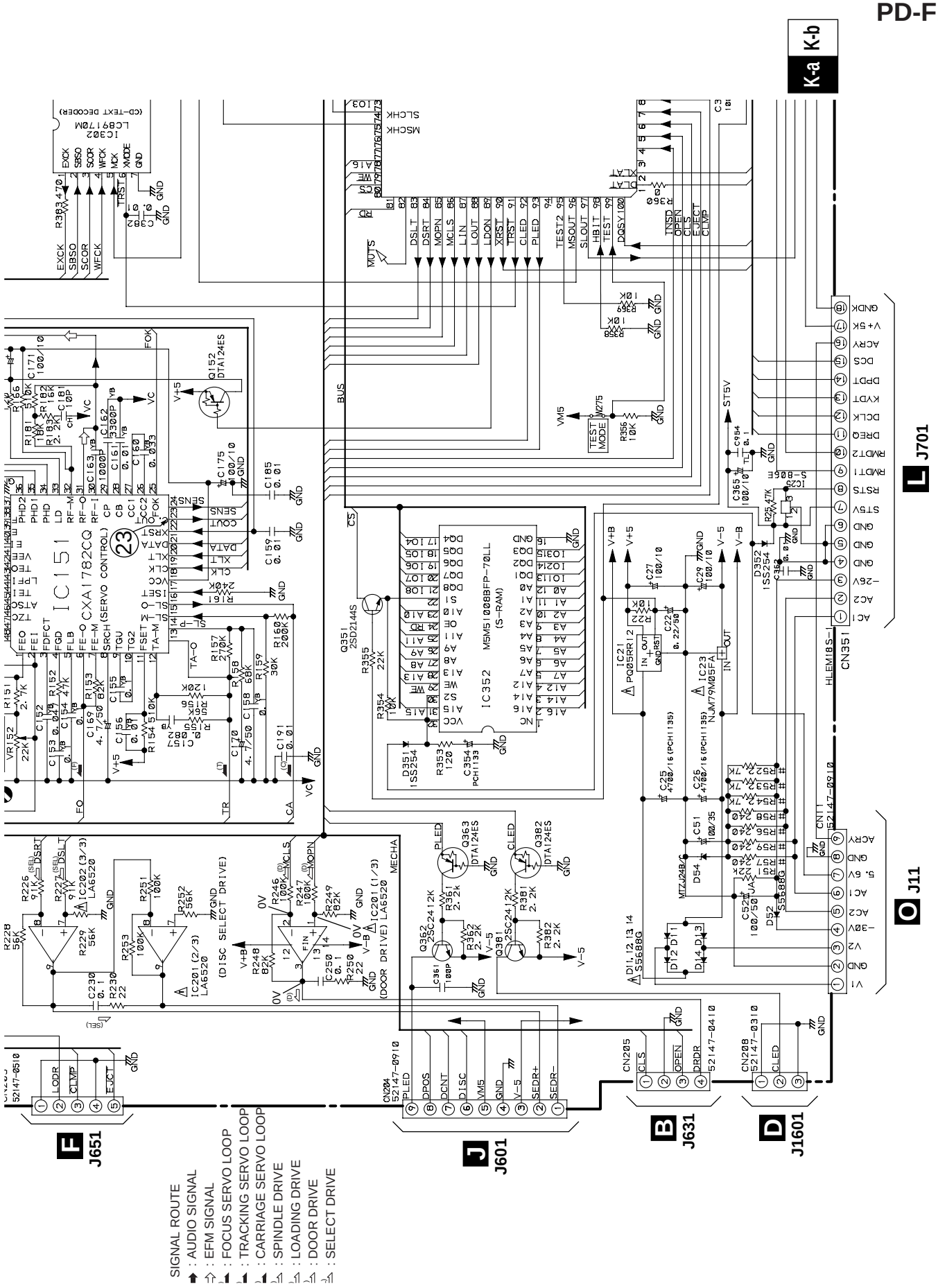
IC151
CXA1782CQ
(SERVO CONTROL)
IC352
M5M51008BFP-70LL
(S-RAM)
IC302
LC89170M
(CD-TEXT DECODER)
IC201(1/3)
LA6520
(DOOR DRIVE)
IC201(2/3)
LA6520
(DISC SELECT DRIVE)
IC202(3/3)
LA6520
MECHA
IC21
PQ05RR12
IC23
NJM79M05FA
CN351
HLEM18S-
CN11
52147-0910
CN204
52147-0910
CN205
52147-0410
CN208
52147-0310
CN202
52147-0510
L J701
O J11
B J631
D J1601
J J601
F J651
K-a
K-b
SIGNAL ROUTE
: AUDIO SIGNAL
: EFM SIGNAL
: FOCUS SERVO LOOP
: TRACKING SERVO LOOP
: CARRIAGE SERVO LOOP
: SPINDLE DRIVE
: LOADING DRIVE
: DOOR DRIVE
: SELECT DRIVE

K-a K-b

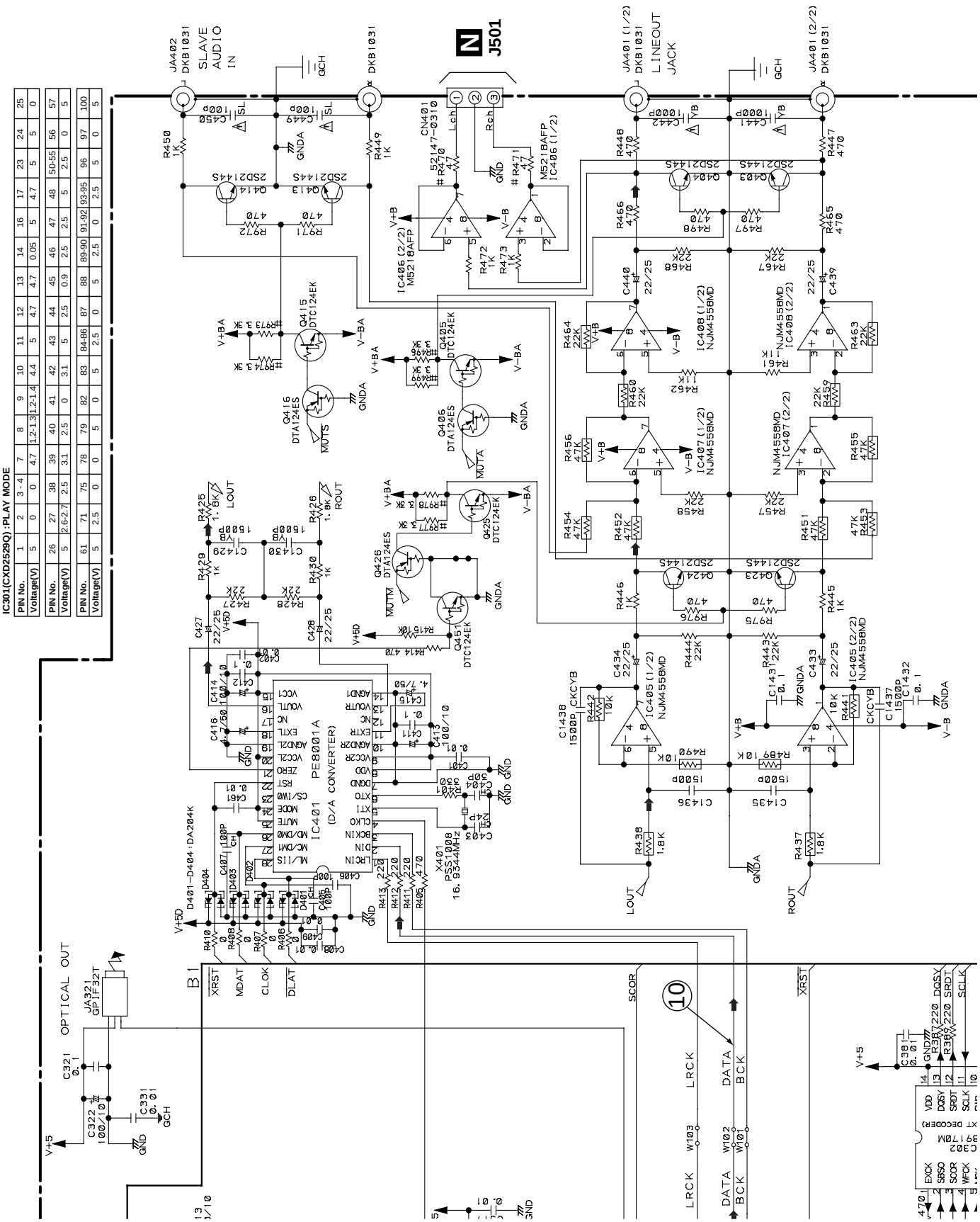

IC301(CXD2529Q):PLAY MODE

PIN No.	1	2	3 - 4	7	8	9	10	11	12	13	14	16	17	23	24	25
Voltage(V)	5	0	0	4.7	1.2-1.3	1.2-1.4	4.4	5	4.7	4.7	0.05	5	4.7	5	5	0

PIN No.	26	27	38	39	40	41	42	43	44	45	46	47	48	50-55	56	57
Voltage(V)	5	2.6-2.7	2.5	3.1	2.5	0	3.1	5	2.5	0.9	2.5	2.5	5	2.5	0	5

PIN No.	61	71	75	78	79	82	83	84-86	87	88	89-90	91-92	93-95	96	97	100
Voltage(V)	5	2.5	0	0	5	0	5	2.5	0	5	2.5	0	2.5	5	0	5

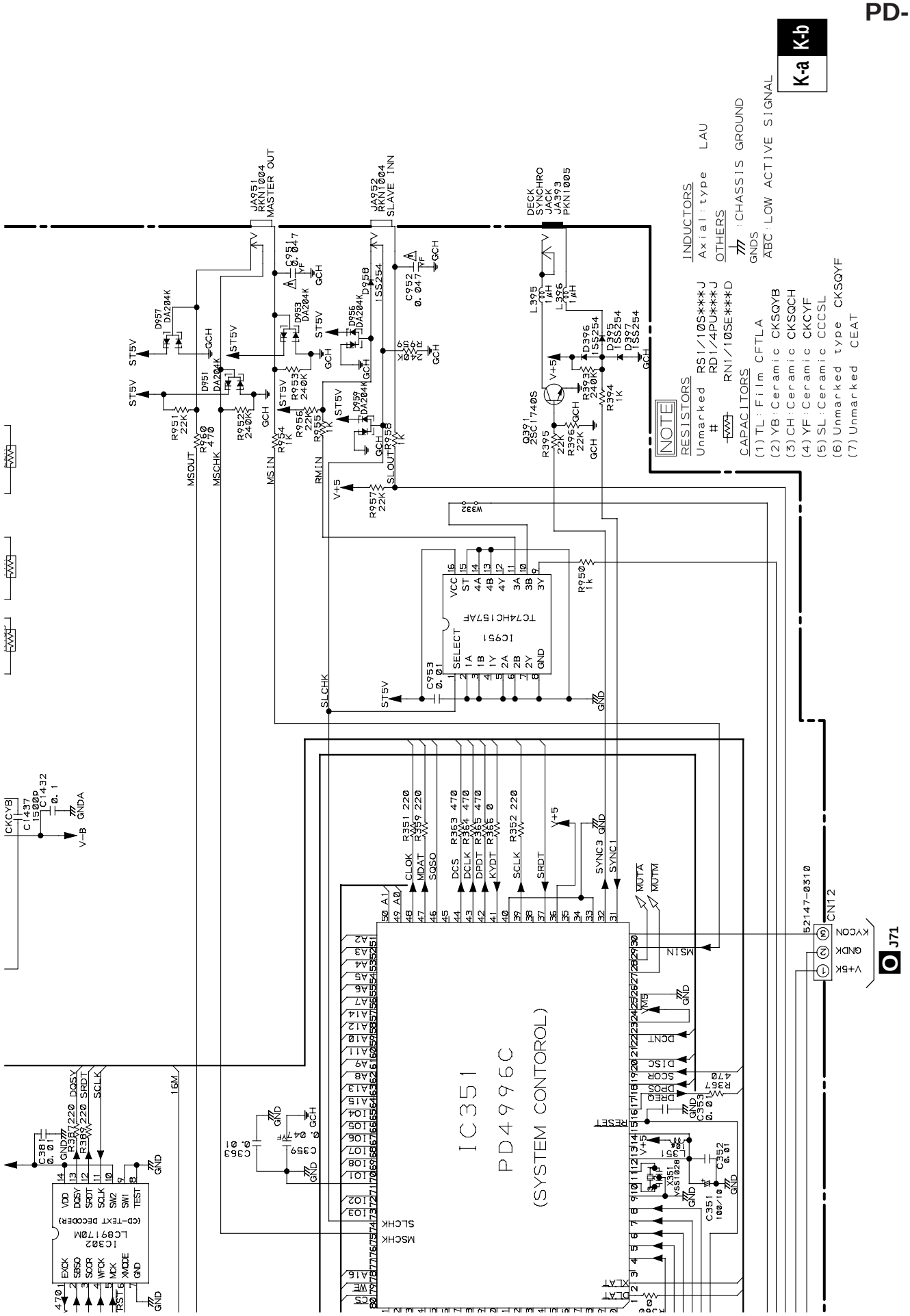
IC351
PD4996C
(SYSTEM CONTROL)
IC391
LC89170M
(CD-TEXT DECODER)
IC951
TC74HC157AF
SELECT
VCC
GND
JA951
RKN1004
MASTER OUT
JA952
RKN1004
SLAVE INN
DECK
SYNCHRO
JACK
JA393
PKN1005
CN12
52147-0310
J71
V+5K
GNDK
KYCON
MSOUT
MSCHK
MSIN
RMIN
SLOUT
SLCHK
CLOK
MDAT
SQSO
DCS
DCLK
DPDT
KYDT
SCLK
SRDT
SYNC3
SYNC1
MUTA
MUTM
DCNT
DISC
SCOR
DPOS
DPEO
RESET
LAT
DLAT
16M
CKCYB
V-B
GNDA
ST5V
V+5
GCH
GND
NOTE
RESISTORS
Unmarked RS1/10S***J
RD1/4PU***J
RN1/10SE***D
CAPACITORS
(1) TL : Film CFTLA
(2) YB : Ceramic CKSQYB
(3) CH : Ceramic CKSQCH
(4) YF : Ceramic CKCYF
(5) SL : Ceramic CCCSL
(6) Unmarked type CKSQYF
(7) Unmarked CEAT
INDUCTORS
Axial type LAU
OTHERS
: CHASSIS GROUND
GNDS
ABC LOW ACTIVE SIGNAL
K-a
K-b

K Waveforms

Main Board Assy

Note: The encircled numbers denote measuring point in the schematic diagram.

∗1 50T-JUMP: After switching to the pause mode, press the manual search key.
∗2 FOCUS-IN: Press the play key without loading a disc.

2 TP1-Pin 1: PLAY MODE (RF)
500mV/div 500nsec/div

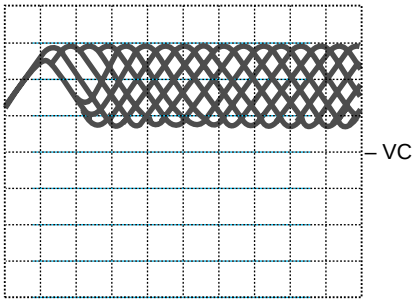

4' TP1-Pin 2: 50T - JUMP (*1) MODE (TRER)
200mV/div 1msec/div

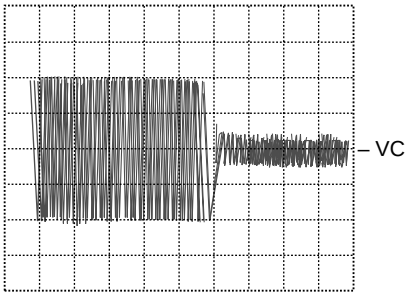

6' IC202-Pin 4: 50T - JUMP (*1) MODE (TRDR)
500mV/div 1msec/div

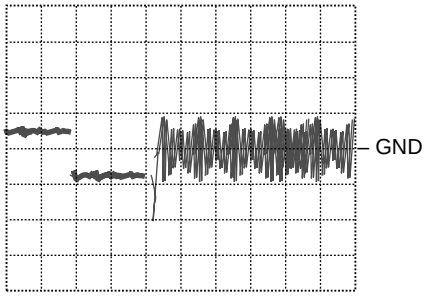

2 TP1-Pin 1: TRACK SEARCH MODE (RF)
500 mV/div 200 µsec/div

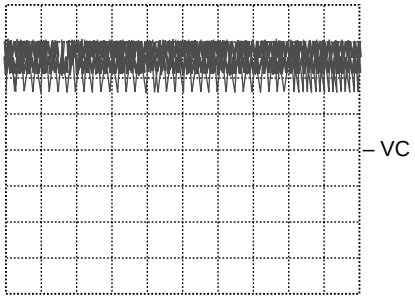

5 IC202-Pin 3: FOCUS-IN (*2) MODE (FODR)
1V/div 200msec/div

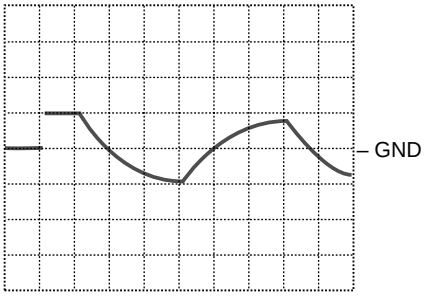

7 IC203-Pin 3: PLAY MODE (SPDR)
1V/div 50msec/div

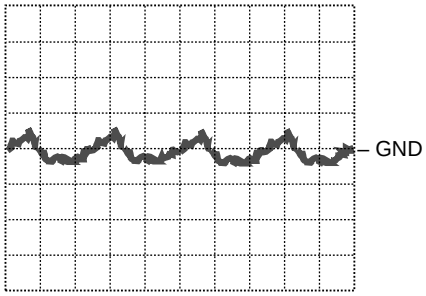

3 TP1-Pin 6: PLAY MODE (FOER)
100mV/div 10msec/div

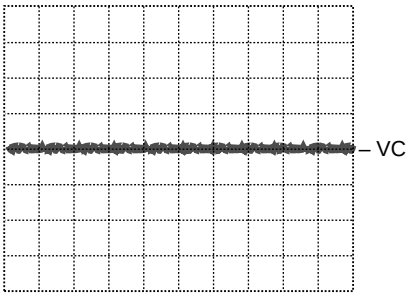

5 IC202-Pin 3: PLAY MODE (FODR)
1V/div 1msec/div

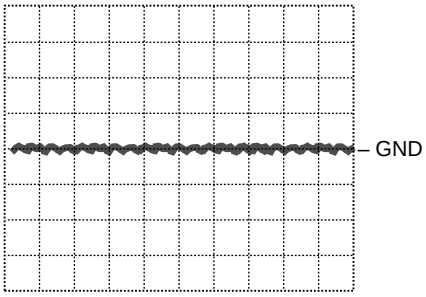

7 IC203-Pin 3: TRACK SEARCH MODE (SPDR)
2V/div 50msec/div

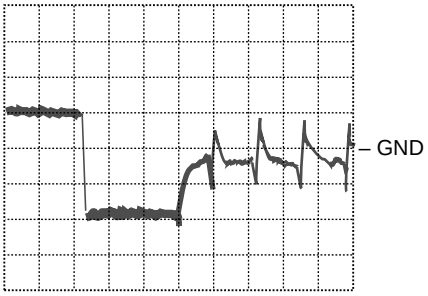

4 TP1-Pin 2: PLAY MODE (TRER)
200mV/div 1msec/div

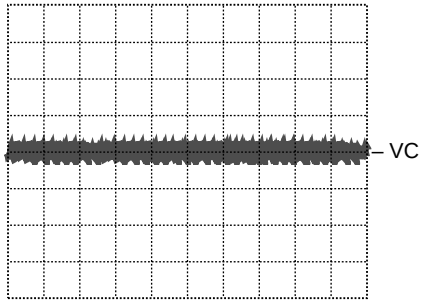

6 IC202-Pin 4: PLAY MODE (TRDR)
500mV/div 1msec/div

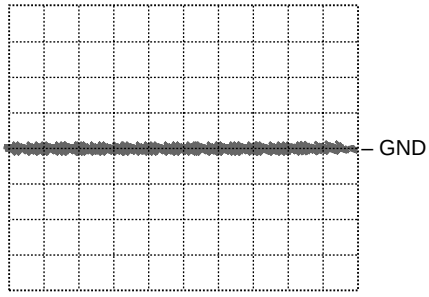

8 IC202-Pin 9: PLAY MODE (CADR)
0.2V/div 2sec/div

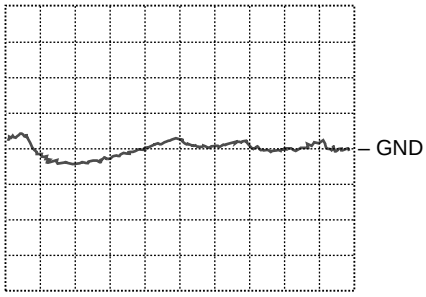

8 IC202-Pin 9: TRACK SEARCH MODE (CADR)
2V/div 200msec/div

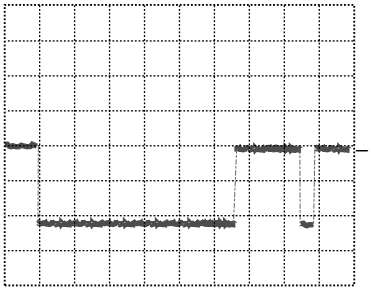

16 IC301-Pin 54 : PLAY MODE (1kHz) (BCK)
2V/div 500nsec/div

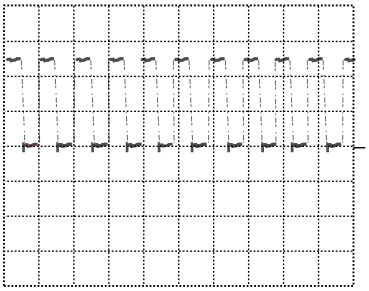

18 IC301-Pin 50 : PLAY MODE (1kHz) (LRCK)
2V/div 10 µsec/div

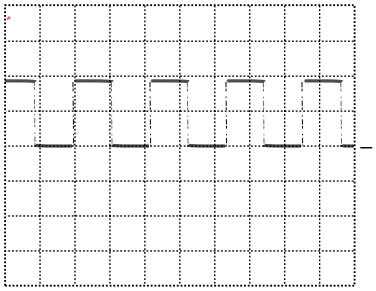

33 IC301-Pin 27 : PLAY MODE (MDP)
2V/div 2 µsec/div

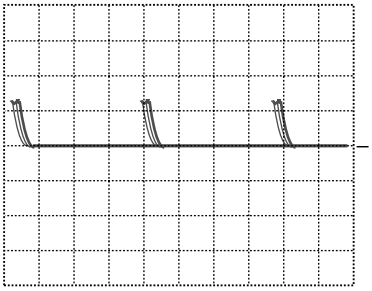

10 IC301-Pin 86 : PLAY MODE (1kHz) (LOUT 1)
1V/div 200msec/div

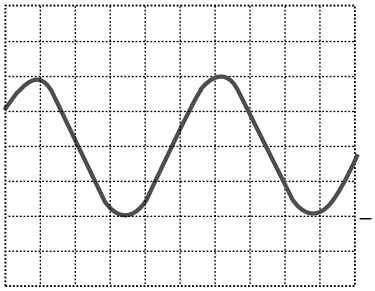

19 IC301-Pin 52 : PLAY MODE (1kHz) (PCMD)
2V/div 500nsec/div

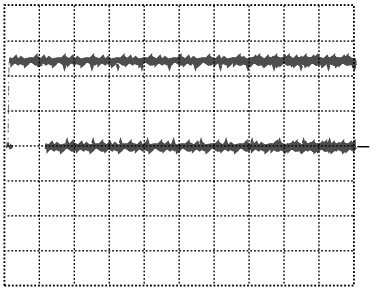

53 IC301-Pin 38 : PLAY MODE (PCO)
2V/div 10 µsec/div

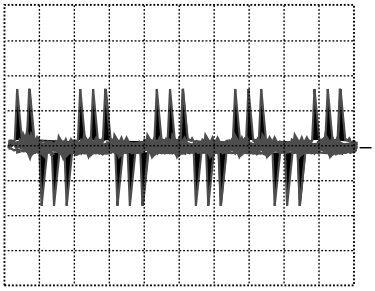

23 TRACK SEARCH MODE
Upper : TP1-Pin 1 (RF) 1V/div
Lower : IC151-Pin 23 (C.OUT)
2V/div 50 µsec/div

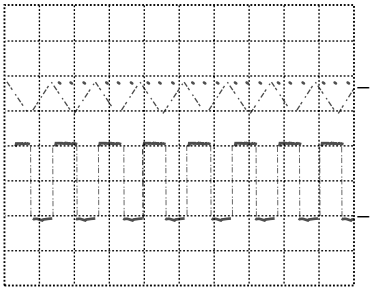

3.4 DISPLAY BOARD, FUNCTION BOARD, HEADPHONE BOARD and POWER BOARD ASSEMBLIES

DISPLAY BOARD ASSY
S701 : MODE
S702 : CLEAR
S703 : PROGRAM
S704 : RANDOM
S705 : TIME/CHARA
S706 : POWER
S707 : SINGLE LOADER ACCESS
S708 : SINGLE LOADER PLAY

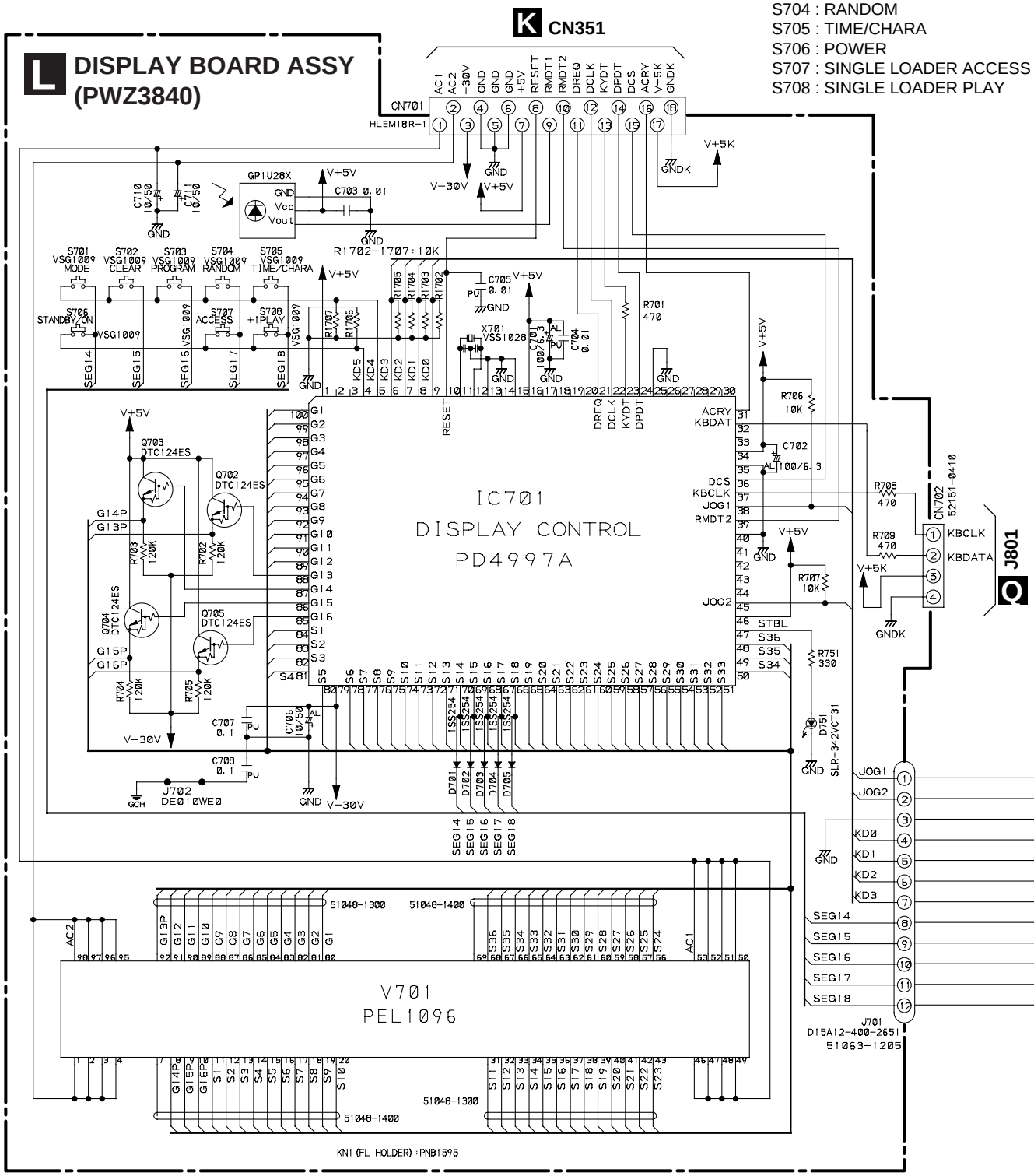

O POWER BOARD ASSY (PWZ3853)

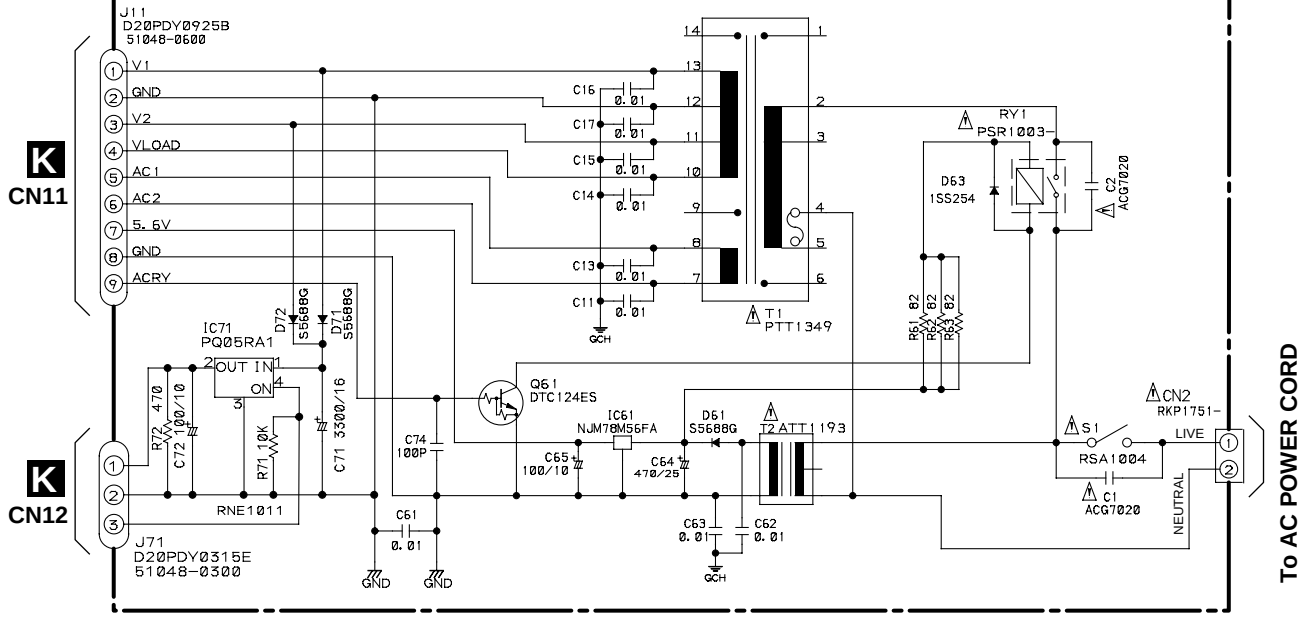

Q KEY BOARD ASSY (PWZ3836)

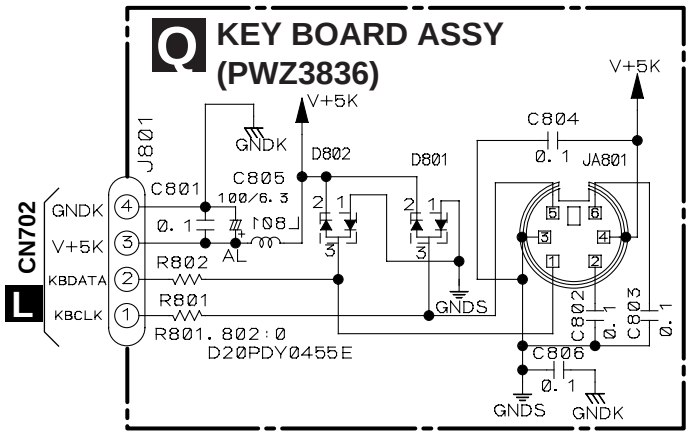

N HEADPHONE BOARD ASSY (PWZ3860)

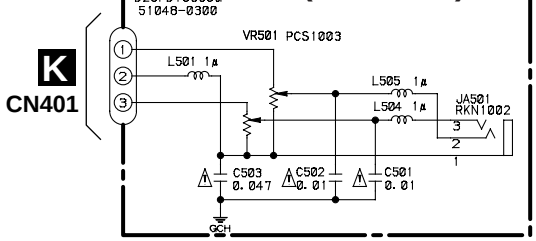

M FUNCTION BOARD ASSY (PWZ3847)

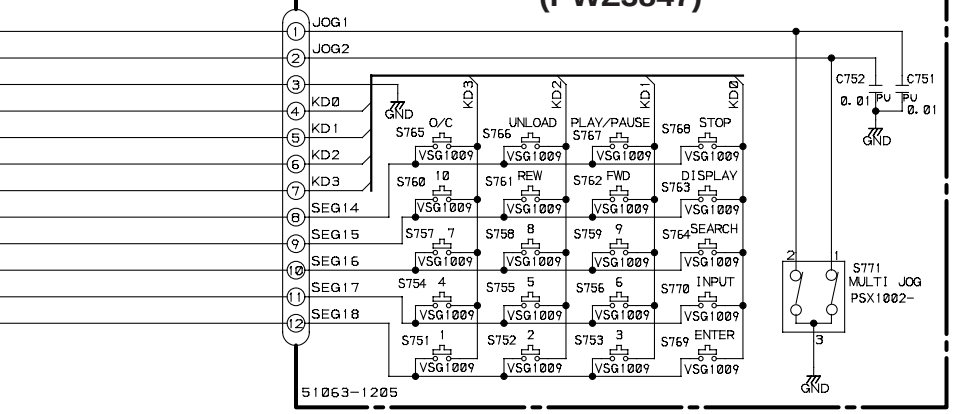

FUNCTION BOARD ASSY
S751–S760 : DIRECT CUSTOM (1–10)
S761 : Track/Manual search (reverse direction)
S762 : Track/Manual search (forward direction)
S763 : TITLE/DISPLAY
S764 : TITLE/SEARCH
S765 : OPEN/CLOSE
S766 : UNLOAD
S767 : Play/Pause
S768 : Stop
S769 : ENTER
S770 : TITLE/INPUT
S771 : Jog dial

NOTE

RESISTORS
Unmarked RS1/10S***J
RD1/4PU***J

CAPACITORS
(1) TL : Film CFTLA
(2) YB : Ceramic CKSQYB
(3) CH : Ceramic CKSQCH
(4) YF : Ceramic CKCYF
(5) SL : Ceramic CCCSL
(6) Unmarked type CKSQYF
(7) Unmarked CEAT

INDUCTORS
Axial : type LAU

OTHERS
: CHASSIS GROUND
GNDS
ABC : LOW ACTIVE SIGNAL

4. PCB CONNECTION DIAGRAM

4.1 MECHANISM BOARD, DOOR MOTOR BOARD, DOOR SW BOARD and LED BOARD ASSEMBLIES

NOTE FOR PCB DIAGRAMS:

1. Part numbers in PCB diagrams match those in the schematic diagrams.
2. A comparison between the main parts of PCB and schematic diagrams is shown below.

Symbol in PCB Diagrams	Symbol in Schematic Diagrams	Part Name
B C E	B C E B C E	Transistor
B C E	B C E B C E	Transistor with resistor
D G S	D G S D G S	Field effect transistor
		Resistor array
		3-terminal regulator

3. The parts mounted on this PCB include all necessary parts for several destination.
   For further information for respective destinations, be sure to check with the schematic diagram.

4. Viewpoint of PCB diagrams

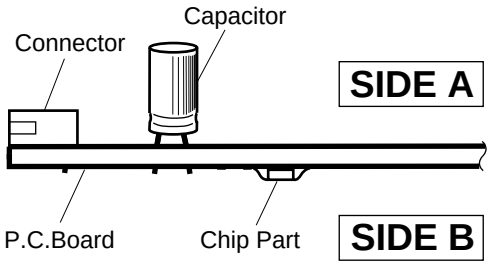

SIDE A

A MECHANISM BOARD ASSY

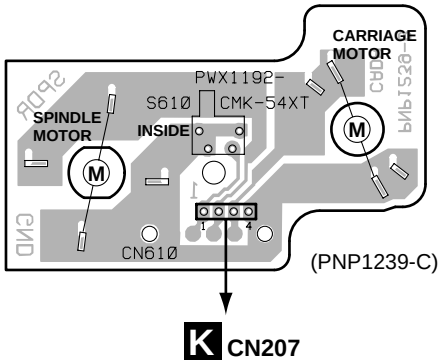

B DOOR MOTOR BOARD ASSY

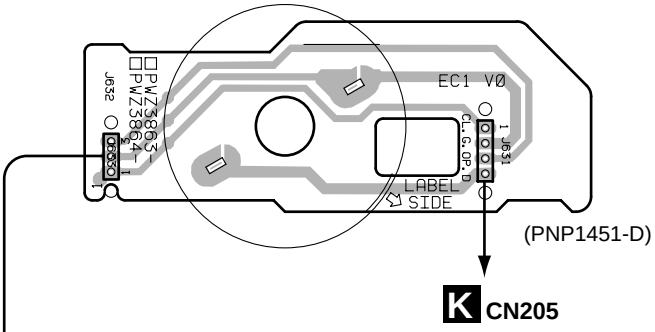

C DOOR SW BOARD ASSY

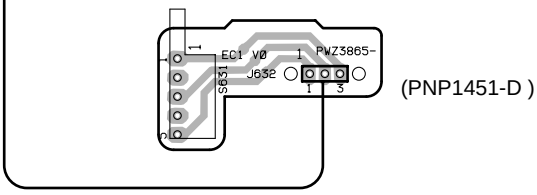

D LED BOARD ASSY

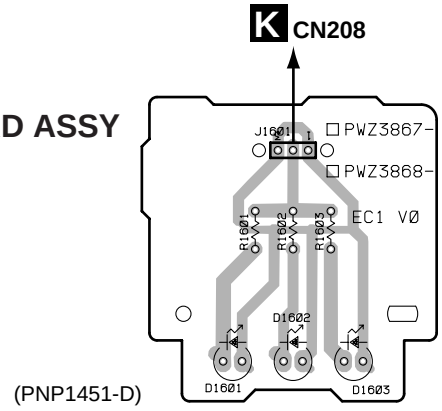

4.2 LOADING SW, LOADING BOARD, SENSOR BOARD, RECIEVE BOARD, RADIATE BOARD, SELECT BOARD and VOLUME BOARD ASSEMBLIES

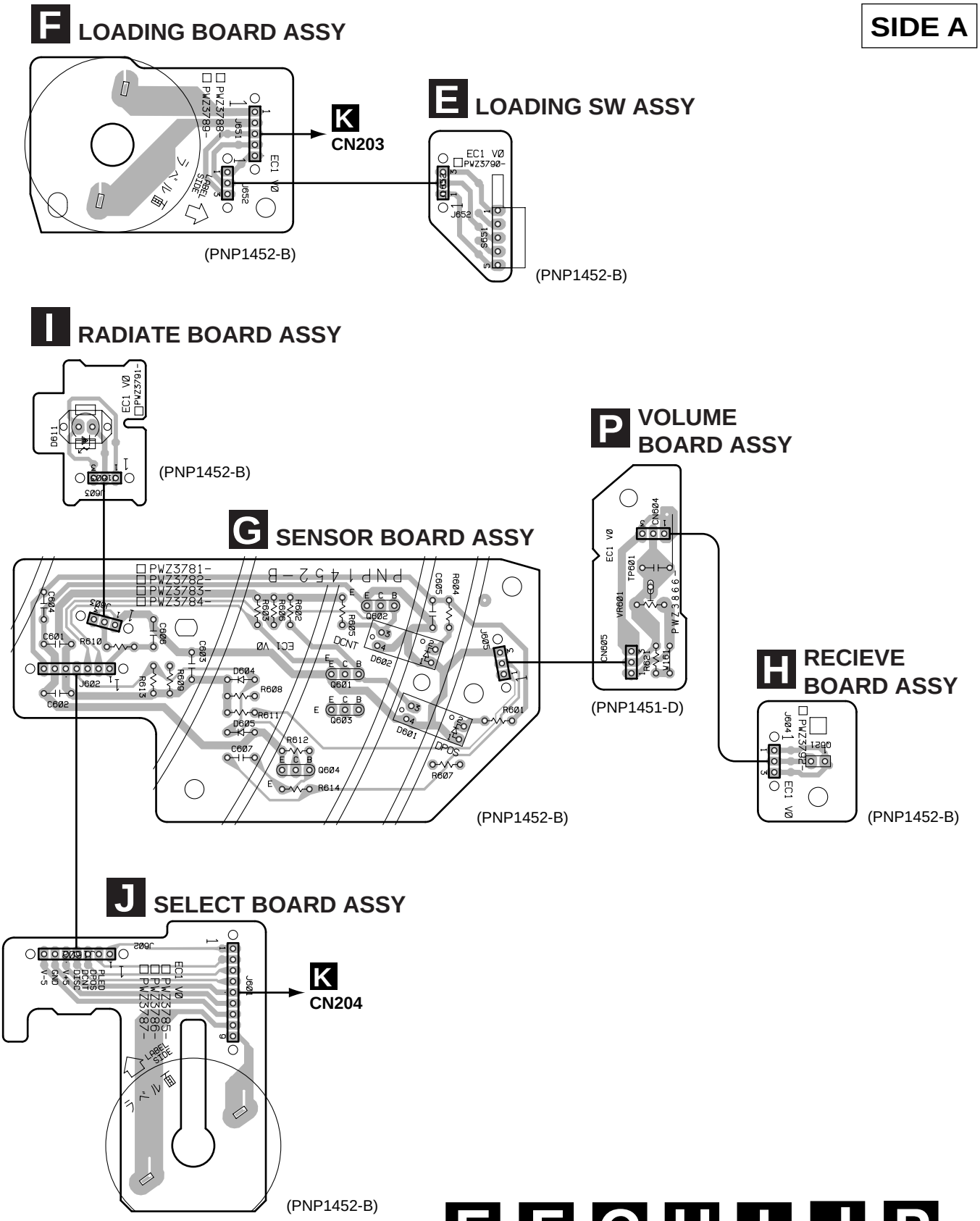

4.3 MAIN BOARD ASSY, HEADHONE and KEY BOARD ASSY

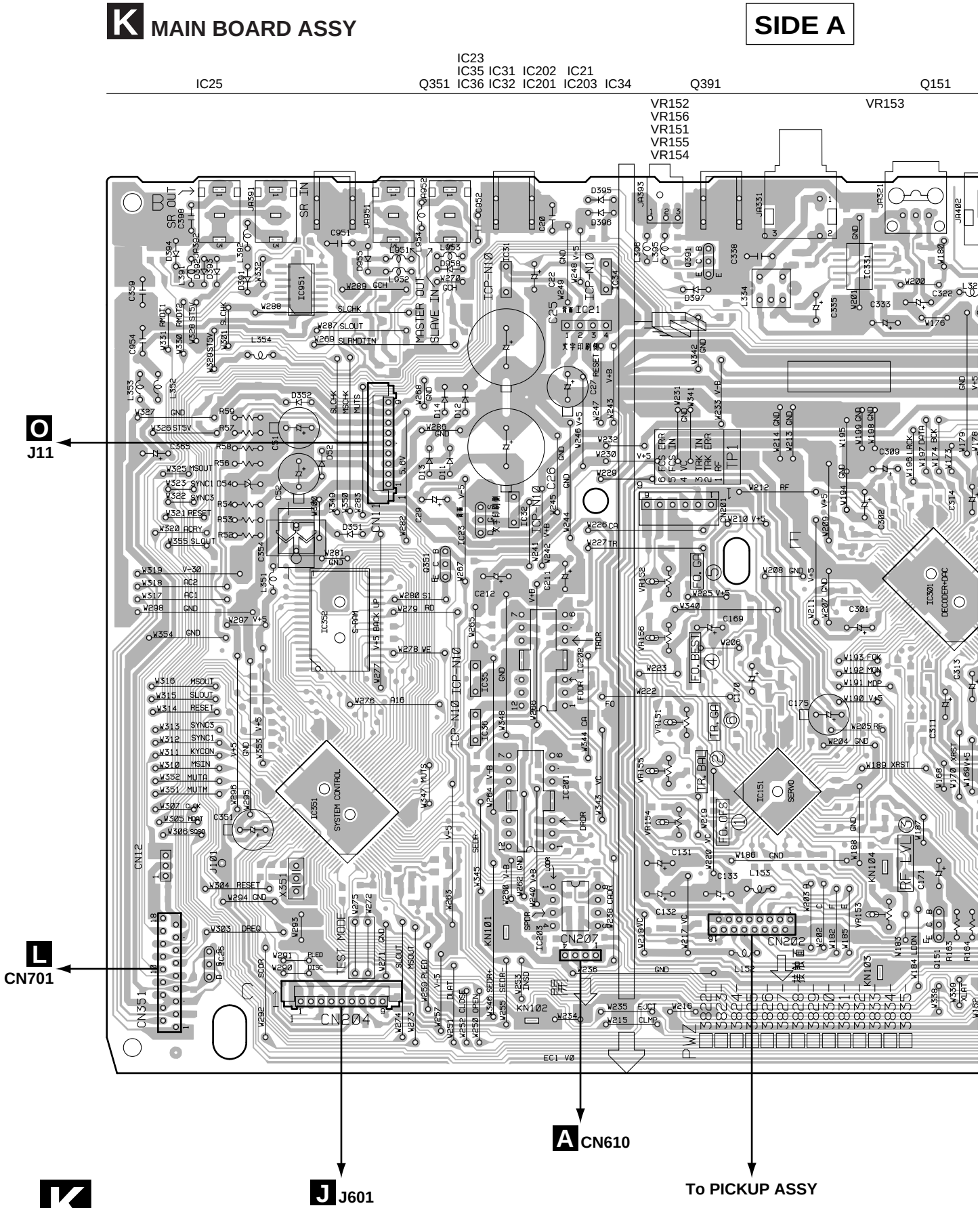

SIDE A

Q151 Q414 Q413 Q404 Q424 Q403 Q423

/R153

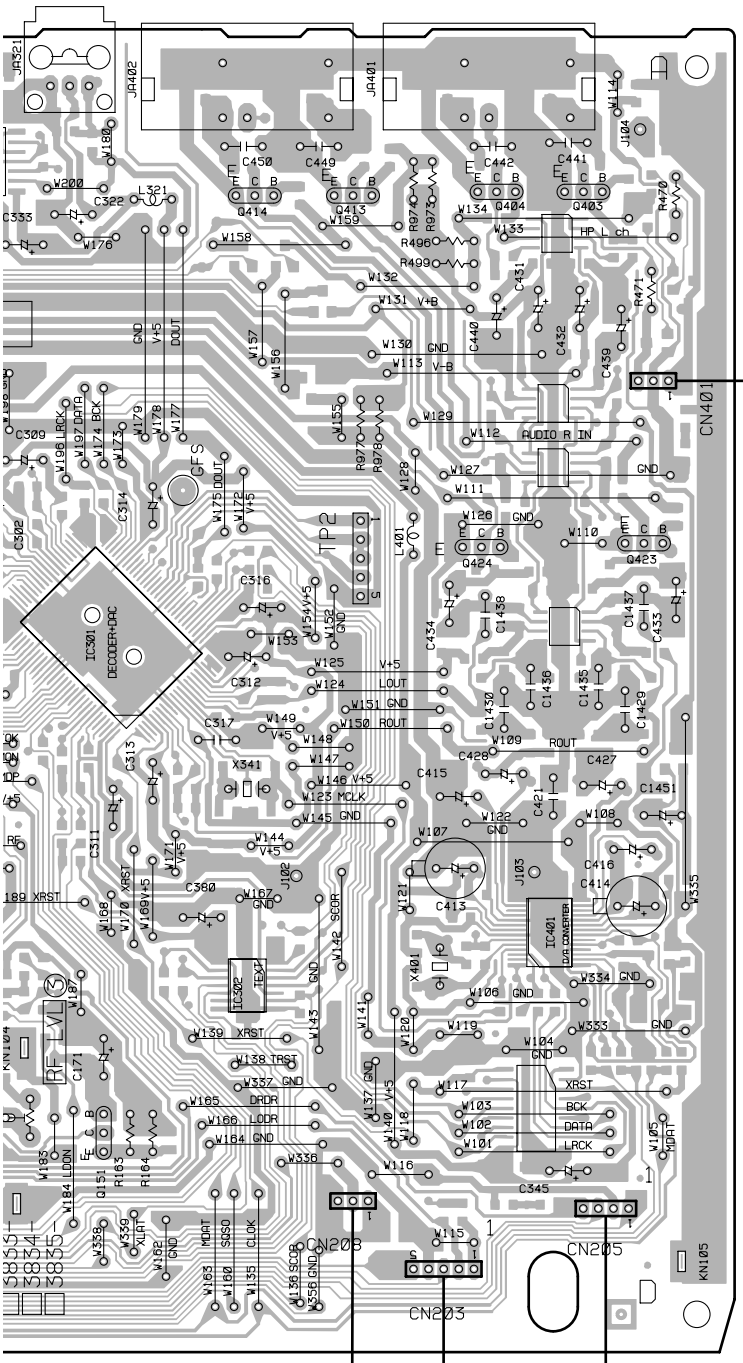

N HEADPHONE BOARD ASSY

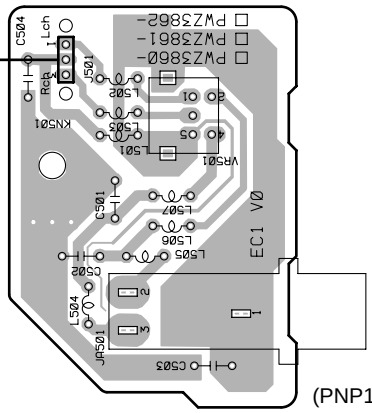

(PNP1451-D)

Q KEY BOARD ASSY

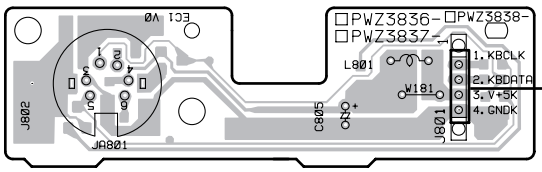

(PNP1450-A)

D J1601 **B** J631

F J651

K N Q

K MAIN BOARD ASSY

SIDE B

IC406
IC408
IC407
Q470 IC405
Q471 IC401 Q426
Q451 IC341 Q425 Q405 Q415 IC301 Q152 IC

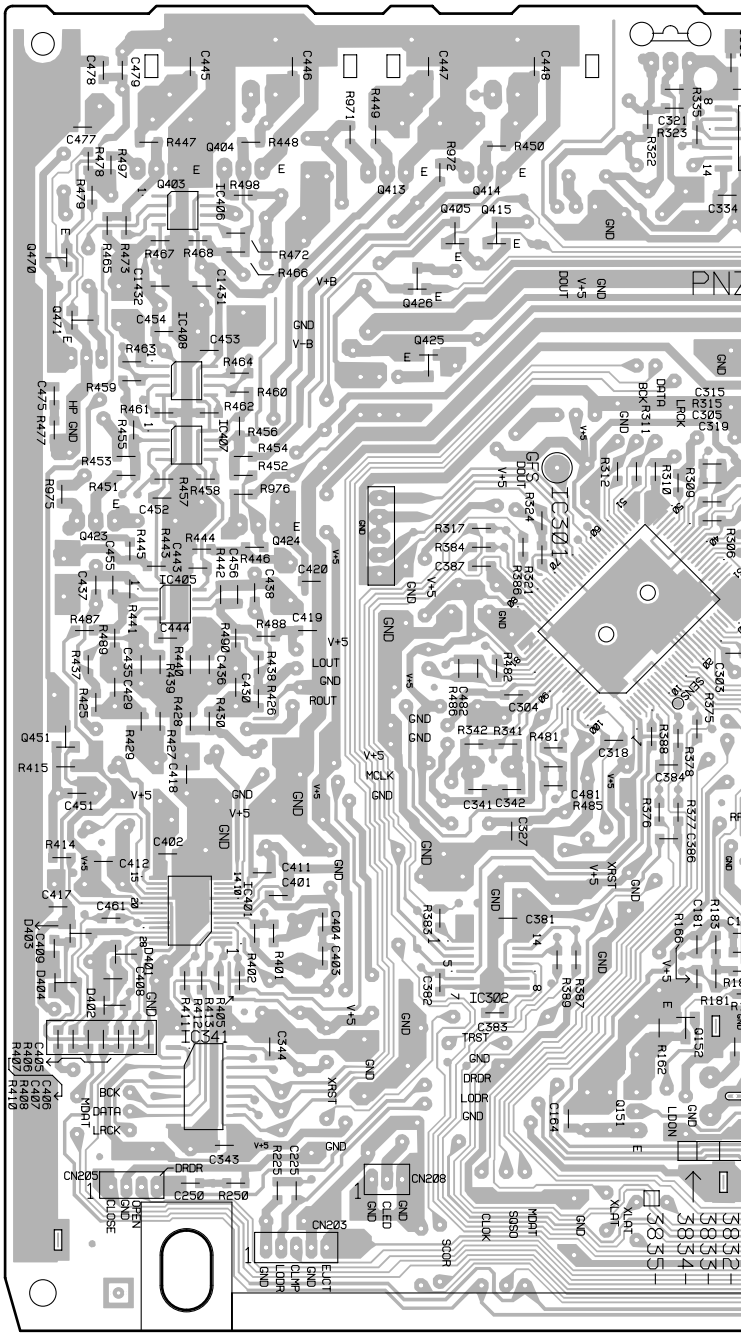

Q KEY BOARD ASSY

SIDE B

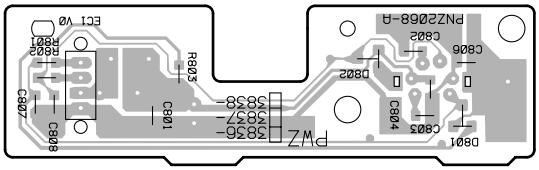

(PNP1450-A)

SIDE B

IC301 Q152 IC331 IC151 Q406 Q416 Q382 Q363 Q381 Q362 IC352 IC351

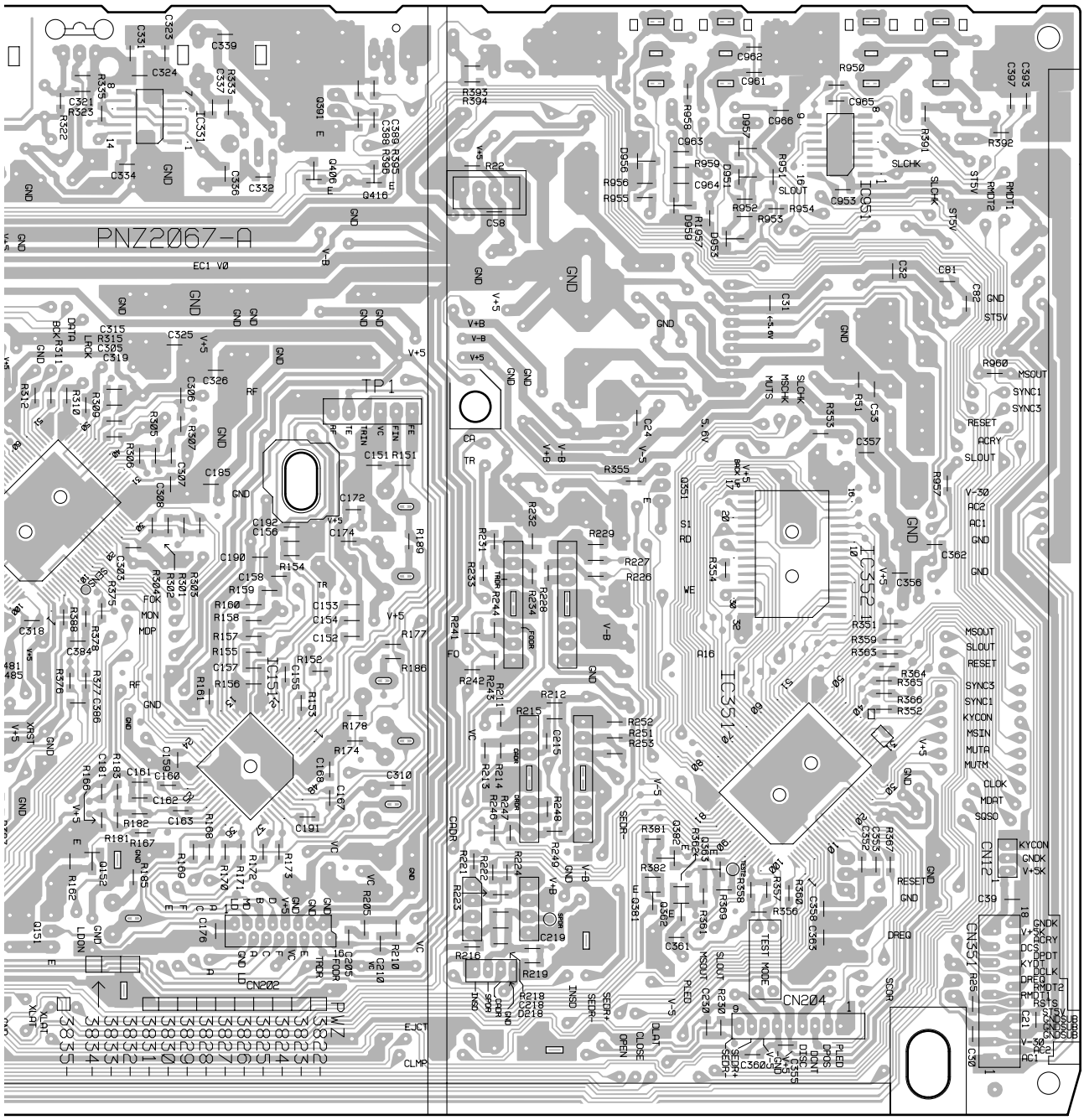

4.4 DISPLAY BOARD and FUNCTION BOARD ASSEMBLIES

L DISPLAY BOARD ASSY

SIDE A

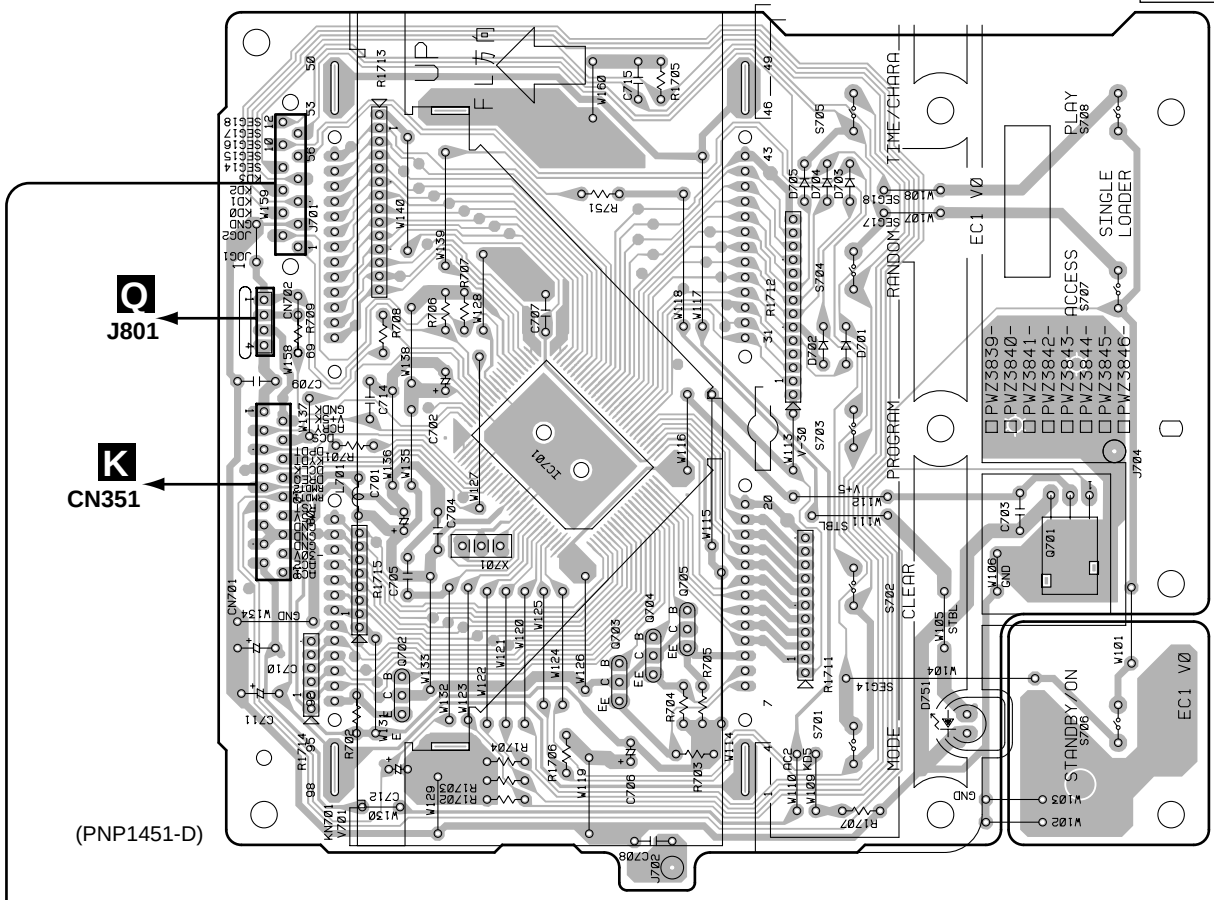

M FUNCTION BOARD ASSY

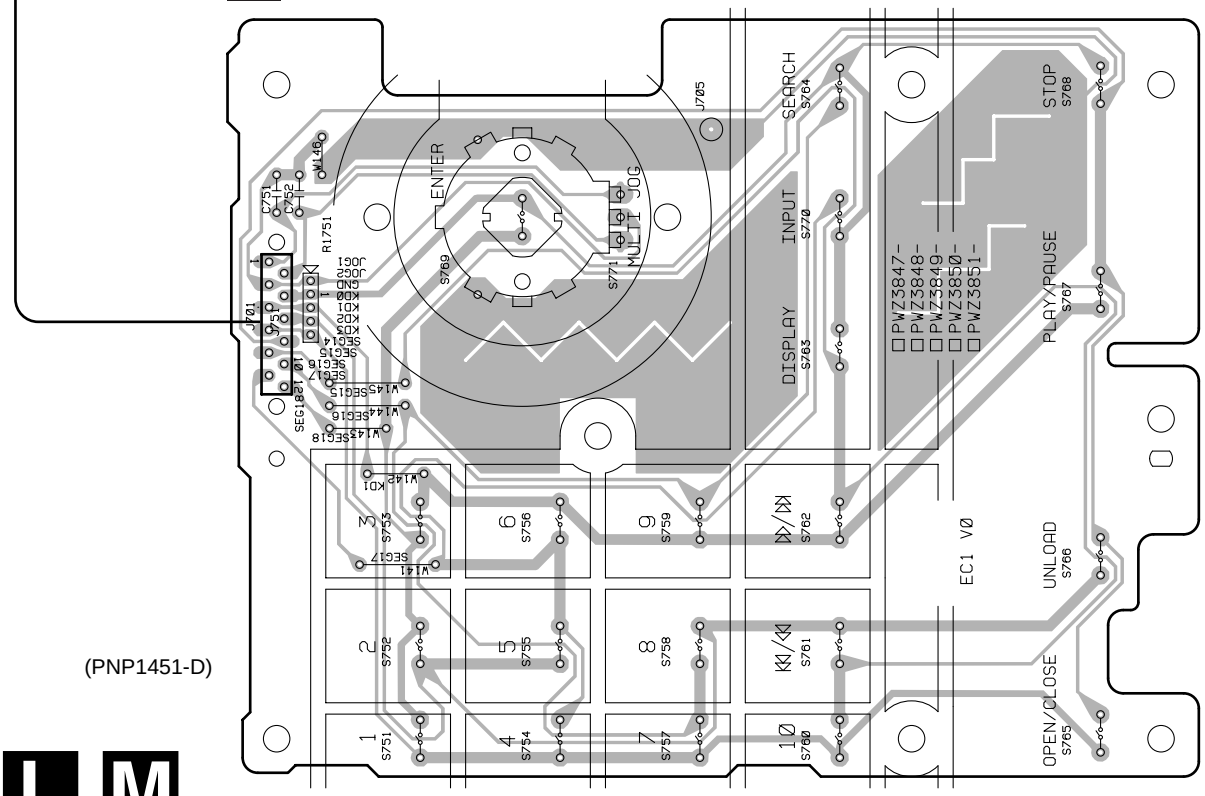

4.5 POWER BOARD ASSY

O POWER BOARD ASSY

SIDE A

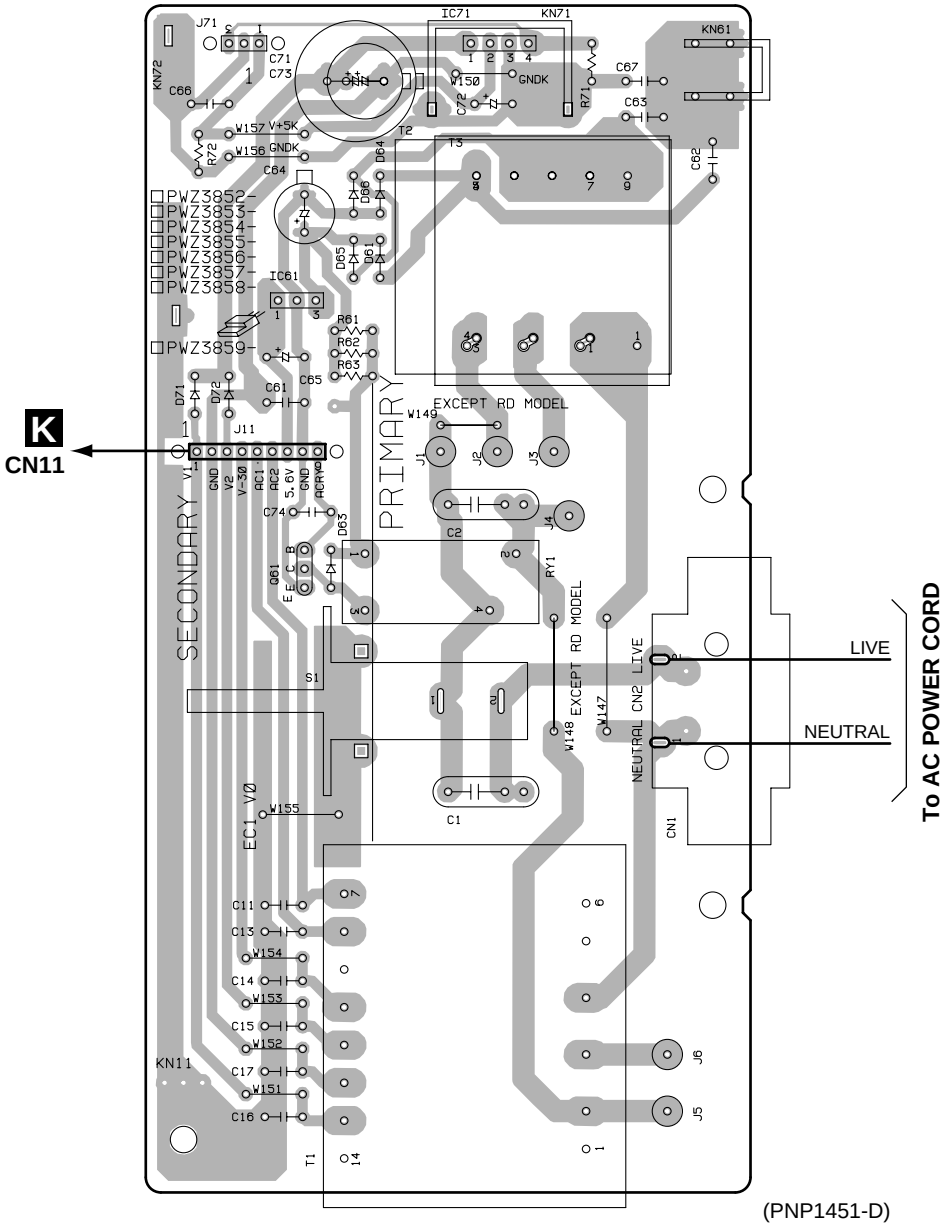

(PNP1451-D)

5. PCB PARTS LIST

NOTES:
- *Parts marked by "NSP" are generally unavailable because they are not in our Master Spare Parts List.*
- *The ⚠ mark found on some component parts indicates the importance of the safety factor of the part. Therefore, when replacing, be sure to use parts of identical designation.*
- *When ordering resistors, first convert resistance values into code form as shown in the following examples.*

Ex.1 When there are 2 effective digits (any digit apart from 0), such as 560 ohm and 47k ohm (tolerance is shown by J=5%, and K=10%).

560	→	*56 x 10^1*	→	*561*	*RD1/4PU 5 6 1 J*
47k	→	*47 x 10^3*	→	*473*	*RD1/4PU 4 7 3 J*
0.5	→	*R50*			*RN2H R 5 0 K*
1	→	*1R0*			*RS1P 1 R 0 K*

Ex.2 When there are 3 effective digits (such as in high precision metal film resistors).

5.62k	→	*562 x 10^1*	→	*5621*	*RN1/4PC 5 6 2 1 F*

Mark	No.	Description	Part No.

LIST OF PCB ASSEMBLIES

⚠NSP	MOTHER BOARD ASSY	PWM2253
	├ MAIN BOARD ASSY	PWZ3823
	└ KEY BOARD ASSY	PWZ3836
NSP	MECHANISM BOARD ASSY	PWX1572
NSP	├ SENSOR BOARD ASSY	PWZ3781
NSP	├ SELECT BOARD ASSY	PWZ3785
NSP	├ LOADING BOARD ASSY	PWZ3788
NSP	├ LOADING SW BOARD ASSY	PWZ3790
NSP	├ RADIATE BOARD ASSY	PWZ3791
NSP	└ RECIEVE BOARD ASSY	PWZ3792
⚠NSP	SUB BOARD ASSY	PWX1577
	├ DISPLAY BOARD ASSY	PWZ3840
NSP	├ FUNCTION BOARD ASSY	PWZ3847
	├ POWER BOARD ASSY	PWZ3853
NSP	├ HEADPHONE BOARD ASSY	PWZ3860
NSP	├ DOOR MOTOR BOARD ASSY	PWZ3863
NSP	├ DOOR SW BOARD ASSY	PWZ3865
NSP	├ VOLUME BOARD ASSY	PWZ3866
NSP	└ LED BOARD ASSY	PWZ3867
NSP	SERVO MECHANISM ASSY GM	PXA1591
	└ MECHANISM BOARD ASSY	PWX1192

A MECHANISM BOARD ASSY

SWITCHES AND RELAYS

	S610		DSG1016

OTHERS

	CN610	MT CONNECTOR	173979-4

G SENSOR BOARD ASSY

SEMICONDUCTORS

	Q604		2SC1740S
	Q601, Q602		DTC124ES
	D601, D602		GP1S58V

RESISTORS

	All Resistors		RD1/4PU □□□ J

OTHERS

		CABLE HOLDER	51048-0300
		CABLE HOLDER	51048-0700
	J603	3P JUMPER WIRE	D20PDD0310E
	J602	7P JUMPER WIRE	D20PDD0725E
	J605	3P JUMPER WIRE	D20PDY0310E

J SELECT BOARD ASSY

OTHERS

		CABLE HOLDER	51048-0700
		CABLE HOLDER	51048-0900
	J601	9P JUMPER WIRE	D20PDY0930G

F LOARDING BOARD ASSY

OTHERS

		CABLE HOLDER	51048-0300
		CABLE HOLDER	51048-0500
	J652	3P JUMPER WIRE	D20PDD0310E
	J651	5P JUMPER WIRE	D20PDY0530E

E LOARDING SW BOARD ASSY

OTHERS

		CABLE HOLDER	51048-0300
		REAF SWITCH	VSK1011

I RADIATE BOARD ASSY

SEMICONDUCTORS

	D611		GL381J

OTHERS

		CABLE HOLDER	51048-0300
		L.E.D. HOLDER	RNK1795

Mark	No.	Description	Part No.

H RECIEVE BOARD ASSY

SEMICONDUCTORS

	Q621		PT381FBC

OTHERS

		CABLE HOLDER	51048-0300
	J604	3P JUMPER WIRE	D20PDY0315E

K MAIN BOARD ASSY

SEMICONDUCTORS

	IC151		CXA1782CQ
	IC301		CXD2529Q
⚠	IC35, IC36 (0.4A/50V)		ICP-N10
⚠	IC203		LA6517
⚠	IC201, IC202		LA6520
	IC302		LC89170M
	IC406		M5218AFP
	IC352		M5M51008BFP-70LL
	IC405, IC407, IC408		NJM4558MD
⚠	IC23		NJM79M05FA
	IC351		PD4996C
⚠	IC21		PQ05RR12
	IC401		PE8001A
	IC25		S-806E
	IC951		TC74HC157AF
	Q151		2SA854S
	Q391		2SC1740S
	Q362, Q381		2SC2412K
	Q351, Q403, Q404, Q413, Q414		2SD2144S
	Q423, Q424		2SD2144S
	Q152, Q363, Q382, Q406, Q416		DTA124EK
	Q426		DTA124EK
	Q405, Q415, Q425, Q451		DTC124EK
	D351, D352, D395– D397, D958		1SS133
	D401– D404, D951, D953, D956		DA204K
	D957, D959		DA204K
	D54		MTZJ24B
⚠	D11– D14, D52		S5688G
	D218		UDZS6.2B

COILS AND FILTERS

	L351		LAU100J
	L395, L396		LAU1R0J

CAPACITORS

	C449, C450		CCCSL101J50
	C181		CCSQCH100D50
	C361, C386, C405– C407		CCSQCH101J50
	C315		CCSQCH221J50
	C403		CCSQCH240J50
	C404		CCSQCH300J50
	C171, C175, C27, C29		CEAT101M10
	C301, C302, C311– C314, C316		CEAT101M10
	C322, C351, C365, C413, C414		CEAT101M10
	C51		CEAT101M35
	C52		CEAT101M50
	C427, C428, C433, C434, C439, C440		CEAT220M25
	C131–C133, C211, C212		CEAT330M16
	C169, C170, C415, C416		CEAT4R7M50
	C22		CEATR22M50
	C309		CEATR47M50
	C954		CFTLA104J50
	C441, C442		CKCYB102K50
	C1429, C1430, C1435– C1438		CKCYB152K50
	C317		CKCYF103Z50
	C359, C951, C952		CKCYF473Z50
	C163		CKSQYB102K50
	C156, C161, C164, C168, C218		CKSQYB103K50
	C153– C155, C158, C230, C250		CKSQYB104K25
	C176, C306		CKSQYB152K50
	C305		CKSQYB222K50
	C162		CKSQYB332K50
	C160		CKSQYB333K25
	C167		CKSQYB472K50
	C152, C307		CKSQYB473K25
	C151		CKSQYB682K50
	C157		CKSQYB823K25
	C159, C185, C191, C205, C210		CKSQYF103Z50
	C215, C219, C303, C308, C318		CKSQYF103Z50
	C331, C352, C353		CKSQYF103Z50
	C362, C363, C381, C382, C401		CKSQYF103Z50
	C402, C408, C409, C461, C953		CKSQYF103Z50
	C321, C411, C412, C1431,C1432		CKSQYF104Z50
	C354	(0.1F/5.5V)	PCH1133
	C25, C26	(4700µF/16V)	PCH1135

RESISTORS

	R56– R59		RD1/4PU241J
	R52– R54		RD1/4PU272J
	R496, R499, R973, R974		RD1/4PU332J
	R977, R978		RD1/4PU332J
	R163, R164, R470, R471		RD1/4PU470J
	R441, R442, R489, R490		RN1/10SE1002D
	R437, R438		RN1/10SE1801D
	R459, R460, R463, R464		RN1/10SE2202D
	R451– R456		RN1/10SE4702D
	VR153, VR155	(10kΩ)	VCP1156
	VR151, VR152, VR154	(22kΩ)	VCP1158
	VR156	(220kΩ)	VCP1164
	Other Resistors		RS1/10S □□□J

OTHERS

	CN207	MT 4P CONNECTOR	173981-4
	CN12	3P JUMPER CONNECTOR	52147-0310
	CN208, CN401	3P JUMPER CONNECTOR	52147-0310
	CN205	4P JUMPER CONNECTOR	52147-0410
	CN203	5P JUMPER CONNECTOR	52147-0510
	CN11, CN204	9P JUMPER CONNECTOR	52147-0910

Mark	No.	Description	Part No.
	JA401, JA402	2P JACK	DKB1031
	JA321	OPTICAL LINK OUT	GP1F32T
	CN351	CONNECTOR	HLEM18S-1
	JA393	JACK	PKN1005
	X401	XTAL. RES. (16.9344MHz)	PSS1008
	JA951, JA952	JACK REMOTE	RKN1004
	CN201	CONNECTOR 6P	RKP-533
	CN202	CONNECTOR	SLW16S-1C7
		PCB BINDER	VEF1040
		SCREW PLATE	VNE1948
	X351	CERAMIC RES.(4.19MHz)	VSS1028

L DISPLAY BOARD ASSY

SEMICONDUCTORS

	IC701		PD4997A
	Q702– Q705		DTC124ES
	D701– D705		1SS254
	D751		SLR-343VC

SWITCHES AND RELAYS

	S701– S705, S707, S708		VSG1009

CAPACITORS

	C706		CEAL100M50
	C701, C702		CEAL101M6R3
	C710, C711		CEAT100M50
	C703		CKCYF103Z50
	C704, C705		CKPUYF103Z25
	C707, C708		CKPUYF104Z50

RESISTORS

	All Resistors		RD1/4PU □□□ J

OTHERS

		CABLE HOLDER(14P)	51048-1400
		CABLE HOLDER(13P)	51048-1300
		CABLE HOLDER(12P)	51063-1205
	J701	JUMPER WIRE	D15A12-400-2651
		REMOTE RECEIVER UNIT	GP1U28X
	CN701	CONNECTOR 18P	HLEM18R-1
	CN702	CONNECTOR 4P	52151-0410
	V701	FL INDICATOR TUBE	PEL1096
	X701	CERAMIC RES.(4.19MHz)	VSS1028
	J702	EARTH LEAD WIRE	DE010WE0

M FUNCTION BOARD ASSY

SWITCHES AND RELAYS

	S771		PSX1002
	S751– S770		VSG1009

Mark	No.	Description	Part No.

CAPACITORS

	C751, C752		CKPUYF103Z25

OTHERS

		CABLE HOLDER(12P)	51063-1205

O POWER BOARD ASSY

SEMICONDUCTORS

⚠	IC61		NJM78M56FA
⚠	IC71		PQ05RA1
	Q61		DTC124ES
	D63		1SS133
	D61, D71, D72		S5688G

SWITCHES AND RELAYS

⚠	S1		RSA1001
⚠	RY1		PSR1003

CAPACITORS

⚠	C1, C2	(10000pF/250V)	ACG7020
	C74		CCCSL101J50
	C65, C72		CEAT101M10
	C71		CEAT332M16
	C64		CEAT471M25
	C11, C13– C17, C61– C63		CKCYF103Z50

RESISTORS

	All Resistors		RD1/4PU □□□ J

OTHERS

		CABLE HOLDER	51048-0900
⚠	T2	POWER TRANSFORMER	ATT1193
	J11	JUMPER WIRE	D20PDY0925G
	J71	JUMPER WIRE	D20PDY0315E
⚠	T1	POWER TRANSFOMER	PTT1349
⚠	CN2	AC CORD SOCKET	RKP1751
		3P CABLE HOLDER	51048-0300
		SCREW PLATE	VNE1948
	KN11	EARTH METAL FITTING	VNF1084
		CAPACITOR COVER	REC-150
		HEAT SINK	RNE1011

N HEADRHONE BOARD ASSY

COILS AND FILTERS

⚠	L501, L504, L505		LAU1R0J

CAPACITORS

⚠	C501, C502		CKCYF103Z50
⚠	C503		CGCYX473K25

RESISTORS

	VR501	(0.5kΩ– B)	PCS1003

Mark	No.	Description	Part No.
OTHERS			
		3P CABLE HOLDER	51048-0300
	J501	JUMPER WIRE	D20PDY0355G
	JA501	JACK	RKN1002

B DOOR MOTOR BOARD ASSY

OTHERS			
		3P CABLE HOLDER	51048-0300
		4P CABLE HOLDER	51048-0400
	J631	JUMPER WIRE	D20PDY0445G

C DOOR SW BOARD ASSY

OTHERS			
		3P CABLE HOLDER	51048-0300
	J632	3P JUMPER WIRE	D20PDD0315E
		REAF SWITCH	VSK1011

P VOLUME BOARD ASSY

RESISTORS			
	VR601	(22kΩ)	VCP1158
OTHERS			
	CN604, CN605	3P JUMPER CONNECTOR	52147-0310
	KN601	JUMPER TERMINAL	PKX1001

D LED BOARD ASSY

SEMICONDUCTORS			
	D1601– D1603		SLR-343YC
RESISTORS			
	All Resistors		RD1/4PU □□□ J
OTHERS			
		3P CABLE HOLDER	51048-0300
	J1601	JUMPER WIRE	D20PDY0325E

Q KEY BOARD ASSY

SEMICONDUCTORS			
	D801, D802		DA204K
CAPACITORS			
	C805		CEAL101M6R3
	C801– C804, C806		CKSQYF104Z50
RESISTORS			
	R801– R803		RS1/10S0R0J
OTHERS			
	J801	4P JUMPER WIRE	D20PWY0455E
NSP	J802	LEAD WIRE UNIT	PDF1012
	JA801	MIN DIN 6P SOCKET	RKN1038

6. ADJUSTMENT

6.1 PREPARATIONS

6.1.1 Jigs and Measuring Instruments

8 cm DISC (With at last about 20 minutes recording)	CD TEST DISC (YEDS-7)	⊖ screwdriver (small)	⊕ screwdriver (medium)	⊕ screwdriver (large)
⊖ Precise screwdriver	Ball point hexagon wrench (size: 1.5mm) GGK1002	Low-frequency oscillator	Dual-trace oscilloscope (10 : 1 probe)	Digital multi meter
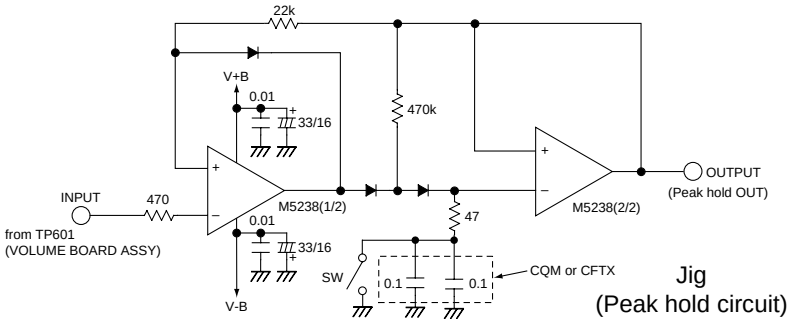 Jig (Peak hold circuit)			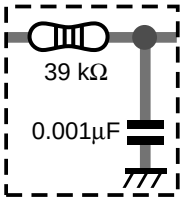 Low pass filter ① (39 kΩ + 0.001μF)	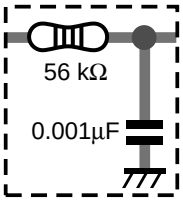 Low pass filter ② (56 kΩ + 0.001μF)

6.1.2 Necessary Adjustment Points

When	Adjustment points
Exchange PICKUP	1.2.3.4.5.6.7.8. 9.10.11.12.13 → Page 36 - 43
Exchange MAIN BOARD ASSY	2.4.6.7.8.9. 10.11.12.13 → Page 38 - 43
Exchange SERVO MECH ASSY	1.2.3.4.5.6.7.8. 9.10.11.12.13 → Page 36 - 43
Exchange SPINDLE MOTOR	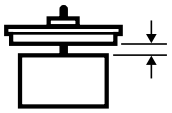 ADJ → Page 8 1. → Page 36 - 37
Remove FRONT PANEL ASSY	1. → Page 36 - 37

6.2 ADJUSTMENT

6.2.1 How to Start/Cancel Test Mode

TEST MODE : ON

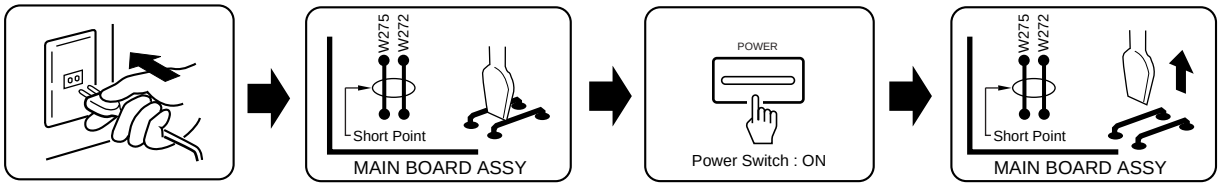

TEST MODE : PLAY

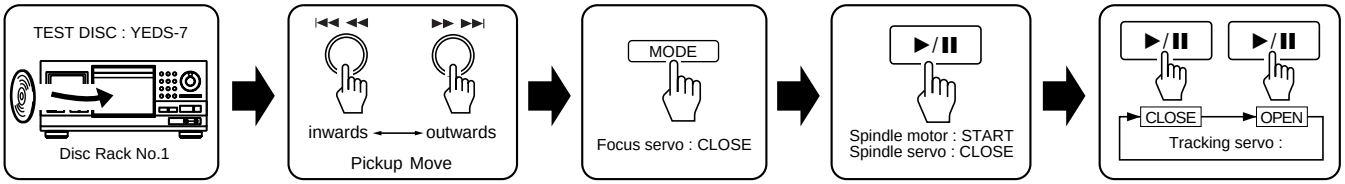

TEST MODE : STOP → CANCEL

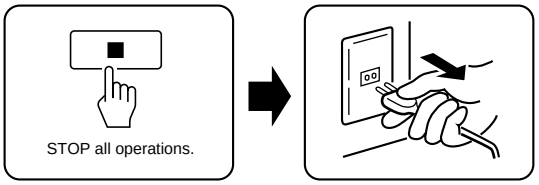

6.2.2 Adjustment Location

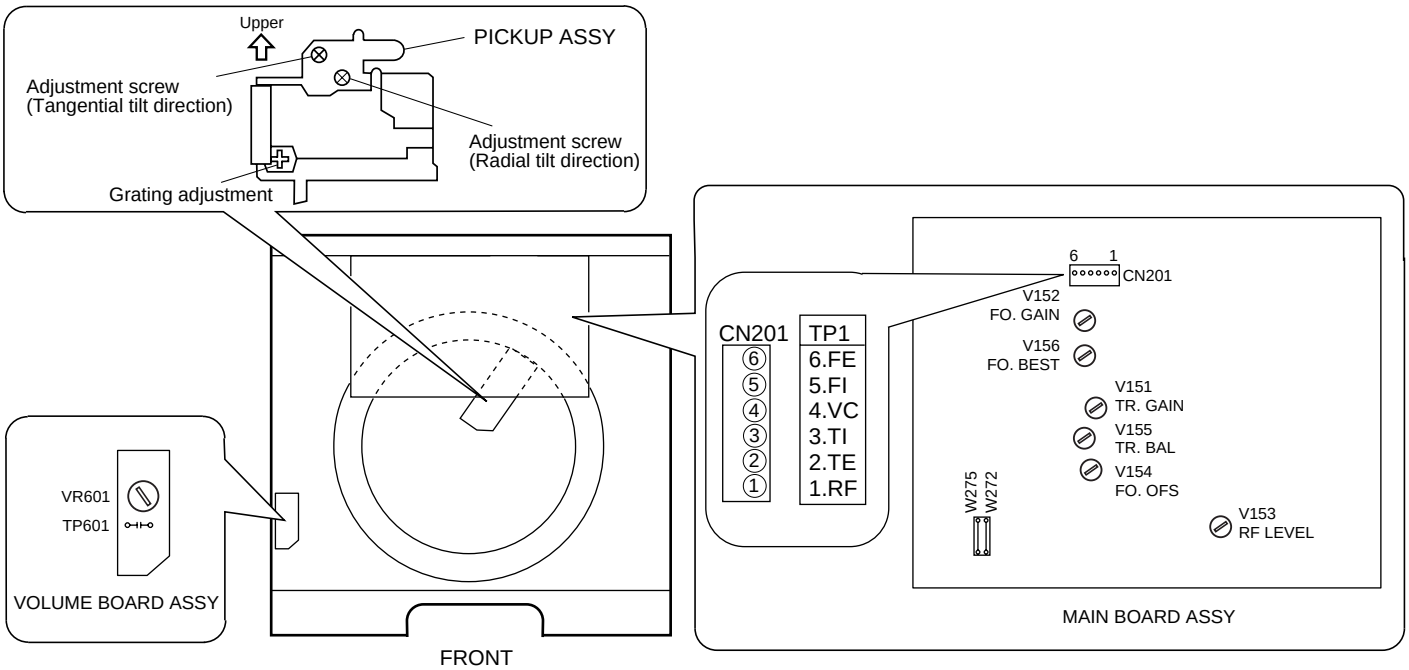

6.2.3 Check and Adjustment

1. Disc-detect Circuit Adjustment

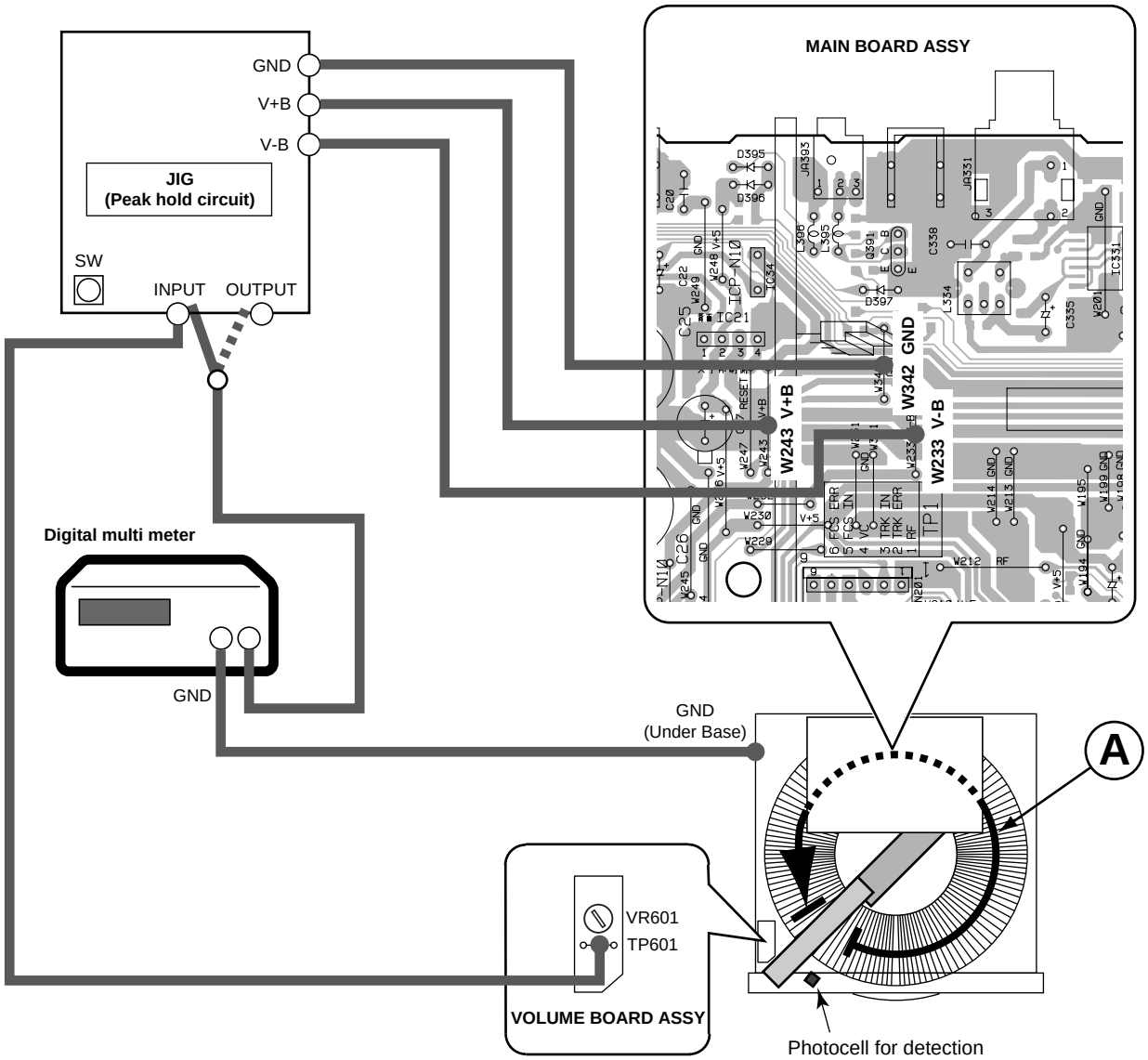

Peak hold voltage (mV)	Revised voltage (mV)
to 840	+20
840 to 860	+10
860 to 900	+ 5
900 to 1150	OK
1150 to 1290	- 5
1290 to 1500	-10
1500 to 1820	-20
1820 to 2200	-30
2200 to	-40

Step 1: Connect all equipment as shown in the diagram.

Step 2: Turn on the power of the CD player. Put the test disc in the no. 1 disc slot.

Step 3: Turn the test mode on.

Step 4: Press the MODE key.

Step 5: Turn the VR601 on the VOLUME BOARD ASSY until the meter on the Digital Multi Meter reads 800± 5mV.

Step 6: Turn off the power of the CD player.

Step 7: Switch the connector that goes from the Digital Multi Meter to the Jig from input to output.

Step 8: Turn on the power of the CD player.

Step 9: Press the OPEN/CLOSE key twice. The 300 CD rack will spin around once.

Step 10: While the test disc is spinning around(Ⓐ section), press the switch on the jig and look at the Digital Multi Meter and record the number it is registering. After the CD rack has made a full rotation it will continue on slightly and return to the starting position. A second number will appear on the Digital Multi Meter, but you can ignore this number. If the number that appears on the meter while the rack is moving (the first number) is the important one. If it is between **900-1150 mV** you can stop the process, no correction is necessary.

Step 11: Switch the connection input between the Digital Multi Meter and the Jig back to input.

Step 12: Turn the test mode on.

Step 13: Press the MODE key.

Step 14: Turn the VR601 on the VOLUME BOARD ASSY to match the first number on the Digital Multi Meter with the chart provided below.

Step 15: Do steps 6-10 again. In step 10, the number that appears on the Digital Multi Meter should be between **900-1150 mV**. If it is you have completed the correction.

2. Focus Offset Adjustment

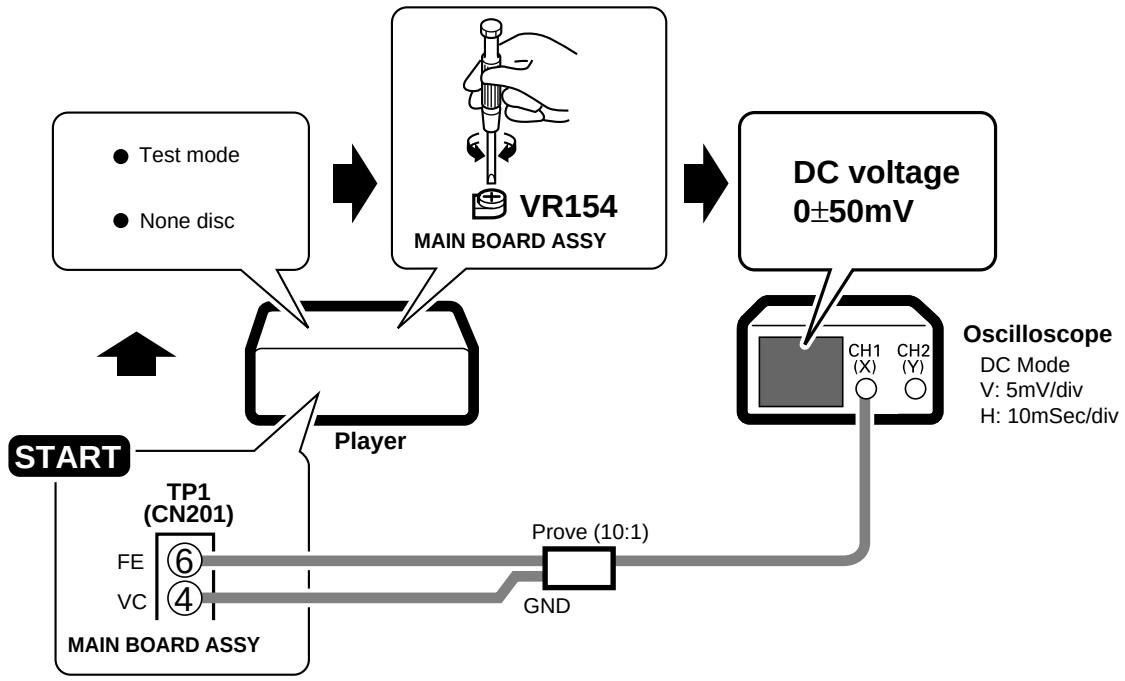

3. Grating Adjustment

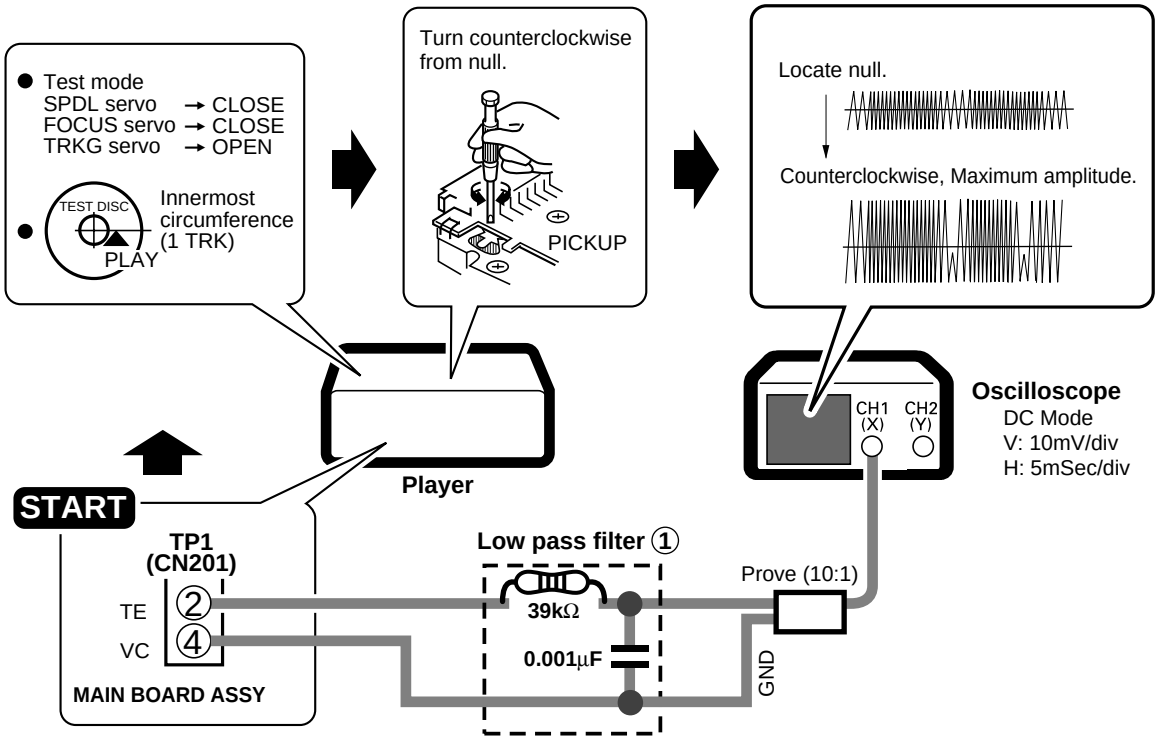

4. Tracking Error Balance Adjustment

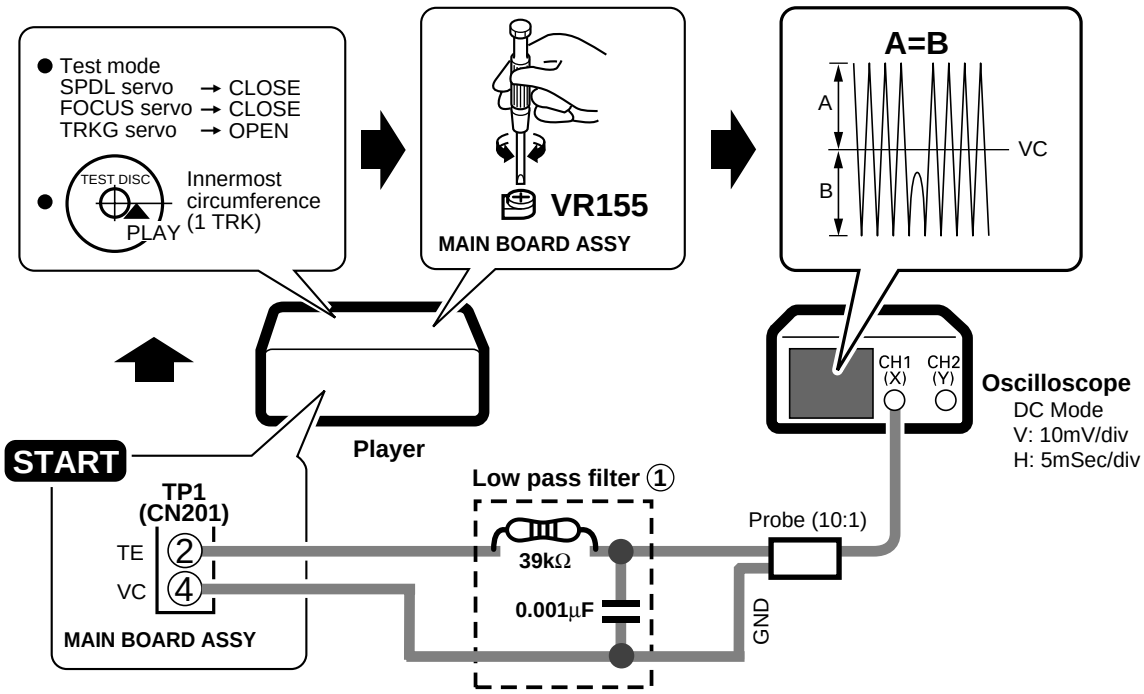

5. Pickup ①Radial/ ②Tangential Direction Tilt Adjustment

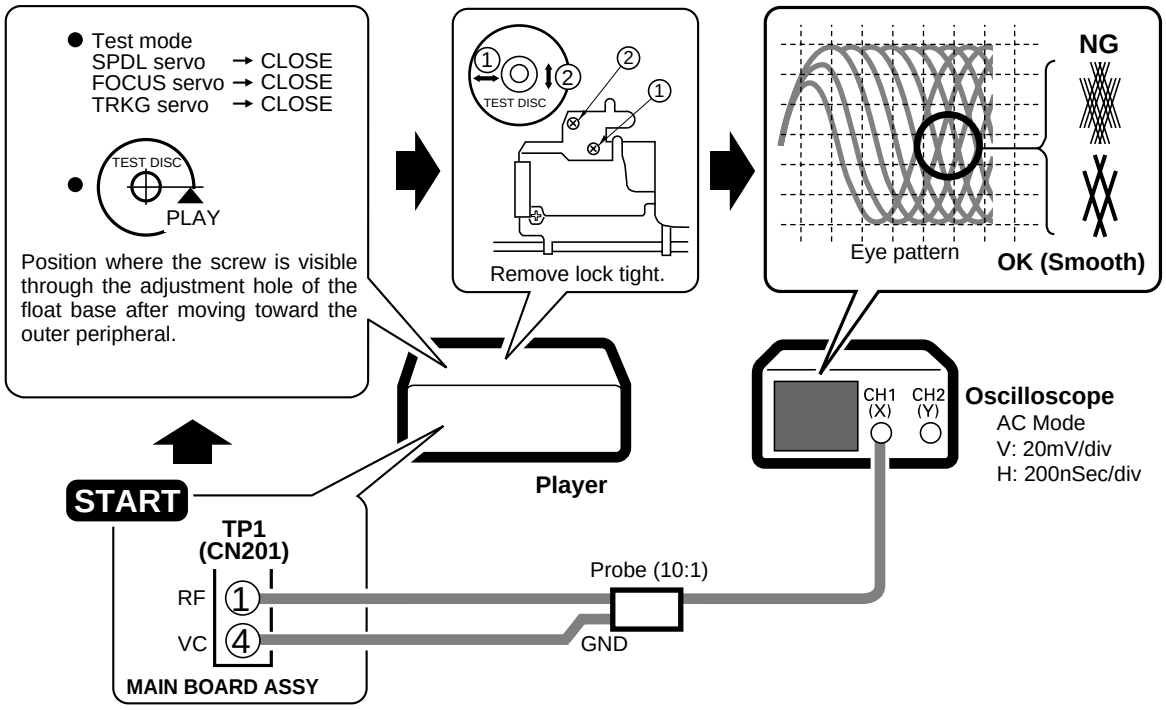

6. RF Level Adjustment Ⅰ

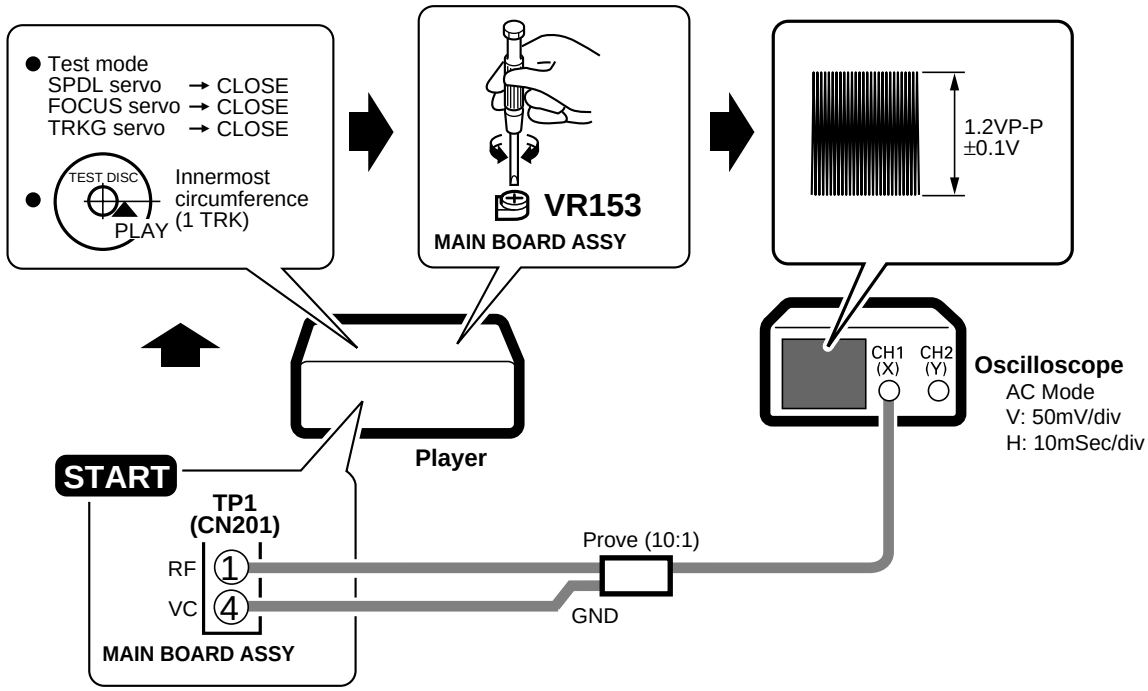

7. Focus Best Adjustment Ⅰ

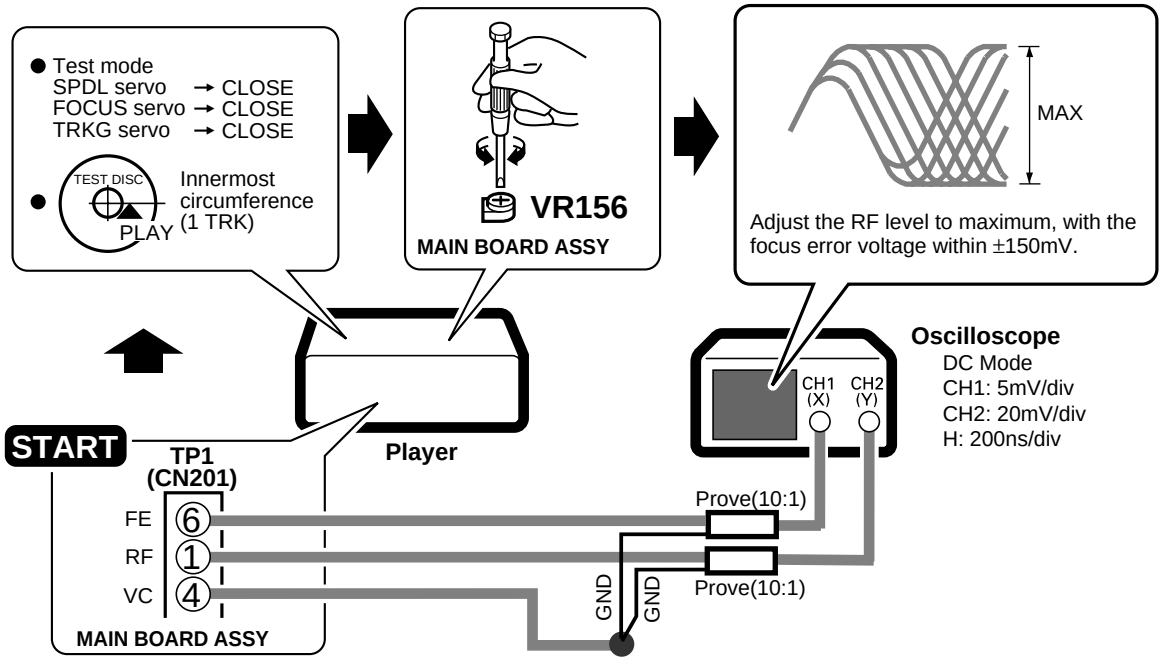

8. RF Level Adjustment Ⅱ

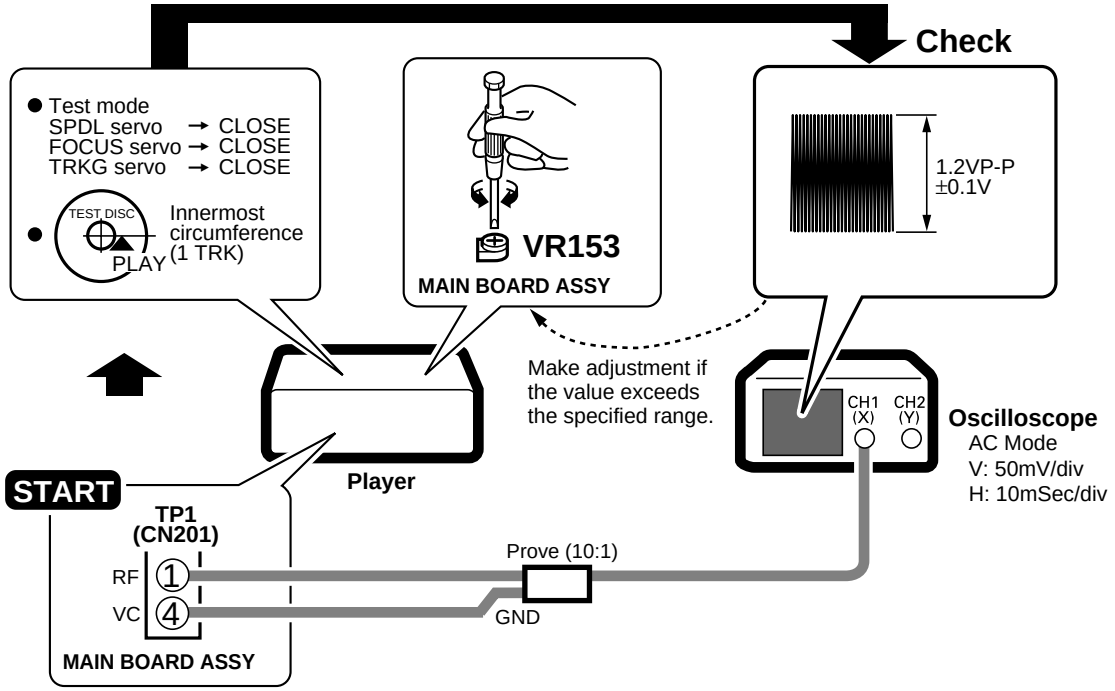

9. Focus Servo Loop Gain Adjustment Ⅰ

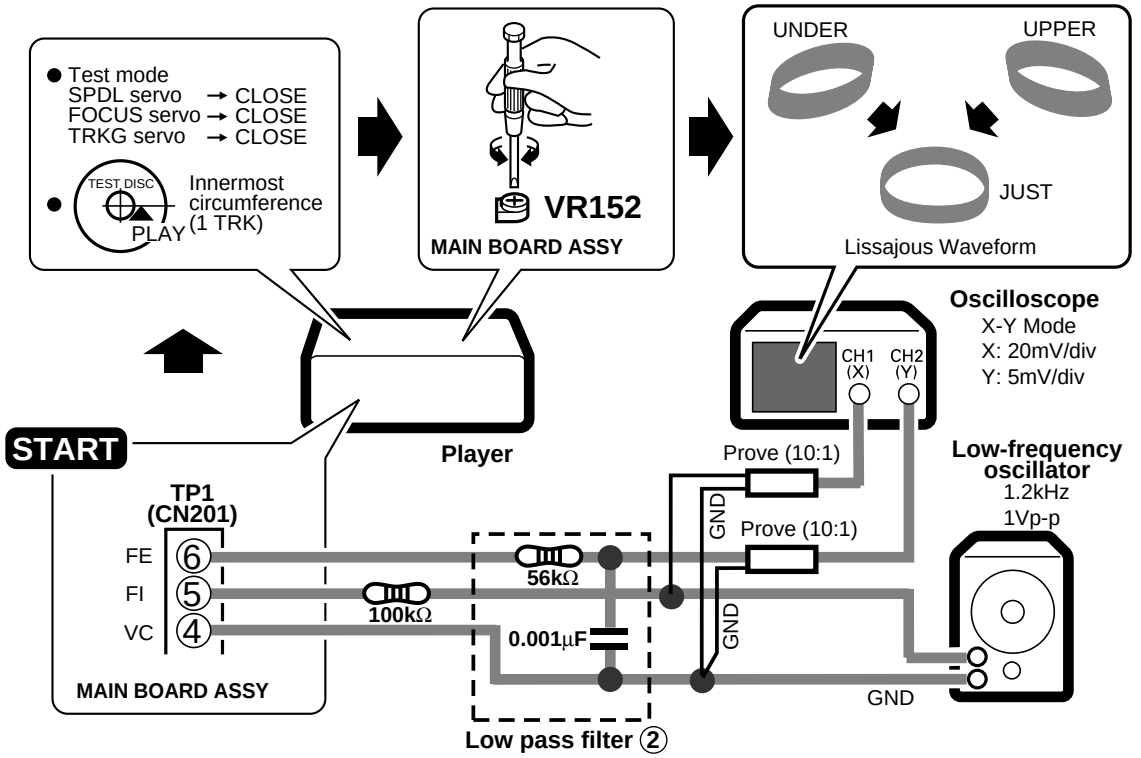

10. Focus Best Adjustment Ⅱ

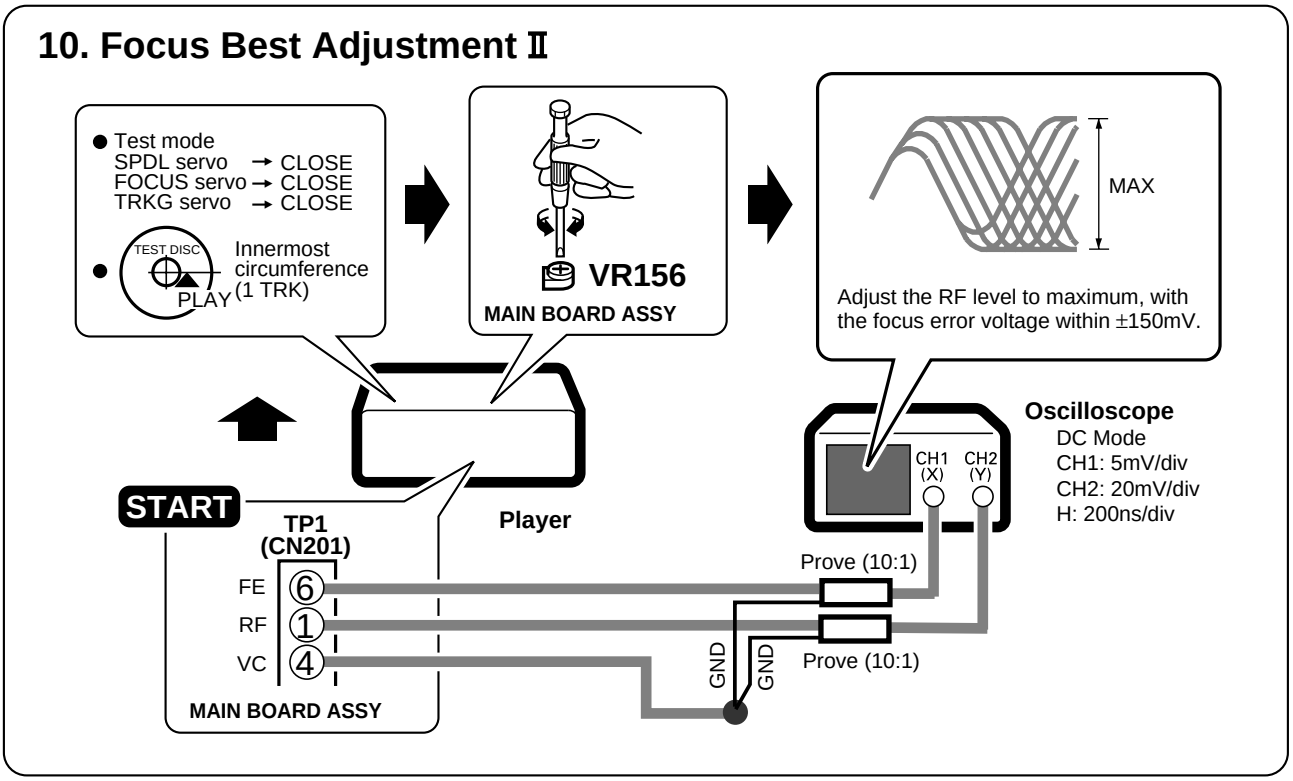

11. Focus Servo Loop Gain Adjustment Ⅱ

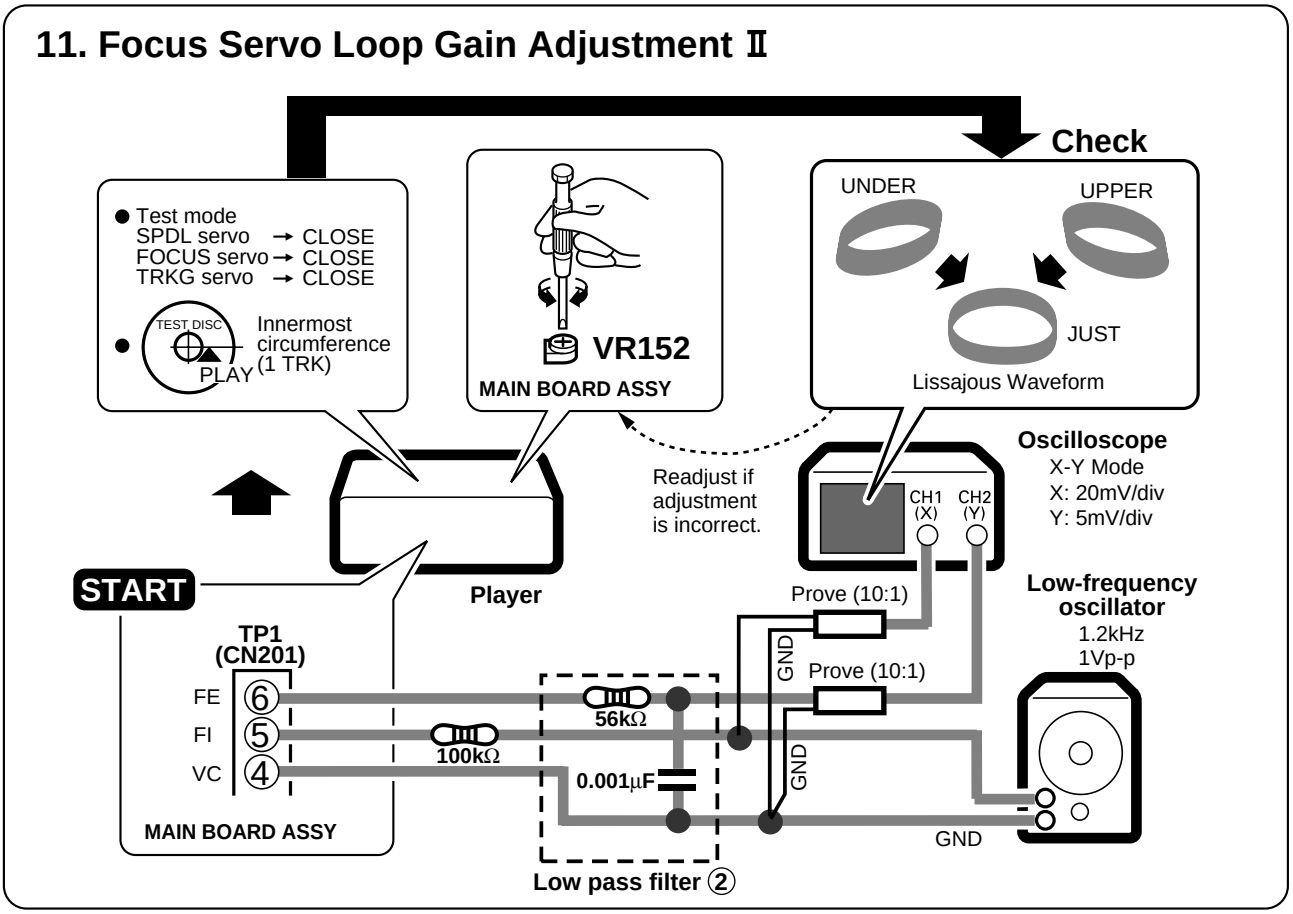

12. Focus Best Adjustment Ⅲ

Adjust this point only if adjustment was made in item 10.

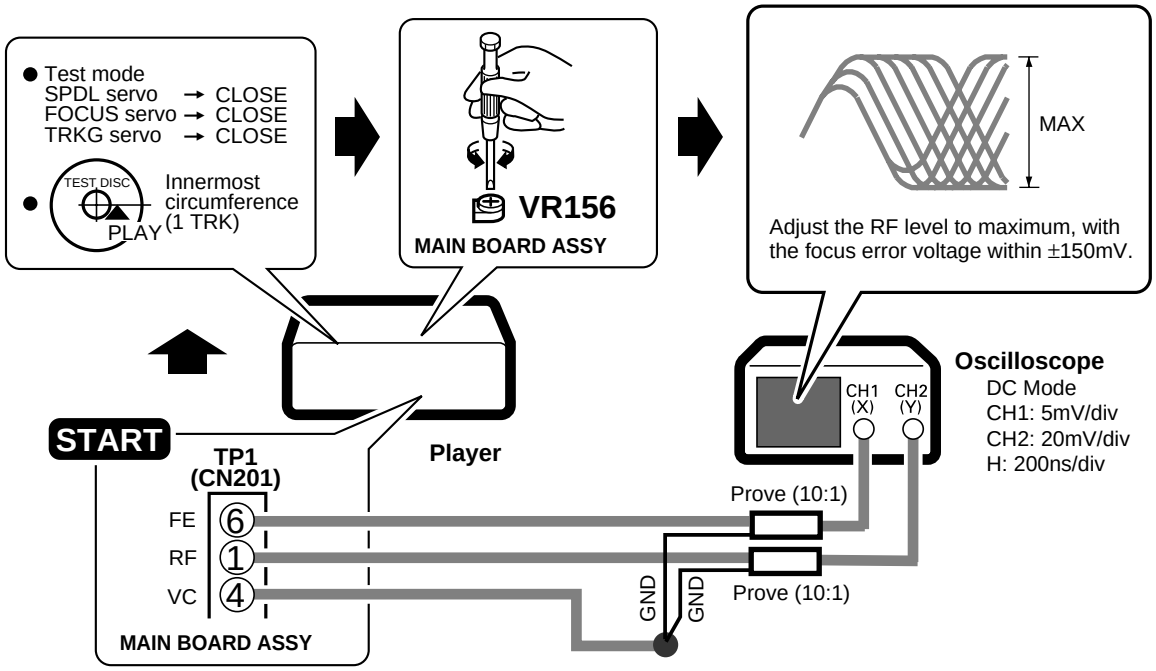

13. Tracking Servo Loop Gain Adjustment

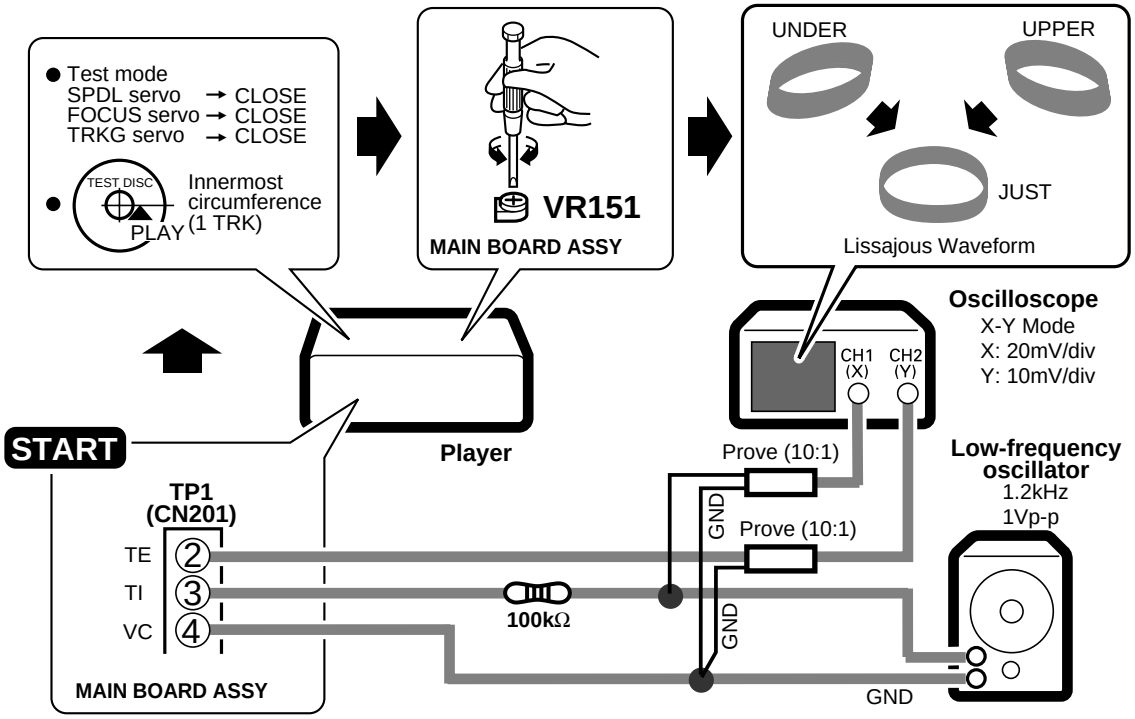

7. GENERAL INFORMATION

7.1 PARTS

7.1.1 IC

■ PD4997A (IC701: DISPLAY BOARD ASSY)

● Display Control Micro-computer

● The information shown in the list is basic information and may not correspond exactly to that shown in the schematic diagrams.

● Pin Function

No.	Symbol	Name	I/O	Description
1	VDD	VDD	–	+5V
2	P37	Not used	O	Open
3	P36/BUZ	Not used	O	
4	P35/PCL	KD5	I	Key data input
5	P34/TI2	KD4	I	
6	P33/TI1	KD3	I	
7	P32/TO2	KD2	I	
8	P31/TO1	KD1	I	
9	P30TO0	KD0	I	
10	$\overline{\text{RESET}}$	$\overline{\text{RESET}}$	I	CPU reset (L: Reset)
11	X2	X2	–	Connected to System clock oscillator (4.19 MHz)
12	X1	X1	–	
13	IC	IC	–	GND
14	XT2	XT2	–	Not Connect (open)
15	P04/XT1	Not used	O	Only for input: Input of GND
16	VDD	VDD	–	+5V
17	P27/$\overline{\text{SCK0}}$	Not used	O	Open
18	P26/SO0/SB1	Not used	O	
19	P25/SI0/SB0	Not used	O	
20	P25/BUSY	Not used	O	
21	P23/STB	DREQ	O	Completion of transmission setting to the main microcomputer
22	P22/$\overline{\text{SCK1}}$	DCLK	I	Clock input for serial communication with the main microcomputer
23	P21/SO1	KYDT	O	Serial data output to the main micro-computer
24	P20/SI1	DPDT	I	Serial data input from the main micro-computer
25	AVSS	AVSS	–	GND
26 | 30	P17/ANI7 | P13/ANI3	Not used	O	OPEN
31	P12/ANI2	ACRY	O	Main microcomputer power ON/OFF

No.	Symbol	Name	I/O	Description
32	P11/ANI1	KBDAT	I	Keyboard communication data transmission and reception
33	P10/ANI0	Not used	O	Open
34	AVDD	AVDD	–	+5V
35	AVREF	AVREF	–	GND
36	P03/INTP3	DCS	I	Serial communication timing input from the main microcomputer
37	P02/INTP2	KBCLK	I	Keyboard communication data clock input
38	P01/INTP0	JOG1	I	JOG input 1
39	P00/INTP0/TI0	RMDT	I	Remote control data input
40	VSS	VSS	–	GND
41 | 44	P74 | P71	Not used	O	OPEN
45	P70	JOG2	I	JOG input 2
46	VDD	VDD	–	+5V
47	P127/FIP52	STBL	O	STANDBY–LED
48 | 54	P126/FIP51 | P120/FIP45	S36 | S30	O	Segment output for FL drive
55 | 62	P117/FIP44 | P110/FIP37	S29 | S22	O	
63 | 70	P107/FIP36 | P100/FIP29	S21 | S14	O	
71 | 78	P97/FIP28 | P90/FIP21	S13 | S6	O	
79	VLOAD	VLOAD	–	–30V
80 | 84	P87/FIP20 | P84/FIP16	S5 | S1	O	Segment output for FL drive
85 | 87	P83/FIP15 | P80/FIP13	G16 | G14	O	DIGIToutput for FL drive
88 | 100	FIP12 | FIP0	G13 | G1	O	

■ PD4996C(IC351: MAIN BOARD ASSY)

● System Control Micro-computer

● Pin Function

No.	Symbol	Name	I/O	Description
1	P120/RTP0	$\overline{\text{DLAT}}$	O	DAC control data, latch pulse output
2	P121/RTP1	$\overline{\text{XLAT}}$	O	LSI control data, latch pulse output
3	P122/RTP2	Not used	O	Output of "L"
4	P123/RTP3	$\overline{\text{INSD}}$	I	Slider INSIDE switch input (L: INSIDE)
5	P124/RTP4	$\overline{\text{OPEN}}$	I	Hood open switch input (L: Opening completed)
6	P125/RTP5	$\overline{\text{CLS}}$	I	Hood close switch input (L: Closing completed)
7	P126/RTP6	$\overline{\text{EJCT}}$	I	Loading out switch input (L: Ejection completed)
8	P127/RTP7	$\overline{\text{CLMP}}$	I	Loading mechanism clamping switch input (L: Clamping completed)
9	IC	IC	–	GND
10	X2	X2	–	Connected to System clock oscillator (4.19 MHz)
11	X1	X1		
12	VDD	VDD	–	+5V
13	XT2	XT2	–	Not Connect (open)
14	P07/XT1	Not used	I	Input of 5 V (only for input)
15	$\overline{\text{RESET}}$	$\overline{\text{RESET}}$	I	CPU reset (L: Reset)
16	P00/INTP0/TI00	DREQ	I	Communication start request input from the SUD microcomputer (L: Communication start)
17	P01/INTP1/TI01	Not used	O	Output of "L"
18	P02/INTP2	DPOS	I	Pulse input for disc position detection
19	P03/INTP3	SCOR	I	Subcode synchronization S0 + S1 input
20	P04/INTP4	DISC	I	Disc detection pulse input (L: Disc present)
21	P05/INTP5	Not used	O	Not used
22	P06/INTP6	DCNT2	I	Disc count pulse input 2
23	AVdd	AVdd	–	VDD
24	AVref0	AVref0	–	GND
25	P10/ANI0	Not used	O	Output of "L"
26	P11/ANI1	MUTM	O	Master side mute output (L: Mute)
27	P12/ANI2	MUTA	O	Audio muting output (L: Mute)
28	P13/ANI3	Not used	O	Output of "L"
29	P14/ANI4	MSIN	I	Master input (response from the slave)
30	P15/ANI5	KYCON	O	Keyboard power supply control (H: Power ON)

No.	Symbol	Name	I/O	Description
31	P16/ANI6	SYNC1	I	Synchronization input (pull-up required)
32	P17/ANI7	SYNC3	O	Synchronization output
33	AVSS	AVSS	–	GND
34	P130/AN00	Not used	O	Output of "L"
35	P131/AN01	Not used		
36	AVref1	AVref1	–	VDD
37	P70/SI2/RxD	SRDT	I	CD TEXT data input
38	P71/SO2/TxD	Not used	O	Output of "L"
39	P71/$\overline{\text{SCK2}}$/ASCK	SCLK	O	CD TEXT data fetch clock output
40	Vss	Vss	–	GND
41	P20/SI1	KYDT	I	Communication data input in regard to the SUB microcomputer
42	P21/SO1	DPDT	O	Communication data output in regard to the SUB microcomputer
43	P22/$\overline{\text{SCK1}}$	DCLK	O	Communication clock in regard to the SUB microcomputer
44	P23/STB	DCS	O	Communication request output in regard to the SUB microcomputer (H → L: Communication request)
45	P24/BUSY	Not used	O	Output of "L"
46	P25/SI0/SB0	SQSO	I	Q data serial input (combined use for FCOK/GFS/SENS)
47	P26/SO0/SB1	MDAT	O	LSI control data serial output
48	P27/$\overline{\text{SCK0}}$	CLOK	O	Serial clock
49 | 56	P80/A0 | P87/A7	A0 | A7	O	External RAM address line
57	P40/AD0	A4	O	
58	P41/AD1	A12	O	
59	P42/AD2	A10	O	
60	P43/AD3	A11	O	
61	P44/AD4	A9	O	
62	P45/AD5	A8	O	
63	P46/AD6	A13	O	
64	P47/AD7	A15	O	
65 | 69	P50/A8 | P54/A12	IO4 | IO8	O	External RAM data Input/Output
70	P55/A13	IO1	O	

No.	Symbol	Name	I/O	Description
71	Vss	Vss	–	GND
72	P56/A14	IO2	O	External RAM data Input/Output
73	P57/A15	IO3		
74	P60	SCHK	I	Input for slave judgment (L: Slave)
75	P61	MCHK	I	Input for master judgment (L: Master)
76	P62	Not used	O	Output of "L"
77	P63	Not used		
78	P64/$\overline{RD}$	A16	O	External RAM address line
79	P65/$\overline{WR}$	$\overline{WE}$	O	Write control output (L: Write)
80	P66/$\overline{WAIT}$	$\overline{CS}$	O	External RAM chip selection output (H: Standby)
81	P67/ASTB	$\overline{RD}$	O	Read control output (L: Read)
82	P100/TI5/TO5	MUTS	O	Slave side mute output (L: Mute)
83	P101/TI6/TO6	DSLT	O	Selector output Count-up (DSRT: L, DSLT: H) Count-down (DSRT: H, DSLT: L) Stopped (DSRT: L, DSLT: L)
84	P102	DSRT	O	
85	P103	MOPN	O	Door motor output Open (MOPN: H, MCLS: L) Close (MOPN: L, MCLS: H) Stop (MOPN: L, MCLS: L)
86	P30/TO0	MCLS	O	

No.	Symbol	Name	I/O	Description
87	P31/TO1	LIN	O	Output for loading motor IN (LIN: H, LOUT: L) OUT (LIN: L, LOUT: H) Stop (LIN: L, LOUT: L)
88	P32/TO2	LOUT	O	
89	P33/TI1	LDON	O	Laser diode output (H: ON, L: OFF)
90	P34/TI2	$\overline{XRST}$	O	Reset output for each LSI
91	P35/PCL	TRST	O	CD TEXT decoder IC reset output (L: Reset)
92	P36/BUZ	CLED	O	Center LED lighting control (H: Lit)
93	P37	PLED	O	Sensor output for disc detection (H: Lit)
94	P90	Not used	O	Output of "L"
95	P91	TRST	I	Test mode input for checker (H: Test)
96	P92	MSOT	O	Master control output (control of the slave)
97	P93	SLOT	O	Slave output (response to the master)
98	P94	HBIT	I	Hi-bit correspondence switching input (H: Hi-bit correspondence)
99	P95	TEST	I	Test mode switching input (H: Test mode)
100	P96	DQSY	I	CD TEXT data timing input

■ M5M51008BFP–70LL (IC352: MAIN BOARD ASSY)

● S-RAM

● Block Diagram

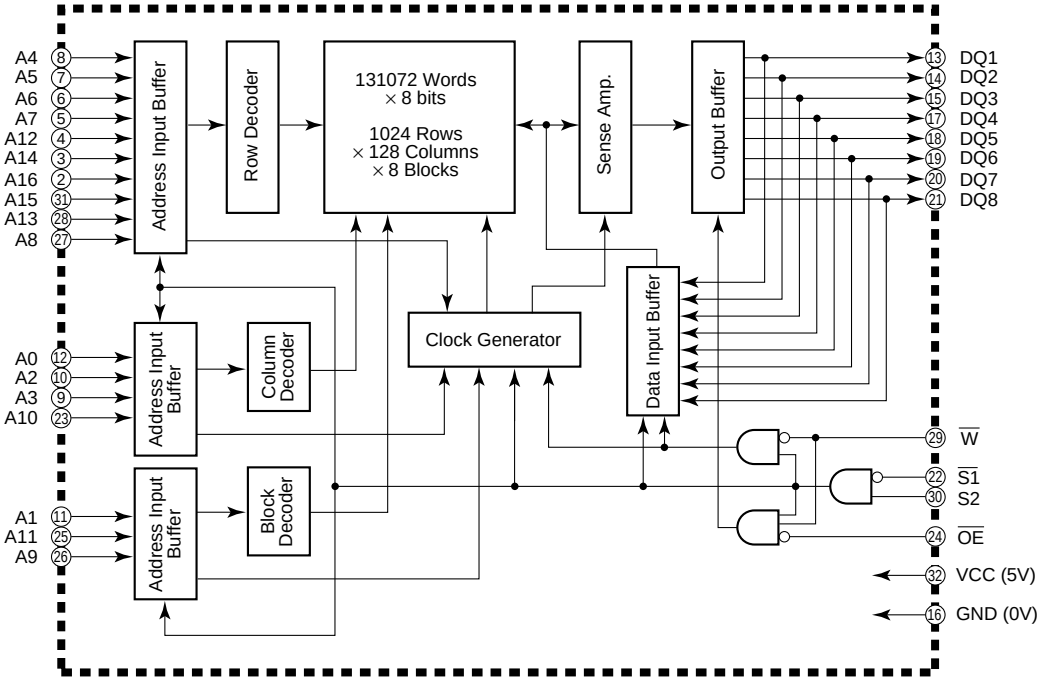

7.1.2 DISPLAY

■ PEL1096 (V701: DISPLAY BOARD ASSY)

● Vacuum Fluorescent Display

● Pin Assignment

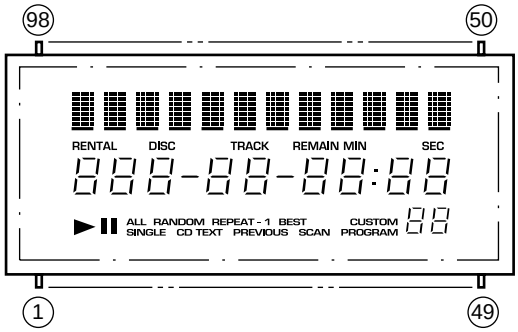

● Pin Connection

PIN NO.	98	97	96	95	94	93	92	91	90	89	88	87	86	85	84	83	82	81	80	79	78	77	76	75	74	73	72	71	70	69	68	67	66
CONNECTION	F1	F1	F1	F1	NP	NP	13G	12G	11G	10G	9G	8G	7G	6G	5G	4G	3G	2G	1G	NX	NX	NX	NX	NX	NX	NX	NX	NX	NX	NC	P36	P35	P34

PIN NO.	65	64	63	62	61	60	59	58	57	56	55	54	53	52	51	50	49	48	47	46	45	44	43	42	41	40	39	38	37	36	35	34	33
CONNECTION	P33	P32	P31	P30	P29	P28	P27	P26	P25	P24	NP	NP	F2	F2	F2	F2	F2	F2	F2	F2	NP	NP	P23	P22	P21	P20	P19	P18	P17	P16	P15	P14	P13

PIN NO.	32	31	30	29	28	27	26	25	24	23	22	21	20	19	18	17	16	15	14	13	12	11	10	9	8	7	6	5	4	3	2	1
CONNECTION	P12	P11	NX	NX	NX	NX	NX	NX	NX	NX	NX	NX	P10	P9	P8	P7	P6	P5	P4	P3	P2	P1	16G	15G	14G	IC	NP	NP	F1	F1	F1	F1

Note 1) F1, F2 ..... Filament
2) NP ..... No Pin
3) NX ..... No extend Pin
4) NC ..... No Connection
5) DL ..... Datum Line
6) 1G to 16G ..... Grid
7) IC ..... Internal Connection

● Grid Assignment

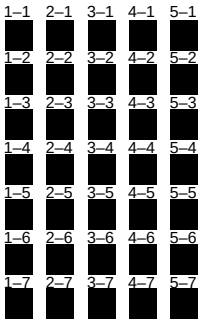

(1G to 12G)

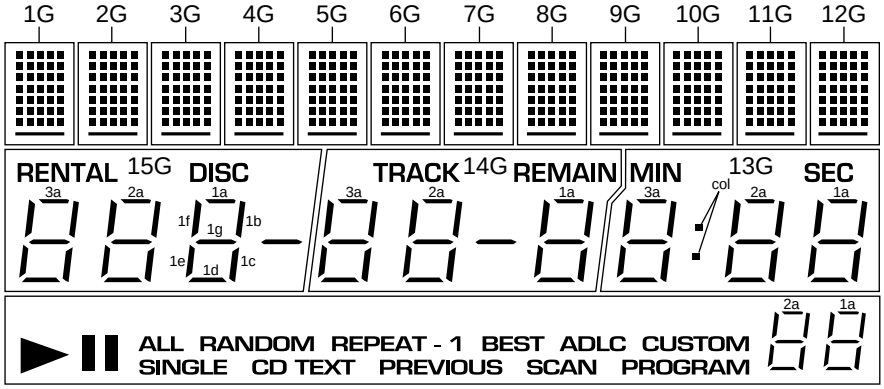

● Anode Connection

	1G to 12G	13G	14G	15G	16G
P1	1–1	1d	1d	1d	▶
P2	2–1	1e	1e	1e	❚❚
P3	3–1	1c	1c	1c	ALL
P4	4–1	1g	1g	1g	SINGLE
P5	5–1	1f	1f	1f	RANDOM
P6	1–2	1b	1b	1b	CD TEXT
P7	2–2	1a	1a	1a	REPEAT
P8	3–2	col	▬	▬	►1
P9	4–2	2d	2d	2d	PREVIOUS
P10	5–2	2e	2e	2e	BEST
P11	1–3	2c	2c	2c	ADLC
P12	2–3	2g	2g	2g	SCAN
P13	3–3	2f	2f	2f	CUSTOM
P14	4–3	2b	2b	2b	PROGRAM
P15	5–3	2a	2a	2a	—
P16	1–4	SEC	REMAIN	DISC	—
P17	2–4	3d	3d	3d	2d
P18	3–4	3e	3e	3e	2e

	1G to 12G	13G	14G	15G	16G
P19	4–4	3c	3c	3c	2c
P20	5–4	3g	3g	3g	2g
P21	1–5	3f	3f	3f	2f
P22	2–5	3b	3b	3b	2b
P23	3–5	3a	3a	3a	2a
P24	4–5	MIN	TRACK	RENTAL	—
P25	5–5	—	—	—	1d
P26	1–6	—	—	—	1e
P27	2–6	—	—	—	1c
P28	3–6	—	—	—	1g
P29	4–6	—	—	—	1f
P30	5–6	—	—	—	1b
P31	1–7	—	—	—	1a
P32	2–7	—	—	—	—
P33	3–7	—	—	—	—
P34	4–7	—	—	—	—
P35	5–7	—	—	—	—
P36	▬	—	—	—	—

7.2 DIAGNOSIS

7.2.1 DISASSEMBLY

■ Removal of the Servo Mechanism Assy GM

① Remove the Bonnet. (Left and right side: ×2, rear side: ×3)
② Remove the wires from the MAIN BOARD Assy. (9 places)
③ Remove the screws Ⓐ (10 screws), and remove the MAIN BOARD Assy.

Note) When the screws (6 screws) are removed in this condition, the mechanical unit can be removed as one entity. Refer to "2. EXPLODED VIEWS AND PARTS LIST".

④ Open the Hood, remove the screws Ⓑ (5 screws), disconnect the hooks of Front Panel Assy and Hood (3 places), and remove the Center Pole.
⑤ Remove the screws Ⓒ (3 screws), remove the link section Ⓓ, and remove the Arm Assy.

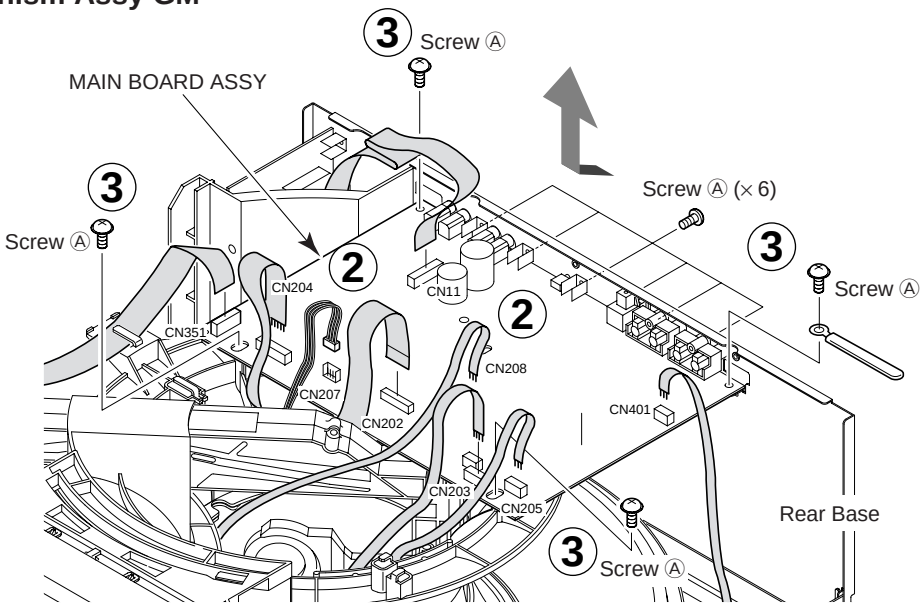

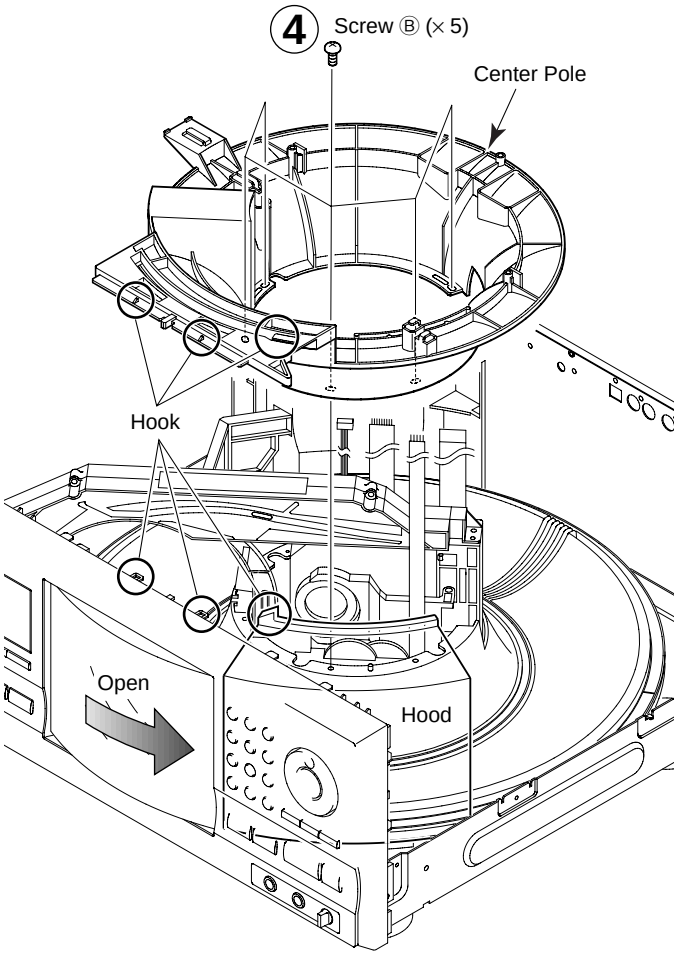

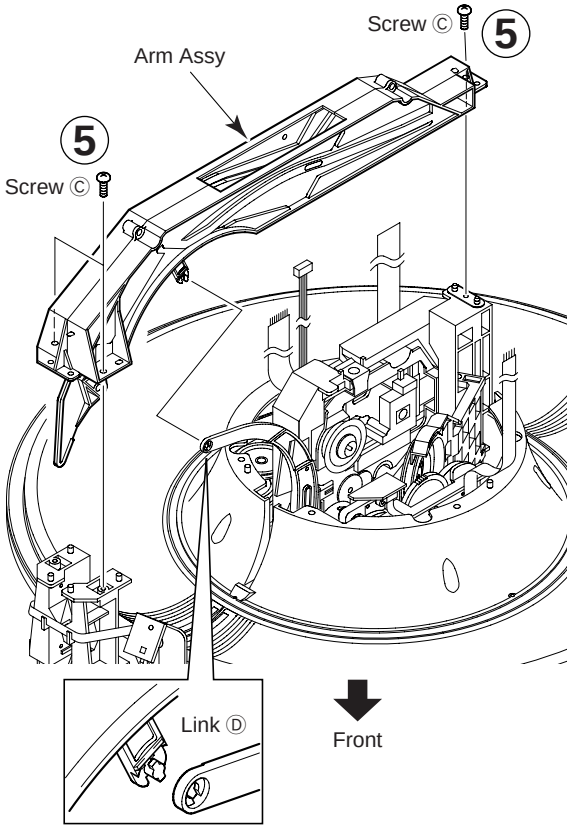

⑥ Remove the screws Ⓔ (4 screws), and then remove the Disc Guard.
⑦ Remove the Float Base Assy and Clamp Holder.

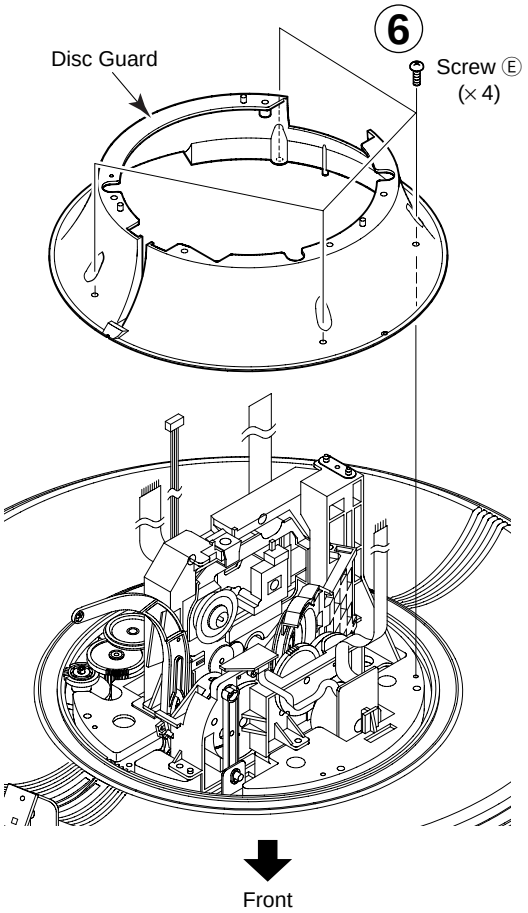

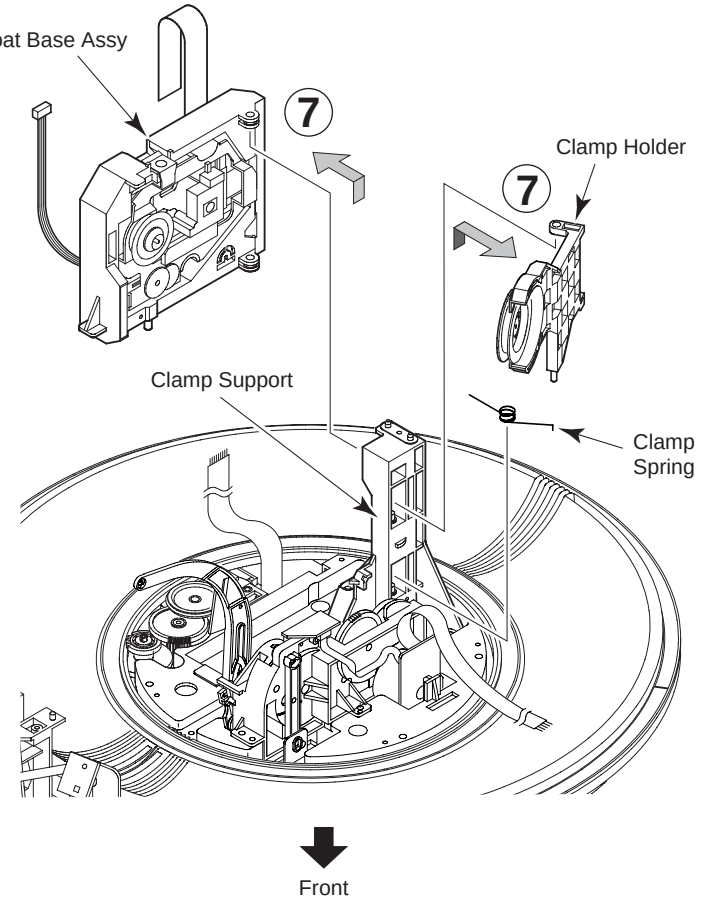

⑧ Remove the Flexible Flat Cable and the Connector Assy (4P) from the Float Base.
⑨ Remove the screw G.
⑩ Remove the float spring.
(To install this part, line up the float angle side of the Servo Mechanism ASSY GM first, and press down on the float base side.)
⑪ Remove the float rubber from the Servo Mechanism ASSY GM. At this time the Float Rubber should remain on the Float Base side. (To install it on the Float Base when it has been removed, push it into place with a thin cylindrical object.

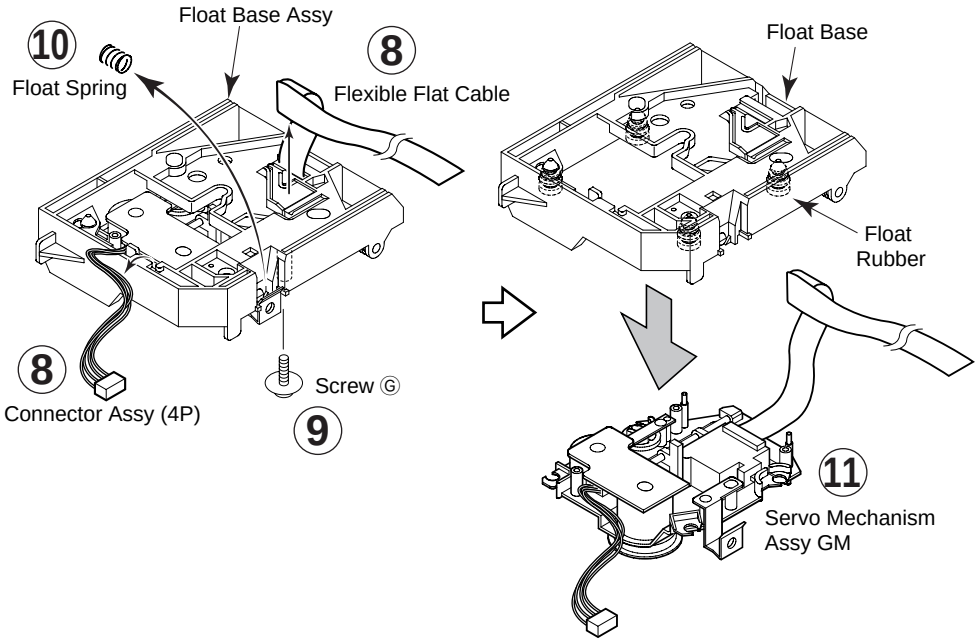

■ Removal of the Gear Holder Assy and the Disc Rack

① Perform the steps ① to ⑥ of " ■ Removal of the Servo Mechanism Assy GM ".
② Remove the screws Ⓐ (2 screws), and then remove the Gear Holder Assy.
③ Remove the Disc Rack.

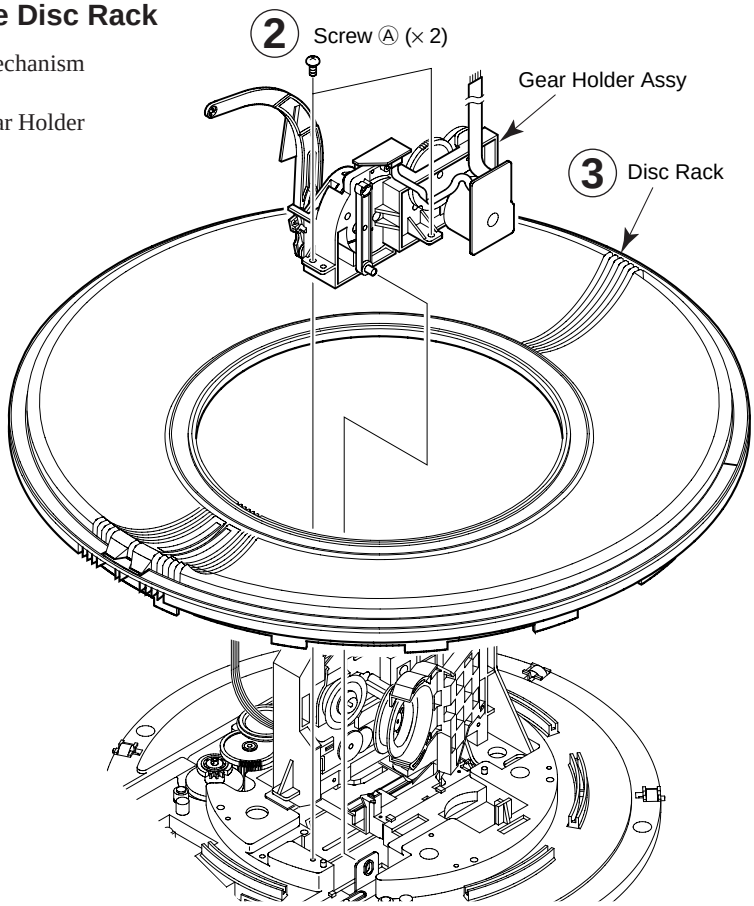

■ Removal of the Hood and Hood Base Assy

① Perform the steps ① to ⑥ of " ■ Removal of the Servo Mechanism Assy GM ". and the steps ② and ③ of " ■ Removal of the Gear Holder Assy and the Disc Rack".
② Remove the screws Ⓑ (3 screws), and then remove the Front Panel Assy.
③ Slide the Hood to the left side and remove it.
④ Remove the screws Ⓒ (2 screws) and remove the Hood Base Assy.

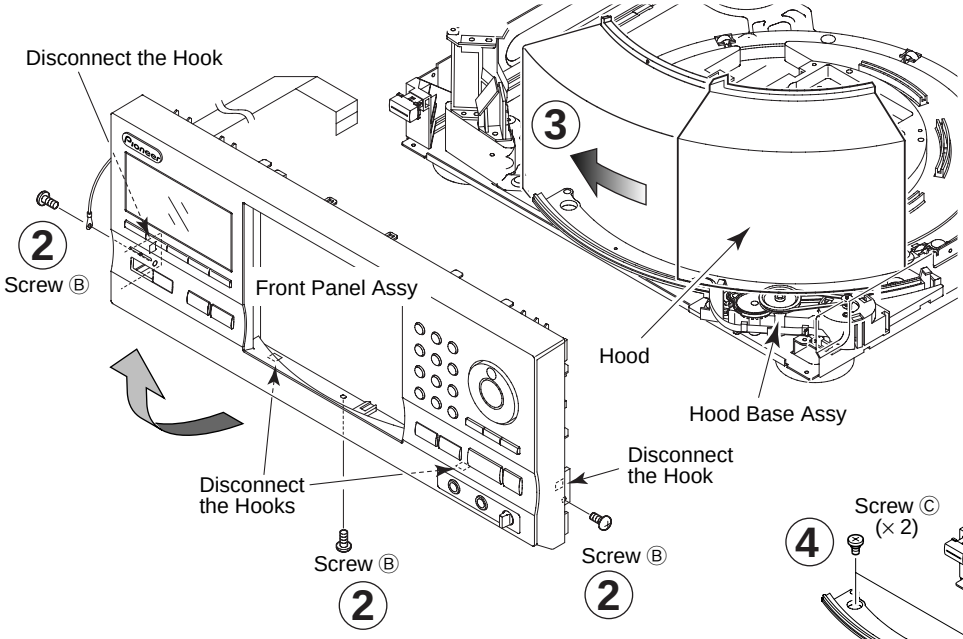

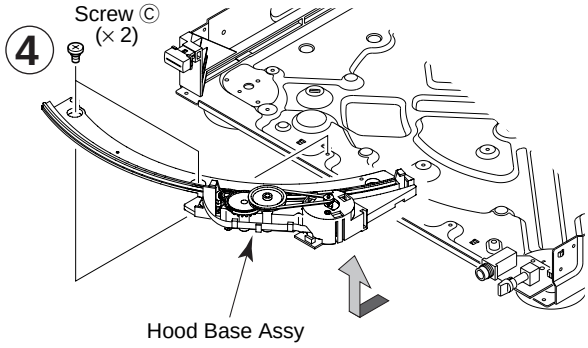

7.2.2 ERROR CHECK DISPLAY

Error check mode (display of the error history for the last 16 times) is entered when the "TIME/CHARA" button is pressed in test mode. By looking at this display, it can be seen in which status the microcomputer has stopped.

(1) Explanation of the display

Disc No. = Error code
Track No. = Error history
Min : sec = Error occurrence mode

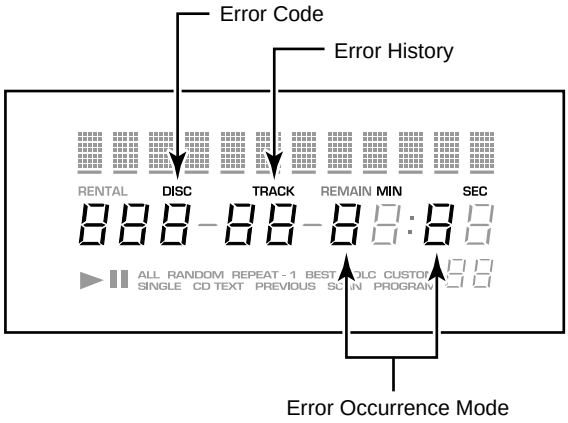

Press the "TIME/CHARA" button again to check past error codes. This switches the display. The contents of each display are as follows.

① Track No.: Error History

Display is possible from 1 to 16. The smaller numbers have occurred more recently. Accordingly, the error No. 1 is the error which has occurred most recently.

② Min : sec: Error Occurrence Mode

The internal mode at the time of occurrence of the displayed error is displayed. With Min : sec, the meaning is provided by the first digit.

Minutes digits

Display	Contents
0	During spindle stop operation
1	During disc return
2	During disc selection (during clamping operation at the time of 26)
3	During setup
4	During CDR setup operation
5	During TOC reading
6	During search operation on the disc
7	During play operation
8	During pause operation
9	During manual search

Seconds digits

Display	Contents
0	During hood closing operation and closed condition
1	During hood opening operation and open condition

③ Disc No.: Error Code Details

Note: A used display is displayed only when return to normal operation after error occurrence is not possible even when failsafe operation is performed.

<<< Rack Section >>>

User Display	Display	Contents
None	A0	• Disc playing was tried after loading, but the disc could not be detected because there was no disc, the disc was upside down, the disc was dirty, disc loading had not been completed, etc. • Focus was lost during disc playing because of disc scratches, dirt, etc.
None	A1	• At the time of track selection during play, or when trying to play, the servo mechanism could not move to the position of the intended track within a fixed time.
U1	A3	• Disc loading was tried, but loading was not possible within a fixed time. (The disc was not brought from the rack.)
	A4	• It was tried to return the disc to the rack, but the disc could not be returned within a fixed time.
U2	A2	• At the time of disc selection during play, or at the start of play from stopped condition, the selection mechanism could not move to the position of the intended disc within a fixed time.
	A5	• After initialization of the selection mechanism, after selection mechanism NG, etc., forced rack section position detection is performed for the selection mechanism, but detection was not possible within a fixed time.
None	A6	• Playing was tried after disc loading, but normal disc rotation was not possible because the disc was upside down, the disc was dirty, disc loading had not been completed, etc. • During play normal rotation was not possible because of disc scratches, dirt, etc.

<<< Rack section >>>

User Display	Display	Contents
None	A7	• When the position of the selection mechanism just before switching to disc selection operation os DCNT terminal = "L". (Normally, DCNT terminal = "H" exists when the selection mechanism is stopped, so that it can be assumed that the position of the mechanism has deviated for some reason. There is the possibility that a position deviation of the mechanism can cause a defect of the mechanism.)
None	A8	• At the time of movement of the selection mechanism, a deviation has occurred between the present position of the disc and the disc position according to position detection. (It can be assumed that the waveform at the DCNT terminal and/or at the DPOS terminal has been miscounted. When a miscount occurs, a discrepancy occurs between the displayed disc No. and the counted disc position.)
None	A9	• When the position of the mechanism became DCNT terminal = "L" during disc loading. (Normally, DCNT terminal = "H" exists when the selection mechanism is stopped, so that it can be assumed that the position of the mechanism has deviated for some reason. There is the possibility that a position deviation of the mechanism can cause a defect of the mechanism.)
None	AA	• At the time of shifting to a different disc after play completion, the pickup does not return to the innermost circumference.

<<< Hood Section >>>

User Display	Display	Contents
U3	P0	The hood did not open within a fixed time. The hood switch was broken.
	P1	The hood did not close within a fixed time. The hood switch was broken.
None	P2	It was tried to force the closed hood open. The hood switch was broken.

7.2.3 EXPLANATION OF DISC DETECTION

1. Detection of the rack position

There are two types of slits on the rear of the rack, and their combination is used to find which disc has been selected during rack rotation. The input ports (DCNT, DPOS) are as follows.

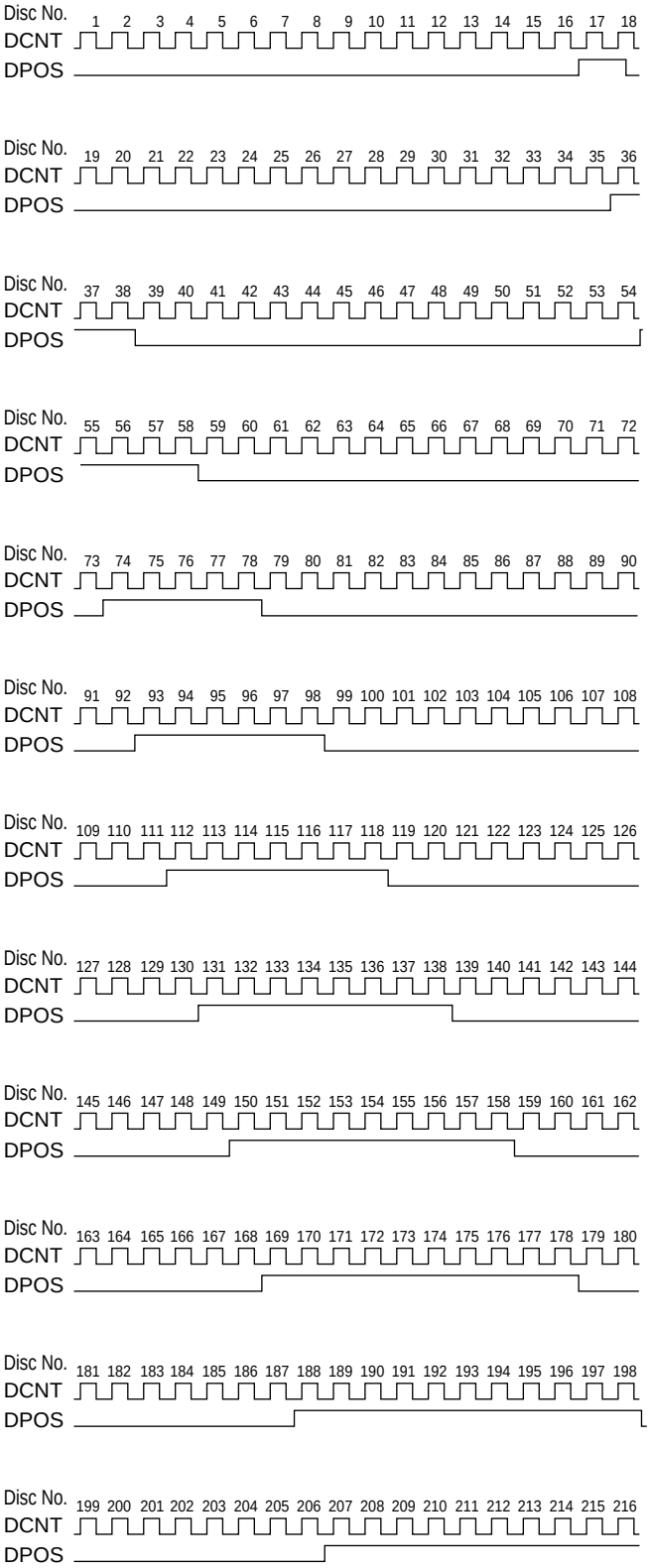

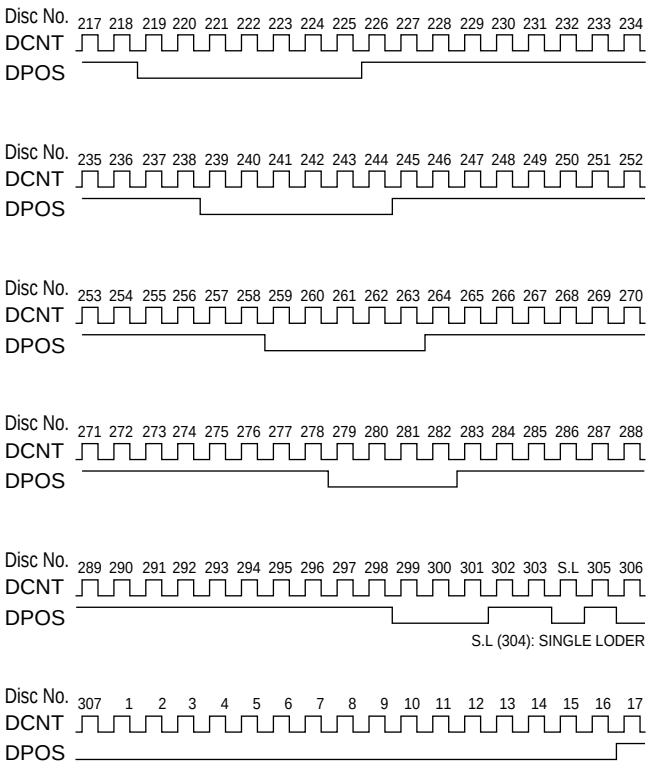

Relation between input port DCNT, DPOS and position of the mechanism

2. Position relation between position of the rack mechanism and photocell for disc detection

The relation between these two positions is as follows.

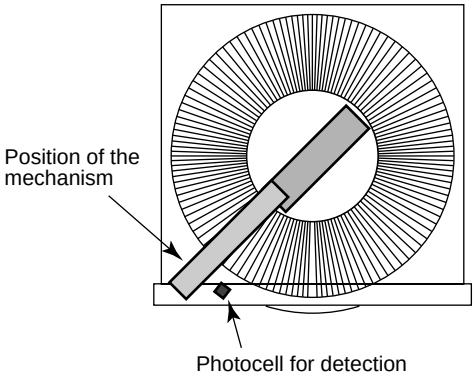

Fig.: The rack seen from above

The position of the mechanism and the photocell for detection are offset by a distance corresponding to 9 discs. Accordingly, the photocell for detection sees the disc number 9 discs before the position of the mechanism.

Example: Disc No. at the rack position : Disc No. 100
Disc No. seen by the photocell for detection : Disc No. 91

Note: The rack has 307 slits, but the slits 301 to 303 and 304 to 307 are the space for the side of the single loader and are not used. Disc detection also is not performed for them.

3. Disc Detection Method

3-1 In Regard to the Disc Detection Method

- Disc detection is performed after stabilization of the rotation speed after rack rotation start and completion of acceleration. (After start of rotation, detection starts after feed of 20 discs.)
- The input ports DCNT and DISC of the microcomputer are used for disc detection.

Port Explanation : DCNT : As described above.
DISC : Input of the disc detection result by the photocell for disc detection.
Input value "H" : No disc,
"L" : Disc present

3-2 In Regard to the Disc Detection Timing

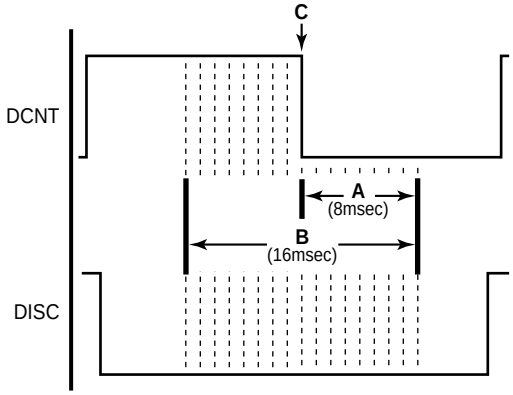

① The microcomputer looks every 1 msec at the status (H or L) of the two inputs DCNT and DISC.
② 8 msec (A in the figure) after the drop of DCNT (C in the figure), the last 17 DISC inputs (B in the figure) are checked.
A disc is assumed to be resent when even one of them is "L".
③ No disc is assumed when DISC was "H" all 17 times (B in the figure) in ②.

Note: In regard to the drop ( ) of DCNT
For looking at the drop or rise of DCNT, it is necessary to check DCNT every 1 msec for "H" or "L".
"H" → "L" means a drop ( ).
"L" → "H" means a rise ( ).

For the timing, either one of the following A and B can be assumed. Accordingly, the point where a drop is found differs by max. 1 msec for A and B.
Thus, using the above figure, it can be said that the time from finding that a drop has occurred until starting to check for disc presence (A in the above figure) becomes 8 to 9 msec.

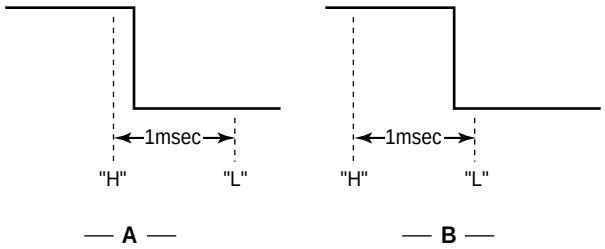

7.3 BLOCK DIAGRAM

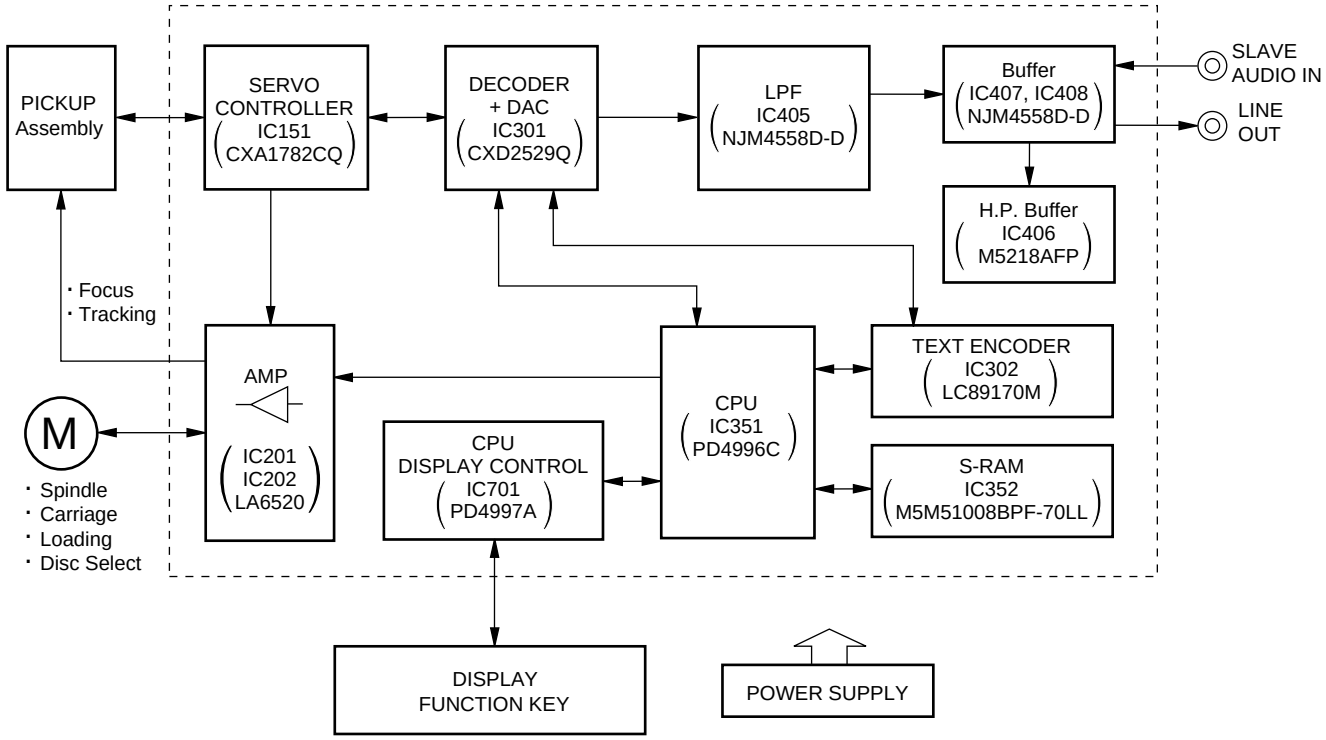

8. PANEL FACILITIES AND SPECIFICATIONS

■ PANEL FACILITIES

FRONT PANEL

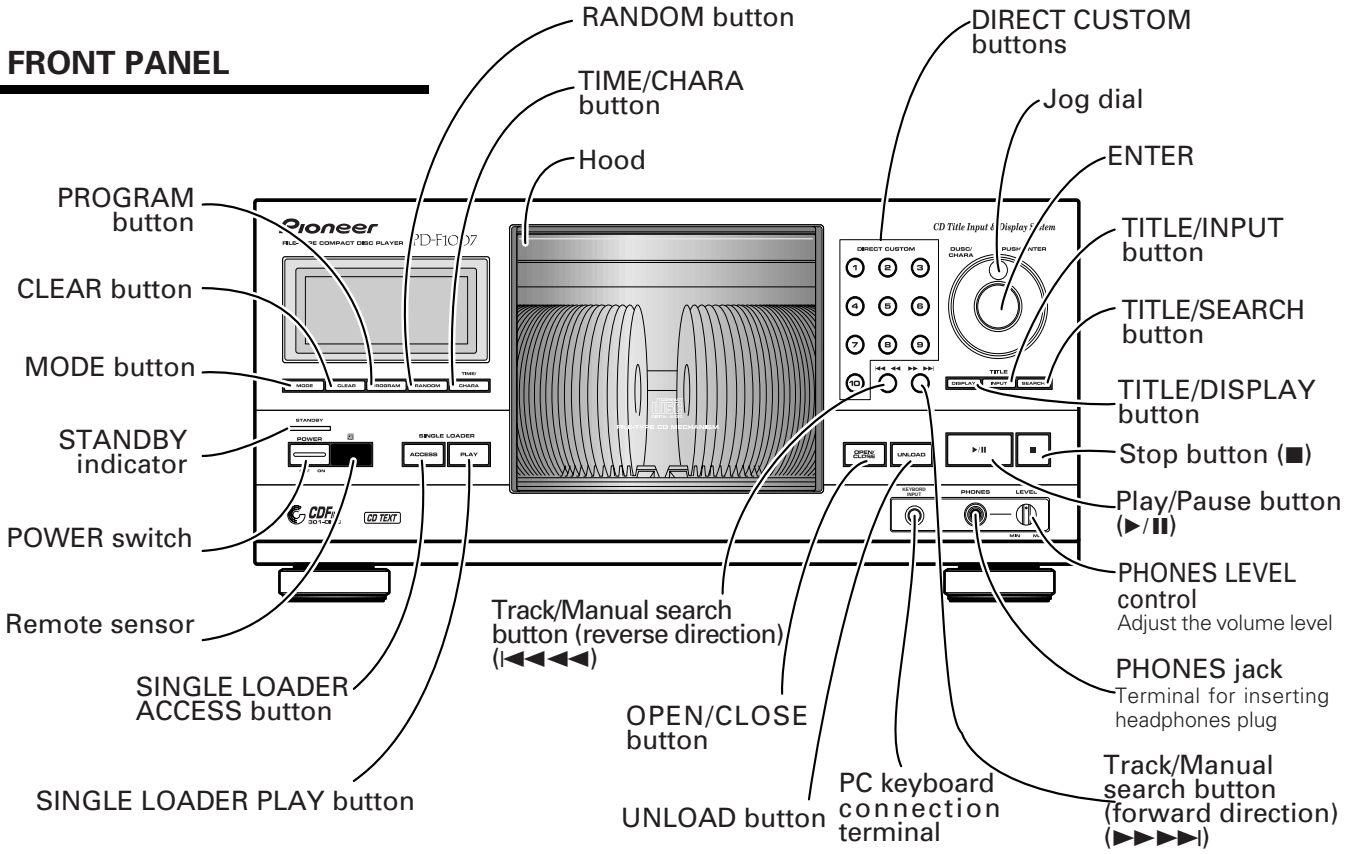

DISPLAY

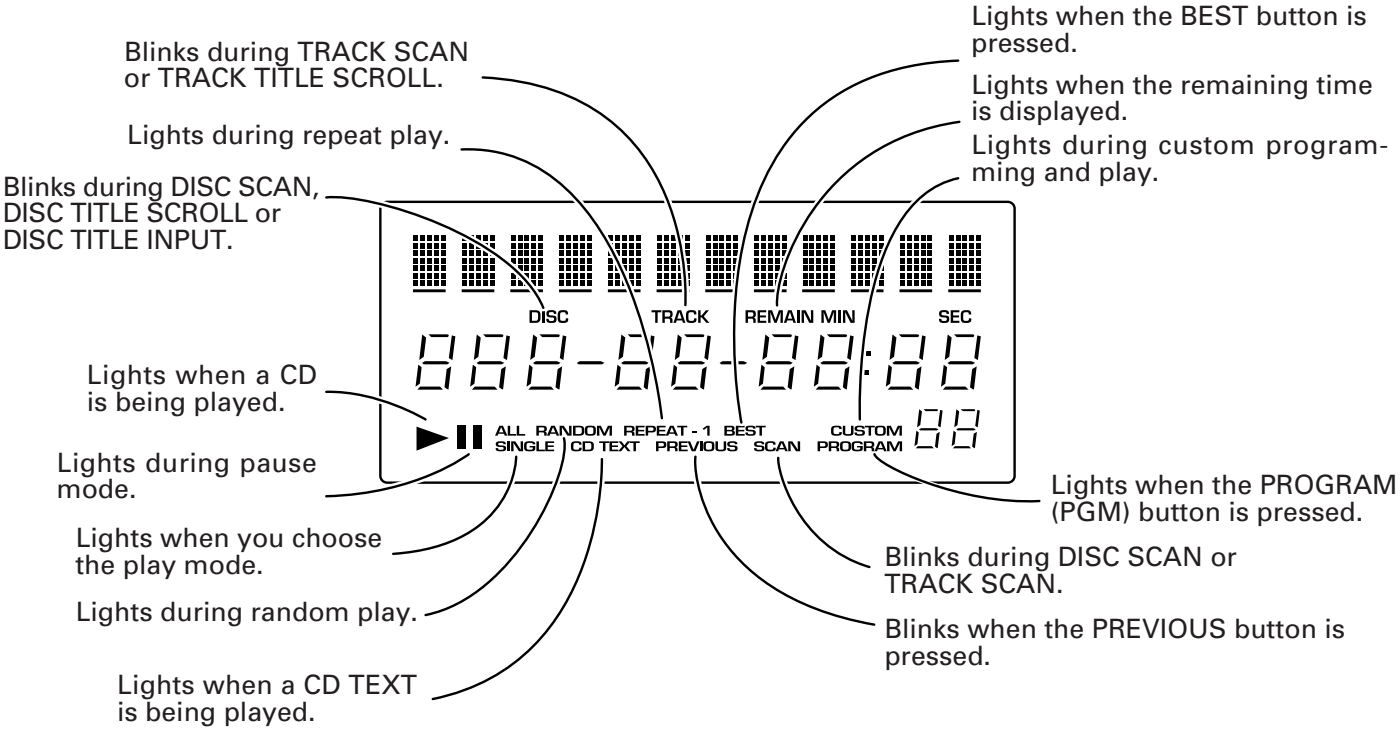

■ SPECIFICATIONS

1. General

Type ..... Compact disc digital audio system
Power requirements ..... AC 220V-230V, 50/60 Hz
Power consumption 16W
Power consumption in standby mode 2W
Operating temperature ..... +5°C - +35°C (+41°F - +95°F)
Weight (without package) ..... 8.0 kg (17 lb 6 oz.)
External dimensions ..... 420(W) X 433(D) X 193(H) mm 16-9/16(W) X 17-1/16(D) X 7-5/8(H) in.

2. Audio section

Frequency response ..... 2 Hz - 20 kHz
S/N ratio ..... 105 dB or more (EIAJ)
Dynamic range ..... 96 dB or more (EIAJ)
Harmonic distortion ..... 0.003 % or less (EIAJ)
Level difference between channels ..... 1.0 dB or less (EIAJ)
Output voltage ..... 2 ± 0.3 Vrms (EIAJ)
Wow and flutter ..... less than ±0.001 % (W.PEAK) (below measurable level) (EIAJ)
Channels ..... 2-channel (stereo)

3. INPUT Output terminal

Audio line output
CD • DECK SYNCHRO jack
Optical digital output jack
Headphone jack with volume control
MASTER/SLAVE Control input/output jack
SLAVE Audio input
PC keyboard input jack

4. Accessories

- Remote control unit 1
- Size AA/R6P dry cell batteries 2
- Audio cable 1
- Control cable 1
- Keyboad label 1
- Operating instructions 1

Note!!
Specifications and design subject to possible modification without notice, due to improvements.

Accessories

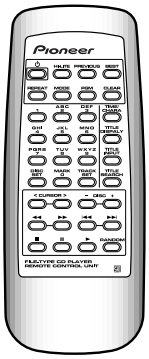

Remote control unit x 1
(CD-PD094)
(PWW1139)

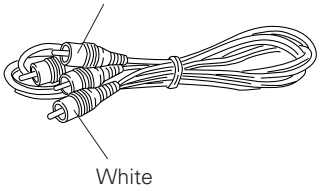

Audio cable x 1
(PDE1248) (L=1 m)

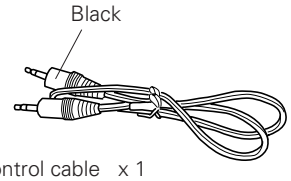

Control cable x 1
(PDE1247) (L=1 m)

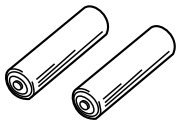

Size AA/R6P dry cell batteries x 2

Other included items
- Keyboad label
- Warranty card
- Operating Instructions