< R42-325-0 >

SERVICE MANUAL

STEREO AMPLIFIER
SA-8100
KUW, FVW

NOTE:

MODEL SA-8100 COMES IN TWO VERSIONS DISTINGUISHED AS FOLLOWS.

Round label on rear panel	Voltage	Type
KUW	120V only	UL approved (U.S.A.)
FVW	5-position selector	General export model

< 73A02Y31L >

PIONEER®

CONTENTS

1. AMPLIFIER CHARACTERISTICS

POWER BANDWIDTH

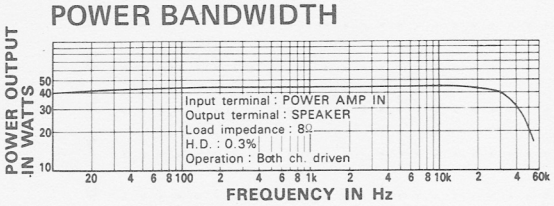

PHONO EQUALIZATION ACCURACY

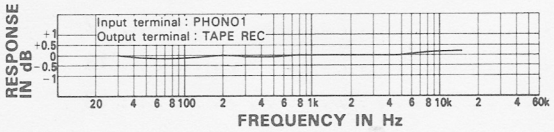

MAX. PHONO INPUT LEVEL

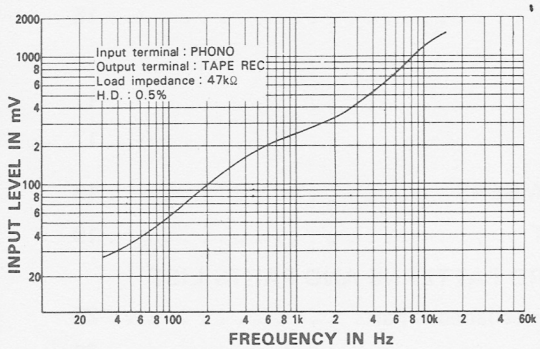

OUTPUT POWER vs. HARMONIC DISTORTION

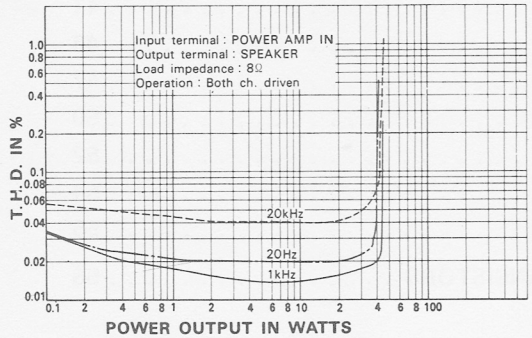

LOW, HIGH AND SUBSONIC FILTERS

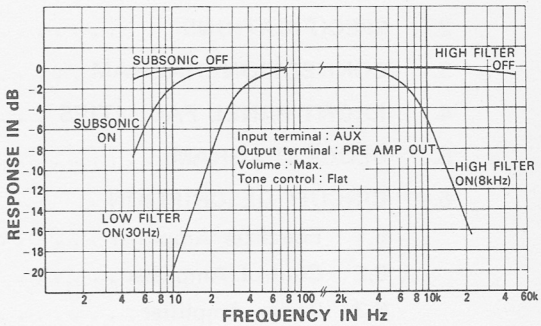

MAIN TONE CONTROLS

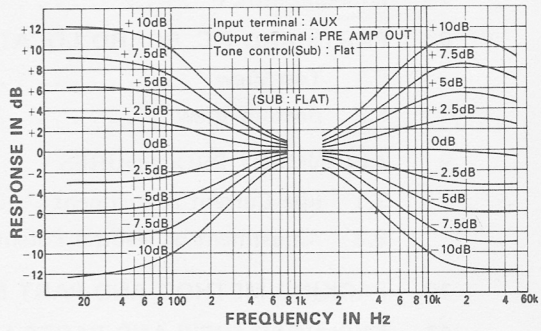

SUB TONE CONTROLS

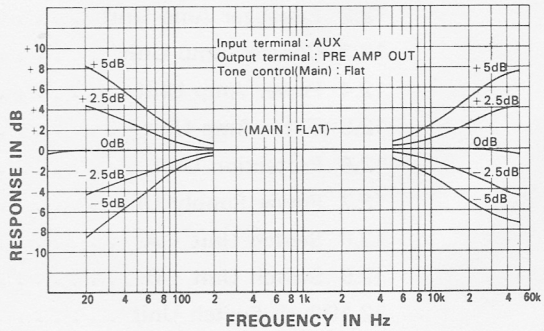

2. SPECIFICATIONS

SEMICONDUCTORS

Transistors 49
Diodes 31

POWER AMPLIFIER SECTION

Circuitry	1st Stage Differential Amplifier, Direct Coupled Pure Complementary OCL
Continuous Power Output	
20Hz~20kHz	
(Both channels driven)	40W+40W(8Ω), 45W+45W(4Ω)
1kHz	
(Both channels driven)	44W+44W(8Ω), 50W+50W(4Ω)
1kHz	
(Each channel driven)	50W/50W(8Ω), 60W/60W(4Ω)
Harmonic Distortion	
(Continuous Power Output)	Less than 0.3%
(1W+1W Power Output)	Less than 0.05%
Intermodulation Distortion	
(Continuous Power Output)	Less than 0.3%
(1W+1W Power Output)	Less than 0.05%
Power Bandwidth (IHF, Both channels driven)	5Hz~40kHz (H.D. 0.3%)
Frequency Response	7Hz~80kHz $^{+0}_{-1}$ dB
Input Sensitivity/Impedance	
POWER AMP IN	500mV/50kΩ
Output, Speaker	A, B, A+B (4~16Ω)
Headphone	4~16Ω
Damping Factor (1kHz, 8Ω)	More than 60
Hum & Noise (IHF, Short-circuited, A Network)	More than 95dB
Residual Hum & Noise (8Ω, Pre & Power-amplifier)	Less than 1mV (0.13μW)
Subsonic Filter	8Hz (12dB/oct)

PREAMPLIFIER SECTION

Circuitry	
Equalizer-amplifier	1st Stage Differential Amplifier, 3-stage Direct Coupled NFB type
Control-amplifier	1st Stage Differential Amplifier 3-stage Direct Coupled NFB type

Input Sensitivity/Impedance	
PHONO 1	2
PHONO 2	2
PHONO Overload Level (rms/p-p)	2
MIC	2
TUNER	1
AUX 1	1
AUX 2	1
TAPE MONITOR 1, 2	1
TAPE MONITOR 2 (DIN connector)	1
Output Level/Impedance	
TAPE REC 1, 2	1
TAPE REC 2 (DIN connector)	3
PRE AMP OUT	2
Harmonic Distortion (20Hz~20kHz)	L
Frequency Response	
PHONO (RIAA equalization)	3
MIC	1
TUNER, AUX, TAPE MON	1
Tone Control	
BASS Main Control	±
Sub Control	±
TREBLE Main Control	±
Sub Control	±
Filter	
SUBSONIC	8
LOW	3
HIGH	8
Loudness Contour (Volume −40dB position)	+
Hum & Noise (IHF, Short-ci	
PHONO	M
MIC	M
TUNER, AUX, TAPE MON	M
Muting	—
Level Set	0

:e
2.5mV/50kΩ
2.5mV~5mV/50kΩ
l
250mV/700mV
2.0mV/50kΩ
150mV/100kΩ
150mV/100kΩ
150mV~1.5V/50kΩ~100kΩ
150mV/100kΩ

150mV/100kΩ

150mV

30mV/80kΩ
2V/5Ω

Less than 0.05%

30Hz~15kHz ±0.2dB
10Hz~10kHz $^{+0}_{-1}$ dB

10Hz~70kHz $^{+0}_{-1}$ dB

±10dB (100Hz)
±5dB (50Hz)
±10dB (10kHz)
±5dB (20kHz)

8Hz (12dB/oct)
30Hz (12dB/oct)
8kHz (12dB/oct)
e control set at
+10dB (100Hz)
circuited A Network)
More than 80dB
More than 70dB

More than 90dB
−20dB
0dB, −15dB, −30dB

MISCELLANEOUS

Power Requirements	AC 120V 60Hz or AC 110V, 120V, 130V, 220V and 240V 50/60Hz. (Switchable)
Power Consumption(Max.)	270W
AC Outlets	Switched 1, Unswitched 2
Dimensions (overall)	430(W) x 138(H) x 341(D)mm 16-15/16(W) x 5-7/16(H) x 13-7/16(D)in.
Weight Without Package	12.1kg(26lb10oz)
With Package	14.1kg(31lb1oz)

Furnished Parts

Connection Cord	1
Polishing Cloth	1
Hex. Wrench	1
Factory-tested Data	1
Operating Instructions	1
5-voltage Model; Fuse 1.5A	1
Fuses 3A	2

NOTE:
Specifications and the design subject to possible modification without notice due to improvements.

3. CONNECTION DIAGRAM

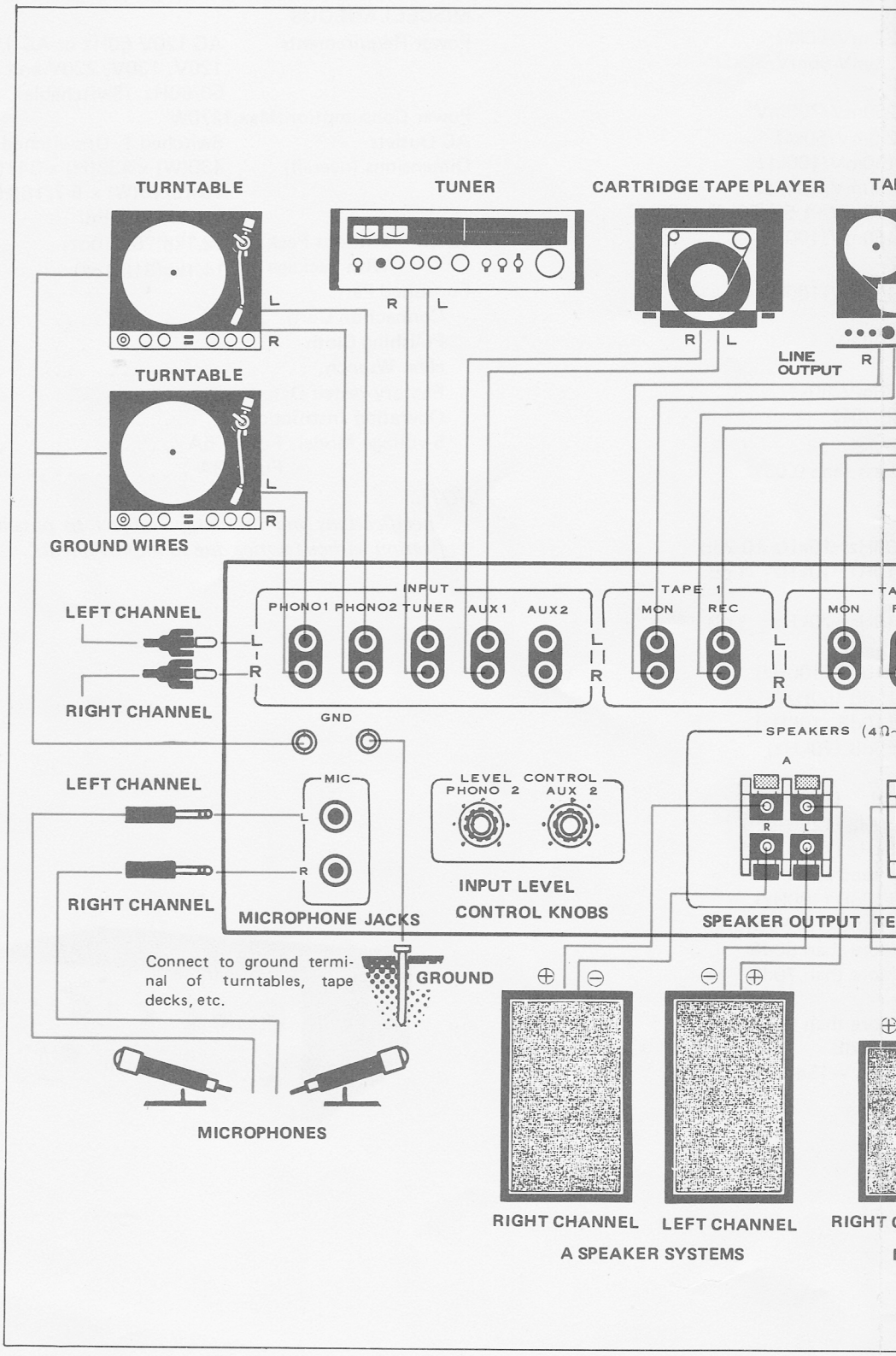

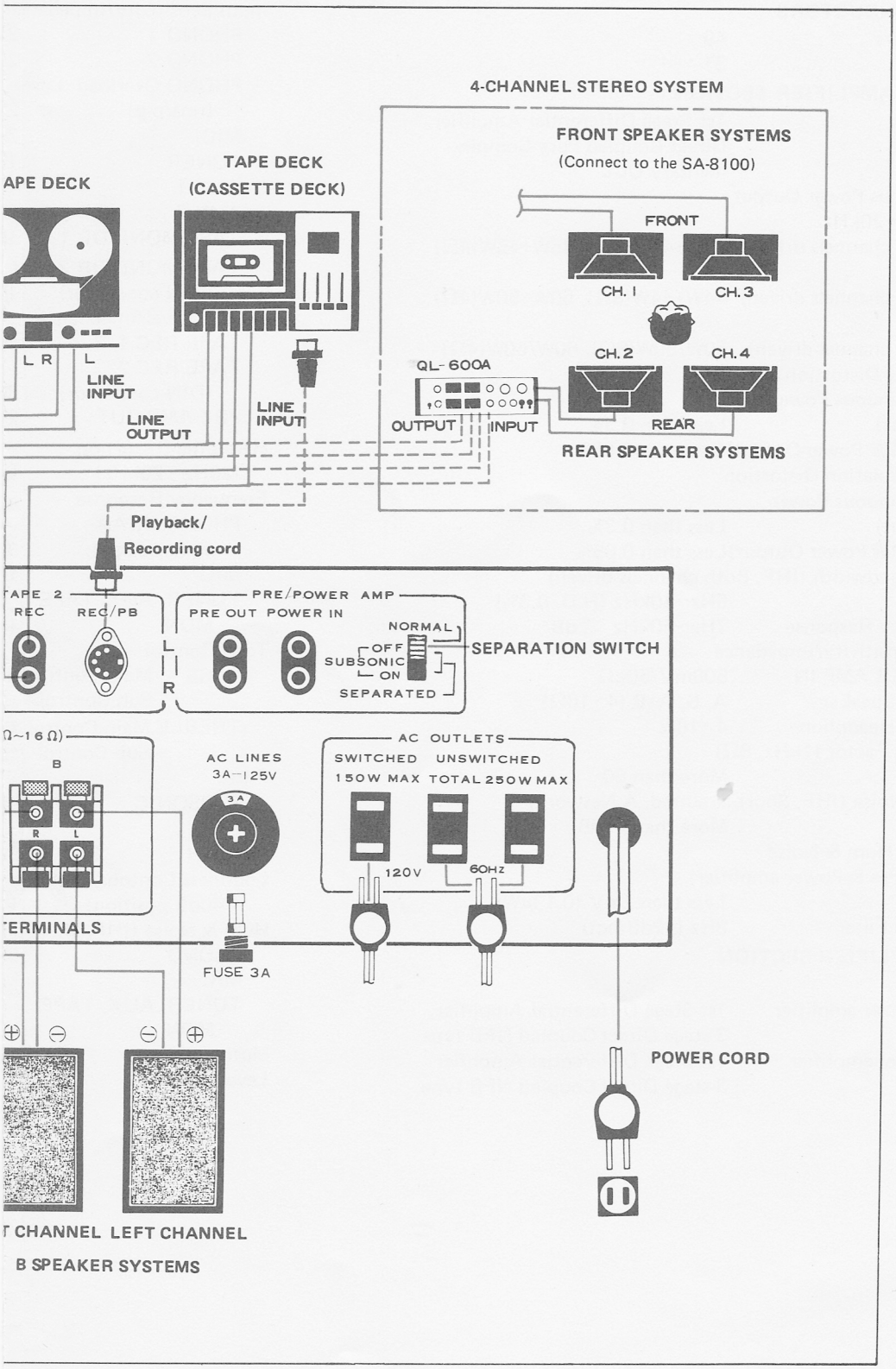
4-CHANNEL STEREO SYSTEM
FRONT SPEAKER SYSTEMS
(Connect to the SA-8100)
FRONT
CH. 1
CH. 3
CH. 2
CH. 4
REAR
REAR SPEAKER SYSTEMS
QL-600A
OUTPUT
INPUT
TAPE DECK
(CASSETTE DECK)
APE DECK
L R
L
LINE INPUT
LINE OUTPUT
LINE INPUT
Playback/
Recording cord
TAPE 2
REC
REC/PB
PRE/POWER AMP
PRE OUT
POWER IN
L
R
NORMAL
OFF
SUBSONIC
ON
SEPARATED
SEPARATION SWITCH
Ω~16Ω)
B
R
L
TERMINALS
AC LINES
3A—125V
3A
FUSE 3A
AC OUTLETS
SWITCHED
UNSWITCHED
150W MAX
TOTAL 250W MAX
120V
60Hz
POWER CORD
T CHANNEL
LEFT CHANNEL
B SPEAKER SYSTEMS

4. FRONT PANEL FACILITIES

BASS CONTROL

This pair of twin controls are for tone adjustments in the bass range.

100Hz knob .... Controls bass frequencies at and below 400Hz and also at 100Hz by up to ±10dB, in click-stops of 2.5dB.

50Hz knob ... Re-controls frequency range below 80 Hz of tone quality being controlled by the 100Hz knob and also by up to ±5dB, in click-stops of 2.5dB.

POWER SWITCH, PILOT LAMP

Turns the power to the unit ON and OFF. Also controls the AC outlet marked SWITCHED on the rear panel. The pilot lamp lights when the power is on.

SPEAKERS SWITCH

Selects the speaker system(s) to be driven.

A ..... Speaker systems connected to speaker outputs A operate.

B ..... Speaker systems connected to speaker outputs B operate.

A+B ... Both speaker systems A and B operate.

OFF ... All speakers off. Use this position when listening through headphones.

PROTECTION PILOT LAMP

When the built-in protector circuit operates to shut off the power to the speakers, this lamp will light. This happens when there's a short-circuit in the speaker leads, or when combined speaker impedance is below 2-ohm, causing overload.

NOTE:
The lamp will also light for 3 to 6 seconds after you turn on the power, and the speakers will remain silent. This is no indication of trouble. The protector circuit is so designed that it will keep the speakers muted for the first few seconds, because they might produce unpleasant noise while the amplifier is still warming up.

HEADPHONE JACK

Stereo headphones can be plugged into this jack. A wide variety of quality headphones is available from Pioneer.

LOW FILTER SWITCH

The low filter is used to eliminate low-frequency noise such as turntable rumble, etc.

SUBSONIC ... Frequencies below 8Hz are attenuated by 12dB/octave. Although such subsonic frequencies are inaudible to the human ear, they can cause intermodulation distortions and even damage to the loudspeakers. It is advisable to leave the switch in this position at all times, even if no record rumble etc. is heard.

30Hz ..... Frequencies below 30Hz are attenuated by 12dB/octave. Use this position to eliminate record rumble and other low-frequency noise.

OFF ..... No attenuation of low and subsonic frequencies. Use this position for measurements, when the widest possible bass response is required.

TREBLE CONTROL

These twin controls are for tone adjustments in the high sound range.

10kHz knob ... Controls high-frequencies at and above 2.5kHz and also at 10kHz by up to ±10dB in click-stops of 2.5dB.

20kHz knob ... Re-controls frequency range above 12 kHz of tone quality being controlled by the 10kHz knob and also by up to ±5dB in click-stops of 2.5dB.

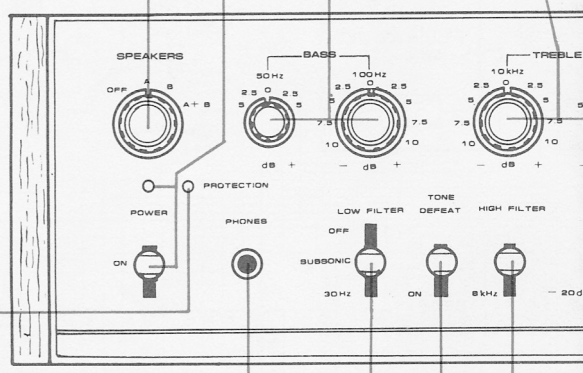

TONE DEFEAT SWITCH

In position ON, the four bass and treble controls do not function – the amplifier produces flat frequency response. This is useful for frequency response measurements of phono cartridges, loudspeakers and the acoustic characteristics of the room.

HIGH FILTER SWITCH

In position 8kHz frequencies above 8kHz are attenuated by 12dB/oct. This helps eliminate noise from scratchy records, tape and FM hiss, etc.

VOLUME CONTROL

Controls the listening volume. Clockwise rotation increases the volume.

LEVEL SET CONTROL

The outer ring of the volume control serves to limit the output level of the SA-8100. This helps to protect speakers of small power handling ability, but also permits finer volume adjustments at low-to-medium listening levels.

-30dB . . . Output level reduced by 30dB.
-15dB . . . Output level reduced by 15dB.
0 . . . . . No reduction. Full output level available.

LOUDNESS SWITCH

Push this switch to obtain a more natural frequency contour at quiet listening levels. The human ear has different frequency response characteristics at high and low volume levels, and the loudness circuit automatically compensates for this deficiency by boosting the bass range when the volume is low.

The loudness circuit operates when the switch is pushed in. Function of the loudness circuit is linked to the VOLUME and LEVEL SET controls.

LEVEL SET at 0 . . . . . Loudness circuit functions at volume settings from MIN to about "11 o'clock."
LEVEL SET at -15dB . . . Loudness circuit functions at volume settings from MIN to about "1 o'clock."
LEVEL SET at -30dB . . . Loudness circuit functions at any position of the volume control.

FUNCTION SELECTOR

Selects the program source to be played.

PHONO 1 . . . Turntable connected to PHONO 1 inputs.
PHONO 2 . . . Turntable connected to PHONO 2 inputs.
TUNER . . . . Radio reception with tuner connected to TUNER inputs.
AUX 1 . . . . . Program source (cartridge tape player etc.) connected to AUX 1 inputs.
AUX 2 . . . . . Program source (TV sound, second tuner, etc.) connected to AUX 2 inputs.
MIC . . . . . Microphones connected to MIC inputs on rear panel.

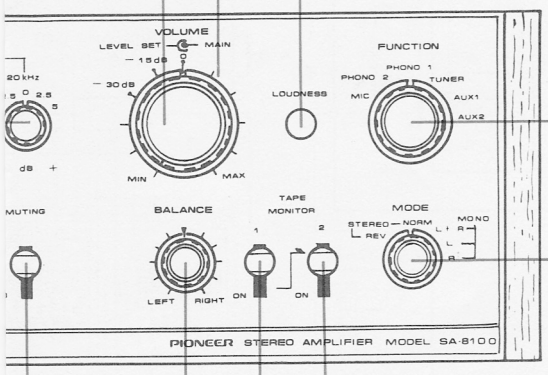

MODE SWITCH

Selects stereophonic and monophonic listening modes.

STEREO NORM . . . Normal stereophonic reproduction.
STEREO REV . . . . Stereophonic reproduction with reversed channels: left input signal to right speaker, right input signal to left speaker.
MONO L+R . . . . . Monophonic reproduction. Mixed left-plus-right signal to both speakers.
MONO L . . . . . Left input signal to both speakers.
MONO R . . . . . Right input signal to both speakers.

TAPE MONITOR SWITCHES 1, 2

Position ON of these switches is used only for tape playback and tape monitoring of a recording in progress. For all other listening modes (records, radio, etc.) these switches must remain OFF.

TAPE MONITOR 1 . . . Playback and monitoring with tape deck connected to TAPE 1 REC and TAPE 1 MON jacks.
TAPE MONITOR 2 . . . Playback and monitoring with tape deck connected to TAPE 2 REC and TAPE 2 MON jacks, or to the DIN-type REC/PB connector.

MUTING SWITCH

In position -20dB, the listening volume is instantly reduced by 20dB. Without having to turn the volume control, you can reduce the sound level.

BALANCE CONTROL

For balancing the relative sound volume of the left and right channel speakers. Clockwise rotation reduces the volume from the left speaker, counterclockwise rotation decreases the volume from the right speaker.

5. BLOCK DIAGRAM

SA - 8100

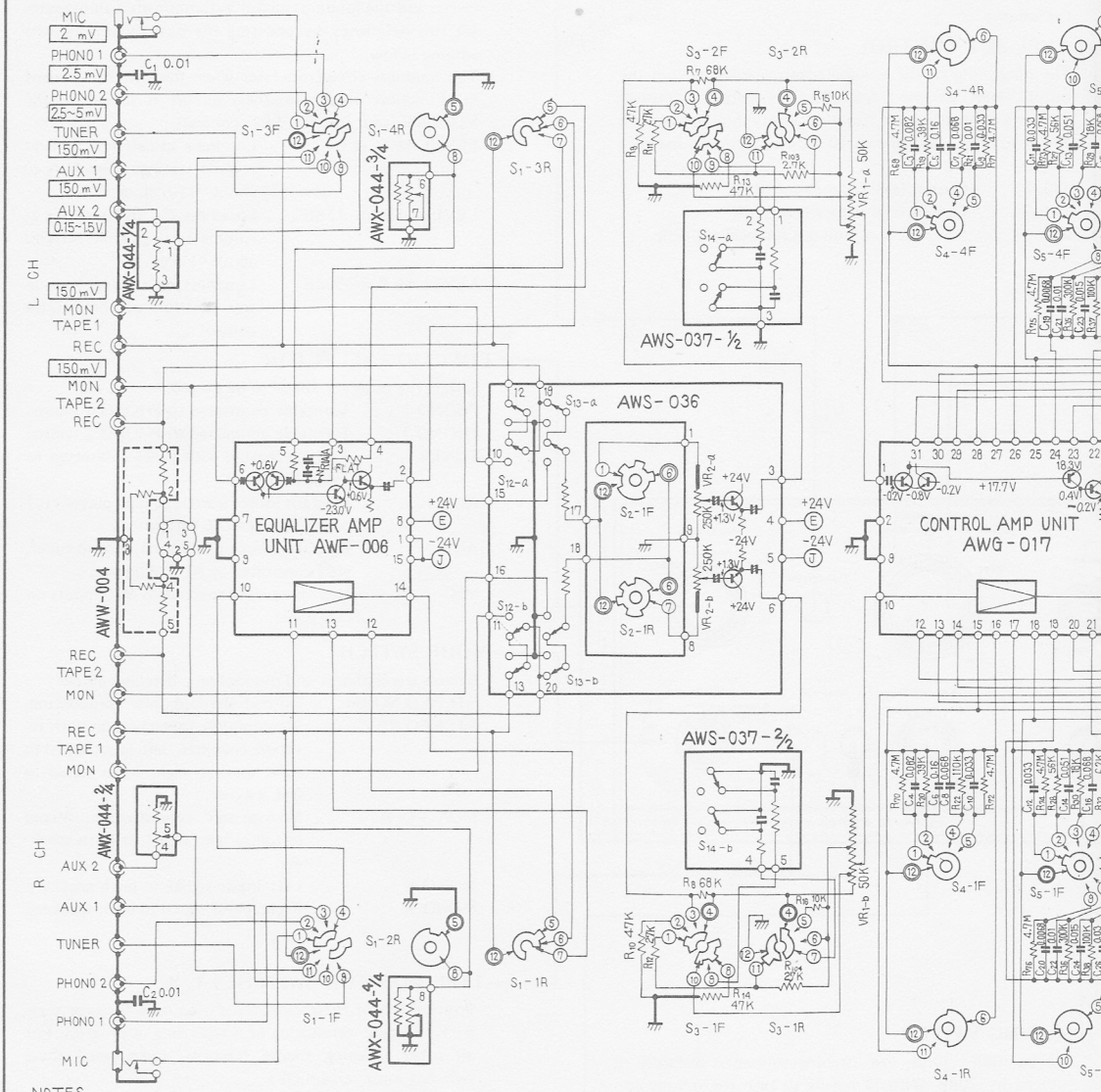

NOTES

SWITCHES

S_1 : FUNCTION SELECTOR
(1) MIC (2) PHONO 2 (3) PHONO 1 (4) TUNER (5) AUX 1 (6) AUX 2

S_2 : MODE SELECTOR
(1) REV (2) NORM (3) L+R (4) L (5) R

S_3 : LEVEL SET (1) -30dB (2) -15dB (3) 0

S_4 : BASS CONTROL (50Hz) -5dB ~ +5dB

S_5 : d: tto (100Hz) -10dB ~ +10dB

S_6 : TREBLE CONTROL (10KHz) -10dB ~ +10dB

S_7 : d: tto (20KHz) -5dB ~ +5dB

S_8 : PRE & POWER SW (1) NORMAL (2) SUBSONIC OFF (3) SUBSONIC ON / SEPARATED

S_9 : RELAY

S_{10} : SPEAKERS SELECTOR (1) OFF (2) A (3) B (4) A+B

S_{11} : POWER

S_{12} : TAPE 1 MON S_{13} : TAPE 2 MON S_{14} : LOUDNESS

S_{15} : LOW FIL (OFF - SUBSONIC - 30Hz) S_{16} : TONE DEFEAT

S_{17} : HIGH FIL (OFF - 6KHz) S_{18} : MUTING (0~-20dB)

POTENTIOMETERS

VR_1 : VOLUME CONTROL

VR_2 : BALANCE CONTROL

RESISTORS

IN OHM, 1/4W, ±5% TOLERANCE UNLESS OTHERWISE NOTED. K=KΩ, M=MΩ.

CAPACITORS

IN μF UNLESS OTHERWISE NOTED. P=PF.

[V] : SIGNAL VOLTAGE NECESSARY FOR OBTAINING 45W/8Ω OUTPUT POWER (1KHz).

V : DC VOLTAGE AT NO INPUT SIGNAL

⟹A : DC CURRENT AT NO INPUT SIGNAL

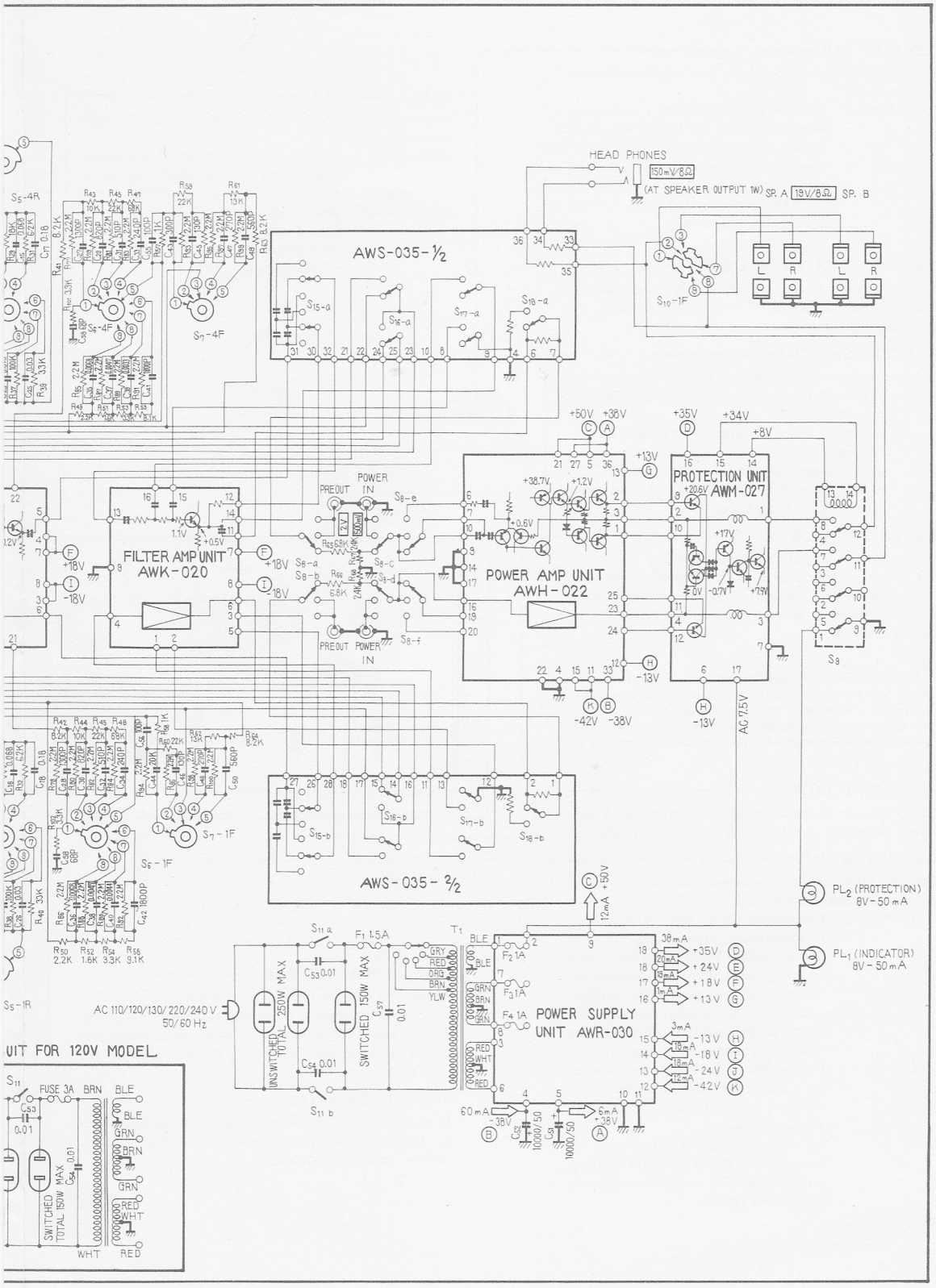
HEAD PHONES
150mV/8Ω
(AT SPEAKER OUTPUT 1W)
SP. A 18V/8Ω SP. B
AWS-035-1/2
AWS-035-2/2
FILTER AMP UNIT AWK-020
POWER AMP UNIT AWH-022
PROTECTION UNIT AWM-027
POWER SUPPLY UNIT AWR-030
PREOUT
POWER IN
+50V +38V
+35V
+34V
+8V
+13V
-13V
-42V -38V
AC 7.5V
+18V
-18V
PL2 (PROTECTION) 8V-50mA
PL1 (INDICATOR) 8V-50mA
AC 110/120/130/220/240 V 50/60 Hz
UNSWITCHED TOTAL 250W MAX
SWITCHED 150W MAX
F1 1.5A
F2 1A
F3 1A
F4 1A
+35V
+24V
+18V
+13V
-13V
-18V
-24V
-42V
60mA -38V
6mA +38V
UIT FOR 120V MODEL
FUSE 3A
SWITCHED TOTAL 150W MAX

6. CIRCUIT DESCRIPTION

6.1 EQUALIZER AMPLIFIER

In the equalizer amplifier, adoption of a differential amplifier design stabilizes DC potential, while a balanced positive and negative power supply keeps the potential at the input and output sides at approximately 0V. These measures minimize the generation of switching noises.
The relatively high supply voltage of ±24V results in a higher than usual output voltage and in a considerable improvement of maximum input handling ability.
To assure strict adherence to RIAA equalization and thereby prevent sound colorations, specially selected components of high reliability and minimum deviation are used in the NFB circuits. The resistors are nichrome vapor coated metallized film types with a tolerance of ±1%, the capacitors are styrol types of ±2% tolerance, resulting in an equalization curve within ±0.2dB of RIAA specification.
First-stage transistors are can-sealed to prevent changes in noise characteristics due to continuous use.
The signal from the PHONO 1, PHONO 2 or MIC input, selected with the FUNCTION switch, enters Q1 of the equalizer amplifier unit. Q1 and Q3 form a differential amplifier whose output is taken from the collector of Q1.

EQUALIZER AMP

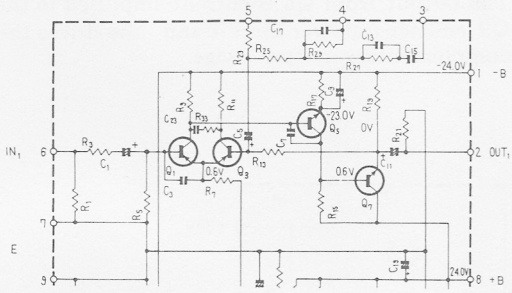

Fig. 1

DC and AC negative feedback is applied to the base of Q3 to obtain flat response (for MIC) and RIAA response (for PHONO). Output from Q1 is further amplified in Q5, then taken out from the emitter-follower of Q7.
When the FUNCTION switch is in position PHONO 2, the level control potentiometer is switched in series with the resistor that changes the amount of NFB. Thereby, overall gain can be controlled in order to accommodate phono cartridges of relatively high output voltage without causing overload or lack of dynamic input safety margin. This gain control does not affect frequency response in any way.
From the equalizer amplifier, the signal passes through FUNCTION switch, TAPE MONITOR switches, MODE switch, BALANCE control, then through the emitter-follower circuit in the switch unit, and from there through the LEVEL SET switch and VOLUME control to the control amp unit.

6.2 CONTROL AMPLIFIER

The control amplifier comprises 4 transistors per channel. Its first stage, with low-noises can-sealed silicon transistors, constitutes a differential amplifier. Here again, a balanced positive and negative power supply keeps the input and output DC potential at approximately 0V, minimizing switching noises. The circuit is a 3-stage direct coupled amplifier; from the emitter of Q7 (the last stage), 100% DC negative feedback is applied to the base of Q3 which assures highly stable DC potential at junctions. The signal applied to the base of Q1 is taken out from the collector, then signal is amplified by Q5 and taken out from the emitter-follower of Q7. The tone controls operate by switching of the CR elements in the NFB circuit between Q7 emitter and Q3 base.

CONTROL AMP

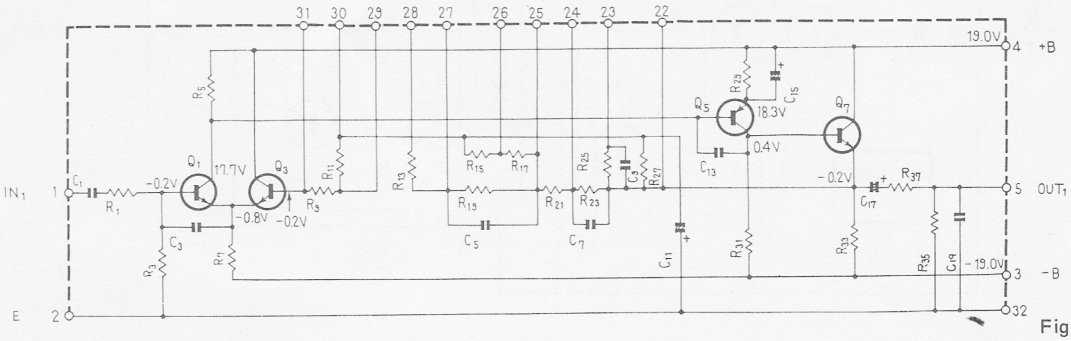

Fig. 2

The tone controls are designed as so-called "twin tone controls," with a pair of controls of different turnover frequencies in the bass and another pair in the treble range. These controls can be used individually or together, their impedances are somewhat different so that they will not affect each other's functions. The CR elements acting as tone controls are arranged between the emitter of Q7 and the base of Q3, but not on the P.C. board unit. They are selectively connected into the circuit by switches.
With all tone controls in position FLAT, the NFB elements changes to resistances so that a completely flat response curve is obtained.
The TONE DEFEAT switch makes it easy for the user to determine the action of the tone controls. It switches the tone control elements to resistor.
From the control amplifier unit, the signal passes through the LOW and HIGH filters of 12dB/oct steepness, through the MUTING switch to the power amplifier unit. With the PRE & MAIN switch in position SEPARATED, the signal can be taken out from the PRE OUT jacks.

6.3 POWER AMPLIFIER

The power amplifier unit uses a differential amplifier design in its first stage, has all stages coupled directly in a pure complementary configuration, and consists of 9 transistors per channel.
Power supply for the first and driver stages is obtained from a rectifier circuit separate from that of the output stage—this results in a reduction of transient crossover distortions and better operating stability.

The combination of differential amplifier with bias compensation circuit helps to obtain DC stability so that fluctuations in the room temperature can hardly cause DC potential to appear at the output points.
Reduction of predriver load (Q5) permits high overall gain, wherefore a generous amount of NFB can be applied, paying off in low distortion, low noise and superior operating stability.
The input signal is first amplified in the differential amplifier formed by Q1 and Q3. The input signal is applied to the base of Q1. To the base of Q3, negative feedback—DC from the output junction, as well as AC—is applied, of which the DC portion is 100% of the potential, coming through R19; the amount of AC NFB is determined by R19 and R17.
To prevent DC potential being generated at the output junction the bias to the base of Q1 is given from a voltage stabilizer and as offset voltage from the temperature compensation circuit.
The output signal of the differential amplifier is taken from the collector of Q1 and enters the base of Q5. Q7, operating as a constant current circuit, constitutes the load of Q5. There are two reasons for using Q7 as a stable high impedance load for Q5: first, this permits Q5 to operate in a range of high current amplification with minimum noise; second, by raising the load impedance against the signal without degrading the utilization rate of the power supply voltage, sufficient gain in Q5 can be obtained.
The output from Q5 is current-amplified in the Q9 emitter-follower circuit and the drives the complementary output stage.

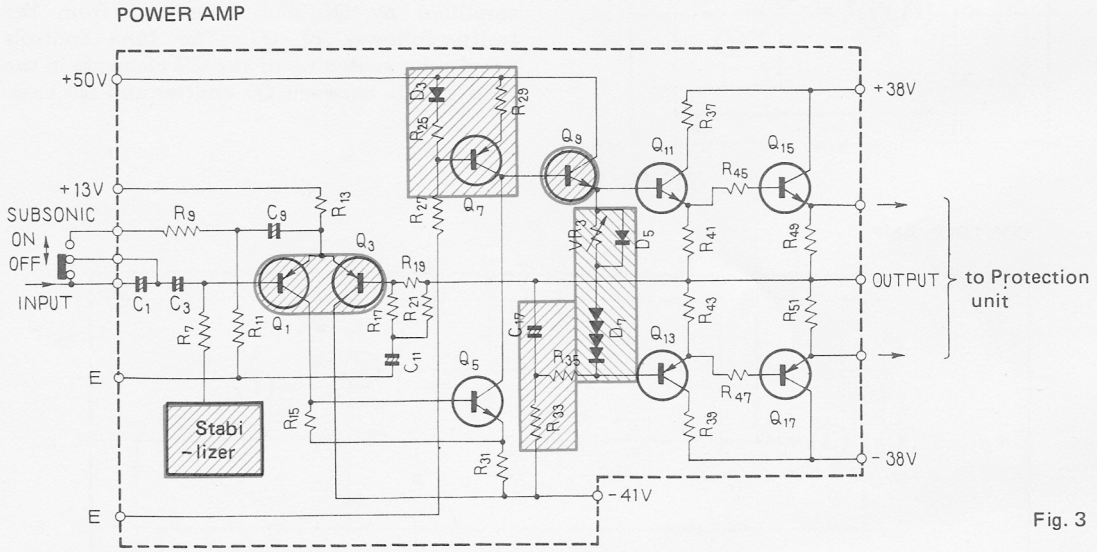

Fig. 3

The load on Q9 consists of the bootstrapped R33 and C17, whereby actual impedance of R35 is raised to assure easier driving.
The output stage is a pure complementary circuit. Transistors used are high-strength types, and resistors R37, R45, R47 and R39 are provided as over current limiters to assure exceptionally safe operation. Another safety precaution is the protector circuit which consists of electronic circuits and electro-magnetic relay.
As becomes evident from the circuit diagram on page 36, phase compensation is carried out at each stage and steps have been taken to prevent NFB instabilities in the high frequency range. Output from the power amplifier unit passes through the parallel resistance-coil circuit in the protection circuit unit, then through the relay contacts and the SPEAKER switch to the speaker output terminals.

6.4 PROTECTION CIRCUIT

The protection circuit has two functions: to protect amplifier and speakers from damage caused by amplifier malfunction or short-circuiting of the speaker load, etc.; and to mute the signal output for a short period after switch-on to prevent initial noises from reaching the speakers.
The protection unit comprises a detector that detects excess current in the power transistors, a DC potential detector, and a relay. The excess current detector, with one transistor in each channel, detects the voltage across the emitter resistor of the power transistors. The DC potential detector operates on both channels. Consisting of a pair of differential amplifiers, it is connected directly to the base of one side and through a capacitor to the base of the other side, in other words, to the center of the output. Presence of DC potential will cause an unbalanced potential between the two bases.
The output from the two detector circuits enters the relay drive circuit which consists of three transistors, and will automatically open the relay.
When the malfunction has been repaired, the relay will automatically reset. Its reset time is determined by the time constant circuit at the base of the third stage of the relay drive circuit. This time constant circuit also serves for muting the output immediately after switch-on.

6.5 POWER SUPPLY UNIT

As the SA-8100 requires a balanced positive and negative power supply in all its stages, two voltage stabilizers had to be incorporated.
All stages except those after the power amplifier's predriver are supplied with stabilized voltage which not only improves their operating stability considerably, but also reduces residual noise. Positive and negative DC voltage is supplied to all parts from two bridged rectifier circuits.
One of these supplies its output through a 10,000 μF capacitor to the power and driver transistors of the power amplifier unit. The other rectifier supplies its output to all other circuits except the just described, through a voltage stabilizer consisting of 2 transistors and a zener diode. This DC supply is very stable and almost free from ripples.

7. DISASSEMBLY

1. To remove the wooden case, remove the two screws in either side and lift the back end of the case up.
2. Pull off all knobs except the LOUDNESS switch. The LEVEL SET knob must be removed with a hex wrench.
3. To remove the front panel, remove the six screws in the top and bottom edge of the panel, then carefully pull the panel forward.
4. To remove the bottom panel, remove the 9 screws holding it in place.

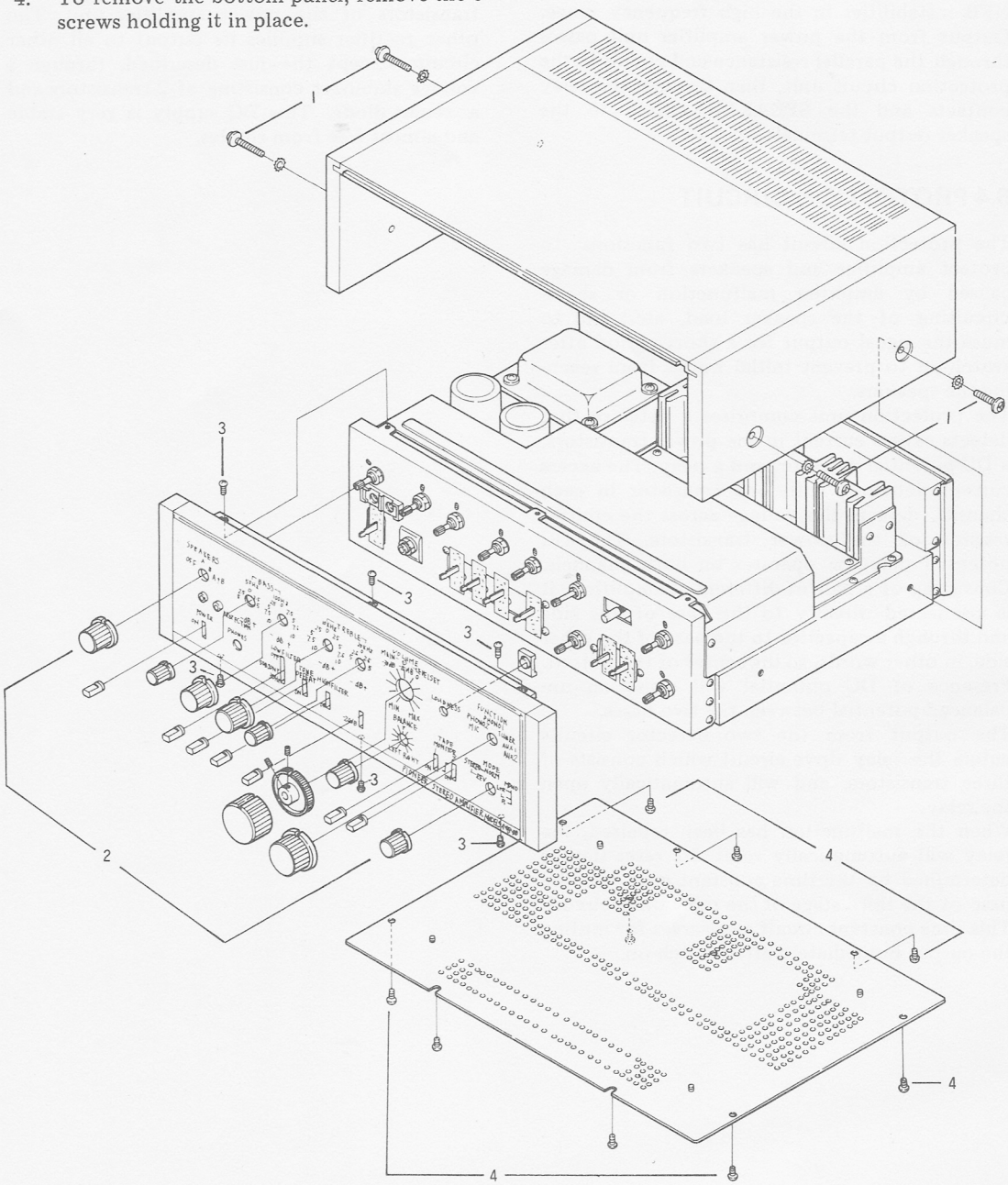

8. PARTS AND P. C. BOARD LOCATION

8.1 TOP VIEW

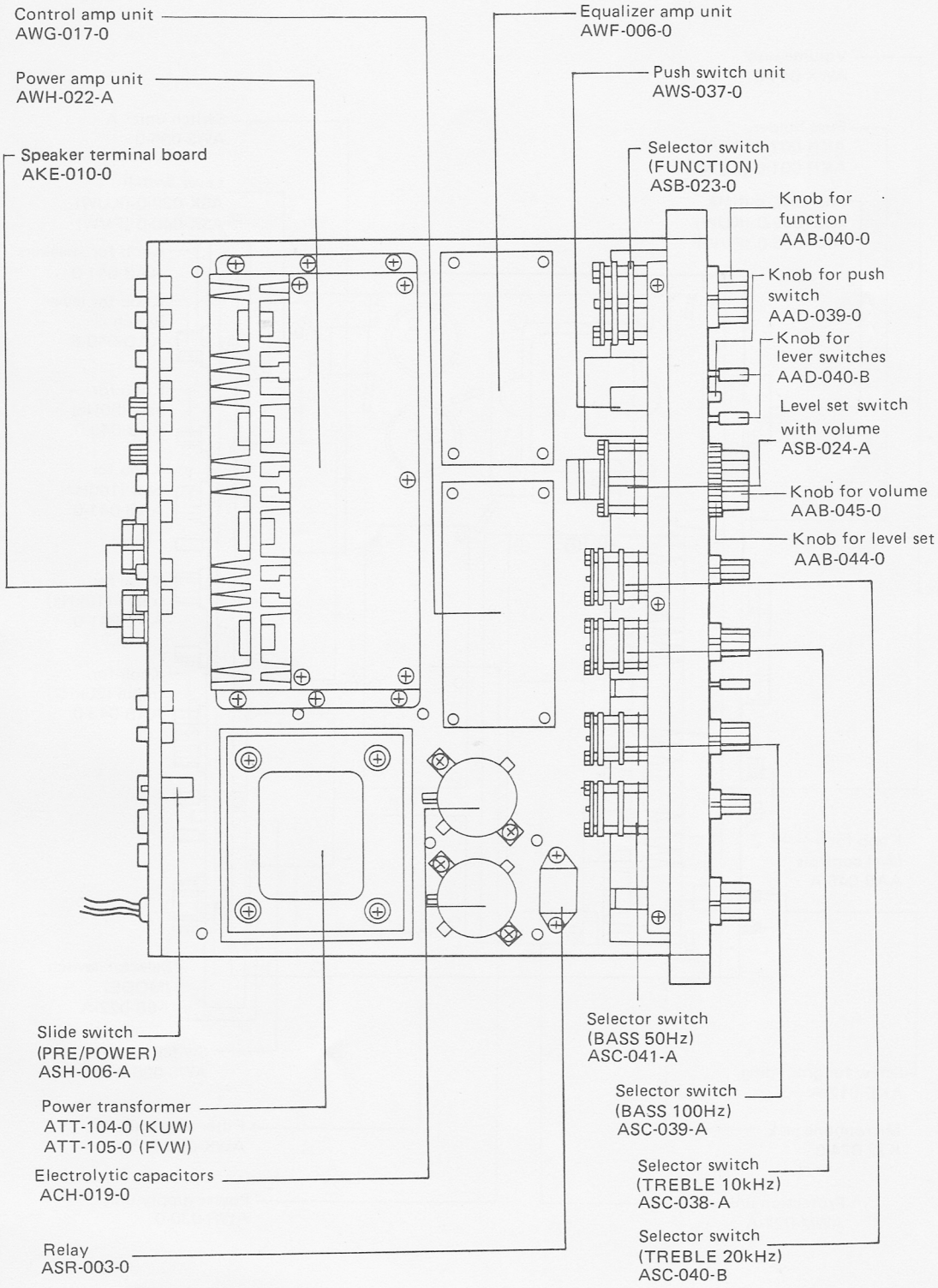

8.2 BOTTOM VIEW

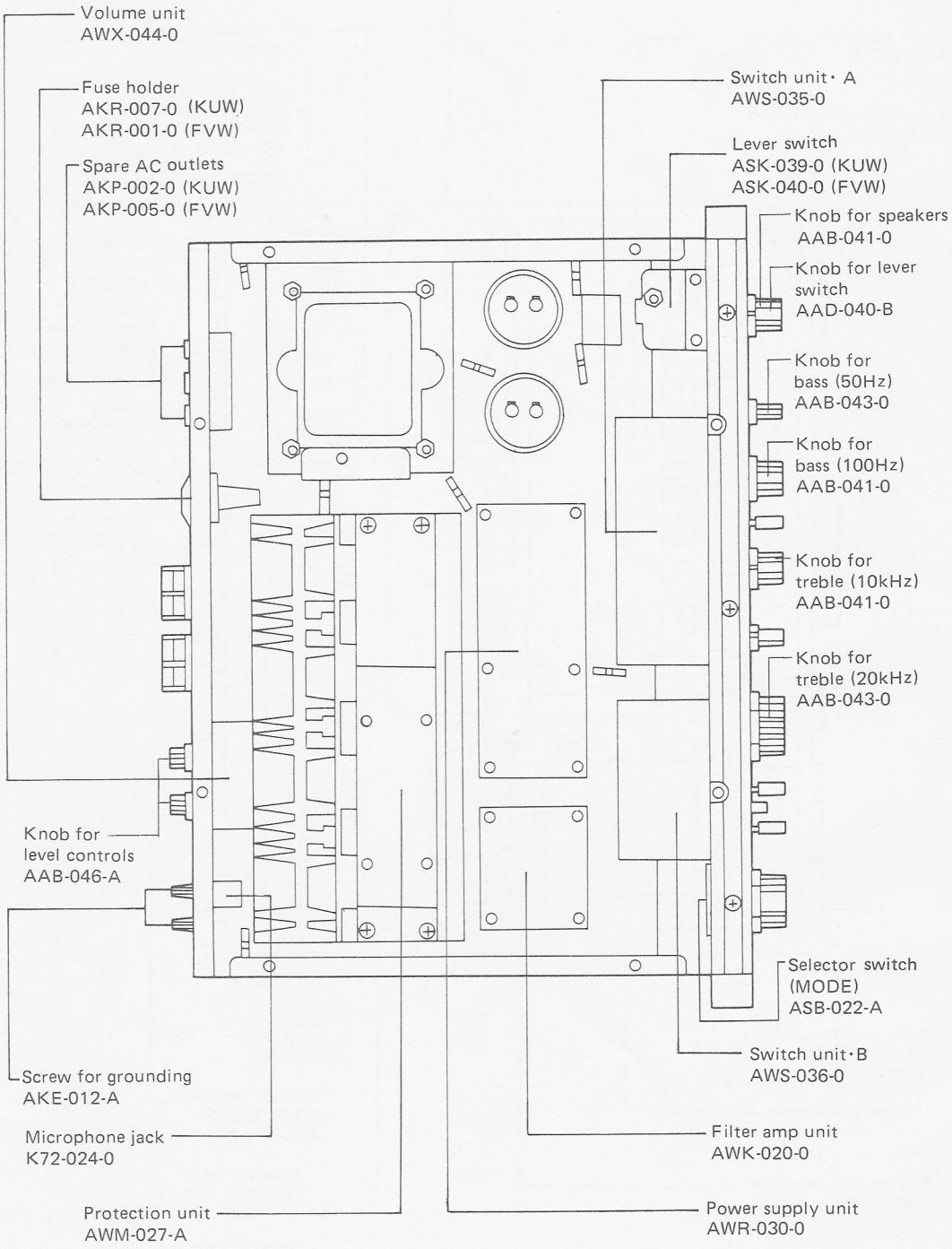

9. ALIGNMENT PROCEDURES

9.1 IDLE CURRENT ADJUSTMENT

1. Remove output load. Terminate input terminals of power amplifier unit with 4.7kΩ resistance.
2. Turn VR1 and VR2 on the power amp unit to approximately center position. Turn VR3 and VR4 completely anti-clockwise. Then turn on power.
3. Allow approximately 10-minute warm-up time. Then adjust VR3 so that voltage between terminals 1 and 2 of unit becomes 20mV.
4. Adjust VR4 so that voltage between terminals 24 and 25 becomes 20mV.

9.2 ADJUSTMENT OF NEUTRAL POTENTIAL

1. Remove output load. Terminate input terminals of power amplifier unit with 4.7 kΩ resistance. Then turn on power.
2. Allow approximately 10-minute warm-up time. Then adjust VR1 so that voltage between terminal 3 and ground becomes 0V ±20mV.
3. Adjust VR2 so that voltage between terminal 23 and ground becomes 0V ±20mV.

After these adjustments, remove 4.7kΩ resistance, re-connect output load.

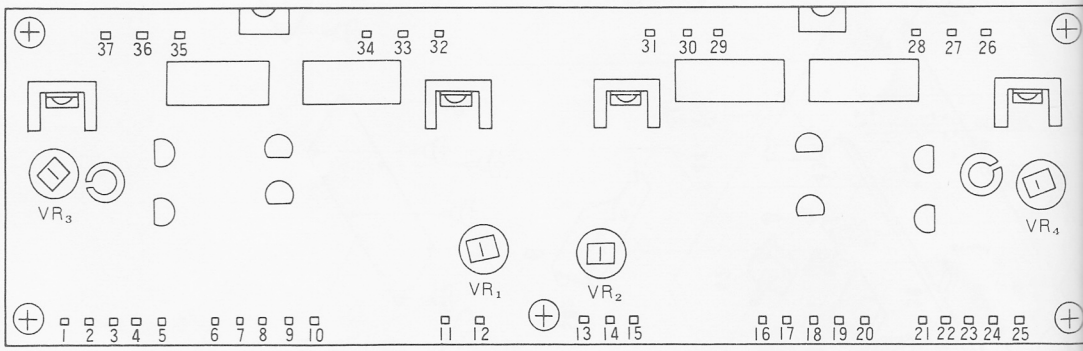

10. PACKING METHOD AND PART NUMBERS

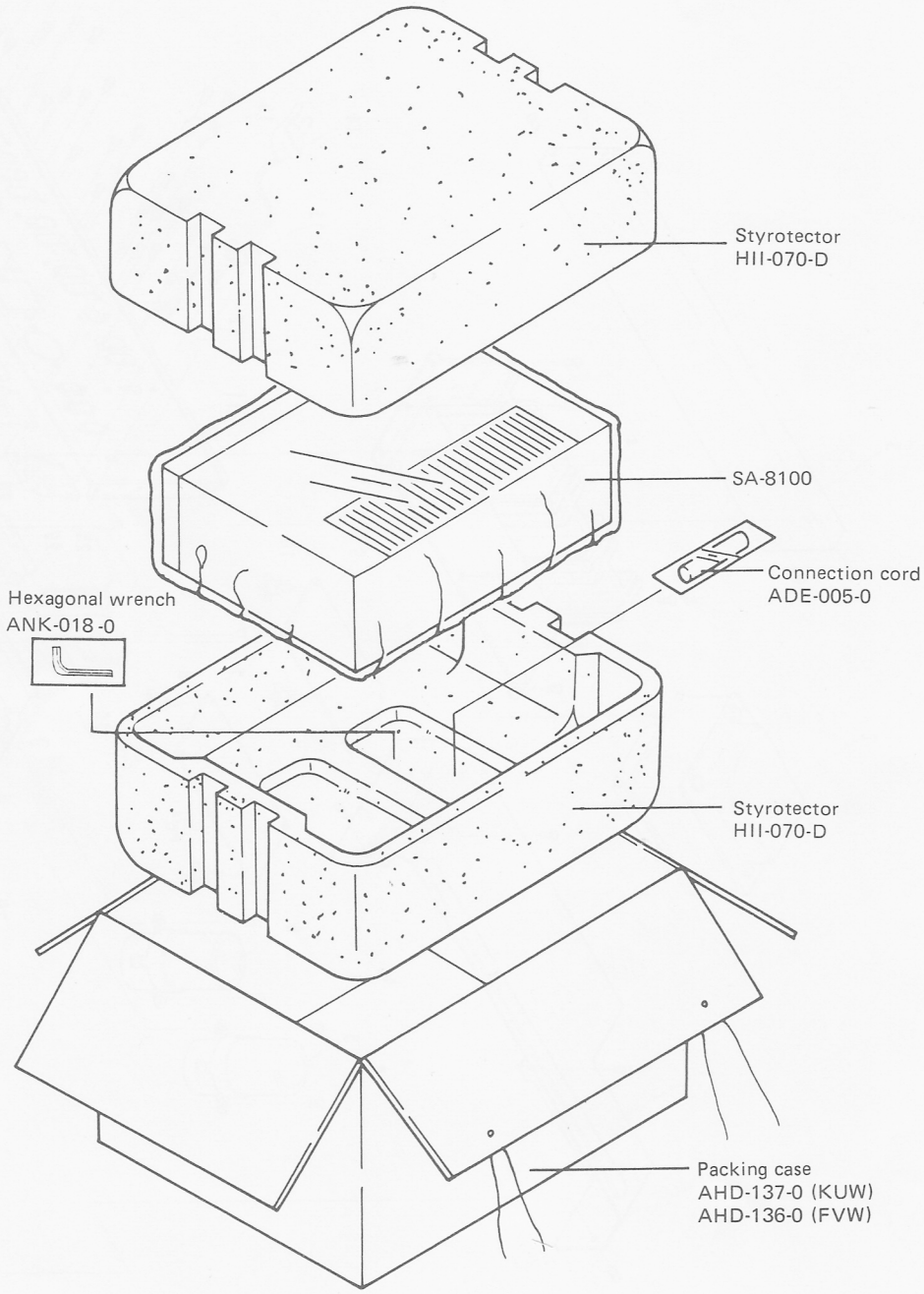

11. EXPLODED VIEW AND PARTS LIST

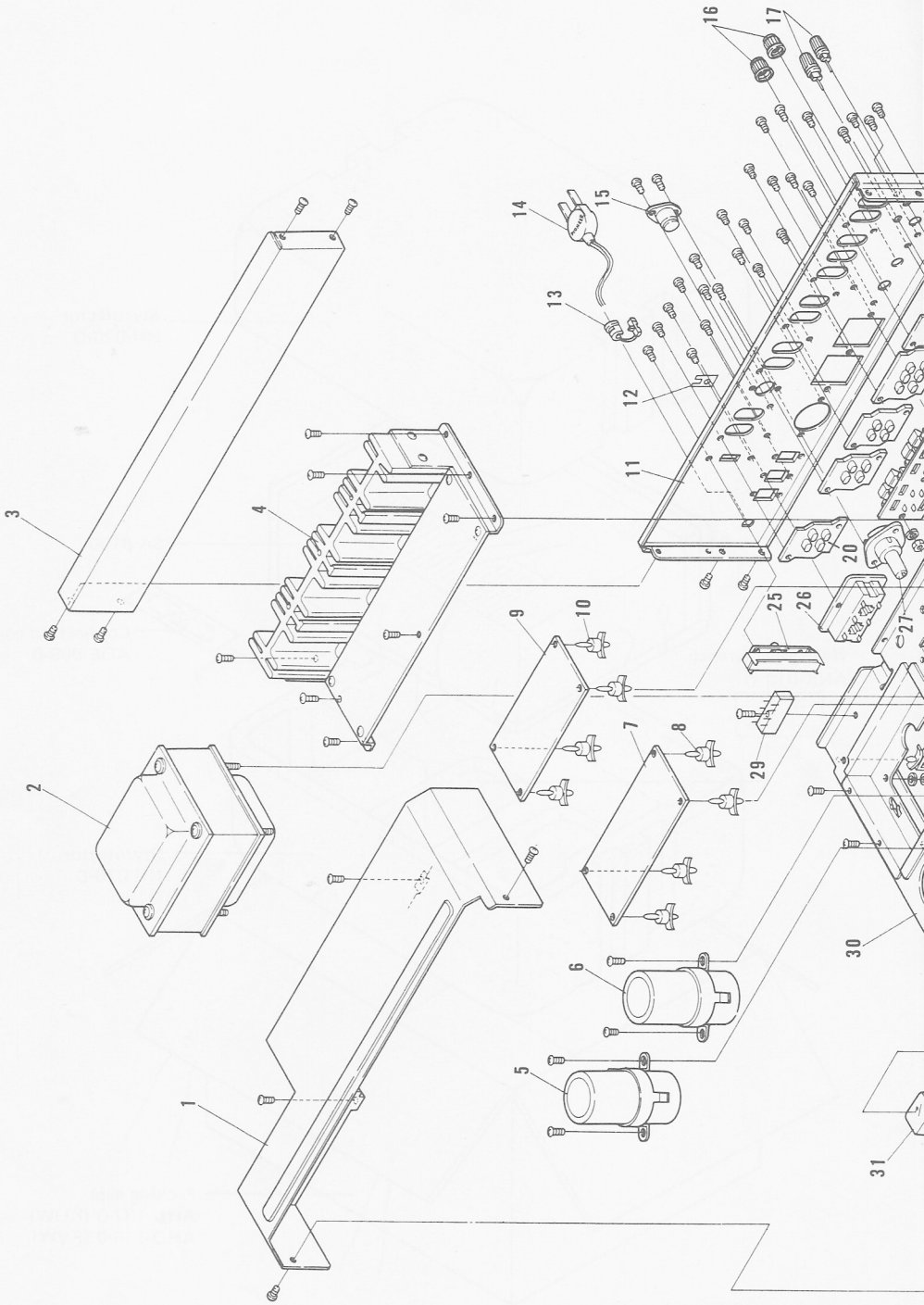

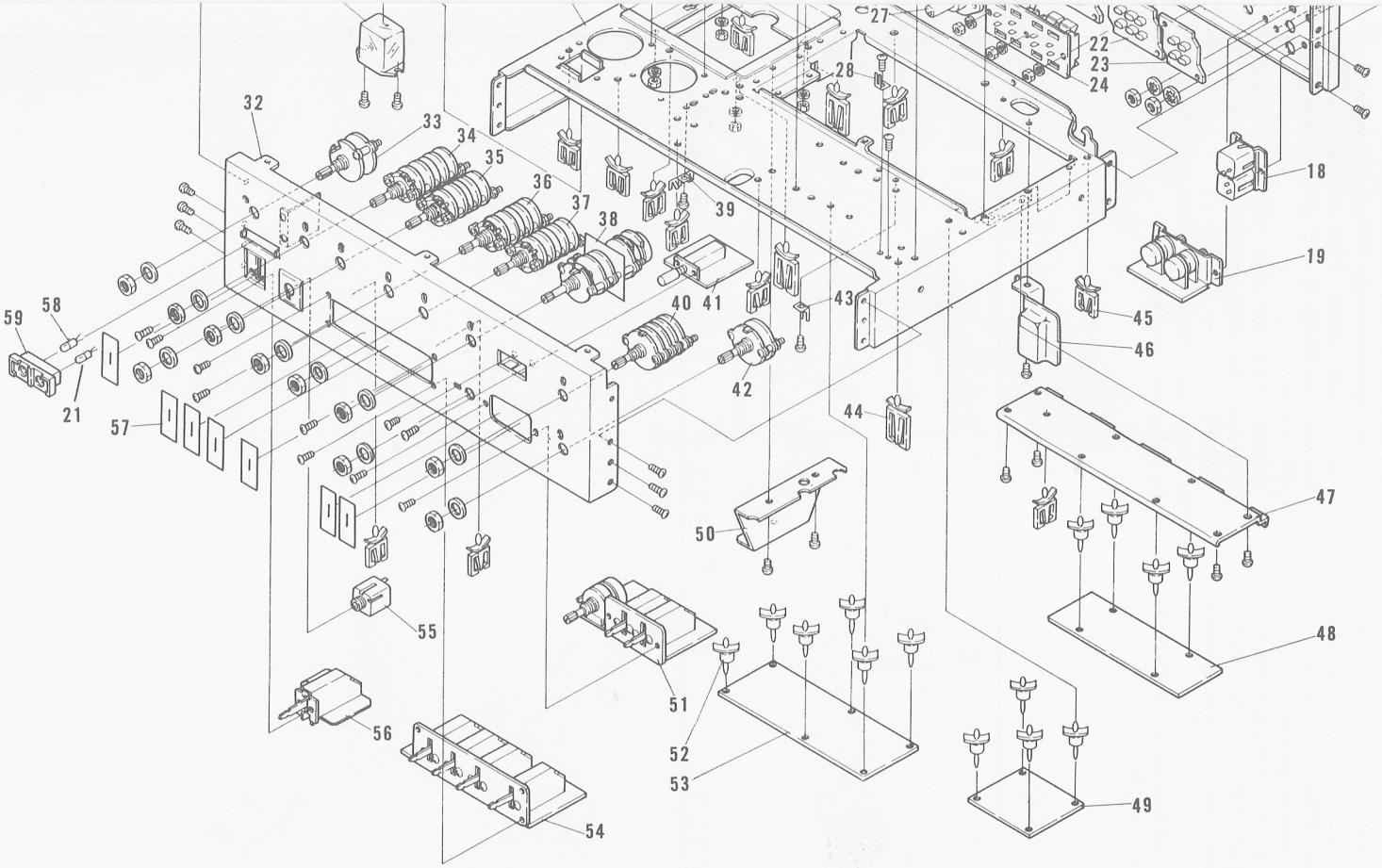
27
22
23
24
28
32
33
34
35
36
37
38
39
18
19
59
58
21
57
40
41
43
45
46
42
44
47
50
55
48
51
56
52
53
49
54

NOTICE:
Any parts asterisked * are subject to being not supplied.

Key No.	Description	Part No.	
1*	Front shield cover	ANH-123-0	
2	Power transformer for KUW model	ATT-104-0	
	Power transformer for FVW model	ATT-105-0	
3*	Rear shield cover	ANH-119-0	
4	Power amp unit	AWH-022-A	
5	Electrolytic capacitor 10,000μF 50V	ACH-019-0	
6	Electrolytic capacitor 10,000μF 50V	ACH-019-0	
7	Control amp unit	AWG-017-0	
8*	Boss	AEB-019-0	
9	Equalizer amp unit	AWF-006-0	
10*	Boss	AEB-019-0	
11*	Rear panel	ANC-065-A	
12*	Switch stopper	AEC-086-0	
13*	AC cord stopper	AEC-079-0	
14	AC power cord for KUW model	ADG-003-0	
	AC power cord for FVW model	ADG-004-0	
15	5P connector (DIN type)	K93-003-B	
16	Knob for level control	AAB-046-A	
17	Screw for grounding	AKE-012-A	
18	Microphone jack	K72-024-0	
19	Volume unit	AWX-044-0	
20	Four-fold phono jack A (RCA type)	AKB-014-0	
21	Pilot lamp for protection	AEL-014-0	
22	Six-fold phono jack A (RCA type)	AKB-018-0	
23	Four-fold phono jack B (RCA type)	AKB-015-0	
24	Speaker terminal board (dual)	AKE-010-0	
25	Slide switch (PRE/POWER)	ASH-006-A	
26	Spare AC outlet for KUW model	AKP-002-0	
	Spare AC outlet for FVW model	AKP-005-0	
27	Fuse holder for KUW model	AKR-007-0	
	Fuse holder for FVW model	AKR-001-0	
28*	Two-fold ground terminal	K13-048-0	
29*	4p terminal strip	AKC-021-0	
30*	Chassis	ANA-032-0	
31	Relay	ASR-003-0	
32*	Sub-panel	AND-050-A	
33	Selector switch (SPEAKERS)	ASB-021-A	
34	Selector switch (BASS 50Hz)	ASC-041-A	
35	Selector switch (BASS 100Hz)	ASC-039-A	
36	Selector switch (TREBLE 10kHz)	ASC-038-A	
37	Selector switch (TREBLE 20kHz)	ASC-040-B	
38	LEVEL SET switch with VOLUME	ASB-024-A	
39*	Four-fold ground terminal	K13-047-0	
40	Selector switch (FUNCTION)	ASB 023-0	
41	Push switch unit	AWS-037-0	
42	Selector switch (MODE)	ASB-022-A	
43*	Two-fold ground terminal	K13-048-0	
44*	Wire clip A	AEC-004-0	
45*	Wire clip	AEC-064-0	

Key No.	Description	Part No.	
46*	Shield board	ANH-128-0	
47*	Sub chassis	ANA-033-0	
48	Protection unit	AWM-027-A	
49	Filter amp unit	AWK-020-0	
50*	Shield board	ANH-138-0	
51	Switch unit・B	AWS-036-0	
52*	Boss	AEB-019-0	
53	Power supply unit	AWR-030-0	
54	Switch unit・A	AWS-035-0	
55	Headphone jack	K72-026-0	
56	Lever switch (POWER)	ASK-039-0	KUW model
	Lever switch (POWER)	ASK-040-0	FVW model
57*	Light shade	AED-018-0	
58	Pilot lamp for indicator	AEL-007-0	
59*	Cushion	AEB-030-0	

12. SCHEMATIC DIAGRAMS, P. C. BOARD PATTERNS

12.1 UNIT CONNECTION DIAGRAM AND MISCELLANEOUS PARTS

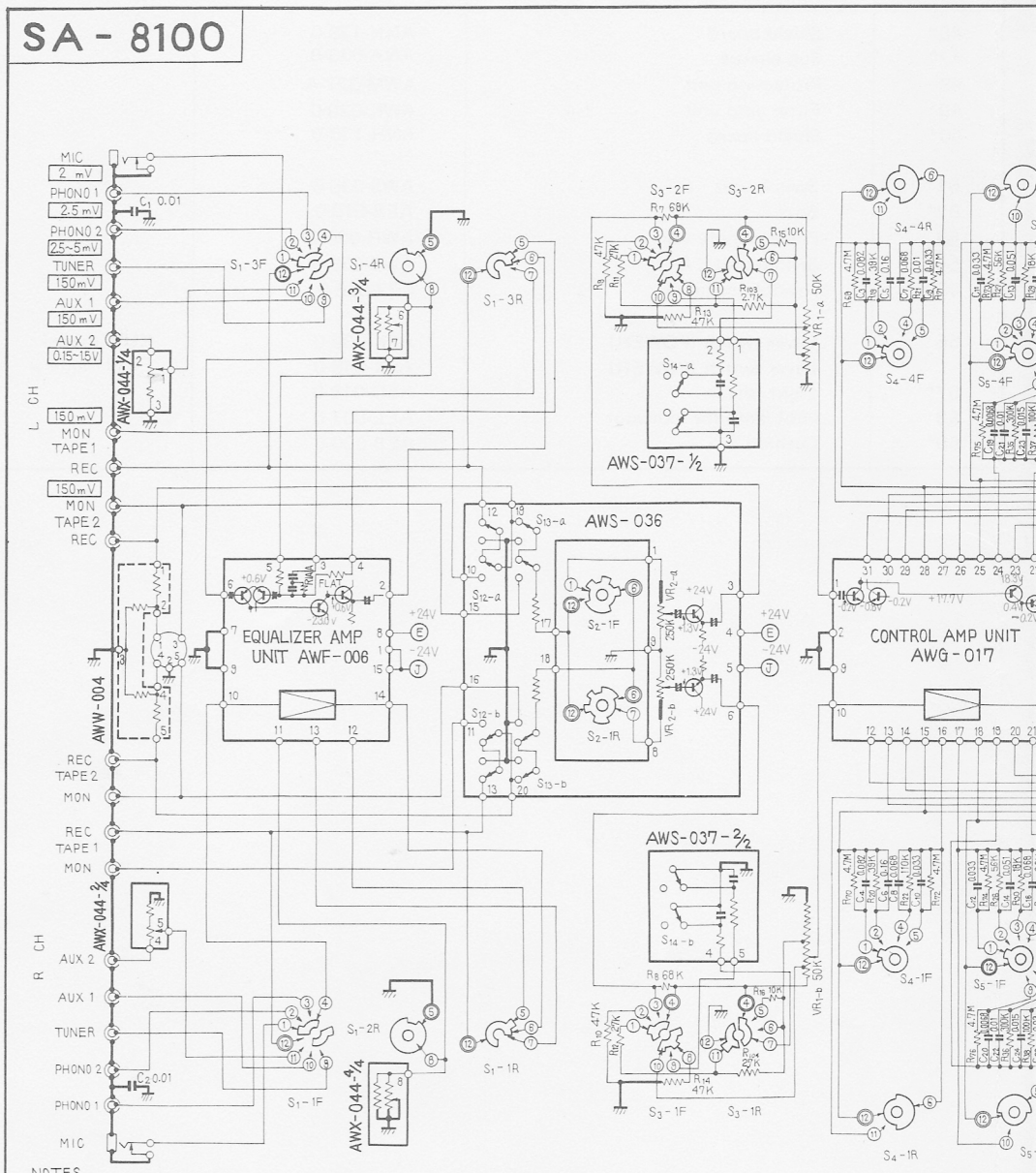

S AND PARTS LIST

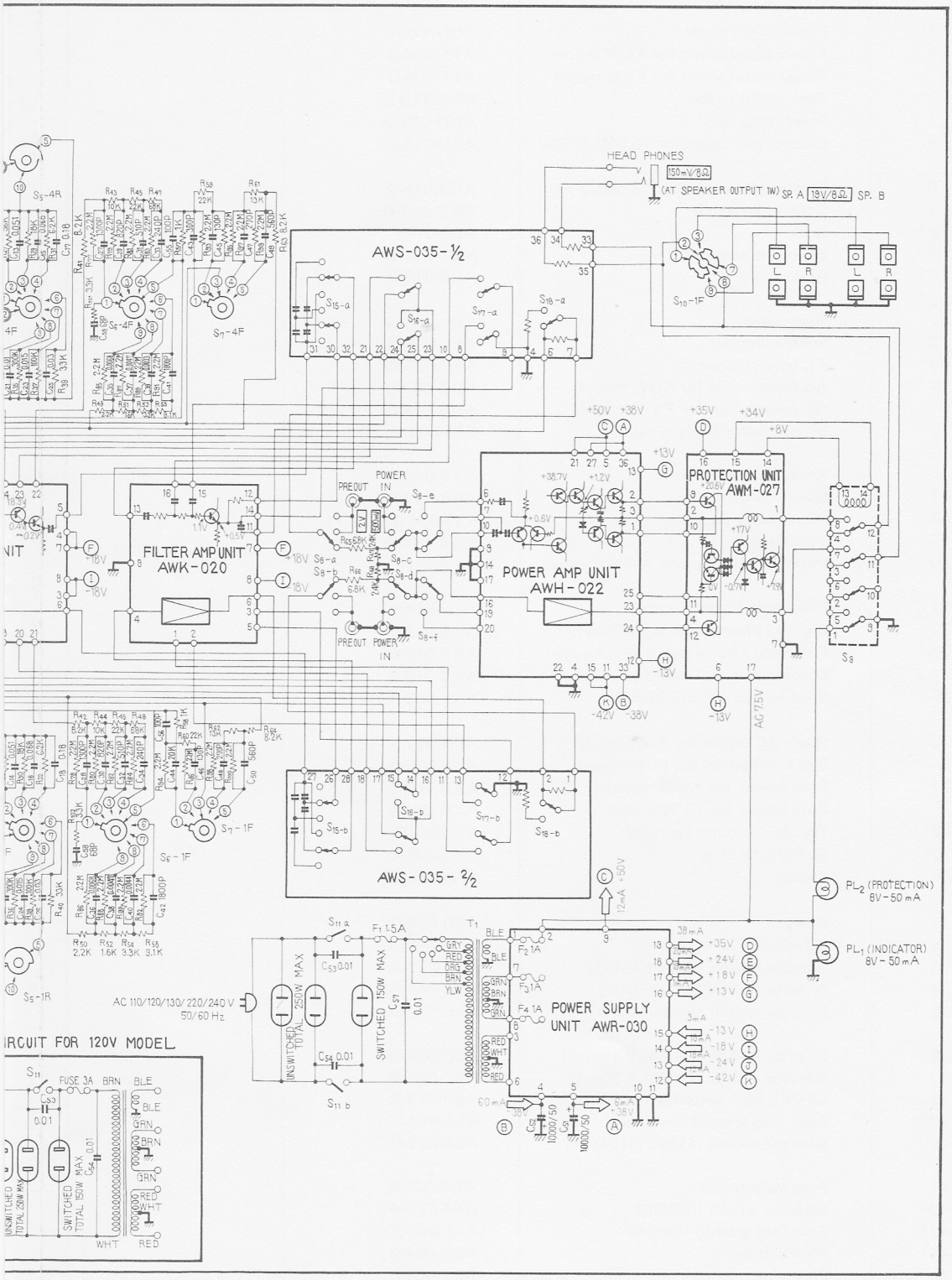

- CAPACITORS: IN μF UNLESS OTHERWISE NOTED p: pF
- RESISTORS: IN Ω, ¼W UNLESS OTHERWISE NOTED k: kΩ, M: MΩ

Miscellaneous Parts List

CAPACITORS

Symbol	Description			Part No.	
C1	Ceramic	0.01	50V	CKDYF 103Z 50	
C2	Ceramic	0.01	50V	CKDYF 103Z 50	
C3	Mylar	0.082	50V	CQMA 823J 50	
C4	Mylar	0.082	50V	CQMA 823J 50	
C5	Mylar	0.16	50V	CQMA 164J 50	
C6	Mylar	0.16	50V	CQMA 164J 50	
C7	Mylar	0.068	50V	CQMA 683J 50	
C8	Mylar	0.068	50V	CQMA 683J 50	
C9	Mylar	0.033	50V	CQMA 333J 50	
C10	Mylar	0.033	50V	CQMA 333J 50	
C11	Mylar	0.033	50V	CQMA 333J 50	
C12	Mylar	0.033	50V	CQMA 333J 50	
C13	Mylar	0.051	50V	CQMA 513J 50	
C14	Mylar	0.051	50V	CQMA 513J 50	
C15	Mylar	0.068	50V	CQMA 683J 50	
C16	Mylar	0.068	50V	CQMA 683J 50	
C17	Mylar	0.18	50V	CQMA 184J 50	
C18	Mylar	0.18	50V	CQMA 184J 50	
C19	Mylar	0.0068	50V	CQMA 682J 50	
C20	Mylar	0.0068	50V	CQMA 682J 50	
C21	Mylar	0.01	50V	CQMA 103J 50	
C22	Mylar	0.01	50V	CQMA 103J 50	
C23	Mylar	0.015	50V	CQMA 153J 50	
C24	Mylar	0.015	50V	CQMA 153J 50	
C25	Mylar	0.03	50V	CQMA 303J 50	
C26	Mylar	0.03	50V	CQMA 303J 50	
C27	Styrol	1300p	50V	CQSB 132J 50	
C28	Styrol	1300p	50V	CQSB 132J 50	
C29	Styrol	820p	50V	CQSB 821J 50	
C30	Styrol	820p	50V	CQSB 821J 50	
C31	Styrol	510p	50V	CQSB 511J 50	
C32	Styrol	510p	50V	CQSB 511J 50	
C33	Styrol	240p	50V	CQSB 241J 50	
C34	Styrol	240p	50V	CQSB 241J 50	
C35	Mylar	0.0068	50V	CQMA 682J 50	
C36	Mylar	0.0068	50V	CQMA 682J 50	
C37	Mylar	0.0047	50V	CQMA 472J 50	
C38	Mylar	0.0047	50V	CQMA 472J 50	
C39	Mylar	0.0033	50V	CQMA 332J 50	
C40	Mylar	0.0033	50V	CQMA 332J 50	
C41	Styrol	1800p	50V	CQSB 182J 50	
C42	Styrol	1800p	50V	CQSB 182J 50	
C43	Styrol	300p	50V	CQSB 301J 50	
C44	Styrol	300p	50V	CQSB 301J 50	
C45	Styrol	130p	50V	CQSB 131J 50	

Symbol	Description			Part No.	
C46	Styrol	130p	50V	CQSB 131J 50	
C47	Styrol	270p	50V	CQSB 271J 50	
C48	Styrol	270p	50V	CQSB 271J 50	
C49	Styrol	560p	50V	CQSB 561J 50	
C50	Styrol	560p	50V	CQSB 561J 50	
C51	Electrolytic	10,000	50V	ACH-019-0	
C52	Electrolytic	10,000	50V	ACH-019-0	
C53	Ceramic	0.01	150V	ACG-002-0	KUW model only
	Ceramic	0.01	1.4kV	C43-003-0	FVW model only
C54	Metallized mylar	0.01	800V	ACE-002-0	KUW model only
	Ceramic	0.01	1.4kV	C43-003-0	FVW model only
C55	Ceramic	100p	50V	CCDSL 101Z 50	
C56	Ceramic	100p	50V	CCDSL 101Z 50	
C57	Ceramic	0.01	1.4kV	C43-003-0	FVW model only
C58	Ceramic	68p	50V	CCDSL 680K 50	
C59	Ceramic	68p	50V	CCDSL 680k 50	

RESISTORS

Symbol	Description		Part No.	
	Compound part for REC jack		AWW-004-0	
R7	Carbon film	68k	RD¼PM 683J	
R8	Carbon film	68k	RD¼PM 683J	
R9	Carbon film	47k	RD¼PM 473J	
R10	Carbon film	47k	RD¼PM 473J	
R11	Carbon film	27k	RD¼PM 273J	
R12	Carbon film	27k	RD¼PM 273J	
R13	Carbon film	47k	RD¼PM 473J	
R14	Carbon film	47k	RD¼PM 473J	
R15	Carbon film	10k	RD¼PM 103J	
R16	Carbon film	10k	RD¼PM 103J	
R19	Carbon film	39k	RD¼PM 393J	
R20	Carbon film	39k	RD¼PM 393J	
R21	Carbon film	110k	RD¼PM 114J	
R22	Carbon film	110k	RD¼PM 114J	
R27	Carbon film	56k	RD¼PM 563J	
R28	Carbon film	56k	RD¼PM 563J	
R29	Carbon film	18k	RD¼PM 183J	
R30	Carbon film	18k	RD¼PM 183J	
R31	Carbon film	6.2k	RD¼PM 622J	
R32	Carbon film	6.2k	RD¼PM 622J	
R35	Carbon film	300k	RD¼PM 304J	
R36	Carbon film	300k	RD¼PM 304J	
R37	Carbon film	100k	RD¼PM 104J	
R38	Carbon film	100k	RD¼PM 104J	
R39	Carbon film	33k	RD¼PM 333J	
R40	Carbon film	33k	RD¼PM 333J	
R41	Carbon film	8.2k	RD¼PM 822J	

Symbol	Description		Part No.	
R42	Carbon film	8.2k	RD¼PM 822J	
R43	Carbon film	10k	RD¼PM 103J	
R44	Carbon film	10k	RD¼PM 103J	
R45	Carbon film	22k	RD¼PM 223J	
R46	Carbon film	22k	RD¼PM 223J	
R47	Carbon film	68k	RD¼PM 683J	
R48	Carbon film	68k	RD¼PM 683J	
R49	Carbon film	2.2k	RD¼PM 222J	
R50	Carbon film	2.2k	RD¼PM 222J	
R51	Carbon film	1.6k	RD¼PM 162J	
R52	Carbon film	1.6k	RD¼PM 162J	
R53	Carbon film	3.3k	RD¼PM 332J	
R54	Carbon film	3.3k	RD¼PM 332J	
R55	Carbon film	9.1k	RD¼PM 912J	
R56	Carbon film	9.1k	RD¼PM 912J	
R57	Carbon film	1k	RD¼PM 102J	
R58	Carbon film	1k	RD¼PM 102J	
R59	Carbon film	22k	RD¼PM 223J	
R60	Carbon film	22k	RD¼PM 223J	
R61	Carbon film	13k	RD¼PM 133J	
R62	Carbon film	13k	RD¼PM 133J	
R63	Carbon film	8.2k	RD¼PM 822J	
R64	Carbon film	8.2k	RD¼PM 822J	
R65	Carbon film	6.8k	RD¼PM 682J	
R66	Carbon film	6.8k	RD¼PM 682J	
R67	Carbon film	3.9k	RD¼PM 392J	
R68	Carbon film	3.9k	RD¼PM 392J	
R69	Carbon film	4.7M	RD¼PS 475J	
R70	Carbon film	4.7M	RD¼PS 475J	
R71	Carbon film	4.7M	RD¼PS 475J	
R72	Carbon film	4.7M	RD¼PS 475J	
R73	Carbon film	4.7M	RD¼PS 475J	
R74	Carbon film	4.7M	RD¼PS 475J	
R75	Carbon film	4.7M	RD¼PS 475J	
R76	Carbon film	4.7M	RD¼PS 475J	
R77	Carbon film	2.2M	RD¼PM 225J	
R78	Carbon film	2.2M	RD¼PM 225J	
R79	Carbon film	2.2M	RD¼PM 225J	
R80	Carbon film	2.2M	RD¼PM 225J	
R81	Carbon film	2.2M	RD¼PM 225J	
R82	Carbon film	2.2M	RD¼PM 225J	
R83	Carbon film	2.2M	RD¼PM 225J	
R84	Carbon film	2.2M	RD¼PM 225J	
R85	Carbon film	2.2M	RD¼PM 225J	
R86	Carbon film	2.2M	RD¼PM 225J	
R87	Carbon film	2.2M	RD¼PM 225J	
R88	Carbon film	2.2M	RD¼PM 225J	
R89	Carbon film	2.2M	RD¼PM 225J	
R90	Carbon film	2.2M	RD¼PM 225J	
R91	Carbon film	2.2M	RD¼PM 225J	

Symbol	Description	Part No.	
R92	Carbon film 2.2M	RD¼PM 225J	
R93	Carbon film 2.2M	RD¼PM 225J	
R94	Carbon film 2.2M	RD¼PM 225J	
R95	Carbon film 2.2M	RD¼PM 225J	
R96	Carbon film 2.2M	RD¼PM 225J	
R97	Carbon film 2.2M	RD¼PM 225J	
R98	Carbon film 2.2M	RD¼PM 225J	
R99	Carbon film 2.2M	RD¼PM 225J	
R100	Carbon film 2.2M	RD¼PM 225J	
R101	Carbon film 3.3k	RD¼PM 332J	
R102	Carbon film 3.3k	RD¼PM 332J	
R103	Carbon film 2.7k	RD¼PM 272J	
R104	Carbon film 2.7k	RD¼PM 272J	

SWITCHES

Symbol	Description	Part No.	
S1	Selector switch (FUNCTION)	ASB-023-0	
S2	Selector switch (MODE)	ASB-022-A	
S3	LEVEL SET switch with VOLUME	ASB-024-B	
S4	Selector switch (BASS 50Hz)	ASC-041-A	
S5	Selector switch (BASS 100Hz)	ASC-039-A	
S6	Selector switch (TREBLE 10kHz)	ASC-038-A	
S7	Selector switch (TREBLE 20kHz)	ASC-040-B	
S8	Slide switch (PRE/POWER)	ASH-006-A	
S9	Relay	ASR-003-0	
S10	Selector switch (SPEAKERS)	ASB-021-A	
S11	Lever switch (POWER)	ASK-039-0	KUW model
	Lever switch (POWER)	ASK-040-0	FVW model

OTHERS

Symbol	Description	Part No.	
	Equalizer amp unit	AWF-006-0	
	Control amp unit	AWG-017-0	
	Power amp unit	AWH-022-A	
	Protection unit	AWM-027-A	
	Power supply unit	AWR-030-0	
	Filter amp unit	AWK-020-0	
	Switch unit ・A	AWS-035-0	
	Switch unit ・B	AWS-036-0	
	Push switch unit	AWS-037-0	
	Volume unit	AWX-044-0	
	Front panel ass'y	ANB-178-A	
	Wooden case	AMM-022-A	
	Foot	AEC-083-A	
	Knob, volume	AAB-045-0	
	Knob, level set	AAB-044-0	

Symbol	Description	Part No.	
	Knob, function	AAB-040-0	
	Knob, balance, mode	AAB-042-0	
	Knob, speaker, bass (100Hz), treble (10kHz)	AAB-041-0	
	Knob, bass (50Hz), treble (20kHz)	AAB-043-0	
	Knob, level control	AAB-046-A	
	Knob, lever switch	AAD-040-B	
	Knob, push switch	AAD-039-0	
	Power transformer for KUW model	ATT-104-0	
	Power transformer for FVW model	ATT-105-0	
	Spare AC outlet for KUW model	AKP-002-0	
	Spare AC outlet for FVW model	AKP-005-0	
	Fuse holder for KUW model	AKR-007-0	
	Fuse holder for FVW model	AKR-001-0	
	Microphone jack	K72-024-0	
	Headphone jack	K72-026-0	
	5P connector (DIN type)	K93-003-B	
	Speaker terminal board (dual)	AKE-010-0	
	Four-fold phono jack A (RCA type)	AKB-014-0	
	Four-fold phono jack B(RCA type)	AKB-015-0	
	Six-fold phono jack A (RCA type)	AKB-018-0	
	Screw for grounding	AKE-012-A	
PL1	Pilot lamp for indicator	AEL-007-0	
PL2	Pilot lamp for protection	AEL-014-0	
F1	Fuse 3A	E21-021-0	KUW model
	Fuse 1.5A	AEK-009-0	FVW model
F2	Fuse 1A for protection	E21-033-0	KUW model
	Fuse 1A for protection	E21-034-A	FVW model
F3	Fuse 1A for protection	E21-033-0	KUW model
	Fuse 1A for protection	E21-034-A	FVW model
F4	Fuse 1A for protection	E21-033-0	KUW model
	Fuse 1A for protection	E21-034-A	FVW model
	Screw to fix wooden case	ABA-010-A	
	AC power cord for KUW model	ADG-003-0	
	AC power cord for FVW model	ADG-004-0	
	Operating instructions	ARB-069-0	
	Connection cord	ADE-005-0	
	Packing case for KUW model	AHD-137-0	
	Packing case for FVW model	AHD-136-0	
	Styrotector	HII-070-D	
	Hexagonal wrench	ANK-018-0	

12.2 EQUALIZER AMP UNIT (AWF-006-0)

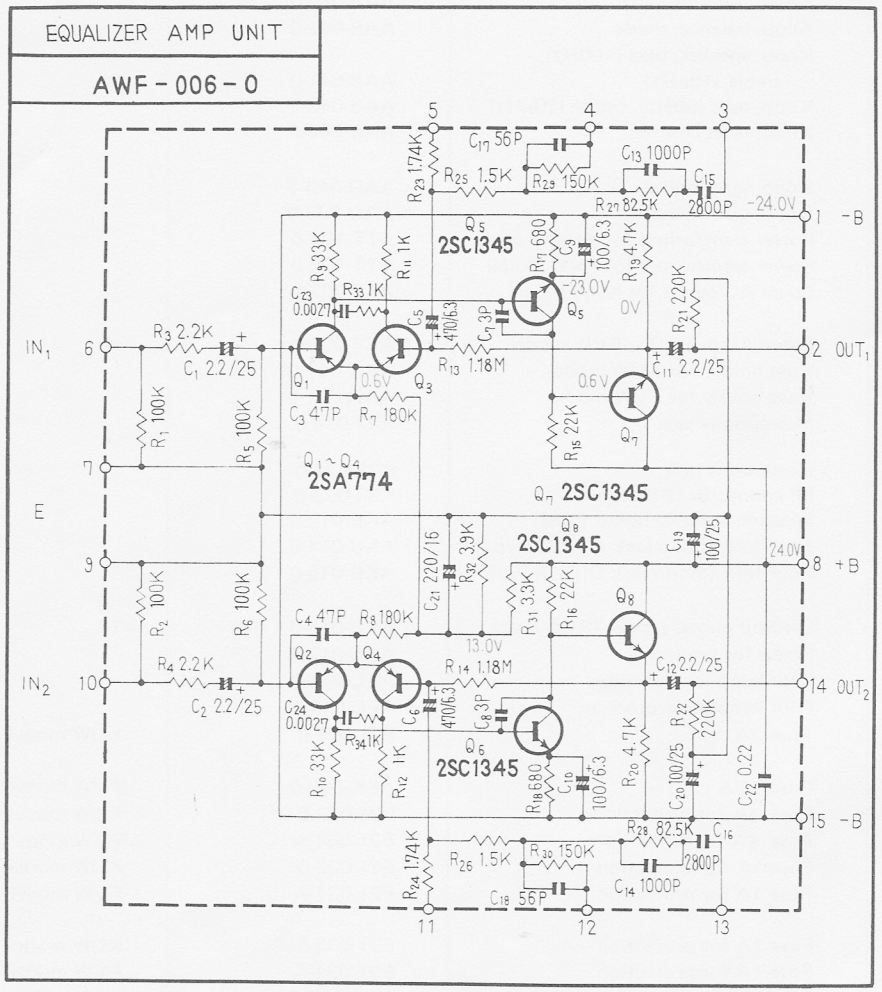

Foil side

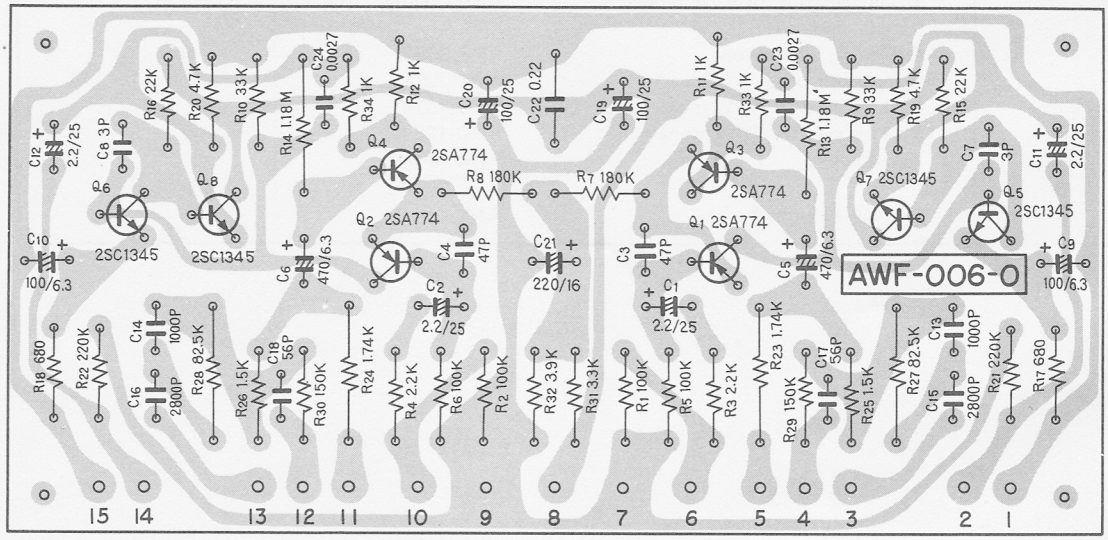

Parts List of Equalizer Amp Unit (AWF-006-0)

CAPACITORS

Symbol	Description			Part No.	
C1	Electrolytic	2.2	25V	CSSA 2R2M 25	
C2	Electrolytic	2.2	25V	CSSA 2R2M 25	
C3	Ceramic	47p	50V	CCDSL 470K 50	
C4	Ceramic	47p	50V	CCDSL 470K 50	
C5	Electrolytic	470	6V	CEA 471P 6	
C6	Electrolytic	470	6V	CEA 471P 6	
C7	Ceramic	3p	50V	CCDSL 030C 50	
C8	Ceramic	3p	50V	CCDSL 030C 50	
C9	Electrolytic	100	6V	CEA 101P 6	
C10	Electrolytic	100	6V	CEA 101P 6	
C11	Electrolytic	2.2	25V	CSSA 2R2M 25	
C12	Electrolytic	2.2	25V	CSSA 2R2M 25	
C13	Styrol	1000p	50V	CQSA 102G 50	
C14	Styrol	1000p	50V	CQSA 102G 50	
C15	Styrol	2800p	50V	CQSA 282G 50	
C16	Styrol	2800p	50V	CQSA 282G 50	
C17	Ceramic	56p	50V	CCDSL 560K 50	
C18	Ceramic	56p	50V	CCDSL 560K 50	
C19	Electrolytic	100	25V	CEA 101P 25	
C20	Electrolytic	100	25V	CEA 101P 25	
C21	Electrolytic	220	16V	CEA 221P 16	
C22	Mylar	0.22	50V	CQMA 224K 50	
C23	Mylar	0.0027	50V	CQMA 272K 50	
C24	Mylar	0.0027	50V	CQMA 272K 50	

RESISTORS

Symbol	Description			Part No.	
R1	Carbon film	100k		RD¼PM 104J	
R2	Carbon film	100k		RD¼PM 104J	
R3	Carbon film	2.2k		RD¼PM 222J	
R4	Carbon film	2.2k		RD¼PM 222J	
R5	Carbon film	100k		RD¼PM 104J	
R6	Carbon film	100k		RD¼PM 104J	
R7	Carbon film	180k		RD¼PM 184J	
R8	Carbon film	180k		RD¼PM 184J	
R9	Carbon film	33k		RD¼PM 333J	
R10	Carbon film	33k		RD¼PM 333J	
R11	Carbon film	1k		RD¼PM 102J	
R12	Carbon film	1k		RD¼PM 102J	
R13	Metal film	1.18M	½W	RN½SS 1184F	
R14	Metal film	1.18M	½W	RN½SS 1184F	
R15	Carbon film	22k		RD¼PM 223J	
R16	Carbon film	22k		RD¼PM 223J	
R17	Carbon film	680		RD¼PM 681J	
R18	Carbon film	680		RD¼PM 681J	
R19	Carbon film	4.7k		RD¼PM 472J	
R20	Carbon film	4.7k		RD¼PM 472J	

Symbol	Description			Part No.	
R21	Carbon film	220k		RD¼PM 224J	
R22	Carbon film	220k		RD¼PM 224J	
R23	Metal film	1.74k	½W	RN½SR 1741F	
R24	Metal film	1.74k	½W	RN½SR 1741F	
R25	Carbon film	1.5k		RD¼PM 152J	
R26	Carbon film	1.5k		RD¼PM 152J	
R27	Metal film	82.5k	½W	RN½SR 8252F	
R28	Metal film	82.5k	½W	RN½SR 8252F	
R29	Carbon film	150k		RD¼PM 154J	
R30	Carbon film	150k		RD¼PM 154J	
R31	Carbon film	3.3k		RD¼PM 332J	
R32	Carbon film	3.9k		RD¼PM 392J	
R33	Carbon film	1k		RD¼PM 102J	
R34	Carbon film	1k		RD¼PM 102J	

SEMICONDUCTORS

Symbol	Description		Part No.	
Q1	Transistor	2SA774-T or S		
Q2	Transistor	2SA774-T or S		
Q3	Transistor	2SA774-T or S		
Q4	Transistor	2SA774-T or S		
Q5	Transistor	2SC1345-E or D (2SC1313-G or F)		
Q6	Transistor	2SC1345-E or D (2SC1313-G or F)		
Q7	Transistor	2SC1345-E or D (2SC1313-G or F)		
Q8	Transistor	2SC1345-E or D (2SC1313-G or F)		

12.3 CONTROL AMP UNIT (AWG-017-0)

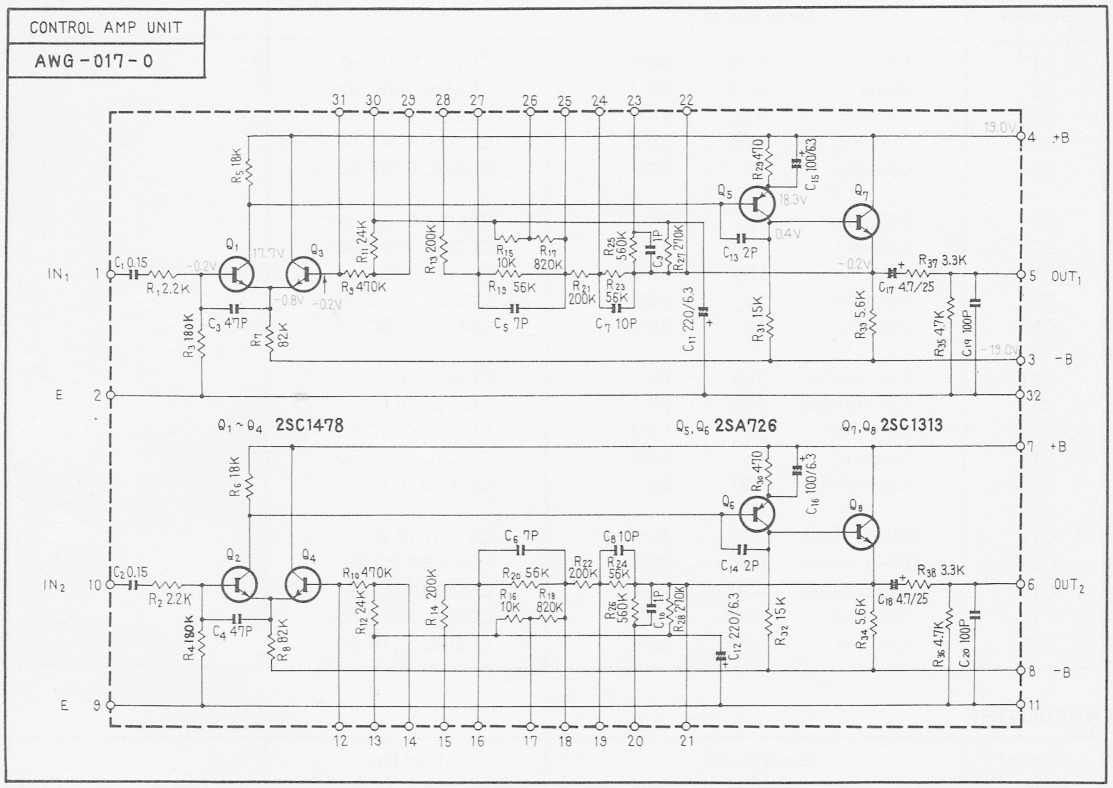

Foil side

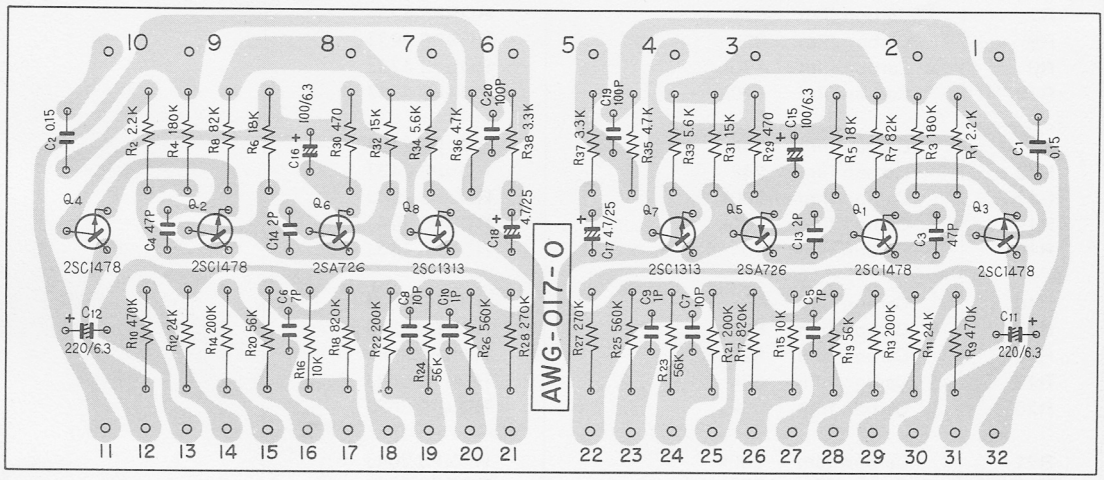

Parts List of Control Amp Unit (AWG-017-0)

CAPACITORS

Symbol	Description			Part No.	
C1	Mylar	0.15	50V	CQMA 154K 50	
C2	Mylar	0.15	50V	CQMA 154K 50	
C3	Ceramic	47p	50V	CCDSL 470K 50	
C4	Ceramic	47p	50V	CCDSL 470K 50	
C5	Ceramic	7p	50V	CCDSL 070F 50	
C6	Ceramic	7p	50V	CCDSL 070F 50	
C7	Ceramic	10p	50V	CCDSL 100K 50	
C8	Ceramic	10p	50V	CCDSL 100K 50	
C9	Ceramic	1p	50V	CCDSL 010C 50	
C10	Ceramic	1p	50V	CCDSL 010C 50	
C11	Electrolytic	220	6V	CEA 221P 6	
C12	Electrolytic	220	6V	CEA 221P 6	
C13	Ceramic	2p	50V	CCDSL 020C 50	
C14	Ceramic	2p	50V	CCDSL 020C 50	
C15	Electrolytic	100	6V	CEA 101P 6	
C16	Electrolytic	100	6V	CEA 101P 6	
C17	Electrolytic	4.7	25V	CSSA 4R7M 25	
C18	Electrolytic	4.7	25V	CSSA 4R7M 25	
C19	Ceramic	100p	50V	CCDSL 101K 50	
C20	Ceramic	100p	50V	CCDSL 101K 50	

RESISTORS

Symbol	Description		Part No.	
R1	Carbon film	2.2k	RD¼PS 222J	
R2	Carbon film	2.2k	RD¼PS 222J	
R3	Carbon film	180k	RD¼PS 184J	
R4	Carbon film	180k	RD¼PS 184J	
R5	Carbon film	18k	RD¼PS 183J	
R6	Carbon film	18k	RD¼PS 183J	
R7	Carbon film	82k	RD¼PS 823J	
R8	Carbon film	82k	RD¼PS 823J	
R9	Carbon film	470k	RD¼PS 474J	
R10	Carbon film	470k	RD¼PS 474J	
R11	Carbon film	24k	RD¼PS 243J	
R12	Carbon film	24k	RD¼PS 243J	
R13	Carbon film	200k	RD¼PS 204J	
R14	Carbon film	200k	RD¼PS 204J	
R15	Carbon film	10k	RD¼PS 103J	
R16	Carbon film	10k	RD¼PS 103J	
R17	Carbon film	820k	RD¼PS 824J	
R18	Carbon film	820k	RD¼PS 824J	
R19	Carbon film	56k	RD¼PS 563J	
R20	Carbon film	56k	RD¼PS 563J	
R21	Carbon film	200k	RD¼PS 204J	
R22	Carbon film	200k	RD¼PS 204J	
R23	Carbon film	56k	RD¼PS 563J	
R24	Carbon film	56k	RD¼PS 563J	
R25	Carbon film	560k	RD¼PS 564J	

Symbol	Description		Part No.	
R26	Carbon film	560k	RD¼PS 564J	
R27	Carbon film	270k	RD¼PS 274J	
R28	Carbon film	270k	RD¼PS 274J	
R29	Carbon film	470	RD¼PS 471J	
R30	Carbon film	470	RD¼PS 471J	
R31	Carbon film	15k	RD¼PS 153J	
R32	Carbon film	15k	RD¼PS 153J	
R33	Carbon film	5.6k	RD¼PS 562J	
R34	Carbon film	5.6k	RD¼PS 562J	
R35	Carbon film	4.7k	RD¼PS 472J	
R36	Carbon film	4.7k	RD¼PS 472J	
R37	Carbon film	3.3k	RD¼PS 332J	
R38	Carbon film	3.3k	RD¼PS 332J	

SEMICONDUCTORS

Symbol	Description		Part No.	
Q1	Transistor	2SC1478-T or S		
Q2	Transistor	2SC1478-T or S		
Q3	Transistor	2SC1478-T or S		
Q4	Transistor	2SC1478-T or S		
Q5	Transistor	2SA726-G or F		
Q6	Transistor	2SA726-G or F		
Q7	Transistor	2SC1313-G or F (2SC1345-D or E)		
Q8	Transistor	2SC1313-G or F (2SC1345-D or E)		

12.4 POWER AMP UNIT (AWH-022-A)

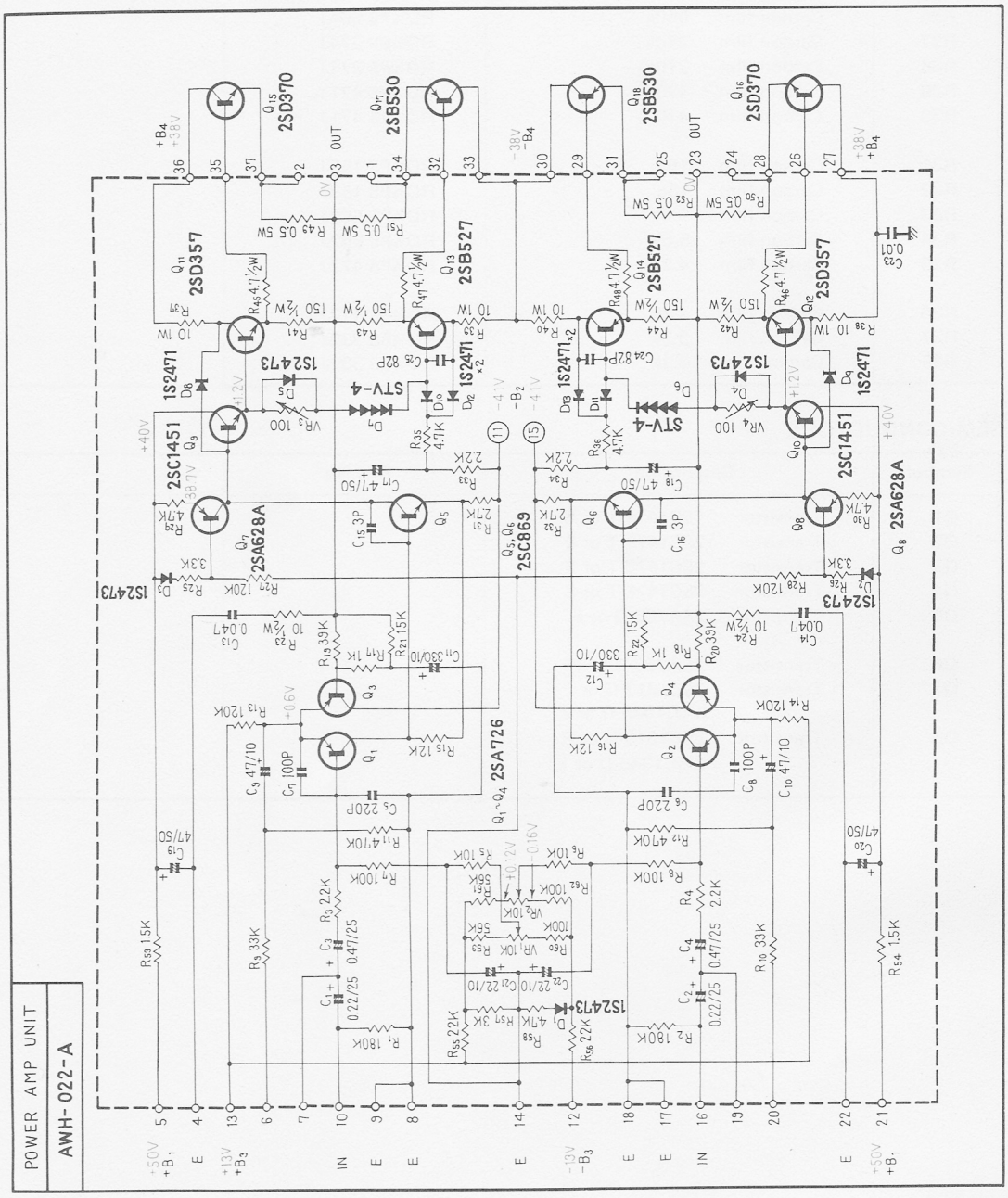

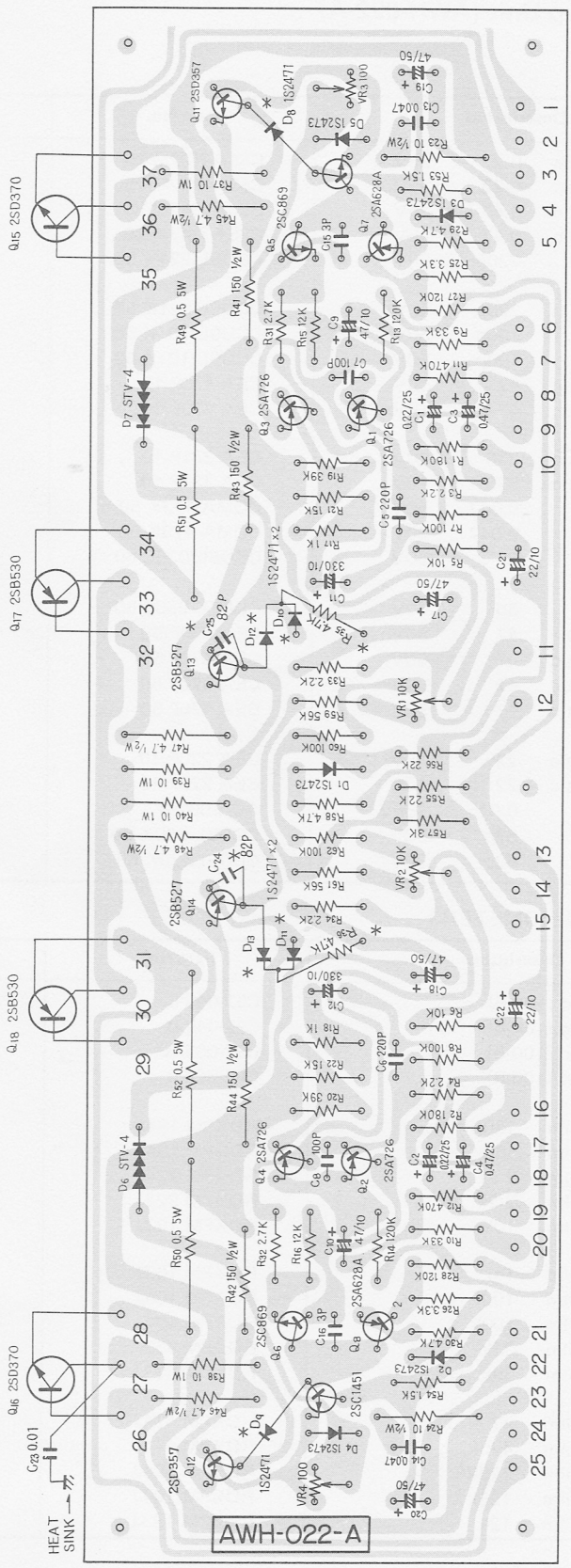

Foil side

NOTE: Asterisked* parts are soldered on foil side.

Parts List of Power Amp Unit (AWH-022-A)

CAPACITORS

Symbol	Description			Part No.	
C1	Electrolytic	0.22	25V	CSSA R22M 25	
C2	Electrolytic	0.22	25V	CSSA R22M 25	
C3	Electrolytic	0.47	25V	CSSA R47M 25	
C4	Electrolytic	0.47	25V	CSSA R47M 25	
C5	Ceramic	220p	50V	CCDSL 221K 50	
C6	Ceramic	220p	50V	CCDSL 221K 50	
C7	Ceramic	100p	50V	CCDSL 101K 50	
C8	Ceramic	100p	50V	CCDSL 101K 50	
C9	Electrolytic	47	10V	CEA 470P 10	
C10	Electrolytic	47	10V	CEA 470P 10	
C11	Electrolytic	330	10V	CEA 331P 10	
C12	Electrolytic	330	10V	CEA 331P 10	
C13	Mylar	0.047	50V	CQMA 473K 50	
C14	Mylar	0.047	50V	CQMA 473K 50	
C15	Ceramic	3p	50V	CCDSL 030C 50	
C16	Ceramic	3p	50V	CCDSL 030C 50	
C17	Electrolytic	47	50V	CEA 470P 50	
C18	Electrolytic	47	50V	CEA 470P 50	
C19	Electrolytic	47	50V	CEA 470P 50	
C20	Electrolytic	47	50V	CEA 470P 50	
C21	Electrolytic	22	10V	CEA 220P 10	
C22	Electrolytic	22	10V	CEA 220P 10	
C23	Ceramic	0.01	150V	ACG-002-0	
C24	Ceramic	82p	50V	CCDSL 820K 50	
C25	Ceramic	82p	50V	CCDSL820K 50	

RESISTORS AND POTENTIOMETERS

Symbol	Description		Part No.	
VR1	Semi-fixed (10k-B)		C92-049-0	
VR2	Semi-fixed (10k-B)		C92-049-0	
VR3	Semi-fixed (100-B)		C92-063-0	
VR4	Semi-fixed (100-B)		C92-063-0	
R1	Carbon film	180k	RD¼PM 184J	
R2	Carbon film	180k	RD¼PM 184J	
R3	Carbon film	2.2k	RD¼PM 222J	
R4	Carbon film	2.2k	RD¼PM 222J	
R5	Carbon film	10k	RD¼PM 103J	
R6	Carbon film	10k	RD¼PM 103J	
R7	Carbon film	100k	RD¼PM 104J	
R8	Carbon film	100k	RD¼PM 104J	
R9	Carbon film	33k	RD¼PM 333J	
R10	Carbon film	33k	RD¼PM 333J	
R11	Carbon film	470k	RD¼PM 474J	
R12	Carbon film	470k	RD¼PM 474J	
R13	Carbon film	120k	RD¼PM 124J	
R14	Carbon film	120k	RD¼PM 124J	
R15	Carbon film	12k	RD¼PM 123J	

Symbol	Description			Part No.	
R16	Carbon film	12k		RD¼PM 123J	
R17	Carbon film	1k		RD¼PM 102J	
R18	Carbon film	1k		RD¼PM 102J	
R19	Carbon film	39k		RD¼PM 393J	
R20	Carbon film	39k		RD¼PM 393J	
R21	Carbon film	15k		RD¼PM 153J	
R22	carbon film	15k		RD¼PM 153J	
R23	Carbon film	10	½W	RD½PS 100J	
R24	Carbon film	10	½W	RD½PS 100J	
R25	Carbon film	3.3k		RD¼PM 332J	
R26	Carbon film	3.3k		RD¼PM 332J	
R27	Carbon film	120k		RD¼PM 124J	
R28	Carbon film	120k		RD¼PM 124J	
R29	Carbon film	4.7k		RD¼PM 472J	
R30	Carbon film	4.7k		RD¼PM 472J	
R31	Carbon film	2.7k		RD¼PM 272J	
R32	Carbon film	2.7k		RD¼PM 272J	
R33	Carbon film	2.2k		RD¼PM 222J	
R34	Carbon film	2.2k		RD¼PM 222J	
R35	Carbon film	4.7k		RD¼PM 472J	
R36	Carbon film	4.7k		RD¼PM 472J	
R37	Metal oxide	10	1W	RSIP 100J	
R38	Metal oxide	10	1W	RSIP 100J	
R39	Metal oxide	10	1W	RSIP 100J	
R40	Metal oxide	10	1W	RSIP 100J	
R41	Carbon film	150	½W	RD½PS 151J	
R42	Carbon film	150	½W	RD½PS 151J	
R43	Carbon film	150	½W	RD½PS 151J	
R44	Carbon film	150	½W	RD½PS 151J	
R45	Carbon film	4.7	½W	RD½PS 4R7J	
R46	Carbon film	4.7	½W	RD½PS 4R7J	
R47	Carbon film	4.7	½W	RD½PS 4R7J	
R48	Carbon film	4.7	½W	RD½PS 4R7J	
R49	Wire wound	0.5	5W	RT5B 0R5K	
R50	Wire wound	0.5	5W	RT5B 0R5K	
R51	Wire wound	0.5	5W	RT5B 0R5K	
R52	Wire wound	0.5	5W	RT5B 0R5K	
R53	Carbon film	1.5k		RD¼PM 152J	
R54	Carbon film	1.5k		RD¼PM 152J	
R55	Carbon film	22k		RD¼PM 223J	
R56	Carbon film	22k		RD¼PM 223J	
R57	Carbon film	3k		RD¼PM 302J	
R58	Carbon film	4.7k		RD¼PM 472J	
R59	Carbon film	56k		RD¼PM 563J	
R60	Carbon film	100k		RD¼PM 104J	
R61	Carbon film	56k		RD¼PM 563J	
R62	Carbon film	100k		RD¼PM 104J	

Parts List of Power Amp Unit

SEMICONDUCTORS

Symbol	Description		Part No.	
Q1	Transistor	2SA726-G or F		
Q2	Transistor	2SA726-G or F		
Q3	Transistor	2SA726-G or F		
Q4	Transistor	2SA726-G or F		
Q5	Transistor	2SC869-C or D		
Q6	Transistor	2SC869-C or D		
Q7	Transistor	2SA628A-C or D		
Q8	Transistor	2SA628A-C or D		
Q9	Transistor	2SC1451-V or B		
Q10	Transistor	2SC1451-V or B		
Q11	Transistor	2SD357-C or D		
Q12	Transistor	2SD357-C or D		
Q13	Transistor	2SB527-C or D		
Q14	Transistor	2SB527-C or D		
Q15	Transistor	2SD370-R or 0 (2SC1403-R or 0)		
Q16	Transistor	2SD370-R or 0 (2SC1403-R or 0)		
Q17	Transistor	2SB530-R or 0 (2SA745-R or 0)		
Q18	Transistor	2SB530-R or 0 (2SA745-R or 0)		
D1	Diode	1S2473		
D2	Diode	1S2473		
D3	Diode	1S2473		
D4	Diode	1S2473		
D5	Diode	1S2473		
D6	Varistor	STV-4		
D7	Varistor	STV-4		
D8	Diode	1S2471		
D9	Diode	1S2471		
D10	Diode	1S2471		
D11	Diode	1S2471		
D12	Diode	1S2471		
D13	Diode	1S2471		

OTHERS

Symbol	Description	Part No.	
	Socket for Power transistor	AKH-001-0	
	Spacer (Mica)	AEC-076-0	
	Heat Sink (2SD357)	ANH-120-A	
	(2SB527)		
	Holder for varistor	ANG-074-A	

12.5 FILTER AMP UNIT (AWK-020-0)

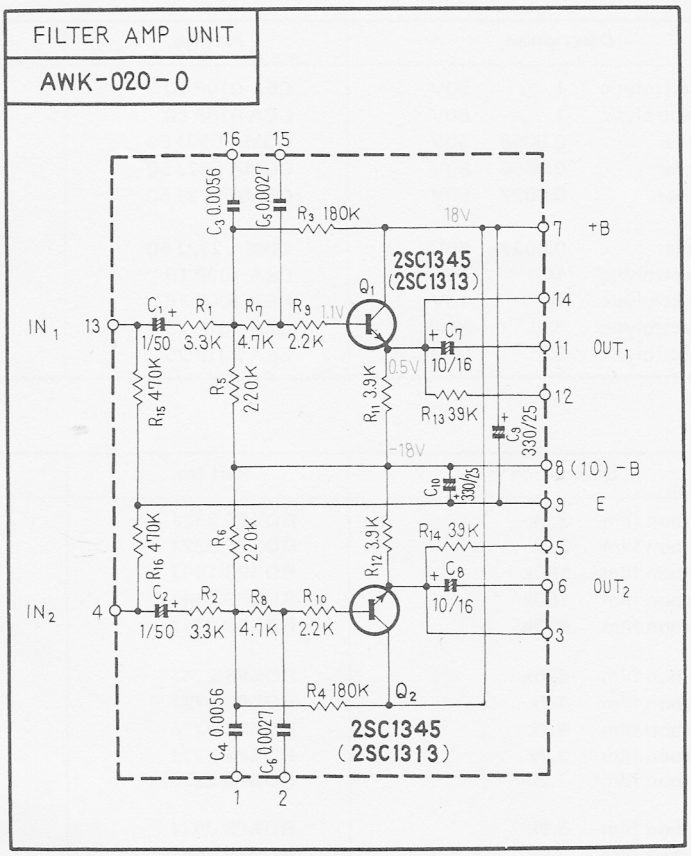

Foil side

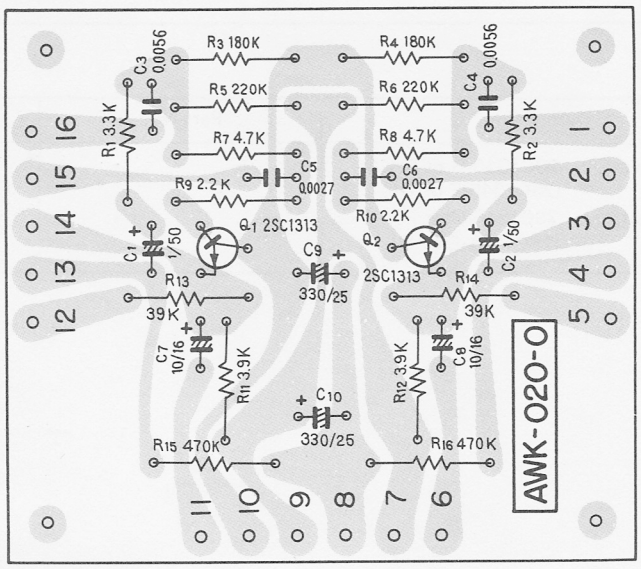

Parts List of Filter Amp Unit (AWK-020-0)

CAPACITORS

Symbol	Description			Part No.	
C1	Electrolytic	1	50V	CEA 010P 50	
C2	Electrolytic	1	50V	CEA 010P 50	
C3	Mylar	0.0056	50V	CQMA 562J 50	
C4	Mylar	0.0056	50V	CQMA 562J 50	
C5	Mylar	0.0027	50V	CQMA 272J 50	
C6	Mylar	0.0027	50V	CQMA 272J 50	
C7	Electrolytic	10	16V	CEA 100P 16	
C8	Electrolytic	10	16V	CEA 100P 16	
C9	Electrolytic	330	25V	CEA 331P 25	
C10	Electrolytic	330	25V	CEA 331P 25	

RESISTORS

Symbol	Description		Part No.	
R1	Carbon film	3.3k	RD¼PS 332J	
R2	Carbon film	3.3k	RD¼PS 332J	
R3	Carbon film	180k	RD¼PS 184J	
R4	Carbon film	180k	RD¼PS 184J	
R5	Carbon film	220k	RD¼PS 224J	
R6	Carbon film	220k	RD¼PS 224J	
R7	Carbon film	4.7k	RD¼PS 472J	
R8	Carbon film	4.7k	RD¼PS 472J	
R9	Carbon film	2.2k	RD¼PS 222J	
R10	Carbon film	2.2k	RD¼PS 222J	
R11	Carbon film	3.9k	RD¼PS 392J	
R12	Carbon film	3.9k	RD¼PS 392J	
R13	Carbon film	39k	RD¼PS 393J	
R14	Carbon film	39k	RD¼PS 393J	
R15	Carbon film	470k	RD¼PS 474J	
R16	Carbon film	470k	RD¼PS 474J	

SEMICONDUCTORS

Symbol	Description		Part No.	
Q1	Transistor	2SC1313-G or F (2SC1345-E or D)		
Q2	Transistor	2SC1313-G or F (2SC1345-E or D)		

12.6 PROTECTION UNIT (AWM-027-A)

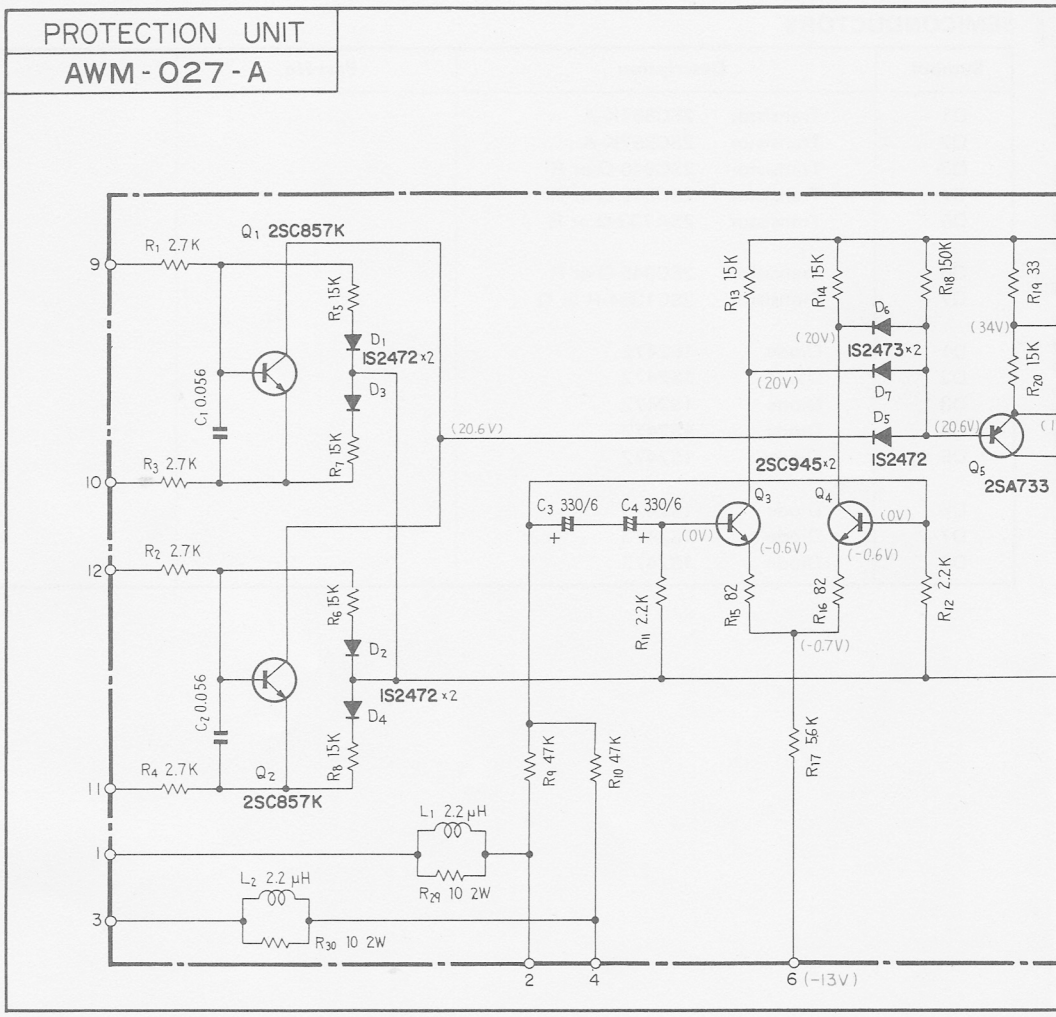

Foil side

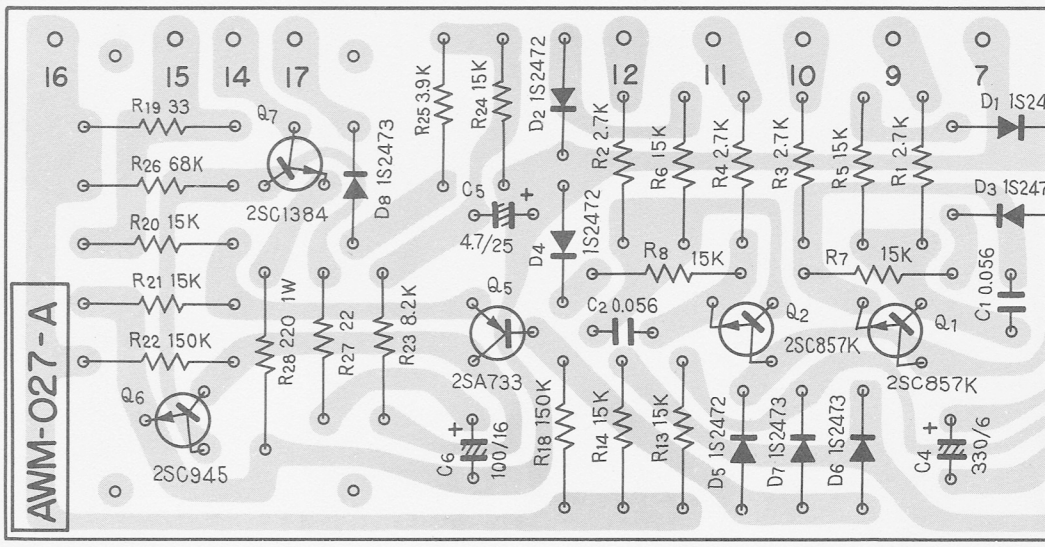

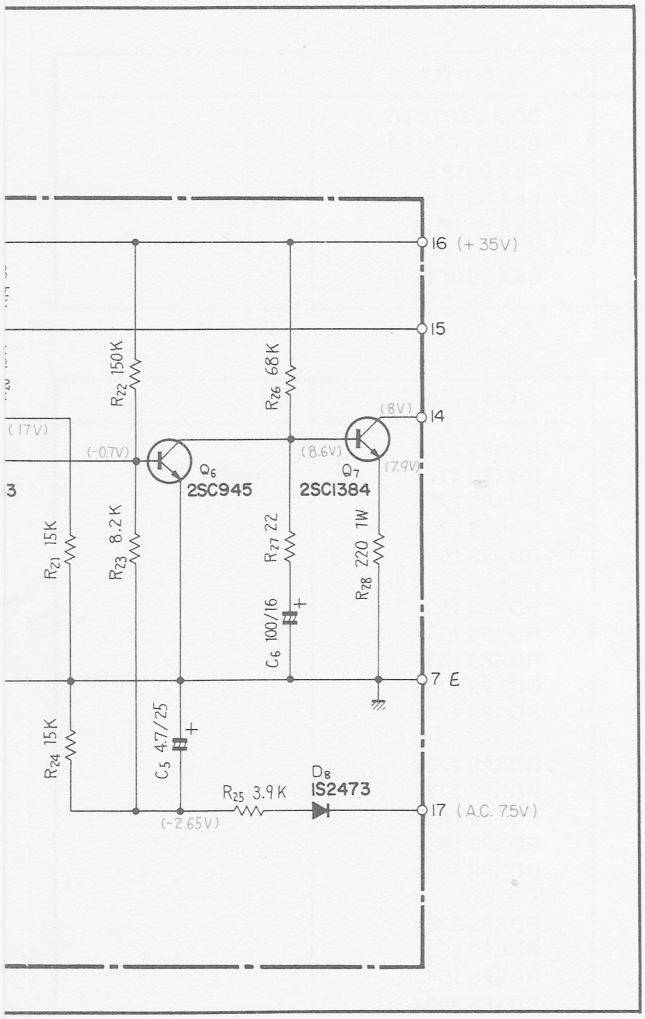
16 (+35V)
15
14
7 E
17 (A.C. 7.5V)
R22 150K
R26 68K
(17V)
(-0.7V)
(8V)
(8.6V)
(7.9V)
Q6
2SC945
Q7
2SC1384
R21 15K
R23 8.2K
R27 22
R28 220 1W
C6 100/16
R24 15K
C5 47/25
R25 3.9K
D8
IS2473
(-2.65V)

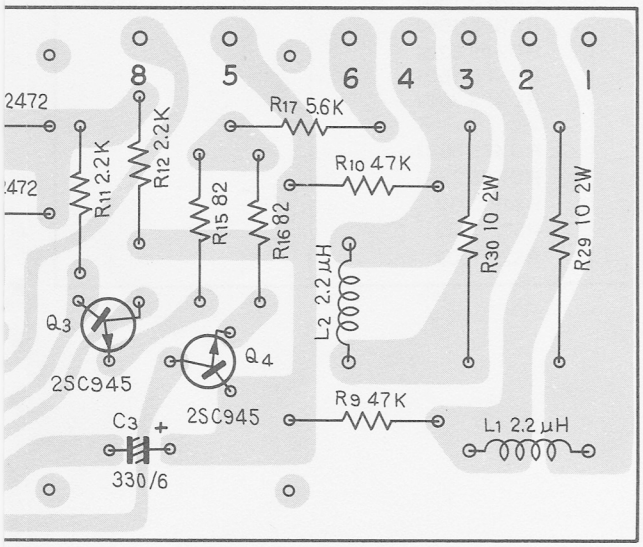
8
5
6
4
3
2
1
R17 5.6K
R11 2.2K
R12 2.2K
R10 4.7K
R15 82
R16 82
R30 10 2W
R29 10 2W
L2 2.2μH
Q3
2SC945
Q4
2SC945
R9 47K
C3
330/6
L1 2.2μH

Parts List of Protection Unit (AWM-027-A)

CAPACITORS

Symbol	Description			Part No.	
C1	Mylar	0.056	50V	CQMA 563K 50	
C2	Mylar	0.056	50V	CQMA 563K 50	
C3	Electrolytic	330	6V	CEA 331P 6	
C4	Electrolytic	330	6V	CEA 331P 6	
C5	Electrolytic	4.7	25V	CEA 4R7P 25	
C6	Electrolytic	100	16V	CEA 101P 16	

RESISTORS

Symbol	Description			Part No.	
R1	Carbon film	2.7k		RD¼PS 272J	
R2	Carbon film	2.7k		RD¼PS 272J	
R3	Carbon film	2.7k		RD¼PS 272J	
R4	Carbon film	2.7k		RD¼PS 272J	
R5	Carbon film	15k		RD¼PS 153J	
R6	Carbon film	15k		RD¼PS 153J	
R7	Carbon film	15k		RD¼PS 153J	
R8	Carbon film	15k		RD¼PS 153J	
R9	Carbon film	47k		RD¼PS 473J	
R10	Carbon film	47k		RD¼PS 473J	
R11	Carbon film	2.2k		RD¼PS 222J	
R12	Carbon film	2.2k		RD¼PS 222J	
R13	Carbon film	15k		RD¼PS 153J	
R14	Carbon film	15k		RD¼PS 153J	
R15	Carbon film	82		RD¼PS 820J	
R16	Carbon film	82		RD¼PS 820J	
R17	Carbon film	5.6k		RD¼PS 562J	
R18	Carbon film	150k		RD¼PS 154J	
R19	Carbon film	33		RD¼PS 330J	
R20	Carbon film	15k		RD¼PS 153J	
R21	Carbon film	15k		RD¼PS 153J	
R22	Carbon film	150k		RD¼PS 154J	
R23	Carbon film	8.2k		RD¼PS 822J	
R24	Carbon film	15k		RD¼PS 153J	
R25	Carbon film	3.9k		RD¼PS 392J	
R26	Carbon film	68k		RD¼PS 683J	
R27	Carbon film	22		RD¼PS 220J	
R28	Metal oxide	220	1W	RS1P 221J	
R29	Metal oxide	10	2W	RS2P 100J	
R30	Metal oxide	10	2W	RS2P 100J	

SEMICONDUCTORS

Symbol	Description		Part No.	
Q1	Transistor	2SC857K-A		
Q2	Transistor	2SC857K-A		
Q3	Transistor	2SC945-Q or R		
Q4	Transistor	2SC945-Q or R		
Q5	Transistor	2SA733-Q or R		
Q6	Transistor	2SC945-Q or R		
Q7	Transistor	2SC1384-R or Q		
D1	Diode	1S2472		
D2	Diode	1S2472		
D3	Diode	1S2472		
D4	Diode	1S2472		
D5	Diode	1S2472		
D6	Diode	1S2473		
D7	Diode	1S2473		
D8	Diode	1S2473		

12.7 POWER SUPPLY UNIT (AWR-030-0)

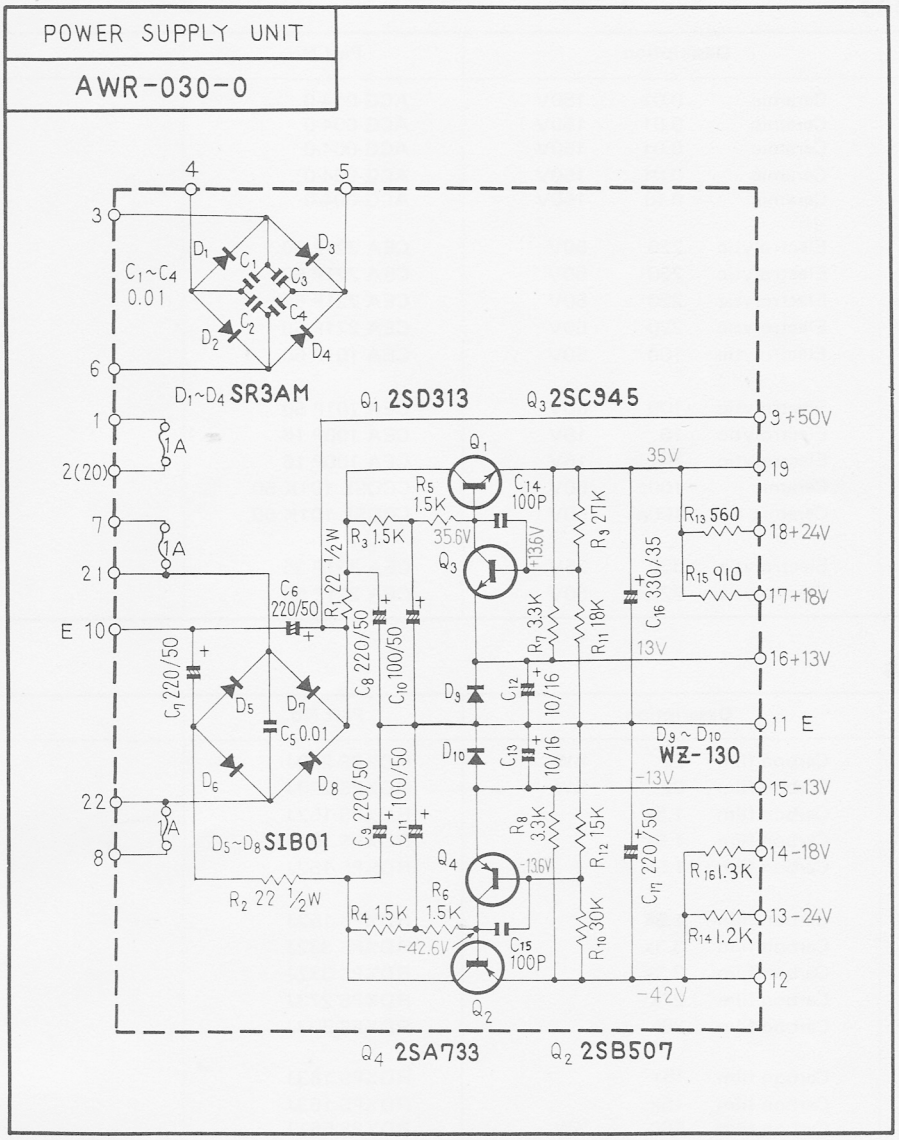

Foil side

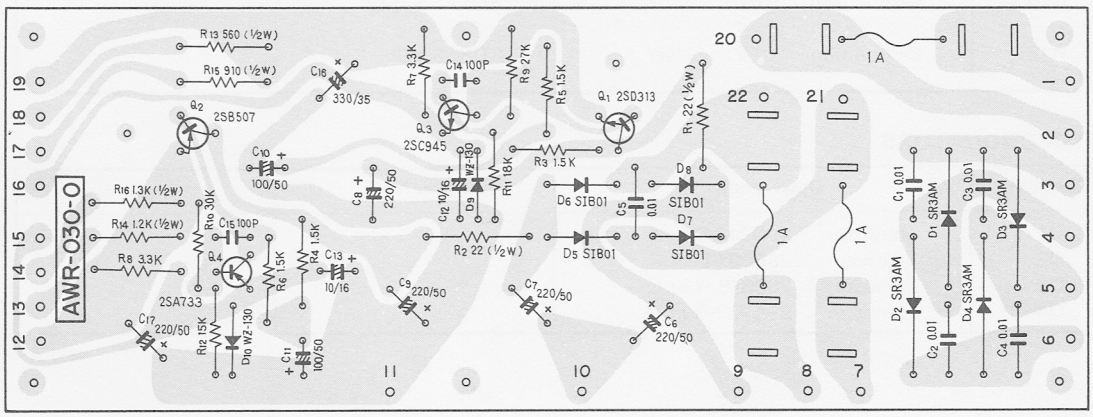

Parts List of Power Supply Unit (AWR-030-0)

CAPACITORS

Symbol	Description			Part No.	
C1	Ceramic	0.01	150V	ACG-004-0	
C2	Ceramic	0.01	150V	ACG-004-0	
C3	Ceramic	0.01	150V	ACG-004-0	
C4	Ceramic	0.01	150V	ACG-004-0	
C5	Ceramic	0.01	150V	ACG-004-0	
C6	Electrolytic	220	50V	CEA 221P 50	
C7	Electrolytic	220	50V	CEA 221P 50	
C8	Electrolytic	220	50V	CEA 221P 50	
C9	Electrolytic	220	50V	CEA 221P 50	
C10	Electrolytic	100	50V	CEA 101P 50	
C11	Electrolytic	100	50V	CEA 101P 50	
C12	Electrolytic	10	16V	CEA 100P 16	
C13	Electrolytic	10	16V	CEA 100P 16	
C14	Ceramic	100p	50V	CCDSL 101K 50	
C15	Ceramic	100p	50V	CCDSL 101K 50	
C16	Electrolytic	330	35V	CEA 331P 35	
C17	Electrolytic	220	50V	CEA 221P 50	

RESISTORS

Symbol	Description			Part No.	
R1	Carbon film	22	½W	RD½PS 220J	
R2	Carbon film	22	½W	RD½PS 220J	
R3	Carbon film	1.5k		RD¼PS 152J	
R4	Carbon film	1.5k		RD¼PS 152J	
R5	Carbon film	1.5k		RD¼PS 152J	
R6	Carbon film	1.5k		RD¼PS 152J	
R7	Carbon film	3.3k		RD¼PS 332J	
R8	Carbon film	3.3k		RD¼PS 332J	
R9	Carbon film	27k		RD¼PS 273J	
R10	Carbon film	30k		RD¼PS 303J	
R11	Carbon film	18k		RD¼PS 183J	
R12	Carbon film	15k		RD¼PS 153J	
R13	Carbon film	560	½W	RD½PS 561J	
R14	Carbon film	1.2k	½W	RD½PS 122J	
R15	Carbon film	910	½W	RD½PS 911J	
R16	Carbon film	1.3k	½W	RD½PS 132J	

SEMICONDUCTORS

Symbol	Description		Part No.	
Q1	Transistor	2SD313-D or E		
Q2	Transistor	2SB507-D or E		
Q3	Transistor	2SC945-R or Q		
Q4	Transistor	2SA733-R or Q		

Symbol	Description	Part No.	
D1	Diode SR3AM-4		
D2	Diode SR3AM-4		
D3	Diode SR3AM-4		
D4	Diode SR3AM-4		
D5	Diode SIBO1-02		
D6	Diode SIBO1-02		
D7	Diode SIBO1-02		
D8	Diode SIBO1-02		
D9	Zener diode WZ-130		
D10	Zener diode WZ-130		

OTHERS

Symbol	Description	Part No.	
	Heat sink (2SD313) (2SB507)	ANH-117-0	
	Fuse holder	K91-006-0	

12.8 SWITCH UNIT · A (AWS-035-0)

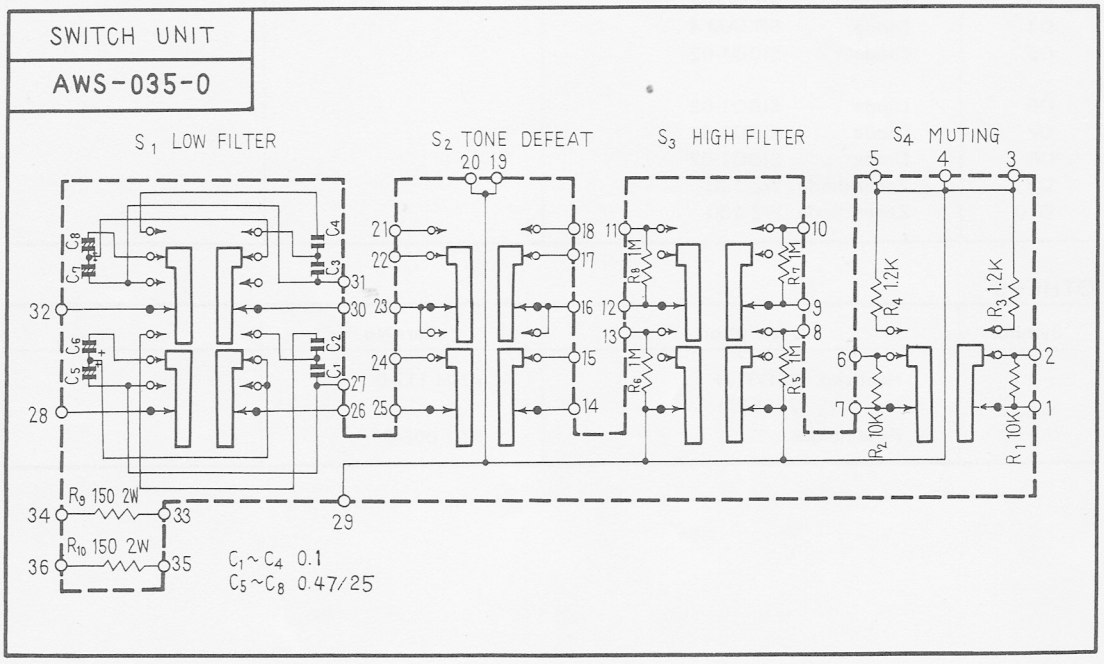

Foil side

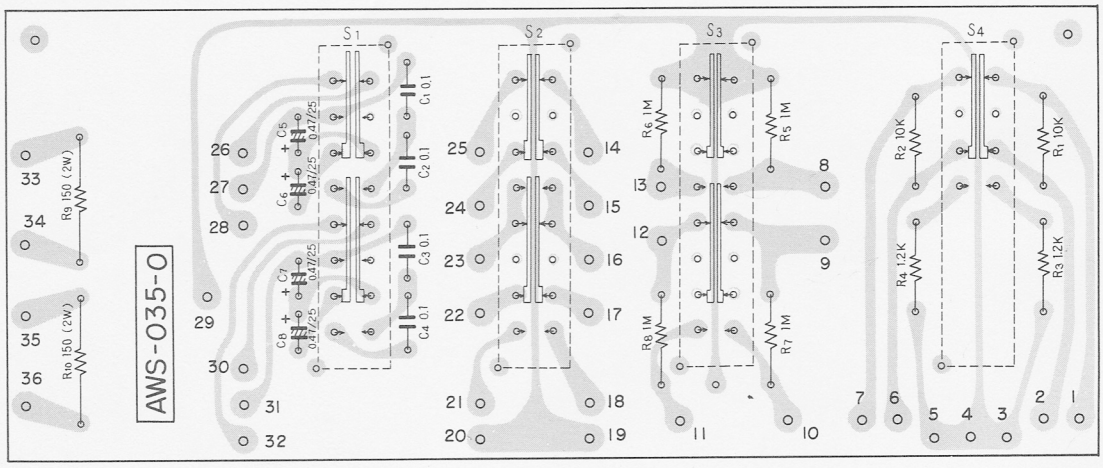

Parts List of Switch Unit · A (AWS-035-0)

CAPACITORS

Symbol	Description			Part No.	
C1	Mylar	0.1	50V	CQMA 104J 50	
C2	Mylar	0.1	50V	CQMA 104J 50	
C3	Mylar	0.1	50V	CQMA 104J 50	
C4	Mylar	0.1	50V	CQMA 104J 50	
C5	Electrolytic	0.47	25V	CSSA R47M 25	
C6	Electrolytic	0.47	25V	CSSA R47M 25	
C7	Electrolytic	0.47	25V	CSSA R47M 25	
C8	Electrolytic	0.47	25V	CSSA R47M 25	

RESISTORS

Symbol	Description			Part No.	
R1	Carbon film	10k		RD¼PS 103J	
R2	Carbon film	10k		RD¼PS 103J	
R3	Carbon film	1.2k		RD¼PS 122J	
R4	Carbon film	1.2k		RD¼PS 122J	
R5	Carbon film	1M		RD¼PS 105J	
R6	Carbon film	1M		RD¼PS 105J	
R7	Carbon film	1M		RD¼PS 105J	
R8	Carbon film	1M		RD¼PS 105J	
R9	Metal oxide	150	2W	RS2P 151K	
R10	Metal oxide	150	2W	RS2P 151K	

SWITCHES

Symbol	Description	Part No.	
S1	Lever switch	ASK-035-0	
S2	Lever switch	ASK-033-0	
S3	Lever switch	ASK-033-0	
S4	Lever switch	ASK-030-0	

12.9 SWITCH UNIT · B (AWS-036-0)

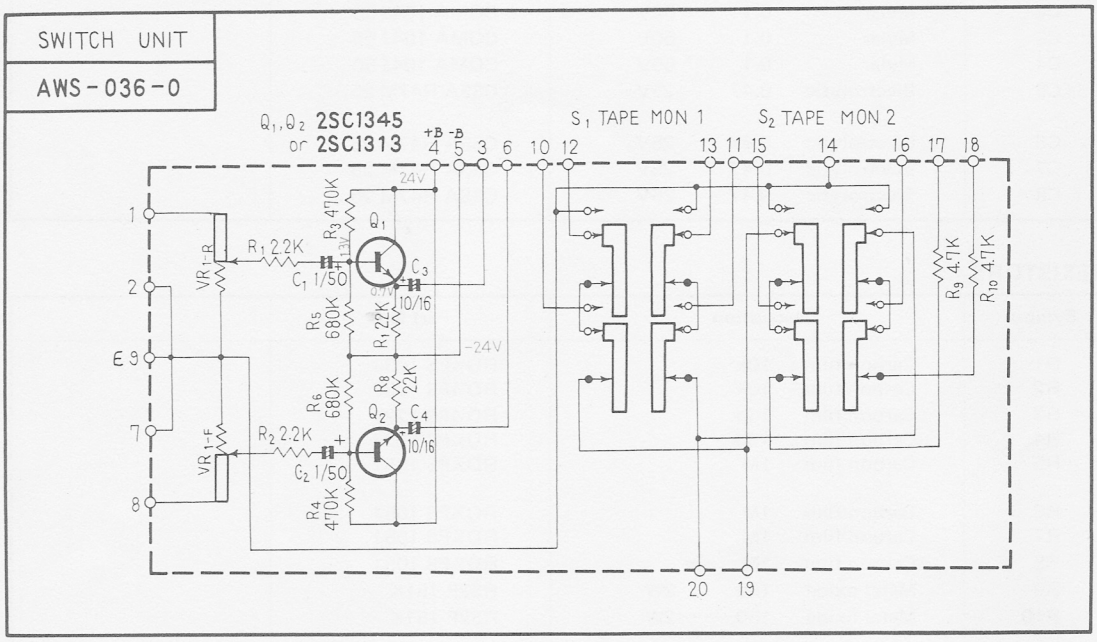

Foil side

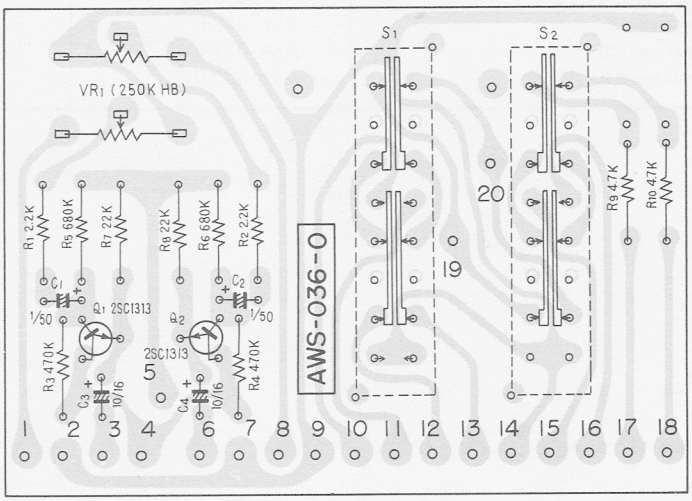

Parts List of Switch Unit · B (AWS-036-0)

CAPACITORS

Symbol	Description			Part No.	
C1	Electrolytic	1	50V	CEA 010P 50	
C2	Electrolytic	1	50V	CEA 010P 50	
C3	Electrolytic	10	16V	CEA 100P 16	
C4	Electrolytic	10	16V	CEA 100P 16	

RESISTORS

Symbol	Description		Part No.	
R1	Carbon film	2.2k	RD¼PS 222J	
R2	Carbon film	2.2k	RD¼PS 222J	
R3	Carbon film	470k	RD¼PS 474J	
R4	Carbon film	470k	RD¼PS 474J	
R5	Carbon film	680k	RD¼PS 684J	
R6	Carbon film	680k	RD¼PS 684J	
R7	Carbon film	22k	RD¼PS 223J	
R8	Carbon film	22k	RD¼PS 223J	
R9	Carbon film	4.7k	RD¼PS 472J	
R10	Carbon film	4.7k	RD¼PS 472J	

POTENTIOMETER

Symbol	Description	Part No.	
VR1	Balance control, 250k(HB)	ACV-111-B	

SEMICONDUCTORS

Symbol	Description		Part No.	
Q1	Transistor	2SC1313-G or F (2SC1345)		
Q2	Transistor	2SC1313-G or F (2SC1345)		

SWITCHES

Symbol	Description	Part No.	
S1	Lever switch	ASK-032-0	
S2	Lever switch	ASK-032-0	

12.10 PUSH SWITCH UNIT (AWS-037-0)

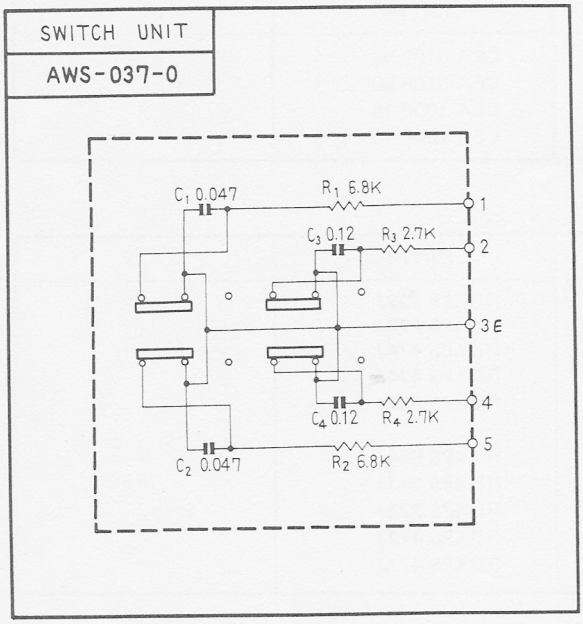

Foil side

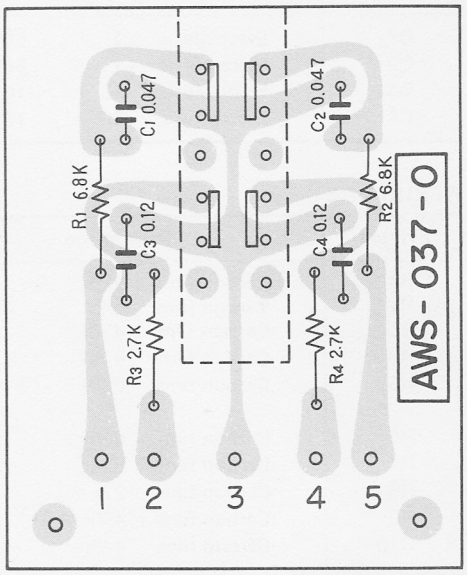

CAPACITORS

Symbol	Description			Part No.	
C1	Mylar	0.047	50V	CQMA 473J 50	
C2	Mylar	0.047	50V	CQMA 473J 50	
C3	Mylar	0.12	50V	CQMA 124J 50	
C4	Mylar	0.12	50V	CQMA 124J 50	

RESISTORS

Symbol	Description		Part No.	
R1	Carbon film	6.8k	RD¼PS 682J	
R2	Carbon film	6.8k	RD¼PS 682J	
R3	Carbon film	2.7k	RD¼PS 272J	
R4	Carbon film	2.7k	RD¼PS 272J	

SWITCH

Symbol	Description	Part No.	
	Push switch (LOUDNESS)	ASG-036-A	

12.11 VOLUME UNIT (AWX-044-0)

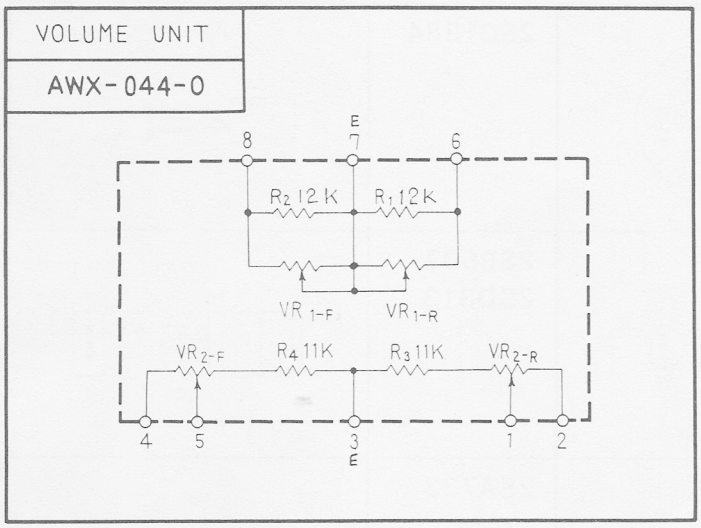

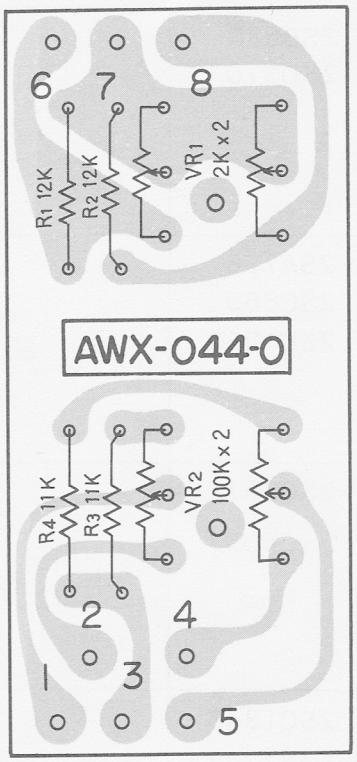

Foil side

RESISTORS

Symbol	Description	Part No.	
R1	Carbon film 12k	RD¼PS 123J	
R2	Carbon film 12k	RD¼PS 123J	
R3	Carbon film 11k	RD¼PS 113J	
R4	Carbon film 11k	RD¼PS 113J	

POTENTIOMETERS

Symbol	Description	Part No.	
VR1	Level control for PHONO 2 2k-B2	ACT-105-A	
VR2	Level control for AUX 2 100k-B2	ACT-104-0	

13. SKELETON APPEARANCES OF TRANSISTORS

2SB530 2SD370	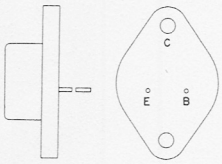	2SC1384	
2SA726 2SC869 2SC1313		2SB507 2SD313	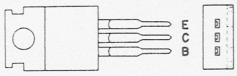
2SC857		2SA733	
2SC1345		2SA628A	
2SC1451	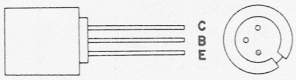	2SB527 2SD357	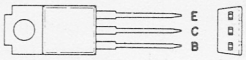
2SC945		2SA774 2SC1478	

PIONEER ELECTRONIC CORPORATION
15-5, 4-Chome, Ohmori-nishi, Ohta-ku, Tokyo, Japan
U.S. PIONEER ELECTRONICS CORPORATION
178 Commerce Road, Carlstadt New Jersey 07072 U.S.A.
PIONEER ELECTRONIC (EUROPE) N.V.
Meir-center, Meir 21, 2000 Antwerp, Belgium

 PRINTED IN JAPAN