Pioneer

Service Manual

ORDER NO.
RRV4229

AUDIO/VIDEO MULTI-CHANNEL RECEIVER

SC-LX85
SC-LX75

THIS MANUAL IS APPLICABLE TO THE FOLLOWING MODEL(S) AND TYPE(S).

Model	Type	Porew Requirement	Remarks
SC-LX85	SYXJ5	AC 220 V to 230 V	
SC-LX75	SYXJ5	AC 220 V to 230 V	

This service manual should be used together with the following manual(s).

Model No.	Order No.	Remarks
SC-57/UXJCB	RRV4195	

For SPECIFICATIONS and PANEL FACILITIES, refer to the operating instructions.

PIONEER CORPORATION 1-1, Shin-ogura, Saiwai-ku, Kawasaki-shi, Kanagawa 212-0031, Japan
PIONEER ELECTRONICS (USA) INC. P.O. Box 1760, Long Beach, CA 90801-1760, U.S.A.
PIONEER EUROPE NV Haven 1087, Keetberglaan 1, 9120 Melsele, Belgium
PIONEER ELECTRONICS ASIACENTRE PTE. LTD. 253 Alexandra Road, #04-01, Singapore 159936

K-ZZZ JULY 2011 Printed in Japan

1. CONTRAST OF MISCELLANEOUS PARTS

NOTES:
- *Parts marked by "NSP" are generally unavailable because they are not in our Master Spare Parts List.*
- *The ⚠ mark found on some component parts indicates the importance of the safety factor of the part. Therefore, when replacing, be sure to use parts of identical designation.*
- *Screws adjacent to ▼ mark on product are used for disassembly.*
- *For the applying amount of lubricants or glue, follow the instructions in this manual. (In the case of no amount instructions, apply as you think it appropriate.)*
- *Nos. indicate the pages and Nos. in the service manual for the base model.*
- *When ordering resistors, first convert resistance values into code form as shown in the following examples.*

Ex.1 When there are 2 effective digits (any digit apart from 0), such as 560 ohm and 47k ohm (tolerance is shown by J=5%, and K=10%).

560Ω → 56 x 10^1 → 561 ..... RD1/4PU561J
47kΩ → 47 x 10^3 → 473 ..... RD1/4PU473J
0.5Ω → R50 ..... RN2HR50K
1Ω → 1R0 ..... RS1P1R0K

Ex.2 When there are 3 effective digits (such as in high precision metal film resistors).

5.62kΩ → 562 x 10^1 → 5621 ..... RN1/4PC5621F

CONTRAST TABLE

SC-57/UXJCB, SC-LX85/SYXJ5 and SC-LX75/SYXJ5 are constructed the same except for the following:

Mark	No.	Symbol and Description	SC-57/UXJCB	SC-LX85/SYXJ5	SC-LX75/SYXJ5	Remarks
		PCB ASSEMBLIES				
	P85-1	1..IR POWER AMP ASSY	AWH7030	AWH7037	AWH7040	
NSP		1..IR BUFFER ASSY	AWM8249	AWM8282	AWM8282	
	P85-2	2..IR BUFFER ASSY	AWX9793	AWX9952	AWX9952	
NSP		1..PRIM DISPLAY ASSY	AWM8250	AWM8262	AWM8262	
	P85-4	2..PRIMARY ASSY	AWX9799	AWX9848	AWX9848	
	P87-1	2..DISPLAY ASSY	AWX9796	AWX9967	AWX9967	
	P87-4	2..MIC HP ASSY	AWX9800	AWX9968	AWX9968	
NSP		1..AUDIO COMPOSITE ASSY	AWR7106	AWR7107	AWR7113	
	P83-2	2..AUDIO ASSY	AWX9790	AWX9831	AWX9834	
	P83-3	2..COMPOSITE ASSY	AWX9791	AWX9791	AWX9836	
NSP		1..INTERFACE REG ASSY	AWR7111	AWR7124	AWR7124	
	P81-3	2..IR REG ASSY	AWX9806	AWX9954	AWX9954	
	P81-4	2..B DIODE ASSY	AWX9808	AWX9958	AWX9958	
	P85-7	2..A REG BRIDGE ASSY	AWX9810	AWX9970	AWX9970	
NSP		1..REG BRIDGE ASSY	AWR7112	AWR7115	AWR7125	
	P81-6	2..DISPLAY BRIDGE ASSY	AWX9815	AWX9956	AWX9956	
	P81-7	2..F-IN BRIDGE ASSY	AWX9816	AWX9965	AWX9965	
	P83-9	2..MCH BRIDGE ASSY	AWX9818	AWX9818	Not used	
	P83-11	2..MULTI CH IN ASSY	AWX9857	AWX9856	Not used	
	P85-8	2..REG ASSY	AWX9813	AWX9955	AWX9955	
	P85-10	2..FB-CONNECT ASSY	AWX9819	AWX9966	AWX9966	
	P87-6	1..FRONT HDMI USB ASSY	AWX9749	AWX9969	AWX9969	
	P83-13	1..DAC HIGH ASSY	AWX9822	AWX9858	AWX9861	
	P83-14	1..DIGITAL MAIN ASSY	AWX9827	AWX9727	AWX9950	
	P83-15	1..COMPONENT ASSY	AWX9866	AWX9951	AWX9867	
		PACKING SECTION				
⚠	P79-2	AC Power Cord	ADG7111	ADG7062	ADG7062	
	P79-6	Packing Case	AHD8722	AHD8723	AHD8730	
	P79-9	Operating Instructions (En)	ARB7459	Not used	Not used	
	P79-12	Operating Instructions (CD-ROM)	ARU7006	ARU7004	ARU7028	
NSP	P79-13	Warranty Card	ARY7007	ARY7128	ARY7128	
	P79-14	Remote Control Unit SEL/MID	AXD7612	Not used	AXD7613	
	P79-14	RF Remote Control Unit	Not used	AXD7580	Not used	

Mark	No.	Symbol and Description	SC-57/UXJCB	SC-LX85/SYXJ5	SC-LX75/SYXJ5	Remarks
	P79-15	Battery Door	AZN8047	Not used	AZN8047	
	P79-15	Battery Cover	Not used	AZN8049	Not used	
NSP	P79-17	Dry Cell Battery (R3)	VEM1051	Not used	VEM1051	
NSP	P79-17	Dry Cell Battery (LR6)	Not used	VEM1053	Not used	
		Operating Instructions	Not used	ARH7107	ARH7107	
		Operating Instructions	Not used	ARH7108	ARH7108	
		Operating Instructions	Not used	ARH7109	ARH7109	
NSP		Label (WEEE)	Not used	ARW7322	Not used	
NSP		Name Label AD(EL)	Not used	AAL7447	Not used	
NSP		Name Label RC(EL)	Not used	AAL7446	Not used	
		IR Bluster Cable	Not used	ADF7007	Not used	
		RF Receiver Box	Not used	AXX7272	Not used	
		RF Remote Caution	Not used	ARM7131	Not used	
		Manual Assy	Not used	AXX7286	AXX7286	
		Wifi Cable (service)	Not used	ADE7138	ADE7138	
NSP		Wifi Converter E	Not used	••••••	••••••	
		EXTERIOR SECTION				
	P81-9	Power Transformer (T1501)	ATS7447	ATS7448	ATS7439	
⚠	P81-10	Fuse (FU13, FU14 : 1 A)	REK1142	Not used	Not used	
⚠	P81-10	Fuse (FU13, FU14 : T800mA)	Not used	AEK7072	AEK7072	
⚠	P81-11	Fuse (FU11, FU12, FU15 : 1.25 A)	REK1143	Not used	Not used	
⚠	P81-11	Fuse (FU11, FU12, FU15 : T1 A)	Not used	AEK7073	AEK7073	
⚠	P81-12	Fuse (FU10 : 4 A)	REK1149	Not used	Not used	
⚠	P81-12	Fuse (FU10 : T3.15 A)	Not used	AEK1059	AEK1059	
	P81-24	Insulator	AMR7198	DXA1904	DXA1904	
		REAR SECTION				
	P83-16	AM/FM Tuner Unit	AXX7282	AXX7283	AXX7283	
	P83-23	Rear Panel	ANC8599	ANC8600	ANC8607	
	P83-25	D. Main Shield 85 (MTL)	ANK7162	ANK7162	Not used	
NSP	P83-26	PC Support	VEC1749	VEC1749	Not used	
	P83-36	Nylon Rivet	AEC7406	AEC7406	Not used	
		CHASSIS SECTION				
⚠	P85-13	Fuse (FU4 : 2 A)	REK1139	Not used	Not used	
⚠	P85-13	Fuse (FU4 : T4 A)	Not used	REK1104	REK1104	
⚠	P85-14	Fuse (FU21, FU22, FU31, FU32 : 1.25A)	REK1143	Not used	Not used	
⚠	P85-14	Fuse (FU21, FU22 : T800 mA)	Not used	AEK7072	AEK7072	
⚠	P85-14	Fuse (FU31, FU32 : T1 A)	Not used	AEK7073	AEK7073	
⚠	P85-15	Fuse (FU1 : 10 A)	REK1154	Not used	Not used	
⚠	P85-15	Fuse (FU1 : T5 A)	Not used	AEK1061	AEK1061	
		FRONT SECTION				
	P87-13	Filter	AAK8443	AAK8459	AAK8459	
	P87-14	Display Panel	AAK8567	AAK8568	AAK8568	
NSP	P87-23	Panel Base	AMB8041	AMB8042	AMB8042	
	P87-26	Door Panel	ANB7562	ANB7563	ANB7563	
	P87-27	Front Panel (AL)	ANB7565	ANB7566	ANB7570	
	P87-29	PIONEER Badge (AL)	VAM1159	VAM1158	VAM1158	

Notes : For PCB ASSEMBLIES, Refer to “CONTRAST OF PCB ASSEMBLIES”.
When a Wifi converter is defective, please replace with a product stock of AS-WL300.
When a Wifi cable is defective or broken, please replace to ADE7138 which has clamp filter attached for this model.

CONTRAST OF PCB ASSEMBLIES

A F AUDIO ASSY

AWX9790, AWX9831 and AWX9834 are constructed the same except for the following:

Mark	Symbol and Description	AWX9790	AWX9831	AWX9834	Remarks
	JA2502, JA3202 2P PIN JACK	AKB7234	AKB7234	AKB7233	
	CN2510 18P SOCKET	AKP7123	AKP7123	Not used	
	JA2501, JA2503, JA2504, JA2951	AKB7218	AKB7218	XKB3017	
	JA3101 PIN JACK(4P)	AKB7218	AKB7218	XKB3017	
	JA3102 RCA JACK	AKB7237	AKB7237	AKB7236	
	JA3201 PIN JACK(6P)	AKB7221	AKB7221	XKB3037	
	R2663, R2664	RS1/10SR331J	RS1/10SR561J	RS1/10SR561J	
	R3030, R3034	Not used	RS1/10SR472J	RS1/10SR472J	
	R3032	RS1/8SQ562J	RS1/8SQ182J	RS1/8SQ182J	
	R3951-R3958	Not used	Not used	RS1/10SR473J	
	C2501-C2504, C2521-C2524	Not used	CCSRCH101J50	CCSRCH101J50	
	C2541-C2544, C2561, C2562	Not used	CCSRCH101J50	CCSRCH101J50	
	C2583, C2584, C2603, C2604	Not used	CCSRCH101J50	CCSRCH101J50	
	C3113, C3114, C3163, C3164	Not used	CCSRCH101J50	CCSRCH101J50	
	C3213, C3214, C3263, C3264	Not used	CCSRCH101J50	CCSRCH101J50	
	C3283, C3284, C3922, C3923	Not used	CCSRCH101J50	CCSRCH101J50	
	C3945	Not used	CCSRCH101J50	CCSRCH101J50	
	C2563, C2564	Not used	CCSRCH220J50	CCSRCH220J50	
	C2661, C2662	Not used	CCSRCH221J50	CCSRCH221J50	
	C2665, C2666, C3111, C3112	Not used	CCSRCH331J50	CCSRCH331J50	
	C3161, C3162, C3211, C3212	Not used	CCSRCH331J50	CCSRCH331J50	
	C3261, C3262, C3281, C3282	Not used	CCSRCH331J50	CCSRCH331J50	
	C3924, C3925, C3944	Not used	CCSRCH331J50	CCSRCH331J50	
	C2951, C2952, C2971, C2972	Not used	CCSRCH471J50	CCSRCH471J50	
	C2667, C2668	Not used	CCSRCH561J50	CCSRCH561J50	
	C3011, C3012	CCSRCH331J50	Not used	Not used	

The mounting positions of the additional parts are described in the circuit diagram and PCB diagram of the parent manual.

B F DAC HIGH ASSY

AWX9822, AWX9858 and AWX9861 are constructed the same except for the following:

Mark	Symbol and Description	AWX9822	AWX9858	AWX9861	Remarks
	D2130	1SS302	Not used	Not used	
	JA2008 RCA JACK	AKB7235	AKB7235	AKB7173	
	JA2101 8P MINI DIN SOCKET	BKP1127	Not used	Not used	
	R2002, R2004	RS1/10SR220J	RS1/10SR270J	RS1/10SR270J	
	R2133, R2134	Not used	RS1/10SR0R0J	RS1/10SR0R0J	
	R2135	RS1/10SR0R0J	Not used	Not used	
	R2140, R2141	RS1/10SR474J	Not used	Not used	
	R2142, R2143	RS1/10SR331J	Not used	Not used	
	R2144, R2145, R2231-R2233	Not used	RS1/10SR0R0J	RS1/10SR0R0J	
	R2491	RS1/8SQ105J	RS1/8SQ222J	RS1/8SQ222J	
	R2492	RS1/8SQ474J	RS1/8SQ105J	RS1/8SQ105J	
	C2124, C2126	CKSRYB103K50	Not used	Not used	
	C2127, C2128	CEAT220M50	Not used	Not used	

The mounting positions of the additional parts are described in the circuit diagram and PCB diagram of the parent manual.

C F FRONT HDMI USB ASSY

AWX9749 and AWX9969 are constructed the same except for the following:

Mark	Symbol and Description	AWX9749	AWX9969	Remarks
	C8043, C8108	CKSSYB102K50	CCSSCH102J50	

EF MULTI CH IN ASSY

AWX9857 and AWX9856 are constructed the same except for the following:

Mark	Symbol and Description	AWX9857	AWX9856	Remarks
	C7761-C7764, C7767-C7770	Not used	CCSRCH101J50	
	C7773-C7776, C7779-C7782	Not used	CCSRCH101J50	

The mounting positions of the additional parts are described in the circuit diagram and PCB diagram of the parent manual.

FF DIGITAL MAIN ASSY

AWX9827, AWX9727 and AWX9950 are constructed the same except for the following:

Mark	Symbol and Description	AWX9827	AWX9727	AWX9950	Remarks
	R610, R618	Not used	RS1/8SQ105J	RS1/8SQ105J	
	R9513	RS1/16SS100J	RS1/16SS0R0J	RS1/16SS100J	
	R9518	RS1/16SS82R0D	RS1/16SS82R0D	RS1/16SS1501D	
	R9519	RS1/16SS331J	RS1/16SS331J	RS1/16SS152J	
	R9520	RS1/16SS7501D	RS1/16SS7501D	RS1/16SS3302D	
	R9521	RS1/16SS622J	RS1/16SS622J	RS1/16SS163J	
	R9522	RS1/16SS3301D	RS1/16SS3301D	RS1/16SS1502D	
	R9531	RS1/16SS3302D	RS1/16SS9101D	RS1/16SS3302D	
	R9532	RS1/16SS123J	RS1/16SS562J	RS1/16SS123J	
	R9533	RS1/16SS2402D	RS1/16SS6801D	RS1/16SS2402D	
	R9534	RS1/16SS2401D	RS1/16SS4700D	RS1/16SS2401D	
	R9535	RS1/16SS112J	RS1/16SS301J	RS1/16SS112J	
	R9536, R9540, R9542, R9543	RS1/8SQ0R0J	Not used	RS1/8SQ0R0J	
	R9555, R9564	RS1/8SQ0R0J	Not used	RS1/8SQ0R0J	
	C9577	Not used	ACH7309	Not used	
	C9578	Not used	ACH7314	Not used	
	C140, C995, C1355	VCH1277	VCH1277	CEVW221M4	
	C197	Not used	CCSSCH101J50	CCSSCH101J50	
	C203, C428, C447	CKSSYB104K16	CCSSCH331J50	CCSSCH331J50	
	C619, C650	CCSSCH102J50	CCSSCH101J50	CCSSCH101J50	
	C996, C1672, C1673	ACH7306	ACH7306	Not used	
	C1008	CCSSCH471J50	CCSSCH101J50	CCSSCH101J50	
	C1770, C1847	CEVW101M16	CEVW101M16	Not used	
	C9056, C9072	CCSSCH471J50	CCSSCH101J50	CCSSCH101J50	
	C9314	CKSSYB104K16	CCSSCH180J50	CCSSCH180J50	
	C9322	Not used	CCSSCH220J50	CCSSCH220J50	
	C9547	CKSSYB682K25	CKSSYB682K25	CCSSCH102J50	
	C9553	CKSSYB472K50	CKSSYB472K50	CCSSCH102J50	
	C9565	CKSSYB152K50	CKSSYB472K50	CKSSYB152K50	
	C9570	CCSSCH102J50	CKSSYB682K25	CCSSCH102J50	
	C9588, C9608	CFHXSQ103J16	CFHXSQ103J16	Not used	
	C9593	ACH7306	ACH7306	Not used	
	C9621	CCSSCH101J50	CKSSYB104K16	CCSSCH101J50	
	C9742	CCSSCH221J50	CCSSCH101J50	CCSSCH101J50	
	C9751	CCSSCH471J50	CCSSCH101J50	CCSSCH101J50	
	C9757	CKSSYB104K16	CCSSCH101J50	CCSSCH101J50	
	C1836	CEVW470M16	CEVW470M16	Not used	
	C156	VCH1268	VCH1268	CEVW101M4	
	C1031, C9004, C9702	VCH1234	VCH1234	CEVW101M16	
	C9537	VCH1234	VCH1234	Not used	

The mounting positions of the additional parts are described in the circuit diagram and PCB diagram of the parent manual.

H F COMPONENT ASSY

AWX9866, AWX9951 and AWX9867 are constructed the same except for the following:

Mark	Symbol and Description	AWX9866	AWX9951	AWX9867	Remarks
	JA8301 6P PIN JACK AU	AKB7225	AKB7225	AKB7224	
	JA8302, JA8304 3P PIN JACK AU	AKB7228	AKB7228	AKB7227	
	JA8305 3P PIN JACK AU	AKB7228	AKB7228	Not used	
	R8316, R8318, R8320	RS1/10SR68R0F	RS1/10SR68R0F	Not used	
	R8317, R8319, R8321	RS1/10SR3R9J	RS1/10SR3R9J	Not used	
	R8361, R8362	RS1/10SR0R0J	RS1/10SR100J	RS1/10SR100J	
	C8394	CCSRCH470J50	CCSRCH470J50	Not used	

I F COMPOSITE ASSY

AWX9791 and AWX9836 are constructed the same except for the following:

Mark	Symbol and Description	AWX9791	AWX9836	Remarks
	JA3601-JA3603 2P PIN JACK	AKB7230	AKB7229	
	JA3604, JA3605 1P PIN JACK	AKB7232	AKB7231	
	R3616	RS1/10SR68R0D	RS1/10SR68R0F	
	C3608, C3610	CKSRYB104K16	CKSRYB104K50	

J F MIC HP ASSY

AWX9800 and AWX9968 are constructed the same except for the following:

Mark	Symbol and Description	AWX9800	AWX9968	Remarks
	C3473	CKSRYB471K50	CCSRCH471J50	
	C3490	CKSRYB102K50	CCSRCH102J50	

K F DISPLAY ASSY

AWX9796 and AWX9967 are constructed the same except for the following:

Mark	Symbol and Description	AWX9796	AWX9967	Remarks
	C3006, C3302	CKSRYB471K50	CCSRCH471J50	
	C3102, C3201, C3306	CKSRYB102K50	CCSRCH102J50	
	C3104	CKSRYB102K50	CCSRCH330J50	

O F IR BUFFER ASSY

AWX9793 and AWX9952 are constructed the same except for the following:

Mark	Symbol and Description	AWX9793	AWX9952	Remarks
	R6857	RS1/8SQ225J	RS1/8SQ224J	

R F IR POWER AMP ASSY

AWH7030, AWH7037 and AWH7040 are constructed the same except for the following:

Mark	Symbol and Description	AWH7030	AWH7037	AWH7040	Remarks
	IC4004	TC74VHC08FK	TC74VHCT08AFKS1	TC74VHCT08AFKS1	
	IC4905	TC7SH08FUS1	TC7SET08FUS1	TC7SET08FUS1	
	IC5101	UPC4570G2-A	Not used	Not used	
	Q4121, Q4221, Q4721	2SC2713	Not used	Not used	
	Q4111, Q4211, Q4311, Q4411	LSA1576UB	LTA114TUB	LTA114TUB	
	Q4511, Q4611, Q4711, Q4811	LSA1576UB	LTA114TUB	LTA114TUB	
	Q4911	LSA1576UB	LTA114TUB	LTA114TUB	
	Q4122, Q4222, Q4722	LSA1576UB	Not used	Not used	
	Q4023, Q4025	LSC4081UB	DTC623TU	DTC623TU	
	Q5101	LSC4081UB	Not used	Not used	
	Q4105, Q4106, Q4205, Q4206	LTC124EUB	DTC115EUA	DTC115EUA	
	Q4305, Q4306, Q4405, Q4406	LTC124EUB	DTC115EUA	DTC115EUA	
	Q4505, Q4506, Q4605, Q4606	LTC124EUB	DTC115EUA	DTC115EUA	
	Q4705, Q4706, Q4805, Q4806	LTC124EUB	DTC115EUA	DTC115EUA	

Mark	Symbol and Description	AWH7030	AWH7037	AWH7040	Remarks
	Q4905, Q4906	LTC124EUB	DTC115EUA	DTC115EUA	
	D4116, D4216, D4316, D4416	RB161VA-20	RB500V-40	RB500V-40	
	D4516, D4616, D4716, D4816	RB161VA-20	RB500V-40	RB500V-40	
	D4916	RB161VA-20	RB500V-40	RB500V-40	
	D4005	1SS352	1SS355	1SS355	
	D4103, D4120, D4203, D4220	1SS302	Not used	Not used	
	D4111, D4211, D4311, D4411	1SS302	DAN217U	DAN217U	
	D4511, D4611, D4711, D4811	1SS302	DAN217U	DAN217U	
	D4703, D4720	1SS302	Not used	Not used	
	D4911	1SS302	DAN217U	DAN217U	
	D4027, D4028, D4029, D4030	RKZ4.7KG	Not used	Not used	
	D4031	RKZ4.7KG	Not used	Not used	
	L4000	QTL1013	RS1/10SR101J	RS1/10SR101J	
	JA4301, JA4501, JA4901	AKE7149	AKE7147	AKE7143	
	JA5101 SP TERMINAL 4-P(V0)	AKE7149	AKE7147	AKE7143	
	JA4101 SP TERMINAL 6-P(V0)	AKE7150	AKE7148	AKE7144	
	R4176, R4180, R4276, R4280	ACN7195	RS1/4S0R0J	RS1/4S0R0J	
	R4776, R4780	ACN7195	RS1/4S0R0J	RS1/4S0R0J	
	R5034, R5036	Not used	RS1/8SQ0R0J	RS1/8SQ0R0J	
	R4113, R4213, R4713, R5107	RS1/10SR0R0J	Not used	Not used	
	R5108, R5112, R5121, R5130	RS1/10SR0R0J	Not used	Not used	
	R5134, R5136, R5138, R5140	RS1/10SR0R0J	Not used	Not used	
	R5027, R5028, R5031, R5032	RS1/10SR0R0J	RS1/10SR101J	RS1/10SR101J	
	R4005	RS1/10SR0R0J	RS1/10SR103J	RS1/10SR103J	
	R5113, R5114, R5122, R5123	RS1/10SR100J	Not used	Not used	
	R5131, R5132	RS1/10SR100J	Not used	Not used	
	R4275, R4475, R4675, R4775	RS1/10SR100J	RS1/10SR101J	RS1/10SR101J	
	R4875	RS1/10SR100J	RS1/10SR101J	RS1/10SR101J	
	R4144, R4161, R4175, R4244	RS1/10SR101J	Not used	Not used	
	R4261, R4282, R4744, R4761	RS1/10SR101J	Not used	Not used	
	R4793	RS1/10SR101J	Not used	Not used	
	R4185, R4285, R4785, R5141	RS1/10SR103J	Not used	Not used	
	R4071, R4074, R5079	RS1/10SR103J	RS1/10SR104J	RS1/10SR104J	
	R4041, R4045, R4127, R4160	RS1/10SR103J	RS1/10SR473J	RS1/10SR473J	
	R4227, R4260, R4327, R4360	RS1/10SR103J	RS1/10SR473J	RS1/10SR473J	
	R4427, R4460, R4527, R4560	RS1/10SR103J	RS1/10SR473J	RS1/10SR473J	
	R4627, R4660, R4727, R4760	RS1/10SR103J	RS1/10SR473J	RS1/10SR473J	
	R4827, R4860, R4927, R4960	RS1/10SR103J	RS1/10SR473J	RS1/10SR473J	
	R4186, R4190, R4286, R4290	RS1/10SR104J	Not used	Not used	
	R4786, R4790, R5104	RS1/10SR104J	Not used	Not used	
	R5105	RS1/10SR105J	Not used	Not used	
	R4032, R4033, R4040, R4157	RS1/10SR153J	RS1/10SR473J	RS1/10SR473J	
	R4257, R4357, R4457, R4557	RS1/10SR153J	RS1/10SR473J	RS1/10SR473J	
	R4657, R4757, R4857, R4957	RS1/10SR153J	RS1/10SR473J	RS1/10SR473J	
	R4000, R4027, R4078, R4079	RS1/10SR182J	RS1/10SR562J	RS1/10SR562J	
	R4090	RS1/10SR182J	RS1/10SR562J	RS1/10SR562J	
	R4184, R4284, R4784	RS1/10SR183J	Not used	Not used	
	R5115, R5124, R5133	RS1/10SR1R0J	Not used	Not used	
	R5106, R5137, R5142	RS1/10SR223J	Not used	Not used	
	R4042, R4189, R4289	RS1/10SR273J	Not used	Not used	
	R4789	RS1/10SR273J	Not used	Not used	
	R4059	RS1/10SR2R2J	RS1/10SR100J	RS1/10SR100J	
	R5001	RS1/10SR3901F	RS1/10SR1002F	RS1/10SR1002F	
	R4124, R4224, R4324, R4424	RS1/10SR471J	RS1/10SR431J	RS1/10SR431J	
	R4524, R4624, R4724, R4824	RS1/10SR471J	RS1/10SR431J	RS1/10SR431J	
	R4924	RS1/10SR471J	RS1/10SR431J	RS1/10SR431J	

Mark	Symbol and Description	AWH7030	AWH7037	AWH7040	Remarks
	R4096, R4110, R4210, R4310	RS1/10SR472J	RS1/10SR103J	RS1/10SR103J	
	R4410, R4510, R4610, R4710	RS1/10SR472J	RS1/10SR103J	RS1/10SR103J	
	R4810, R4910	RS1/10SR472J	RS1/10SR103J	RS1/10SR103J	
	R5101, R5102	RS1/10SR473J	Not used	Not used	
	R5111, R5120, R5129	RS1/10SR4R7J	Not used	Not used	
	R5000	RS1/10SR5600F	RS1/10SR1501F	RS1/10SR1501F	
	R5103	RS1/10SR682J	Not used	Not used	
	R5135	RS1/10SR821J	Not used	Not used	
	R5035, R5037	RS1/8SQ0R0J	Not used	Not used	
	R5029, R5030	RS1/8SQ0R0J	RS1/8SQ103J	RS1/8SQ103J	
	R5012, R5013, R5020, R5021	RS1/8SQ103J	RS1/8SQ104J	RS1/8SQ104J	
	R5011	RS1/8SQ103J	RS1/8SQ473J	RS1/8SQ473J	
	R5019	RS1/8SQ104J	RS1/8SQ224J	RS1/8SQ224J	
	R5018	RS1/8SQ104J	RS1/8SQ474J	RS1/8SQ474J	
	R5083-R5087	RS1/8SQ105J	Not used	Not used	
	R5014, R5022	RS1/8SQ223J	RS1/8SQ683J	RS1/8SQ683J	
	R5016, R5024	RS1/8SQ473J	RS1/8SQ104J	RS1/8SQ104J	
	C4186, C4286, C4786	CCSRCH100D50	Not used	Not used	
	C4012	CCSRCH331J50	CCSRCH221J50	CCSRCH221J50	
	C4045, C4049, C5001-C5005	CCSRCH331J50	Not used	Not used	
	C4184, C4284, C4784	CCSRCH471J50	Not used	Not used	
	C4121, C4122, C4221, C4222	CFHXSQ103J16	CFHXSQ472J16	CFHXSQ472J16	
	C4321, C4322, C4421, C4422	CFHXSQ103J16	CFHXSQ472J16	CFHXSQ472J16	
	C4521, C4522, C4621, C4622	CFHXSQ103J16	CFHXSQ472J16	CFHXSQ472J16	
	C4721, C4722, C4821, C4822	CFHXSQ103J16	CFHXSQ472J16	CFHXSQ472J16	
	C4921, C4922	CFHXSQ103J16	CFHXSQ472J16	CFHXSQ472J16	
	C5102, C5103	CFHXSQ103J16	Not used	Not used	
	C4151, C4251, C4351, C4451	CKSRYB103K50	Not used	Not used	
	C4551, C4651, C4751, C4851	CKSRYB103K50	Not used	Not used	
	C4951	CKSRYB103K50	Not used	Not used	
	C4258, C4458, C4658, C4758	CKSRYB104K50	CKSRYB103K50	CKSRYB103K50	
	C4858	CKSRYB104K50	CKSRYB103K50	CKSRYB103K50	
	C4006, C4124, C4152, C4153	CKSRYB104K50	Not used	Not used	
	C4224, C4252, C4253, C4324	CKSRYB104K50	Not used	Not used	
	C4352, C4353, C4424, C4452	CKSRYB104K50	Not used	Not used	
	C4453, C4524, C4552, C4553	CKSRYB104K50	Not used	Not used	
	C4624, C4652, C4653, C4724	CKSRYB104K50	Not used	Not used	
	C4752, C4753, C4824, C4852	CKSRYB104K50	Not used	Not used	
	C4853, C4924, C4952, C4953	CKSRYB104K50	Not used	Not used	
	C5101	CKSRYB104K50	Not used	Not used	
	C5106	CKSRYB224K25	Not used	Not used	
	C4083, C4084	Not used	ACE7082	ACE7082	

The mounting positions of the additional parts are described in the circuit diagram and PCB diagram of the parent manual.

SF PRIMARY ASSY

AWX9799 and AWX9848 are constructed the same except for the following:

Mark	Symbol and Description	AWX9799	AWX9848	Remarks
	L1 LINE FILTER	ATF7046	ATF7050	
	CN81 CONNECTOR	B2P3-VH	Not used	
	CN82 CONNECTOR(VH)	Not used	B3P5-VH	
	VA1 VARISTOR	Not used	TND10V-511KB00AAA0	
	C81	ACE7013	Not used	

The mounting positions of the additional parts are described in the circuit diagram and PCB diagram of the parent manual.

U F REG ASSY

Although AWX9813 and AWX9955 are different in part number, they consist of the same service components.

V F IR REG ASSY

AWX9806 and AWX9954 are constructed the same except for the following:

Mark	Symbol and Description	AWX9806	AWX9954	Remarks
	R7258	RS1/4SA822J	RS1/4SA105J	

W F B DIODE ASSY

AWX9808 and AWX9958 are constructed the same except for the following:

Mark	Symbol and Description	AWX9808	AWX9958	Remarks
	R7400 R7401	RS1/4SA823J RS1/4SA823J	RS1/4SA913J RS1/4SA683J	

Y F FB-CONNECT ASSY

AWX9819 and AWX9966 are constructed the same except for the following:

Mark	Symbol and Description	AWX9819	AWX9966	Remarks
	C7693, C7696 C7694, C7697	CCSRCH270J50 CCSRCH331J50	Not used Not used	

AE F DISPLAY BRIDGE ASSY

AWX9815 and AWX9956 are constructed the same except for the following:

Mark	Symbol and Description	AWX9815	AWX9956	Remarks
	C7654 C7901, C7905	Not used Not used	CCSRCH101J50 CCSRCH100D50	

The mounting positions of the additional parts are described in the circuit diagram and PCB diagram of the parent manual.

AF F F-IN BRIDGE ASSY

AWX9816 and AWX9965 are constructed the same except for the following:

Mark	Symbol and Description	AWX9816	AWX9965	Remarks
	R7161 R7669 C7168 C7171	RS1/10SR0R0J Not used Not used Not used	RS1/10SR100J RS1/10SR105J CCSRCH101J50 CCSRCH330J50	

The mounting positions of the additional parts are described in the circuit diagram and PCB diagram of the parent manual.

AH F A REG BRIDGE ASSY

AWX9810 and AWX9970 are constructed the same except for the following:

Mark	Symbol and Description	AWX9810	AWX9970	Remarks
	R5777, R5780	Not used	RS1/10SR472J	

The mounting positions of the additional parts are described in the circuit diagram and PCB diagram of the parent manual.

Pioneer

Service Manual

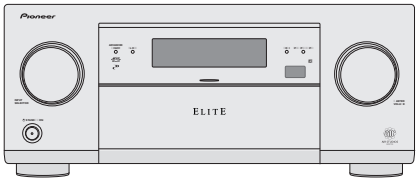

SC-57

OR R O.
RRV□□□□

AUDIO□VIDEO □ ULTI□C□ ANNEL RECEIVER

SC□□□
SC□□□
SC□□□□□□

T□ IS □ ANUAL IS APPLICA□ LE TO T□ E □OLLO□ IN□ □ ODEL(S) AND T□ PE(S).

□ □□□□	T□□□	P□□ □□R□□□□□□□ □□□	R□□ □□□□
SC-57	U JCB	AC 120	
SC-55	U JCB	AC 120	
SC-1526-K	CU J	AC 120	

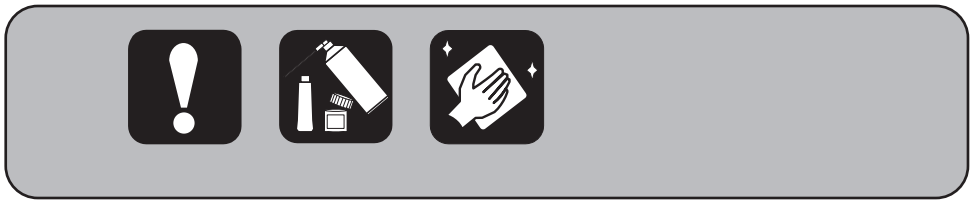

PIONEER CORPORATION 1-1, Shin-ogura, Saiwai-ku, Kawasaki-shi, Kanagawa 212-0031, Japan
PIONEER ELECTRONICS (USA) INC. P.O. Box 1760, Long Beach, CA 90801-1760, U.S.A.
PIONEER EUROPE NV Haven 1087, Keetberglaan 1, 9120 Melsele, Belgium
PIONEER ELECTRONICS ASIACENTRE PTE. LTD. 253 Alexandra Road, #04-01, Singapore 159936

K- AU . 2011 Printed in Japan

SA□ET□ IN□OR□ ATION

A

T□□ □□□□□□ □ □□□□□□ □□□□□□□ □□□ □□□□□□□ □□□□□□ □□□□□□□□□□ □ □□□ □□□ □ □□□□ □□□ □□□ □□□□□□ □□□□□□□□□. □□□□□□□ □□□□□□□□□□ □□□□ □□□ □□□□□□□□□□ □□□□ □□□□□ □□□ □□□ □□□□□□□ □□□□ □□□□ □□□□□□ □□ □□□□□□□□ □□□ □□□□□□ □□□□□□□□ □□□ □□□□□□□□ □□□□ □□ □□□□□ □□□□□□□ □□ □□□□ □ □□□□□.

I□ □□□□□□□□ □□□□□□□ □□ □□□□□□□ □□□ □□□□□□□□□ □□□□□□ □□□ □□□□□□ □□□ □□□□□□□□□□ □□ □□□ □□□□□□□□ □□□ □ □□ □□□□ □□□ □ □□□□□□□□□. **I□** □□□ □□□ □□□ □□□□□□□□□□ □□ □□□□□□□□ □□□ □□□□□□ □□ □□□□ □□□□□□□□ □□□□□□□□□ □□□ □□□□□□□□□ □□□□□□ □□□□□□□ □□□□□□□ □□ □□ □□ □□□ □□□□□□□□□ □□□□□□□□ □ □□□□□□□□□ □□□□□□□□ □□□□□□□□□□□.

□ ARNIN□

T□□ □□□□□□□□□□□□□□□ □□□□ □□ □□□□□□□ □□□□ □□□□□□□ □□□□□□□□□□□□□□□ □□□□□□□ □□□□ □□□□ □ □□□□ □□□ □□□□□ □ □□ □□□ □□□□□ □□ □□ **C**□□□□□□□□□□ □□ □□□□□ □□□□□□□□□□□□□□□ □□□□□□□□□□□□□□□□□□□□□□□□□□□□□□□□□ .

□□□□□ □ **S**□□□□□ **C**□□□ **S**□□□□□ □□□□□.□ □**P**□□□□□□□□□□ □□

B

O C
OR CA A A MO L O L
use s mbols ▬▬▬ ast operating use and or ▬▬▬ slow operating use on PCB indicate that replacement parts must be o identical designation.

R MAR U
POUR MO L CA A S UL M
Les s mboles de usible ▬▬▬ usible de t pe rapide et ou ▬▬▬ usible de t pe lent sur CC indi uent ue les pi ces de remplacement doivent avoir la m me d signation.

C

(□OR USA □ ODEL ONL□)

□. SA□ET□ PRECAUTIONS

he ollowing check should be per ormed or the continued protection o the customer and service technician.

LEA□ A□ E CURRENT C□ EC□

Measure leakage current to a known earth ground water pipe, conduit, etc. b connecting a leakage current tester such as Simpson Model 229-2 or e uivalent between the earth ground and all exposed metal parts o the appliance input output terminals, screwheads, metal overla s, control sha t, etc. . Plug the AC line cord o the appliance directl into a 120 AC 60 H outlet and turn the AC power switch on. An current measured must not exceed 0.5 mA.

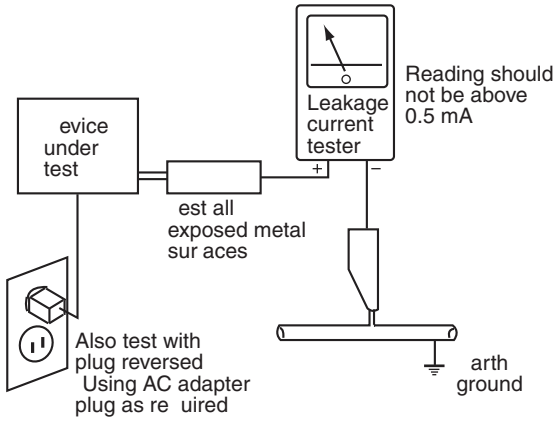

AC Leakage est

AN□ □EASURE□ ENTS NOT □IT□IN T□E LI□ITS OUTLINED A□OVE ARE INDICATIVE O□ A POTENTIAL S□OC□ □A□ARD AND □UST □E CORRECTED □E□ORE RETURNIN□ T□E APPLIANCE TO T□E CUSTO□ER.

□. PRODUCT SA□ET□ NOTICE

Man electrical and mechanical parts in the appliance have special sa et related characteristics. hese are o ten not evident rom visual inspection nor the protection a orded b them necessaril can be obtained b using replacement components rated or voltage, wattage, etc. Replacement parts which have these special sa et characteristics are identi ied in this Service Manual.

lectrical components having such eatures are identi ied b marking with a ⚠ on the schematics and on the parts list in this Service Manual.

he use o a substitute replacement component which does not have the same sa et characteristics as the P O R recommended replacement one, shown in the parts list in this Service Manual, ma create shock, ire, or other ha ards.

Product Sa et is continuousl under review and new instructions are issued rom time to time. or the latest in ormation, alwa s consult the current P O R Service Manual. A subscription to, or additional copies o , P O R Service Manual ma be obtained at a nominal charge rom P O R.

CONTENTS

. SERVICE PRECAUTIONS

. NOTES ON SOLDERIN

or environmental protection, lead- ree solder is used on the printed circuit boards mounted in this unit.
Be sure to use lead- ree solder and a soldering iron that can meet speci ications or use with lead- ree solders or repairs accompanied b reworking o soldering.

Compared with conventional eutectic solders, lead- ree solders have higher melting points, b approximatel 40 C.
here ore, or lead- ree soldering, the tip temperature o a soldering iron must be set to around 373 C in general, although the temperature depends on the heat capacit o the PC board on which reworking is re uired and the weight o the tip o the soldering iron.

o O use a soldering iron whose tip temperature cannot be controlled.

Compared with eutectic solders, lead- ree solders have higher bond strengths but slower wetting times and higher melting temperatures hard to melt eas to harden .

he ollowing lead- ree solders are available as service parts
Parts numbers o lead- ree solder
P1006 1.0 in dia.
P1007 0.6 in dia.
P1008 0.3 in dia.

. NOTES ON REPLACIN

he part listed below is di icult to replace as a discrete component part.
hen the part listed in the table is de ective, replace whole Ass .

ASS NA E	PC ASS P N.	P D R			
		R N.	UNCTION	P N.	R
AL MA ASS	A 9827 SC-57 A 9824 SC-55 SC-1526-K	C101	MA CPU	UP 61283 1-407LU2A	B A
		C903	H M R C R	S 9233AC U	C with heat-pad
		C905	H M S CH	S 9387C U	C with heat-pad
		C1204	AL O ORMA CO R R	88 2750	B A
		C1212 MA	R2-S RAM	H5PS5162 R-S5C-K	B A
		C1212 SUB	R2-S RAM	K4 51163 -HC 7	B A
		JA1501	CO C OR or BLU OO H	CKS5712-A	Land is under parts
		C1602	H M RA SM R	S 9136C U	C with heat-pad
		C1603	H M RA SM R	S 9136C U	C with heat-pad
		C9002	1st SP	810K013B KB400-K	B A
		C9702	2nd SP	810K013B KB400-K	B A
		C9204	M A PROC SSOR	M860	B A
		C9203	LA PH	LA 8700C-A	C with heat-pad
		C9205	LASH ROM	A 7346-A	MAC Address closed-door
		C9510	R ULA OR	JM2846 L3-33	C with heat-pad
		C9509	R ULA OR	MM1701 H	C with heat-pad
R PO R AMP ASS	A H7030 SC-57 A H7039 SC-55 SC-1526-K	4101,4102 4201,4202 4301,4302 4401,4402 4501,4502 4601,4602 4701,4702 4801,4802 4901,4902		R 6775MPB	Land is under parts

. CAUTION

D

Be ore starting the diagnosis, wait or three minutes until the electricit o the unit is discharged.

P

Please re er to page 51, round Points .

□.□ NOTES ON ASSE□ □ LIN□

N□□□ □ he right and le t positions or the attachment positioning o R ampli ier block are gradual, however, ad ust the ront and back positions correctl . or the positioning procedure, re er to 7. SASS MBL .

hen assembling the R ampli ier block, please note the ollowing points o screws to prevent rom short-circuit.

T□□ □□□□□ □□□ □ □□□□□□ □□□□□□□ □ □ □□□□□□ □□□ □□ □□□□ A□ □□□P□□□□TC

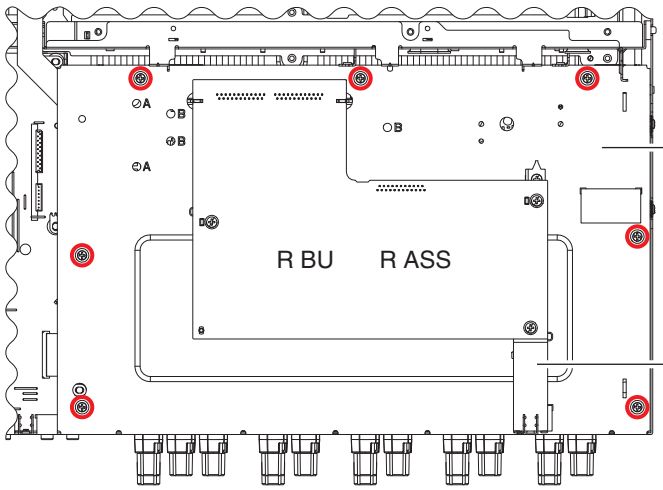

P□□□□ □□ □□ □ □□□□□□ □□□□ □□

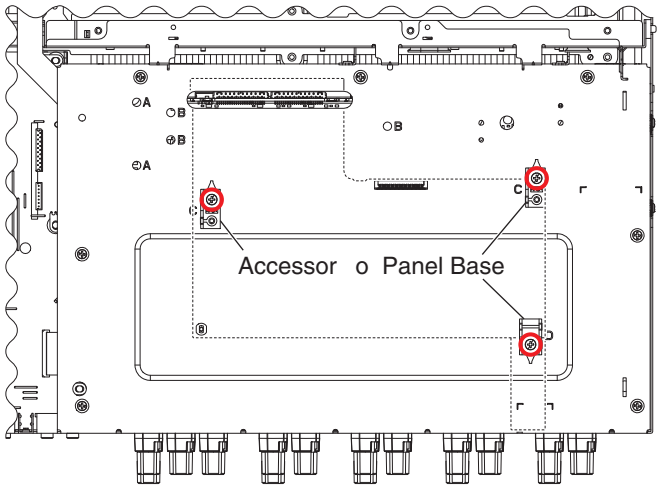

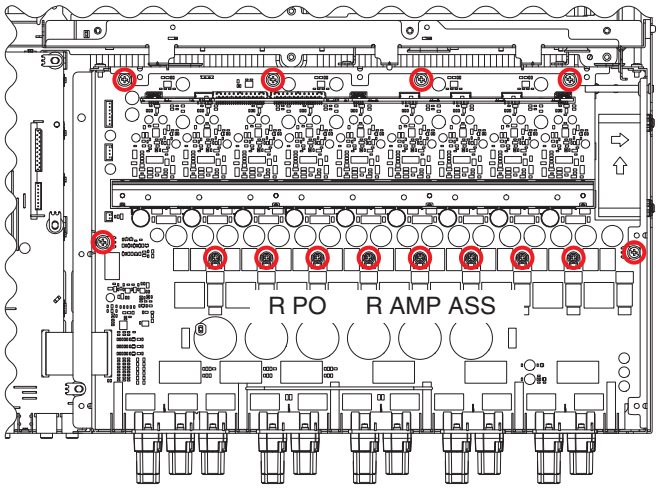

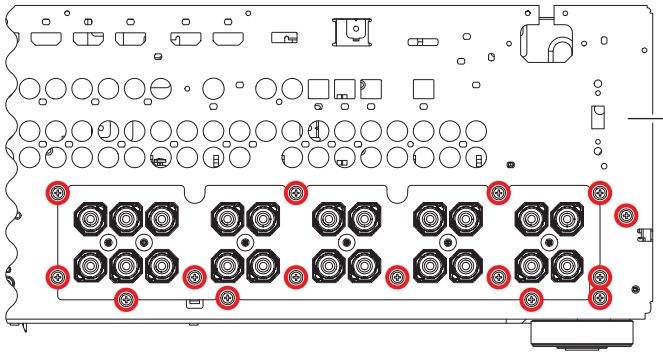

a screw at an o these points needs to be removed or service,
be sure to check that the swar is not on the screw be ore re astening.

7. SPECIFICATIONS

7.1 SC-57/SC-55 SPECIFICATIONS

A[illegible]

C[illegible]

Multi channel simultaneous power output
1 kH , 1 , 8Ω
9 ch total.....810 SC-57 720 SC-55
Continuous Power Output 1 kH , 8Ω, 0.08
ront 140 140
Center..... 140
Surround 140 140
Surround back 140 140
ront height ront wide 140 140
Continuous Power Output 1 kH , 6 , 1.0
ront 180 180
Center..... 180
Surround 180 180
Surround back 180 180
ront height ront wide..... 180 180
otal harmonic distortion 0.04
1 kH , 130 130 , 8Ω
uaranteed speaker impedance..... 6Ω to 16Ω

** Measured pursuant to the Federal Trade Commission's Trade Regulation rule on Power Output Claims for Amplifiers*

*** Measured by Audio Spectrum Analyzer*

A[illegible] S[illegible]

nput Sensitivit mpedance
PHO O MM..... 5 m 47 kΩ
L .....400 m 47 kΩ
Output Level mpedance
R C.....380 m 2.2 kΩ
Signal-to- oise Ratio
H , short circuited, A network
L .....103 dB

T[illegible] S[illegible]

re uenc Range M ..... 87.5 MH to 108 MH
Antenna nput M ..... 75Ω unbalanced
re uenc Range AM ..... 531 kH to 1602 kH
Antenna AM ..... Loop antenna balanced

V[illegible] S[illegible]

Signal level
Composite ideo.....1 p-p 75Ω
Component ideo ..... 1.0 p-p 75Ω ,
PB PR 0.7 p-p 75Ω
Corresponding maximum resolution
Component ideo..... 1080p 1125p
ideo convert o

D[illegible] I/O S[illegible]

H M terminal ..... 19-pin ot
H M output t pe.....5 , 55 mA
USB terminal..... USB2.0 ull Speed pe A
iPod terminal ..... USB,and ideo Composite
S R US antenna cable ..... 8-pin mini cable
A AP R POR terminal.....5 , 100 mA
R L SS LA A AP R terminal
..... 5 , 600 mA

I[illegible] C[illegible] S[illegible]

Control SR terminal ..... 3.5 Mini- ack MO O
Control R terminal ..... 3.5 Mini- ack MO O
R signal..... High Active High Level 2.0
12 rigger terminal ..... 3.5 Mini- ack MO O
12 rigger output t pe..... 12 , otal 150 mA
RS-232C cable t pe.....9-pin, cross t pe,
emale- emale
S O terminal..... 5 , 150 mA

N[illegible] S[illegible]

LA terminal.....10 BAS - 100 BAS -

[illegible]

Power re uirements..... AC 120 , 60 H
Power consumption..... 370
n standb 0.1
H M Setup Control O
0.3 H M Setup Control O
imensions
..... 435 mm x 185.6 mm H x 440.3 mm
17 3 16 in. x 7 5 16 in. H x 17 3 8 in.

eight without package

SC-57..... 17.7 kg 39.0 lb

SC-55..... 17.4 kg 38.4 lb

N□□ □□□□□□□□□□□□□□ P□□□□

MCACC Setup microphone 1

Remote control unit 1

AAA si e C R03 dr cell batteries 2

iPod cable..... 1

AM loop antenna..... 1

M wire antenna..... 1

arrant card..... 1

Power cord

C -ROM A avigator

hese operating instructions

N□□□

- Speci ications and the design are sub ect to possible modi ications without notice, due to improvements.
- his product includes ontAvenue onts licensed b C Corporation. ontAvenue is a registered trademark o C Corporation.

Manufactured under license from Dolby Laboratories. “Dolby”, “Pro Logic”, “Surround EX” and the double-D symbol are trademarks of Dolby Laboratories.

Manufactured under license under U.S. Patent Nos: 5,956,674, 5,974,380, 5,978,762, 6,487,535, 6,226,616, 7,212,872, 7,003,467, 7,272,567, 7,668,723, 7,392,195, 7,333,929, 7,548,853, 7,283,634, 7,853,022 & other U.S. and world - wide patents issued and pending. DTS-HD, the Symbol, & DTS-HD and the Symbol together are registered trademarks & DTS-HD Master Audio is a trademark of DTS, Inc. Product includes soft - ware.© DTS, Inc. All Rights Reserved.

THX, the THX logo Ultra2 Plus and Select2 Plus are trademarks of THX Ltd. which are registered in some jurisdictions. All rights reserved. All other trademarks are the property of their respective owners.

Apple, AirPlay, the AirPlay logo, iPad, iPhone, iPod, iPod shuffle, iPod nano, iPod classic, iPod touch, iTunes and Mac are trademarks of Apple Inc., registered in the U.S. and other countries.

SIRIUS, XM and all related marks and logos are trademarks of Sirius XM Radio Inc. and its subsidiaries. All rights reserved.

[illegible] SC[illegible] SPECI[illegible]ICATIONS

A[illegible]

C[illegible]

Multi channel simultaneous power output
1 kH , 1 , 8 Ω
9 ch total.....720
Continuous Power Output 1 kH , 8 Ω, 0.08
ront 140 140
Center.....140
Surround 140 140
Surround back 140 140
ront height ront wide 140 140
Continuous Power Output 1 kH , 6 Ω, 1.0
ront 180 180
Center.....180
Surround 180 180
Surround back 180 180
ront height ront wide 180 180
otal harmonic distortion ... 0.04 1 kH , 130
130 , 8 Ω
uaranteed speaker impedance ..... 6 Ω to 16 Ω

** Measured pursuant to the Federal Trade Commission's Trade Regulation rule on Power Output Claims for Amplifiers*
*** Measured by Audio Spectrum Analyzer*

A[illegible] S[illegible]

nput Sensitivit mpedance
PHO O MM..... 5 m 47 k Ω
L .....400 m 47 k Ω
Output Level mpedance
R C.....380 m 2.2 k Ω
Signal-to- oise Ratio H , short circuited, A network
L ..... 103 dB

T[illegible] S[illegible]

re uenc Range M ..... 87.5 MH to 108 MH
Antenna nput M ..... 75 Ω unbalanced
re uenc Range AM ..... 531 kH to 1602 kH
Antenna AM ..... Loop antenna balanced

V[illegible] S[illegible]

Signal level
Composite ideo.....1 p-p 75 Ω
Component ideo ..... 1.0 p-p 75 Ω ,
PB PR 0.7 p-p 75 Ω
Corresponding maximum resolution
Component ideo..... 1080p 1125p
ideo convert o

D[illegible] I[illegible]O[illegible] S[illegible]

H M terminal ..... 19-pin ot
H M output t pe..... 5 , 55 mA
USB terminal.....USB2.0 ull Speed pe A
iPod terminal..... USB, and ideo Composite
S R US antenna cable..... 8-pin mini cable
A AP R POR terminal..... 5 , 100 mA
R L SS LA A AP R
terminal ..... 5 , 600 mA

I[illegible] C[illegible] S[illegible]

Control SR terminal ..... 3.5 Mini- ack MO O
Control R terminal ..... 3.5 Mini- ack MO O
R signal..... High Active High Level 2.0
12 rigger terminal..... 3.5 Mini- ack MO O
12 rigger output t pe ..... 12 , otal 150 mA
RS-232C cable t pe ..... 9-pin, cross t pe,
emale- emale
S O terminal .....5 , 150 mA

N[illegible] S[illegible]

LA terminal .....10 BAS - 100 BAS -

[illegible]

Power re uirements..... AC 120 , 60 H
Power consumption..... 370
n standb 0.1
H M Setup Control O
..... 0.3 H M Setup Control O

imensions
..... 435 mm x 185.6 mm H x 440.3 mm
17 3 16 in. x 7 5 16 in. H x 17 3 8 in.
eight without package ..... 17.4 kg 38.4 lb

N□□ □□□□□□□□□□□□□□□□□ P□□□□

MCACC Setup microphone 1
Remote control unit 1
AAA si e C R03 dr cell batteries 2
iPod cable 1
AM loop antenna 1
M wire antenna 1
Power cord
C -ROM A avigator
hese operating instructions

N□□□

- Speci ications and the design are sub ect to possible modi ications without notice, due to improvements.
- his product includes ontAvenue onts licensed b C Corporation. ontAvenue is a registered trademark o C Corporation.

Manufactured under license from Dolby Laboratories. “Dolby”, “Pro Logic”, “Surround EX” and the double-D symbol are trademarks of Dolby Laboratories.

Manufactured under license under U.S. Patent Nos: 5,956,674, 5,974,380, 5,978,762, 6,487,535, 6,226,616, 7,212,872, 7,003,467, 7,272,567, 7,668,723, 7,392,195, 7,333,929, 7,548,853, 7,283,634, 7,853,022 & other U.S. and world - wide patents issued and pending. DTS-HD, the Symbol, & DTS-HD and the Symbol together are registered trademarks & DTS-HD Master Audio is a trademark of DTS, Inc. Product includes soft - ware. © DTS, Inc. All Rights Reserved.

THX, the THX logo and Select2 Plus are trade - marks of THX Ltd. which are registered in some jurisdictions. All rights reserved. All other trade - marks are the property of their respective owners.

Apple, AirPlay, the AirPlay logo, iPad, iPhone, iPod, iPod shuffle, iPod nano, iPod classic, iPod touch, iTunes and Mac are trademarks of Apple Inc., registered in the U.S. and other countries.

SIRIUS, XM and all related marks and logos are trademarks of Sirius XM Radio Inc. and its subsidiaries. All rights reserved.

9. BASIC ITEMS FOR SERVICE

9.1 CHECK POINTS AFTER SERVICING

IMPORTANT CHECK POINTS AFTER SERVICING

o keep the product ualit a ter servicing, con irm recommended check points shown below.

No.	Points	Check Points
1	Con irm whether the customer complain has been solved. the customer complain occurs with the particular source, such as olb igital, S, AAC, -A and H M , input it or the operation check.	he customer complain must not be reappeared. ideo, Audio and operations must be normal.
2	Check the analog audio pla back. Make the analog connections with a pla er.	ach channel audio and operations must be normal.
3	Check the digital audio pla back. Make the digital connections with a pla er.	ach channel audio and operations must be normal.
4	Check surround pla back. Select Surround mode and check the multichannel operations via the SP circuit.	ach channel audio and operations must be normal.
5	Check the video outputs. Connect with a pla er.	ideo and operations must be normal.
6	Check the tuner AM and M operations.	Audio and operations must be normal.
7	Check the sound rom headphone output.	Sound must be normal, without noise.
8	Check the appearance o the product.	o scratches or dirt on its appearance a ter receiving it or service.

See the table below or the items to be checked regarding video and audio.

Image Quality Problems	Image Quality Problems
Block noise	istortion
Hori ontal noise	oise
licker	olume too low
isturbed image video umpiness	olume too high
oo dark	olume luctuating
oo bright	Sound interrupted
Mottled color	

CLEANING

Be ore shipping out the product, be sure to clean the ollowing positions b using the prescribed cleaning tools.

Positions to be cleaned	Name	Part No.	Remarks
ans	Cleaning paper	-008	Re er to 9.4 CHASS S S C O .

□.□ PC□ LOCATIONS

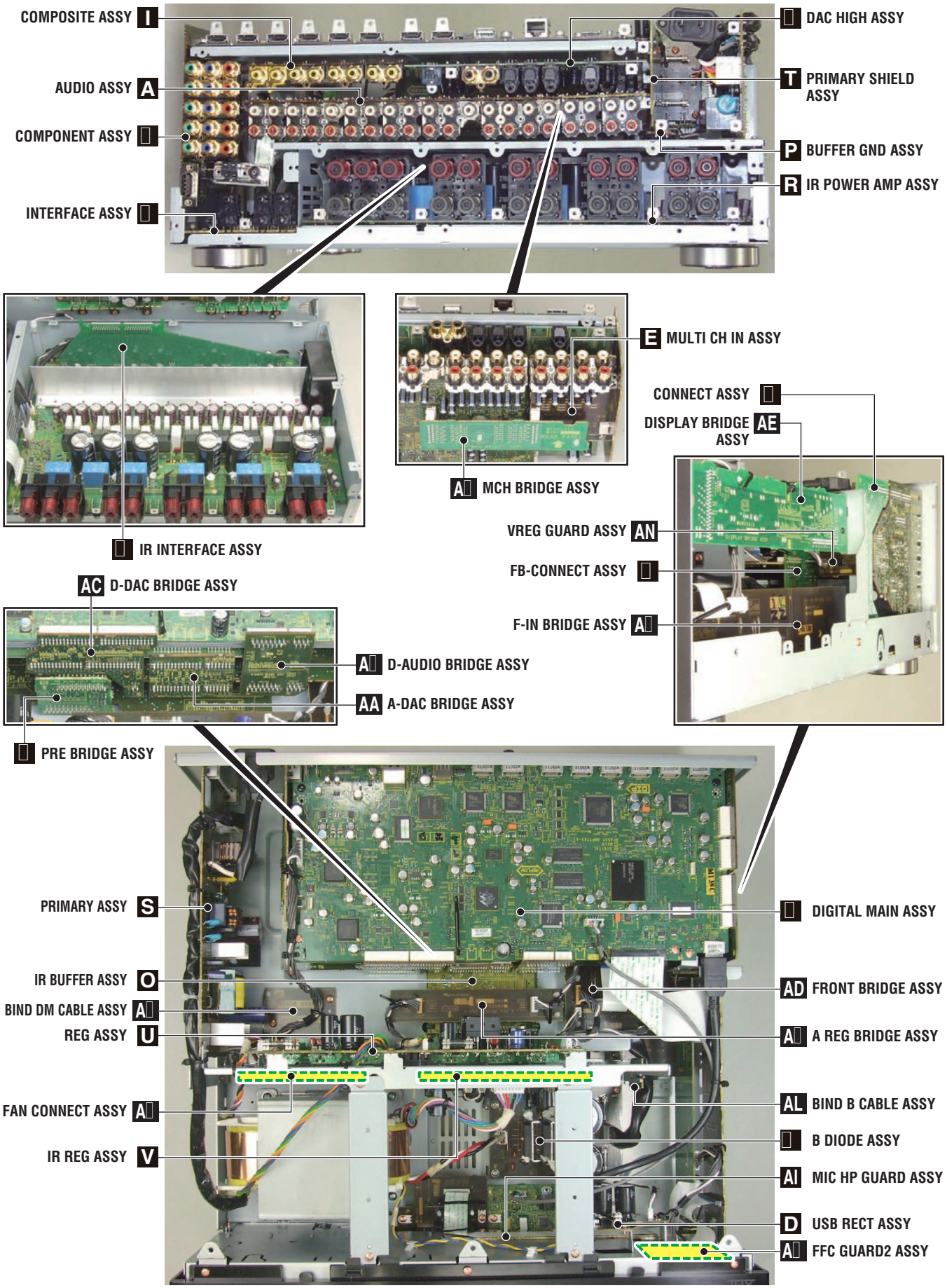

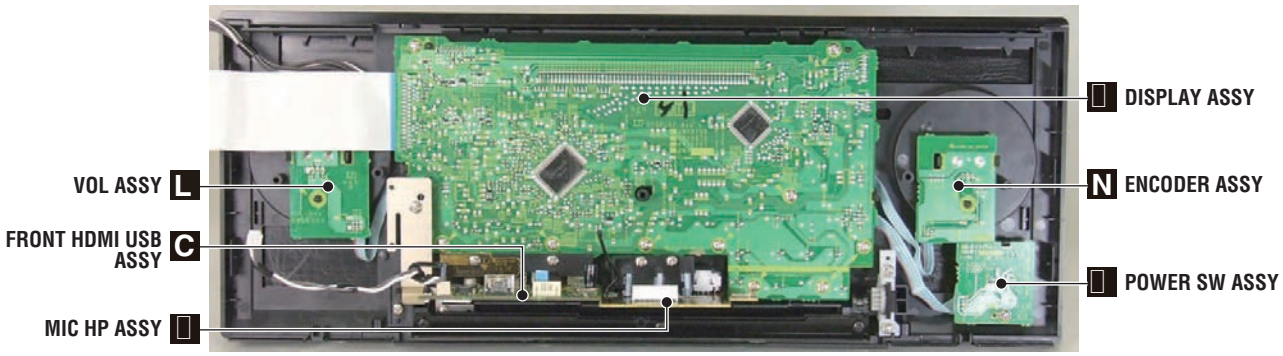

NOTES: ● *Parts marked by "NSP" are generally unavailable because they are not in our Master Spare Parts List.*
● *The ⚠ mark found on some component parts indicates the importance of the safety factor of the part. Therefore, when replacing, be sure to use parts of identical designation.*

LIST OF ASSEMBLIES

	1..IR POWER AMP ASSY(SC-57)	AWH7030
	1..IR POWER AMP ASSY(SC-55/SC-1526-K)	AWH7039
NSP	1..IR BUFFER ASSY	AWM8249
	2..IR BUFFER ASSY	AWX9793
	2..BUFFER GND ASSY	AWX9795
NSP	1..PRIM DISPLAY ASSY(SC-57/SC-55)	AWM8250
	2..DISPLAY ASSY	AWX9796
	2..VOL ASSY	AWX9797
	2..POWER SW ASSY	AWX9798
	2..PRIMARY ASSY	AWX9799
	2..MIC HP ASSY	AWX9800
	2..ENCODER ASSY	AWX9801
	2..MIC HP GUARD ASSY	AWX9803
	2..FAN CONNECT ASSY	AWX9804
	2..BIND DM CABLE ASSY	AWX9863
NSP	1..PRIM DISPLAY ASSY(SC-1526-K)	AWM8267
	2..DISPLAY ASSY	AWX9847
	2..VOL ASSY	AWX9797
	2..POWER SW ASSY	AWX9901
	2..PRIMARY ASSY	AWX9799
	2..MIC HP ASSY	AWX9800
	2..ENCODER ASSY	AWX9801
	2..MIC HP GUARD ASSY	AWX9803
	2..FAN CONNECT ASSY	AWX9804
	2..BIND DM CABLE ASSY	AWX9863
NSP	1..AUDIO COMPOSITE ASSY(SC-57)	AWR7106
	2..D-AUDIO BRIDGE ASSY	AWX9769
	2..D-DAC BRIDGE ASSY	AWX9935
	2..A-DAC BRIDGE ASSY	AWX9936
	2..AUDIO ASSY	AWX9790
	2..COMPOSITE ASSY	AWX9791
NSP	1..AUDIO COMPOSITE ASSY(SC-55/SC-1526-K)	AWR7110
	2..D-AUDIO BRIDGE ASSY	AWX9769
	2..D-DAC BRIDGE ASSY	AWX9935
	2..A-DAC BRIDGE ASSY	AWX9936
	2..AUDIO ASSY	AWX9833
	2..COMPOSITE ASSY	AWX9836
NSP	1..INTERFACE REG ASSY	AWR7111
	2..INTERFACE ASSY	AWX9805
	2..IR REG ASSY	AWX9806
	2..B DIODE ASSY	AWX9808
	2..PRE BRIDGE ASSY	AWX9809
	2..A REG BRIDGE ASSY	AWX9810
	2..PRIMARY SHIELD ASSY	AWX9811
NSP	2..BIND B CABLE ASSY	AWX9807
NSP	2..FFC GUARD 2 ASSY	AWX9812
NSP	1..REG BRIDGE ASSY(SC-57)	AWR7112
	2..REG ASSY	AWX9813
	2..FRONT BRIDGE ASSY	AWX9814
	2..DISPLAY BRIDGE ASSY	AWX9815
	2..F-IN BRIDGE ASSY	AWX9816
	2..MCH BRIDGE ASSY	AWX9818
	2..FB-CONNECT ASSY	AWX9819
	2..CONNECT ASSY	AWX9820
	2..USB RECT ASSY	AWX9821
	2..MULTI CH IN ASSY	AWX9857
NSP	2..VREG GUARD ASSY	AWX9895
NSP	1..REG BRIDGE ASSY(SC-55/SC-1526-K)	AWR7117
	2..REG ASSY	AWX9813
	2..FRONT BRIDGE ASSY	AWX9814
	2..DISPLAY BRIDGE ASSY	AWX9815
	2..F-IN BRIDGE ASSY	AWX9816
	2..FB-CONNECT ASSY	AWX9819
	2..CONNECT ASSY	AWX9820
	2..USB RECT ASSY	AWX9821
NSP	2..VREG GUARD ASSY	AWX9895
	1..FRONT HDMI USB ASSY	AWX9749
	1..IR INTERFACE ASSY	AWX9792
	1..DAC HIGH ASSY(SC-57)	AWX9822
	1..DAC HIGH ASSY(SC-55/SC-1526-K)	AWX9860
	1..DIGITAL MAIN ASSY(SC-57)	AWX9827
	1..DIGITAL MAIN ASSY(SC-55/SC-1526-K)	AWX9824
	1..COMPONENT ASSY(SC-57)	AWX9866
	1..COMPONENT ASSY(SC-55/SC-1526-K)	AWX9865
	1..FM/AM TUNER UNIT	AXX7282

[illegible] S LIST

[illegible] L[illegible]

N[illegible]	[illegible] N[illegible].	R[illegible]
39P C	1681	iagnosis or AU O ASS , R BU R ASS , R PO R AMP ASS , R R AC ASS
15P C	1680	iagnosis or AU O ASS , R BU R ASS , R PO R AMP ASS , R R AC ASS
30P 30P board to board extension ig cable	1682	iagnosis or AL MA ASS , AU O ASS , AC H H ASS
28P 14P board to board extension ig cable	1763	iagnosis or AC H H ASS
23P 23P board to board extension ig cable	1761	iagnosis or AU O ASS , R BU R ASS , R PO R AMP ASS
20P board to board extension ig cable	1677	iagnosis or AL MA ASS , COMPOS ASS
20P 14P board to board extension ig cable	1759	iagnosis or AL MA ASS , AU O ASS , R BU R ASS , R PO R AMP ASS , R R AC ASS
15P 7P board to board extension ig cable	1762	iagnosis or AL MA ASS , AU O ASS
5P PH Housing Ass	1594	iagnosis or AU O ASS , R BU R ASS , R PO R AMP ASS , R R AC ASS

A

B

C

7. BLOCK DIAGRAM
7.1 OVERALL WIRING DIAGRAM

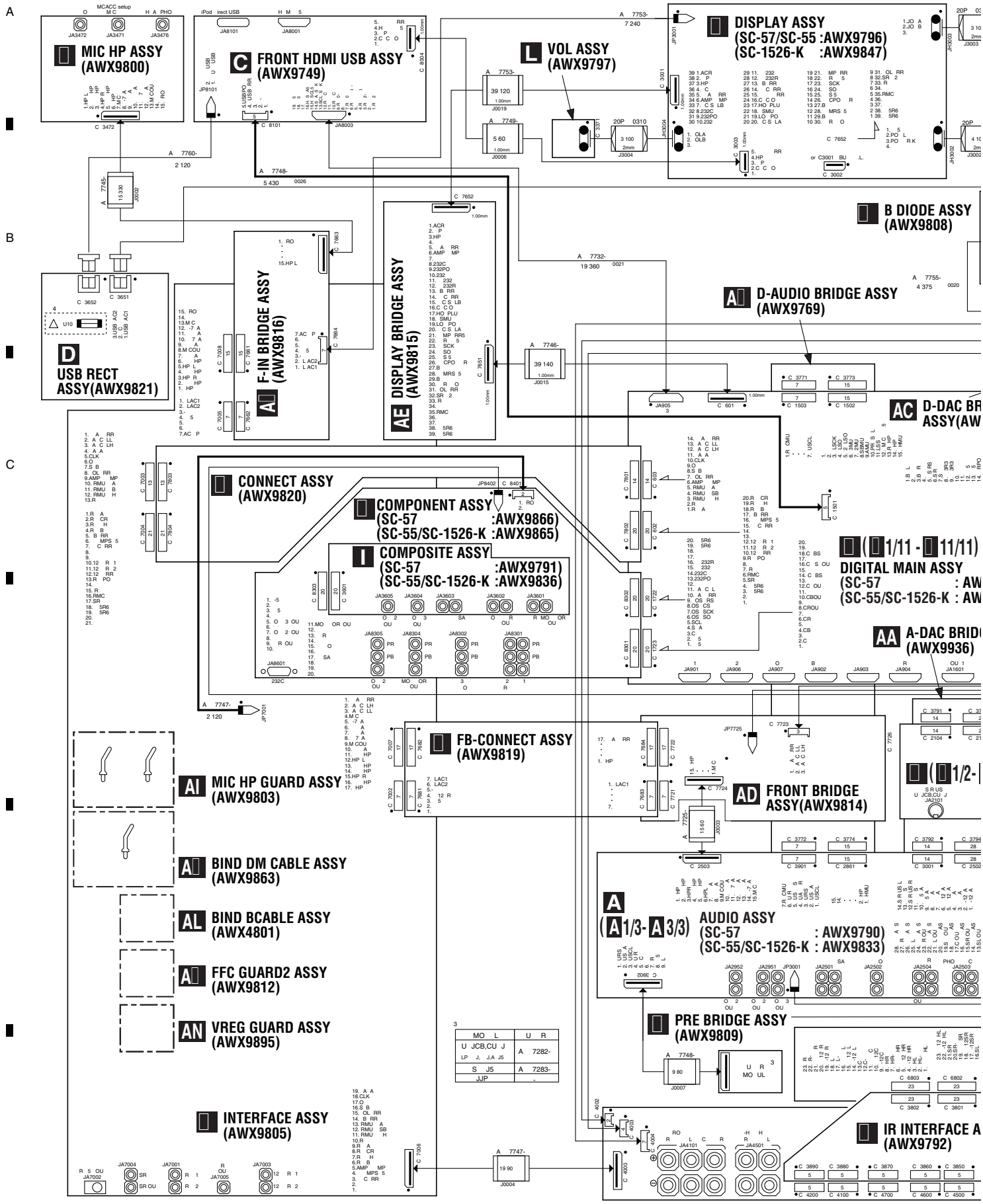

- hen ordering service parts, be sure to re er to PLO S and PAR S L S or PCB PAR S L S .
- he ⚠ mark ound on some component parts indicates the importance o the sa et actor o the part. here ore, when replacing, be sure to use parts o identical designation.
- he power suppl is shown with the marked box.

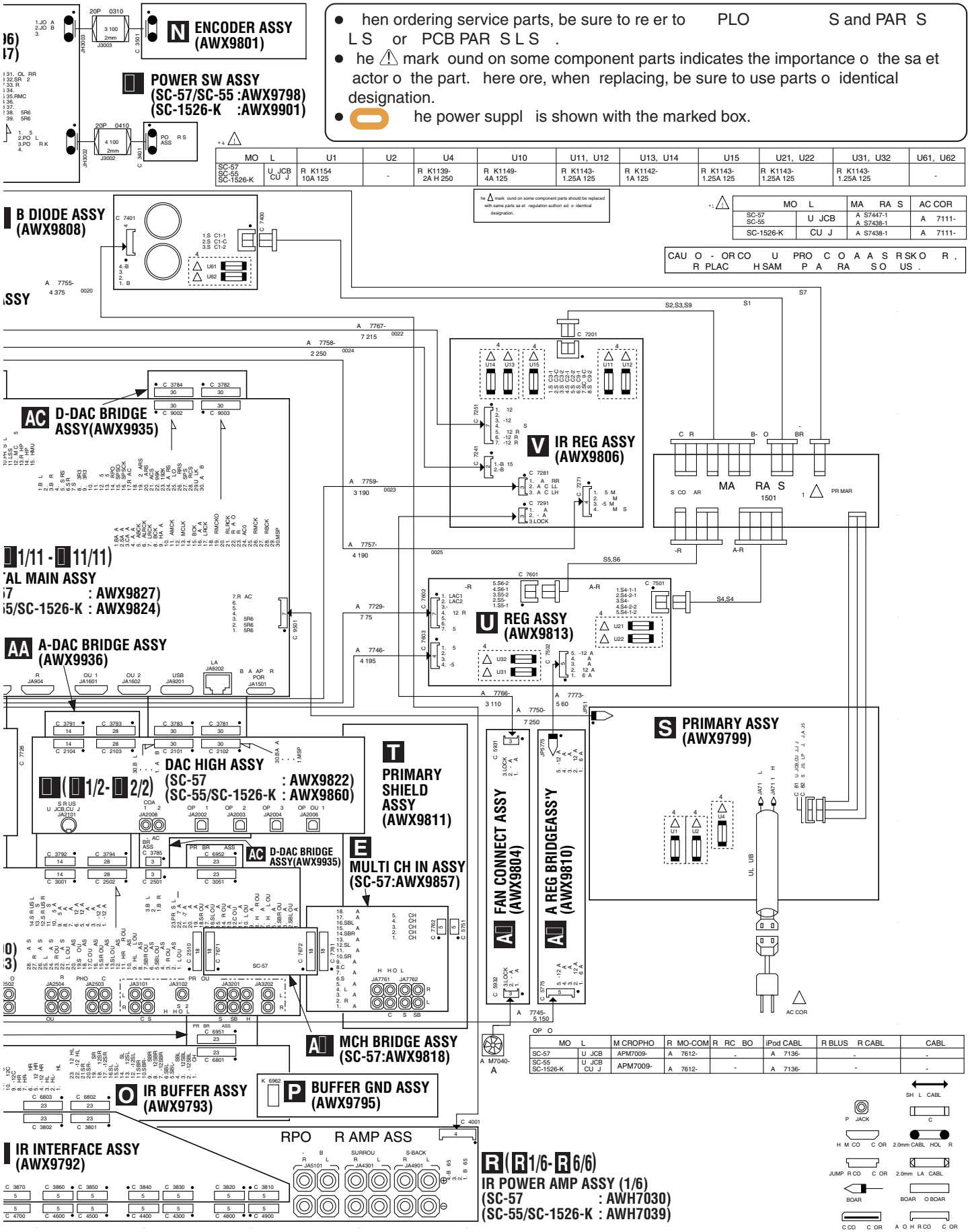

MO L		U1	U2	U4	U10	U11, U12	U13, U14	U15	U21, U22	U31, U32	U61, U62
SC-57 SC-55 SC-1526-K	U JCB CU J	R K1154 10A 125	-	R K1139- 2A H 250	R K1149- 4A 125	R K1143- 1.25A 125	R K1142- 1A 125	R K1143- 1.25A 125	R K1143- 1.25A 125	R K1143- 1.25A 125	-

he ⚠ mark ound on some component parts should be replaced with same parts sa et regulation authori ed o identical designation.

MO L		MA RA S	AC COR
SC-57 SC-55	U JCB	A S7447-1 A S7438-1	A 7111-
SC-1526-K	CU J	A S7438-1	A 7111-

CAU O - OR CO U PRO C O A A S R SK O R , R PLAC H SAM P A RA S O US .

MO L		M CROPHO	R MO-COM	R RC BO	iPod CABL	R BLUS R CABL	CABL
SC-57	U JCB	APM7009-	A 7612-	-	A 7136-	-	-
SC-55 SC-1526-K	U JCB CU J	APM7009-	A 7612-	-	A 7136-	-	-

7.7 BLOCK DIAGRAM FOR AUDIO BLOCK

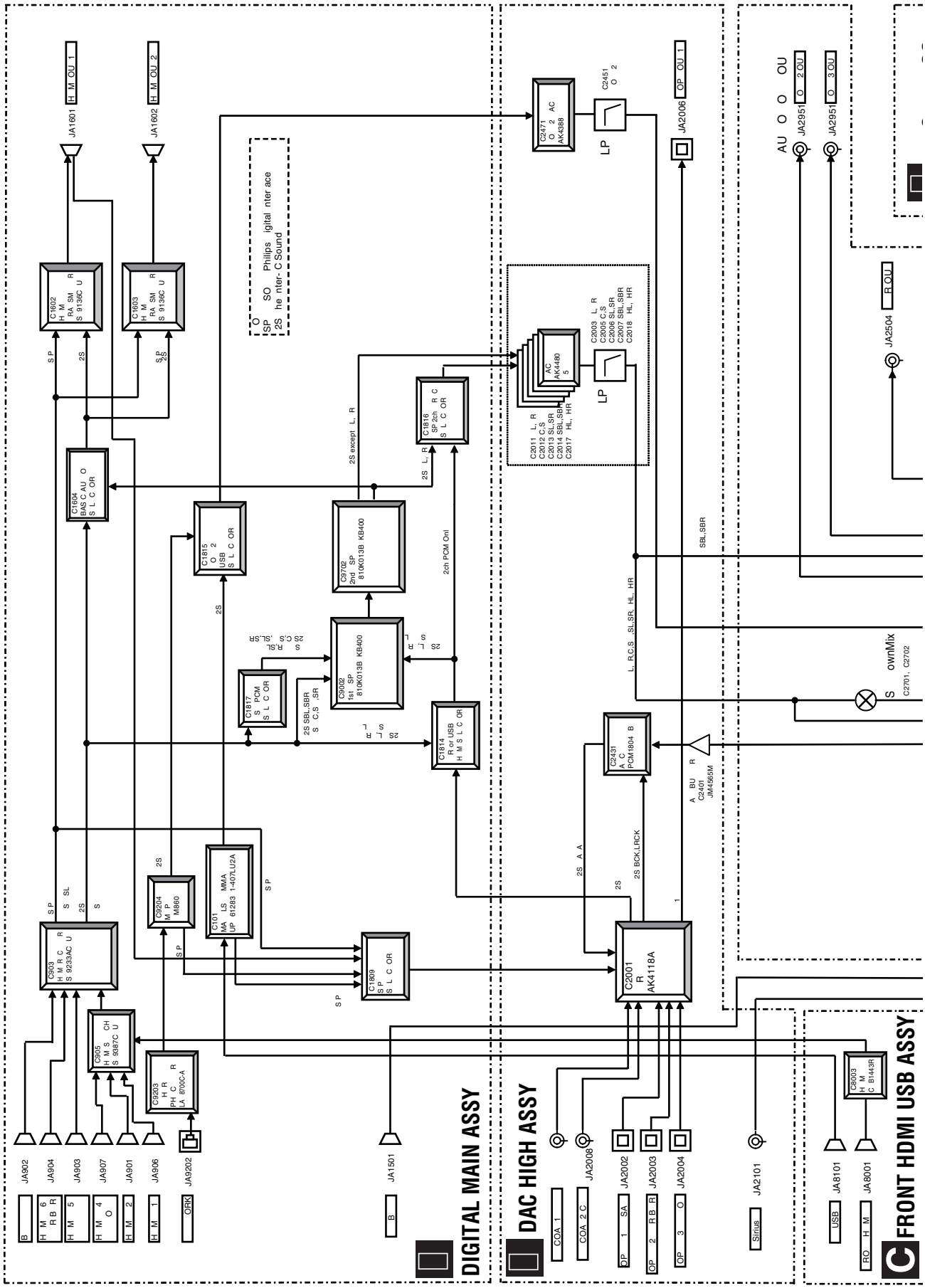

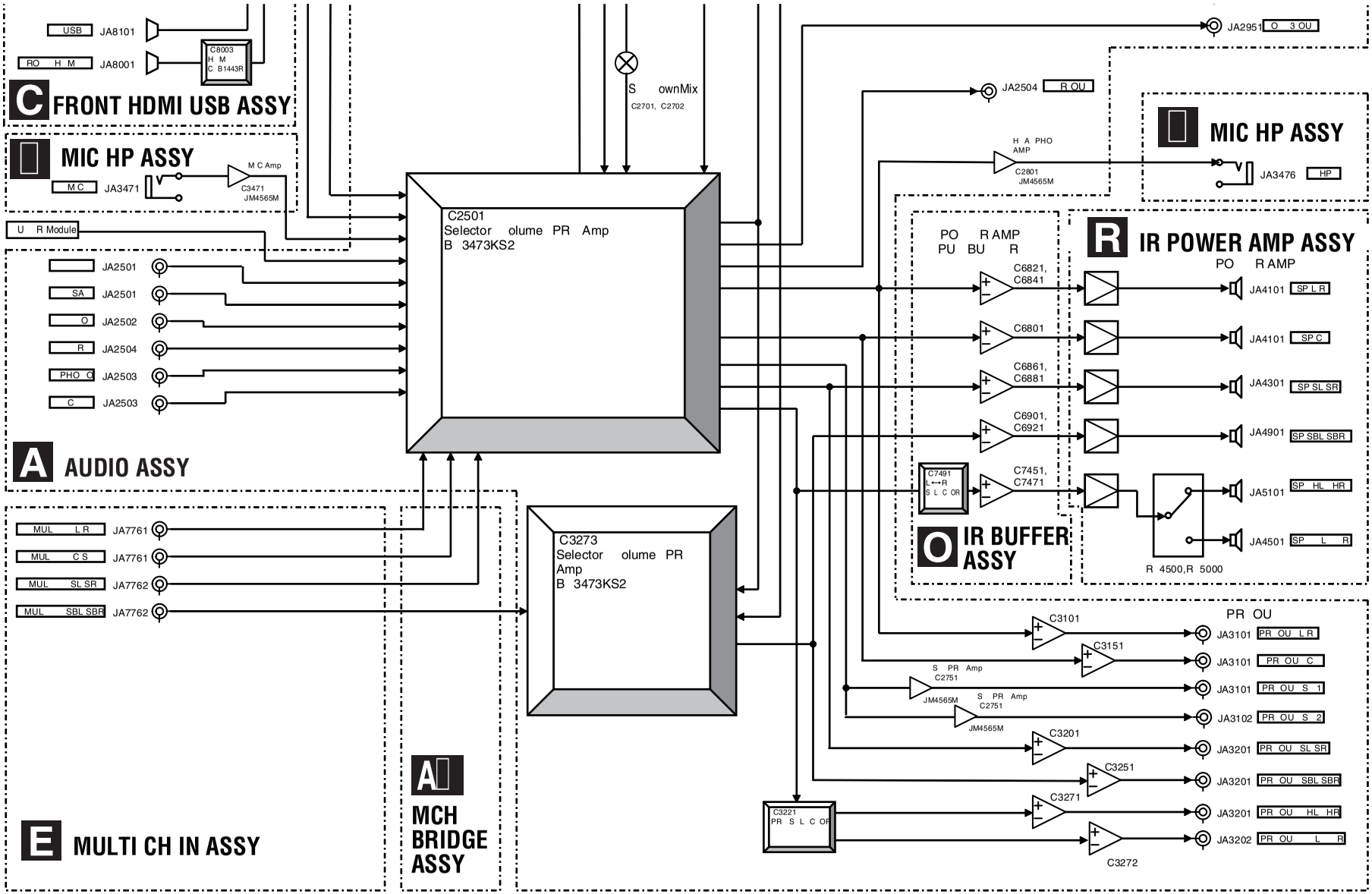
C FRONT HDMI USB ASSY
USB
JA8101
RO H M
JA8001
C8003
H M
C B1443R
MIC HP ASSY
M C
JA3471
M C Amp
C3471
JM4565M
U R Module
JA2501
SA
JA2501
O
JA2502
R
JA2504
PHO C
JA2503
C
JA2503
A AUDIO ASSY
MUL L R
JA7761
MUL C S
JA7761
MUL SL SR
JA7762
MUL SBL SBR
JA7762
E MULTI CH IN ASSY
A MCH BRIDGE ASSY
S ownMix
C2701, C2702
C2501
Selector olume PR Amp
B 3473KS2
C3273
Selector olume PR
Amp
B 3473KS2
C3221
PR S L C OR
JA2951
O 3 OU
JA2504
R OU
H A PHO
AMP
C2801
JM4565M
MIC HP ASSY
JA3476
HP
PO R AMP
PU BU R
C6821,
C6841
C6801
C6861,
C6881
C6901,
C6921
C7491
L↔R
S L C OR
C7451,
C7471
O IR BUFFER ASSY
R IR POWER AMP ASSY
PO R AMP
JA4101
SP L R
JA4101
SP C
JA4301
SP SL SR
JA4901
SP SBL SBR
JA5101
SP HL HR
JA4501
SP L R
R 4500,R 5000
PR OU
C3101
JA3101
PR OU L R
C3151
JA3101
PR OU C
S PR Amp
C2751
JM4565M
JA3101
PR OU S 1
S PR Amp
C2751
JM4565M
JA3102
PR OU S 2
C3201
JA3201
PR OU SL SR
C3251
JA3201
PR OU SBL SBR
C3271
JA3201
PR OU HL HR
C3272
JA3202
PR OU L R

□.□ □LOC□ DIA□ RA□ □OR DI□ ITAL □ AIN VIDEO □LOC□

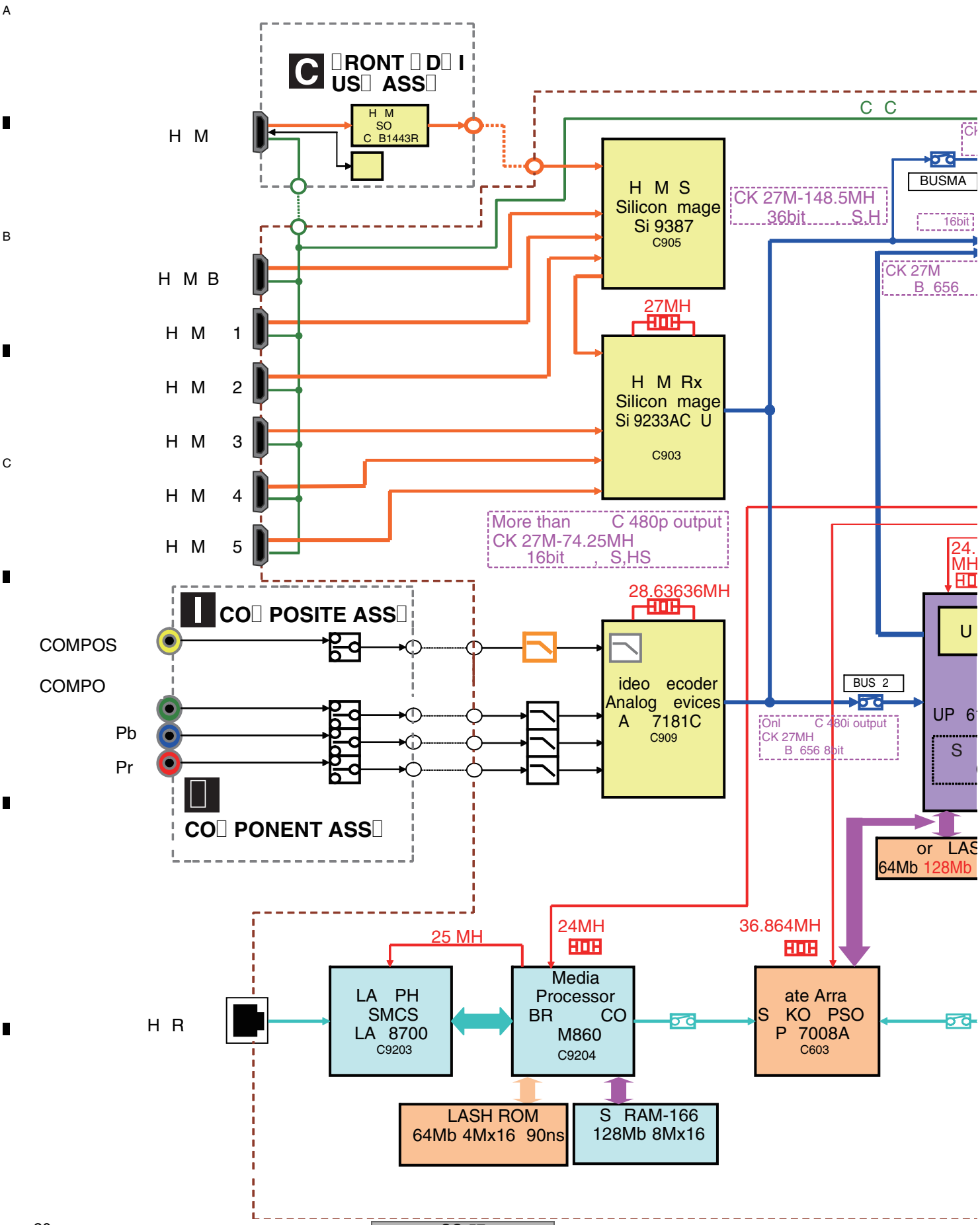

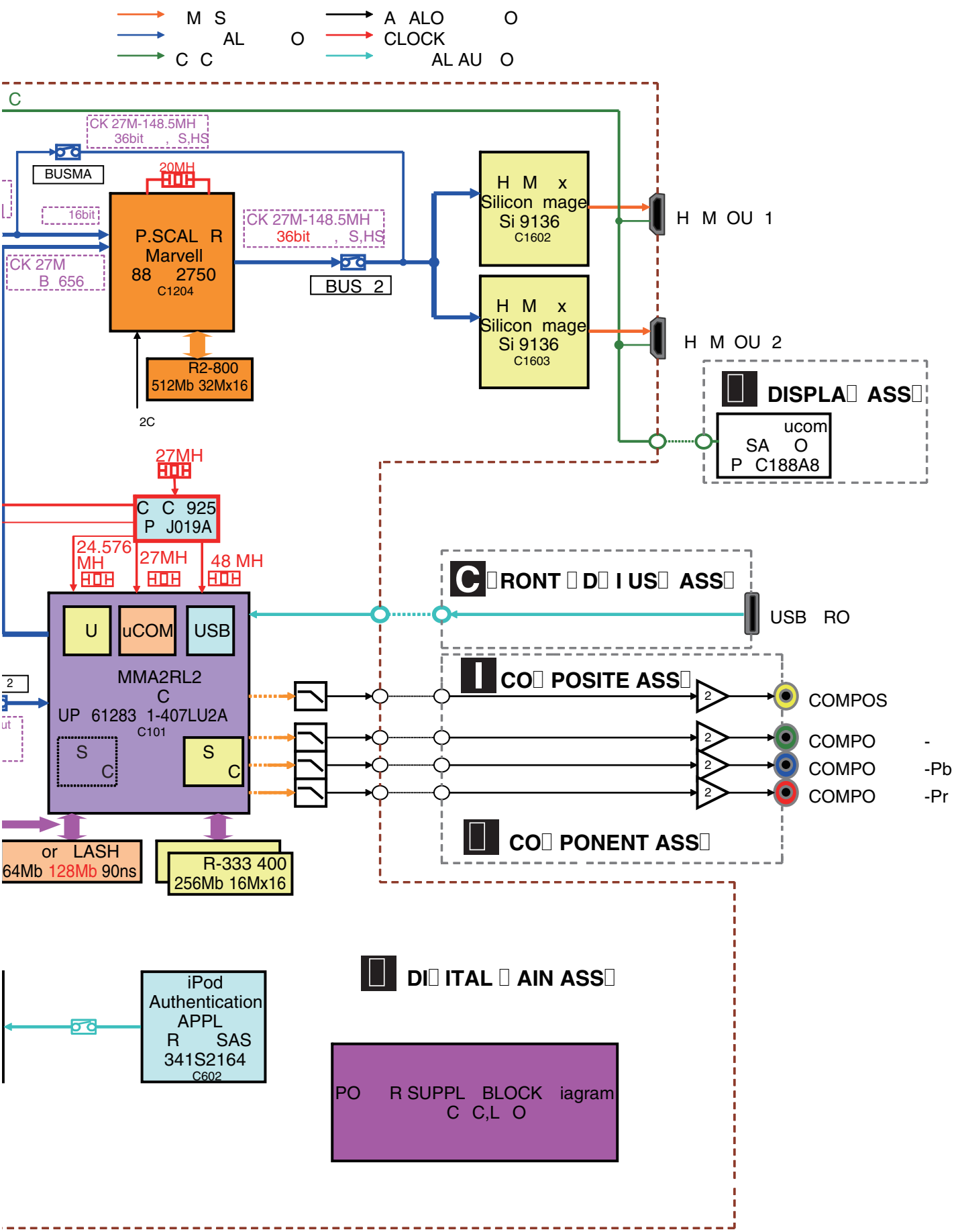
M S
AL O
C C
A ALO O
CLOCK
AL AU O
C
CK 27M-148.5MH
36bit , S,HS
BUSMA
20MH
16bit
P.SCAL R
Marvell
88 2750
C1204
CK 27M
B 656
CK 27M-148.5MH
36bit , S,HS
BUS 2
H M x
Silicon mage
Si 9136
C1602
H M x
Silicon mage
Si 9136
C1603
H M OU 1
H M OU 2
R2-800
512Mb 32Mx16
2C
DISPLA ASS
ucom
SA O
P C188A8
27MH
C C 925
P J019A
24.576
MH
27MH
48 MH
C RONT D I US ASS
USB RO
U
uCOM
USB
MMA2RL2
C
UP 61283 1-407LU2A
C101
S
C
S
C
CO POSITE ASS
COMPOS
COMPO -
COMPO -Pb
COMPO -Pr
CO PONENT ASS
or LASH
64Mb 128Mb 90ns
R-333 400
256Mb 16Mx16
DI ITAL AIN ASS
iPod
Authentication
APPL
R SAS
341S2164
C602
PO R SUPPL BLOCK iagram
C C,L O

7.7 BLOCK DIAGRAM FOR DIGITAL MAIN AUDIO BLOCK

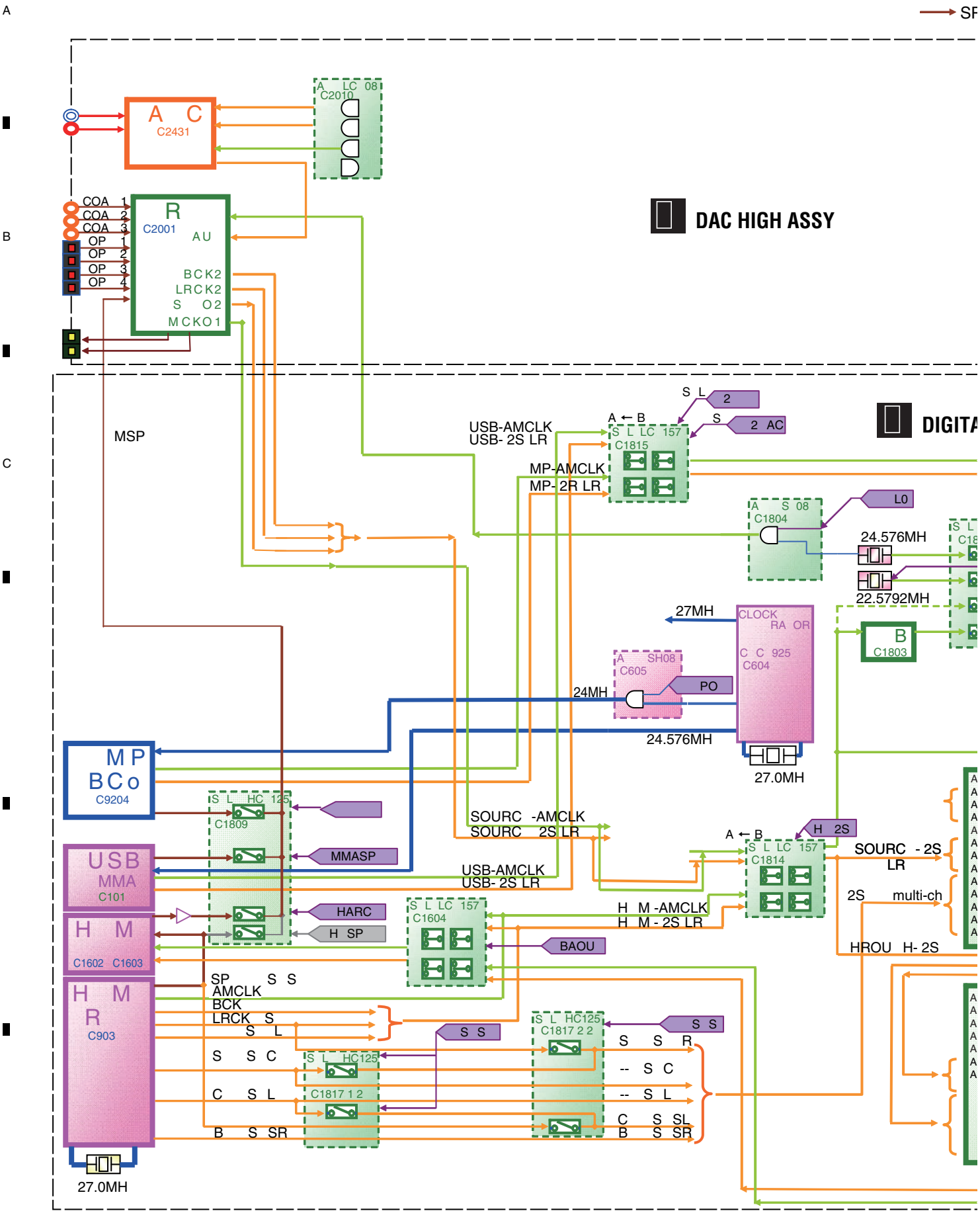

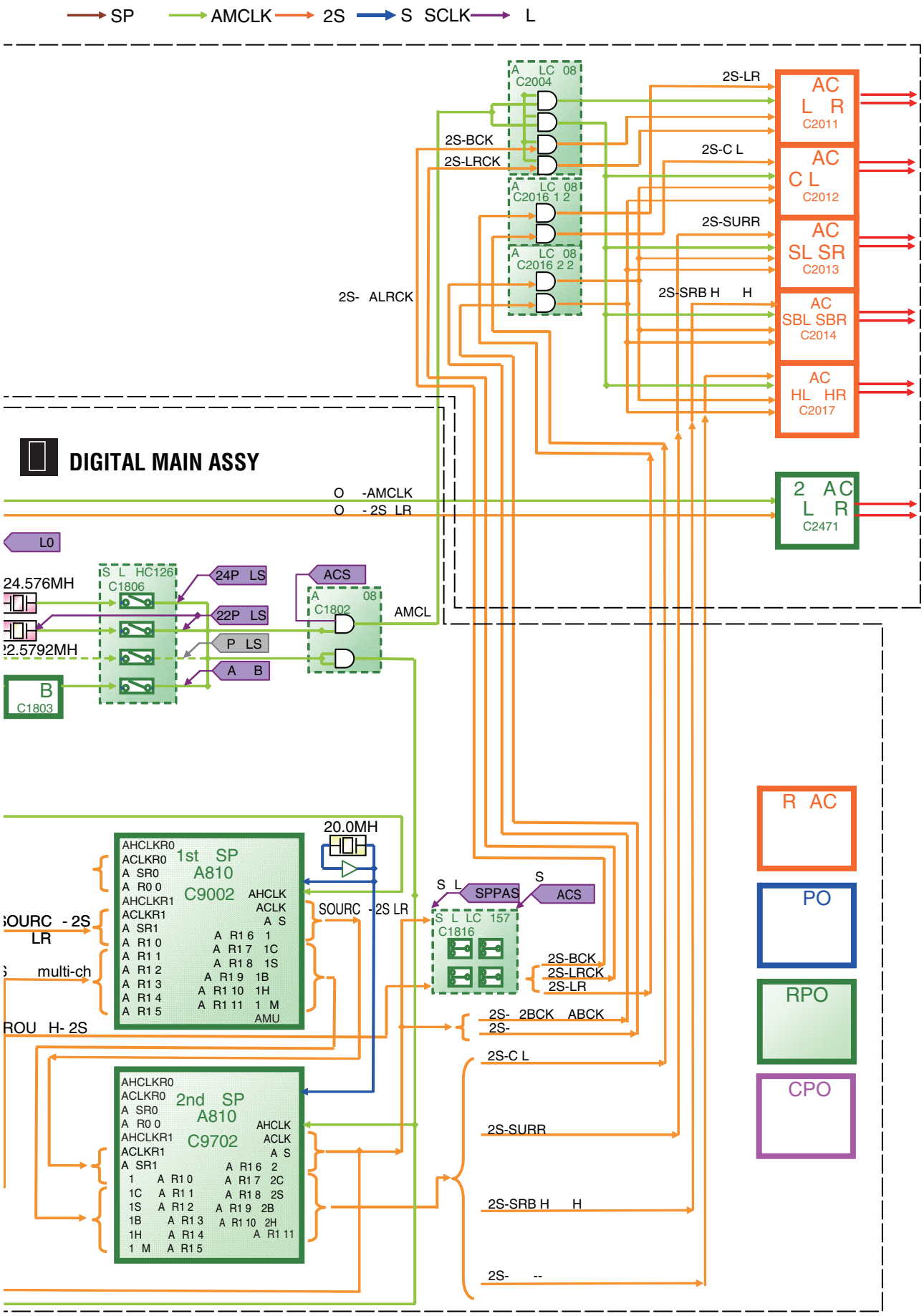
SP
AMCLK
2S
S SCLK
L
DIGITAL MAIN ASSY
A LC 08
C2004
A LC 08
C2016 1 2
A LC 08
C2016 2 2
2S-LR
2S-BCK
2S-LRCK
2S-C L
2S-SURR
2S-SRB H H
2S- ALRCK
AC
L R
C2011
AC
C L
C2012
AC
SL SR
C2013
AC
SBL SBR
C2014
AC
HL HR
C2017
O -AMCLK
O - 2S LR
2 AC
L R
C2471
L0
24.576MH
22.5792MH
S L HC126
C1806
24P LS
22P LS
P LS
A B
B
C1803
ACS
A 08
C1802
AMCL
20.0MH
AHCLKR0
ACLKR0
A SR0
A R0 0
AHCLKR1
ACLKR1
A SR1
A R1 0
A R1 1
A R1 2
A R1 3
A R1 4
A R1 5
1st SP
A810
C9002
AHCLK
ACLK
A S
A R1 6 1
A R1 7 1C
A R1 8 1S
A R1 9 1B
A R1 10 1H
A R1 11 1 M
AMU
SOURC - 2S
LR
multi-ch
ROU H- 2S
SOURC -2S LR
S L
SPPAS
S
ACS
S L LC 157
C1816
2S-BCK
2S-LRCK
2S-LR
2S- 2BCK ABCK
2S-
2S-C L
2S-SURR
2S-SRB H H
2S- --
2nd SP
A810
C9702
1 A R1 0
1C A R1 1
1S A R1 2
1B A R1 3
1H A R1 4
1 M A R1 5
A R1 6 2
A R1 7 2C
A R1 8 2S
A R1 9 2B
A R1 10 2H
A R1 11
R AC
PO
RPO
CPO

□.□ □LOC□ DIA□RA□ □OR VIDEO □LOC□

VIDEO □LOC□ DIA□RA□

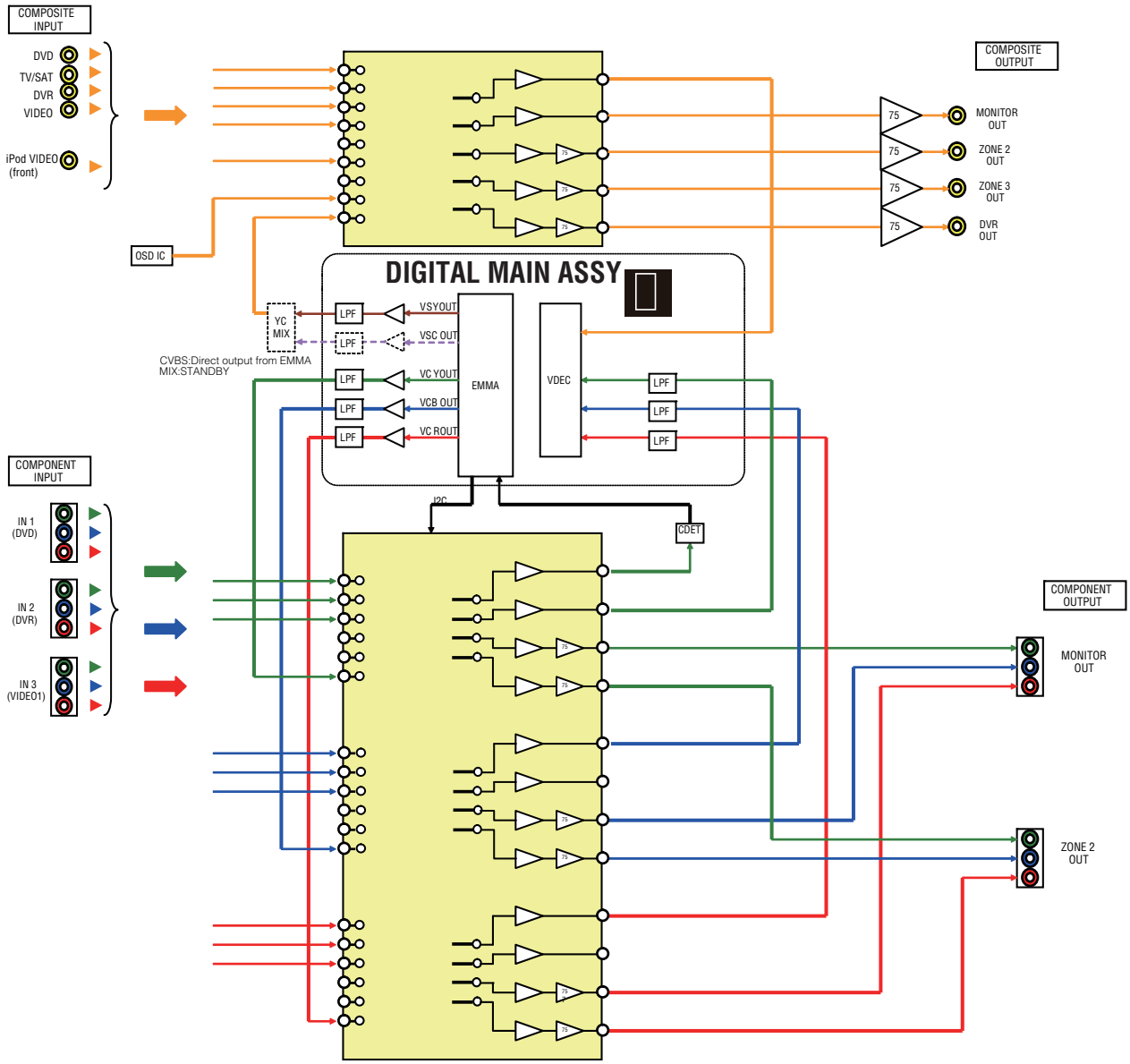

□.□ □LOC□ DIA□ RA□ □OR CO□ POSITE VIDEO □LOC□

CO□ POSITE VIDEO □LOC□ DIA□ RA□

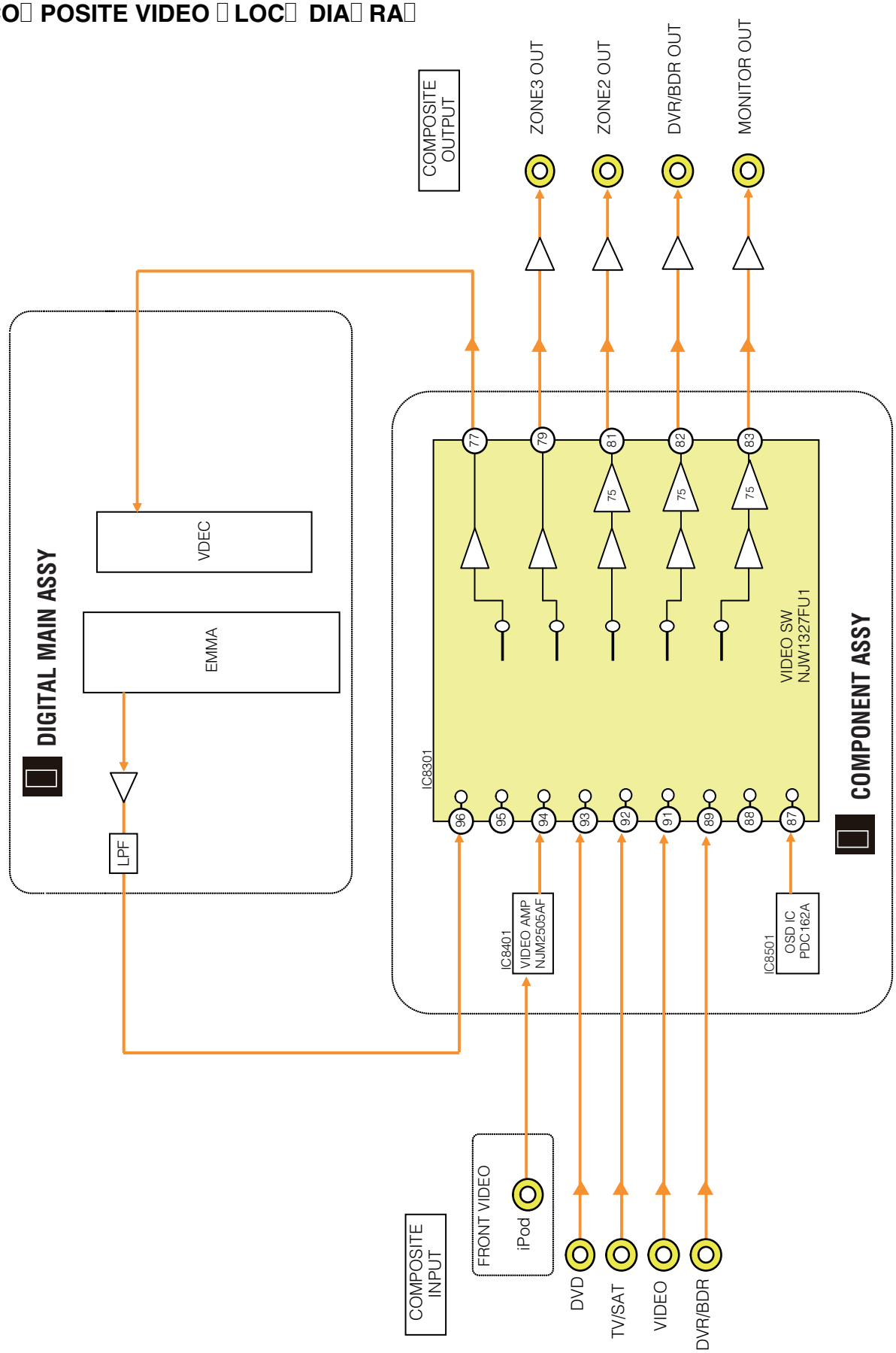

□.□ □LOC□ DIA□RA□ □OR CO□PONENT VIDEO □LOC□

A

CO□PONENT VIDEO □LOC□ DIA□RA□

B

C

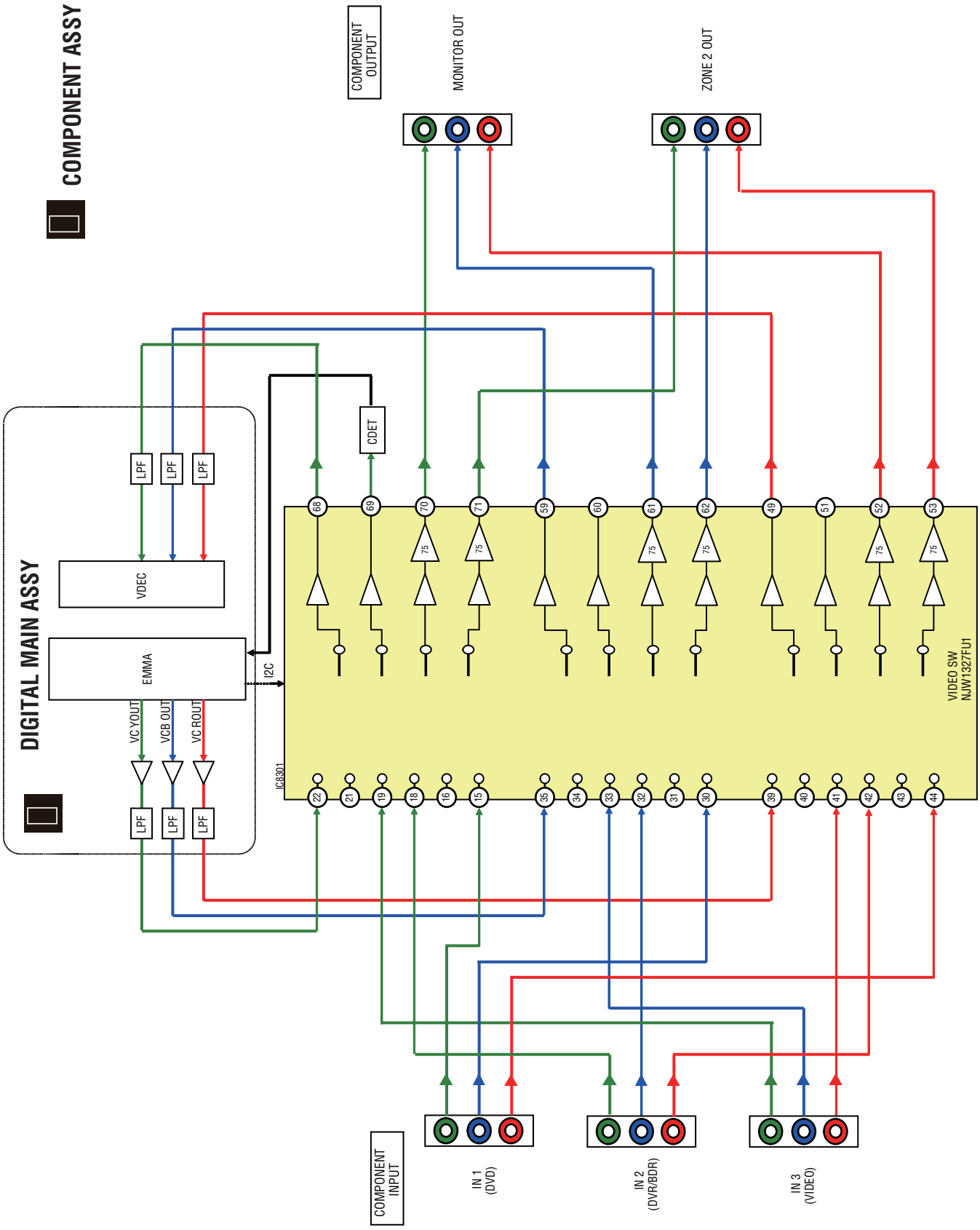

A

B

C

□.□ □LOC□ DIA□RA□ □OR PO□ ER □LOC□(□)

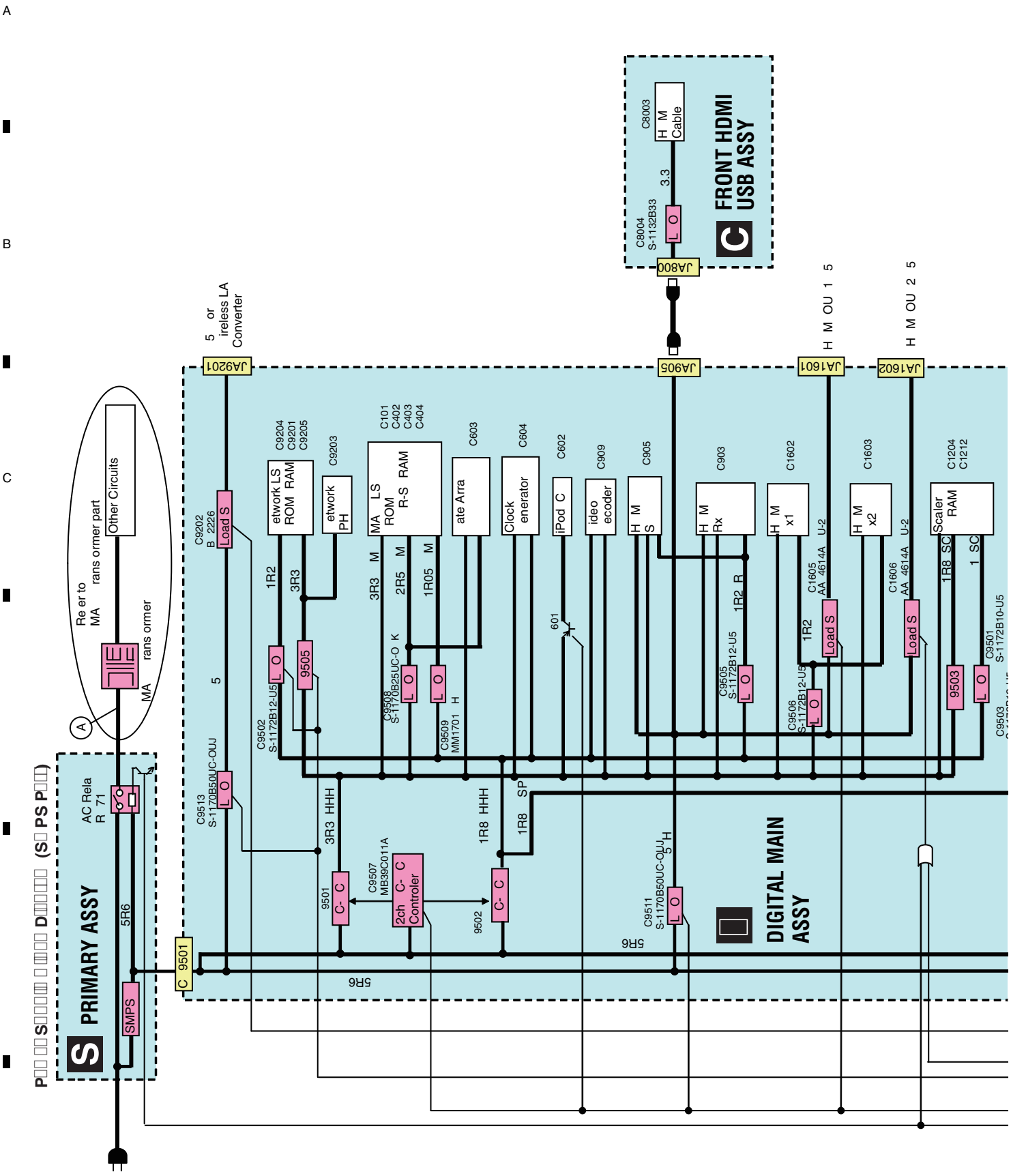

D-DAC BRIDGE ASSY
DAC HIGH ASSY
COMPONENT ASSY
INTERFACE ASSY
DISPLAY ASSY
CONNECT ASSY
DISPLAY BRIDGE ASSY
Scaler RAM
1st SP ROM RAM
2ndt SP ROM RAM
OSC 24.576M 22.5792M
Logic or igital Audio
Load S
CPU
RS232C
JA7002
JA1501
JA16
Power Suppl or R Remote xtention
Power Suppl Control Signals

□.□ □LOC□ DIA□RA□ □OR PO□ ER □LOC□ (□)

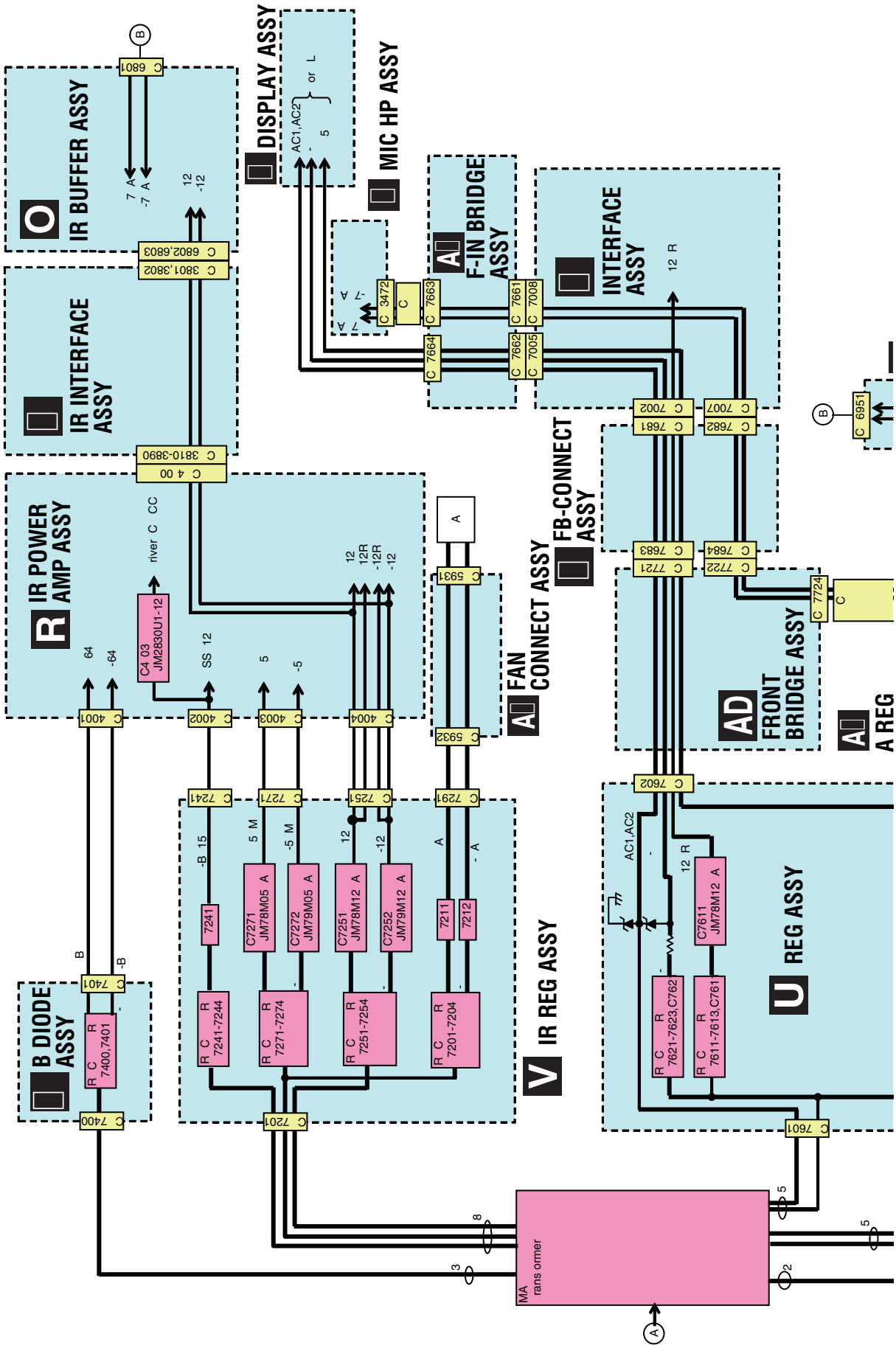

P□□ □□S□□□□□ □□□□□□ D□□□□□□ (□ AIN T□□□□□□□□ □□P□□)

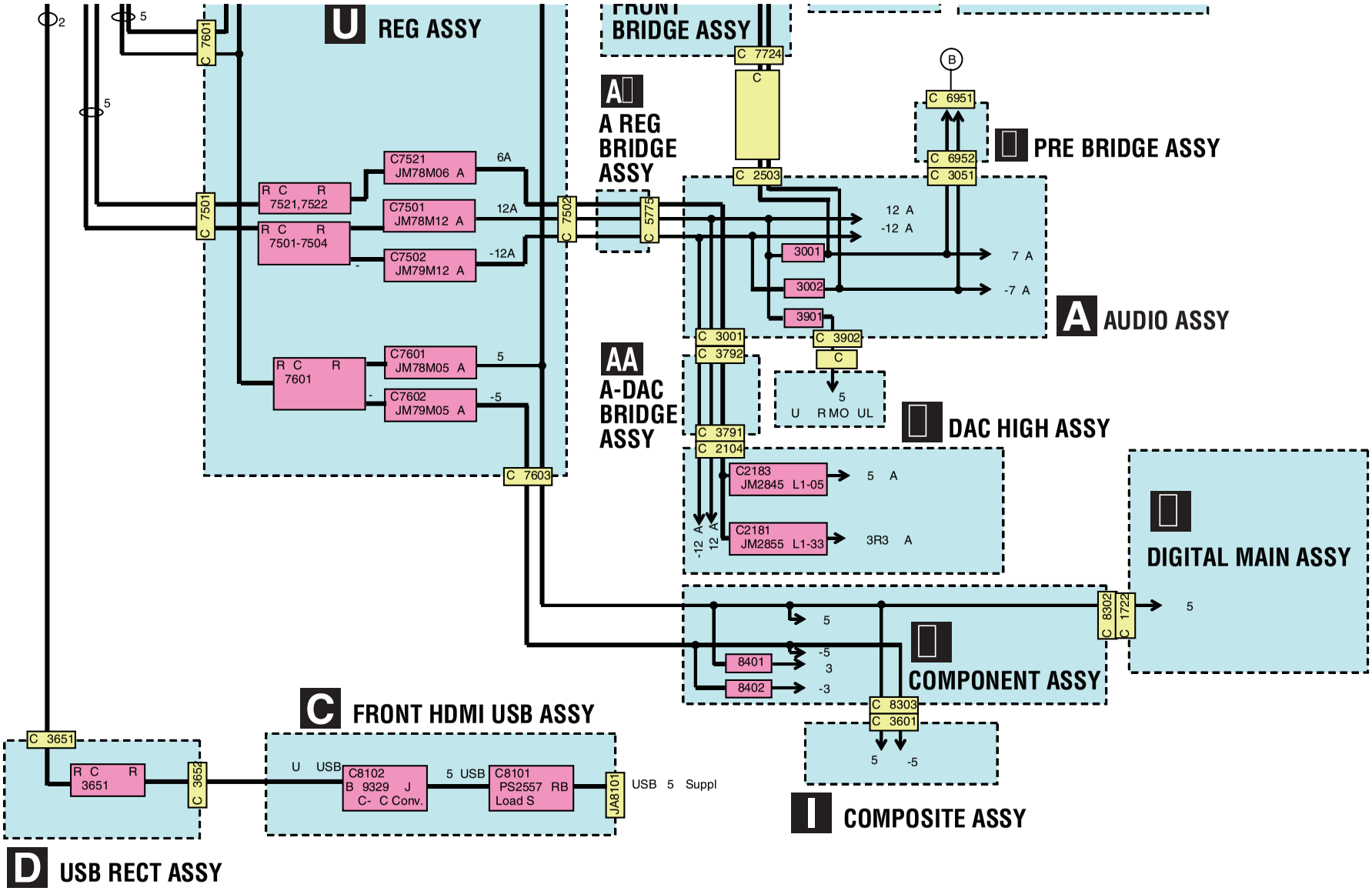
U REG ASSY
FRONT BRIDGE ASSY
A REG BRIDGE ASSY
PRE BRIDGE ASSY
A AUDIO ASSY
AA A-DAC BRIDGE ASSY
DAC HIGH ASSY
DIGITAL MAIN ASSY
COMPONENT ASSY
C FRONT HDMI USB ASSY
COMPOSITE ASSY
D USB RECT ASSY
C 7601
C 7501
C 7502
C 5773
C 7724
C 2503
C 6951
C 6952
C 3051
C 3001
C 3792
C 3902
C 3791
C 2104
C 7603
C 8302
C 1722
C 8303
C 3601
C 3651
C 3654
JA8101
R C R 7521,7522
R C R 7501-7504
R C R 7601
C7521 JM78M06 A
C7501 JM78M12 A
C7502 JM79M12 A
C7601 JM78M05 A
C7602 JM79M05 A
6A
12A
-12A
5
-5
3001
3002
3901
12 A
-12 A
7 A
-7 A
C2183 JM2845 L1-05
C2181 JM2855 L1-33
5 A
3R3 A
8401
8402
-5
3
-3
U R MO UL
U USB
C8102 B 9329 J C- C Conv.
5 USB
C8101 PS2557 RB Load S
USB 5 Suppl
R C R 3651

□. DIA□ NOSIS
□.□ DIA□ NOSIS □LO□ C□ART

A

NO PO□ ER

his is ust or general re erence and does not including ever single case.

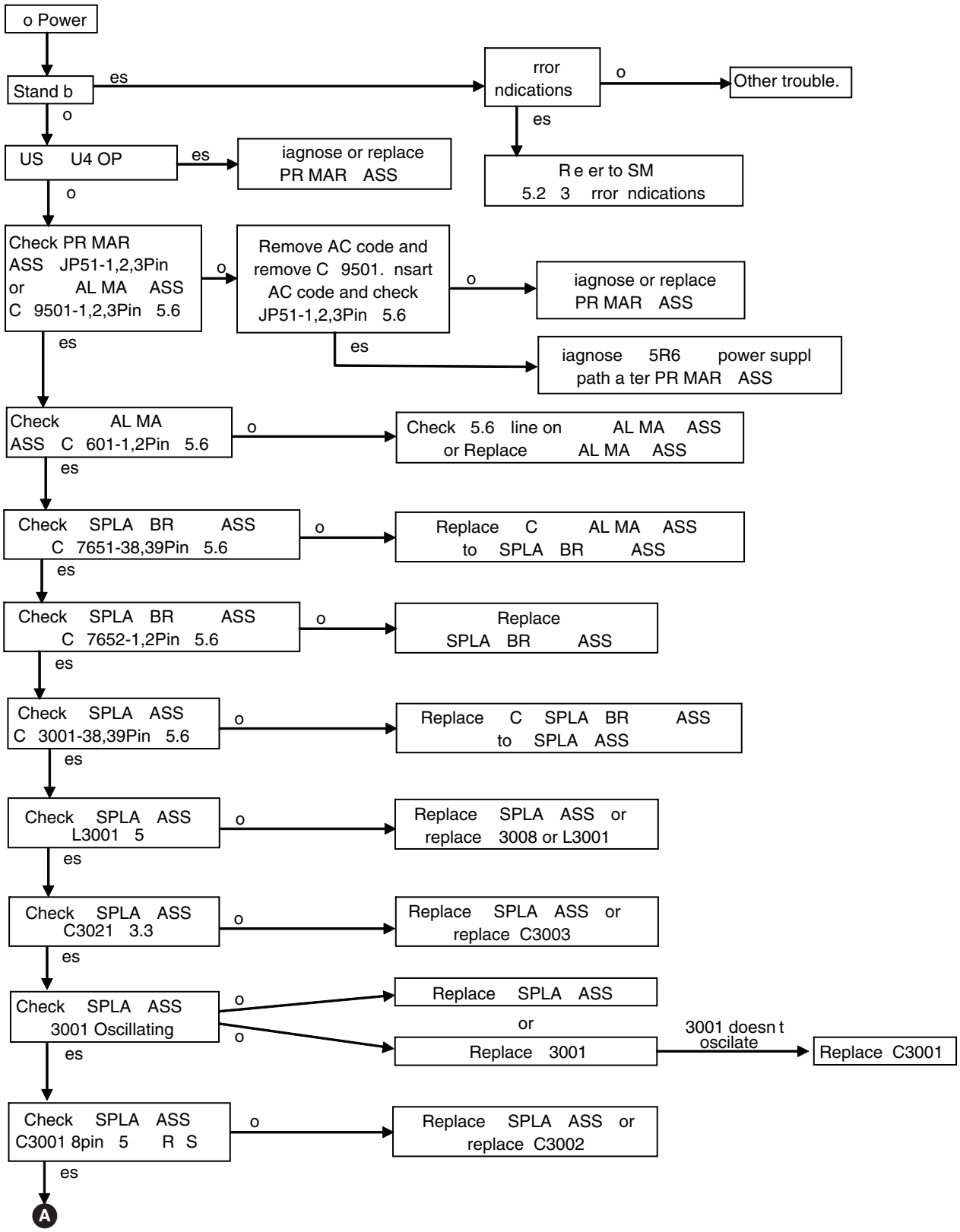

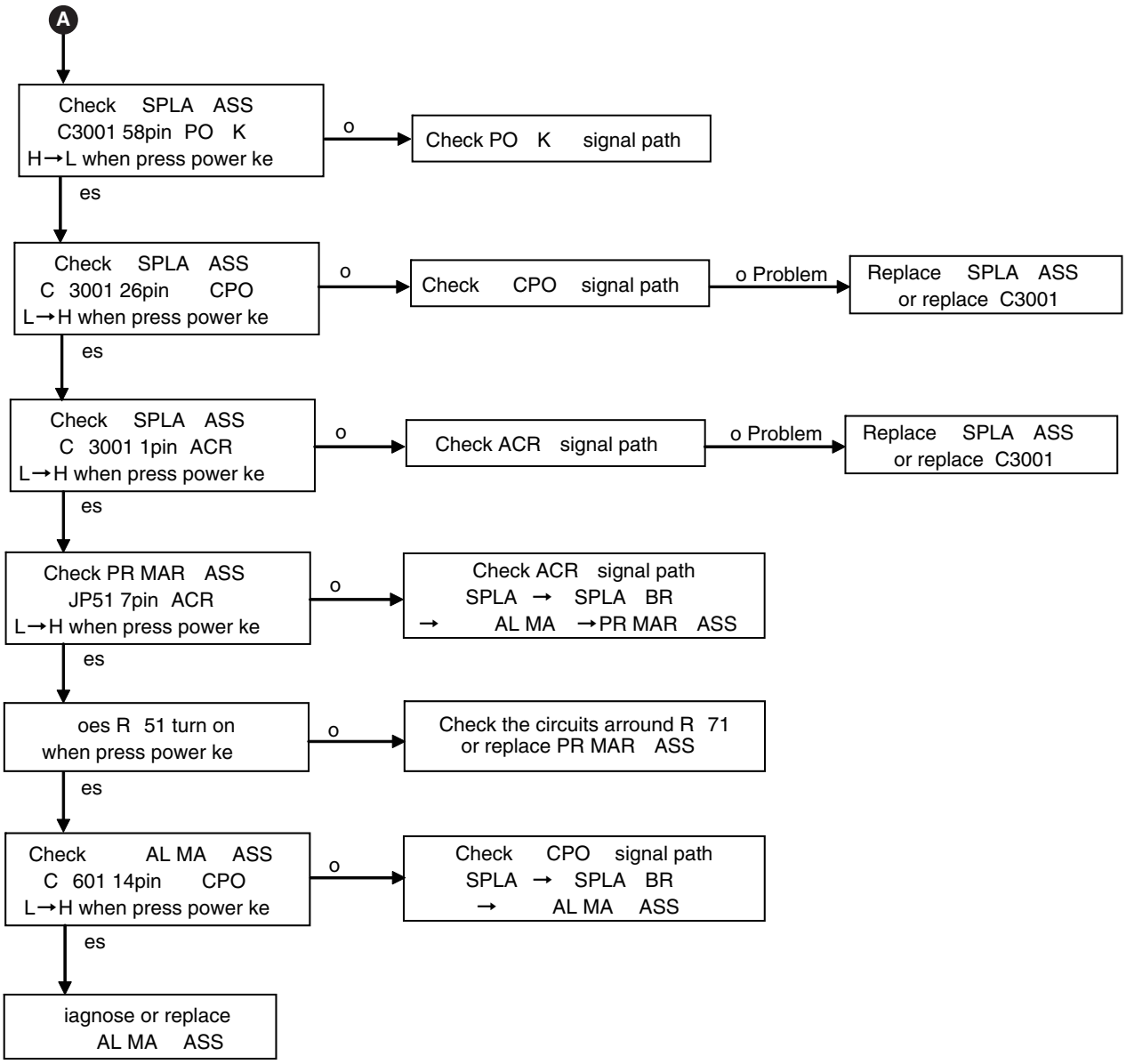
A
Check SPLA ASS
C3001 58pin PO K
H→L when press power ke
o
Check PO K signal path
es
Check SPLA ASS
C 3001 26pin CPO
L→H when press power ke
o
Check CPO signal path
o Problem
Replace SPLA ASS
or replace C3001
es
Check SPLA ASS
C 3001 1pin ACR
L→H when press power ke
o
Check ACR signal path
o Problem
Replace SPLA ASS
or replace C3001
es
Check PR MAR ASS
JP51 7pin ACR
L→H when press power ke
o
Check ACR signal path
SPLA → SPLA BR
→ AL MA →PR MAR ASS
es
oes R 51 turn on
when press power ke
o
Check the circuits arround R 71
or replace PR MAR ASS
es
Check AL MA ASS
C 601 14pin CPO
L→H when press power ke
o
Check CPO signal path
SPLA → SPLA BR
→ AL MA ASS
es
iagnose or replace
AL MA ASS

NO L DISPLA

his is ust or general re erence and does not including ever single case.

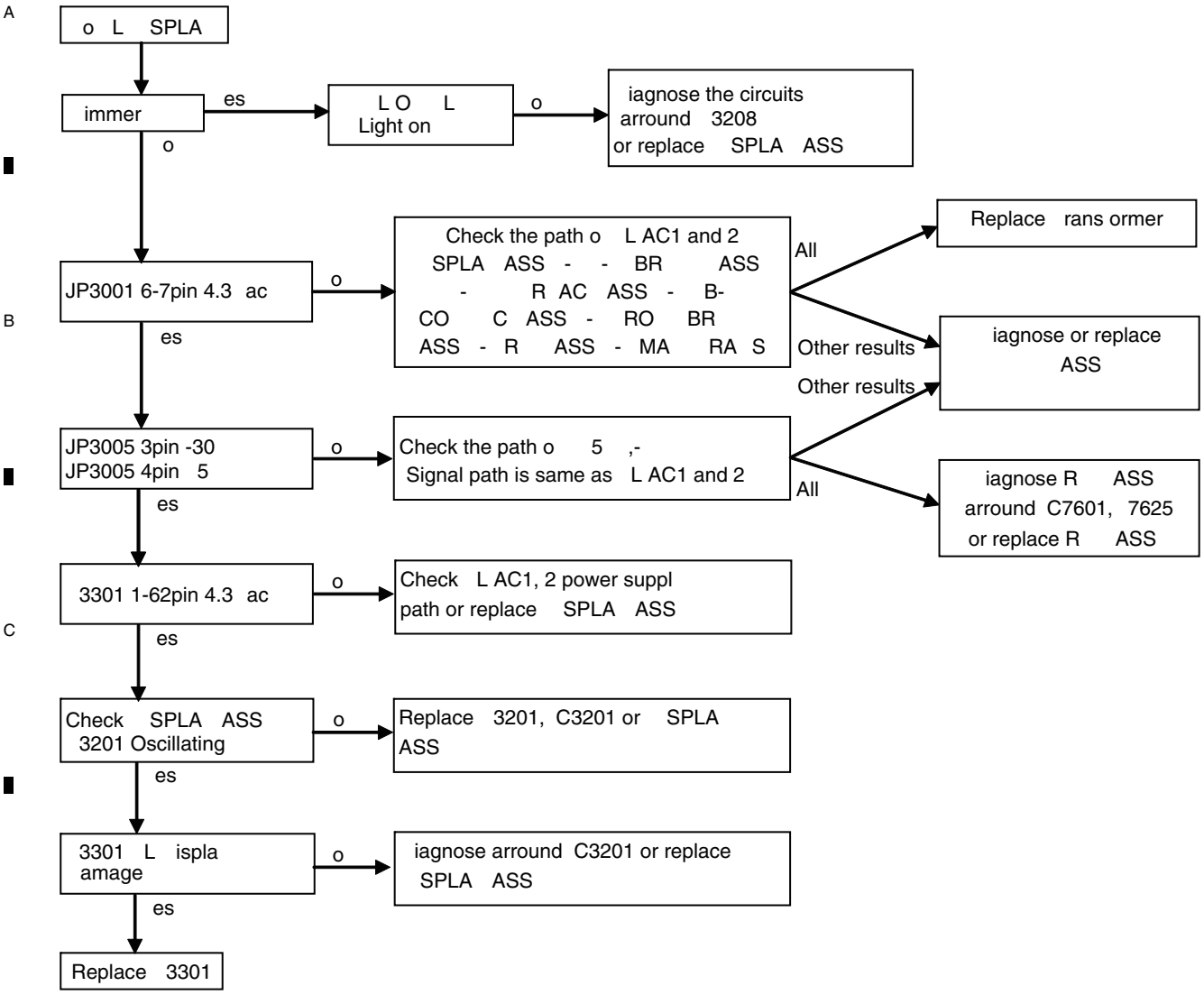

NO SOUND

his is ust or general re erence and does not including ever single case.

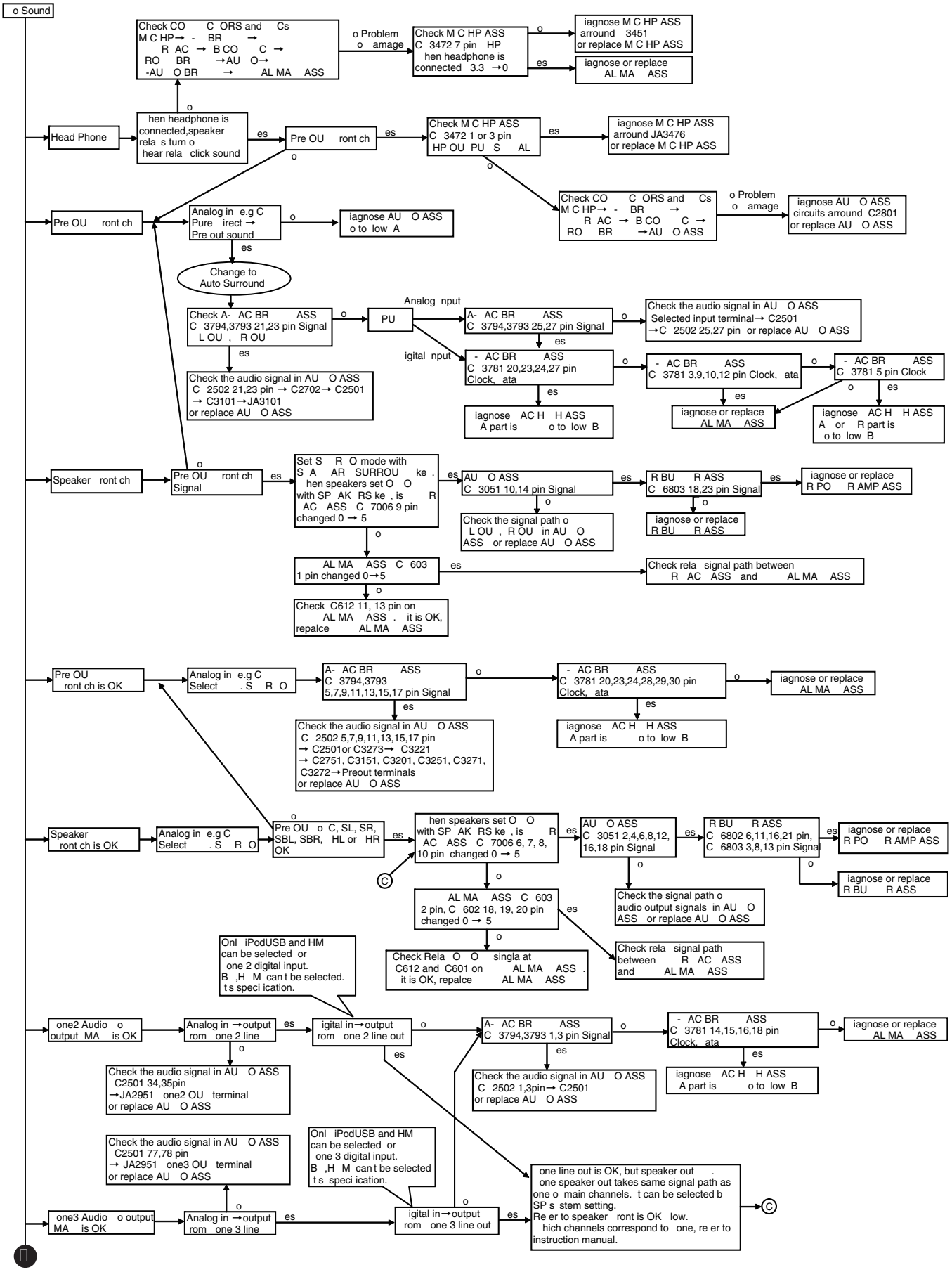

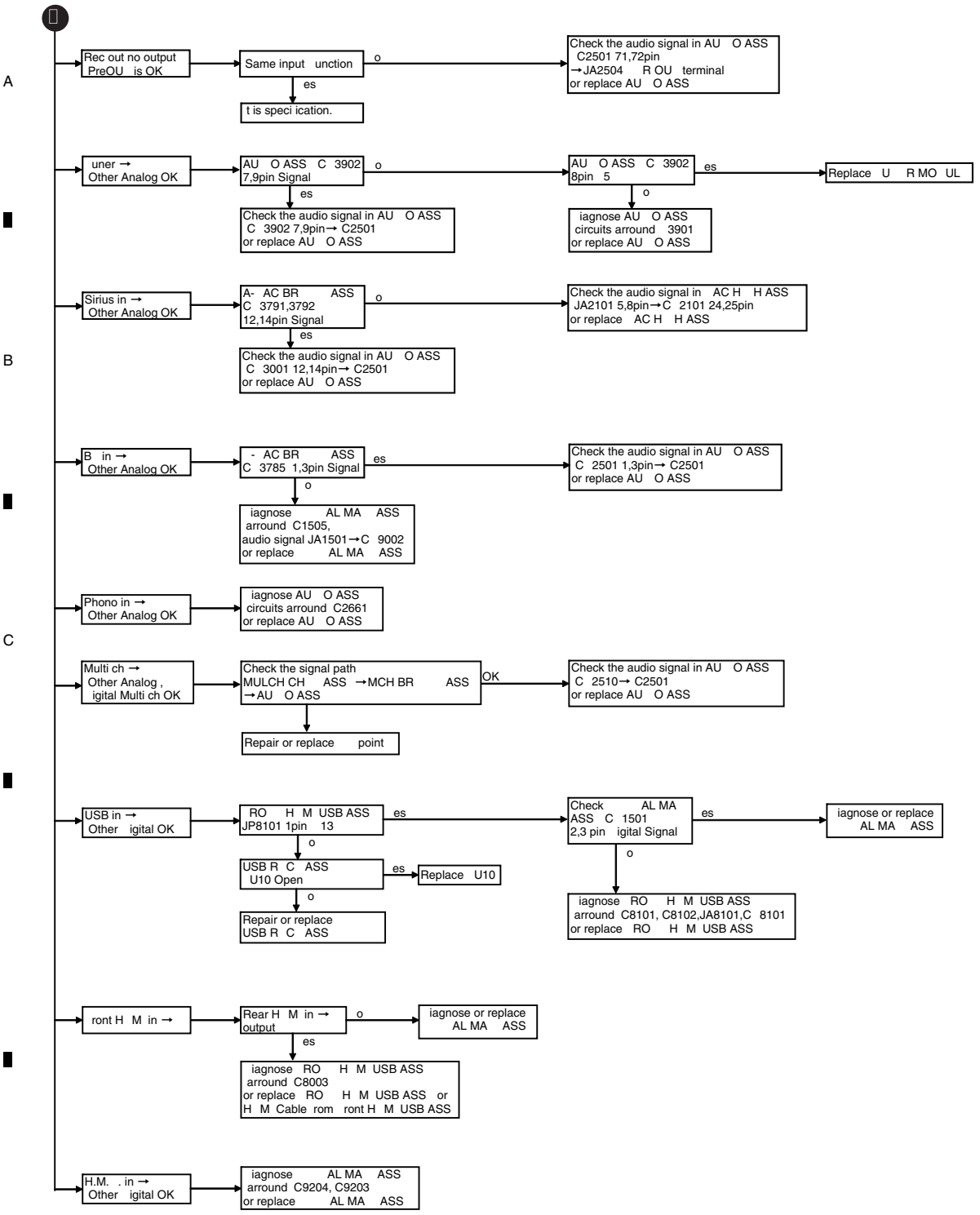
A
Rec out no output PreOU is OK
Same input unction
o
Check the audio signal in AU O ASS C2501 71,72pin →JA2504 R OU terminal or replace AU O ASS
es
t is speci ication.
uner → Other Analog OK
AU O ASS C 3902 7,9pin Signal
o
AU O ASS C 3902 8pin 5
es
Replace U R MO UL
es
Check the audio signal in AU O ASS C 3902 7,9pin→ C2501 or replace AU O ASS
o
iagnose AU O ASS circuits arround 3901 or replace AU O ASS
B
Sirius in → Other Analog OK
A- AC BR ASS C 3791,3792 12,14pin Signal
o
Check the audio signal in AC H H ASS JA2101 5,8pin→C 2101 24,25pin or replace AC H H ASS
es
Check the audio signal in AU O ASS C 3001 12,14pin→ C2501 or replace AU O ASS
B in → Other Analog OK
- AC BR ASS C 3785 1,3pin Signal
es
Check the audio signal in AU O ASS C 2501 1,3pin→ C2501 or replace AU O ASS
o
iagnose AL MA ASS arround C1505, audio signal JA1501→C 9002 or replace AL MA ASS
C
Phono in → Other Analog OK
iagnose AU O ASS circuits arround C2661 or replace AU O ASS
Multi ch → Other Analog , igital Multi ch OK
Check the signal path MULCH CH ASS →MCH BR ASS →AU O ASS
OK
Check the audio signal in AU O ASS C 2510→ C2501 or replace AU O ASS
Repair or replace point
USB in → Other igital OK
RO H M USB ASS JP8101 1pin 13
es
Check AL MA ASS C 1501 2,3 pin igital Signal
es
iagnose or replace AL MA ASS
o
USB R C ASS U10 Open
es
Replace U10
o
Repair or replace USB R C ASS
o
iagnose RO H M USB ASS arround C8101, C8102,JA8101,C 8101 or replace RO H M USB ASS
ront H M in →
Rear H M in → output
o
iagnose or replace AL MA ASS
es
iagnose RO H M USB ASS arround C8003 or replace RO H M USB ASS or H M Cable rom ront H M USB ASS
H.M. . in → Other igital OK
iagnose AL MA ASS arround C9204, C9203 or replace AL MA ASS

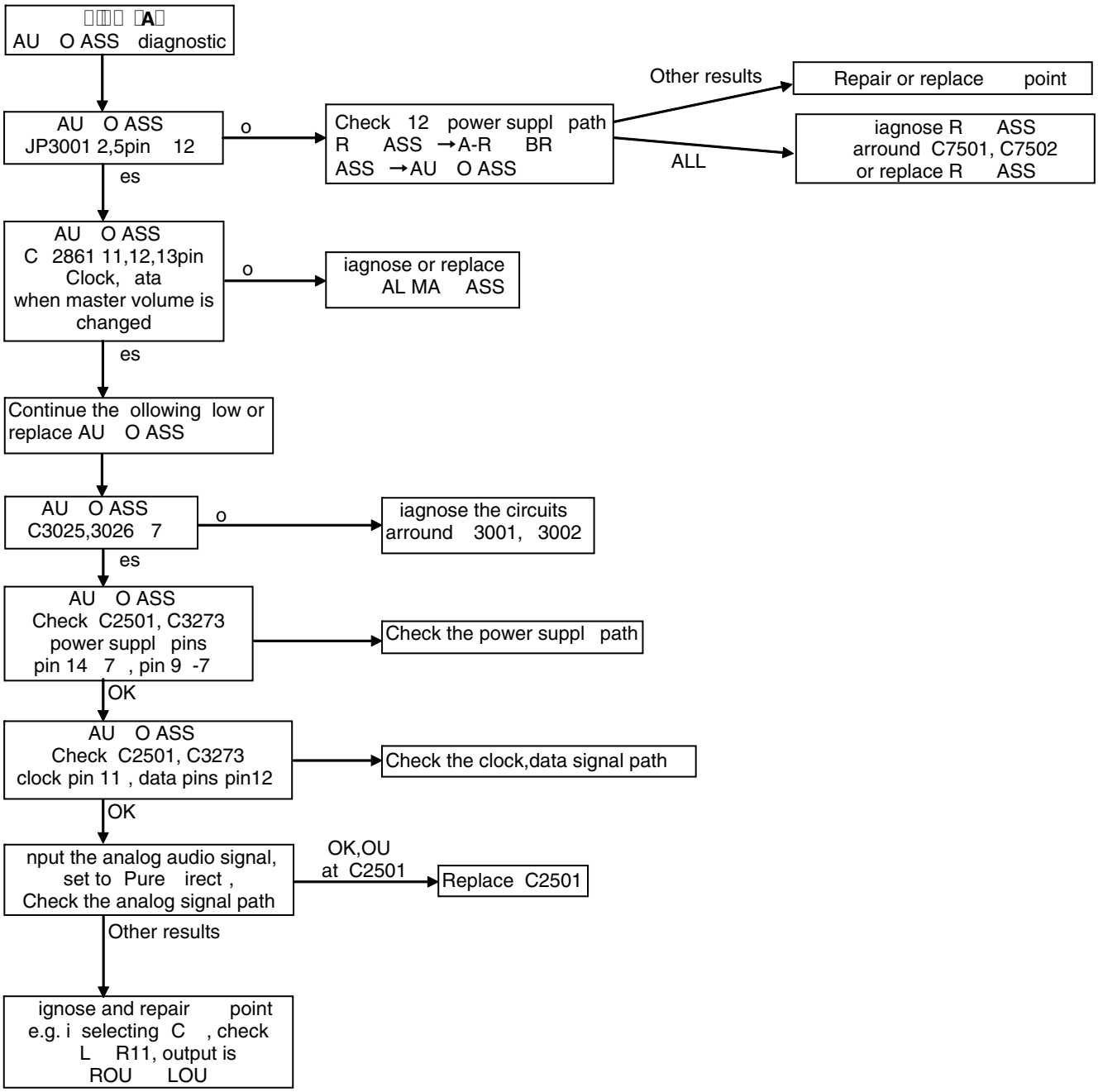
AU O ASS diagnostic
AU O ASS
JP3001 2,5pin 12
o
Check 12 power suppl path
R ASS →A-R BR
ASS →AU O ASS
Other results
Repair or replace point
ALL
iagnose R ASS
arround C7501, C7502
or replace R ASS
es
AU O ASS
C 2861 11,12,13pin
Clock, ata
when master volume is
changed
o
iagnose or replace
AL MA ASS
es
Continue the ollowing low or
replace AU O ASS
AU O ASS
C3025,3026 7
o
iagnose the circuits
arround 3001, 3002
es
AU O ASS
Check C2501, C3273
power suppl pins
pin 14 7 , pin 9 -7
Check the power suppl path
OK
AU O ASS
Check C2501, C3273
clock pin 11 , data pins pin12
Check the clock,data signal path
OK
nput the analog audio signal,
set to Pure irect ,
Check the analog signal path
OK,OU
at C2501
Replace C2501
Other results
ignose and repair point
e.g. i selecting C , check
L R11, output is
ROU LOU

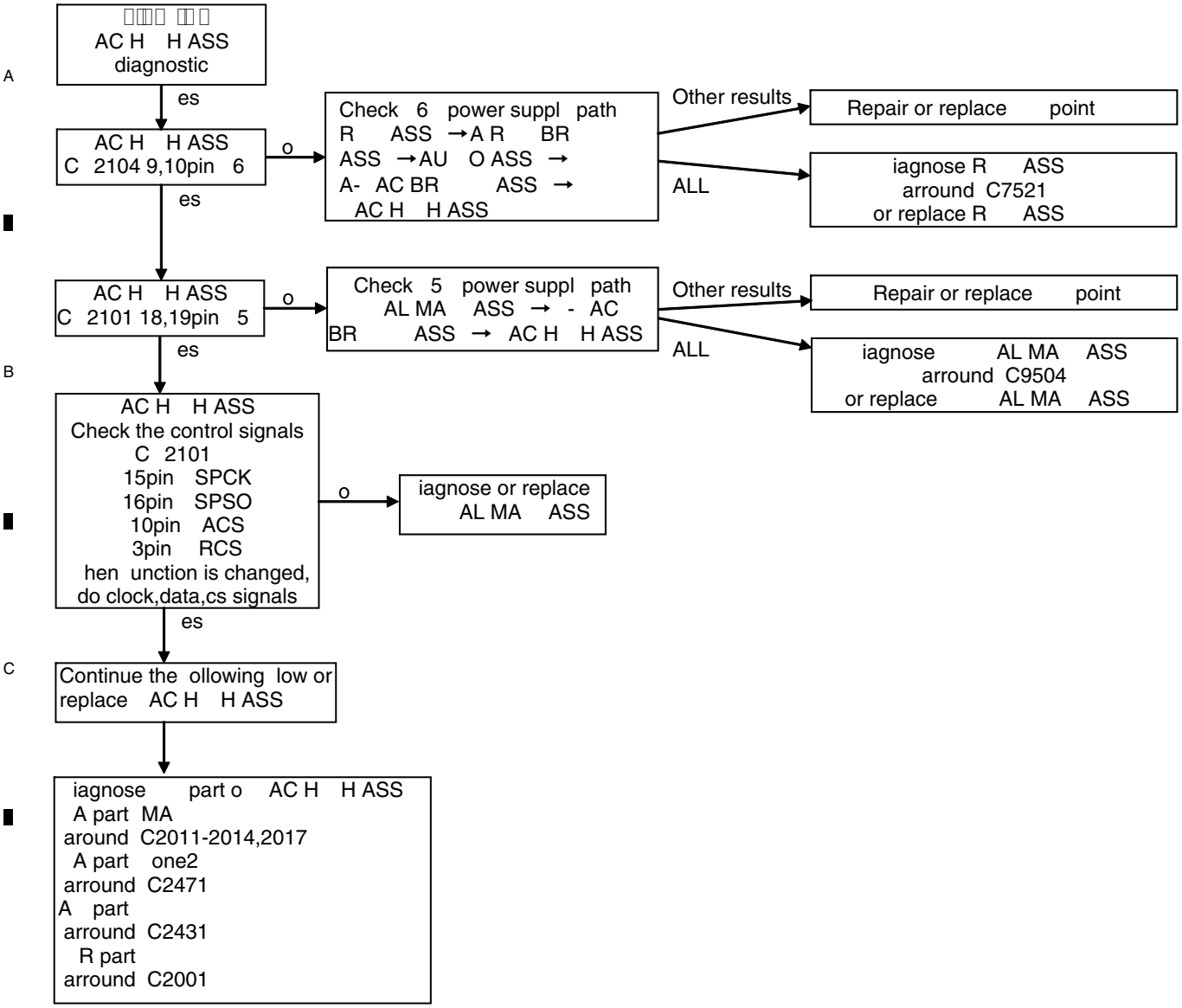
AC H H ASS
diagnostic
A
es
AC H H ASS
C 2104 9,10pin 6
o
Check 6 power suppl path
R ASS →A R BR
ASS →AU O ASS →
A- AC BR ASS →
AC H H ASS
Other results
Repair or replace point
ALL
iagnose R ASS
arround C7521
or replace R ASS
es
AC H H ASS
C 2101 18,19pin 5
o
Check 5 power suppl path
AL MA ASS → - AC
BR ASS → AC H H ASS
Other results
Repair or replace point
ALL
iagnose AL MA ASS
arround C9504
or replace AL MA ASS
es
B
AC H H ASS
Check the control signals
C 2101
15pin SPCK
16pin SPSO
10pin ACS
3pin RCS
hen unction is changed,
do clock,data,cs signals
o
iagnose or replace
AL MA ASS
es
C
Continue the ollowing low or
replace AC H H ASS
iagnose part o AC H H ASS
A part MA
around C2011-2014,2017
A part one2
arround C2471
A part
arround C2431
R part
arround C2001

NO PICTURE

his is ust or general re erence and does not including ever single case.

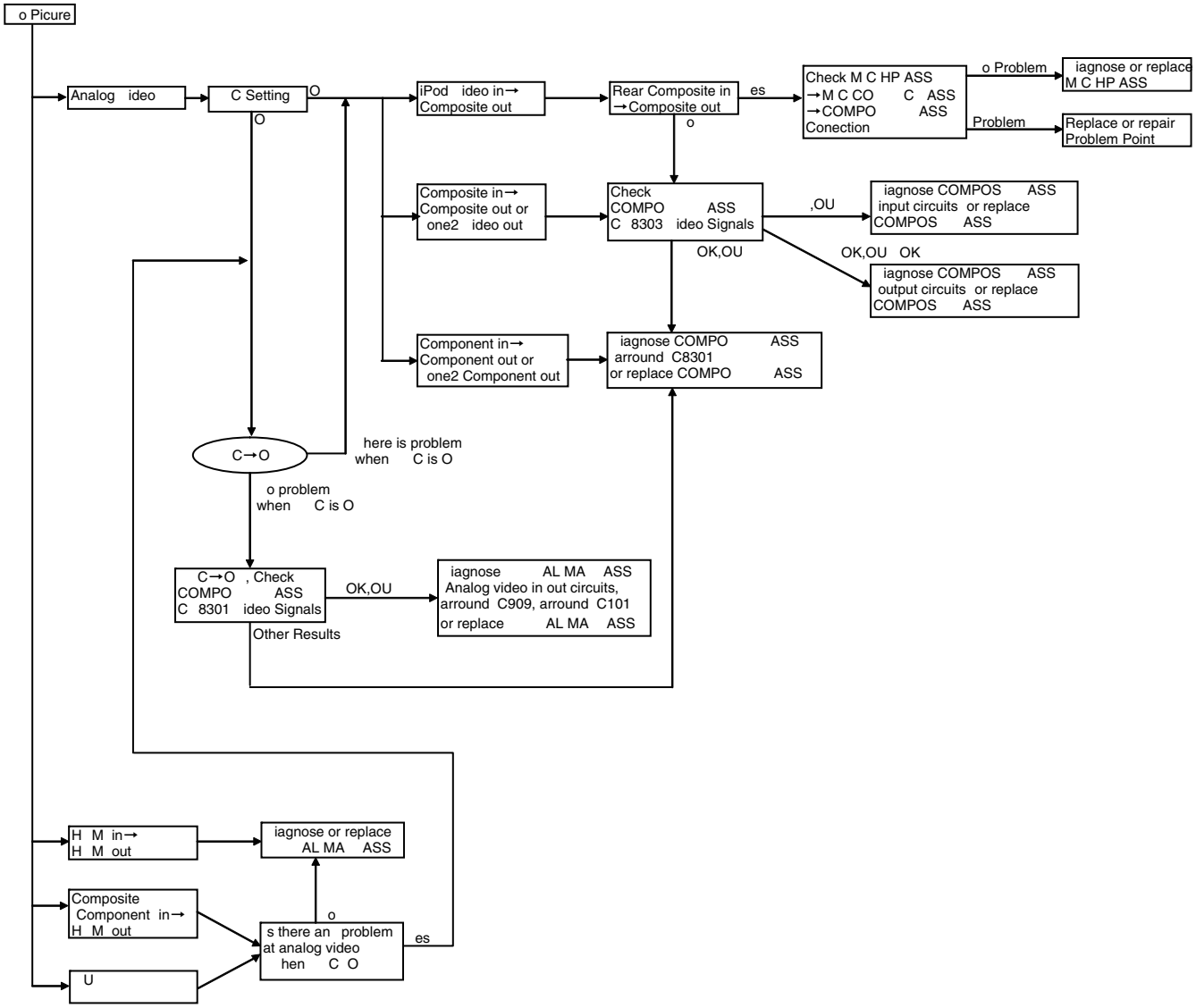

OT ER

his is ust or general re erence and does not including ever single case.

A

V T

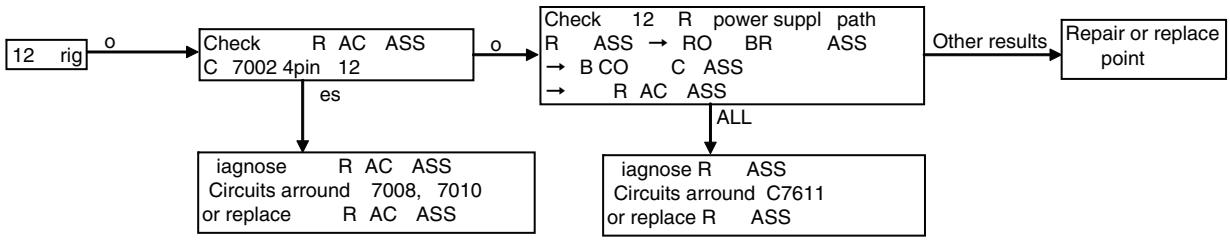

B

RS C

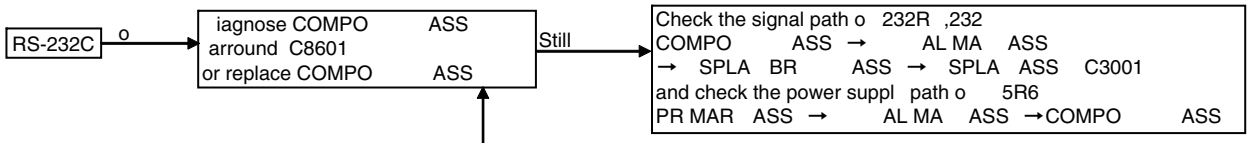

R R

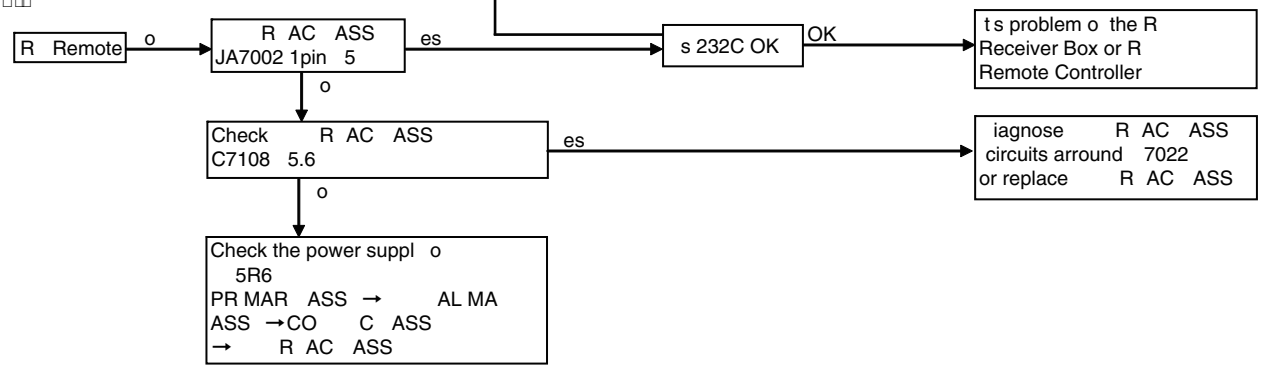

C

IR SR

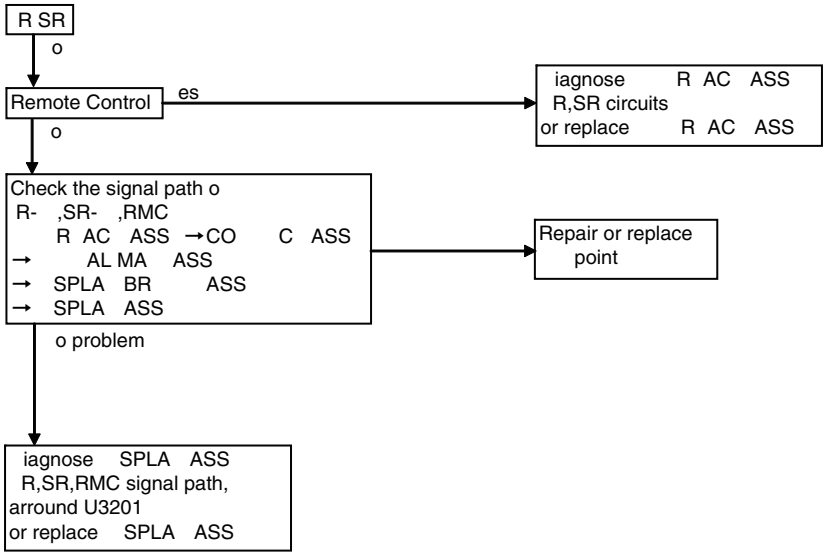

DI ITAL A P LOC LO C ART

) N S

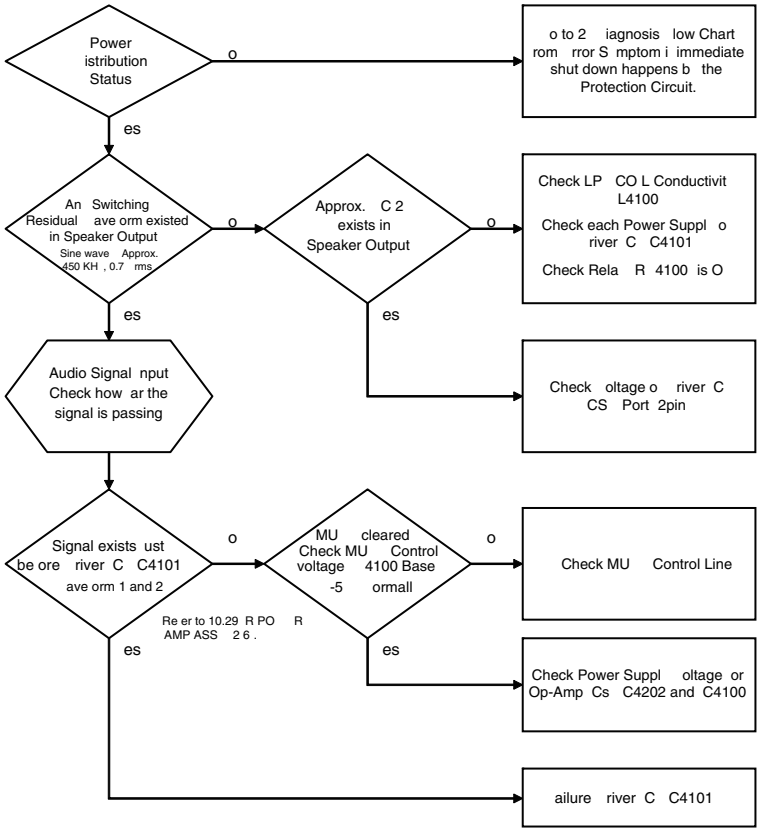

NOTE iring number listed is the example o ront L-ch

) D C E S

ailure locating method rom error s mptom is available as diagnosis a ter product shutdown.
iagnosis low Chart rom error s mptom due to Ampli ier Section is shown here.

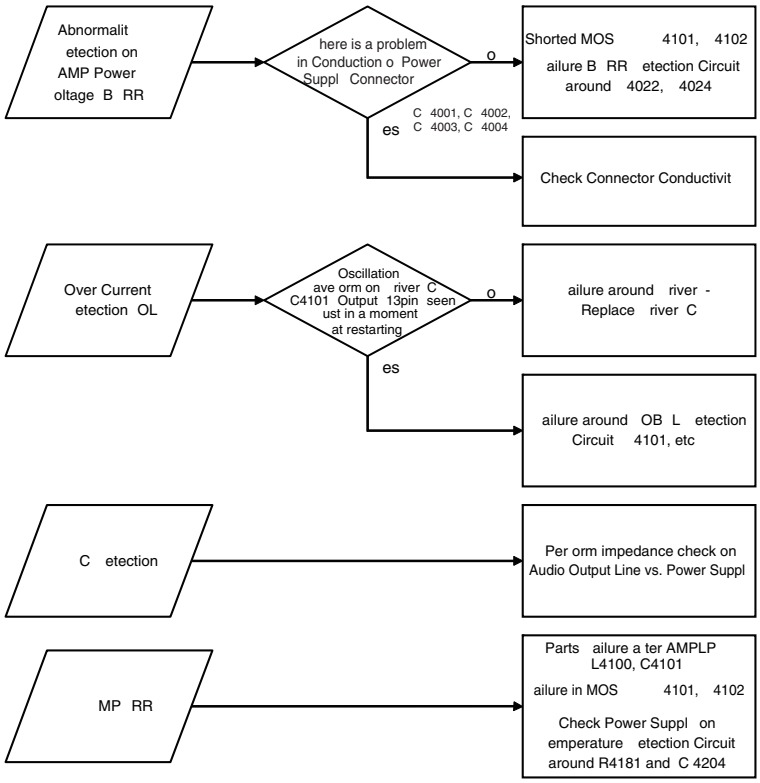

Cause o being B RR
hen B-Power Suppl oltage exceeds _ 75
hen B-Power Suppl oltage alls below _ 20

Cause o being OL
At Over Current etected ot worked with no-load
At river C not Oscillated
At OB L etection Circuit Activated

Cause o being C
hen C 7 or above is output in Audio Output Line

Cause o being MP RR
hen MOS emperature exceeds approx. 95 degrees
hen MOS temperature is suddenl increased

. CIRCUIT DESCRIPTION

P C P L

A C

I	P	D	S E	I	R
Overheat detection	etects MOS temperature o ampli ier output stage	etects when MP RR POR becomes L in case o the detecting temperature exceeds 95 C or rapid change b short cuicuit o speaker terminals. C3001 72pin	lashes O RH A Shuts down when abnormalit continues or more than 3 seconds.	Blinks L O L indicator.	Recoverable b power-on a ter shutdown in one minute.
		etects when MA MP port becomes below 1.9 at C hermistor detect circuit. C3001 2pin	an rotates b power-on.		MA MP voltage 5 -1.8 A LO 1.8 or less A H H
C detection	etects C o ampli ier output A ter LP	etects when SP output exceeds C 7 and C RR port becomes L . C3001 80pin	MU on and Speaker Rela o . lashes AMP RR . Shuts down when abnormalit continues or more than 3 seconds.	Blinks A A C MCACC L	n case o detecting C abnormalit during power-on se uence a ter the C was once detected. Recoverable b onl C C cancel. Re er to How to nter Release Mode .
			MU on and Speaker Rela o . lashes AMP RR . Shuts down when abnormalit continues or more than 3 seconds.	Blinks L O L indicator.	n case o detecting C abnormalit during normal operation. Recoverable b power-on a ter 1 minute.
an abnormalit detection	etects a an not rotating b loose connector or an lock when controling the an rotation	etects when A port becomes L . C3001 87pin	lashes A S OP Shuts down when abnormalit continues or more than 3 seconds.	Blinks iPod iPhone iPad L	Recoverable b power-on
obel detection	Protects overcurrent b obel Resistance when high power output o higher re uenc continued	etects OL RR port becomes L . C3001 71pin	Shuts down	Blinks iPod iPhone iPad L	Recoverable b power-on
Overcurrent detection	Protects overcurrent o MOS in output stage when overcurrent lows at the output stage	etects OL RR port becomes L . C3001 71pin	Shuts down	Blinks iPod iPhone iPad L	Recoverable b power-on
Ampli ier Power Suppl ailure detection	etects abnormal in the Ampli ier Power Suppl	etects B-Power Suppl oltage exceeds 75 or alls below 20 and B RR port becomes L . C3001 84pin	Shuts down	Blinks A A C MCACC L	Recoverable b onl C C cancel. Re er to How to nter Release Mode .

E R O

uring Standb mode, simultaneousl press and hold the U ↓ and MUL - O O O ke s or 5 seconds.

O D

R IR POWER AMP ASSY

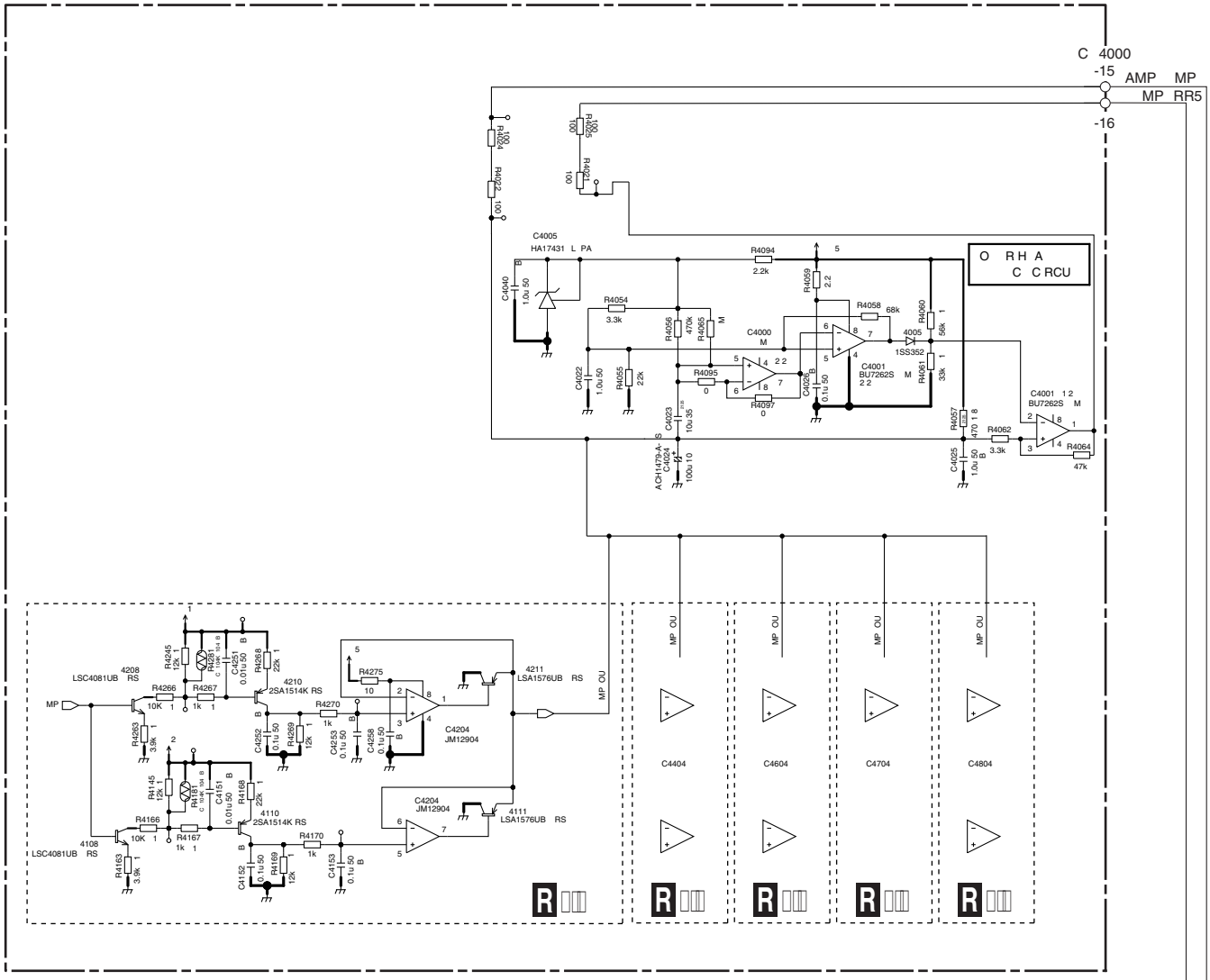

DISPLAY ASSY

DIGITAL MAIN ASSY

INTERFACE ASSY

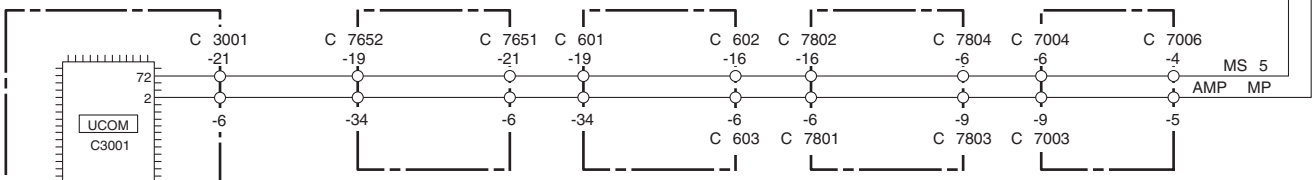

AE DISPLAY BRIDGE ASSY

CONNECT ASSY

DC D□□□□□□□□

A

R IR POWER AMP ASSY

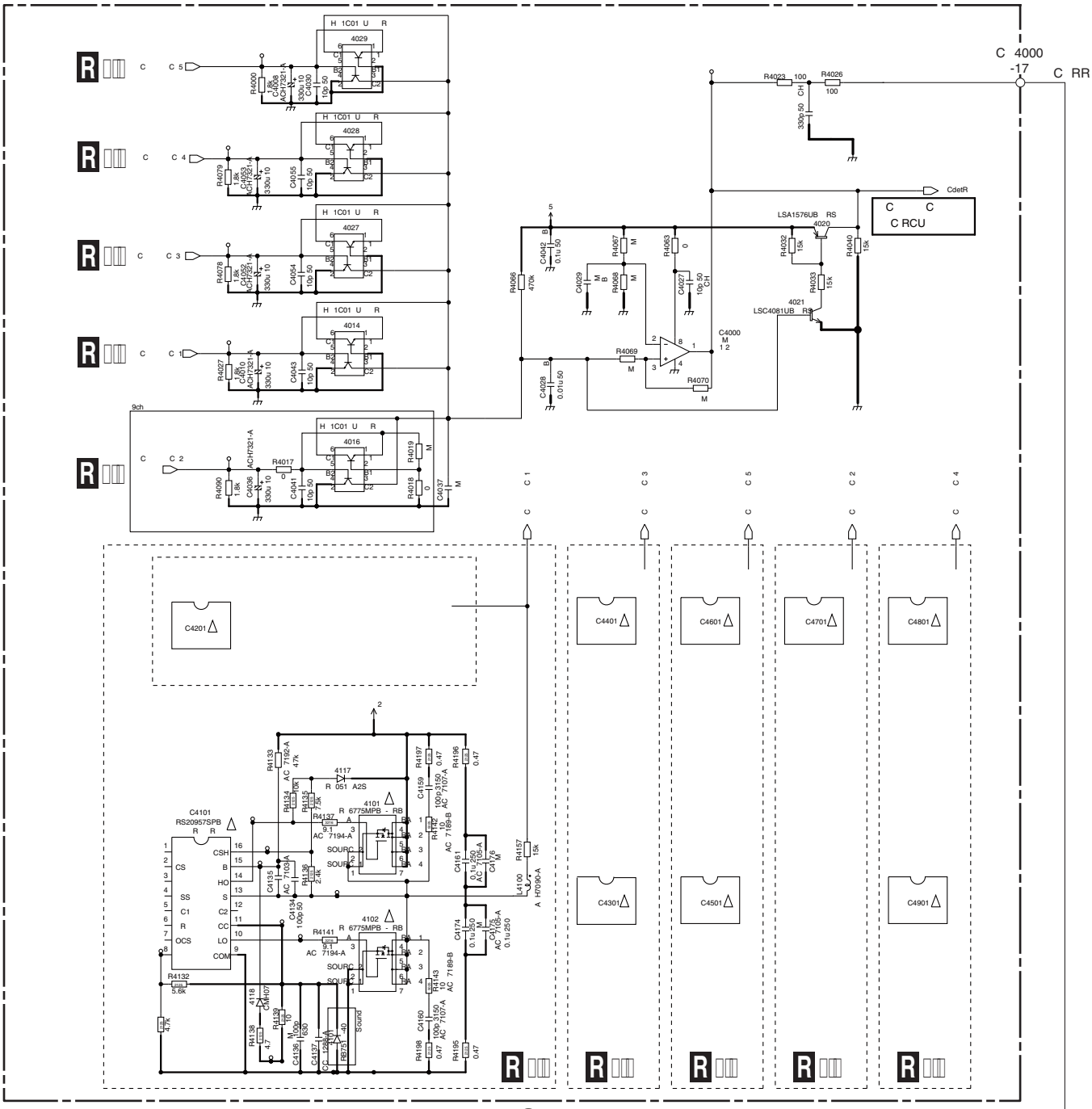

DISPLAY ASSY

DIGITAL MAIN ASSY

INTERFACE ASSY

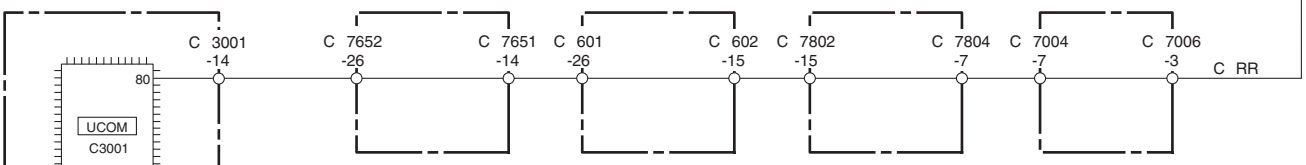

AE DISPLAY BRIDGE ASSY

CONNECT ASSY

D
O C D OS ET O S

A

R IR POWER AMP ASSY

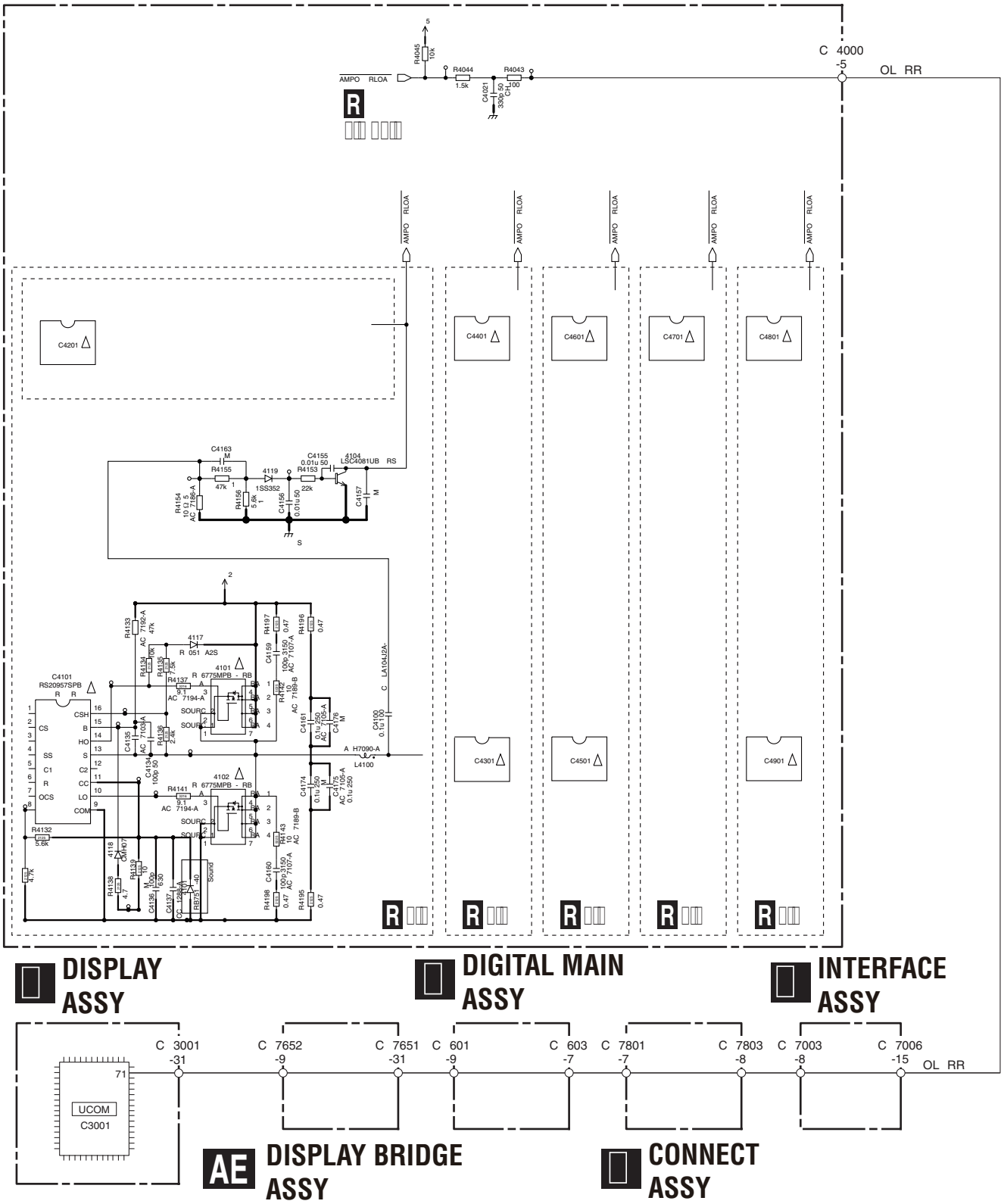

B

C

DISPLAY ASSY

DIGITAL MAIN ASSY

INTERFACE ASSY

AE DISPLAY BRIDGE ASSY

CONNECT ASSY

R IR POWER AMP ASSY

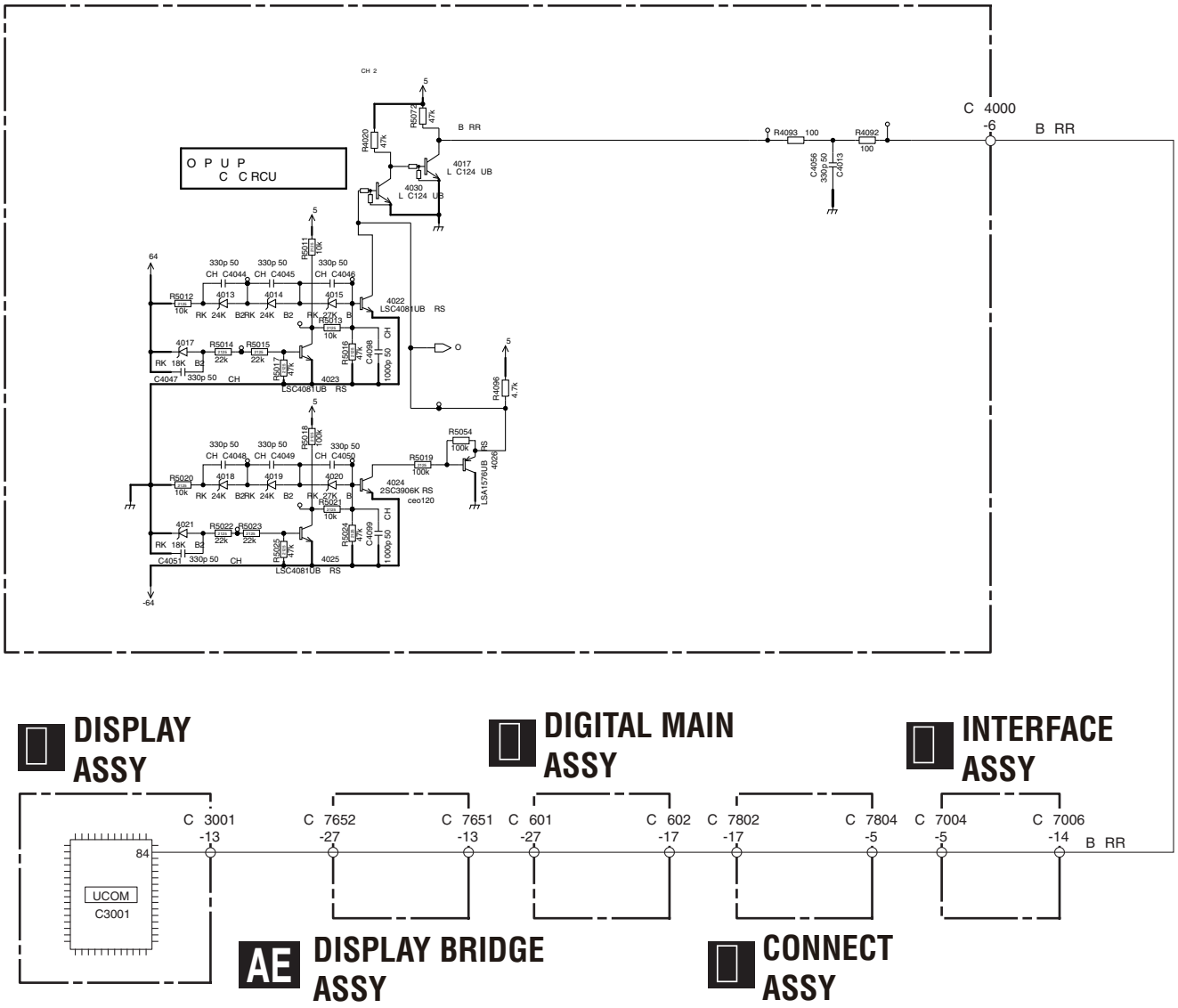

DISPLAY ASSY

DIGITAL MAIN ASSY

INTERFACE ASSY

AE DISPLAY BRIDGE ASSY

CONNECT ASSY

P C P L (VDDERR)

I	P	D	S E	I	R
USB power ailure detection	etection o ailure in regulator circuit or external suppl	etected when USB voltage reaches 7 or higher, or 4.1 or lower and RR port is set to L	Shuts down	Blinks iPod	Restoration possible with Power O

■ VDDERR C

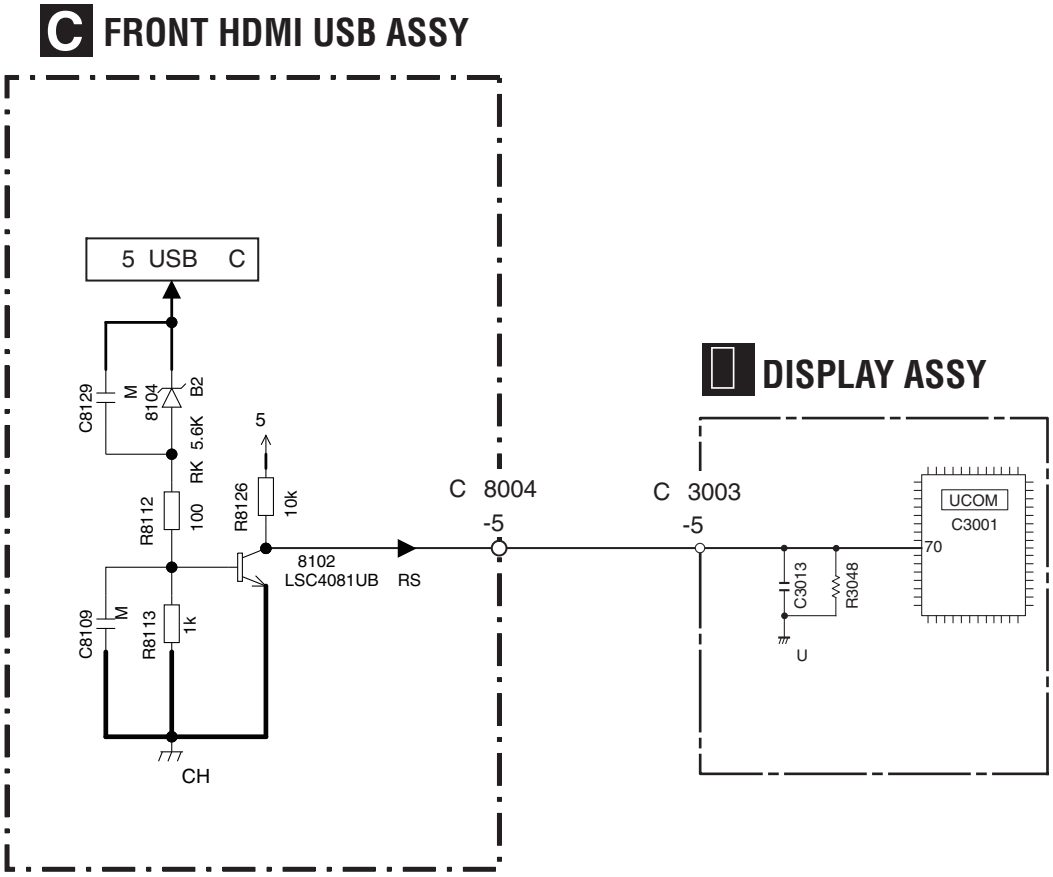

	L ispla	L lashes	Status	iming sec.	escription	Remarks
1	Over Current	A	hen the overload USB device over 500 mA is connected.		he connected USB device is overload.	
2	H CP RROR	A	hen an H CP RROR is detected.	lashes 5 seconds		arning indication or H M Simpla
3	12 R RR	A	hen the 12 trigger circuit is short-circuited.	lashes	he 12 trigger circuit is short-circuited, and a overcurrent is generated.	
4	A	A	hen the A ALO PU O R is detected.	con lights 1 second	hile the con lights 1 second, when the A ALO PU O R is detected again, the con continues to light 1 second more rom that time. hile the con lights 1 second, when there is no A ALO PU O R detection, the con stops lighting and returns to normal displa .	he con O R lights
5	A	A A C MCACC	hen the B R power suppl ailure is detected.		abnormarlit voltage is detected in the B R power suppl circuit B RR , the unit power o immediatel and the MCACC L starts lashing. o restore the previous status, ollow the procedure How to nter Release Mode .	
6	O A AP R	A	hen B Adapter is not connected.	Lights	hile the A AP R POR unction is selected, the B Adapter is not connected.	
7	O A A LABL	A	on-B Adapter is connected.	Lights	hile the A AP R POR unction is selected, the non-B Adapter is connected.	
8	A C	A	o wireless connection between B source and A R	Lights	hile the A AP R POR unction is selected, there is no wireless connection between B source e uipment and A R.	
9	A P O RLOA	A	hen overcurrent is detected in the Adapter port.	Lights	hile the A AP R POR unction is selected, overcurrent is detected in the Adapter port, and Bluetooth unction is not available.	
10	LA PO RR	A	hen power abnormalit o wireless LA converter is detected.	lashes	Over-current status is generated at the power terminal o wireless LA converter.	

□. SERVICE □ ODE

□.□ TEST □ ODE

□□□D□□□□□□□ □□□□□□□□□ □□□□□□

A

□P□□□□□□□

he numbers o detections or various protection processes are displa ed.

□□ □□ □□ □□□□□□□□□

urn o the power to this unit b setting the main volume level to ---dB and Multi- one to O .
uring Standb mode, simultaneousl press and hold MUL - O O O and R ke s or 5 seconds to enter this mode.

□□ □□□□ □□□□□□□□□□

B

Ke operation	L displa
ispla number o times C is detected.	C ＊＊＊
↓ ↑	
ispla number o times O RLOA is detected.	O L ＊＊＊
↓ ↑	
ispla number o times COMB A O is detected. etects C and O RLOA simultaneousl	C O M ＊＊＊
↓ ↑	
ispla number o times A S OP is detected.	A ＊＊＊
↓ ↑	
ispla number o times AMP overheat is detected.	S M P ＊＊＊
↓ ↑	
ispla number o times igital Power abnormalit is detected.	R R ＊＊＊
↓ ↑	
ispla number o times B R power suppl overheat is detected.	B M P ＊＊＊
↓ ↑	
ispla number o times B R power suppl ailure is detected.	B R R ＊＊＊
↓ ↑	

his unction does not work on this model.

□□□□□P□□□□□□□

↓ U Ke
↑ U Ke
← PR S Ke
→ PR S Ke

C

Ke operation	L displa
Resetting the number o times error is detected.	R S ◀HOL ▶
↓ ↑	
ispla accumulated time R S .	12345h20m◀ HL ▶
↓ ↑	
ispla C C S state.	C C ◀O ▶
↓ ↑	
ispla A S state.	A ◀O ▶
↓ ↑	
USB Backup state	USB BAK ◀HOL ▶
↓ ↑	
ispla Model ame estination state.	SC-57 U JCB
↓ ↑	
Change c clicall	

Resetting the number o times error is detected

Ke operation	L displa
← →	R S ◀CL AR ▶
R	R S ◀ R S ▶
↓ Continued	

Resetting the accumulated time

Ke operation	L displa
← →	12345h 20m ◀CL ▶
R	0h 0m ◀RS ▶
↓ Continued	

ispla C C S state.

Ke operation	L displa
← →	C C ◀ O ▶
↓ Change c clicall	

Ke operation	L displa
← →	A ◀ O ▶
↓ Change c clicall	

Saving and Loading o USB backup state.

Ke operation	L displa
← →	A Receiver → USB USB BAK◀SA ▶
← →	USB → A Receiver USB BAK◀LOA ▶
↓ Change c clicall	

Ke operation	L displa
R	PL AS A
SA or LOA is completed.	COMPL
↓ 5 sec Power O All one O	

D

C C S he unction or making the H M output terminal to output 1 kH s uare wave. the s uare wave is output, the C C line is considered to be normal.

A S he unction or making the A to be orced to rotate.

□. DISASSE□ □ L□

□ □□□□□ P□□□□

N□□□

he points marked below must be grounded when the Rear Panel 57U is removed.
Be ore turning the unit O , be sure to ground the marked points with the chassis. Or, ou ma short-circuit the ground points on the solder sur ace, using pieces o wire.

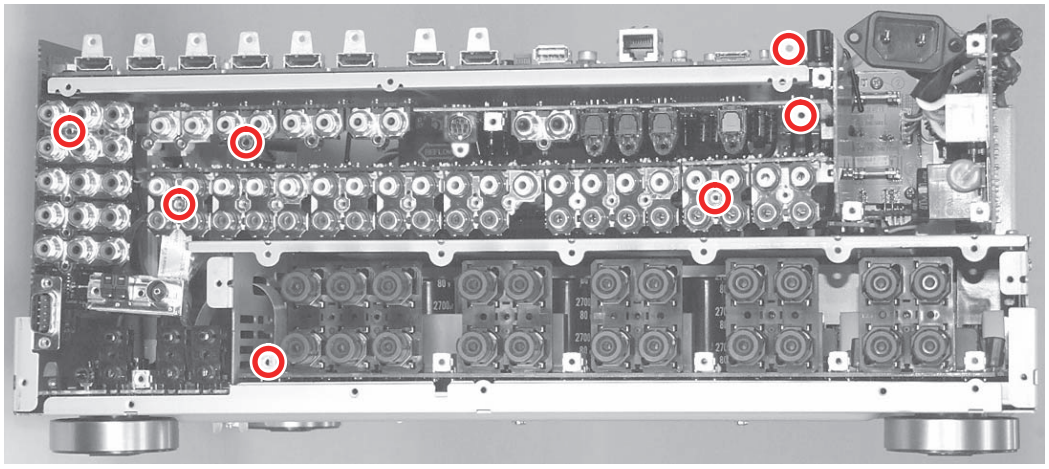

S□□□□ □ □□□ R□□□ P□□□□□□□U

Ⓐ ABA1011	□ ABA1207	Ⓒ ABA7078	Ⓓ BB 30P060 CC
Ⓔ BM 30P040 B	□ BP 30P080 B	□ CB 30P080 B	□ BP 30P100 C

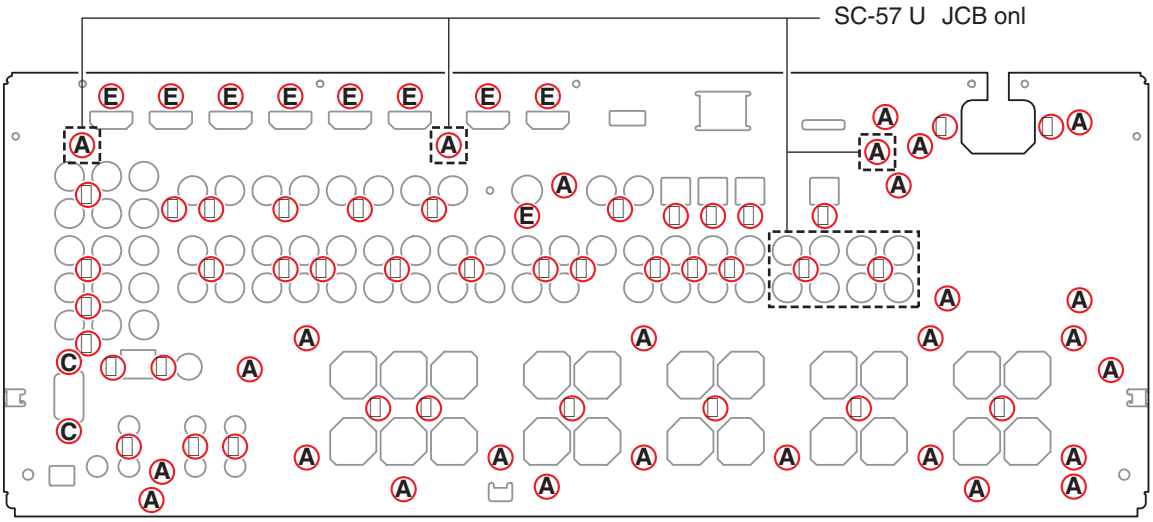

N□□□ □

1 ven i the unit shown in the photos and illustrations in this manual ma di er rom our product, the procedures described here are common.

2 or per orming the diagnosis shown below, the ollowing igs or service is re uired.

39P	C	1681
15P	C	1680
30P	30P board to board extension ig cable	1682
28P	14P board to board extension ig cable	1763
23P	23P board to board extension ig cable	1761
20P	20P board to board extension ig cable	1677
20P	14P board to board extension ig cable	1759
15P	7P board to board extension ig cable	1762
5P PH Housing Ass		1594

(□) □□□□□ □□□□□□□ □□□ □□□□□□□□□□□□ □□□□□□□□□□□□ □ □□□□□□ □□□□□□□□ □□□□□□□□□□□□ □□□□□ □□□□□ □□□□□□□□□□□.

D□□□□□□□ □□□

□□□ □□□□□S□□□□□

Remove the Bonnet 85 b removing the 16 screws.

N□□□□ □□ □□□□□ □□□□ □□ □□ □□□ □ □□□□□□□□

ighten screw rom the location ∗1 on the picture.

□□□□ □□□□□S□□□□□

1 Release the 15P CC A 7745 rom the two PCB binders.
2 isconnect the three connectors.
3 Release the two cables rom the Cord Clamper HL.
4 Remove the ore screws. BB 30P060 CC
5 Remove the 15P CC A 7745 rom the M C HP UAR ASS .

N□□□□ 15P CC A 7745 is a ixed with the double side tape 10 x 110mm .

N□□□□ □□ □□□□□ □□□□

∗1 PCB binder tilt in the direction o the blue arrow.
∗2 15P C A 7745 don t touch cable rom Power rans ormer.
∗3 on t touch cables to iode.

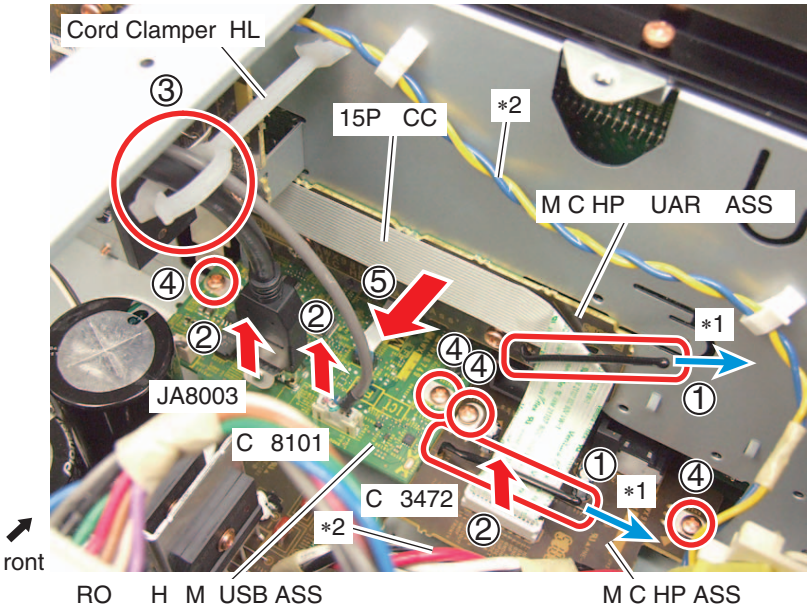

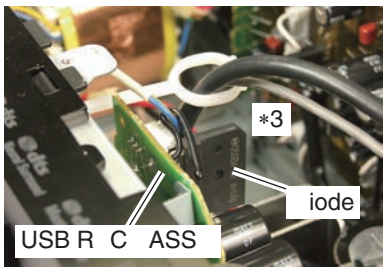

6 Release the umper wires rom the three PCB binders.

N□□□□ □□ □□□□□ □□□□

∗1 Jumper wire A 7753 rom SPLA ASS don t touch J7657 and J7904 or the SPLA BR ASS .

∗2 on t touch the 39P C A 7753 to a top o screw.

∗3 Bind as not to touch 39P C A 7753 and Jumper wire A 7753 .

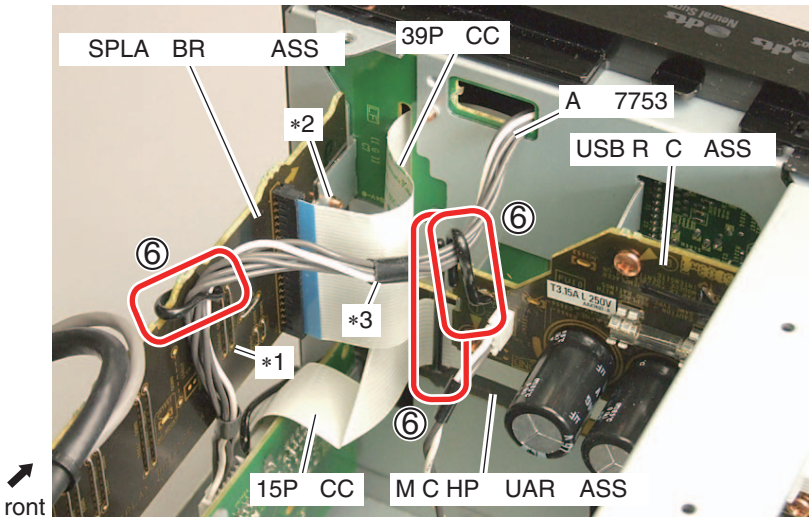

7 Remove the two screws. BB 30P080 B

8 Remove the two screws. ABA1193

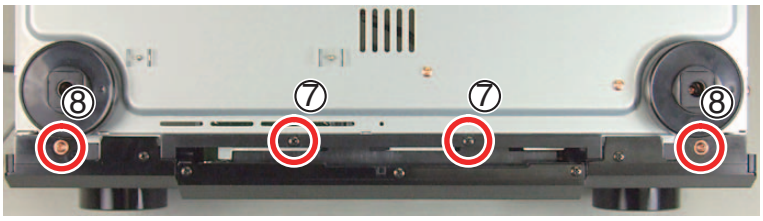

Bottom view

9 Remove the three screws. BB 30P080 CC

10 Unhook the two hooks.

11 Remove the ront Section.

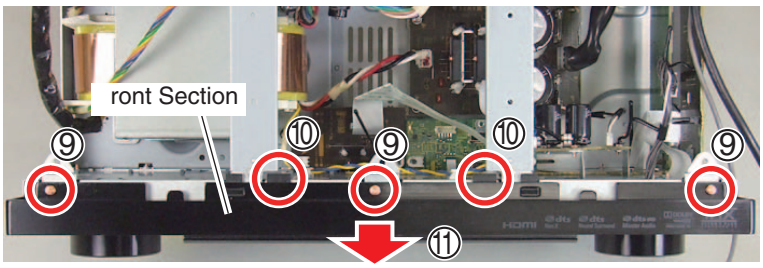

op view

□□□□ D□□□□□□□

Connect the two connectors and arrange the unit as shown in the photo.

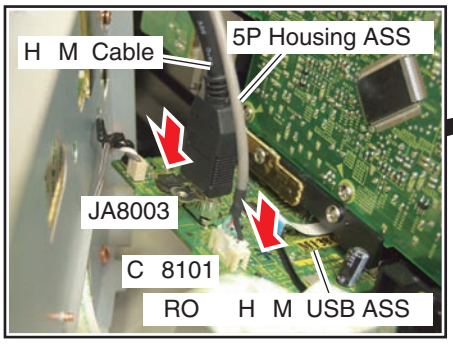

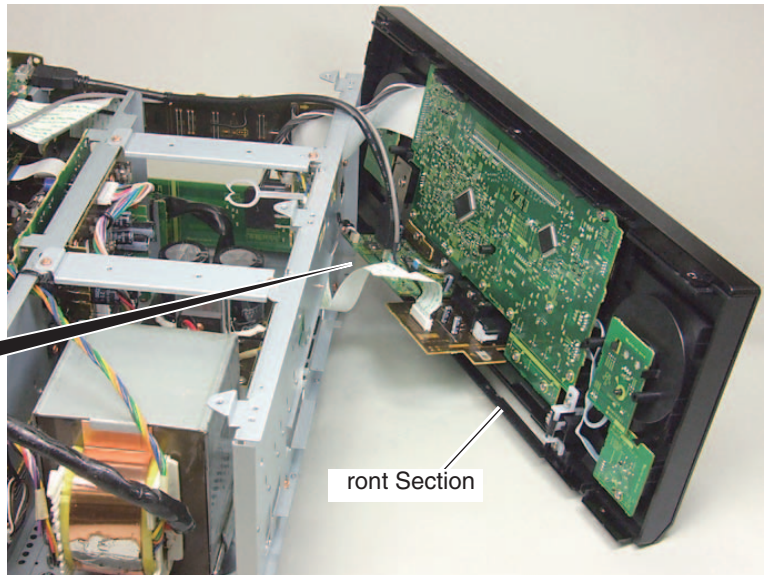

□□□ R□□□ S□□□□□□

hen ou per orm diagnosis on the side-B o AU O ASS , please re er to last part o Step, □□□□□□ D□□□□□□□□□□.

Remove the Bonnet 85 b removing the 16 screws.

□□□□ R□□□ S□□□□□

1 Cut the Binder.
2 Release the cables rom the two PCB binders.
3 Remove the 39P C A 7746 b disconnect the two connectors.
4 isconnect the three connectors.
5 Remove the screw. BB 30P060 CC

N□□□□ □□ □□□□□ □□□□

∗1 H M Cabel and 5P Housing ASS A 7748 bind together inside.
∗2 Attention to st le cables as shown in the photo.

6 Remove the 15P C A 7725 b disconnect the two connectors.
7 Release the umper wire A 7746 rom COMPO ASS rom hook o the R UAR ASS .
8 Release the umper wires rom two PCB binders.
9 isconnect the connector.

N□□□□ □□ □□□□□ □□□□

∗1 wist PCB binder around the umper wire A 7746 so that it does not contact B-CO C ASS or plate.
∗2 our umper wires don t contact.
∗3 PCB binder tilt in the direction o the blue arrow and pull the umper wire A 7745 rom AU O ASS to the opposite direction blue arrow .

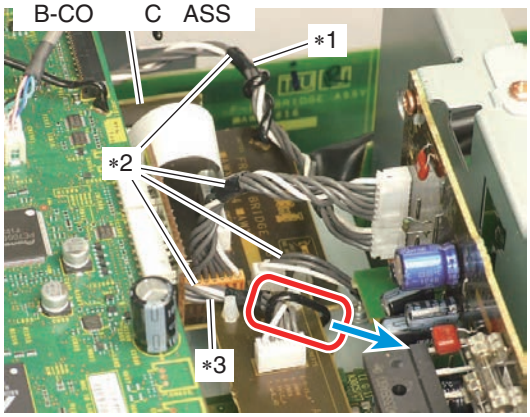

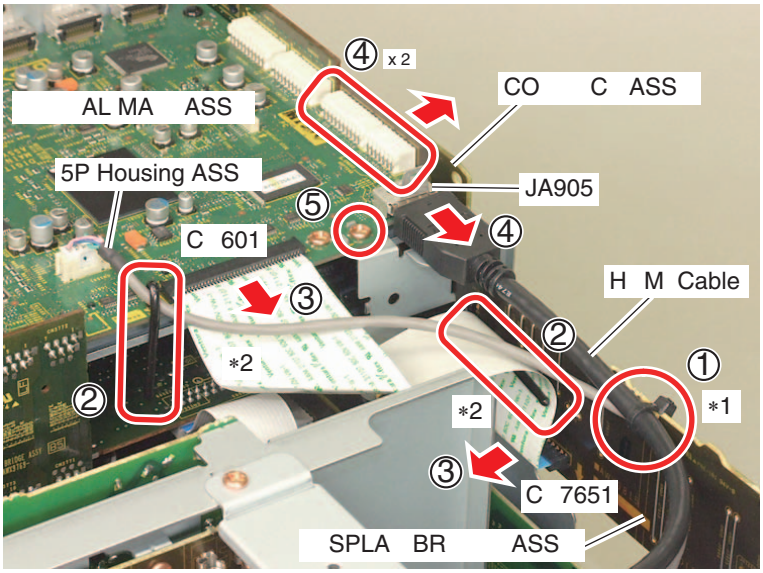

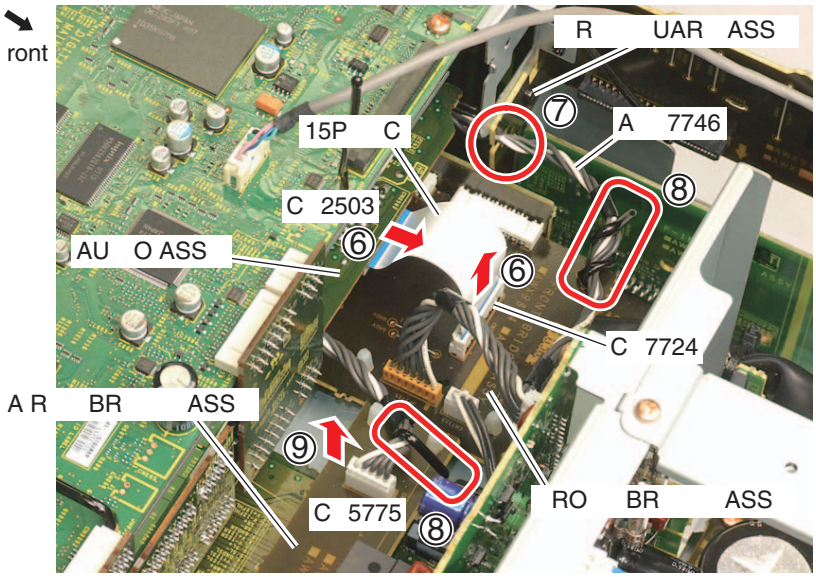

10 Remove the PR BR ASS .

11 Release the umper wire A 7750 rom PR MAR ASS rom PCB binder.

N□□□□ □□ □□□□□ □□□□

*1 Pass the umper wire A 7750 rom PR MAR ASS under the R ASS .

*2 PCB binder tilt in the direction o the blue arrow.

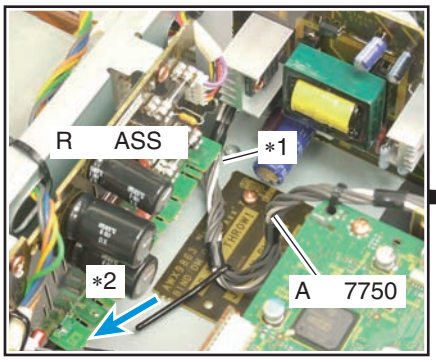

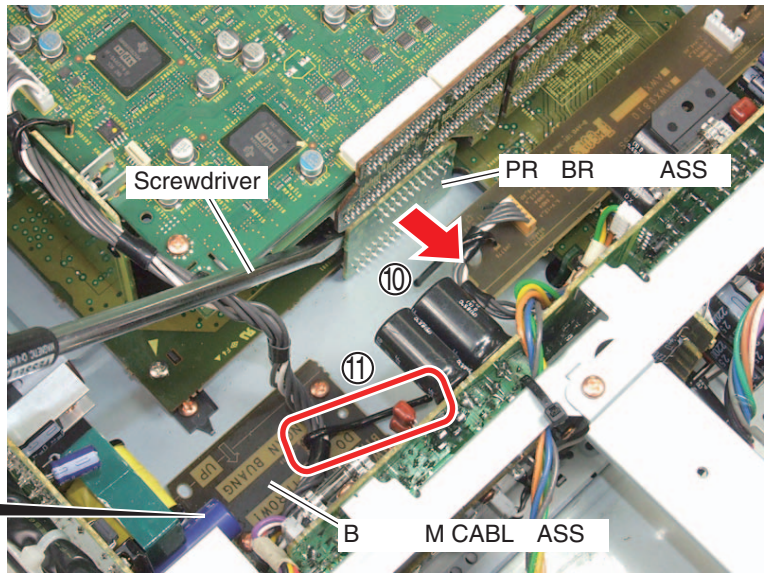

12 Remove the six Cushion Circle 14B.

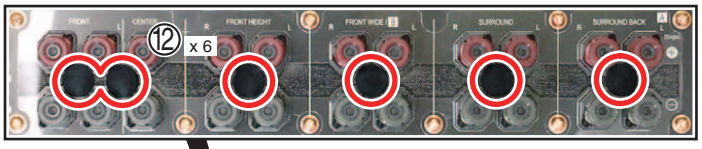

13 Remove the six screws. BP 30P100 C

14 Remove the AC inlet b removing the two screws. CB 30P080 B

15 Remove the three screws. BP 30P080 B

16 Remove the 21 screws. ABA1011

17 Remove the Rear Section.

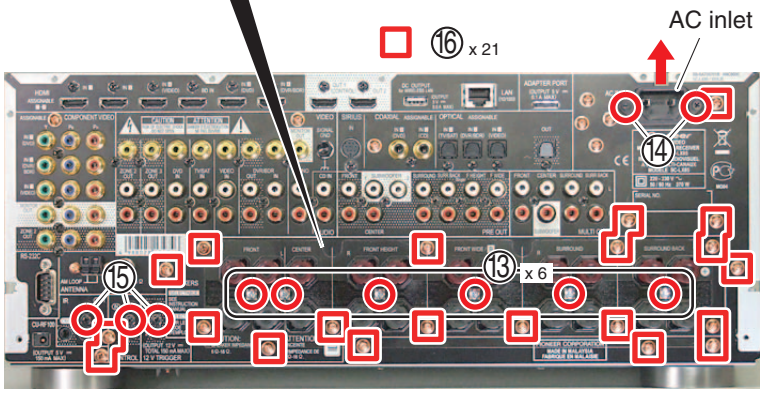

N□□□□Also disconnect the umper wire A 7747 rom R AC ASS rom the COMPO ASS .

N□□□ □□ □□□□□ □□□□

*1 Bind umper wire A 7747 rom R AC ASS , using the PCB binder.

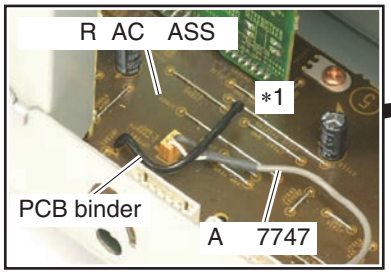

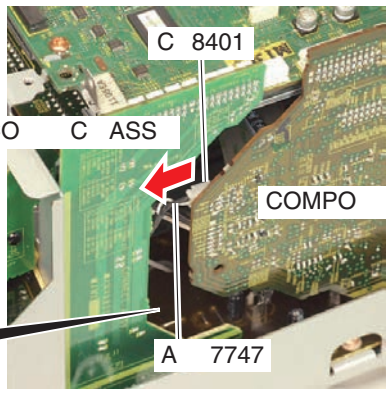

D

1 Arrange the unit as shown in the photo.
2 nsert the nsulation Sheet.
3 Connect the Rear Panel 57U to the Under Base 85 round and point o the R PO R AMP ASS .
Re er to the **P** or the point o the R PO R AMP ASS .

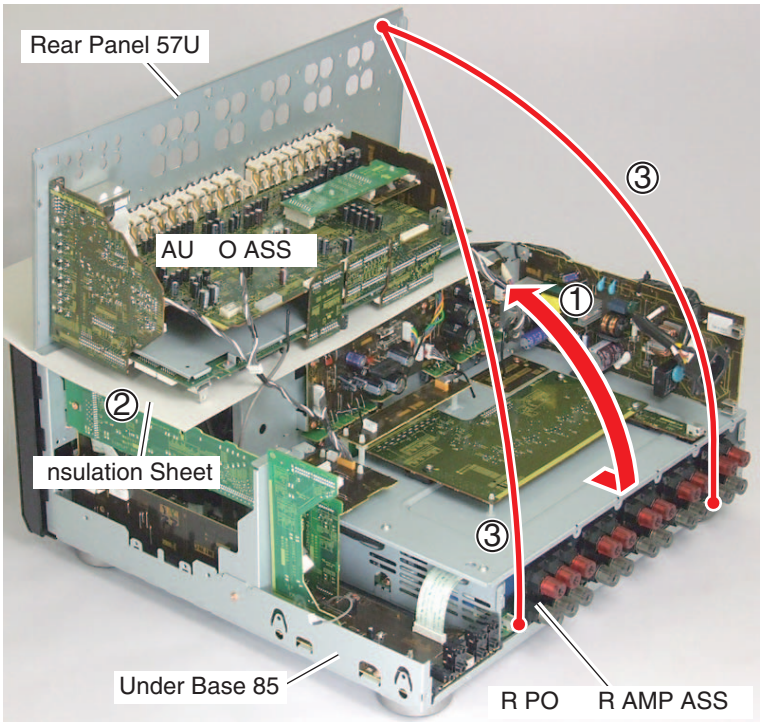

4 Attach the PR BR ASS .
5 Connect the two pair board to board extension ig cables. 1761
(PRE BRIDGE CN6951 <-> IR BUFFER CN6801)

N n case o using 1761 with the this condition, onl using a le t side connector on the ig board.

6 isconnect the connector.
7 Connect the 5P PH Housing ASS ig cable. 1594
(AUDIO ADX7745 <-> REG CN7502)

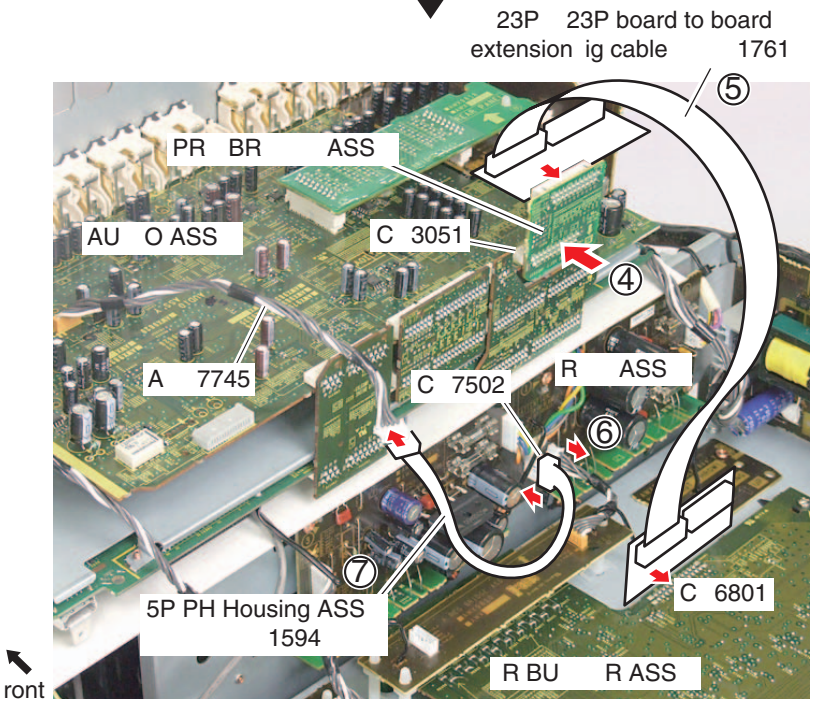

8 Connect the 39P CC ig cable. 1681
(DIGITAL MAIN CN601 <-> DISPLAY BRIDGE CN7651)

9 Connect the 15P CC ig cable. 1680
(AUDIO CN2503 <-> FRONT BRIDGE CN7724)

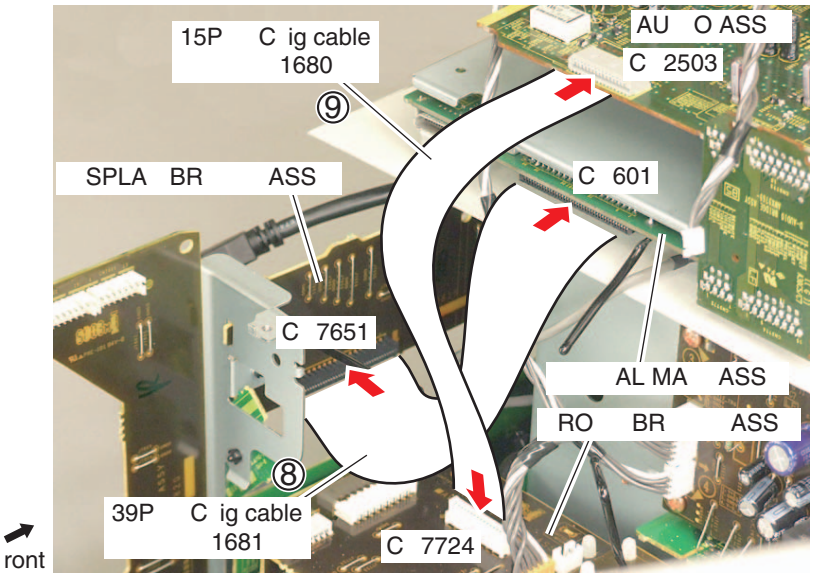

10 Connect the two pair board to board extension ig cables. 1759
(DIGITAL MAIN CN602 <-> CONNECT CN7802)
(DIGITAL MAIN CN603 <-> CONNECT CN7801)

N n case o diagnosis b this situation, do not connect H M Cable rom RO H M USB ASS to prevent breakdown o H M connector.
the H M connection is necessar , use another normal H M Cable and connect it to AL MA ASS without an stress rom H M Cable.

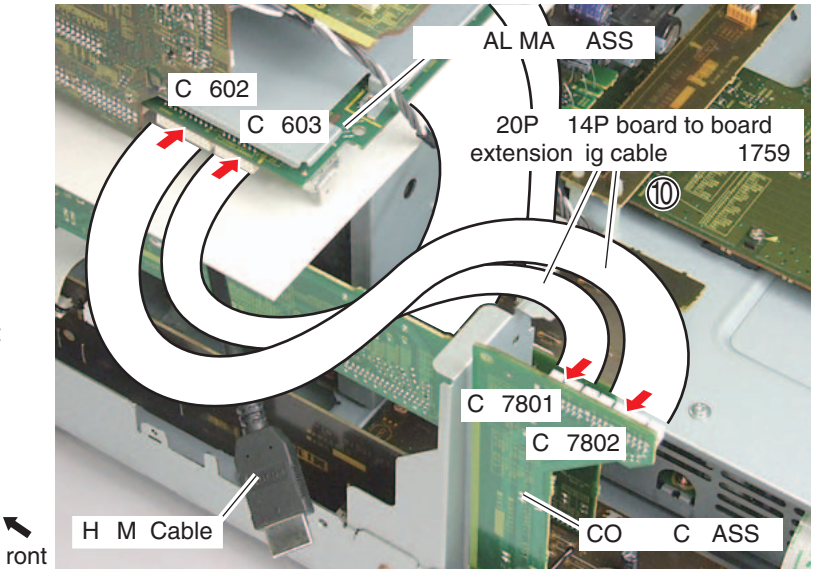

N hen diagnosing, it is not necessar to connect A cable A CO C ASS C 5931 .

N

∗1 PCB binder tilt in the direction o the blue arrow.

∗2 his umper wire don t touch umper and screw.

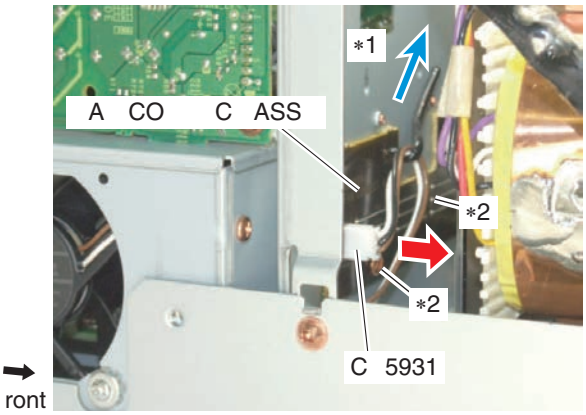

□□□ IR PO□ ER A□ P ASS□

Remove the Rear Section.

A Re er to the □□□□R□□□S□□□□□□□

□□□□ IR C□□□□□□

1 Cut the Binder.

2 Remove the two screws. ABA1011

3 Remove the PR MAR ASS .

N□□ □□ □□□□□ □□□□

*1 A ter the umper wire is bounded, pull the extra length to the direction indicated b the blue arrow.

B

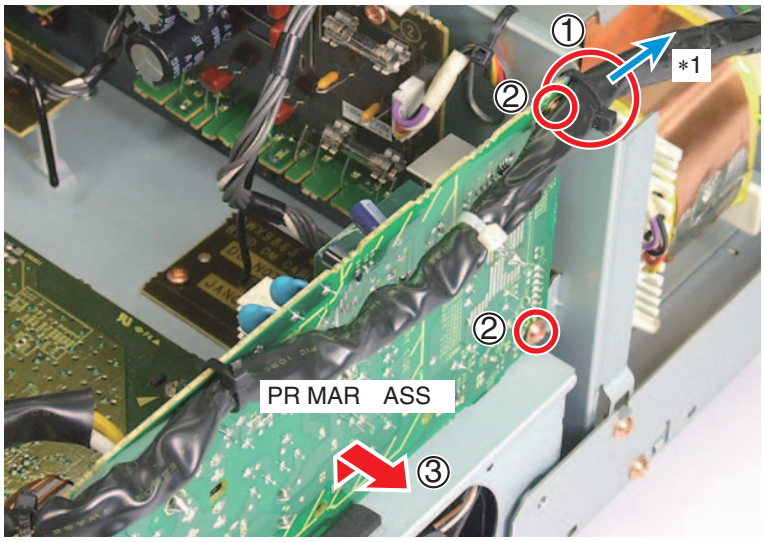

4 isconnect the two connectors.

5 Remove the RO BR ASS rom the two PCB Holder, using Pliers.

C

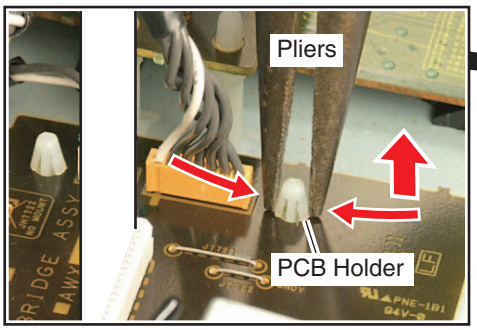

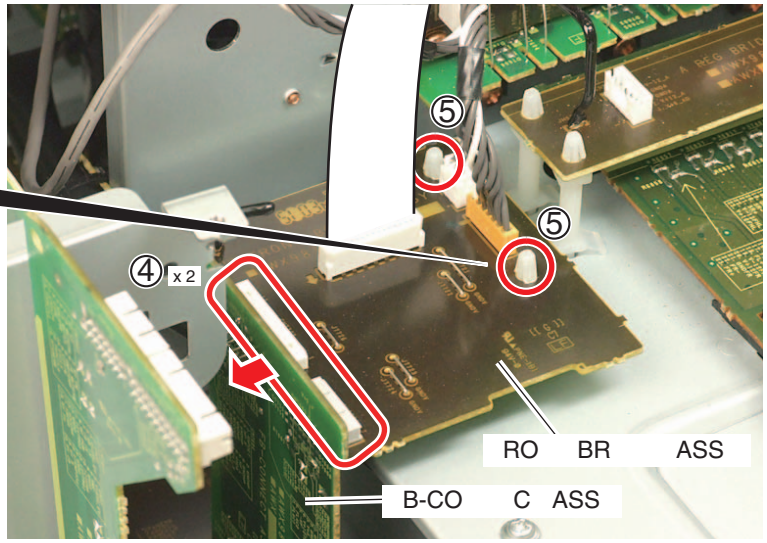

6 Cut the Binder.

7 Remove the seven screws.
AM 30P060 C

8 isconnect the two connectors and then remove the R Cover 85 with our ass s .

N□□ □□ □□□□□ □□□□ □

o attach the R Cover 85 in the correct position, re er to step 9 and subse uent steps in it, □A□□□□ □□□□ □□IR A□ □□□□□□ □□□□□.

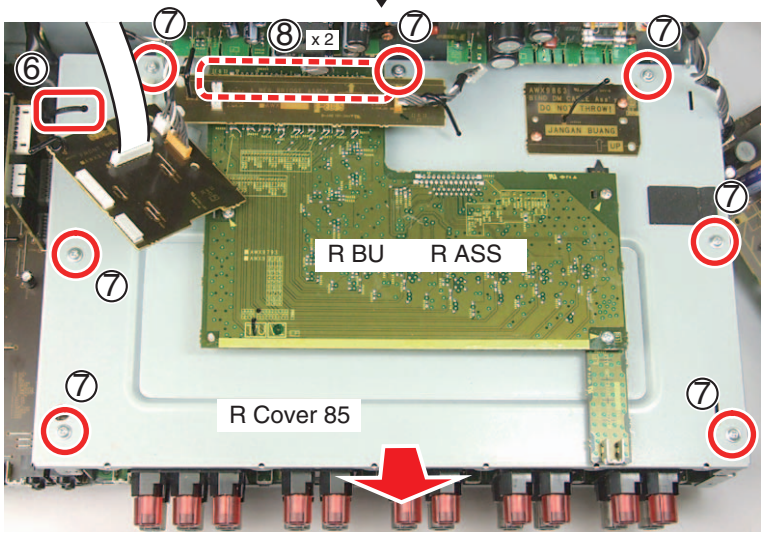

D

N Rear Section should be set diagnosis condition with extention ig cables.

Re er to the **D** o **R S**.

isconnect the two pair board to board extension ig cables 1761 and remove the PR BR ASS .

Re er to the steps 5 to 4 o **D**.

N the R BU R ASS is removed, the connectors o R R AC ASS ma be loosened.
Attach the connectors securel .

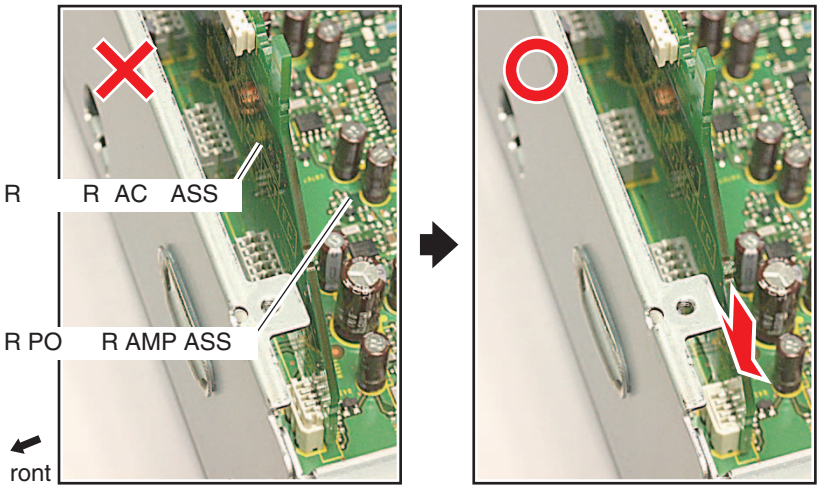

1 emporaril attach the R CO R 85 to the Rear Panel 57U, using the three screws ABA1011 .

2 Attach the PR BR ASS .
3 Connect the two connectors and attach the RO BR ASS .
4 Connect the two pair board to board extension ig cables. 1761
(IR INTERFACE CN3801 <-> IR BUFFER CN6802)
(IR INTERFACE CN3802 <-> IR BUFFER CN6803)

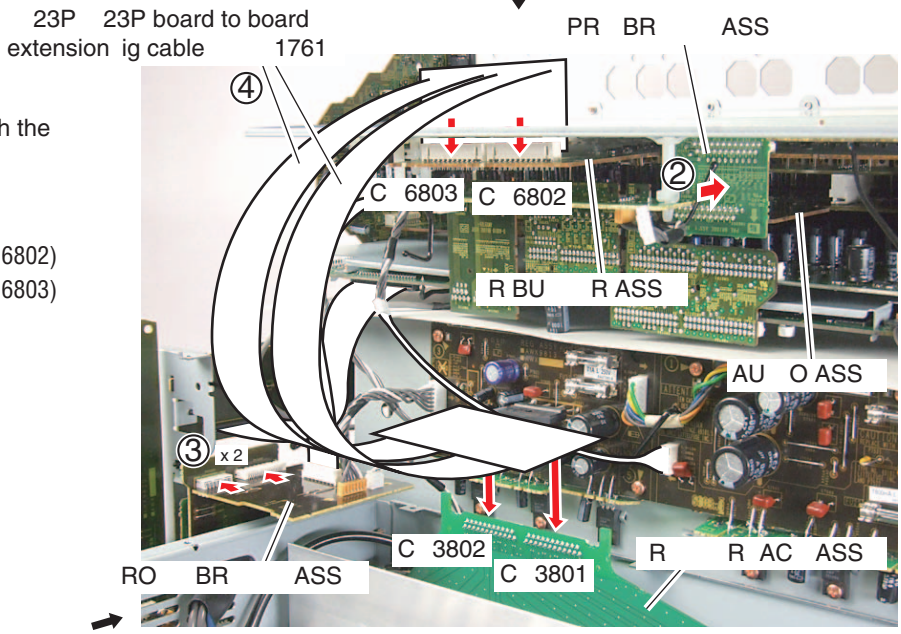

5 Attach the PR MAR ASS , using the two screws ABA1011 .

6 Connect the Rear Panel 57U to the Under Base 85 round and point o the R PO R AMP ASS .

Re er to the **P**.

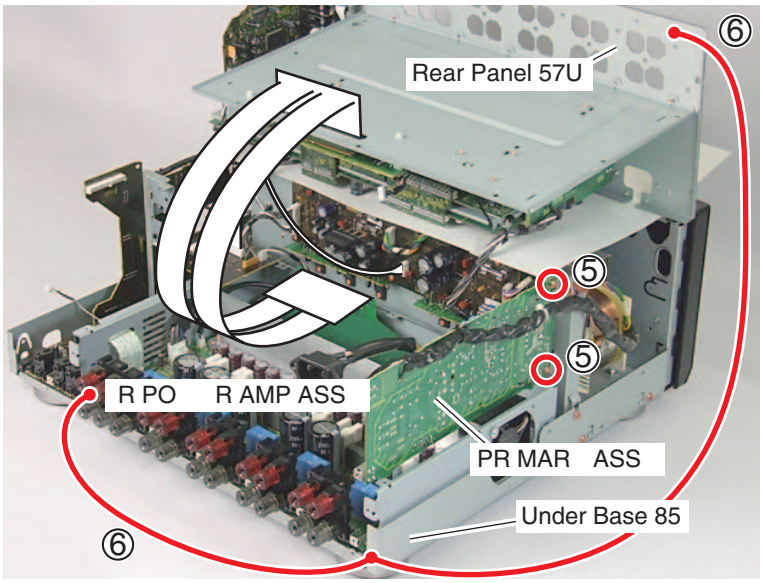

R IR A

1 isconnect the two pair board to board extension ig cables 1761 and remove the PR MAR ASS and RO BR ASS .

Re er to the steps 3 to 1 o **D**

2 isconnect the six extension ig cables.

Re er to the steps 10 to 5 o **D**

3 isconnect the six connectors.

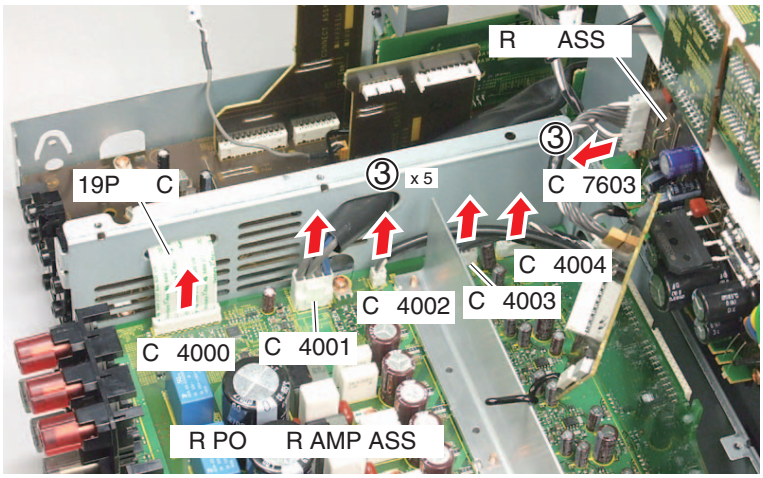

4 isconnect the connector.

5 Release the 5P Housing ASS rom the Cord Clamper HL.

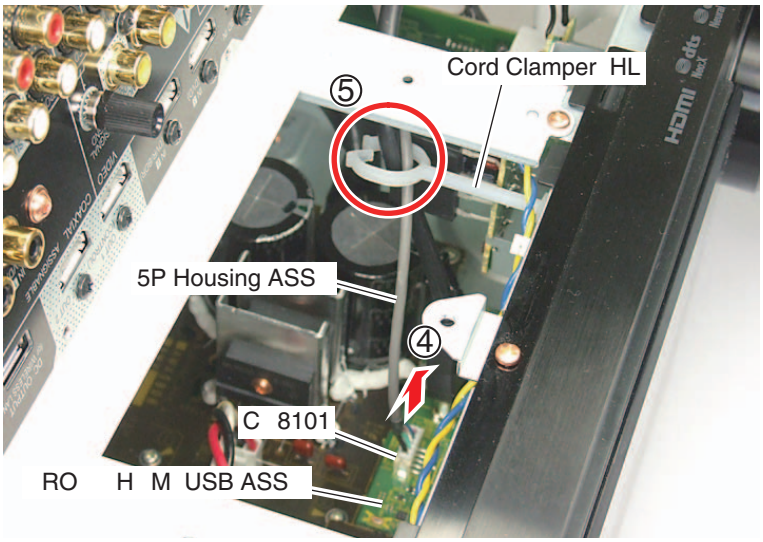

N

∗1 on t touch cables to iode.

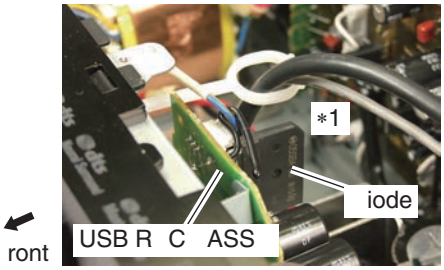

6 Arrange the unit as shown in the photo.

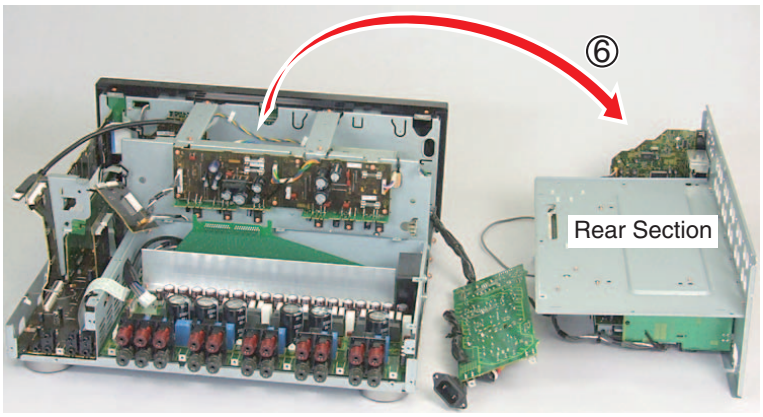

7 Set up the main unit part as shown in the photo, and remove six screws.
BP 30P080

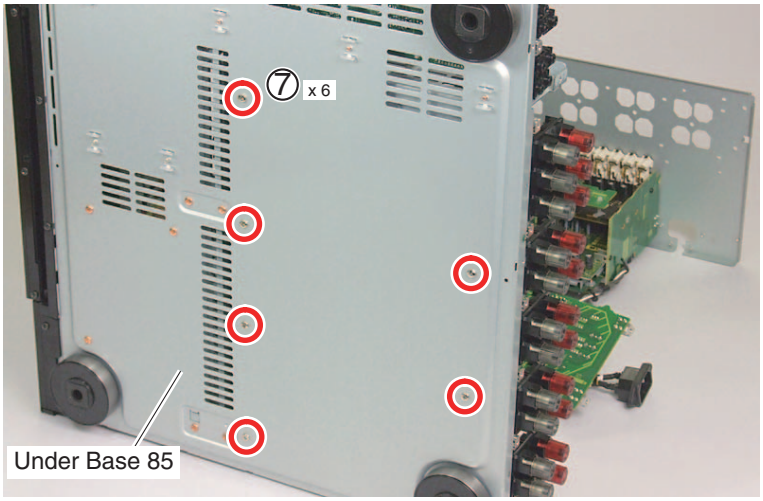

8 Remove the R Ampli ier Block.

N Re er to the A IR A or the installation procedure o the R Ampli ier Block.

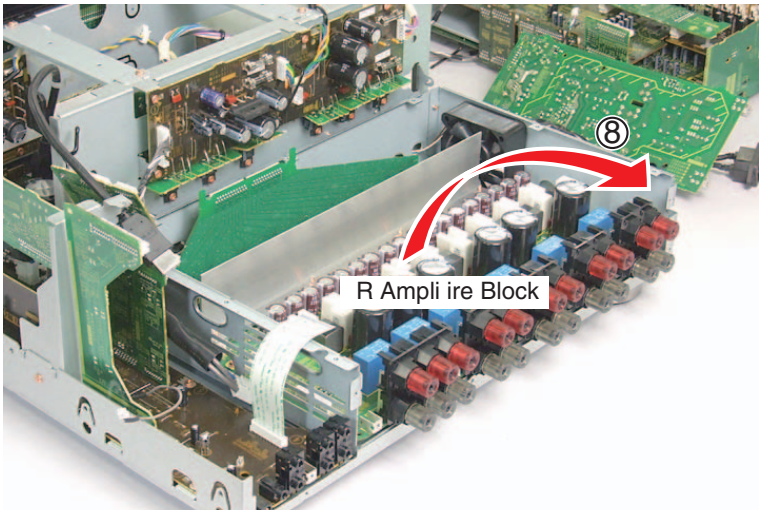

DAC I ASS

Remove the Bonnet 85 b removing the 16 screws.

E

1 Remove the - AC BR ASS .
2 Remove the A- AC BR ASS .

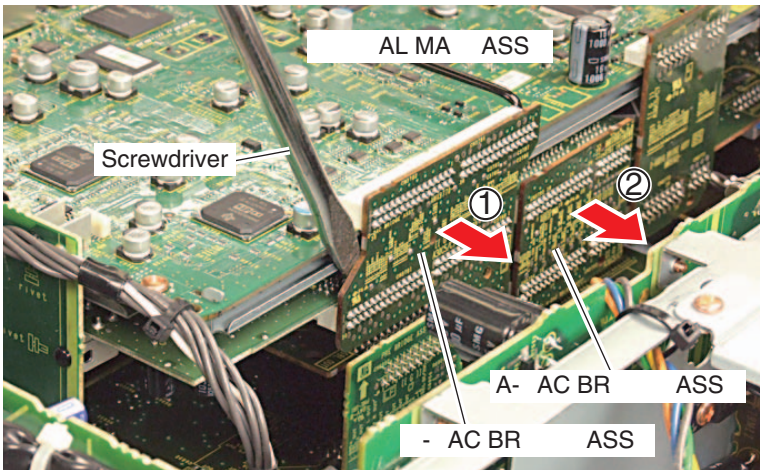

3 Remove the screw. BM 30P040 B
4 Remove the ive screws. BP 30P080 B
5 Remove the ive screws. ABA1011
6 Remove the AC inlet b removing the two screws. CB 30P080 B

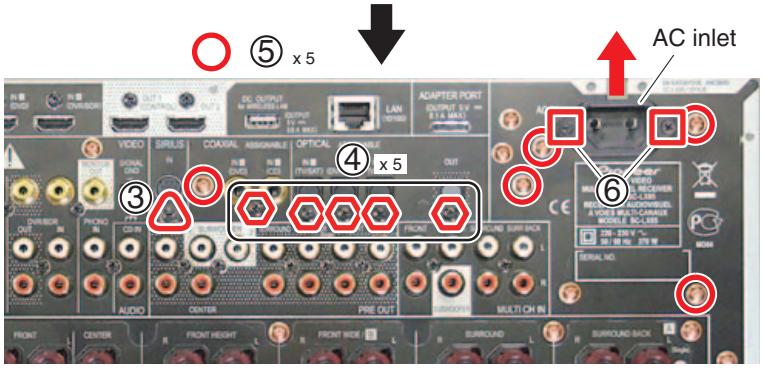

7 Release the umper wire rom PCB binder.
8 Cut the Binder.

N

∗1 PCB binder tilt in the direction o the blue arrow.
∗2 A ter the umper wire is bounded, pull the extra length to the direction indicated b the blue arrow.

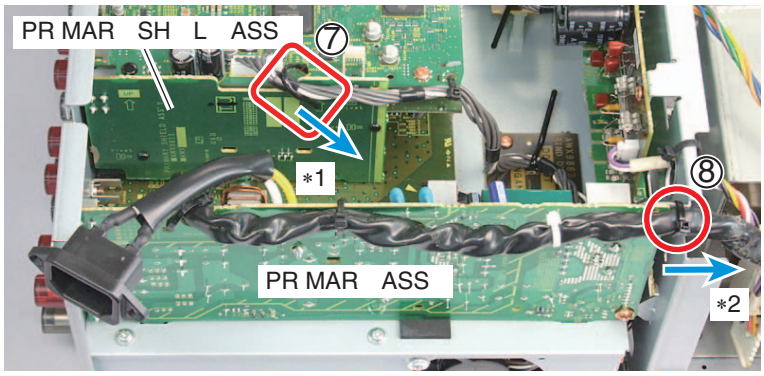

9 Remove the two screws. ABA1011
10 Remove the PR MAR ASS .
11 Remove the two Push Rivet. A C7071
12 Remove the Push Rivet. A C7071 SC-57 U JCB onl
13 isconnect the connector. SC-57 U JCB onl
14 Remove the PR MAR SH L ASS .

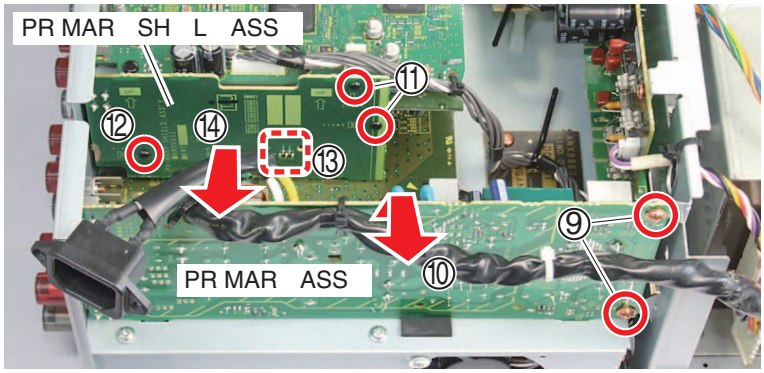

15 Remove the AC H H ASS .

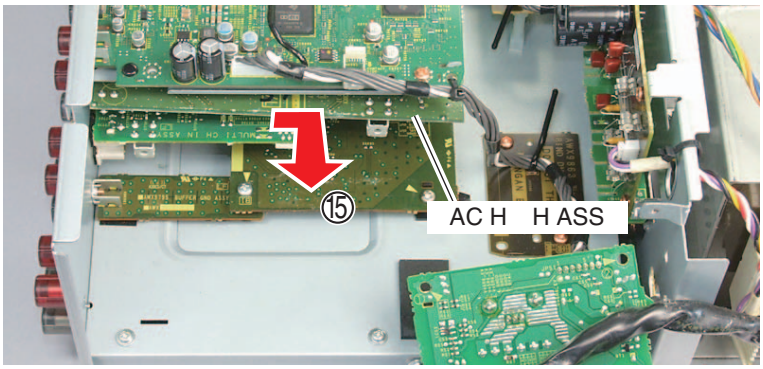

28P 14P board to board
extension ig cable 1763

30P 30P board to board
extension ig cable 1682

D

1 Attach the PR MAR ASS , using the two screws ABA1011 .
2 Connect the two pair board to board extension ig cables. 1682
(DAC HIGH CN2102 <-> DIGITAL MAIN CN9003)
(DAC HIGH CN2101 <-> DIGITAL MAIN CN9002)
3 Connect the two pair board to board extension ig cables. 1763
(DAC HIGH CN2103 <-> AUDIO CN2502)
(DAC HIGH CN2104 <-> AUDIO CN3001)

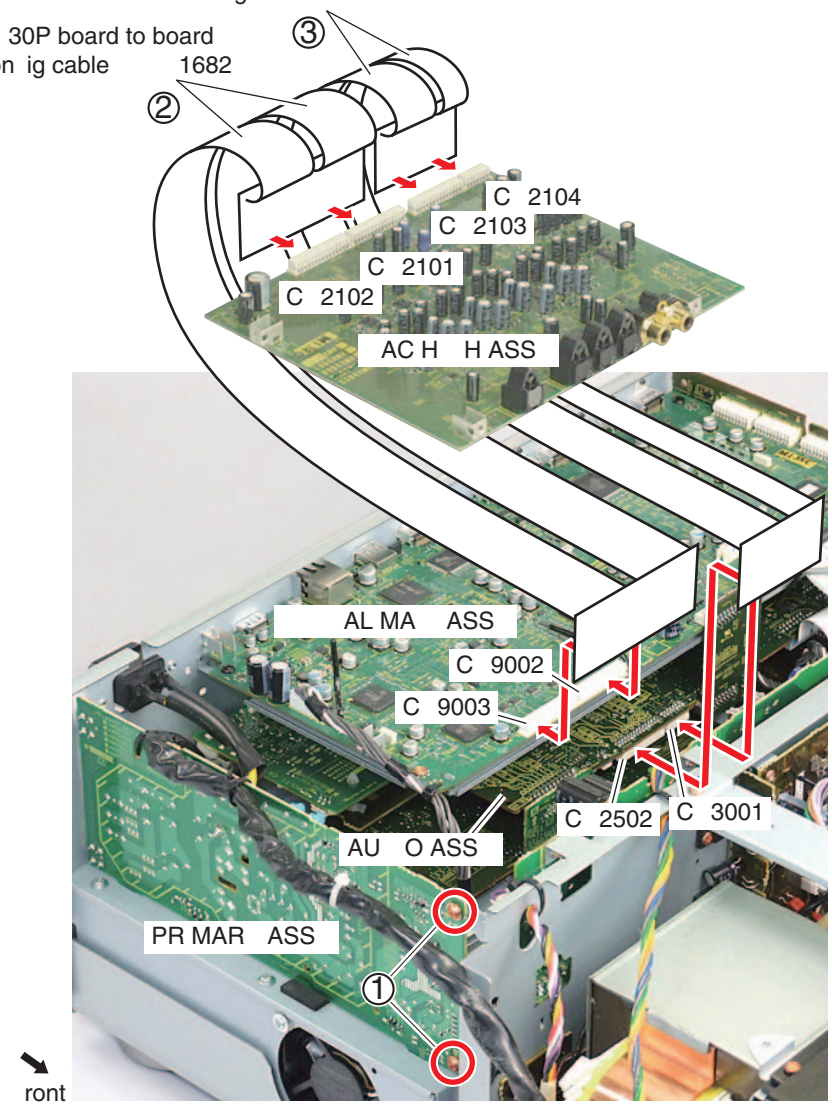

4 nsert the nsulation Sheet.

5 Connect the AC H H ASS to the Rear Panel 57U ground.

Re er to the □□ □□□□ □□□□□.□

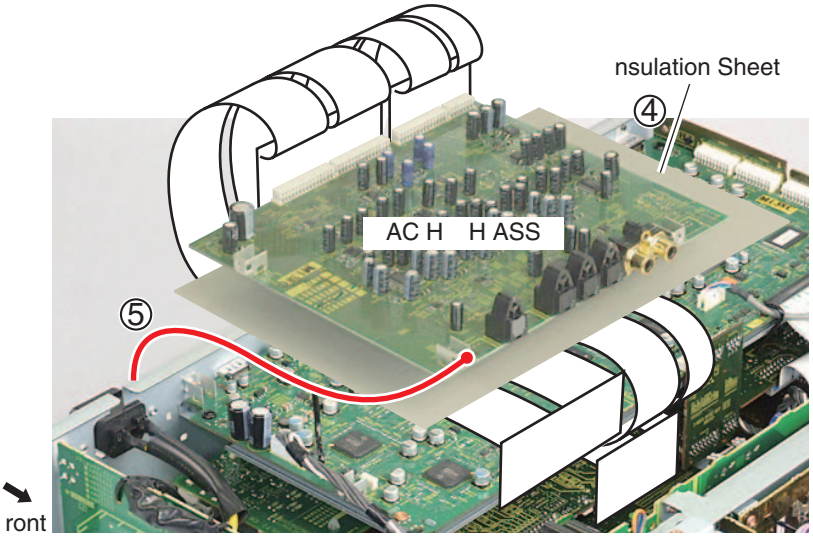

□□□ DI□ ITAL □ AIN ASS□

Remove the Bonnet 85 b removing the 16 screws.

□□□□ R□□□S□□□□□

1 Cut the Binder.

2 Release the cables rom the two PCB binders.

3 isconnect the connector.

4 Remove the screw. BB 30P060 CC

N□□ □□ □□□□□ □□□□

∗1 H M Cabel and 5P Housing ASS A 7748 bind together inside.

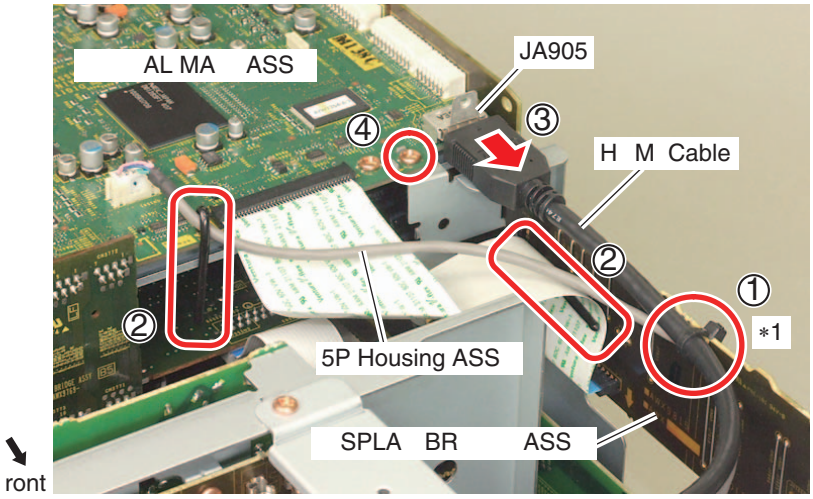

5 Release the umper wire A 7746 rom COMPO ASS rom hook o the R UAR ASS .

6 Release the umper wire rom PCB binder.

N□□ □□ □□□□□ □□□□

∗1 wist PCB binder around the umper wire A 7746 so that it does not contact B-CO C ASS or plate.

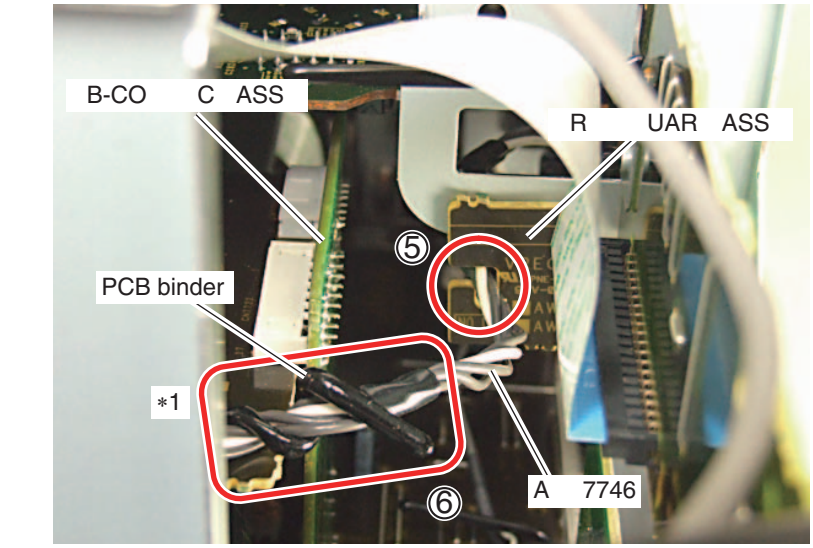

7 isconnect the two connectors.

8 isconnect the two connectors and then remove the CO C ASS .

9 isconnect the connector.

N□□□ □□ □□□□□ □□□□

*1 Bind umper wire A 7747 rom R AC ASS , using the PCB binder.

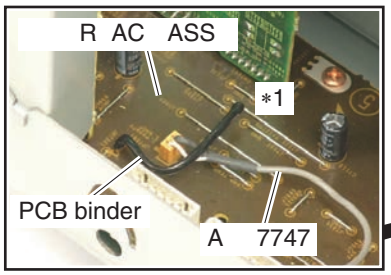

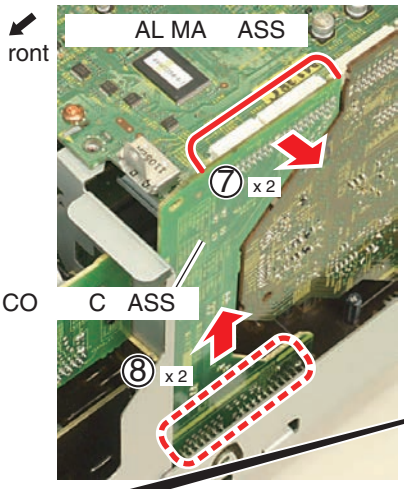

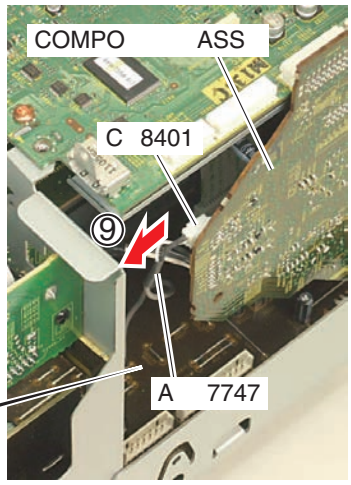

10 Remove the - AC BR ASS .

11 Remove the A- AC BR ASS .

12 Remove the -AU O BR ASS .

13 Release the umper wire rom PCB binder.

14 Remove the two Push Rivet. A C7071

N□□□ □□ □□□□□ □□□□

*1 PCB binder tilt in the direction o the blue arrow.

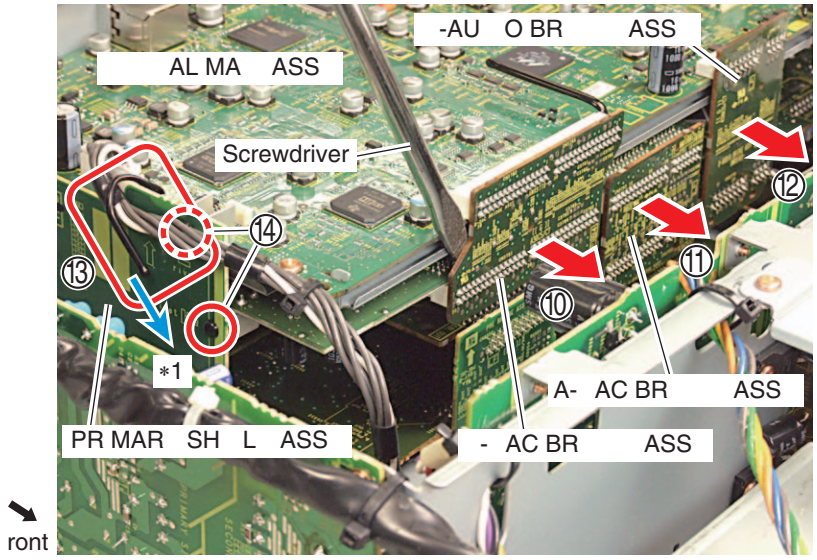

15 Release the umper wire A 7750 rom PR MAR ASS rom PCB binder.

N□□□□ □□ □□□□□ □□□□

*1 Pass the umper wire A 7750 rom PR MAR ASS under the R ASS .

*2 PCB binder tilt in the direction o the blue arrow.

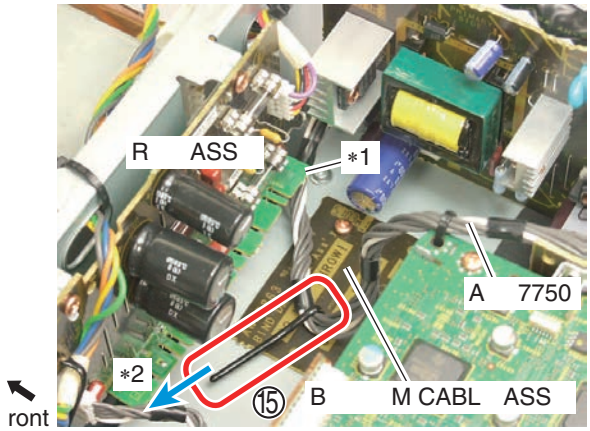

16 Remove the nine screws.
BM 30P040 B

17 Remove the nine screws. BP 30P080 B

18 Remove the two Hex head Screws.
ABA7078

19 Remove the three screws. ABA1011

20 Remove the three screws. ABA1011
SC-57 U JCB onl

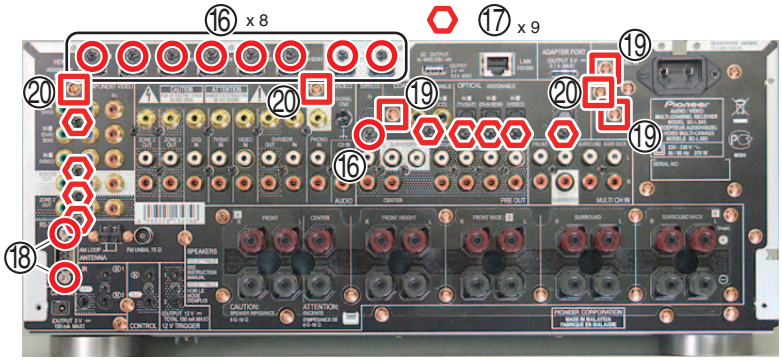

21 Li t the AL MA ASS rom the
PR MAR SH L ASS side.

22 isconnect the two connectors and then
remove the AL MA ASS .

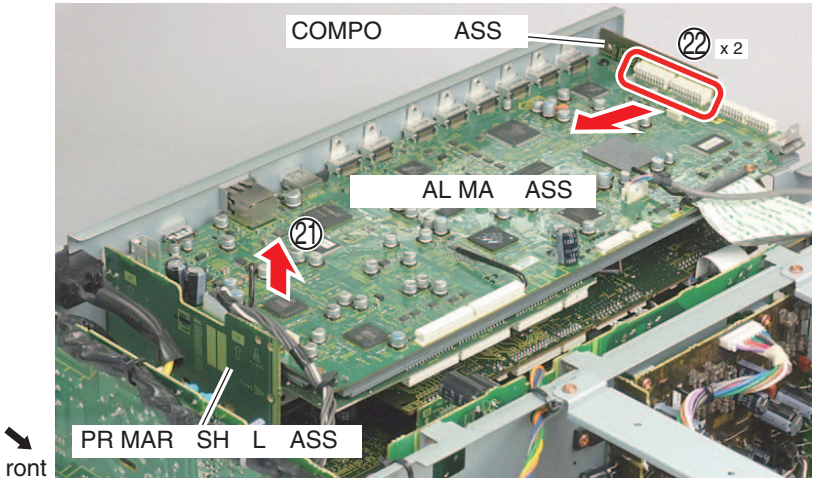

23 Remove the two lon Rivet. A C7406
SC-57 U JCB onl

24 Remove the two screws. BB 30P060 CC
SC-57 U JCB onl

25 Remove the . Main Shield 85.
SC-57 U JCB onl

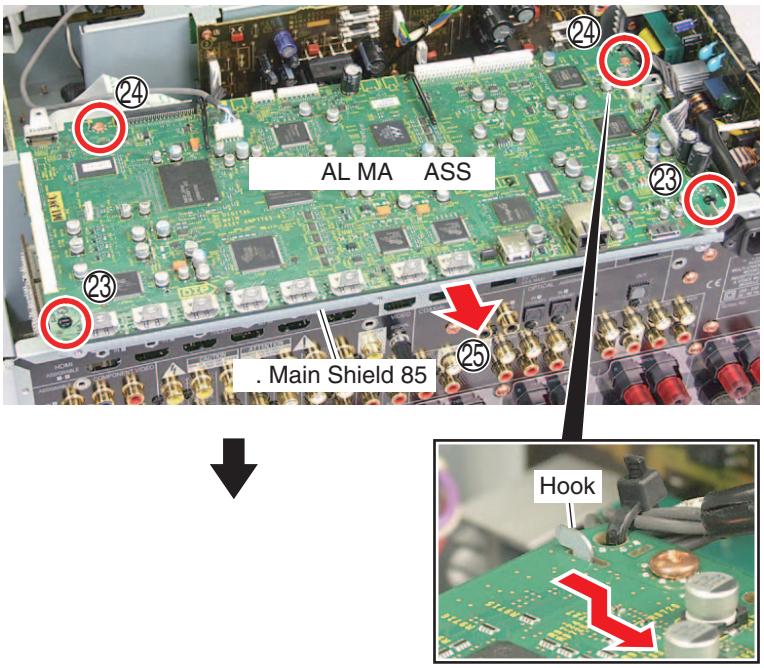

26 Arrange the AL MA ASS as shown in the photo.

27 nsert the nsulation Sheet.

28 Remove the AC H H ASS .

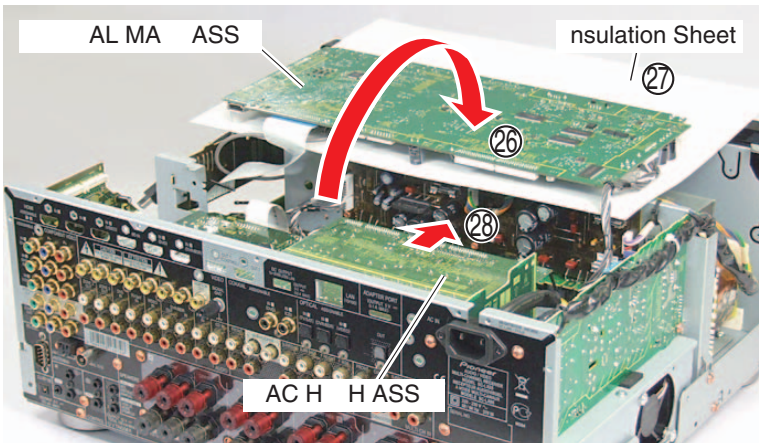

29 isconnect the connector and then remove the COMPO ASS .

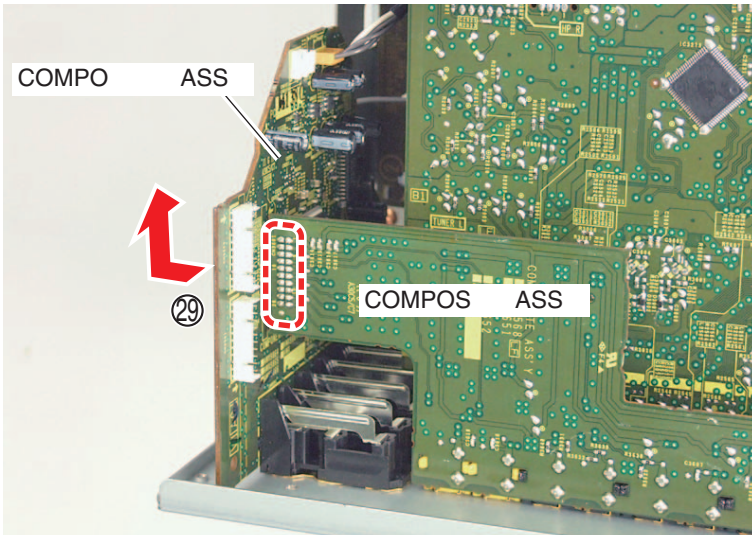

ront

op view

D DI ITAL AIN ASS

1 Attach the COMPO ASS to the AL MA ASS .

2 Attach the CO C ASS to the R AC ASS .

3 Connect the two pair board to board extension ig cables. 1759
(DIGITAL MAIN CN602 <-> CONNECT CN7802)
(DIGITAL MAIN CN603 <-> CONNECT CN7801)

4 Connect the two pair board to board extension ig cables. 1677
(COMPONENT CN8303 <-> CONPOSITE CN3601)

N n case o using 1677 with the this condition, onl using either o connector on the ig board.

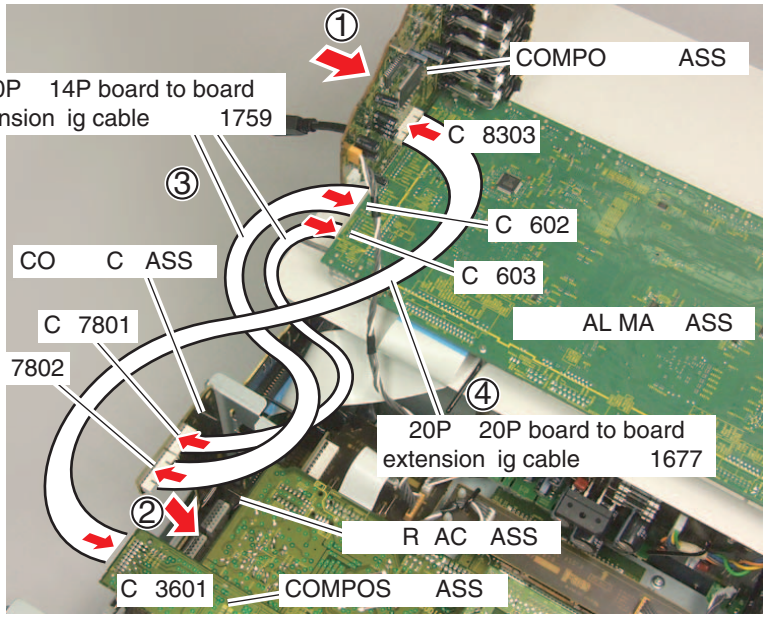

ront

5 Connect the two pair board to board extension ig cables. 1762
(DIGITAL MAIN CN1503 <-> AUDIO CN3901)
(DIGITAL MAIN CN1502 <-> AUDIO CN2861)

6 Connect the two pair board to board extension ig cables. 1763
(DAC HIGH CN2103 <-> AUDIO CN2502)
(DAC HIGH CN2104 <-> AUDIO CN3001)

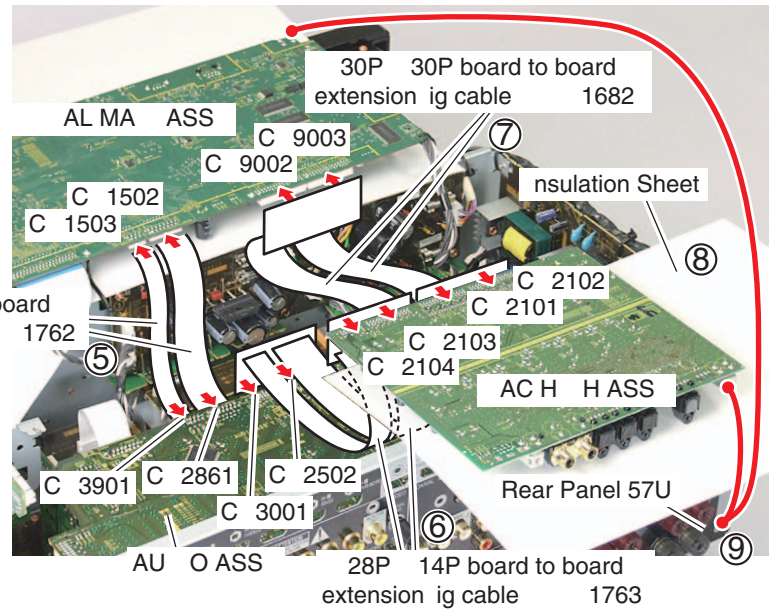

7 Connect the two pair board to board extension ig cables. 1682
(DAC HIGH CN2102 <-> DIGITAL MAIN CN9003)
(DAC HIGH CN2101 <-> DIGITAL MAIN CN9002)

8 nsert the nsulation Sheet.

9 Connect the AL MA ASS and the AC H H ASS to the Rear Panel 57U ground.
Re er to the [illegible].

N[illegible] n case o diagnosing AL MA ASS b this situation, do not connect H M Cable rom RO H M USB ASS to prevent breakdown o H M connector. the H M connection is necessar , use another normal H M Cable and connect it to AL MA ASS without an stress rom H M Cable.

N[illegible] B placing the AC H H ASS on the AL MA ASS rom the above status, it is possible to per orm diagnosis both on the AC H H ASS and the side-B o AU O ASS simultaneousl .

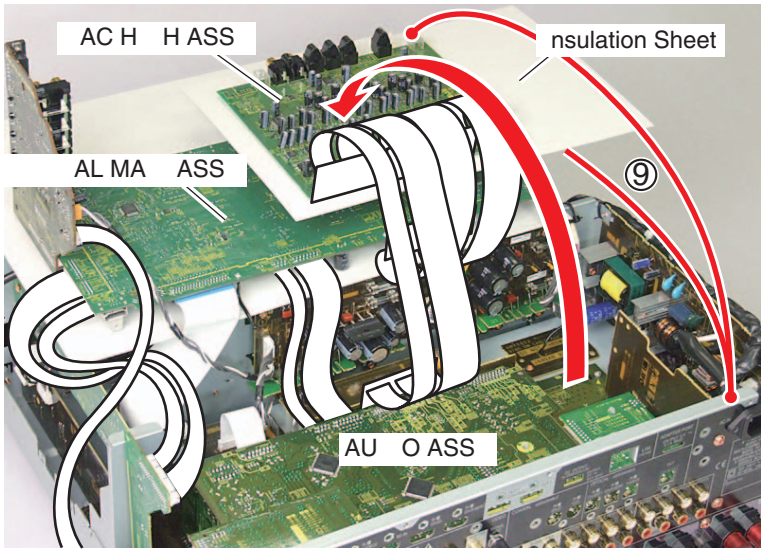

A IR A

N he attachment positioning o the R Ampli ier block relates to sound ualit o the unit. assembling R Ampli ier Block b wrong steps, sound ualit would deteriorate. here ore assemble it correctl ollowing the procedure shown below.

hen ou removed onl R Cover 85, per orm rom step 9 .

---

1 Allocate the R Ampli ier block rom which the R Cover 85 is removed. o not ix it with screws.

2 Connect the six connectors.

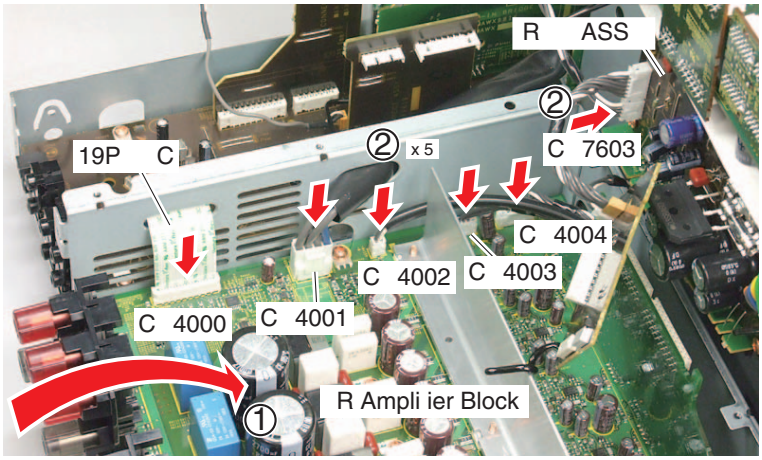

3 emporaril attach the Rear Panel 57U with other ass to the Under Base 85, using the three screws. ABA1011

N ix the AL MA ASS to the hook o the Right Angle 85.

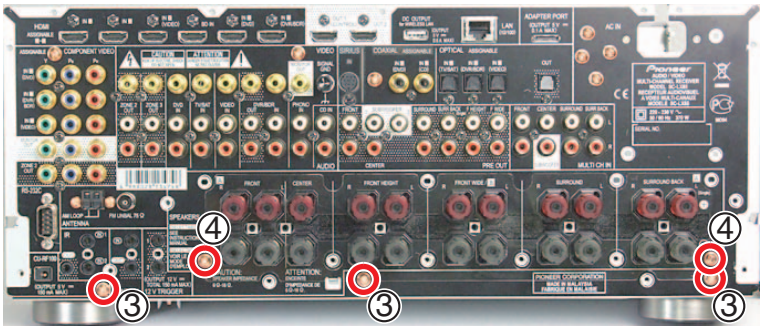

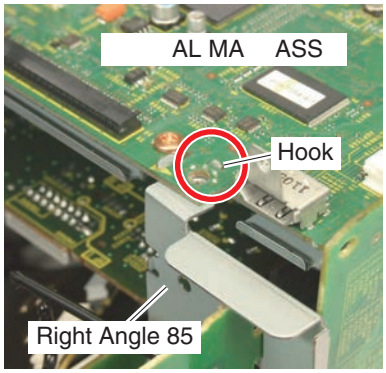

ront

4 emporaril attach the R Box 85 to the Rear Panel 57U, using the two screws. ABA1011

5 Attach the R Ampli ier block to the Under Base 85, using the six screws.
BP 30P080

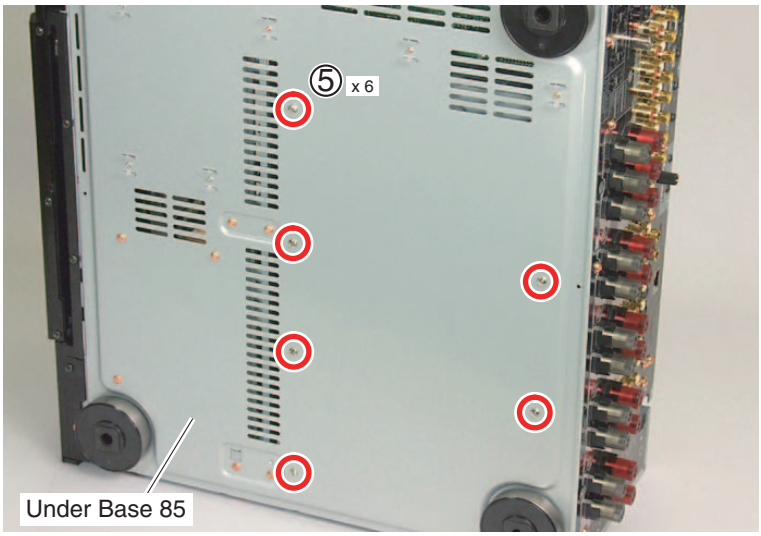

6 Remove the ive screws. ABA1011

7 Remove the Rear Panel 57U.

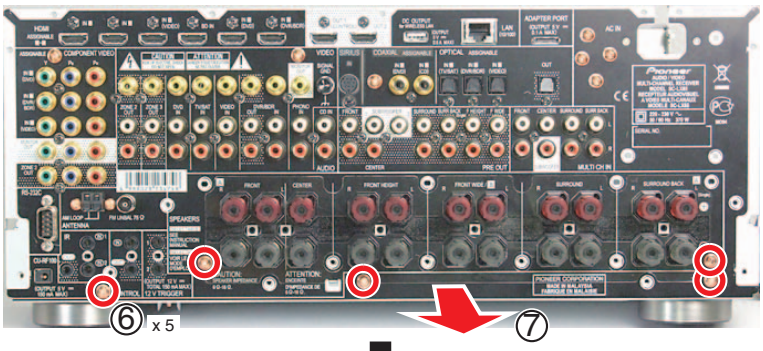

8 Allocate the R Cover 85 with our ass .
o not ix it with screws.

9 Connect the two connectors.

N□□□□ it is di icult to connect the two connectors o the R BU R ASS , at irst remove the A R BR ASS and then tr to connect them.

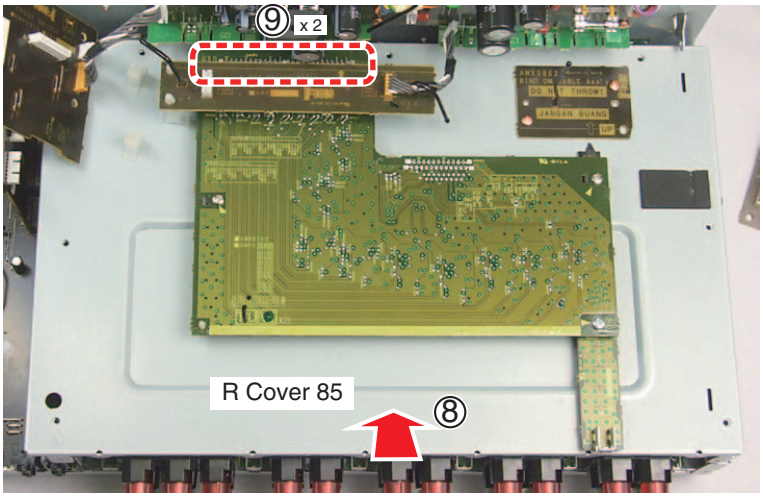

10 Remove the PR BR ASS rom Rear Section.

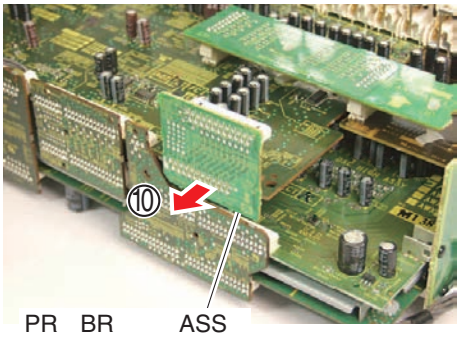

11 emporaril attach the Rear Panel 57U with other ass to the Under Base 85, using the three screws. ABA1011

12 emporaril attach the R Cover 85 to the Rear Panel 57U, using the two screws. ABA1011

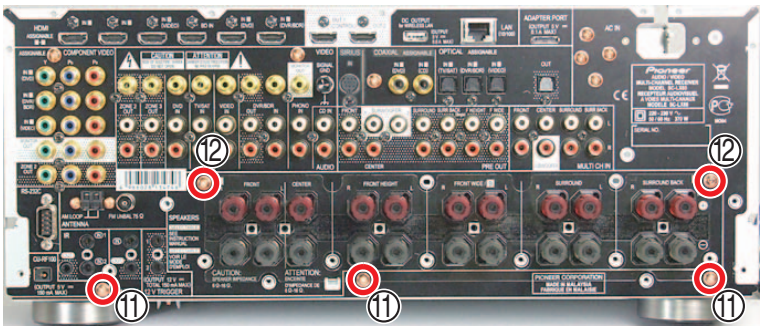

13 Attach the R Cover 85 to the R Box 85 rom upper ace, using the three screws.
AM 30P060 C

N□□□Secure the screws or ixing the R Cover 85 without using the electric screwdriver, but manuall .

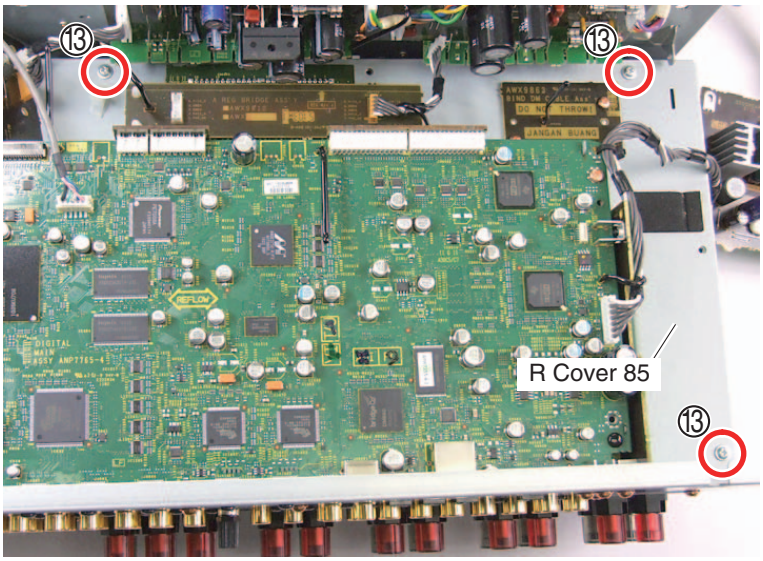

14 Remove the ive screws ABA1011 rom the Rear Panel 57U.
Re er to the step 12 11

15 Remove the Rear Panel 57U.

16 Attach the R Cover 85 to the R Box 85 completel , using the our screws.
AM 30P060 C

17 Attach the binder.

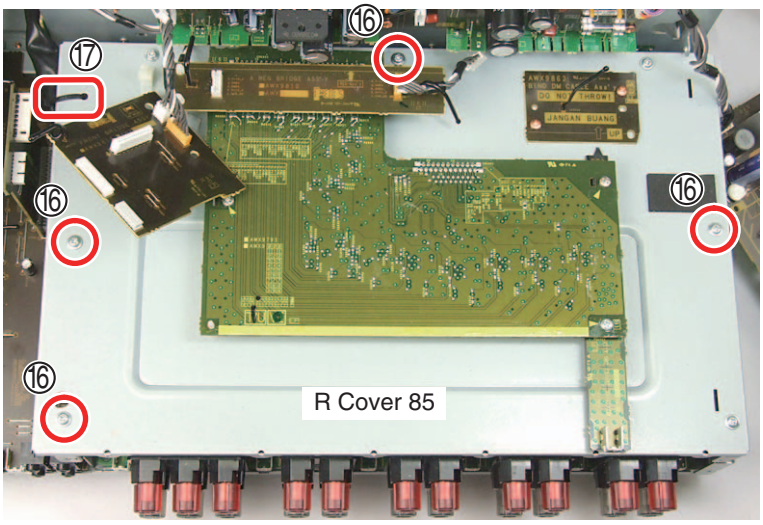

18 Attach the RO BR ASS and PR MAR ASS ,.
Re er to the step 5 to 1 o □□□□□ **IR C**□□□□□□□

8. EACH SETTING AND ADJUSTMENT

8.1 ADJUSTMENT REQUIRED WHEN THE UNIT IS REPAIRED OR REPLACED

A

■ [illegible]

SPLA ASS	➡	8.3 R O R
AL MA ASS	➡	8.2 HO O SA A LOA H S US BACKUP U C O H USB M MOR
Other assemblies	➡	o adjustment required

B

■ [illegible]

AL MA ASS	➡	o adjustment required he part listed below is difficult to replace as a discrete component part. hen the part listed in the table is defective, replace whole Ass . C101 UP 61283 1-407LU2A C903 S 9233AC U C905 S 9387C U C1204 88 2750 C1212 MA H5PS5162 R-S5C-K C1212 SUB K4 51163 -HC 7 JA1501 CKS5712-A C1602 S 9136C U C1603 S 9136C U C9002 810K013B KB400-K C9702 810K013B KB400-K C9203 LA 8700C-A C9204 M860 C9205 A 7346-A C9509 MM1701 H C9510 JM2846 L3-33

C

R PO R AMP ASS	➡	o adjustment reguired he part listed below is difficult to replace as a discrete component part. hen the part listed in the table is defective, replace whole Ass . 4101,4102 R 6775MPB 4201,4202 R 6775MPB 4301,4302 R 6775MPB 4401,4402 R 6775MPB 4501,4502 R 6775MPB 4601,4602 R 6775MPB 4701,4702 R 6775MPB 4801,4802 R 6775MPB 4901,4902 R 6775MPB
Other assemblies	➡	o adjustment required

. O TO SAVE AND LOAD T E SETTIN USIN AC UP UNCTION IT US E OR

I

his model is capable o saving the set values stored in the MA Ucom o AL MA ASS in the USB and loading them in a new AL MA ASS .
ote that MA Ucom should normall operate to enable this unction.

hen replacing AL MA ASS , execute the above mentioned processes.

D

he ollowing . ata other than these can be saved.

Contents to save	estination to save
Last memor or turning O O the Main power and power suppl or O 2 and O 3 Last memor or inputting the Main O , O 2 and O 3 Setting or controlling H M Remote control Setting or R remote control S O Setup Setting or etwork Standb ata to be save upon the operation o protection circuit	Ucom
Settings or HM Preset Memor , avorite, Recentl pla ed, etc.	BridgeCo C

As the data saved b Ucom is on the SPLA ASS ,
the data cannot be deleted unless Ass is replaced at the same time.

R US

USB memor to be used should meet the ollowing re uirements.
- Compatible with USB Mass storage Class
- ith a ile s stem o A A 32

iles are to be saved in the ollowing ormat Model number backup version.extension avr
xample SC-57 BK01.avr

US AV

1. nsert the usable USB memor into the USB terminal when the main device is o .
2. nter the S R C MO and select USB BAK ◄ HOL ► with ⇅ ke s.
   See 6.1 S MO or how to enter the S R C MO .
3. Select USB BAK ◄ SA ► with ⇄ ke s and press R .
4. Saving in the USB starts and the main device automaticall goes o a ter the normal completion COMPL is displa ed. .
5. Remove the USB and saving is inished.

1. the ollowing errors occur a ter SA is executed, error message will be displa ed and SA will be stopped and the power will be turned o .
   - ecting o USB device
   - Short capacit o USB device
   - rror during writing in the USB device Read Onl or de ective Sector, etc.
2. the same ile name exists in the USB, overwriting will be automaticall executed.

AV US

1. nsert the USB with the saved ile into the USB terminal when the main device is o .
2. nter the S MO and select USB BAK ◄ HOL ► with ⇅ ke s.
   See 6.1 S MO or how to enter the S MO .
3. Select USB BAK ◄ LOA ► with ⇄ ke s and press R .
4. Saving in the main device starts and it automaticall goes o a ter the normal completion COMPL is displa ed. .
5. Remove the USB and loading is inished.

the ollowing errors occur a ter LOA is executed, error message will be displa ed and LOA will be stopped and the power will be turned o .
- o setting ile
- Mismatching between the setting ile and the speci ication o the A R C R t pe to be loaded back
- rror due to Checksum, Signature Check, and Si e Check
- ecting o USB device during reading o the setting ile

P□□□□□□□□□□□□

- iles are stored in Root o USB memor .
- iles are read rom Root o USB memor .

A

⇨ o make operations such as moving iles, be sure to assign the saved ile in Root o the USB memor .
Also please be care ul not to assign .avr in multiple numbers.

- he time and date o updating or saved ile is ixed to 2010 01 01 0 00.
- n principle, please implement Load without making o actor de ault settings.
  o Load rom actor de ault settings status, please take caution on the ollowing points

Please be sure to check the H M control setting or the user be ore per orming o actor de ault settings.
Since the H M control setting o de ault settings is O , turn O the H M control setting and Load a ter per orming o actor de ault settings i the checked user setting is O .

B

Load is executed with the setting O , the assignment in ormation or each H M input will be cleared.

Procedures or turning O the H M control setting
⇨ HOM M U ⇨ 4.S stem Setup ⇨ 4e.H M Setup ⇨ Control O

□.□ RE□ION □ RITIN□

his is the unction to write Region in ormation b using an USB Memor .
Automatic start-up is conducted with PO R O i the Region in ormation is not written.
his work is carried out when SPLA ASS is replaced.

C

□P□□□□□□□□□□□□□□

1. Please cop the R O ile or the same model number and the point o destination with the ob ect set to the route director o USB Memor .

ote Cop onl the R O ile to the USB memor . ever cop to other iles.

□P□□□□□□□□□□□□

Please be sure to use the R O ile or the same model number and the point o destination with the ob ect set.
ou make a mistake, it is impossible to rewrite. Replacement o SPLA ASS is re uired again

Ke operation	L displa
Plug in the AC cord. o Region in ormation	
Power On Automaticall	P O R O
Start up inished	
unction initial displa	S R O
Connect USB Memor . Loading inished correctl	
Region riting inished	S C - 5 7 U J C B

□P□□□□□□□□□□□□

1. Connect an AC cord a ter replacing SPLA ASS . Power turns O automaticall
2. S R O is displa ed several seconds a ter PO R O is displa ed on the ront panel.
   Standb status or R O ile writing
3. Automatic writing starts when USB memor prepared b Preparation 1 is inserted.
   egree o several seconds
4. he written model number is displa ed a ter the normal completion o R O ile writing.
   14 characters, maximum
5. Pull out the AC cord.

C A C

R O ile writing did not complete normall , an error number is displa ed rather than the model number.
Please per orm rewriting based on the coping strateg b error numbers below.

L ispla xamples	Reason or ispla	Coping Strateg
R R O R R 0 1	Case o unsuccess ul USB Read-in	r writing with other USB Memor
R R O R R 0 2	Case o o ile or riting	Place writing re uired R O ile to root director
R R O R R 0 3	Case o destro ed ile	ownload R O ile again
R R O R R 0 4	Case o destination in ormation or di erent model is written	ownload R O ile or correct model

. O TO UPDATE IR ARE

■ AIN (E A) SU (EVENT) DSP RO C IC U US C V

● **UPDATE PANEL (V)**

P

1. Cop the UP A L to the root director o the USB Memor .
   N R cop several UP A L S to the root director o the USB Memor .
   Cop onl the corresponding UP A L .
2. urn o the power to this unit b setting Multi- one to O .
3. Connect the USB Memor to the USB terminal A t pe o the ront panel.

P

1. hile holding down **TUNE↑** ke on the ront panel, press **STAND ON O** ke and moves to the **UPDATE PANEL** .
2. he updating process is as ollows.

nter the UP A PA L mode.
↓
Check a current version.
↓
Update it.
↓
Update completed.
urn the power O automaticall .

Updating process

↓
nter the UP A PA L mode again.
↓
Check an updated version.
↓
urn the power o .
Release the UP A PA L mode.

Checking process

A

Ke operation	L displa
U ↑ S A B O O	
Booting is completed	P O R O
	ersion is displa ed. 1 - 0 0 1 0 0 2 0 0 3 0 0 4
B U ↓ or U ↑	
	Update Menu U P A

□□□□□P□□□□□ □□

↓ U ke
↑ U ke
← PR S ke
→ PR S ke

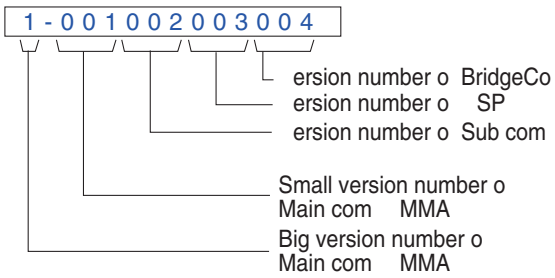

∗∗∗ displa ed instead o number indicates the process while the version is obtained.
ait or a while until the version is displa ed.

C

Ke operation	L displa
	Update Menu U P A
R	
PR S → or PR S ←	Update Con irmation U P A ◀ O ▶
← →	
	Update Con irmation U P A ◀ S ▶
R	
	ile searching A c c e s s i n g
UP A L searching completed	

Ke operation	L displa
UP A L searching completed	
	Updating process ＊Updating. 20
SP UP A completed	
	Updating process ＊Updating. 40
BridgeCo C UP A completed	
	Updating process ＊Updating. 60
MA com MMA UP A completed	
	Updating process ＊Updating. 80
SUB com UP A completed	
	Update completion displa ＊Updating. 100
5 Second	
Power turns o automaticall . All O O isconnect the USB M MOR .	

Update time is luctuated b contents o the update. t will take about 20 minutes at the maximum.
Actual time is rom 2 minutes to 15 minutes.
ime re uired or updating varies, because onl the programs that re uire updating will be updated.

C

nter UP A PA L mode and check that the programs have been updated.

8. EXPLODED VIEWS AND PARTS LIST

NOTES: ● *Parts marked by "NSP" are generally unavailable because they are not in our Master Spare Parts List.*
● *The ⚠ mark found on some component parts indicates the importance of the safety factor of the part. Therefore, when replacing, be sure to use parts of identical designation.*
● *Screws adjacent to ▼ mark on product are used for disassembly.*
● *For the applying amount of lubricants or glue, follow the instructions in this manual. (In the case of no amount instructions, apply as you think it appropriate.)*

8.2 PACKING SECTION

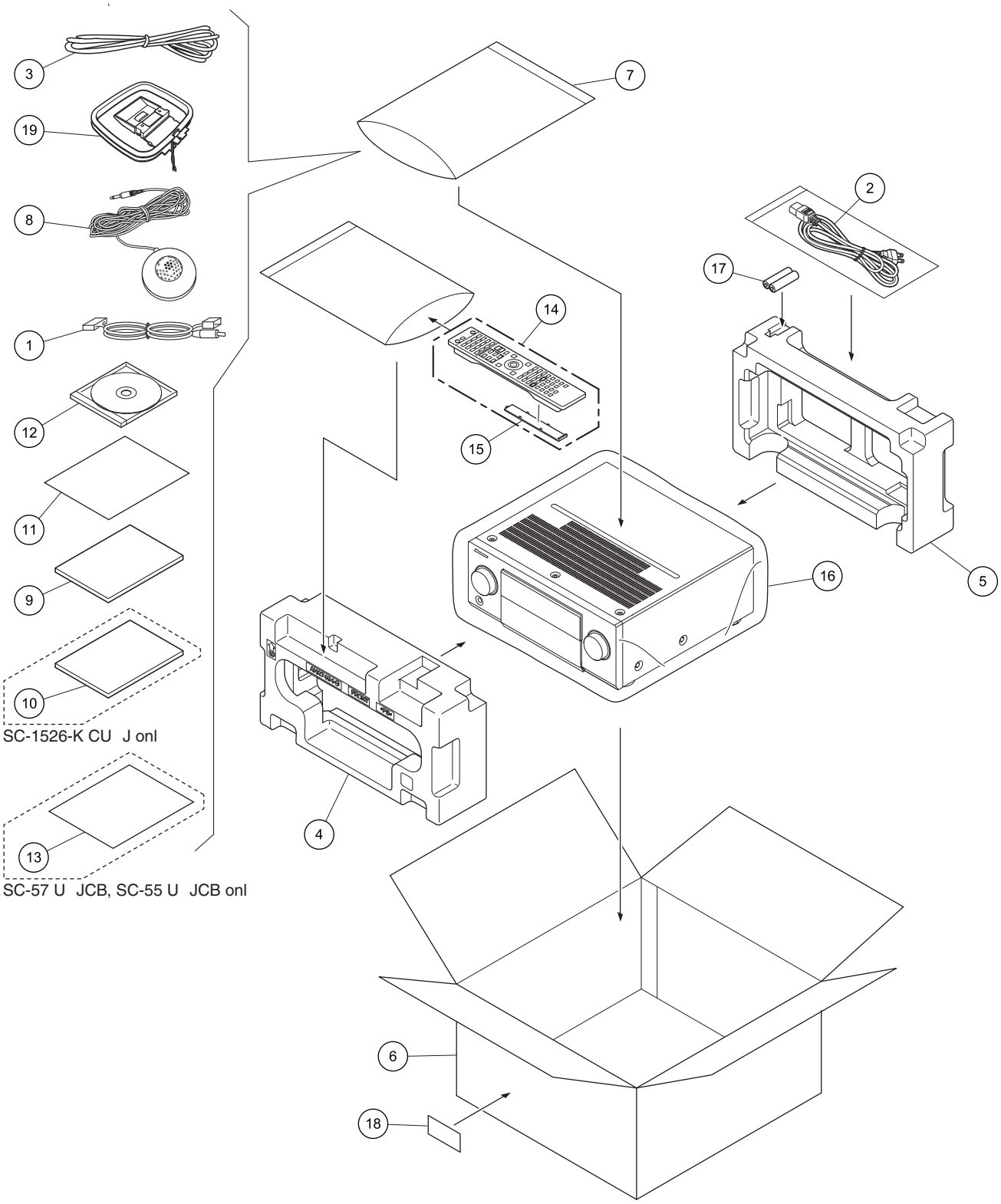

(□) PAC□ IN□ SECTION PARTS LIST

□ □□□	N□.	D□□□□□□□□□□□□	P□□□N□.
	1	30P iPod Cable	A 7136
⚠	2	AC Power Cord	A 7111
	3	M ire Antenna	A H7030
	4	Packing Pad	AHA7494
	5	Packing Pad R	AHA7495
	6	Packing Case	See Contrast table 2
SP	7	Pol eth lene Bag	AH 7117
	8	MCACC Setup Microphone	APM7009
	9	Operating nstructions n	See Contrast table 2
	10	Operating nstructions r	See Contrast table 2
	11	Caution Sheet SP,	ARM7083
	12	Operating nstructions C -ROM	See Contrast table 2
SP	13	arrant Card	See Contrast table 2
	14	Remote Control Unit S L M U	A 7612
	15	Batter oor	A 8047
	16	Packing Sheet	RHC1023
SP	17	r Cell Batter R3	M1051
SP	18	Serial Label S	R 2017
	19	AM Loop Antenna	B3004

(□) CONTRAST TA□ LE

SC-57 U JCB, SC-55 U JCB and SC-1526-K CU J are constructed the same except or the ollowing

□ □□□	N□.	S□□ □□□□□□ D□□□□□□□□□□□□	SC□□□□ U□□C□	SC□□□□ U□□C□	SC□□□□□□□□ CU□□
	6	Packing Case	AH 8722	AH 8728	AH 8729
	9	Operating nstructions n	ARB7459	ARB7459	ARB7461
	10	Operating nstructions r	ot used	ot used	ARC8004
	12	Operating nstructions C -ROM	ARU7006	ARU7023	ARU7016
SP	13	arrant Card	AR 7007	AR 7007	ot used

□.□ E□TERIOR SECTION

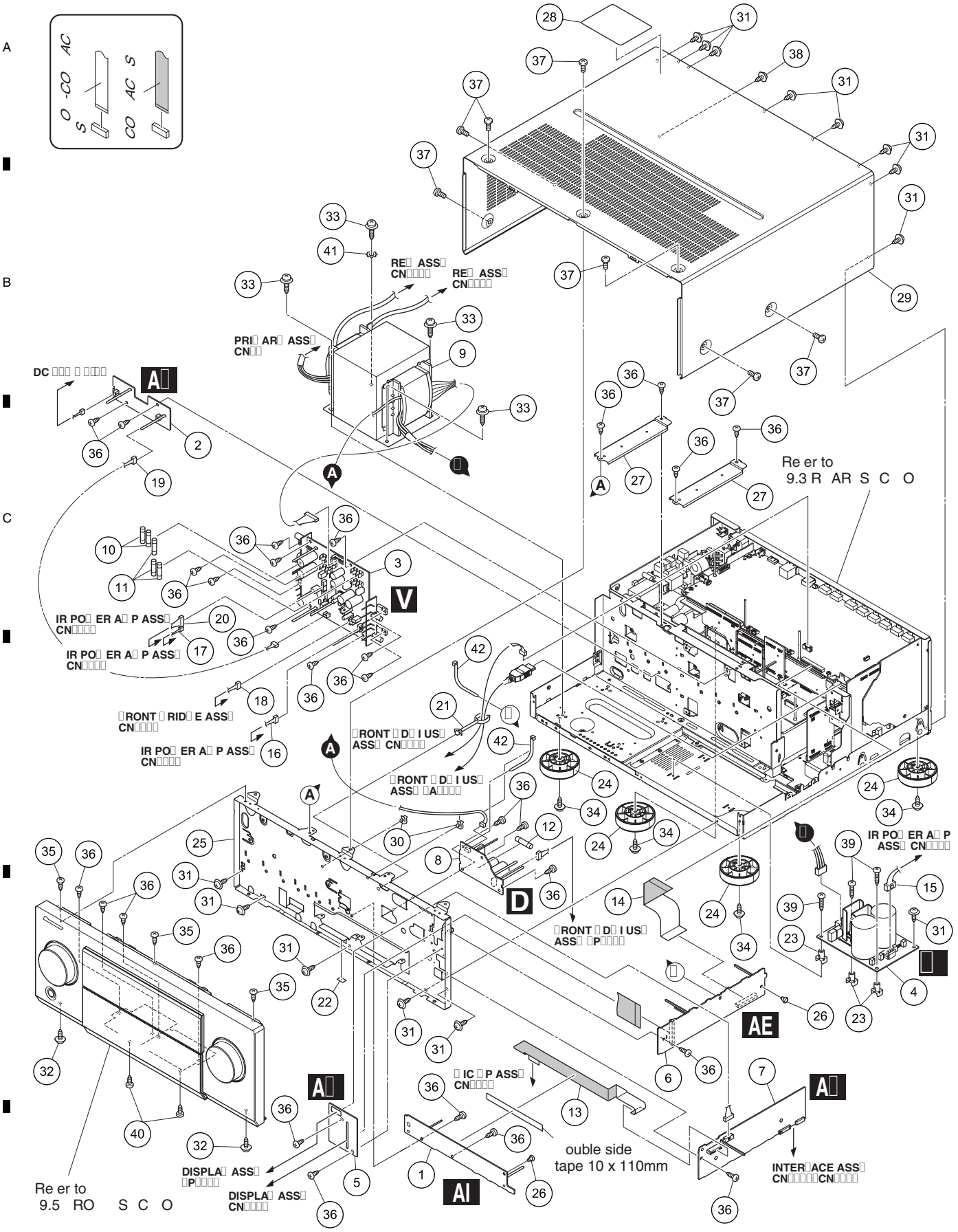

(□) E□TERIOR SECTION PARTS LIST

□ □□□	N□.	D□□□□□□□□□□□□	P□□□N□.
	1	M C HP UAR ASS	A 9803
	2	A CO C ASS	A 9804
	3	R R ASS	A 9806
	4	B O ASS	A 9808
SP	5	C UAR 2 ASS	A 9812
	6	SPLA BR ASS	A 9815
	7	- BR ASS	A 9816
	8	USB R C ASS	A 9821
⚠	9	Power rans ormer	See Contrast table 2
⚠	10	use U13, U14 1A	R K1142
⚠	11	use U11, U12, U15 1.25A	R K1143
⚠	12	use U10 4A	R K1149
	13	15P C J0002	A 7745
	14	39P C J0015	A 7746
	15	4P Housing ASS 0020	A 7755
	16	4P Housing ASS 0025	A 7757
	17	2P Housing ASS 0024	A 7758
	18	3P Housing ASS 0023	A 7759
	19	3P Housing ASS	A 7766
	20	7P Housing ASS 0022	A 7767
	21	Cord Clamper HL	A C7653
	22	Cushion 11 x 7	A 7092
	23	PCB Mold PP	AMR2533
	24	nsulator	AMR7198
SP	25	Panel Sta 85 M L	A 7684
	26	Push Rivet	A C7071
	27	op Beam 85 M L	A 7726
	28	Lisence Label	AR 7419
	29	Bonnet 85 BO	A 8050
SP	30	Mini Clamp	C1597
	31	Screw Steel	ABA1011
	32	Screw 3 x 10B Steel	ABA1193
	33	Screw 4 x 12	ABA7109
	34	Cup Screw 3 x 8 CC	ABA7149
	35	Screw	BB 30P080 CC
	36	Screw	BB 30P060 CC
	37	Screw	BC 40P060 B
	38	Screw	BP30P090 CC
	39	Screw	B 30P180 C
	40	Screw	BB 30P080 B
	41	oothed Lock asher	H40
SP	42	Binder BK-1	CA-BK1

(□) CONTRAST TA□LE

SC-57 U JCB, SC-55 U JCB and SC-1526-K CU J are constructed the same except or the ollowing

□ □□□	N□.	S□□ □□□□□□ D□□□□□□□□□□□□	SC□□□□□ U□□C□	SC□□□□□ U□□C□	SC□□□□□□□□□ CU□□
⚠	9	Power rans ormer	A S7447	A S7438	A S7438

□.□ REAR SECTION

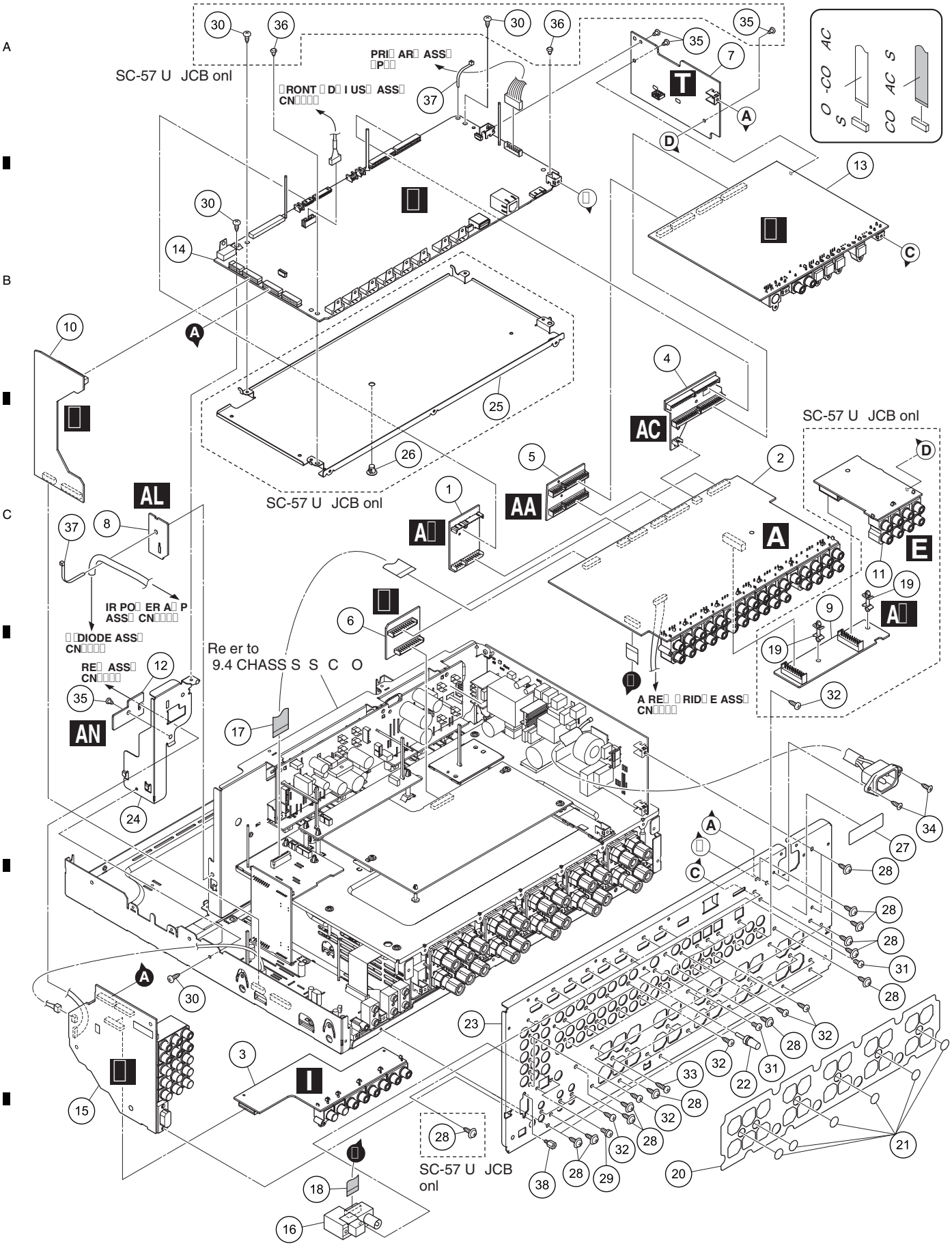

(□) REAR SECTION PARTS LIST

□ □□□	N□.	D□□□□□□□□□□□□	P□□□N□.
	1	-AU O BR ASS	A 9769
	2	AU O ASS	See Contrast table 2
	3	COMPOS ASS	See Contrast table 2
	4	- AC BR ASS	A 9935
	5	A- AC BR ASS	A 9936
	6	PR BR ASS	A 9809
	7	PR MAR SH L ASS	A 9811
SP	8	B B CABL ASS	A 9807
	9	MCH BR ASS	See Contrast table 2
	10	CO C ASS	A 9820
	11	MUL CH ASS	See Contrast table 2
SP	12	R UAR ASS	A 9895
	13	AC H H ASS	See Contrast table 2
	14	AL MA ASS	See Contrast table 2
	15	COMPO ASS	See Contrast table 2
	16	AM M uner Unit	A 7282
	17	15P C 60 J0003	A 7725
	18	9P C J0007	A 7748
	19	Locking Spacer PLS	See Contrast table 2
	20	SP Sheet 85 PC	A C7651
	21	Cushion Circle 14B	A 7081
	22	erminal Screw	AK -031
	23	Rear Panel 57U M L	See Contrast table 2
	24	Right Angle 85 M L	A 7687
	25	. Main Shield 85 M L	See Contrast table 2
SP	26	PC Support	See Contrast table 2
SP	27	Serial Label S	R 2017
	28	Screw Steel	ABA1011
	29	Screw 3 x 6B Steel	ABA1207
	30	Screw	BB 30P060 CC
	31	Screw	BM 30P040 B
	32	Screw	BP 30P080 B
	33	Screw	BP 30P100 C
	34	Screw	CB 30P080 B
	35	Push Rivet	A C7071
	36	Ion Rivet	See Contrast table 2
SP	37	Binder BK-1	CA-BK1
	38	Hex head Screw 2.85 7 BS	ABA7078

(□) CONTRAST TA□ LE

SC-57 U JCB, SC-55 U JCB and SC-1526-K CU J are constructed the same except or the ollowing

□ □□□	N□.	S□□ □□□□□□ D□□□□□□□□□□□□	SC□□□□ U□□C□	SC□□□□ U□□C□	SC□□□□□□□□ CU□□
	2	AU O ASS	A 9790	A 9833	A 9833
	3	COMPOS ASS	A 9791	A 9836	A 9836
	9	MCH BR ASS	A 9818	ot used	ot used
	11	MUL CH ASS	A 9857	ot used	ot used
	13	AC H H ASS	A 9822	A 9860	A 9860
	14	AL MA ASS	A 9827	A 9824	A 9824
	15	COMPO ASS	A 9866	A 9865	A 9865
	19	Locking Spacer PLS	A C7643	ot used	ot used
	23	Rear Panel 57U M L	A C8599	A C8605	A C8606
	25	. Main Shield 85 M L	A K7162	ot used	ot used
SP	26	PC Support	C1749	ot used	ot used
	36	Ion Rivet	A C7406	ot used	ot used

□.□ C□ ASSIS SECTION

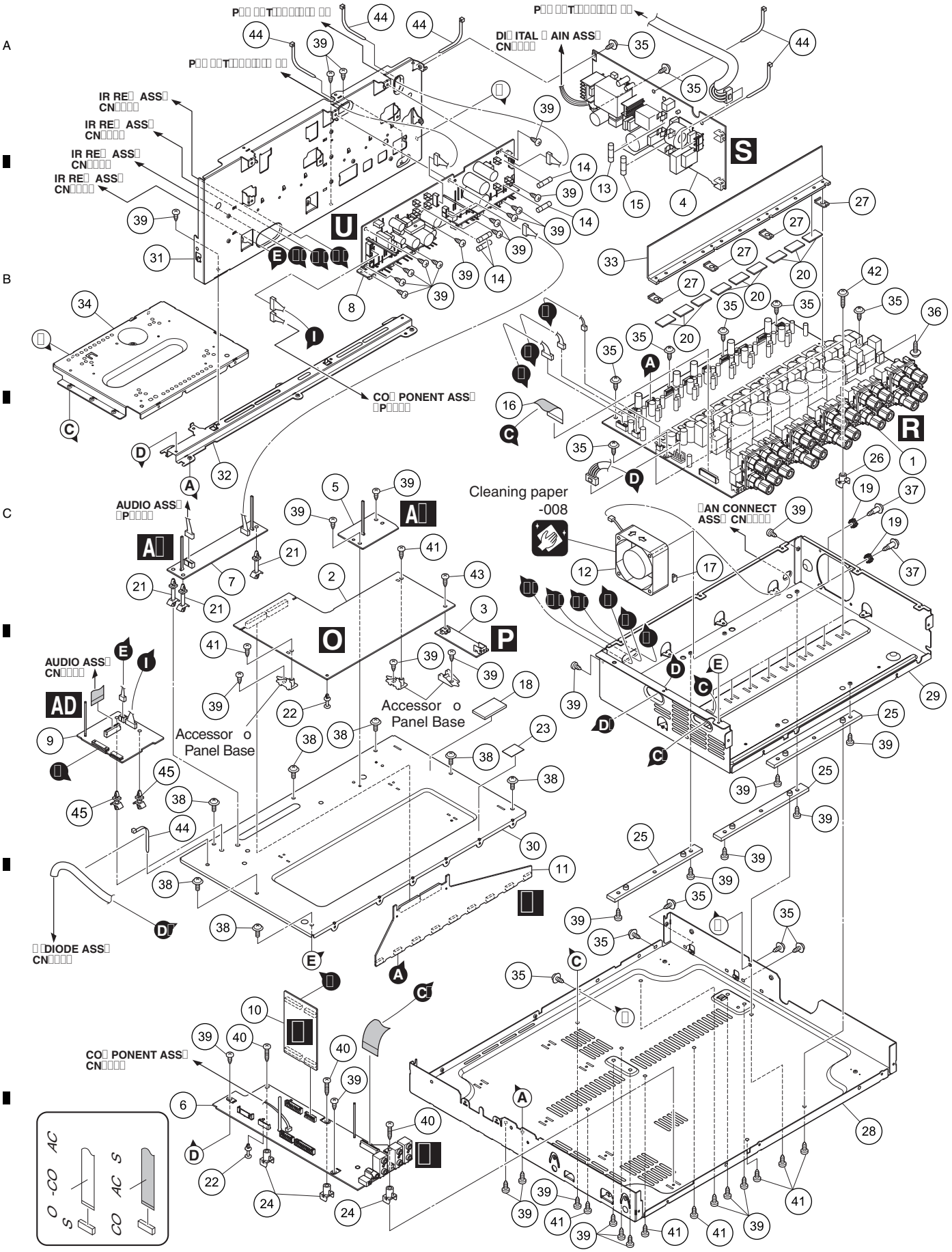

(□) C□ ASSIS SECTION PARTS LIST

□ □□□	N□.	D□□□□□□□□□□□□	P□□□N□.
	1	R PO R AMP ASS	See Contrast table 2
	2	R BU R ASS	A 9793
	3	BU R ASS	A 9795
	4	PR MAR ASS	A 9799
	5	B M CABL ASS	A 9863
	6	R AC ASS	A 9805
	7	A R BR ASS	A 9810
	8	R ASS	A 9813
	9	RO BR ASS	A 9814
	10	B-CO C ASS	A 9819
	11	R R AC ASS	A 9792
⚠	12	C an Motor	A M7040
⚠	13	use U4 2A	R K1139
⚠	14	use U21, U22, U31, U32 1.25A	R K1143
⚠	15	use U1 10A	R K1154
	16	19P C J0004	A 7747
	17	Cushion 5 x 8	A B7397
	18	Cushion 3 20 x 35	A B7406
	19	amper Bushing 83	A B7425
	20	Radiation Sheet	A B7428
SP	21	PCB Spacer	A C1446
	22	PCB Spacer 3 x 12	A C7080
	23	nsulating Sheet	A C7654
	24	PCB Mold PP	AMR2533
	25	nsulator C PLS	AMR7523
	26	PCB Mold PP	AMR7536
	27	Heat Sink Spacer PLS	AMR7568
SP	28	Under Base 85 M L	A A7236
SP	29	R Box 85 M L	A 7061
SP	30	R Cover 85 M L	A 7062
	31	R ASS Plate 85 M	A 7688
	32	Center Beam 85 M L	A 7689
SP	33	Heat Sink 85 AL	A H7234
	34	rans rame 85 M L	A 7685
	35	Screw Steel	ABA1011
	36	Screw 3 x 12	ABA1052
	37	Screw 3 x 11.6	ABA7146
	38	Screw	AM 30P060 C
	39	Screw	BB 30P060 CC
	40	Screw	BB 30P180 CC
	41	Screw	BP 30P080
	42	Screw	B 30P150 CC
	43	Screw	BB 30P060 C
SP	44	Binder BK-1	CA-BK1
SP	45	PCB Holder	P 2100

(□) CONTRAST TA□ LE

SC-57 U JCB, SC-55 U JCB and SC-1526-K CU J are constructed the same except or the ollowing

□ □□□	N□.	S□□ □□□□□□ D□□□□□□□□□□□□	SC□□□□ U□□C□	SC□□□□ U□□C□	SC□□□□□□□□ CU□□
	1	R PO R AMP ASS	A H7030	A H7039	A H7039

□.□ □RONT SECTION

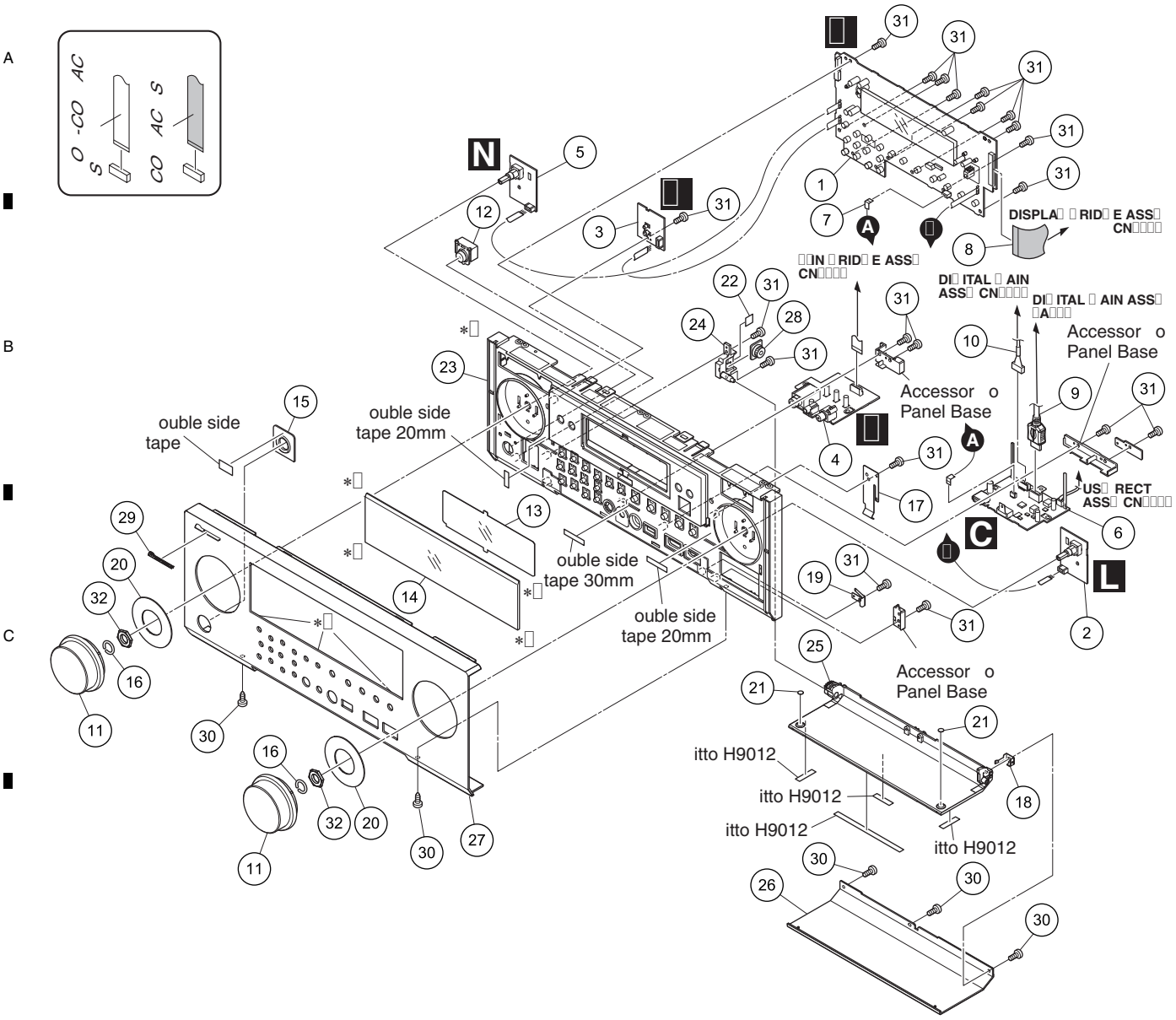

N□□□ *□□Please pa attention not to hurt Panel Base 55U when ou remove the ront Panel.

N□□□ *□□Please tape up at our 4 places to protect Panel Base 55U as shown on the photograph when ou remove the ront Panel.

Le t side 

Right side

N□□□ *□□ ouble Side ape 10mm x 30mm a ixing position on ront Panel

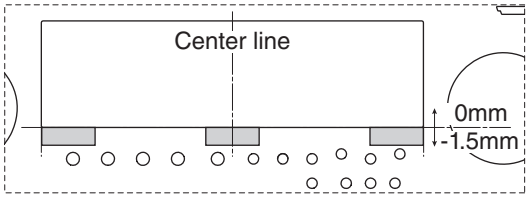

nside

(□) □RONT SECTION PARTS LIST

□ □□□	N□.	D□□□□□□□□□□□□	P□□□N□.
	1	SPLA ASS	See Contrast table 2
	2	OL ASS	A 9797
	3	PO R S ASS	See Contrast table 2
	4	M C HP ASS	A 9800
	5	CO R ASS	A 9801
	6	RO H M USB ASS	A 9749
	7	5P C J0006	A 7749
	8	39P C J0019	A 7753
	9	H M Cable	A 7732
	10	5P Housing ASS 0026	A 7748
	11	OL. Knob L 85 AL	AAA7064
	12	S B B L 85 ASS	AA 7804
	13	ilter 07KU PC	See Contrast table 2
	14	ispla Panel	See Contrast table 2
	15	Power Ring L 85 PLS	AAK8571
	16	Ring	ABH7213
	17	oor Spring SUS	ABK7061
	18	arth Spring 81 SUS	ABK7067
	19	arth Spring 85 SUS	ABK7070
	20	OL Stabili er L 85	A C7644
	21	Cushion Circle 6B	A 7083
	22	Cushion 11 x 7	A 7092
SP	23	Panel Base 55U PLS	AMB8041
	24	oor Sha t 60 PLS	AMR7531
	25	oor Base 85 PLS	AMR7565
	26	oor Panel 57U AL	See Contrast table 2
	27	ront Panel AL	See Contrast table 2
	28	amper ASS 240 L	A A7156
	29	P O R Badge AL	See Contrast table 2
	30	Screw	BB 30P080 B
	31	Screw	BP 30P080
	32	ut	K90 C

(□) CONTRAST TA□LE

SC-57 U JCB, SC-55 U JCB and SC-1526-K CU J are constructed the same except or the ollowing

□ □□□	N□.	S□□ □□□□□□ D□□□□□□□□□□□□	SC□□□□ U□□C□	SC□□□□ U□□C□	SC□□□□□□□□ CU□□
	1	SPLA ASS	A 9796	A 9796	A 9847
	3	PO R S ASS	A 9798	A 9798	A 9901
	13	ilter 07KU PC	AAK8443	AAK8443	AAK8459
	14	ispla Panel	AAK8567	AAK8567	AAK8573
	26	oor Panel 57U AL	A B7562	A B7562	A B7563
	27	ront Panel AL	A B7565	A B7568	A B7569
	29	P O R Badge AL	AM1159	AM1159	AM1158

□□. SC□ E□ ATIC DIA□ RA□

□□.□ AUDIO ASS□ (□□□)(□ UIDE PA□ E)

A N□□□□□ □□□ □□□□□□□□ □□□□□□□ □□□□□□□□ □□□□ □□ □□□□□□ □□ □ E□PLOTED VIE□ S AND PARTS LIST□ □□ □ELECTRICAL PARTS LIST□.

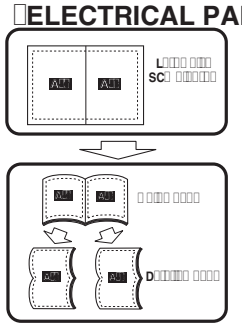

A□ □□

B

C

AC C 3785

A□ C 5775

AA C 3792

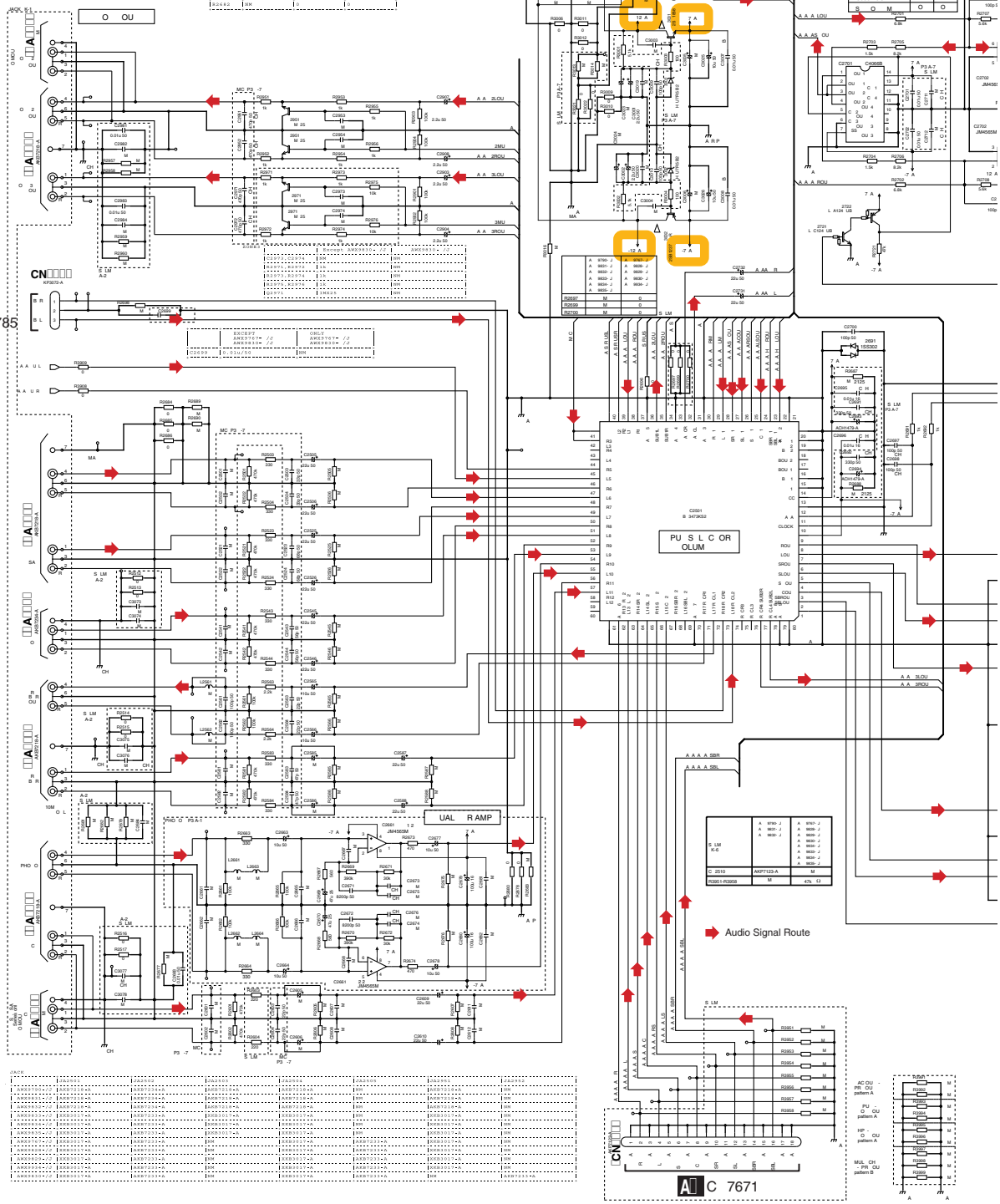

A□□□

A

A AUDIO ASSY (1/3)
(SC-57 : AWX9790)
(SC-55/SC-1526-K: AWX9833)

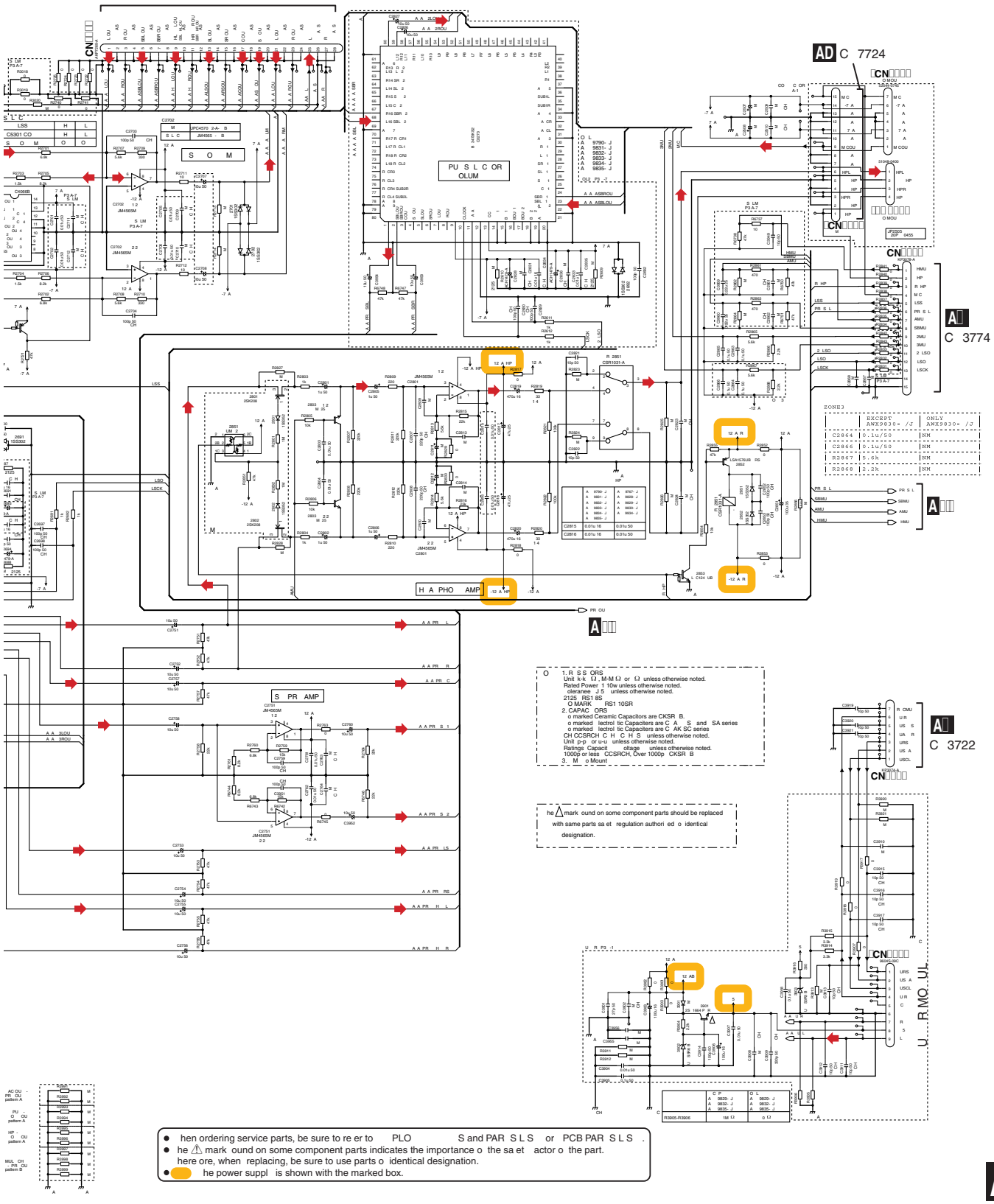

- hen ordering service parts, be sure to re er to PLO S and PAR S L S or PCB PAR S L S .
- he ⚠ mark ound on some component parts indicates the importance o the sa et actor o the part. here ore, when replacing, be sure to use parts o identical designation.
- he power suppl is shown with the marked box.

A-a A-b

AUDIO ASSY (1/3)
(SC-57 : AWX9790)
(SC-55/SC-1526-K : AWX9833)

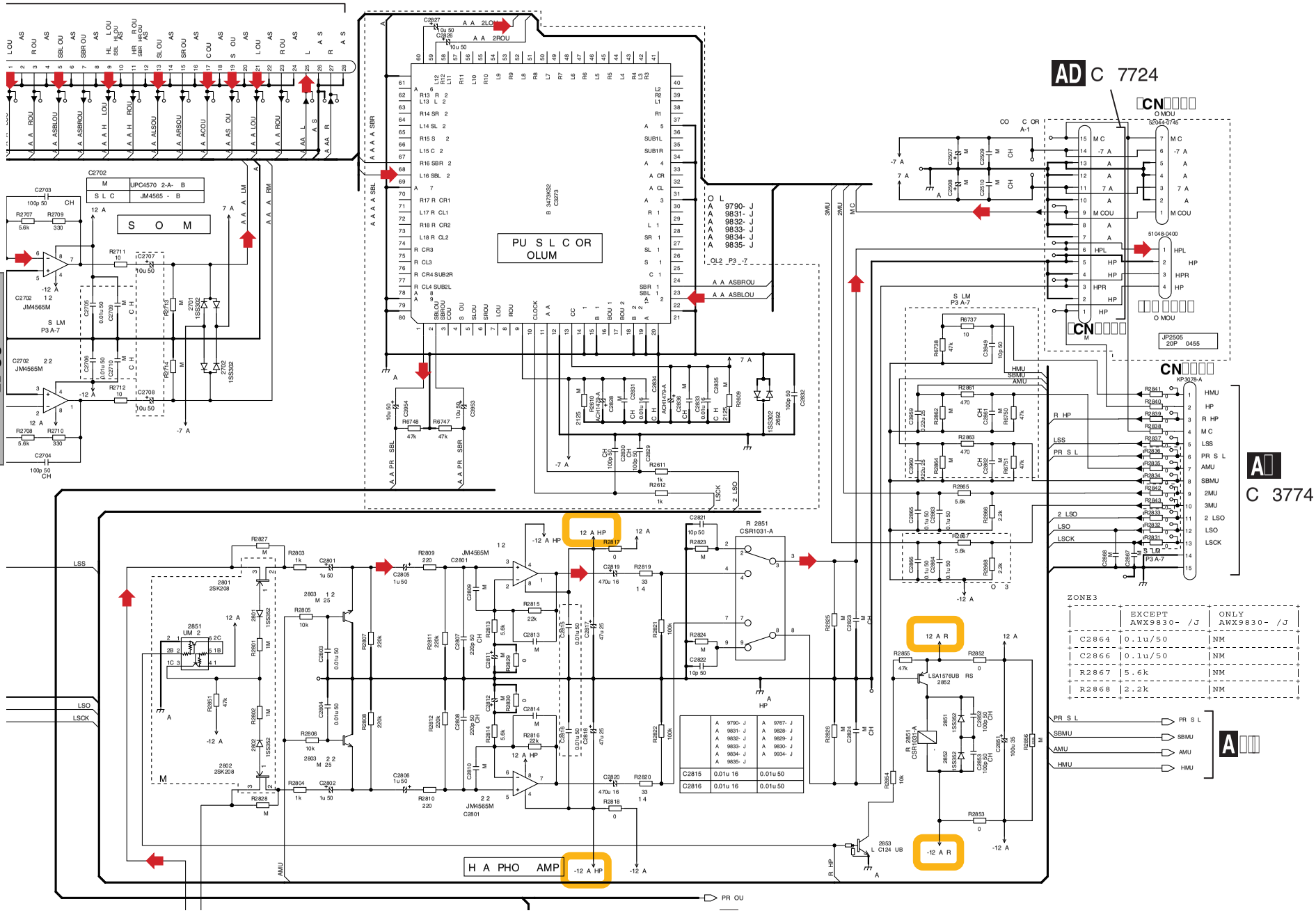

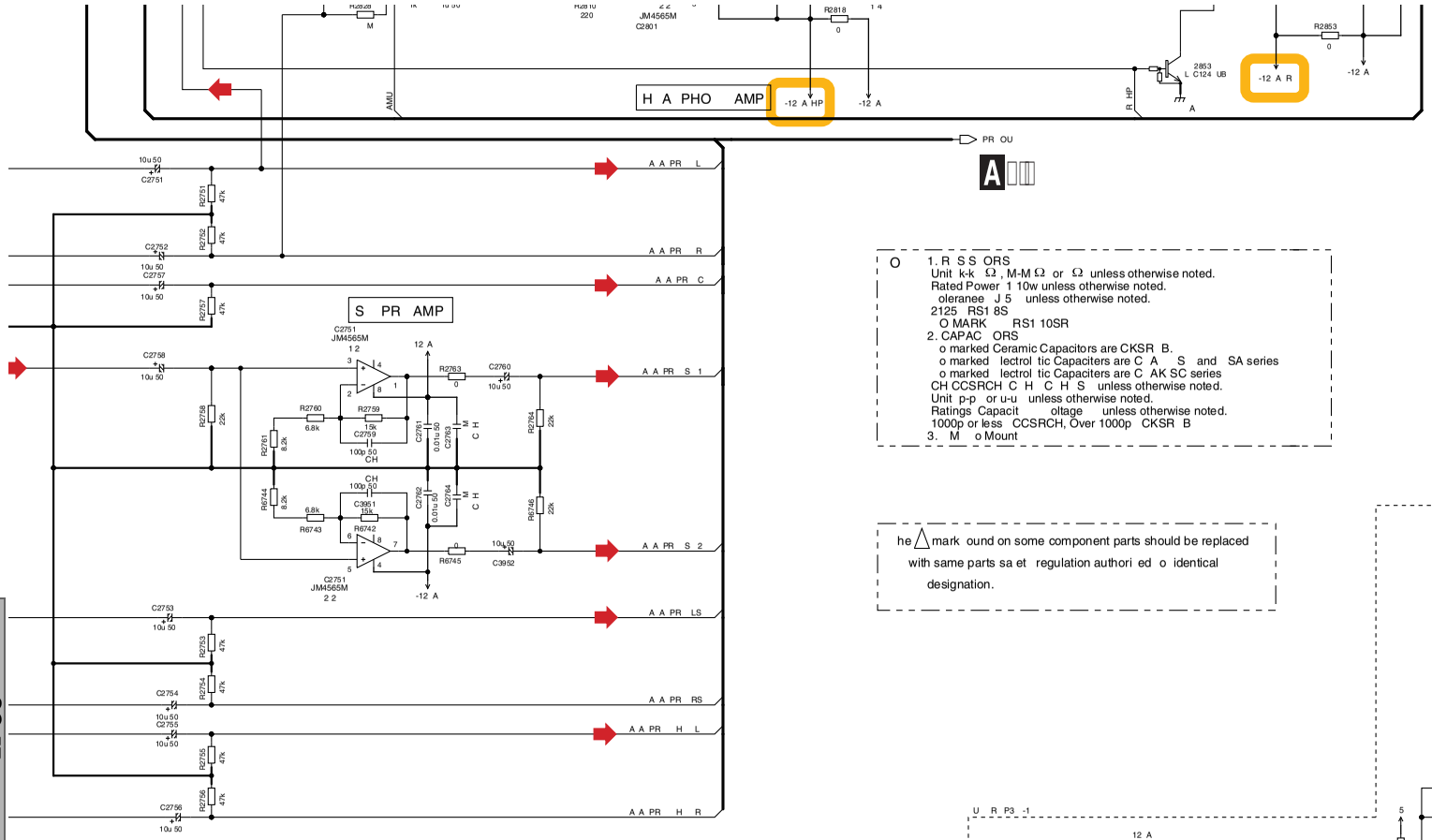

O
1. R S S ORS
Unit k-k Ω , M-M Ω or Ω unless otherwise noted.
Rated Power 1 10w unless otherwise noted.
oleranee J 5 unless otherwise noted.
2125 RS1 8S
O MARK RS1 10SR
2. CAPAC ORS
o marked Ceramic Capacitors are CKSR B.
o marked lectrol tic Capaciters are C A S and SA series
o marked lectrol tic Capaciters are C AK SC series
CH CCSRCH C H C H S unless otherwise noted.
Unit p-p or u-u unless otherwise noted.
Ratings Capacit oltage unless otherwise noted.
1000p or less CCSRCH, Over 1000p CKSR B
3. M o Mount

he △ mark ound on some component parts should be replaced with same parts sa et regulation authori ed o identical designation.

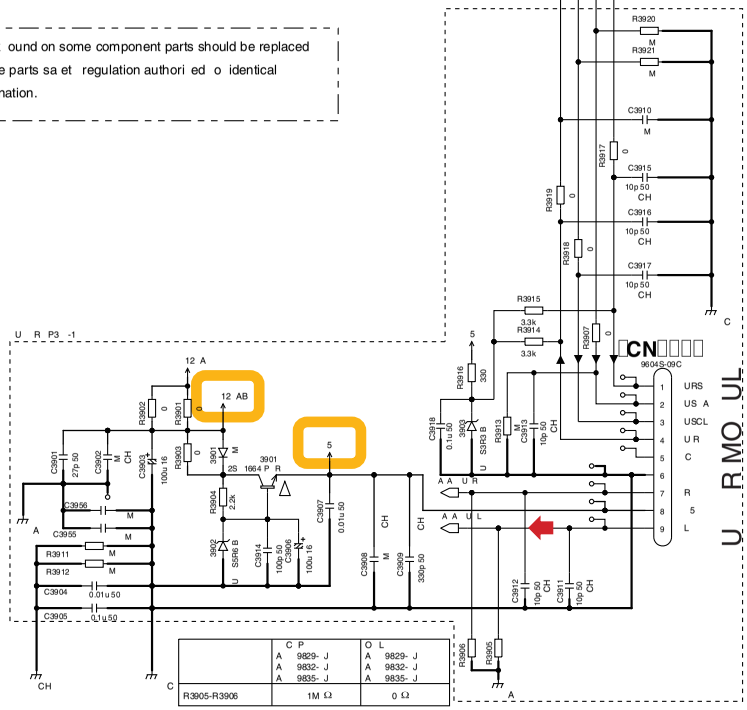

	C P	O L
	A 9829- J A 9832- J A 9835- J	A 9829- J A 9832- J A 9835- J
R3905-R3906	1M Ω	0 Ω

- hen ordering service parts, be sure to re er to PLO S and PAR S L S or PCB PAR S L S .
- he ⚠ mark ound on some component parts indicates the importance o the sa et actor o the part. here ore, when replacing, be sure to use parts o identical designation.
- he power suppl is shown with the marked box.

CONNECTOR

	AWX9790- /J AWX9831- /J AWX9832- /J AWX9833- /J AWX9834- /J AWX9835- /J	AWX9767- /J AWX9828- /J AWX9829- /J AWX9934- /J AWX9830- /J
CN2503	52044-1545	NM
JP3001	ADX7745-A	NM
JP3002	NM	PF06PG-S47
CN2504	NM	52044-0745
JH2505	NM	51048-0400
JP2505	NM	D20PYY0455E

SELMID

	AWX9790- /J AWX9831- /J AWX9832- /J AWX9833- /J AWX9834- /J AWX9835- /J	AWX9767- /J AWX9828- /J AWX9829- /J AWX9934- /J	AWX9830- /J
C2683	0.01u/50	NM	NM
C2684	NM	NM	NM
C2983	0.01u/50	0.01u/50	NM
C3073	0.1u/50	NM	NM
C3074	470p/50	NM	NM
C3075	0.1u/50	NM	NM
C3076	470p/50	NM	NM
C3077	470p/50	NM	NM
C3078	0.1u/50	NM	NM
R2532	NM	0	0
R2513	NM	0	0
R2514	NM	0	0
R2515	NM	0	0
R2516	NM	0	0
R2517	NM	0	0
R2677	NM	0	0
R2679	NM	0	0
R2681	NM	0	0
R2682	NM	0	0

A-a A-b

AC C 3785

AC C 5775

AA C 3792

	A 9790- J A 9831- J A 9832- J A 9833- J A 9834- J A 9835- J	A 9767- J A 9828- J A 9829- J A 9830- J A 9934- J	
R2697	M	0	
R2699	M	0	
R2700	M	0	

	Except AWX9830- /J	AWX9830- /J	
C2973,C2974	NM	NM	
R2971,R2972	1k	NM	
R2973,R2974	1k	NM	
R2975,R2976	1k	NM	
Q2971	1MX25	NM	

	EXCEPT AWX9767- /J AWX9830- /J	ONLY AWX9767- /J AWX9830- /J
C2699	0.01u/50	NM

LSS	H	L
C5301 CO	H	L
S O M	O	O

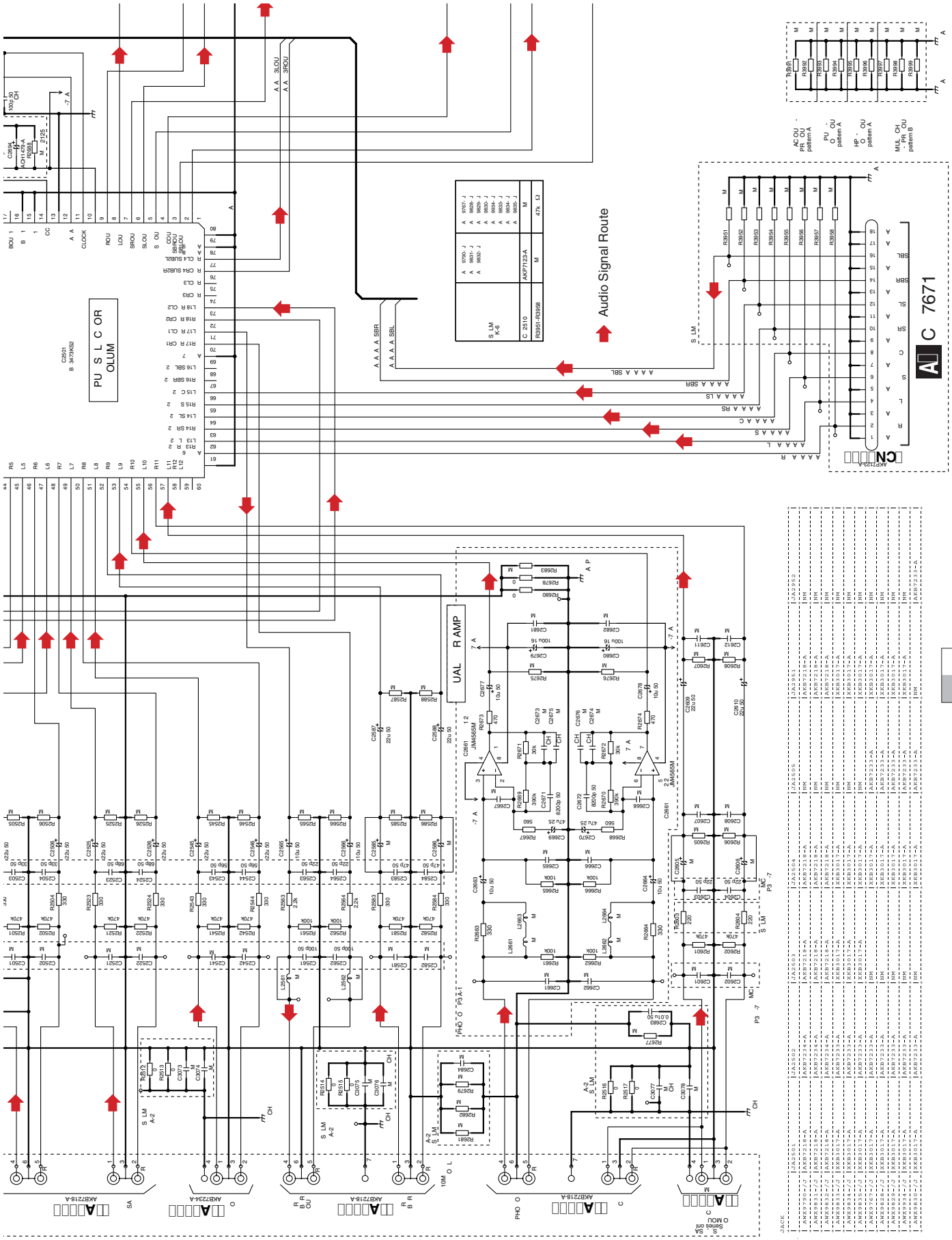
Audio Signal Route
PU S L C OR
OLUM
UAL R AMP
AL C 7671
A-a
A-b

□□.□ AUDIO ASS□ (□□□)

SELMID

	AWB7990-J2	AWB9831-J2	AWB9832-J2	AWB9833-J2	AWB9834-J2	AWB9835-J2	AWB9790-J2	AWB9831-J2	AWB9832-J2	AWB9833-J2	AWB9834-J2	AWB9835-J2
C3052	ACH1480-A	ACH1480-A	ACH1480-A	ACH1480-A	ACH1480-A	ACH1480-A	ACH1480-A	NM	NM	NM	NM	NM
C3054	ACH1480-A	ACH1480-A	ACH1480-A	ACH1480-A	ACH1480-A	ACH1480-A	ACH1480-A	NM	NM	NM	NM	NM
C3055	0.01u/16	0.01u/16	0.01u/16	0.01u/16	0.01u/16	0.01u/16	0.01u/16	NM	NM	NM	NM	NM
C3056	0.01u/16	0.01u/16	0.01u/16	0.01u/16	0.01u/16	0.01u/16	0.01u/16	NM	NM	NM	NM	NM
C3057	NM	NM	NM	NM	NM	NM	NM	NM	NM	NM	NM	NM
C3058	NM	NM	NM	NM	NM	NM	NM	NM	NM	NM	NM	NM
R3051	0	0	0	0	0	0	NM	NM	NM	NM	NM	NM
R3052	0	0	0	0	0	0	NM	NM	NM	NM	NM	NM
R3053	NM	NM	NM	NM	NM	NM	10	10	10	10	10	10
R3054	NM	NM	NM	NM	NM	NM	10	10	10	10	10	10
CN3051	RRR9082-A	RRR9082-A	RRR9082-A	RRR9082-A	RRR9082-A	RRR9082-A	NM	NM	NM	NM	NM	NM
CN3052	NM	NM	NM	NM	NM	NM	RR0775-13F	RR0775-13F	RR0775-13F	RR0775-13F	RR0775-13F	RR0775-13F

he △ mark ound on some component parts should be replaced with same parts sa et regulation authori ed o identical designation.

PR BU R

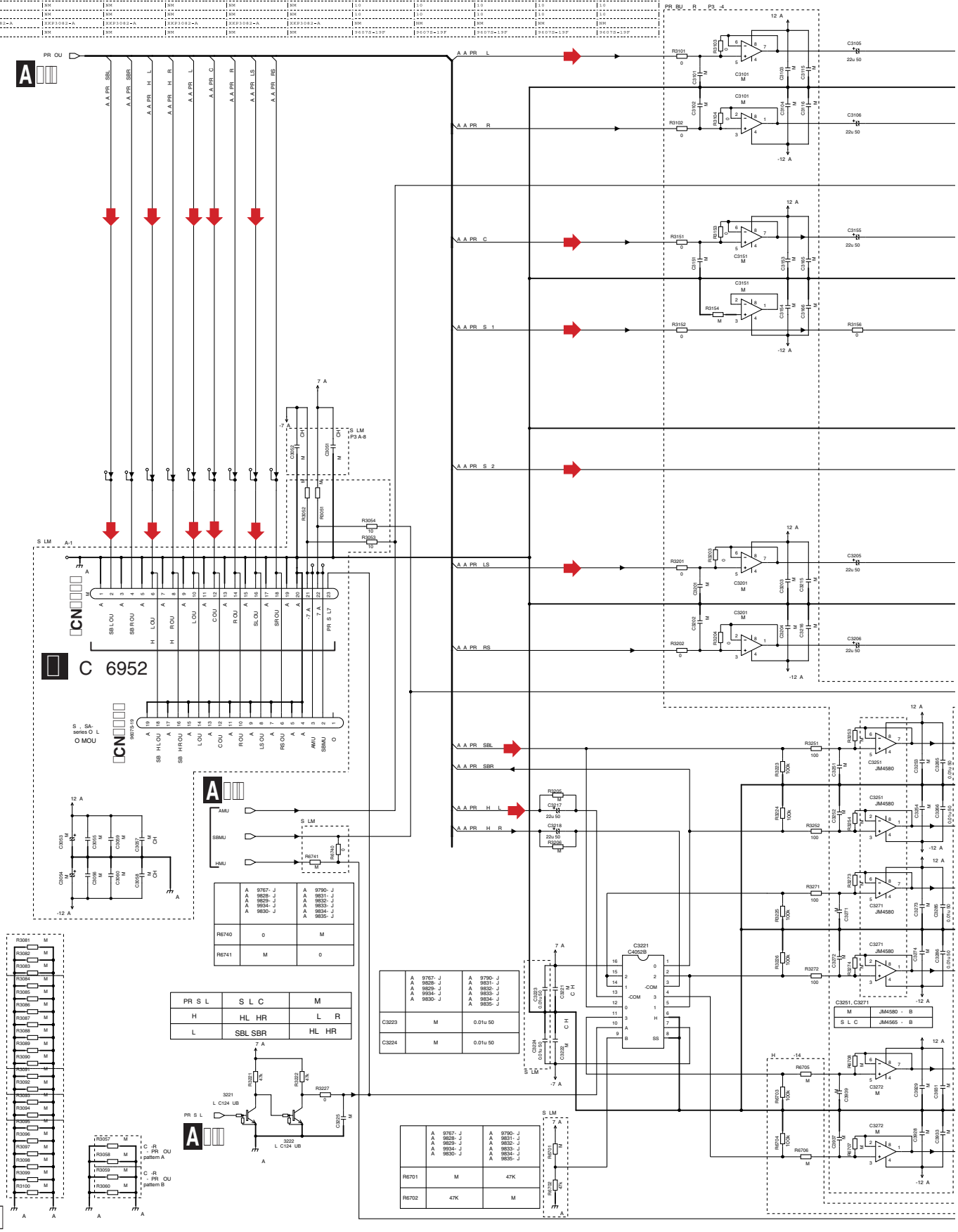

	A 9767- J A 9828- J A 9829- J A 9934- J A 9830- J	A 9790- J A 9831- J A 9832- J A 9833- J A 9834- J A 9835- J
R6740	0	M
R6741	M	0

PR S L	S L C	M
H	HL HR	L R
L	SBL SBR	HL HR

	A 9767- J A 9828- J A 9829- J A 9934- J A 9830- J	A 9790- J A 9831- J A 9832- J A 9833- J A 9834- J A 9835- J
C3223	M	0.01u 50
C3224	M	0.01u 50

	A 9767- J A 9828- J A 9829- J A 9934- J A 9830- J	A 9790- J A 9831- J A 9832- J A 9833- J A 9834- J A 9835- J
R6701	M	47K
R6702	47K	M

M	JM4580 - B
S L C	JM4565 - B

A □□□

ponent parts should be replaced
ation authori ed o identical

O
1. R S S ORS
Unit k-kΩ , M-MΩ or Ω unless otherwise noted.
Rated Power 1 10w unless otherwise noted.
oleranee J 5 unless otherwise noted.
2125 RS1 8S
O MARK RS1 10SR
2. CAPAC ORS
o marked Ceramic Capacitors are CKSR B.
o marked lectrol tic Capaciters are C A S and SA series
o marked lectrol tic Capaciters are C AK SC series
CH CCSRCH C H C H S unless otherwise noted.
Unit p-p or u-u unless otherwise noted.
Ratings Capacit oltage unless otherwise noted.
1000p or less CCSRCH, Over 1000p CKSR B
3. M o Mount

A AUDIO ASSY (2/3)
(SC-57 : AWX9790)
(SC-55/SC-1526-K : AWX9833)

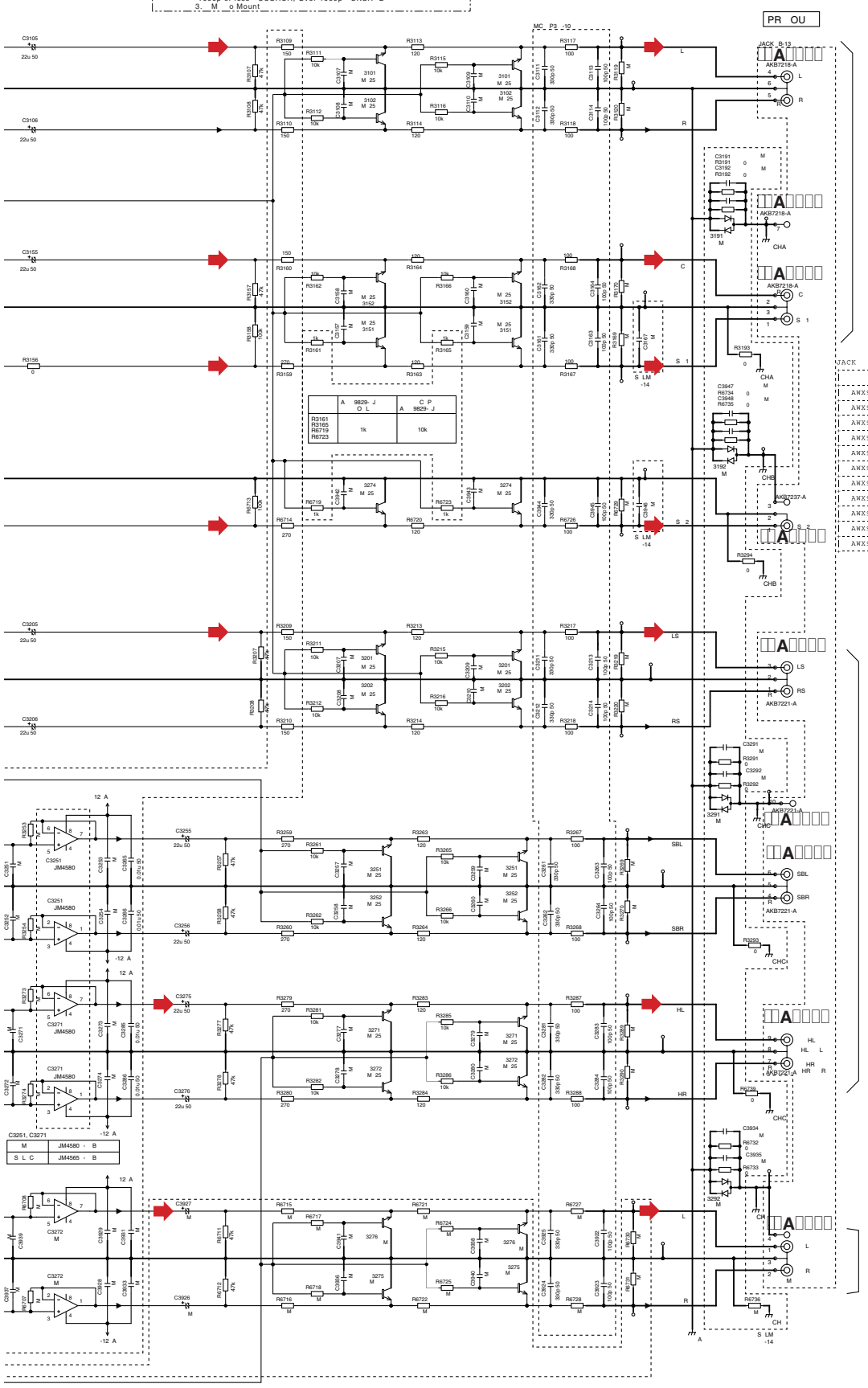

	A 9829- J O L	C P A 9829- J
R3161 R3165 R6719 R6723	1k	10k

JACK

	JA3101	JA3102	JA3201	JA3202
AWX9790- /J	AKB7218-A	AKB7237-A	AKB7221-A	AKB7234-A
AWX9831- /J	AKB7218-A	AKB7237-A	AKB7221-A	AKB7234-A
AWX9832- /J	AKB7218-A	AKB7237-A	AKB7221-A	AKB7234-A
AWX9833- /J	XKB3017-A	AKB7236-A	XKB3037-A	AKB7233-A
AWX9834- /J	XKB3017-A	AKB7236-A	XKB3037-A	AKB7233-A
AWX9835- /J	XKB3017-A	AKB7236-A	XKB3037-A	AKB7233-A
AWX9767- /J	XKB3017-A	AKB7236-A	XKB3037-A	NM
AWX9828- /J	XKB3017-A	AKB7236-A	XKB3037-A	NM
AWX9829- /J	XKB3017-A	AKB7236-A	XKB3037-A	NM
AWX9934- /J	XKB3017-A	AKB7236-A	XKB3037-A	NM
AWX9830- /J	XKB3017-A	AKB7236-A	XKB3037-A	NM

SELMID

	AWX9790- /J AWX9831- /J AWX9832- /J AWX9833- /J AWX9834- /J AWX9835- /J	AWX9767- /J AWX9828- /J AWX9829- /J AWX9830- /J AWX9934- /J
C3167	10p/50	NM
C3946	10p/50	NM

SELMID

	AWX9790- /J AWX9831- /J AWX9832- /J AWX9833- /J AWX9834- /J AWX9835- /J	AWX9767- /J AWX9828- /J AWX9829- /J AWX9830- /J AWX9934- /J
C3191	0.1u/50	NM
C3192	470p/50	NM
C3291	0.1u/50	NM
C3292	470p/50	NM
C3934	0.1u/50	NM
C3935	470p/50	NM
C3947	0.01u/50	NM
C3948	470p/50	NM
R3191	NM	0
R3192	NM	0
R3193	NM	0
R3291	NM	0
R3292	NM	0
R3293	NM	0
R3294	NM	0
R6732	NM	0
R6733	NM	0
R6734	NM	0
R6735	NM	0
R6736	NM	NM
R6739	NM	0
D3191	NM	NM
D3291	NM	NM
D3292	NM	NM

FH/FW

	AWX9790- /J AWX9831- /J AWX9832- /J AWX9833- /J AWX9834- /J AWX9835- /J	AWX9767- /J AWX9828- /J AWX9829- /J AWX9934- /J AWX9830- /J
C3926	22u/50	NM
C3927	22u/50	NM
C3936	NM	NM
C3938	NM	NM
C3940	NM	NM
C3941	NM	NM
R6703	100k	NM
R6704	100k	NM
R6705	100	NM
R6706	100	NM
R6711	47k	NM
R6712	47k	NM
R6715	270	NM
R6716	270	NM
R6717	10k	NM
R6718	10k	NM
R6721	120	NM
R6722	120	NM
R6724	10k	NM
R6725	10k	NM
R6730	NM	NM
R6731	NM	NM
Q3275	IMX35	NM
Q3276	IMX25	NM

Audio Signal Route

□□.□ AUDIO ASS□ (□□□)

PHONO (P1 I-2)

	AWX9790- /J AWX9832- /J AWX9833- /J AWX9835- /J	AWX9831- /J AWX9834- /J	AWX9767- /J AWX9828- /J AWX9829- /J AWX9934- /J AWX9830- /J
C2661	NM	220p/50	NM
C2662	NM	220p/50	NM
C2663	10u/50	10u/50	NM
C2664	10u/50	10u/50	NM
C2665	NM	330p/50	NM
C2666	NM	330p/50	NM
C2667	NM	560p/50	NM
C2668	NM	560p/50	NM
C2669	47u/25	47u/25	NM
C2670	47u/25	47u/25	NM
C2671	8200p/50	8200p/50	NM
C2672	8200p/50	8200p/50	NM
C2673	1200p/50	1200p/50	NM
C2674	1200p/50	1200p/50	NM
C2675	1200p/50	1200p/50	NM
C2676	1200p/50	1200p/50	NM
C2677	10u/50	10u/50	NM
C2678	10u/50	10u/50	NM
C2679	100u/16	100u/16	NM
C2680	100u/16	100u/16	NM
C2681	NM	NM	NM
C2682	NM	NM	NM
R2661	100k	100k	NM
R2662	100k	100k	NM
R2663	330	560	NM
R2664	330	560	NM
R2665	100k	100k	NM
R2666	100k	100k	NM
R2667	560	560	NM
R2668	560	560	NM
R2669	390k	390k	NM
R2670	390k	390k	NM
R2671	30k	30k	NM
R2672	30k	30k	NM
R2673	470	470	NM
R2674	470	470	NM
R2675	NM	NM	NM
R2676	NM	NM	NM
R2678	0	0	0
R2680	0	0	0
R2683	NM	NM	NM
L2661	NM	NM	NM
L2662	NM	NM	NM
L2663	NM	NM	NM
L2664	NM	NM	NM
IC2661	NJM4565MD	NJM4565MD	NM

EMC (P1 C-2,F-2,K-2)

	EXCEPT AWX9828- /J AWX9831- /J AWX9834- /J	ONLY AWX9831- /J AWX9834- /J	ONLY AWX9828- /J
C2501	NM	100p/50	NM
C2502	NM	100p/50	NM
C2503	NM	100p/50	33p/50
C2504	NM	100p/50	33p/50
C2521	NM	100p/50	NM
C2522	NM	100p/50	NM
C2523	NM	100p/50	68p/50
C2524	NM	100p/50	68p/50
C2541	NM	100p/50	NM
C2542	NM	100p/50	NM
C2543	NM	100p/50	56p/50
C2544	NM	100p/50	56p/50
C2561	NM	100p/50	100p/50
C2562	NM	100p/50	100p/50
C2563	NM	22p/50	22p/50
C2564	NM	22p/50	22p/50
C2581	NM	NM	NM
C2582	NM	NM	NM
C2583	NM	100p/50	47p/50
C2584	NM	100p/50	47p/50
C2601	NM	NM	NM
C2602	NM	NM	NM
C2603	NM	100p/50	22p/50
C2604	NM	100p/50	22p/50
C2951	NM	470p/50	470p/50
C2952	NM	470p/50	470p/50
C2971	NM	470p/50	470p/50
C2972	NM	470p/50	470p/50

PREBUFFER (P2 B-6)

	AWX9790- /J AWX9831- /J AWX9832- /J AWX9833- /J AWX9834- /J AWX9835- /J	AWX9767- /J AWX9828- /J AWX9829- /J AWX9934- /J AWX9830- /J
C3103	0.01u/16	NM
C3104	0.01u/16	NM
C3115	NM	NM
C3116	NM	NM
C3153	0.01u/16	NM
C3154	0.01u/16	NM
C3165	NM	NM
C3166	NM	NM
C3203	0.01u/16	NM
C3204	0.01u/16	NM
C3215	NM	NM
C3216	NM	NM
C3253	0.01u/16	NM
C3254	0.01u/16	NM
C3265	NM	0.01u/50
C3266	NM	0.01u/50
C3273	0.01u/16	NM
C3274	0.01u/16	NM
C3285	NM	0.01u/50
C3286	NM	0.01u/50
C3928	0.01u/16	NM
C3929	0.01u/16	NM
C3931	NM	NM
C3933	NM	NM
C3937	NM	NM
C3939	NM	NM
R3101	100	0
R3102	100	0
R3103	NM	0
R3104	NM	0
R3109	270	150
R3110	270	150
R3151	100	0
R3153	NM	0
R3154	0	NM
R3160	270	150
R3201	100	0
R3202	100	0
R3203	NM	0
R3204	NM	0
R3209	270	150
R3210	270	150
R3253	NM	NM
R3254	NM	NM
R3273	NM	NM
R3274	NM	NM
R6707	NM	NM
R6708	NM	NM
IC3101	NJM4580V	NM
IC3151	NJM4580V	NM
IC3201	NJM4580V	NM
IC3251	NJM4580V	NJM4580V
IC3271	NJM4580V	NJM4565V
IC3272	NJM4580V	NJM4565V

TUNER (P1 J-13)

	AWX9790- /J AWX9831- /J AWX9833- /J AWX9834- /J	AWX9832- /J AWX9835- /J	AWX9767- /J AWX9828- /J AWX9934- /J AWX9830- /J	AWX9829- /J
C3901	27p/50	NM	NM	NM
C3902	NM	NM	NM	NM
C3903	100u/16	NM	100u/16	NM
C3904	0.01u/50	NM	0.01u/50	NM
C3905	0.1u/50	NM	0.1u/50	NM
C3906	100u/16	NM	100u/16	NM
C3907	0.01u/50	NM	0.01u/50	NM
C3908	10p/50	NM	NM	NM
C3909	330p/50	NM	330p/50	NM
C3910	NM	NM	NM	NM
C3911	10p/50	NM	10p/50	NM
C3912	10p/50	NM	10p/50	NM
C3913	10p/50	NM	10p/50	NM
C3914	100p/50	NM	NM	NM
C3915	10p/50	NM	10p/50	NM
C3916	10p/50	NM	10p/50	NM
C3917	10p/50	NM	10p/50	NM
C3918	0.1u/50	NM	0.1u/50	NM
R3901	0	NM	0	NM
R3902	0	NM	0	NM
R3903	0	NM	0	NM
R3904	2.2k	NM	2.2k	NM
R3905	1M	0	1M	0
R3906	1M	0	1M	0
R3907	0	NM	0	NM
R3911	NM	NM	NM	0
R3912	NM	NM	NM	0
R3913	NM	NM	NM	NM
R3914	3.3k	NM	3.3k	NM
R3915	3.3k	NM	3.3k	NM
R3916	330	NM	330	NM
R3917	0	NM	0	NM
R3918	0	NM	0	NM
R3919	0	NM	0	NM
R3920	NM	47k	NM	47k
R3921	NM	47k	NM	47k
CN3902	96048-09C	NM	96048-09C	NM
D3901	NM	NM	NM	NM
D3902	UDZS5R6(B)	NM	UDZS5R6(B)	NM
D3903	UDZS3R3(B)	NM	UDZS3R3(B)	NM
Q3901	2SD1664(PQR)	NM	2SD1664(PQR)	NM

AUDIO ASSY (3/3)
(SC-57 : AWX9790)
(SC-55/SC-1526-K : AWX9833)

SELMID(P1)

	AWX9790- /J	AWX9831- /J	AWX9832- /J	AWX9833- /J	AWX9834- /J	AWX9835- /J	AWX9767- /J	AWX9828- /J	AWX9829- /J	AWX9934- /J	AWX9830- /J
R2687	1M	1M	1M	1M	1M	1M	NM	1M	1M	NM	NM
R2688	1.5k	1.5k	1.5k	1.5k	1.5k	1.5k	NM	1.6k	1.6k	NM	NM
R2740	NM	NM	NM	NM	NM	NM	0	0	0	0	0
R2741	NM	NM	NM	NM	NM	NM	0	0	0	0	0
R2831	10	10	10	10	10	10	0	0	0	0	0
R2832	10	10	10	10	10	10	0	0	0	0	0
R2833	10	10	10	10	10	10	0	0	0	0	0
R2834	10	10	10	10	10	10	0	0	0	0	0
R2835	10	10	10	10	10	10	0	0	0	0	0
R2836	10	10	10	10	10	10	0	0	0	0	0
R2861	0	0	0	0	0	0	470	470	470	470	470
R2862	47k	47k	47k	47k	47k	47k	NM	NM	NM	NM	NM
R2863	0	0	0	0	0	0	470	470	470	470	470
R2864	47k	47k	47k	47k	47k	47k	NM	NM	NM	NM	NM
R3005	NM	NM	NM	NM	NM	NM	0	0	0	0	0
R3013	0	0	0	0	0	0	NM	NM	NM	NM	NM
R3014	0	0	0	0	0	0	NM	NM	NM	NM	NM
R3018	NM	NM	NM	NM	NM	NM	0	0	0	0	0
R3019	NM	NM	NM	NM	NM	NM	0	0	0	0	0
R3020	0	0	0	0	0	0	NM	NM	NM	NM	NM
R3021	NM	NM	NM	NM	NM	NM	0	0	0	0	0
R3022	NM	NM	NM	NM	NM	NM	0	0	0	0	0
R3031	4.7M	4.7M	470k	4.7M	4.7M	470k	NM	4.7M	3.9k	NM	NM
R3032	5.6k	5.6k	470k	5.6k	5.6k	820k	8.2k	7.5k	2.2k	8.2k	8.2k
R3034	NM	NM	NM	NM	NM	NM	NM	NM	3K	NM	NM
R6737	0	0	0	0	0	0	10	10	10	10	10
R6738	47k	47k	47k	47k	47k	47k	47k	47k	47k	47k	47k
R6750	NM	NM	NM	NM	NM	NM	47k	47k	47k	47k	47k
R6751	NM	NM	NM	NM	NM	NM	47k	47k	47k	47k	47k
C2691	NM	NM	NM	NM	NM	NM	330p/50	330p/50	330p/50	330p/50	330p/50
C2692	NM	NM	NM	NM	NM	NM	330p/50	330p/50	330p/50	330p/50	330p/50
C2701	NM	NM	NM	NM	NM	NM	0.01u/50	0.01u/50	0.01u/50	0.01u/50	0.01u/50
C2702	NM	NM	NM	NM	NM	NM	0.01u/50	0.01u/50	0.01u/50	0.01u/50	0.01u/50
C2705	NM	NM	NM	NM	NM	NM	0.01u/50	0.01u/50	0.01u/50	0.01u/50	0.01u/50
C2706	NM	NM	NM	NM	NM	NM	0.01u/50	0.01u/50	0.01u/50	0.01u/50	0.01u/50
C2709	0.01u/16	0.01u/16	0.01u/16	0.01u/16	0.01u/16	0.01u/16	NM	NM	NM	NM	NM
C2710	0.01u/16	0.01u/16	0.01u/16	0.01u/16	0.01u/16	0.01u/16	NM	NM	NM	NM	NM
C2711	0.01u/16	0.01u/16	0.01u/16	0.01u/16	0.01u/16	0.01u/16	NM	NM	NM	NM	NM
C2712	0.01u/16	0.01u/16	0.01u/16	0.01u/16	0.01u/16	0.01u/16	NM	NM	NM	NM	NM
C2861	NM	NM	NM	NM	NM	NM	NM	NM	NM	NM	NM
C2862	NM	NM	NM	NM	NM	NM	NM	NM	NM	NM	NM
C3009	NM	NM	NM	NM	NM	NM	100p/50	100p/50	100p/50	100p/50	100p/50
C3010	NM	NM	NM	NM	NM	NM	100p/50	100p/50	100p/50	100p/50	100p/50
C3021	0.01u/50	0.01u/50	0.01u/50	0.01u/50	0.01u/50	0.01u/50	NM	0.01u/50	0.01u/50	0.01u/50	NM
C3949	NM	NM	NM	NM	NM	NM	10p/50	10p/50	10p/50	10p/50	10p/50
C3959	NM	NM	NM	NM	NM	NM	0.22u/25	0.22u/25	0.22u/25	0.22u/25	0.22u/25
C3960	NM	NM	NM	NM	NM	NM	0.22u/25	0.22u/25	0.22u/25	0.22u/25	0.22u/25

VOL2 (P1 B-13)

	AWX9790- /J AWX9831- /J AWX9832- /J AWX9833- /J AWX9834- /J AWX9835- /J	AWX9767- /J AWX9828- /J AWX9829- /J AWX9934- /J AWX9830- /J
C2826	10u/50	NM
C2827	10u/50	NM
C2828	ACH1479-A	NM
C2829	100p/50	NM
C2830	100p/50	NM
C2831	NM	NM
C2832	100p/50	NM
C2833	NM	NM
C2834	0.01u/16	NM
C2835	0.01u/16	NM
C2836	ACH1479-A	NM
C3953	10u/50	NM
C3954	10u/50	NM
R2609	NM	NM
R2610	NM	NM
R2611	1k	NM
R2612	1k	NM
R6747	47k	NM
R6748	47k	NM
IC3273	BD3473KS2	NM
D2692	1SS302	NM

EMC (P2 B-11)

	EXCEPT AWX9828- /J AWX9934- /J AWX9831- /J AWX9834- /J	ONLY AWX9828- /J AWX9831- /J AWX9834- /J	ONLY AWX9934- /J
C3111	NM	330p/50	330p/50
C3112	NM	330p/50	330p/50
C3113	NM	100p/50	100p/50
C3114	NM	100p/50	100p/50
C3161	NM	330p/50	330p/50
C3162	NM	330p/50	330p/50
C3163	NM	100p/50	100p/50
C3164	NM	100p/50	100p/50
C3211	NM	330p/50	330p/50
C3212	NM	330p/50	330p/50
C3213	NM	100p/50	100p/50
C3214	NM	100p/50	100p/50
C3261	NM	330p/50	330p/50
C3262	NM	330p/50	330p/50
C3263	NM	100p/50	100p/50
C3264	NM	100p/50	100p/50
C3281	NM	330p/50	330p/50
C3282	NM	330p/50	330p/50
C3283	NM	100p/50	100p/50
C3284	NM	100p/50	100p/50
C3922	NM	100p/50	NM
C3923	NM	100p/50	NM
C3924	NM	330p/50	NM
C3925	NM	330p/50	NM
C3944	NM	330p/50	330p/50
C3945	NM	100p/50	100p/50

O

1. R S S ORS
Unit k-kΩ, M-MΩ or Ω unless otherwise noted.
Rated Power 1 10w unless otherwise noted.
oleranee J 5 unless otherwise noted.
2125 RS1 8S
O MARK RS1 10SR
2. CAPAC ORS
o marked Ceramic Capacitors are CKSR B.
o marked lectrol tic Capaciters are C A S and SA series
o marked lectrol tic Capaciters are C AK SC series
CH CCSRCH C H C H S unless otherwise noted.
Unit p-p or u-u unless otherwise noted.
Ratings Capacit oltage unless otherwise noted.
1000p or less CCSRCH, Over 1000p CKSR B
3. M o Mount

□□.□ DAC □I□ □ ASS□ (□□□)

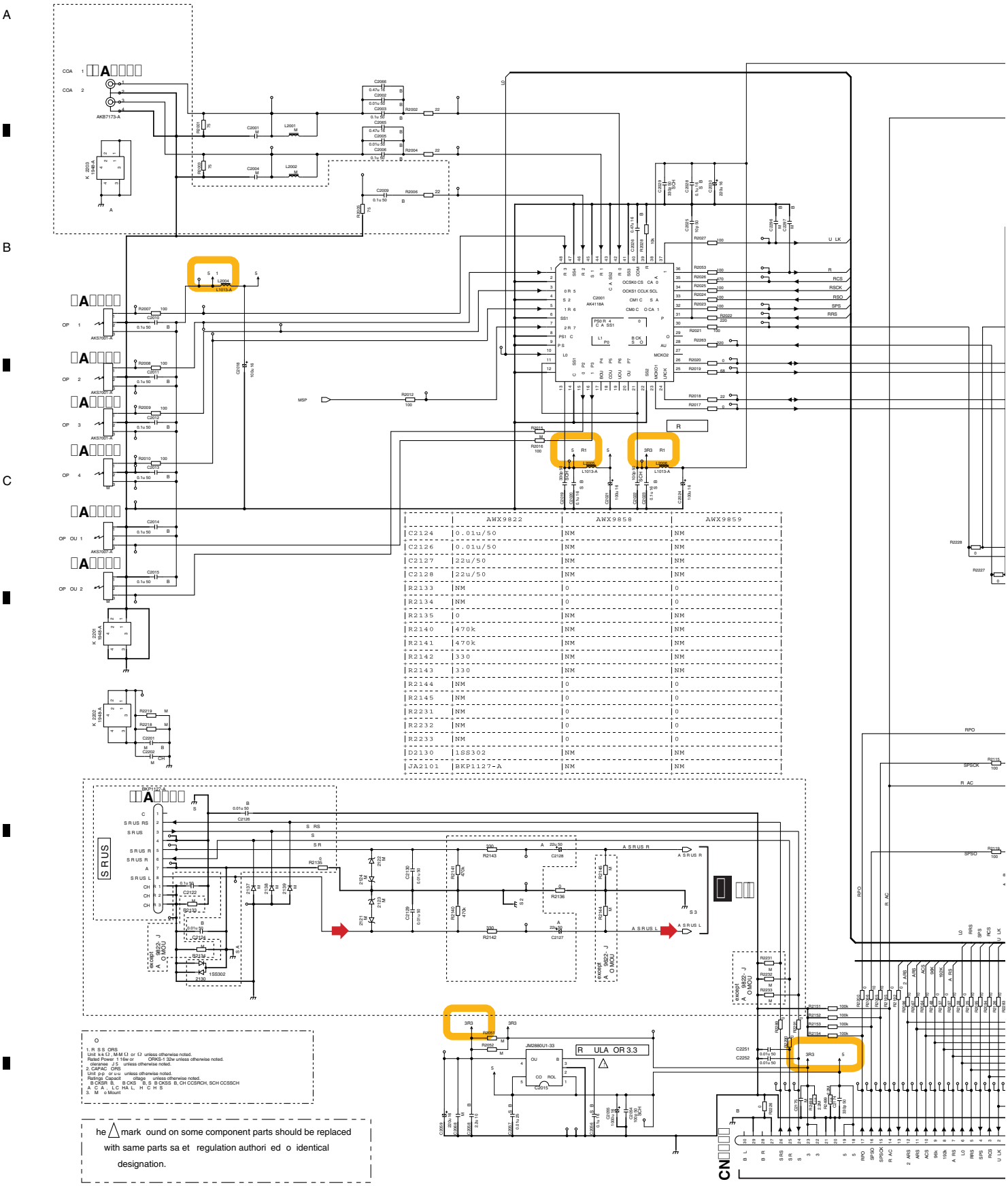

	AWX9822	AWX9858	AWX9859
C2124	0.01u/50	NM	NM
C2126	0.01u/50	NM	NM
C2127	22u/50	NM	NM
C2128	22u/50	NM	NM
R2133	NM	0	0
R2134	NM	0	0
R2135	0	NM	NM
R2140	470k	NM	NM
R2141	470k	NM	NM
R2142	330	NM	NM
R2143	330	NM	NM
R2144	NM	0	0
R2145	NM	0	0
R2231	NM	0	0
R2232	NM	0	0
R2233	NM	0	0
D2130	1SS302	NM	NM
JA2101	BKP1127-A	NM	NM

DAC HIGH ASSY (1/2)
(SC-57 : AWX9822)
(SC-55/SC-1526-K : AWX9860)

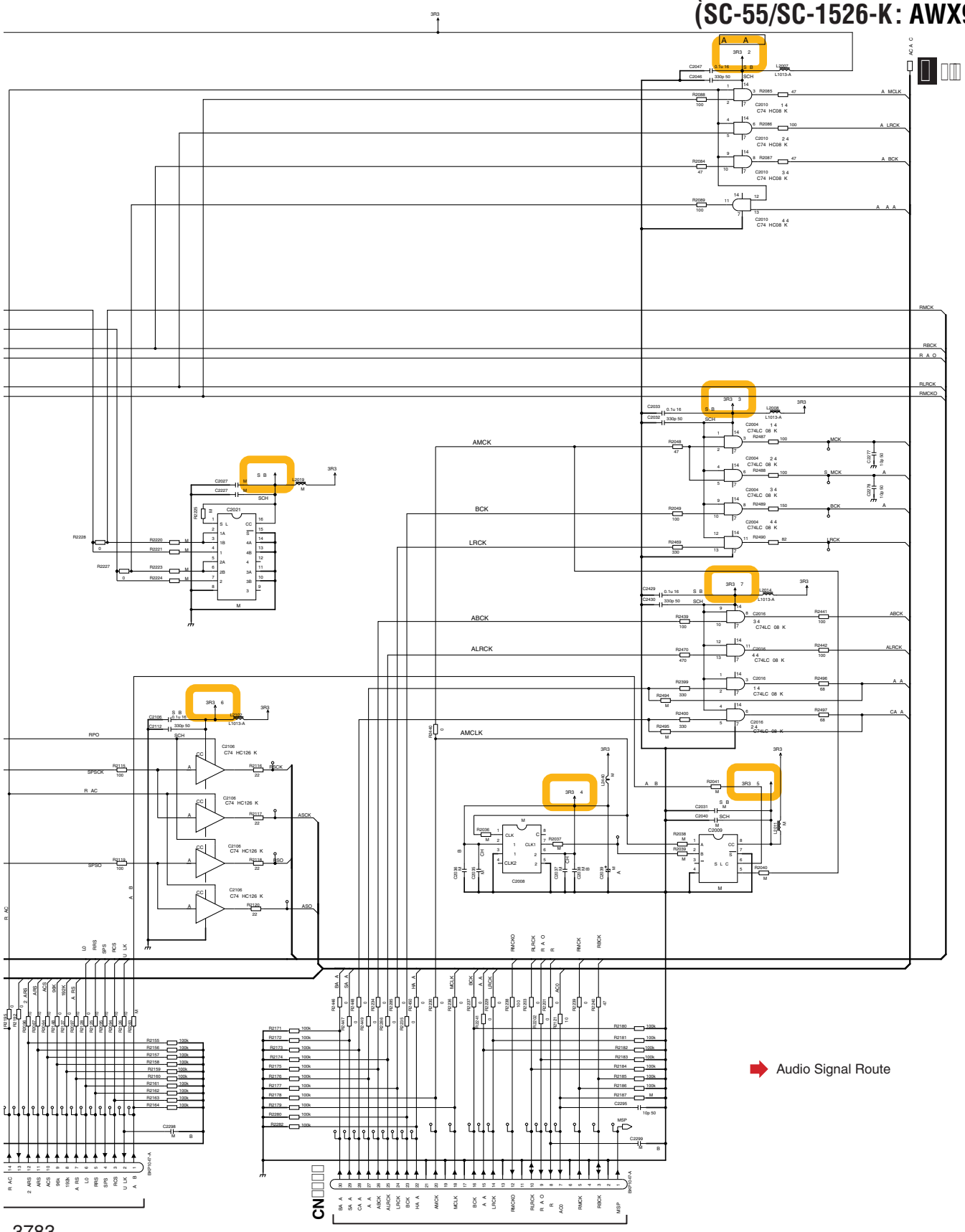

□□.□ DAC □I□ □ ASS□ (□□□)

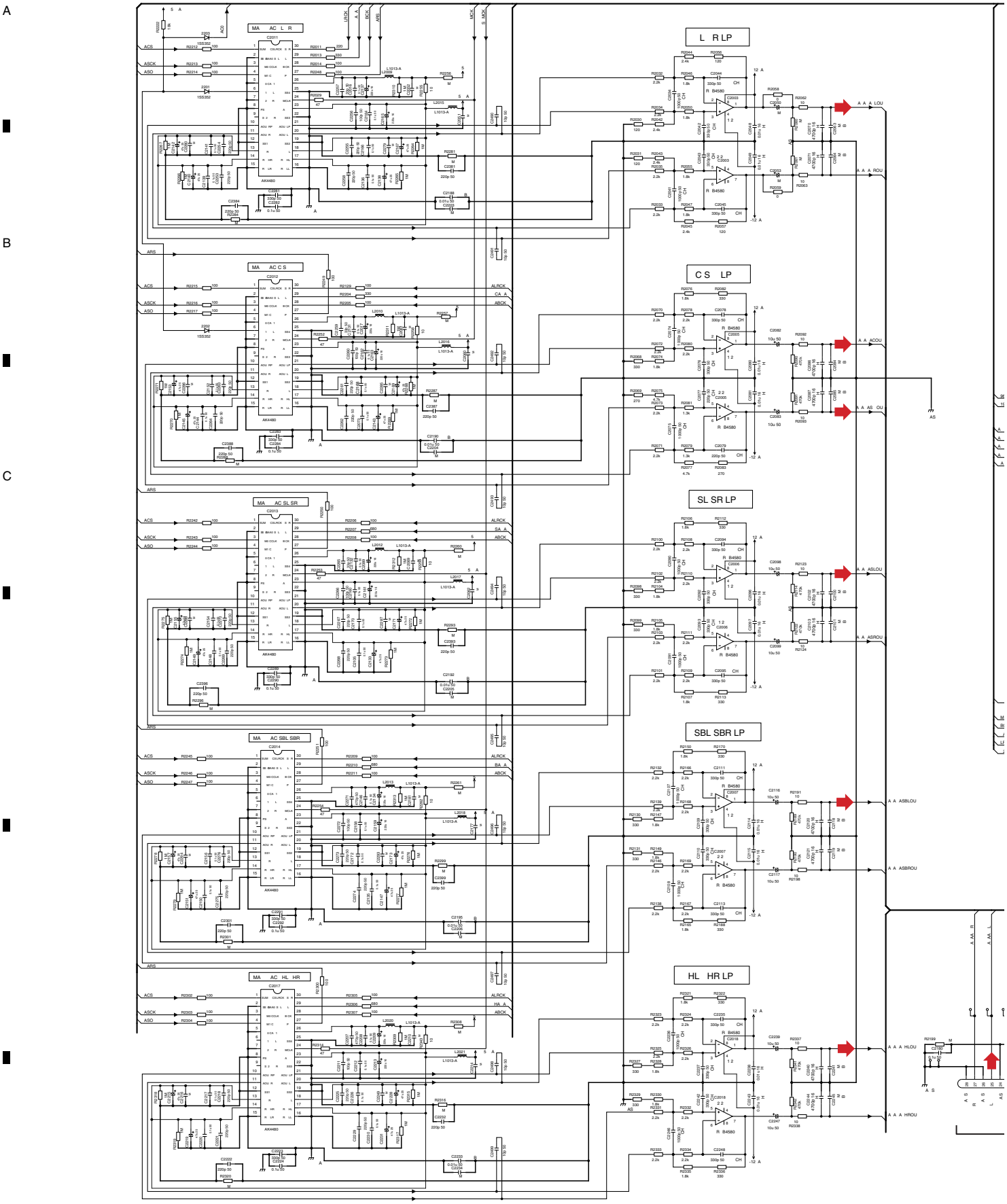
A
B
C
MA AC L R
MA AC C S
MA AC SL SR
MA AC SBL SBR
MA AC HL HR
L R LP
C S LP
SL SR LP
SBL SBR LP
HL HR LP
AK4480
ACS
ASCK
ASO
ARS
ALRCK
ABCK
A A A LOU
A A A ROU
A A ACOU
A A AS OU
A A ASLOU
A A ASROU
A A ASBLOU
A A ASBROU
A A A HLOU
A A A HROU

DAC HIGH ASSY (2/2)
(SC-57 : AWX9822)
(SC-55/SC-1526-K : AWX9860)

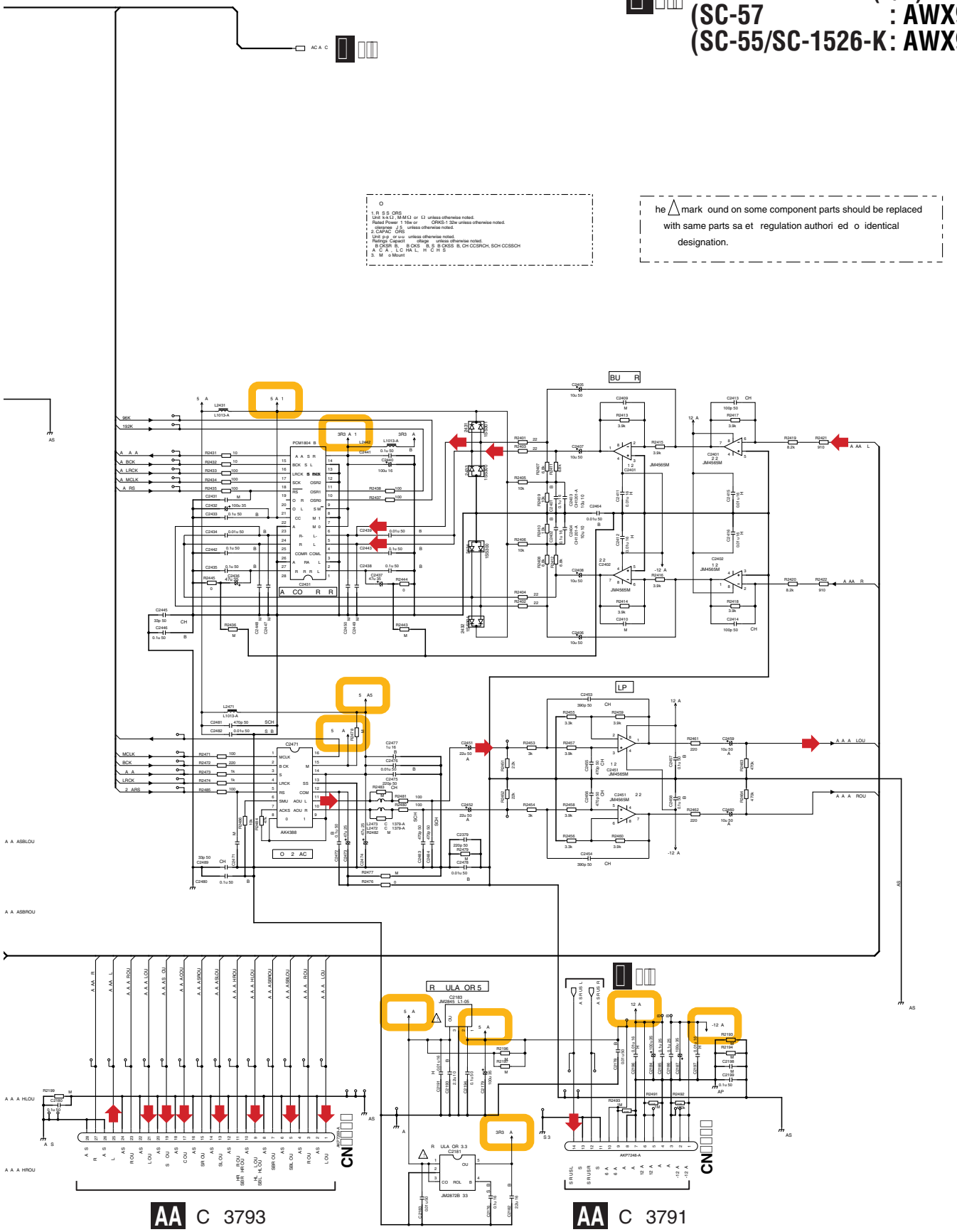

□□.□ □RONT □D□ I US□ ASS□

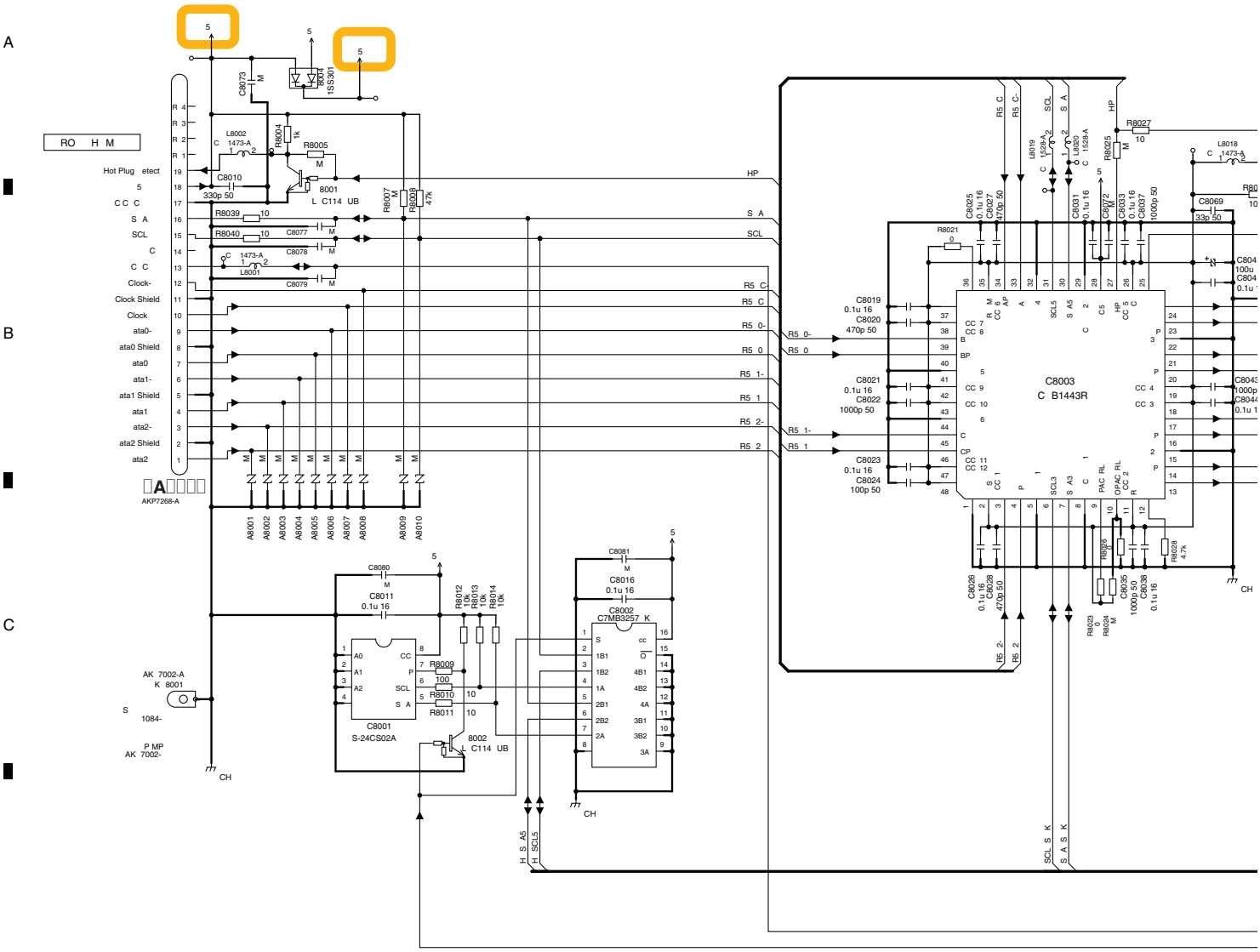

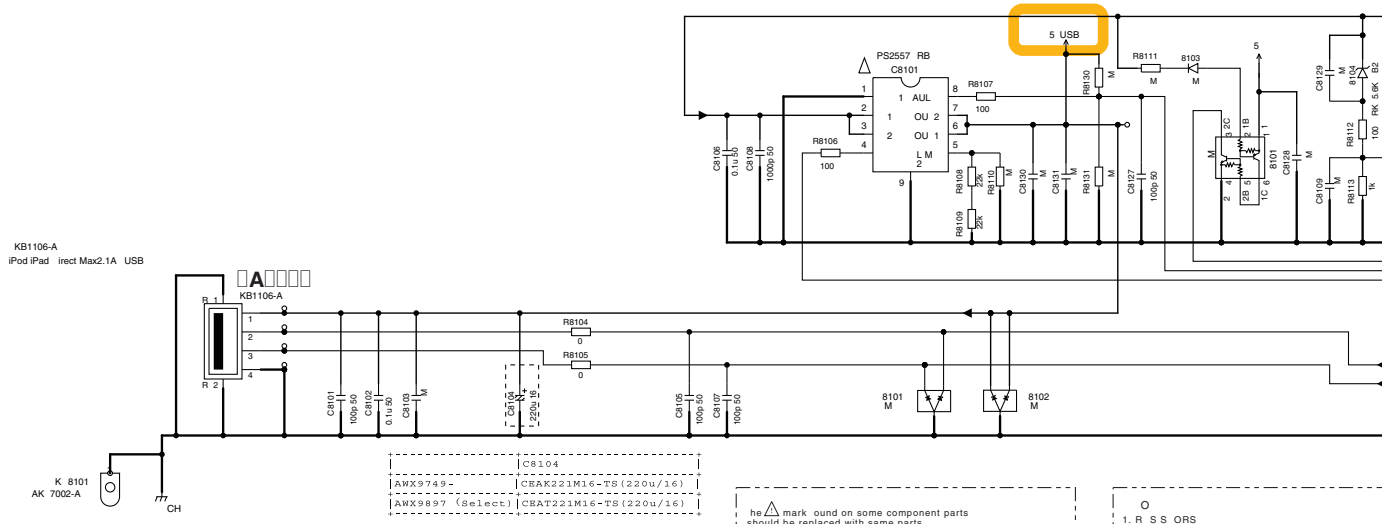

	C8104
AWX9749-	CEAK221M16-TS(220u/16)
AWX9897 (Select)	CEAT221M16-TS(220u/16)

he △ mark ound on some component parts should be replaced with same parts sa et regulation authori ed o identical designation.

O
1. R S S ORS
Unit k-kΩ , M-M Ω or Ω unless otherwise noted.
Rated Power 1 16w unless otherwise noted.
oleranee J 5 unless otherwise noted.
2. CAPAC ORS
o marked Capacitors are C A or CKSR B or CKS
CH CCSRCH or CCSSCH
Unit p-p or u-u unless otherwise noted.
Ratings Capacit oltage unless otherwise no
3. M o Mount

C

C FRONT HDMI USB ASSY (AWX9749)

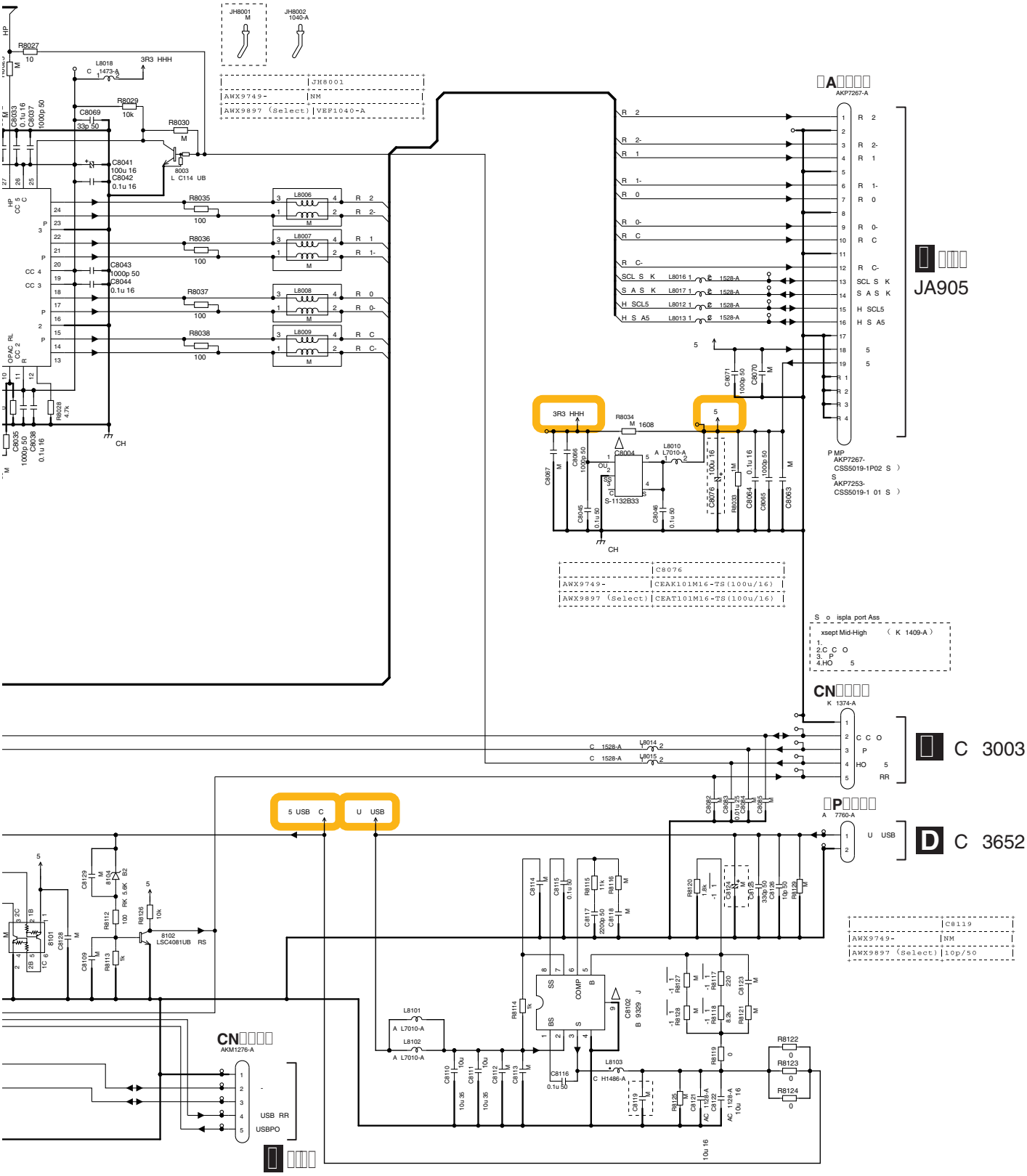

D USB RECT ASSY (AWX9821)

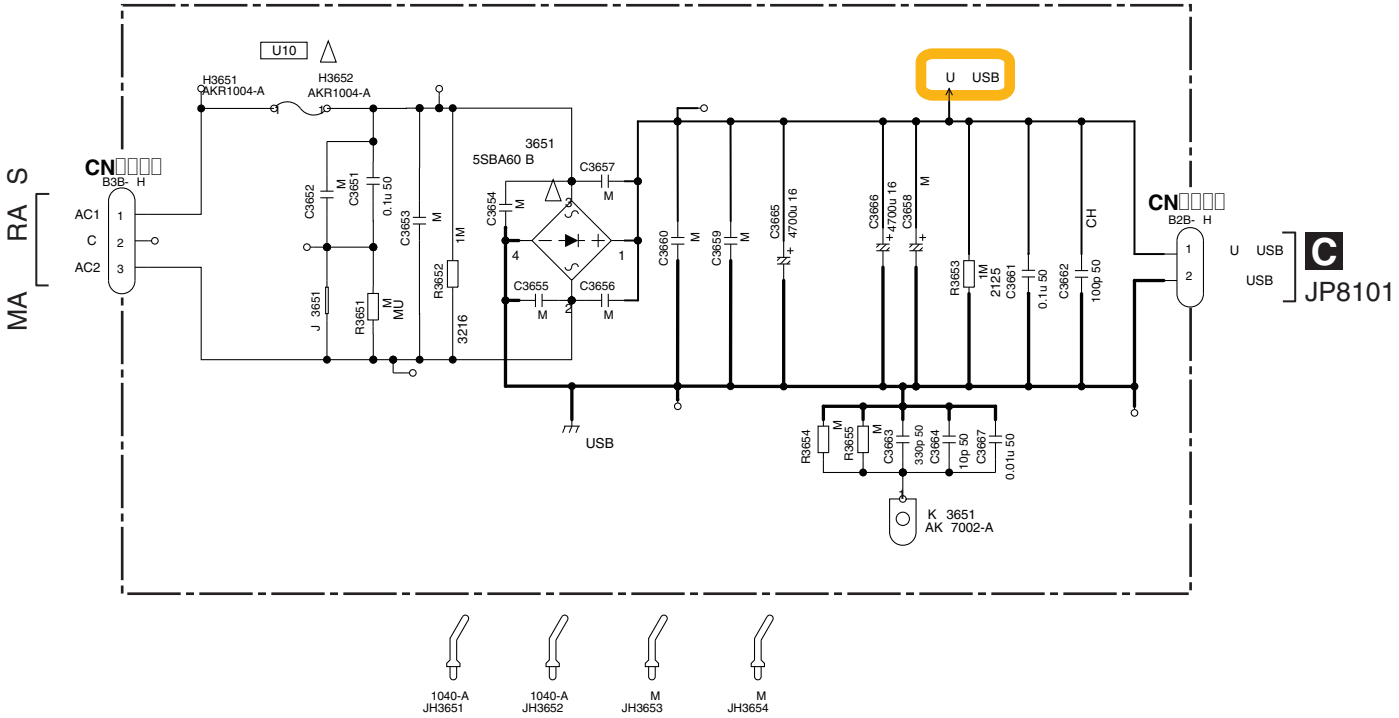

CAU O - OR CO U PRO C O A A S R SK O R ,
R PLAC H SAM P A RA S O US .

O

1. R S S ORS
Unit k-k Ω , M-M Ω or Ω unless otherwise noted.
Rated Power 1 10 unless otherwise noted.
oleranee J 5 unless otherwise noted.
MU R 1 4MU
2125 RS1 8S

2. CAPAC ORS
Unit p-p or u-u unless otherwise noted.
Ratings Capacit oltage unless otherwise noted.
CH CCSRCH
O MARK C A or CKSR B

3. M O MOU

he △mark ound on some component parts should be replaced with same parts sa et regulation authori ed o identical designation.

	AWX9856	AWX9857
C7761	100p/50	NM
C7762	100p/50	NM
C7763	100p/50	NM
C7764	100p/50	NM
C7767	100p/50	NM
C7768	100p/50	NM
C7769	100p/50	NM
C7770	100p/50	NM
C7773	100p/50	NM
C7774	100p/50	NM
C7775	100p/50	NM
C7776	100p/50	NM
C7779	100p/50	NM
C7780	100p/50	NM
C7781	100p/50	NM
C7782	100p/50	NM
JA7761	XKB3017-A	AKB7218-A
JA7762	XKB3017-A	AKB7218-A

E MULTI CH IN ASSY (SC-57:AWX9857)

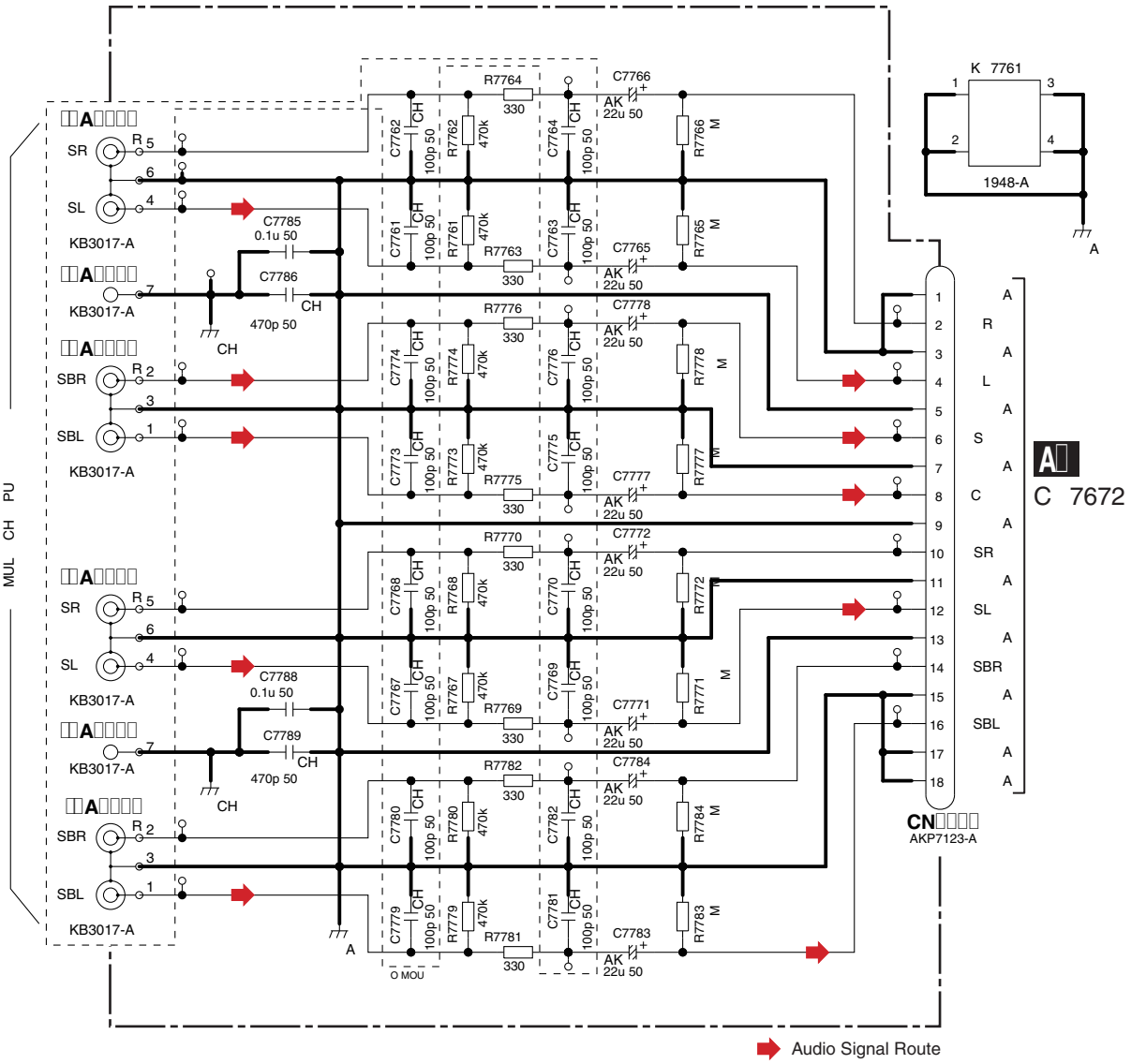

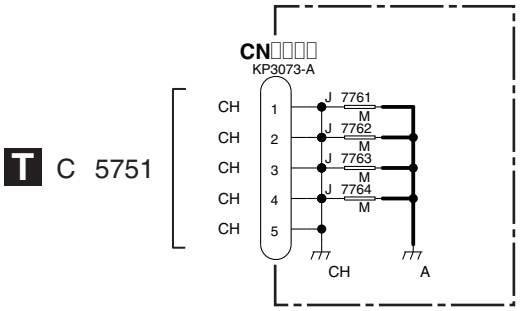

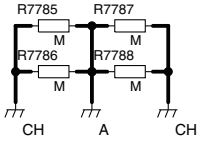

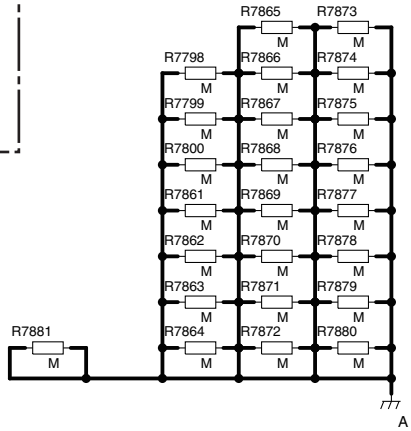

□□.□ DI□ ITAL □ AIN ASS□ (□□□□) (□ UIDE PA□ E)

A

N□□□□□ □□□ □□□□□□□□ □□□□□□□ □□□□□□□□ □□□□ □□ □□□□□□□ □ E□PLODED VIE□ S AND PARTS LIST□ □□ □ELECTRICAL PARTS LIST□.

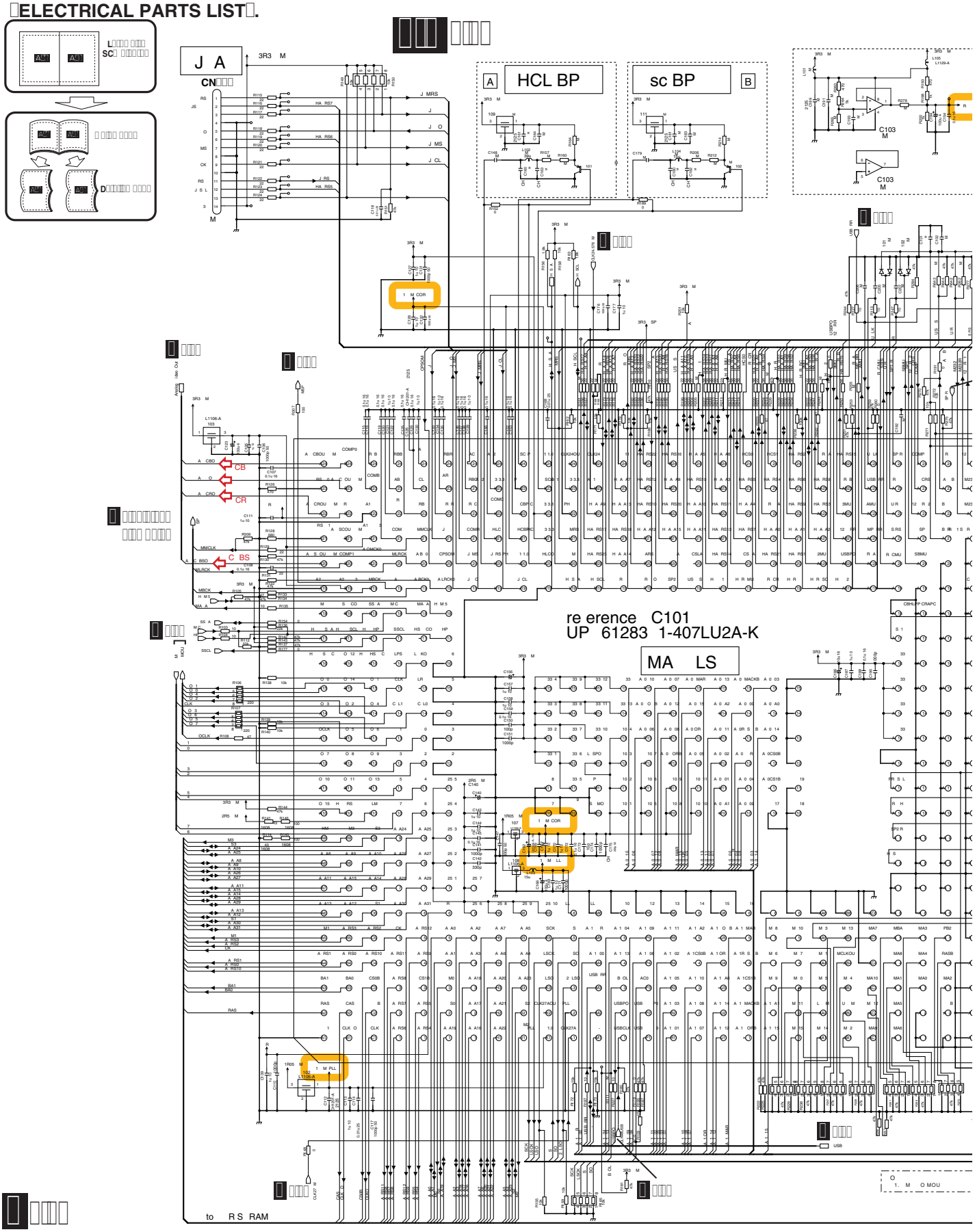

B

C

DIGITAL MAIN ASSY (1/11)
(SC-57 : AWX9827)
(SC-55/SC-1526-K : AWX9824)

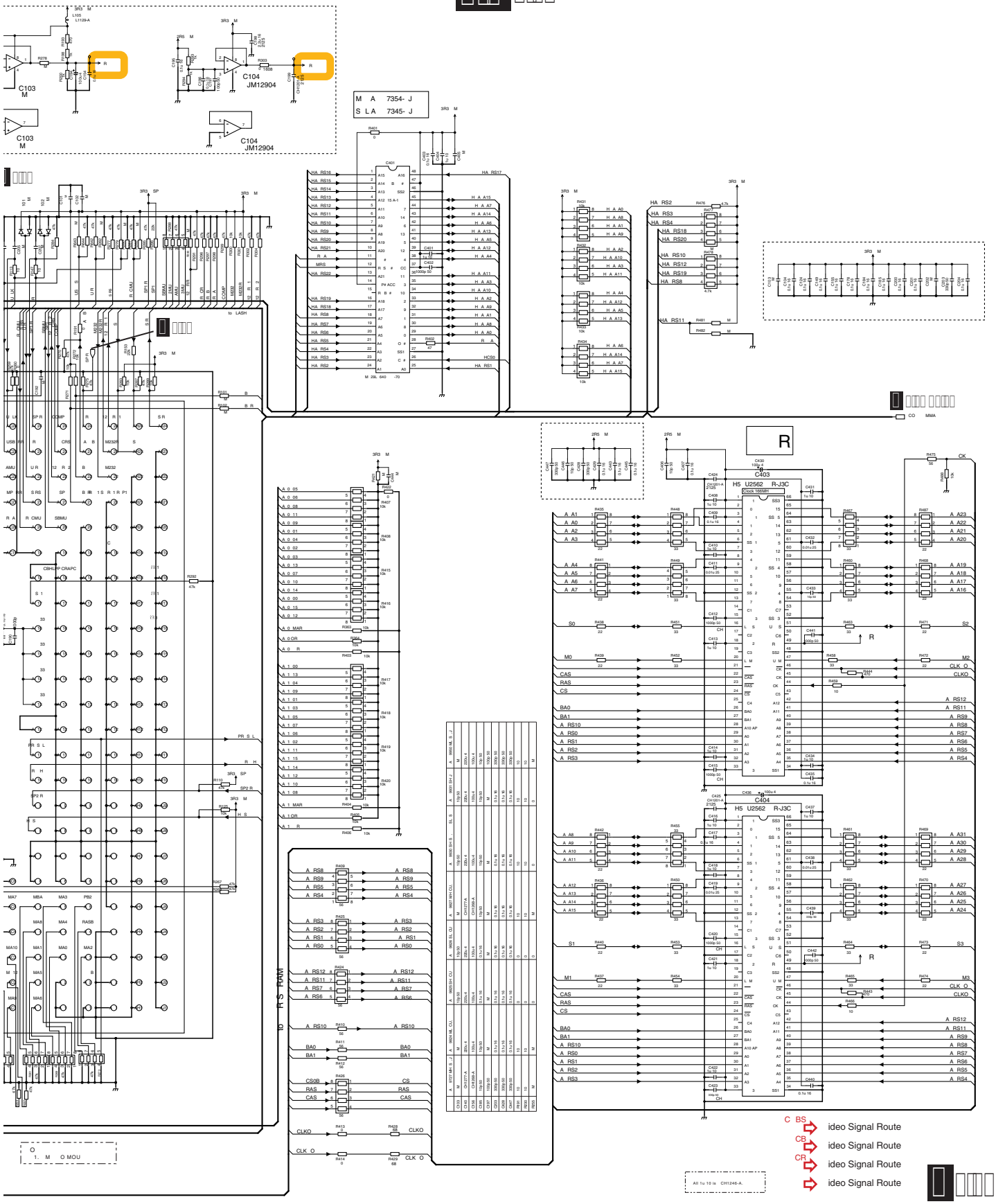

DIGITAL MAIN ASSY (1/11)
(SC-57 : AWX9827)
(SC-55/SC-1526-K : AWX9824)

A-a A-b

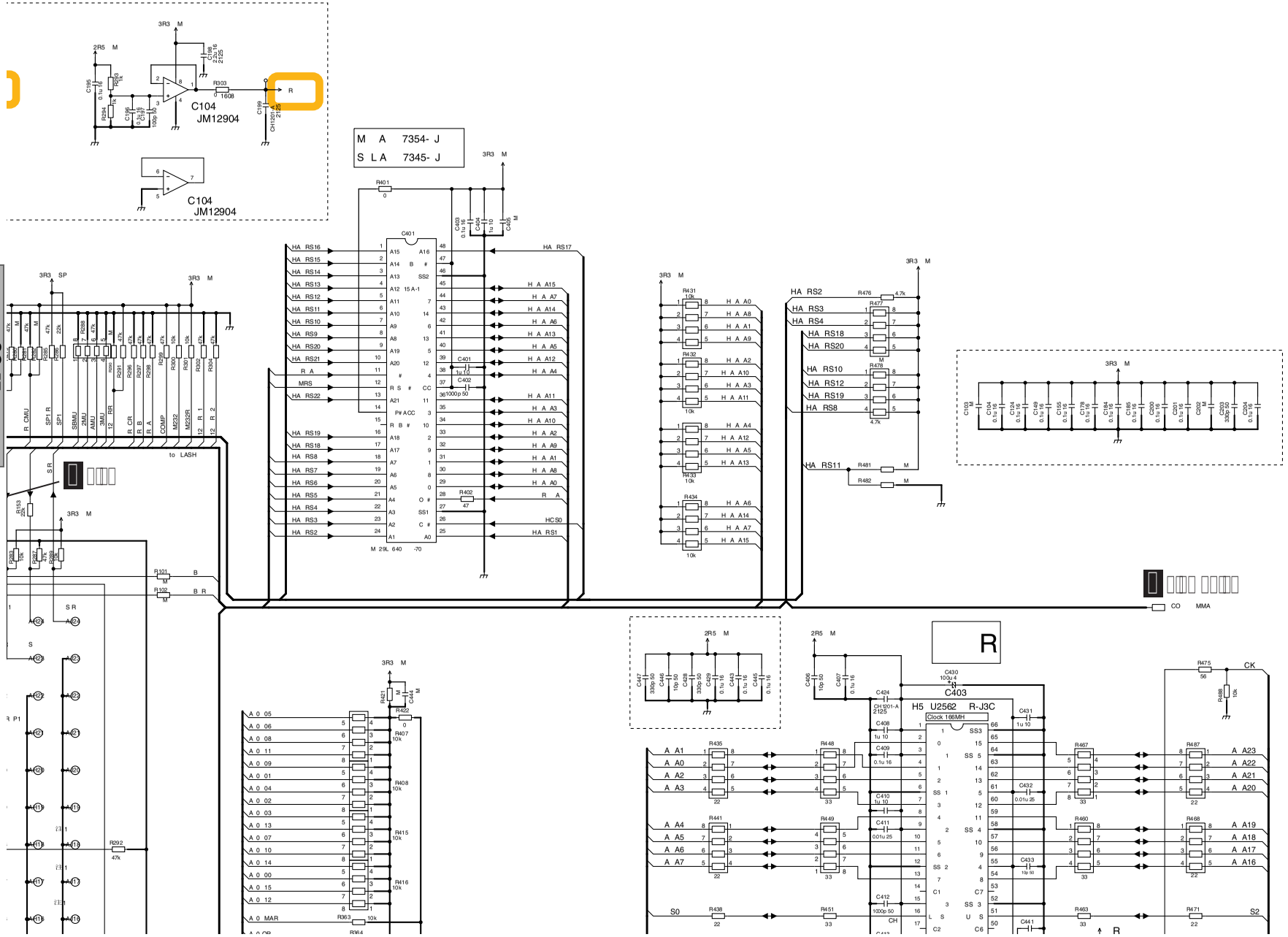

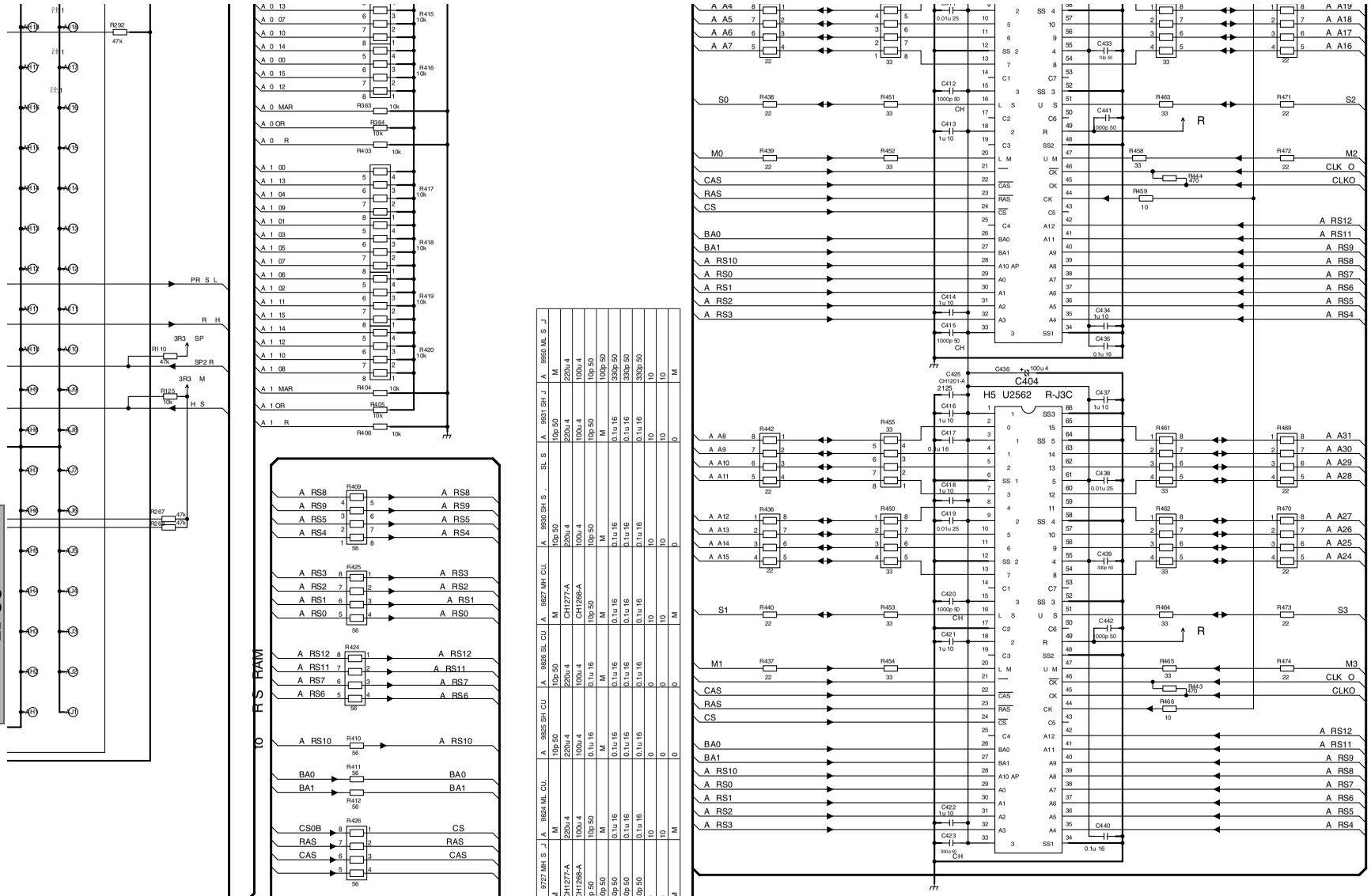

C BS ideo Signal Route

CB ideo Signal Route

CR ideo Signal Route

ideo Signal Route

A-a A-b

SC-57

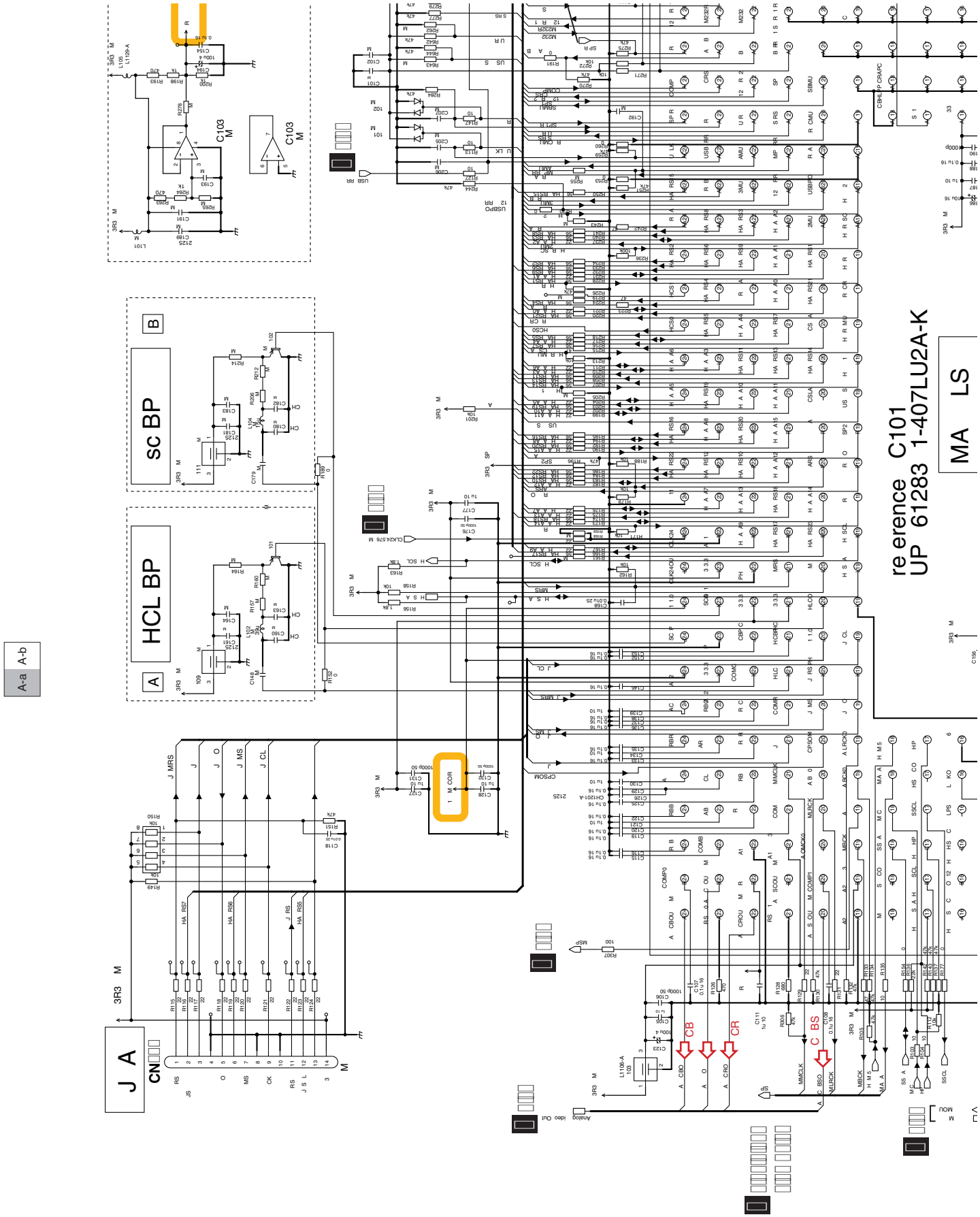
re erence C101
UP 61283 1-407LU2A-K
MA LS
sc BP
HCL BP
J A
CN
CB
CR
C BS
A-a A-b

re erence C101
UP 61283 1-407LU2A-K

MA LS

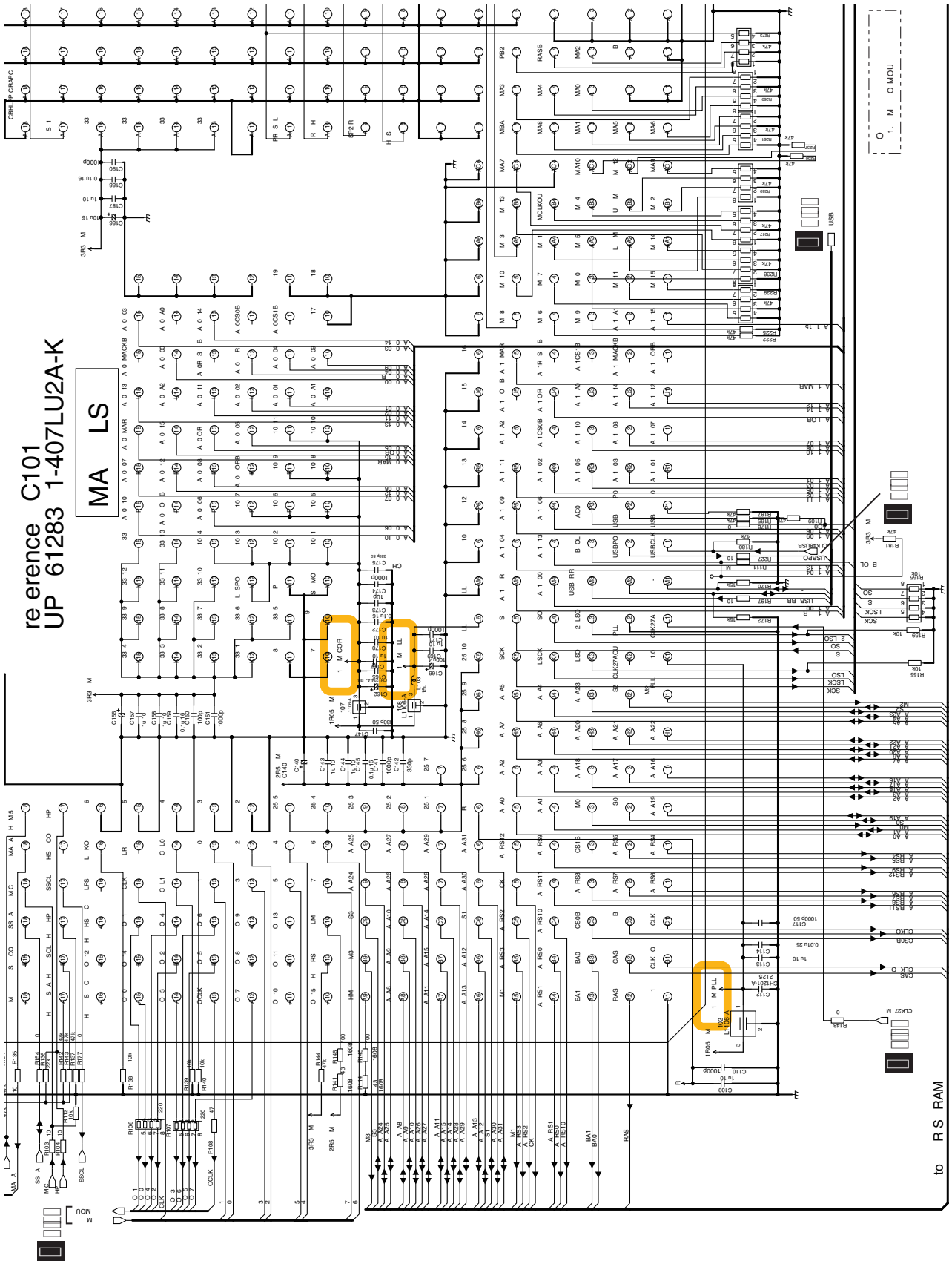

A-a A-b

□□.□ DI□ ITAL □ AIN ASS□ (□□□□)

	A 9727 MH S J	A 9824 ML CU,	A 9825 SH CU	A 9826 SL CU	A 9827 MH CU,	A 9930 SH S , SL S	A 9931 SH J	A 9950 ML S J
C619	100p 50	1000p 50	1000p 50	1000p 50	1000p 50	1000p 50	1000p 50	100p 50
C650	100p 50	1000p 50	1000p 50	1000p 50	1000p 50	1000p 50	1000p 50	100p 50
C652	100p 50	100p 50	0.1u 16	0.1u 16	100p 50	100p 50	100p 50	100p 50
C657	0.1u 16	0.1u 16	1000p 50	1000p 50	0.1u 16	0.1u 16	0.1u 16	0.1u 16
C658	0.1u 16	0.1u 16	1000p 50	1000p 50	0.1u 16	0.1u 16	0.1u 16	0.1u 16
C661	100p 50	100p 50	0.1u 16	0.1u 16	100p 50	100p 50	100p 50	100p 50
C671	1000p 50	1000p 50	0.1u 16	0.1u 16	1000p 50	1000p 50	1000p 50	1000p 50
C672	0.1u 16	0.1u 16	1000p 50	1000p 50	0.1u 16	0.1u 16	0.1u 16	0.1u 16
C677	330p 50	330p 50	1000p 50	1000p 50	330p 50	330p 50	330p 50	330p 50
R610	1M	M	M	M	M	M	M	1M
R615	10	10	0	0	10	0	0	10
R618	1M	M	M	M	M	M	M	1M
R624	10	10	0	0	10	0	0	10
R625	10	10	0	0	10	10	10	10
R638	100	56	56	56	56	100	56	100
R667	10	10	0	0	10	10	10	10
R686	M	M	100	100	M	100	100	M
R687	M	M	100	100	M	100	100	M
R688	M	M	100	100	M	100	100	M
R718	10	10	0	0	10	10	10	10
R723	10	10	0	0	10	10	10	10
R725	10	10	0	0	10	10	10	10

	A 9727 MH S J	A 9824 ML CU,	A 9825 SH CU	A 9826 SL CU	A 9827 MH CU,	A 9930 SH S , SL S	A 9931 SH J	A 9950
C686	0.1u 16	0.1u 16	M	M	0.1u 16	M	M	0.1u 16
C758	10p 50	10p 50	M	M	10p 50	M	M	10p 50
C759	0.1u 16	0.1u 16	M	M	0.1u 16	M	M	0.1u 16
R652	100	100	M	M	100	M	M	100
R656	100	100	M	M	100	M	M	100
R665	100	100	M	M	100	M	M	100
R702	100	100	M	M	100	M	M	100
R703	100	100	M	M	100	M	M	100
R704	47k	47k	M	M	47k	M	M	47k
R710	47k	47k	M	M	47k	M	M	47k
R711	47k	47k	M	M	47k	M	M	47k
R712	47k	47k	M	M	47k	M	M	47k
R715	47k	47k	M	M	47k	M	M	47k
R722	100	100	M	M	100	M	M	100
R724	100	100	M	M	100	M	M	100
R728	100	100	M	M	100	M	M	100
R729	100	100	M	M	100	M	M	100
C601	C74 HC 08A KS1	C74 HC 08A KS1	M	M	C74 HC 08A KS1	M	M	C74 HC
C607	C74 HC 08A KS1	C74 HC 08A KS1	M	M	C74 HC 08A KS1	M	M	C74 HC
K 601	1948-A	1948-A	M	M	1948-A	M	M	1948-

	A 9727 MH S J	A 9824 ML CU,	A 9825 SH CU	A 9826 SL CU	A 9827 MH CU,	A 9930 SH S , SL S	A 9931 SH J	A 9950 ML S J
C679	10p 50	10p 50	M	M	10p 50	M	M	10p 50
C732	10p 50	10p 50	M	M	10p 50	M	M	10p 50
C740	10p 50	10p 50	1000p 50	1000p 50	10p 50	1000p 50	1000p 50	10p 50
C743	10p 50	10p 50	M	M	10p 50	M	M	10p 50
C744	10p 50	10p 50	M	M	10p 50	M	M	10p 50
C748	330p 50	330p 50	1000p 50	1000p 50	330p 50	330p 50	330p 50	330p 50
C749	100p 50	100p 50	1000p 50	1000p 50	100p 50	100p 50	100p 50	100p 50
C750	220p 50	220p 50	1000p 50	1000p 50	220p 50	220p 50	220p 50	220p 50
C753	1000p 50	1000p 50	M	M	1000p 50	M	M	1000p 50
C756	1000p 50	1000p 50	M	M	1000p 50	M	M	1000p 50
R628	M	M	0	0	M	0	0	M
R629	M	M	M	M	M	M	M	M
R640	M	M	0	0	M	0	0	M
R649	M	M	M	M	M	M	M	M
R705	M	M	0	0	M	0	0	M
R708	0	0	M	M	0	M	M	0
C 603	M	M	M	M	M	M	M	M
C 607	M	M	M	M	M	M	M	M

	A 9727 MH S J	A 9824 ML CU,	A 9825 SH CU	A 9826 SL	A 9826 SL
C687	M	M	0.1u 16	0.1u 16	0.1u 16
C688	M	M	0.1u 16	0.1u 16	0.1u 16
C689	M	M	0.1u 16	0.1u 16	0.1u 16
R776	M	M	47k	47k	47k
R778	M	M	5.6k	5.6k	5.6k
R780	M	M	47k	47k	47k
R793	M	M	47k	47k	47k
R795	M	M	5.6k	5.6k	5.6k
R796	M	M	2.7k	2.7k	2.7k
C 604	M	M	KM200 A2L	KM200 A2L	KM200 A2L
C 605	M	M	KM200 A3L	KM200 A3L	KM200 A3L
C 606	M	M	KM200 A2L	KM200 A2L	KM200 A2L
607	M	M	R 4983	R 4983	R 4983
608	M	M	R 4983	R 4983	R 4983
609	M	M	R 4983	R 4983	R 4983
P616	M	M	S PO	S PO	S PO
P617	M	M	S PO	S PO	S PO
P689	M	M	S PO	S PO	S PO
P690	M	M	S PO	S PO	S PO
P691	M	M	S PO	S PO	S PO

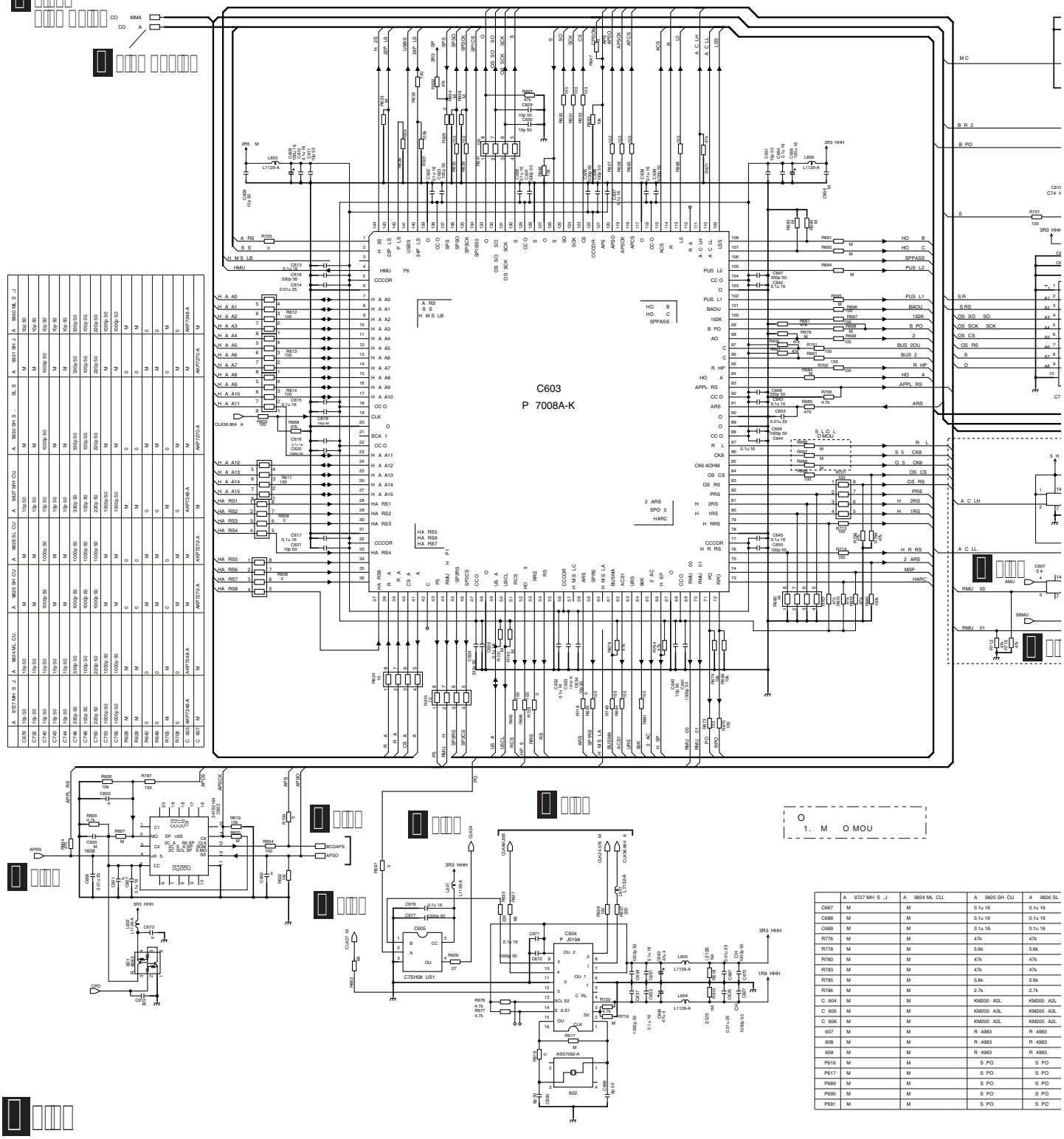

DIGITAL MAIN ASSY (2/11)
(SC-57 : AWX9827)
(SC-55/SC-1526-K : AWX9824)

9930 SH S , SL S	A 9931 SH J	A 9950 ML S J
	M	0.1u 16
	M	10p 50
	M	0.1u 16
	M	100
	M	100
	M	100
	M	100
	M	100
	M	47k
	M	47k
	M	47k
	M	47k
	M	47k
	M	100
	M	100
	M	100
	M	100
	M	C74 HC 08A KS1
	M	C74 HC 08A KS1
	M	1948-A

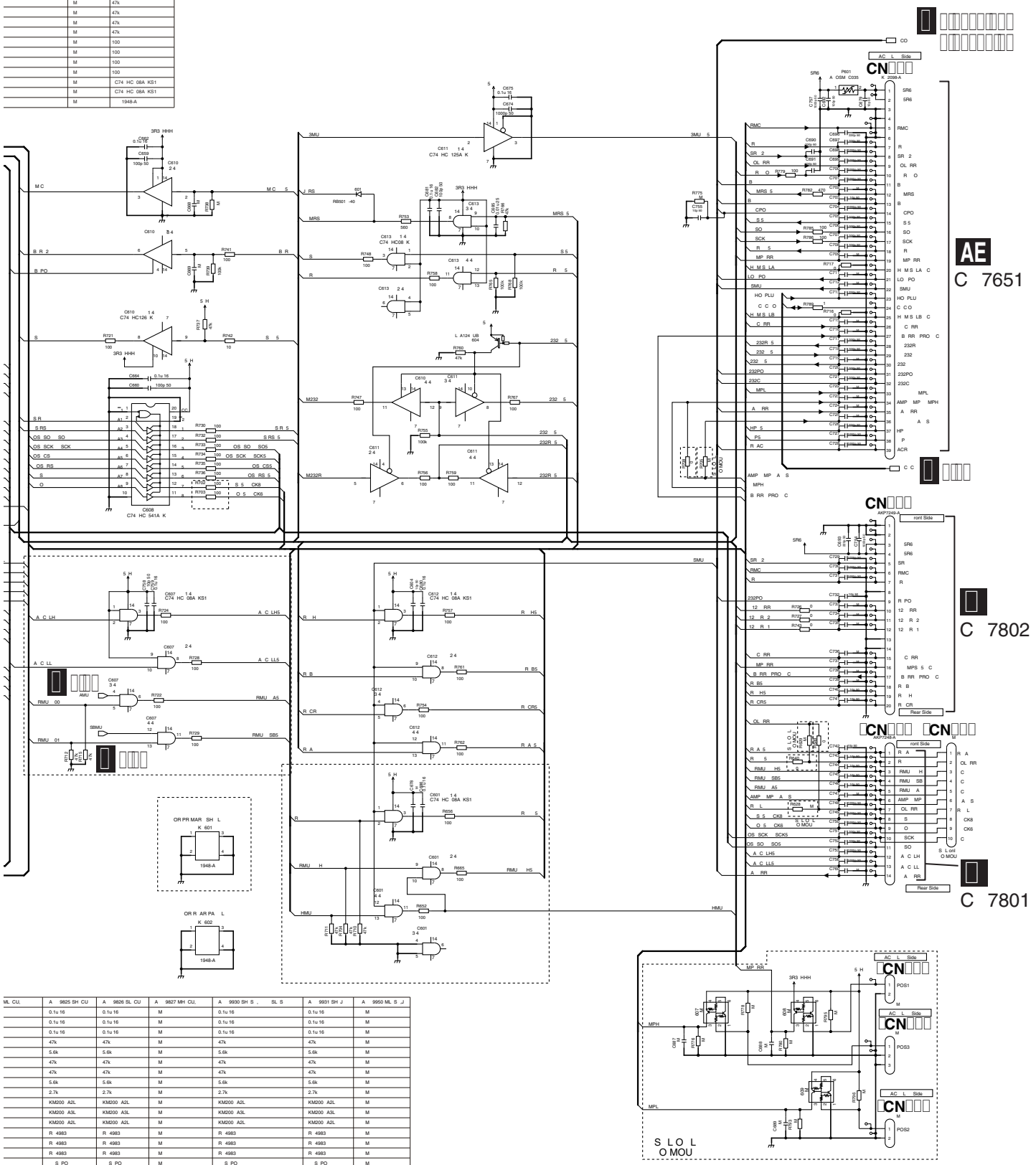

ML CU,	A 9825 SH CU	A 9826 SL CU	A 9827 MH CU,	A 9930 SH S , SL S	A 9931 SH J	A 9950 ML S J
	0.1u 16	0.1u 16	M	0.1u 16	0.1u 16	M
	0.1u 16	0.1u 16	M	0.1u 16	0.1u 16	M
	0.1u 16	0.1u 16	M	0.1u 16	0.1u 16	M
	47k	47k	M	47k	47k	M
	5.6k	5.6k	M	5.6k	5.6k	M
	47k	47k	M	47k	47k	M
	47k	47k	M	47k	47k	M
	5.6k	5.6k	M	5.6k	5.6k	M
	2.7k	2.7k	M	2.7k	2.7k	M
	KM200 A2L	KM200 A2L	M	KM200 A2L	KM200 A2L	M
	KM200 A3L	KM200 A3L	M	KM200 A3L	KM200 A3L	M
	KM200 A2L	KM200 A2L	M	KM200 A2L	KM200 A2L	M
	R 4983	R 4983	M	R 4983	R 4983	M
	R 4983	R 4983	M	R 4983	R 4983	M
	R 4983	R 4983	M	R 4983	R 4983	M
	S PO	S PO	M	S PO	S PO	M
	S PO	S PO	M	S PO	S PO	M
	S PO	S PO	M	S PO	S PO	M
	S PO	S PO	M	S PO	S PO	M
	S PO	S PO	M	S PO	S PO	M

The ⚠ mark ound on some component parts should be replaced with same parts sa et regulation authori ed o identical designation.

□□.□□ DI□ ITAL □ AIN ASS□ (□□□□)

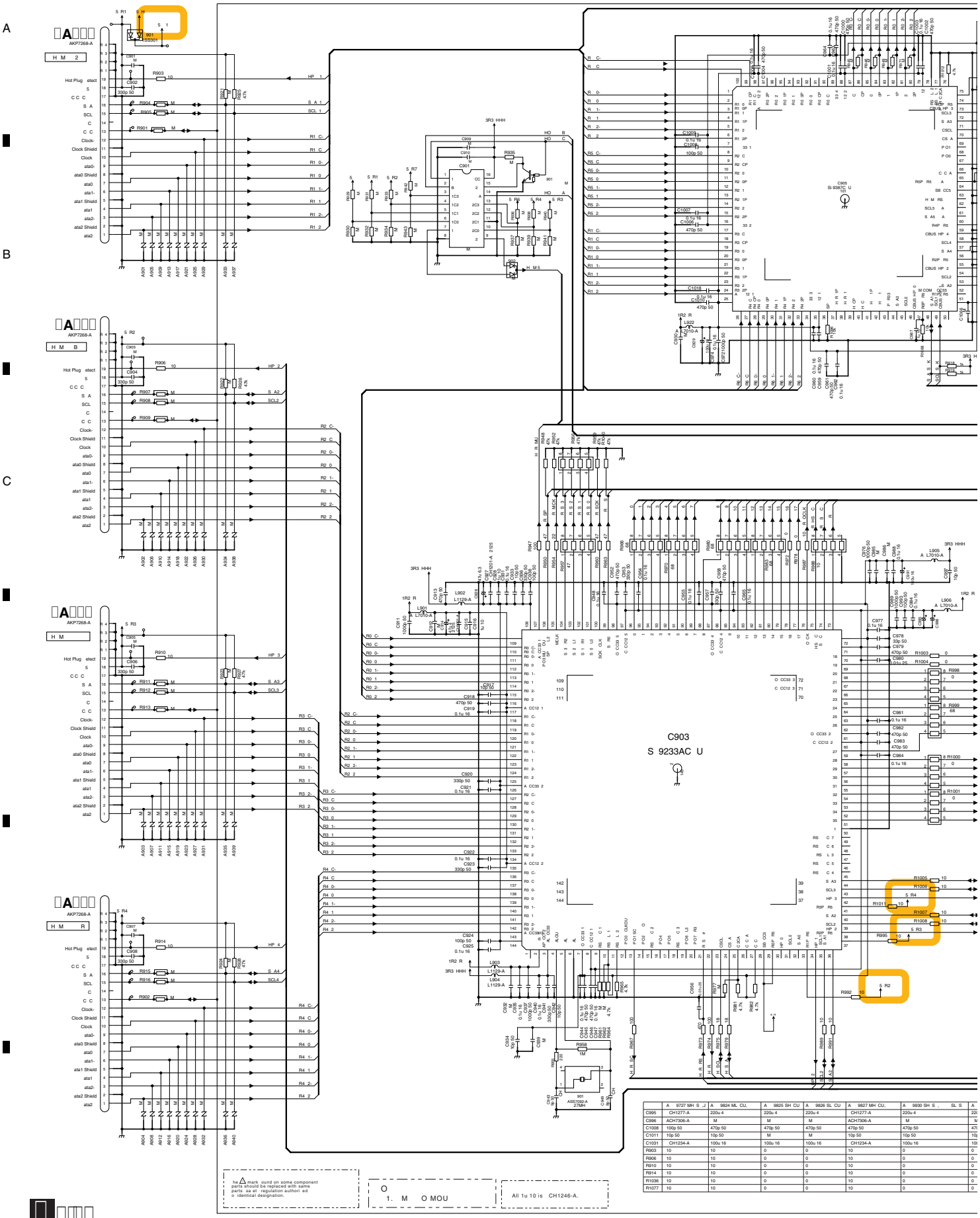

	A 9727 MH S J	A 9824 ML CU,	A 9825 SH CU	A 9826 SL CU	A 9827 MH CU,	A 9930 SH S , SL S	A
C995	CH1277-A	220u 4	220u 4	220u 4	CH1277-A	220u 4	220
C996	ACH7306-A	M	M	M	ACH7306-A	M	M
C1008	100p 50	470p 50	470p 50	470p 50	470p 50	470p 50	470
C1011	10p 50	10p 50	M	M	10p 50	10p 50	10p
C1031	CH1234-A	100u 16	100u 16	100u 16	CH1234-A	100u 16	100
R903	10	10	0	0	10	0	0
R906	10	10	0	0	10	0	0
R910	10	10	0	0	10	0	0
R914	10	10	0	0	10	0	0
R1036	10	10	0	0	10	0	0
R1077	10	10	0	0	10	0	0

he △ mark ound on some component parts should be replaced with same parts se et regulation authori ed o identical designation.

O
1. M O MOU

All 1u 10 is CH1246-A.

DIGITAL MAIN ASSY (3/11)
(SC-57 : AWX9827)
(SC-55/SC-1526-K: AWX9824)

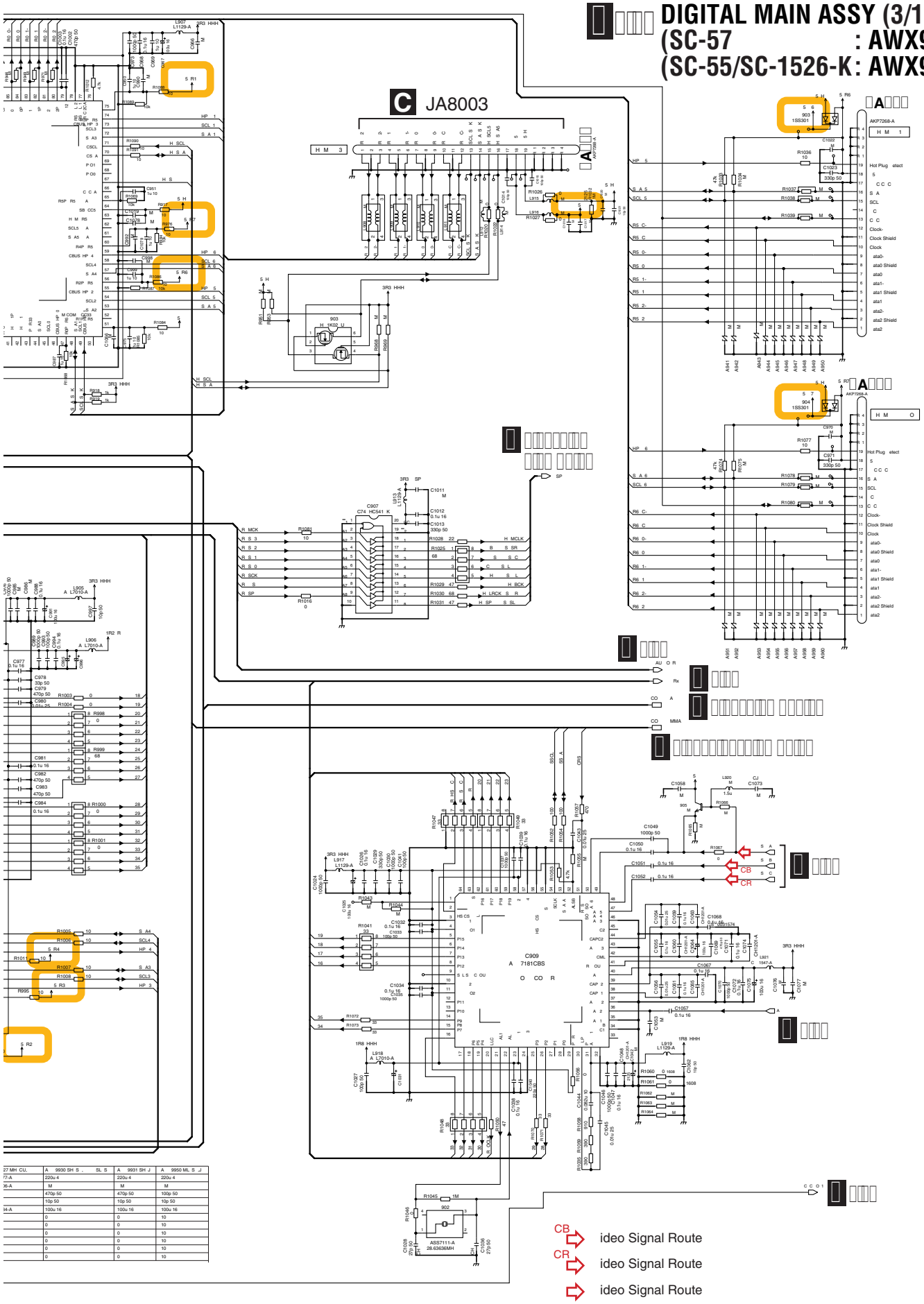

27 MH CU,	A 9930 SH S , SL S	A 9931 SH J	A 9950 ML S J
73-A	220u 4	220u 4	220u 4
36-A	M	M	M
	470p 50	470p 50	100p 50
	10p 50	10p 50	10p 50
94-A	100u 16	100u 16	100u 16
	0	0	10
	0	0	10
	0	0	10
	0	0	10
	0	0	10
	0	0	10

□□.□□ DI□ ITAL □ AIN ASS□ (□□□□)

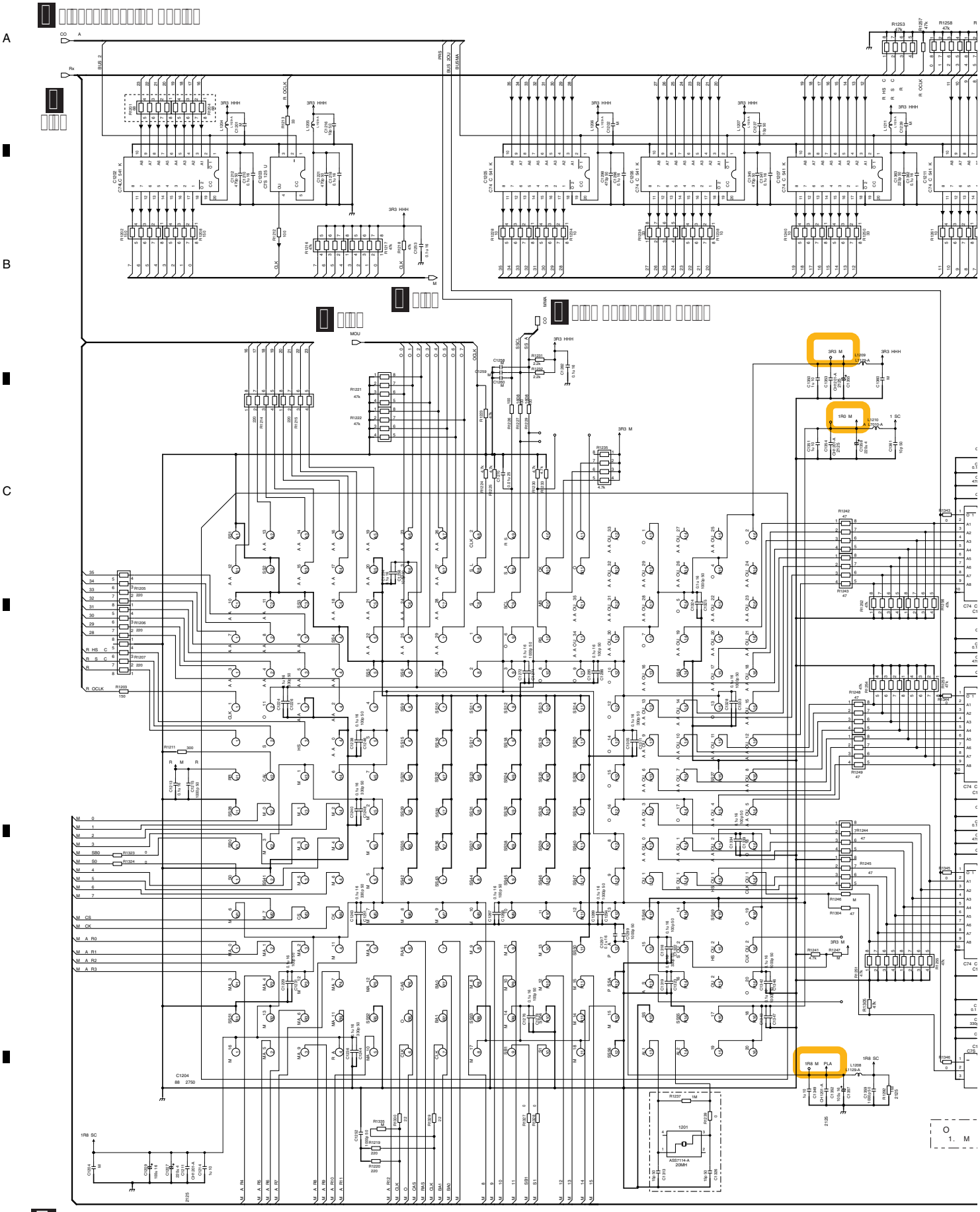

DIGITAL MAIN ASSY (4/11)
(SC-57 : AWX9827)
(SC-55/SC-1526-K: AWX9824)

he △ mark ound on some component parts should be replaced with same parts sa et regulation authori ed o identical designation.

All 1u 10 is CH1246-A.

	C1225	C1355
A 9727 MH S J	1000p 50	CH1277-A
A 9824 ML	1000p 50	220u 4
A 9825 SH CU	100p 50	220u 4
A 9826 SL CU	100p 50	220u 4
A 9827 MH CU,	1000p 50	CH1277-A
A 9930 SH S , SL S	100p 50	220u 4
A 9931 SH J	100p 50	220u 4

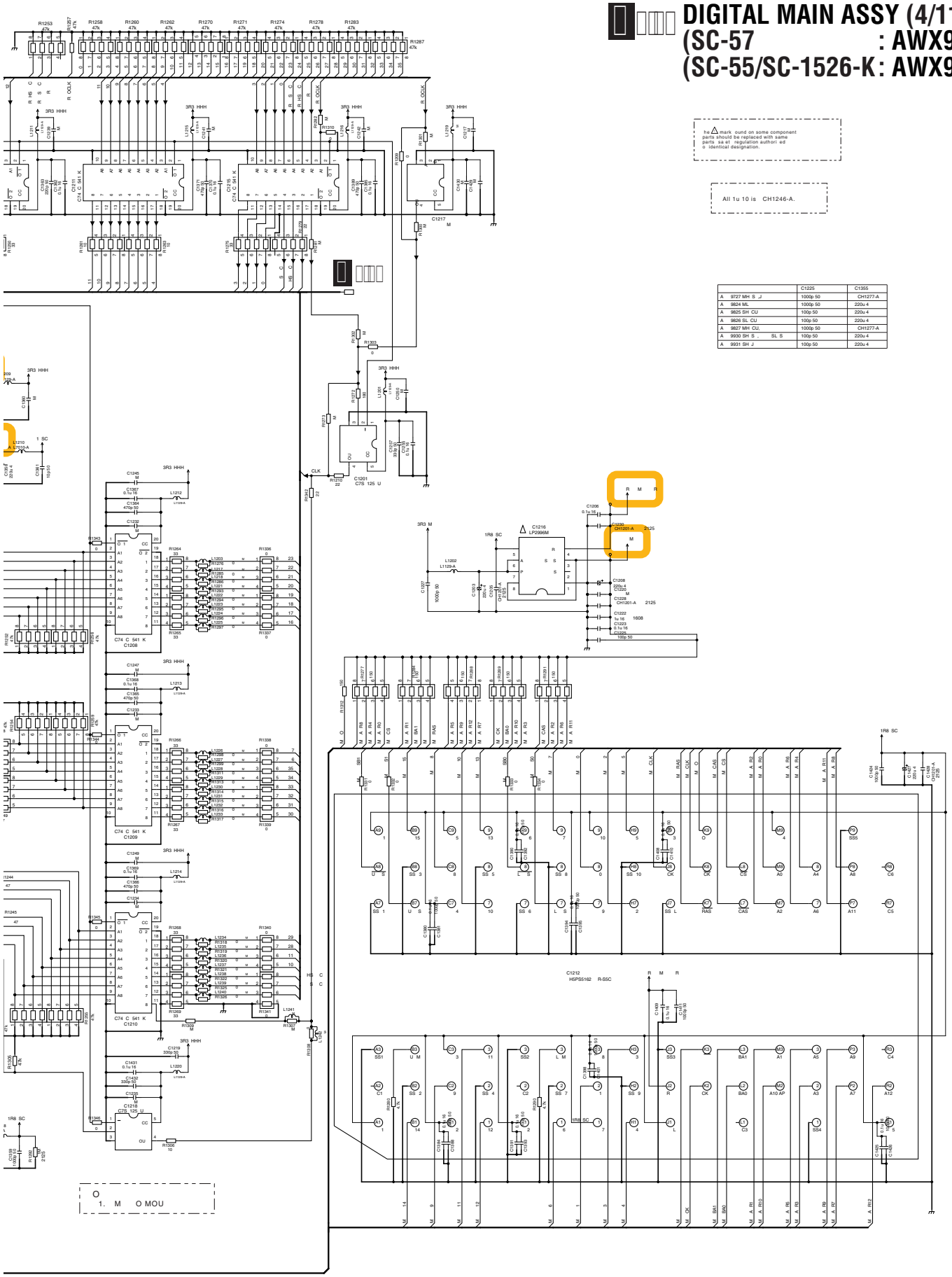

□□.□□ DI□ ITAL □ AIN ASS□ (□□□□)

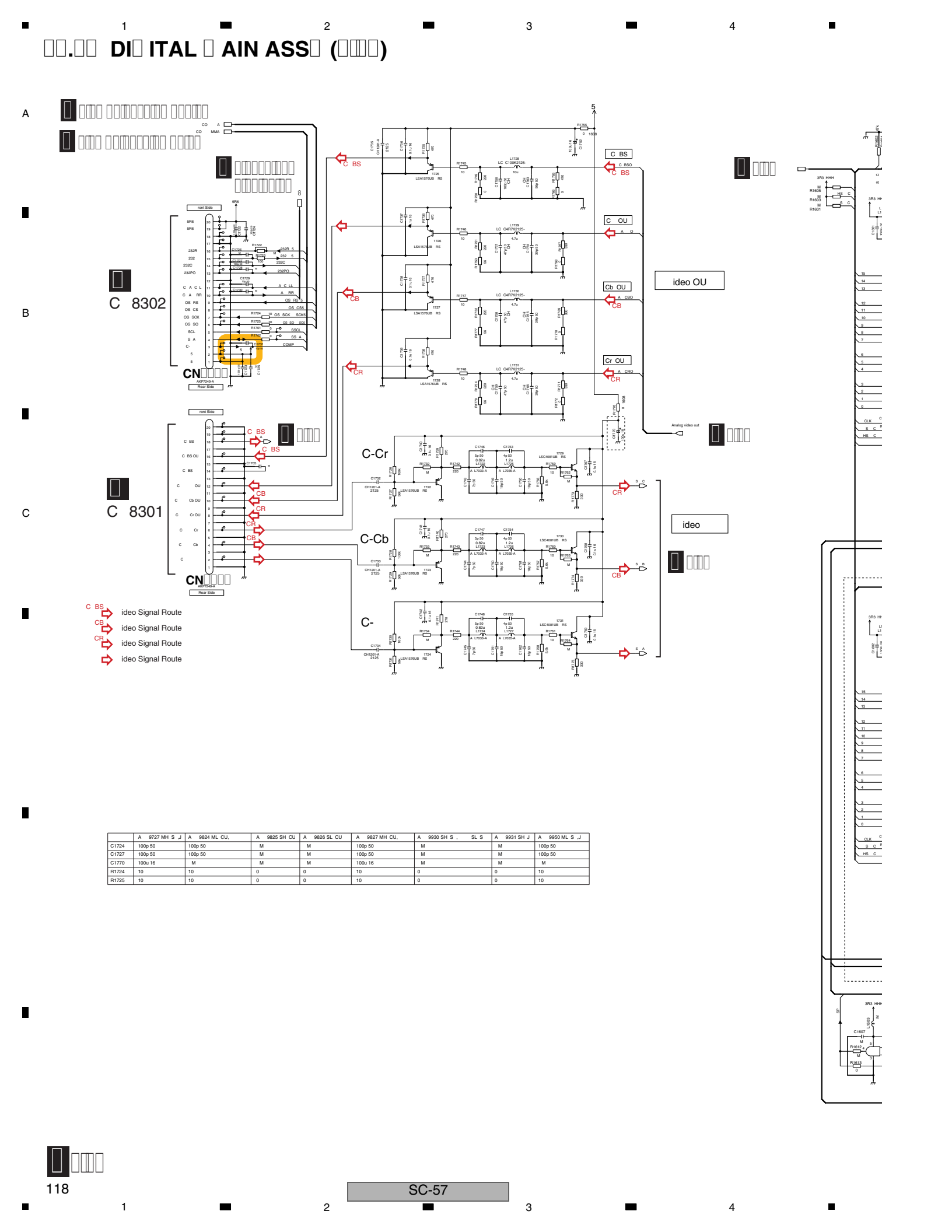

	A 9727 MH S J	A 9824 ML CU,	A 9825 SH CU	A 9826 SL CU	A 9827 MH CU,	A 9930 SH S , SL S	A 9931 SH J	A 9950 ML S J
C1724	100p 50	100p 50	M	M	100p 50	M	M	100p 50
C1727	100p 50	100p 50	M	M	100p 50	M	M	100p 50
C1770	100u 16	M	M	M	100u 16	M	M	M
R1724	10	10	0	0	10	0	0	10
R1725	10	10	0	0	10	0	0	10

DIGITAL MAIN ASSY (5/11)
(SC-57 : AWX9827)
(SC-55/SC-1526-K: AWX9824)

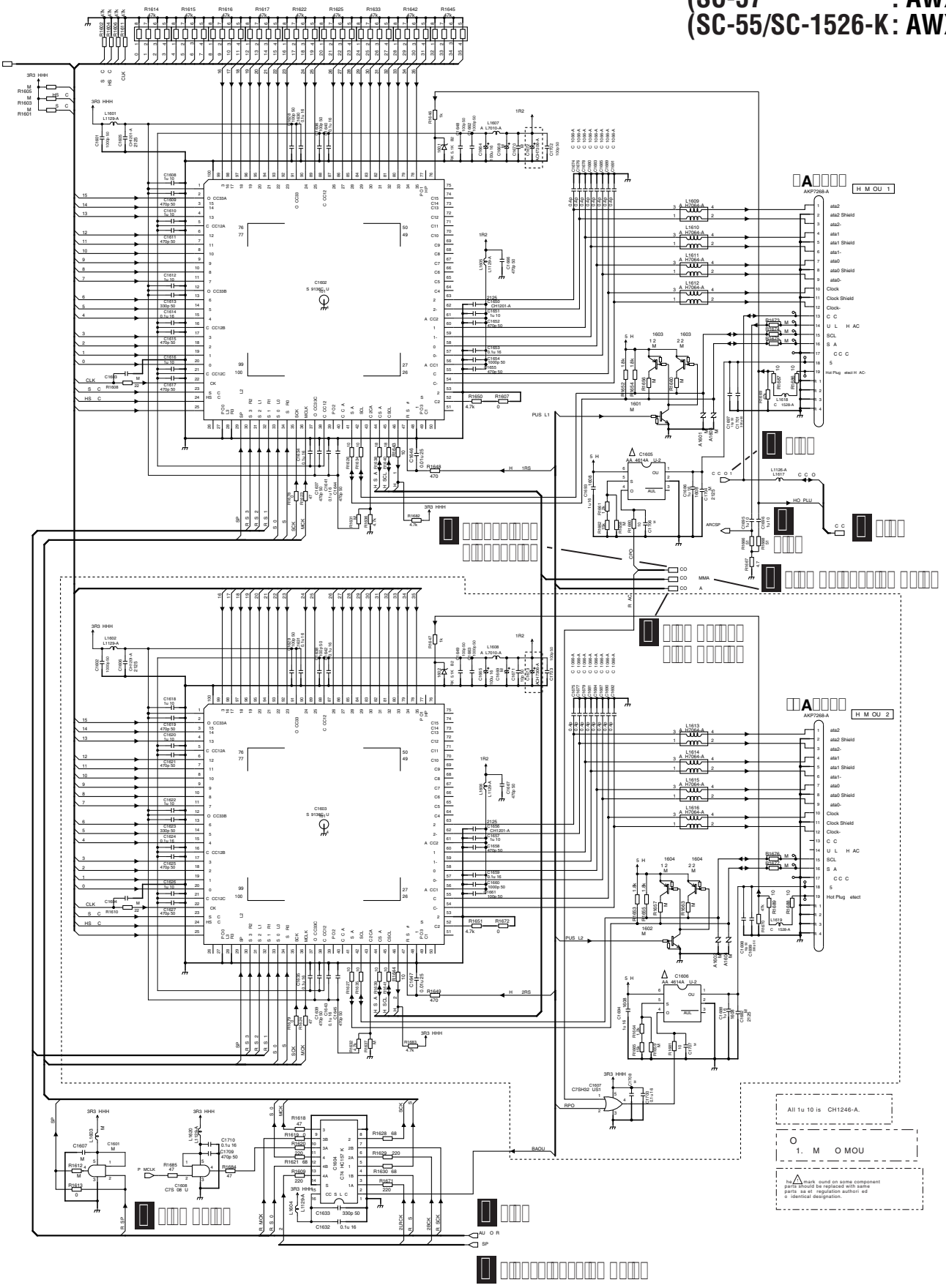

□□.□□ DI□ ITAL □ AIN ASS□ (□□□□)

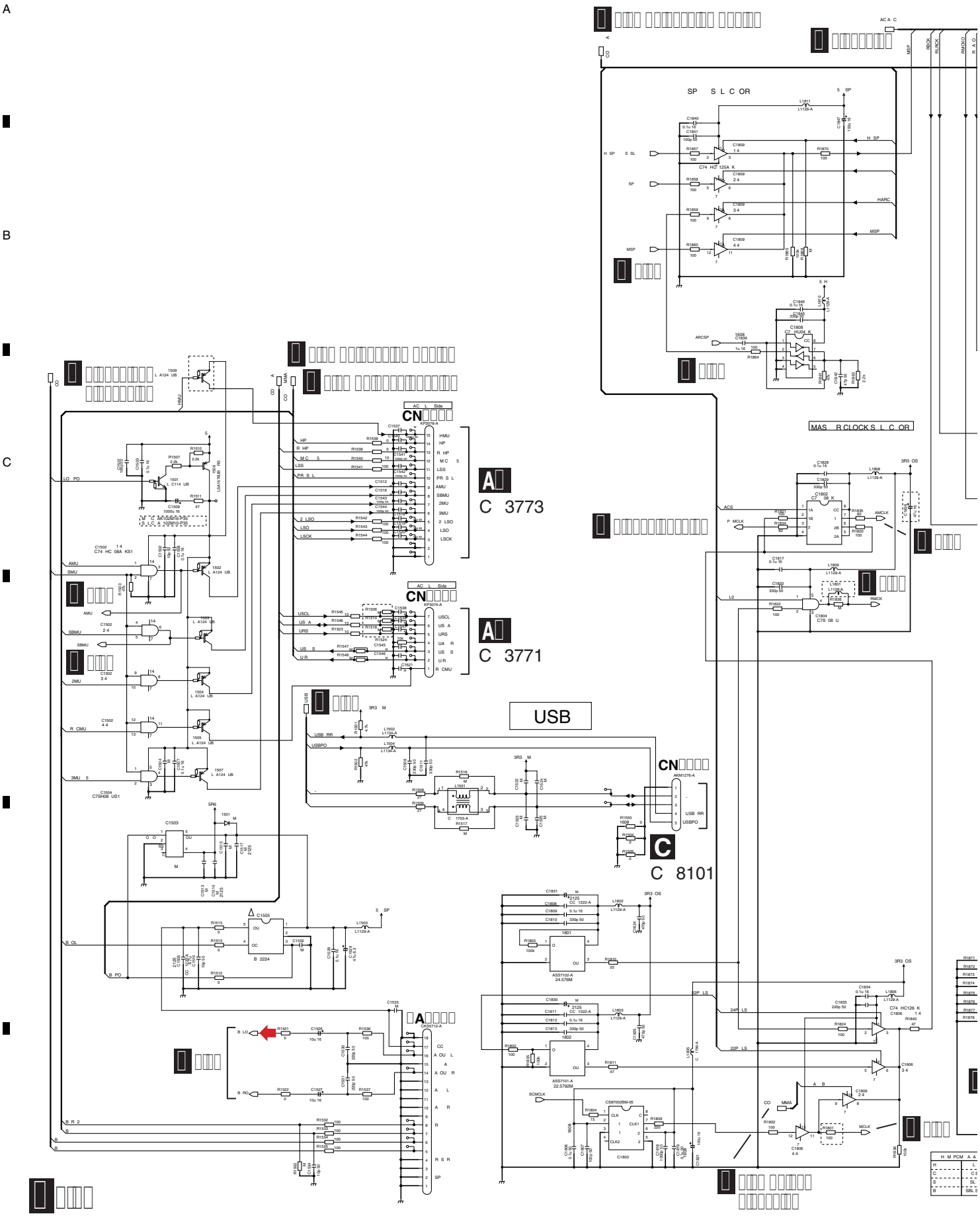

DIGITAL MAIN ASSY (6/11)
(SC-57 : AWX9827)
(SC-55/SC-1526-K : AWX9824)

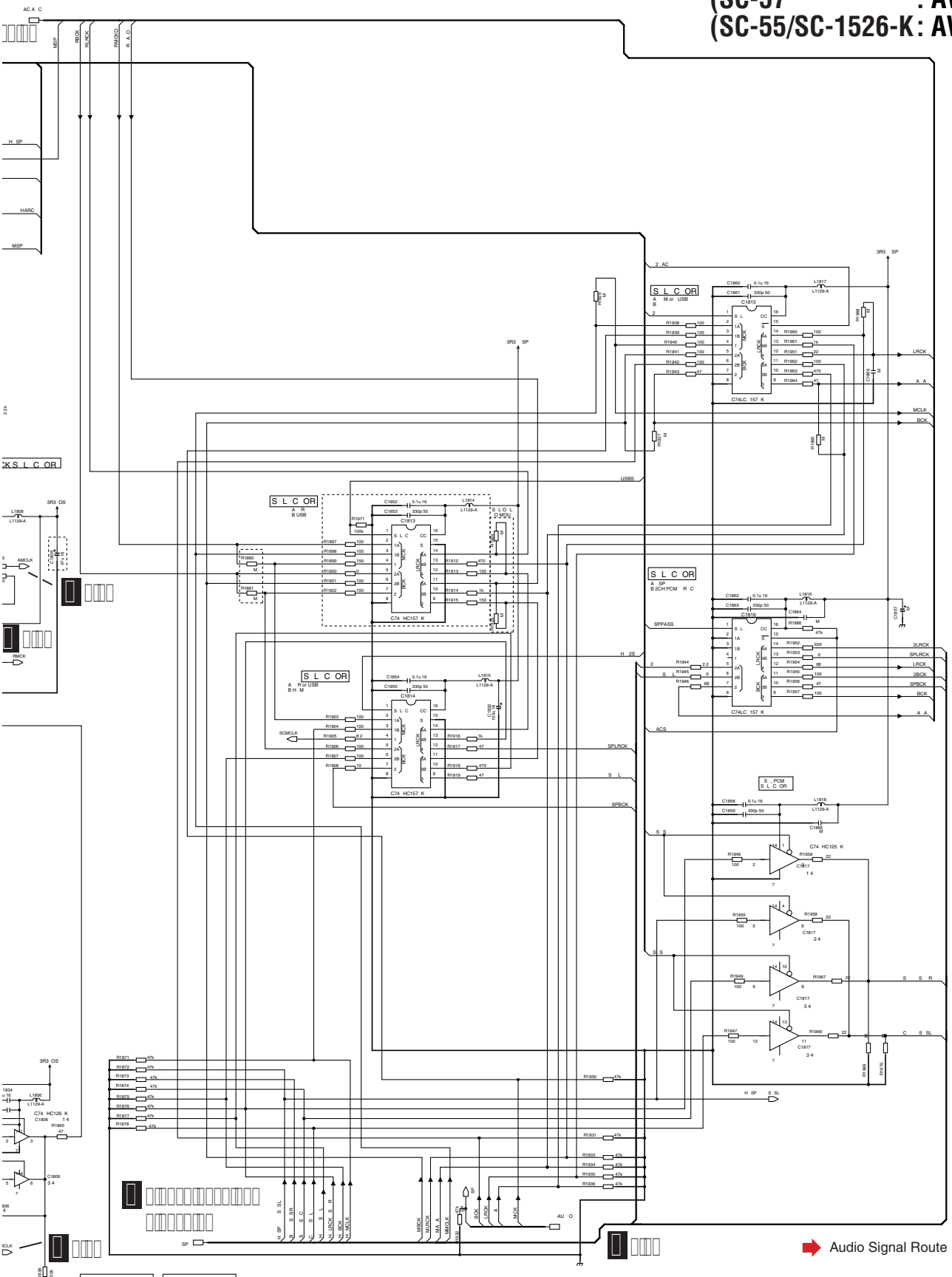

H	M PCM	A A
	L	R
C		C S
S		SL SR
B		SBL SBR

H	M S	A A
	L	
H LRCK		R
S		C
C		S
HBP		SL
B		SR

O
1. M O MOU

he ⚠ mark ound on some component parts should be replaced with same parts sa et regulation authori ed o identical designation.

All 1u 10 is CH1246-A.

□□.□□ DI□ ITAL □ AIN ASS□ (□□□□)

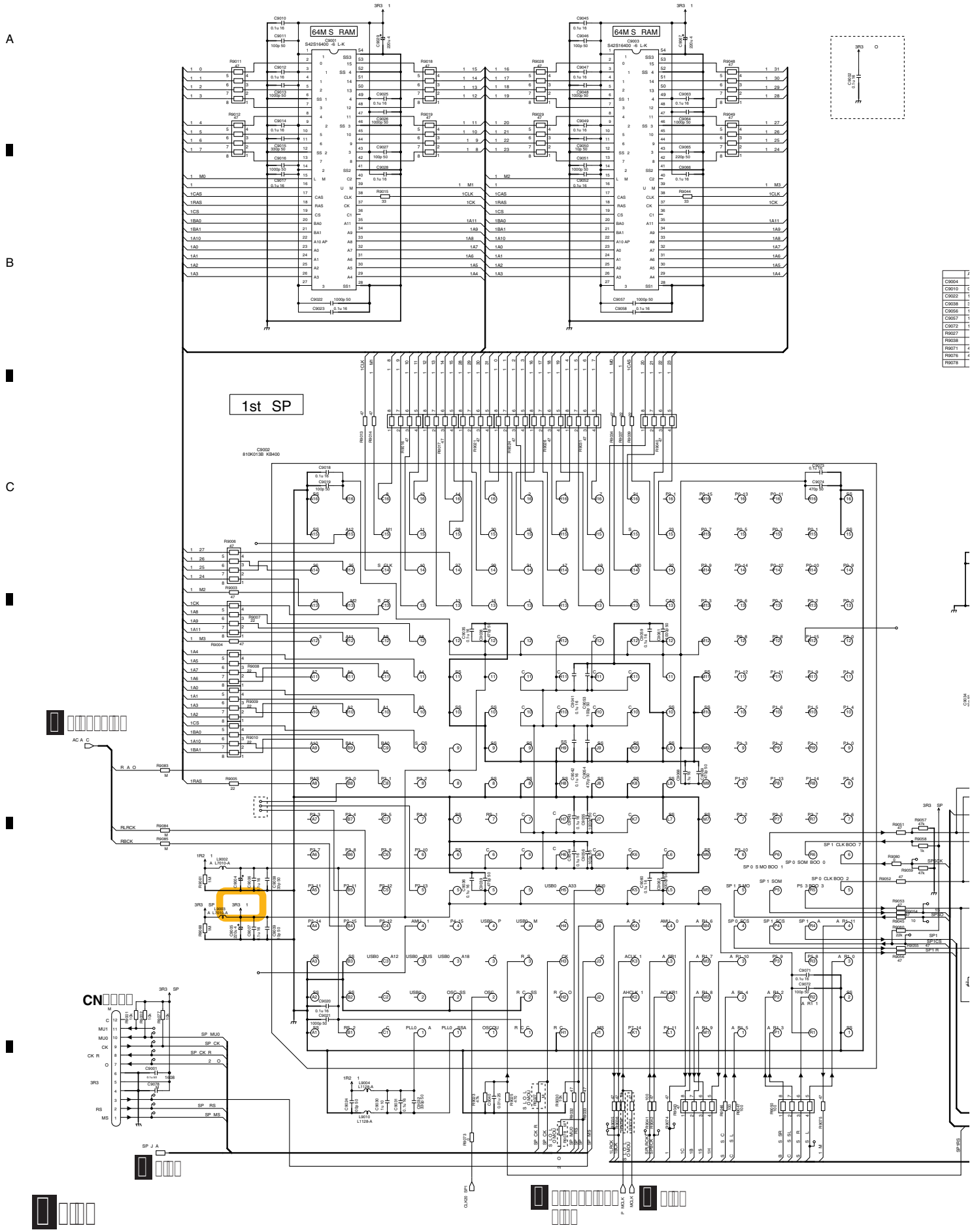

DIGITAL MAIN ASSY (7/11)
(SC-57 : AWX9827)
(SC-55/SC-1526-K: AWX9824)

A

B

	A 9727 MH S ,J	A 9824 ML CU,	A 9825 SH CU	A 9826 SL CU	A 9827 MH CU,	A 9930 SH S , SL S	A 9931 SH J	A 9950 ML S ,J
C9004	CH1234-A	100u 16	100u 16	100u 16	CH1234-A	100u 16	100u 16	100u 16
C9010	0.1u 16	0.1u 16	0.1u 16	0.1u 16	0.1u 16	0.1u 16	0.01u 25	0.1u 16
C9022	10p 50	10p 50	1000p 50	1000p 50	10p 50	10p 50	10p 50	10p 50
C9038	330p 50	330p 50	470p 50	470p 50	330p 50	330p 50	330p 50	330p 50
C9056	100p 50	470p 50	470p 50	470p 50	470p 50	470p 50	470p 50	100p 50
C9057	100p 50	100p 50	1000p 50	1000p 50	100p 50	100p 50	100p 50	100p 50
C9072	100p 50	470p 50	470p 50	470p 50	470p 50	470p 50	470p 50	100p 50
R9027	M	M	0	0	M	0	0	M
R9038	M	M	47	47	M	56	47	M
R9071	47	47	M	M	47	M	M	47
R9076	47	47	M	M	47	M	M	47
R9078	M	M	0	0	M	0	0	M

C

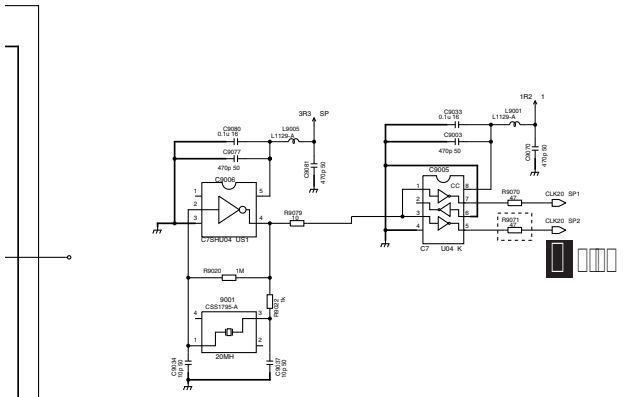

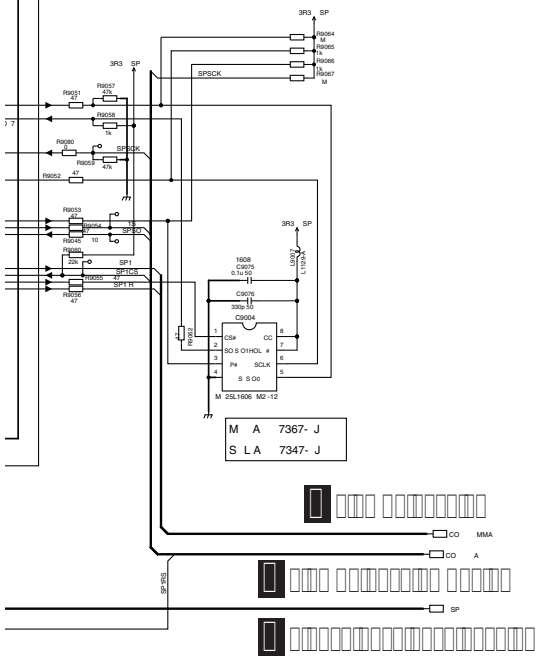

O
1. M O MOU

□□.□□ DI□ ITAL □ AIN ASS□ (□□□□)

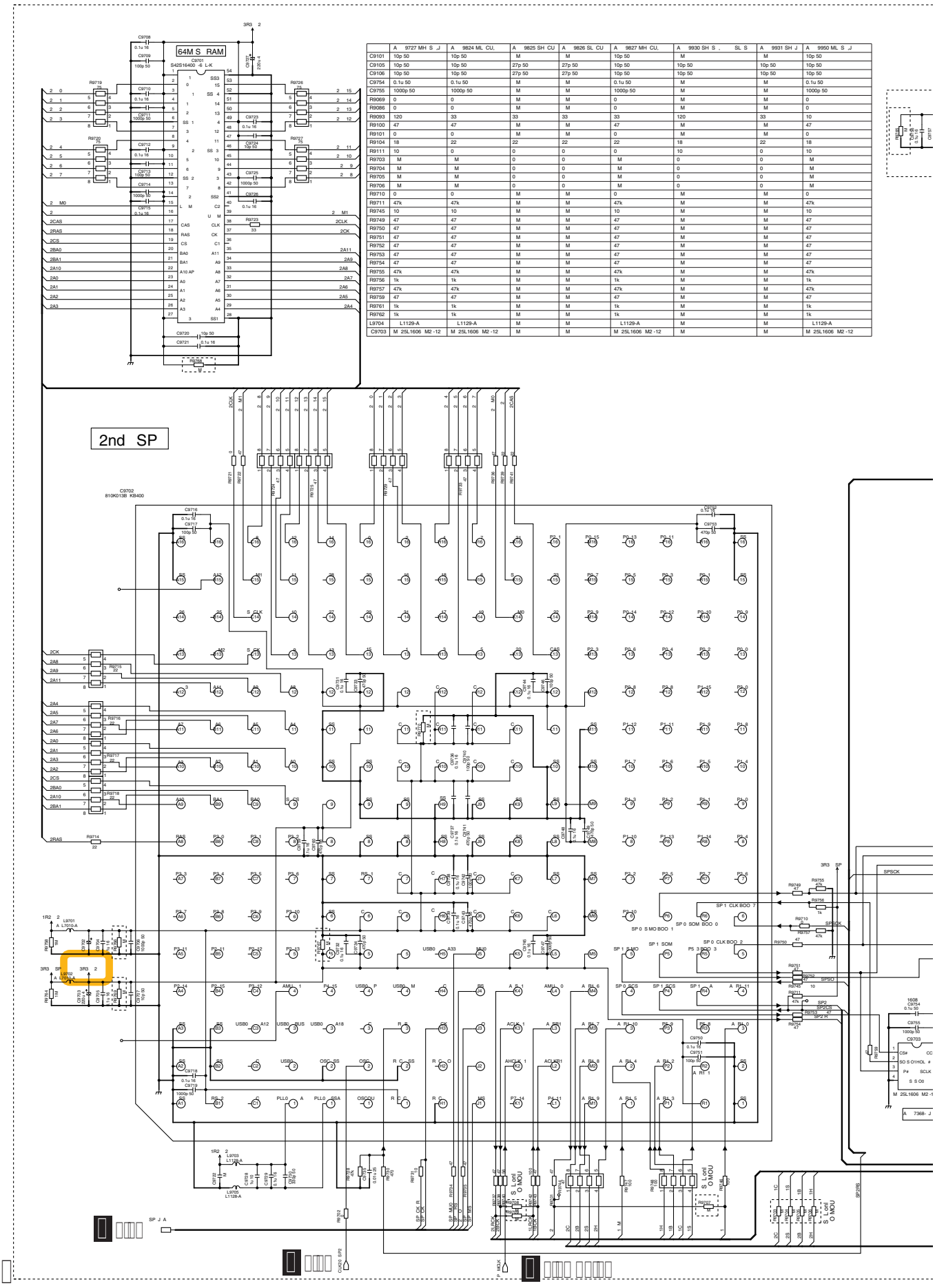

	A 9727 MH S ,J	A 9824 ML CU,	A 9825 SH CU	A 9826 SL CU	A 9827 MH CU,	A 9930 SH S , SL S	A 9931 SH J	A 9950 ML S ,J
C9101	10p 50	10p 50	M	M	10p 50	M	M	10p 50
C9105	10p 50	10p 50	27p 50	27p 50	10p 50	10p 50	10p 50	10p 50
C9106	10p 50	10p 50	27p 50	27p 50	10p 50	10p 50	10p 50	10p 50
C9754	0.1u 50	0.1u 50	M	M	0.1u 50	M	M	0.1u 50
C9755	1000p 50	1000p 50	M	M	1000p 50	M	M	1000p 50
R9069	0	0	M	M	0	M	M	0
R9086	0	0	M	M	0	M	M	0
R9093	120	33	33	33	33	120	33	10
R9100	47	47	M	M	47	M	M	47
R9101	0	0	M	M	0	M	M	0
R9104	18	22	22	22	22	18	22	18
R9111	10	0	0	0	0	10	0	10
R9703	M	M	0	0	M	0	0	M
R9704	M	M	0	0	M	0	0	M
R9705	M	M	0	0	M	0	0	M
R9706	M	M	0	0	M	0	0	M
R9710	0	0	M	M	0	M	M	0
R9711	47k	47k	M	M	47k	M	M	47k
R9745	10	10	M	M	10	M	M	10
R9749	47	47	M	M	47	M	M	47
R9750	47	47	M	M	47	M	M	47
R9751	47	47	M	M	47	M	M	47
R9752	47	47	M	M	47	M	M	47
R9753	47	47	M	M	47	M	M	47
R9754	47	47	M	M	47	M	M	47
R9755	47k	47k	M	M	47k	M	M	47k
R9756	1k	1k	M	M	1k	M	M	1k
R9757	47k	47k	M	M	47k	M	M	47k
R9759	47	47	M	M	47	M	M	47
R9761	1k	1k	M	M	1k	M	M	1k
R9762	1k	1k	M	M	1k	M	M	1k
L9704	L1129-A	L1129-A	M	M	L1129-A	M	M	L1129-A
C9703	M 25L1606 M2 -12	M 25L1606 M2 -12	M	M	M 25L1606 M2 -12	M	M	M 25L1606 M2 -12

DIGITAL MAIN ASSY (8/11)
(SC-57 : AWX9827)
(SC-55/SC-1526-K : AWX9824)

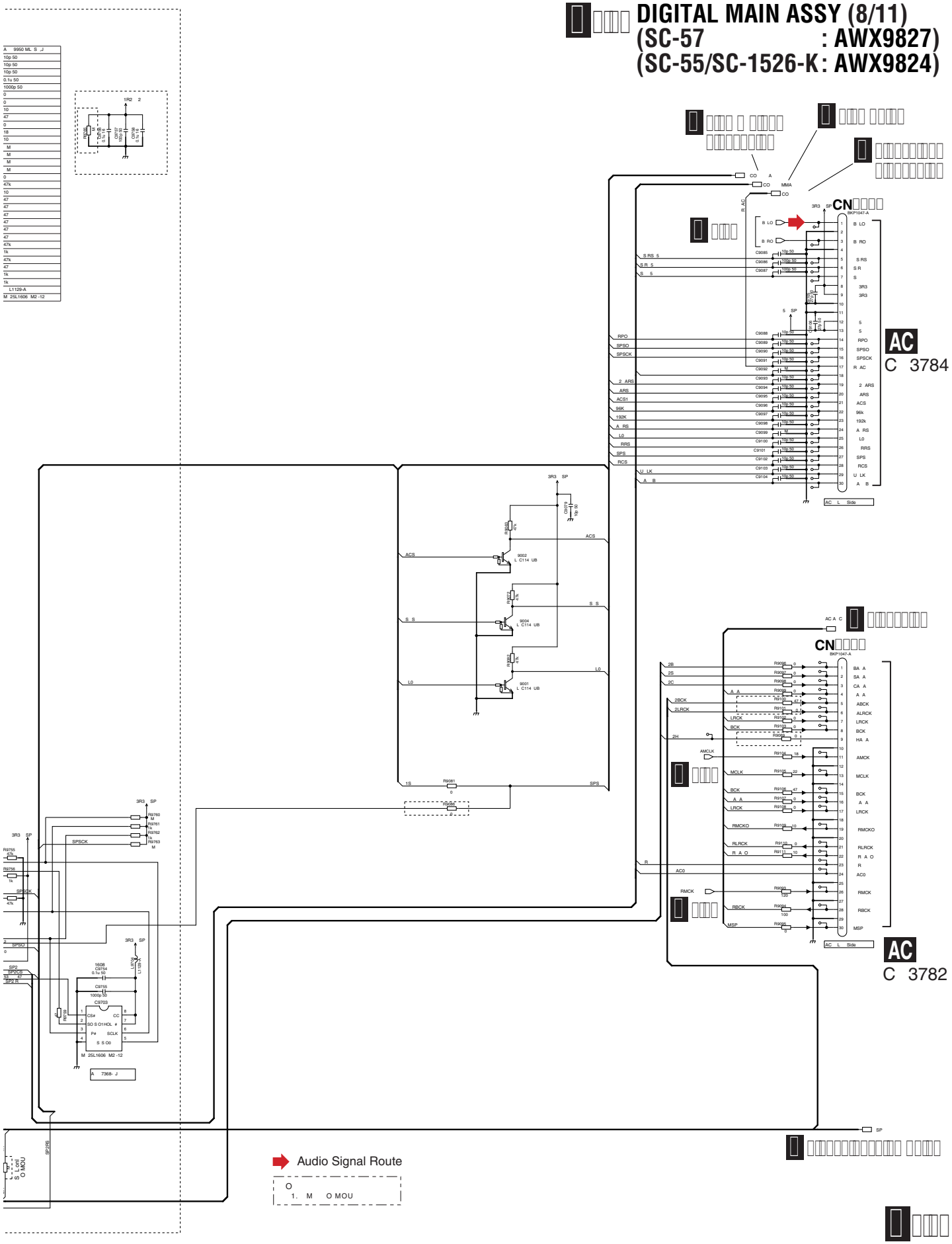

□□.□□ DI□ ITAL □ AIN ASS□ (□□□□)

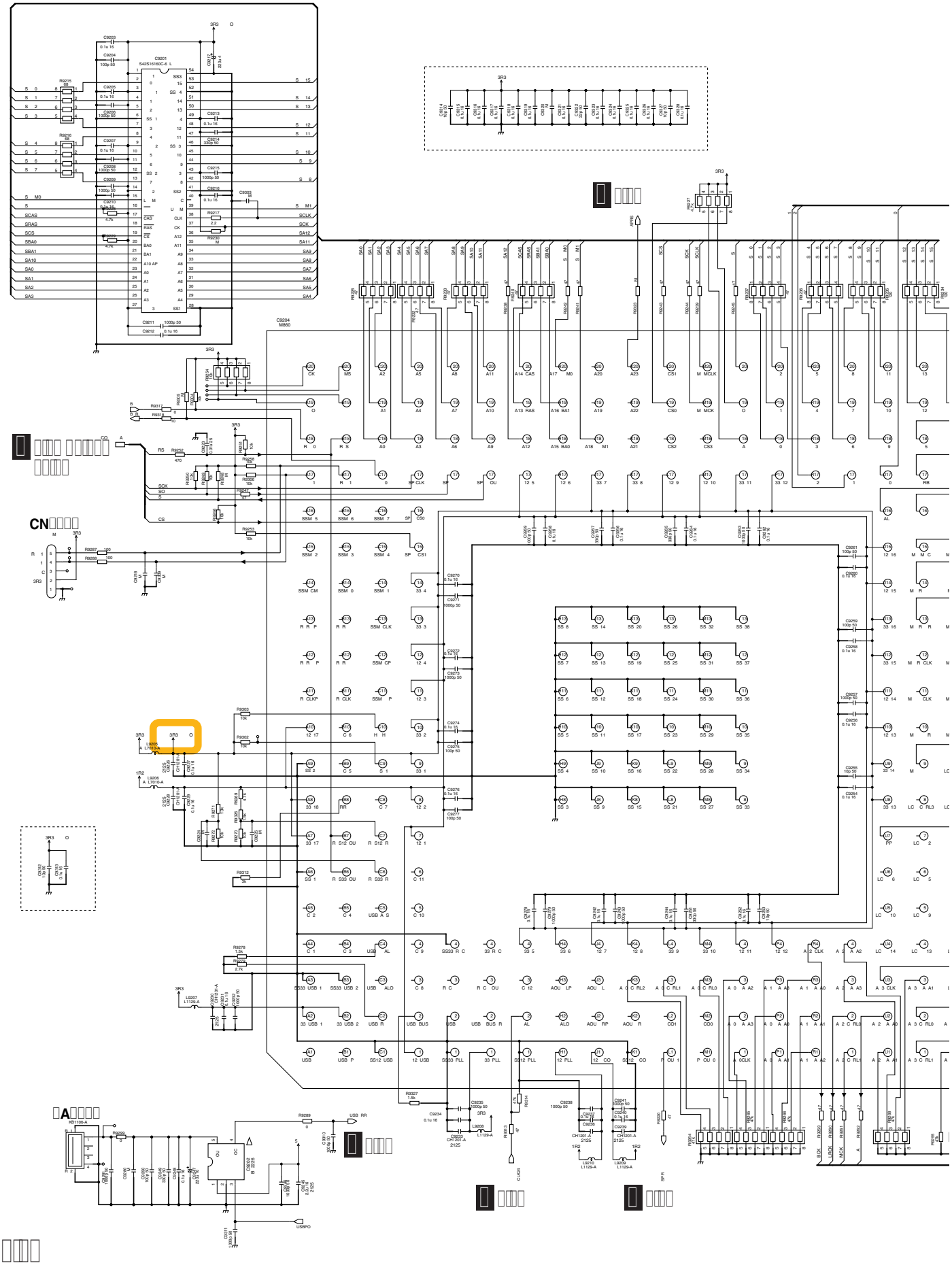

DIGITAL MAIN ASSY (9/11)
(SC-57 : AWX9827)
(SC-55/SC-1526-K : AWX9824)

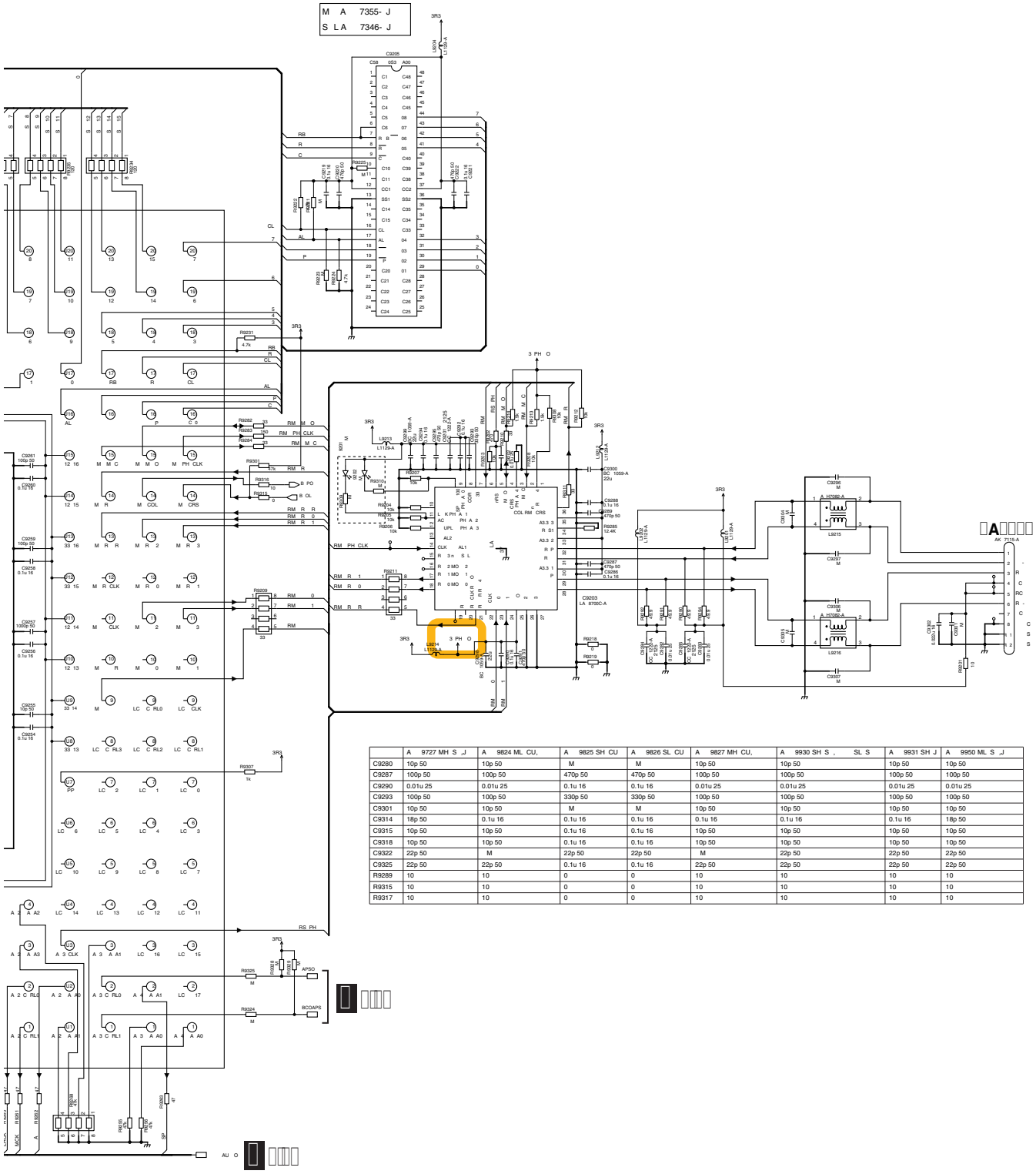

	A 9727 MH S ,J	A 9824 ML CU,	A 9825 SH CU	A 9826 SL CU	A 9827 MH CU,	A 9930 SH S , SL S	A 9931 SH J	A 9950 ML S ,J
C9280	10p 50	10p 50	M	M	10p 50	10p 50	10p 50	10p 50
C9287	100p 50	100p 50	470p 50	470p 50	100p 50	100p 50	100p 50	100p 50
C9290	0.01u 25	0.01u 25	0.1u 16	0.1u 16	0.01u 25	0.01u 25	0.01u 25	0.01u 25
C9293	100p 50	100p 50	330p 50	330p 50	100p 50	100p 50	100p 50	100p 50
C9301	10p 50	10p 50	M	M	10p 50	10p 50	10p 50	10p 50
C9314	18p 50	0.1u 16	0.1u 16	0.1u 16	0.1u 16	0.1u 16	0.1u 16	18p 50
C9315	10p 50	10p 50	0.1u 16	0.1u 16	10p 50	10p 50	10p 50	10p 50
C9318	10p 50	10p 50	0.1u 16	0.1u 16	10p 50	10p 50	10p 50	10p 50
C9322	22p 50	M	22p 50	22p 50	M	22p 50	22p 50	22p 50
C9325	22p 50	22p 50	0.1u 16	0.1u 16	22p 50	22p 50	22p 50	22p 50
R9289	10	10	0	0	10	10	10	10
R9315	10	10	0	0	10	10	10	10
R9317	10	10	0	0	10	10	10	10

he ⚠ mark ound on some component parts should be replaced with same parts sa et regulation authori ed o identical designation.

O
1. M O MOU

All 1u 10 is CH1246-A.

DIGITAL MAIN ASSY (10/11)
(SC-57 : AWX9827)
(SC-55/SC-1526-K : AWX9824)

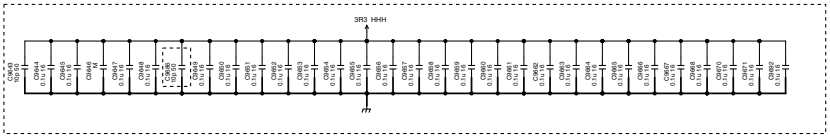

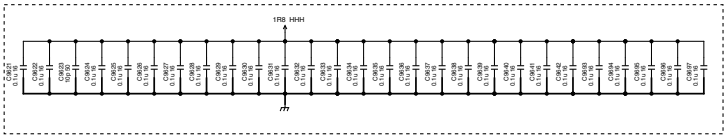

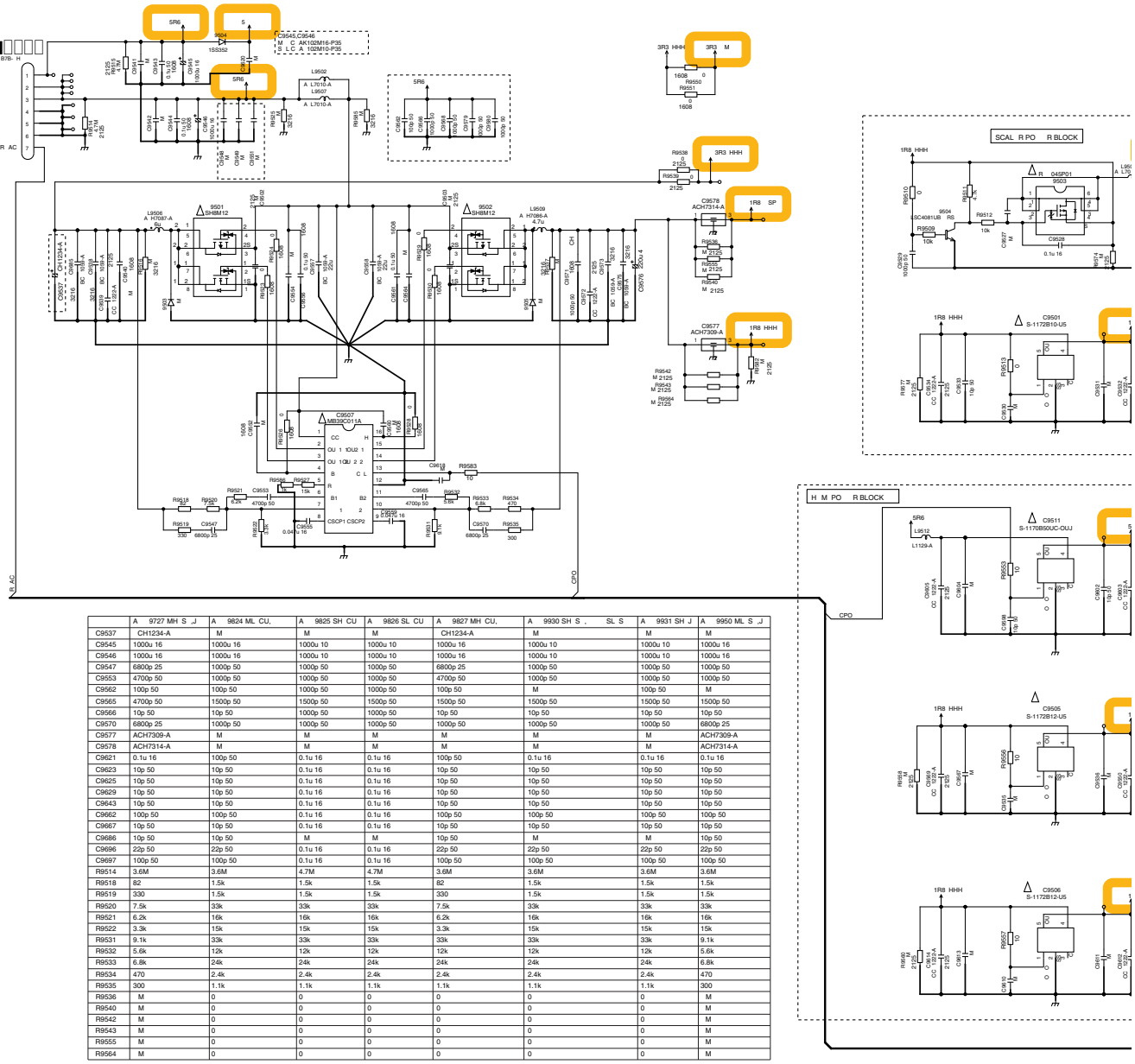

	A 9727 MH S ,J	A 9824 ML CU,	A 9825 SH CU	A 9826 SL CU	A 9827 MH CU,	A 9930 SH S , SL S	A 9931 SH J	A 9950 ML S ,J
C9537	CH1234-A	M	M	M	CH1234-A	M	M	M
C9545	1000u 16	1000u 16	1000u 10	1000u 10	1000u 16	1000u 10	1000u 10	1000u 16
C9546	1000u 16	1000u 16	1000u 10	1000u 10	1000u 16	1000u 10	1000u 10	1000u 16
C9547	6800p 25	1000p 50	1000p 50	1000p 50	6800p 25	1000p 50	1000p 50	1000p 50
C9553	4700p 50	1000p 50	1000p 50	1000p 50	4700p 50	1000p 50	1000p 50	1000p 50
C9562	100p 50	100p 50	1000p 50	1000p 50	100p 50	M	100p 50	M
C9565	4700p 50	1500p 50	1500p 50	1500p 50	1500p 50	1500p 50	1500p 50	1500p 50
C9566	10p 50	10p 50	1000p 50	1000p 50	10p 50	10p 50	10p 50	10p 50
C9570	6800p 25	1000p 50	1000p 50	1000p 50	1000p 50	1000p 50	1000p 50	6800p 25
C9577	ACH7309-A	M	M	M	M	M	M	ACH7309-A
C9578	ACH7314-A	M	M	M	M	M	M	ACH7314-A
C9621	0.1u 16	100p 50	0.1u 16	0.1u 16	100p 50	0.1u 16	0.1u 16	0.1u 16
C9623	10p 50	10p 50	0.1u 16	0.1u 16	10p 50	10p 50	10p 50	10p 50
C9625	10p 50	10p 50	0.1u 16	0.1u 16	10p 50	10p 50	10p 50	10p 50
C9629	10p 50	10p 50	0.1u 16	0.1u 16	10p 50	10p 50	10p 50	10p 50
C9643	10p 50	10p 50	0.1u 16	0.1u 16	10p 50	10p 50	10p 50	10p 50
C9662	100p 50	100p 50	0.1u 16	0.1u 16	100p 50	100p 50	100p 50	100p 50
C9667	10p 50	10p 50	0.1u 16	0.1u 16	10p 50	10p 50	10p 50	10p 50
C9686	10p 50	10p 50	M	M	10p 50	M	M	10p 50
C9696	22p 50	22p 50	0.1u 16	0.1u 16	22p 50	22p 50	22p 50	22p 50
C9697	100p 50	100p 50	0.1u 16	0.1u 16	100p 50	100p 50	100p 50	100p 50
R9514	3.6M	3.6M	4.7M	4.7M	3.6M	3.6M	3.6M	3.6M
R9518	82	1.5k	1.5k	1.5k	82	1.5k	1.5k	1.5k
R9519	330	1.5k	1.5k	1.5k	330	1.5k	1.5k	1.5k
R9520	7.5k	33k	33k	33k	7.5k	33k	33k	33k
R9521	6.2k	16k	16k	16k	6.2k	16k	16k	16k
R9522	3.3k	15k	15k	15k	3.3k	15k	15k	15k
R9531	9.1k	33k	33k	33k	33k	33k	33k	9.1k
R9532	5.6k	12k	12k	12k	12k	12k	12k	5.6k
R9533	6.8k	24k	24k	24k	24k	24k	24k	6.8k
R9534	470	2.4k	2.4k	2.4k	2.4k	2.4k	2.4k	470
R9535	300	1.1k	1.1k	1.1k	1.1k	1.1k	1.1k	300
R9536	M	0	0	0	0	0	0	M
R9540	M	0	0	0	0	0	0	M
R9542	M	0	0	0	0	0	0	M
R9543	M	0	0	0	0	0	0	M
R9555	M	0	0	0	0	0	0	M
R9564	M	0	0	0	0	0	0	M

	A 9727 MH S ,J	A 9824 ML CU,	A 9825 SH CU	A 9826 SL CU	A 9827 MH CU,	A 9930 SH S , SL S	A 9931 SH J	A 9950 ML S ,J
C9516	10p 50	10p 50	M	M	10p 50	10p 50	10p 50	10p 50
C9518	M	M	M	M	M	M	33p 50	M
C9588	0.01u 16	M	M	M	0.01u 16	M	M	M
C9593	ACH7306-A	M	M	M	ACH7306-A	M	M	M
C9608	0.01u 16	M	M	M	0.01u 16	10p 50	10p 50	0.01u 16
C9677	M	M	M	M	M	M	M	M
C9679	CC 1222-A	CC 1222-A	M	M	CC 1222-A	M	M	CC 1222-A
C9681	CC 1222-A	CC 1222-A	M	M	CC 1222-A	M	M	CC 1222-A
C9682	220u 4	220u 4	M	M	220u 4	M	M	220u 4
R9505	10	10	10	10	10	10	22	10
R9513	0	10	0	0	10	0	0	0
R9517	10	10	0	0	10	10	10	10
R9541	4.7k	4.7k	M	M	4.7k	M	M	4.7k
R9591	M	M	M	M	M	0	0	M
R9596	4.7k	4.7k	M	M	4.7k	M	M	4.7k
C9514	S-1172B12-U5	S-1172B12-U5	M	M	S-1172B12-U5	M	M	S-1172B12-U5

All 1u 10 is CH1246-A.
CC 1222-A is 4.7u 25.

he ⚠ mark ound on some component parts should be replaced with same parts sa et regulation authori ed o identical designation.

O
1. M O MOU

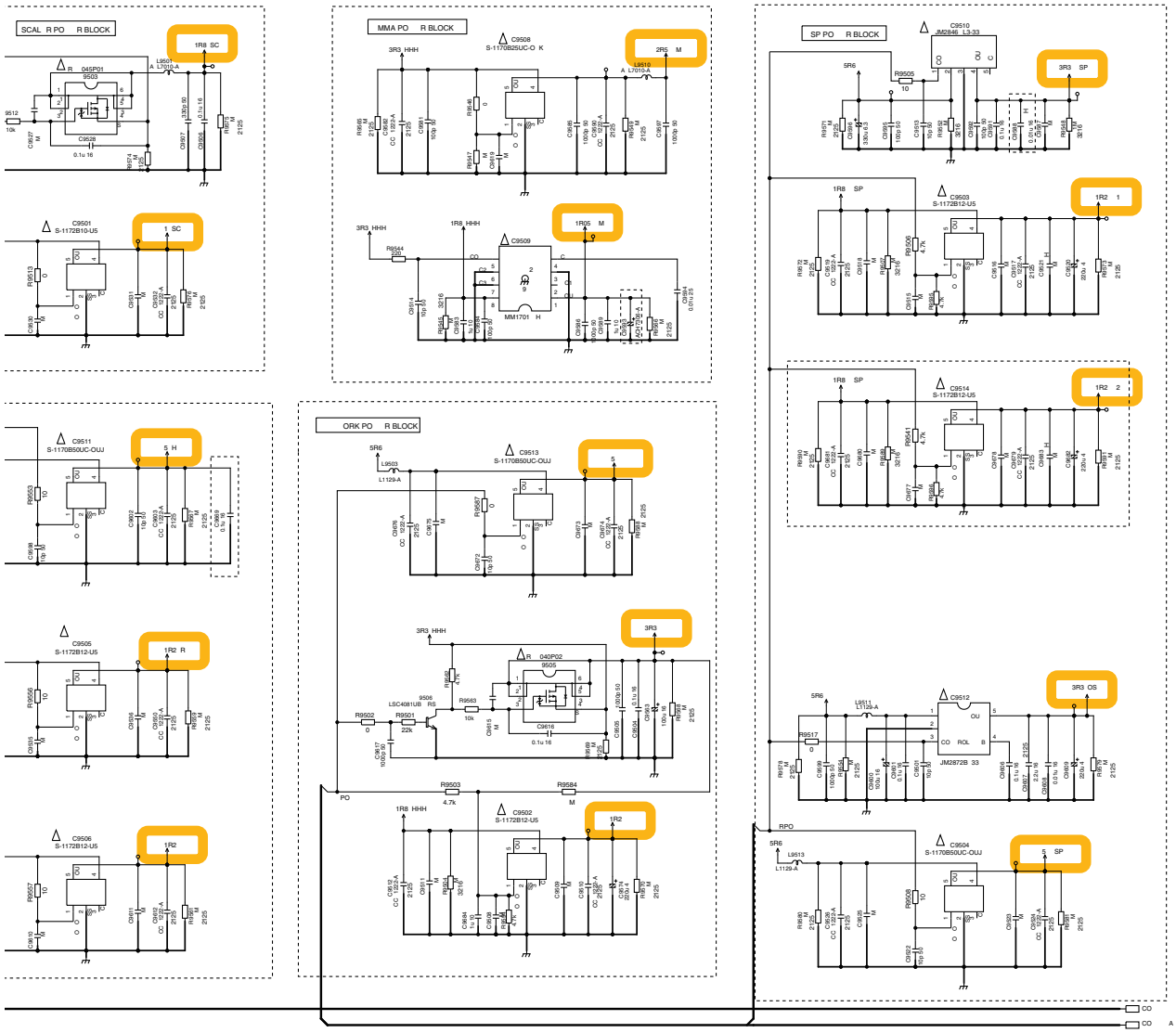

□□□□□ DIGITAL MAIN ASSY (11/11) (SC-57 : AWX9827) (SC-55/SC-1526-K: AWX9824)

R O ABL or AL MA ASS 5 11

	A 9727 MH S ,J	A 9824 ML CU,	A 9825 SH CU	A 9826 SL CU	A 9827 MH CU,	A 9930 SH S , SL S	A 9931 SH J	A 9950 ML S ,J
C1602	1000p 50	1000p 50	1000p 50	M	1000p 50	1000p 50	1000p 50	1000p 50
C1606	CH1201-A	CH1201-A	CH1201-A	M	CH1201-A	CH1201-A	CH1201-A	CH1201-A
C1618	1u 10	1u 10	1u 10	M	1u 10	1u 10	1u 10	1u 10
C1619	470p 50	470p 50	470p 50	M	470p 50	470p 50	470p 50	470p 50
C1620	1u 10	1u 10	1u 10	M	1u 10	1u 10	1u 10	1u 10
C1621	470p 50	470p 50	470p 50	M	470p 50	470p 50	470p 50	470p 50
C1622	1u 10	1u 10	1u 10	M	1u 10	1u 10	1u 10	1u 10
C1623	330p 50	330p 50	330p 50	M	330p 50	330p 50	330p 50	330p 50
C1624	0.1u 16	0.1u 16	0.1u 16	M	0.1u 16	0.1u 16	0.1u 16	0.1u 16
C1625	470p 50	470p 50	470p 50	M	470p 50	470p 50	470p 50	470p 50
C1626	1u 10	1u 10	1u 10	M	1u 10	1u 10	1u 10	1u 10
C1627	470p 50	470p 50	470p 50	M	470p 50	470p 50	470p 50	470p 50
C1629	100p 50	100p 50	100p 50	M	100p 50	100p 50	100p 50	100p 50
C1631	0.1u 16	0.1u 16	0.1u 16	M	0.1u 16	0.1u 16	0.1u 16	0.1u 16
C1635	0.1u 16	0.1u 16	0.1u 16	M	0.1u 16	0.1u 16	0.1u 16	0.1u 16
C1638	100p 50	100p 50	100p 50	M	100p 50	100p 50	100p 50	100p 50
C1639	470p 50	470p 50	470p 50	M	470p 50	470p 50	470p 50	470p 50
C1642	0.1u 16	0.1u 16	0.1u 16	M	0.1u 16	0.1u 16	0.1u 16	0.1u 16
C1643	0.1u 16	0.1u 16	0.1u 16	M	0.1u 16	0.1u 16	0.1u 16	0.1u 16
C1645	470p 50	470p 50	470p 50	M	470p 50	470p 50	470p 50	470p 50
C1647	0.01u 25	0.01u 25	0.01u 25	M	0.01u 25	0.01u 25	0.01u 25	0.01u 25
C1649	100p 50	100p 50	100p 50	M	100p 50	100p 50	100p 50	100p 50
C1656	CH1201-A	CH1201-A	CH1201-A	M	CH1201-A	CH1201-A	CH1201-A	CH1201-A
C1657	1u 10	1u 10	1u 10	M	1u 10	1u 10	1u 10	1u 10
C1658	470p 50	470p 50	470p 50	M	470p 50	470p 50	470p 50	470p 50
C1659	0.1u 16	0.1u 16	0.1u 16	M	0.1u 16	0.1u 16	0.1u 16	0.1u 16
C1660	1000p 50	1000p 50	1000p 50	M	1000p 50	1000p 50	1000p 50	1000p 50
C1661	100p 50	100p 50	100p 50	M	100p 50	100p 50	100p 50	100p 50
C1663	1000p 50	1000p 50	1000p 50	M	1000p 50	1000p 50	1000p 50	1000p 50
C1665	100u 16	100u 16	100u 16	M	100u 16	100u 16	100u 16	100u 16
C1667	470p 50	470p 50	470p 50	M	470p 50	470p 50	470p 50	470p 50
C1671	10p 50	10p 50	10p 50	M	10p 50	10p 50	10p 50	10p 50
C1672	ACH7306-A	M	M	M	ACH7306-A	M	M	M
C1673	ACH7306-A	M	M	M	ACH7306-A	M	M	M
C1675	C 1066-A	C 1066-A	C 1066-A	M	C 1066-A	C 1066-A	C 1066-A	C 1066-A
C1677	C 1066-A	C 1066-A	C 1066-A	M	C 1066-A	C 1066-A	C 1066-A	C 1066-A
C1679	C 1066-A	C 1066-A	C 1066-A	M	C 1066-A	C 1066-A	C 1066-A	C 1066-A
C1681	C 1066-A	C 1066-A	C 1066-A	M	C 1066-A	C 1066-A	C 1066-A	C 1066-A
C1684	C 1066-A	C 1066-A	C 1066-A	M	C 1066-A	C 1066-A	C 1066-A	C 1066-A
C1687	C 1066-A	C 1066-A	C 1066-A	M	C 1066-A	C 1066-A	C 1066-A	C 1066-A
C1688	1u 16	1u 16	1u 16	M	1u 16	1u 16	1u 16	1u 16
C1690	C 1066-A	C 1066-A	C 1066-A	M	C 1066-A	C 1066-A	C 1066-A	C 1066-A
C1692	C 1066-A	C 1066-A	C 1066-A	M	C 1066-A	C 1066-A	C 1066-A	C 1066-A
C1694	1u 16	1u 16	1u 16	M	1u 16	1u 16	1u 16	1u 16
C1698	10p 50	10p 50	10p 50	M	10p 50	10p 50	10p 50	10p 50
C1699	330p 50	330p 50	330p 50	M	330p 50	330p 50	330p 50	330p 50
C1700	0.1u 16	0.1u 16	0.1u 16	M	0.1u 16	0.1u 16	0.1u 16	0.1u 16
C1703	100p 50	100p 50	100p 50	M	100p 50	100p 50	100p 50	100p 50
R1610	22	22	22	M	22	22	22	22
R1624	47	47	47	M	47	47	47	47
R1627	10	10	10	M	10	10	10	10
R1632	4.7k	4.7k	4.7k	M	4.7k	4.7k	4.7k	4.7k
R1635	10	10	10	M	10	10	10	10
R1639	10	10	10	M	10	10	10	10
R1641	10	10	10	M	10	10	10	10
R1644	10	10	10	M	10	10	10	10
R1647	1k	1k	1k	M	1k	1k	1k	1k
R1649	470	470	470	M	470	470	470	470
R1651	4.7k	4.7k	4.7k	M	4.7k	4.7k	4.7k	4.7k
R1653	1.8k	1.8k	1.8k	M	1.8k	1.8k	1.8k	1.8k
R1655	1.8k	1.8k	1.8k	M	1.8k	1.8k	1.8k	1.8k
R1664	1.2k	1.2k	1.2k	M	1.2k	1.2k	1.2k	1.2k
R1665	15k	15k	15k	M	15k	15k	15k	15k
R1670	47k	47k	47k	M	47k	47k	47k	47k
R1672	0	0	0	M	0	0	0	0
R1679	0	0	0	M	0	0	0	0
R1681	10	10	10	M	10	10	10	10
R1686	10	10	0	0	10	0	0	10
R1687	10	10	0	0	10	0	0	10
R1688	10	10	0	M	10	0	0	10
R1689	10	10	0	M	10	0	0	10
L1602	L1129-A	L1129-A	L1129-A	M	L1129-A	L1129-A	L1129-A	L1129-A
L1606	L1129-A	L1129-A	L1129-A	M	L1129-A	L1129-A	L1129-A	L1129-A
L1608	A L7010-A	A L7010-A	A L7010-A	M	A L7010-A	A L7010-A	A L7010-A	A L7010-A
L1613	A H7064-A	A H7064-A	A H7064-A	M	A H7064-A	A H7064-A	A H7064-A	A H7064-A
L1614	A H7064-A	A H7064-A	A H7064-A	M	A H7064-A	A H7064-A	A H7064-A	A H7064-A
L1615	A H7064-A	A H7064-A	A H7064-A	M	A H7064-A	A H7064-A	A H7064-A	A H7064-A
L1616	A H7064-A	A H7064-A	A H7064-A	M	A H7064-A	A H7064-A	A H7064-A	A H7064-A
L1619	C 1528-A	C 1528-A	C 1528-A	M	C 1528-A	C 1528-A	C 1528-A	C 1528-A
C1603	S 9136C U	S 9136C U	S 9136C U	M	S 9136C U	S 9136C U	S 9136C U	S 9136C U
C1606	AA 4614A U-2	AA 4614A U-2	AA 4614A U-2	M	AA 4614A U-2	AA 4614A U-2	AA 4614A U-2	AA 4614A U-2
C1607	C7SH32 US1	C7SH32 US1	C7SH32 US1	M	C7SH32 US1	C7SH32 US1	C7SH32 US1	C7SH32 US1
1602	RK 5.1K B2	RK 5.1K B2	RK 5.1K B2	M	RK 5.1K B2	RK 5.1K B2	RK 5.1K B2	RK 5.1K B2
JA1602	AKP7268-A	AKP7268-A	AKP7268-A	M	AKP7268-A	AKP7268-A	AKP7268-A	AKP7268-A
P1603	S PO	S PO	S PO	S PO	S PO	S PO	S PO	S PO
P1604	S PO	S PO	S PO	S PO	S PO	S PO	S PO	S PO
P1609	S PO	S PO	S PO	S PO	S PO	S PO	S PO	S PO
P1610	S PO	S PO	S PO	S PO	S PO	S PO	S PO	S PO
P1612	S PO	S PO	S PO	S PO	S PO	S PO	S PO	S PO

R O ABL or AL MA ASS 8 11

	A 9727 MH S ,J	A 9824 ML CU,	A 9825 SH CU	A 9826 SL CU	A 9827 MH CU,	A 9930 SH S , SL S	A 9931 SH J	A 9950 ML S ,J
C9708	0.1u 16	0.1u 16	M	M	0.1u 16	M	M	0.1u 16
C9709	100p 50	100p 50	M	M	100p 50	M	M	100p 50
C9710	0.1u 16	0.1u 16	M	M	0.1u 16	M	M	0.1u 16
C9711	1000p 50	1000p 50	M	M	1000p 50	M	M	1000p 50
C9712	0.1u 16	0.1u 16	M	M	0.1u 16	M	M	0.1u 16
C9713	100p 50	100p 50	M	M	100p 50	M	M	100p 50
C9714	1000p 50	1000p 50	M	M	1000p 50	M	M	1000p 50
C9715	0.1u 16	0.1u 16	M	M	0.1u 16	M	M	0.1u 16
C9720	10p 50	10p 50	M	M	10p 50	M	M	10p 50
C9721	0.1u 16	0.1u 16	M	M	0.1u 16	M	M	0.1u 16
C9723	0.1u 16	0.1u 16	M	M	0.1u 16	M	M	0.1u 16
C9724	10p 50	10p 50	M	M	10p 50	M	M	10p 50
C9725	1000p 50	1000p 50	M	M	1000p 50	M	M	1000p 50
C9726	0.1u 16	0.1u 16	M	M	0.1u 16	M	M	0.1u 16
C9727	220u 4	220u 4	M	M	220u 4	M	M	220u 4
C9756	0.1u 16	0.1u 16	M	M	0.1u 16	M	M	0.1u 16
C9757	100p 50	100p 50	M	M	100p 50	M	M	100p 50
C9758	0.1u 16	0.1u 16	M	M	0.1u 16	M	M	0.1u 16
R9719	75	75	M	M	75	M	M	75
R9720	75	75	M	M	75	M	M	75
R9723	33	33	M	M	33	M	M	33
R9726	75	75	M	M	75	M	M	75
R9727	75	75	M	M	75	M	M	75
R9765	M	M	M	M	M	0	0	0
R9768	M	M	M	M	M	0	0	M
C9701	S42S16400 -6 L	S42S16400 -6 L	M	M	S42S16400 -6 L	M	M	S42S16400 -6 L

□□□□□

R O ABL or AL MA ASS 6 11

	A 9727 MH S ,J	A 9824 ML CU,	A 9825 SH CU	A 9826 SL CU	A 9827 MH CU,	A 9930 SH S , SL S	A 9931 SH J	A 9950 ML S ,J
C1509	1000u 16	1000u 16	1000u 10	1000u 10	1000u 16	1000u 10	1000u 10	1000u 16
C1518	10p 50	10p 50	M	M	10p 50	M	M	10p 50
C1533	100p 50	100p 50	M	M	100p 50	100p 50	100p 50	100p 50
C1545	M	M	M	M	M	M	220p 50	M
C1546	M	M	M	M	M	M	220p 50	M
C1820	100p 50	100p 50	330p 50	330p 50	100p 50	100p 50	100p 50	100p 50
C1824	100p 50	100p 50	470p 50	470p 50	100p 50	100p 50	100p 50	100p 50
C1835	220p 50	220p 50	470p 50	470p 50	220p 50	470p 50	470p 50	220p 50
C1836	47u 16	M	M	M	47u 16	M	M	M
C1847	100u 16	M	M	M	100u 16	M	100u 16	100u 16
C1852	0.1u 16	0.1u 16	M	M	0.1u 16	M	M	0.1u 16
C1853	330p 50	330p 50	M	M	330p 50	M	M	330p 50
C1855	270p 50	270p 50	330p 50	330p 50	270p 50	270p 50	270p 50	270p 50
R1506	M	M	M	M	M	M	0	0
R1512	10	10	0	0	10	10	10	10
R1513	10	10	0	0	10	10	10	10
R1514	M	M	M	M	M	M	0	0
R1518	M	M	M	M	M	M	0	0
R1523	10	10	0	0	10	10	M	10
R1545	10	10	0	0	10	10	M	10
R1546	10	10	0	0	10	10	M	10
R1801	100	100	M	M	100	M	M	100
R1803	47k	47k	100k	100k	47k	47k	47k	47k
R1804	15	10	10	10	10	15	10	15
R1834	82	100	100	100	100	82	100	82
R1835	82	100	100	100	100	82	100	82
R1836	M	47	47	47	47	M	M	M
R1880	M	M	0	0	M	0	0	M
R1881	M	M	0	0	M	0	0	M
R1897	100	100	M	M	100	M	M	100
R1898	100	100	M	M	100	M	M	100
R1899	150	150	M	M	150	M	M	150
R1900	0	0	M	M	0	M	M	0
R1901	100	100	M	M	100	M	M	100
R1902	150	150	M	M	150	M	M	150
R1905	8.2	10	10	10	10	8.2	10	8.2
R1912	470	470	M	M	470	M	M	470
R1913	150	150	M	M	150	M	M	150
R1914	1k	1k	M	M	1k	M	M	1k
R1915	150	150	M	M	150	M	M	150
R1924	M	M	0	0	M	0	0	M
R1925	M	M	0	0	M	10	10	M
R1940	100	100	47	47	100	47	47	100
R1971	100k	100k	M	M	100k	M	M	100k
L1801	L1128-A	M	M	M	M	L1128-A	L1128-A	L1128-A
L1814	L1129-A	L1129-A	M	M	L1129-A	M	M	L1129-A
C1813	C74 HC157 K	C74 HC157 K	M	M	C74 HC157 K	M	M	C74 HC157 K
1509	L A124 UB	L A124 UB	M	M	L A124 UB	M	M	L A124 UB

R O ABL or AL MA ASS 8 11

	A 9727 MH S ,J	A 9824 ML CU,	A 9825 SH CU	A 9826 SL CU	A 9827 MH CU,	A 9930 SH S , SL S	A 9931 SH J	A 9950 ML S ,J
C9702	CH1234-A	100u 16	M	M	CH1234-A	M	M	CH1234-A
C9703	220u 4	220u 4	M	M	220u 4	M	M	220u 4
C9704	0.1u 16	0.1u 16	M	M	0.1u 16	M	M	0.1u 16
C9705	0.1u 16	0.1u 16	M	M	0.1u 16	M	M	0.1u 16
C9706	1000p 50	1000p 50	M	M	1000p 50	M	M	1000p 50
C9707	10p 50	10p 50	M	M	10p 50	M	M	10p 50
C9716	0.1u 16	0.1u 16	M	M	0.1u 16	M	M	0.1u 16
C9717	100p 50	100p 50	M	M	100p 50	M	M	100p 50
C9718	0.1u 16	0.1u 16	M	M	0.1u 16	M	M	0.1u 16
C9719	1000p 50	1000p 50	M	M	1000p 50	M	M	1000p 50
C9728	1u 10	1u 10	M	M	1u 10	M	M	1u 10
C9729	0.1u 16	0.1u 16	M	M	0.1u 16	M	M	0.1u 16
C9730	330p 50	330p 50	M	M	330p 50	M	M	330p 50
C9731	0.1u 16	0.1u 16	M	M	0.1u 16	M	M	0.1u 16
C9732	0.1u 16	0.1u 16	M	M	0.1u 16	M	M	0.1u 16
C9733	470p 50	470p 50	M	M	470p 50	M	M	470p 50
C9734	470p 50	470p 50	M	M	470p 50	M	M	470p 50
C9735	0.01u 25	0.01u 25	M	M	0.01u 25	M	M	0.01u 25
C9736	0.1u 16	0.1u 16	M	M	0.1u 16	M	M	0.1u 16
C9737	0.1u 16	0.1u 16	M	M	0.1u 16	M	M	0.1u 16
C9738	0.1u 16	0.1u 16	M	M	0.1u 16	M	M	0.1u 16
C9739	0.1u 16	0.1u 16	M	M	0.1u 16	M	M	0.1u 16
C9740	100p 50	100p 50	M	M	100p 50	M	M	100p 50
C9741	470p 50	470p 50	M	M	470p 50	M	M	470p 50
C9742	100p 50	220p 50	220p 50	220p 50	220p 50	220p 50	220p 50	100p 50
C9743	470p 50	470p 50	M	M	470p 50	M	M	470p 50
C9744	0.1u 16	0.1u 16	M	M	0.1u 16	M	M	0.1u 16
C9745	0.1u 16	0.1u 16	M	M	0.1u 16	M	M	0.1u 16
C9746	100p 50	100p 50	M	M	100p 50	M	M	100p 50
C9747	1000p 50	1000p 50	M	M	1000p 50	M	M	1000p 50
C9748	0.1u 16	0.1u 16	M	M	0.1u 16	M	M	0.1u 16
C9749	470p 50	470p 50	M	M	470p 50	M	M	470p 50
C9750	0.1u 16	0.1u 16	M	M	0.1u 16	M	M	0.1u 16
C9751	100p 50	470p 50	470p 50	470p 50	470p 50	470p 50	470p 50	100p 50
C9752	0.1u 16	0.1u 16	M	M	0.1u 16	M	M	0.1u 16
C9753	470p 50	470p 50	M	M	470p 50	M	M	470p 50
C9759	0.1u 16	0.1u 16	M	M	0.1u 16	M	M	0.1u 16
C9760	470p 50	470p 50	M	M	470p 50	M	M	470p 50
R9701	47	47	M	M	47	M	M	47
R9702	0	0	M	M	0	M	M	0
R9707	M	M	0	0	M	0	0	M
R9708	M	M	0	0	M	0	0	M
R9709	M	M	0	0	M	0	0	M
R9714	22	22	M	M	22	M	M	22
R9715	22	22	M	M	22	M	M	22
R9716	22	22	M	M	22	M	M	22
R9717	22	22	M	M	22	M	M	22
R9718	22	22	M	M	22	M	M	22
R9721	0	0	M	M	0	M	M	0
R9722	47	47	M	M	47	M	M	47
R9724	47	47	M	M	47	M	M	47
R9725	47	47	M	M	47	M	M	47
R9728	47k	47k	M	M	47k	M	M	47k
R9729	47	47	M	M	47	M	M	47
R9730	470	470	M	M	470	M	M	470
R9731	10	10	M	M	10	M	M	10
R9733	47	47	M	M	47	M	M	47
R9734	47	47	M	M	47	M	M	47
R9735	47	47	M	M	47	M	M	47
R9736	47	47	M	M	47	M	M	47
R9737	47	47	M	M	47	M	M	47
R9738	47	47	M	M	47	M	M	47
R9739	22	22	M	M	22	M	M	22
R9740	56	56	M	M	56	M	M	56
R9741	22	22	M	M	22	M	M	22
R9742	100	100	M	M	100	M	M	100
R9743	47	47	M	M	47	M	M	47
R9744	47	47	M	M	47	M	M	47
R9746	100	100	M	M	100	M	M	100
R9747	100	100	M	M	100	M	M	100
R9748	100	100	M	M	100	M	M	100
R9758	1M	1M	M	M	1M	M	M	1M
R9764	1M	1M	M	M	1M	M	M	1M
R9766	M	M	M	M	M	0	0	M
R9767	M	M	M	M	M	0	0	M
R9769	M	M	M	M	M	0	0	M
R9770	M	M	M	M	M	0	0	M
L9701	A L7010-A	A L7010-A	M	M	A L7010-A	M	M	A L7010-A
L9702	A L7010-A	A L7010-A	M	M	A L7010-A	M	M	A L7010-A
L9703	L1128-A	L1128-A	M	M	L1128-A	M	M	L1128-A
L9705	L1128-A	L1128-A	M	M	L1128-A	M	M	L1128-A

□□.□□ INTER□ACE ASS□

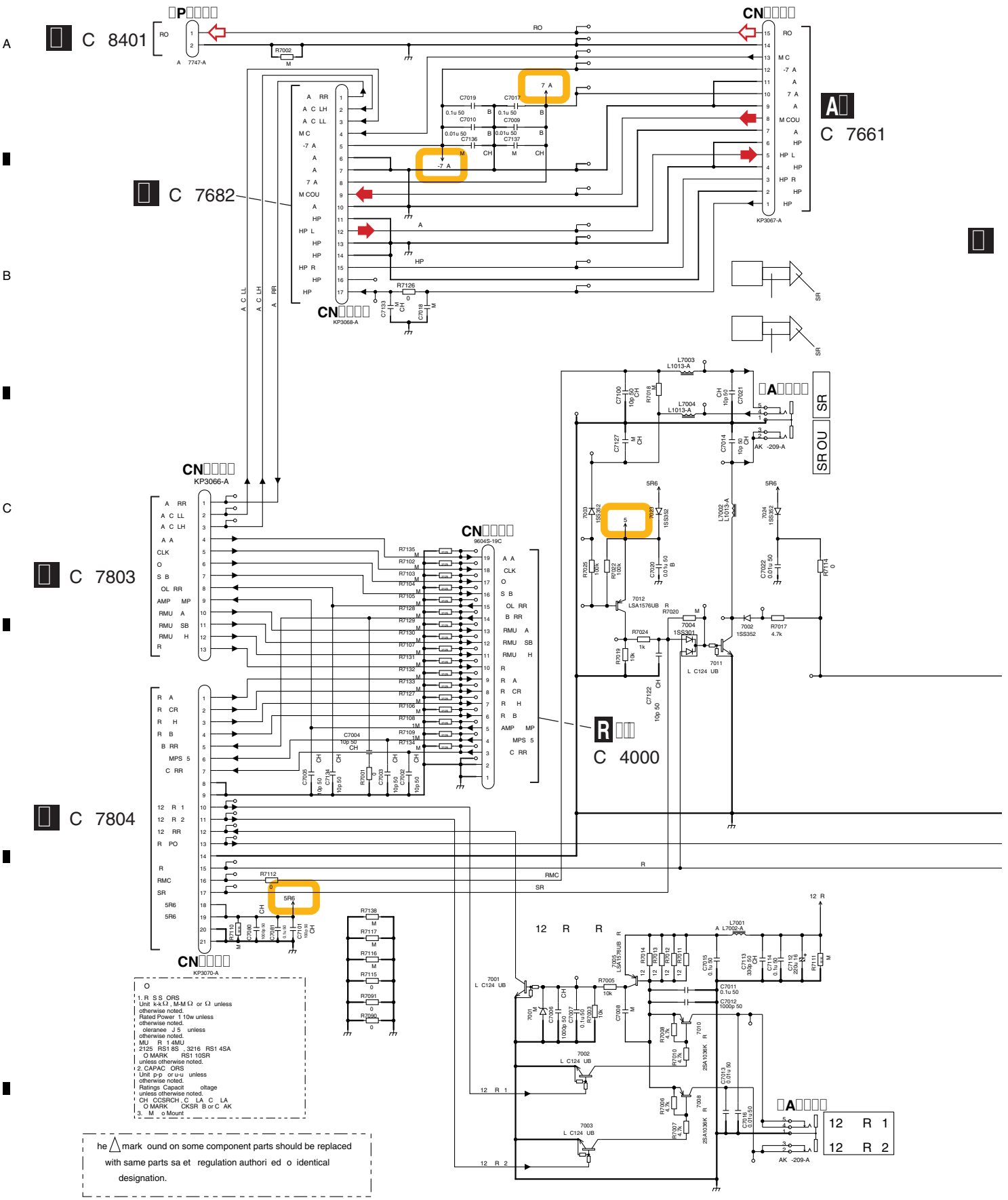

O

1. R S S ORS
Unit k-k kΩ , M-M Ω or Ω unless otherwise noted.
Rated Power 1 10w unless otherwise noted.
oleranee J 5 unless otherwise noted.
MU R 1 4MU
2125 RS1 8S , 3216 RS1 4SA
O MARK RS1 10SR
unless otherwise noted.
2. CAPAC ORS
Unit p-p or u-u unless otherwise noted.
Ratings Capacit oltage unless otherwise noted.
CH CCSRCH , C LA C LA
O MARK CKSR B or C AK
3. M o Mount

he △ mark ound on some component parts should be replaced with same parts sa et regulation authori ed o identical designation.

INTERFACE ASSY (AWX9805)

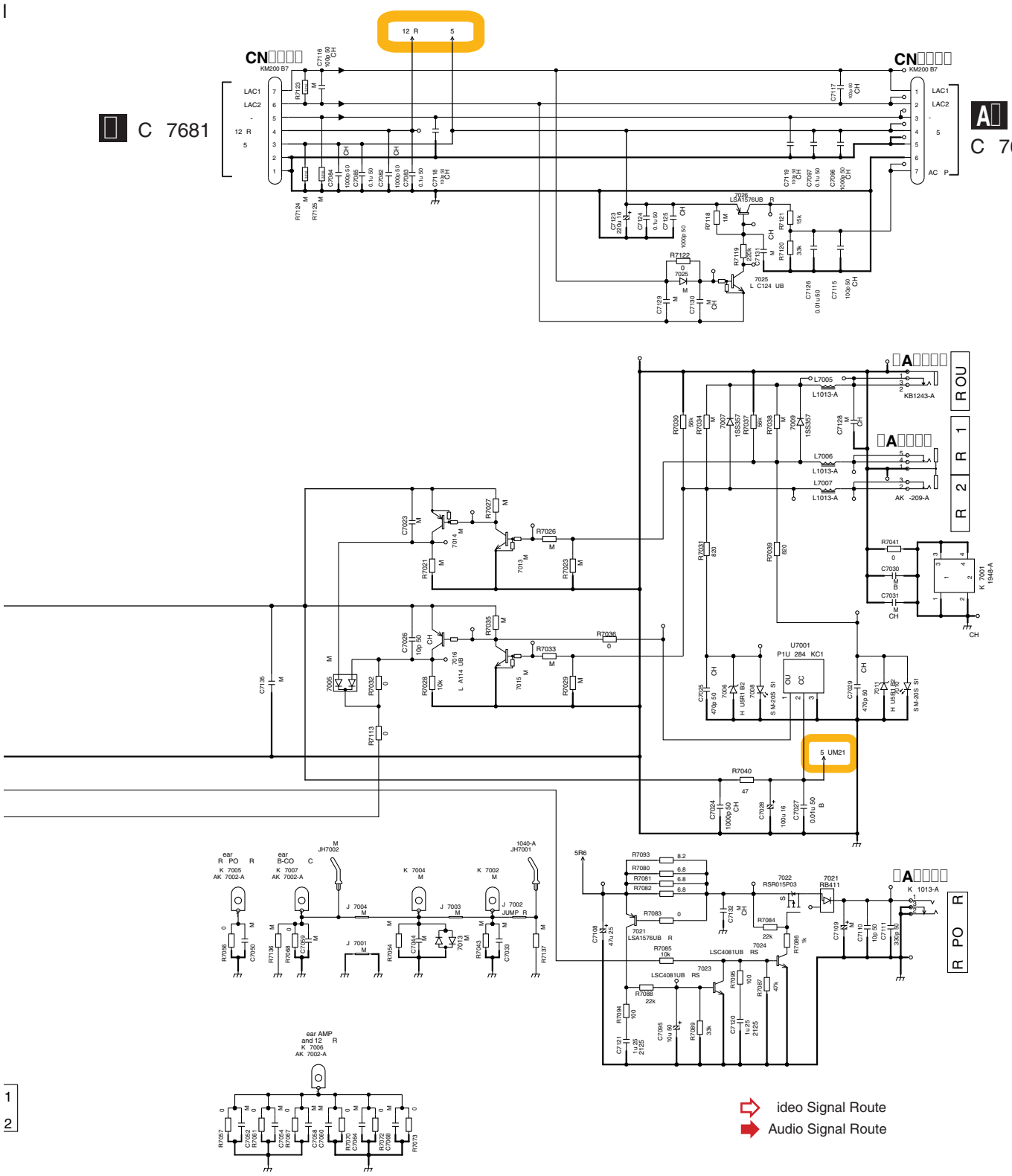

□□.□□ CO□ PONENT ASS□

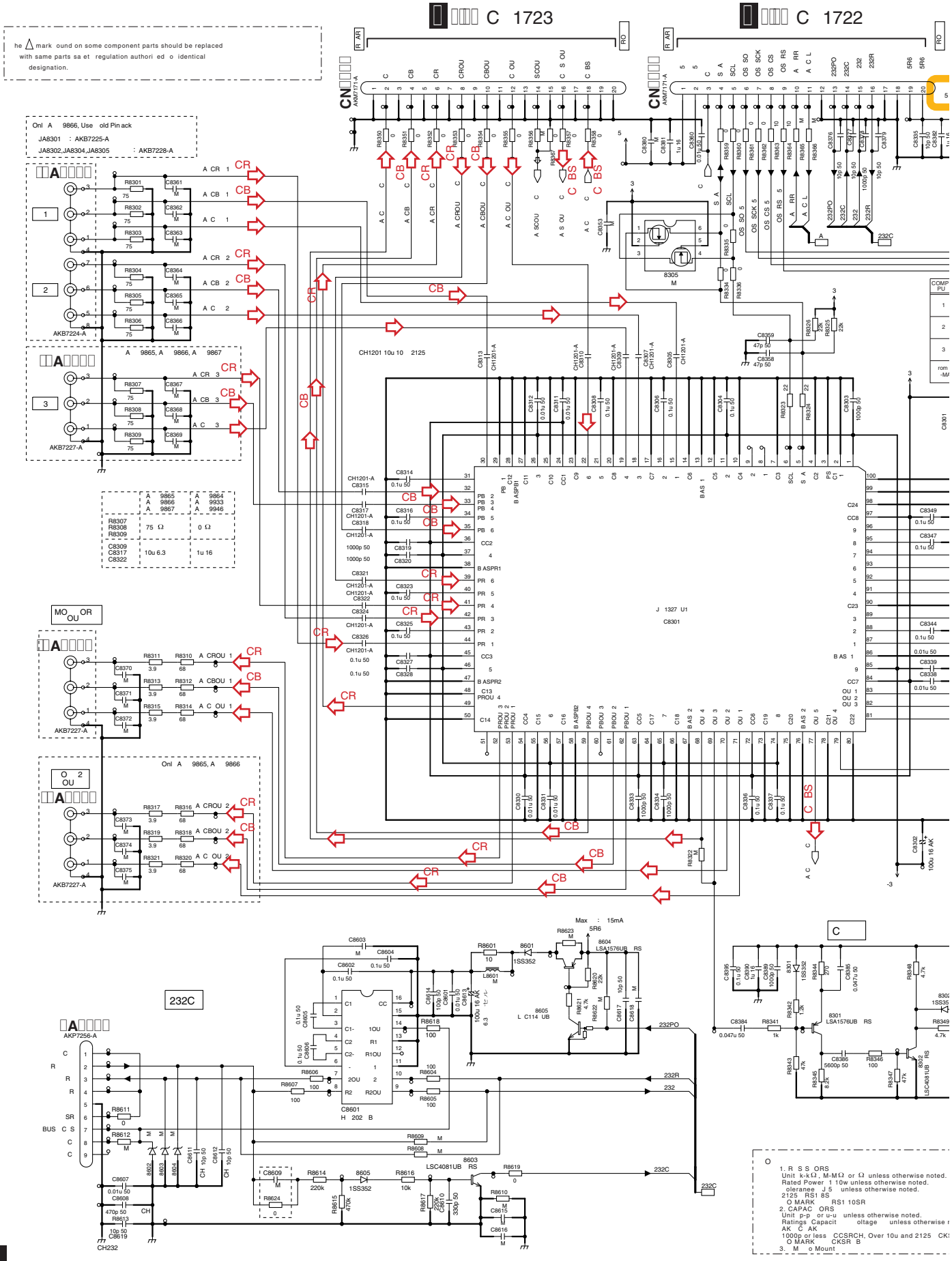

COMPONENT ASSY
(SC-57 :AWX9866)
(SC-55/SC-1526-K:AWX9865)

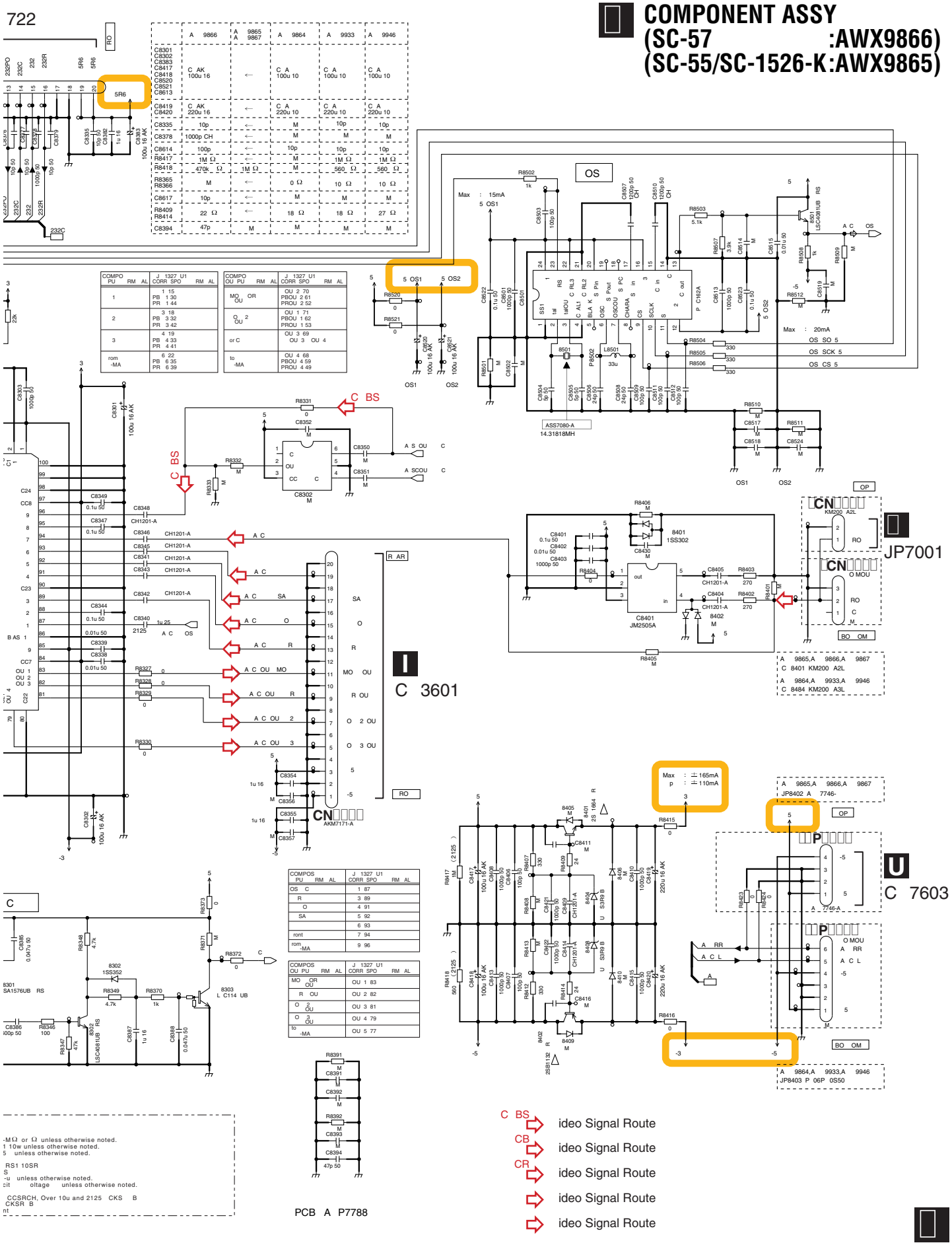

□□.□□ CO□ POSITE ASS□

	AWX9768- /J	AWX9791- /J	AWX9836- /J
JA3601	AKB7229-A	AKB7230-A	AKB7229-A
JA3602	AKB7229-A	AKB7230-A	AKB7229-A
JA3603	AKB7229-A	AKB7230-A	AKB7229-A

	AWX9768- /J	AWX9791- /J	AWX9836- /J
C3608	NM	0.1u/16	0.1u/50
C3610	NM	0.1u/16	0.1u/50
C3618	NM	180p/50	180p/50
R3615	NM	0	0
R3616	NM	68	68
R3617	NM	1k	1k
R3618	NM	100	100
R3619	NM	100	100
R3620	NM	2.2k	2.2k
R3621	NM	220	220
R3635	NM	NM	NM
R3644	NM	220	220
JA3604	NM	AKB7232-A	AKB7231-A
Q3605	NM	LSA1576UB(QR)	LSA1576UB(QRS)
Q3606	NM	HN1C01FU(YGR)	HN1C01FU(YGR)

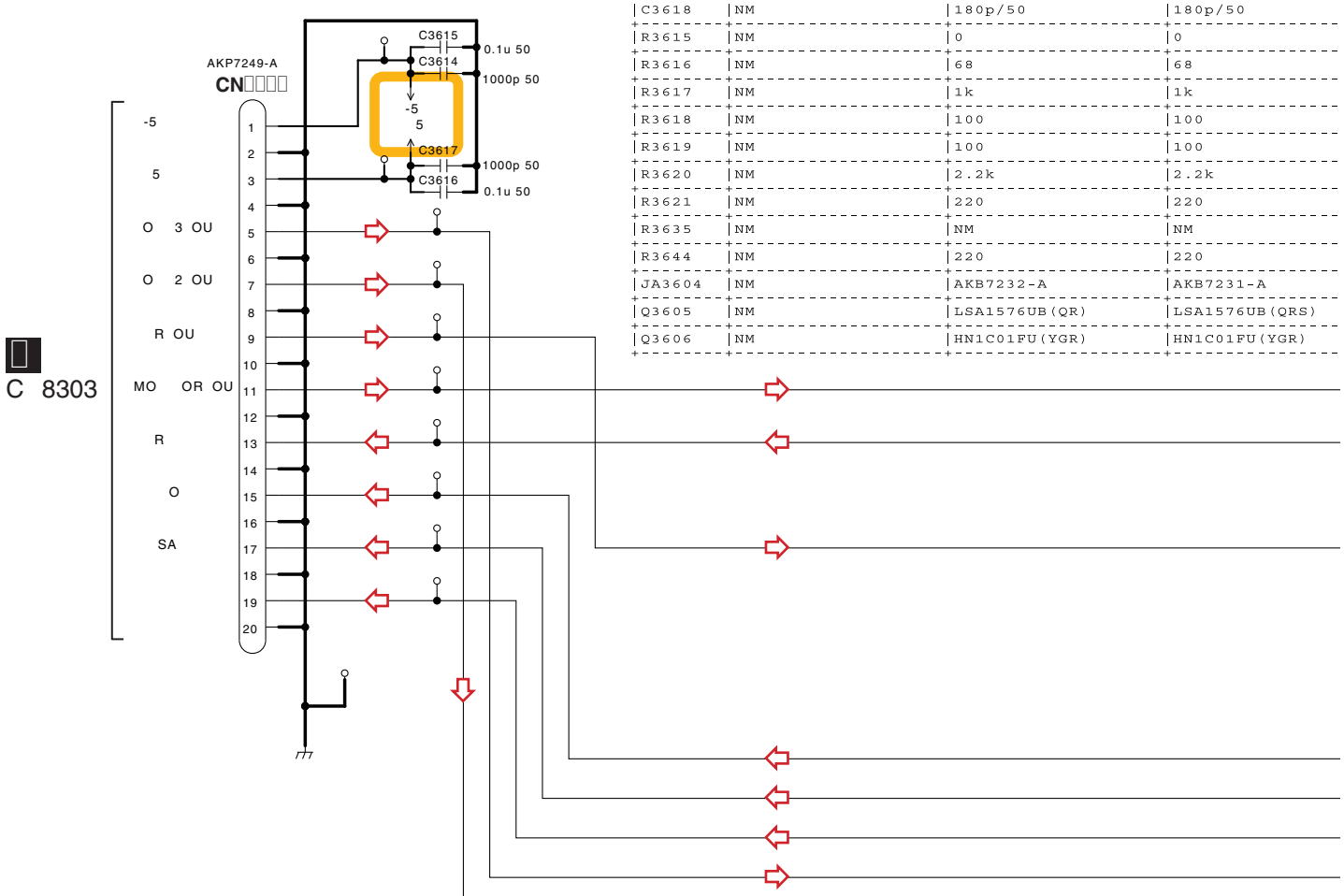

	AWX9768- /J	AWX9791- /J	AWX9836- /J
JA3605	AKB7231-A	AKB7232-A	AKB7231-A

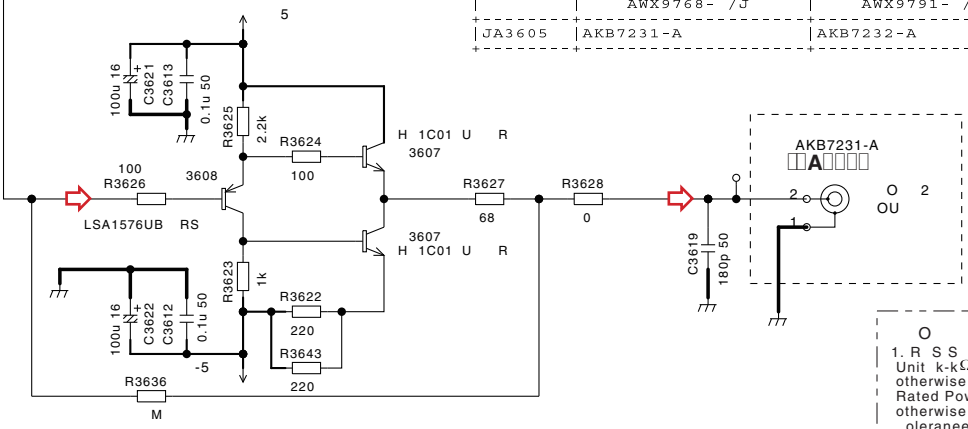

O

1. R S S ORS
Unit k-kΩ, M-MΩ or Ω unless otherwise noted.
Rated Power 1 10w unless otherwise noted.
oleranee J 5 unless otherwise noted.

2. CAPAC ORS
Unit p-p or u-u unless otherwise noted.
Ratings Capacit oltage unless otherwise noted.
CH CCSRCH
O MARK CKSR B

3. M o Mount

ideo Signal Route

COMPOSITE ASSY
(SC-57 :AWX9791)
(SC-55/SC-1526-K:AWX9836)

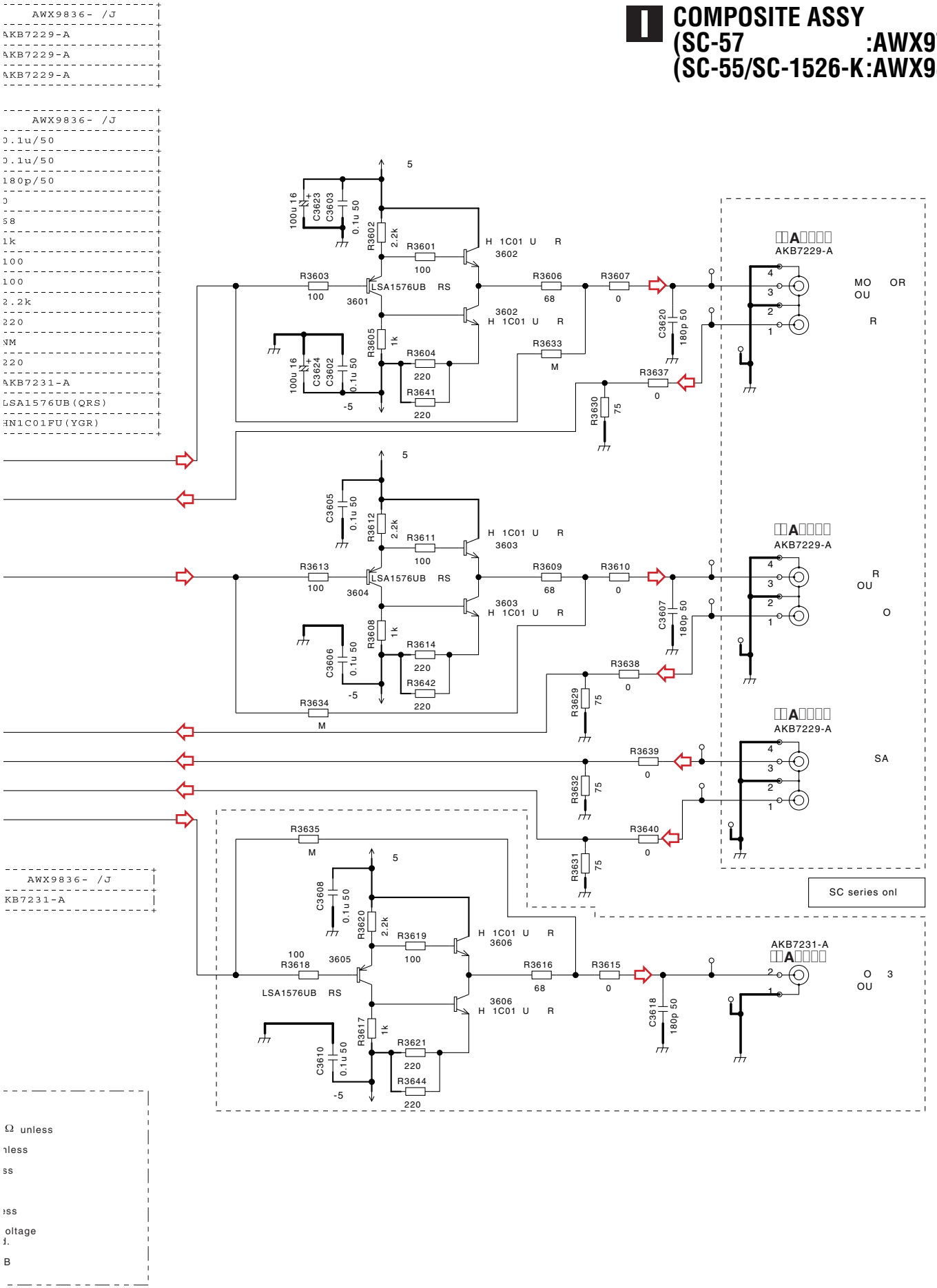

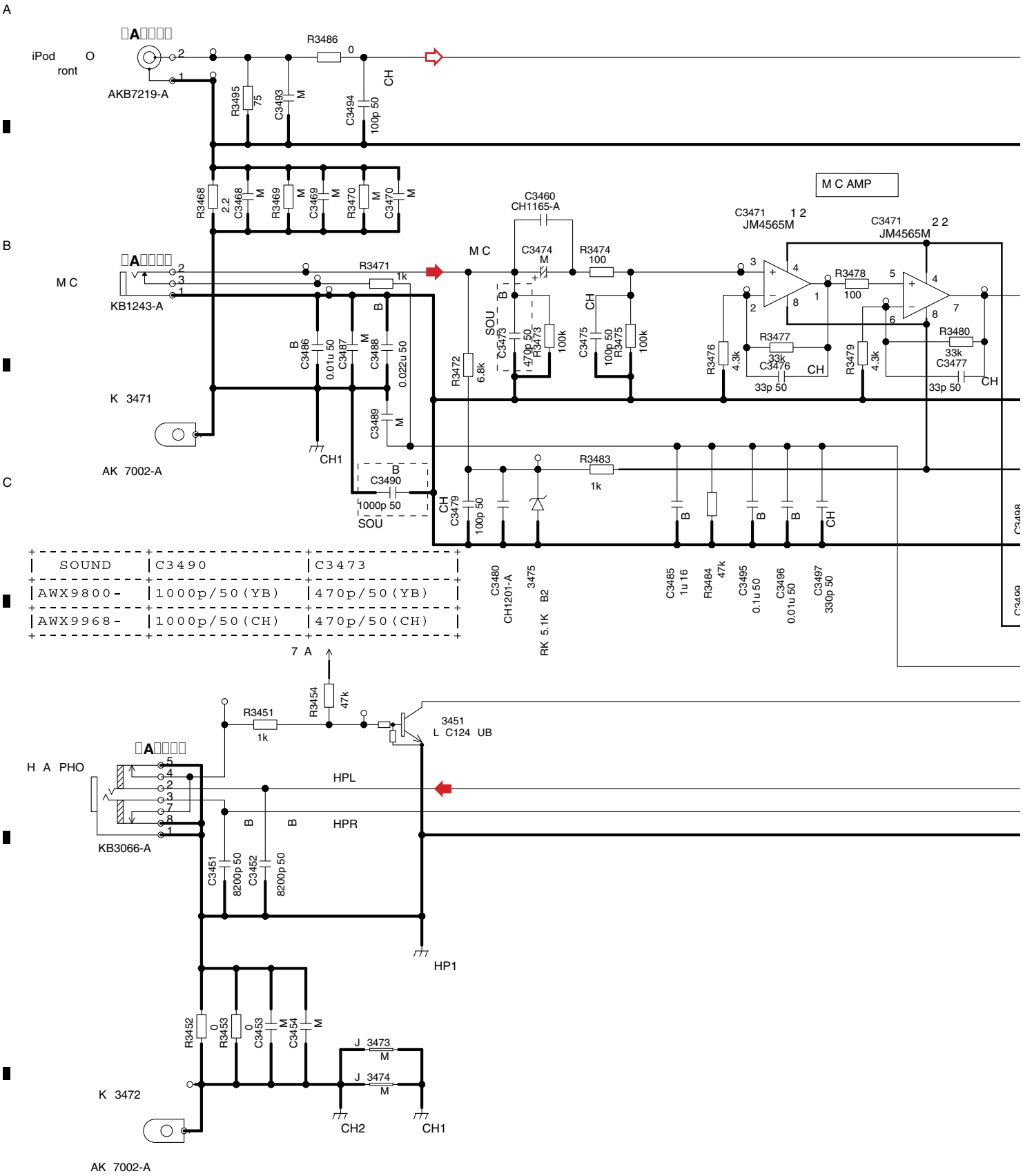

SOUND	C3490	C3473
AWX9800-	1000p/50(YB)	470p/50(YB)
AWX9968-	1000p/50(CH)	470p/50(CH)

MIC HP ASSY (AWX9800)

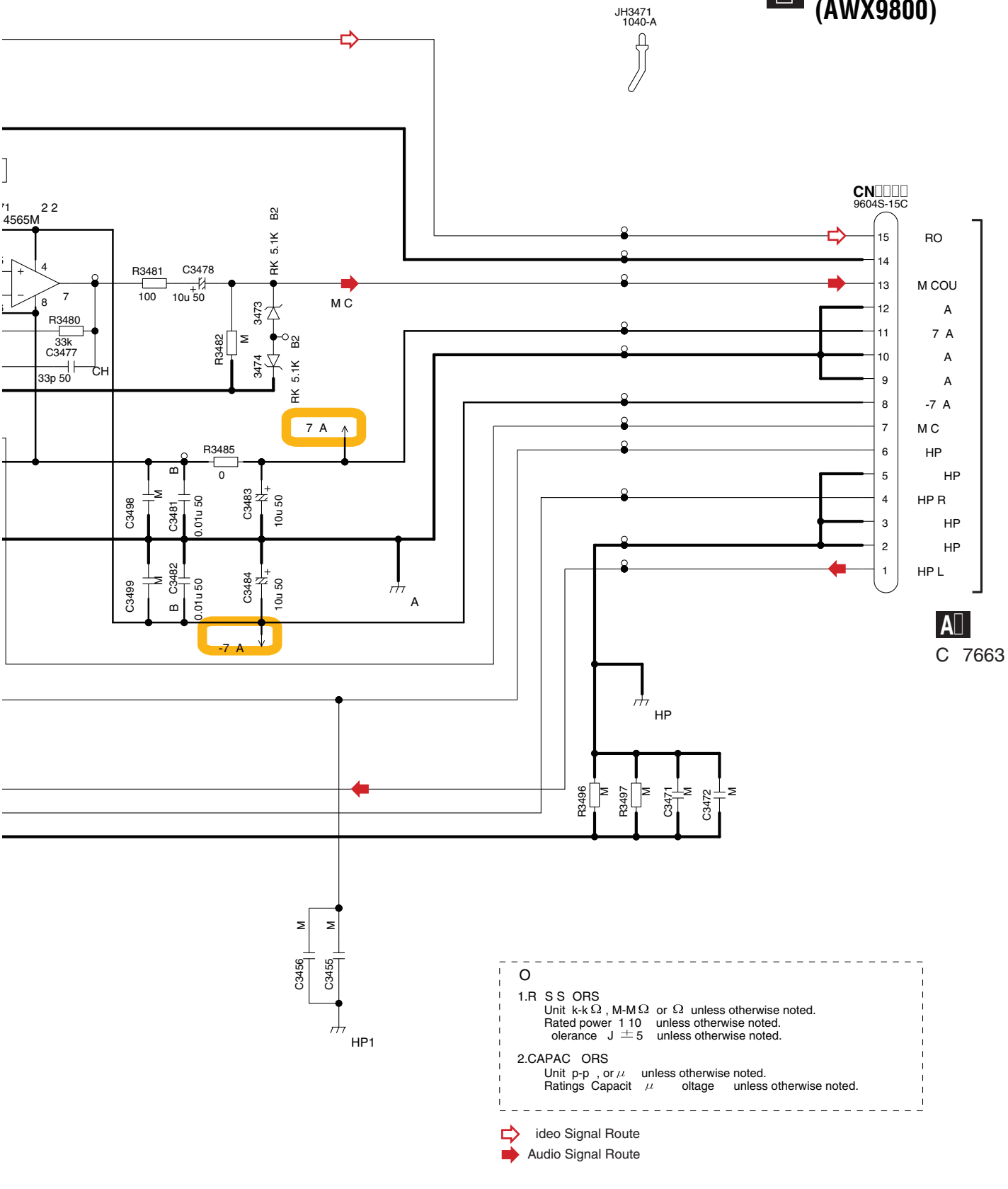

O

1.R S S ORS
Unit k-k Ω , M-M Ω or Ω unless otherwise noted.
Rated power 1 10 unless otherwise noted.
olerance J ± 5 unless otherwise noted.

2.CAPAC ORS
Unit p-p , or μ unless otherwise noted.
Ratings Capacit μ oltage unless otherwise noted.

ideo Signal Route
Audio Signal Route

□□.□□ DISPLA□ ASS□

	LED1-2	C3218	C3338	R3079	R3095	R3114	R3211	R3212	R3213	R3214	R3241	R3242	R3243	R3244	R3245	R3356	D3204	D3206	D3208	D3210	D3212	Q3207	Q3210
A	AWX9796-/AWX9967-	47p/50	10p/50	NM	100	NM	NM	NM	NM	NM	150	150	150	150	150	100	SLR343BC4T(JKLM)	SLR343BC4T(JKLM)	SLR343BC4T(JKLM)	SLR343BC4T(JKLM)	SLR343BC4T(JKLM)	LTC124EUB	LTC124EU
	AWX9870-	47p/50	10p/50	NM	100	NM	NM	NM	NM	NM	150	150	150	150	150	100	SLR343BC4T(JKLM)	SLR343BC4T(JKLM)	SLR343BC4T(JKLM)	SLR343BC4T(JKLM)	SLR343BC4T(JKLM)	LTC124EUB	LTC124EU
	AWX9847-	NM	NM	0	NM	0	0	0	0	0	680	680	680	680	NM	NM	SLR-343VC(NPQ)	SLR-343VC(NPQ)	SLR-343VC(NPQ)	SLR-343VC(NPQ)	NM	NM	NM

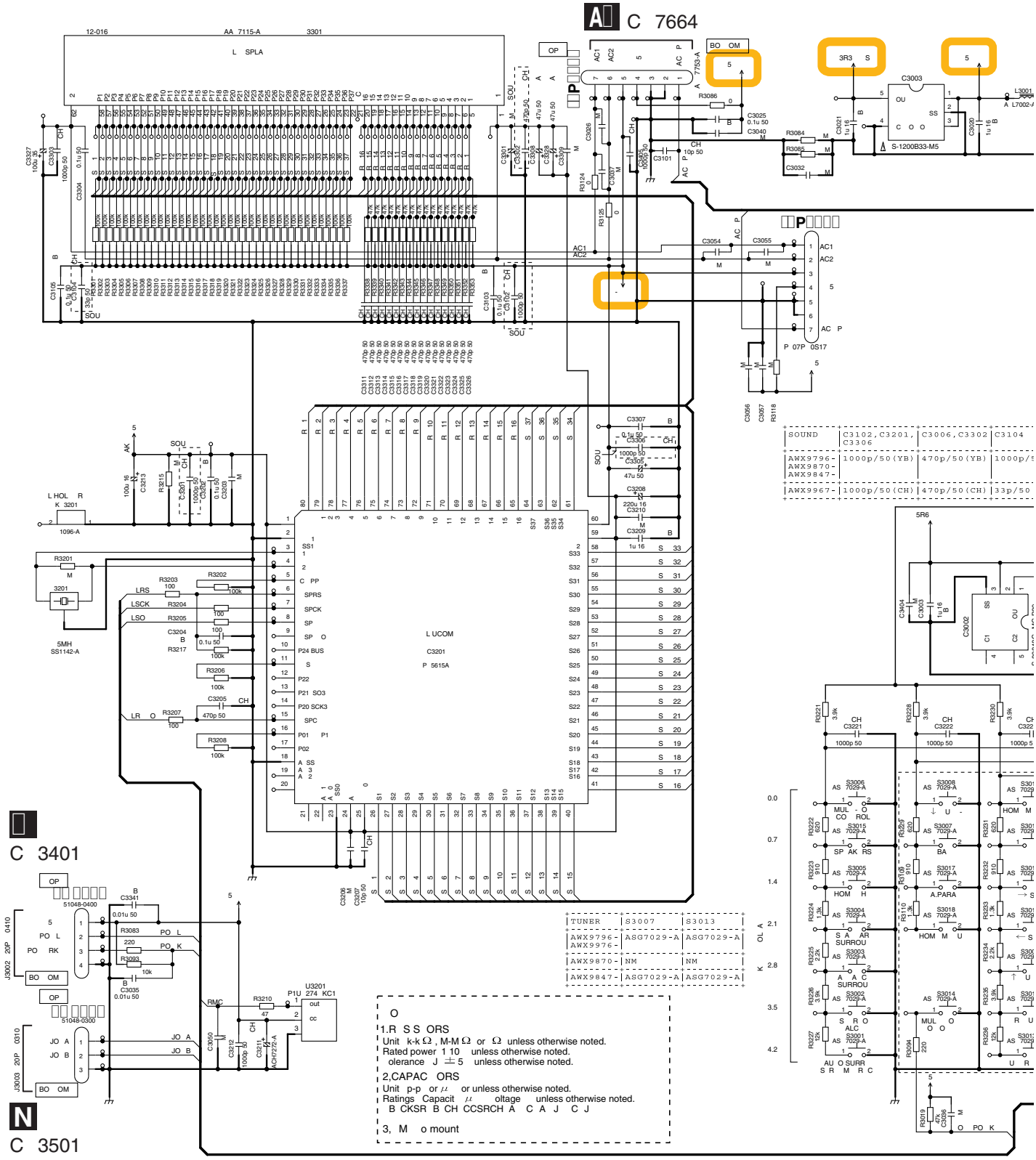

SOUND	C3102,C3201,C3306	C3006,C3302	C3104
AWX9796- AWX9870- AWX9847-	1000p/50(YB)	470p/50(YB)	1000p/5
AWX9967-	1000p/50(CH)	470p/50(CH)	33p/50

TUNER	S3007	S3013
AWX9796- AWX9976-	ASG7029-A	ASG7029-A
AWX9870-	NM	NM
AWX9847-	ASG7029-A	ASG7029-A

O

1.R S S ORS
Unit k-k Ω , M-M Ω or Ω unless otherwise noted.
Rated power 1 10 unless otherwise noted.
olerance J ± 5 unless otherwise noted.

2,CAPAC ORS
Unit p-p or μ or unless otherwise noted.
Ratings Capacit μ oltage unless otherwise noted.
B CKSR B CH CCSRCH A C A J C J

3, M o mount

he △ mark ound on some component parts should be replaced with same parts sa et regulation authori ed o identical designation.

DISPLAY ASSY
(SC-57/SC-55 :AWX9796)
(SC-1526-K :AWX9847)

AE C 7652

	Q3207	Q3210	Q3211	Q3212	Q3213	C3048	R3068
BC4T(JKLM)	LTC124EUB	LTC124EUB	LTC124EUB	LTC124EUB	LTC124EUB	10p/50	1k
BC4T(JKLM)	LTC124EUB	LTC124EUB	LTC124EUB	LTC124EUB	LTC124EUB	10p/50	1k
	NM	NM	NM	NM	NM	NM	NM

	C3006,C3302	C3104
)	470p/50(YB)	1000p/50(YB)
)	470p/50(CH)	33p/50(CH)

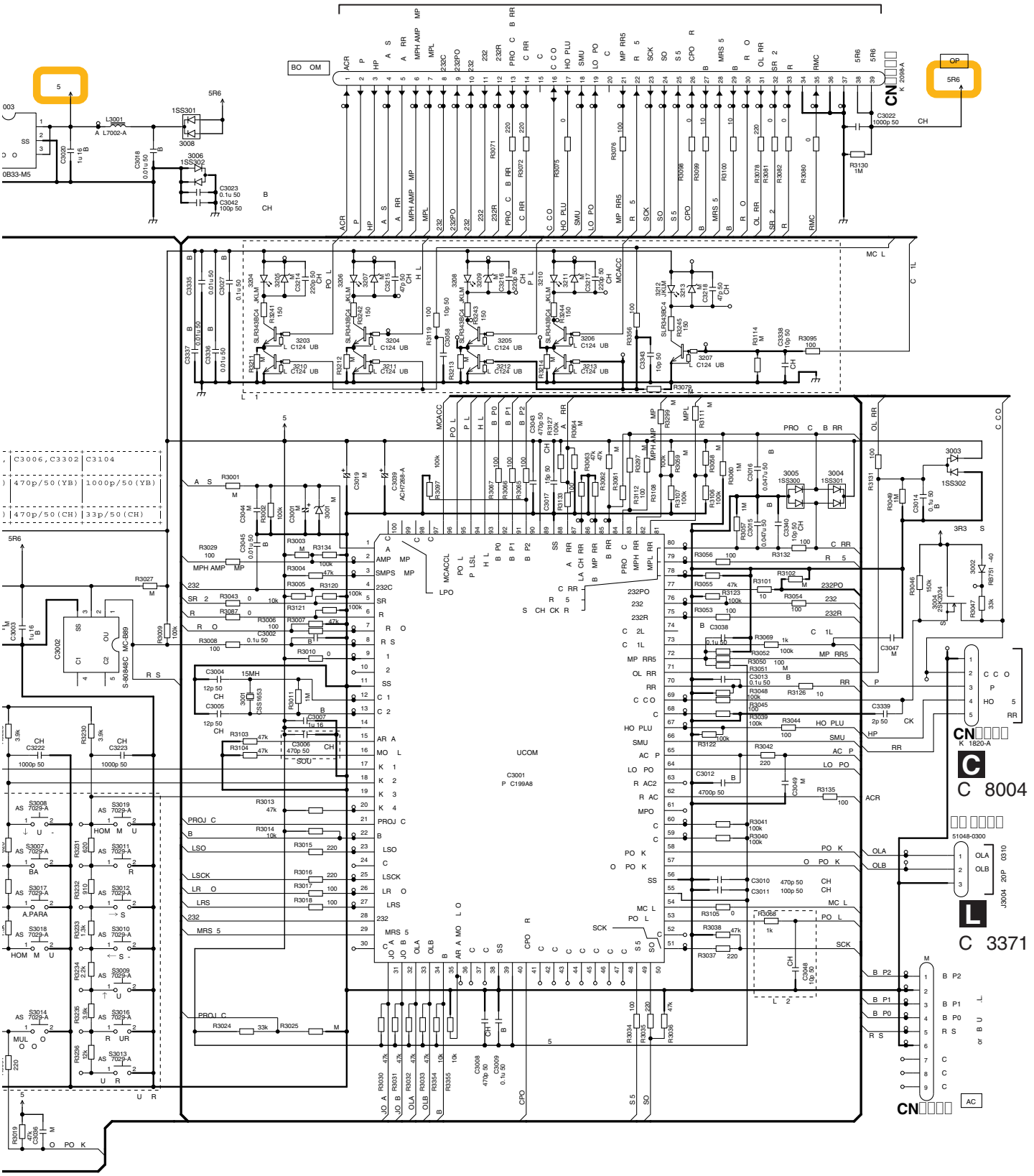

□□.□□ VOL □□□ PO□ ER S□ ASS□S

A

L VOL ASSY (AWX9797)

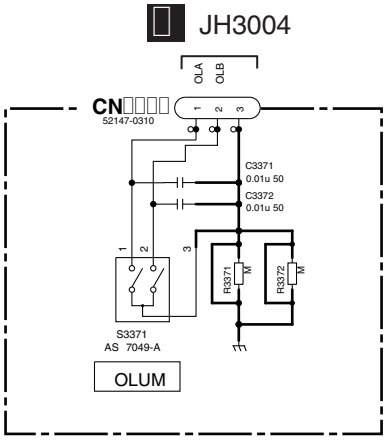

B

C

□ POWER SW ASSY (SC-57/SC-55 :AWX9798) (SC-1526-K :AWX9901)

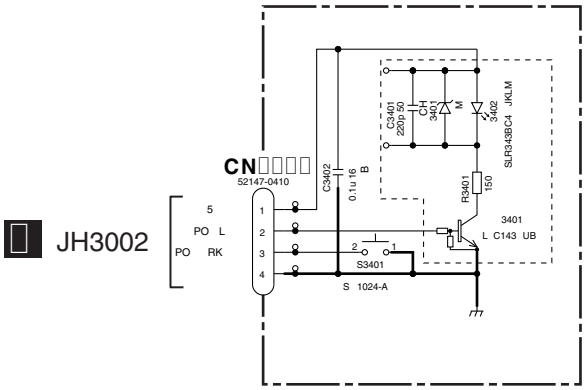

	AWX9798-	AWX9901-
C3401	220p/50	NM
R3401	150	NM
D3402	SLR343BC4T(JKLM)	NM
Q3401	LTC143EUB	NM

O

1.R S S ORS
Unit k-k Ω , M-M Ω or Ω unless otherwise noted.
Rated power 1 10 unless otherwise noted.
olerance J ± 5 unless otherwise noted.

2,CAPAC ORS
Unit p-p or μ or unless otherwise noted.
Ratings Capacit μ oltage unless otherwise noted.
B CKSR B CH CCSRCH A C A J C J

3, M o mount

□□.□□ ENCODER ASS□

A

N ENCODER ASSY (AWX9801)

B

JH3003

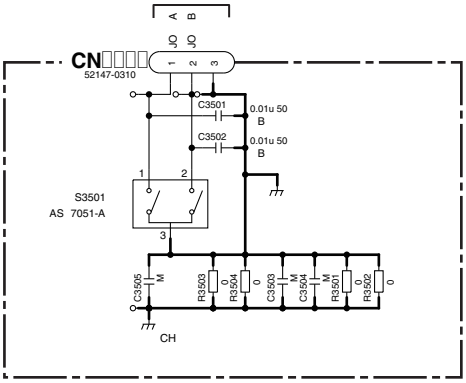

C

O

1.R S S ORS
Unit k-k Ω , M-M Ω or Ω unless otherwise noted.
Rated power 1 10 unless otherwise noted.
olerance J ± 5 unless otherwise noted.

2.CAPAC ORS
Unit p-p , or μ unless otherwise noted.
Ratings Capacit μ oltage unless otherwise noted.

3. M o mount

N N

IR BUFFER ASSY (AWX9793)

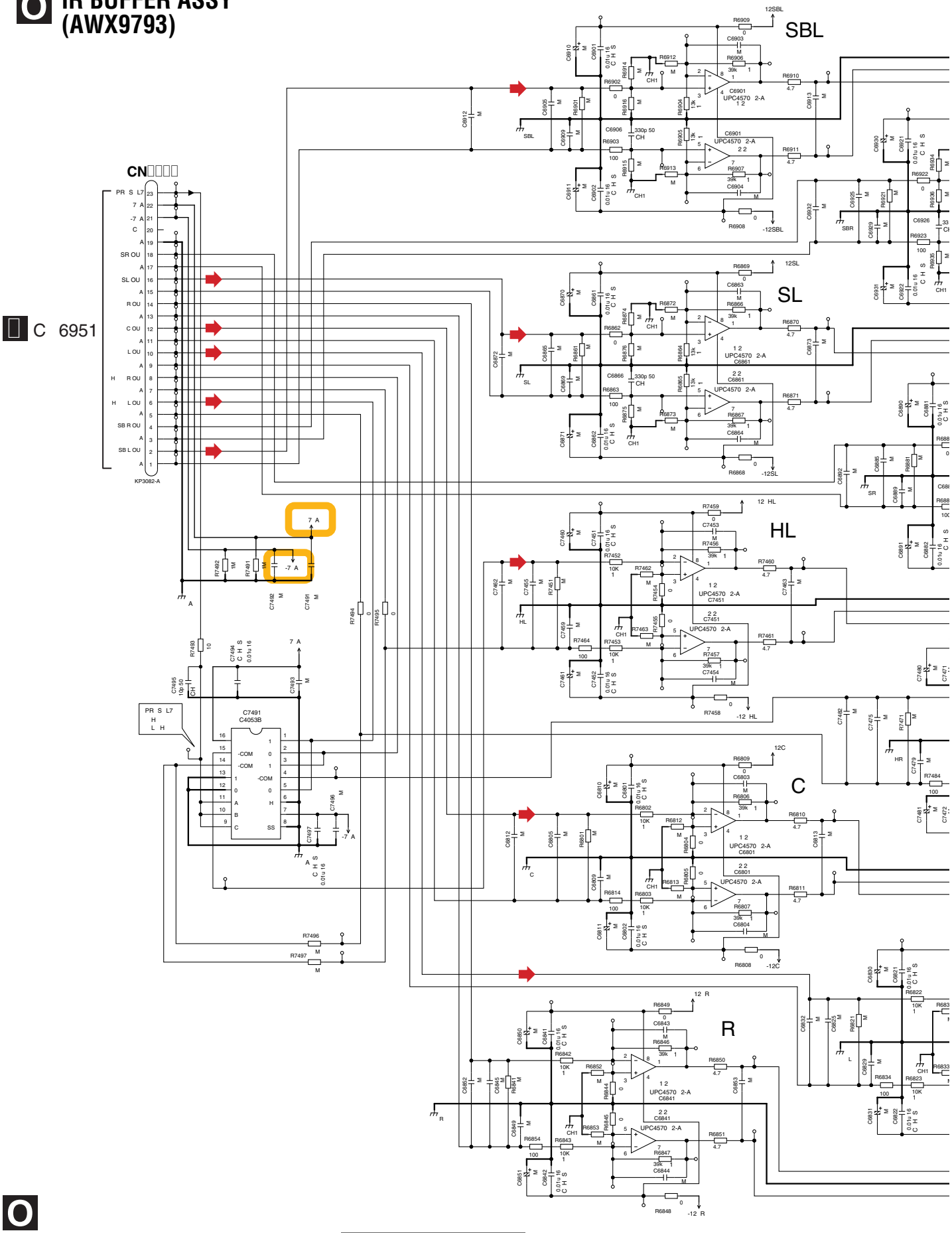

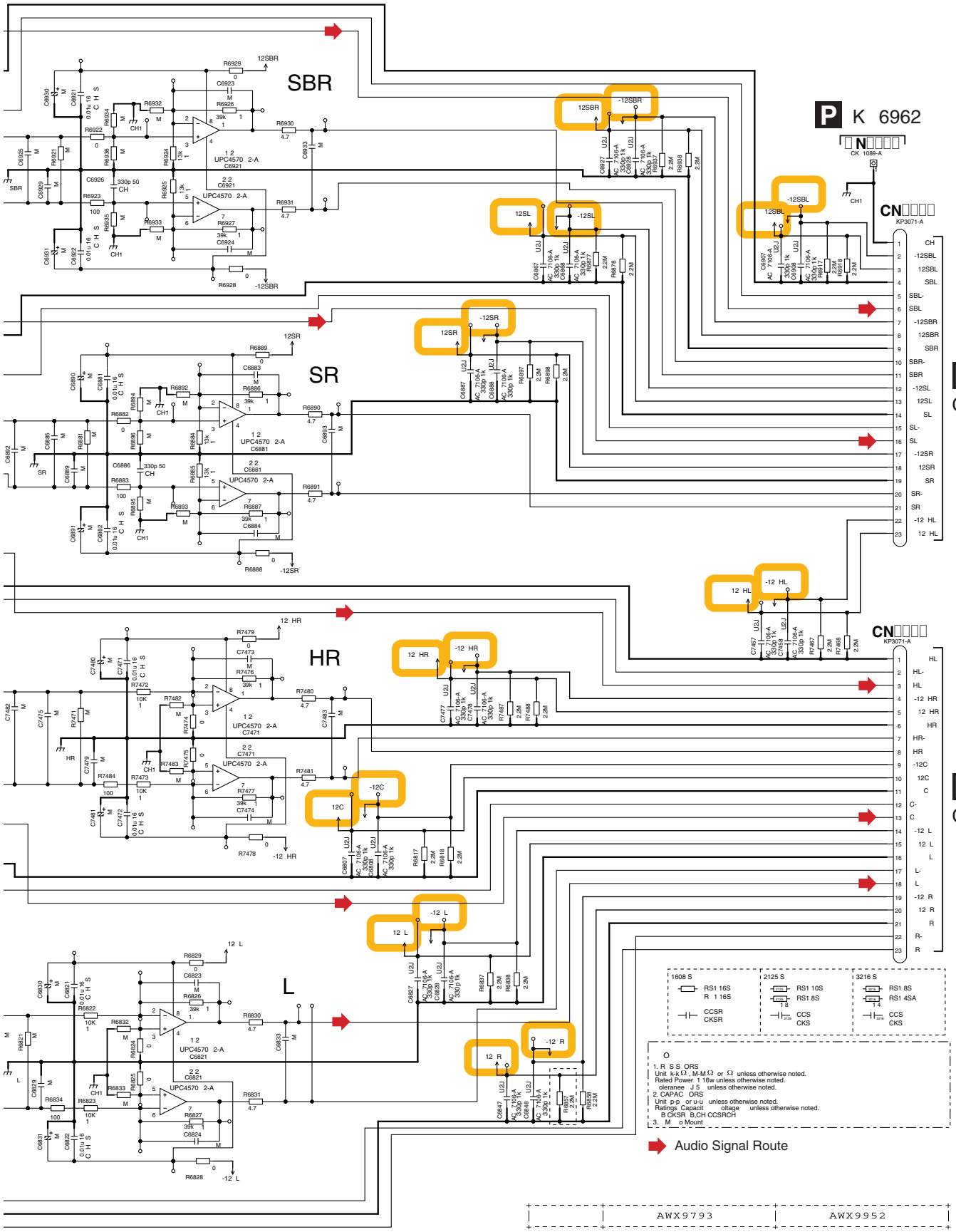
SBR
SR
HR
L
P K 6962
CN
KP3071-A
C 3801
C 3802
UPC4570 2-A
Audio Signal Route
AWX9793
AWX9952
R6857
1M
240k

P BUFFER GND ASSY (AWX9795)

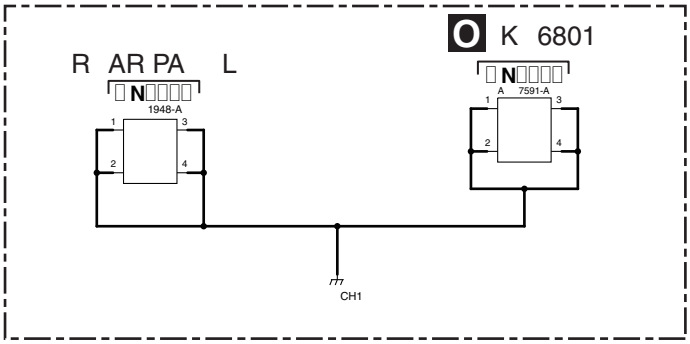

O
C 6802

O
C 6803

O

1. R S S ORS
Unit k-k Ω , M-M Ω or Ω unless otherwise noted.
Rated Power 1 16w unless otherwise noted.
oleranee J 5 unless otherwise noted.
2. CAPAC ORS
Unit p-p or u-u unless otherwise noted.
Ratings Capacit oltage unless otherwise noted.
B CKSR B,CH CCSRCH
3. M o Mount

1608 S	2125 S	3216 S
RS1 16S R 1 16S	RS1 10S RS1 8S 1 8	RS1 8S RS1 4SA 1 4
CCSR CKSR	CCS CKS	CCS CKS

IR INTERFACE ASSY (AWX9792)

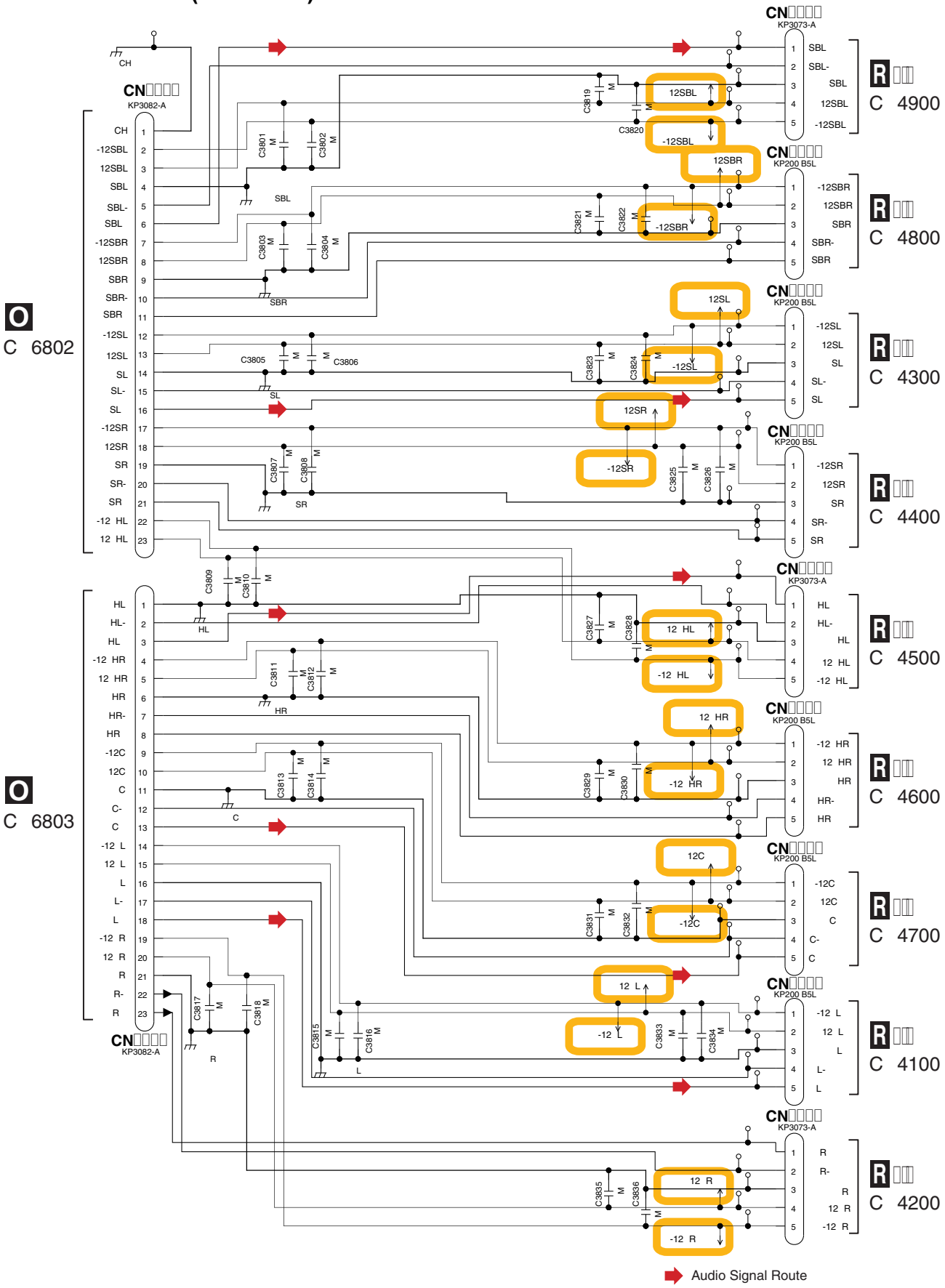

□□.□□ IR PO□ ER A□ P ASS□ (□□□)

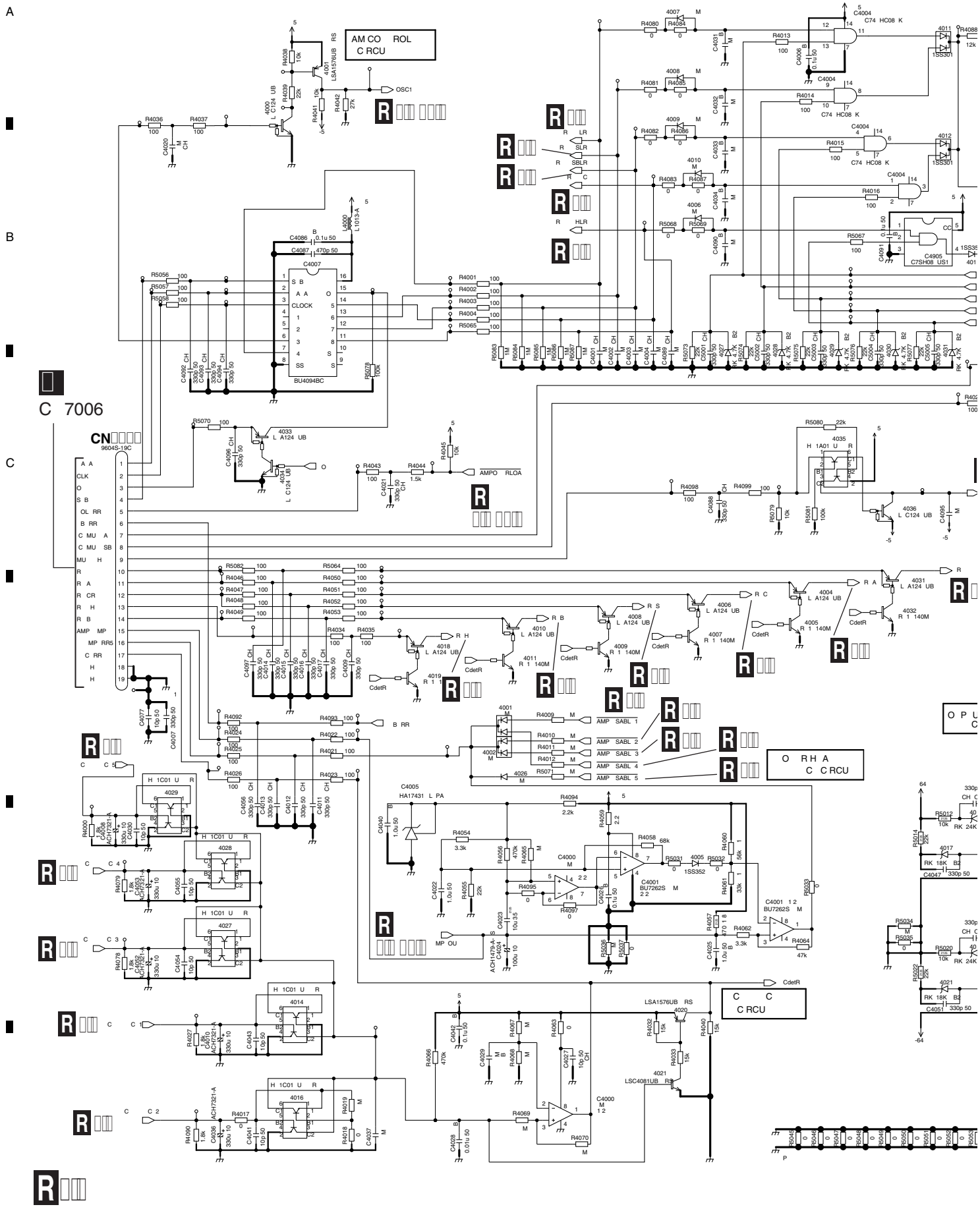

IR POWER AMP ASSY (1/6)
(SC-57 : AWH7030)
(SC-55/SC-1526-K : AWH7039)

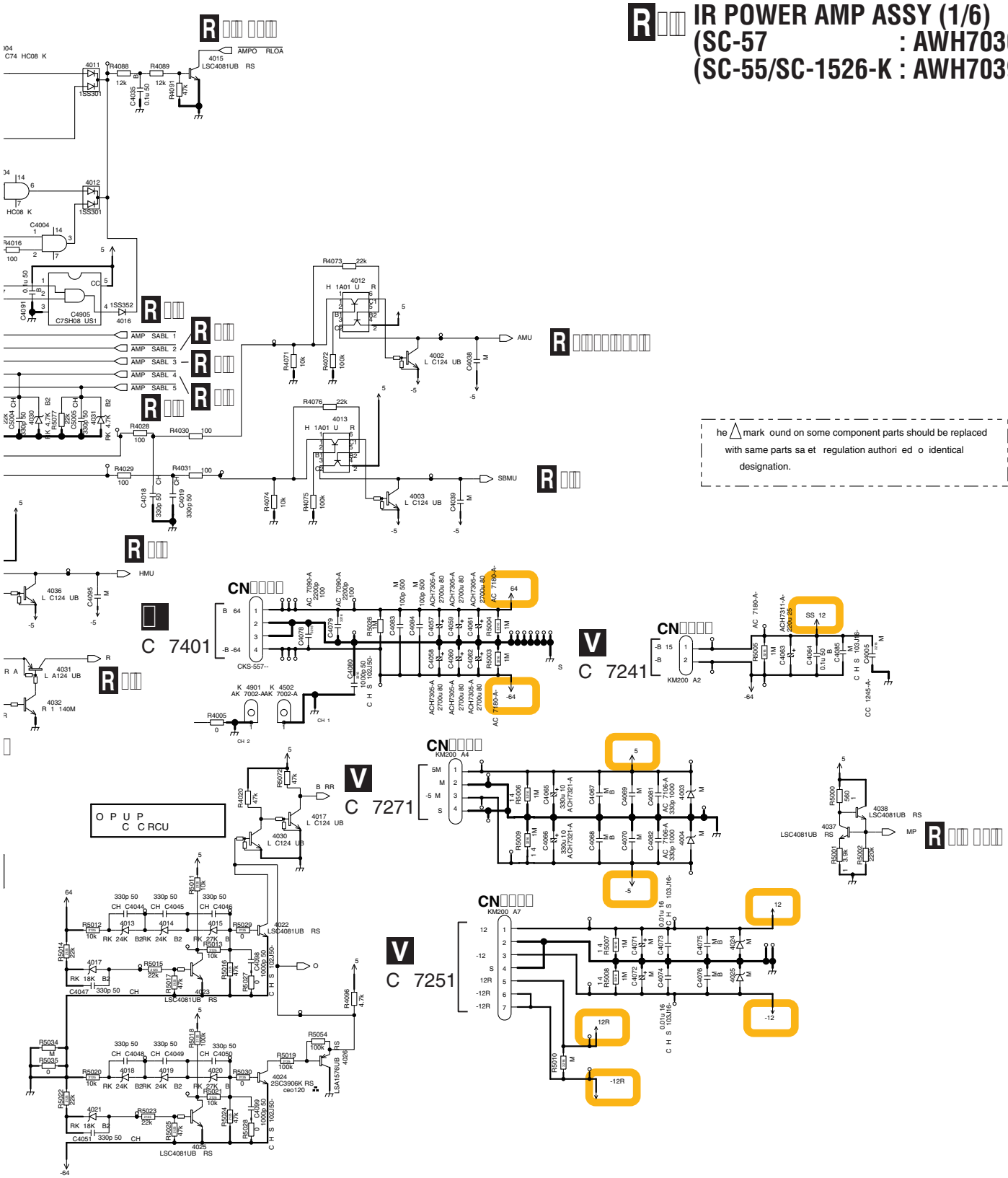

O
1. R S S ORS
Unit k-k Ω , M-M Ω or Ω unless otherwise noted.
Rated Power 1 16w unless otherwise noted.
oleranee J 5 unless otherwise noted.
2. CAPAC ORS
Unit p-p or u-u unless otherwise noted.
Ratings Capacit oltage unless otherwise noted.
B CKSR B, B CKS B,S B CKS B, CH CCSRCH
HA C HA , L C HA L
3. M o Mount

1608 S	2125 S	3216 S
RS1 16S	RS1 10S	RS1 8S
R 1 16S	RS1 8S	RS1 4SA
CCSR	CCS	CCS
CKSR	CKS	CKS

□□.□□ IR PO□ ER A□ P ASS□ (□□□)

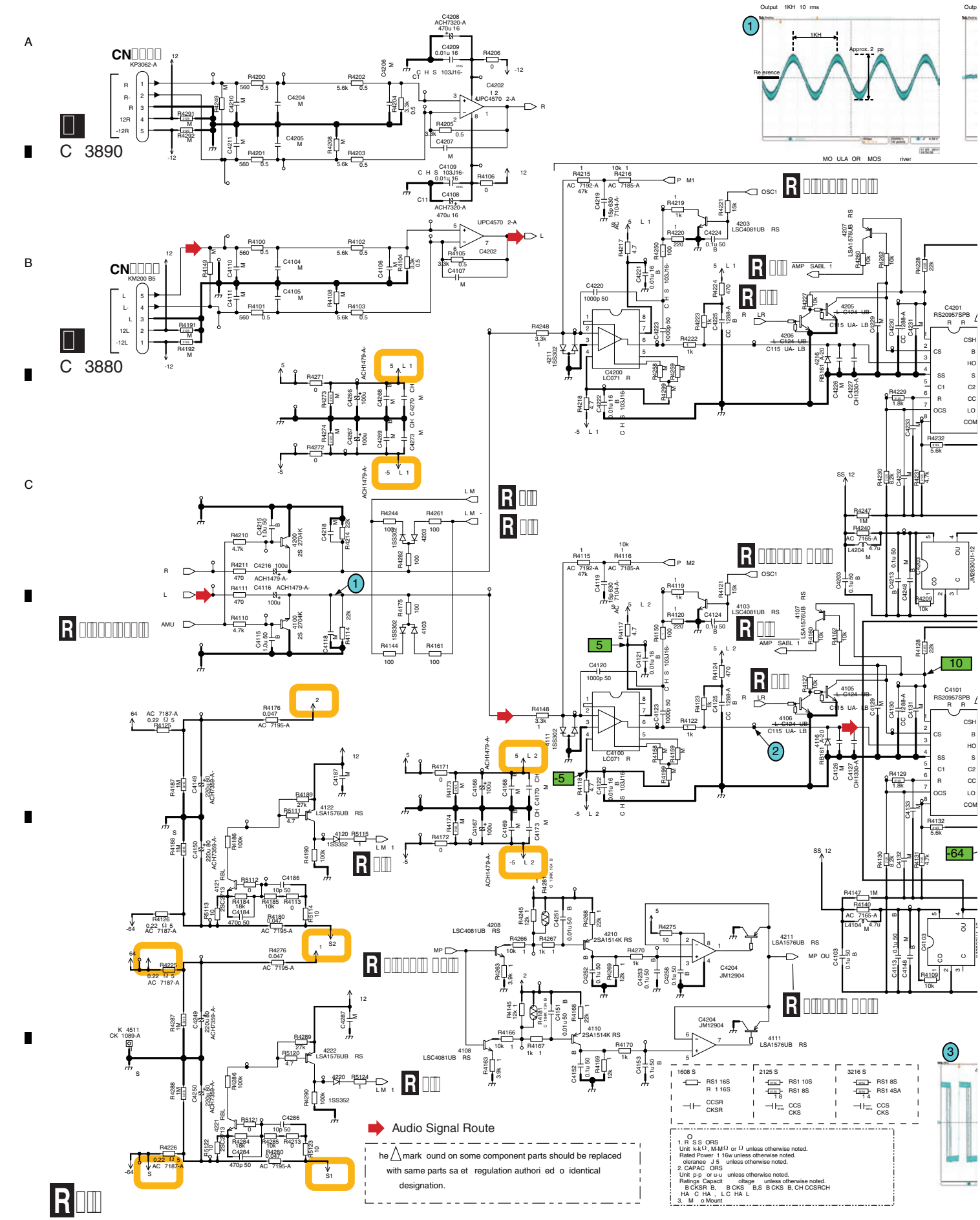

IR POWER AMP ASSY (2/6)
(SC-57 : AWH7030)
(SC-55/SC-1526-K : AWH7039)

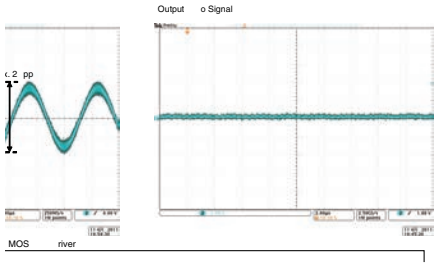

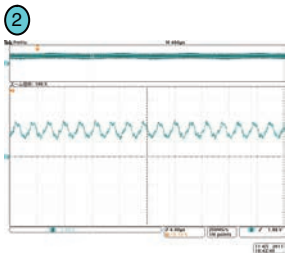

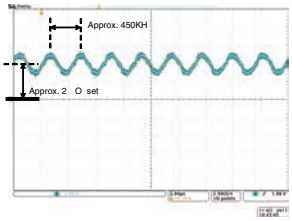

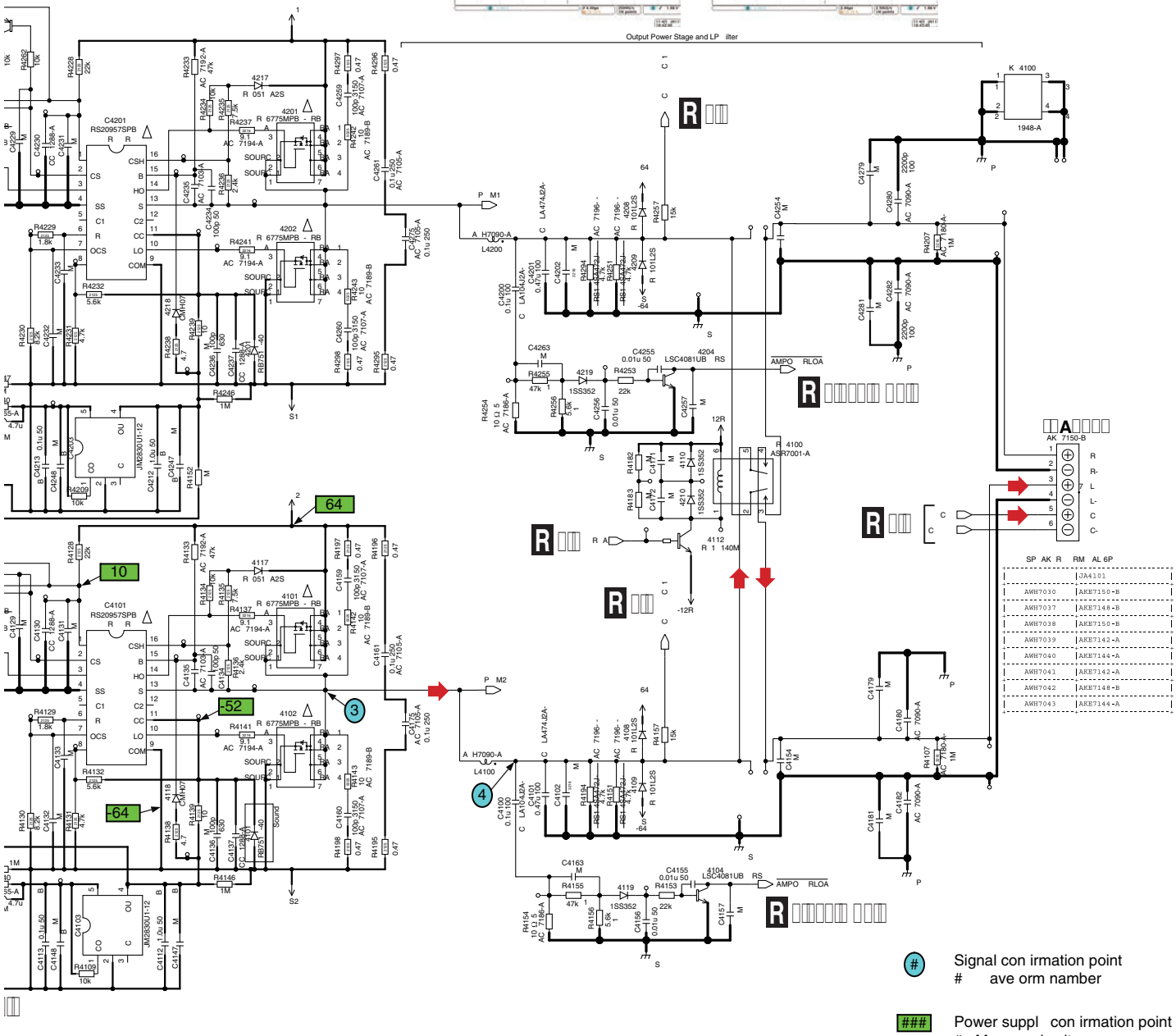

	JA4101
AWH7030	AKE7150-B
AWH7037	AKE7148-B
AWH7038	AKE7150-B
AWH7039	AKE7142-A
AWH7040	AKE7144-A
AWH7041	AKE7142-A
AWH7042	AKE7148-B
AWH7043	AKE7144-A

Signal con irmation point
ave orm namber

Power suppl con irmation point
Measured voltage

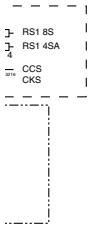

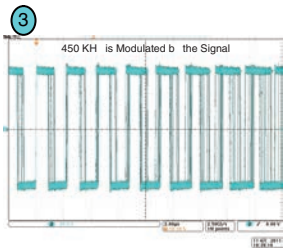

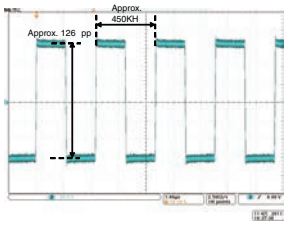

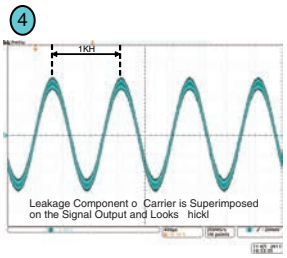

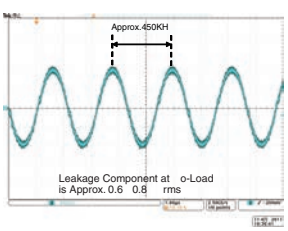

□□.□□ IR PO□ ER A□ P ASS□ (□□□)

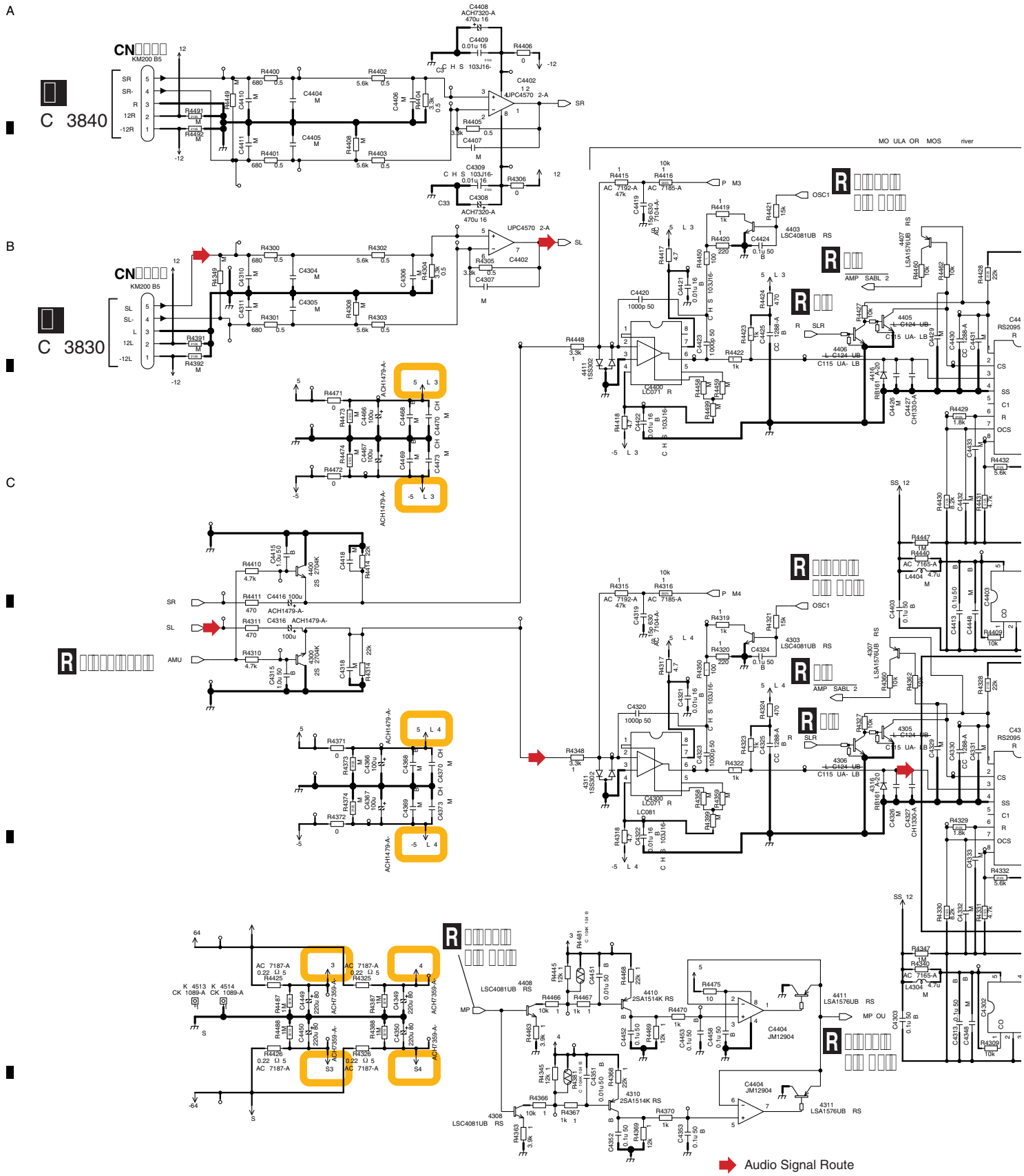

R□□□

R IR POWER AMP ASSY (3/6)
(SC-57 : AWH7030)
(SC-55/SC-1526-K : AWH7039)

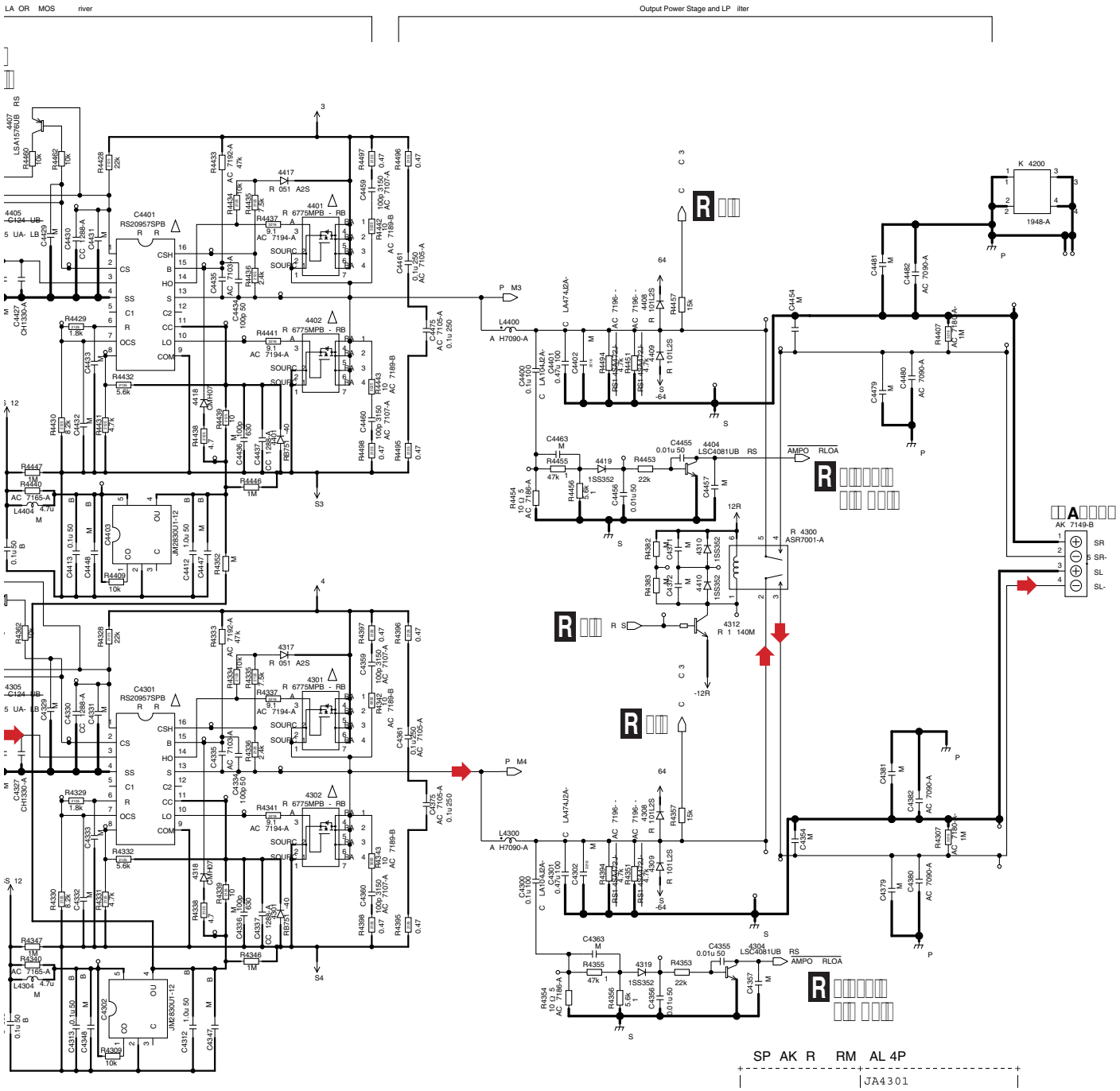

SP AK R RM AL 4P	
	JA4301
AWH7030	AKE7149-B
AWH7037	AKE7147-B
AWH7038	AKE7149-B
AWH7039	AKE7141-A
AWH7040	AKE7143-A
AWH7041	AKE7141-A
AWH7042	AKE7147-B
AWH7043	AKE7143-A

1608 S	2125 S	3216 S
RS1 16S R 1 16S CCSR CKSR	RS1 10S RS1 8S 1 8 CCS CKS	RS1 8S RS1 4SA 1 4 CCS CKS

□□.□□ IR PO□ ER A□ P ASS□ (□□□)

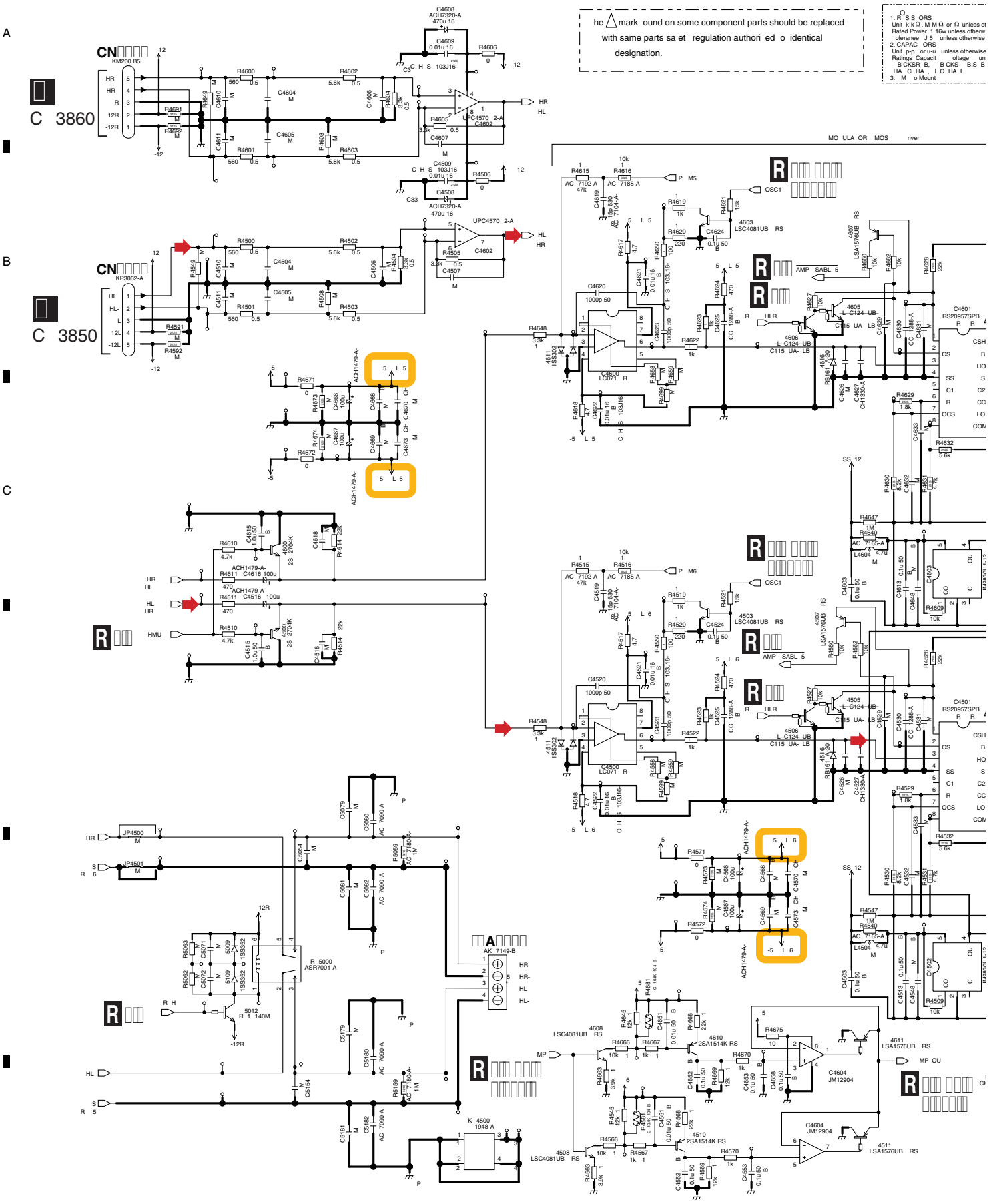

IR POWER AMP ASSY (4/6)
(SC-57 : AWH7030)
(SC-55/SC-1526-K : AWH7039)

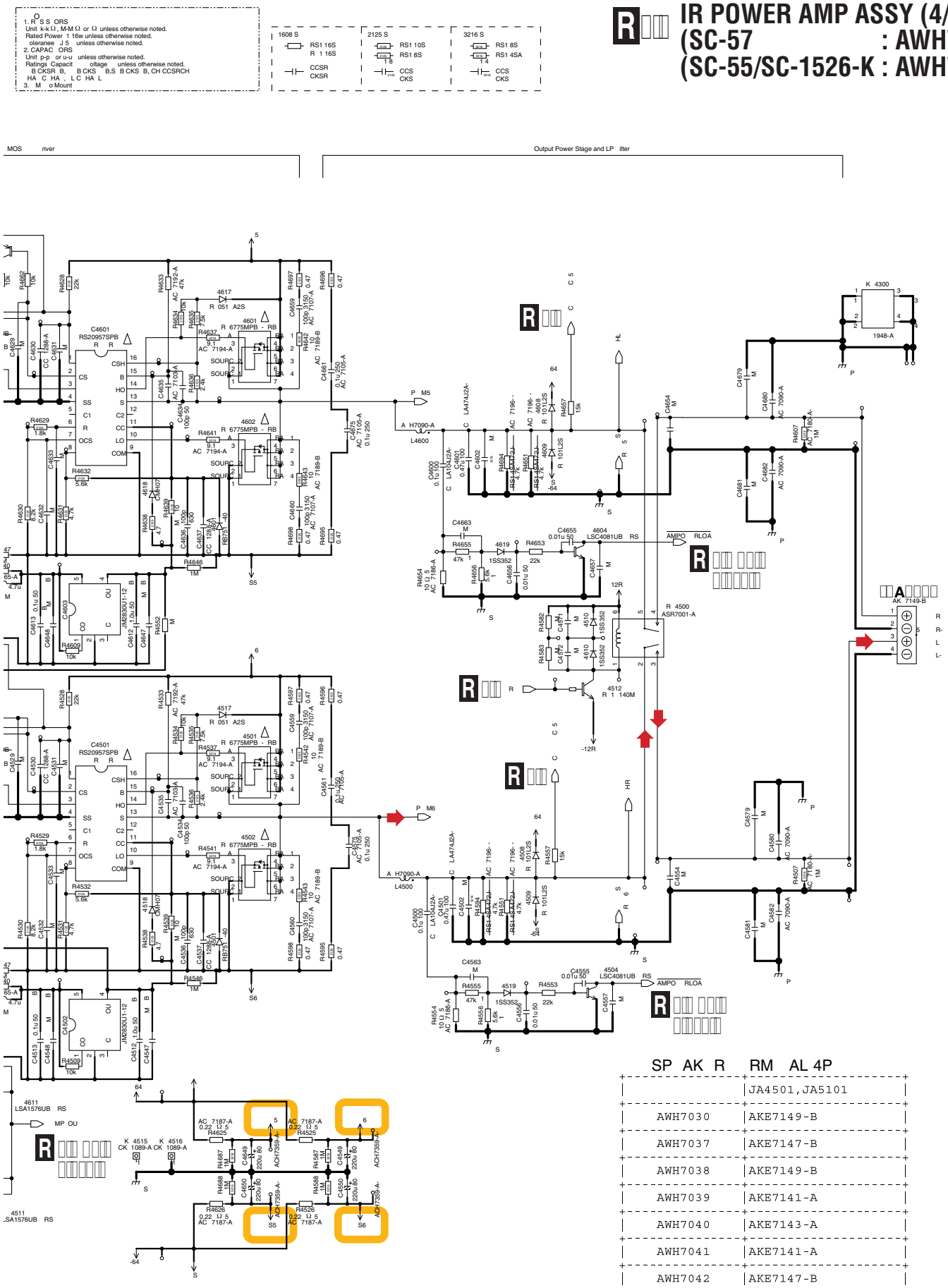

SP AK R	RM AL 4P
	JA4501,JA5101
AWH7030	AKE7149-B
AWH7037	AKE7147-B
AWH7038	AKE7149-B
AWH7039	AKE7141-A
AWH7040	AKE7143-A
AWH7041	AKE7141-A
AWH7042	AKE7147-B
AWH7043	AKE7143-A

□□.□□ IR PO□ ER A□ P ASS□ (□□□)

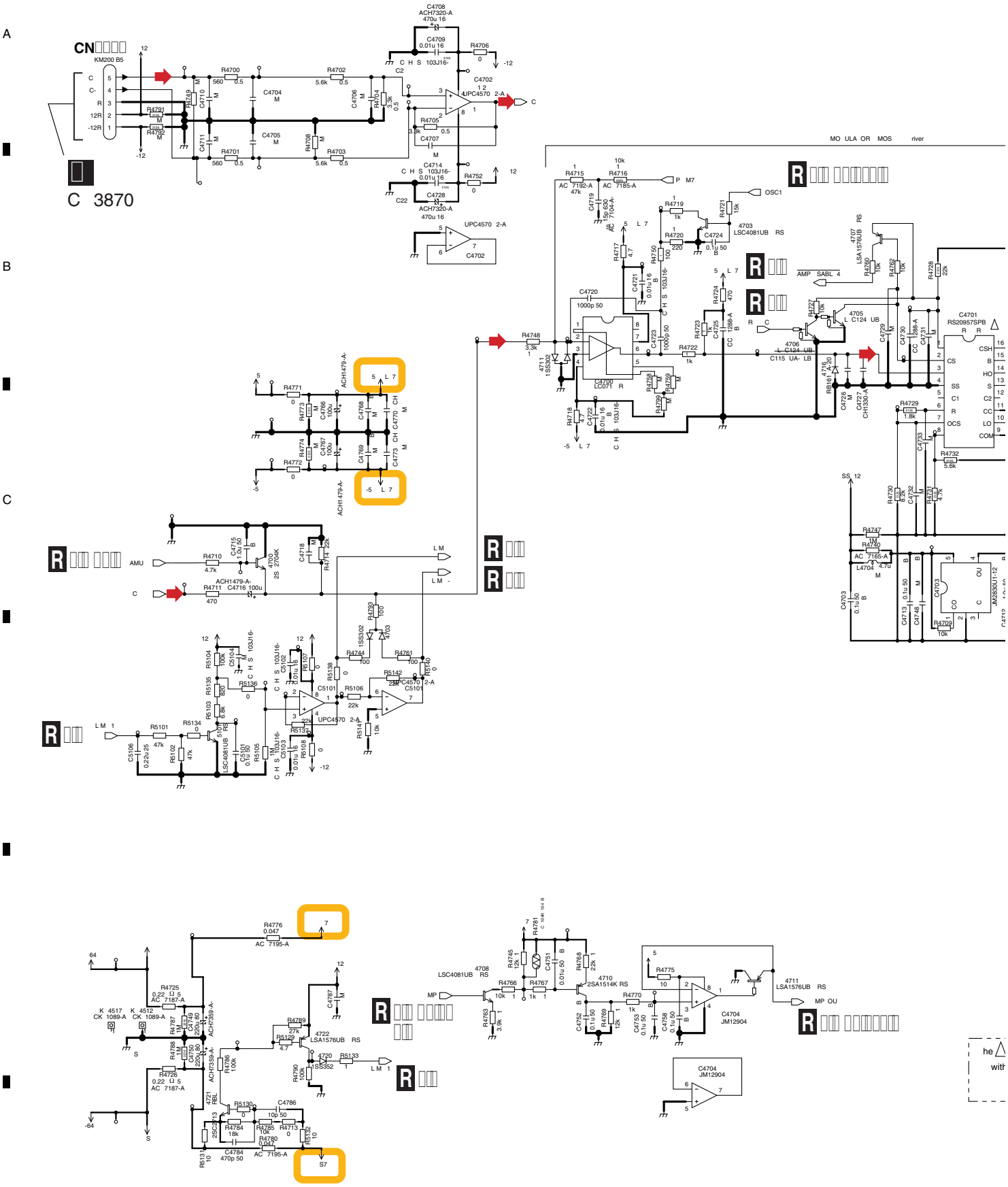

IR POWER AMP ASSY (5/6)
(SC-57 : AWH7030)
(SC-55/SC-1526-K : AWH7039)

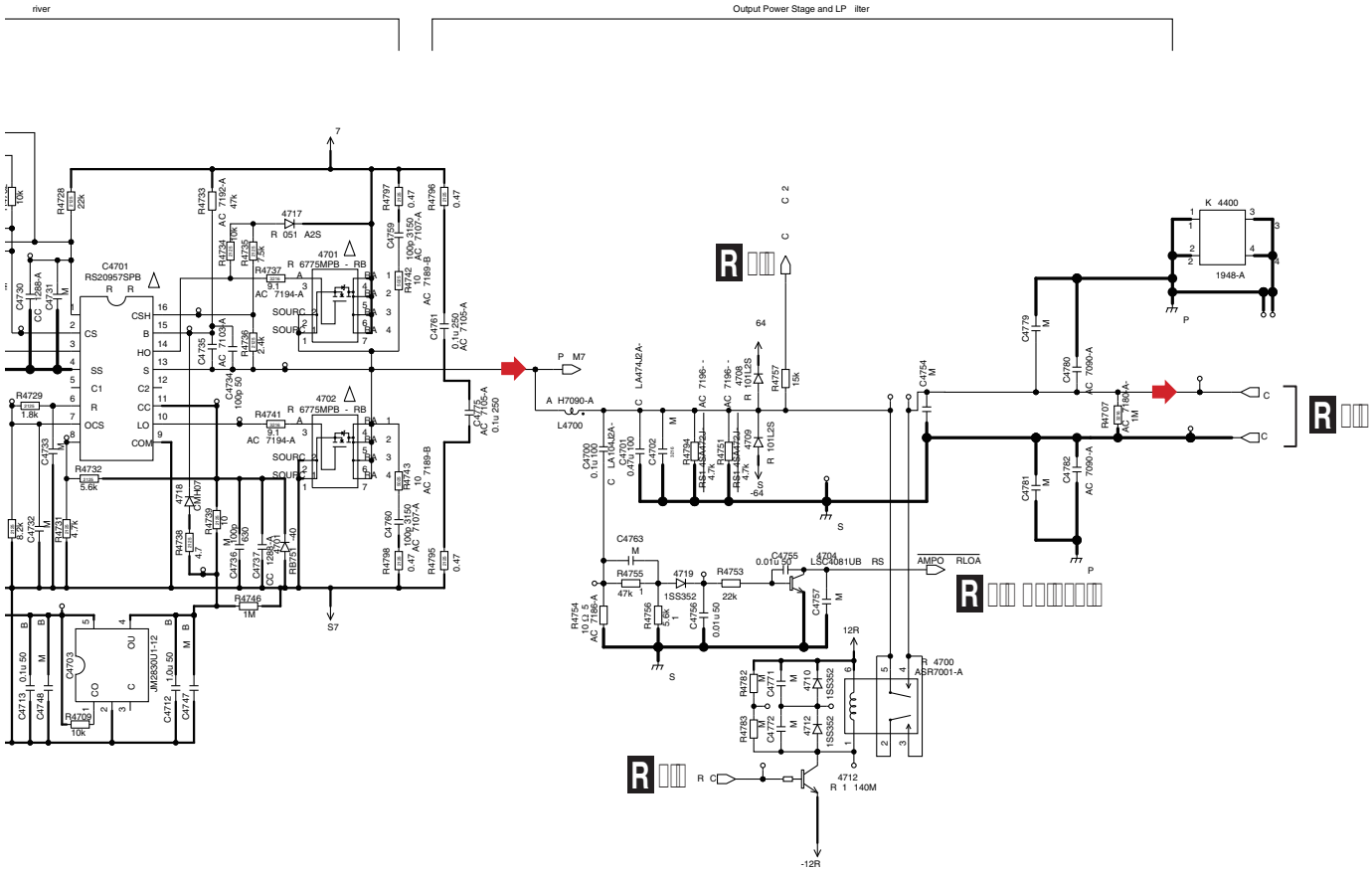

he △ mark ound on some component parts should be replaced with same parts sa et regulation authori ed o identical designation.

O
1. R S S ORS
Unit k-kΩ, M-MΩ or Ω unless otherwise noted.
Rated Power 1 16w unless otherwise noted.
oleranee J 5 unless otherwise noted.
2. CAPAC ORS
Unit p-p or u-u unless otherwise noted.
Ratings Capacit oltage unless otherwise noted.
B CKSR B, B CKS B,S B CKS B, CH CCSRCH
HA C HA . L C HA L
3. M o Mount

Audio Signal Route

1608 S	2125 S	3216 S
RS1 16S R 1 16S	RS1 10S RS1 8S 1 8	RS1 8S RS1 4SA 1 4
CCSR CKSR	CCS CKS	CCS CKS

□□.□□ IR PO□ ER A□ P ASS□ (□□□)

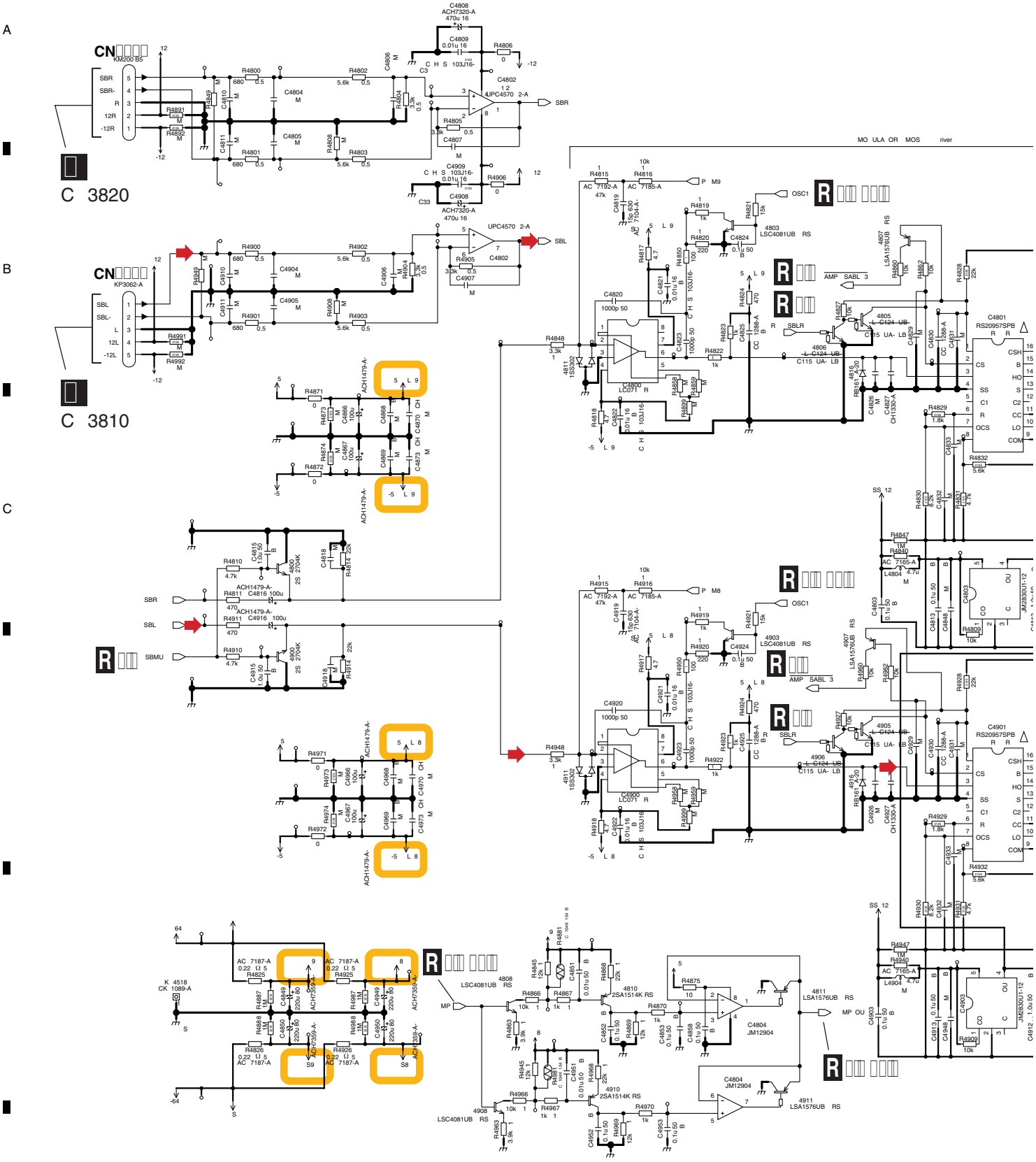

he △ mark ound on some component parts should be replaced with same parts sa et regulation authori ed o identical designation.

1. R S S ORS
Unit k-k Ω , M-MΩ or Ω unless otherwise noted.
Rated Power 1 16w unless otherwise noted.
oleranee J 5 unless otherwise noted.
2. CAPAC ORS
Unit p-p or u-u unless otherwise noted.
Ratings Capacit oltage unless otherwise noted.
B CKSR B, B CKS B,S B CKS B, CH CCSRCH
HA C HA , L C HA L
3. M o Mount

1608 S
RS1 16S
R 1 16S
CCSR
CKSR

IR POWER AMP ASSY (6/6)
(SC-57 : AWH7030)
(SC-55/SC-1526-K : AWH7039)

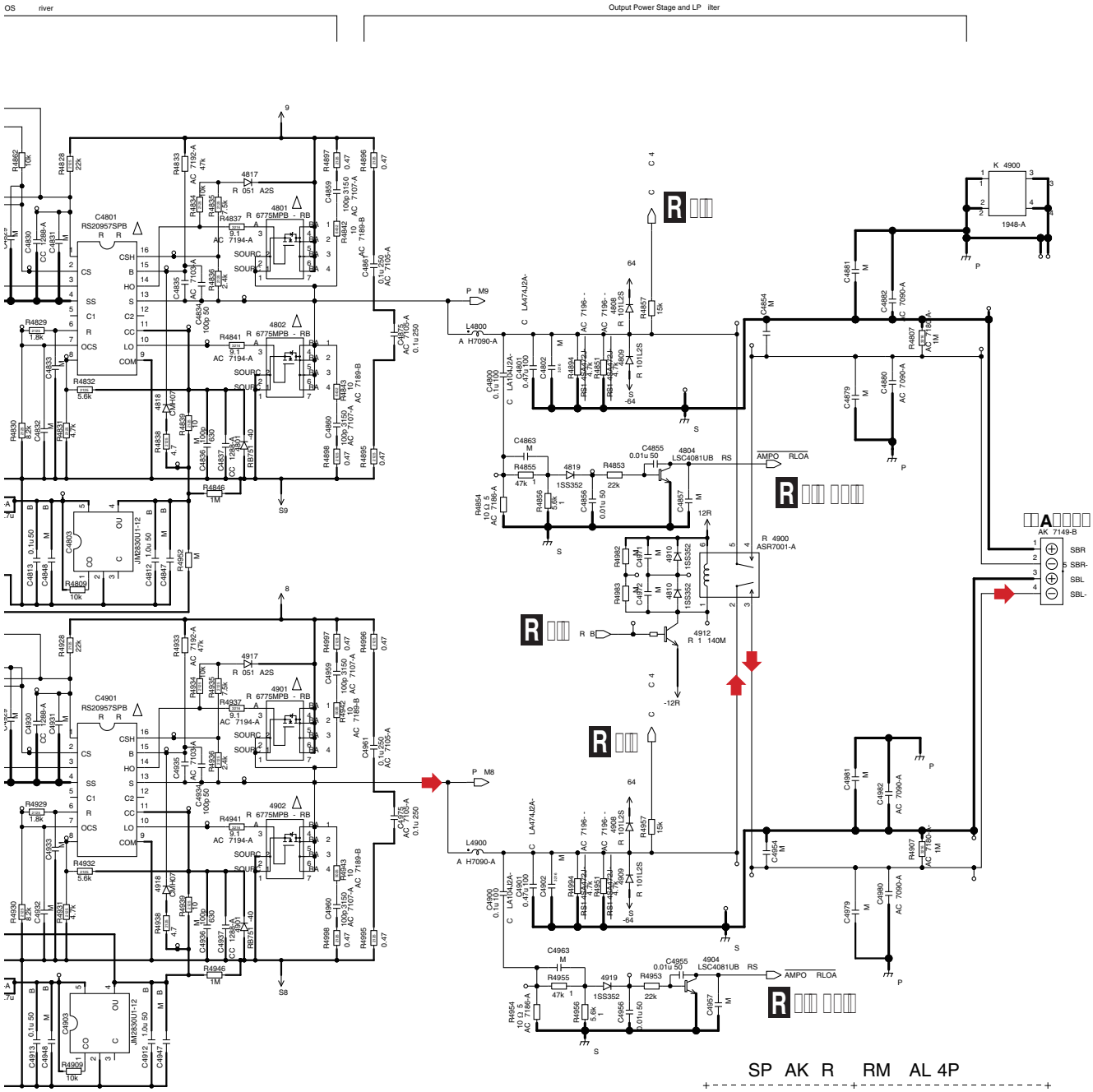

SP AK R RM AL 4P	
	JA4901
AWH7030	AKE7149-B
AWH7037	AKE7147-B
AWH7038	AKE7149-B
AWH7039	AKE7141-A
AWH7040	AKE7143-A
AWH7041	AKE7141-A
AWH7042	AKE7147-B
AWH7043	AKE7143-A

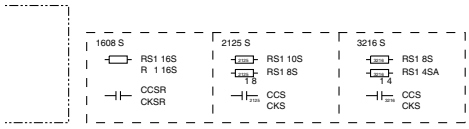

□□.□□ PRI□ AR□ □□□ PRI□ AR□ S□IELD ASS□S

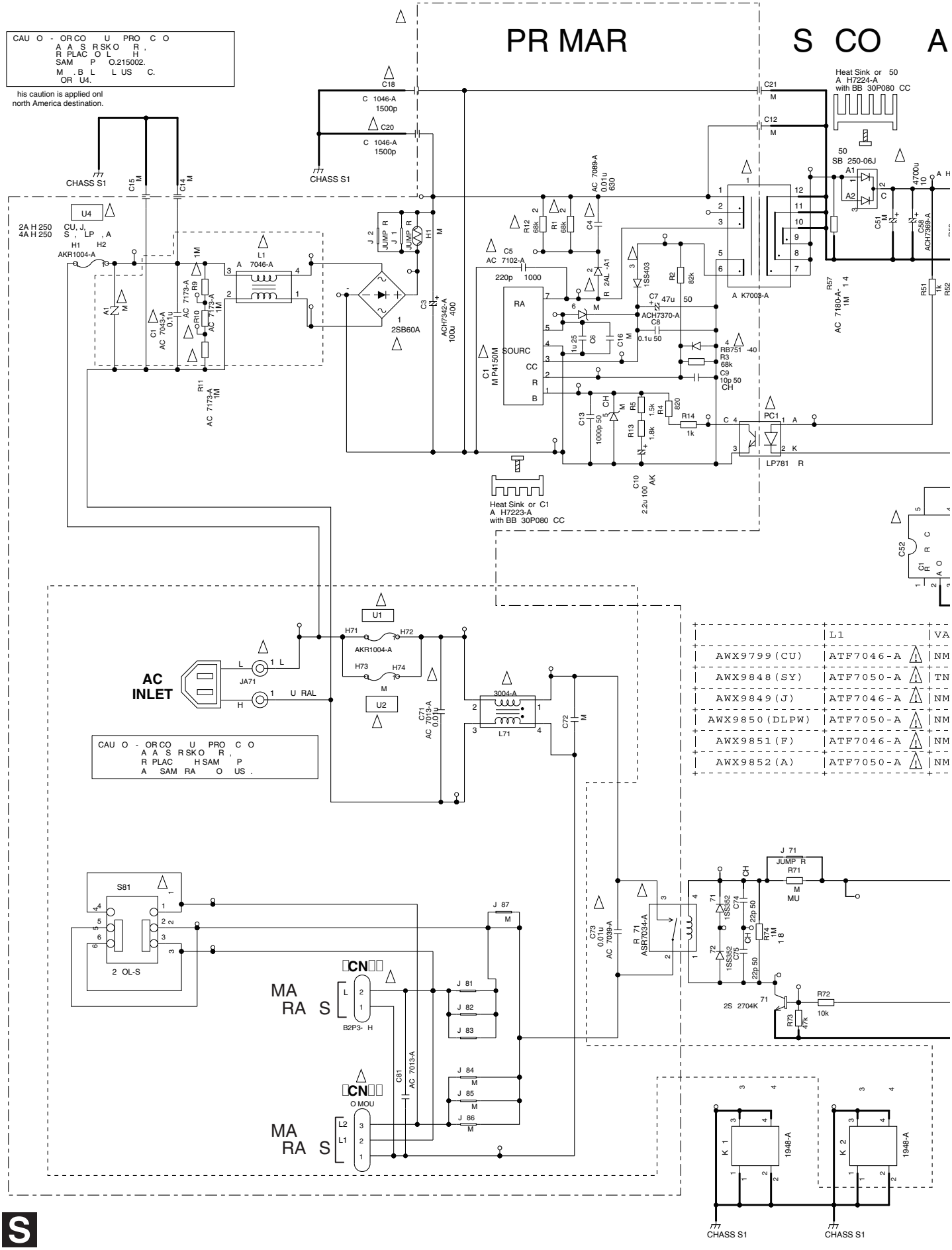

	L1	VA
AWX9799(CU)	ATF7046-A	NM
AWX9848(SY)	ATF7050-A	TN
AWX9849(J)	ATF7046-A	NM
AWX9850(DLPW)	ATF7050-A	NM
AWX9851(F)	ATF7046-A	NM
AWX9852(A)	ATF7050-A	NM

CO AR

S PRIMARY ASSY (AWX9799)

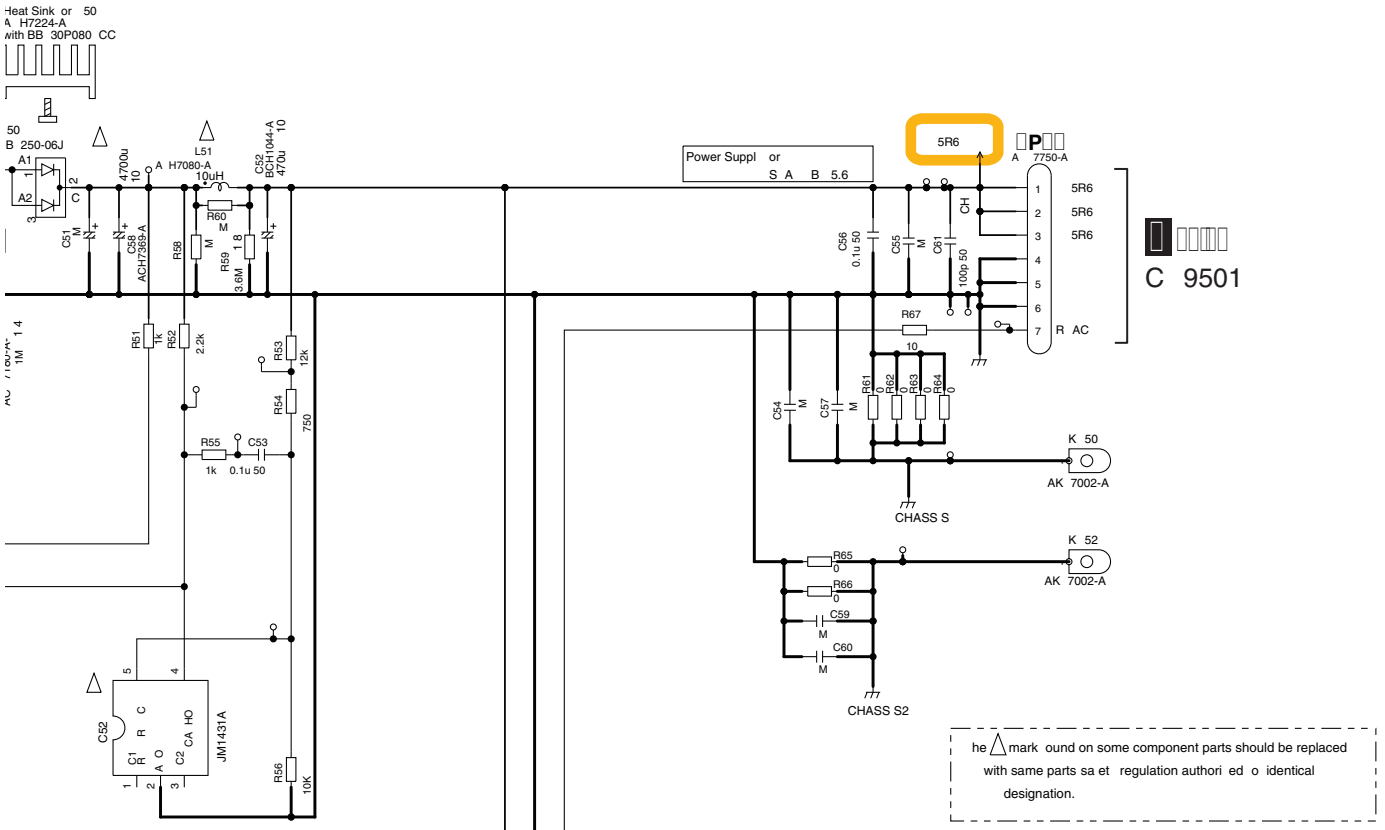

he △ mark ound on some component parts should be replaced with same parts sa et regulation authori ed o identical designation.

1	VA1
TF7046-A △	NM
TF7050-A △	TND10V-511KB00AAA0 △
TF7046-A △	NM
TF7050-A △	NM
TF7046-A △	NM
TF7050-A △	NM

T PRIMARY SHIELD ASSY (AWX9811)

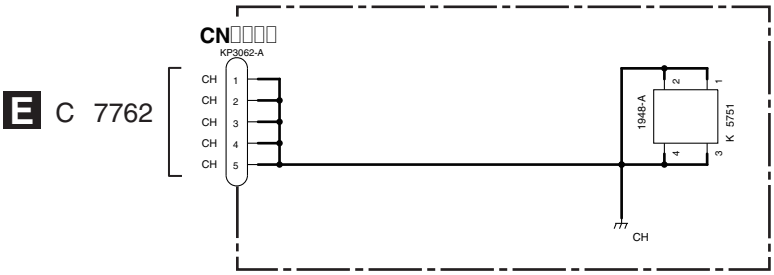

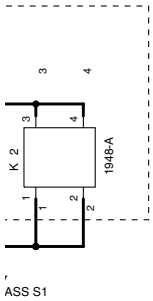

O

1. R S S ORS
Unit k-kΩ , M-MΩ or Ω unless otherwise noted.
Rated Power 1 10w unless otherwise noted.
olerane J 5 unless otherwise noted.
MU R 1 4MU
2. CAPAC ORS
Unit p-p or u-u unless otherwise noted.
Ratings Capacit oltage unless otherwise noted.
CH CCSRCH , C LA C LA
AK C AK
O MARK CKSR B or C A
3. M o Mount

	AWX9799(CU)	AWX9848(SY)	AWX9849(J)	AWX9850(DLPW)	AWX9851(F)	AWX9852(A)
C81	ACE7013-A △	NM	ACE7013-A △	NM	ACE7013-A △	NM
CN81	B2P3-VH △	NM	B2P3-VH △	NM	NM	NM
CN82	NM	B3P5-VH △	NM	B3P5-VH △	B3P5-VH △	B3P5-VH △
H71	AKR1004-A	AKR1004-A	NM	AKR1004-A	AKR1004-A	AKR1004-A
H72	AKR1004-A	AKR1004-A	NM	AKR1004-A	AKR1004-A	AKR1004-A
H73	NM	NM	AKR7004-A	NM	NM	NM
H74	NM	NM	AKR7004-A	NM	NM	NM
JA71	ADX7464-B △	ADX7464-B △	ADX7513-A △	ADX7464-B △	ADX7464-B △	ADX7464-B △
JA71_1	ADX7464-B_1 △	ADX7464-B_1 △	ADX7513-A_1 △	ADX7464-B_1 △	ADX7464-B_1 △	ADX7464-B_1 △
JV81	JUMPER	JUMPER	JUMPER	NM	JUMPER	NM
JV82	JUMPER	JUMPER	JUMPER	NM	JUMPER	NM
JV83	JUMPER	JUMPER	JUMPER	NM	JUMPER	NM
KN2	VNE1948-A	VNE1948-A	VNE1948-A	NM	VNE1948-A	NM
S81	NM	NM	NM	AKX7020-A △	NM	AKX7020-A △

S T

□□.□□ RE□ ASS□

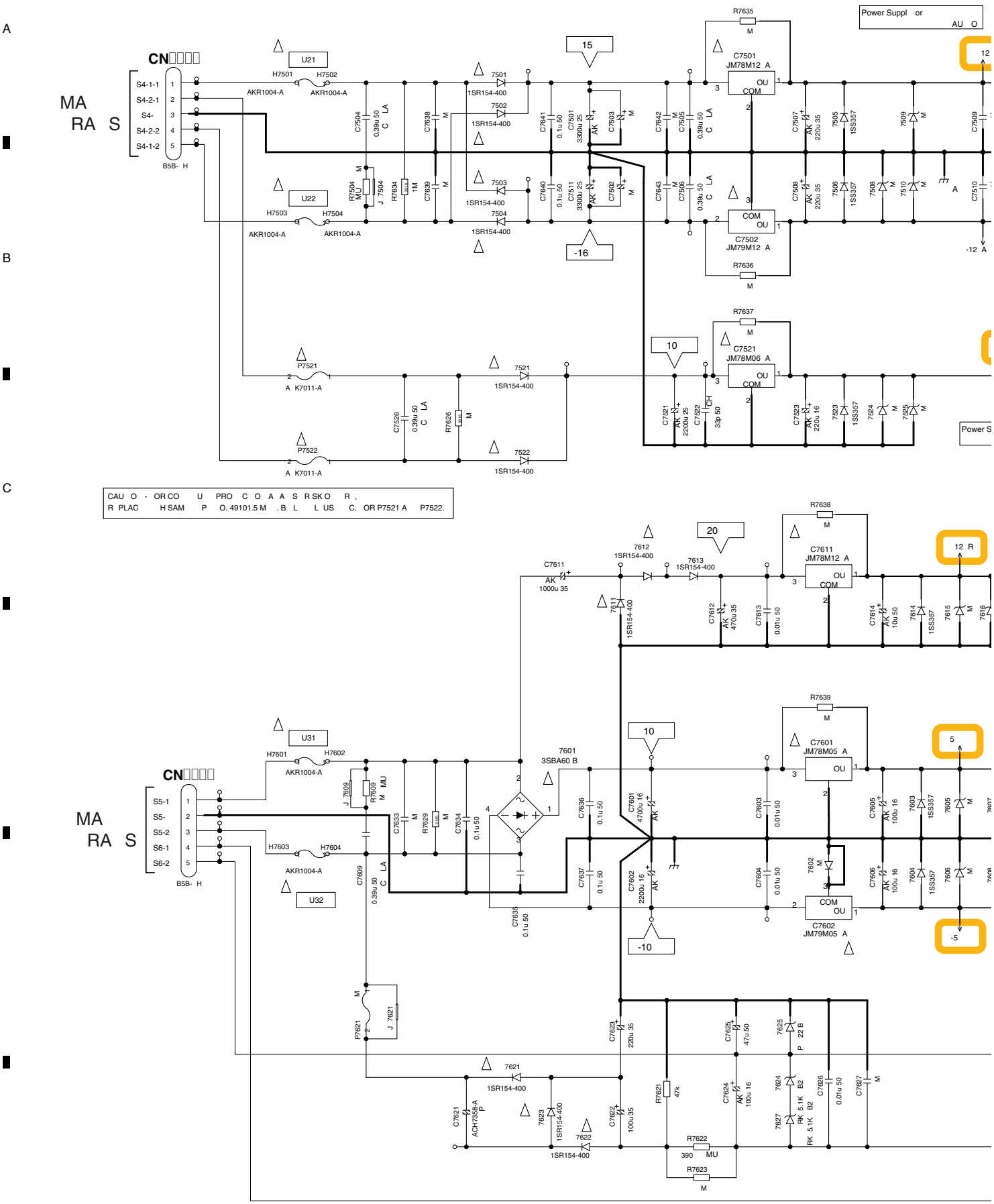
A
B
C
CN□□□□
MA
RA S
S4-1-1
S4-2-1
S4-
S4-2-2
S4-1-2
B5B- H
U21
U22
U31
U32
H7501
H7502
H7503
H7504
H7601
H7602
H7603
H7604
AKR1004-A
P7521
P7522
A K7011-A
7501
7502
7503
7504
7521
7522
1SR154-400
R7635
R7636
R7637
R7638
R7639
C7501
JM78M12 A
C7502
JM79M12 A
C7521
JM78M06 A
C7611
JM78M12 A
C7601
JM78M05 A
C7602
JM79M05 A
7601
3SBA60 B
15
-16
10
20
-10
12
-12
12 R
5
-5
Power Suppl or
AU O
Power S
CAU O - OR CO U PRO C O A A S R SK O R ,
R PLAC H SAM P O. 49101.5 M . B L L US C. OR P7521 A P7522.

U REG ASSY (AWX9813)

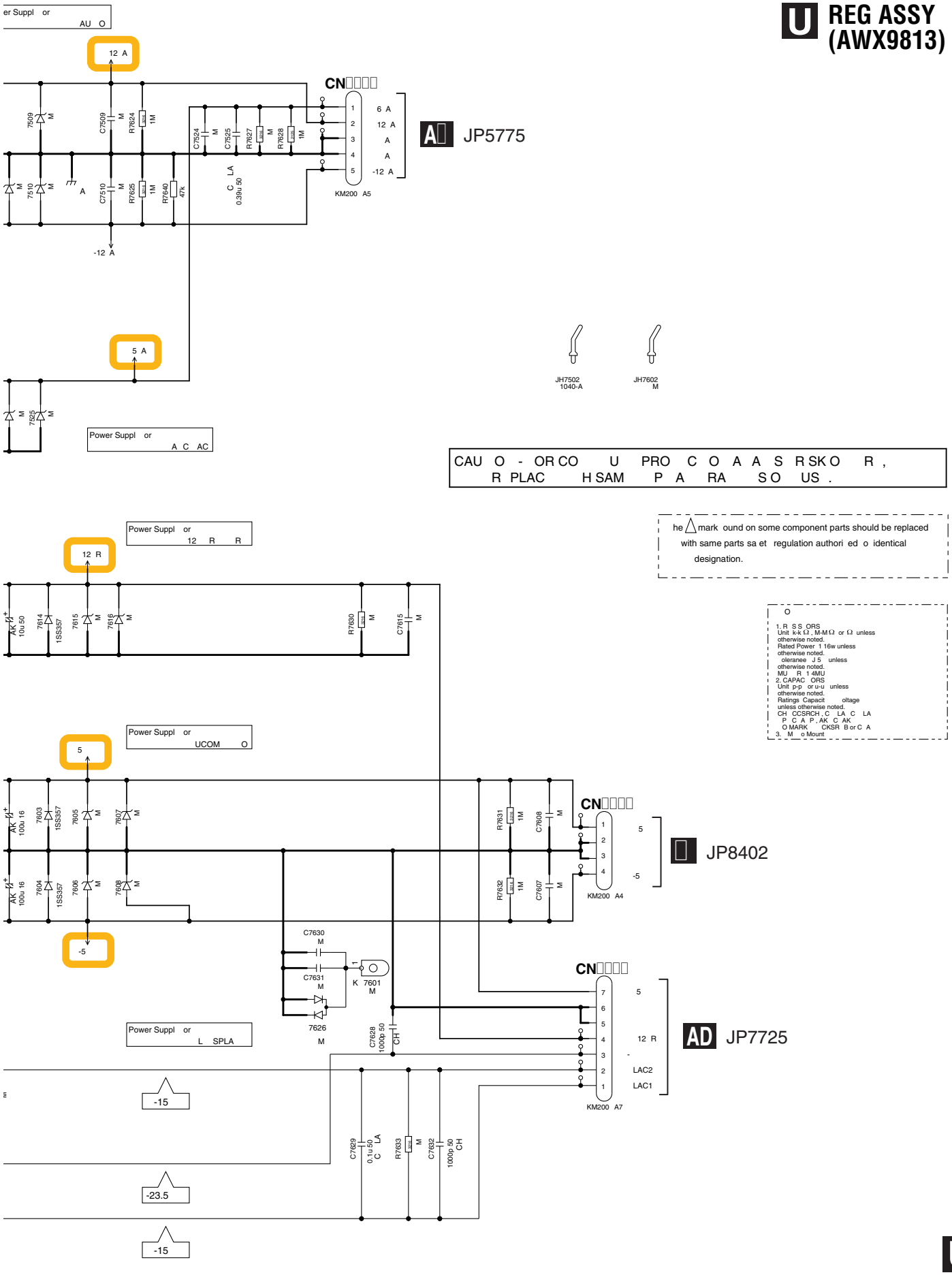

□□.□□ IR RE□ ASS□

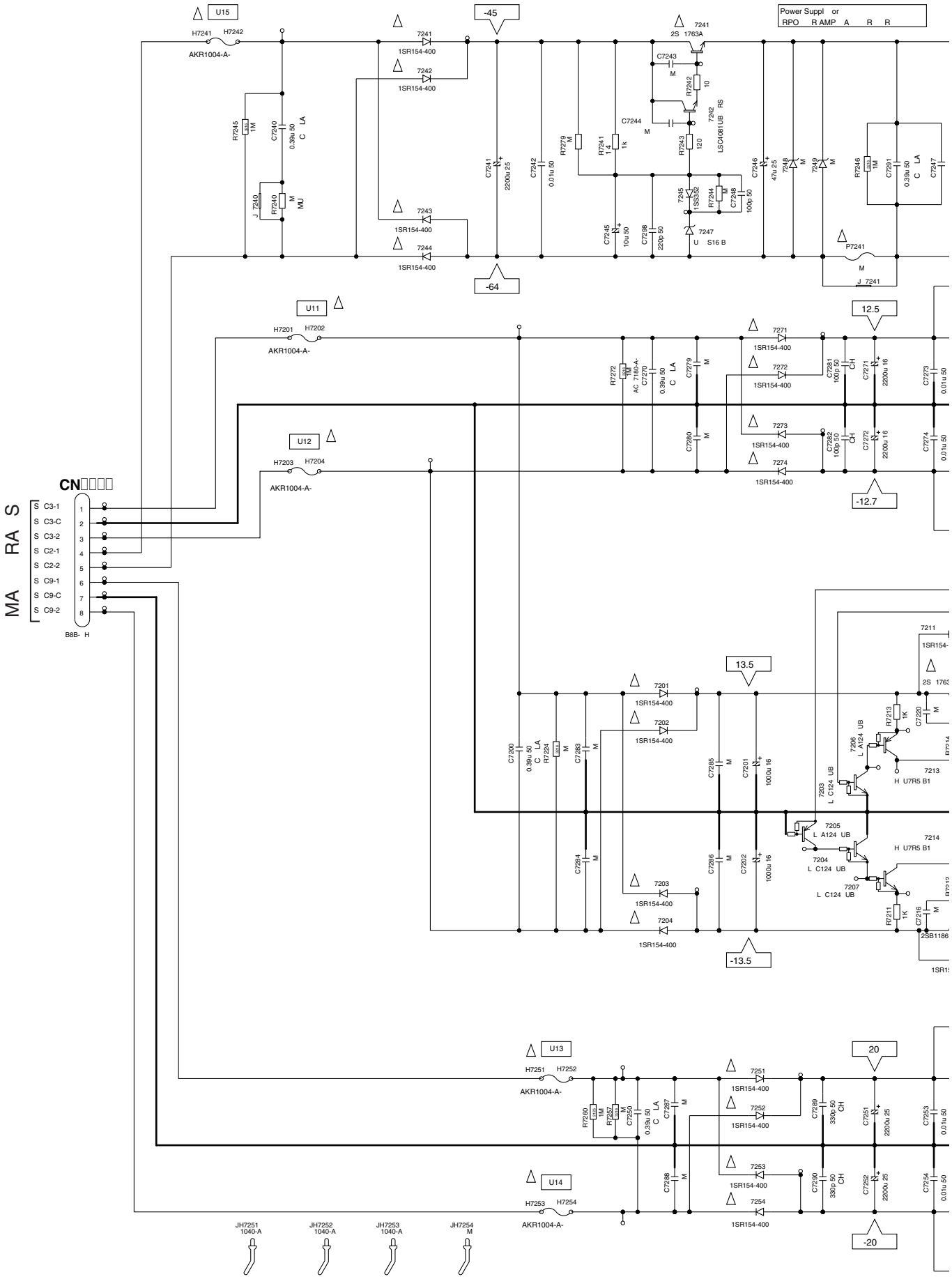
U15
H7241 H7242
AKR1004-A-
7241 1SR154-400
7242 1SR154-400
7243 1SR154-400
7244 1SR154-400
-45
-64
Power Suppl or
RPO R AMP A R R
7241 2S 1763A
C7243 M
R7242 10
7242 LSC1081UB RS
C7244 M
R7243 120
R7245 1M
C7240 0.39u 50 C LA
J 7240
R7240 M MU
C7241 2200u 25
C7242 0.01u 50
R7279 M
R7241 1k
C7245 10u 50
C7298 220p 50
7245 1SS352
R7244 M
C7248 100p 50
7247 U S16 B
C7246 47u 25
7248 M
7249 M
R7246 1M
C7291 0.39u 50 C LA
C7247
P7241 M
J 7241
U11
H7201 H7202
AKR1004-A-
12.5
7271 1SR154-400
7272 1SR154-400
7273 1SR154-400
7274 1SR154-400
R7272 M AC 7199A-
C7270 0.39u 50 C LA
C7279 M
C7280 M
C7281 100p 50 CH
C7282 100p 50 CH
C7271 2200u 16
C7272 2200u 16
C7273 0.01u 50
C7274 0.01u 50
-12.7
U12
H7203 H7204
AKR1004-A-
CN□□□□
S C3-1
S C3-C
S C3-2
S C2-1
S C2-2
S C9-1
S C9-C
S C9-2
B8B- H
MA RA S
13.5
7201 1SR154-400
7202 1SR154-400
7203 1SR154-400
7204 1SR154-400
C7200 0.39u 50 C LA
R7224 M
C7283 M
C7284 M
C7285 M
C7286 M
C7201 1000u 16
C7202 1000u 16
7206 L A124 UB
R7213 1K
C7220 M
7203 L C124 UB
7213 H U7R5 B1
7205 L A124 UB
7204 L C124 UB
7207 L C124 UB
7214 H U7R5 B1
R7211 1K
C7216 M
2SB1186
-13.5
U13
H7251 H7252
AKR1004-A-
20
7251 1SR154-400
7252 1SR154-400
R7260 1M
R7262 M
C7250 0.39u 50 C LA
C7287 M
C7289 330p 50 CH
C7251 2200u 25
C7253 0.01u 50
U14
H7253 H7254
AKR1004-A-
7253 1SR154-400
7254 1SR154-400
C7288 M
C7290 330p 50 CH
C7252 2200u 25
C7254 0.01u 50
-20
JH7251 1040-A
JH7252 1040-A
JH7253 1040-A
JH7254 M

V IR REG ASSY (AWX9806)

he △ mark ound on some component parts should be replaced with same parts sa et regulation authori ed o identical designation.

O
1. R S S ORS
Unit k-k Ω , M-M Ω or Ω unless otherwise noted.
Rated Power 1 10 unless otherwise noted.
oleranee J 5 unless otherwise noted.
MU R 1 4MU
2125 RS1 8S
3216 RS1 4SA
2. CAPAC ORS
Unit p-p or u-u unless otherwise noted.
Ratings Capacit oltage unless otherwise noted.
CH CCSRCH , C LA C LA
O MARK CKSR B or C AK
3. M o Mount

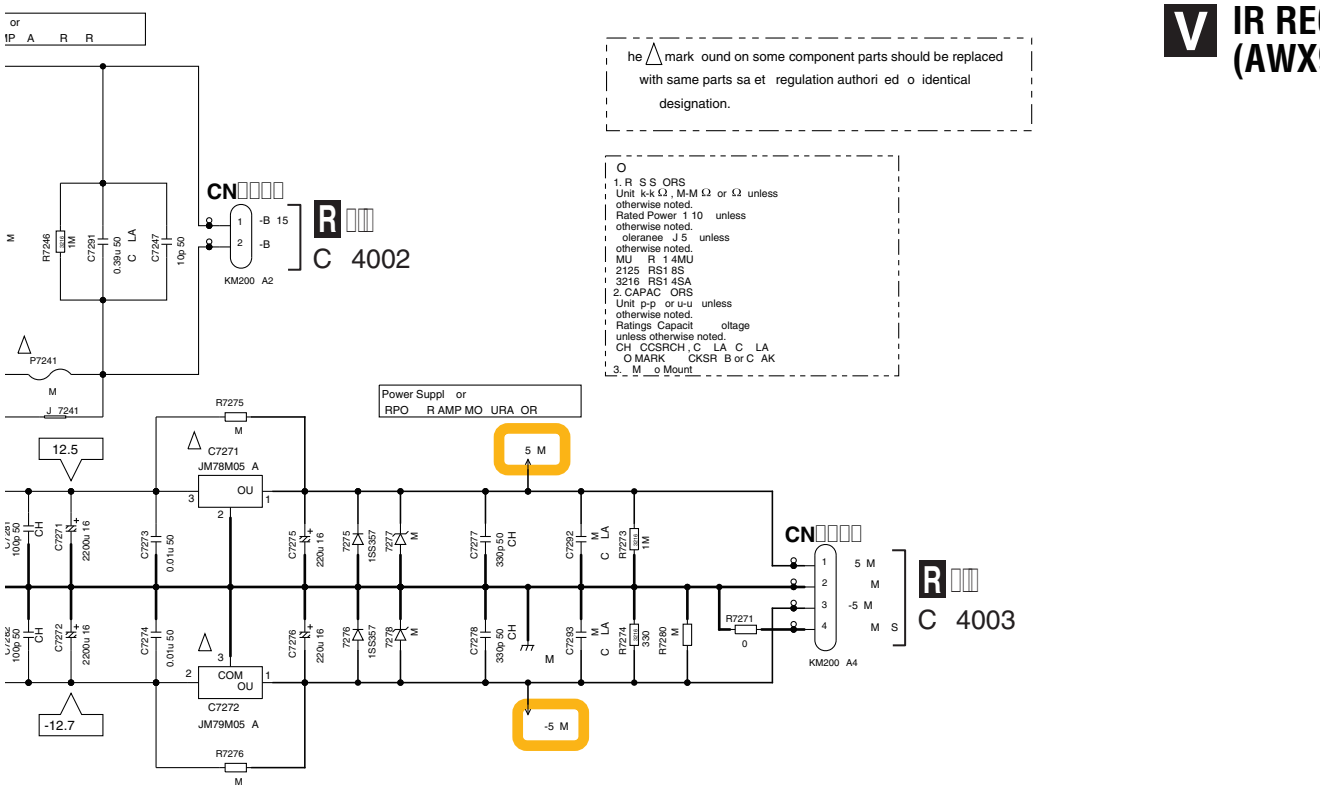

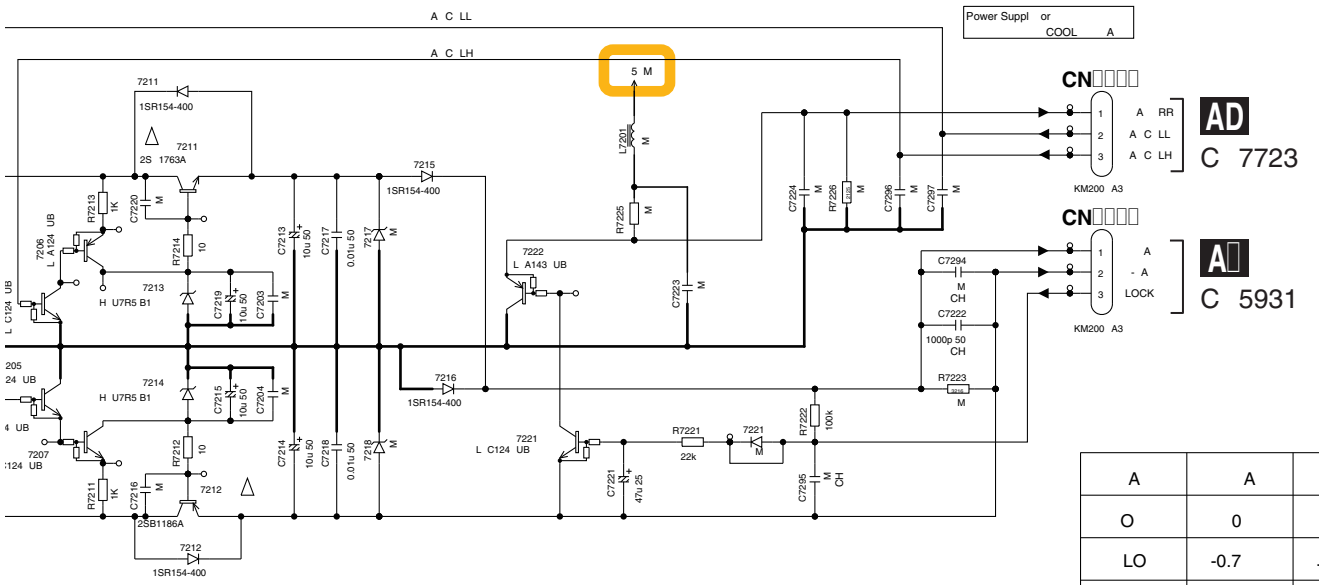

A	A	- A
O	0	0
LO	-0.7	-6.5
H H	6.5	-6.5

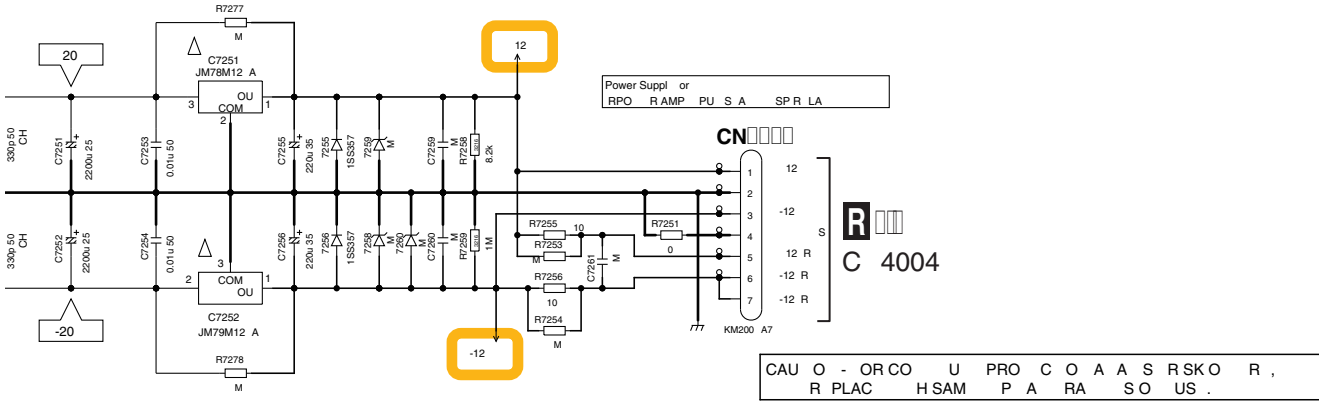

CAU O - OR CO U PRO C O A A S R SK O R ,
R PLAC H SAM P A RA S O US .

B DIODE ASSY (AWX9808)

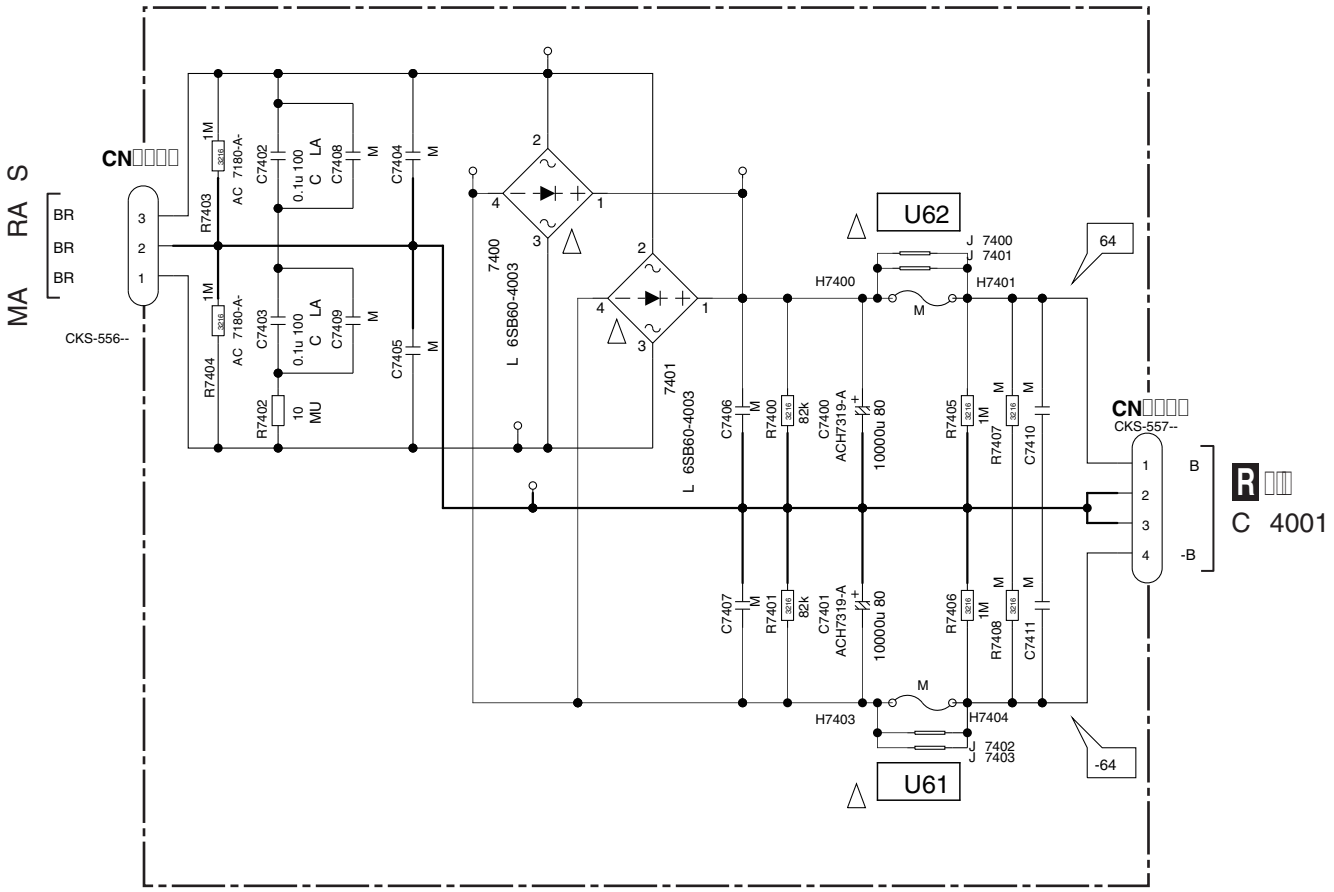

he △ mark ound on some component parts should be replaced with same parts sa et regulation authori ed o identical designation.

CAU O - OR CO U PRO C O A A S R SK O R , R PLAC H SAM P A RA S O US .

O

1. R S S ORS
Unit k-k Ω , M-M Ω or Ω unless otherwise noted.
Rated Power 1 10w unless otherwise noted.
oleranee J 5 unless otherwise noted.
MU R 1 4MU
3216 RS1 4SA unless otherwise noted.
2. CAPAC ORS
Unit p-p or u-u unless otherwise noted.
Ratings Capacit oltage unless otherwise noted.
C LA C LA
3. M o Mount

□□.□□ CONNECT ASS□

CONNECT ASSY (AWX9820)

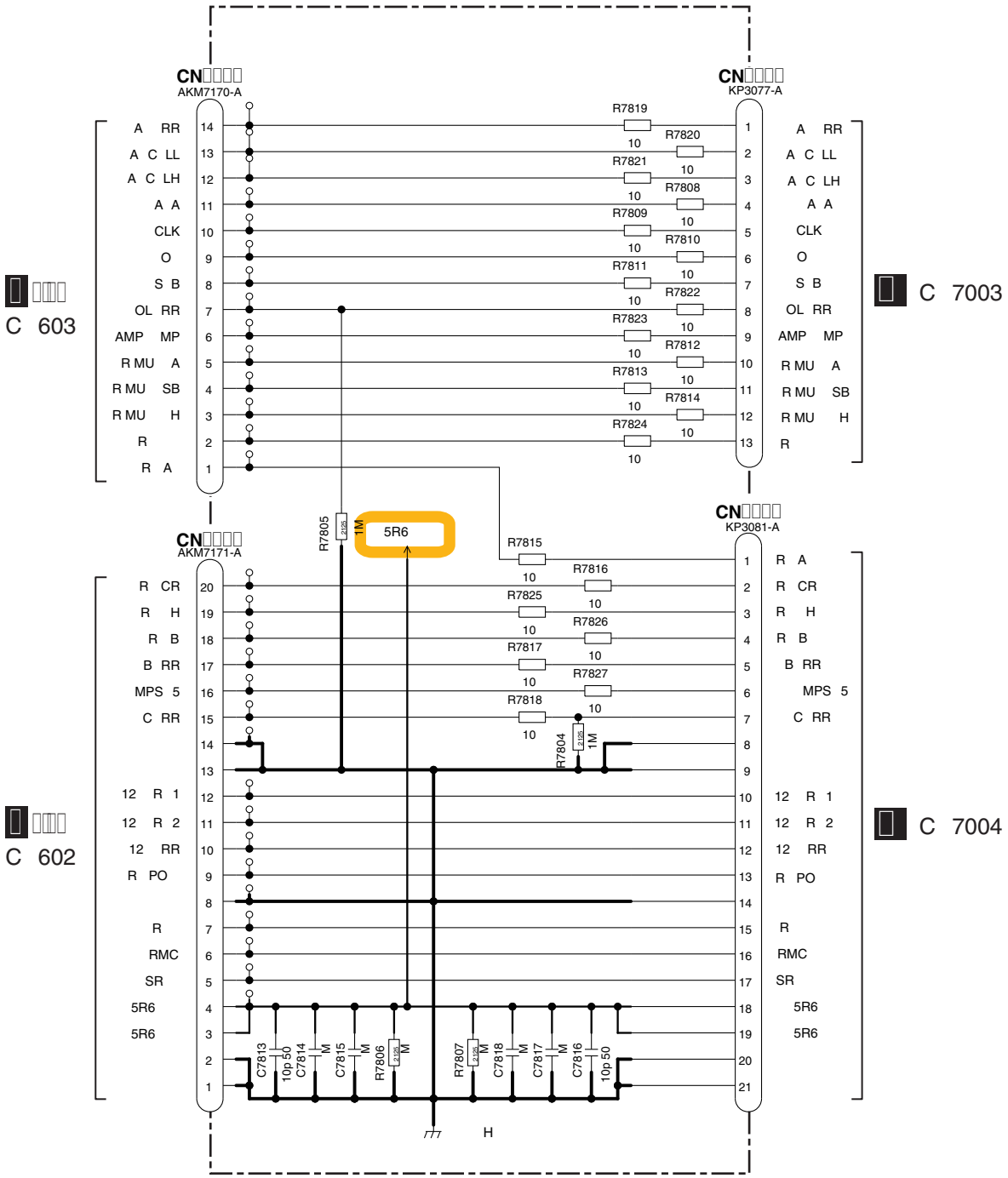

O

1. R S S ORS
Unit k-kΩ , M-MΩ or Ω unless otherwise noted.
Rated Power 1 16w unless otherwise noted.
oleranee J 5 unless otherwise noted.
2. CAPAC ORS
Unit p-p or u-u unless otherwise noted.
Ratings Capacit oltage unless otherwise noted.
3. M o Mount

FB-CONNECT ASSY (AWX9819)

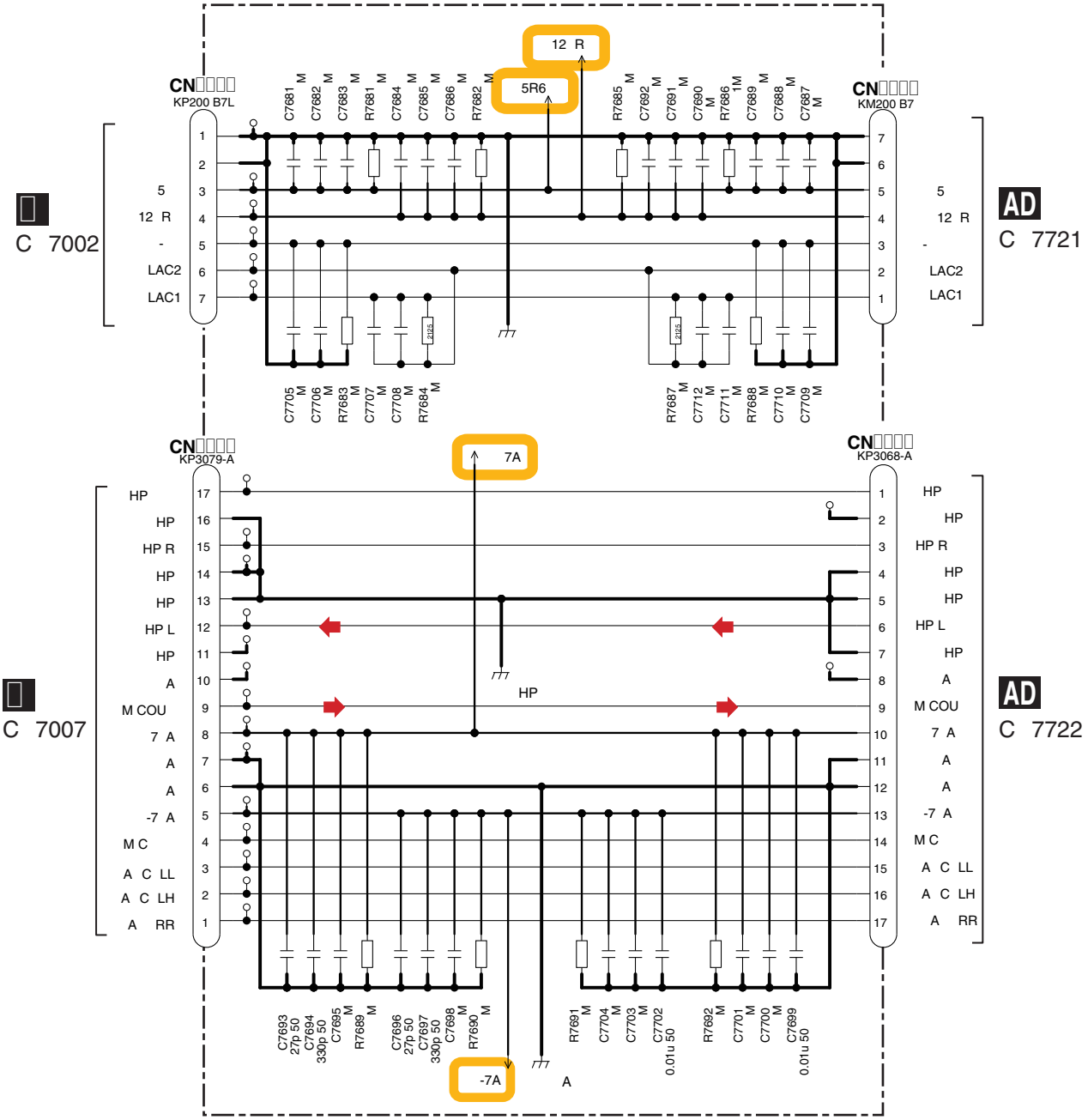

Audio Signal Route

	A 9819	A 9966
C7693	27p 50	M
C7694	330p 50	M
C7696	27p 50	M
C7697	330p 50	M

O

1. R S S ORS
Unit k-kΩ , M-MΩ or Ω unless otherwise noted.
Rated Power 1 16w unless otherwise noted.
oleranee J 5 unless otherwise noted.
2. CAPAC ORS
Unit p-p or u-u unless otherwise noted.
Ratings Capacit oltage unless otherwise noted.
3. M o Mount

□□.□□ PRE □ RID□ E □□□ A□DAC □ RID□ E ASS□S

PRE BRIDGE ASSY (AWX9809)

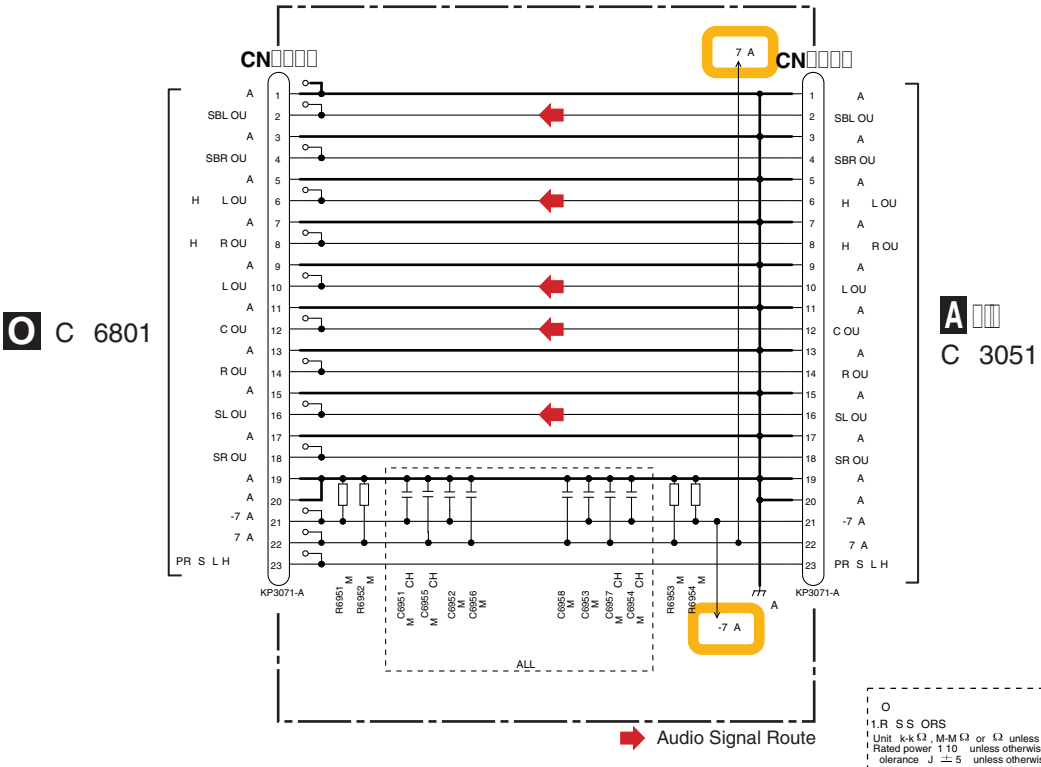

O
1.R S S ORS
Unit k-k Ω , M-M Ω or Ω unless otherwise noted.
Rated power 1 10 unless otherwise noted.
olerance J ±5 unless otherwise noted.
2,CAPAC ORS
Unit p-p or μ or unless otherwise noted.
Ratings Capacit μ oltage unless otherwise noted.
B CKSR B CH CCSRCH A C A J C J
3, M o mount

AA A-DAC BRIDGE ASSY (AWX9936)

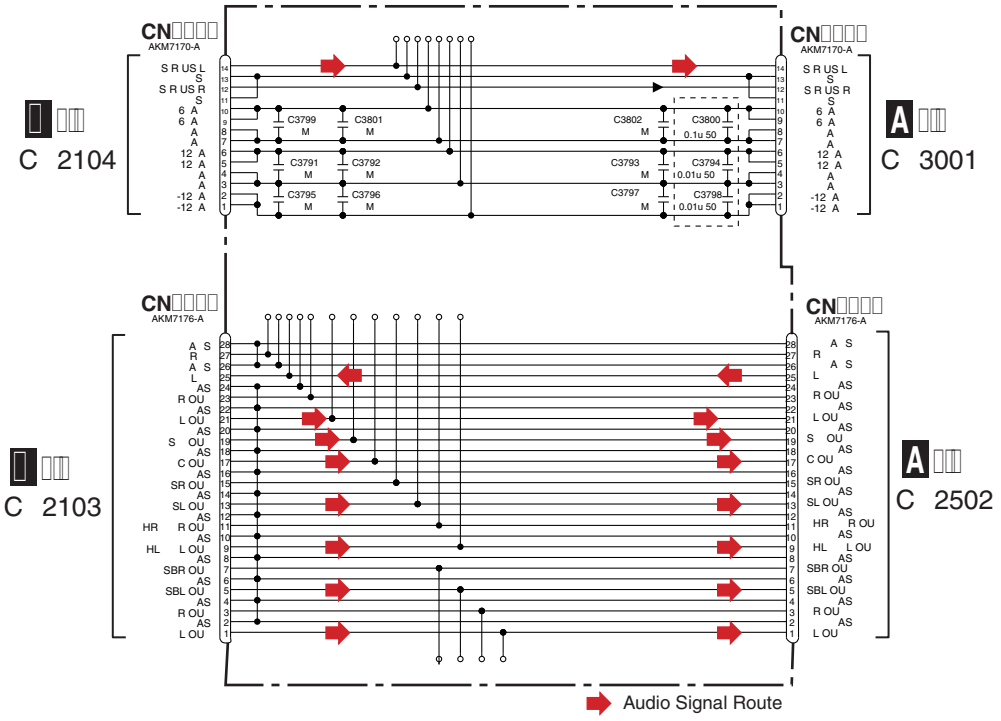

	AWX9771	AWX9936
C3794	NM	0.01u/50
C3798	NM	0.01u/50
C3800	NM	0.1u/50

A□ D-AUDIO BRIDGE ASSY (AWX9769)

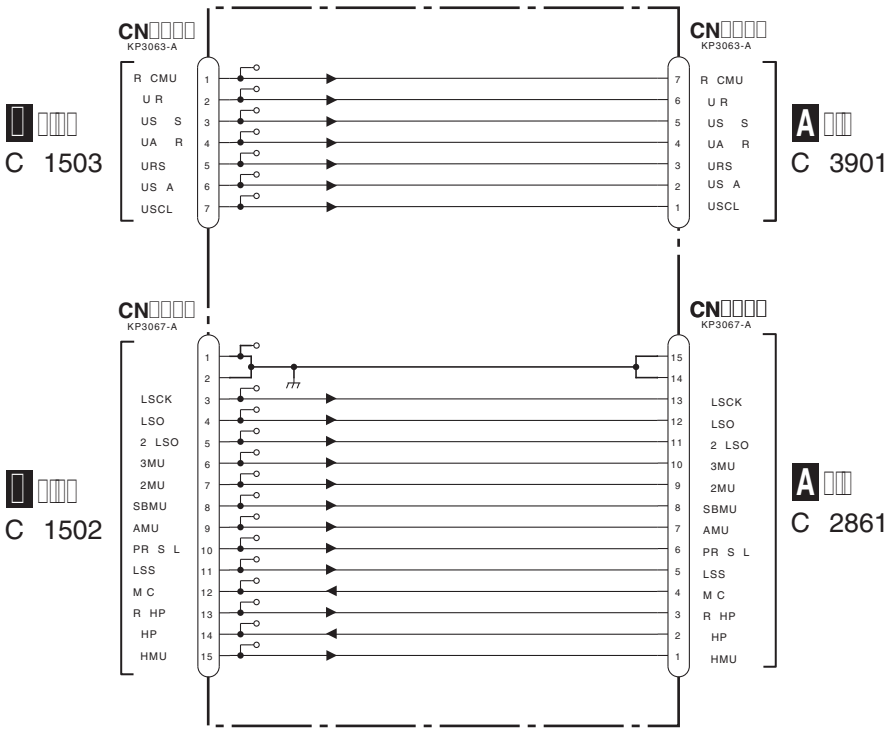

O
1. R S S ORS
Unit k-kΩ, M-MΩ or Ω unless otherwise noted.
Rated Power 1 10w unless otherwise noted.
oleranee J 5 unless otherwise noted.
2. CAPAC ORS
Unit p-p or u-u unless otherwise noted.
Ratings Capacit oltage unless otherwise noted.
CH CCSRCH
O MARK CKSR B
3. M o Mount

AC D-DAC BRIDGE ASSY (AWX9935)

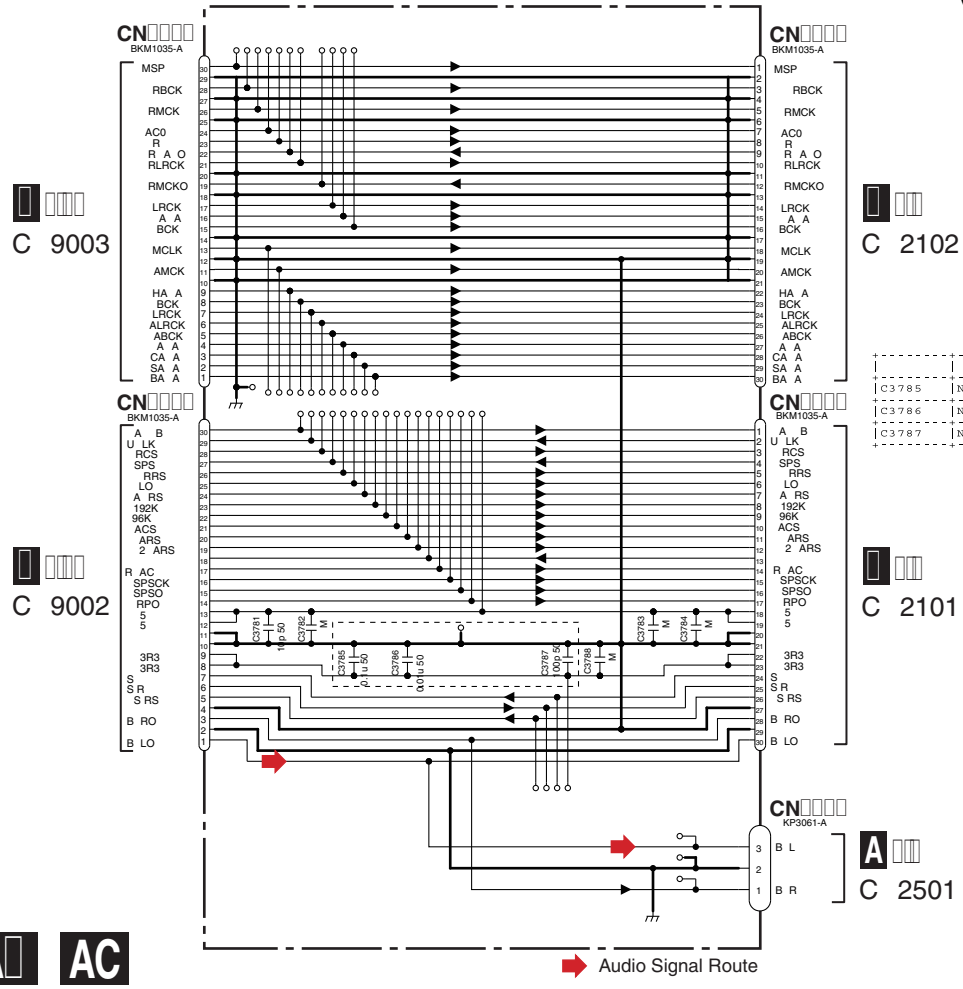

	AWX9770	AWX9935
C3785	NM	0.1u/50
C3786	NM	0.01u/50
C3787	NM	100p/50

A□ AC

A□ AC

AD FRONT BRIDGE ASSY (AWX9814)

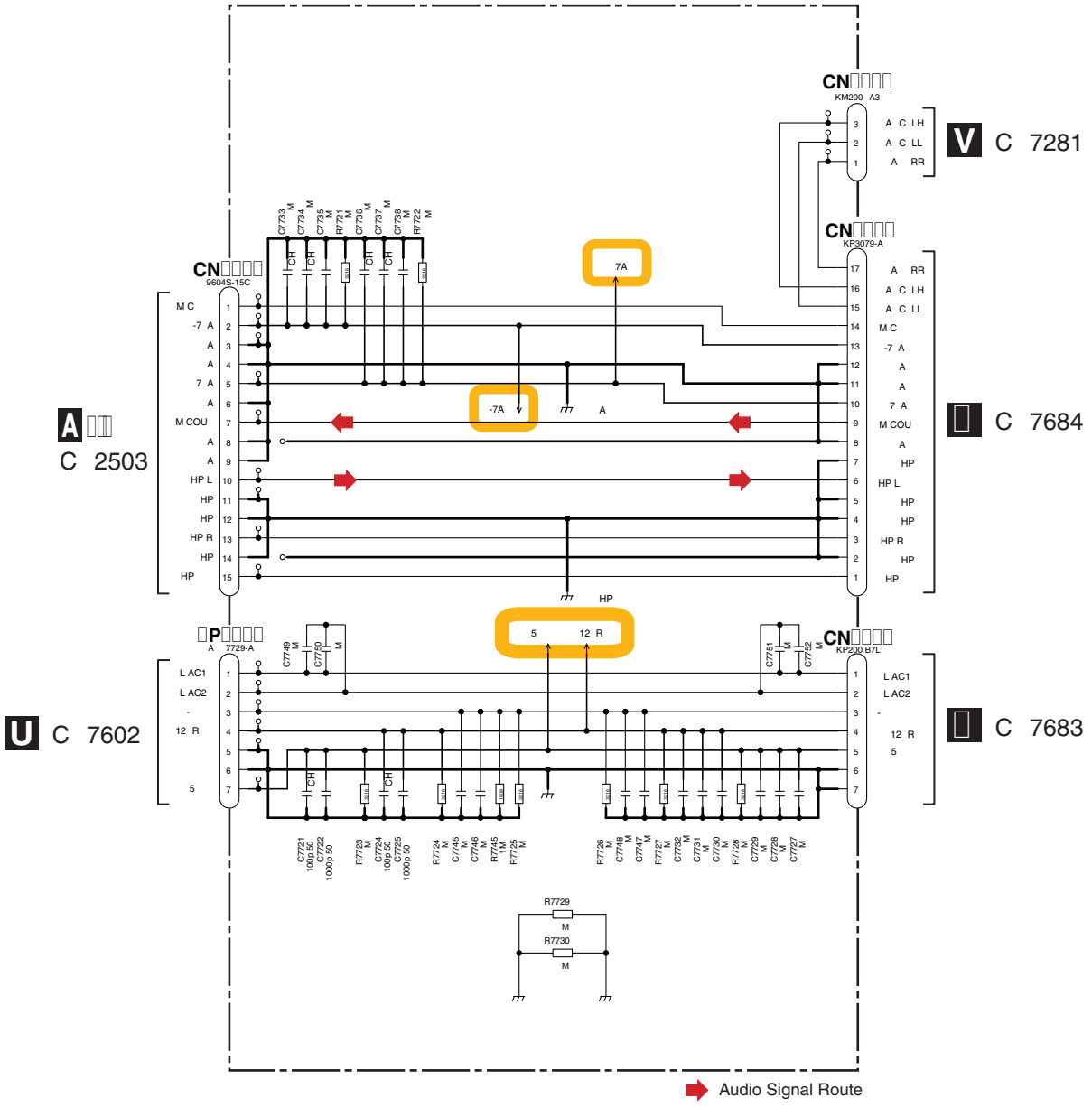

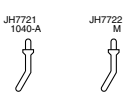

O

1. R S S ORS
Unit k-k Ω , M-M Ω or Ω unless otherwise noted.
Rated Power 1 16w unless otherwise noted.
oleranee J 5 unless otherwise noted.
2. CAPAC ORS
Unit p-p or u-u unless otherwise noted.
Ratings Capacit oltage unless otherwise noted.
3. M o Mount

AE DISPLAY BRIDGE ASSY (AWX9815)

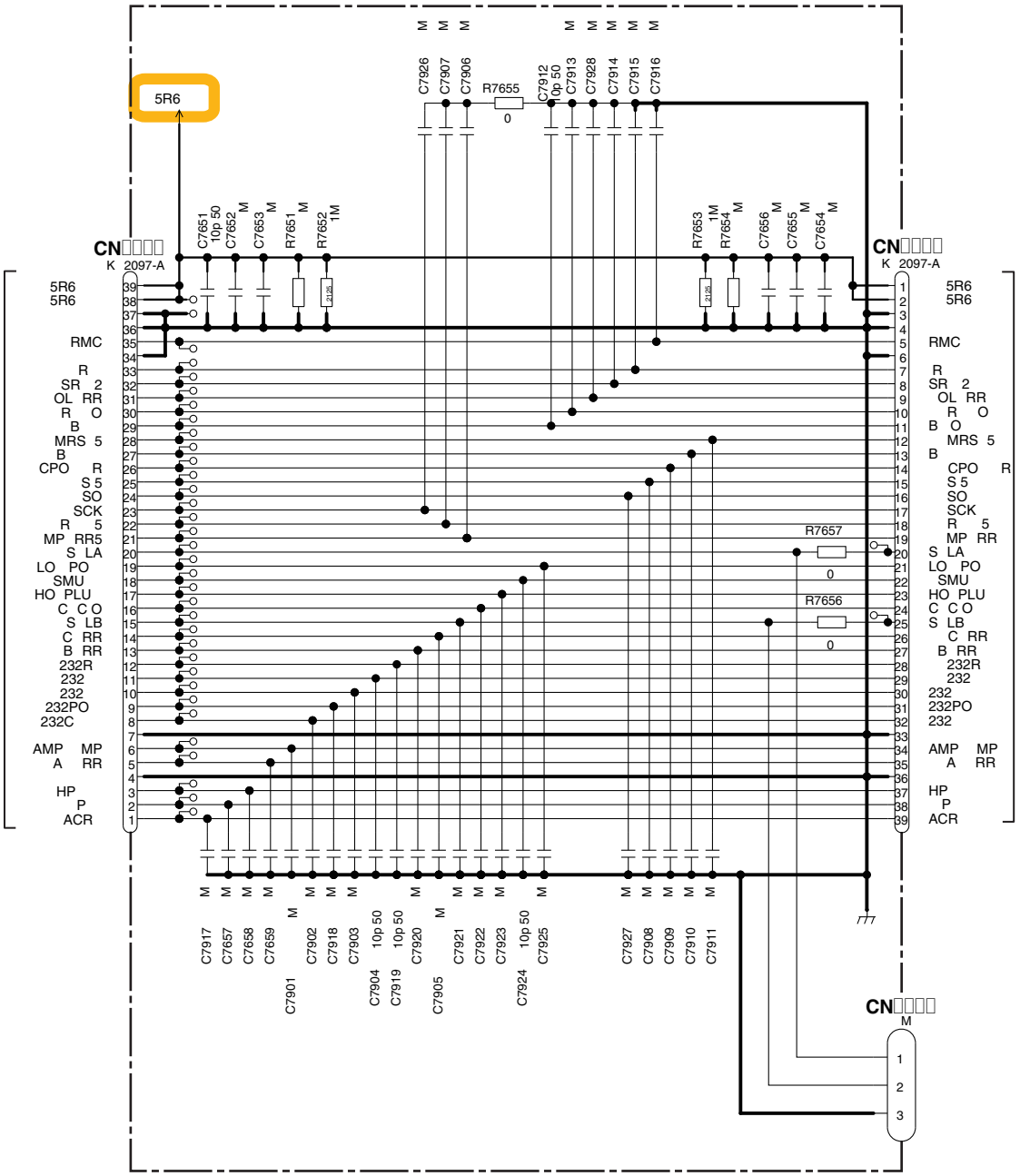

	A 9815	A 9956
C7654	M	100p 50
C7901	M	10p 50
C7905	M	10p 50

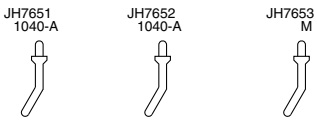

O

1. R S S ORS
Unit k-kΩ , M-MΩ or Ω unless otherwise noted.
Rated Power 1 16w unless otherwise noted.
oleranee J 5 unless otherwise noted.
2. CAPAC ORS
Unit p-p or u-u unless otherwise noted.
Ratings Capacit oltage unless otherwise noted.
3. M o Mount

A□ F-IN BRIDGE ASSY (AWX9816)

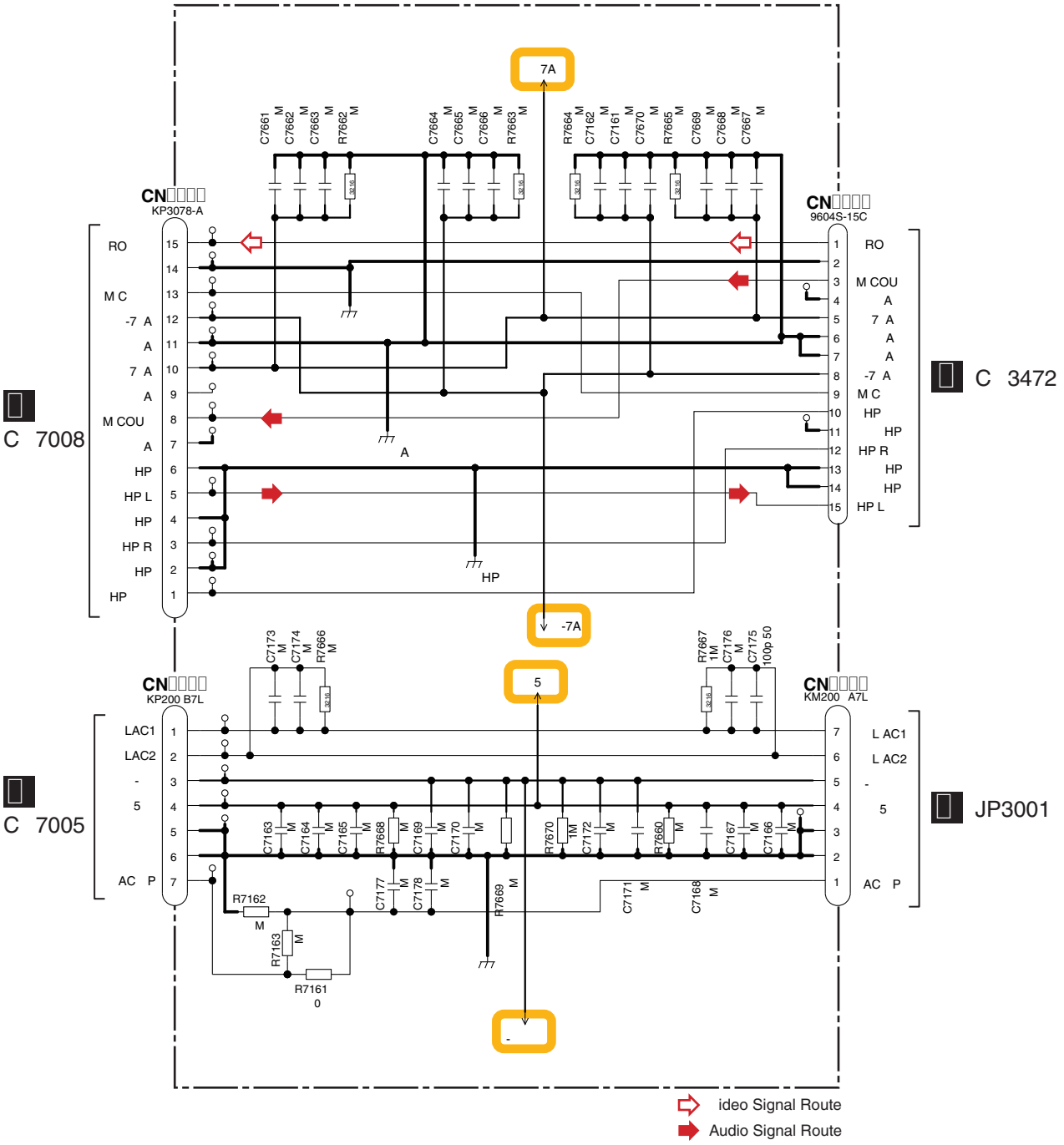

	A 9816	A 9965
R7161	0 Ω	10 Ω
R7669	M	1M Ω
C7168	M	100p 50
C7171	M	33p 50

JH7661
1040-A

O

1. R S S ORS
Unit k-k Ω , M-M Ω or Ω unless otherwise noted.
Rated Power 1 16w unless otherwise noted.
oleranee J 5 unless otherwise noted.
2. CAPAC ORS
Unit p-p or u-u unless otherwise noted.
Ratings Capacit oltage unless otherwise noted.
3. M o Mount

A□ MCH BRIDGE ASSY (SC-57:AWX9818)

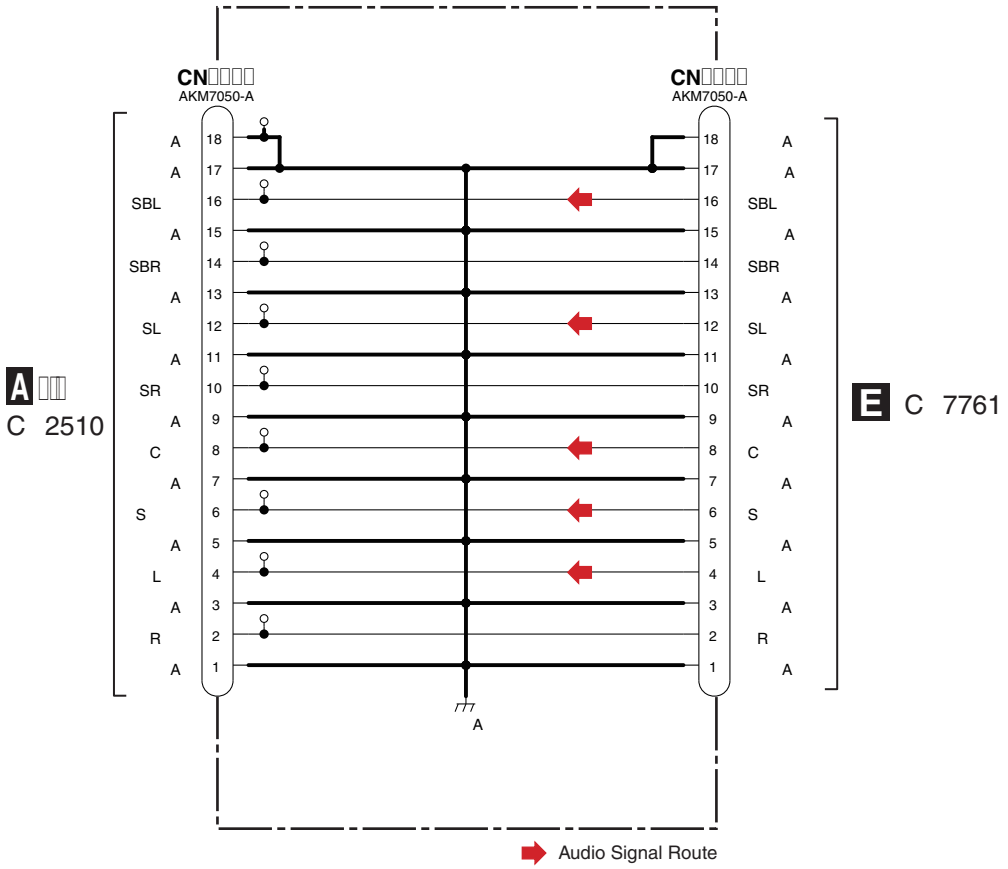

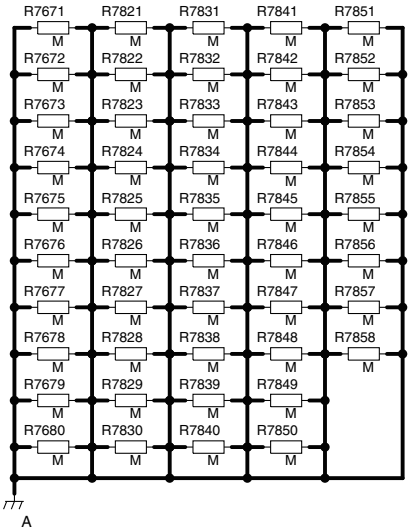

O

1. R S S ORS
Unit k-k Ω , M-M Ω or Ω unless otherwise noted.
Rated Power 1 16w unless otherwise noted.
oleranee J 5 unless otherwise noted.
2. CAPAC ORS
Unit p-p or u-u unless otherwise noted.
Ratings Capacit oltage unless otherwise noted.
3. M o Mount

□□.□□ A RE□ □RID□ E□□ IC □P □UARD□□AN CONNECT□□ IND D□ □□ IND □ CA□LE□□□C □UARD□ □□□ VRE□ □UARD ASS□S

A□ A REG BRIDGE ASS'Y (AWX9810)

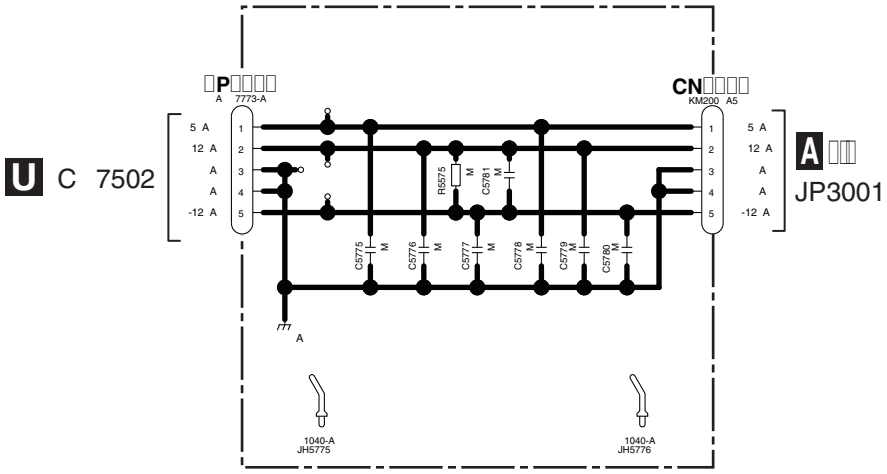

AI MIC HP GUARD ASSY (AWX9803)

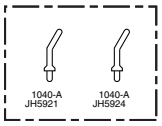

A□ FAN CONNECT ASSY (AWX9804)

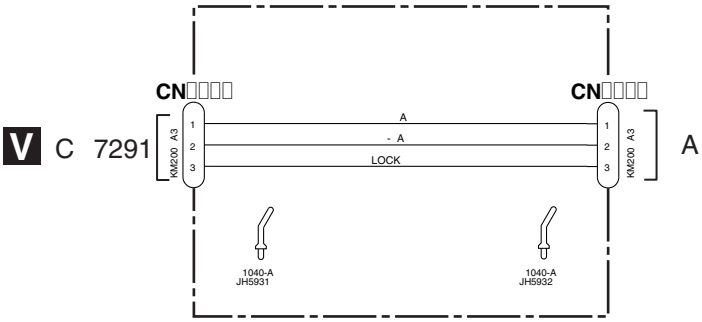

A□ BIND DM CABLE ASSY (AWX9863)

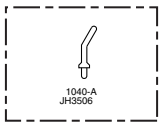

AL BIND B CABLE ASSY (AWX9807)

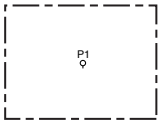

A□ FFC GUARD2 ASSY (AWX9812)

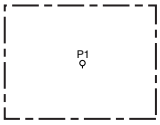

AN VREG GUARD ASSY (AWX9895)

O

1. R S S ORS
Unit k-kΩ , M-M Ω or Ω unless otherwise noted.
Rated Power 1 16w unless otherwise noted.
oleranee J 5 unless otherwise noted.
2. CAPAC ORS
Unit p-p or u-u unless otherwise noted.
Ratings Capacit oltage unless otherwise noted.
3. M o Mount

A□ AI A□ A□ AL A□ AN A□ AI A□ A□ AL A□ AN

□□. PC□ CONNECTION DIA□ RA□
□□.□ AUDIO ASS□

SIDE A

A AUDIO ASSY

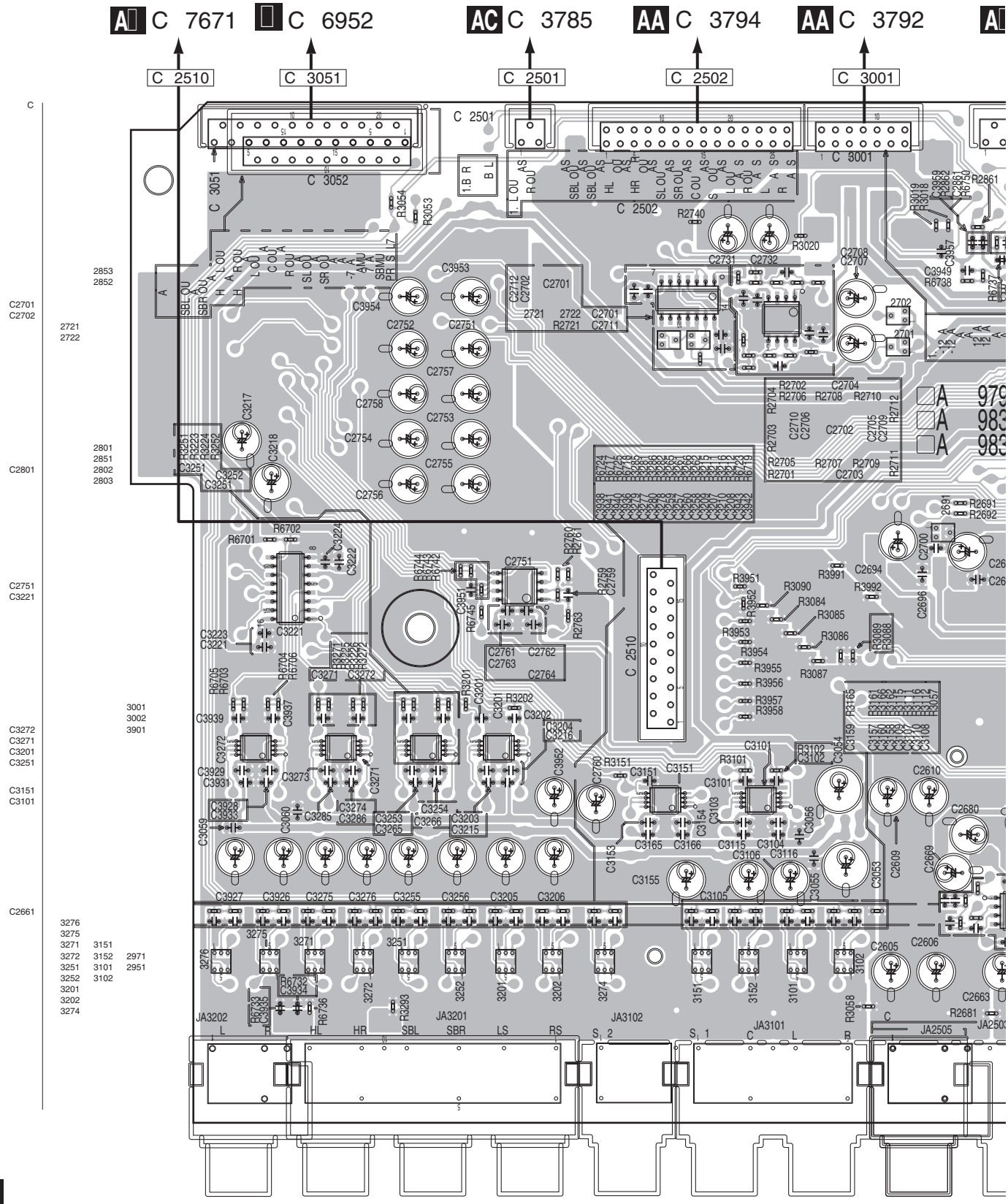

NOTE OR PC DIA RA S

1. he parts mounted on this PCB include all necessar parts or several destinations. or urther in ormation or respective destinations, be sure to check with the schematic diagram.

2. iew point o PCB diagrams.

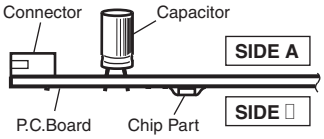

SIDE A

792 A C 3774 A C 3772 AD C 7724

C 2861 C 3901 C 2503

C 2504 C 2503

JP3001 A C 5775

AU O ASS

A 9790 A 9831 A 9832 A 9833 A 9834 A 9835 A 9767 A 9828 A 9830 A 9829

A30C5 C7

(ANP7778-C)

SIDE

A AUDIO ASSY

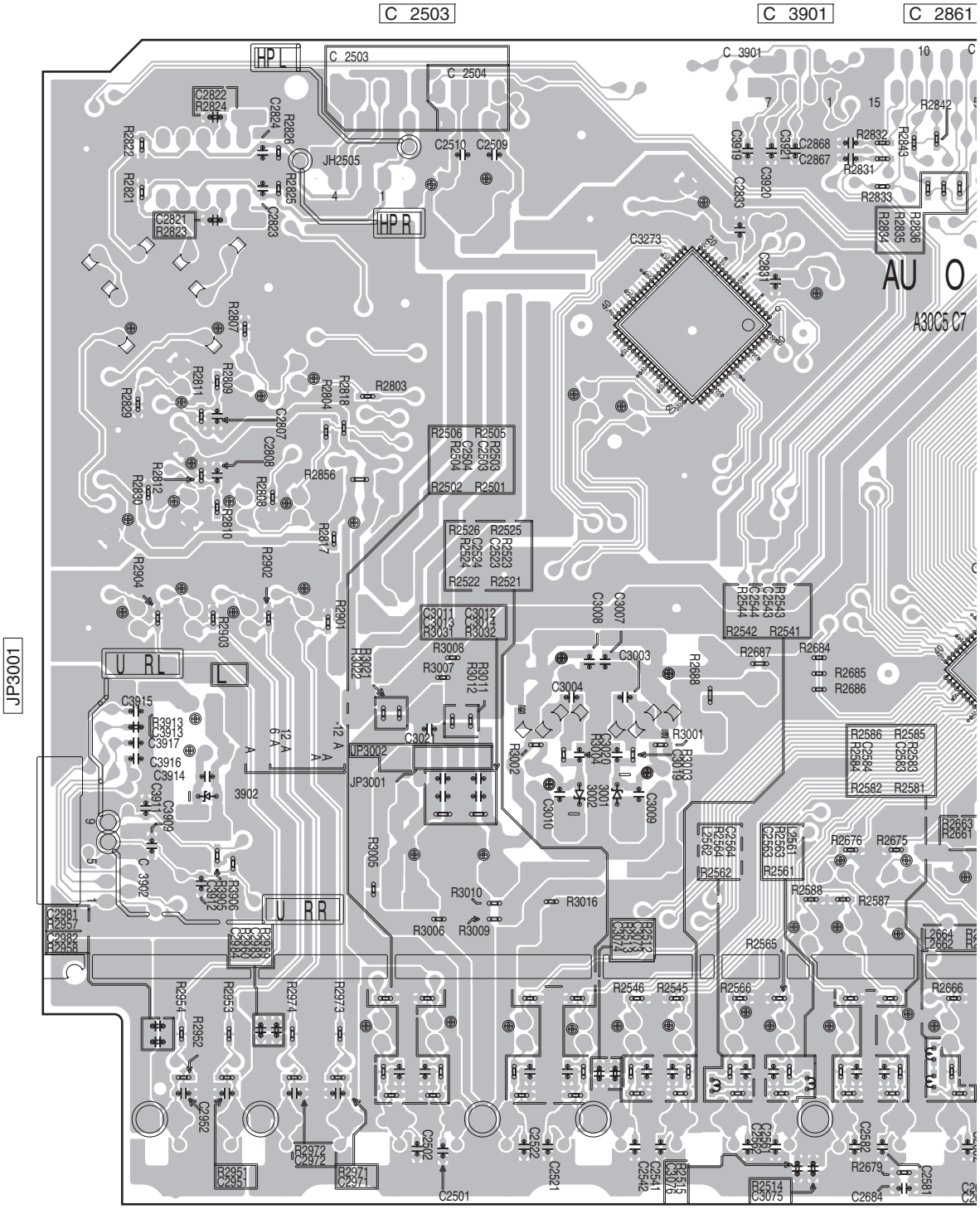

SIDE Ⅱ

A

C 2861 C 3001 C 2502 C 2501 C 3051

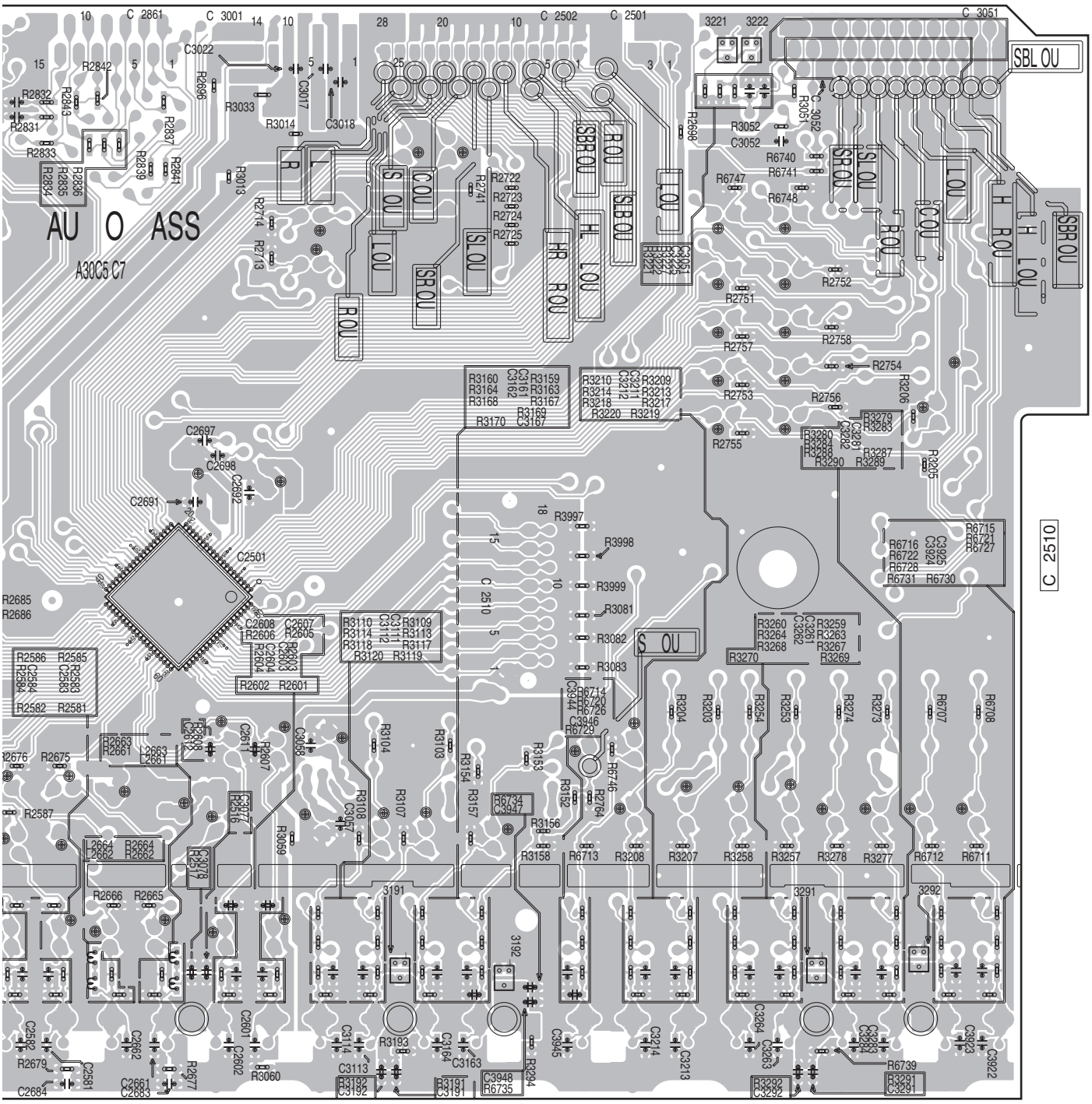

(ANP7778-C)

SIDE A

DAC HIGH ASSY

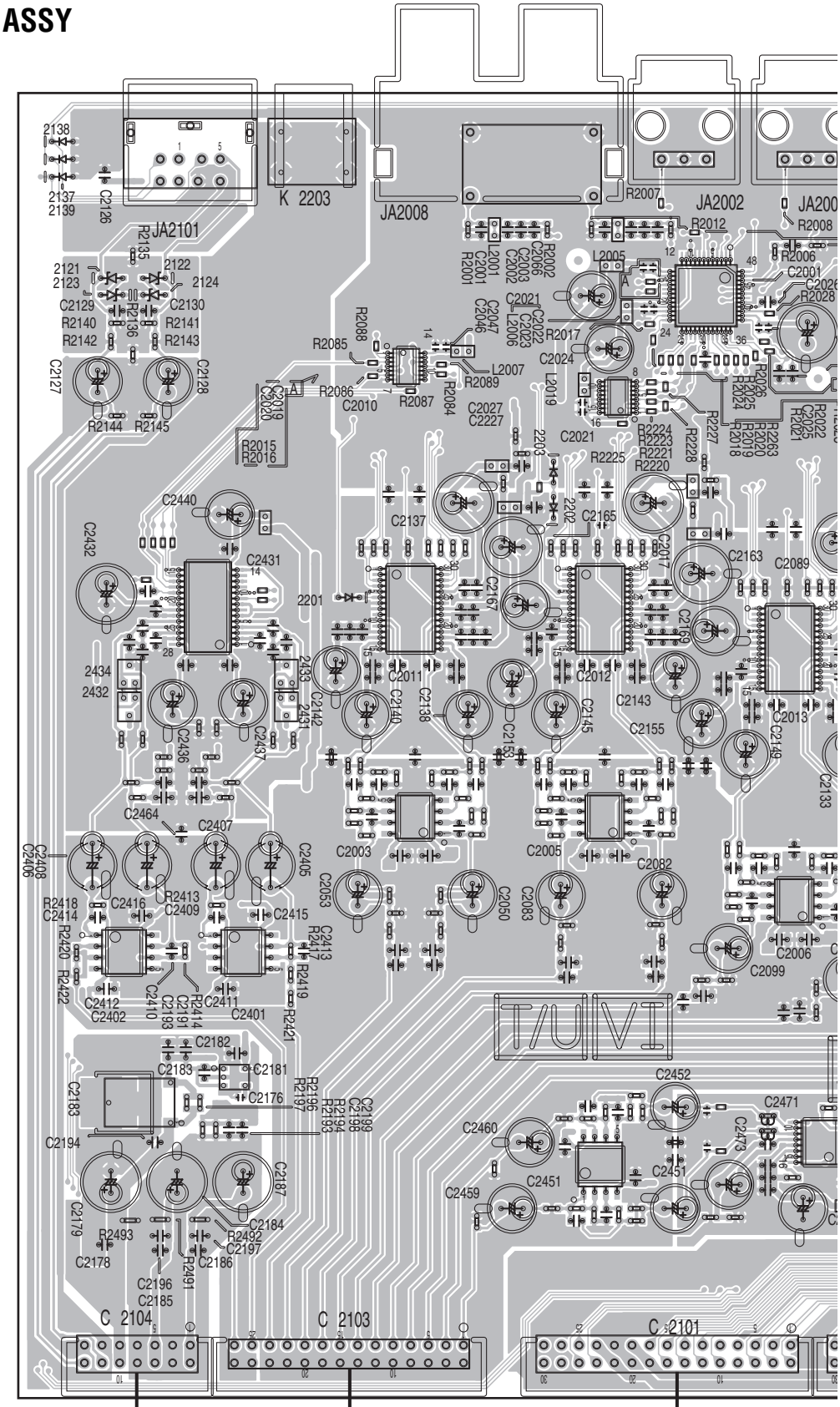

C 2104 → AA C 3791

C 2103 → AA C 3793

C 2101 → AC C 3783

SIDE A

A

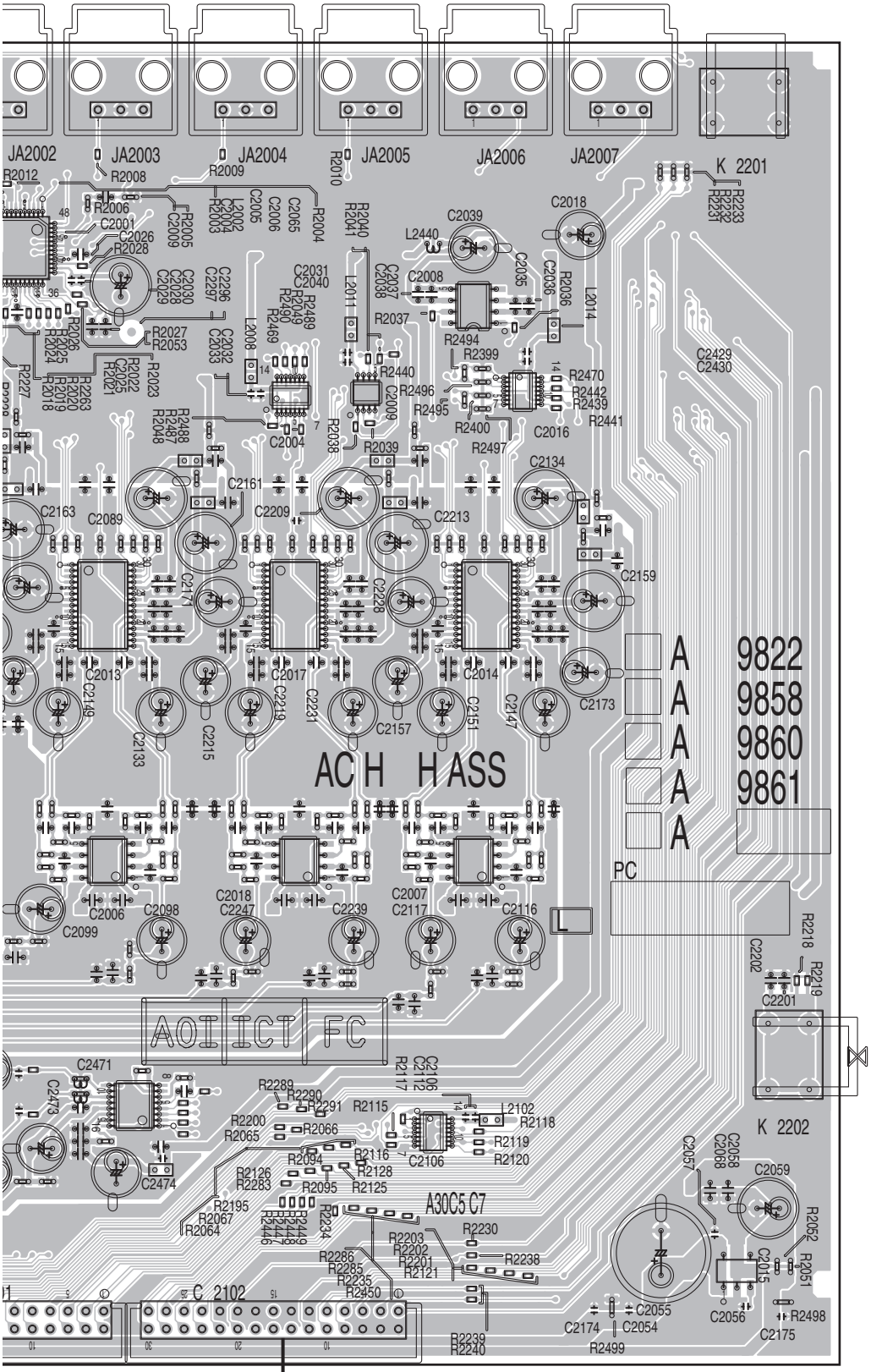

B

C

(ANP7787-B)

01 C 2102

3783 AC C 3781

SIDE

DAC HIGH ASSY

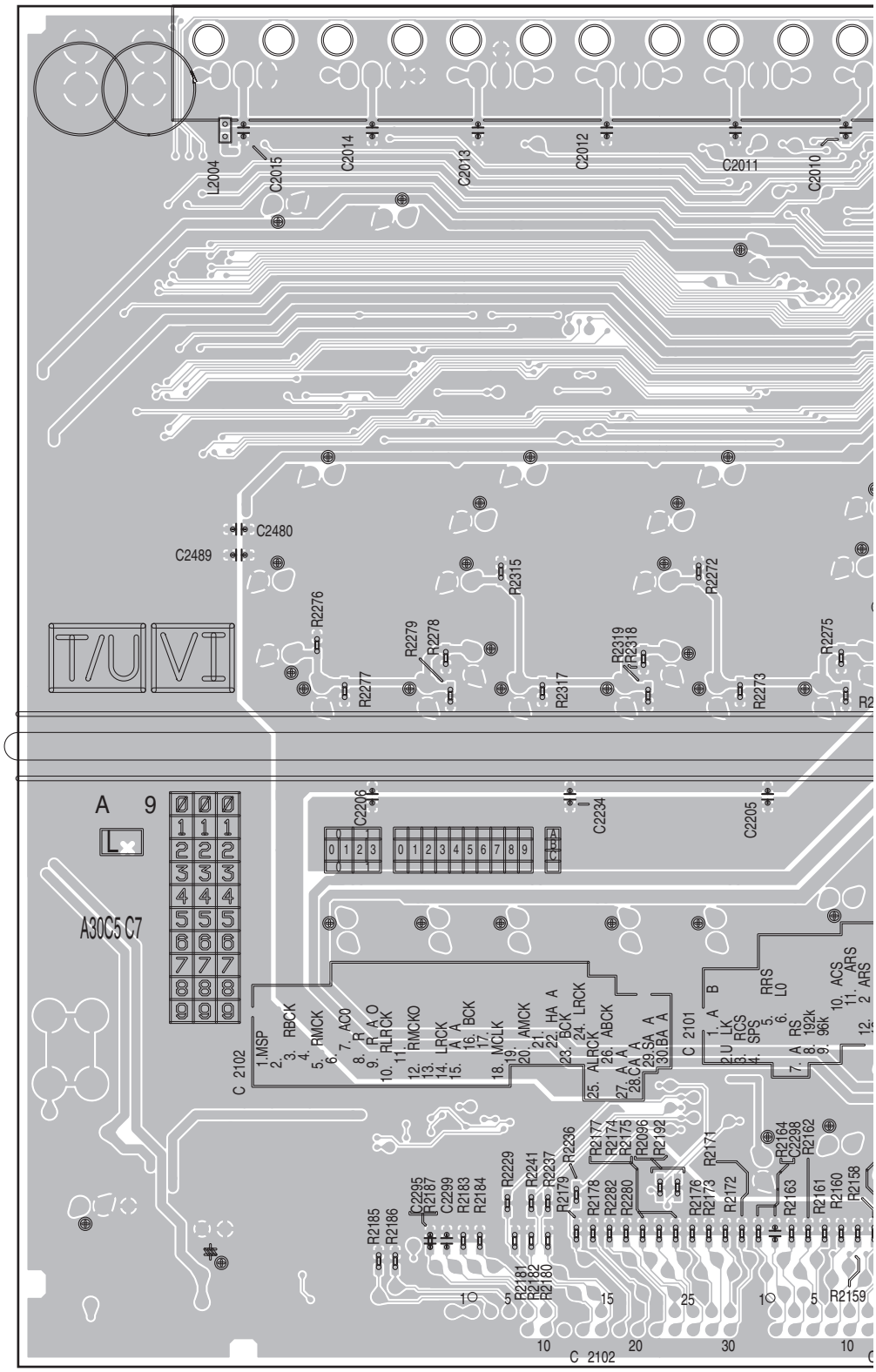

SIDE

A

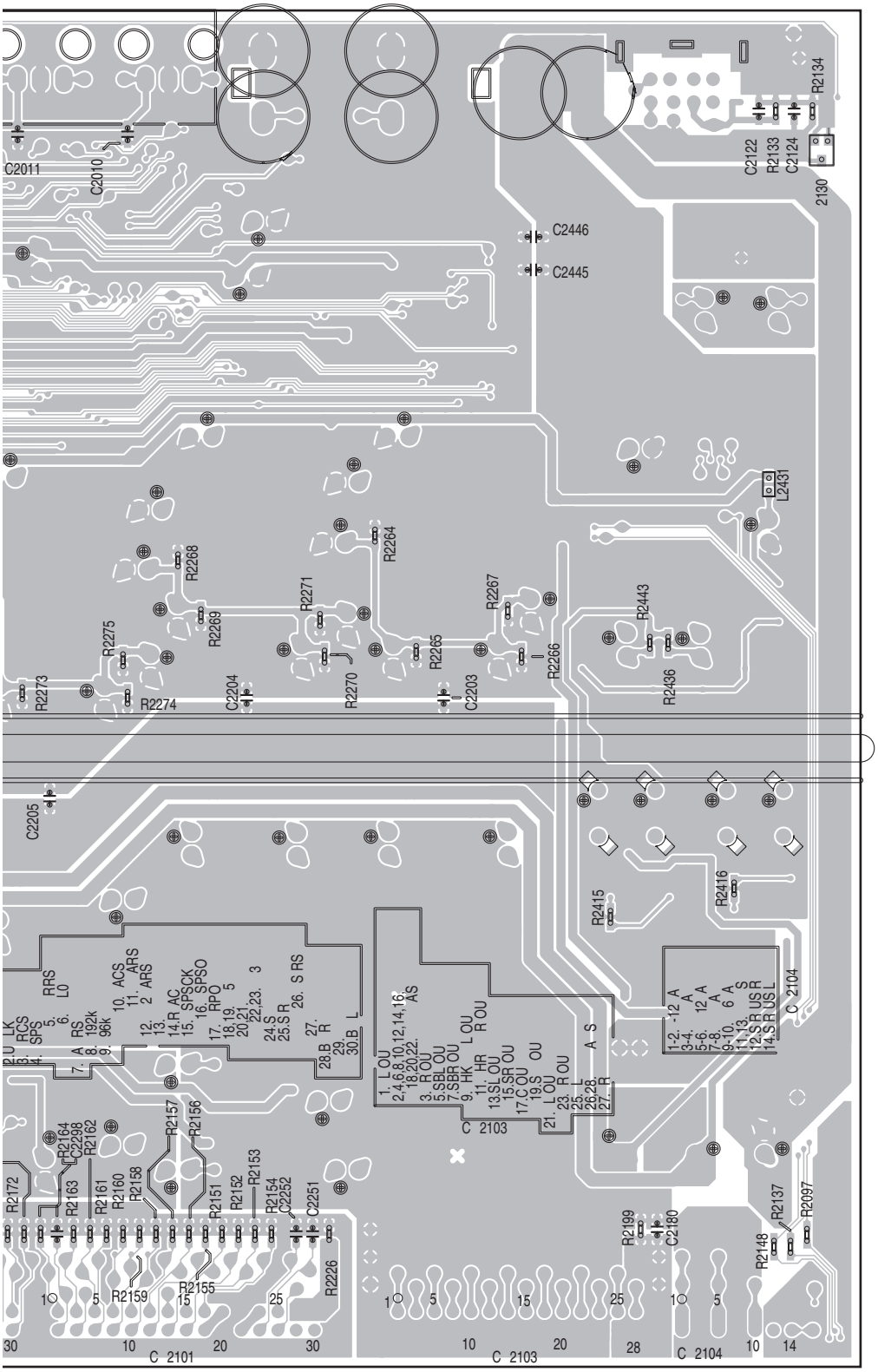

C 2101 C 2103 C 2104 (ANP7787-B)

□□.□ □RONT □ D□ I US□ □US□ RECT □□□ □ ULTI C□ IN(SC□□□) ASS□S

SIDE A

A

C FRONT HDMI USB ASSY

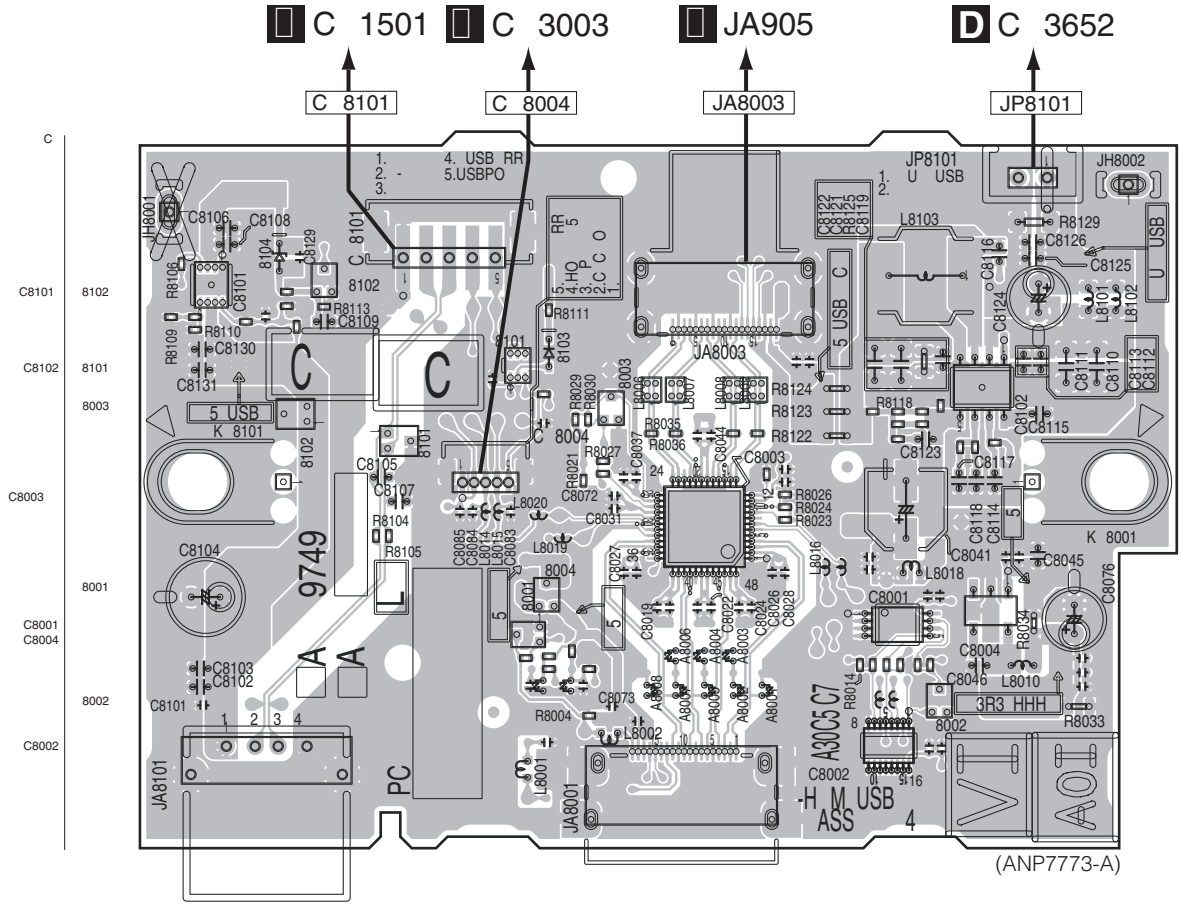

D USB RECT ASSY

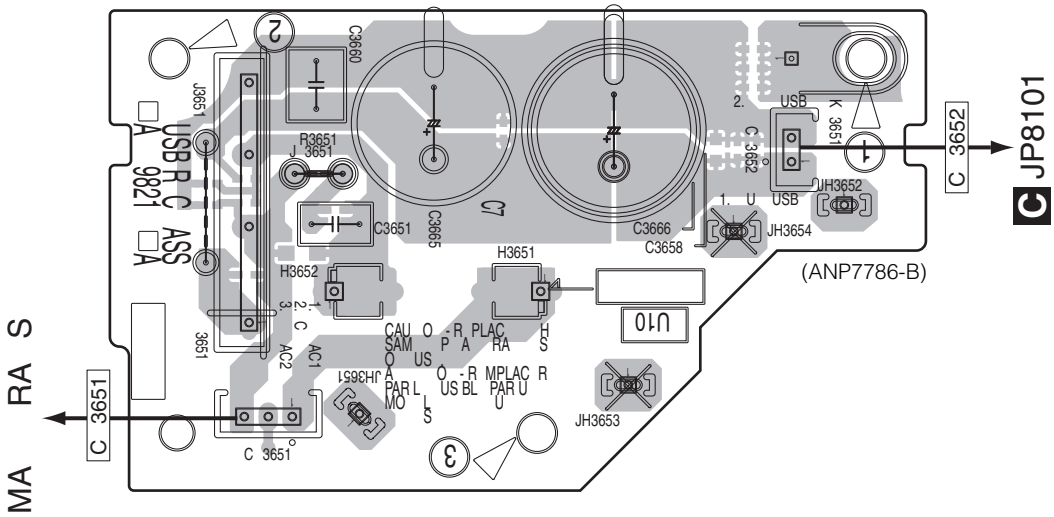

C D

SIDE A

A

E MULTI CH IN ASSY

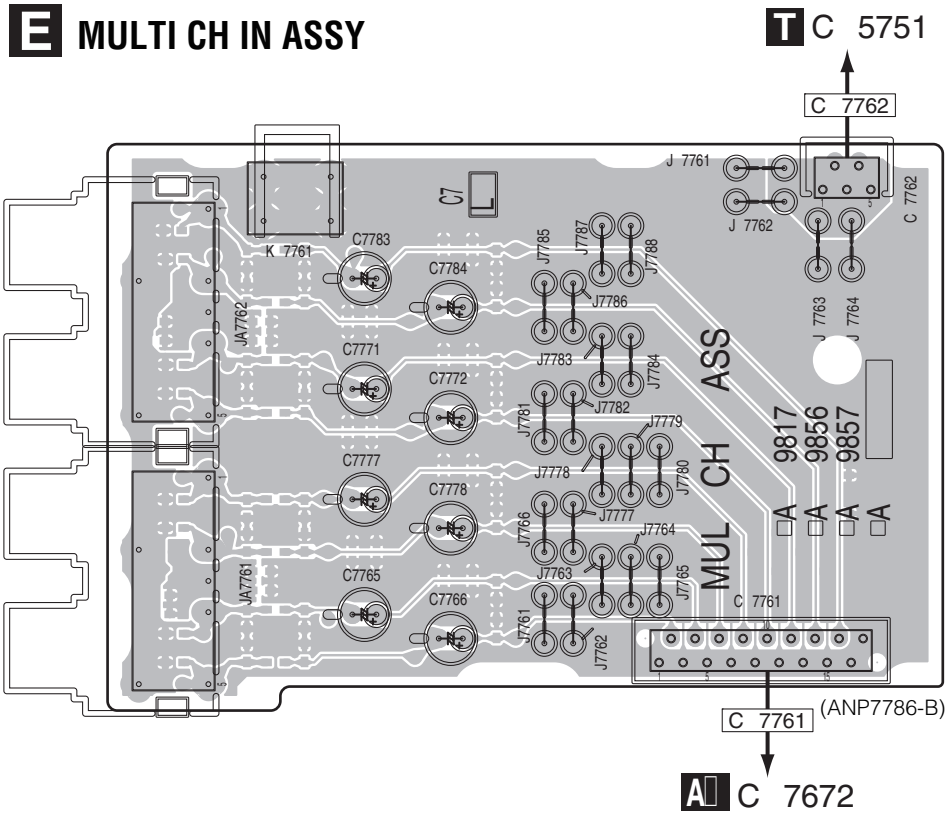

B

C

SIDE □

E MULTI CH IN ASSY

C 7762

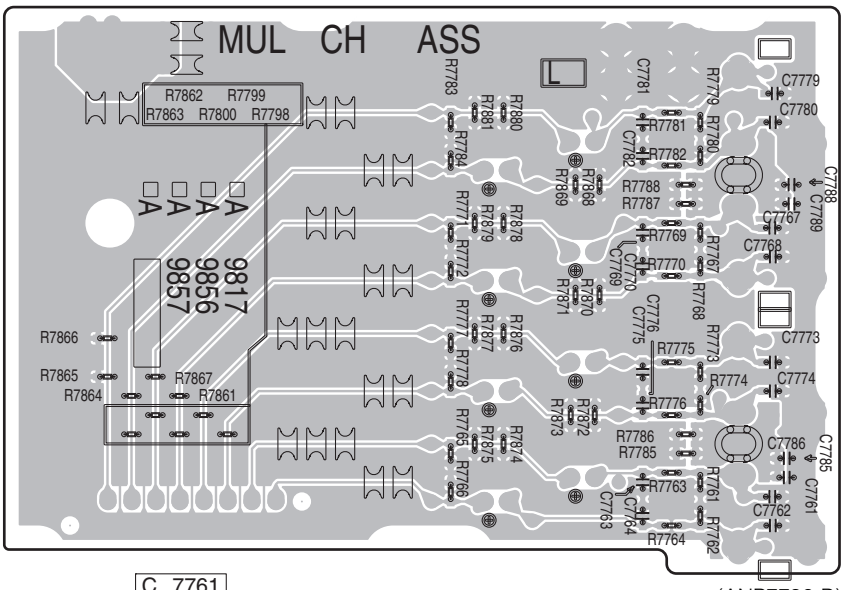

C 7761

(ANP7786-B)

SIDE

A

C FRONT HDMI USB ASSY

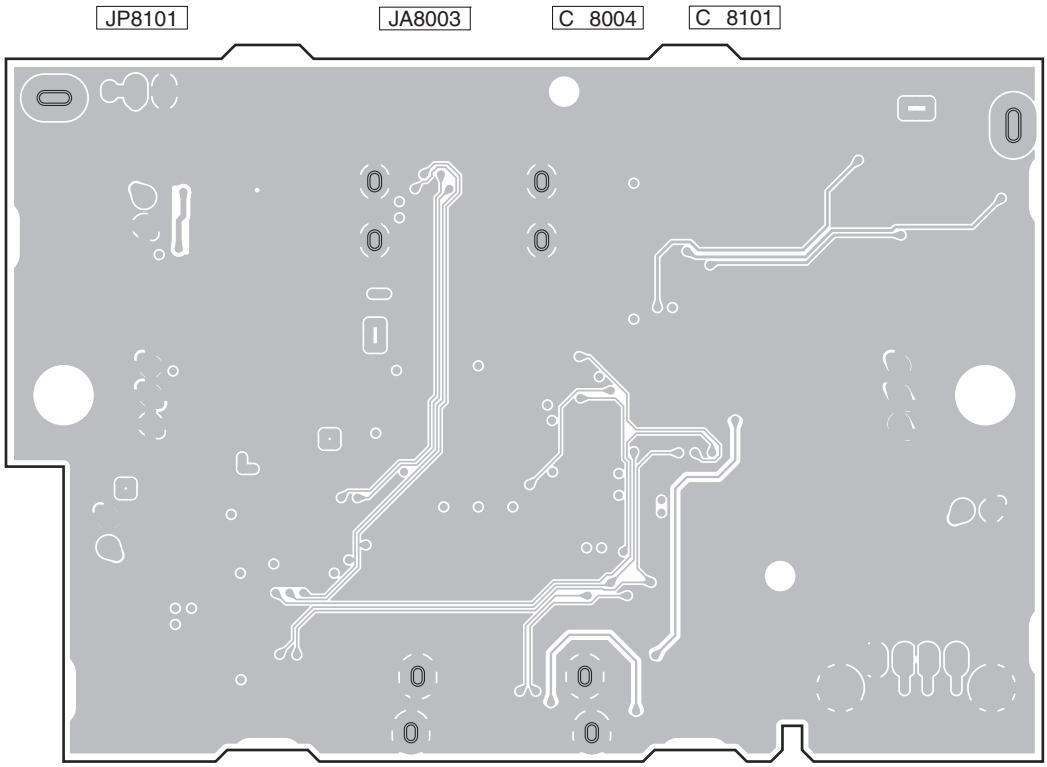

(ANP7773-A)

B

C

D USB RECT ASSY

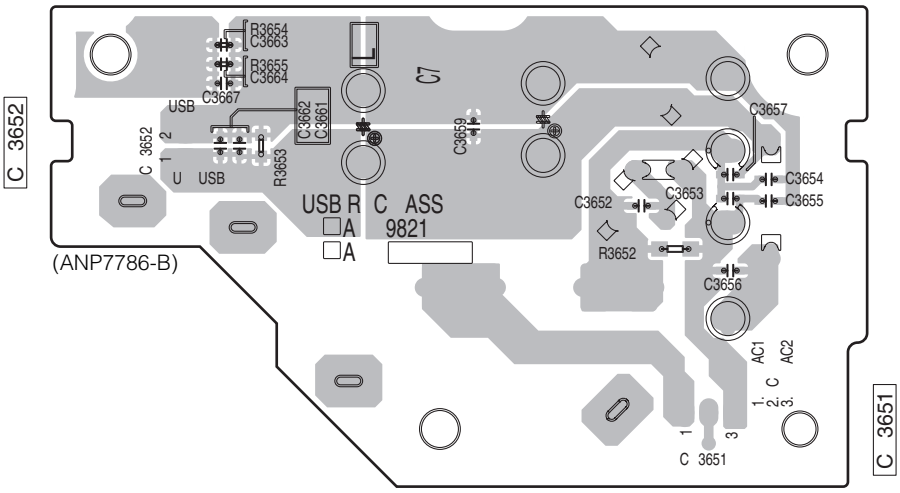

(ANP7786-B)

C D

□□.□ DIGITAL MAIN ASSY

SIDE A

DIGITAL MAIN ASSY

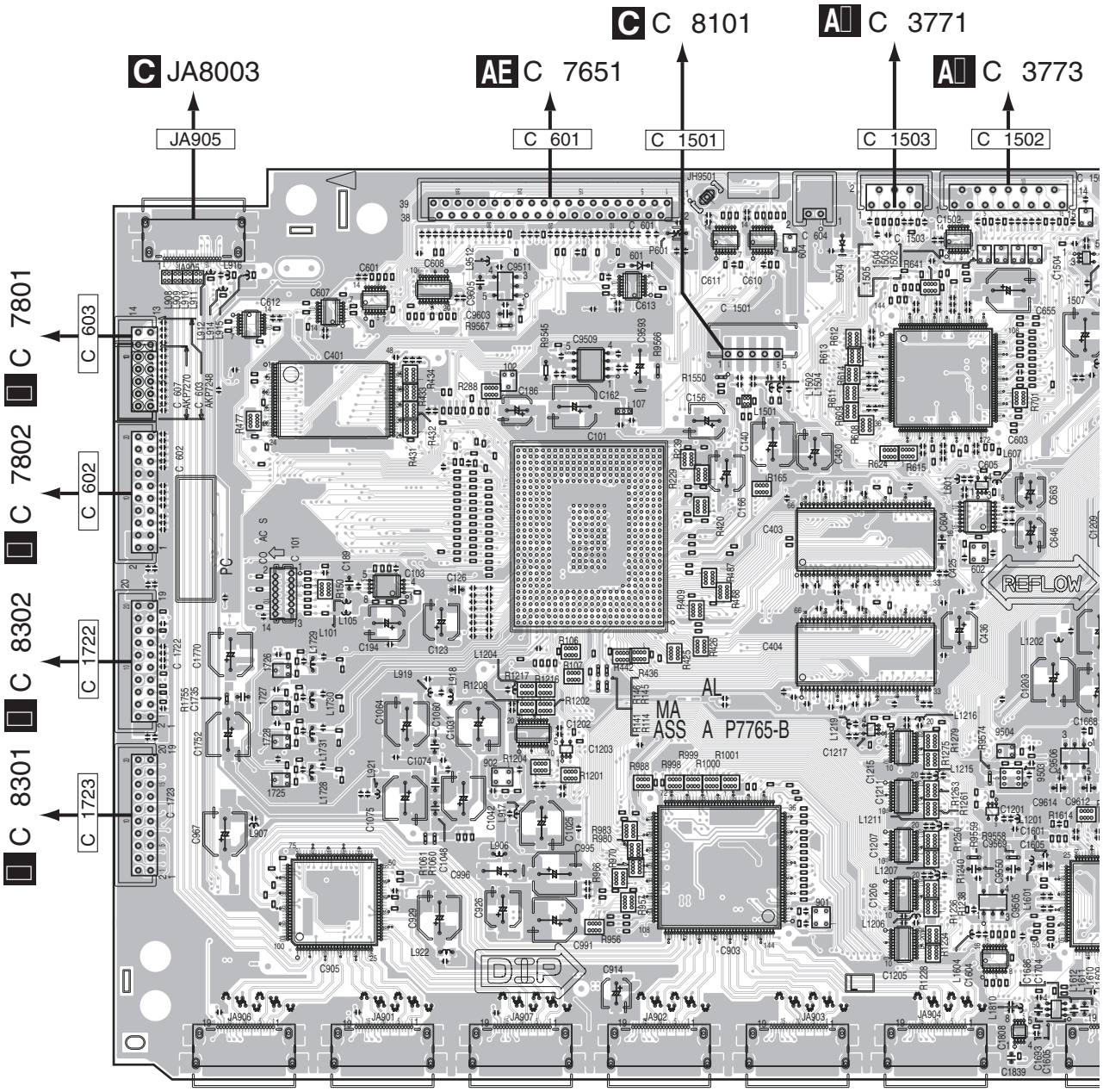

	1726 1727 1728 1725							604				1505 1503	1504 1502 9504 9503		15
C	C612	C607 C401 C905	C601 C103	C608	C9511	C613 C9509 C101 C1202 C1203	C611 C903	C610	C403 C404 C1217	C1215 C1211 C1207 C1206 C1205	C1201 C9505 C1604	C604 C9506	C1502 C603 C605 C1808	C1605	C150

SIDE A

A

B

C

C 3773 | AC C 3784 | AC C 3782 | S JP51

C 1502 | C 9002 | C 9003 | C 9501

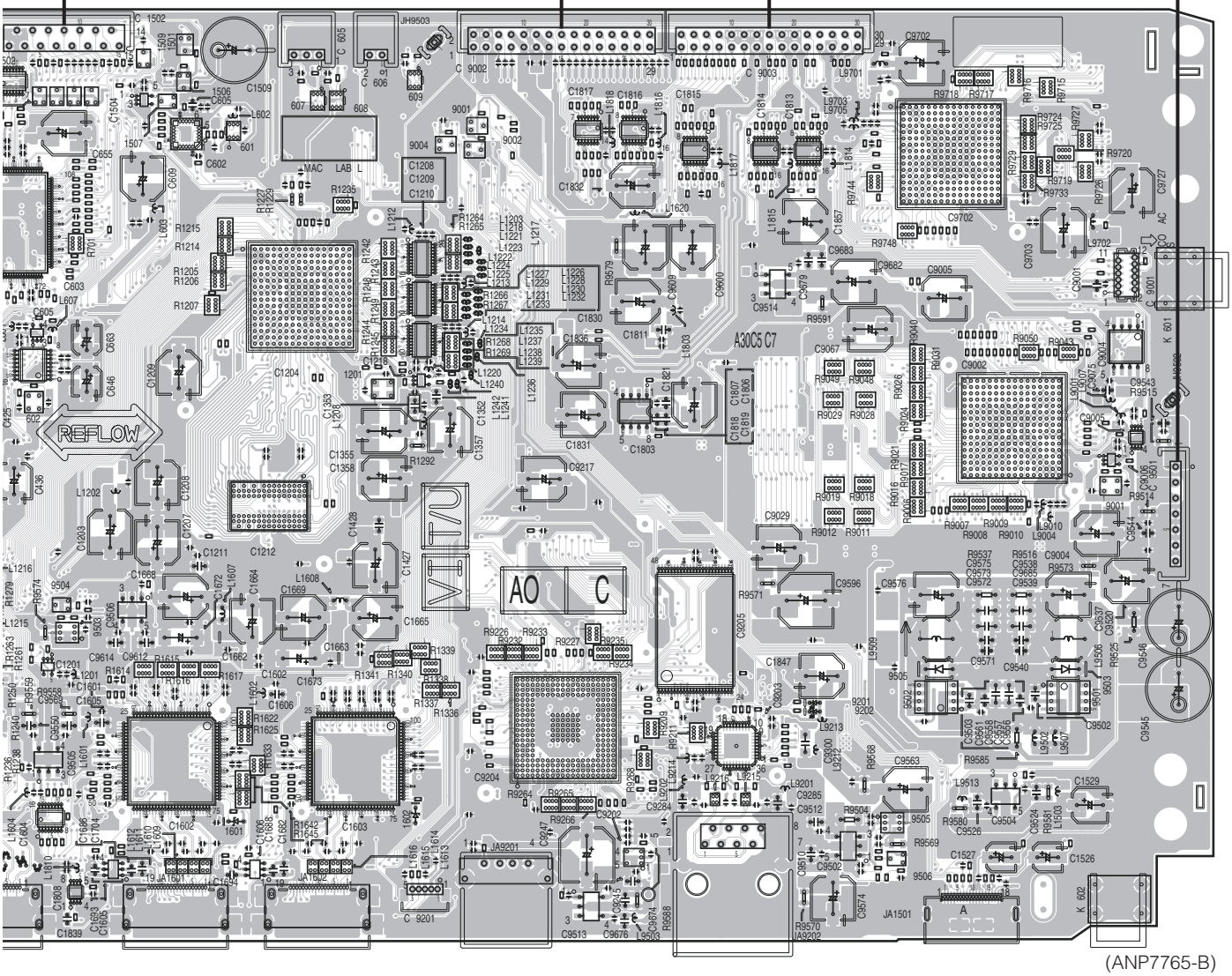

(ANP7765-B)

1505 1504 1509 1501 601 607 608 609 9001
1503 1502 1507 1506 9004 9002
9504
9503

9502 9501
9505
9506

C1502 C1504 C602 C1208 C1817 C1816 C1815 C1814 C1813 C9702 C9004
C603 C1209 C9514 C9005
1201 C604 C605 C1204 C1218 C1803 C9006
C1212 C1210 C9204 C9205 C9002
9505 C9506 C9203
1604 C1808 C1605 C1602 C1606 C1603 C9513 C9202 C9502 C9504

SIDE

DIGITAL MAIN ASSY

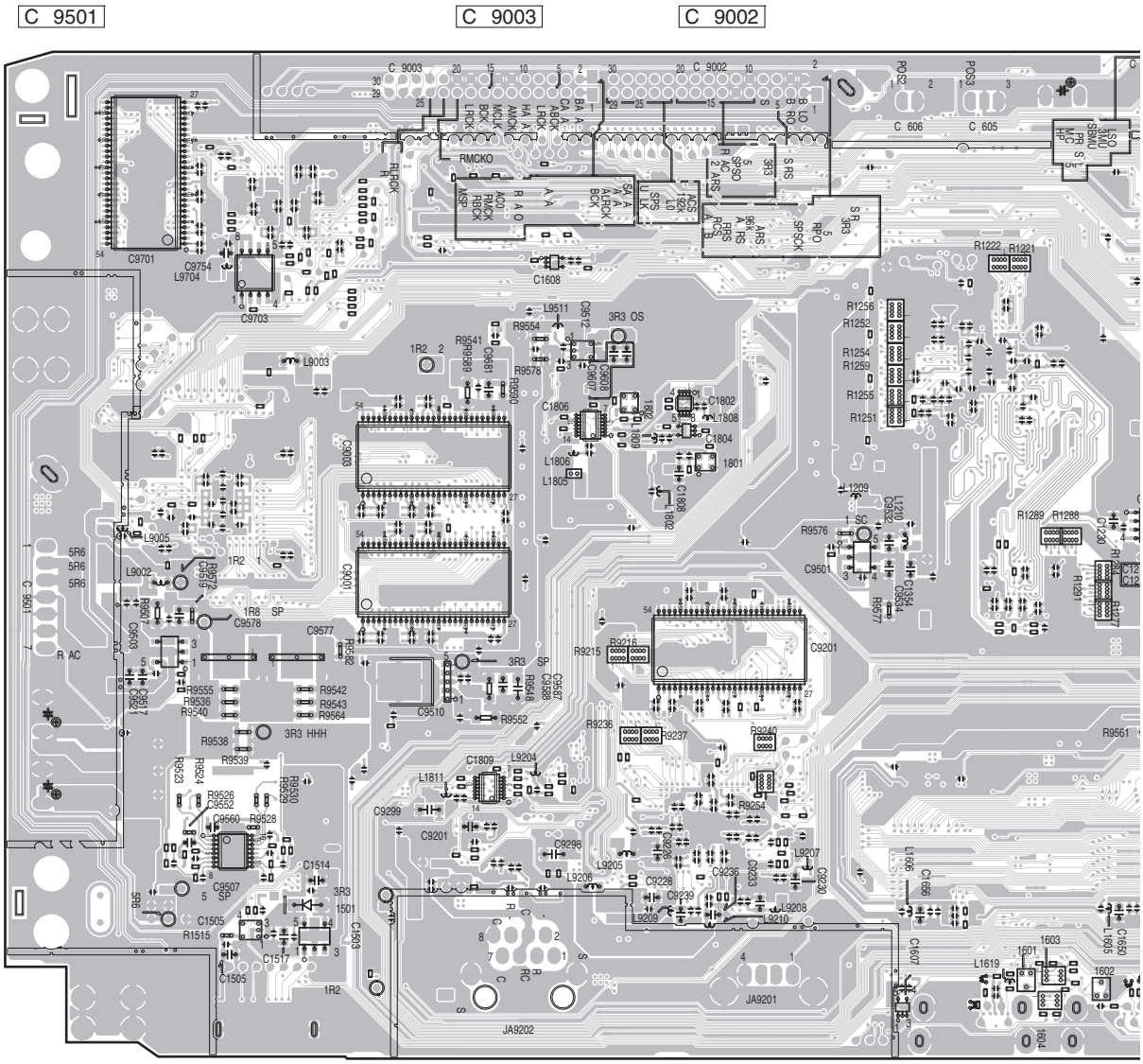

SIDE Ⅱ

A

B

C 1502 C 1503 C 1501 C 601 JA905

C

C 603

C 602

C 1722

C 1723

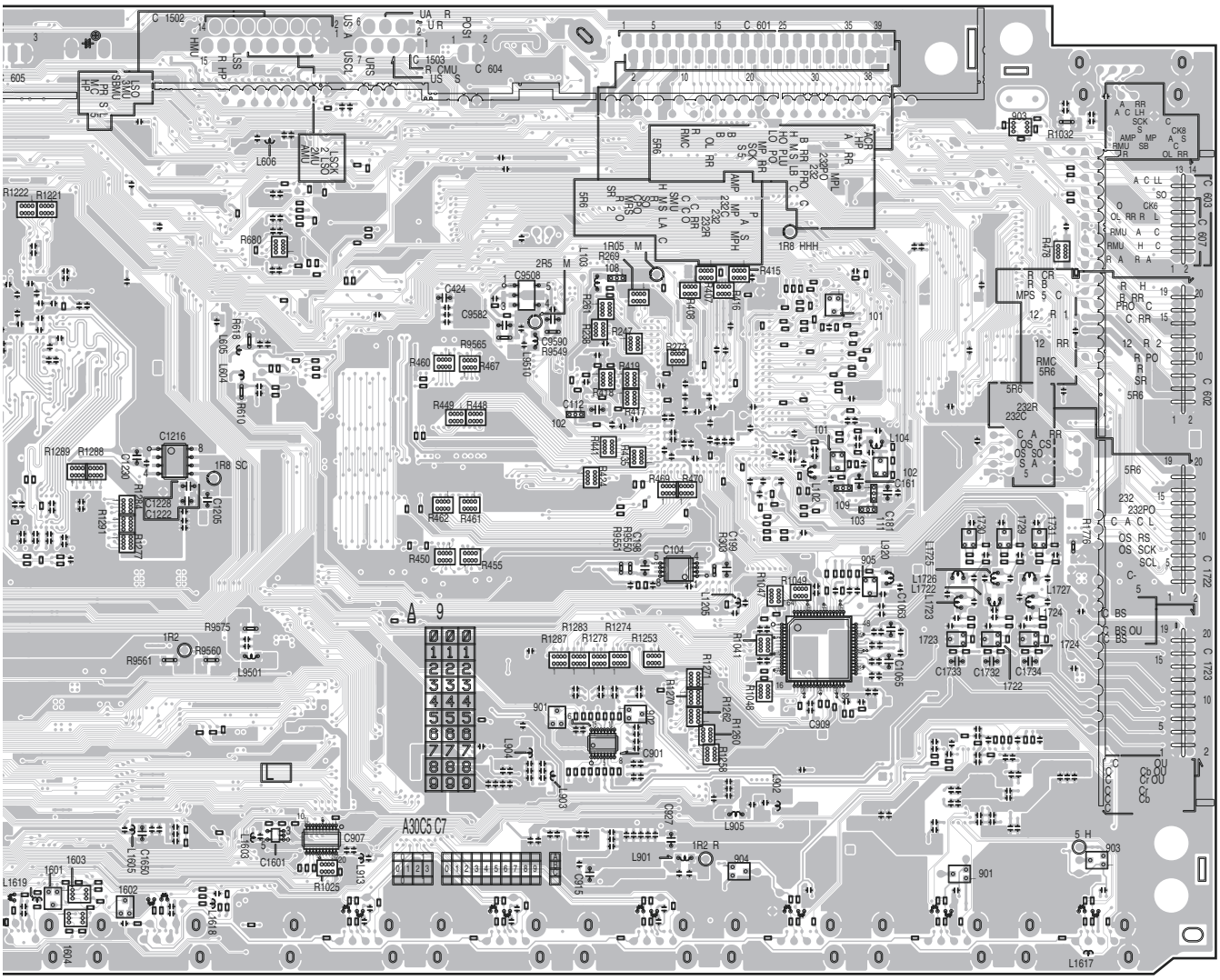

(ANP7765-B)

1603 1601 1602 1604 901 101 102 905 903 1730 1729 1731 1723 1722 1724

C1216 C9508 C104 C909 C1601 C907 C901

SIDE A

INTERFACE ASSY

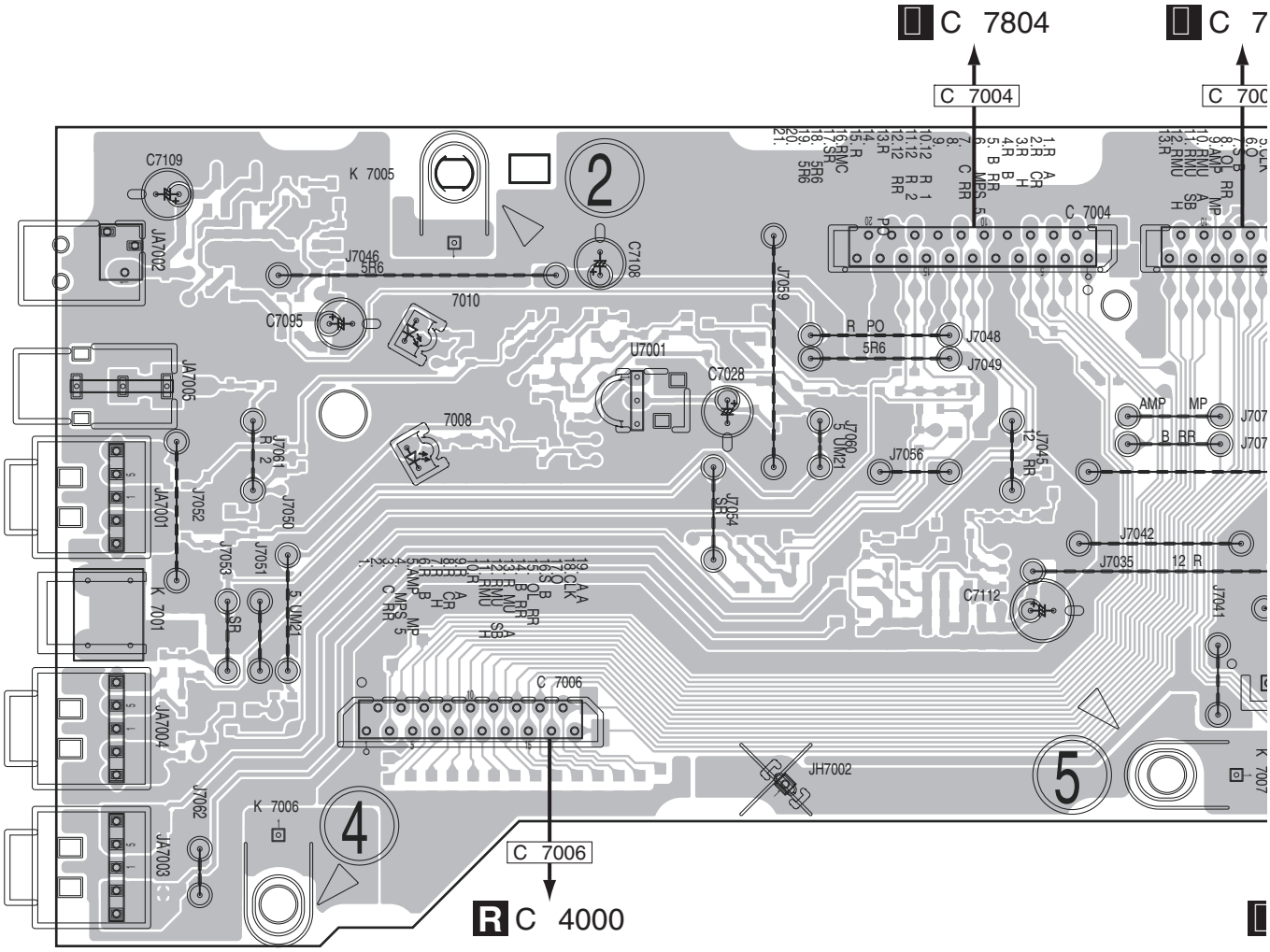

SIDE A

A

B

C

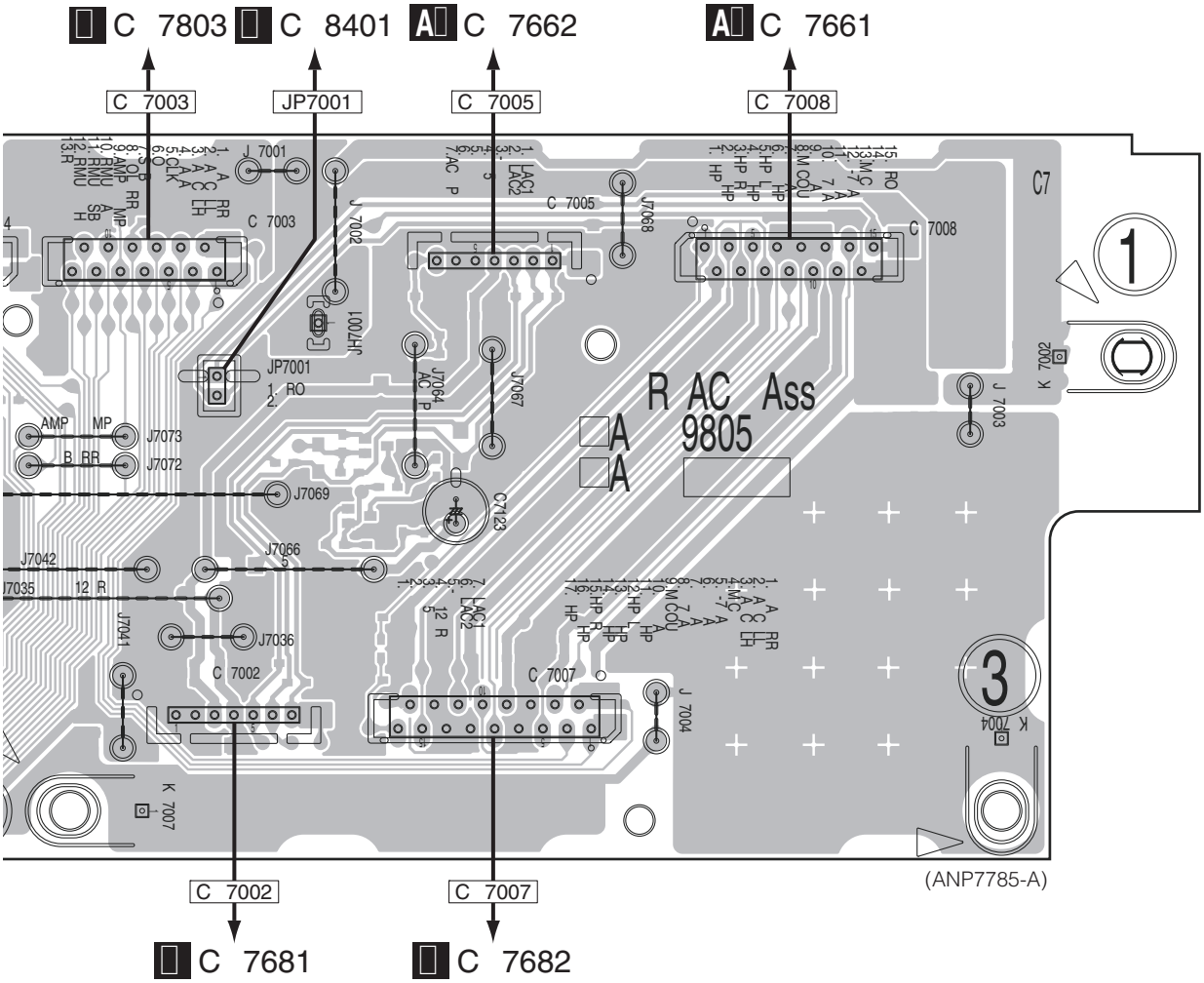
C 7803
C 8401
C 7662
C 7661
C 7003
JP7001
C 7005
C 7008
J 7001
J 7002
JH7001
C 7005
J7068
C 7003
C 7008
C7
1
K 7002
J 7003
JP7001
1. RO
2.
J7064
AC P
J7067
R AC Ass
9805
AMP
MP
J7073
B RR
J7072
J7069
C7123
J7042
J7035
12 R
J7066
J7041
J7036
C 7002
C 7007
J 7004
3
K 7004
K 7007
C 7002
C 7007
(ANP7785-A)
C 7681
C 7682

SIDE

INTERFACE ASSY

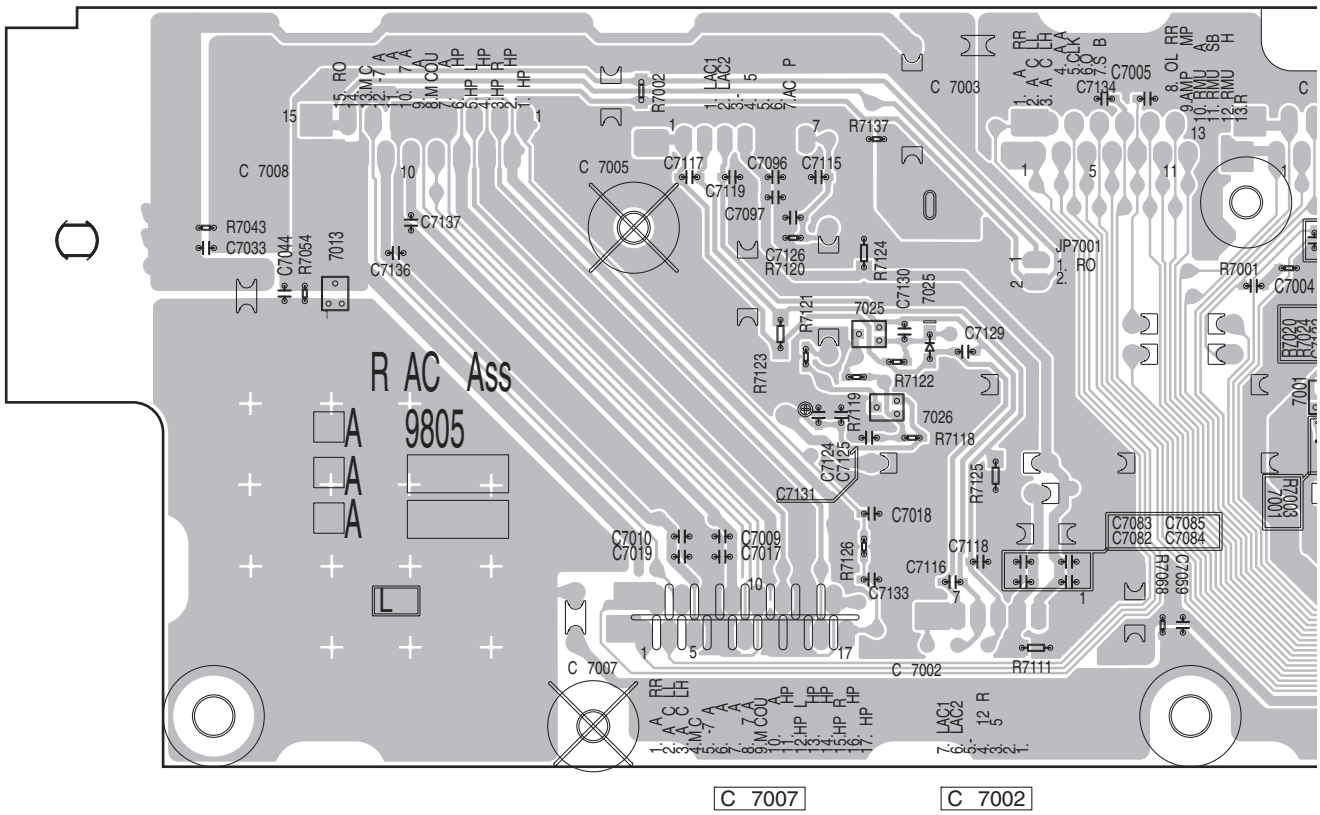

SIDE

A

B

C

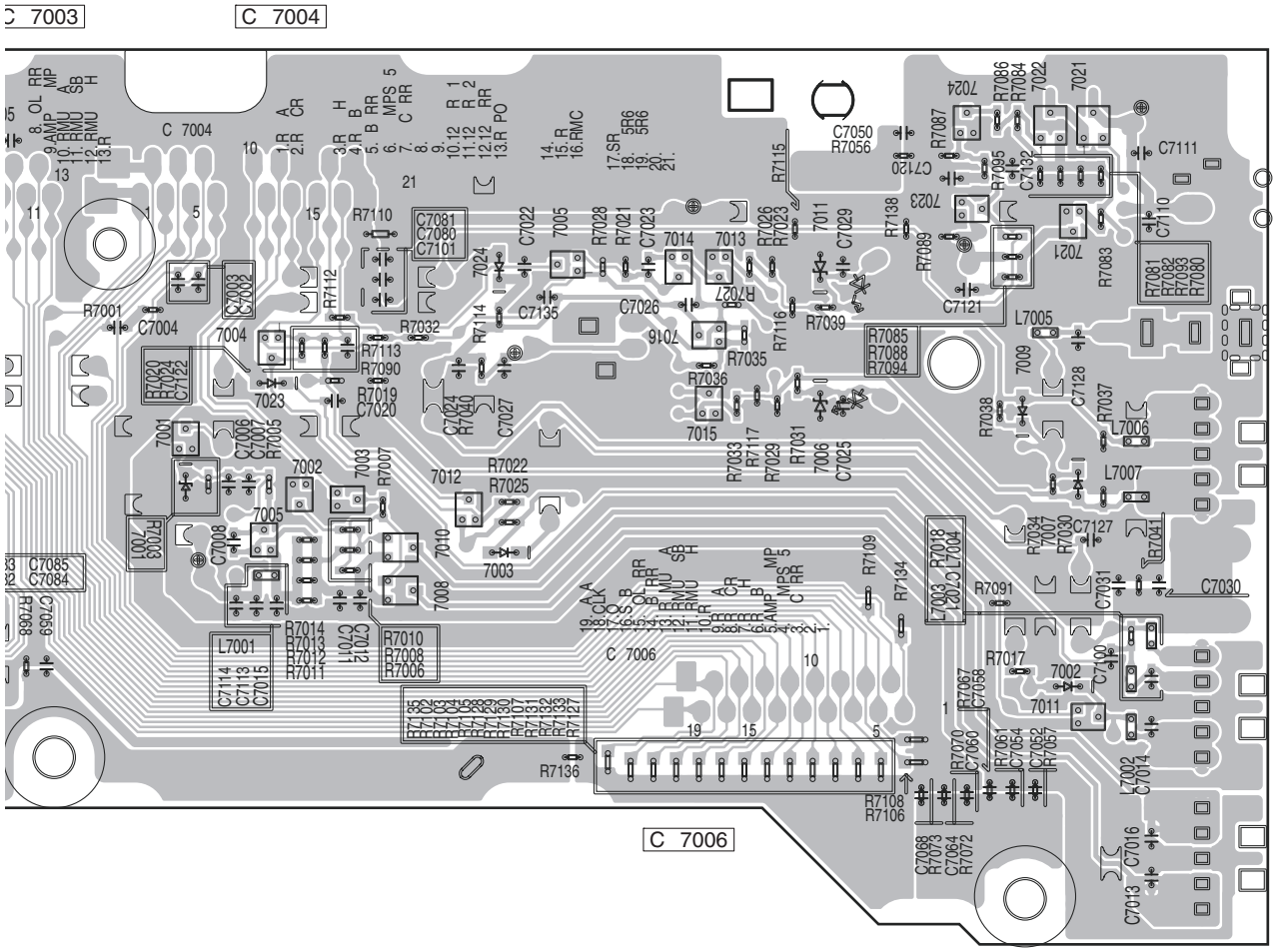

(ANP7785-A)

SIDE A

COMPONENT ASSY

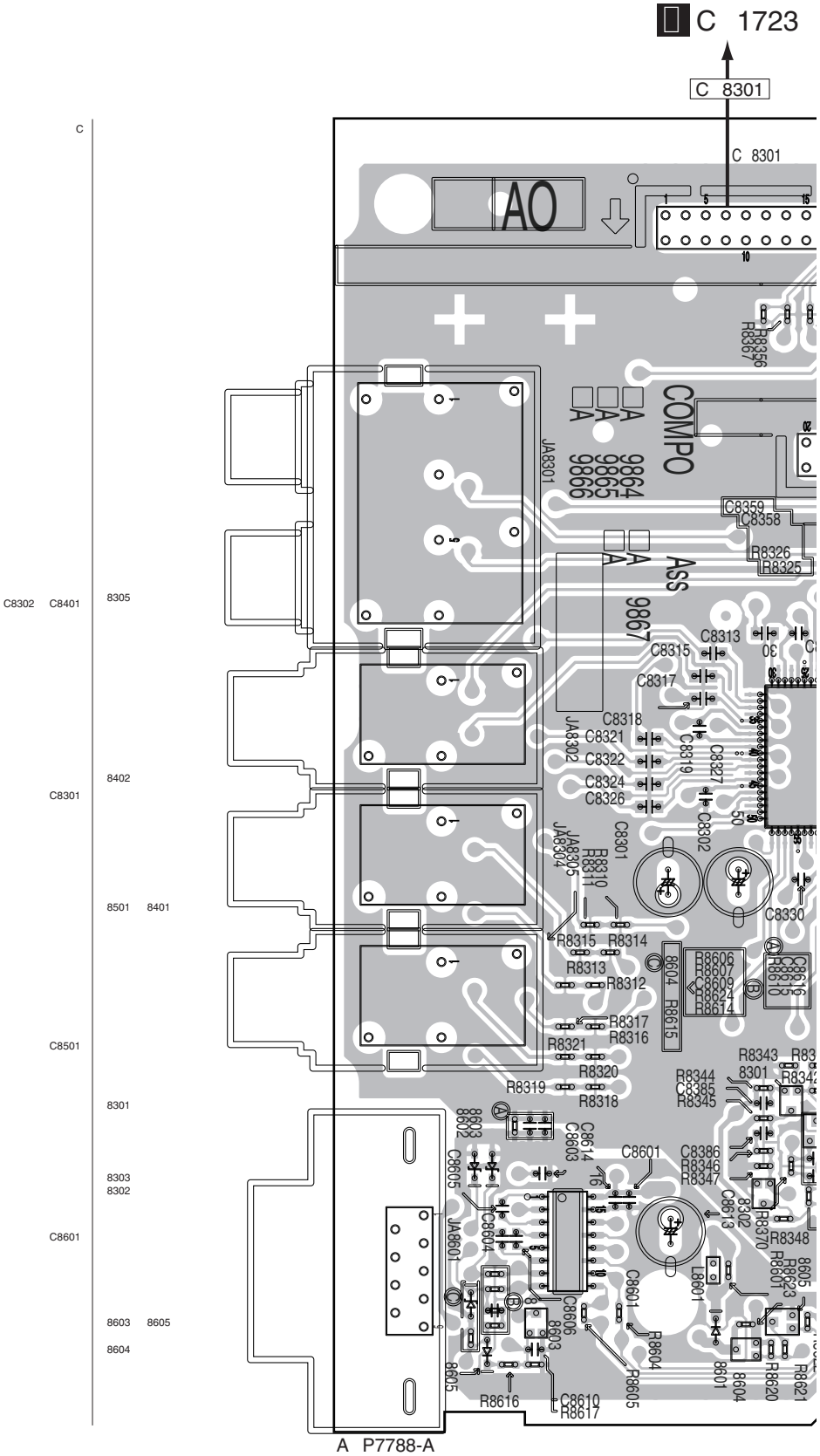

SIDE A

A

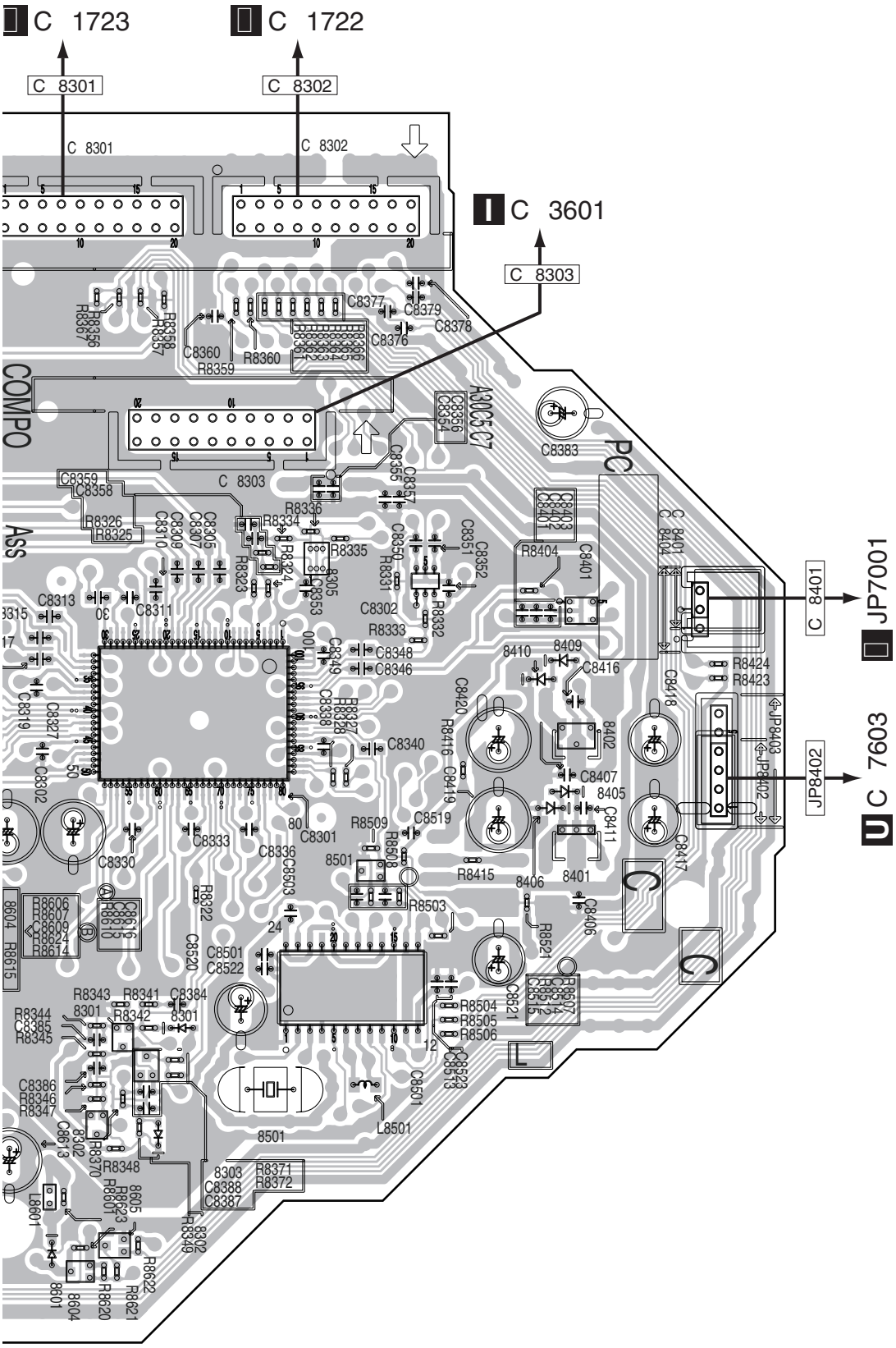
C 1723
C 1722
C 8301
C 8302
C 3601
C 8303
C 8401
JP7001
C 7603
JP8402
COMPO
PC
Ass

B

C

SIDE

COMPONENT ASSY

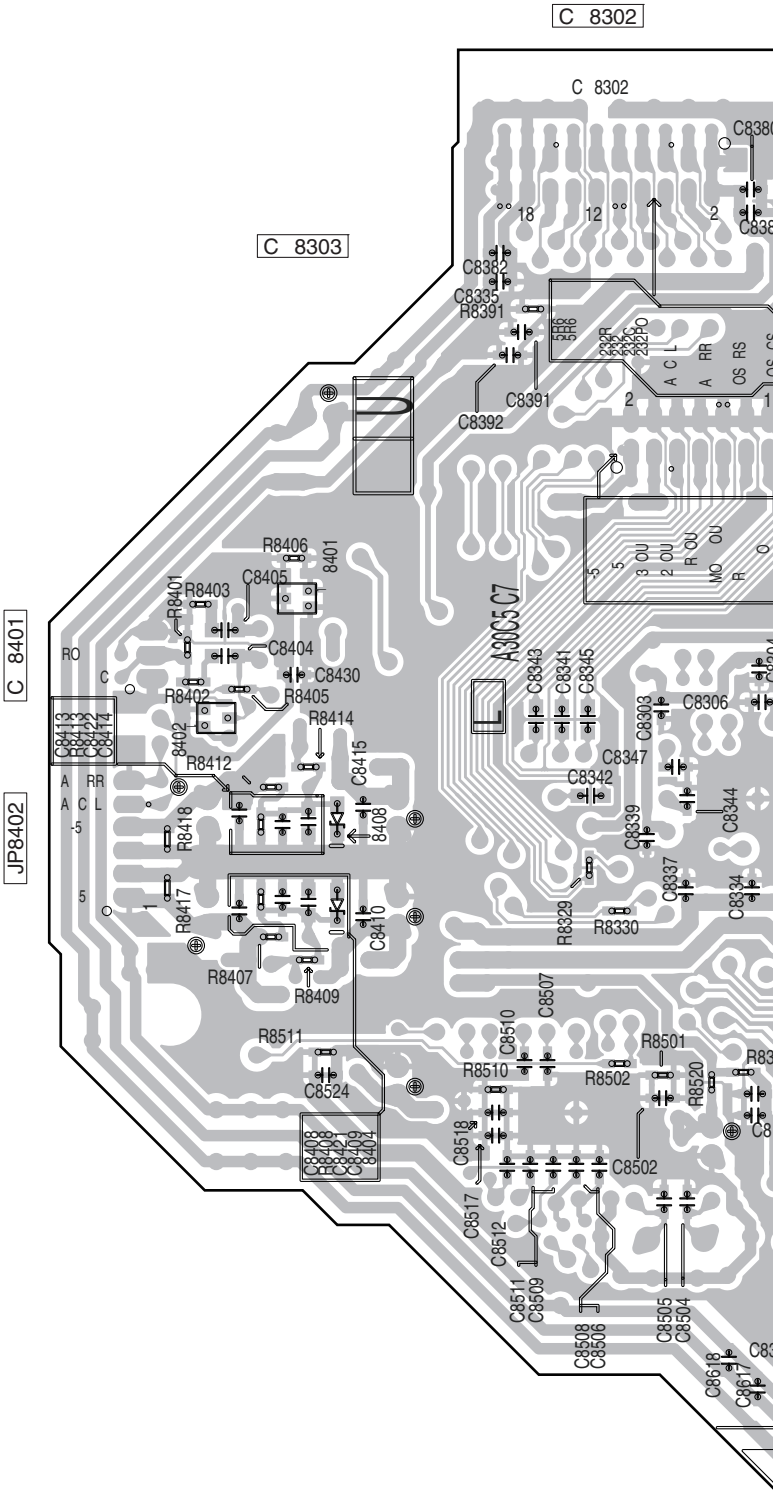

SIDE

A

B

C

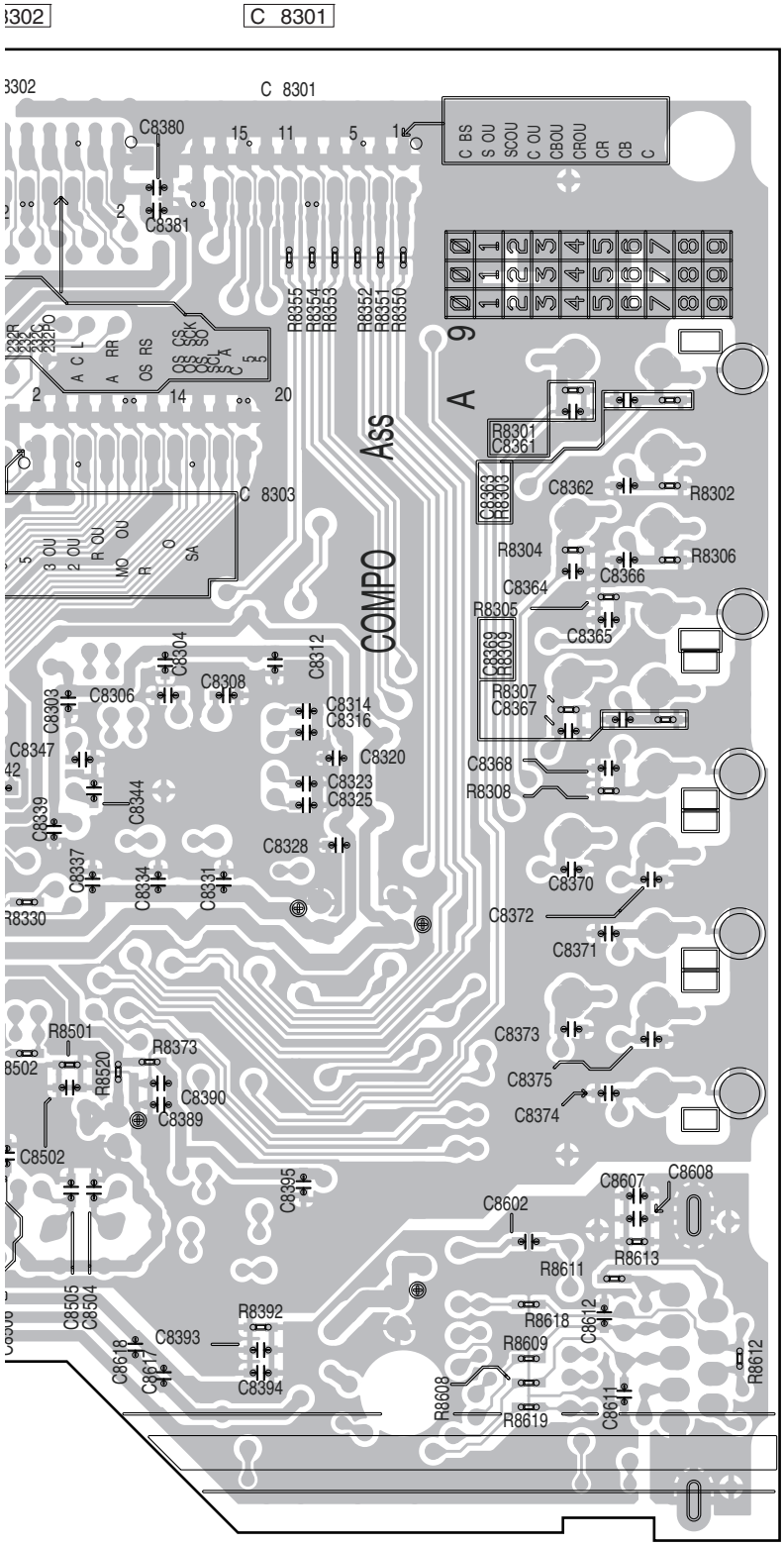

(ANP7788-A)

SIDE A

SIDE A

I COMPOSITE ASSY

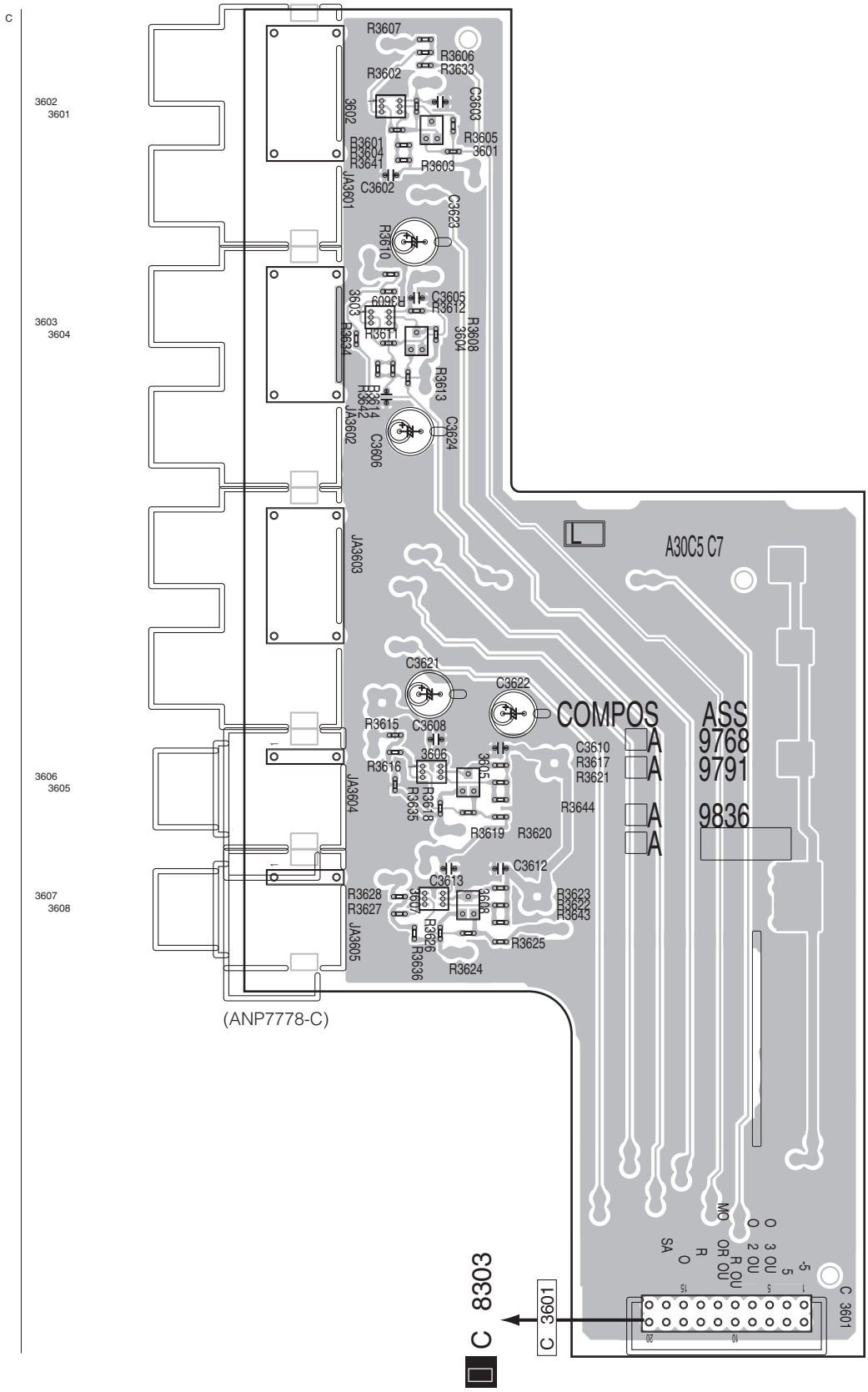

SIDE □

SIDE □

I COMPOSITE ASSY

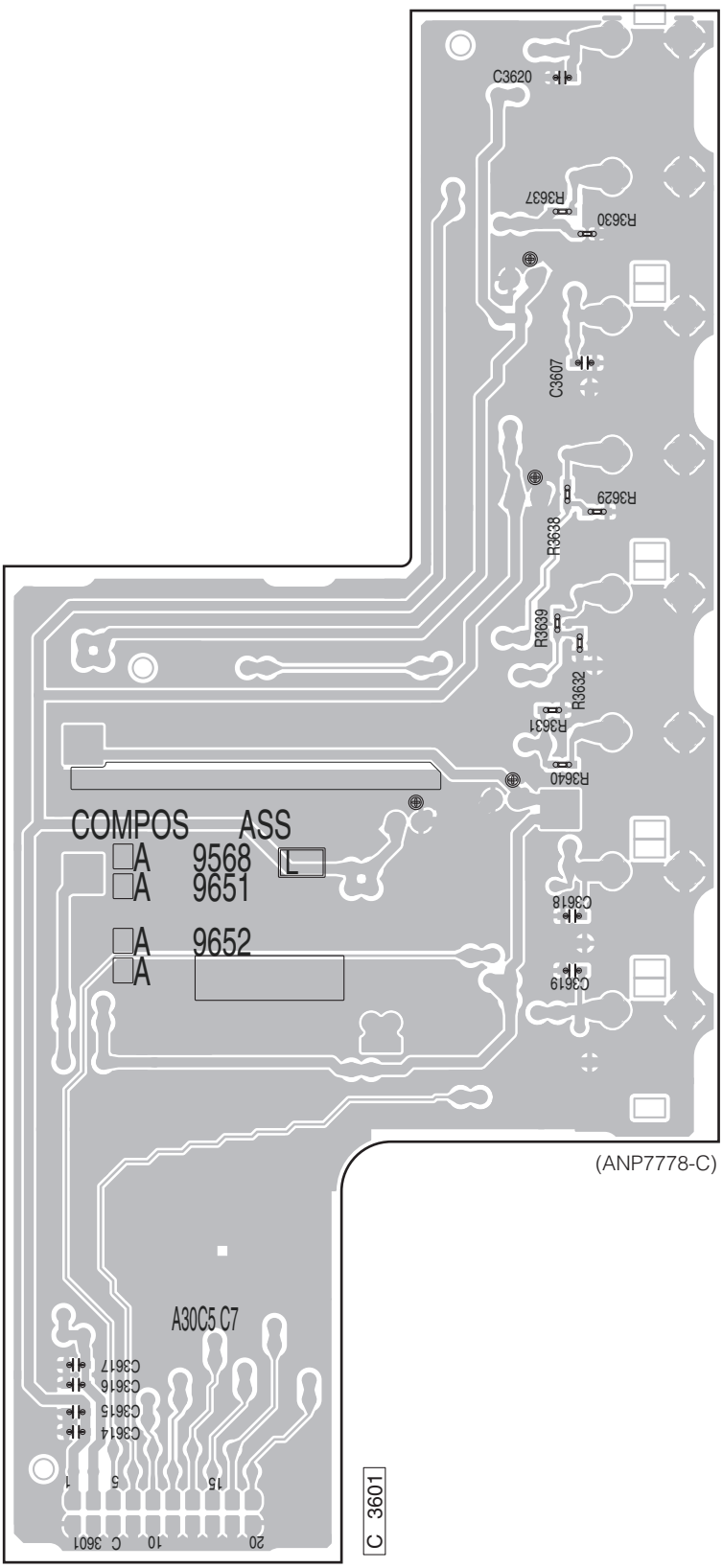

(ANP7778-C)

SIDE A

DISPLAY ASSY

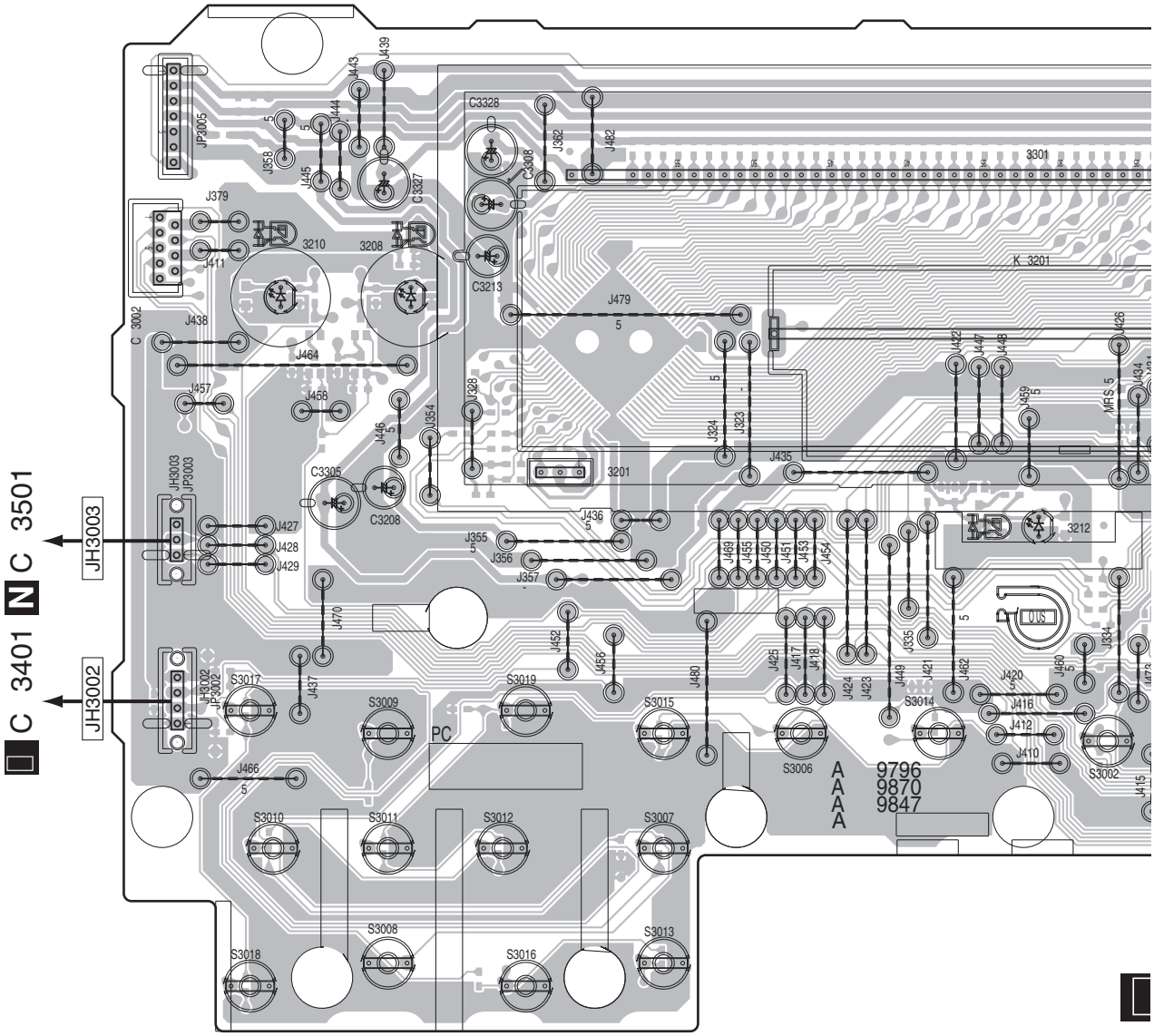

(ANP7784-B)

SIDE A

A C 7664

JP3001

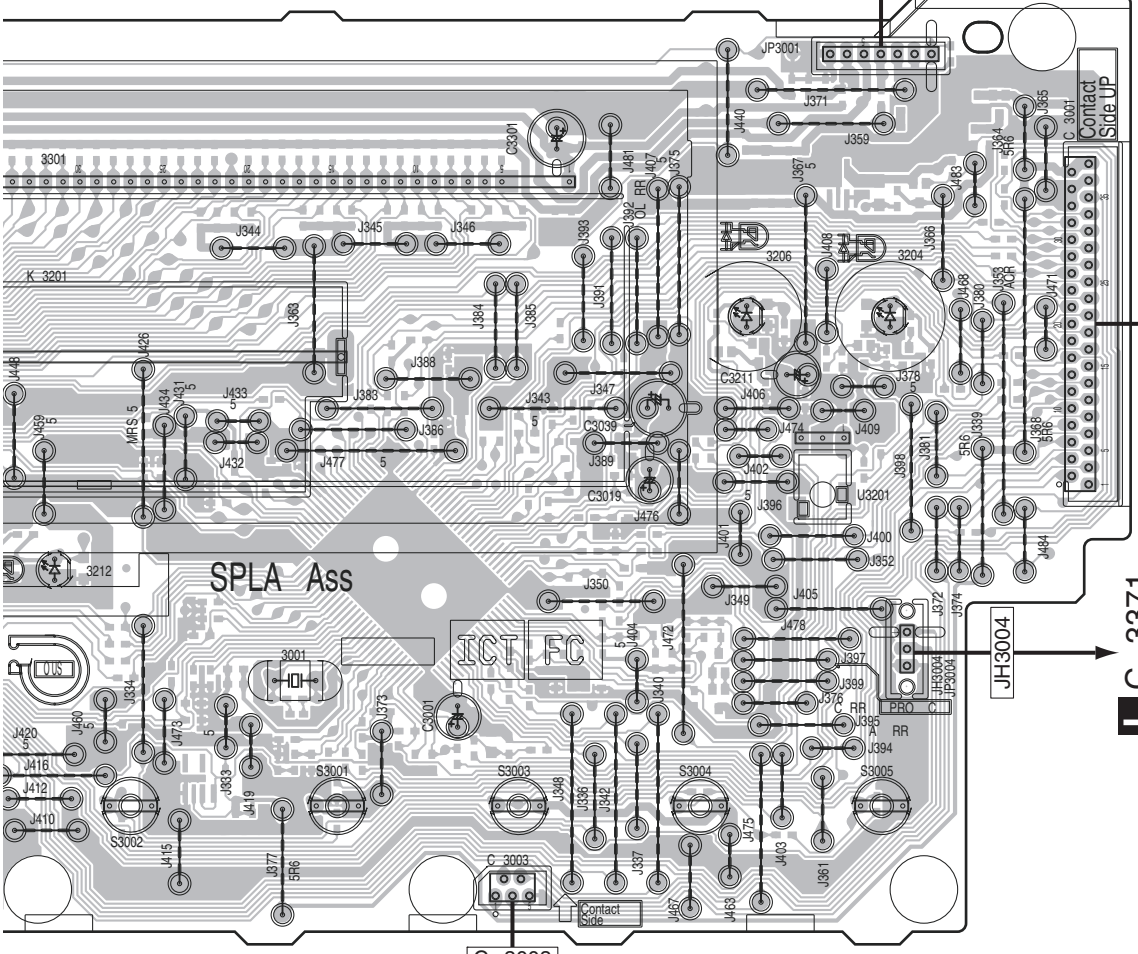

AE C 7652

L C 3371

C C 8004

MIC HP ASSY

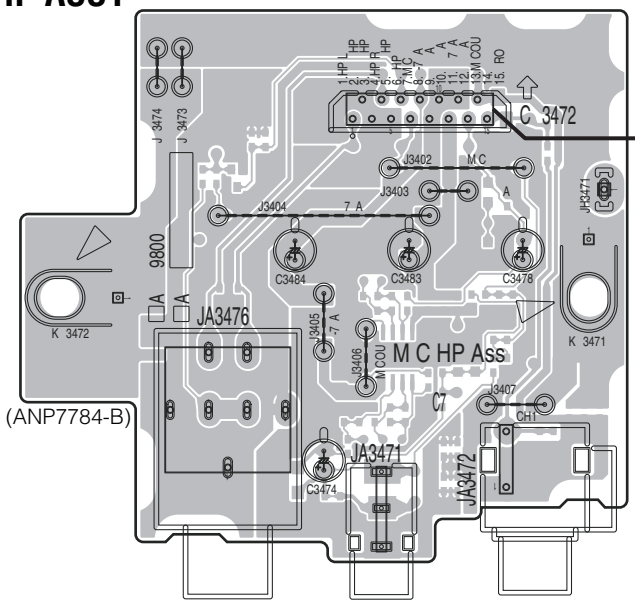

A C 7663

SIDE

DISPLAY ASSY

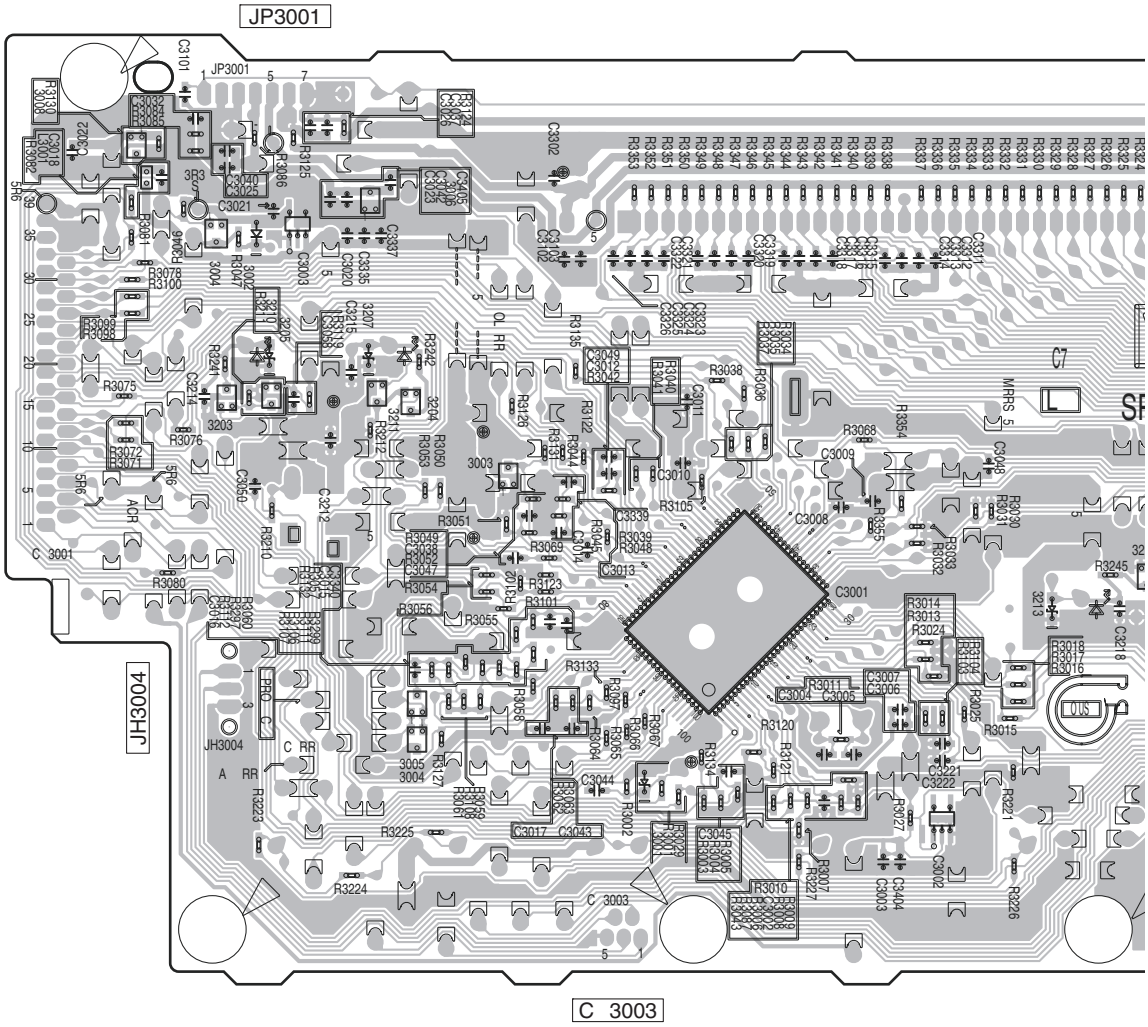

MIC HP ASSY

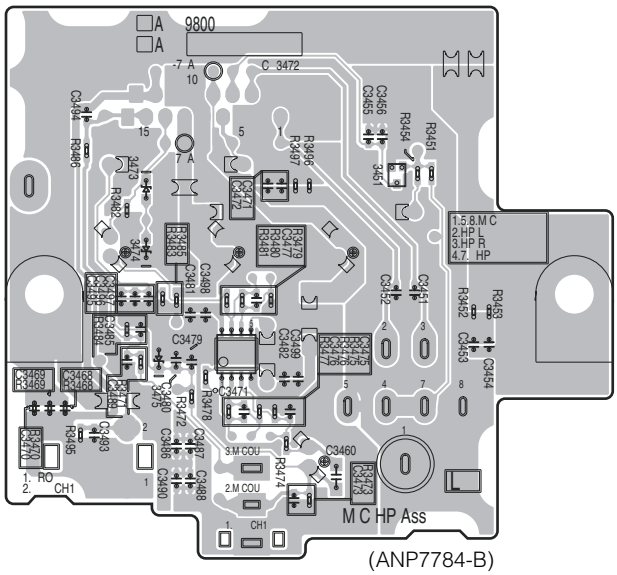

(ANP7784-B)

SIDE Ⅱ

A

B

C

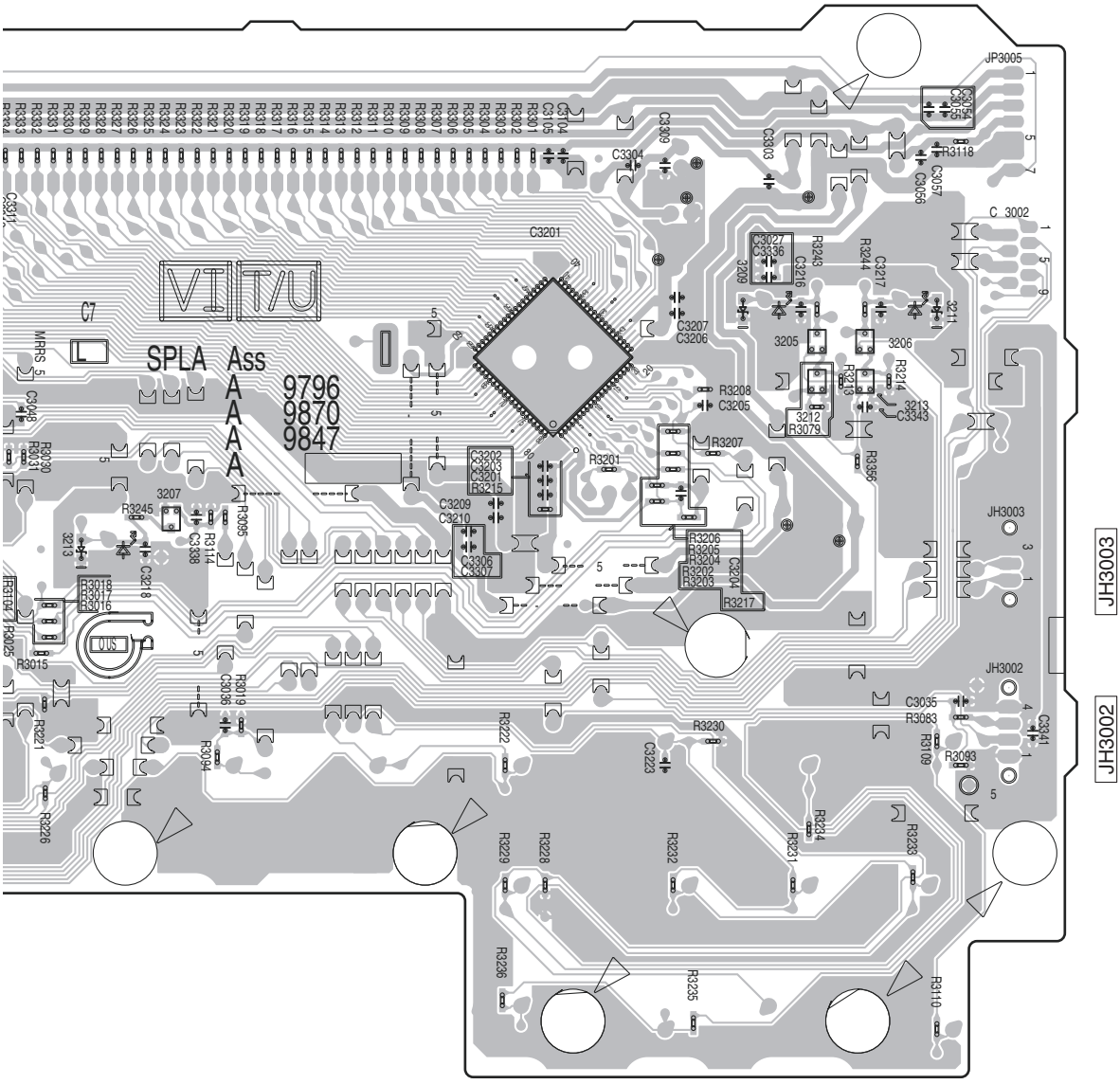

(ANP7784-B)

□□.□ VOL□PO□ ER S□ □□□ ENCODER ASS□S

SIDE A

SIDE A

L VOL ASSY

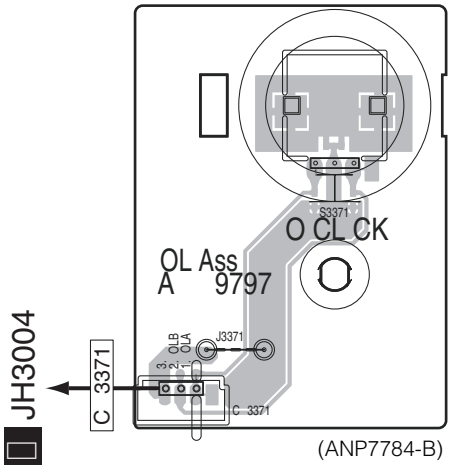

POWER SW ASSY

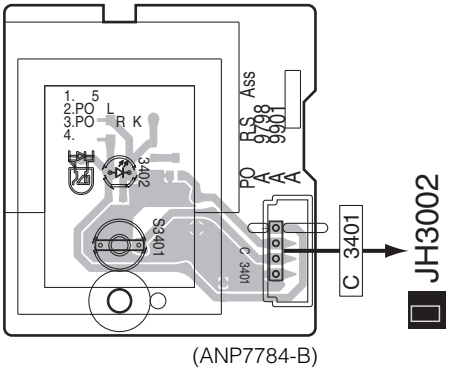

N ENCODER ASSY

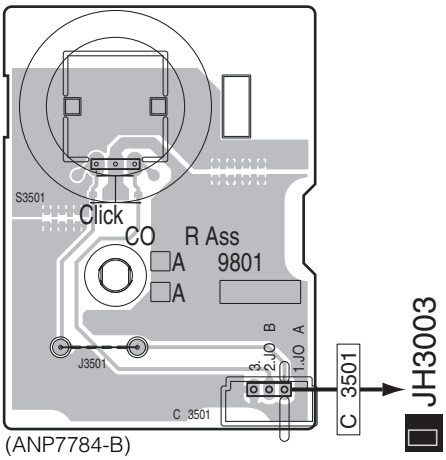

L N

L N

SIDE

SIDE

A

L VOL ASSY

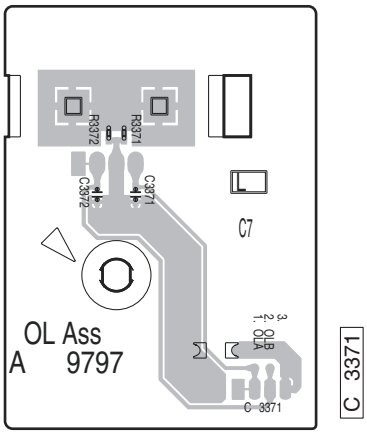

(ANP7784-B)

B

POWER SW ASSY

C

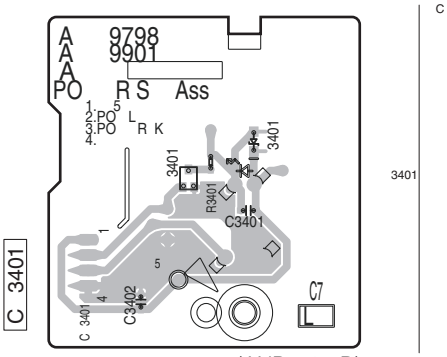

(ANP7784-B)

N ENCODER ASSY

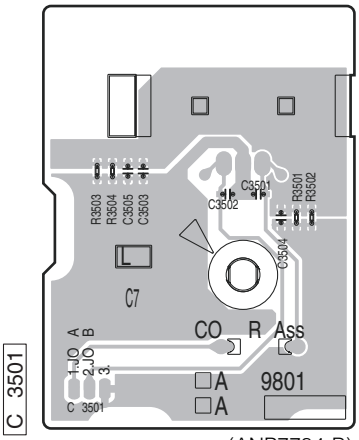

(ANP7784-B)

SIDE A

SIDE A

IR BUFFER ASSY

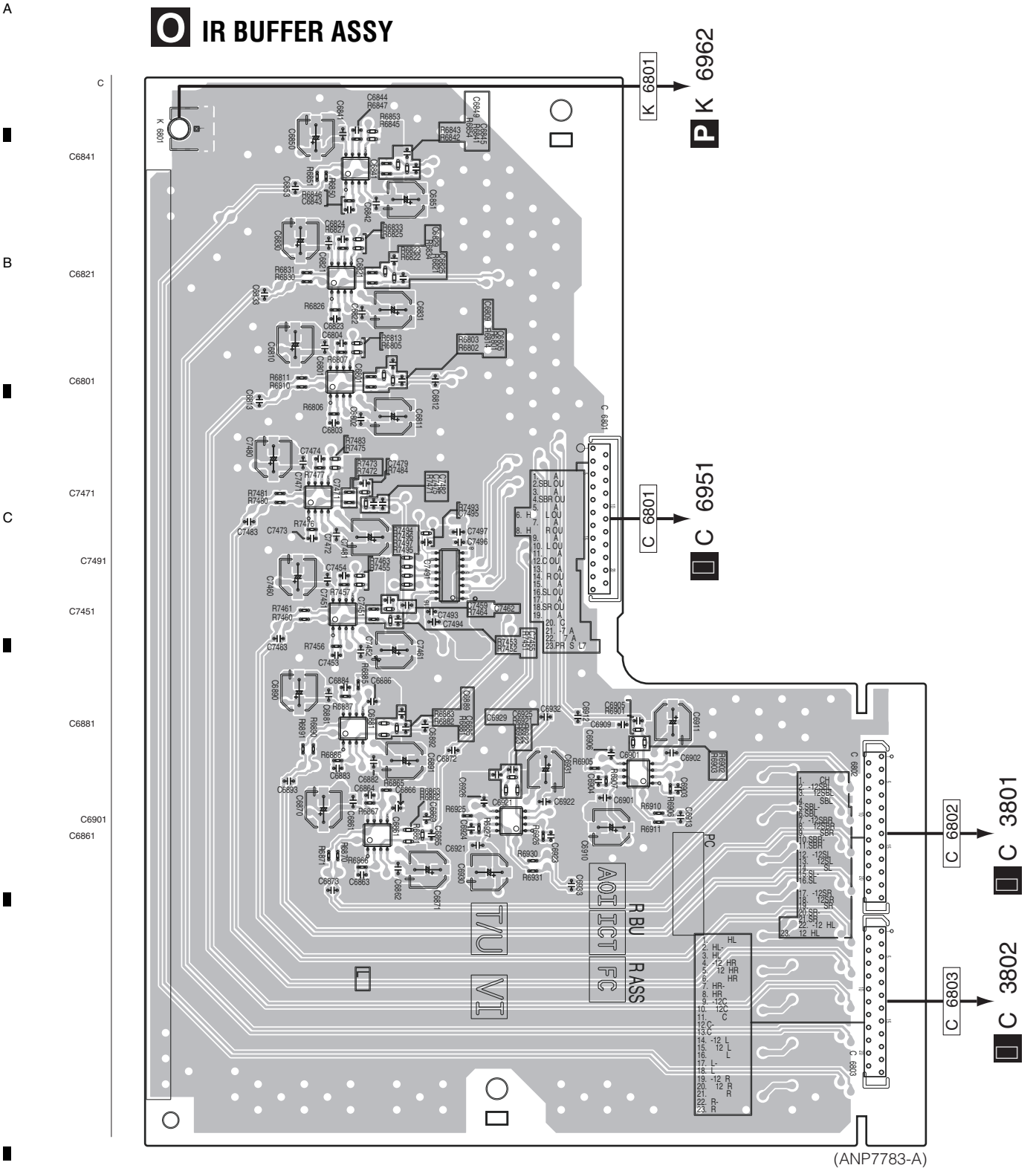

(ANP7783-A)

SIDE

SIDE

A

B

C

IR BUFFER ASSY

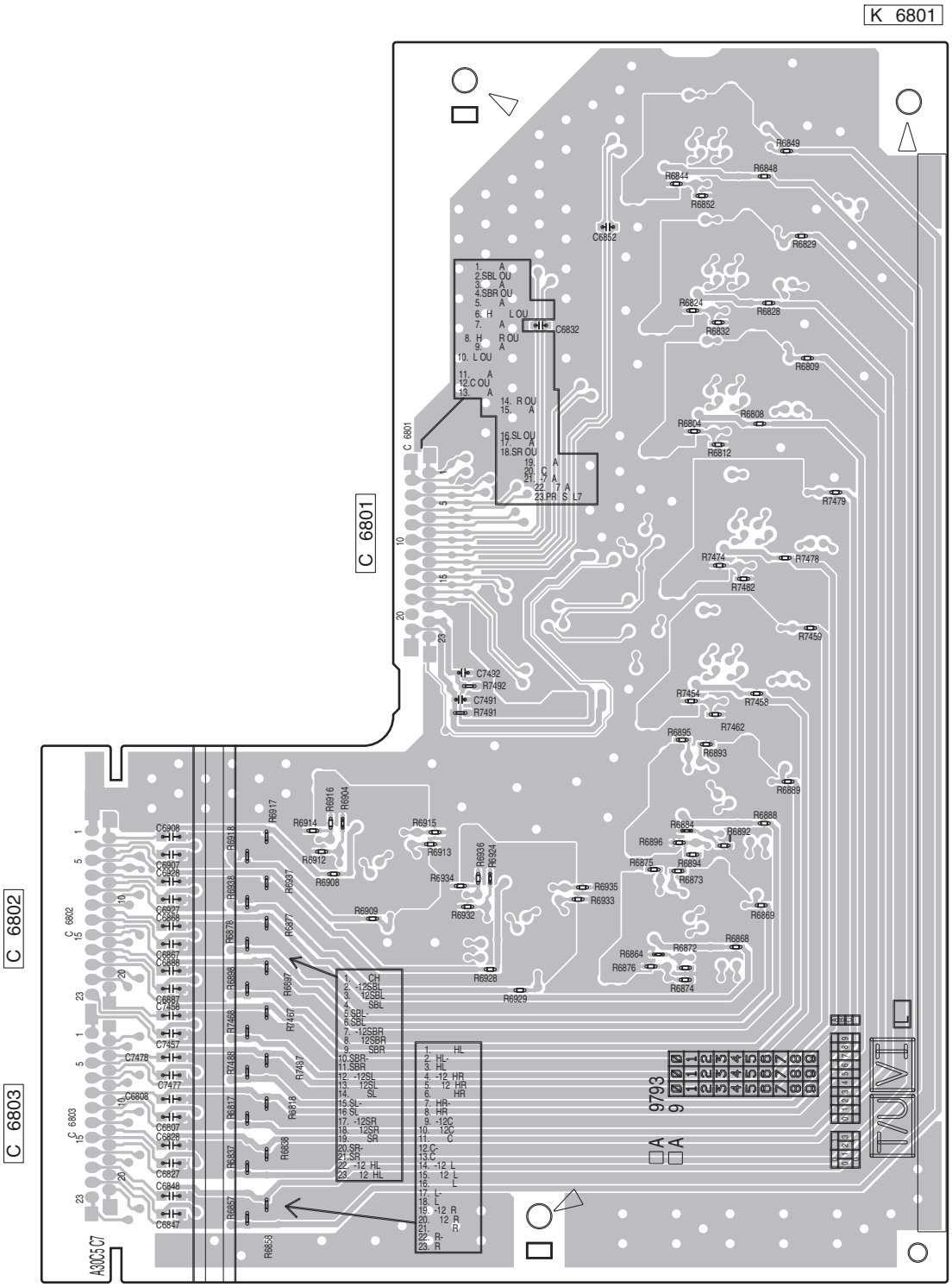

(ANP7783-A)

□□.□□ □U□□ER □ND □□□ IR INTER□ACE ASS□S

SIDE A

SIDE A

P BUFFER GND ASSY

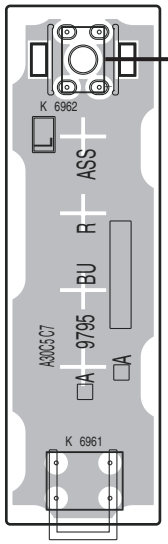

(ANP7783-A)

K 6962

C 6801

IR INTERFACE ASSY

C 4900 C 3810

C 4800 C 3820

C 4300 C 3830

C 4400 C 3840

C 4500 C 3850

C 4600 C 3860

C 4700 C 3870

C 4100 C 3880

C 4200 C 3890

C 3801

C 3802

C 6802

C 6803

(ANP7782-A)

P

P

SIDE

SIDE

IR INTERFACE ASSY

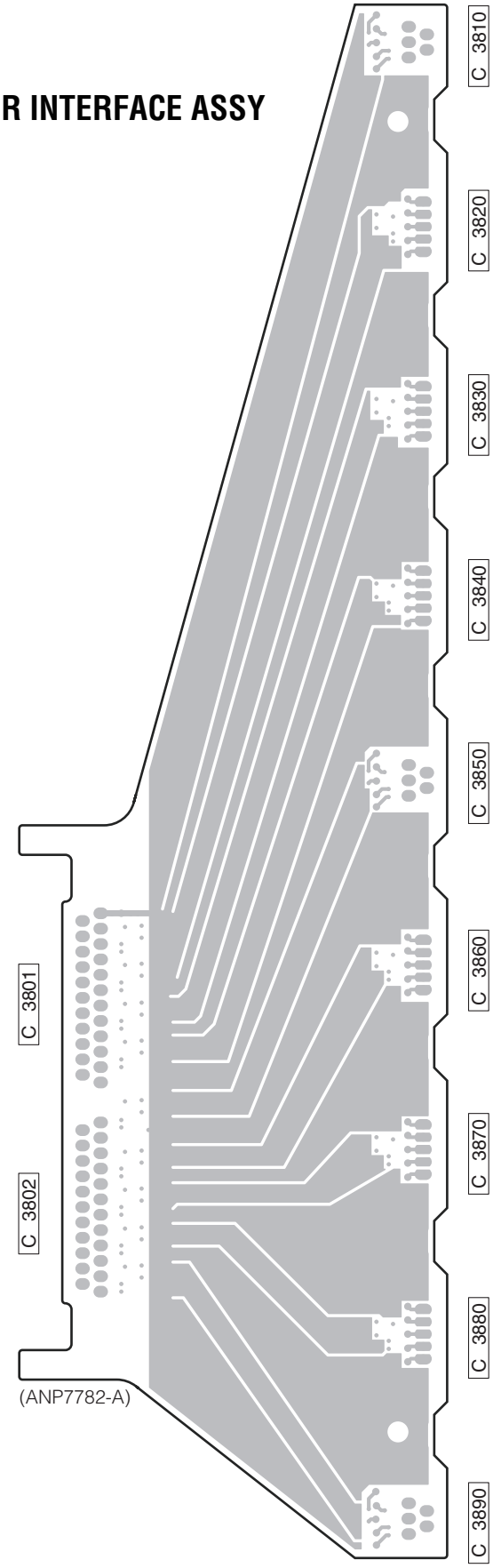

(ANP7782-A)

BUFFER GND ASSY

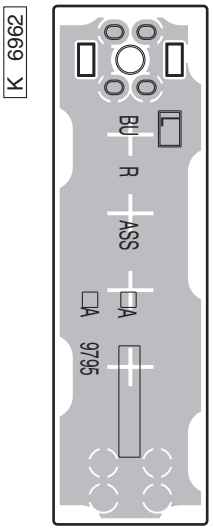

(ANP7783-A)

SIDE A

R IR POWER AMP ASSY

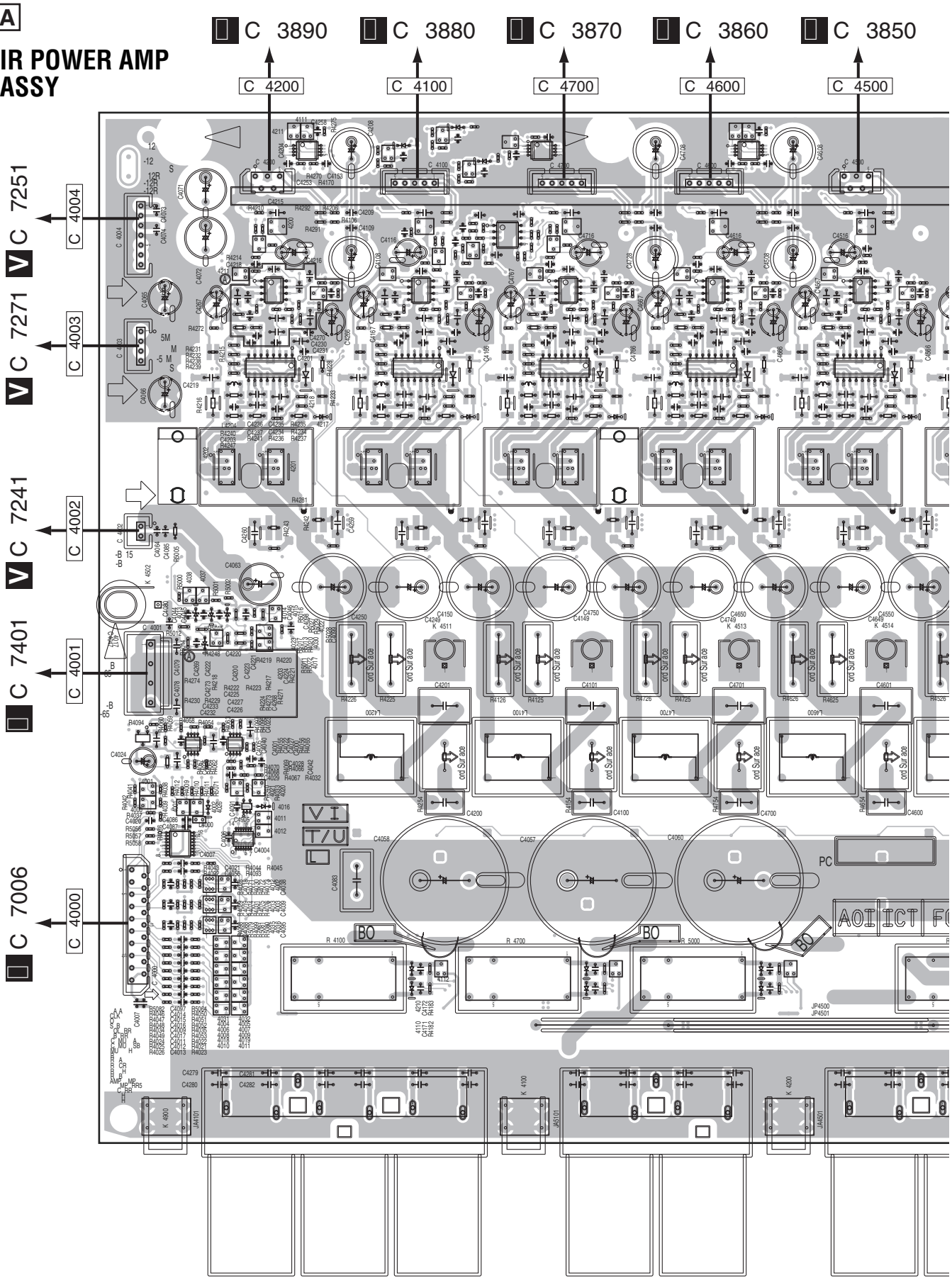

SIDE A

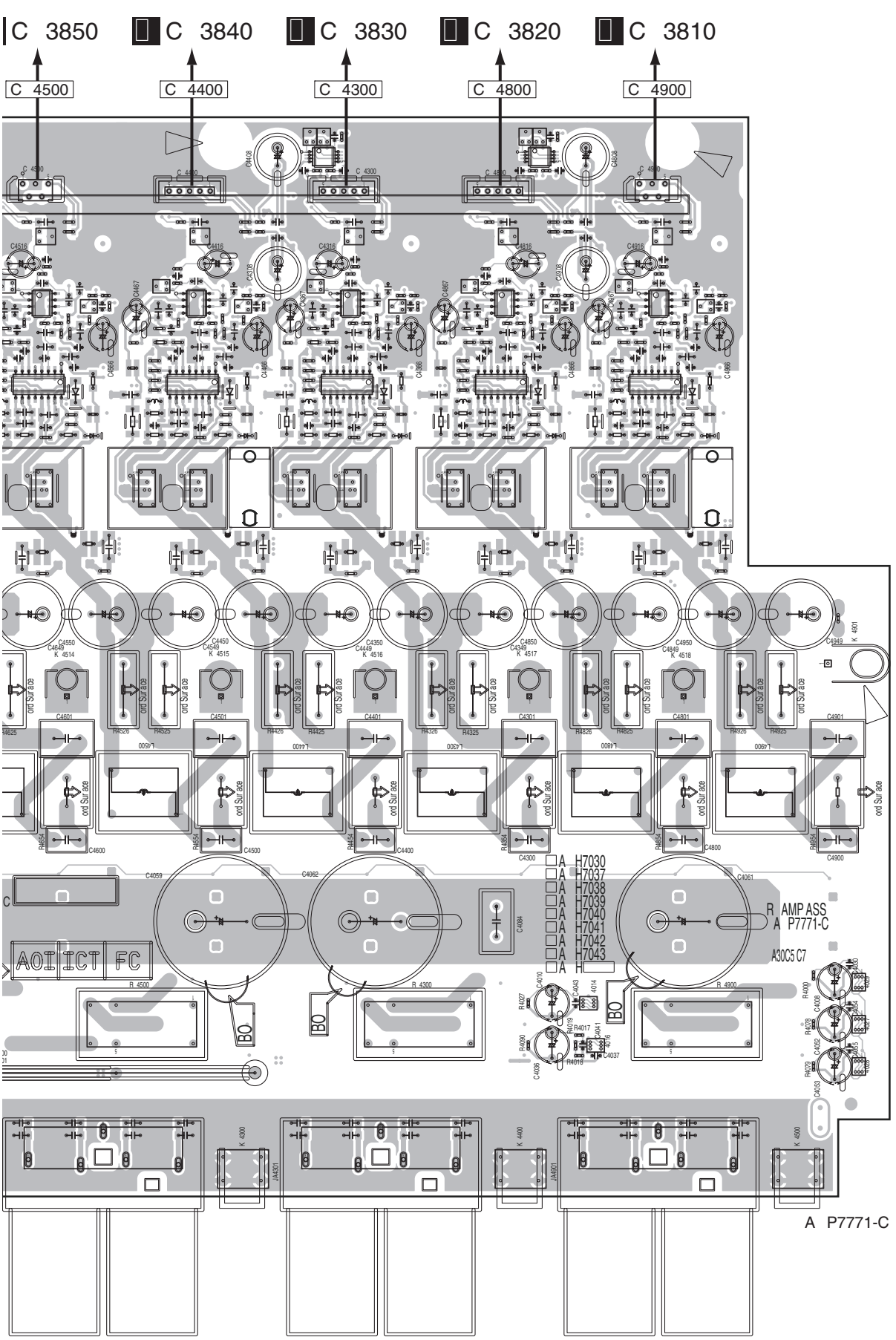

A
B
C

4111
4211
4200
4202
4201
4038
4037
4022
4023
4030
4017
4203
4001
4000
4021
4020
4012
4002
4013
4003
4035
4036
4112
4031
4004
4006 4029
4008 4014
4018
4010 4027
4032 4016
4005 4028
4007
4009
4019
4011

C4204
C4201
C4200
C4005
C4001
C4000
C4905
C4007
C4004

SIDE

R IR POWER AMP ASSY

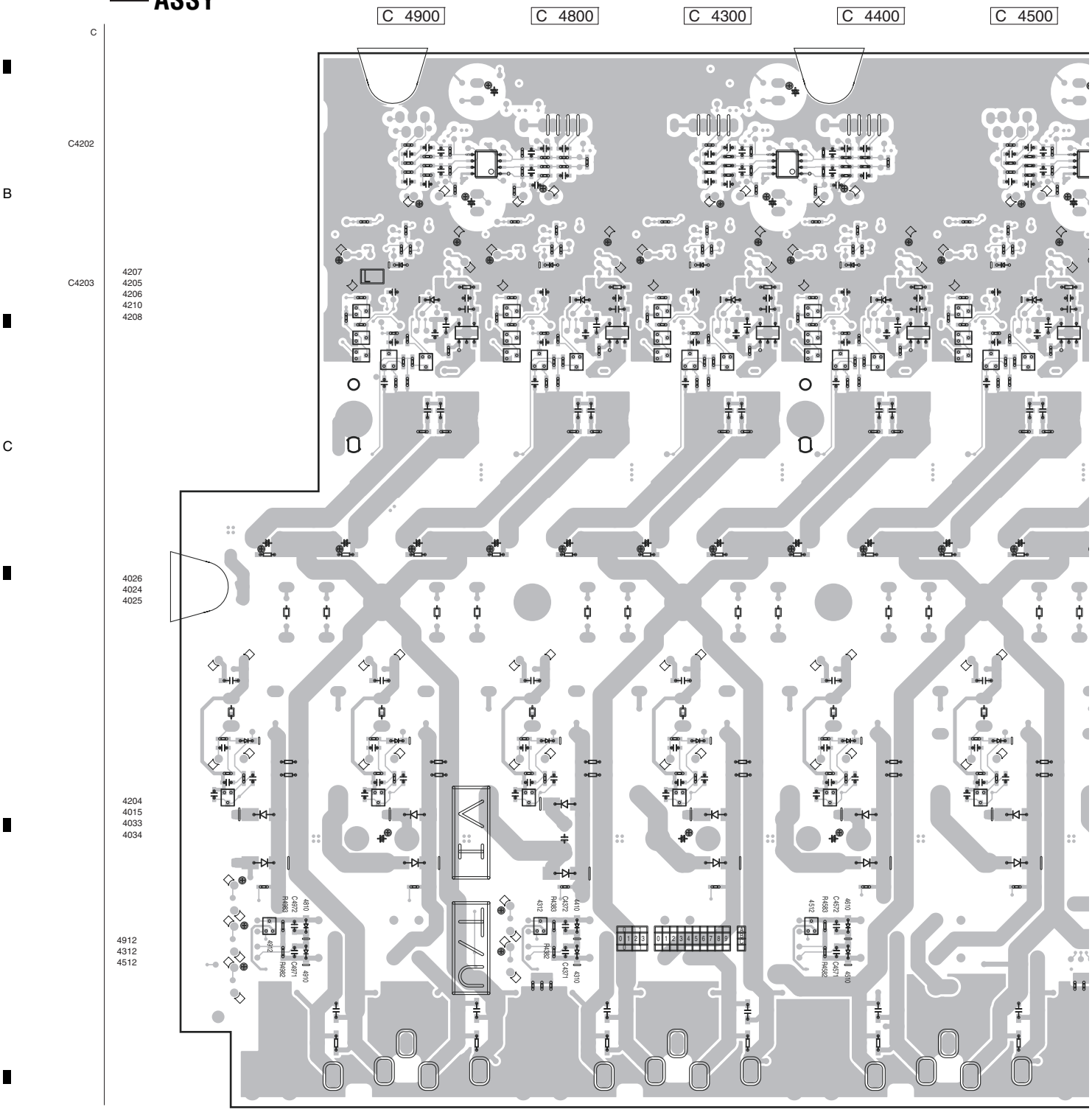

SIDE B

A

C 4500 C 4600 C 4700 C 4100 C 4200

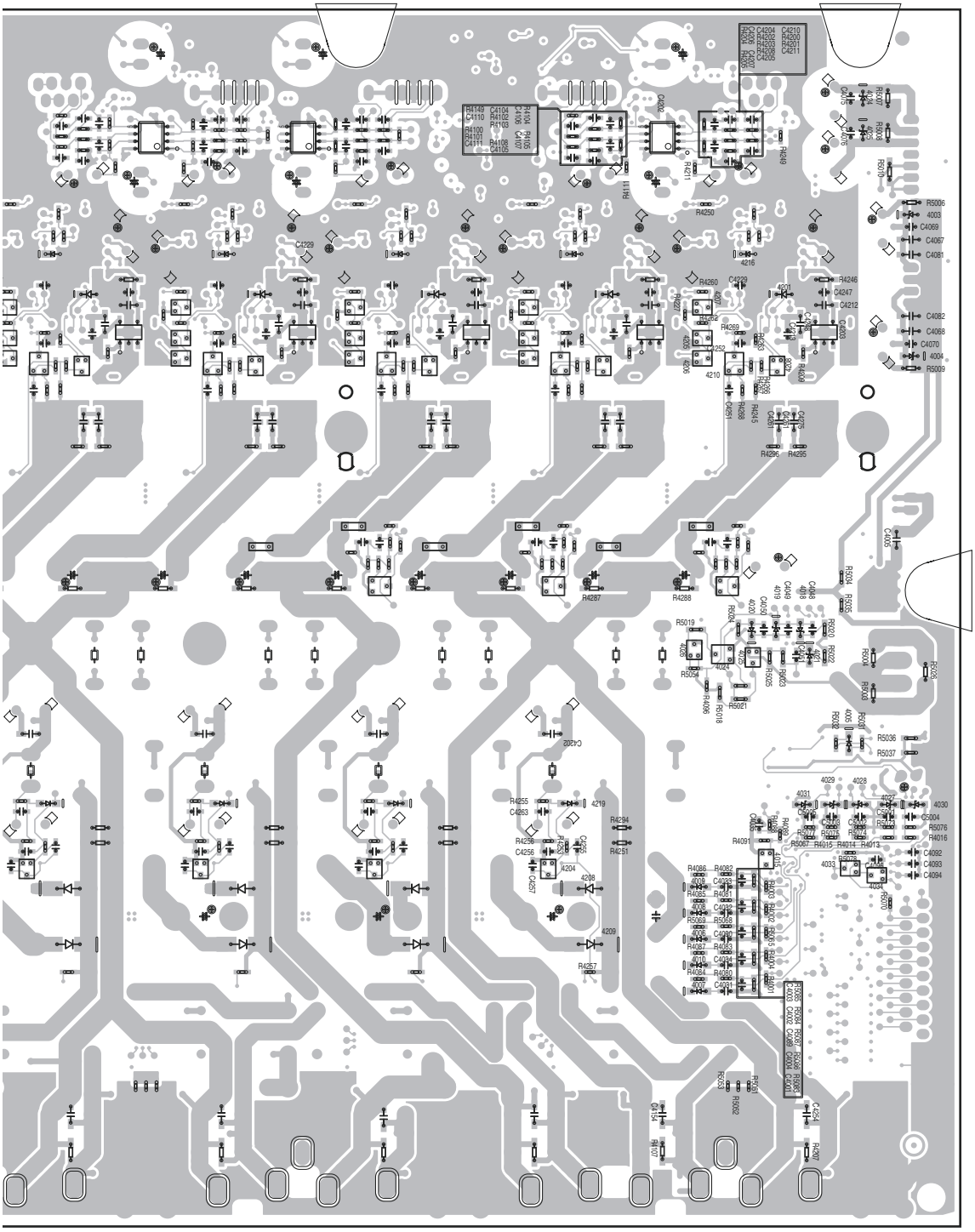

C 4004

B

C 4003

C

C 4002

C 4001

C 4000

(ANP7771-C)

SIDE A

S PRIMARY ASSY

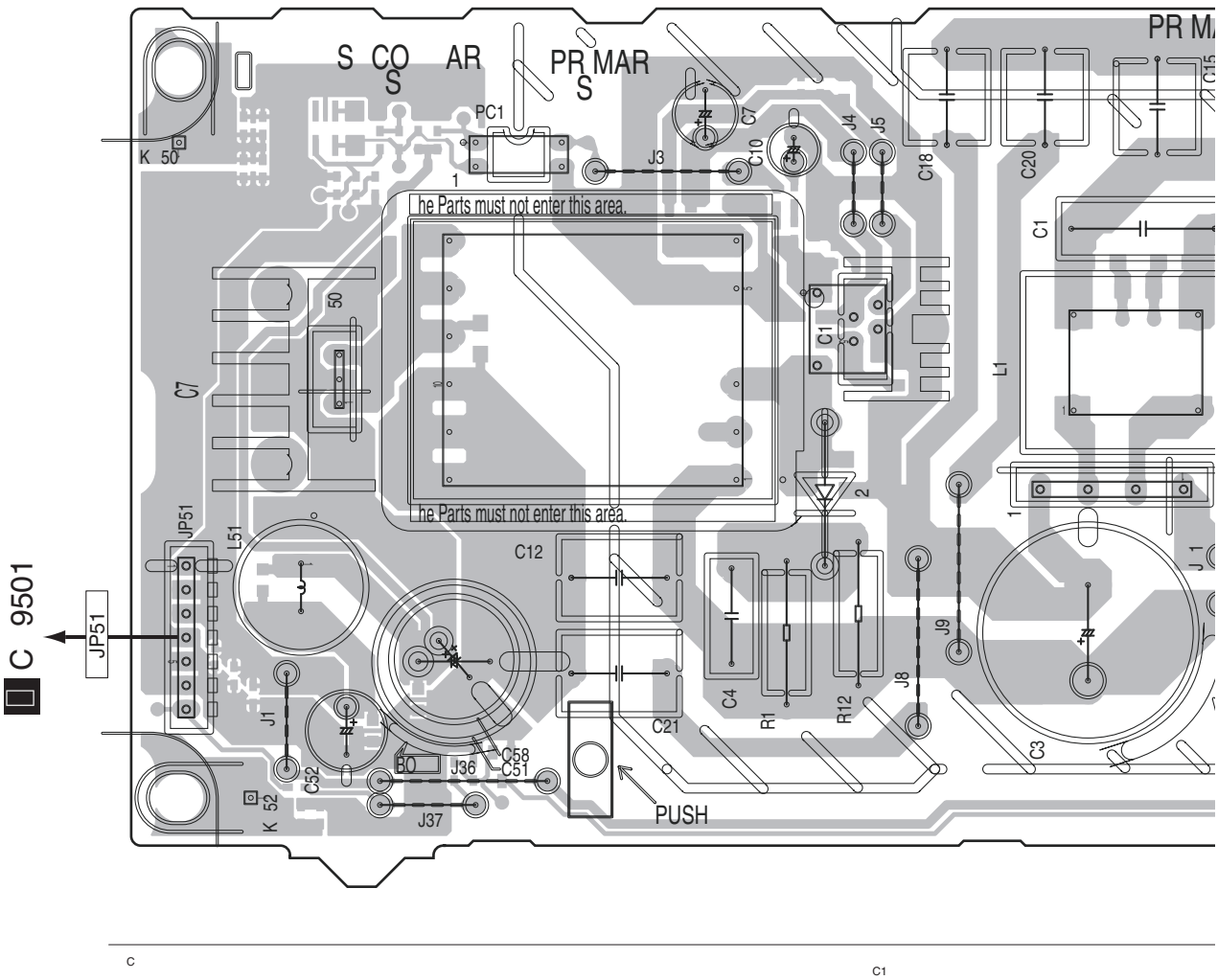

SIDE A

A

B

C

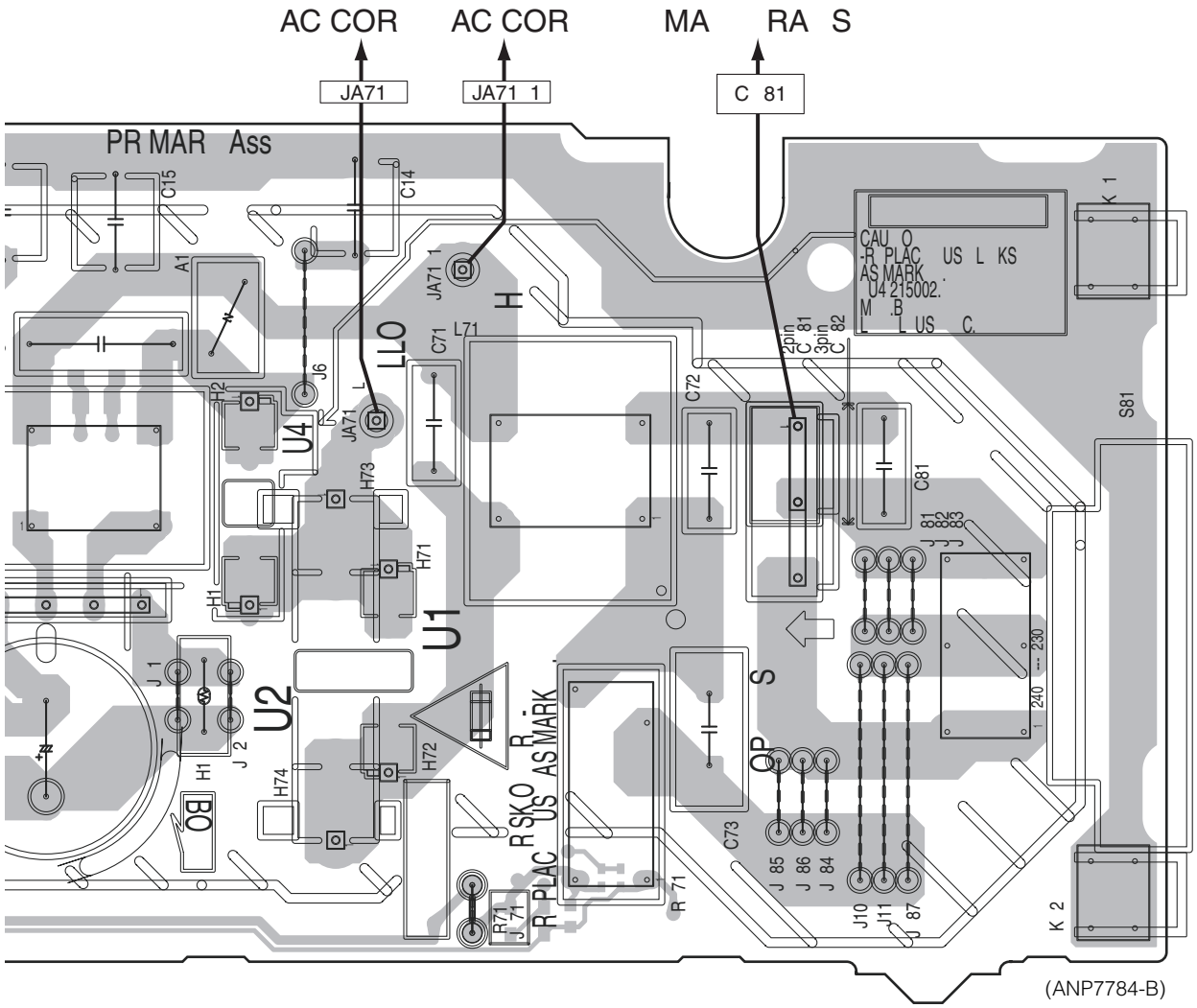

(ANP7784-B)

SIDE

S PRIMARY ASSY

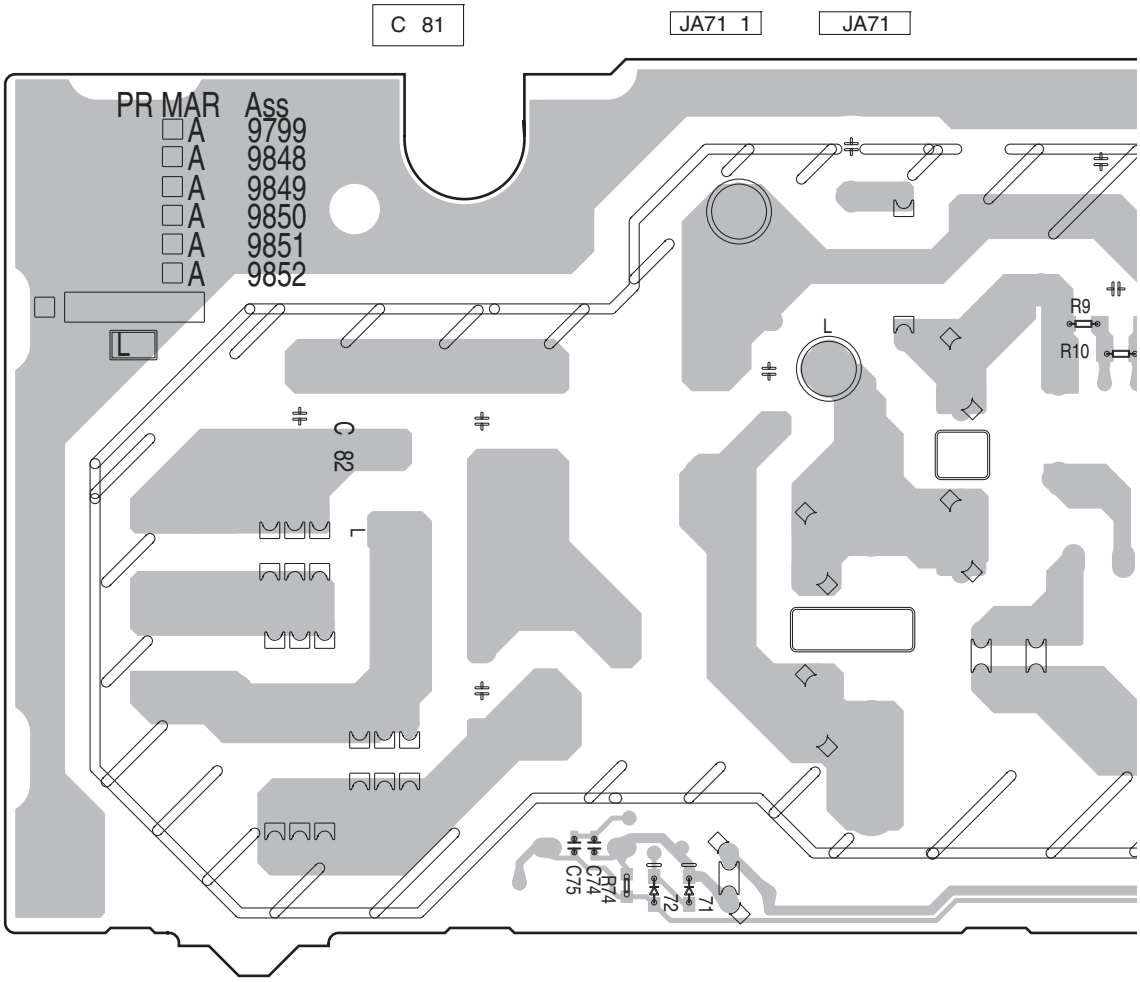

c

SIDE B

A

B

C

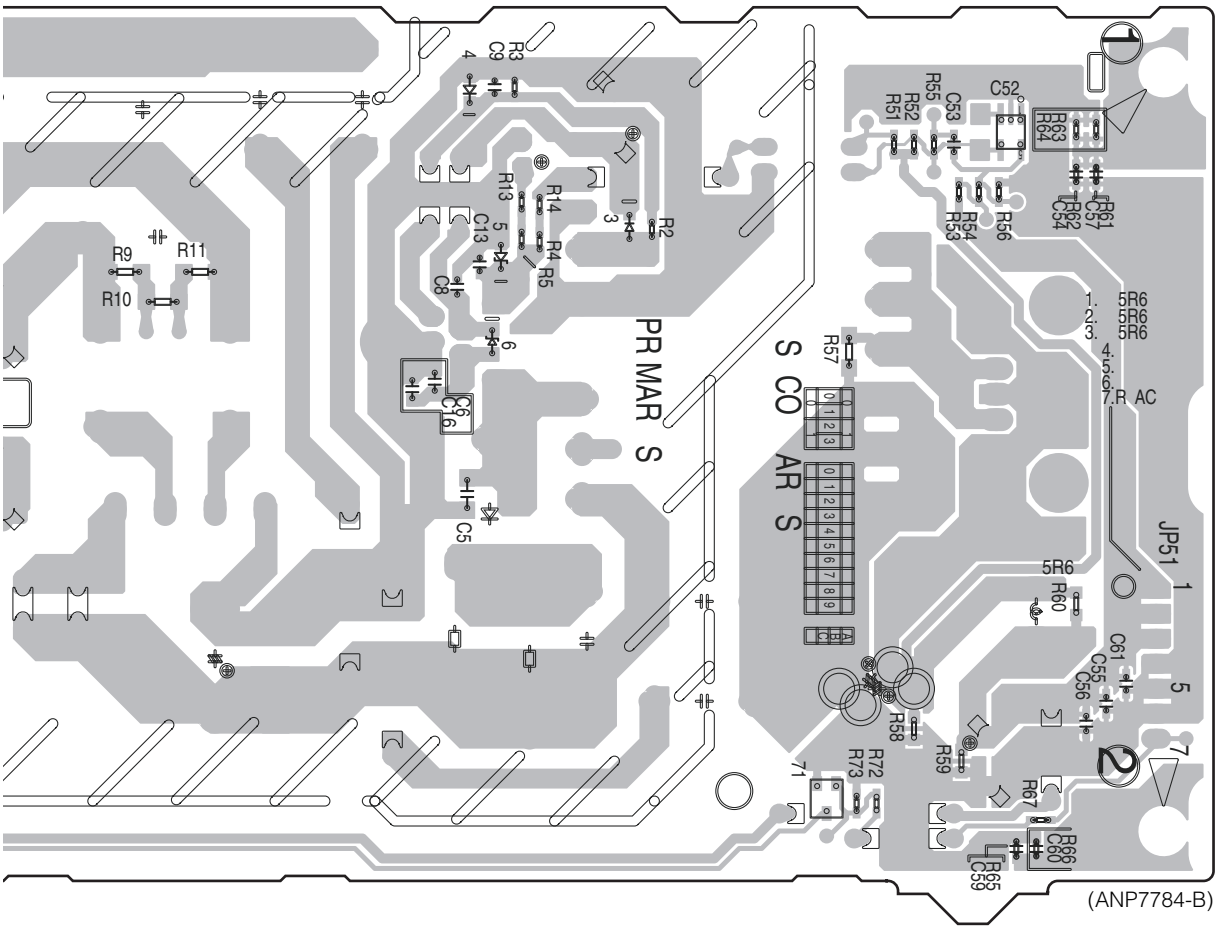

JP51

□□.□□ PRI□ AR□ S□ IELD □□□ RE□ ASS□S

SIDE A

T PRIMARY SHIELD ASSY

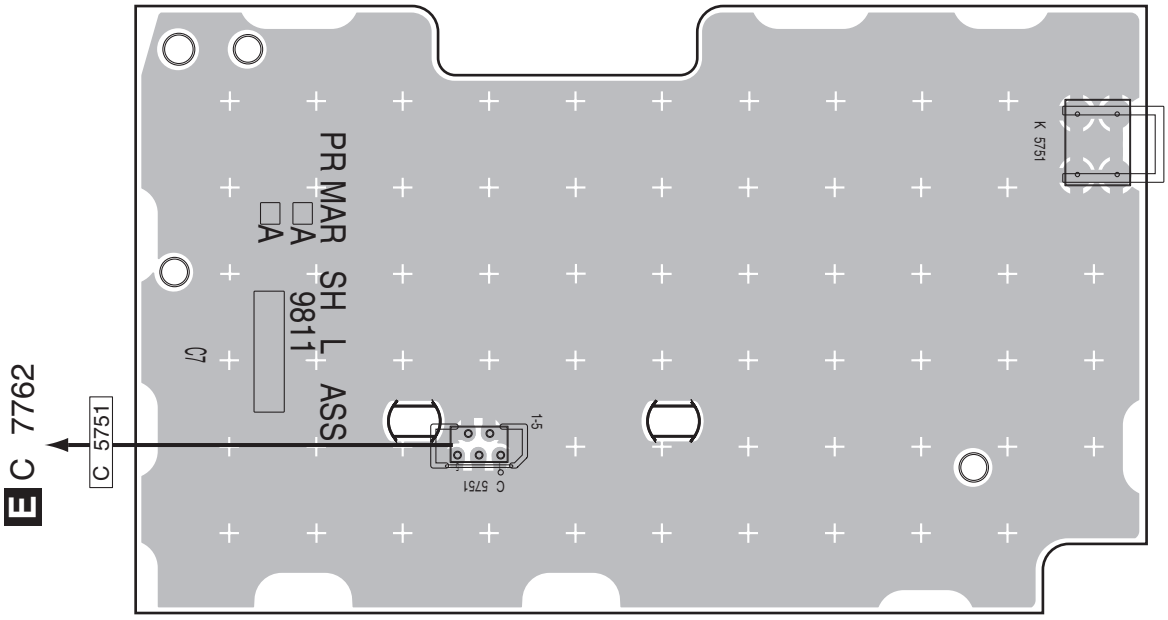

(ANP7785-A)

U REG ASSY

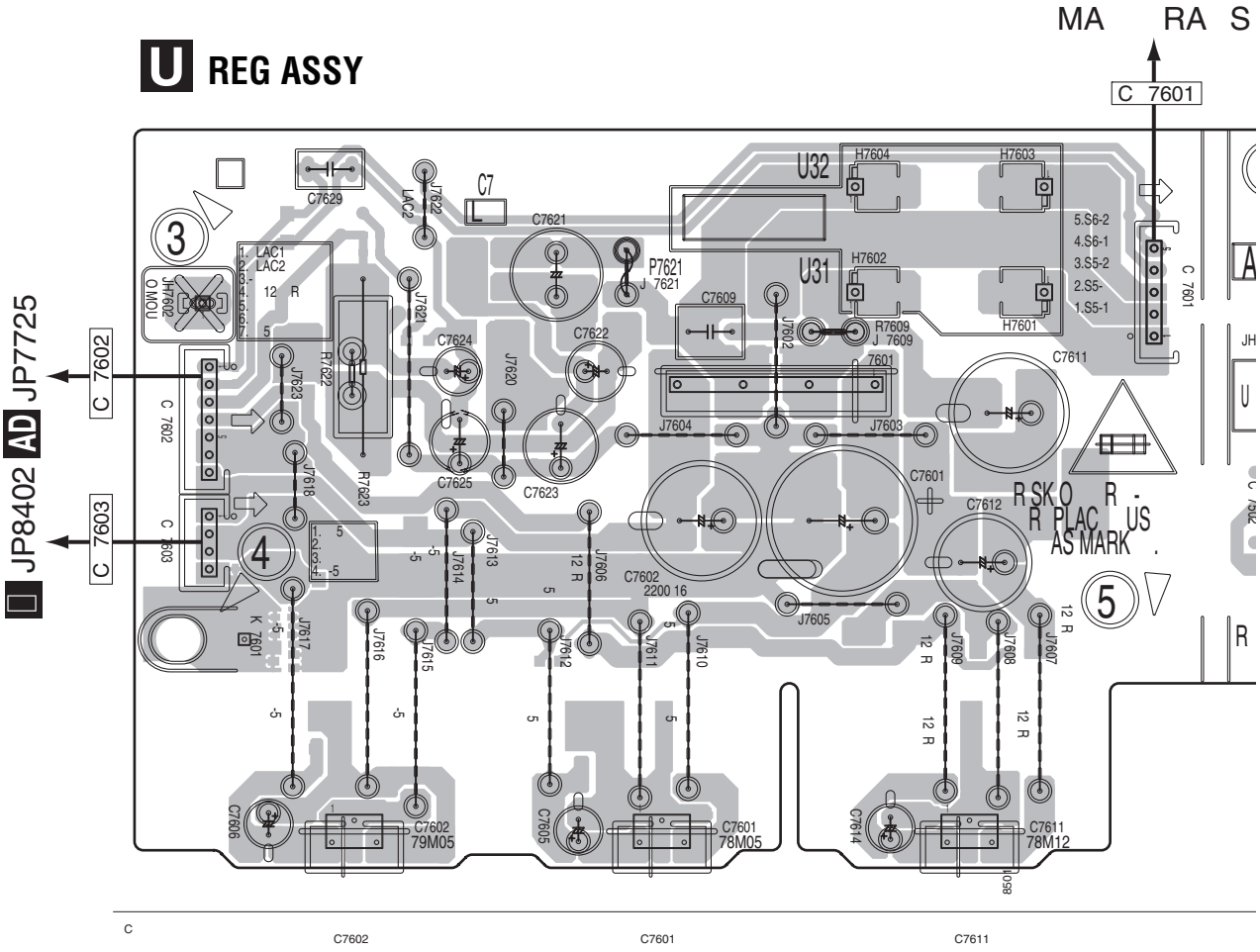

C7602 C7601 C7611

T U

SIDE A

A

B

C

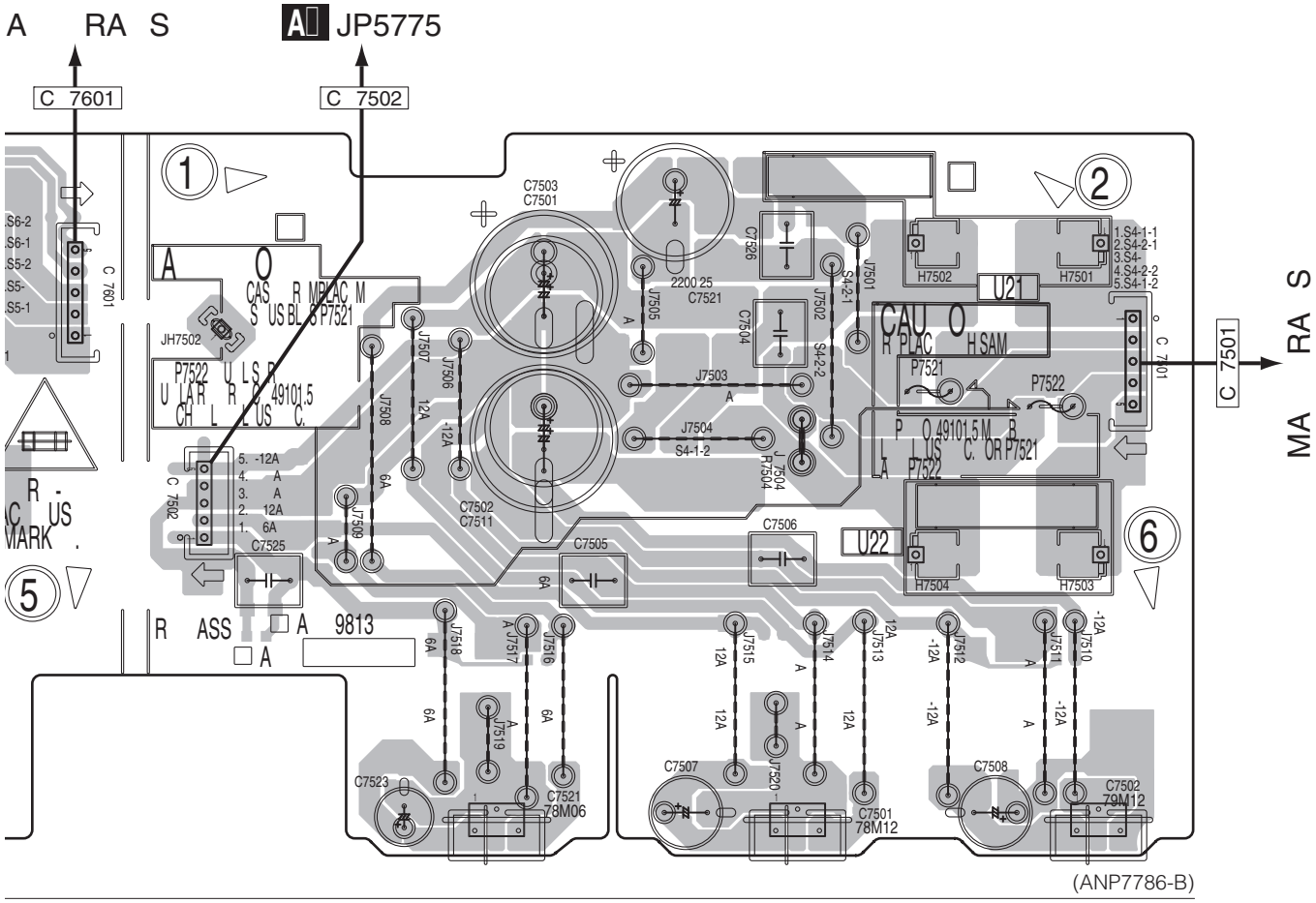

C7521 C7501 C7502

SIDE

A

B

C

U REG ASSY

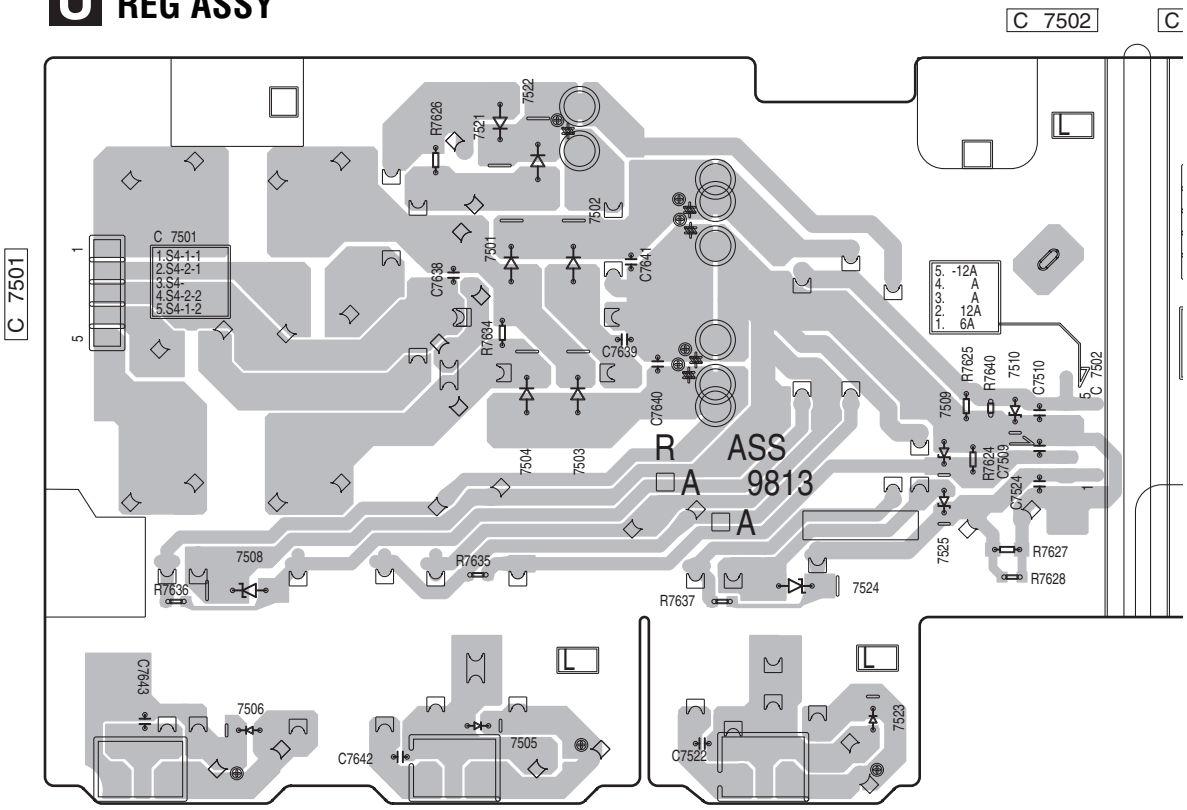

SIDE

A

T PRIMARY SHIELD ASSY

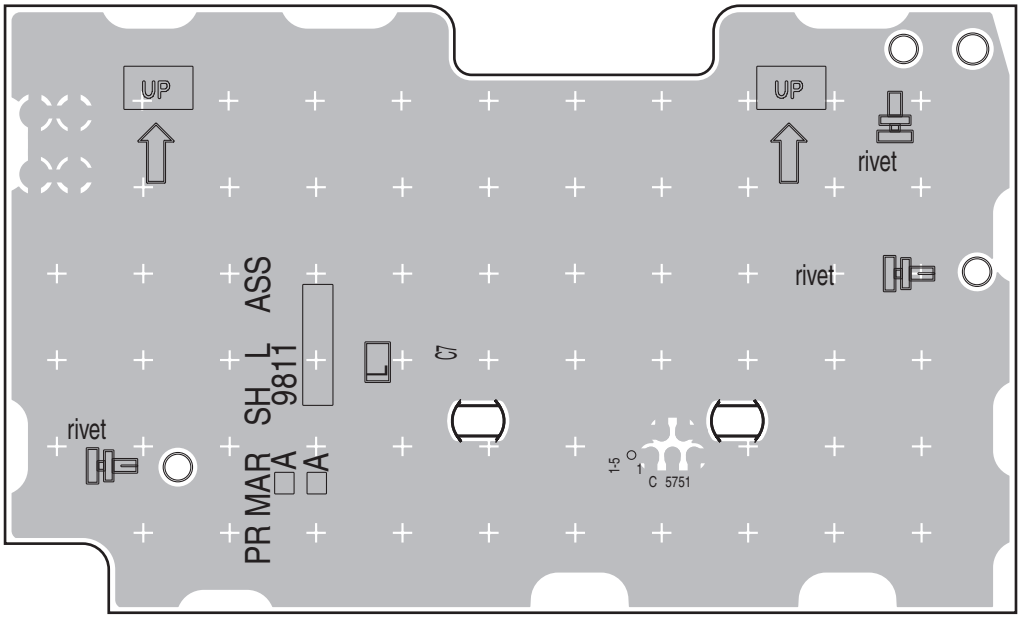

C 5751

(ANP7785-A)

B

C

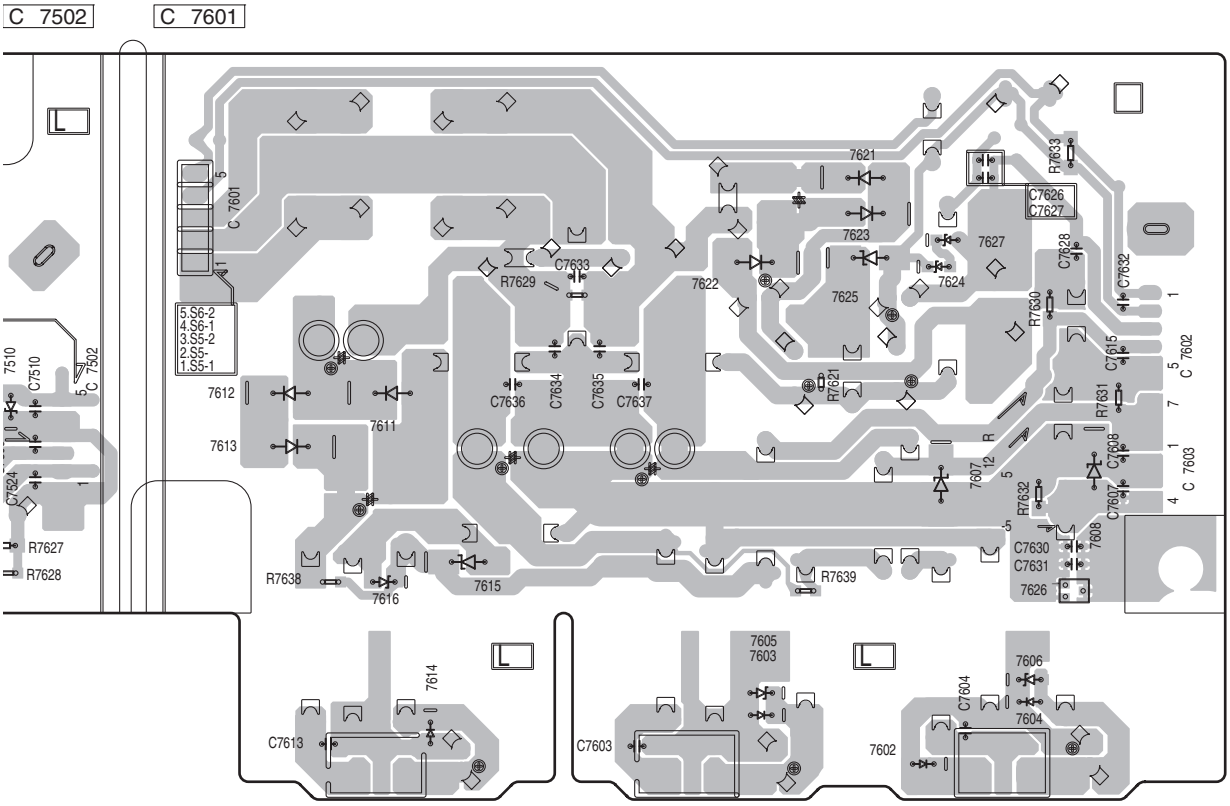

(ANP7786-B)

T U

SIDE A

SIDE A

V IR REG ASSY

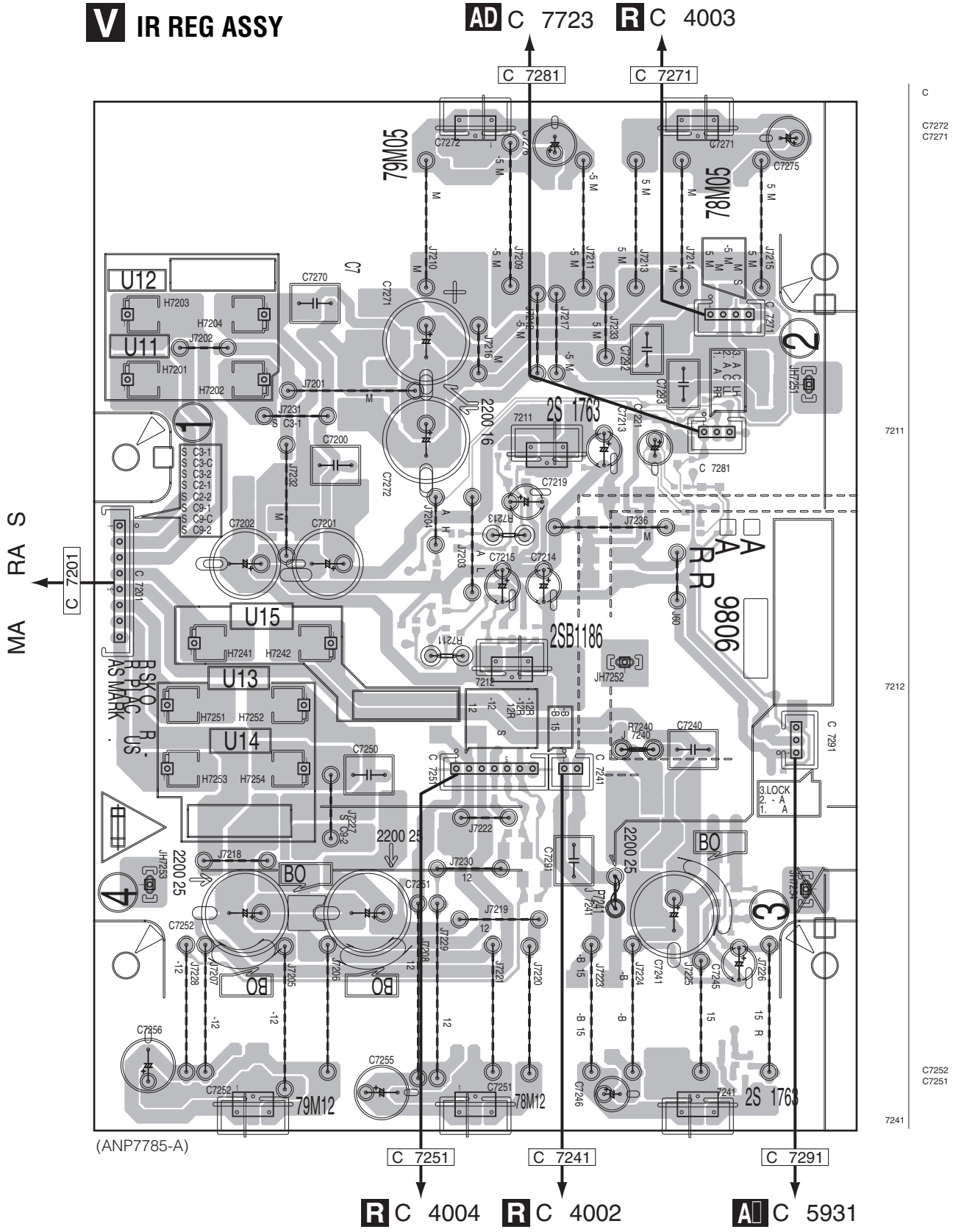

V

V

SIDE B

SIDE A

V IR REG ASSY

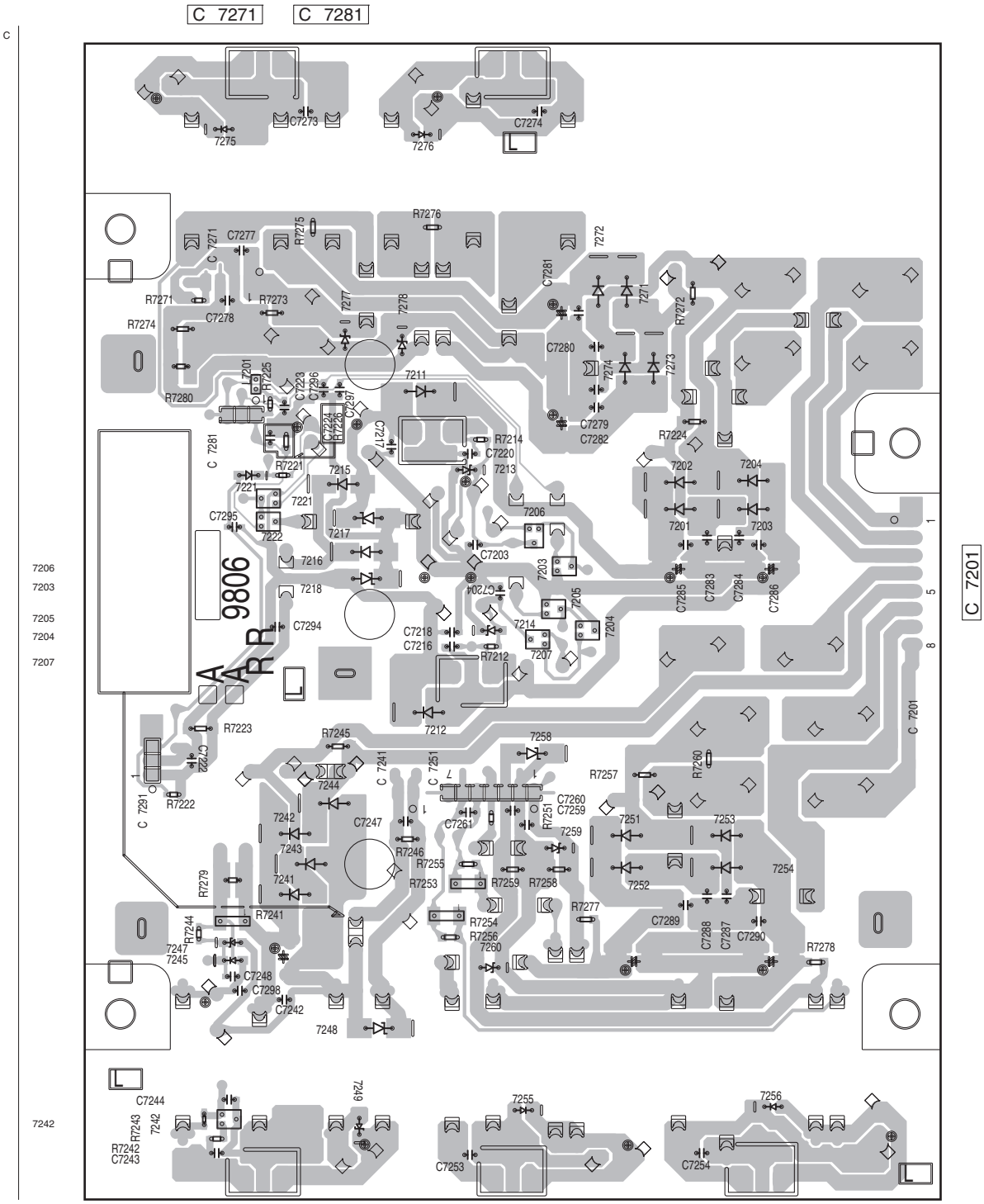

(ANP7785-A)

SIDE A

SIDE A

B DIODE ASSY

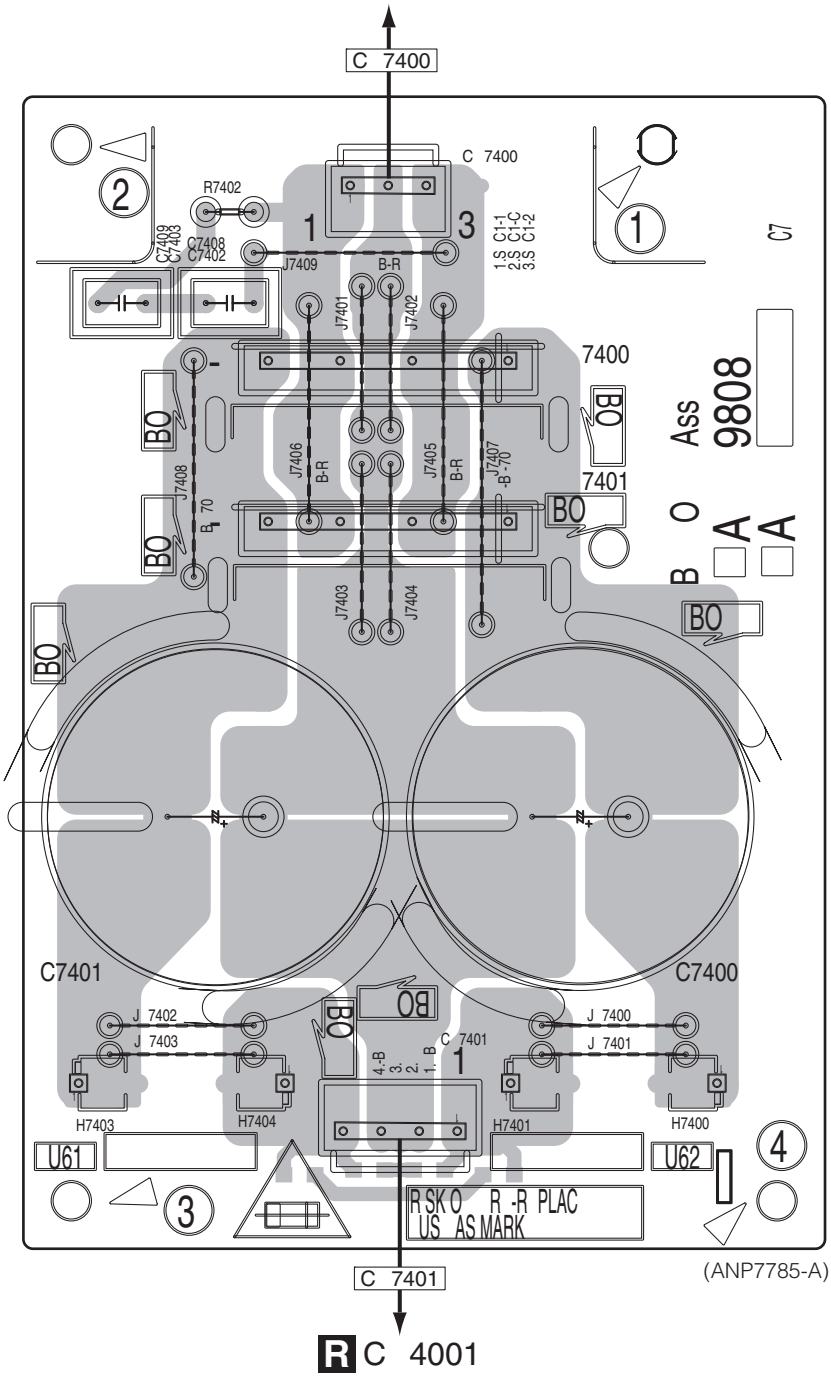

SIDE

SIDE

A

B DIODE ASSY

C 7400

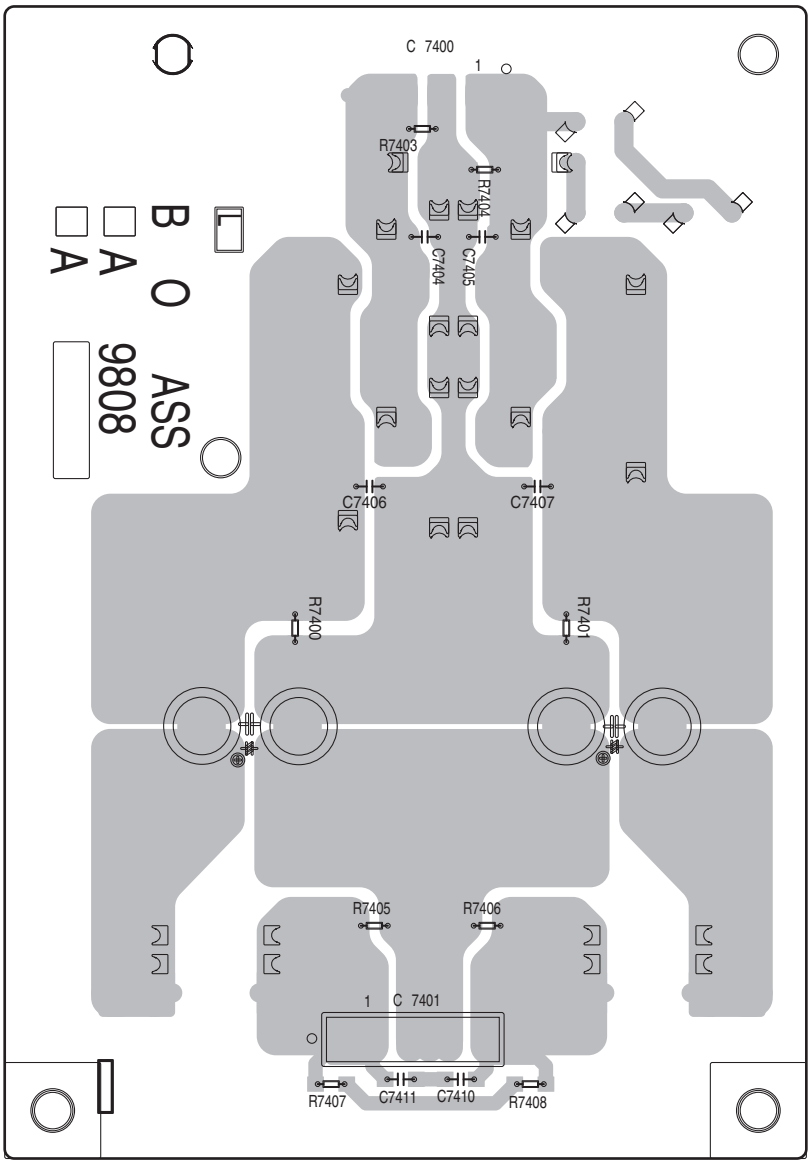

(ANP7785-A)

C 7401

B

C

SIDE A

SIDE A

CONNECT ASSY

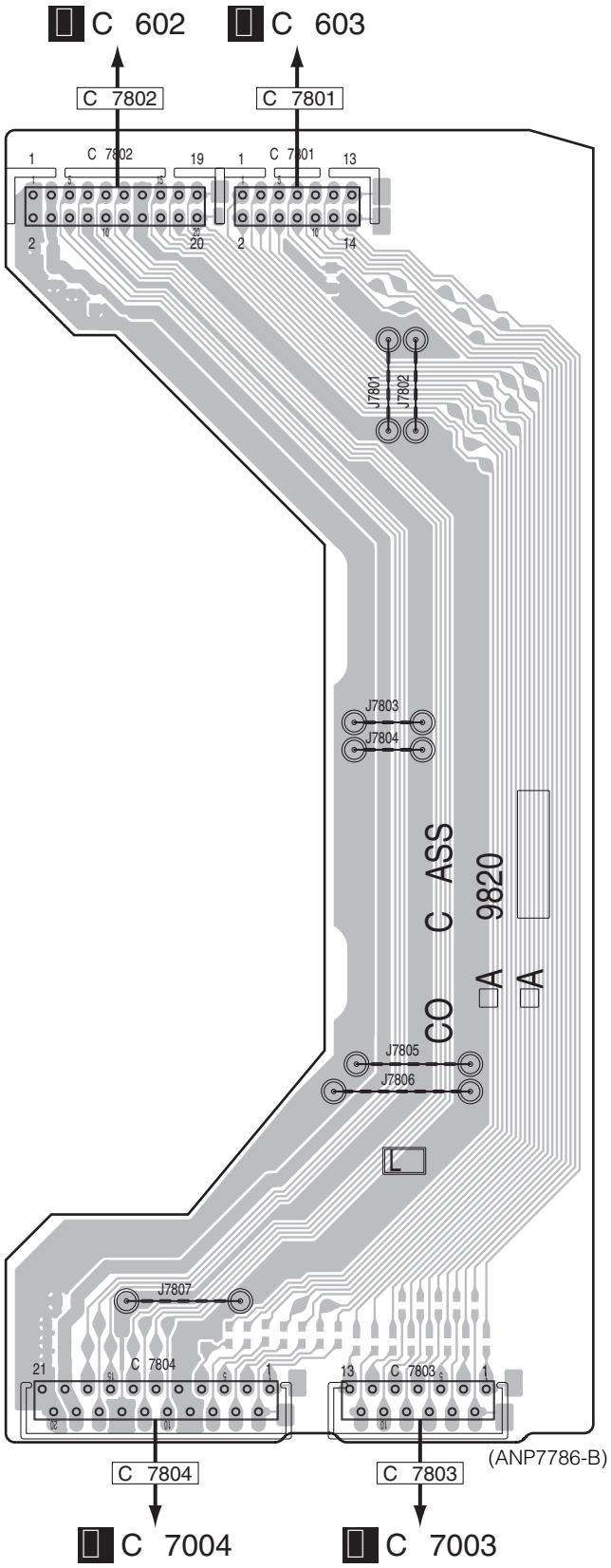

SIDE

SIDE

A

B

C

CONNECT ASSY

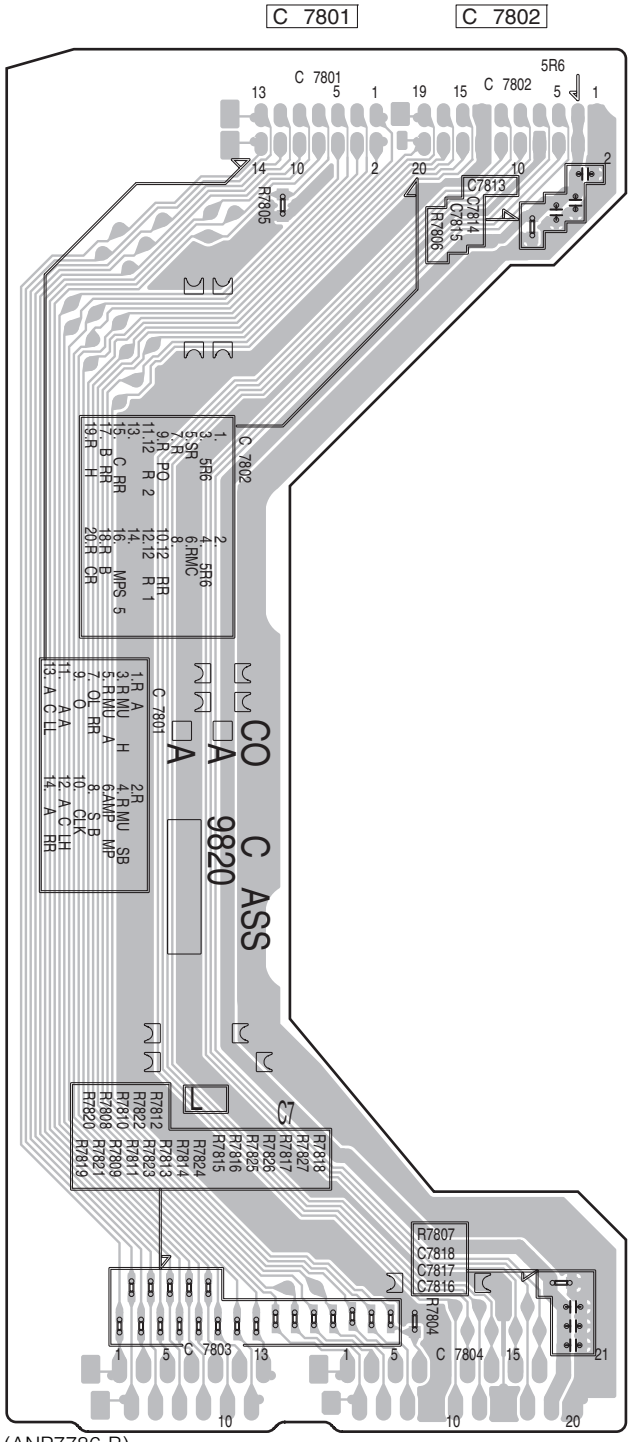

SIDE A

SIDE A

FB-CONNECT ASSY

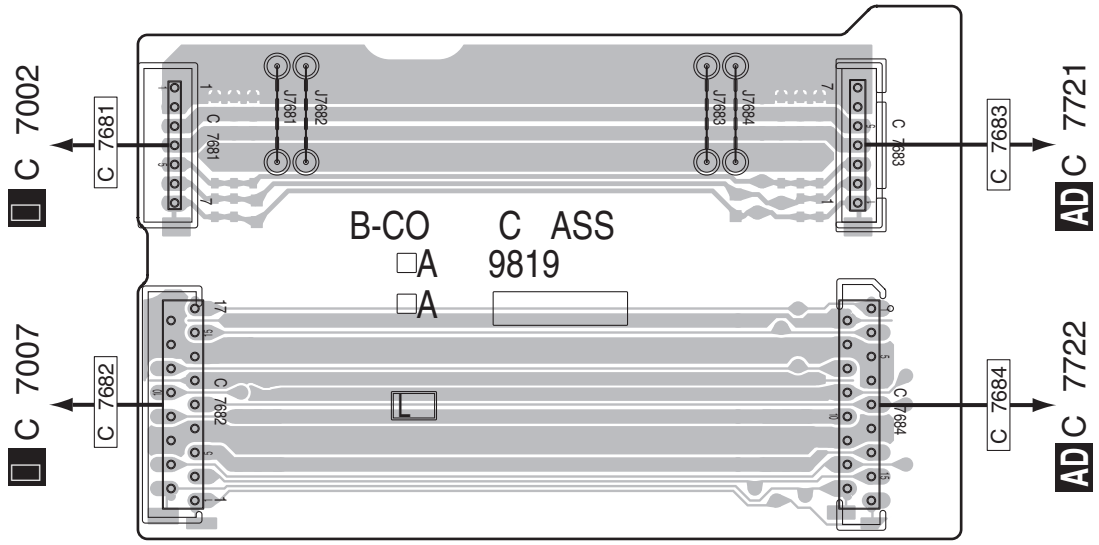

(ANP7786-B)

PRE BRIDGE ASSY

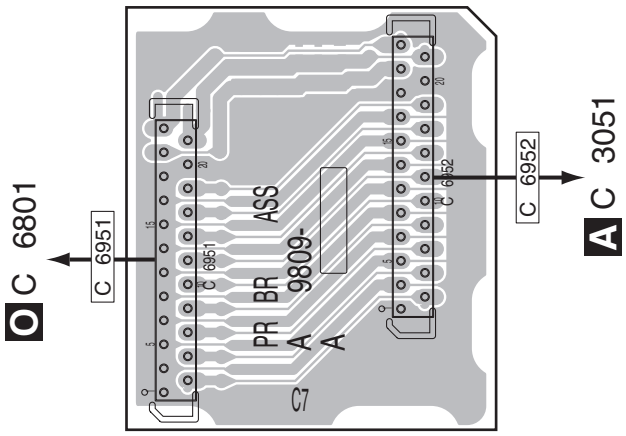

(ANP7785-A)

SIDE

SIDE

A

B

C

FB-CONNECT ASSY

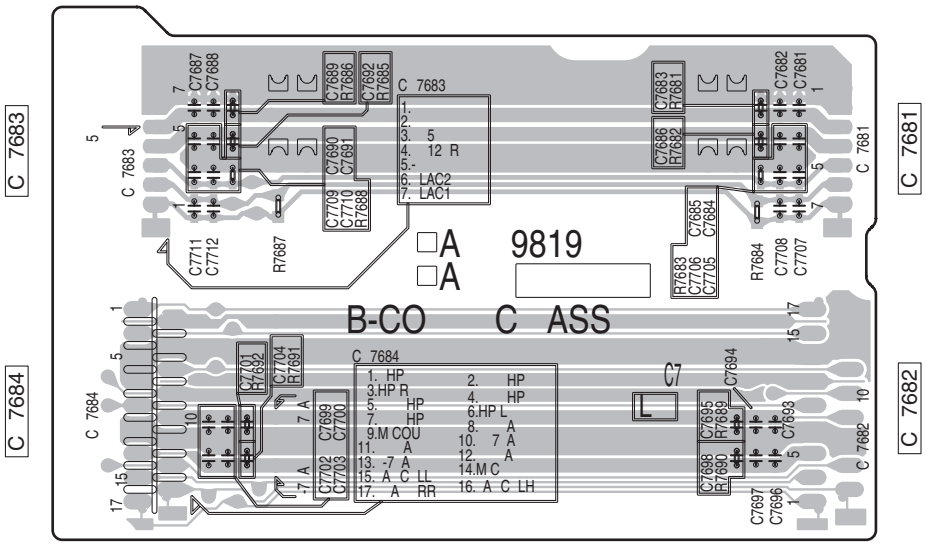

(ANP7786-B)

PRE BRIDGE ASSY

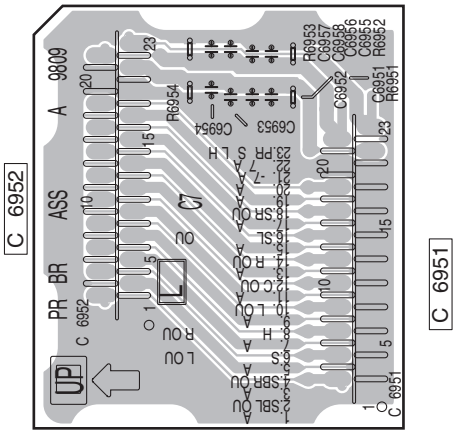

(ANP7785-A)

□□.□□ A□DAC□D□AUDIO□D□DAC□□RONT □RID□ E ASS□S

SIDE A

AA A-DAC BRIDGE ASSY

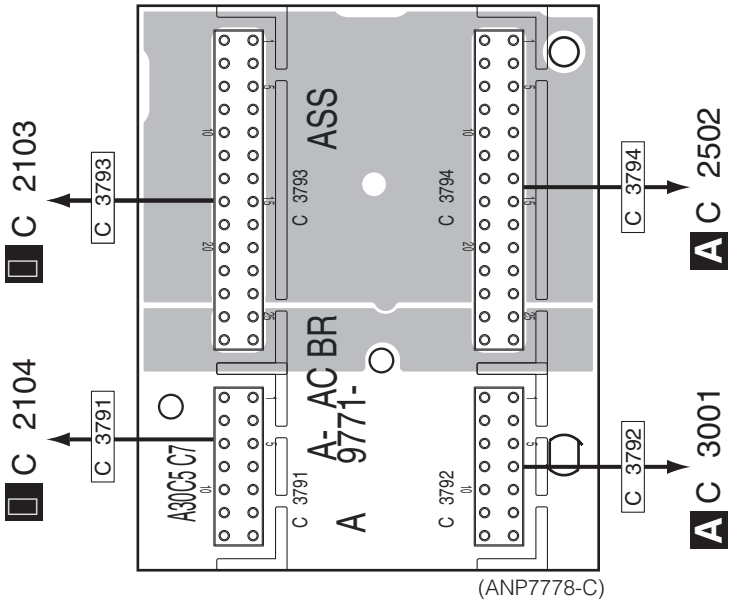

(ANP7778-C)

A□ D-AUDIO BRIDGE ASSY

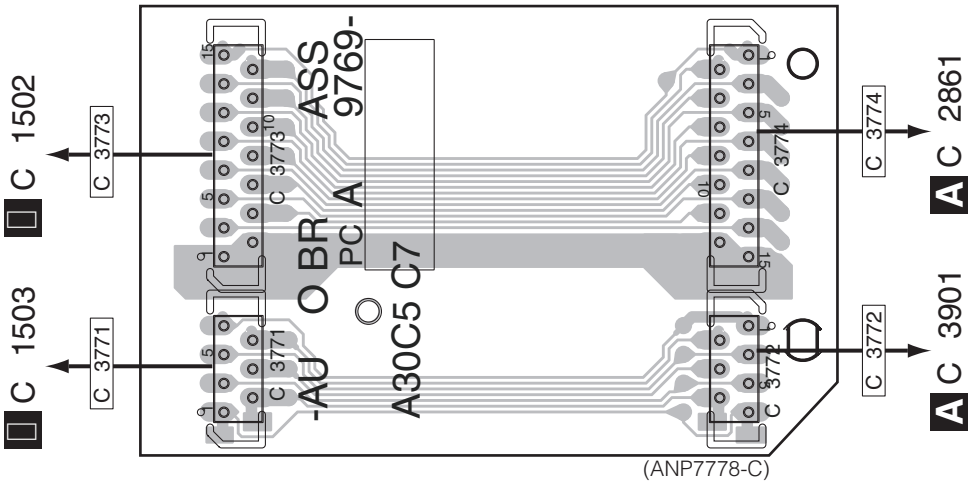

(ANP7778-C)

AA A□

SIDE A

AC D-DAC BRIDGE ASSY

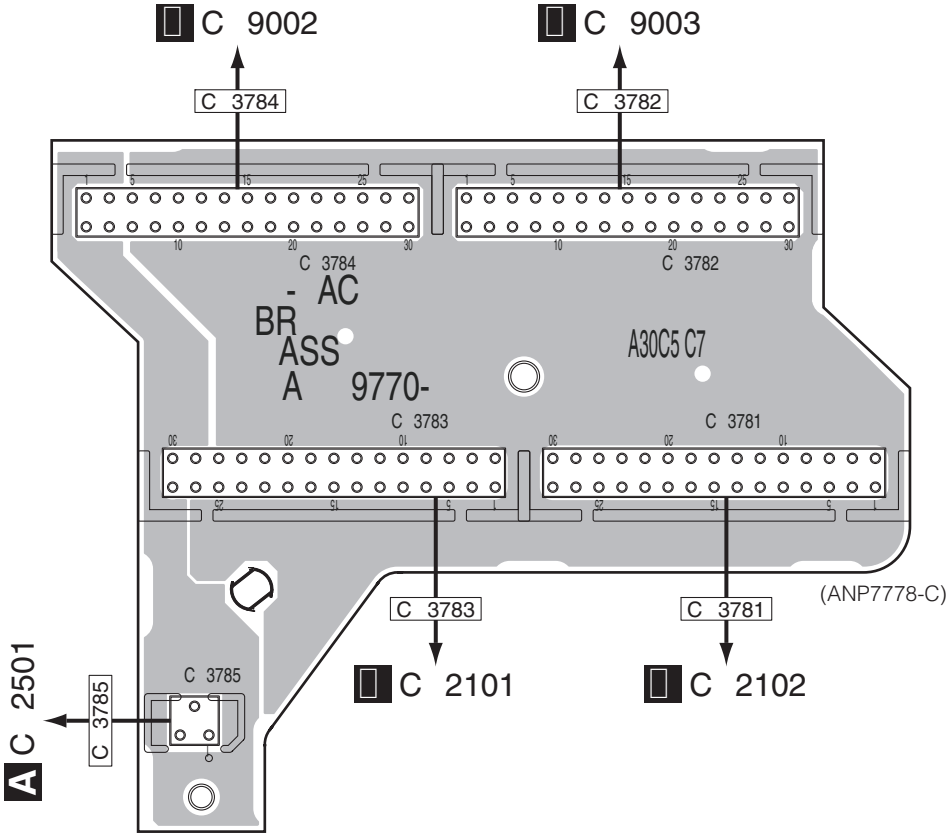

AD FRONT BRIDGE ASSY

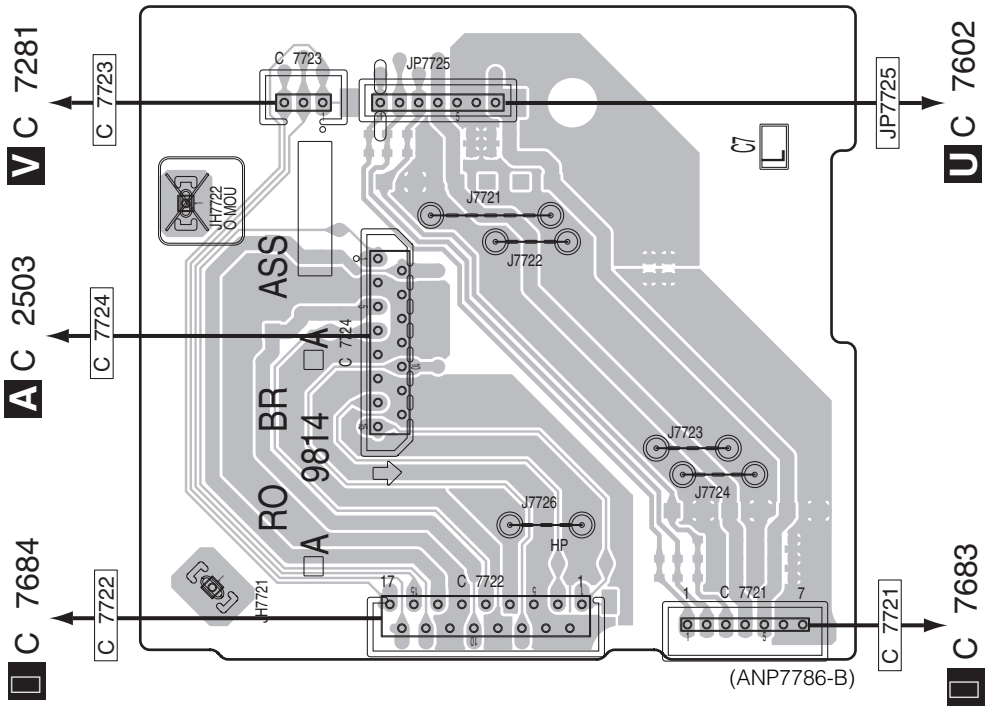

AC AD

SIDE

AC D-DAC BRIDGE ASSY

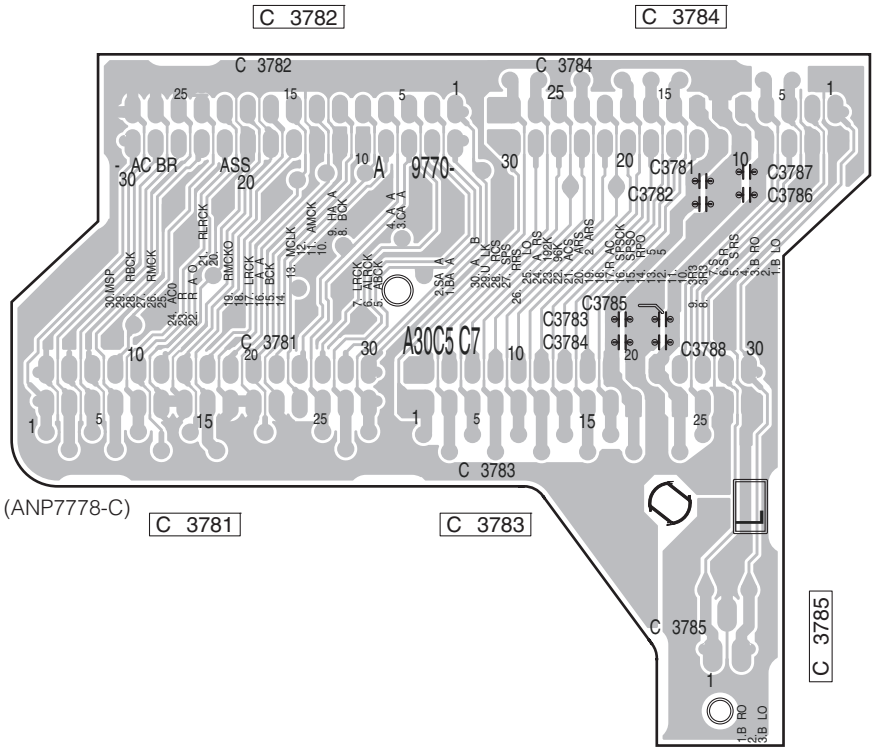

AD FRONT BRIDGE ASSY

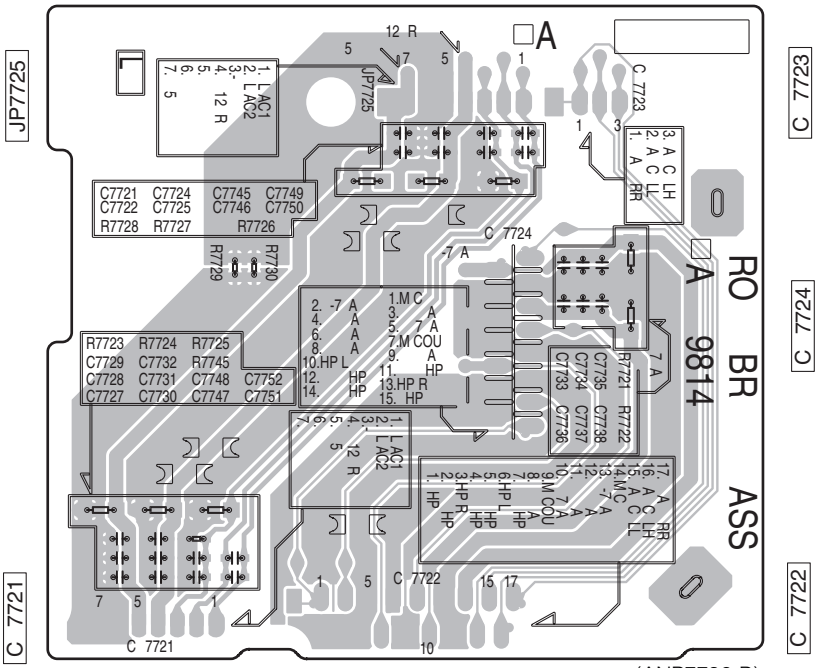

AC AD

AA A-DAC BRIDGE ASSY

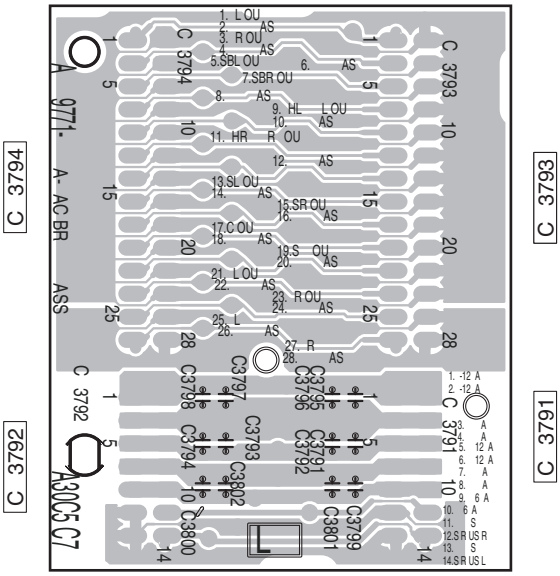

(ANP7778-C)

AA D-AUDIO BRIDGE ASSY

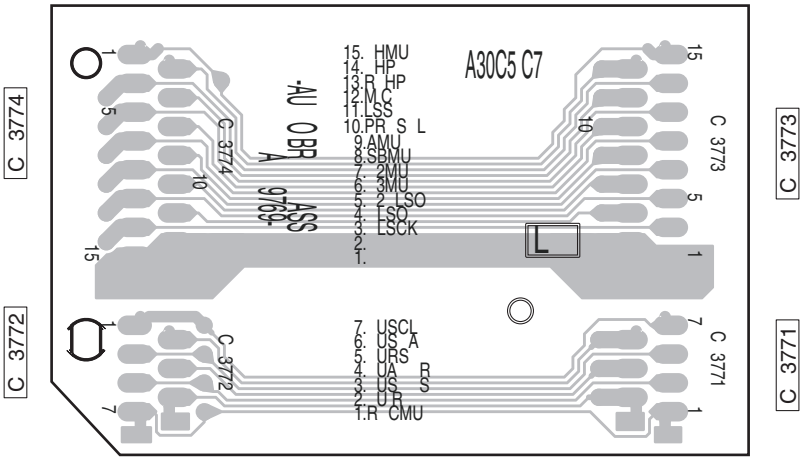

(ANP7778-C)

□□.□□ DISPLA□ □RID□ E □□□ □□IN □RID□ E ASS□S

SIDE A

A

AE DISPLAY BRIDGE ASSY

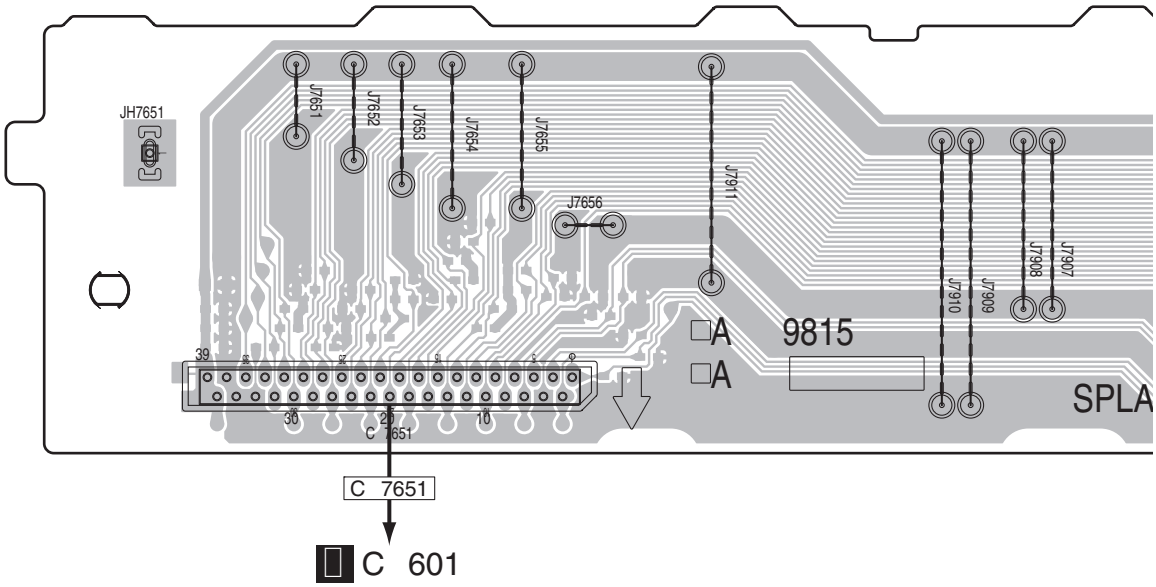

B

C

A□ F-IN BRIDGE ASSY

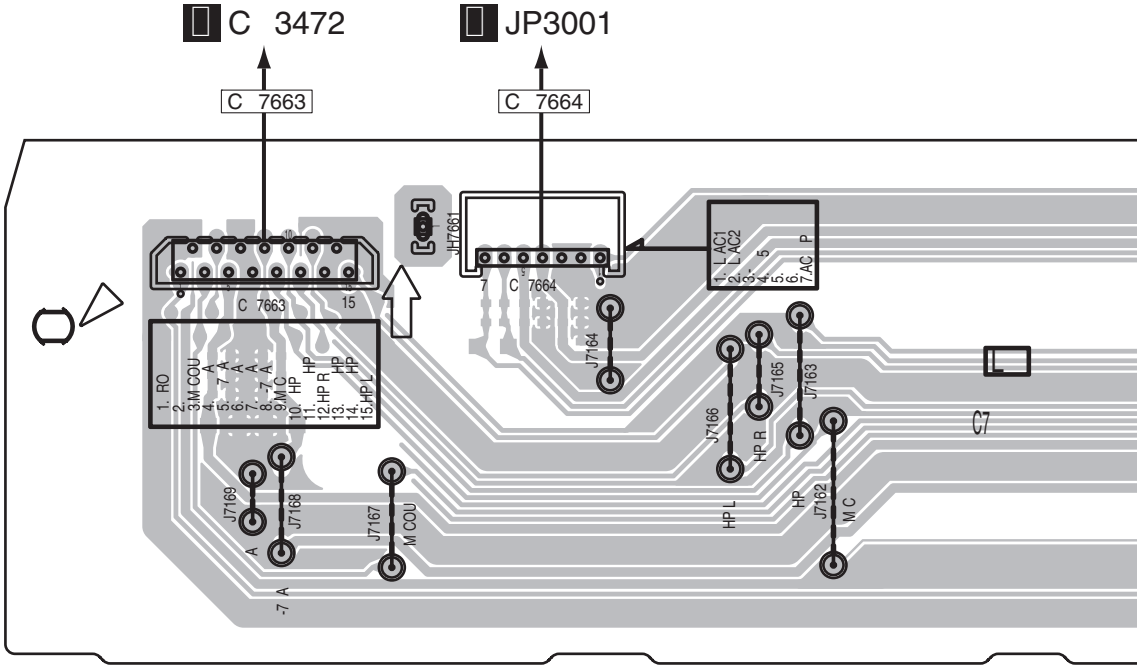

(ANP7786-B)

AE A□

SIDE A

A

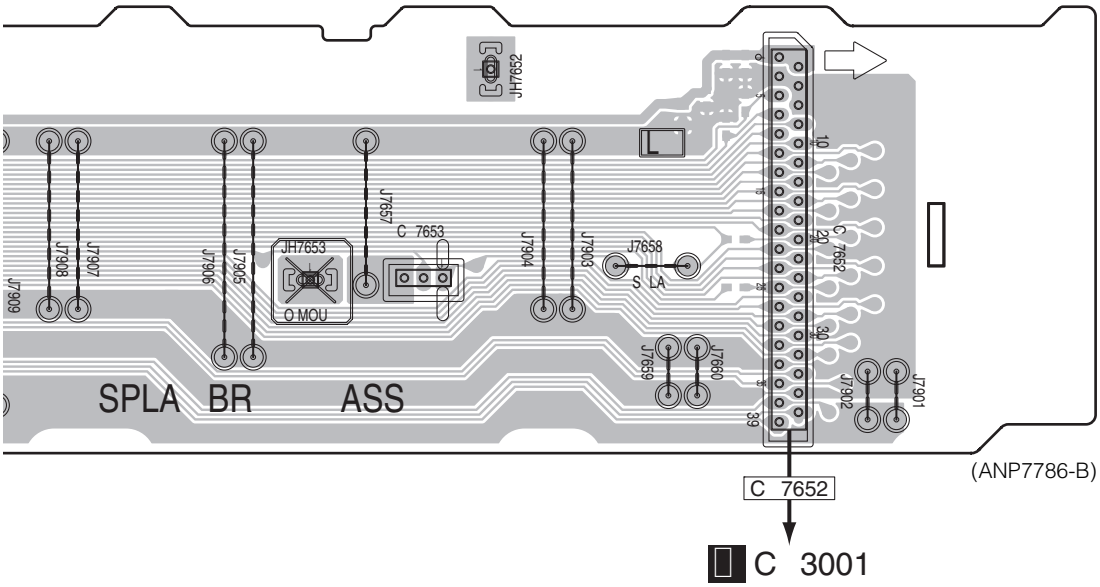

B

C

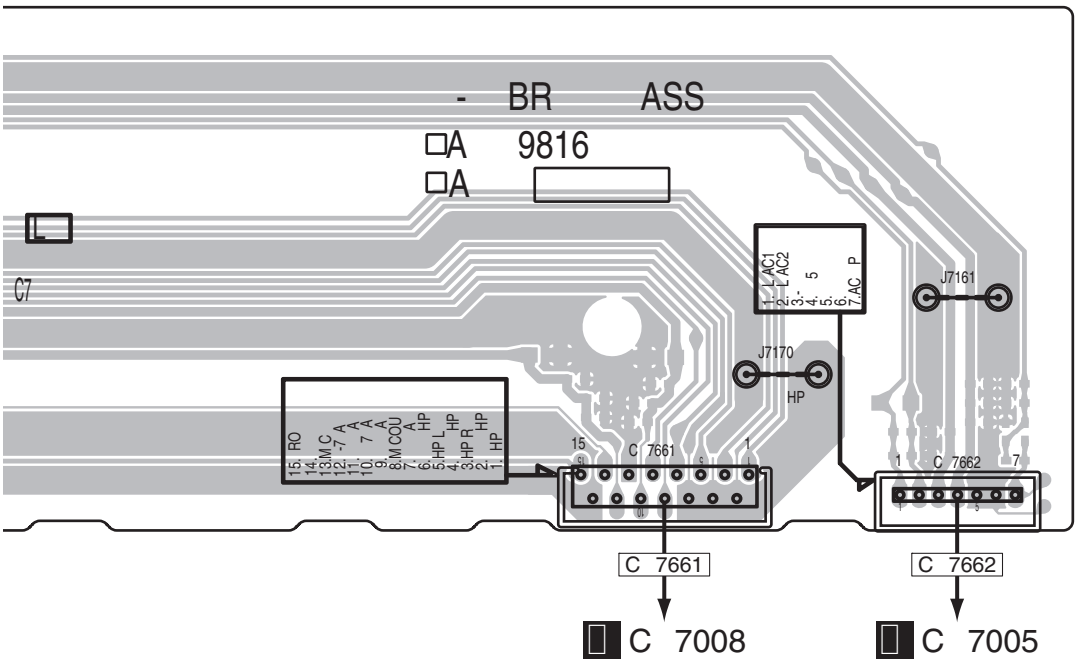

AE A

SIDE

AE DISPLAY BRIDGE ASSY

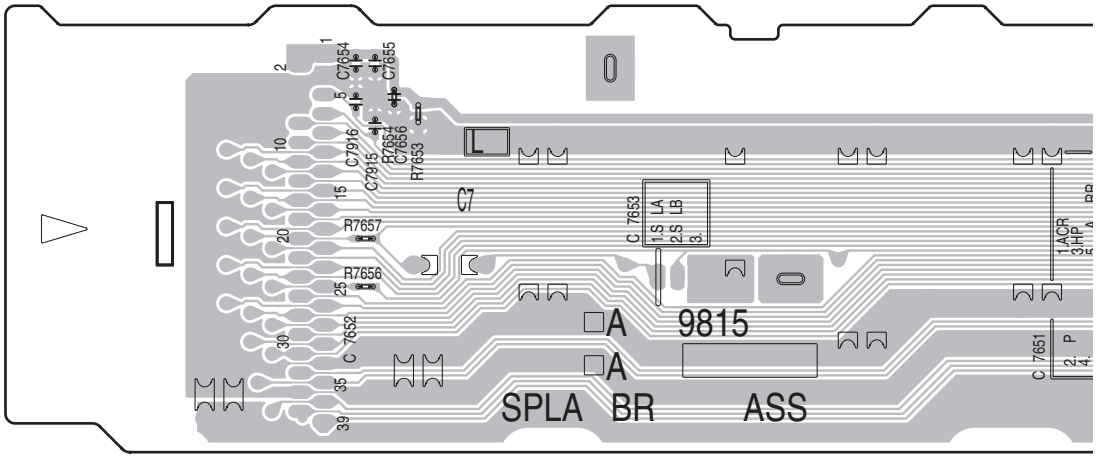

C 7652

A F-IN BRIDGE ASSY

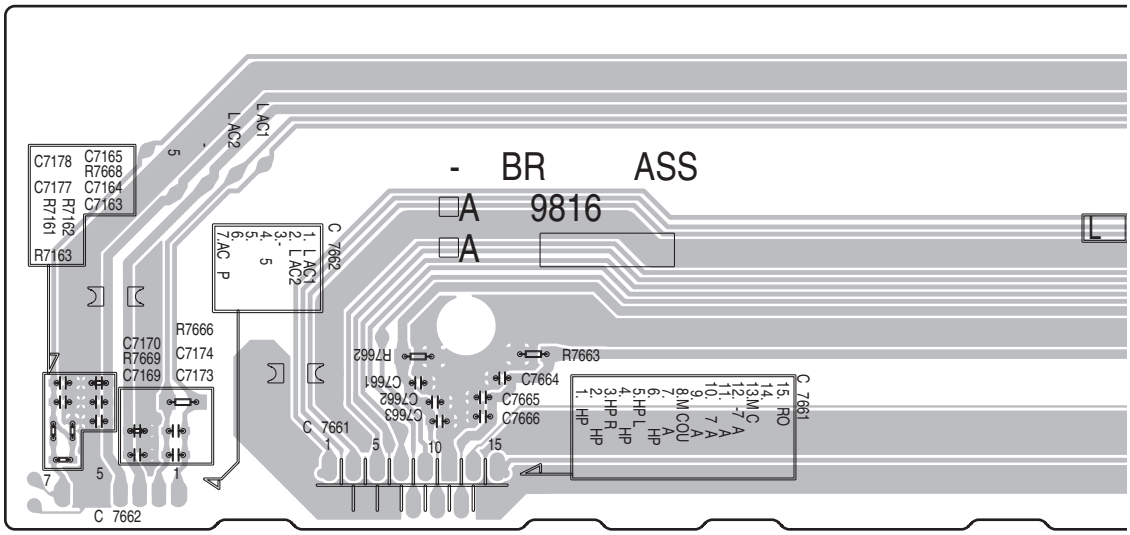

C 7662 C 7661

AE A

SIDE

A

B

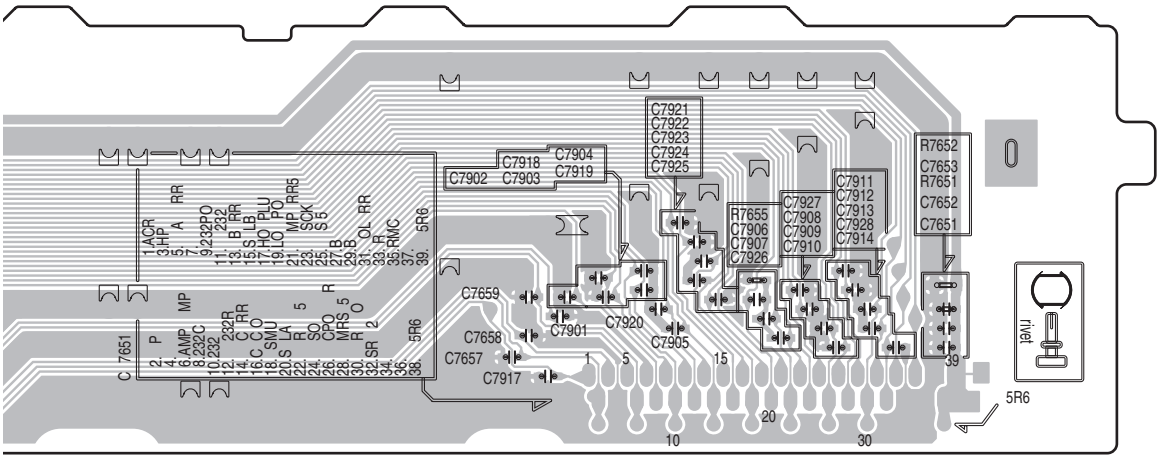

(ANP7786-B)

C 7651

C 7664 C 7663

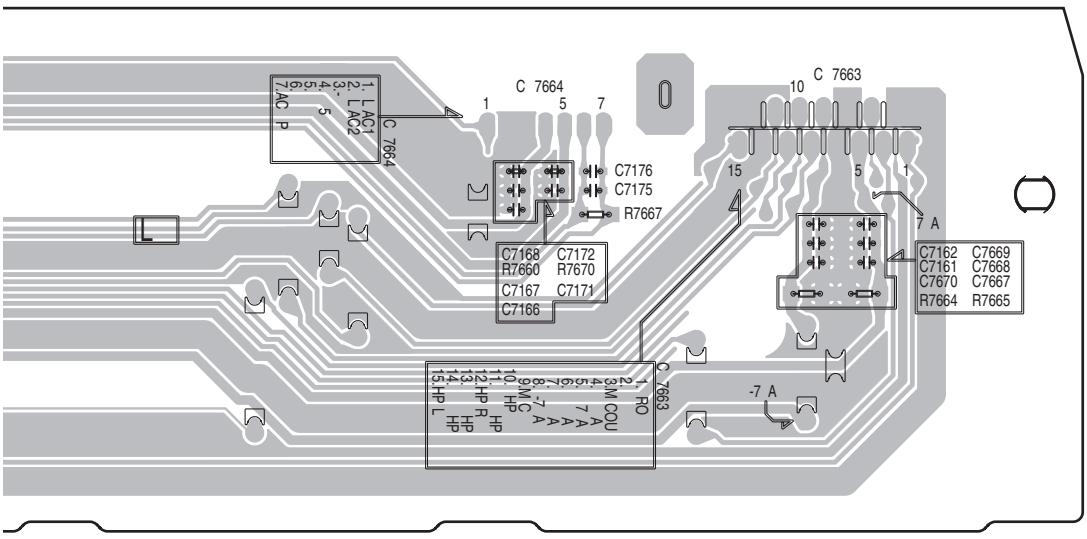

(ANP7786-B)

AE A

□□.□□ □C□ □RID□ E□A RE□ □RID□ E □□□ □IC □P □UARD ASS□S

SIDE A

A

A□ MCH BRIDGE ASSY

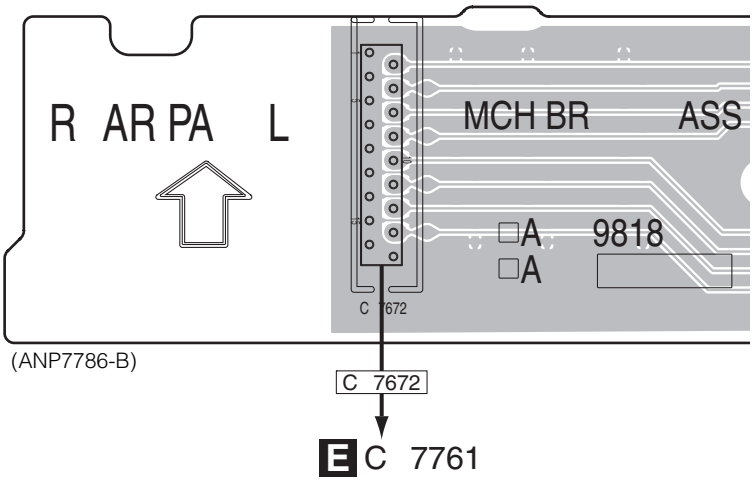

B

C

A□ A REG BRIDGE ASS'Y

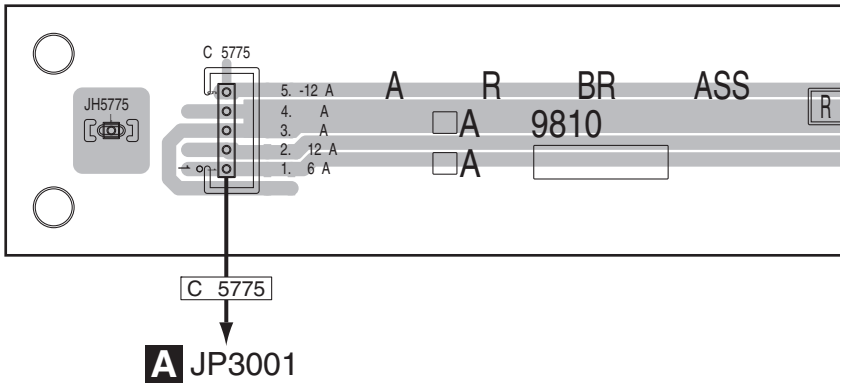

AI MIC HP GUARD ASSY

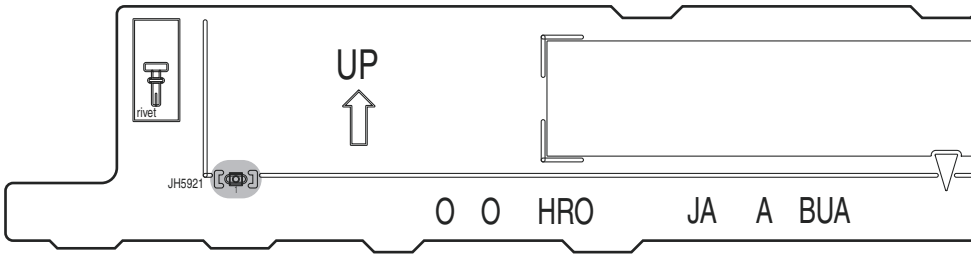

A□ A□ AI

SIDE A

A

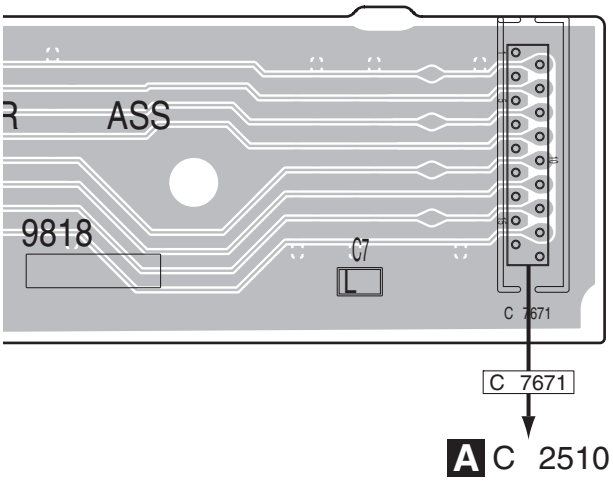

B

C

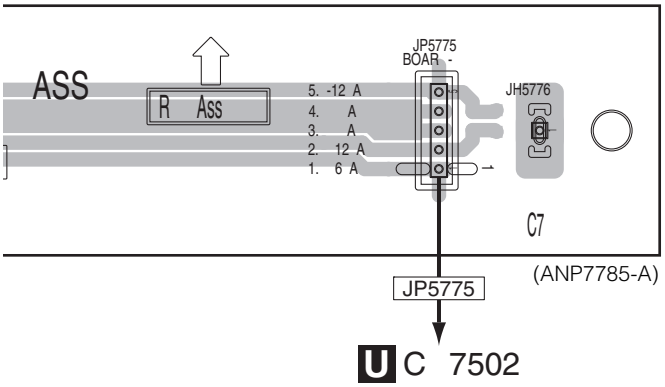

(ANP7785-A)

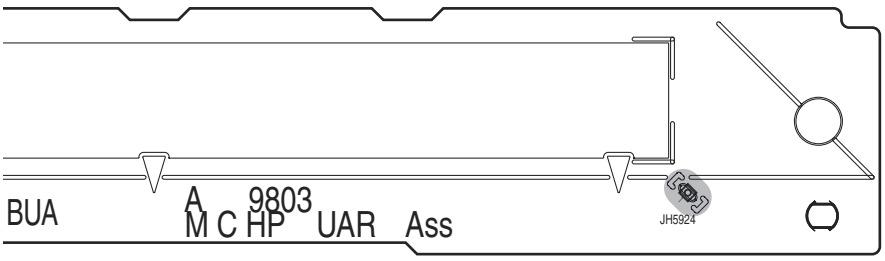

(ANP7784-B)

SIDE

A MCH BRIDGE ASSY

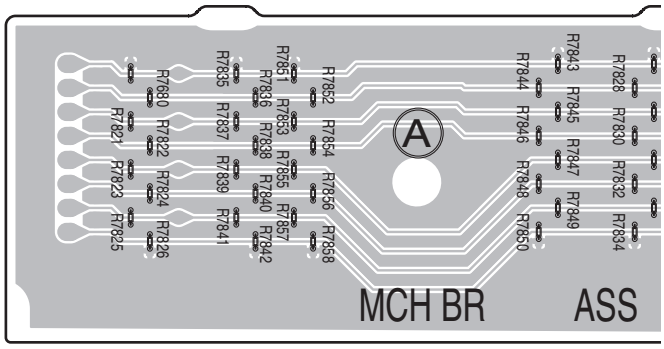

C 7671

A A REG BRIDGE ASS'Y

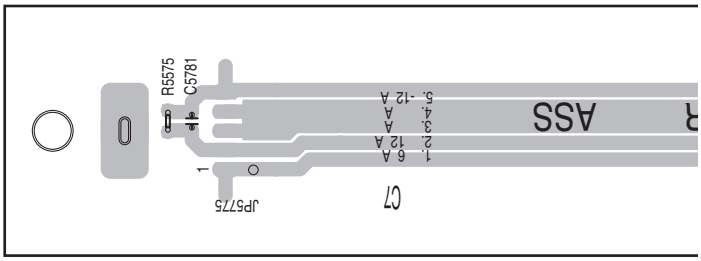

JP5775

A MIC HP GUARD ASSY

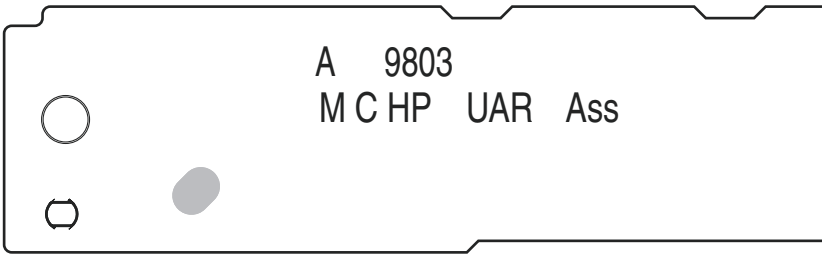

SIDE

A

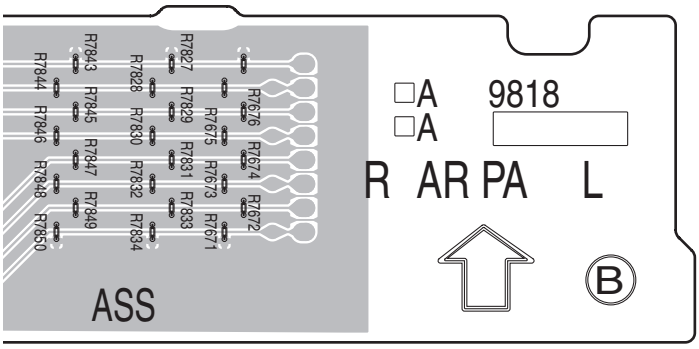

C 7672

(ANP7786-B)

B

C

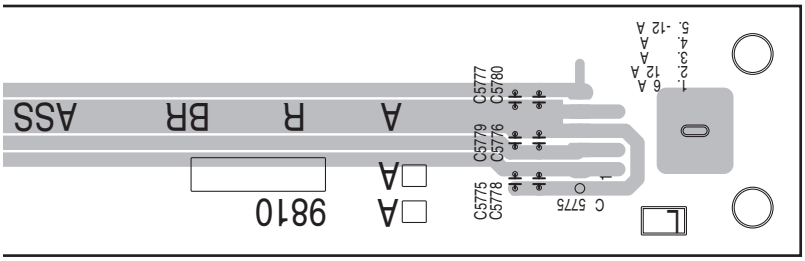

C 5775

(ANP7785-A)

(ANP7784-B)

SIDE A

SIDE A

A□ FAN CONNECT ASSY

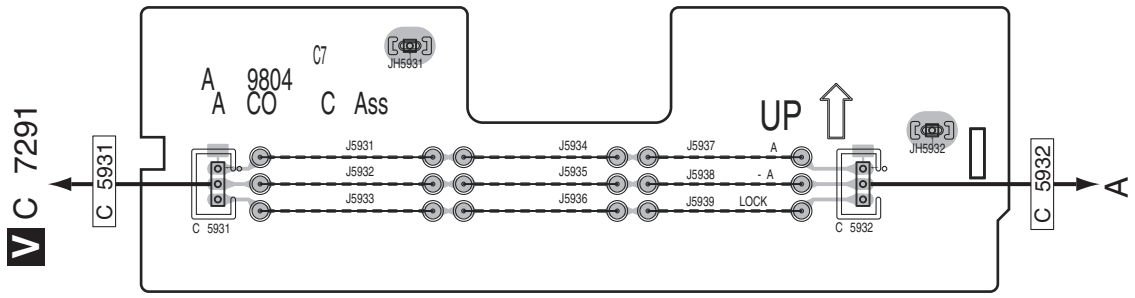

(ANP7784-B)

A□ BIND DM CABLE ASSY

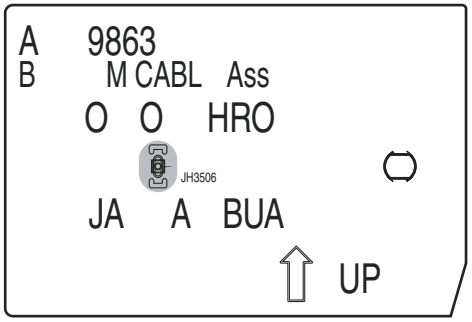

(ANP7784-B)

AL BIND B CABLE ASSY

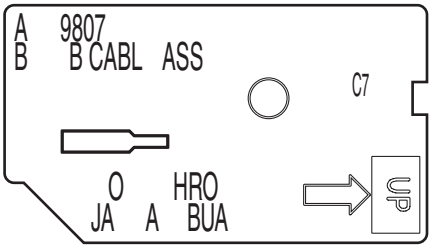

(ANP7785-A)

A□ FFC GUARD2 ASSY

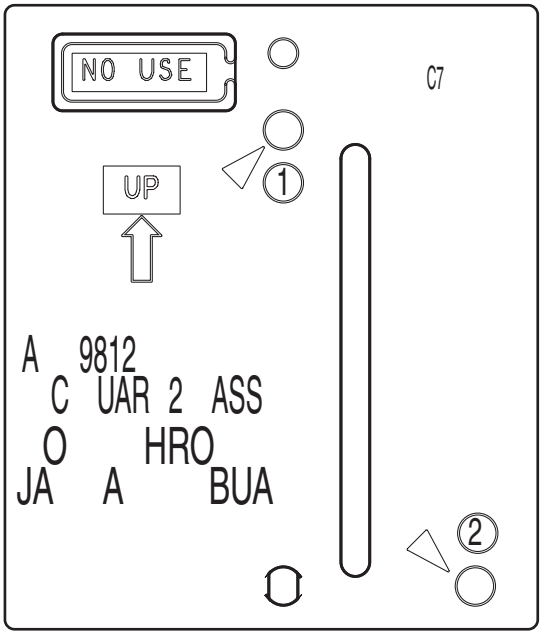

(ANP7785-A)

AN VREG GUARD ASSY

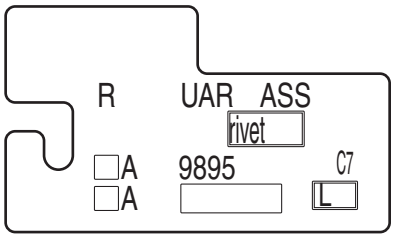

(ANP7786-B)

A□ A□ AL A□ AN A□ A□ AL A□ AN

SIDE

SIDE

A FAN CONNECT ASSY

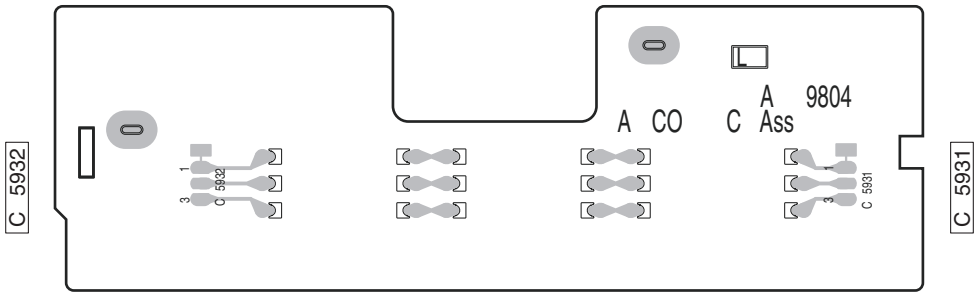

(ANP7784-B)

AL BIND B CABLE ASSY

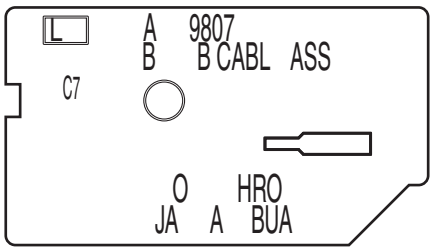

(ANP7785-A)

A BIND DM CABLE ASSY

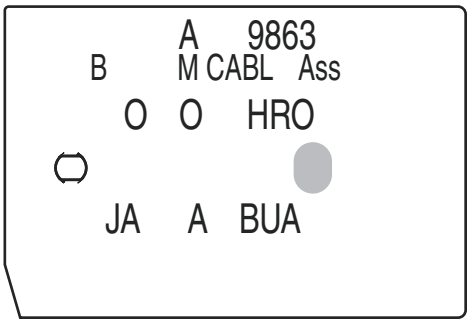

(ANP7784-B)

AN VREG GUARD ASSY

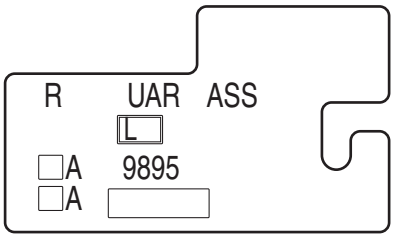

(ANP7786-B)

A FFC GUARD2 ASSY

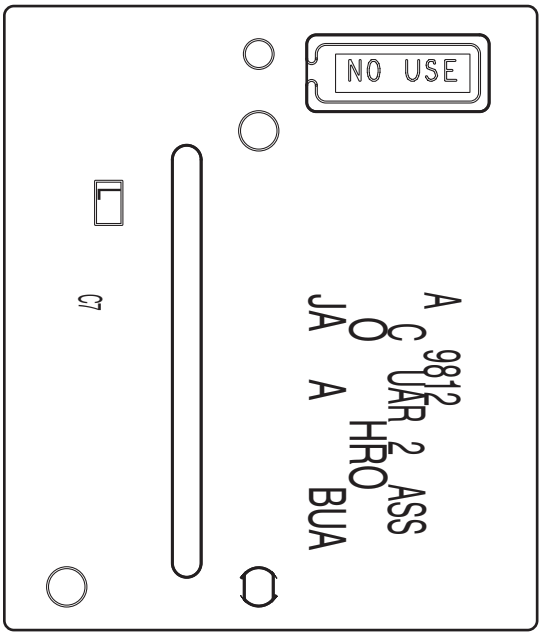

(ANP7785-A)

A A AL A AN

A A AL A AN

□□. PC□ PARTS LIST

NOTES: ● *Parts marked by "NSP" are generally unavailable because they are not in our Master Spare Parts List.*

● *The ⚠ mark found on some component parts indicates the importance of the safety factor of the part. Therefore, when replacing, be sure to use parts of identical designation.*

● *When ordering resistors, first convert resistance values into code form as shown in the following examples.*

Ex.1 When there are 2 effective digits (any digit apart from 0), such as 560 ohm and 47 k ohm (tolerance is shown by J = 5%, and K = 10%).

560 Ω	→	56×10^1	→	561	RD1/4PU 5 6 1 J
47 kΩ	→	47×10^3	→	473	RD1/4PU 4 7 3 J
0.5 Ω	→	R50			RN2H R 5 0 K
1 Ω	→	1R0			RS1P 1 R 0 K

Ex.2 When there are 3 effective digits (such as in high precision metal film resistors).

5.62 kΩ	→	562×10^1	→	5621	RN1/4PC 5 6 2 1 F

LIST O□ ASSE□ □LIES

□□□	N□. D□□□□□□□□□□	P□□N□.
	1..IR POWER AMP ASSY(SC-57)	AWH7030
	1..IR POWER AMP ASSY(SC-55/SC-1526-K)	AWH7039
NSP	1..IR BUFFER ASSY	AWM8249
	2..IR BUFFER ASSY	AWX9793
	2..BUFFER GND ASSY	AWX9795
NSP	1..PRIM DISPLAY ASSY(SC-57/SC-55)	AWM8250
	2..DISPLAY ASSY	AWX9796
	2..VOL ASSY	AWX9797
	2..POWER SW ASSY	AWX9798
	2..PRIMARY ASSY	AWX9799
	2..MIC HP ASSY	AWX9800
	2..ENCODER ASSY	AWX9801
	2..MIC HP GUARD ASSY	AWX9803
	2..FAN CONNECT ASSY	AWX9804
	2..BIND DM CABLE ASSY	AWX9863
NSP	1..PRIM DISPLAY ASSY(SC-1526-K)	AWM8267
	2..DISPLAY ASSY	AWX9847
	2..VOL ASSY	AWX9797
	2..POWER SW ASSY	AWX9901
	2..PRIMARY ASSY	AWX9799
	2..MIC HP ASSY	AWX9800
	2..ENCODER ASSY	AWX9801
	2..MIC HP GUARD ASSY	AWX9803
	2..FAN CONNECT ASSY	AWX9804
	2..BIND DM CABLE ASSY	AWX9863
NSP	1..AUDIO COMPOSITE ASSY(SC-57)	AWR7106
	2..D-AUDIO BRIDGE ASSY	AWX9769
	2..D-DAC BRIDGE ASSY	AWX9935
	2..A-DAC BRIDGE ASSY	AWX9936
	2..AUDIO ASSY	AWX9790
	2..COMPOSITE ASSY	AWX9791
NSP	1..AUDIO COMPOSITE ASSY(SC-55/SC-1526-K)	AWR7110
	2..D-AUDIO BRIDGE ASSY	AWX9769
	2..D-DAC BRIDGE ASSY	AWX9935
	2..A-DAC BRIDGE ASSY	AWX9936
	2..AUDIO ASSY	AWX9833
	2..COMPOSITE ASSY	AWX9836

□□□	N□. D□□□□□□□□□□	P□□N□.
NSP	1..INTERFACE REG ASSY	AWR7111
	2..INTERFACE ASSY	AWX9805
	2..IR REG ASSY	AWX9806
	2..B DIODE ASSY	AWX9808
	2..PRE BRIDGE ASSY	AWX9809
	2..A REG BRIDGE ASSY	AWX9810
	2..PRIMARY SHIELD ASSY	AWX9811
NSP	2..BIND B CABLE ASSY	AWX9807
NSP	2..FFC GUARD 2 ASSY	AWX9812
NSP	1..REG BRIDGE ASSY(SC-57)	AWR7112
	2..REG ASSY	AWX9813
	2..FRONT BRIDGE ASSY	AWX9814
	2..DISPLAY BRIDGE ASSY	AWX9815
	2..F-IN BRIDGE ASSY	AWX9816
	2..MCH BRIDGE ASSY	AWX9818
	2..FB-CONNECT ASSY	AWX9819
	2..CONNECT ASSY	AWX9820
	2..USB RECT ASSY	AWX9821
	2..MULTI CH IN ASSY	AWX9857
NSP	2..VREG GUARD ASSY	AWX9895
NSP	1..REG BRIDGE ASSY(SC-55/SC-1526-K)	AWR7117
	2..REG ASSY	AWX9813
	2..FRONT BRIDGE ASSY	AWX9814
	2..DISPLAY BRIDGE ASSY	AWX9815
	2..F-IN BRIDGE ASSY	AWX9816
	2..FB-CONNECT ASSY	AWX9819
	2..CONNECT ASSY	AWX9820
	2..USB RECT ASSY	AWX9821
NSP	2..VREG GUARD ASSY	AWX9895
	1..FRONT HDMI USB ASSY	AWX9749
	1..IR INTERFACE ASSY	AWX9792
	1..DAC HIGH ASSY(SC-57)	AWX9822
	1..DAC HIGH ASSY(SC-55/SC-1526-K)	AWX9860
	1..DIGITAL MAIN ASSY(SC-57)	AWX9827
	1..DIGITAL MAIN ASSY(SC-55/SC-1526-K)	AWX9824
	1..COMPONENT ASSY(SC-57)	AWX9866
	1..COMPONENT ASSY(SC-55/SC-1526-K)	AWX9865
	1..FM/AM TUNER UNIT	AXX7282

A AUDIO ASS

A [illegible] A [illegible]

[illegible]	S[illegible] D[illegible]	A[illegible]	A[illegible]
	JA2501 Pin Jack 4p	AKB7218	KB3017
	JA2502 2p Pin Jack	AKB7234	AKB7233
	JA2503 Pin Jack 4p	AKB7218	KB3017
	JA2504 Pin Jack 4p	AKB7218	KB3017
	JA2951 Pin Jack 4p	AKB7218	KB3017
	JA3101 Pin Jack 4p	AKB7218	KB3017
	JA3102 RCA Jack	AKB7237	AKB7236
	JA3201 Pin Jack 6p	AKB7221	KB3037
	JA3202 2p Pin Jack	AKB7234	AKB7233
	C 2510 18p Socket	AKP7123	ot used
	R3951	ot used	RS1 10SR473J
	R3952	ot used	RS1 10SR473J
	R3953	ot used	RS1 10SR473J
	R3954	ot used	RS1 10SR473J
	R3955	ot used	RS1 10SR473J
	R3956	ot used	RS1 10SR473J
	R3957	ot used	RS1 10SR473J
	R3958	ot used	RS1 10SR473J

B DAC I[illegible] ASS

A [illegible] A [illegible]

[illegible]	S[illegible] D[illegible]	A[illegible]	A[illegible]
	JA2008 RCA Jack	AKB7235	AKB7173

F DI[illegible]ITAL [illegible]AIN ASS

A [illegible] A [illegible]

[illegible]	S[illegible] D[illegible]	A[illegible]	A[illegible]
	R9518	RS1 16SS82R0	RS1 16SS1501
	R9519	RS1 16SS331J	RS1 16SS152J
	R9520	RS1 16SS7501	RS1 16SS3302
	R9521	RS1 16SS622J	RS1 16SS163J
	R9522	RS1 16SS3301	RS1 16SS1502
	C140	CH1277	C 221M4
	C156	CH1268	C 101M4
	C995	CH1277	C 221M4
	C996	ACH7306	ot used
	C1031	CH1234	C 101M16
	C1355	CH1277	C 221M4
	C1672	ACH7306	ot used
	C1673	ACH7306	ot used
	C1770	C 101M16	ot used
	C1836	C 470M16	ot used
	C1847	C 101M16	ot used
	C9004	CH1234	C 101M16
	C9537	CH1234	ot used
	C9547	CKSS B682K25	CCSSCH102J50
	C9553	CKSS B472K50	CCSSCH102J50
	C9588	C H S 103J16	ot used
	C9593	ACH7306	ot used
	C9608	C H S 103J16	ot used
	C9702	CH1234	C 101M16

H CO□ PONENT ASS□

A□ □□□□□ □□□ A□ □□□□□ □□□ □□□□□□□□□□□□□ □□□ □□□ □ □□□□□□□□□□□□□ □□□□□ □□□□□

□ □□□	S□□ □□□□□□ D□□□□□□□□□□	A□ □□□□□	A□ □□□□□
	JA8301 6p Pin Jack Au	AKB7225	AKB7224
	JA8302 3p Pin Jack Au	AKB7228	AKB7227
	JA8304 3p Pin Jack Au	AKB7228	AKB7227
	JA8305 3p Pin Jack Au	AKB7228	AKB7227
	C8394	CCSRCH470J50	ot used

I CO□ POSITE ASS□

A□ □□□□□ □□□ A□ □□□□□ □□□ □□□□□□□□□□□□□ □□□ □□□ □ □□□□□□□□□□□□□ □□□□□ □□□□□

□ □□□	S□□ □□□□□□ D□□□□□□□□□□	A□ □□□□□	A□ □□□□□
	JA3601 2p Pin Jack	AKB7230	AKB7229
	JA3602 2p Pin Jack	AKB7230	AKB7229
	JA3603 2p Pin Jack	AKB7230	AKB7229
	JA3604 1p Pin Jack	AKB7232	AKB7231
	JA3605 1p Pin Jack	AKB7232	AKB7231
	R3616	RS1 10SR68R0	RS1 10SR68R0
	C3608	CKSR B104K16	CKSR B104K50
	C3610	CKSR B104K16	CKSR B104K50

K DISPLA□ ASS□

A□ □□□□□ □□□ A□ □□□□□ □□□ □□□□□□□□□□□□□ □□□ □□□ □ □□□□□□□□□□□□□ □□□□□ □□□□□

□ □□□	S□□ □□□□□□ D□□□□□□□□□□	A□ □□□□□	A□ □□□□□
	3207	L C124 UB	ot used
	3210	L C124 UB	ot used
	3211	L C124 UB	ot used
	3212	L C124 UB	ot used
	3213	L C124 UB	ot used
	3204	SLR343BC4 JKLM	SLR-343 C P
	3206	SLR343BC4 JKLM	SLR-343 C P
	3208	SLR343BC4 JKLM	SLR-343 C P
	3210	SLR343BC4 JKLM	SLR-343 C P
	3212	SLR343BC4 JKLM	ot used
	R3068	RS1 10SR102J	ot used
	R3079	ot used	RS1 10SR0R0J
	R3095	RS1 10SR101J	ot used
	R3114	ot used	RS1 10SR0R0J
	R3211	ot used	RS1 10SR0R0J
	R3212	ot used	RS1 10SR0R0J
	R3213	ot used	RS1 10SR0R0J
	R3214	ot used	RS1 10SR0R0J
	R3241	RS1 10SR151J	RS1 10SR681J
	R3242	RS1 10SR151J	RS1 10SR681J
	R3243	RS1 10SR151J	RS1 10SR681J
	R3244	RS1 10SR151J	RS1 10SR681J
	R3245	RS1 10SR151J	ot used
	R3356	RS1 10SR101J	ot used
	C3048	CCSRCH100 50	ot used
	C3218	CCSRCH470J50	ot used
	C3338	CCSRCH100 50	ot used

M POWER SW ASSY

A[illegible] [illegible] A[illegible] [illegible]

Mark	Symbol and Description	A[illegible]	A[illegible]
	3401	L C143 UB	Not used
	3402	SLR343BC4 JKLM	Not used
	R3401	RS1 10SR151J	Not used
	C3401	CCSRCH221J50	Not used

R IR POWER AMP ASSY

A[illegible] [illegible] A[illegible] [illegible]

Mark	Symbol and Description	A[illegible]	A[illegible]
	JA4101 Sp erminal 6-p v0	AK 7150	AK 7142
	JA4301 Sp erminal 4-p v0	AK 7149	AK 7141
	JA4501 Sp erminal 4-p v0	AK 7149	AK 7141
	JA4901 Sp erminal 4-p v0	AK 7149	AK 7141
	JA5101 Sp erminal 4-p v0	AK 7149	AK 7141

PCB PARTS LIST FOR SC[illegible] UNLESS OTHERWISE NOTED

A AUDIO ASSY

SEMICONDUCTORS

Mark	No. Description	Part No.
	IC 2501,3273	BD3473KS2
	IC 2661,2751,2801	NJM4565MD
	IC 2701	TC4066BFN
	IC 2702	UPC4570G2-A
	IC 3101,3151,3201,3251	NJM4580V
	IC 3221	TC4052BFN
	IC 3271,3272	NJM4580V
	Q 2721,2853,3221,3222	LTC124EUB
	Q 2722	LTA124EUB
	Q 2803,2951,2971,3101	IMX25
	Q 2852	LSA1576UB
⚠	Q 3001	2SD1858X
⚠	Q 3002	2SB1237X
	Q 3102,3151,3152,3201	IMX25
	Q 3202,3251,3252,3271	IMX25
	Q 3272,3274-3276	IMX25
⚠	Q 3901	2SD1664
	D 2691,2692,2701,2702	1SS302
	D 2851,2852	1SS352
	D 3001,3002	HZU7R5(B2)
	D 3902	UDZS5R6(B)
	D 3903	UDZS3R3(B)

MISCELLANEOUS

Mark	No. Description	Part No.
	JA 2501,2503,2504 PIN JACK(4P)	AKB7218
	JA 2502,3202 2P PIN JACK	AKB7234
	JA 2951,3101 PIN JACK(4P)	AKB7218
	JA 3102 RCA JACK	AKB7237
	JA 3201 PIN JACK(6P)	AKB7221
	RY 2851 RELAY	CSR1031
	CN 2501 3P SOCKET	XKP3072
	CN 2502 B TO B CONNECTOR	AKP7269
	CN 2503 15P CONNECTOR	52044-1545
	CN 2510 18P SOCKET	AKP7123
	CN 2861 15P SOCKET	XKP3078
	CN 3001 14P SOCKET	AKP7248
	CN 3051 23P SOCKET	XKP3082
	CN 3901 7P SOCKET	XKP3074
	CN 3902 CONNECTOR	9604S-09C

Mark	No. Description	Part No.
	JP 3001 HOUSING	ADX7745

RESISTORS

Mark	No. Description	Part No.
	R 2687	RS1/8SQ105J
	R 2688	RS1/8SQ152J
	R 2819,2820	RD1/4MUF330J
	R 3031	RS1/8SQ475J
	R 3032	RS1/8SQ562J
	Other Resistors	RS1/10SR###J

CAPACITORS

Mark	No. Description	Part No.
	C 2505,2506,2525,2526	CEAK220M50
	C 2545,2546,2587,2588	CEAK220M50
	C 2565,2566,2663,2664	CEAK100M50
	C 2609,2610,2731,2732	CEAK220M50
	C 2669,2670,2817,2818	CEAK470M25
	C 2671,2672	CKSRYB822K50
	C 2673-2676	CCSRCH122J50
	C 2677,2678,2707,2708	CEAK100M50
	C 2679,2680,3903,3906	CEAK101M16
	C 2683,2699,2803,2804	CKSRYB103K50
	C 2693,2694,2828,2836	ACH1479
	C 2695,2696,2709-2712	CFHXSQ103J16
	C 2697,2698,2700,2703	CCSRCH101J50
	C 2704,2759,2829,2830	CCSRCH101J50
	C 2751-2758,2760,2826	CEAK100M50
	C 2763,2764,2815,2816	CFHXSQ103J16
	C 2801,2802,2805,2806	CEAT1R0M50
	C 2807,2808	CCSRCH221J50
	C 2819,2820	CEAT471M16
	C 2821,2822,3167,3225	CCSRCH100D50
	C 2827,2903,2904,2907	CEAK100M50
	C 2832,2852,2853,3914	CCSRCH101J50
	C 2834,2835,3055,3056	CFHXSQ103J16
	C 2851	CEAK101M35
	C 2863-2866,3073,3075	CKSRYB104K50
	C 2908,3025,3026	CEAK100M50
	C 2981,2983,3007,3008	CKSRYB103K50
	C 3001,3002	CEAK2R2M50
	C 3011,3012,3909	CCSRCH331J50
	C 3021,3904,3907,3947	CKSRYB103K50

	N□. D□□□□□□□□□	P□□□N□.
	C 3053,3054	ACH1480
	C 3074,3076,3077,3192	CCSRCH471J50
	C 3078,3191,3291,3905	CKSRYB104K50
A	C 3103,3104,3153,3154	CFHXSQ103J16
	C 3105,3106,3155,3205	CEAK220M50
	C 3203,3204,3221,3222	CFHXSQ103J16
	C 3206,3255,3256,3275	CEAK220M50
	C 3253,3254,3273,3274	CFHXSQ103J16
	C 3276,3926,3927	CEAK220M50
	C 3292,3935,3948	CCSRCH471J50
	C 3901	CCSRCH270J50
	C 3908,3911-3913	CCSRCH100D50
	C 3915-3917,3919-3921	CCSRCH100D50
	C 3918,3934	CKSRYB104K50
B	C 3928,3929	CFHXSQ103J16
	C 3946	CCSRCH100D50
	C 3951	CCSRCH101J50
	C 3952-3954	CEAK100M50

B DAC □I□□ ASS□

SE□ICONDUCTORS

	IC 2001	AK4118AEQ
C	IC 2003,2005-2007,2018	RNB4580F
	IC 2004,2016	TC74LCX08FK
	IC 2010	TC74VHC08FK
	IC 2011-2014,2017	AK4480EF
⚠	IC 2015	NJM2880U1-33
	IC 2106	TC74VHC126FK
⚠	IC 2181	NJM2872BF33
⚠	IC 2183	NJM2845DL1-05
	IC 2401,2402,2451	NJM4565MD
	IC 2431	PCM1804DB
	IC 2471	AK4388ET
	D 2130	1SS302
	D 2201-2203	1SS352
	D 2431,2432	1SS301
	D 2433,2434	1SS300

□ISCELLANEOUS

	L 2004-2010 CHIP SOLID INDUCTOR	QTL1013
	L 2012-2018 CHIP SOLID INDUCTOR	QTL1013
	L 2020,2021 CHIP SOLID INDUCTOR	QTL1013
	L 2102,2431 CHIP SOLID INDUCTOR	QTL1013
	L 2442,2471 CHIP SOLID INDUCTOR	QTL1013
	L 2472,2473 INDUCTOR	CTF1379
	JA 2002-2004 OPT. LINK IN	AKS7001
	JA 2006 OPT OUT MODULE	AKS7007
	JA 2008 RCA JACK	AKB7235
	JA 2101 SOCKET	BKP1127
	KN 2201-2203 SCREW PLATE	VNE1948
	CN 2101,2102 SOCKET(30PL)	BKP1047
	CN 2103 B TO B CONNECTOR	AKP7269
	CN 2104 14P SOCKET	AKP7248

RESISTORS

	R 2007-2010,2012,2016	RS1/16SS101J
	R 2017,2020,2128,2195	RS1/16SS0R0J
	R 2018,2116-2118,2120	RS1/16SS220J
	R 2019	RS1/16SS680J
	R 2021,2023-2025,2027	RS1/16SS101J

	N□. D□□□□□□□□□	P□□□N□.
	R 2022,2263,2472	RS1/16SS221J
	R 2026,2470	RS1/16SS471J
	R 2028	RS1/16SS1002F
	R 2048,2084,2085,2087	RS1/16SS470J
	R 2049,2053,2086,2088	RS1/16SS101J
	R 2064-2067,2094,2095	RS1/16SS100J
	R 2089,2115,2119,2238	RS1/16SS101J
	R 2121,2125,2126,2431	RS1/16SS100J
	R 2200-2203,2227,2228	RS1/16SS0R0J
	R 2222	RS1/16SS183J
	R 2230,2234,2235,2239	RS1/16SS0R0J
	R 2240	RS1/16SS470J
	R 2285,2286,2289-2291	RS1/16SS0R0J
	R 2432	RS1/16SS100J
	R 2433-2435,2437-2439	RS1/16SS101J
	R 2440,2446-2450	RS1/16SS0R0J
	R 2441,2442,2471,2480	RS1/16SS101J
	R 2469	RS1/16SS331J
	R 2473,2474	RS1/16SS102J
	R 2481,2485,2487,2488	RS1/16SS101J
	R 2489	RS1/16SS151J
	R 2490	RS1/16SS820J
	R 2491,2493	RS1/8SQ105J
	R 2492	RS1/8SQ474J
	R 2498,2499	RS1/8SQ225J
	Other Resistors	RS1/10SR###J

CAPACITORS

	C 2002,2005,2124,2126	CKSRYB103K50
	C 2003,2006,2009-2016	CKSRYB104K50
	C 2017,2030,2059,2089	CEAK221M16
	C 2018,2021,2024,2440	CEAK101M16
	C 2019,2029,2032,2046	CCSSCH331J50
	C 2020,2023,2028,2033	CKSSYB104K16
	C 2022,2054	CCSSCH101J50
	C 2025,2295,2490-2499	CCSRCH100D50
	C 2026,2065,2066	CKSRYB474K16
	C 2034,2041,2074,2075	CCSRCH102J50
	C 2042-2045,2076,2078	CCSRCH331J50
	C 2047,2056,2106,2176	CKSSYB104K16
	C 2048,2049,2080,2081	CFHXSQ103J16
	C 2055	CEAK102M16
	C 2057	CKSSYB103K25
	C 2058,2193	CKSQYB225K10
	C 2070,2071,2086,2087	CFHXSQ472J16
	C 2073,2105,2122,2131	CKSRYB104K50
	C 2077,2079,2218,2221	CCSRCH221J50
	C 2082,2083,2098,2099	CEAK100M50
	C 2090,2091,2107,2108	CCSRCH102J50
	C 2092-2095,2109-2111	CCSRCH331J50
	C 2096,2097,2114,2115	CFHXSQ103J16
	C 2102,2103,2120,2121	CFHXSQ472J16
	C 2112,2174,2430	CCSSCH331J50
	C 2113,2223,2235,2237	CCSRCH331J50
	C 2116,2117,2239,2247	CEAK100M50
	C 2127,2128,2451,2452	CEAT220M50
	C 2129,2130,2178,2183	CKSRYB103K50
	C 2132,2135,2136,2139	CKSRYB104K50

C	2133,2138,2140,2142	CEAK470M25
C	2134,2137,2159,2161	CEAK221M16
C	2141,2144,2146,2148	CKSRYB104K50
C	2143,2145,2147,2149	CEAK470M25
C	2150,2152,2154,2156	CKSRYB104K50
C	2151,2153,2155,2157	CEAK470M25
C	2158,2160,2162,2164	CKSRYB104K50
C	2163,2165,2209,2213	CEAK221M16
C	2166,2168,2170,2172	CKSRYB104K50
C	2167,2169,2171,2173	CEAK470M25
C	2179,2184,2187,2432	CEAK101M35
C	2180,2194,2199,2208	CKSRYB104K50
C	2182	CKSQYB225K16
C	2188,2190,2192,2195	CKSRYB103K50
C	2191,2196,2197,2238	CFHXSQ103J16
C	2207,2271,2455,2456	CCSRCH471J50
C	2211,2256,2260,2266	CCSRCH101J50
C	2212,2217,2220,2224	CKSRYB104K50
C	2215,2219,2228,2231	CEAK470M25
C	2222,2225,2229,2232	CCSRCH221J50
C	2226,2230,2282,2284	CKSRYB104K50
C	2233,2251,2252,2434	CKSRYB103K50
C	2236,2246	CCSRCH102J50
C	2240,2244	CFHXSQ472J16
C	2242,2248,2281,2283	CCSRCH331J50
C	2243,2411,2412,2415	CFHXSQ103J16
C	2253-2255,2258	CCSRCH221J50
C	2257,2259,2265,2445	CCSRCH330J50
C	2261-2264,2267-2270	CCSRCH221J50
C	2272,2413,2414	CCSRCH101J50
C	2273-2276,2301,2379	CCSRCH221J50
C	2277,2278	CCSSCH100D50
C	2289,2291	CCSRCH331J50
C	2290,2292,2433,2435	CKSRYB104K50
C	2381,2384,2387,2388	CCSRCH221J50
C	2393,2396,2399,2475	CCSRCH221J50
C	2401,2402	CKSRYB104K16
C	2403,2404	DCH1201
C	2405-2408	CEAK100M50
C	2416	CFHXSQ103J16
C	2429	CKSSYB104K16
C	2436,2437,2473,2474	CEAK470M25
C	2438,2441-2443,2446	CKSRYB104K50
C	2439,2464,2476,2478	CKSRYB103K50
C	2453,2454	CCSRCH391J50
C	2457,2458,2472,2480	CKSRYB104K50
C	2459,2460	CEAT100M50
C	2477	CKSRYB105K16
C	2481,2483,2484	CCSSCH471J50
C	2482	CKSRYB103K50
C	2489	CCSRCH330J50

C FRONT END USE ASSTE

SEMICONDUCTORS

	IC 8001	S-24CS02AFT
	IC 8002	TC7MB3257FK
	IC 8003	CXB1443R
⚠	IC 8004	S-1132B33-U5
⚠	IC 8101	TPS2557DRB
⚠	IC 8102	BD9329EFJ
	Q 8001-8003	LTC114YUB
	Q 8102	LSC4081UB
	D 8004	1SS301
	D 8104	RKZ5.6KG(B2)

MISCELLANEOUS

L	8001,8002,8018 INDUCTOR	CTF1473
L	8010,8101,8102 CHIP BEADS	ATL7010
L	8012-8017,8019 FERRITE BEAD	CTF1528
L	8020 FERRITE BEAD	CTF1528
L	8103 CHOKE COIL	CTH1486
JA	8001 HDMI JACK	AKP7268
JA	8003 HDMI JACK	AKP7267
JA	8101 USB CONNECTOR	DKB1106
KN	8001,8101 EARTH TERMINAL	AKF7002
CN	8004 5P CONNECTOR	VKN1374
CN	8101 CONNECTOR	AKM1276
	8002 PCB BINDER	VEF1040
JP	8101 HOUSING	ADX7760

RESISTORS

R	8028	RS1/16SS4701F
R	8033	RS1/8SQ105J
R	8035-8038	RS1/16SS1000F
R	8108,8109	RS1/16SS2202F
R	8117	RS1/16SS2200F
R	8118	RS1/16SS8201F
R	8120	RS1/16SS1801F
R	8122-8124	RS1/8SQ0R0J
	Other Resistors	RS1/16SS###J

CAPACITORS

C	8010	CCSSCH331J50
C	8011,8016,8019,8021	CKSSYB104K16
C	8020,8027,8028	CCSSCH471J50
C	8022,8035,8037,8065	CCSSCH102J50
C	8023,8025,8026,8031	CKSSYB104K16
C	8024,8101,8127	CCSSCH101J50
C	8033,8038,8042,8044	CKSSYB104K16
C	8041	CEVW101M16
C	8043	CKSSYB102K50
C	8045,8046,8102,8106	CKSRYB104K50
C	8064	CKSSYB104K16
C	8066,8071	CCSSCH102J50
C	8069	CCSSCH330J50
C	8076	CEAK101M16
C	8083	CKSSYB103K25
C	8104	CEAK221M16
C	8105,8107	CCSRCH101J50
C	8108	CKSRYB102K50
C	8110,8111	CCG1236
C	8115,8116	CKSRYB104K50

		N□. D□□□□□□□□□□	P□□N□.
		C 8117	CCSRCH222J50
		C 8119,8126	CCSRCH100D50
		C 8121,8122	ACG1128
A		C 8125	CCSRCH331J50

D US□ RECT ASS□

SE□ ICONDUCTORS

	⚠	D 3651	D5SBA60(B)

□ ISCELLANEOUS

		H 3651,3652 FUSE CLIP	AKR1004
		KN 3651 EARTH TERMINAL	AKF7002
B		CN 3651 3P TOP POST	B3B-EH
		CN 3652 2P TOP POST	B2B-EH
		JH 3651,3652 PCB BINDER	VEF1040

RESISTORS

		R 3652	RS1/4SA105J
		Other Resistors	RS1/8SQ###J

CAPACITORS

		C 3651	CFTLA104J50
		C 3661	CKSRYB104K50
		C 3662	CCSRCH101J50
		C 3663	CCSRCH331J50
C		C 3664	CCSRCH100D50
		C 3665,3666	CEAK472M16
		C 3667	CKSRYB103K50

E □ ULTI C□ IN ASS□

□ ISCELLANEOUS

		JA 7761,7762 PIN JACK(4P)	AKB7218
		KN 7761 SCREW PLATE	VNE1948
		CN 7761 18P SOCKET	AKP7123
		CN 7762 5P SOCKET	XKP3073

RESISTORS

		All Resistors	RS1/10SR###J

CAPACITORS

		C 7765,7766,7771,7772	CEAK220M50
		C 7777,7778,7783,7784	CEAK220M50
		C 7785,7788	CKSRYB104K50
		C 7786,7789	CCSRCH471J50

F DI□ ITAL □ AIN ASS□

SE□ ICONDUCTORS

		IC 101	UPD61283F1-407LU2A
		IC 104	NJM12904V
		IC 401	AYW7354
		IC 403,404	H5DU2562GTR-J3C
		IC 601,607,612,1502	TC74VHCT08AFKS1
		IC 602	341S2164
		IC 603	PE7008A
		IC 604	PDJ019A
		IC 605,1504	TC7SH08FUS1
		IC 608	TC74VHCT541AFK

		N□. D□□□□□□□□□□	P□□N□.
		IC 610,1806	TC74VHC126FK
		IC 611,1809	TC74VHCT125AFK
		IC 613	TC74VHC08FK
		IC 903	SII9233ACTU
		IC 905	SII9387CTU
		IC 907	TC74VHC541FK
		IC 909	ADV7181CBSTZ
		IC 1201,1203,1218	TC7SZ125FU
		IC 1202	TC74LCX541FK
		IC 1204	88DE2750
		IC 1205-1211,1215	TC74VCX541FK
		IC 1212	H5PS5162GFR-S5C
	⚠	IC 1216	LP2996M
	⚠	IC 1505	BD2224G
		IC 1602,1603	SII9136CTU
		IC 1604,1813,1814	TC74VHC157FK
	⚠	IC 1605,1606	AAT4614AIGU-2
		IC 1607	TC7SH32FUS1
		IC 1608,1804	TC7SZ08FU
		IC 1802	TC7WZ08FK
		IC 1803	ICS87002BM-05
		IC 1808	TC7WHU04FK
		IC 1815,1816	TC74LCX157FK
		IC 1817	TC74VHC125FK
		IC 9001,9003,9701	IS42S16400F-6TL
		IC 9002,9702	D810K013BZKB400
		IC 9004	AYW7356
		IC 9005	TC7WGU04FK
		IC 9006	TC7SHU04FUS1
		IC 9201	IS42S16160C-6TL
	⚠	IC 9202	BD2226G
		IC 9203	LAN8700C-AEZG
		IC 9204	DM860
	NSP	IC 9205	AYW7355
	⚠	IC 9501	S-1172B10-U5
	⚠	IC 9502,9503,9505,9506	S-1172B12-U5
	⚠	IC 9504,9511,9513	S-1170B50UC-OUJ
	⚠	IC 9507	MB39C011A
	⚠	IC 9508	S-1170B25UC-OTK
	⚠	IC 9509	MM1701WH
	⚠	IC 9510	NJM2846DL3-33
	⚠	IC 9512	NJM2872BF33
	⚠	IC 9514	S-1172B12-U5
		IC 9703	AYW7349
		Q 601	RN4983
		Q 604,1502-1505,1507	LTA124EUB
		Q 903	HN1K02FU
		Q 1501,9001,9002,9004	LTC114YUB
		Q 1506,1722-1728	LSA1576UB
		Q 1509	LTA124EUB
		Q 1729-1731,9504,9506	LSC4081UB
	⚠	Q 9501,9502	SH8M12
	⚠	Q 9503	RZQ045P01
	⚠	Q 9505	RTQ040P02
		D 601	RB501V-40
		D 901,903,904	1SS301
		D 1601,1602	RKZ5.1KG(B2)
		D 9504	1SS352

Loc. No.	Description	Part No.
MISCELLANEOUS		
L 103	INDUCTOR	LCTC150K2125
L 105,601-606	CHIP BEADS	VTL1129
L 607	CHIP BEADS	VTL1132
L 901,905,906,918	CHIP BEADS	ATL7010
L 902-904,907,913	CHIP BEADS	VTL1129
L 917,919,1201,1202	CHIP BEADS	VTL1129
L 921	INDUCTOR	CTF1547
L 922,1210,1607,1608	CHIP BEADS	ATL7010
L 1204-1209,1211-1216	CHIP BEADS	VTL1129
L 1220,1503,1601,1602	CHIP BEADS	VTL1129
L 1501	FILTER	CTF1703
L 1502,1504	CHIP BEADS	VTL1134
L 1604-1606,1620,1802	CHIP BEADS	VTL1129
L 1609-1616	COIL	ATH7064
L 1617	CHIP BEADS	VTL1126
L 1618,1619	FERRITE BEAD	CTF1528
L 1722-1724	INDUCTOR	ATL7033
L 1725-1727	INDUCTOR	ATL7035
L 1728	INDUCTOR	LCTC100K2125
L 1729-1731	INDUCTOR	LCTC4R7K2125
L 1803,1806,1808-1811	CHIP BEADS	VTL1129
L 1805	INDUCTOR	CTF1786
L 1814-1818,9001,9005	CHIP BEADS	VTL1129
L 9002,9003,9205,9206	CHIP BEADS	ATL7010
L 9004,9010,9703,9705	CHIP BEADS	VTL1128
L 9007,9201,9202,9204	CHIP BEADS	VTL1129
L 9207-9210,9212-9214	CHIP BEADS	VTL1129
L 9215,9216	COIL	ATH7082
L 9501,9502,9507,9510	CHIP BEADS	ATL7010
L 9503,9511-9513,9704	CHIP BEADS	VTL1129
L 9506	INDUCTOR	ATH7087
L 9509	INDUCTOR	ATH7086
L 9701,9702	CHIP BEADS	ATL7010
F 102,103,107,108	EMI FILTER	DTL1106
JA 901-907,1601,1602	HDMI JACK	AKP7268
JA 1501	CONNECTOR	CKS5712
JA 9201	USB CONNECTOR	DKB1106
JA 9202	RJ45 CONNECTOR	AKN7115
KN 601,602	SCREW PLATE	VNE1948
X 602,901	CRYSTAL	ASS7092
X 902	CRYSTAL	ASS7111
X 1201	CRYSTAL	ASS7114
X 1801	CRYSTAL OSCILLATOR	ASS7102
X 1802	CRYSTAL OSCILLATOR	ASS7101
X 9001	RESONATOR	CSS1795
CN 601	39P CONNECTOR	VKN2098
CN 602,1722,1723	20P SOCKET	AKP7249
CN 603	14P SOCKET	AKP7248
CN 1501	CONNECTOR	AKM1276
CN 1502	15P SOCKET	XKP3078
CN 1503	7P SOCKET	XKP3074
CN 9002,9003	SOCKET(30PL)	BKP1047
CN 9501	CONNECTOR	B7B-EH
JH 9501,9502	PCB BINDER	VEF1040
P 601	POLYSWITCH	NANOSMDC035F

Loc. No.	Description	Part No.
RESISTORS		
R 106,107,1205-1207		RAB4CQ221J
R 114,141		RS1/10SR43R0D
R 145,146		RS1/10SR1000D
R 150,165,407,408		RAB4CQ103J
R 193,1765		RS1/16SS4700F
R 198,200,293,294		RS1/16SS1001F
R 229,238,239,247		RAB4CQ473J
R 261,269,273,288		RAB4CQ473J
R 303,1060,1061,1515		RS1/10SR0R0J
R 409,424-426		RAB4CQ560J
R 415-420,431-434		RAB4CQ103J
R 435,436,441,442		RAB4CQ220J
R 448-450,455		RAB4CQ330J
R 460-462,467,1041		RAB4CQ330J
R 468-470,487,1279		RAB4CQ220J
R 478,1235,9227		RAB4CQ472J
R 608,609,998,1000		RAB4CQ0R0J
R 611-614,641,701		RAB4CQ101J
R 615,624,988,1228		RAB4CQ100J
R 680,956,1216,1217		RAB4CQ473J
R 957,1242-1245,1248		RAB4CQ470J
R 966,970,980,983		RAB4CQ680J
R 999,1025,1201,1204		RAB4CQ680J
R 1001,1336-1341		RAB4CQ0R0J
R 1032,1292		RS1/8SQ105J
R 1047-1049,1236,1250		RAB4CQ330J
R 1202,1208,1277,1284		RAB4CQ151J
R 1214,1215		RAB4CQ221J
R 1221,1222,1251-1256		RAB4CQ473J
R 1227,1229		RS1/10SR101J
R 1234,1238,1240,1261		RAB4CQ100J
R 1249,9006,9011,9012		RAB4CQ470J
R 1258-1260,1262,1270		RAB4CQ473J
R 1263		RAB4CQ100J
R 1264-1269,1275,9209		RAB4CQ330J
R 1271,1274,1278,1283		RAB4CQ473J
R 1287,1614-1617,1622		RAB4CQ473J
R 1288,1289,1291		RAB4CQ151J
R 1550,1755,1776,9523		RS1/10SR0R0J
R 1625,1633,1642,1645		RAB4CQ473J
R 1650,1651		RS1/16SS4701F
R 1742-1744,1749,1751		RS1/16SS2200F
R 1752,1754		RS1/16SS2200F
R 1753,1777,1778		RS1/16SS56R0F
R 1756-1758		RS1/16SS5601F
R 1767,1769,1771		RS1/16SS3300D
R 9007-9010,9715-9718		RAB4CQ220J
R 9016-9019,9021,9024		RAB4CQ470J
R 9026,9028,9029,9031		RAB4CQ470J
R 9040,9043,9048,9049		RAB4CQ470J
R 9050,9748		RAB4CQ101J
R 9211		RAB4CQ330J
R 9215,9216		RAB4CQ680J
R 9226,9232,9233,9236		RAB4CQ470J
R 9234,9235		RAB4CQ121J

	No.	Description	Part No.
	R 9237,9240,9724,9725		RAB4CQ470J
	R 9254		RAB4CQ103J
	R 9264-9266,9268		RAB4CQ473J
A	R 9285		RS1/16SS1242F
	R 9290-9292,9294		RS1/16SS49R9F
	R 9312		RS1/16SS3001F
	R 9514,9515		RS1/8SQ475J
	R 9518		RS1/16SS82R0D
	R 9520		RS1/16SS7501D
	R 9522		RS1/16SS3301D
	R 9524,9526,9528-9530		RS1/10SR0R0J
	R 9531		RS1/16SS3302D
	R 9533		RS1/16SS2402D
	R 9534		RS1/16SS2401D
B	R 9536,9538-9540,9542		RS1/8SQ0R0J
	R 9543,9555,9564		RS1/8SQ0R0J
	R 9548		RS1/4SA105J
	R 9550,9551		RS1/10SR0R0J
	R 9719,9720,9726,9727		RAB4CQ750J
	R 9729,9733,9744		RAB4CQ470J
	Other Resistors		RS1/16SS###J

CAPACITORS

	No.	Description	Part No.
	C 104,107,108,115		CKSSYB104K16
C	C 105,109,111,113		DCH1246
	C 106,110,117,131		CCSSCH102J50
	C 112,126,199,424		DCH1201
	C 114,118,168,411		CKSSYB103K25
	C 116,119,120,122		CKSSYB104K16
	C 121,127,128,130		DCH1246
	C 123,166,194,430		CEVW101M4
	C 124,125,129,133		CKSSYB104K16
	C 132,141,151,171		CCSSCH102J50
	C 134,139,143,144		DCH1246
	C 135-138,145,146		CKSSYB104K16
	C 140,995,1355		VCH1277
	C 142,147,175,423		CCSSCH331J50
	C 149,152-155,159		CKSSYB104K16
	C 150,623,636,659		CCSSCH101J50
	C 156		VCH1268
	C 157,158,167,169		DCH1246
	C 162,1031,9004,9537		VCH1234
	C 170,177,187,401		DCH1246
	C 172,178,184,185		CKSSYB104K16
	C 173,406,433,604		CCSSCH100D50
	C 174,176,190,402		CCSSCH102J50
	C 186,1526,1527		CEVW100M16
	C 188,195,196,200		CKSSYB104K16
	C 198,9245,9607		CKSQYB225K16
	C 201,203,204,403		CKSSYB104K16
	C 404,408,410,413		DCH1246
	C 407,409,417,428		CKSSYB104K16
	C 412,415,420,441		CCSSCH102J50
	C 414,416,418,421		DCH1246
	C 419,432,438,606		CKSSYB103K25
	C 422,431,434,437		DCH1246
	C 425,915,927,1048		DCH1201
	C 429,435,440,443		CKSSYB104K16
	C 436		CEVW101M4
	C 439,618,624,631		CCSSCH331J50
	C 442,619,620,627		CCSSCH102J50
	C 445-447,607,610		CKSSYB104K16
	C 608,611,621,629		CCSSCH100D50
	C 609,655,929,967		CEVW101M16
	C 613,615-617,622		CKSSYB104K16
	C 614,625,653,667		CKSSYB103K25
	C 626,628,632,637		CKSSYB104K16
	C 630,634,651,679		CCSSCH100D50
	C 633,635,639,641		CCSSCH102J50
	C 638,640,642-645		CKSSYB104K16
	C 646,663,914		CEVW470M4
	C 647,648,696,713		CCSSCH331J50
	C 649,650,657,658		CCSSCH102J50
	C 652,654,661,662		CKSSYB104K16
	C 660,682,690-692		CCSSCH101J50
	C 664,671,675,676		CKSSYB104K16
	C 665,949		CCSSCH8R0D50
	C 666,943		CCSSCH9R0D50
	C 670,672,674,677		CCSSCH102J50
	C 680,681,686,759		CKSSYB104K16
	C 685,956,980,1043		CKSSYB103K25
	C 693,1040,1363,1530		CCSSCH221J50
	C 697,705-708,717		CCSSCH101J50
	C 698-701,704		CCSSCH102J50
	C 703,741-746,755		CCSSCH100D50
	C 718,720,721,751		CCSSCH101J50
	C 726,902,904,906		CCSSCH331J50
	C 727-731,740		CCSSCH102J50
	C 748-750,753,754		CCSSCH102J50
	C 752,924,938,993		CCSSCH101J50
	C 756,757,911,937		CCSSCH102J50
	C 758,917,933,934		CCSSCH100D50
	C 908,920,923,936		CCSSCH331J50
	C 913,918,945,946		CCSSCH471J50
	C 916,928,950,951		DCH1246
	C 919,921,922,925		CKSSYB104K16
	C 926,1529		CEVW470M6R3
	C 931,935,940,944		CKSSYB104K16
	C 941,953,957,971		CCSSCH331J50
	C 942,997,1021,1062		CCSSCH100D50
	C 947,948,954,955		CKSSYB104K16
	C 952,958,959,961		CCSSCH471J50
	C 960,962,964,965		CKSSYB104K16
	C 963,979,982,983		CCSSCH471J50
	C 968,974,977,981		CKSSYB104K16
	C 969,975,987,999		DCH1246
	C 972,973,976,989		CCSSCH102J50
	C 978,9008		CCSSCH330J50
	C 984,988,994,1001		CKSSYB104K16
	C 991,1025,1064,1075		CEVW101M16
	C 996,1672,1673,9593		ACH7306
	C 1000,1002,1004,1006		CCSSCH471J50
	C 1003,1005,1007,1009		CKSSYB104K16
	C 1008,1010,1069,1212		CCSSCH471J50
	C 1012,1018,1026,1032		CKSSYB104K16
	C 1013,1023,1029,1219		CCSSCH331J50
	C 1014,1015,1027,1033		CCSSCH101J50
	C 1024,1030,1035,1037		CCSSCH102J50

C	1028,1036,9105,9106	CCSSCH270J50	
C	1034,1038,1039,1047	CKSSYB104K16	
C	1041,1231,1246,1256	CCSSCH101J50	
C	1044	CKSSYB823K10	
C	1045,1054,1056,1270	CKSSYB103K25	
C	1046,1049,1070,1215	CCSSCH102J50	
C	1050-1052,1055,1057	CKSSYB104K16	
C	1059,1061,1067,1068	CKSSYB104K16	
C	1060,1063,1065,1074	DCH1201	
C	1071,1072,1206,1210	CKSSYB104K16	
C	1079,1214,1349-1351	DCH1246	
C	1203,1207,1208,1358	CEVW221M4	
C	1205,1211,1228,1230	DCH1201	
C	1209,1357,1664,1665	CEVW101M16	
C	1213,1218,1223,1224	CKSSYB104K16	
C	1216,1237,1361,1410	CCSSCH100D50	
C	1221,1298,1345	CCSSCH471J50	
C	1222,1686,1688,1693	CKSRYB105K16	
C	1225,1227,1252,1274	CCSSCH102J50	
C	1226,1244,1248,1251	CCSSCH331J50	
C	1229,1236,1238,1240	CKSSYB104K16	
C	1243,1253-1255,1267	CKSSYB104K16	
C	1257,1311,1323,1388	CCSSCH331J50	
C	1268,1278,1286,1322	CCSSCH101J50	
C	1272,1276,1282,1285	CKSSYB104K16	
C	1289,1296,1297,1305	CKSSYB104K16	
C	1294,1299,1325,1333	CCSSCH102J50	
C	1313,1326	CCSSCH150J50	
C	1318,1319,1324,1328	CKSSYB104K16	
C	1334,1341-1343,1362	CKSSYB104K16	
C	1339,1392,1393,1426	CCSSCH101J50	
C	1346,1347,1359,1381	CCSSCH102J50	
C	1352-1354,1428,1605	DCH1201	
C	1364-1366,1371,1389	CCSSCH471J50	
C	1367-1370,1380,1384	CKSSYB104K16	
C	1385,1390,1391,1394	CKSSYB104K16	
C	1395,1401,1411,1424	CCSSCH102J50	
C	1398,1408,1409,1425	CKSSYB104K16	
C	1427,9005,9029,9067	CEVW221M4	
C	1431,1503,1507,1508	CKSSYB104K16	
C	1432,1506,1511,1613	CCSSCH331J50	
C	1501,1628,1629,1636	CCSSCH101J50	
C	1502,1510,1518-1520	CCSSCH100D50	
C	1505,1808,1811,9201	CCG1222	
C	1509,9545,9546	CEAK102M16-P35	
C	1528,1614,1624	CKSSYB104K16	
C	1531,9065,9742	CCSSCH221J50	
C	1534,1671,1697,1698	CCSSCH100D50	
C	1540-1544,1654,1660	CCSSCH102J50	
C	1601,1602,1662,1663	CKSSYB102K50	
C	1606,1650,1656	DCH1201	
C	1608,1610,1612,1616	DCH1246	
C	1609,1611,1615,1617	CCSSCH471J50	
C	1618,1620,1622,1626	DCH1246	
C	1619,1621,1625,1627	CCSSCH471J50	
C	1623,1633,1699,1701	CCSSCH331J50	
C	1630-1632,1634,1635	CKSSYB104K16	
C	1637,1639,1644,1645	CCSSCH471J50	
C	1638,1648,1649,1661	CCSSCH101J50	
C	1640-1643,1653,1659	CKSSYB104K16	

C	1646,1647,9040,9202	CKSSYB103K25	
C	1651,1657,1695,1696	DCH1246	
C	1652,1655,1658,1666	CCSSCH471J50	
C	1667,1709,1824,1825	CCSSCH471J50	A
C	1674-1681,1683-1685	VCG1066	
C	1687,1689-1692	VCG1066	
C	1694,1839	CKSRYB105K16	
C	1700,1710,1736-1742	CKSSYB104K16	
C	1702,1703,1756,1807	CCSSCH101J50	
C	1722,1723,1729,9013	CCSSCH102J50	
C	1731,9009,9034,9037	CCSSCH100D50	
C	1732-1735,9226,9228	DCH1201	
C	1743-1745	CCSSCH7R0D50	
C	1746-1748	CCSSCH5R0C50	
C	1749-1751,1760-1762	CCSSCH180J50	B
C	1752,1770,1821,1832	CEVW101M16	
C	1753-1755	CCSSCH4R0C50	
C	1757-1759,1842	CCSSCH470J50	
C	1763	CCSSCH560J50	
C	1764-1766	CCSSCH390J50	
C	1767-1769,1809,1812	CKSSYB104K16	
C	1806,1819,9001,9075	CKSRYB104K50	
C	1810,1813,1820,1829	CCSSCH331J50	
C	1817,1828,1834,1840	CKSSYB104K16	
C	1818,9571	CCSRCH102J50	C
C	1835,9003,9038,9039	CCSSCH471J50	
C	1836	CEVW470M16	
C	1841,1845,1853,1855	CCSSCH331J50	
C	1846,1852,1854,1858	CKSSYB104K16	
C	1847,9563,9600	CEVW101M16	
C	1859,1861,1863,9015	CCSSCH331J50	
C	1860,1862,9002,9006	CKSSYB104K16	
C	9007,9010,9012,9014	CKSSYB104K16	
C	9011,9019,9046,9053	CCSSCH101J50	
C	9016,9021,9022,9026	CCSSCH102J50	
C	9017,9018,9020,9023	CKSSYB104K16	
C	9025,9028,9031,9033	CKSSYB104K16	
C	9027,9048,9051,9055	CCSSCH102J50	
C	9030,9583,9589,9684	DCH1246	
C	9032,9076,9214,9249	CCSSCH331J50	
C	9035,9036,9041-9045	CKSSYB104K16	
C	9047,9049,9052	CKSSYB104K16	
C	9050,9079,9085	CCSSCH100D50	
C	9054,9056,9069,9070	CCSSCH471J50	
C	9057,9061,9062,9064	CCSSCH102J50	
C	9058-9060,9063,9066	CKSSYB104K16	
C	9068,9071,9073,9080	CKSSYB104K16	
C	9072,9074,9077,9081	CCSSCH471J50	
C	9086,9087,9204,9250	CCSSCH101J50	
C	9088-9091,9093-9098	CCSSCH100D50	
C	9100,9102-9104,9312	CCSSCH100D50	
C	9203,9205,9207,9210	CKSSYB104K16	
C	9206,9208,9209,9211	CCSSCH102J50	
C	9212,9213,9216,9219	CKSSYB104K16	
C	9215,9232,9235,9238	CCSSCH102J50	
C	9217,9520,9574,9576	CEVW221M4	
C	9220,9222,9287,9289	CCSSCH471J50	
C	9221,9227,9229,9231	CKSSYB104K16	
C	9223,9282,9283,9594	CKSSYB103K25	
C	9230,9233,9236,9239	DCH1201	

	N□. D□□□□□□□□□	P□□N□.
	C 9234,9237,9240,9242	CKSSYB104K16
	C 9241,9243,9246,9253	CCSSCH102J50
A	C 9244,9248,9252,9254	CKSSYB104K16
	C 9247	CEVW221M10
	C 9251,9267,9293,9507	CCSSCH331J50
	C 9255,9257,9263,9265	CCSSCH102J50
	C 9256,9258,9260,9262	CKSSYB104K16
	C 9259,9261,9581,9584	CCSSCH101J50
	C 9264,9266,9268,9270	CKSSYB104K16
	C 9269,9271,9273,9275	CCSSCH102J50
	C 9272,9274,9276,9278	CKSSYB104K16
	C 9277,9279,9281,9310	CCSSCH102J50
	C 9284,9285,9510,9512	CCG1222
B	C 9286,9288,9290,9292	CKSSYB104K16
	C 9291,9295,9733,9734	CCSSCH471J50
	C 9294,9313-9328,9504	CKSSYB104K16
	C 9298-9300,9538,9557	BCG1059
	C 9302	CKSSYB223K16
	C 9311,9505,9529,9562	CCSSCH102J50
	C 9501,9513,9514,9522	CCSSCH100D50
	C 9506,9528,9591,9601	CKSSYB104K16
	C 9517,9519,9524,9526	CCG1222
	C 9532,9534,9539,9550	CCG1222
	C 9533,9598,9602,9672	CCSSCH100D50
C	C 9543,9544,9556,9561	CKSRYB104K50
	C 9547	CKSSYB682K25
	C 9553	CKSSYB472K50
	C 9555,9559	CKSSYB473K16
	C 9558,9573,9575,9685	BCG1059
	C 9565	CKSSYB152K50
	C 9566,9568,9570,9579	CCSSCH102J50
	C 9569,9572,9582,9590	CCG1222
	C 9580,9585,9586,9597	CCSSCH102J50
	C 9588,9608	CFHXSQ103J16
	C 9592,9595,9709,9713	CCSSCH101J50
	C 9596	CEVW331M6R3
	C 9599,9617,9706,9711	CCSSCH102J50
	C 9603,9605,9612,9614	CCG1222
	C 9606,9616,9621-9645	CKSSYB104K16
	C 9609,9682,9703,9727	CEVW221M4
	C 9647-9671,9692-9697	CKSSYB104K16
	C 9674,9676,9679,9681	CCG1222
	C 9686,9707,9724	CCSSCH100D50
	C 9702	VCH1234
	C 9704,9705,9708,9710	CKSSYB104K16
	C 9712,9715,9716,9718	CKSSYB104K16
	C 9714,9717,9719,9720	CCSSCH102J50
	C 9721,9723,9726,9729	CKSSYB104K16
	C 9725,9740,9747,9755	CCSSCH102J50
	C 9728	DCH1246
	C 9730	CCSSCH331J50
	C 9731,9732,9736-9739	CKSSYB104K16
	C 9735	CKSSYB103K25
	C 9741,9743,9749,9751	CCSSCH471J50
	C 9744,9745,9748,9750	CKSSYB104K16
	C 9746	CCSSCH101J50
	C 9752,9756-9759	CKSSYB104K16
	C 9753,9760	CCSSCH471J50
	C 9754	CKSRYB104K50

	N□. D□□□□□□□□□	P□□N□.

G INTER□ACE ASS□

SE□ ICONDUCTORS

Q	7001-7003,7011,7025	LTC124EUB
Q	7005,7012,7021,7026	LSA1576UB
Q	7008,7010	2SA1036K
Q	7016	LTA114TUB
Q	7022	RSR015P03
Q	7023,7024	LSC4081UB
D	7002,7003,7023,7024	1SS352
D	7004	1SS301
D	7006,7011	HZU5R1(B2)
D	7007,7009	1SS357
D	7008,7010	SIM-20STS1
D	7021	RB411D

□ ISCELLANEOUS

L	7001 CHIP SOLID INDUCTOR	ATL7002
L	7002-7007 CHIP SOLID INDUCTOR	QTL1013
JA	7001,7003,7004 JACK	AKN-209
JA	7002 MINI JACK	QKN1013
JA	7005 JACK	VKB1243
KN	7001 SCREW PLATE	VNE1948
KN	7005-7007 EARTH TERMINAL	AKF7002
CN	7002,7005 7P PLUG	KM200IB7
CN	7003 13P PLUG	XKP3066
CN	7004 21P PLUG	XKP3070
CN	7006 CONNECTOR	9604S-19C
CN	7007 17P PLUG	XKP3068
CN	7008 15P PLUG	XKP3067
JH	7001 PCB BINDER	VEF1040
JP	7001 HOUSING	ADX7747
U	7001 REMOTE RECEIVER UNIT	GP1UE284QKC1

RESISTORS

R	7108,7109	RS1/8SQ105J
	Other Resistors	RS1/10SR###J

CAPACITORS

C	7002-7005,7014,7021	CCSRCH100D50
C	7006,7012,7024,7080	CCSRCH102J50
C	7007,7011,7015,7017	CKSRYB104K50
C	7009,7010,7013,7016	CKSRYB103K50
C	7019,7081,7083,7085	CKSRYB104K50
C	7020,7022,7027,7126	CKSRYB103K50
C	7025,7029	CCSRCH471J50
C	7026,7100,7110,7122	CCSRCH100D50
C	7028	CEAK101M16
C	7082,7084,7096,7125	CCSRCH102J50
C	7095	CEAK100M50
C	7097,7114,7124	CKSRYB104K50
C	7101,7115-7119	CCSRCH101J50
C	7108	CEAK470M25
C	7111,7113	CCSRCH331J50
C	7112,7123	CEAK221M16
C	7120,7121	CKSQYB105K25
C	7134	CCSRCH100D50

	NO.	DESCRIPTION	PART NO.

H COMPONENT ASSY

SEMICONDUCTORS

	IC	8301	NJW1327FU1
	IC	8401	NJM2505AF
	IC	8501	PDC162A
	IC	8601	HIN202EIBNZ
	Q	8301,8604	LSA1576UB
	Q	8302,8501,8603	LSC4081UB
	Q	8303,8605	LTC114EUB
⚠	Q	8401	2SD1664
⚠	Q	8402	2SB1132
	D	8301,8302,8601,8605	1SS352
	D	8401	1SS302
	D	8404,8408	UDZS3R9(B)

MISCELLANEOUS

	L	8501 CHIP COIL	LCYA330J2520
	JA	8301 6P PIN JACK AU	AKB7225
	JA	8302,8304,8305 3P PIN JACK AU	AKB7228
	JA	8601 9P D-SUB SOCKET	AKP7256
	X	8501 CRYSTAL RESONATOR	ASS7080
	CN	8301-8303 20P PLUG	AKM7171
	CN	8401 PLUG(2P)	KM200NA2L
	JP	8402 HOUSING	ADX7746

RESISTORS

	R	8301-8309	RS1/10SR75R0F
	R	8310,8312,8314,8316	RS1/10SR68R0F
	R	8318,8320	RS1/10SR68R0F
	R	8417	RS1/8SQ105J
	R	8418	RS1/8SQ561J
	Other Resistors		RS1/10SR###J

CAPACITORS

	C	8301,8302,8383,8417	CEAK101M16
	C	8303,8319,8320,8333	CCSRCH102J50
	C	8304,8306,8308,8314	CKSRYB104K50
	C	8305,8307,8309,8310	DCH1201
	C	8311,8312,8330,8331	CKSRYB103K50
	C	8313,8315,8317,8318	DCH1201
	C	8316,8323,8325,8327	CKSRYB104K50
	C	8321,8322,8324,8326	DCH1201
	C	8328,8336,8337,8344	CKSRYB104K50
	C	8334,8378,8389,8403	CCSRCH102J50
	C	8335,8376,8377,8379	CCSRCH100D50
	C	8338,8339,8360,8402	CKSRYB103K50
	C	8340	CKSQYB105K25
	C	8341-8343,8345,8346	DCH1201
	C	8347,8349,8395,8401	CKSRYB104K50
	C	8348,8404,8405,8409	DCH1201
	C	8354,8355,8381,8382	CKSRYB105K16
	C	8358,8359,8394	CCSRCH470J50
	C	8384,8385,8388	CKSRYB473K50
	C	8386	CKSRYB562K50
	C	8387,8390	CKSRYB105K16
	C	8406,8407,8503,8509	CCSRCH101J50
	C	8408,8410,8413,8415	CCSRCH102J50
	C	8414	DCH1201
	C	8418,8520,8521,8613	CEAK101M16
	C	8419,8420	CEAK221M16
	C	8421,8422,8501,8513	CCSRCH102J50
	C	8504,8505	CCSRCH5R0C50
	C	8506,8508	CCSRCH240J50
	C	8507,8510	CCSRCH122J50
	C	8511,8512,8614	CCSRCH101J50
	C	8515,8601,8607	CKSRYB103K50
	C	8522,8523,8602	CKSRYB104K50
	C	8604-8606	CKSRYB104K50
	C	8608	CCSRCH471J50
	C	8610	CCSRCH331J50
	C	8611,8612,8617,8619	CCSRCH100D50

I COMPOSITE ASSY

SEMICONDUCTORS

	Q	3601,3604,3605,3608	LSA1576UB
	Q	3602,3603,3606,3607	HN1C01FU

MISCELLANEOUS

	JA	3601-3603 2P PIN JACK	AKB7230
	JA	3604,3605 1P PIN JACK	AKB7232
	CN	3601 20P SOCKET	AKP7249

RESISTORS

	R	3606,3609,3627	RS1/10SR68R0F
	R	3616	RS1/10SR68R0D
	R	3629-3632	RS1/10SR75R0F
	Other Resistors		RS1/10SR###J

CAPACITORS

	C	3602,3603,3605,3606	CKSRYB104K50
	C	3607,3618-3620	CCSRCH181J50
	C	3608,3610	CKSRYB104K16
	C	3612,3613,3615,3616	CKSRYB104K50
	C	3614,3617	CCSRCH102J50
	C	3621-3624	CEAK101M16

J MICROPHONE ASSY

SEMICONDUCTORS

	IC	3471	NJM4565MD
	Q	3451	LTC124EUB
	D	3473-3475	RKZ5.1KG(B2)

MISCELLANEOUS

	JA	3471 JACK	VKB1243
	JA	3472 JACK	AKB7219
	JA	3476 HEADPHONE JACK	XKB3066
	KN	3471,3472 EARTH TERMINAL	AKF7002
	CN	3472 CONNECTOR	9604S-15C
	JH	3471 PCB BINDER	VEF1040

RESISTORS

	R	3495	RS1/10SR75R0F
	Other Resistors		RS1/10SR###J

CAPACITORS

	C	3451,3452	CKSRYB822K50
	C	3460	DCH1165
	C	3473	CKSRYB471K50
	C	3475,3479,3494	CCSRCH101J50
	C	3476,3477	CCSRCH330J50

	NO.	DESCRIPTION	PART NO.
	C 3478,3483,3484		CEAT100M50
	C 3480		DCH1201
	C 3481,3482,3486,3496		CKSRYB103K50
	C 3485		CKSRYB105K16
	C 3488		CKSRYB223K50
	C 3490		CKSRYB102K50
	C 3495		CKSRYB104K50
	C 3497		CCSRCH331J50

K DISPLAY ASSY

SEMICONDUCTORS

	NO.	DESCRIPTION	PART NO.
	IC 3001		PDC199A8
	IC 3002		S-80848CNMC-B89
⚠	IC 3003		S-1200B33-M5
	IC 3201		PE5615A
	Q 3004		2SK2034
	Q 3203-3207,3210-3213		LTC124EUB
	D 3002		RB751V-40
	D 3003,3006		1SS302
	D 3004,3008		1SS301
	D 3005		1SS300
	D 3204,3206,3208,3210		SLR343BC4T(JKLM)
	D 3212		SLR343BC4T(JKLM)

MISCELLANEOUS

	NO.	DESCRIPTION	PART NO.
	L 3001	CHIP SOLID INDUCTOR	ATL7002
	KN 3201	FL HOLDER(FE)	VNF1096
	V 3301	FL TUBE DISPLAY	AAV7115
	S 3001-3019	SWITCH	ASG7029
	X 3001	CRYSTAL OSCILLATOR	CSS1653
	X 3201	CERAMIC RESONATOR	VSS1142
	CN 3001	39P CONNECTOR	VKN2098
	CN 3003	5P CONNECTOR	VKN1820

RESISTORS

	NO.	DESCRIPTION	PART NO.
	All Resistors		RS1/10SR###J

MISCELLANEOUS

	NO.	DESCRIPTION	PART NO.
	JH 3002	4P CABLE HOLDER	51048-0400
	JH 3003,3004	3P CABLE HOLDER	51048-0300
	JP 3001	HOUSING	ADX7753
	JP 3002	JUMPER WIRE	D20PYY0410E
	JP 3003,3004	JUMPER WIRE	D20PYY0310E
	U 3201	REMOTE RECEIVER UNIT	GP1UE274XKC1

CAPACITORS

	NO.	DESCRIPTION	PART NO.
	C 3002,3009,3013,3014		CKSRYB104K50
	C 3003,3007,3020,3021		CKSRYB105K16
	C 3004,3005		CCSRCH120J50
	C 3006,3302		CKSRYB471K50
	C 3008,3010,3043,3205		CCSRCH471J50
	C 3011,3042		CCSRCH101J50
	C 3012		CKSRYB472K50
	C 3015,3016		CKSRYB473K50
	C 3017		CCSRCH150J50
	C 3018,3035,3045		CKSRYB103K50
	C 3022,3212,3221-3223		CCSRCH102J50
	C 3023,3025,3027,3038		CKSRYB104K50
	C 3039		ACH7268
	C 3048,3058,3101,3207		CCSRCH100D50
	C 3102,3104,3201,3306		CKSRYB102K50
	C 3103,3105,3202,3204		CKSRYB104K50
	C 3208		CEAK221M16
	C 3209		CKSRYB105K16
	C 3211		ACH7272
	C 3213		CEAK101M16
	C 3214,3216,3217		CCSRCH221J50
	C 3215,3218		CCSRCH470J50
	C 3303,3405		CCSRCH102J50
	C 3304,3307		CKSRYB104K50
	C 3305,3308,3328		CEAK470M50
	C 3311-3326		CCSRCH471J50
	C 3327		CEAK101M35
	C 3335-3337,3341		CKSRYB103K50
	C 3338,3340,3343		CCSRCH100D50
	C 3339		CCSRCK2R0C50

L VOL ASSY

MISCELLANEOUS

	NO.	DESCRIPTION	PART NO.
	S 3371	ROTARY ENCODER	ASX7049
	CN 3371	3P JUMPER CONNECTOR	52147-0310

CAPACITORS

	NO.	DESCRIPTION	PART NO.
	C 3371,3372		CKSRYB103K50

M POWER SW ASSY

SEMICONDUCTORS

	NO.	DESCRIPTION	PART NO.
	Q 3401		LTC143EUB
	D 3402		SLR343BC4T(JKLM)

MISCELLANEOUS

	NO.	DESCRIPTION	PART NO.
	S 3401	SWITCH	VSG1024
	CN 3401	4P JUMPER CONNECTOR	52147-0410

RESISTORS

	NO.	DESCRIPTION	PART NO.
	All Resistors		RS1/10SR###J

CAPACITORS

	NO.	DESCRIPTION	PART NO.
	C 3401		CCSRCH221J50
	C 3402		CKSRYB104K16

N ENCODER ASSY

MISCELLANEOUS

	NO.	DESCRIPTION	PART NO.
	S 3501	ROTARY ENCODER	ASX7051
	CN 3501	3P JUMPER CONNECTOR	52147-0310

RESISTORS

	NO.	DESCRIPTION	PART NO.
	All Resistors		RS1/10SR###J

CAPACITORS

	NO.	DESCRIPTION	PART NO.
	C 3501,3502		CKSRYB103K50

Ref. No.	Description	Part No.

O IR □U□□ER ASS□

SE□ ICONDUCTORS

	IC 6801,6821,6841,6861	UPC4570G2-A
	IC 6881,6901,6921,7451	UPC4570G2-A
	IC 7471	UPC4570G2-A
	IC 7491	TC4053BFN

□ ISCELLANEOUS

	KN 6801 WRAPPING TERMINAL	CKF1089
	CN 6801 23P SOCKET	XKP3082
	CN 6802,6803 23P PLUG	XKP3071

RESISTORS

	R 6802,6803,6822,6823	RS1/10SR1002F
	R 6806,6807,6826,6827	RS1/10SR3902F
	R 6817,6818,6837,6838	RS1/8SQ225J
	R 6842,6843,7452,7453	RS1/10SR1002F
	R 6846,6847,6866,6867	RS1/10SR3902F
	R 6857,6858,6877,6878	RS1/8SQ225J
	R 6864,6865,6884,6885	RS1/10SR1302F
	R 6886,6887,6906,6907	RS1/10SR3902F
	R 6897,6898,6917,6918	RS1/8SQ225J
	R 6904,6905,6924,6925	RS1/10SR1302F
	R 6926,6927,7456,7457	RS1/10SR3902F
	R 6937,6938,7467,7468	RS1/8SQ225J
	R 7472,7473	RS1/10SR1002F
	R 7476,7477	RS1/10SR3902F
	R 7487,7488	RS1/8SQ225J
	R 7491,7492	RS1/8SQ105J
	Other Resistors	RS1/10SR###J

CAPACITORS

	C 6801,6802,6821,6822	CFHXSQ103J16
	C 6807,6808,6827,6828	ACG7106
	C 6841,6842,6861,6862	CFHXSQ103J16
	C 6847,6848,6867,6868	ACG7106
	C 6866,6886,6906,6926	CCSRCH331J50
	C 6881,6882,6901,6902	CFHXSQ103J16
	C 6887,6888,6907,6908	ACG7106
	C 6921,6922,7451,7452	CFHXSQ103J16
	C 6927,6928,7457,7458	ACG7106
	C 7471,7472,7494,7497	CFHXSQ103J16
	C 7477,7478	ACG7106
	C 7495	CCSRCH100D50

P □U□□ER □ND ASS□

□ ISCELLANEOUS

	KN 6961 SCREW PLATE	VNE1948
	KN 6962 SCREW PLATE(MTL)	ANG7591

Q IR INTER□ACE ASS□

□ ISCELLANEOUS

	CN 3801,3802 23P SOCKET	XKP3082
	CN 3810,3850,3890 5P SOCKET	XKP3073
	CN 3820,3830,3840,3860 5P SOCKET	KP200IB5L
	CN 3870,3880 5P SOCKET	KP200IB5L

R IR PO□ ER A□ P ASS□

SE□ ICONDUCTORS

	IC 4001	BU7262SFVM
	IC 4004	TC74VHC08FK
	IC 4005	HA17431GLTPA
	IC 4007	BU4094BCFV
	IC 4100,4200,4300,4400	TLC071IDR
⚠	IC 4101,4201,4301,4401	IRS20957SPBF
⚠	IC 4103,4203,4302,4403	NJM2830U1-12
	IC 4202,4402,4602,4702	UPC4570G2-A
	IC 4204,4404,4604,4704	NJM12904V
	IC 4500,4600,4700,4800	TLC071IDR
⚠	IC 4501,4601,4701,4801	IRS20957SPBF
⚠	IC 4502,4603,4703,4803	NJM2830U1-12
	IC 4802,5101	UPC4570G2-A
	IC 4804	NJM12904V
	IC 4900	TLC071IDR
⚠	IC 4901	IRS20957SPBF
⚠	IC 4903	NJM2830U1-12
	IC 4905	TC7SH08FUS1
	Q 4000,4002,4003,4017	LTC124EUB
	Q 4001,4020,4026,4107	LSA1576UB
	Q 4004,4006,4008,4010	LTA124EUB
	Q 4005,4007,4009,4011	RT1N140M
	Q 4012,4013,4035	HN1A01FU
	Q 4014,4016,4027-4029	HN1C01FU
	Q 4015,4021-4023,4025	LSC4081UB
	Q 4018,4031,4033	LTA124EUB
	Q 4019,4032,4112,4312	RT1N140M
	Q 4024	2SC3906K
	Q 4030,4034,4036,4105	LTC124EUB
	Q 4037,4038,4103,4104	LSC4081UB
	Q 4100,4200,4300,4400	2SD2704K
⚠	Q 4101,4102,4201,4202	IRF6775MPBF
	Q 4106,4205,4206,4305	LTC124EUB
	Q 4108,4113,4203,4204	LSC4081UB
	Q 4110,4210,4310,4410	2SA1514K
	Q 4111,4122,4207,4211	LSA1576UB
	Q 4120,4220,4720	2SA1163
	Q 4121,4221,4721	2SC2713
	Q 4208,4213,4303,4304	LSC4081UB
	Q 4222,4307,4311,4407	LSA1576UB
⚠	Q 4301,4302,4401,4402	IRF6775MPBF
	Q 4306,4405,4406,4505	LTC124EUB
	Q 4308,4403,4404,4408	LSC4081UB
	Q 4411,4507,4511,4607	LSA1576UB
	Q 4500,4600,4700,4800	2SD2704K
⚠	Q 4501,4502,4601,4602	IRF6775MPBF
	Q 4503,4504,4508,4603	LSC4081UB
	Q 4506,4605,4606,4705	LTC124EUB
	Q 4510,4610,4710,4810	2SA1514K
	Q 4512,4712,4912,5012	RT1N140M
	Q 4604,4608,4703,4704	LSC4081UB
	Q 4611,4707,4711,4722	LSA1576UB
⚠	Q 4701,4702,4801,4802	IRF6775MPBF
	Q 4706,4805,4806,4905	LTC124EUB
	Q 4708,4713,4803,4804	LSC4081UB

		N□. D□□□□□□□□□	P□□N□.
		Q 4807,4811,4907,4911	LSA1576UB
		Q 4808,4903,4904,4908	LSC4081UB
		Q 4900	2SD2704K
A	⚠	Q 4901,4902	IRF6775MPBF
		Q 4906	LTC124EUB
		Q 4910	2SA1514K
		Q 5101	LSC4081UB
		D 4005,4016,4110,4119	1SS352
		D 4011,4012	1SS301
		D 4013,4014,4018,4019	RKZ24KG(B2)
		D 4015,4020	RKZ27KG(B)
		D 4017,4021	RKZ18KG(B2)
		D 4027-4031	RKZ4.7KG(B2)
B		D 4101,4201,4301,4401	RB751V-40
		D 4103,4111,4203,4211	1SS302
		D 4108,4109,4208,4209	RF101L2S
		D 4116,4216,4316,4416	RB161VA-20
		D 4117,4217,4317,4417	RF051VA2S
		D 4118,4218,4318,4418	CMH07
		D 4120,4210,4219,4220	1SS352
		D 4308,4309,4408,4409	RF101L2S
		D 4310,4319,4410,4419	1SS352
		D 4311,4411,4511,4611	1SS302
		D 4501,4601,4701,4801	RB751V-40
C		D 4508,4509,4608,4609	RF101L2S
		D 4510,4519,4610,4619	1SS352
		D 4516,4616,4716,4816	RB161VA-20
		D 4517,4617,4717,4817	RF051VA2S
		D 4518,4618,4718,4818	CMH07
		D 4703,4711,4811,4911	1SS302
		D 4708,4709,4808,4809	RF101L2S
		D 4710,4712,4719,4720	1SS352
		D 4810,4819,4910,4919	1SS352
		D 4901	RB751V-40
		D 4908,4909	RF101L2S
		D 4916	RB161VA-20
		D 4917	RF051VA2S
		D 4918	CMH07
		D 5009,5109	1SS352

□ISCELLANEOUS

	L 4000 CHIP SOLID INDUCTOR	QTL1013
	L 4100,4200,4300,4400 OTHER COIL	ATH7090
	L 4500,4600,4700,4800 OTHER COIL	ATH7090
	L 4900 OTHER COIL	ATH7090
	JA 4101 SP TERMINAL 6-P(V0)	AKE7150
	JA 4301,4501 SP TERMINAL 4-P(V0)	AKE7149
	JA 4901,5101 SP TERMINAL 4-P(V0)	AKE7149
	KN 4100,4200,4300,4400 SCREW PLATE	VNE1948
	KN 4500,4900 SCREW PLATE	VNE1948
	KN 4502,4901 EARTH TERMINAL	AKF7002
	KN 4511-4518 WRAPPING TERMINAL	CKF1089
	RY 4100,4300,4500,4700 RELAY	ASR7001
	RY 4900,5000 RELAY	ASR7001
	CN 4000 CONNECTOR	9604S-19C
	CN 4002 PLUG(2P)	KM200NA2
	CN 4003 PLUG(4P)	KM200NA4
	CN 4004 PLUG(7P)	KM200NA7
	CN 4100,4300,4400,4600 5P PLUG	KM200IB5
	CN 4200,4500,4900 5P PLUG	XKP3062
	CN 4700,4800 5P PLUG	KM200IB5

		N□. D□□□□□□□□□	P□□N□.

RESISTORS

	R 4057	RS1/8SQ471J
	R 4060	RS1/10SR5602F
	R 4061	RS1/10SR3302F
	R 4100,4101,4200,4201	RN1/16SE5600D
	R 4102,4103,4202,4203	RN1/16SE5601D
	R 4104,4105,4204,4205	RN1/16SE3301D
	R 4107,4146,4147,4187	ACN7180
	R 4111,4119,4122,4123	RS1/10SR1001F
	R 4115,4133,4215,4233	ACN7192
	R 4116,4216,4316,4416	ACN7185
	R 4120,4220,4320,4420	RS1/10SR2200F
	R 4125,4126,4225,4226	ACN7187
	R 4128,4228,4328,4428	RS1/4SA223J
	R 4129,4229,4329,4429	RS1/8SQ182J
	R 4130,4230,4330,4430	RS1/8SQ822J
	R 4131,4231,4331,4431	RS1/8SQ472J
	R 4132,4232,4332,4432	RS1/8SQ562J
	R 4134,4234,4334,4434	RS1/8SQ103J
	R 4135,4235,4335,4435	RS1/8SQ752J
	R 4136,4236,4336,4436	RS1/8SQ242J
	R 4137,4141,4237,4241	ACN7194
	R 4138,4238,4338,4438	RS1/8SQ4R7J
	R 4139,4239,4339,4439	RS1/8SQ100J
	R 4140,4240,4340,4440	ACN7165
	R 4142,4143,4242,4243	ACN7189
	R 4145,4169,4245,4269	RS1/10SR1202F
	R 4148,4248,4348,4448	RS1/10SR3301F
	R 4150,4250,4350,4450	RS1/10SR1000F
	R 4151,4251,4351,4451	ACN7191
	R 4154,4254,4354,4454	ACN7186
	R 4155,4255,4355,4455	RS1/10SR4702F
	R 4156,4256,4356,4456	RS1/10SR5601F
	R 4163,4263,4363,4463	RS1/10SR3901F
	R 4166,4266,4366,4466	RS1/10SR1002F
	R 4167,4211,4219,4222	RS1/10SR1001F
	R 4168,4268,4368,4468	RS1/10SR2202F
	R 4176,4180,4276,4280	ACN7195
⚠	R 4181,4281,4381,4481	NTCG104KF104FB
	R 4188,4207,4246,4247	ACN7180
	R 4195-4198,4295-4298	RS1/8SQR47J
	R 4223,4267,4311,4319	RS1/10SR1001F
	R 4287,4288,4307,4346	ACN7180
	R 4300,4301,4400,4401	RN1/16SE6800D
	R 4302,4303,4402,4403	RN1/16SE5601D
	R 4304,4305,4404,4405	RN1/16SE3301D
	R 4315,4333,4415,4433	ACN7192
	R 4322,4323,4367,4411	RS1/10SR1001F
	R 4325,4326,4425,4426	ACN7187
	R 4337,4341,4437,4441	ACN7194
	R 4342,4343,4442,4443	ACN7189
	R 4345,4369,4445,4469	RS1/10SR1202F
	R 4347,4387,4388,4407	ACN7180
	R 4395-4398,4495-4498	RS1/8SQR47J
	R 4419,4422,4423,4467	RS1/10SR1001F
	R 4446,4447,4487,4488	ACN7180

		No.	Description	Part No.
	R	4500,4501,4600,4601		RN1/16SE5600D
	R	4502,4503,4602,4603		RN1/16SE5601D
	R	4504,4505,4604,4605		RN1/16SE3301D
	R	4507,4546,4547,4587		ACN7180
	R	4511,4519,4522,4523		RS1/10SR1001F
	R	4515,4533,4615,4633		ACN7192
	R	4516,4616,4716,4816		ACN7185
	R	4520,4620,4720,4820		RS1/10SR2200F
	R	4525,4526,4625,4626		ACN7187
	R	4528,4628,4728,4828		RS1/4SA223J
	R	4529,4629,4729,4829		RS1/8SQ182J
	R	4530,4630,4730,4830		RS1/8SQ822J
	R	4531,4631,4731,4831		RS1/8SQ472J
	R	4532,4632,4732,4832		RS1/8SQ562J
	R	4534,4634,4734,4834		RS1/8SQ103J
	R	4535,4635,4735,4835		RS1/8SQ752J
	R	4536,4636,4736,4836		RS1/8SQ242J
	R	4537,4541,4637,4641		ACN7194
	R	4538,4638,4738,4838		RS1/8SQ4R7J
	R	4539,4639,4739,4839		RS1/8SQ100J
	R	4540,4640,4740,4840		ACN7165
	R	4542,4543,4642,4643		ACN7189
	R	4545,4569,4645,4669		RS1/10SR1202F
	R	4548,4648,4748,4848		RS1/10SR3301F
	R	4550,4650,4750,4850		RS1/10SR1000F
	R	4551,4651,4751,4851		ACN7191
	R	4554,4654,4754,4854		ACN7186
	R	4555,4655,4755,4855		RS1/10SR4702F
	R	4556,4656,4756,4856		RS1/10SR5601F
	R	4563,4663,4763,4863		RS1/10SR3901F
	R	4566,4666,4766,4866		RS1/10SR1002F
	R	4567,4611,4619,4622		RS1/10SR1001F
	R	4568,4668,4768,4868		RS1/10SR2202F
⚠	R	4581,4681,4781,4881		NTCG104KF104FB
	R	4588,4607,4646,4647		ACN7180
	R	4595-4598,4695-4698		RS1/8SQR47J
	R	4623,4667,4711,4719		RS1/10SR1001F
	R	4687,4688,4707,4746		ACN7180
	R	4700,4701		RN1/16SE5600D
	R	4702,4703,4802,4803		RN1/16SE5601D
	R	4704,4705,4804,4805		RN1/16SE3301D
	R	4715,4733,4815,4833		ACN7192
	R	4722,4723,4767,4811		RS1/10SR1001F
	R	4725,4726,4825,4826		ACN7187
	R	4737,4741,4837,4841		ACN7194
	R	4742,4743,4842,4843		ACN7189
	R	4745,4769,4845,4869		RS1/10SR1202F
	R	4747,4787,4788,4807		ACN7180
	R	4776,4780		ACN7195
	R	4795-4798,4895-4898		RS1/8SQR47J
	R	4800,4801,4900,4901		RN1/16SE6800D
	R	4819,4822,4823,4867		RS1/10SR1001F
	R	4846,4847,4887,4888		ACN7180
	R	4902,4903		RN1/16SE5601D
	R	4904,4905		RN1/16SE3301D
	R	4907,4946,4947,4987		ACN7180
	R	4911,4919,4922,4923		RS1/10SR1001F
	R	4915,4933		ACN7192
	R	4916		ACN7185
	R	4920		RS1/10SR2200F
	R	4925,4926		ACN7187
	R	4928		RS1/4SA223J
	R	4929		RS1/8SQ182J
	R	4930		RS1/8SQ822J
	R	4931		RS1/8SQ472J
	R	4932		RS1/8SQ562J
	R	4934,5011-5013,5020		RS1/8SQ103J
	R	4935		RS1/8SQ752J
	R	4936		RS1/8SQ242J
	R	4937,4941		ACN7194
	R	4938		RS1/8SQ4R7J
	R	4939		RS1/8SQ100J
	R	4940		ACN7165
	R	4942,4943		ACN7189
	R	4945,4969		RS1/10SR1202F
	R	4948		RS1/10SR3301F
	R	4950		RS1/10SR1000F
	R	4951		ACN7191
	R	4954		ACN7186
	R	4955		RS1/10SR4702F
	R	4956		RS1/10SR5601F
	R	4963,5001		RS1/10SR3901F
	R	4966		RS1/10SR1002F
	R	4967		RS1/10SR1001F
	R	4968		RS1/10SR2202F
⚠	R	4981		NTCG104KF104FB
	R	4988,5003-5005,5026		ACN7180
	R	4995-4998		RS1/8SQR47J
	R	5000		RS1/10SR5600F
	R	5006-5009		RS1/4SA105J
	R	5014,5015,5022,5023		RS1/8SQ223J
	R	5016,5017,5024,5025		RS1/8SQ473J
	R	5018,5019		RS1/8SQ104J
	R	5021		RS1/8SQ103J
	R	5059,5159		ACN7180
	R	5083-5087		RS1/8SQ105J
	Other Resistors			RS1/10SR###J

CAPACITORS

		No.	Description	Part No.
	C	4006,4026,4035,4042		CKSRYB104K50
	C	4007,4009,4011-4019		CCSRCH331J50
	C	4008,4010,4036,4052		ACH7321
	C	4021,4044-4051,4056		CCSRCH331J50
	C	4022,4025,4040,4112		CCG1255
	C	4023		CCG1236
	C	4024,4116,4166,4167		ACH1479
	C	4027,4030,4041,4043		CCSRCH100D50
	C	4028,4151,4155,4156		CKSRYB103K50
	C	4053,4065,4066		ACH7321
	C	4054,4055,4077,4185		CCSRCH100D50
	C	4057-4062		ACH7305
	C	4063		ACH7311
	C	4064,4086,4091,4103		CKSRYB104K50
	C	4073,4074,4109,4121		CFHXSQ103J16
	C	4078,4079,4180,4182		ACE7090
	C	4080,4120,4123,4220		CFHXSQ102J50
	C	4081,4082		ACG7106
	C	4087,4183,4184,4283		CCSRCH471J50
	C	4088,4092-4094,4096		CCSRCH331J50

	C	4097,5001-5005	CCSRCH331J50
	C	4098,4099	CCSRCH102J50
	C	4100,4200,4300,4400	CFTLA104J2A
A	C	4101,4201,4301,4401	CFTLA474J2A
	C	4108,4208,4308,4408	ACH7320
	C	4113,4124,4152,4153	CKSRYB104K50
	C	4115,4212,4215,4312	CCG1255
	C	4119,4219,4319,4419	ACG7104
	C	4122,4209,4221,4222	CFHXSQ103J16
	C	4125,4130,4137,4225	CCG1288
	C	4127,4227,4327,4427	DCH1330
	C	4134,4234,4334,4434	CCSQCH101J50
	C	4135,4235,4335,4435	ACG7103
	C	4149,4150,4249,4250	ACH7359
B	C	4159,4160,4259,4260	ACG7107
	C	4161,4175,4261,4275	ACG7105
	C	4186,4285,4286,4785	CCSRCH100D50
	C	4203,4213,4224,4252	CKSRYB104K50
	C	4216,4266,4267,4316	ACH1479
	C	4223,4320,4323,4420	CFHXSQ102J50
	C	4230,4237,4325,4330	CCG1288
	C	4251,4255,4256,4351	CKSRYB103K50
	C	4253,4258,4303,4313	CKSRYB104K50
	C	4280,4282,4380,4382	ACE7090
C	C	4284,4783,4784	CCSRCH471J50
	C	4309,4321,4322,4409	CFHXSQ103J16
	C	4315,4412,4415,4512	CCG1255
	C	4324,4352,4353,4403	CKSRYB104K50
	C	4337,4425,4430,4437	CCG1288
	C	4349,4350,4449,4450	ACH7359
	C	4355,4356,4451,4455	CKSRYB103K50
	C	4359,4360,4459,4460	ACG7107
	C	4361,4375,4461,4475	ACG7105
	C	4366,4367,4416,4466	ACH1479
	C	4413,4424,4452,4453	CKSRYB104K50
	C	4421,4422,4509,4521	CFHXSQ103J16
	C	4423,4520,4523,4620	CFHXSQ102J50
	C	4456,4551,4555,4556	CKSRYB103K50
	C	4458,4503,4513,4524	CKSRYB104K50
	C	4467,4516,4566,4567	ACH1479
	C	4480,4482,4580,4582	ACE7090
	C	4500,4600,4700,4800	CFTLA104J2A
	C	4501,4601,4701,4801	CFTLA474J2A
	C	4508,4608,4708,4728	ACH7320
	C	4515,4612,4615,4712	CCG1255
	C	4519,4619,4719,4819	ACG7104
	C	4522,4609,4621,4622	CFHXSQ103J16
	C	4525,4530,4537,4625	CCG1288
	C	4527,4627,4727,4827	DCH1330
	C	4534,4634,4734,4834	CCSQCH101J50
	C	4535,4635,4735,4835	ACG7103
	C	4549,4550,4649,4650	ACH7359
	C	4552,4553,4603,4613	CKSRYB104K50
	C	4559,4560,4659,4660	ACG7107
	C	4561,4575,4661,4675	ACG7105
	C	4616,4666,4667,4716	ACH1479
	C	4623,4720,4723,4820	CFHXSQ102J50
	C	4624,4652,4653,4658	CKSRYB104K50
	C	4630,4637,4725,4730	CCG1288
	C	4651,4655,4656,4751	CKSRYB103K50

	C	4680,4682,4780,4782	ACE7090
	C	4703,4713,4724,4752	CKSRYB104K50
	C	4709,4714,4721,4722	CFHXSQ103J16
	C	4715,4812,4815,4912	CCG1255
	C	4737,4825,4830,4837	CCG1288
	C	4749,4750,4849,4850	ACH7359
	C	4753,4758,4803,4813	CKSRYB104K50
	C	4755,4756,4851,4855	CKSRYB103K50
	C	4759,4760,4859,4860	ACG7107
	C	4761,4775,4861,4875	ACG7105
	C	4766,4767,4816,4866	ACH1479
	C	4786	CCSRCH100D50
	C	4808,4908	ACH7320
	C	4809,4821,4822,4909	CFHXSQ103J16
	C	4823,4920,4923	CFHXSQ102J50
	C	4824,4852,4853,4858	CKSRYB104K50
	C	4856,4951,4955,4956	CKSRYB103K50
	C	4867,4916,4966,4967	ACH1479
	C	4880,4882,4980,4982	ACE7090
	C	4900	CFTLA104J2A
	C	4901	CFTLA474J2A
	C	4903,4913,4924,4952	CKSRYB104K50
	C	4915	CCG1255
	C	4919	ACG7104
	C	4921,4922,5102,5103	CFHXSQ103J16
	C	4925,4930,4937	CCG1288
	C	4927	DCH1330
	C	4934	CCSQCH101J50
	C	4935	ACG7103
	C	4949,4950	ACH7359
	C	4953,5101	CKSRYB104K50
	C	4959,4960	ACG7107
	C	4961,4975	ACG7105
	C	5080,5082,5180,5182	ACE7090
	C	5106	CKSRYB224K25

S PRI AR ASS

SE ICONDUCTORS

⚠	IC 1		MIP4150MD
⚠	IC 52		NJM1431AF
	Q 71		2SD2704K
⚠	D 1		D2SB60A
⚠	D 2		RD2ALF-A1
⚠	D 3		1SS403
⚠	D 4		RB751V-40
⚠	D 50		SBT250-06J
	D 71,72		1SS352

ISCELLANEOUS

⚠	L 1	LINE FILTER	ATF7046
	L 51	COIL	ATH7080
⚠	L 71	LINE FILTER	XTF3004
	H 1,2,71,72	FUSE CLIP	AKR1004
⚠	JA 71	AC INLET ASSY	ADX7464
	KN 1,2	SCREW PLATE	VNE1948
	KN 50,52	EARTH TERMINAL	AKF7002
⚠	RY 71	POWER RELAY	ASR7034
⚠	T 1	POWER TRANSFORMER	ATK7003
⚠	CN 81	CONNECTOR	B2P3-VH

	0	HEAT SINK(AL)	ANH7224
	0	SCREW	BBZ30P080FCC
	0	HEAT SINK(AL)	ANH7223
	JP 51	HOUSING	ADX7750
⚠	PC 1	PHOTO COUPLER	TLP781(GR)

RESISTORS

⚠	R 1,12		RS2LMF683J
⚠	R 9-11		ACN7173
	R 14		RS1/10SR1001F
	R 53		RS1/10SR1202F
	R 54		RS1/10SR7500F
	R 56		RS1/10SR1002F
	R 57		ACN7180
	R 59		RS1/8SQ365J
	R 74		RS1/8SQ105J
	Other Resistors		RS1/10SR###J

CAPACITORS

⚠	C 1		ACE7043
	C 3		ACH7342
⚠	C 4		ACE7089
⚠	C 5		ACG7102
	C 6		CKSQYB105K25
	C 7		ACH7370
	C 8,53,56		CKSRYB104K50
	C 9		CCSRCH100D50
	C 10		CEAK2R2M2A
	C 13		CCSRCH102J50
⚠	C 18,20		VCG1046
	C 52		BCH1044
	C 58		ACH7369
	C 61		CCSRCH101J50
⚠	C 71,81		ACE7013
⚠	C 73		ACG7039
	C 74,75		CCSRCH220J50

T PRI□ AR□ S□ IELD ASS□

□ ISCELLANEOUS

	KN 5751	SCREW PLATE	VNE1948
	CN 5751	5P PLUG	XKP3062

U RE□ ASS□

SE□ ICONDUCTORS

⚠	IC 7501,7611		NJM78M12FA
⚠	IC 7502		NJM79M12FA
⚠	IC 7521		NJM78M06FA
⚠	IC 7601		NJM78M05FA
⚠	IC 7602		NJM79M05FA
⚠	D 7501-7504,7521,7522		1SR154-400
	D 7505,7506,7523,7603		1SS357
⚠	D 7601		D3SBA60(B)
	D 7604,7614		1SS357
⚠	D 7611-7613,7621-7623		1SR154-400
	D 7624,7627		RKZ5.1KG(B2)
	D 7625		PTZ22(B)

□ ISCELLANEOUS

	H 7501-7504,7601-7604	FUSE CLIP	AKR1004
	CN 7501,7601	5P TOP POST	B5B-EH
	CN 7502	PLUG(5P)	KM200NA5
	CN 7602	PLUG(7P)	KM200NA7
	CN 7603	PLUG(4P)	KM200NA4
	7502	PCB BINDER	VEF1040
⚠	P 7521,7522	PROTECTOR(1.5A)	AEK7011

RESISTORS

	R 7621,7640		RS1/10SR473J
	R 7622		RD1/4MUF391J
	R 7628		RS1/8SQ105J
	Other Resistors		RS1/4SA###J

CAPACITORS

	C 7501,7511		CEAK332M25
	C 7504-7506,7525,7526		CFTLA394J50
	C 7507,7508,7623		CEAK221M35
	C 7521		CEAK222M25
	C 7522		CCSRCH330J50
	C 7523		CEAK221M16
	C 7601		CEAK472M16
	C 7602		CEAK222M16
	C 7603,7604,7613,7626		CKSRYB103K50
	C 7605,7606,7624		CEAK101M16
	C 7609		CFTLA394J50
	C 7611		CEAK102M35
	C 7612		CEAK471M35
	C 7614		CEAK100M50
	C 7621		ACH7358
	C 7622		CEAK101M35
	C 7625		CEAK470M50
	C 7628,7632		CCSRCH102J50
	C 7629		CFTLA104J50
	C 7634-7637,7640,7641		CKSRYB104K50

V IR RE□ ASS□

SE□ ICONDUCTORS

⚠	IC 7251		NJM78M12FA
⚠	IC 7252		NJM79M12FA
⚠	IC 7271		NJM78M05FA
⚠	IC 7272		NJM79M05FA
	Q 7203,7204,7207,7221		LTC124EUB
	Q 7205,7206		LTA124EUB
⚠	Q 7211,7241		2SD1763A
⚠	Q 7212		2SB1186A
	Q 7222		LTA143EUB
	Q 7242		LSC4081UB
⚠	D 7201-7204,7241-7244		1SR154-400
	D 7211,7212,7215,7216		1SR154-400
	D 7213,7214		HZU7R5(B1)
	D 7245		1SS352
	D 7247		UDZS16(B)
⚠	D 7251-7254,7271-7274		1SR154-400
	D 7255,7256,7275,7276		1SS357

Loc. No.	Description	Part No.
MISCELLANEOUS		
	H 7201-7204,7241,7242 FUSE CLIP	AKR1004
	H 7251-7254 FUSE CLIP	AKR1004
	CN 7201 8P TOP POST	B8B-EH
	CN 7241 PLUG(2P)	KM200NA2
	CN 7251 PLUG(7P)	KM200NA7
	CN 7271 PLUG(4P)	KM200NA4
	CN 7281,7291 PLUG(3P)	KM200NA3
	JH 7251-7253 PCB BINDER	VEF1040
RESISTORS		
	R 7211,7213	RD1/4MUF102J
	R 7241	RS1/4S102J
	R 7245,7246,7259,7273	RS1/4SA105J
	R 7255,7256	RS1/8SQ100J
	R 7258	RS1/4SA822J
	R 7260	RS1/8SQ105J
	R 7272	ACN7180
	R 7274	RS1/4SA331J
	Other Resistors	RS1/10SR###J
CAPACITORS		
	C 7200,7240,7250,7270	CFTLA394J50
	C 7201,7202	CEAK102M16
	C 7213-7215,7219,7245	CEAK100M50
	C 7217,7218,7242,7253	CKSRYB103K50
	C 7221,7246	CEAK470M25
	C 7222	CCSRCH102J50
	C 7241,7251,7252	CEAK222M25
	C 7247	CCSRCH100D50
	C 7248,7281,7282	CCSRCH101J50
	C 7254,7273,7274	CKSRYB103K50
	C 7255,7256	CEAK221M35
	C 7271,7272	CEAK222M16
	C 7275,7276	CEAK221M16
	C 7277,7278,7289,7290	CCSRCH331J50
	C 7291	CFTLA394J50
	C 7298	CCSRCH221J50

W DIODE ASS

Loc. No.	Description	Part No.
SEMICONDUCTORS		
⚠	D 7400,7401	LN6SB60-4003
MISCELLANEOUS		
	CN 7400 PLUG	CKS-556
	7400,7401 HEAT SINK B	ANH1021
	7402,7403 SCREW	IBZ30P080FCC
RESISTORS		
	R 7402	RD1/4MUF100J
	R 7403,7404	ACN7180
	Other Resistors	RS1/4SA###J
CAPACITORS		
	C 7400,7401	ACH7319
	C 7402,7403	CFTLA104J2A

X CONNECT ASS

Loc. No.	Description	Part No.
MISCELLANEOUS		
	CN 7801 14P PLUG	AKM7170
	CN 7802 20P PLUG	AKM7171
	CN 7803 13P SOCKET	XKP3077
	CN 7804 21P SOCKET	XKP3081
RESISTORS		
	R 7808-7827	RS1/10SR100J
	Other Resistors	RS1/8SQ###J
CAPACITORS		
	C 7813,7816	CCSRCH100D50

Y CONNECT ASS

Loc. No.	Description	Part No.
MISCELLANEOUS		
	CN 7681 7P SOCKET	KP200IB7L
	CN 7682 17P SOCKET	XKP3079
	CN 7683 7P PLUG	KM200IB7
	CN 7684 17P PLUG	XKP3068
RESISTORS		
	All Resistors	RS1/10SR###J
CAPACITORS		
	C 7693,7696	CCSRCH270J50
	C 7694,7697	CCSRCH331J50
	C 7699,7702	CKSRYB103K50

Z PRE RIDE ASS

Loc. No.	Description	Part No.
MISCELLANEOUS		
	CN 6951,6952 23P PLUG	XKP3071

AA ADAC RIDE ASS

Loc. No.	Description	Part No.
MISCELLANEOUS		
	CN 3791,3792 14P PLUG	AKM7170
	CN 3793,3794 B TO B CONNECTOR	AKM7176
CAPACITORS		
	C 3794,3798	CKSRYB103K50
	C 3800	CKSRYB104K50

AB DAUDIO RIDE ASS

Loc. No.	Description	Part No.
MISCELLANEOUS		
	CN 3771,3772 7P PLUG	XKP3063
	CN 3773,3774 15P PLUG	XKP3067

AC DDAC RIDE ASS

Loc. No.	Description	Part No.
MISCELLANEOUS		
	CN 3781-3784 PLUG (30P)	BKM1035
	CN 3785 3P PLUG	XKP3061

Loc. No.	Description	Part No.
CAPACITORS		
C 3781		CCSRCH100D50
C 3785		CKSRYB104K50
C 3786		CKSRYB103K50
C 3787		CCSRCH101J50

AD FRONT PRIDE ASS

Loc. No.	Description	Part No.
MISCELLANEOUS		
CN 7721	7P SOCKET	KP200IB7L
CN 7722	17P SOCKET	XKP3079
CN 7723	PLUG(3P)	KM200NA3
CN 7724	CONNECTOR	9604S-15C
RESISTORS		
All Resistors		RS1/10SR###J
MISCELLANEOUS		
JH 7721	PCB BINDER	VEF1040
JP 7725	7P HOUSING ASSY	ADX7729
CAPACITORS		
C 7721,7724		CCSRCH101J50
C 7722,7725		CCSRCH102J50

AE DISPLAY PRIDE ASS

Loc. No.	Description	Part No.
MISCELLANEOUS		
CN 7651,7652	39P CONNECTOR	VKN2097
JH 7651,7652	PCB BINDER	VEF1040
RESISTORS		
R 7655-7657		RS1/10SR0R0J
Other Resistors		RS1/8SQ###J
CAPACITORS		
C 7651,7904,7912,7919		CCSRCH100D50
C 7924		CCSRCH100D50

AF MAIN PRIDE ASS

Loc. No.	Description	Part No.
MISCELLANEOUS		
CN 7661	15P SOCKET	XKP3078
CN 7662	7P SOCKET	KP200IB7L
CN 7663	CONNECTOR	9604S-15C
CN 7664	L-PLUG(7P)	KM200NA7L
JH 7661	PCB BINDER	VEF1040
RESISTORS		
R 7667		RS1/4SA105J
Other Resistors		RS1/10SR###J
CAPACITORS		
C 7175		CCSRCH101J50

AG PC PRIDE ASS

Loc. No.	Description	Part No.
MISCELLANEOUS		
CN 7671,7672	18P PLUG	AKM7050

AH A REAR PRIDE ASS

Loc. No.	Description	Part No.
MISCELLANEOUS		
CN 5775	PLUG(5P)	KM200NA5
JH 5775,5776	PCB BINDER	VEF1040
JP 5775	HOUSING	ADX7773

AI PIC PGUARD ASS

Loc. No.	Description	Part No.
MISCELLANEOUS		
JH 5921,5924	PCB BINDER	VEF1040

AJ PAN CONNECT ASS

Loc. No.	Description	Part No.
MISCELLANEOUS		
CN 5931,5932	PLUG(3P)	KM200NA3
JH 5931,5932	PCB BINDER	VEF1040

AK PIND DA CALE ASS

Loc. No.	Description	Part No.
MISCELLANEOUS		
JH 3506	PCB BINDER	VEF1040

AL PIND PCALE ASS

BIND B CABLE ASSY has no service parts.

AM PPC PGUARD ASS

FFC GUARD2 ASSY has no service parts.

AN VREG PGUARD ASS

VREG GUARD ASSY has no service parts.

PPA TUNER UNIT

FM/AM TUNER UNIT has no service parts.