Pioneer

Service Manual

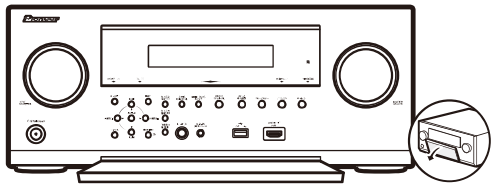

SC-LX901

ORDER NO.
ARP4012

AV RECEIVER

SC-LX901(B) /MDC

SC-LX901(B),(S) /MGP

SC-LX901(B) /MHB

THIS MANUAL IS APPLICABLE TO THE FOLLOWING MODEL(S) AND TYPE(S).

Model	Type	Power Requirement	Remarks
SC-LX901(B)	MDC	AC 120 V	-----
SC-LX901(B)	MGP	AC 220 V to 230 V	-----
SC-LX901(B)	MHB	AC 220 V to 230 V / 240 V	-----
SC-LX901(S)	MGP	AC 220 V to 230 V	-----

This service manual is intended for qualified service technicians; it is not meant for the casual do-it-yourselfer. Qualified technicians have the necessary test equipment and tools, and have been trained to properly and safely repair complex products such as those covered by this manual.
Improperly performed repairs can adversely affect the safety and reliability of the product and may void the warranty. If you are not qualified to perform the repair of this product properly and safely, you should not risk trying to do so and refer the repair to a qualified service technician.

O-4584

How to read suffix code of this model

Note for suffix code

The following is explanation for the suffix code.

S C - L X 5 0 1 (B) M D C

Model No.

The suffix code of each model is mentioned in serial number label as per below.

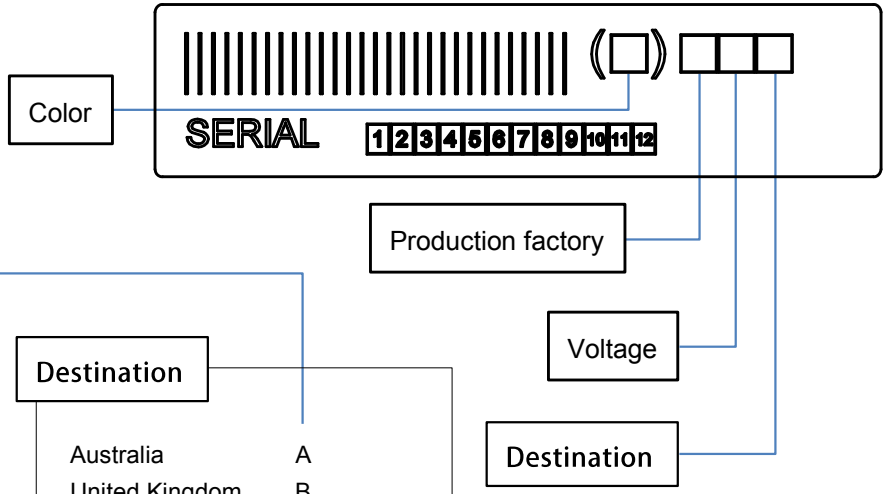

Color

Black	B
Brown	BR
Cherry	C
Gold	G
Green	GR
Gray	H
Black	K
Blue	L
Light Blue	LB
Wood	M
Orange	O
Pink	P
Red	R
Silver	S
Violet	V
White	W
Yellow	Y

Production factory

Malaysia	M
China	C
Japan	U
Others	W

Voltage

120V AC	D
220～230V	G
220～230／240V	H
100V AC	J
220～240V AC	M
230V AC	P
100～240V AC	U
110～240V	V
120V／220～240V	W

Speaker System (without AMP.) :

Passive Subwoofer	0
Front Speaker	F
Center Speaker	C
Rear Speaker	R
Back Speaker	B

Destination

Australia	A
United Kingdom	B
North American	C
USA	D
Taiwan	F
Japan	J
Korea	K
Russia	L
Europe	P
Hong Kong	Q
China	R
Brazil	S
Thai	T
Worldwide	U

Speaker System (without AMP.) :

Left channel	L
Right channel	R
Center channel	0

COMMON

Panel

Front Panel

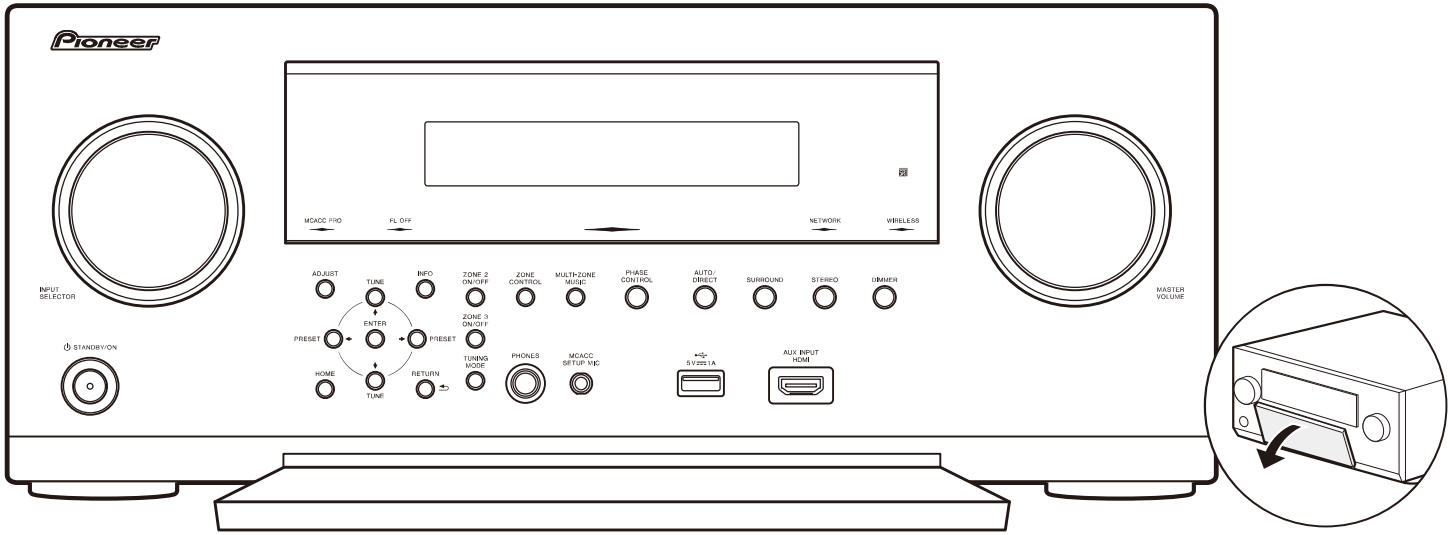

Rear Panel

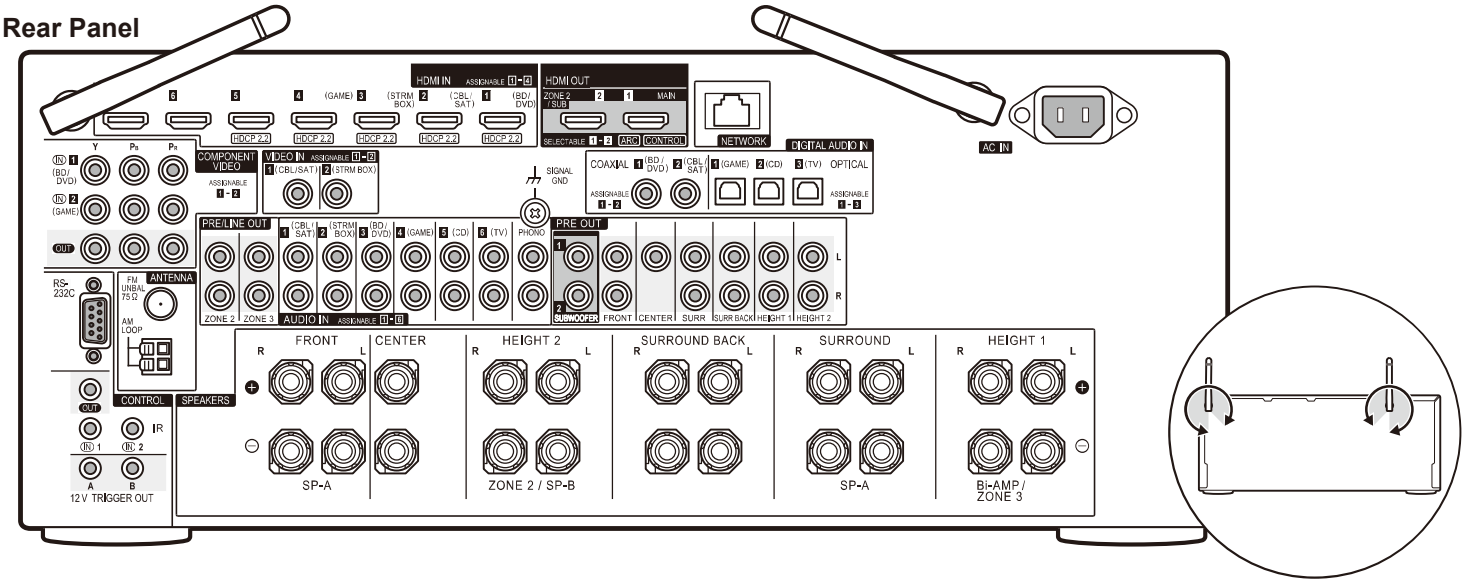

Remote Control Unit
RC-927R

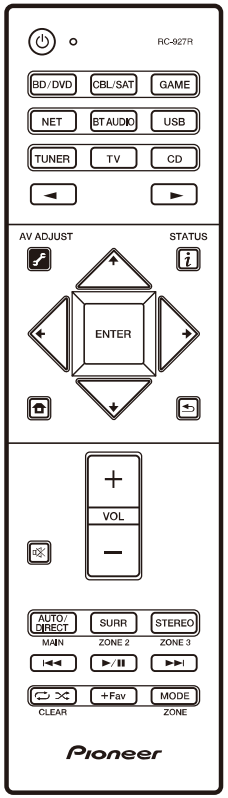

Accessory

1. Remote controller (RC-927R) ×1
   Batteries (AAA/R03) ×2
2. Indoor FM antenna ×1
3. AM loop antenna ×1
4. Speaker setup microphone ×1
5. Power cord ×1

Dimensions (W × H × D) : 435 mm × 185 mm × 441 mm (17-1/8" × 7-5/16" × 17-1/3")
Weight : 18.0 kg (39.7 lbs.) (North American), 18.3 kg (40.3 lbs.) (Others)

How to Reset the Unit

Step1. STORE (To save user preferences.)

While pressing [HOME MENU] button, press [ENTER] button twice.

Step2. RESET

While pressing [AUTO DIRECT] button, press [STANDBY/ON] button.

※) ”Clear” appears on the display and the unit returns to standby. Do not unplug the power cord until “Clear” disappears from the display.

Step3. RECALL (To load user preferences.)

While pressing [RETURN] button, press [HOME MENU] button twice.

Process List

Protection

Item (signal name)	Detection Method	Status of Equipment	Warning Indication	Service information display	Recovery Procedure
DC detection (XDCERR)	Observe with 20 msec interval and Decide by 2 times continuously low level detection.	Case A) When detect XDCERR continuously after previously shutdown by XDCERR. (At the start of power on) 1) MUTE on and Speaker Relay off. 2) Flashes “AMP ERR”. 3) Shuts down when abnormality continues for more than 3 seconds. *Operation (except recovery procedure) is disabled. Case B) When detect XDCERR while normal operation. 1) MUTE on and Speaker Relay off. 2) Flashes “AMP ERR”. 3) Shuts down when abnormality continues for more than 3 seconds. *Operation (except recovery procedure) is disabled for 1 minute.	Case A) Blinks MCACC LED indicator. Case B) Blinks FLOFF LED indicator.	DC	↓(TuneDown) + Zone2 ON/OFF(long press)
Over Current Detection (XOLERR)	Observe with 20 msec interval and Decide by low level detection.	Shut down	Blinks Wireless LED indicator.	OL	POWER ON
Combination of DC and Overcurrent	Decide by Over Current detection within 3 seconds after DC detection.	Shut down	Blinks Wireless LED indicator.	COM	POWER ON
Overheat Detection (TEMPERR5)	Observe with 20 msec interval and Decide by 2 times continuously low level detection.	1) Flashes “AMP OVERHEAT”. 2) Shuts down when abnormality continues for more than 3 seconds. *Operation (except recovery procedure) is disabled for 1 minute.	Blinks FLOFF LED indicator.	STMP	↓(TuneDown) + Zone2 ON/OFF(long press)
XVDDERR failure Detection (XVDDERR)	Observe with 20 msec interval and Decide by 10 times continuously low level detection.	Shut down	Blinks Wireless LED indicator.	DERR	POWER ON
Amplifier Power Supply Failure Detection (XBERR)	A/D conversion with 5 msec interval and Decide by 8 times continuously low level detection.	Shut down *Operation (except recovery procedure) is disabled.	Blinks MCACC LED indicator.	BERR	↓(TuneDown) + Zone2 ON/OFF(long press)
AC Pulse failure Detection (ACWP)	Observe with 1~ 2 msec interval.	1) There are no change of signal(low or high) among 32 msec. Turn on the mute. 2) There are change of signal among 32msec to 42msec. Turn off the mute and reset the count. 3) There are no change of signal among 42msec. Shutdown.	N/A	N/A	POWER ON
Fan Abnormality Detection (XFANERR)	Observe with 20 msec interval and Decide by 2 times continuously low level detection.	1) Flashes “FAN STOP”. 2) Shuts down when abnormality continues for more than 3 seconds.	Blinks Wireless LED indicator.	FAN	POWER ON

Service information (Detected protection history)

Purpose

The number of detections for various protection processes are displayed.

How to enter to service information mode.

Step1 :

[DIMMER] + [ON/STANDBY] x 2

M1.xx / xxxxxAEx — The version of main microprocessor.

Step2 :

[HOME]

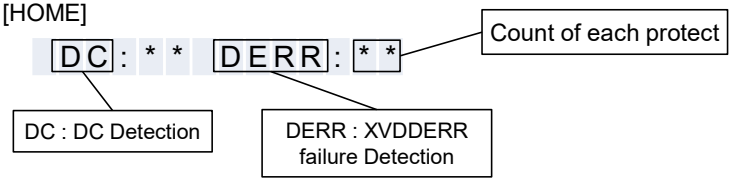

Step3 :

[TUNE UP] or [TUNE DOWN]

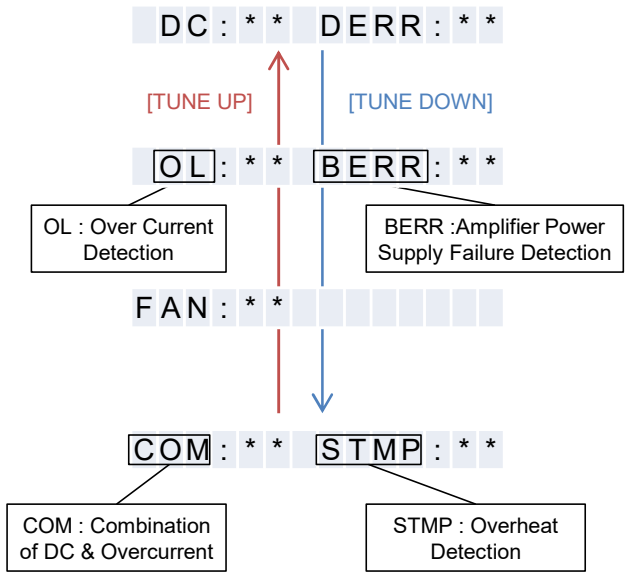

How to exit the service information mode.

Step :

[INFO]

Normal Display

How to initialize the data in the service information.

Step :

[RETURN]

ProtectDataCLR

*Unit will once become standby and then turn on again automatically.

Detection circuit

DC Detection

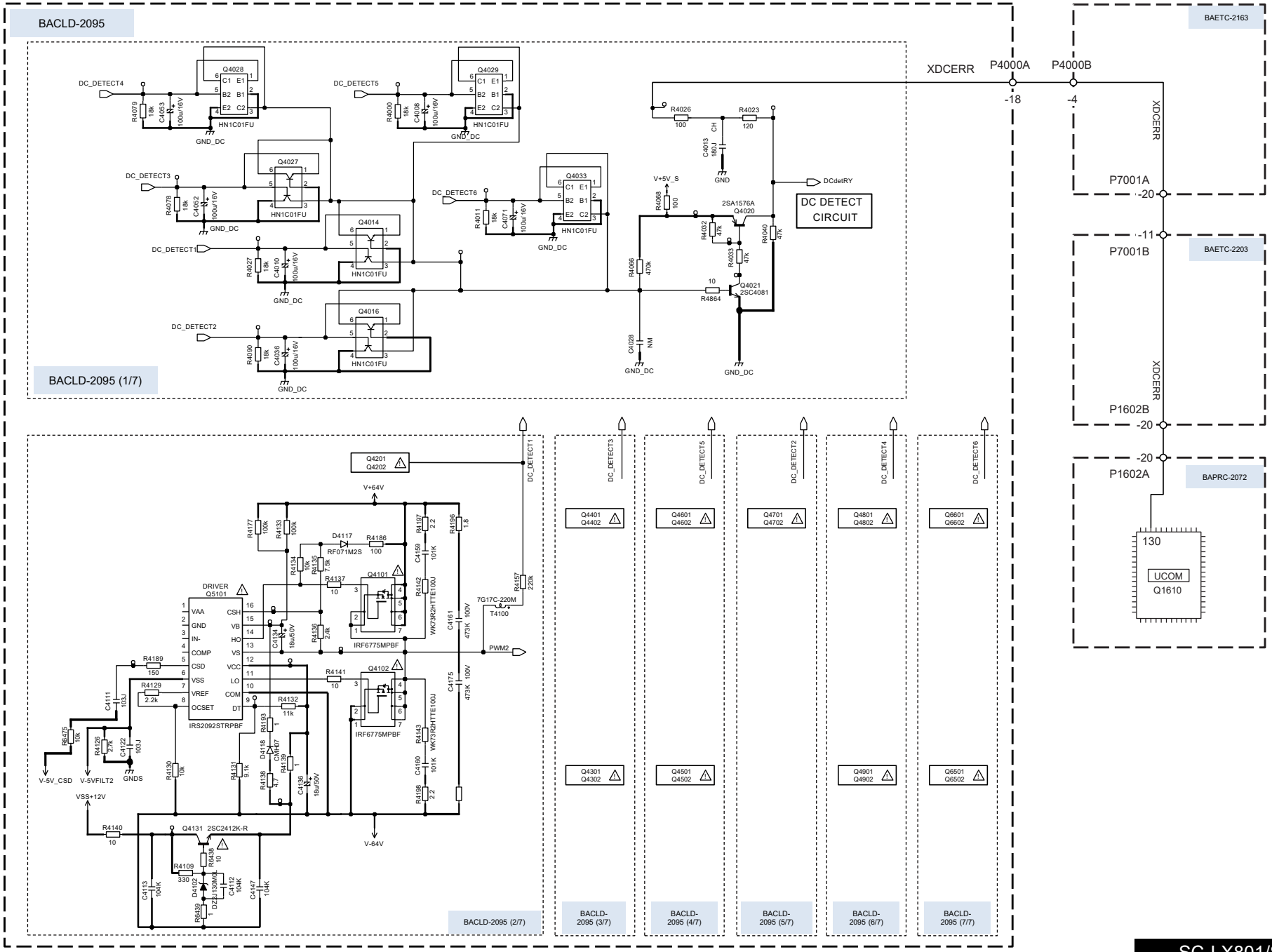

Detection circuit

Over Current Detection of MOS FET in Output Stage

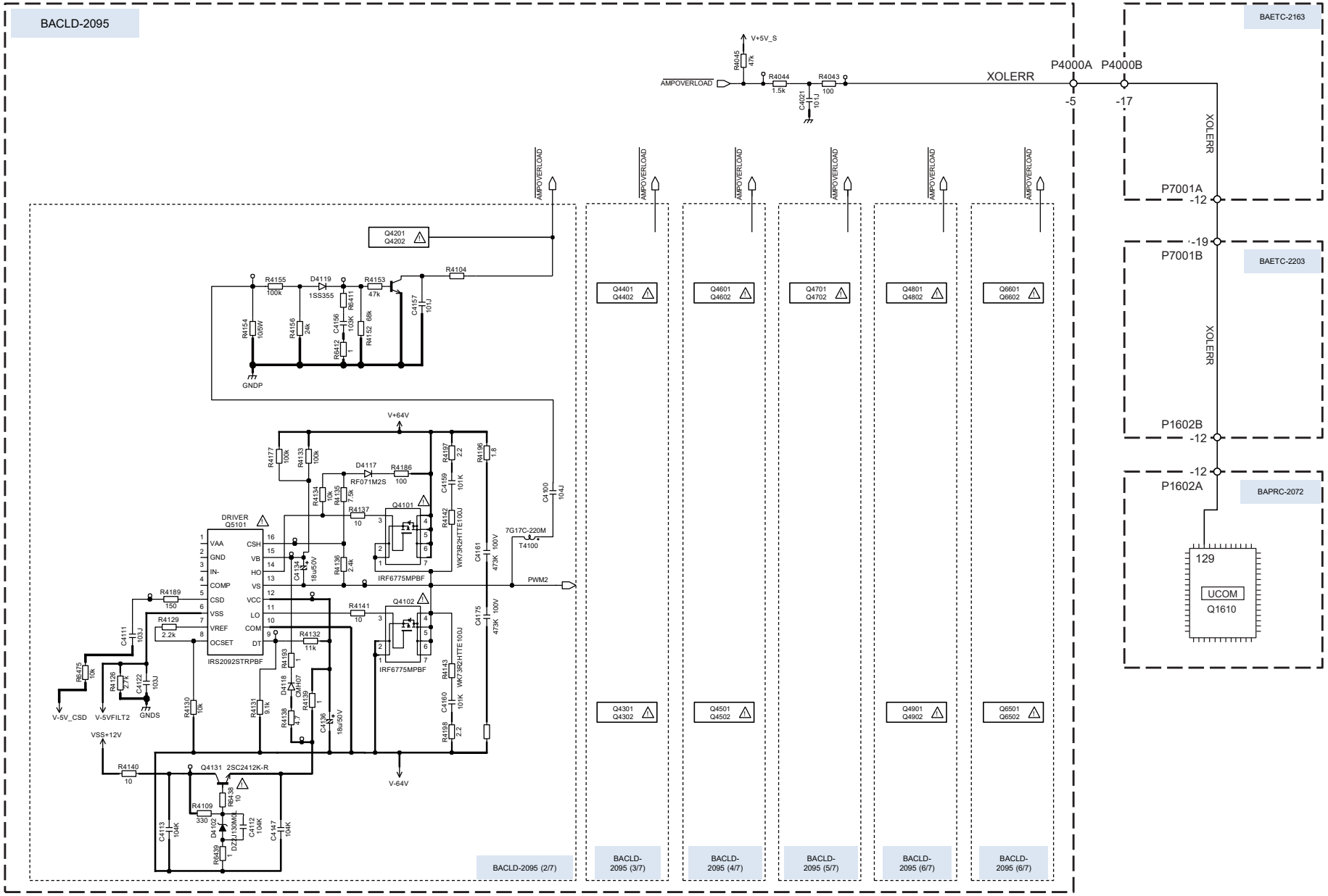

Detection circuit

Fan Abnormality Detection

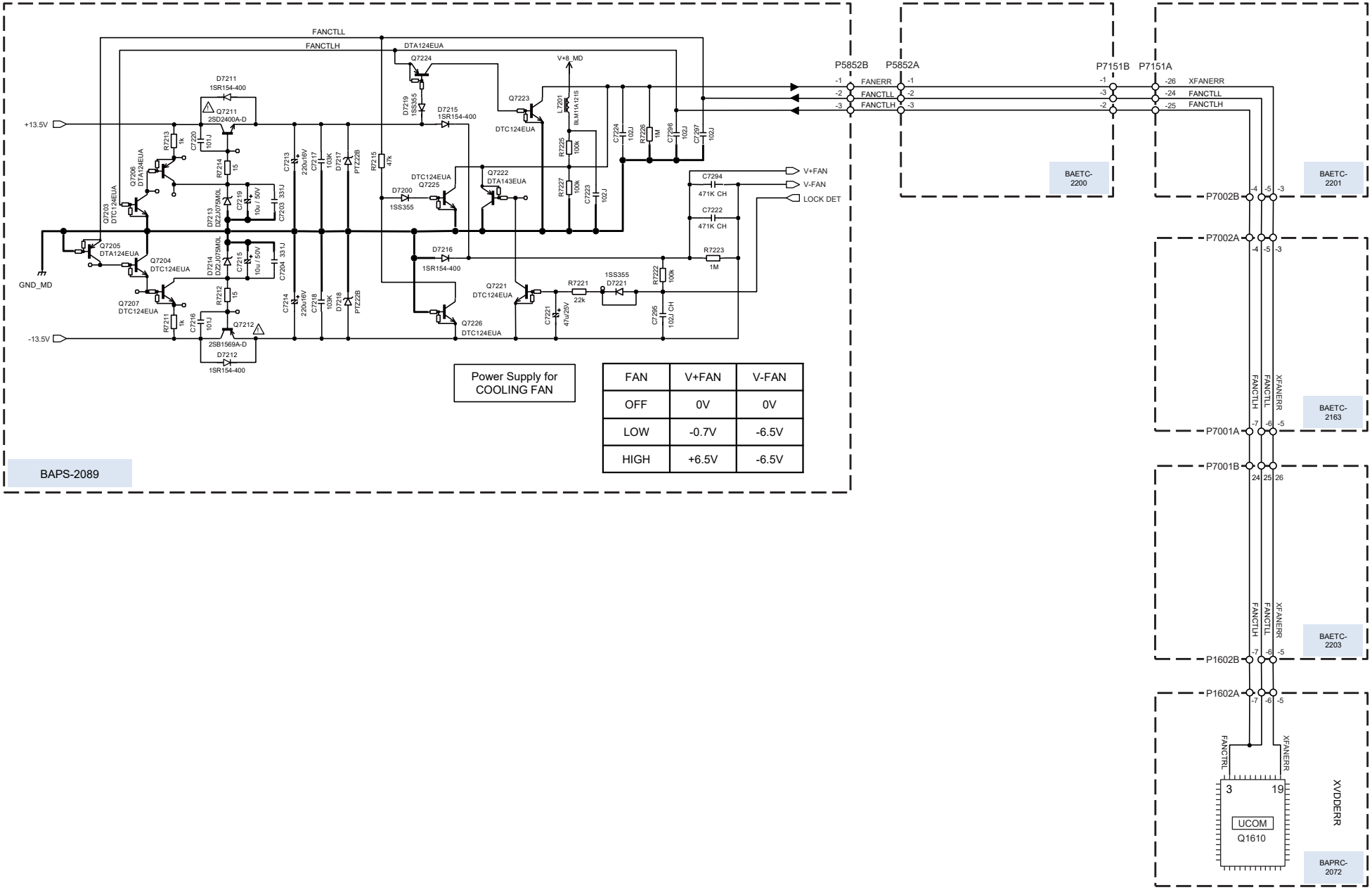

Detection circuit

Overheat Detection

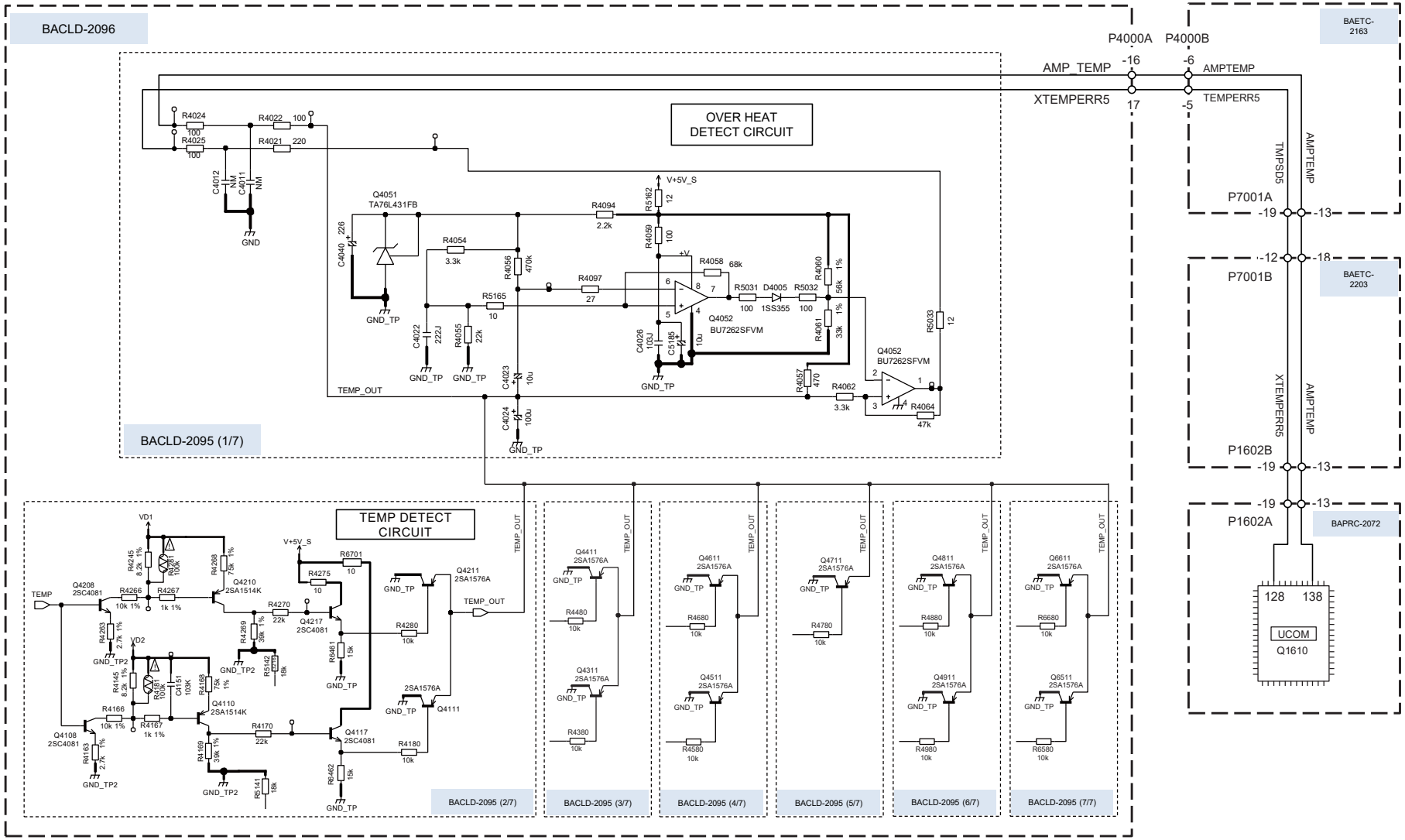

Detection circuit

XVDDERR Detection

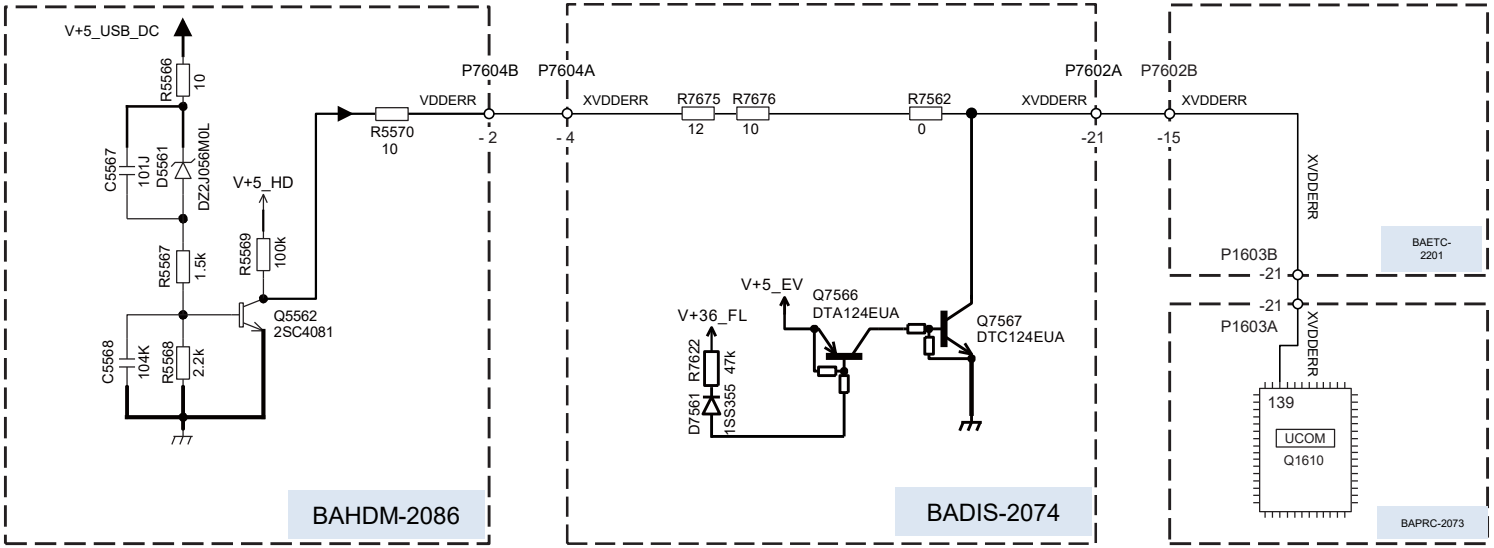

AC Pulse failure Detection

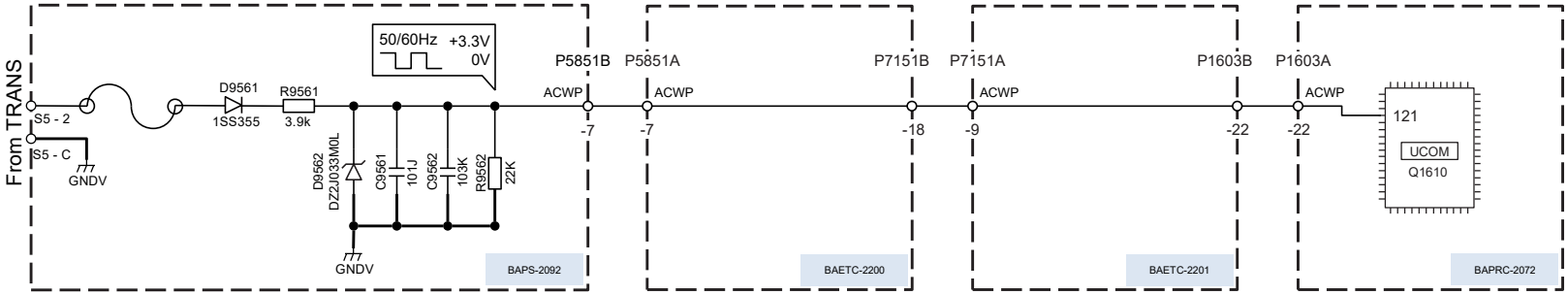

Detection circuit

Amplifier Power Supply Failure Detection

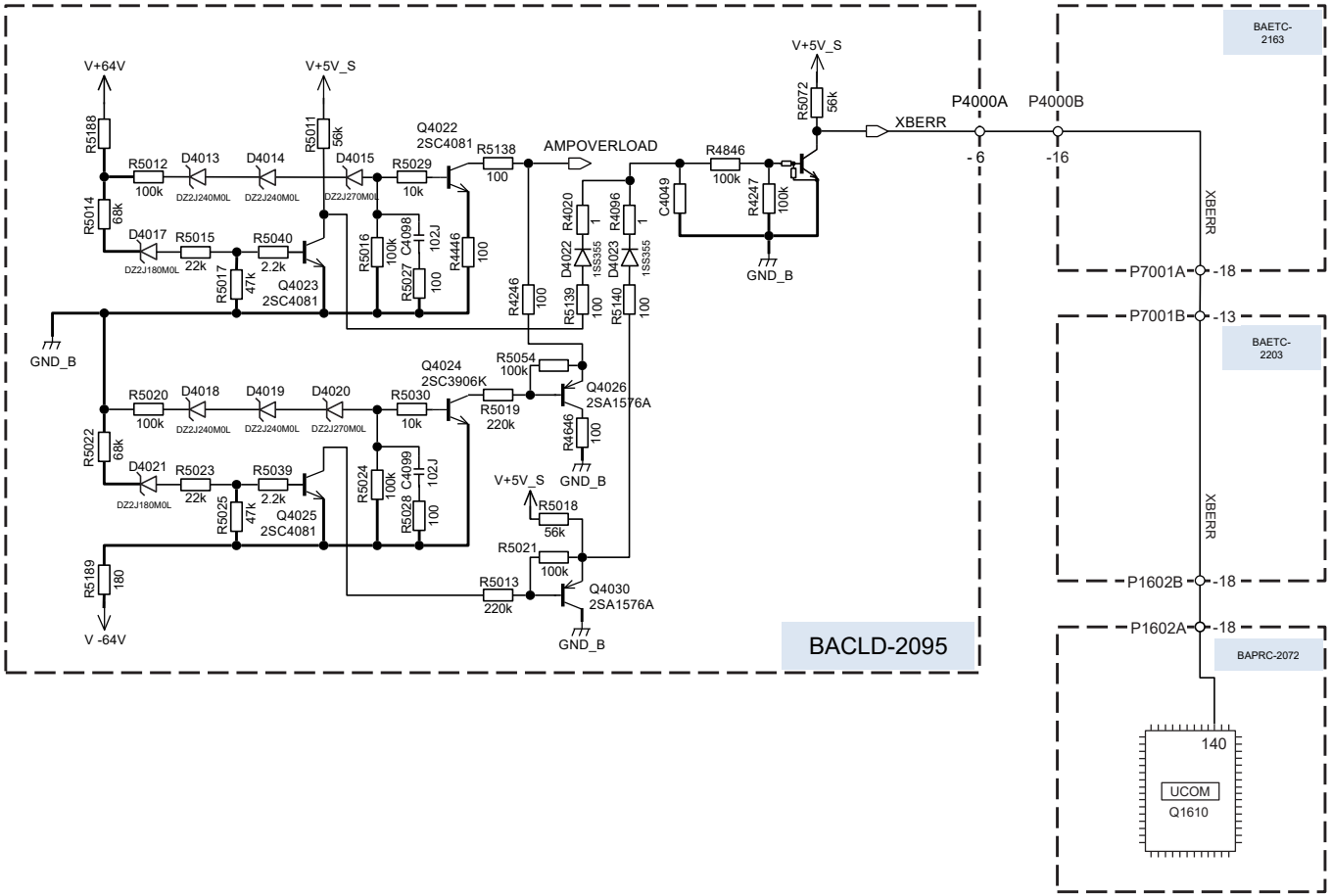

How to check model and destination

Step1 :

Set VOL Level = -42

Step2 :

[RETURN] + [ON/STANDBY] → [DIMMER] → [TuneUP] x 5

Model Name	Destination	FL Display													
SC-LX501 MDC	DC	L	X	5	0	1			D	C		3	4	0	0
SC-LX501 MGP/MHB	xx	L	X	5	0	1			x	x		2	4	1	0
SC-LX501 MJJ	JJ	L	X	5	0	1			J	J		2	4	2	0
SC-LX701 MDC	DC	L	X	7	0	1			D	C		3	6	0	0
SC-LX701 MGP/MHB	xx	L	X	7	0	1			x	x		2	6	1	0
SC-LX701 MJJ	JJ	L	X	7	0	1			J	J		2	6	2	0
SC-LX801 MDC	DC	L	X	8	0	1			D	C		3	7	0	0
SC-LX801 MGP	xx	L	X	8	0	1			x	x		2	7	1	0
SC-LX801 MJJ	JJ	L	X	8	0	1			J	J		2	7	2	0
SC-LX901 MDC	DC	L	X	9	0	1			D	C		3	8	0	0
SC-LX901 MGP/MHB	xx	L	X	9	0	1			x	x		2	8	1	0
SC-LX901 MJJ	JJ	L	X	9	0	1			J	J		2	8	2	0

This list is MCU internal value,
And The destination code of this list,
it is different from Wi-Fi 5GHz setting Destination Code

IMPORTANT!!

Back Ground:

It is totally different from Radio Law at the each country on 5GHz band.

It means it is totally different from enabled Channel of 5GHz band at the each country.

We define the "Country Code" for 5GHz band.

You must set up the appropriate country code to the product.

Example;

Case1:

When you use the "P" destination products and bring move to Russia or Israel,

If you did not setup change country code and use in Russia and Israel,

You will be on the illegal Radio Law in Russia and Israel.

Case2;

When you use "C" or "D" destination product bring move to Japan or Taiwan,

If you did not setup change country code and use in Japan and Taiwan,

You will be on the illegal Radio Law in Japan and Taiwan.

Service Parts information:

The default country code is set on "Processing Circuit Board(PRC board)".

You must make sure and set up the "Country Code" when you replace the processing circuit pc board (i.e. BAPRC-2072).

Otherwise You and your customer should be on the illegal Radio Law and

IT HAS POSSIBILITY TO HAVE A RISK OF

PUNISHMENT FROM EACH COUNTRY GOVERNMENT.

If you did not make sure country code and no setup code and face any trouble,

We does not have any responsibility.

For setting up the Country Code,

Please ask the procedure of changing country code

to your distributer or our sales.

It is no described the procedure of changing Country Code on this Service Manual

If you have any trouble of unclear procedure for update country code,

Please contact our sales department.

PRC Board Default Value of Country Code

The PRC board is already set default Country Code by the representative destination.

To confirm the default country code, Please refer to the "How to read PRC Board part number and Default value of Country Code" section.

Figure Country List (need to set up)

IMPOTANT!!

Make sure and Setup Country Code

You have to make sure country code for using or replacing "Processing Circuit PC Board".

It means that you have to make sure country code between using Processing Circuit PC board(PRC Board) and your customer's country code.

When it is not match PRC board default country code and customer's country, you have to setup Country Code.

Case3;

When you repair the "P" destination products and replace "P" destination PRC Board and the customer live in UK, It is no necessary to setup Country Code

Because "P" destination PRC board already setup "EU" country code.

Match Country code

NO NECESSARY TO SETUP COUNTRY CODE

Case4;

When you repair the "P" destination products and replace "P" destination PRC board and the customer live in Russia, It is necessary to setup Country Code

Because "P" destination PRC Board already setup "EU" country code.

However, the customer's country code is "RU". It means no match PRC Board code and Customer's code.

No Match Country code

NECESSARY TO SETUP COUNTRY CODE

Case5;

When you repair the "C" destination products and replace "C" destination PRC board and the customer live in US, it is no necessary to setup Country Code

Because "C" destination PRC board already setup "US" country code.

Match Country code

NO NECESSARY TO SETUP COUNTRY CODE

Case6;

When you repair the "C" destination product and replace "C" destination PRC board and the customer live in Taiwan, It is necessary to setup Country Code.

Because "C" destination PRC Board already setup "US" country code as default.

However, the customer's country code is "TW". It means no match PRC Board code and the customer's country code

No Match Country code

NECESSARY TO SETUP COUNTRY CODE

Wireless LAN 5GHz Country Code 1/2

Region	Country	Code
America	USA	US
	Canada	US
	Mexico	US
	Brazil	US
	Chile	CL
	Guatemala	US
	Puerto Rico	US
	Trinidad	TT
	Dominican Rep	US
	Argentina	AR
	Ecuador	US
	Paraguay	PY
	Colombia	US
	Guam	US
	Panama	US
	Costa Rica	US
	Uruguay	UY
	Peru	PE

Region	Country	Code
Asia / Oceania	Japan	JP
	China	CN
	Hong Kong	EU
	Korea	KR
	Taiwan	TW
	Singapore	SG
	Malaysia	MY
	Philippines	EU
	Vietnam	EU
	Indonesia	ID
	Sri Lanka	EU
	Australia	AU
	New Zealand	AU
	Thailand	EU
	India	IN
	Pakistan	PK

Region	Country	Code
Middle East	UAE	EU
	Bahrain	BH
	Kuwait	KW
	Oman	EU
	Qatar	QA
	Lebanon	EU
	Jordan	JO
	Saudi Arabia	EU

Wireless LAN 5GHz Country Code 2/2

Region	Country	Code
Europe / Africa	Germany	EU
	UK	EU
	France	EU
	Netherlands	EU
	Italy	EU
	Switzerland	EU
	Denmark	EU
	Sweden	EU
	Austria	EU
	Belgium	EU
	Spain	EU
	Norway	EU
	Finland	EU
	Czech	EU
	Israel	IL
	Ukraine	EU
	Hungary	EU
	Slovakia	EU
	Luxembourg	EU
	Turkey	EU
	Portugal	EU
	Malta	EU
	Latvia	EU
	Poland	EU

Region	Country	Code
Europe / Africa	Cyprus	EU
	Estonia	EU
	Slovenia	EU
	Bulgaria	EU
	Greece	EU
	Romania	EU
	Lithuania	EU
	Serbia	EU
	Croatia	EU
	Ireland	EU
	Macedonia	EU
	Moldova	EU
	Russia	RU
	Andorra	EU
	Armenia	EU
	Azerbaijan	EU
	Belarus	EU
	Bosnia and Herzegovina	EU
	Northern Cyprus(Turkey)	EU
	Georgia	EU
	Iceland	EU
	Kazakhstan	EU

Region	Country	Code
Europe / Africa	Liechtenstein	EU
	Monaco	EU
	Montenegro	EU
	San Marino	EU
	Vatican City	EU
	Kosovo	EU
	Kaliningrad(Russia)	RU
	Gibraltar(UK)	EU
	Canary Islands(Spain)	EU
	Ceuta	EU
	Melilla	EU
	Morocco	MA
	Algeria	EU
	Tunisia	TN
	Egypt	EG
	Mauritius	US
	South Africa	EU

How to read PRC Board part number and Default value of Country Code

WiFi 5GHz Setting

1B5142072-1C801MDC

Board No.

Suffix No.

Model Number Last 3 Digit

701 : SC-LX701
801 : SC-LX801
901 : SC-LX901

Destination

PRC Board Default setting Country Code

Dst	Code	Main Country
C	**US**	North America
D	**US**	United State
S	**US**	Brazil
P	**EU**	Europe
B	**EU**	United Kingdom
Q	**EU**	Hong Kong
T	**EU**	Thai
L	**RU**	Russia
A	**AU**	Australia / New Zealand
R	**CN**	China
F	**TW**	Taiwan
K	**KR**	Korea
J	**JP**	Japan

COMMON

How to check Firmware Version & Preparation of Update

Step1 : [DIMMER] + [ON/STANDBY] x 2
Main Firmware Version will appear on the main unit's display.

Step2 : [TUNE +1] (Push Up Key 1 click)
NET Firmware Version will appear on the main unit's display.

Step3 : [TUNE +2] (Push Up Key 2 click)
DSP1 Firmware Version will appear on the main unit's display.

Step4 : [TUNE +3] (Push Up Key 3 click)
DSP2 Firmware Version will appear on the main unit's display.

Step5 : [TUNE +4] (Push Up Key 4 click)
DSP2 Firmware Version will appear on the main unit's display.

Step6 : [TUNE +5] (Push Up Key 5 click)
Video Firmware Version will appear on the main unit's display.

Step7 : [TUNE +6] (Push Up Key 6 click)
OSD Firmware Version will appear on the main unit's display.

Step8 : [TUNE +7 over] (Push Up Key 7 click over)
Return to Display Main Firmware Version (Return Step1)

If [TUNE -] key is pressed, the order will be reversed.

[Preparation of Update]

1. Connect the USB storage device to your PC. If there is any data in the USB storage device, remove it.
2. Download the firmware file (package file) from the service website normally accessed.

   Filename is as follows: PIOAVR1022**********.zip

   Unzip the downloaded file. A following file is created.

   PIOAVR1022**********.of0
   PIOAVR1022**********.of1
   PIOAVR1022**********.of2
   PIOAVR1022**********.of3
   PIOAVR1022**********.of4

3. Copy it to the USB storage device. Be careful not to copy the zip file.

4. Remove the USB storage device from your PC.

How to Update (service mode) 1/2

Overwriting is also possible.

1. Connect the USB storage to the USB port on the unit.

2. Turn on the unit. It takes some time to start after you switch on the unit.

   Press: [DIMMER] + [ON/STANDBY] x 2

3. Press [RETURN] button, Then it is displayed as below

If you need each module of the firmware update, you can select the module by pressing PRESET < and > button.

If you need change source NET or USB, you can select the source by pressing TUNE UP and Down key

It should be updated firmware by selecting USB -> ALL normally.

Please do NOT choose T-SRV(it is test server)

USB -> ALL: ALL firmware update (default)
USB -> DSP1: DSP1 firmware update
USB -> DSP2: DSP2 firmware update
USB -> DSP3: DSP3 firmware update
USB -> OSD: OSD firmware update
USB -> VMPU: VMPU firmware update
USB -> NET: NET firmware update
USB -> MMPU: Main MPU firmware update
USB -> WORK: Compare between AVR and USB, Only update new version firmware

NET -> ALL: ALL firmware update (default)
NET -> DSP1: DSP1 firmware update
NET -> DSP2: DSP2 firmware update
NET -> DSP3: DSP3 firmware update
NET -> OSD: OSD firmware update
NET -> VMPU: VMPU firmware update
NET -> NET: NET firmware update
NET -> MMPU: Main MPU firmware update
NET -> WORK: Compare between AVR and server, Only update new version firmware
The default setting is “ ALL”

CAUTION: When you will update each module firmware, you have to keep combination of firmware.

4. Press [ENTER] button. Start update firmware.

5. Wait until update is completed. When the update ends, “Completed!” is displayed. When “ Completed!” message appeared, you can power off by pressing “ ON/STANDBY” button.

6. Press [ON/STANDBY] button, and the unit turns on.

7. Check the new FW version number.

<Note>

If the procedure might not be successful, please select “USB -> ALL”.

MODEL No.SC-LX701/801/901,TX-RZ1100/3100,DRX-7/R1,PR-RZ5100,DRC-R1

SCHEMATIC DIAGRAM(PART-1) MPU SECTION

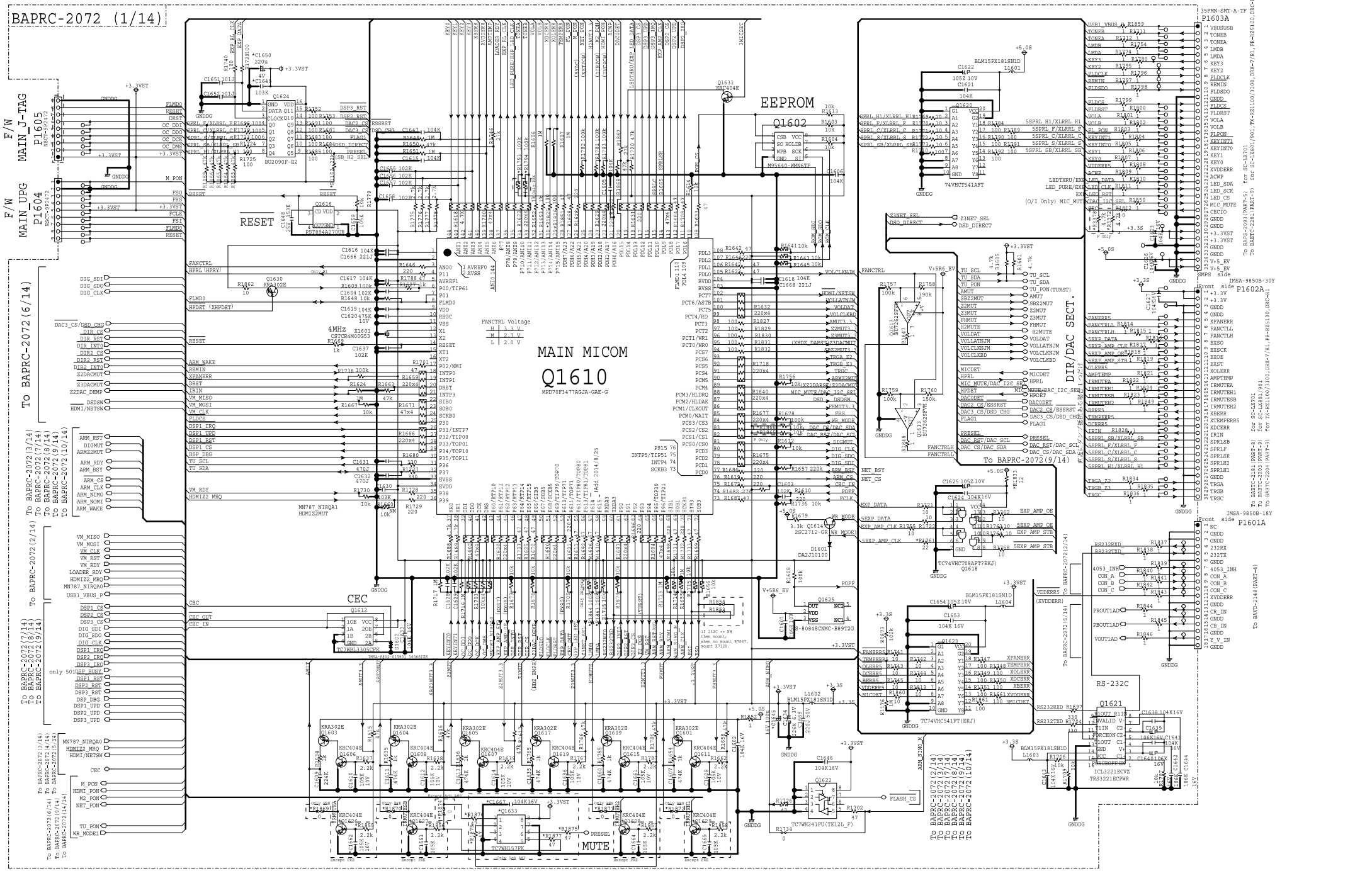

MODEL No.SC-LX701/801/901,TX-RZ1100/3100,DRX-7/R1,PR-RZ5100,DRC-R1

SCHEMATIC DIAGRAM(PART-1) VMPU SECTION

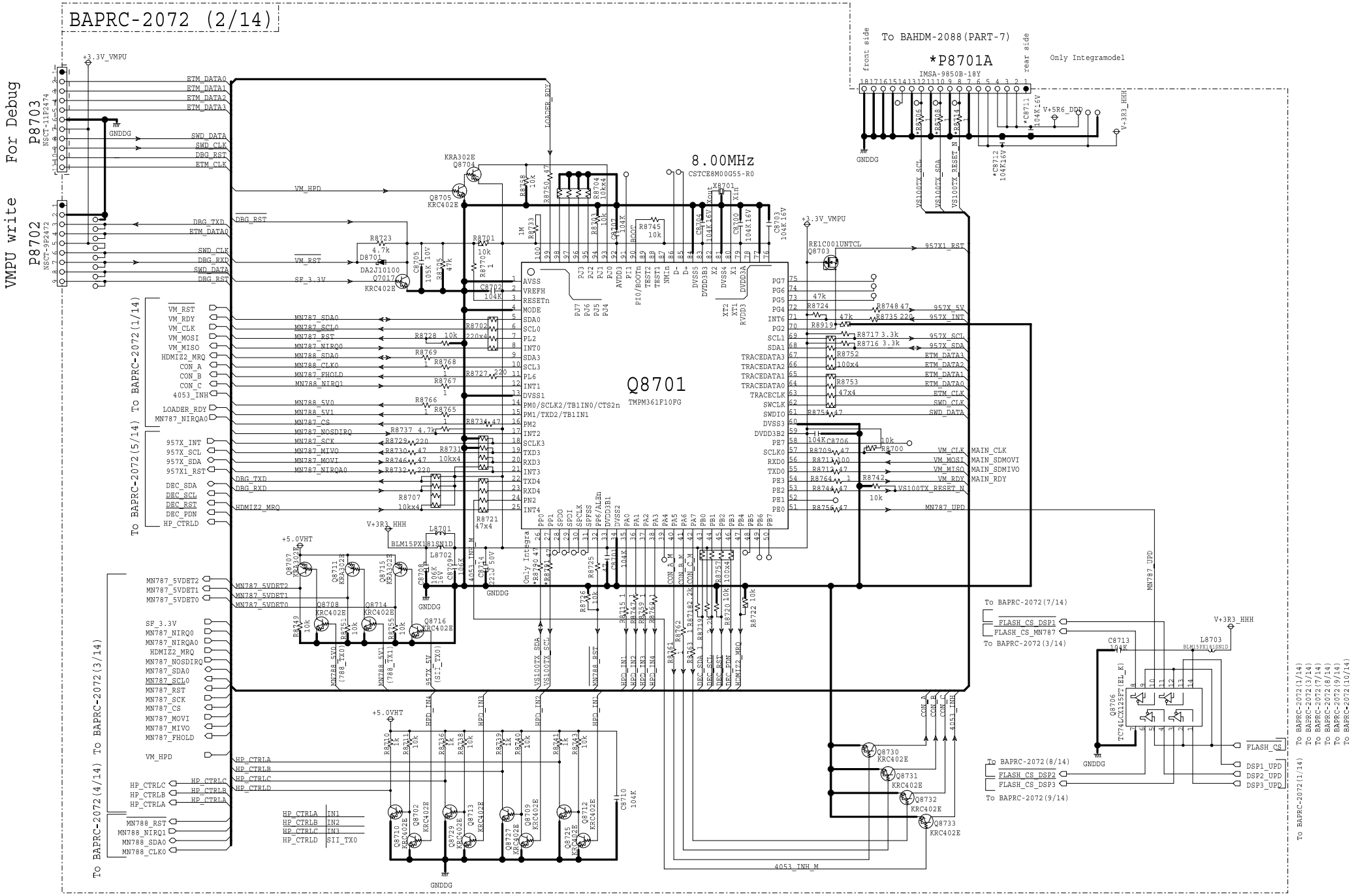

MODEL No.SC-LX701/801/901,TX-RZ1100/3100,DRX-7/R1,PR-RZ5100,DRC-R1

SCHEMATIC DIAGRAM(PART-1) VSP SECTION

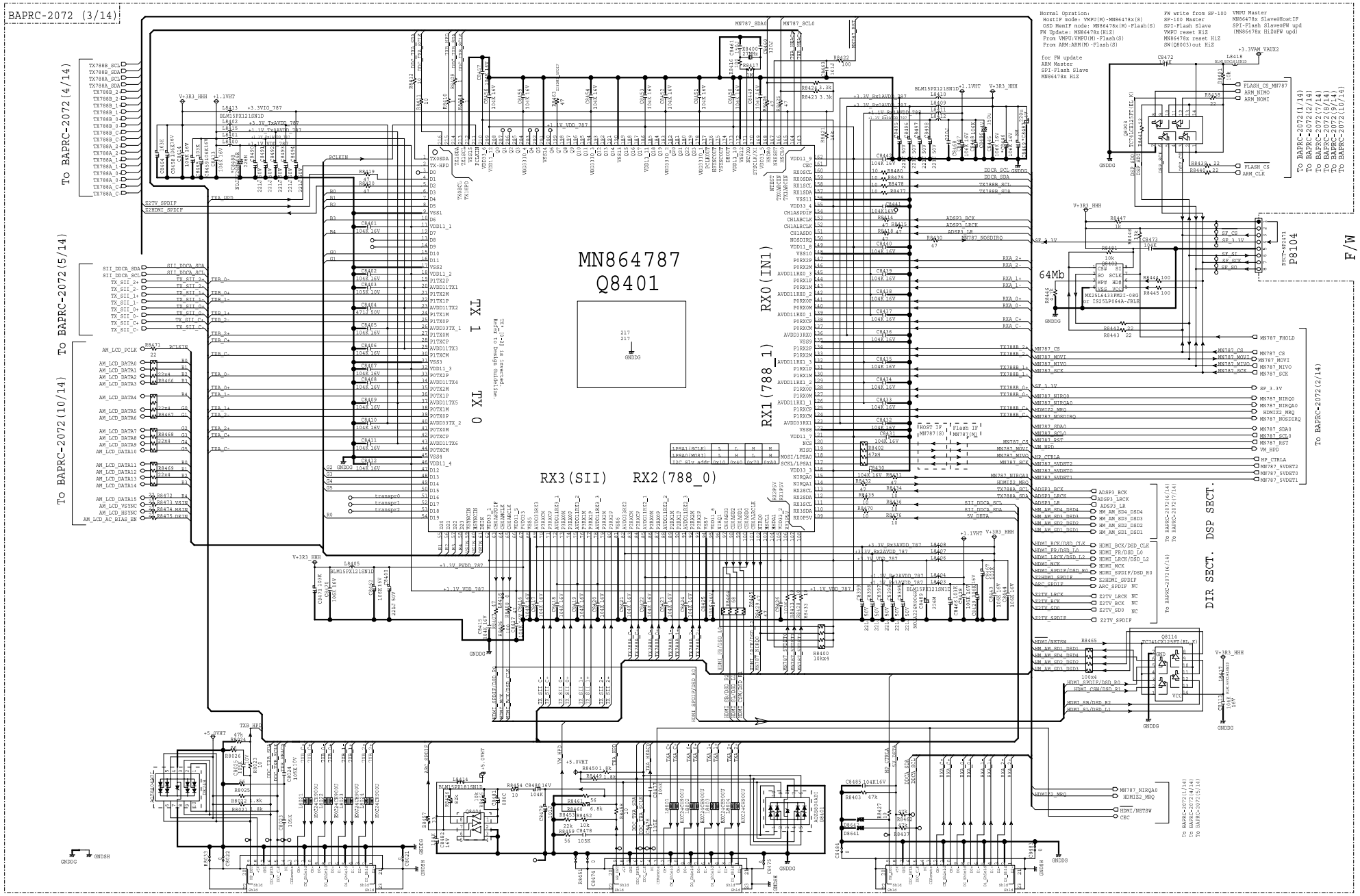

MODEL No.SC-LX701/801/901,TX-RZ1100/3100,
DRX-7/R1,PR-RZ5100,DRC-R1

SCHEMATIC DIAGRAM(PART-1) HDMI RX1 SECTION

BAPRC-2072 (4/14)

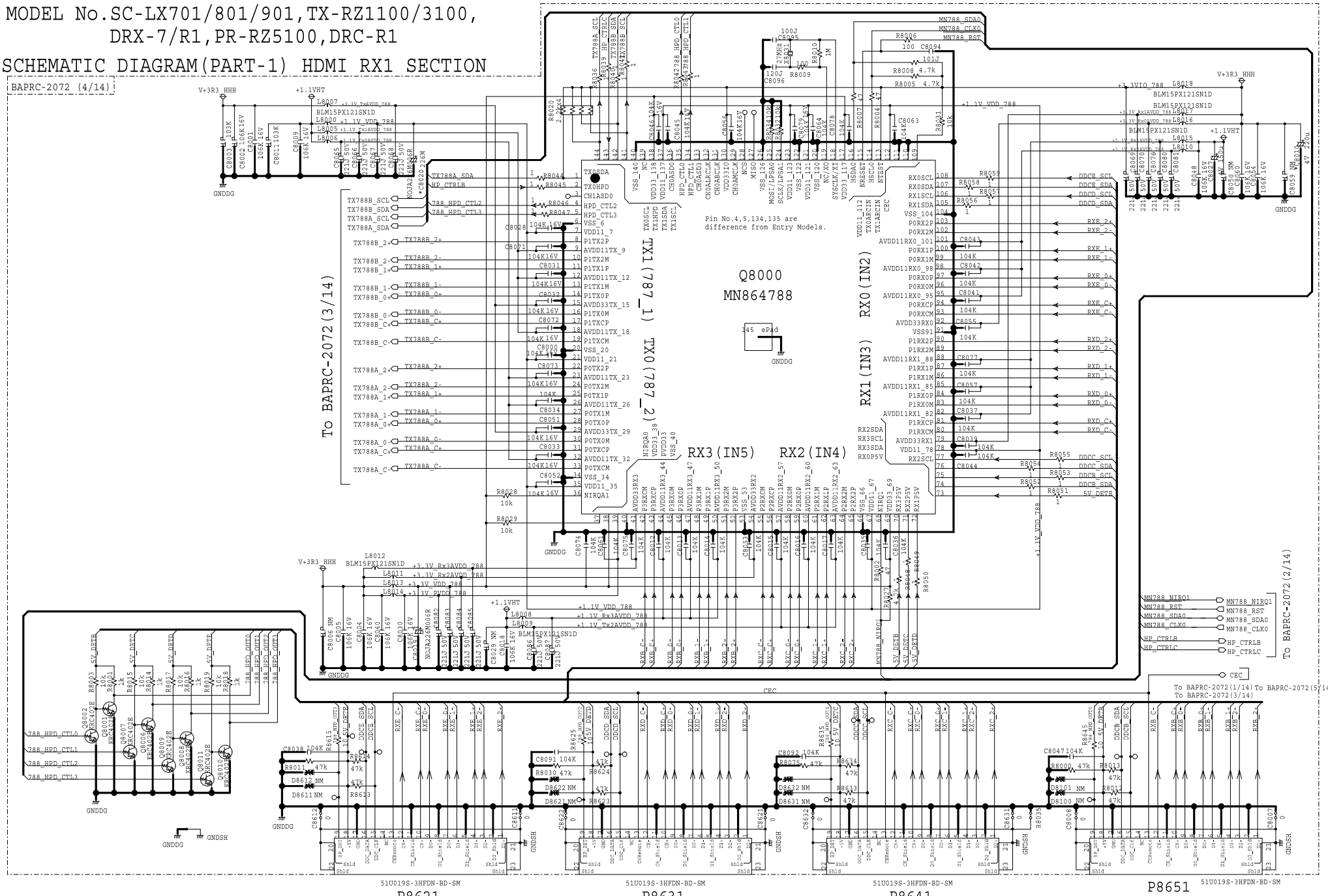

MODEL No.SC-LX701/801/901,TX-RZ1100/3100,DRX-7/R1,PR-RZ5100,DRC-R1

SCHEMATIC DIAGRAM (PART-1)
HDMI RX2 SECTION

BAPRC-2072 (5/14)

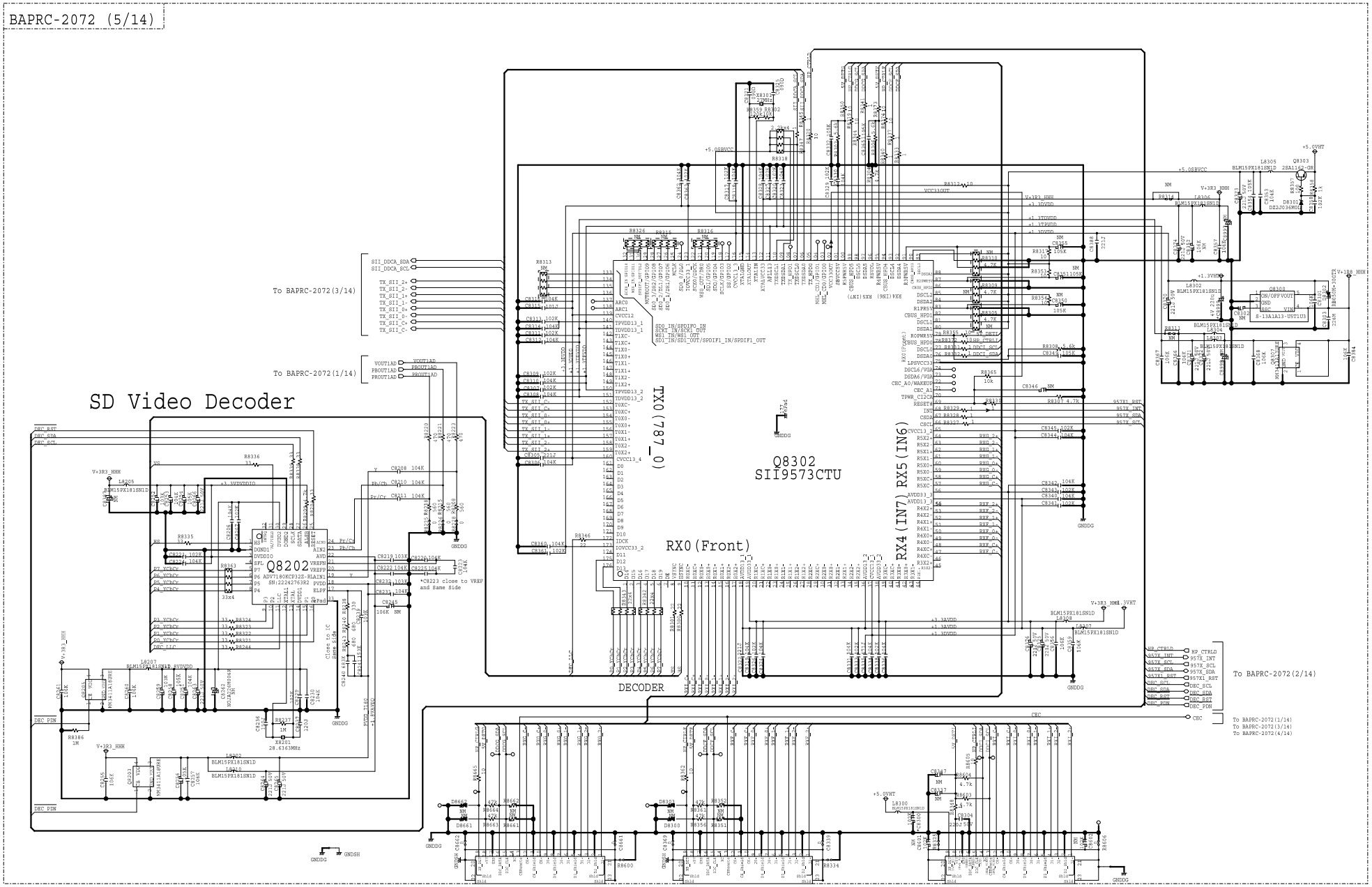

BAHDM-2086(PART-6) for TX-RZ1100/3100,DRX-7/R1,PR-RZ5100,DRC-R1
BAHDM-2087(PART-6) for SC-LX501/701/801/901

MODEL No.SC-LX701/801/901,TX-RZ1100/3100,DRX-7/R1,PR-RZ5100,DRC-R1 SCHEMATIC DIAGRAM (PART-1) DIR SECTION

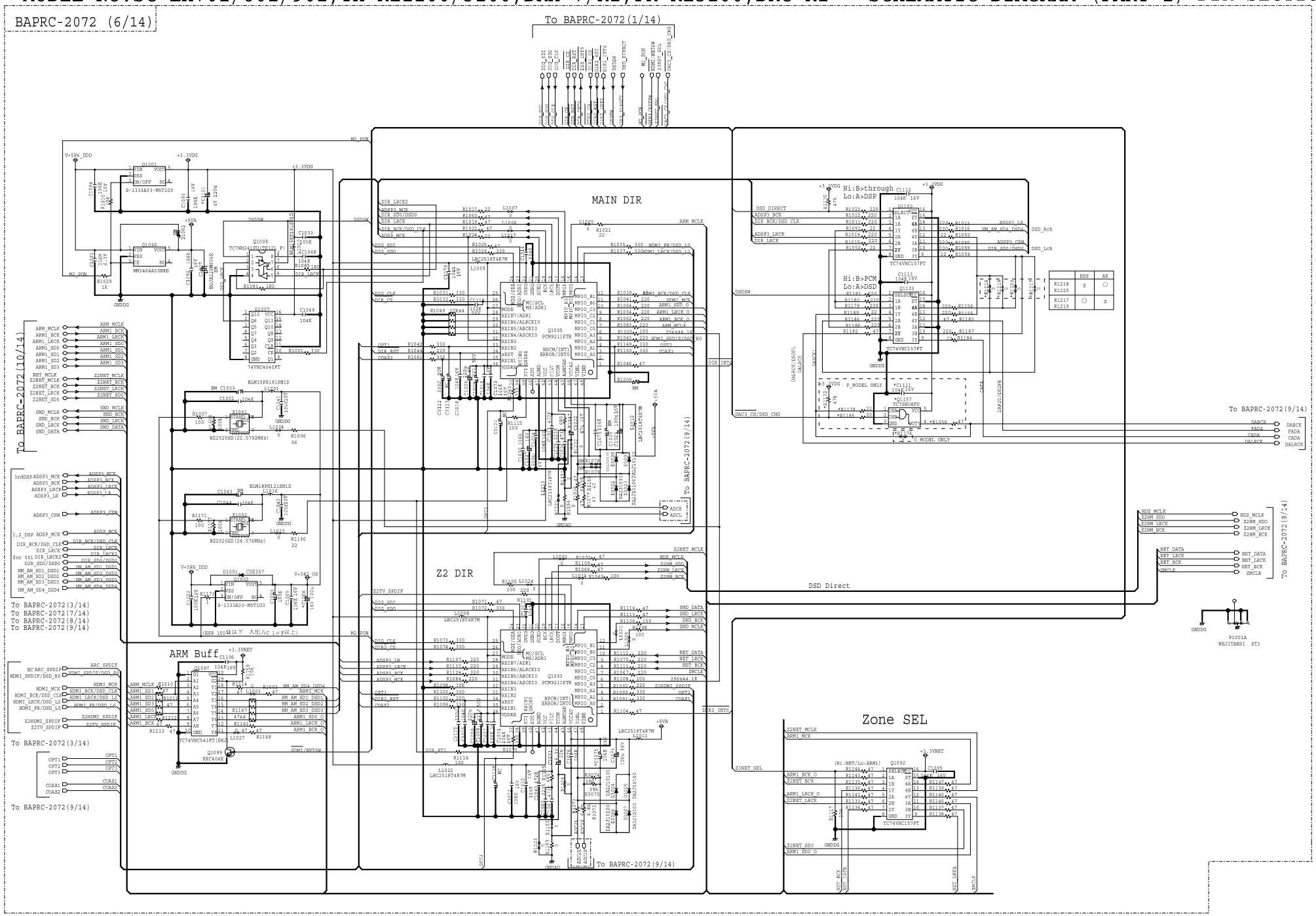

MODEL No.SC-LX701/801/901,TX-RZ1100/3100,DRX-7/R1,PR-RZ5100,DRC-R1 SCHEMATIC DIAGRAM (PART-1) 1stDSP SECTION

BAPRC-2072 (7/14)

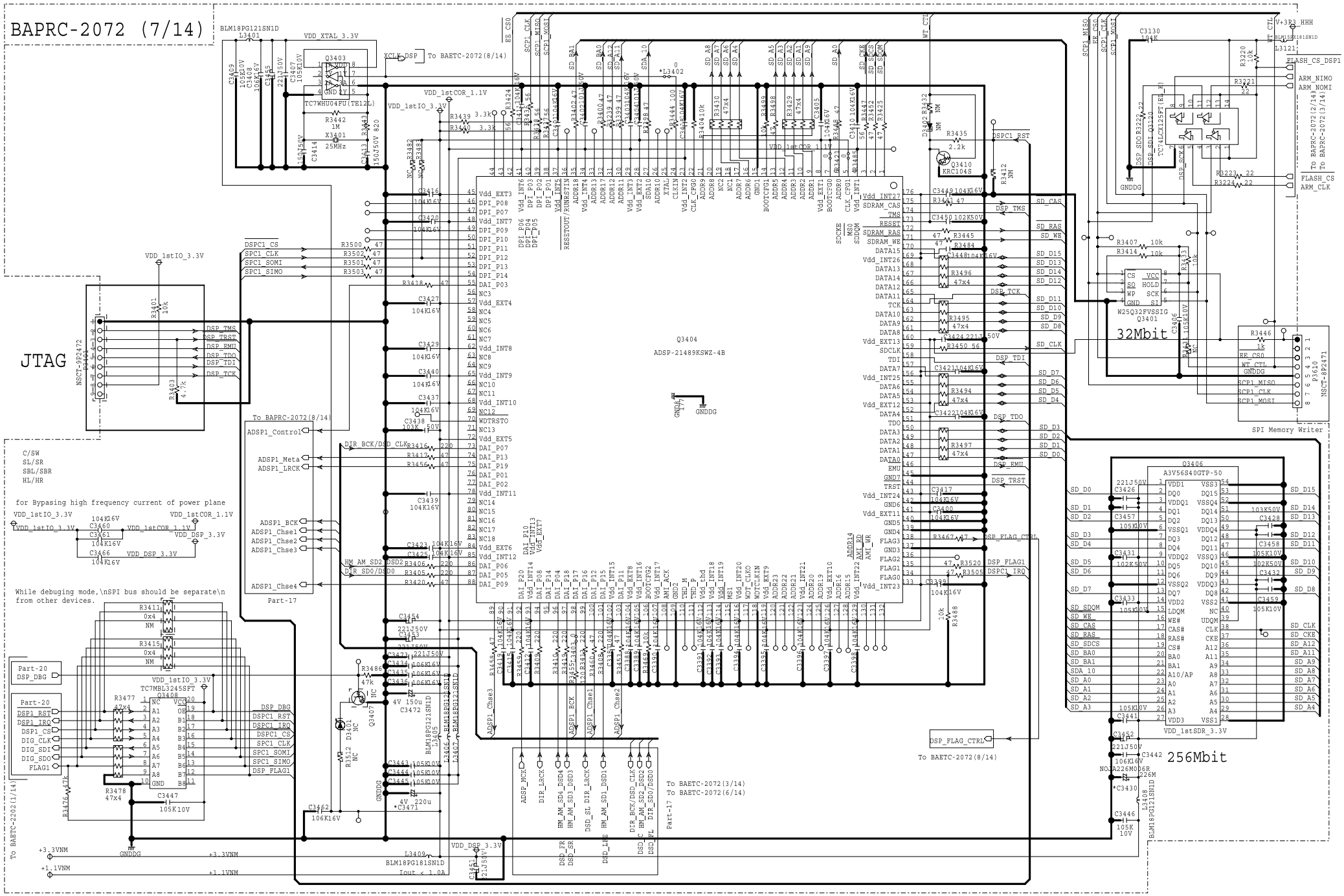

MODEL No.SC-LX701/801/901,TX-RZ1100/3100,DRX-7/R1,PR-RZ5100,DRC-R1 SCHEMATIC DIAGRAM (PART-1) 2ndDSP SECTION

BAPRC-2072 (8/14)

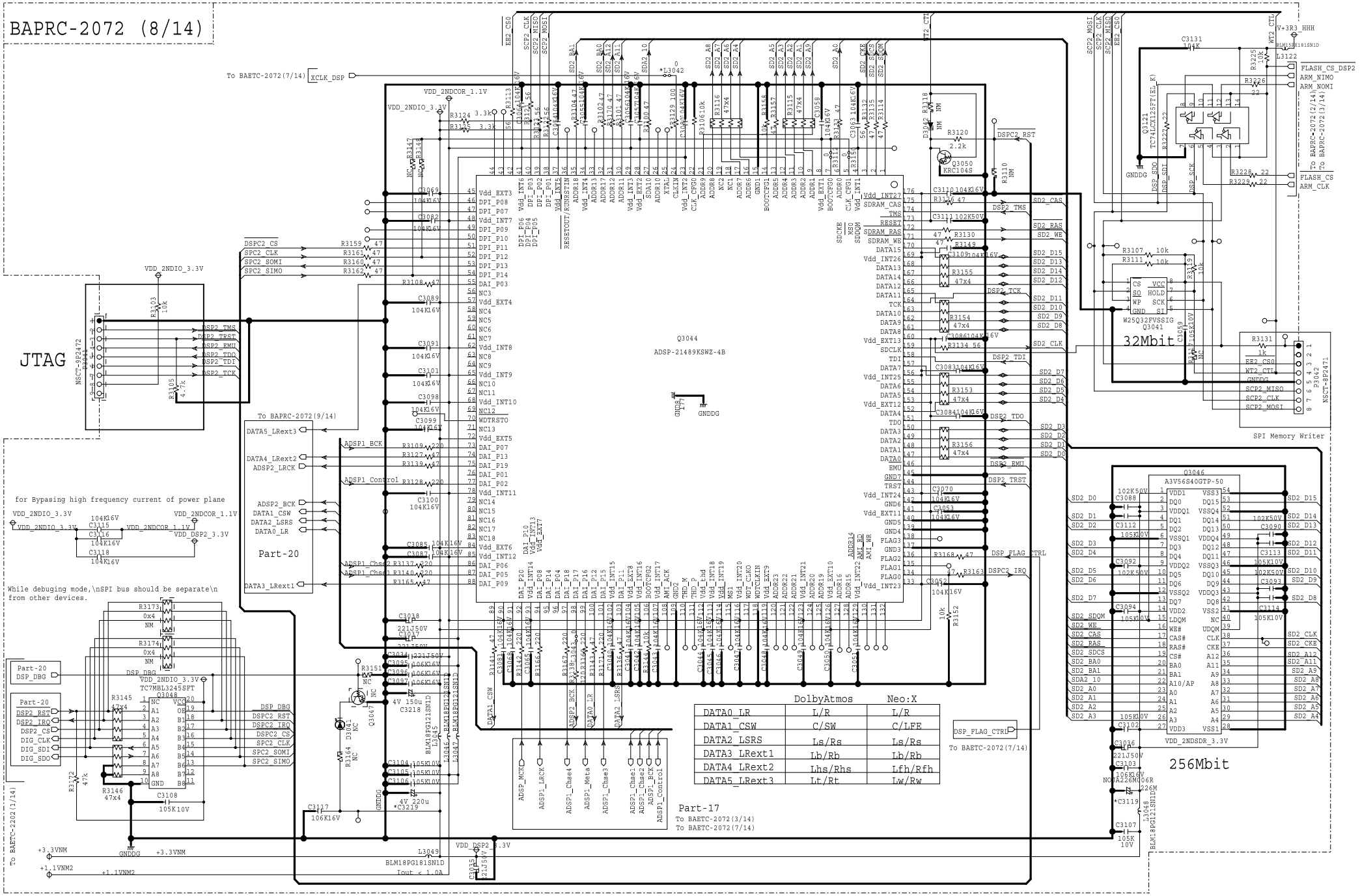

MODEL No.SC-LX701/801/901,TX-RZ1100/3100,DRX-7/R1,PR-RZ5100,DRC-R1

SCHEMATIC DIAGRAM (PART-1) 3rdDSP SECTION

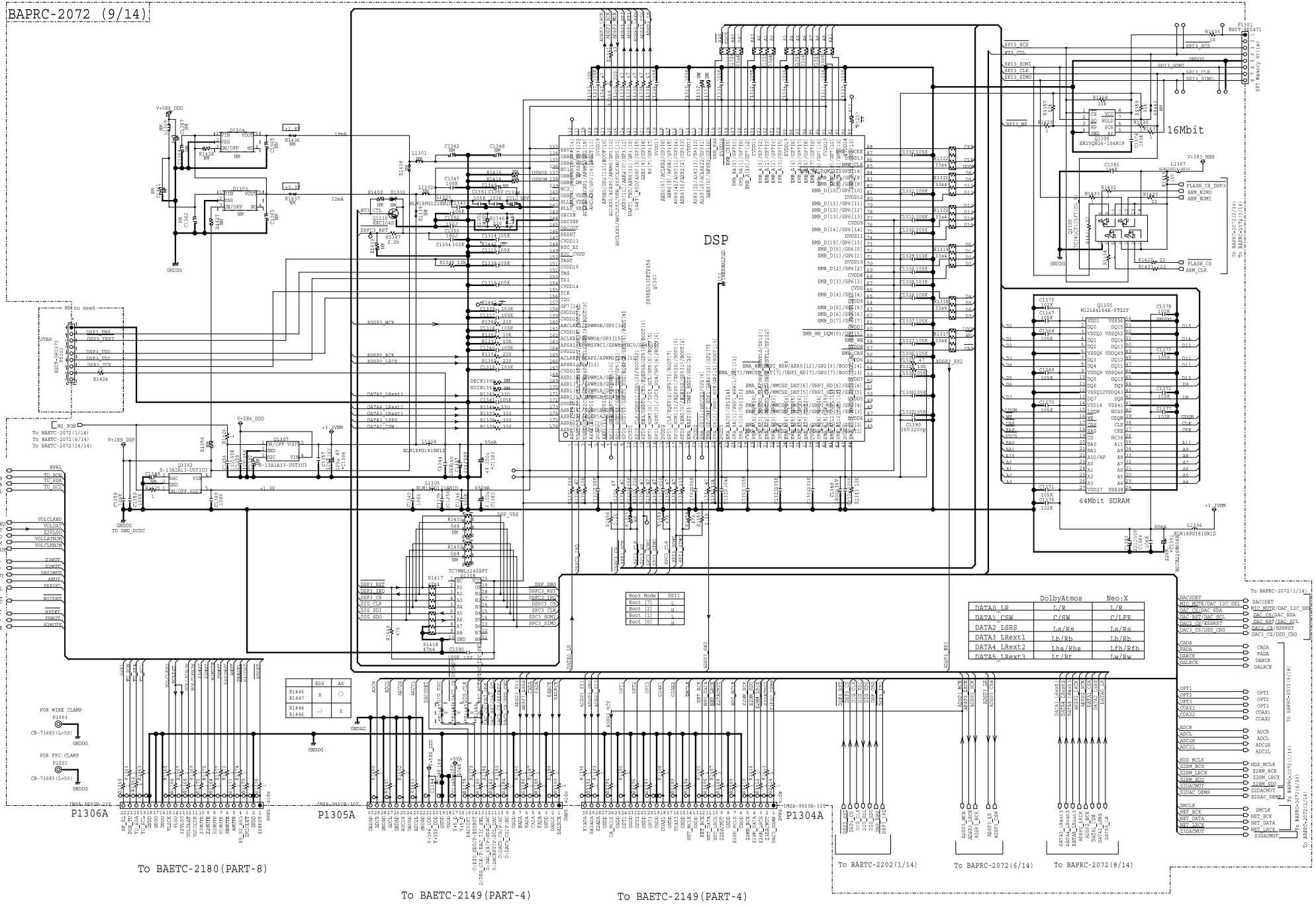

Boot Mode	SPI1
Boot [3]	L
Boot [2]	L
Boot [1]	L
Boot [0]	H

	DolbyAtmos	Neo:X
DATA0_LR	L/R	L/R
DATA1_CSW	C/SW	C/LFE
DATA2_LSRS	Ls/Rs	Ls/Rs
DATA3_LRext1	Lb/Rb	Lb/Rb
DATA4_LRext2	Lhs/Rhs	Lfh/Rfh
DATA5_LRext3	Lr/Rr	Lw/Rw

	ESS	AK
R1445 R1447	X	○
R1444 R1446	○	X

MODEL No.SC-LX701/801/901,TX-RZ1100/3100,DRX-7/R1,PR-RZ5100,DRC-R1 SCHEMATIC DIAGRAM (PART-1) ARM IO SECTION

BAPRC-2072 (10/14)

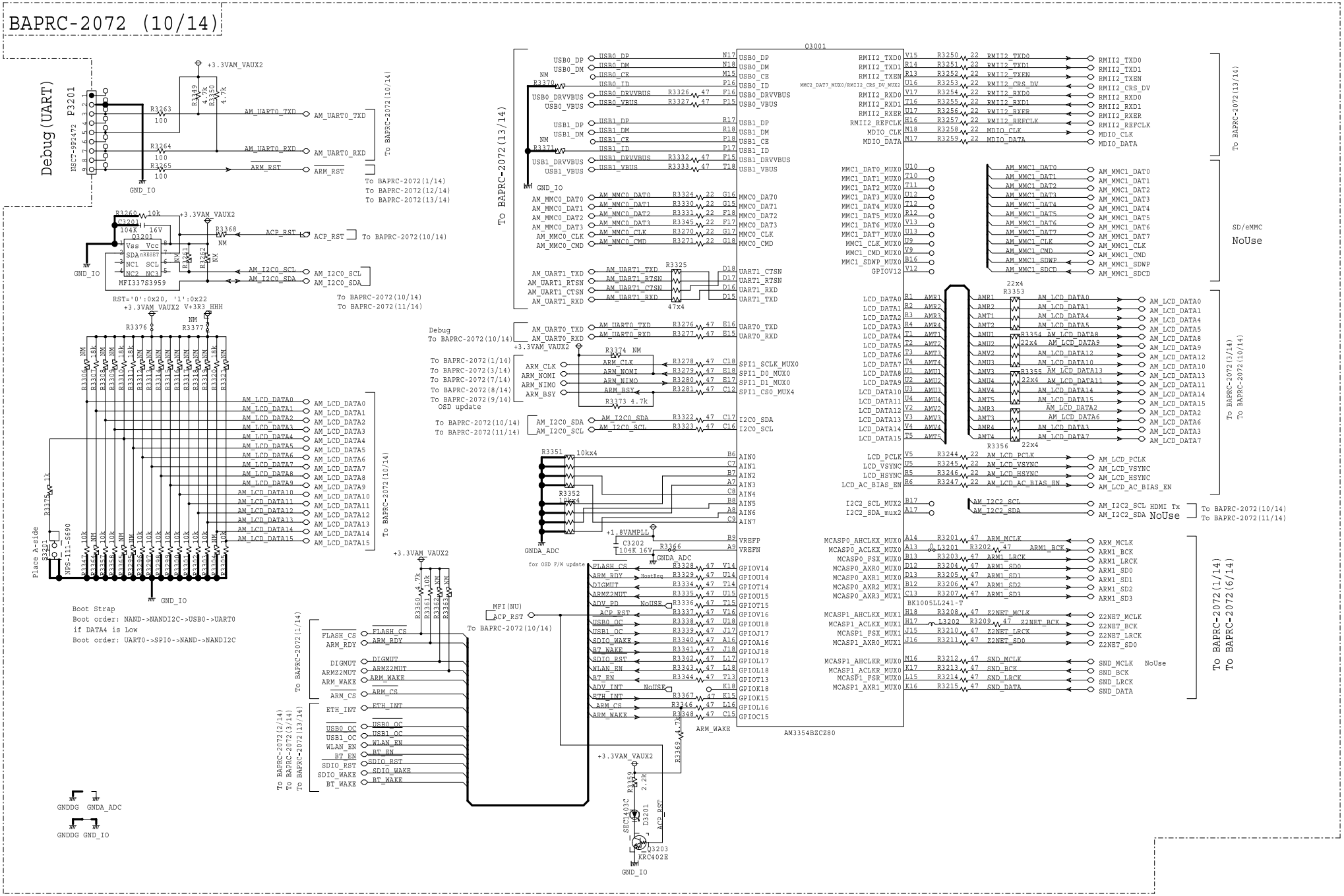

MODEL No.SC-LX701/801/901,TX-RZ1100/3100,DRX-7/R1,PR-RZ5100,DRC-R1 SCHEMATIC DIAGRAM (PART-1) ARM PS SECTION

BAPRC-2072 (11/14)

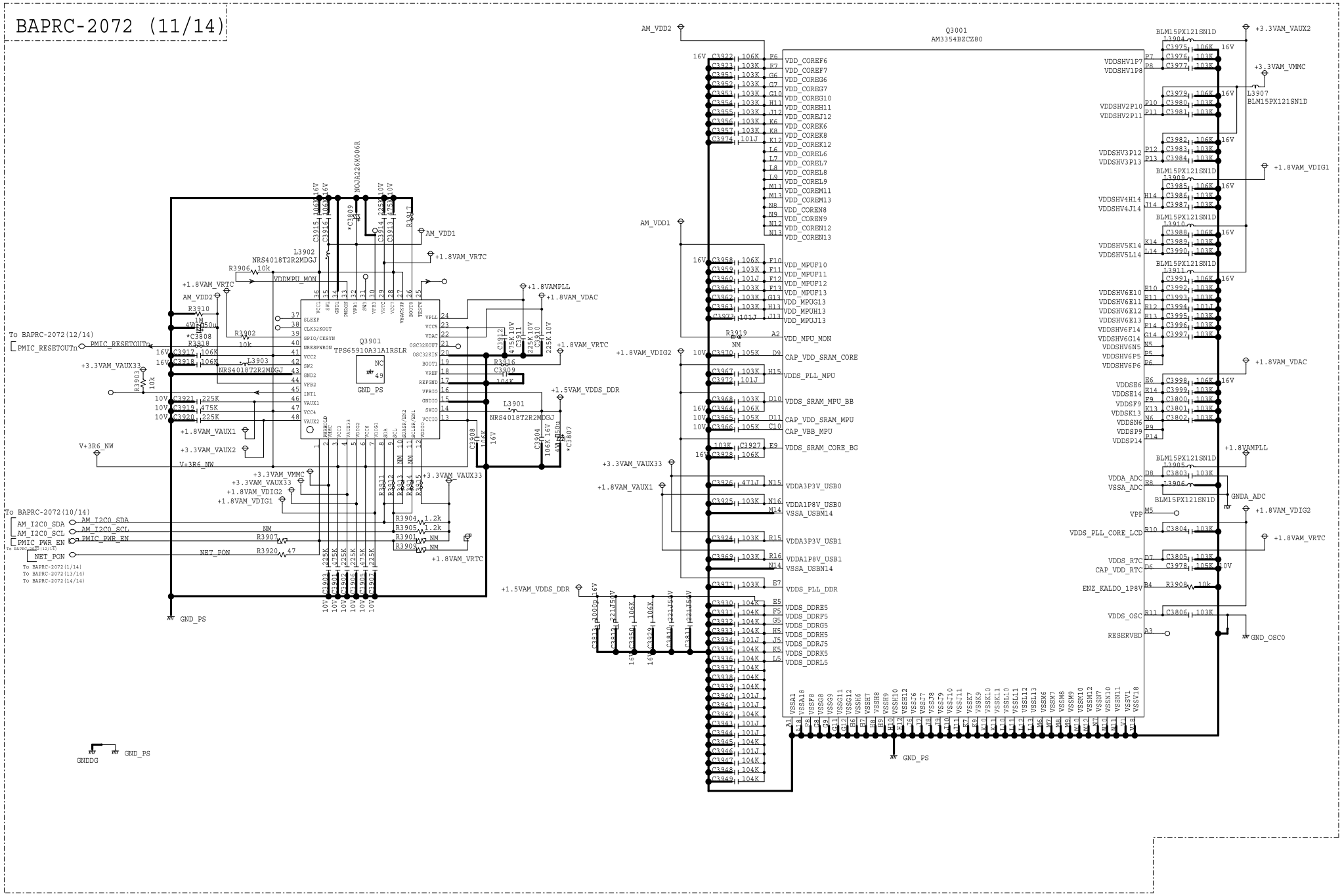

MODEL No.SC-LX701/801/901,TX-RZ1100/3100,DRX-7/R1,PR-RZ5100,DRC-R1

SCHEMATIC DIAGRAM (PART-1)
ARM Memory SECTION

BAPRC-2072 (12/14)

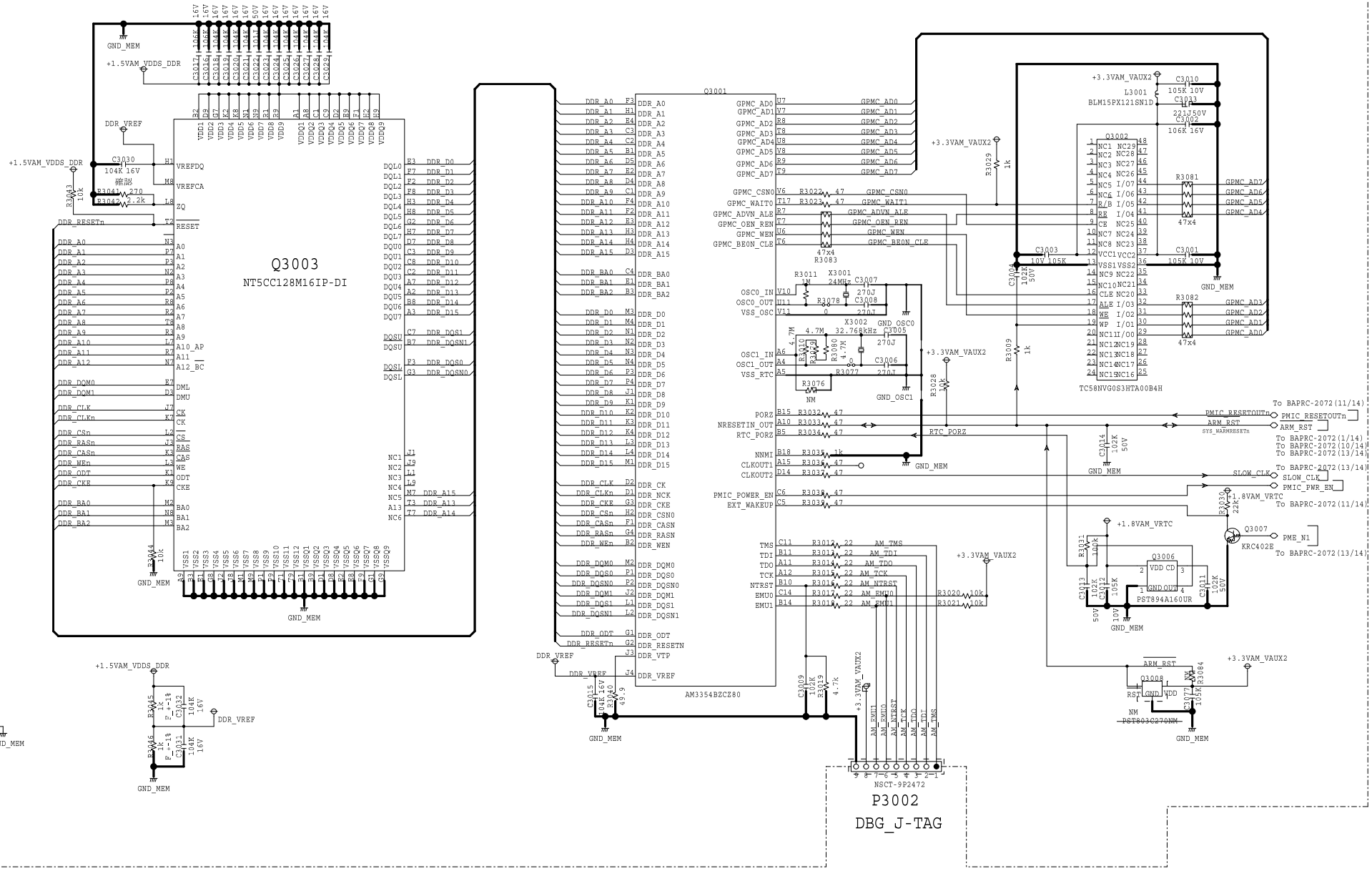

MODEL No.SC-LX701/801/901,TX-RZ1100/3100,DRX-7/R1,PR-RZ5100,DRC-R1

SCHEMATIC DIAGRAM (PART-10)

BAPRC-2072 (13/14)

ARM USB/Ethwernet/WiFi SECTION

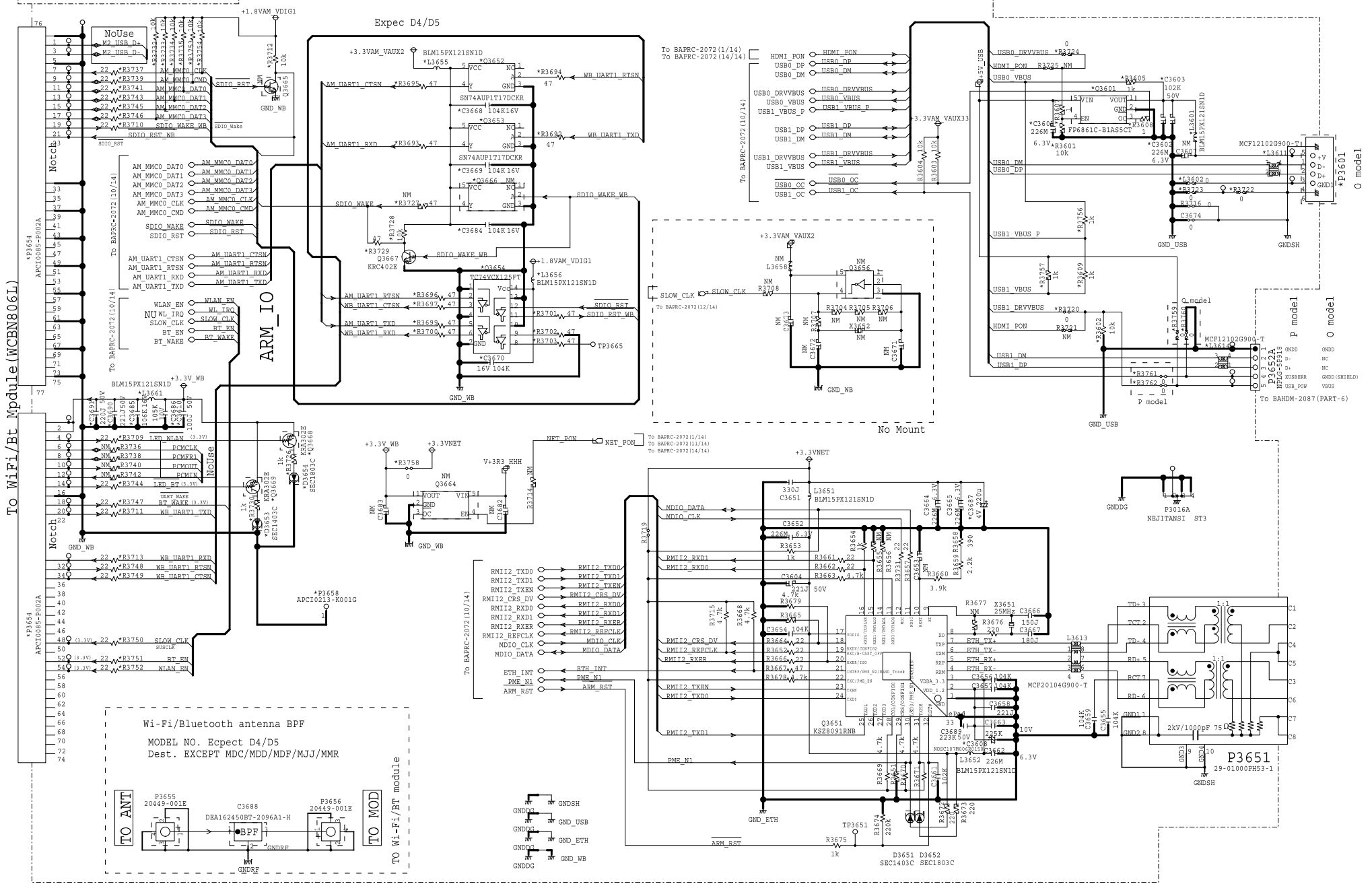

MODEL No.SC-LX701/801/901,TX-RZ1100/3100,DRX-7/R1,PR-RZ5100,DRC-R1

SCHEMATIC DIAGRAM (PART-1)

POWER SECTION

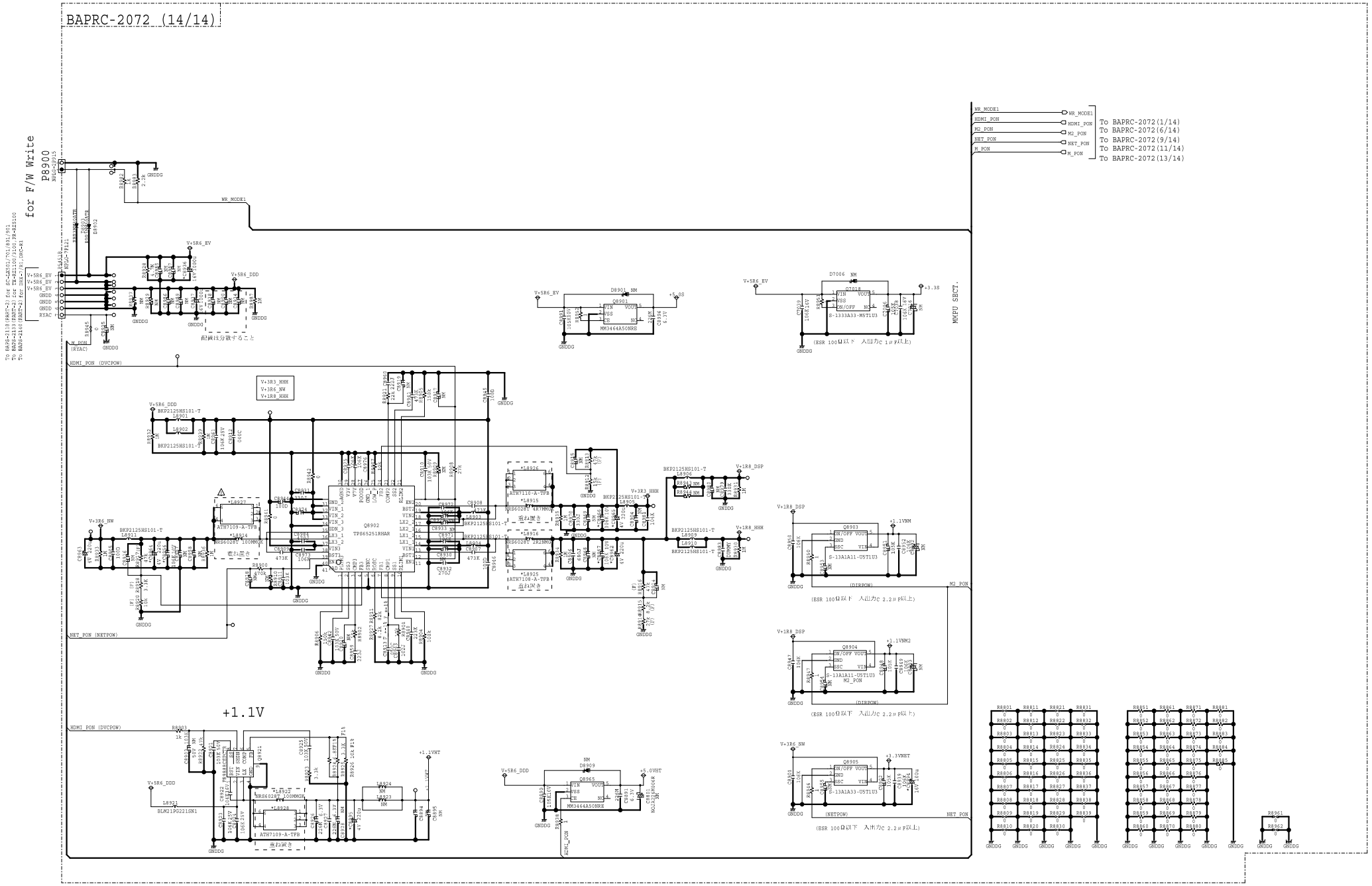

MODEL No.SC-LX501/701/801/901 SCHEMATIC DIAGRAM(PART-2) DISPLAY SECTION

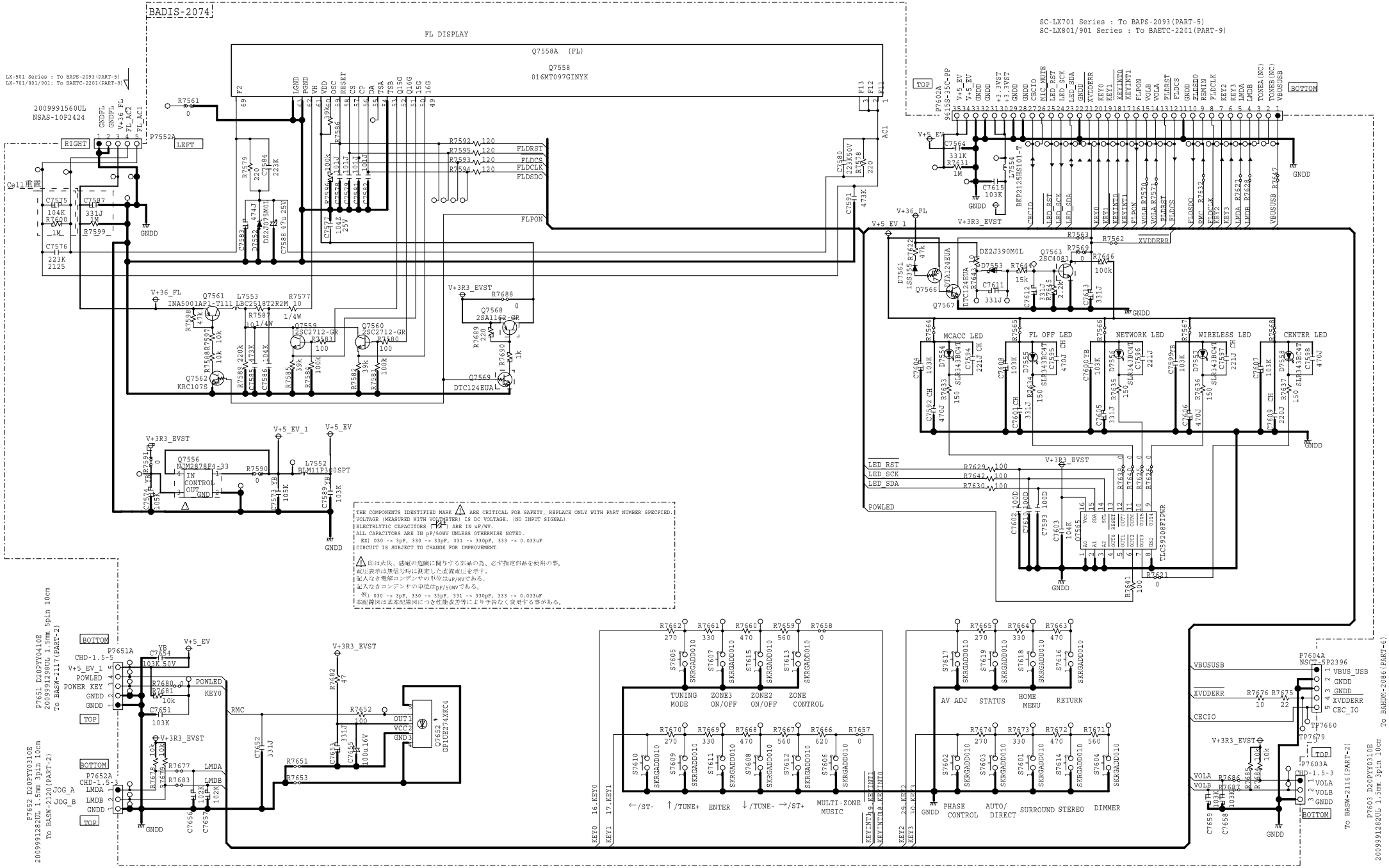

MODEL No.SC-LX501/701/801/901

SCHEMATIC DIAGRAM(PART-2) VOL SECTION

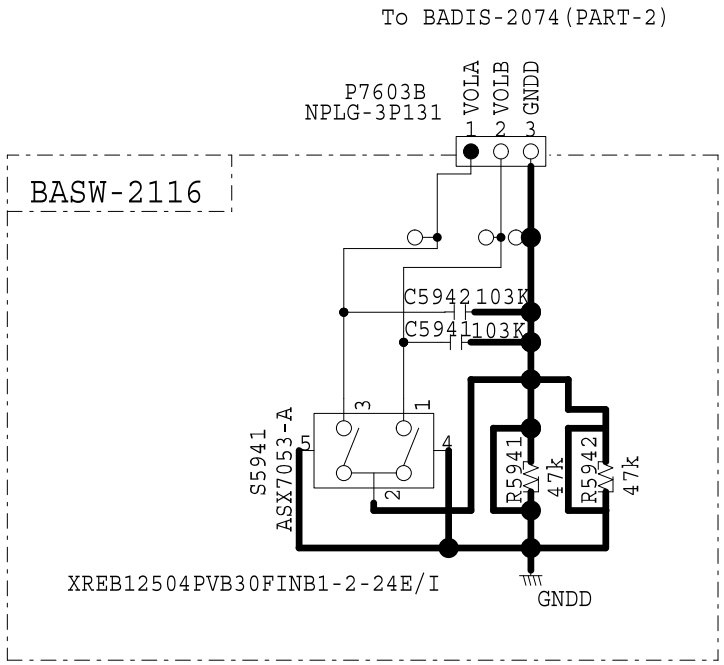

MODEL No.SC-LX501/701/801/901
SCHEMATIC DIAGRAM(PART-2) POWER SW SECTION

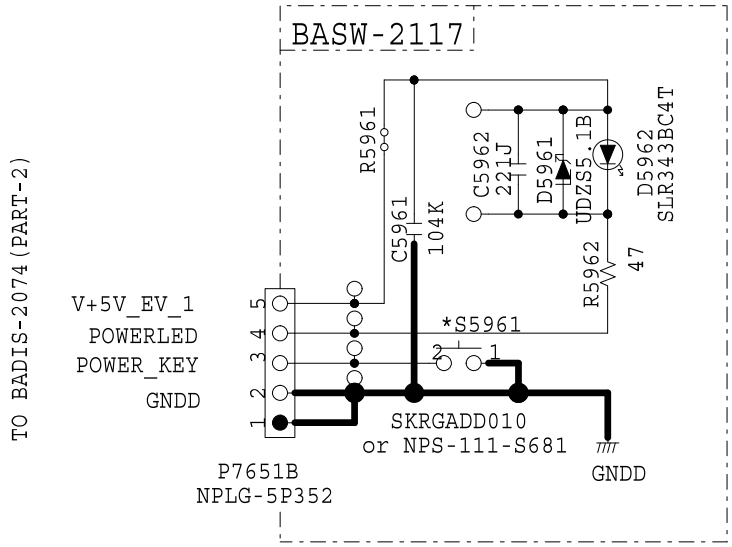

MODEL No.SC-LX501/701/801/901 SCHEMATIC DIAGRAM(PART-2) PRIMARY SECTION

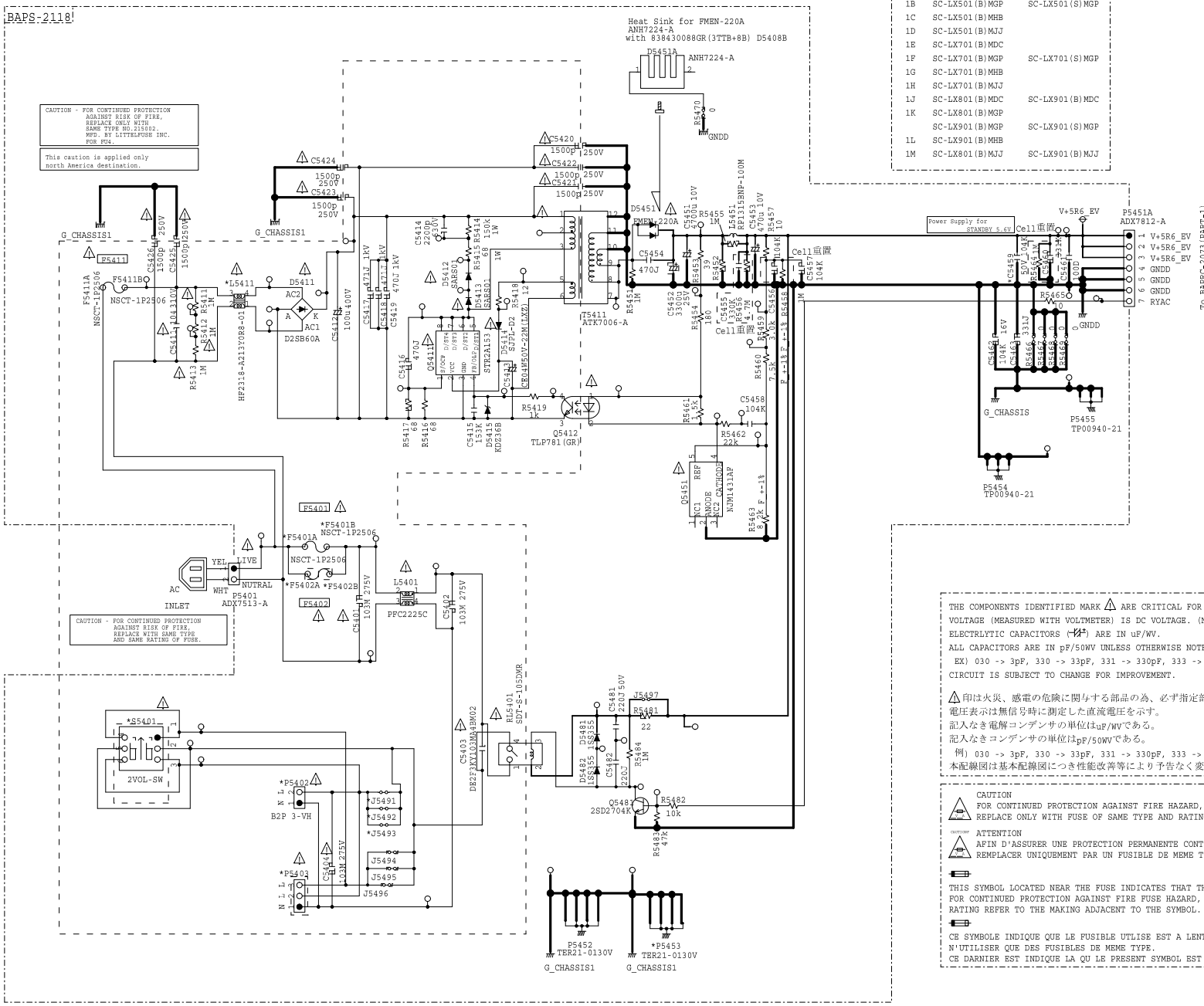

1A	SC-LX501(B)MDC	
1B	SC-LX501(B)MGP	SC-LX501(S)MGP
1C	SC-LX501(B)MHB	
1D	SC-LX501(B)MJJ	
1E	SC-LX701(B)MDC	
1F	SC-LX701(B)MGP	SC-LX701(S)MGP
1G	SC-LX701(B)MHB	
1H	SC-LX701(B)MJJ	
1J	SC-LX801(B)MDC	SC-LX901(B)MDC
1K	SC-LX801(B)MGP	
	SC-LX901(B)MGP	SC-LX901(S)MGP
1L	SC-LX901(B)MHB	
1M	SC-LX801(B)MJJ	SC-LX901(B)MJJ

reference	1A	1B	1C
*L5411	HF2318-A213Y0R8-01	HF2318-A303Y0R6-01	HF2318-A303Y0R6-01
*C5459	CKZ25B50V-104K	CKZ25B50V-104K	CKZ25B50V-104K
*S5401	-	-	SDKPA407D0
*J5491	TA_WIRE	TA_WIRE	-
*J5492	TA_WIRE	TA_WIRE	-
*J5491	TA_WIRE	TA_WIRE	-
*P5401A	NSCT-1P2506	NSCT-1P2506	NSCT-1P2506
*P5401B	NSCT-1P2506	NSCT-1P2506	NSCT-1P2506
*P5402A	-	-	-
*P5402B	-	-	-
*P5402	NPLG-2P631	-	-
*P5403	-	B3P5-VH(LF)	B3P5-VH(LF)
*P5453	TER21-0130V	TER21-0130V	-

reference	1D	1E	1F
*L5411	HF2318-A213Y0R8-01	HF2318-A213Y0R8-01	HF2318-A303Y0R6-01
*C5459	CKZ25B50V-104K	35MU104KZ22012	35MU104KZ22012
*S5401	-	-	-
*J5491	TA_WIRE	TA_WIRE	TA_WIRE
*J5492	TA_WIRE	TA_WIRE	TA_WIRE
*J5491	TA_WIRE	TA_WIRE	TA_WIRE
*P5401A	NSCT-1P2506	NSCT-1P2506	NSCT-1P2506
*P5401B	NSCT-1P2506	NSCT-1P2506	NSCT-1P2506
*P5402A	-	-	-
*P5402B	-	-	-
*P5402	NPLG-2P631	-	-
*P5403	-	B3P5-VH(LF)	B3P5-VH(LF)
*P5453	TER21-0130V	TER21-0130V	-

reference	1G	1H	1J
*L5411	HF2318-A303Y0R6-01	HF2318-A213Y0R8-01	HF2318-A213Y0R8-01
*C5459	35MU104KZ22012	35MU104KZ22012	35MU104KZ22012
*S5401	SDKPA407D0	-	-
*J5491	-	TA_WIRE	TA_WIRE
*J5492	-	TA_WIRE	TA_WIRE
*J5491	-	TA_WIRE	TA_WIRE
*P5401A	NSCT-1P2506	NSCT-1P2506	NSCT-1P2506
*P5401B	NSCT-1P2506	NSCT-1P2506	NSCT-1P2506
*P5402A	-	-	-
*P5402B	-	-	-
*P5402	-	NPLG-2P631	NPLG-2P631
*P5403	B3P5-VH(LF)	-	-
*P5453	-	TER21-0130V	TER21-0130V

reference	JK	JL	JM
*L5411	HF2318-A303Y0R6-01	HF2318-A303Y0R6-01	HF2318-A213Y0R8-01
*C5459	35MU104KZ22012	35MU104KZ22012	35MU104KZ22012
*S5401	-	SDKPA407D0	-
*J5491	TA_WIRE	-	TA_WIRE
*J5492	TA_WIRE	-	TA_WIRE
*J5491	TA_WIRE	-	TA_WIRE
*P5401A	NSCT-1P2506	NSCT-1P2506	-
*P5401B	NSCT-1P2506	NSCT-1P2506	-
*P5402A	-	-	D1220D88Z
*P5402B	-	-	D1220D88Z
*P5402	-	-	NPLG-2P631
*P5403	-	B3P5-VH(LF)	-
*P5453	TER21-0130V	-	TER21-0130V

THE COMPONENTS IDENTIFIED MARK ⚠ ARE CRITICAL FOR SAFETY, REPLACE ONLY WITH PART NUMBER SPECFIED.
VOLTAGE (MEASURED WITH VOLTMETER) IS DC VOLTAGE. (NO INPUT SIGNAL)
ELECTRLYTIC CAPACITORS (⚟) ARE IN uF/WV.
ALL CAPACITORS ARE IN pF/50WV UNLESS OTHERWISE NOTED.
EX) 030 -> 3pF, 330 -> 33pF, 331 -> 330pF, 333 -> 0.033uF
CIRCUIT IS SUBJECT TO CHANGE FOR IMPROVEMENT.

⚠印は火災、感電の危険に関与する部品の為、必ず指定部品を使用の事。
電圧表示は無信号時に測定した直流電圧を示す。
記入なき電解コンデンサの単位はuF/WVである。
記入なきコンデンサの単位はpF/50WVである。
例) 030 -> 3pF, 330 -> 33pF, 331 -> 330pF, 333 -> 0.033uF
本配線図は基本配線図につき性能改善等により予告なく変更する事がある。

⚠ CAUTION
FOR CONTINUED PROTECTION AGAINST FIRE HAZARD,
REPLACE ONLY WITH FUSE OF SAME TYPE AND RATING INDICATED.

⚠ ATTENTION
AFIN D'ASSURER UNE PROTECTION PERMANENTE CONTRE LES RISQUES D'INCENDIE,
REMPLACER UNIQUEMENT PAR UN FUSIBLE DE MEME TYPE ET CALIBRATION COMME INDIQUE.

THIS SYMBOL LOCATED NEAR THE FUSE INDICATES THAT THE FUSE USED IS SLOW OPERATING TYPE
FOR CONTINUED PROTECTION AGAINST FIRE FUSE HAZARD, REPLACE WITH SAME TYPE FUSE.
RATING REFER TO THE MAKING ADJACENT TO THE SYMBOL.

CE SYMBOLE INDIQUE QUE LE FUSIBLE UTLISE EST A LENT, E POUR UNEPROTECTION PERMANENT,
N'UTILISER QUE DES FUSIBLES DE MEME TYPE.
CE DARNIER EST INDIQUE LA QU LE PRESENT SYMBOL EST APPOSE.

MODEL No.SC-LX501/701/801/901 SCHEMATIC DIAGRAM(PART-2) MIC_HP SECTION

reference	1A	1B	1C	1D	1E	1F	1G	1H	1J	1K	1L	1M
*Q5701	NJM4565M-D	NJM4565M-D	NJM4565M-D	NJM4565M-D	NJM4585M	NJM4585M	NJM4585M	NJM4585M	NJM4585M	NJM4585M	NJM4585M	NJM4585M
*R5723,R5724	15Ω	15Ω	15Ω	15Ω	0Ω	0Ω	0Ω	0Ω	15Ω	15Ω	15Ω	15Ω
*Q5705-Q5708	2SD2704K	2SD2704K	2SD2704K	2SD2704K	2SD2704K	2SD2704K	2SD2704K	2SD2704K	NM	NM	NM	NM
*R5717-R5720	6.8kΩ	6.8kΩ	6.8kΩ	6.8kΩ	6.8kΩ	6.8kΩ	6.8kΩ	6.8kΩ	NM	NM	NM	NM

1A	SC-LX501(B)MDC	
1B	SC-LX501(B)MGP	SC-LX501(S)MGP
1C	SC-LX501(B)MHB	
1D	SC-LX501(B)MJJ	
1E	SC-LX701(B)MDC	
1F	SC-LX701(B)MGP	SC-LX701(S)MGP
1G	SC-LX701(B)MHB	
1H	SC-LX701(B)MJJ	
1J	SC-LX801(B)MDC	SC-LX901(B)MDC
1K	SC-LX801(B)MGP	
	SC-LX901(B)MGP	SC-LX901(S)MGP
1L	SC-LX901(B)MHB	
1M	SC-LX801(B)MJJ	SC-LX901(B)MJJ

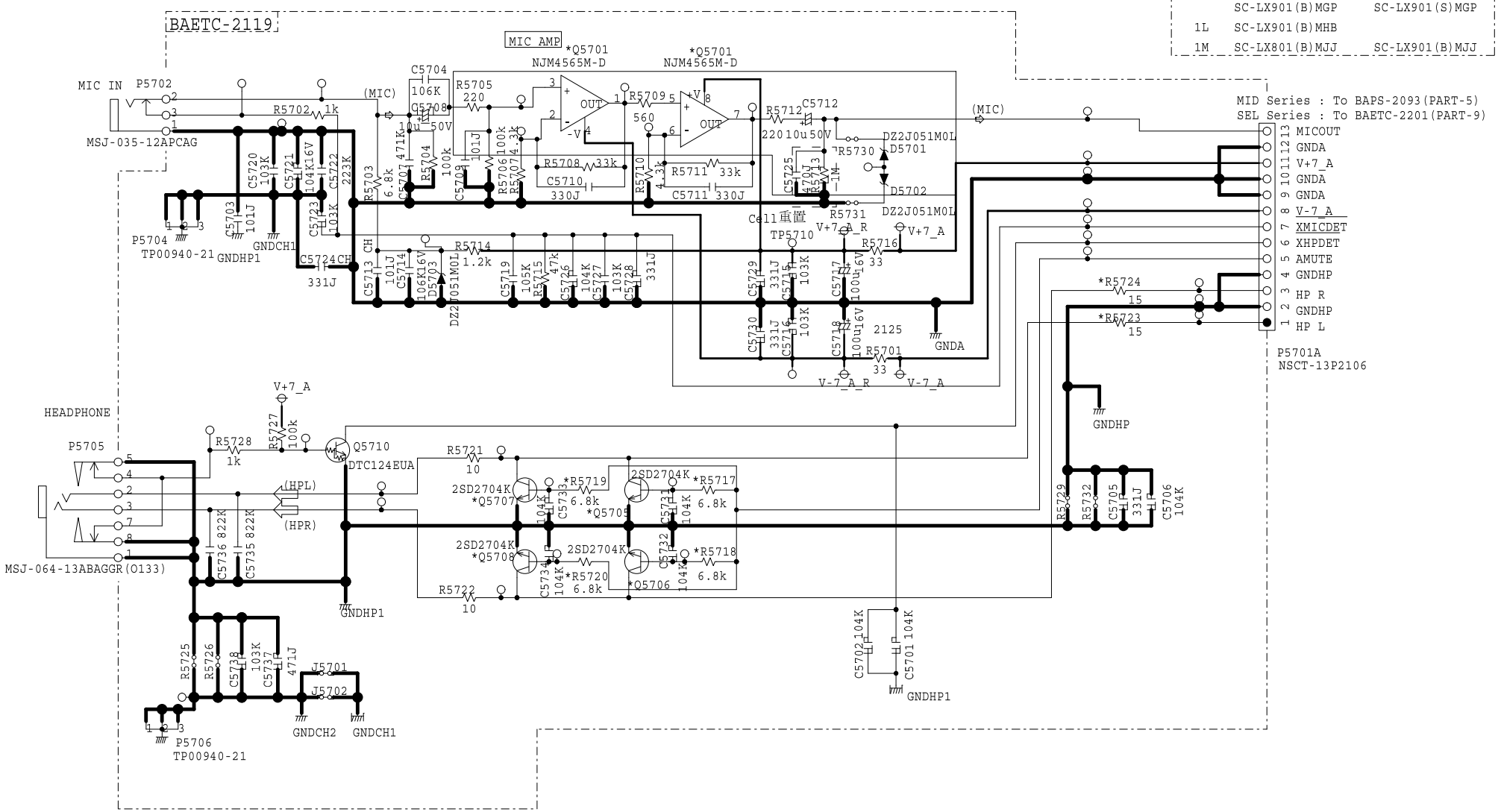

MODEL No.SC-LX501/701/801/901

SCHEMATIC DIAGRAM(PART-2) ENCODER SECTION

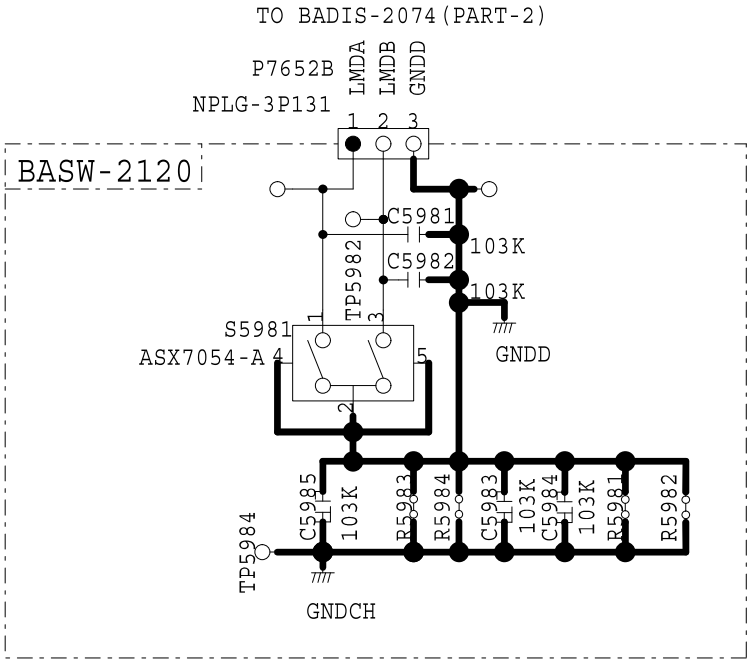

MODEL No.SC-LX501/701/801/901
SCHEMATIC DIAGRAM(PART-2) MIC_HP_GUARD SECTION

MODEL No.SC-LX701/801/901

SCHEMATIC DIAGRAM(PART-2) BIND DM CABLE SECTION

BAETC-2216

*P5901

260261

CB-71683(L=50)

1A,1B,1C,1D No Mount

1A	SC-LX501(B)MDC	
1B	SC-LX501(B)MGP	SC-LX501(S)MGP
1C	SC-LX501(B)MHB	
1D	SC-LX501(B)MJJ	
1E	SC-LX701(B)MDC	
1F	SC-LX701(B)MGP	SC-LX701(S)MGP
1G	SC-LX701(B)MHB	
1H	SC-LX701(B)MJJ	
1J	SC-LX801(B)MDC	SC-LX901(B)MDC
1K	SC-LX801(B)MGP	
	SC-LX901(B)MGP	SC-LX901(S)MGP
1L	SC-LX901(B)MHB	
1M	SC-LX801(B)MJJ	SC-LX901(B)MJJ

reference	1A	1B	1C	1D	1E	1F	1G	1H	1J	1K	1L	1M
*P5901	-	-	-	-	CB-71683(L=50)	CB-71683(L=50)	CB-71683(L=50)	CB-71683(L=50)	CB-71683(L=50)	CB-71683(L=50)	CB-71683(L=50)	CB-71683(L=50)

MODEL No.SC-LX701/801/901

SCHEMATIC DIAGRAM(PART-3) DAC_P SECTION

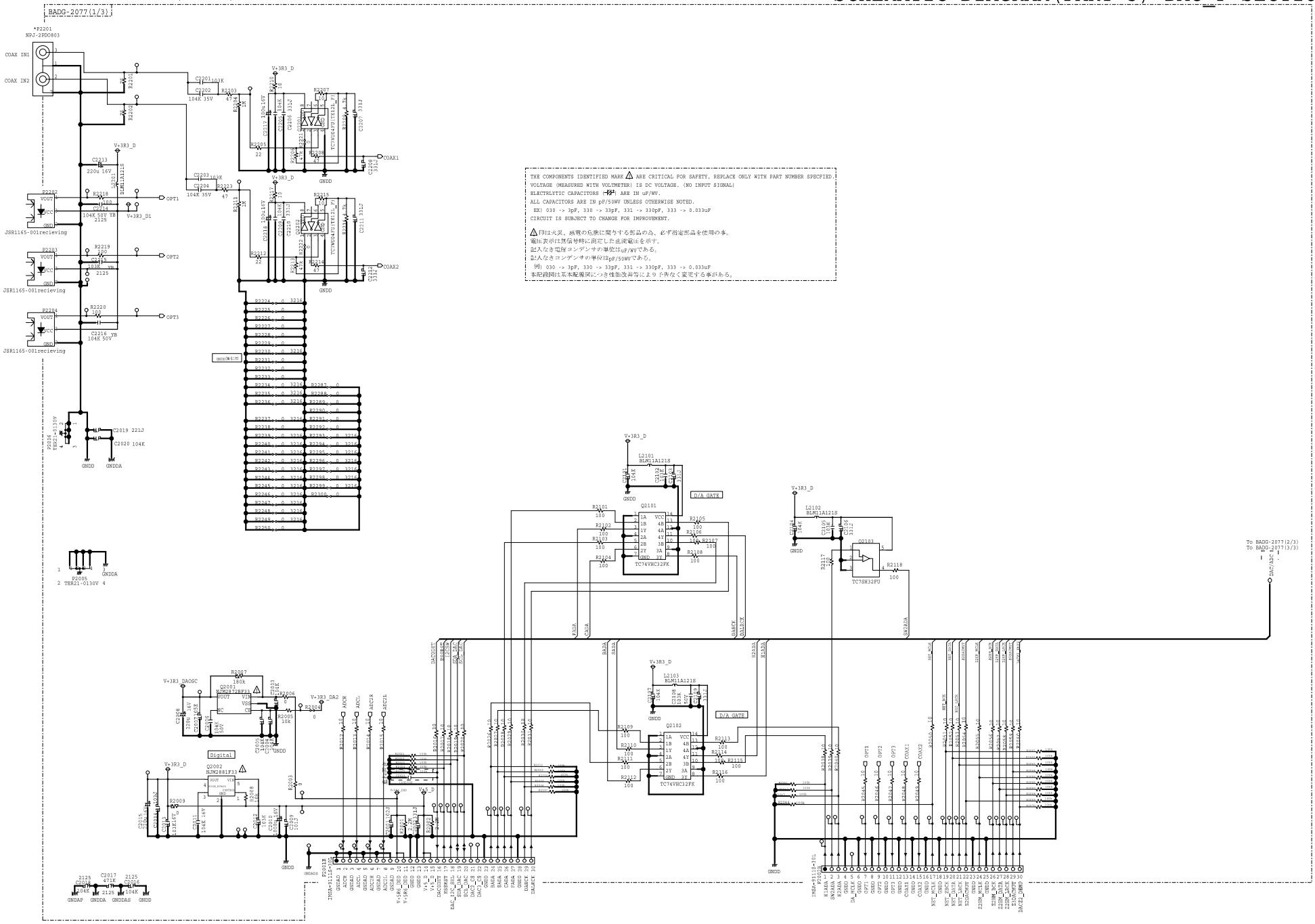

Schematic Diagram

MODEL No.SC-LX701/801/901

SCHEMATIC DIAGRAM(PART-3) DAC_P SECTION

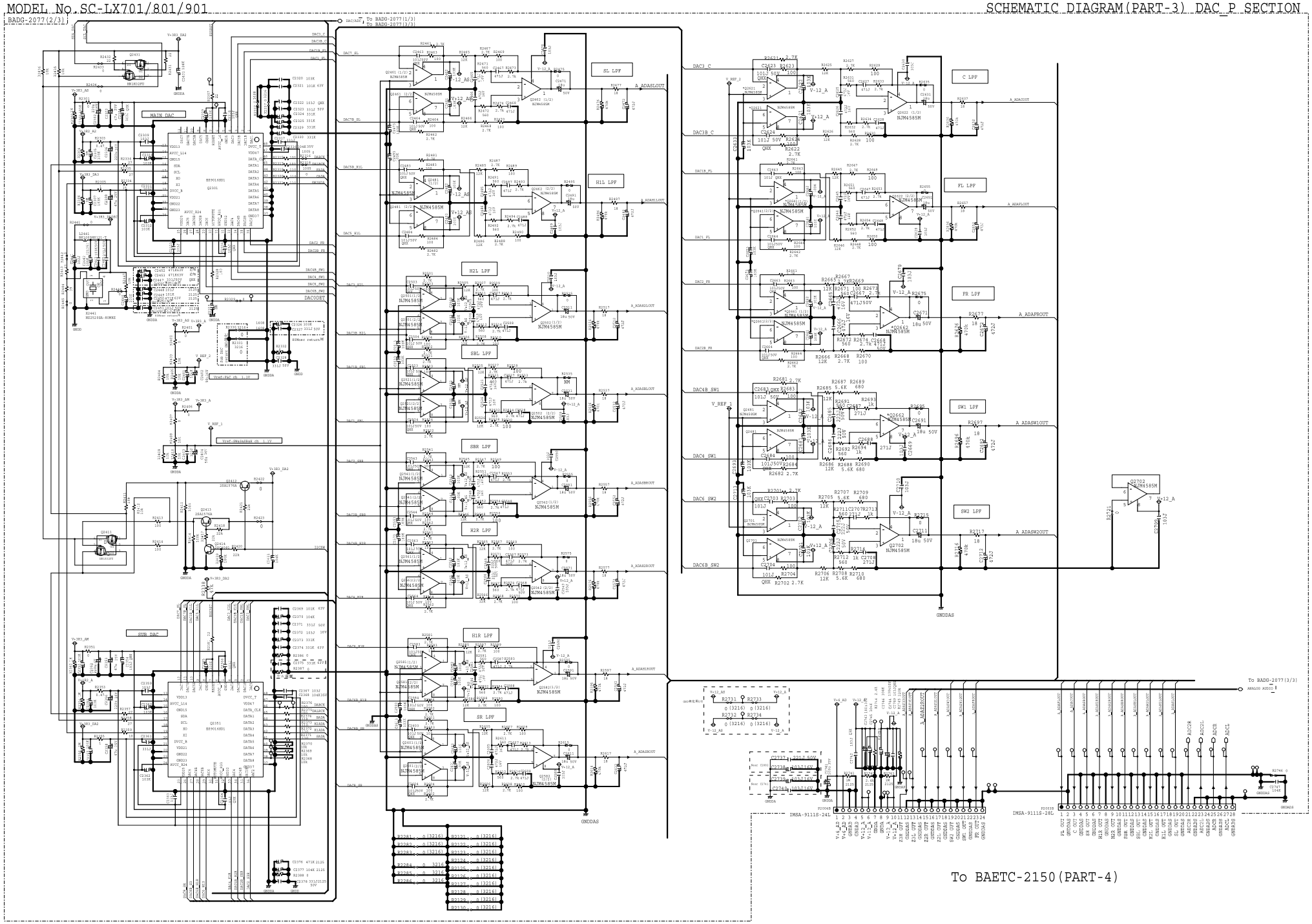

MODEL No.SC-LX701/801/901

SCHEMATIC DIAGRAM(PART-3) DAC_P SECTION

BADG-2077(3/3)

THE COMPONENTS IDENTIFIED MARK ⚠ ARE CRITICAL FOR SAFETY, REPLACE ONLY WITH PART NUMBER SPECFIED.
VOLTAGE (MEASURED WITH VOLTMETER) IS DC VOLTAGE. (NO INPUT SIGNAL)
ELECTRLYTIC CAPACITORS (⊕) ARE IN uF/WV.
ALL CAPACITORS ARE IN pF/50WV UNLESS OTHERWISE NOTED.
EX) 030 -> 3pF, 330 -> 33pF, 331 -> 330pF, 333 -> 0.033uF
CIRCUIT IS SUBJECT TO CHANGE FOR IMPROVEMENT.

⚠印は火災、感電の危険に関与する部品の為、必ず指定部品を使用の事。
電圧表示は無信号時に測定した直流電圧を示す。
記入なき電解コンデンサの単位はuF/WVである。
記入なきコンデンサの単位はpF/50WVである。
(例) 030 -> 3pF, 330 -> 33pF, 331 -> 330pF, 333 -> 0.033uF
本配線図は基本配線図につき性能改善等により予告なく変更する事がある。

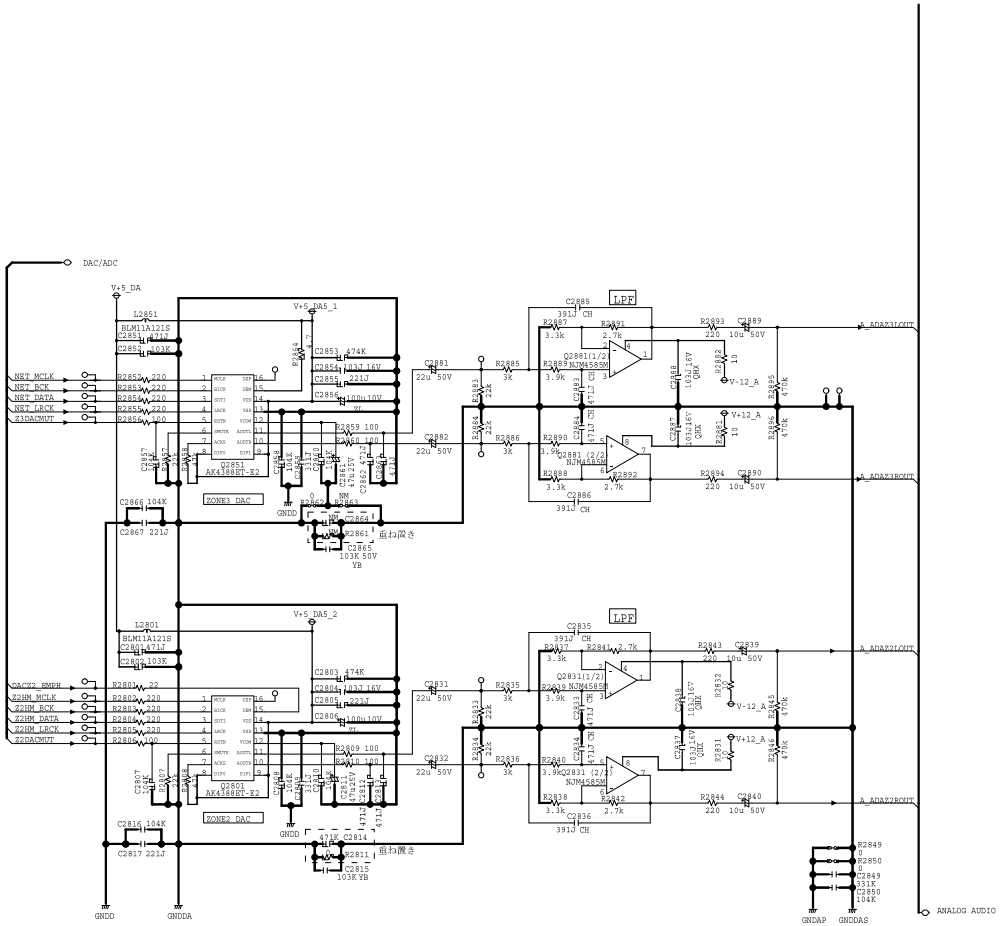

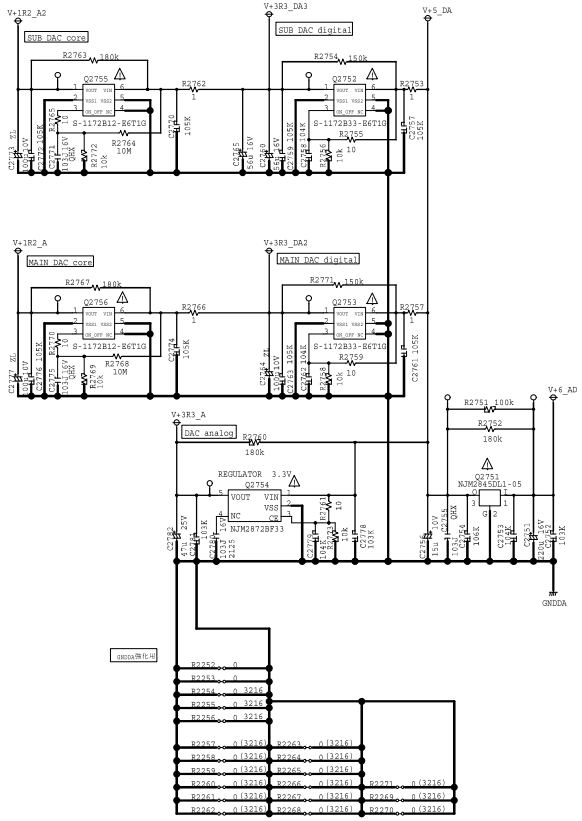

Schematic Diagram

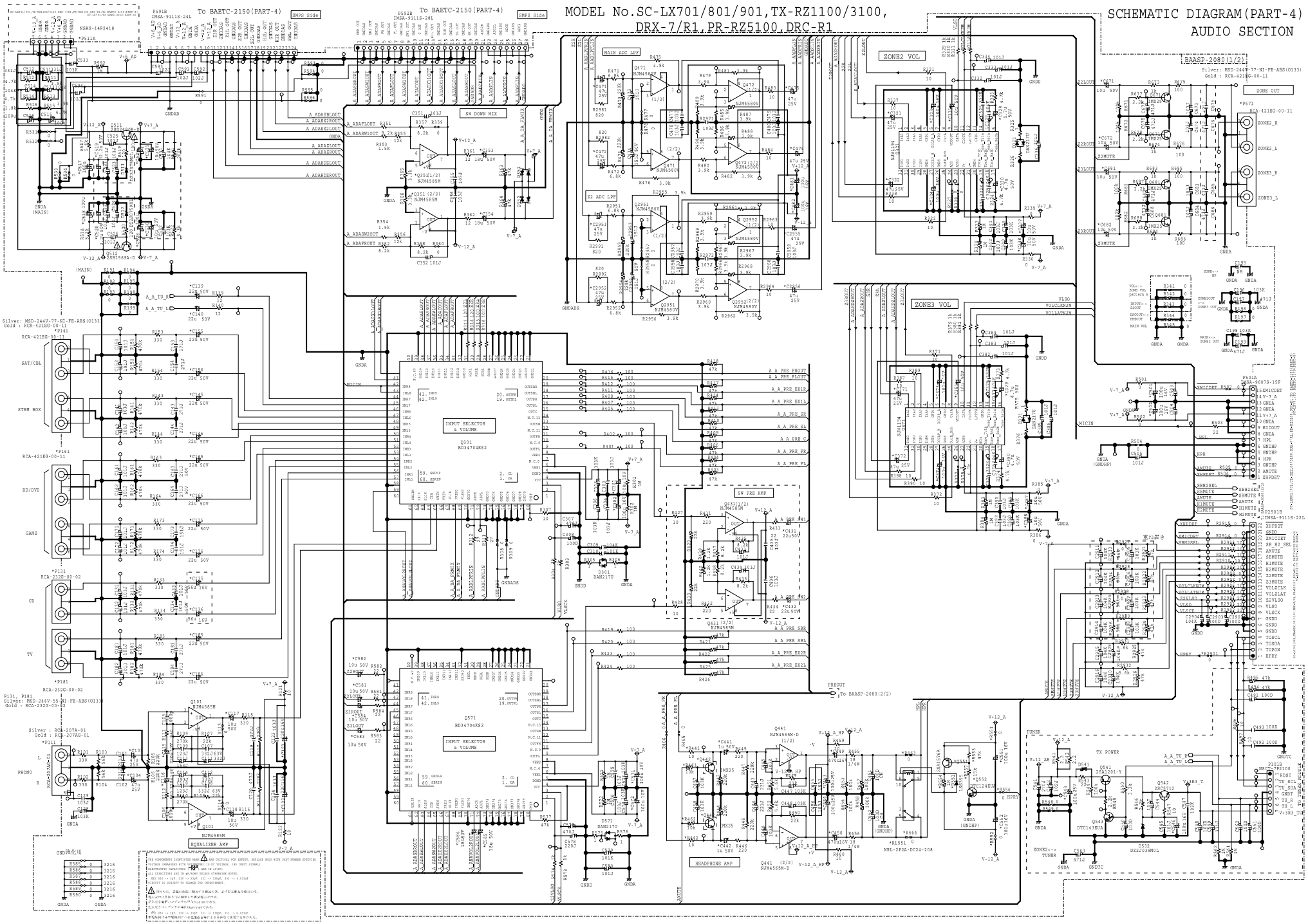

Schematic Diagram

MODEL No.SC-LX701/801/901,TX-RZ1100/3100,DRX-7/R1,PR-RZ5100,DRC-R1

SCHEMATIC DIAGRAM(PART-4) AUDIO SECTION

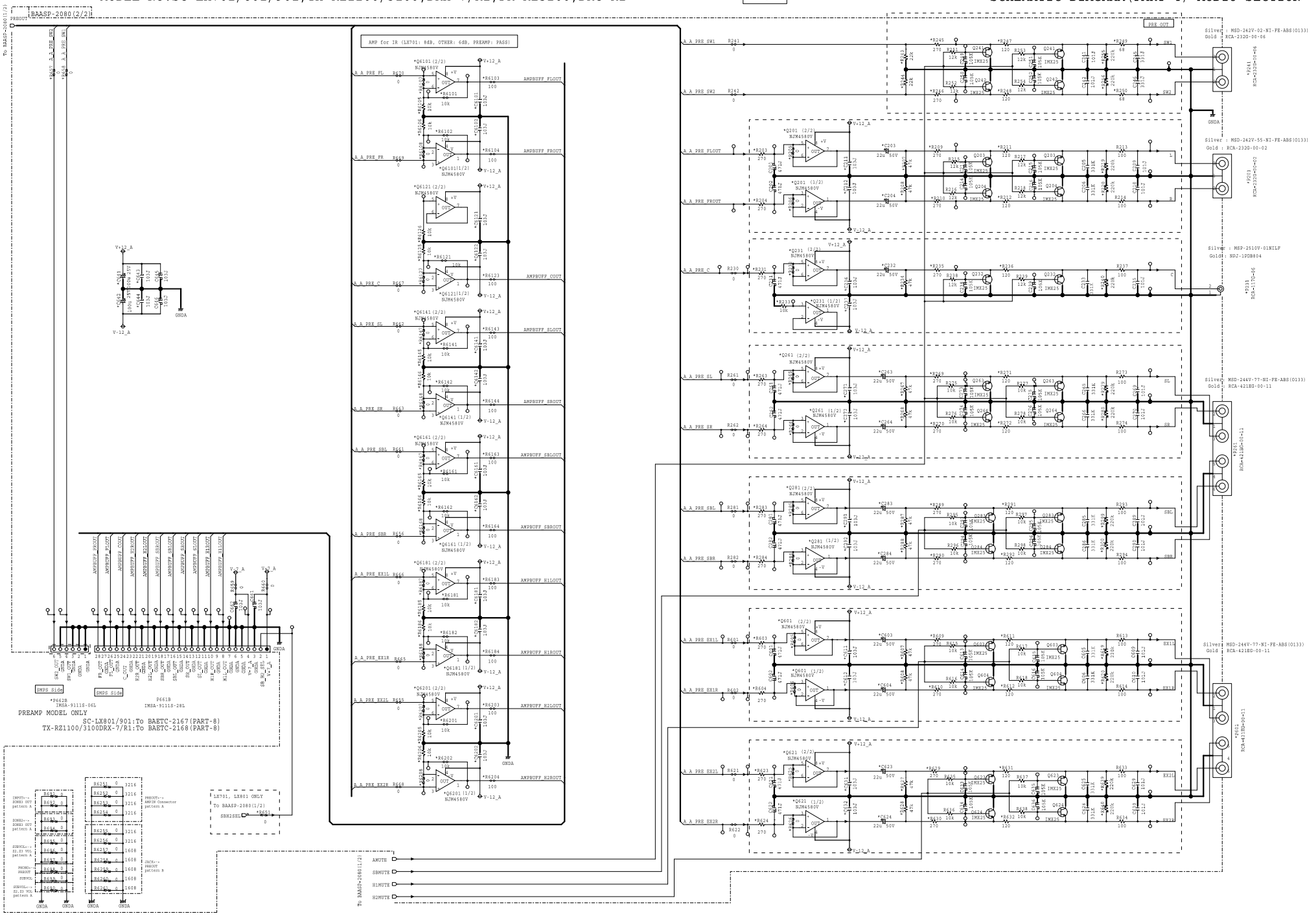

MODEL No.SC-LX701/801/901,TX-RZ1100/3100,DRX-7/R1,PR-RZ5100,DRC-R1

SCHEMATIC DIAGRAM(PART-4) COMPOSITE SECTION

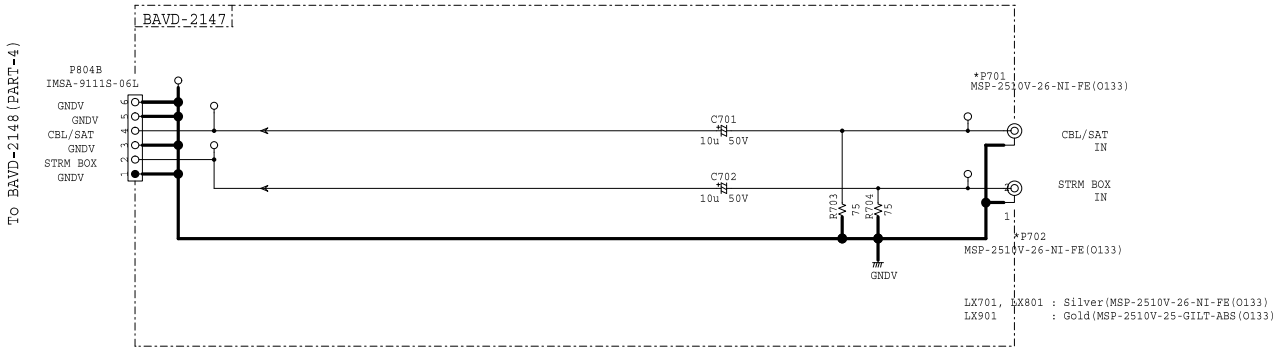

reference	1A	1B	1C	1D	1E
*P701	MSP-2510V-26-NI-FE(O133)	MSP-2510V-26-NI-FE(O133)	MSP-2510V-26-NI-FE(O133)	MSP-2510V-26-NI-FE(O133)	MSP-2510V-25-GILT-ABS(O133)
*P702	MSP-2510V-26-NI-FE(O133)	MSP-2510V-26-NI-FE(O133)	MSP-2510V-26-NI-FE(O133)	MSP-2510V-26-NI-FE(O133)	MSP-2510V-25-GILT-ABS(O133)

reference	1F	1G	1H	1J	1K
*P701	MSP-2510V-25-GILT-ABS(O133)	MSP-2510V-26-NI-FE(O133)	MSP-2510V-26-NI-FE(O133)	MSP-2510V-26-NI-FE(O133)	MSP-2510V-26-NI-FE(O133)
*P702	MSP-2510V-25-GILT-ABS(O133)	MSP-2510V-26-NI-FE(O133)	MSP-2510V-26-NI-FE(O133)	MSP-2510V-26-NI-FE(O133)	MSP-2510V-26-NI-FE(O133)

reference	1L	1M	1N	1P	1Q	1R
*P701	MSP-2510V-25-GILT-ABS(O133)	MSP-2510V-25-GILT-ABS(O133)	MSP-2510V-25-GILT-ABS(O133)	MSP-2510V-25-GILT-ABS(O133)	MSP-2510V-25-GILT-ABS(O133)	MSP-2510V-25-GILT-ABS(O133)
*P702	MSP-2510V-25-GILT-ABS(O133)	MSP-2510V-25-GILT-ABS(O133)	MSP-2510V-25-GILT-ABS(O133)	MSP-2510V-25-GILT-ABS(O133)	MSP-2510V-25-GILT-ABS(O133)	MSP-2510V-25-GILT-ABS(O133)

NOTE

1. RESISTORS
Unit: k-kΩ, M-MΩ or Ω unless otherwise noted.
Rated Power: 1/10W unless otherwise noted.
Tolerance: (J)5% unless otherwise noted.

2. CAPACITORS
Unit: p-pF or u-uF unless otherwise noted.
Ratings: Capacity(F)/Voltage(V) unless otherwise noted.
CH : CCSRCH
NO MARKED : CKSRYB
1. SM: No Mount

Schematic Diagram

MODEL No.SC-LX701/801/901,TX-RZ1100/3100,DRX-7/R1,PR-RZ5100,DRC-R1 SCHEMATIC DIAGRAM(PART-4) COMPONENT SECTION

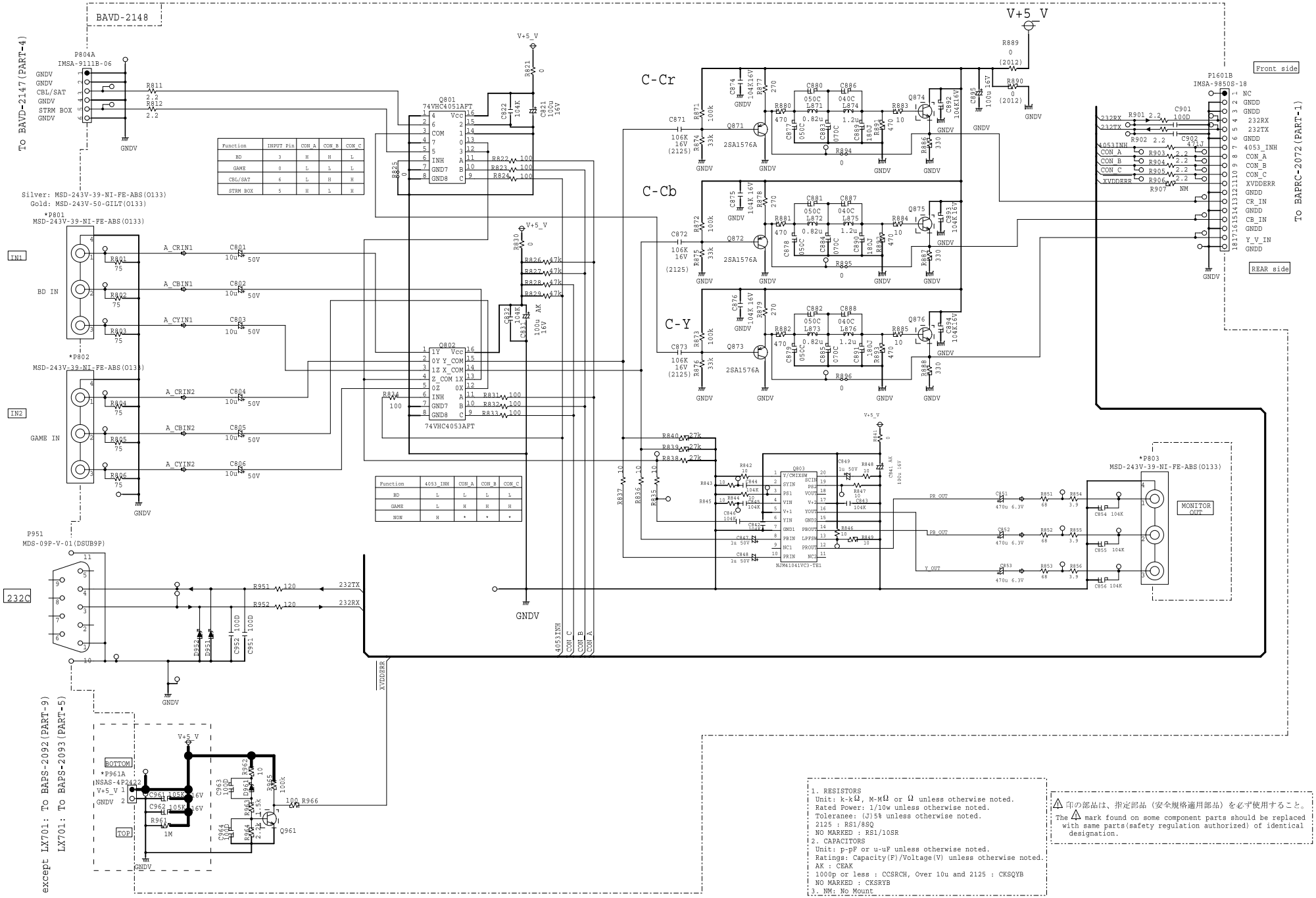

1. RESISTORS
Unit: k-kΩ, M-MΩ or Ω unless otherwise noted.
Rated Power: 1/10w unless otherwise noted.
Tolerance: (J)5% unless otherwise noted.
2125 : RS1/8SQ
NO MARKED : RS1/10SR
2. CAPACITORS
Unit: p-pF or u-uF unless otherwise noted.
Ratings: Capacity(F)/Voltage(V) unless otherwise noted.
AK : CEAK
1000p or less : CCSRCH, Over 10u and 2125 : CKSQYB
NO MARKED : CKSRYB
3. NM: No Mount

⚠ 印の部品は、指定部品（安全規格適用部品）を必ず使用すること。
The ⚠ mark found on some component parts should be replaced with same parts(safety regulation authorized) of identical designation.

MODEL No.SC-LX701/801/901,TX-RZ1100/3100,DRX-7/R1,PR-RZ5100,DCR-R1

SCHEMATIC DIAGRAM(PART-4) D-DAC BRIDGE SECTION

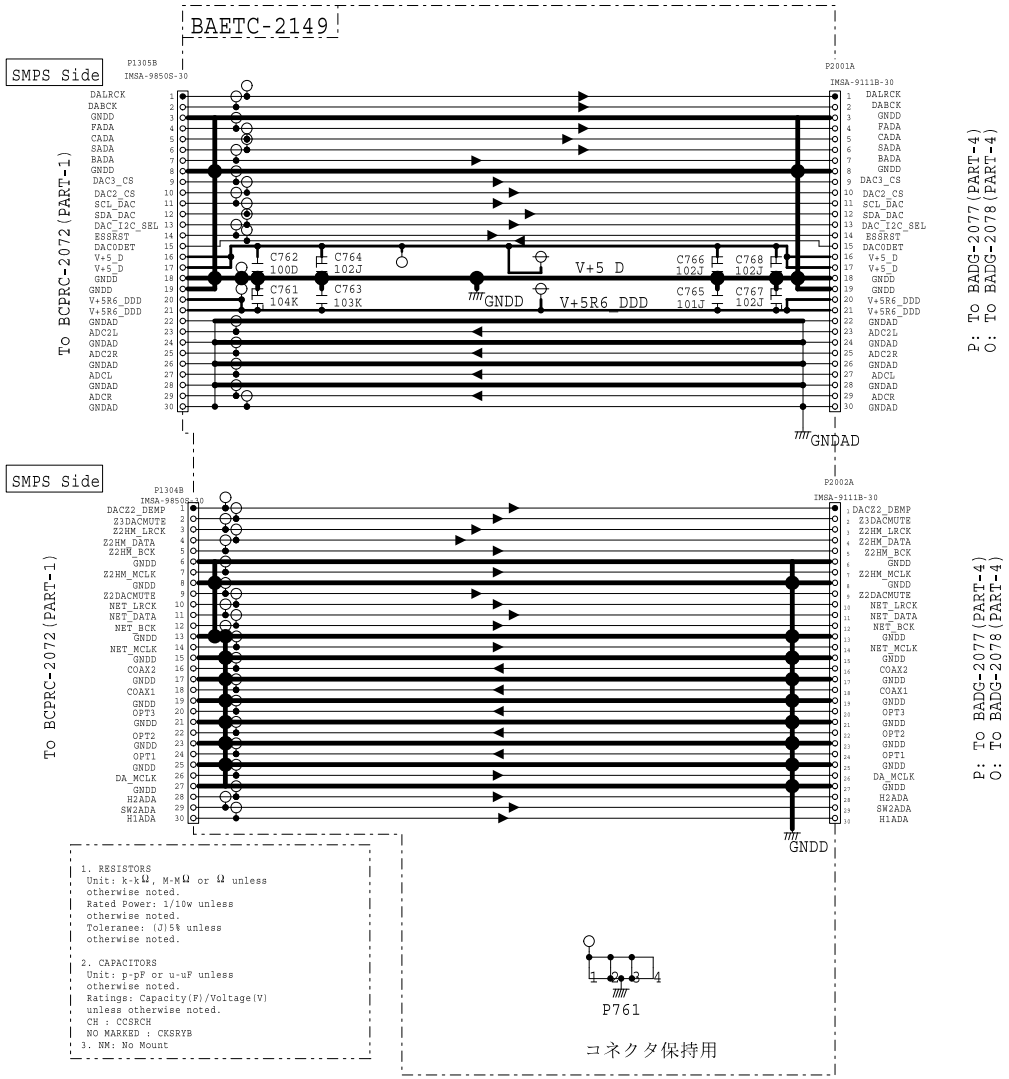

1. RESISTORS
Unit: k-kΩ, M-MΩ or Ω unless otherwise noted.
Rated Power: 1/10w unless otherwise noted.
Toleranee: (J)5% unless otherwise noted.

2. CAPACITORS
Unit: p-pF or u-uF unless otherwise noted.
Ratings: Capacity(F)/Voltage(V) unless otherwise noted.
CH : CCSRCH
NO MARKED : CKSRYB
3. NM: No Mount

コネクタ保持用

MODEL No.SC-LX701/801/901
SCHEMATIC DIAGRAM(PART-4) A-DAC BRIDGE SECTION

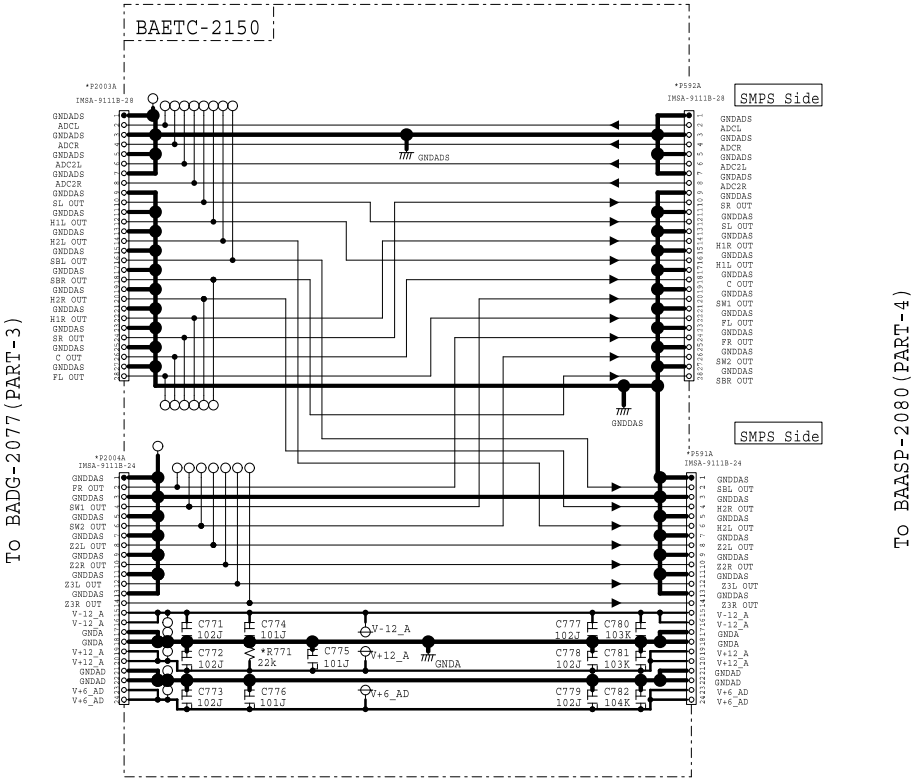

reference	1A	1B	1C	1D	1E	1F	1G	1H	1J	1K	1L	1M	1N	1P	1Q	1R
*R771	RN72K1J-223JE	RN72K1J-223JE	RN72K1J-223JE	RN72K1J-223JE	RN72K1J-223JE	RN72K1J-223JE	-	-	-	-	-	-	-	-	-	-
*P591A	IMSA-9111B-24	IMSA-9111B-24	IMSA-9111B-24	IMSA-9111B-24	IMSA-9111B-24	IMSA-9111B-24	-	-	-	-	-	-	-	-	-	-
*P592A	IMSA-9111B-28	IMSA-9111B-28	IMSA-9111B-28	IMSA-9111B-28	IMSA-9111B-28	IMSA-9111B-28	-	-	-	-	-	-	-	-	-	-
*P2003A	IMSA-9111B-28	IMSA-9111B-28	IMSA-9111B-28	IMSA-9111B-28	IMSA-9111B-28	IMSA-9111B-28	-	-	-	-	-	-	-	-	-	-
*P2004A	IMSA-9111B-24	IMSA-9111B-24	IMSA-9111B-24	IMSA-9111B-24	IMSA-9111B-24	IMSA-9111B-24	-	-	-	-	-	-	-	-	-	-

MODEL No.SC-LX801/901/TX-RZ1100/DRX-7/TX-RZ3100/DRX-R1

SCHEMATIC DIAGRAM(PART-5) IR_INTERFACE_M5 SECTION

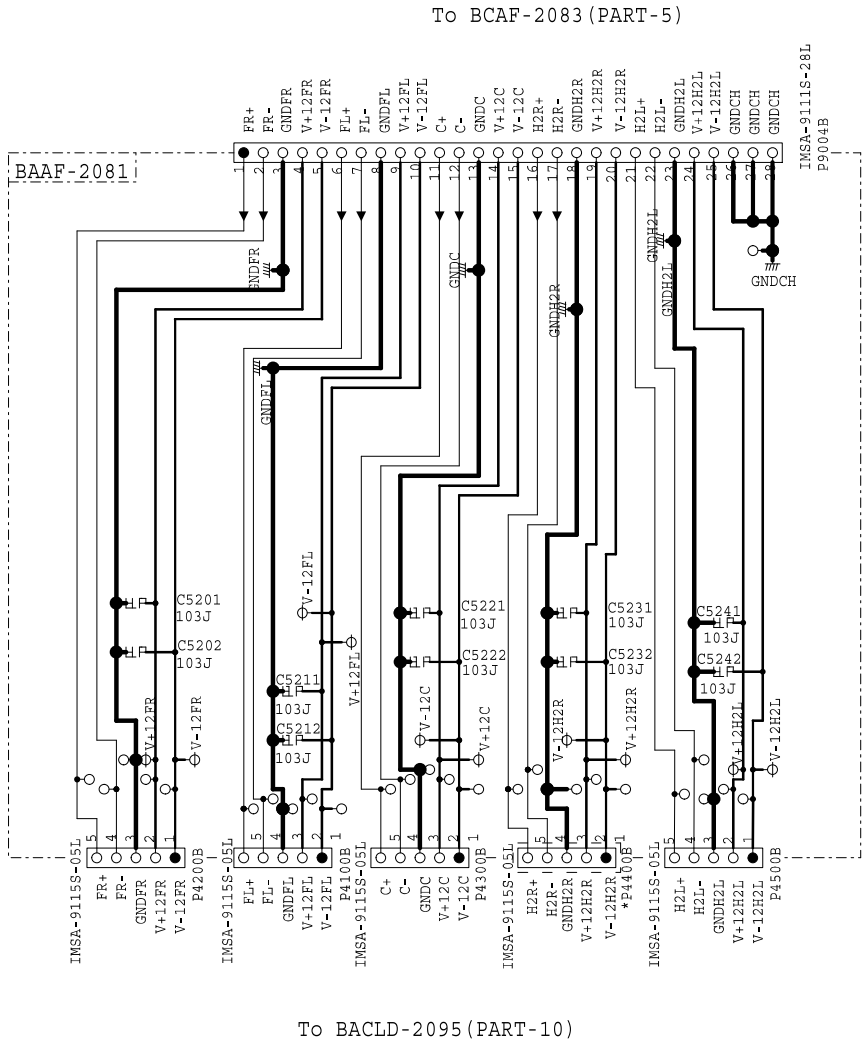

reference	1A	1B	1C	1D
*P4400B	-	IMSA-9115S-05L	-	IMSA-9115S-05L

1A	SC-LX801(B)MDC	
	SC-LX801(B)MGP	
	SC-LX801(B)MJJ	
1B	SC-LX901(B)MDC	
	SC-LX901(B)MGP	SC-LX901(S)MGP
	SC-LX901(B)MHB	
	SC-LX901(B)MJJ	
1C	TX-RZ1100(B)MDC	
	TX-RZ1100(B)MGP	TX-RZ1100(S)MGP
	TX-RZ1100(B)MHB	
	TX-RZ1100(B)MGR	
	DRX-7(B)MDD	
	DRX-7(B)MGA	
1D	TX-RZ3100(B)MDC	
	TX-RZ3100(B)MGP	TX-RZ3100(S)MGP
	TX-RZ3100(B)MHB	
	TX-RZ3100(B)MGR	
	DRX-R1(B)MDD	
	DRX-R1(B)MGR	
	DRX-R1(B)MGA	
	DRX-R1(B)MJJ	

NOTE
1. RESISTORS
Unit: k-kΩ, M-MΩ or Ω unless otherwise noted.
Rated Power: 1/16w unless otherwise noted.
Toleranee: (J)5% unless otherwise noted.
2. CAPACITORS
Unit: p-pF or u-uF unless otherwise noted.
Ratings: Capacity(F)/Voltage(V) unless otherwise noted.
YB:CKSRYB,CH:CCSRCH
3. NM: No Mount

MODEL No.SC-LX801/901/TX-RZ1100/DRX-7/TX-RZ3100/DRX-R1

SCHMATIC DIAGRAM(PART-5) IR_INTERFACE_M6 SECTION

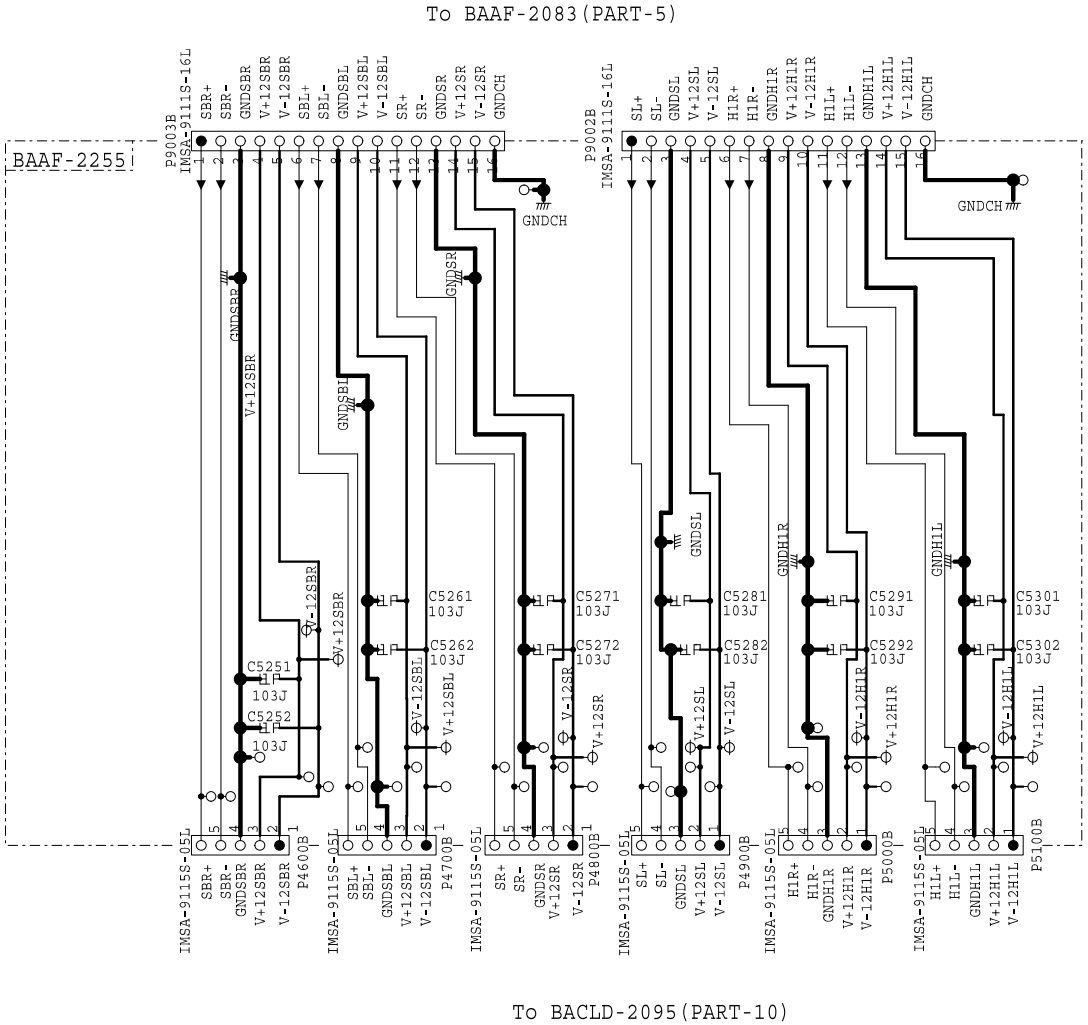

NOTE
1. RESISTORS
Unit: k-kΩ, M-MΩ or Ω unless otherwise noted.
Rated Power: 1/16w unless otherwise noted.
Tolerance: (J)5% unless otherwise noted.
2. CAPACITORS
Unit: p-pF or u-uF unless otherwise noted.
Ratings: Capacity(F)/Voltage(V) unless otherwise noted.
YB:CKSRYB,CH:CCSRCH
3. NM: No Mount

1608 SIZE	2125 SIZE	3216 SIZE
RS1/16S***	RS1/10S***	RS1/8S***
RN1/16S***	RS1/8SQ***	RS1/4SA***
CCSR***	1/8W CCSQ***	1/4W CCS***
CKSR***	CKSQ***	CKS***

MODEL No.SC-LX801/901/TX-RZ1100/DRX-7/TX-RZ3100/DRX-R1
SCHMATIC DIAGRAM(PART-5) BUFFER GND_M SECTION

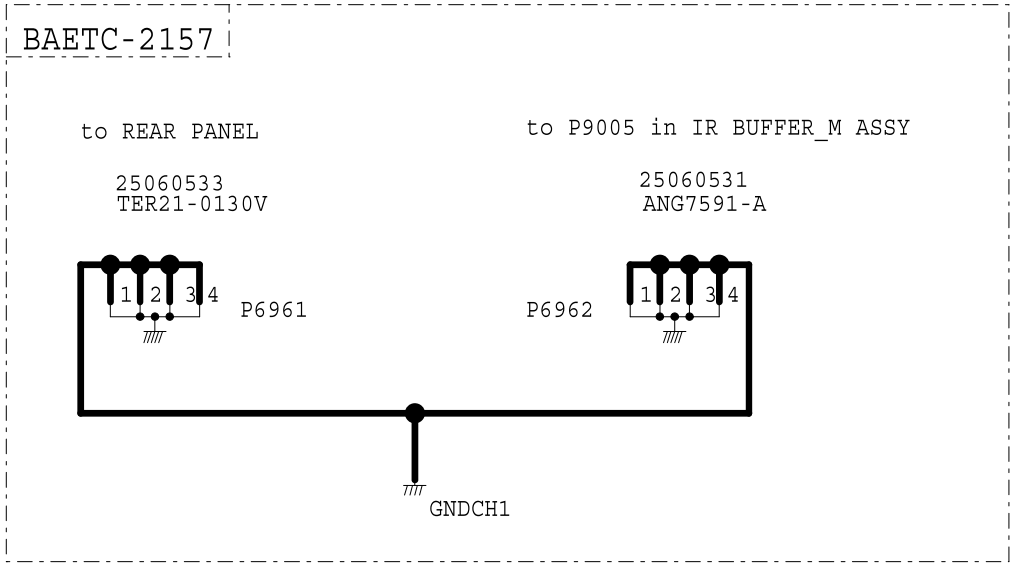

Schematic Diagram

MODEL No.SC-LX801/SC-LX901/TX-RZ1100
/TX-RZ3100/DRX-7/DRX-R1

SCHEMATIC DIAGRAM(PART-5) IR BUFFER_M SECTION

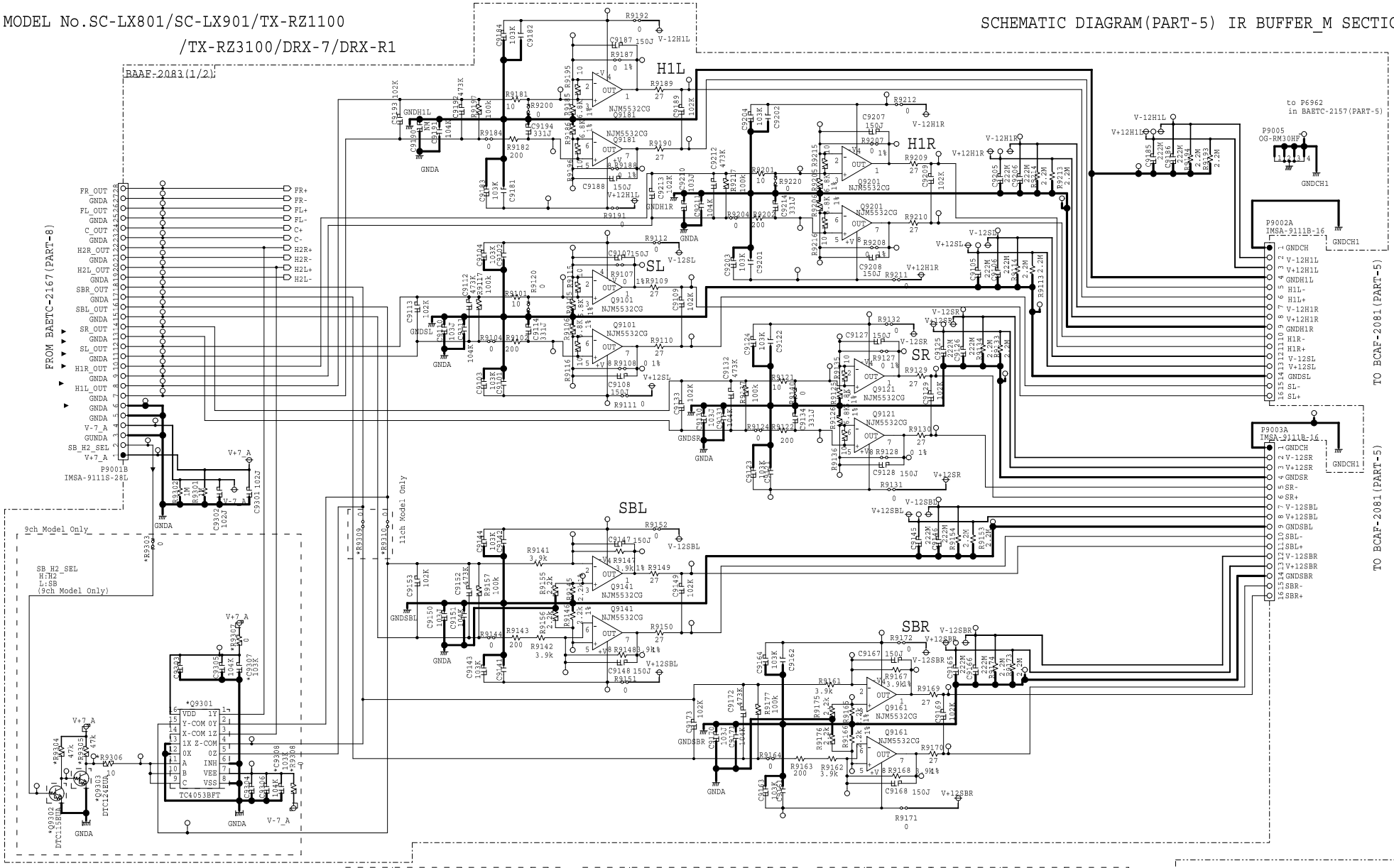

1A SC-LX801(B)MDC
1B SC-LX801(B)MGP SC-LX801(B)MJJ
1C SC-LX901(B)MDC
1D SC-LX901(B)MGP SC-LX901(S)MGP SC-LX901(B)MHB
SC-LX901(B)MJJ
1E TX-RZ1100(B)MDC DRX-7(B)MDD
1F TX-RZ1100(B)MGP TX-RZ1100(S)MGP TX-RZ1100(B)MHB
TX-RZ1100(B)MGR DRX-7(B)MGA
1G TX-RZ3100(B)MDC DRX-R1(B)MDD
1H TX-RZ3100(B)MGP TX-RZ3100(S)MGP TX-RZ3100(B)MHB
TX-RZ3100(B)MGR DRX-R1(B)MGR DRX-R1(R)MGA DRX-R1(R)MJJ

reference	1A	1B	1C	1D
*Q9301	TC4053BFT	TC4053BFT	-	-
*Q9302	DTC115EUA	DTC115EUA	-	-
*Q9303	DTC124EUA	DTC124EUA	-	-
*C9307	50MU103KY1160S	50MU103KY1160S	-	-
*C9308	50MU103KY1160S	50MU103KY1160S	-	-

reference	1E	1F	1G	1H
*Q9301	TC4053BFT	TC4053BFT	-	-
*Q9302	DTC115EUA	DTC115EUA	-	-
*Q9303	DTC124EUA	DTC124EUA	-	-
*C9307	50MU103KY1160S	50MU103KY1160S	-	-
*C9308	50MU103KY1160S	50MU103KY1160S	-	-

reference	1A	1B	1C	1D
*R9303	RN72K1J-000JE	RN72K1J-000JE	-	-
*R9304	RN72K1J-473JE	RN72K1J-473JE	-	-
*R9305	RN72K1J-473JE	RN72K1J-473JE	-	-
*R9306	RN72K1J-100JE	RN72K1J-100JE	-	-
*R9307	RN72K2B-000JE2	RN72K2B-000JE2	-	-

reference	1E	1F	1G	1H
*R9303	RN72K1J-000JE	RN72K1J-000JE	-	-
*R9304	RN72K1J-473JE	RN72K1J-473JE	-	-
*R9305	RN72K1J-473JE	RN72K1J-473JE	-	-
*R9306	RN72K1J-100JE	RN72K1J-100JE	-	-
*R9307	RN72K2B-000JE2	RN72K2B-000JE2	-	-

reference	1A	1B	1C	1D
*R9308	RN72K2B-000JE2	RN72K2B-000JE2	-	-
*R9309	-	-	RN72K1J-000JE	RN72K1J-000JE
*R9310	-	-	RN72K1J-000JE	RN72K1J-000JE

reference	1E	1F	1G	1H
*R9308	RN72K2B-000JE2	RN72K2B-000JE2	-	-
*R9309	-	-	RN72K1J-000JE	RN72K1J-000JE
*R9310	-	-	RN72K1J-000JE	RN72K1J-000JE

1. RESISTORS
Unit: k-kΩ, M-MΩ or Ω unless otherwise noted.
Rated Power: 1/16w unless otherwise noted.
Toleranee: (J)5% unless otherwise noted.
2. CAPACITORS
Unit: p-pF or u-uF unless otherwise noted.
Ratings: Capacity(F)/Voltage(V) unless otherwise noted.
YB:CKSRYB,CH:CCSRCH
3. NM: No Mount

Schematic Diagram

MODEL No.SC-LX801/SC-LX901/TX-RZ1100/TX-RZ3100/DRX-7/DRX-R1

SCHEMATIC DIAGRAM(PART-5) IR BUFFER_M SECTION

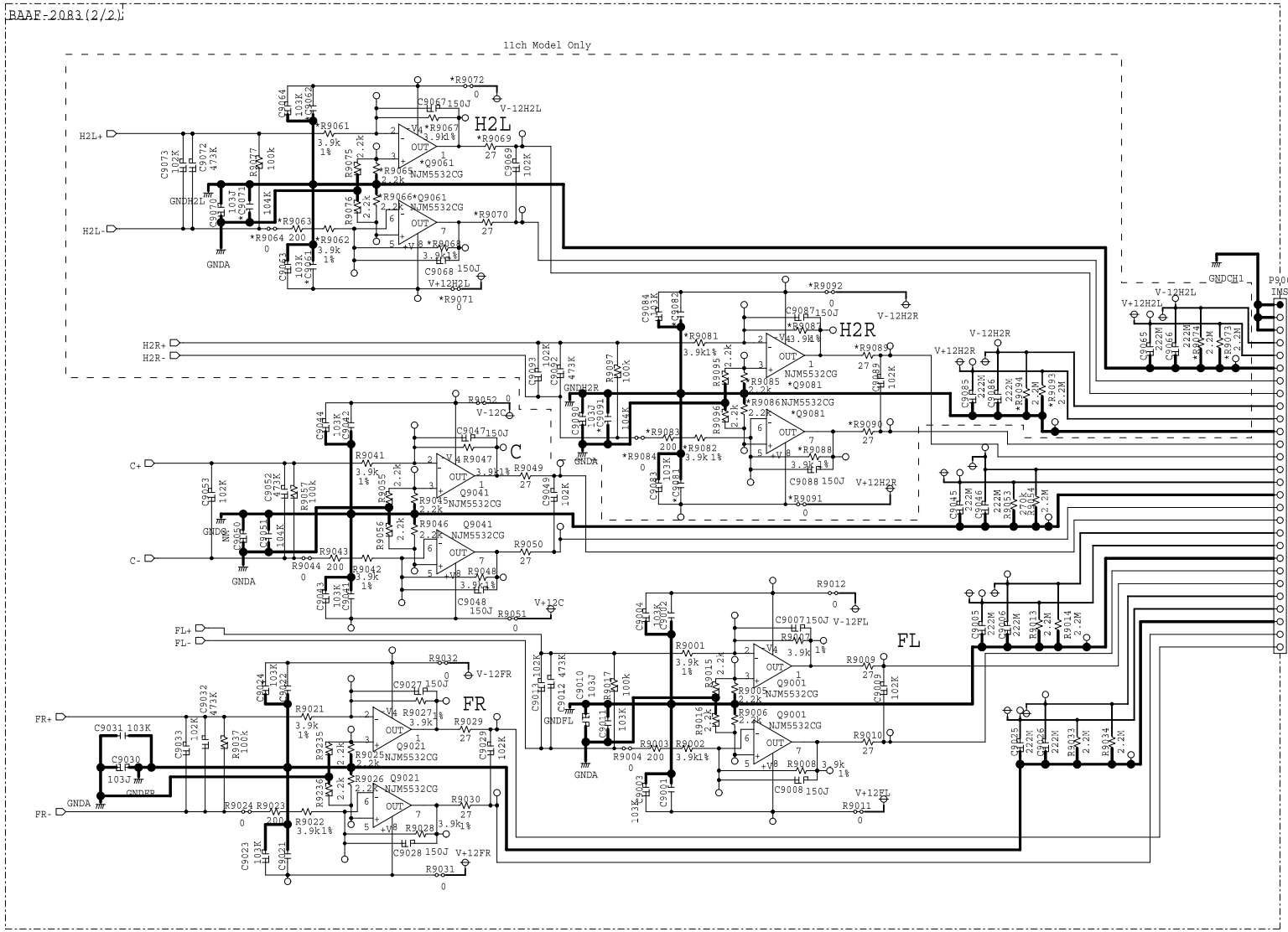

MODEL No. SC-LX501/701/801/901

SCHEMATIC DIAGRAM (PART-6) F-HDMI USB_P SECTION

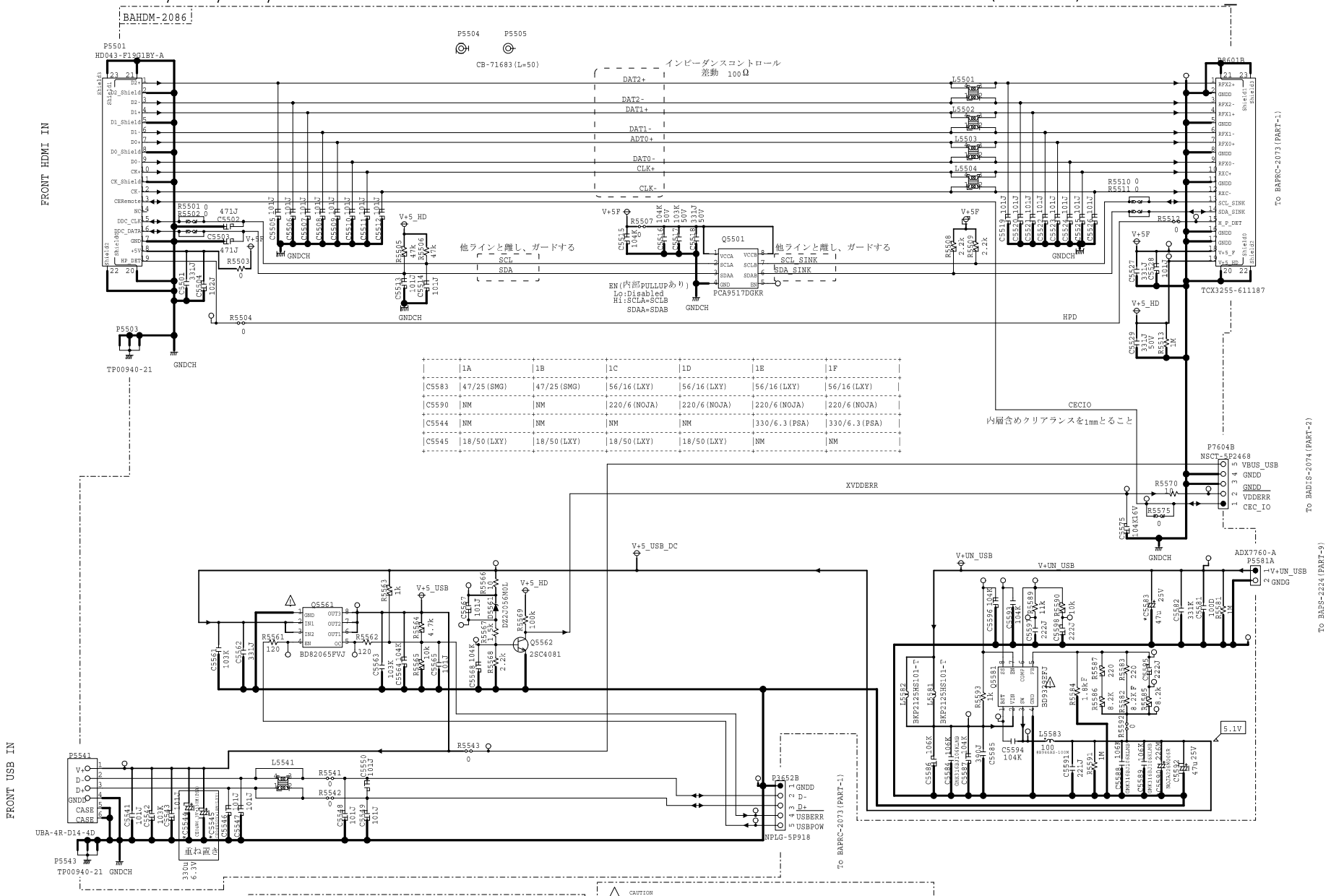

	1A	1B	1C	1D	1E	1F
C5583	47/25(SMG)	47/25(SMG)	56/16(LXY)	56/16(LXY)	56/16(LXY)	56/16(LXY)
C5590	NM	NM	220/6(NOJA)	220/6(NOJA)	220/6(NOJA)	220/6(NOJA)
C5544	NM	NM	NM	NM	330/6.3(PSA)	330/6.3(PSA)
C5545	18/50(LXY)	18/50(LXY)	18/50(LXY)	18/50(LXY)	NM	NM

THE COMPONENTS IDENTIFIED MARK ⚠ ARE CRITICAL FOR SAFETY, REPLACE ONLY WITH PART NUMBER SPECFIED.
VOLTAGE (MEASURED WITH VOLTMETER) IS DC VOLTAGE. (NO INPUT SIGNAL)
ELECTRLYTIC CAPACITORS ARE IN uF/WV.
ALL CAPACITORS ARE IN pF/50WV UNLESS OTHERWISE NOTED.
EX) 030 -> 3pF, 330 -> 33pF, 331 -> 330pF, 333 -> 0.033uF
CIRCUIT IS SUBJECT TO CHANGE FOR IMPROVEMENT.

⚠印は火災、感電の危険に関与する部品の為、必ず指定部品を使用の事。
電圧表示は無信号時に測定した直流電圧を示す。
記入なき電解コンデンサの単位はuF/WVである。
記入なきコンデンサの単位はpF/50WVである。
例) 030 -> 3pF, 330 -> 33pF, 331 -> 330pF, 333 -> 0.033uF
本配線図は基本配線図につき性能改善等により予告なく変更する事がある。

CAUTION
FOR CONTINUED PROTECTION AGAINST FIRE HAZARD,
REPLACE ONLY WITH FUSE OF SAME TYPE AND RATING INDICATED.

CAUTION
ATTENTION
AFIN D'ASSURER UNE PROTECTION PERMANENTE CONTRE LES RISQUES D'INCENDIE,
REMPLACER UNIQUEMENT PAR UN FUSIBLE DE MEME TYPE ET CALIBRATION COMME INDIQUE.

THIS SYMBOL LOCATED NEAR THE FUSE INDICATES THAT THE FUSE USED IS SLOW OPERATING TYPE
FOR CONTINUED PROTECTION AGAINST FIRE FUSE HAZARD, REPLACE WITH SAME TYPE FUSE.
RATING REFER TO THE MAKING ADJACENT TO THE SYMBOL.

CE SYMBOLE INDIQUE QUE LE FUSIBLE UTLISE EST A LENT, E POUR UNEPROTECTION PERMANENT,
M'UTILISER QUE DES FUSIBLES DE MEME TYPE.
CE DARNIER EST INDIQUE LA QU LE PRESENT SYMBOL EST APPOSE.

MODEL No.SC-LX801/901,TZ-RZ1100/3100,DRX-7/R1,PR-RZ5100,DRC-R1

SCHEMATIC DIAGRAM(PART-8) INTERFACE_M SECTION

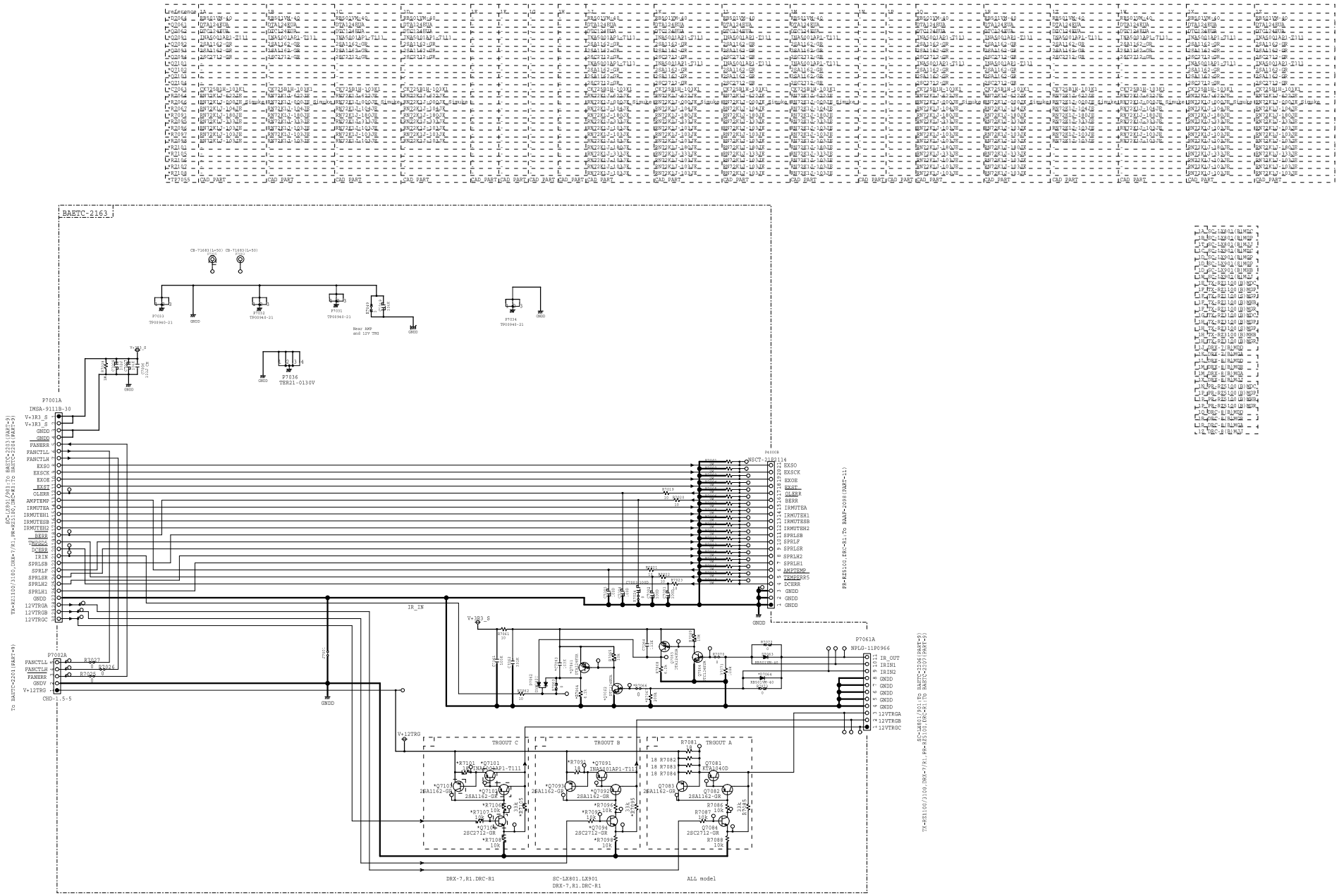

Schematic Diagram

MODEL No. SC-LX801/901,TZ-RZ1100/3100,DRX-7/R1

SCHEMATIC DIAGRAM(PART-8) IR REG_M SECTION

BAPS-2089

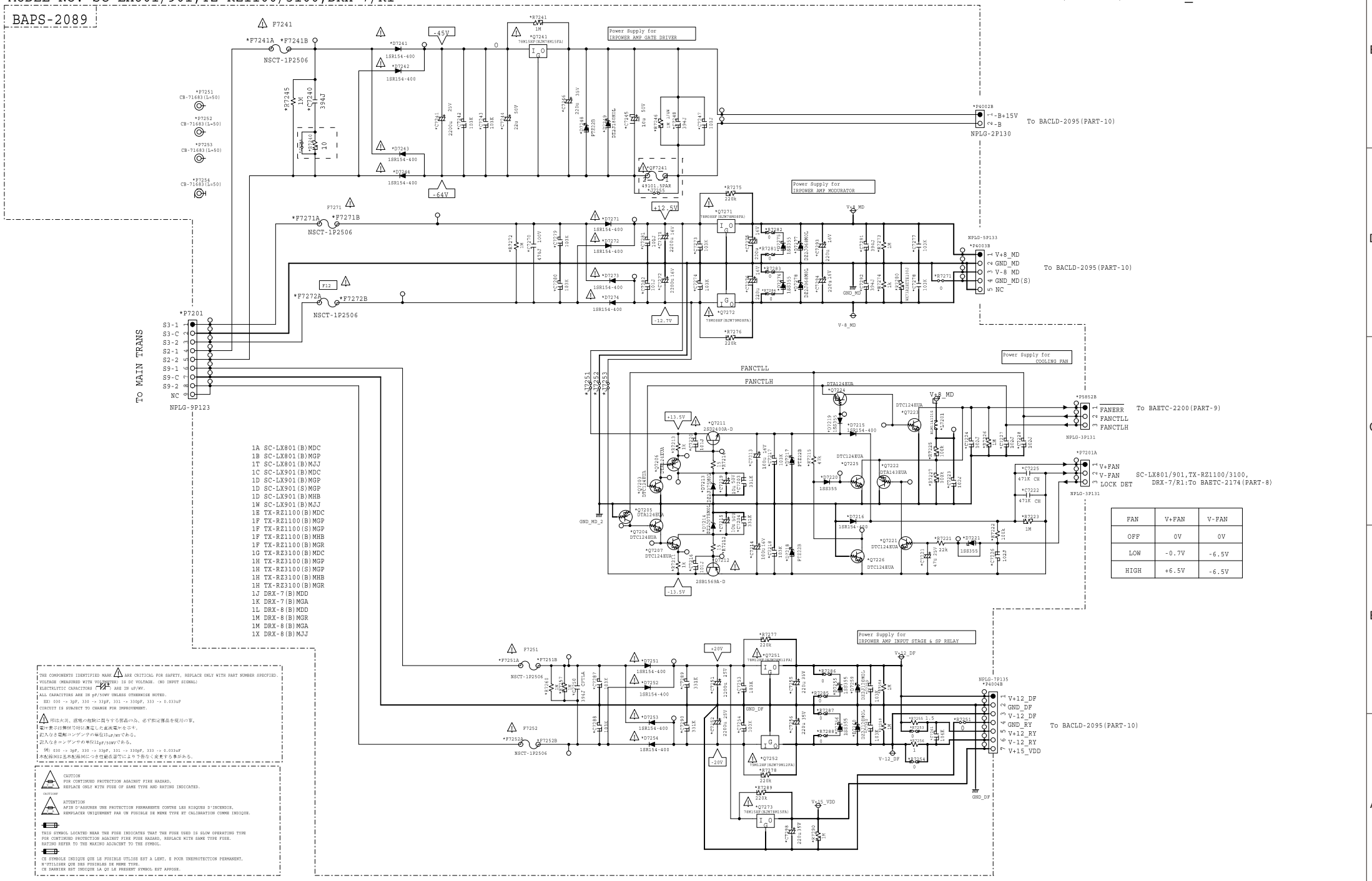

FAN	V+FAN	V-FAN
OFF	0V	0V
LOW	-0.7V	-6.5V
HIGH	+6.5V	-6.5V

MODEL No.SC-LX801/901,TZ-RZ1100/3100,DRX-7/R1

SCHEMATIC DIAGRAM(PART-8) B_DIODE SECTION

reference	1A	1B	1C
*D7401	LN6SB60	LN6SB60	LN6SB60
*D7402	LN6SB60	LN6SB60	LN6SB60
*C7401	CE69W80V-10000M_LKS1K103MESQPB	CE69W80V-10000M_LKS1K103MESQPB	CE69W80V-10000M_LKS1K103MESQPB
*C7402	CE69W80V-10000M_LKS1K103MESQPB	CE69W80V-10000M_LKS1K103MESQPB	CE69W80V-10000M_LKS1K103MESQPB
*C7405	ECQ-V100V-104J	ECQ-V100V-104J	ECQ-V100V-104J
*C7406	ECQ-V100V-104J	ECQ-V100V-104J	ECQ-V100V-104J
*R7401	KTR18EZPJ105	KTR18EZPJ105	KTR18EZPJ105
*R7402	KTR18EZPJ105	KTR18EZPJ105	KTR18EZPJ105
*R7403	RS25J-10	RS25J-10	RS25J-10
*R7405	RN72K2E-154JE	RN72K2E-154JE	RN72K2E-154JE
*R7406	RN72K2E-154JE	RN72K2E-154JE	RN72K2E-154JE
*R7408	RN72K2E-913JE	RN72K2E-913JE	RN72K2E-913JE
*P4001B	NPLG-4P151	NPLG-4P151	NPLG-4P151
*P7401	NPLG-3P150	NPLG-3P150	NPLG-3P150

reference	1D	1E	1F
*D7401	LN6SB60	LN6SB60	LN6SB60
*D7402	LN6SB60	LN6SB60	LN6SB60
*C7401	CE69W80V-10000M_LKS1K103MESQPB	CE69W80V-10000M_LKS1K103MESQPB	CE69W80V-10000M_LKS1K103MESQPB
*C7402	CE69W80V-10000M_LKS1K103MESQPB	CE69W80V-10000M_LKS1K103MESQPB	CE69W80V-10000M_LKS1K103MESQPB
*C7405	ECQ-V100V-104J	ECQ-V100V-104J	ECQ-V100V-104J
*C7406	ECQ-V100V-104J	ECQ-V100V-104J	ECQ-V100V-104J
*R7401	KTR18EZPJ105	KTR18EZPJ105	KTR18EZPJ105
*R7402	KTR18EZPJ105	KTR18EZPJ105	KTR18EZPJ105
*R7403	RS25J-10	RS25J-10	RS25J-10
*R7405	RN72K2E-154JE	RN72K2E-154JE	RN72K2E-154JE
*R7406	RN72K2E-154JE	RN72K2E-154JE	RN72K2E-154JE
*R7408	RN72K2E-913JE	RN72K2E-913JE	RN72K2E-913JE
*P4001B	NPLG-4P151	NPLG-4P151	NPLG-4P151
*P7401	NPLG-3P150	NPLG-3P150	NPLG-3P150

reference	1G	1H	1J
*D7401	LN6SB60	LN6SB60	LN6SB60
*D7402	LN6SB60	LN6SB60	LN6SB60
*C7401	CE69W80V-10000M_LKS1K103MESQPB	CE69W80V-10000M_LKS1K103MESQPB	CE69W80V-10000M_LKS1K103MESQPB
*C7402	CE69W80V-10000M_LKS1K103MESQPB	CE69W80V-10000M_LKS1K103MESQPB	CE69W80V-10000M_LKS1K103MESQPB
*C7405	ECQ-V100V-104J	ECQ-V100V-104J	ECQ-V100V-104J
*C7406	ECQ-V100V-104J	ECQ-V100V-104J	ECQ-V100V-104J
*R7401	KTR18EZPJ105	KTR18EZPJ105	KTR18EZPJ105
*R7402	KTR18EZPJ105	KTR18EZPJ105	KTR18EZPJ105
*R7403	RS25J-10	RS25J-10	RS25J-10
*R7405	RN72K2E-154JE	RN72K2E-154JE	RN72K2E-154JE
*R7406	RN72K2E-154JE	RN72K2E-154JE	RN72K2E-154JE
*R7408	RN72K2E-913JE	RN72K2E-913JE	RN72K2E-913JE
*P4001B	NPLG-4P151	NPLG-4P151	NPLG-4P151
*P7401	NPLG-3P150	NPLG-3P150	NPLG-3P150

reference	1G	1H	1J	1K	1L	1M	1N	1P	1Q	1R	1T	1W	1X	1Z
*D7401	LN6SB60	LN6SB60	LN6SB60	LN6SB60	LN6SB60	LN6SB60					LN6SB60	LN6SB60	LN6SB60	
*D7402	LN6SB60	LN6SB60	LN6SB60	LN6SB60	LN6SB60	LN6SB60					LN6SB60	LN6SB60	LN6SB60	
*C7401	CE69W80V-10000M_LKS1K103MESQPB	CE69W80V-10000M_LKS1K103MESQPB	CE69W80V-10000M_LKS1K103MESQPB	CE69W80V-10000M_LKS1K103MESQPB	CE69W80V-10000M_LKS1K103MESQPB	CE69W80V-10000M_LKS1K103MESQPB					CE69W80V-10000M_LKS1K103MESQPB	CE69W80V-10000M_LKS1K103MESQPB	CE69W80V-10000M_LKS1K103MESQPB	
*C7402	CE69W80V-10000M_LKS1K103MESQPB	CE69W80V-10000M_LKS1K103MESQPB	CE69W80V-10000M_LKS1K103MESQPB	CE69W80V-10000M_LKS1K103MESQPB	CE69W80V-10000M_LKS1K103MESQPB	CE69W80V-10000M_LKS1K103MESQPB					CE69W80V-10000M_LKS1K103MESQPB	CE69W80V-10000M_LKS1K103MESQPB	CE69W80V-10000M_LKS1K103MESQPB	
*C7405	ECQ-V100V-104J	ECQ-V100V-104J	ECQ-V100V-104J	ECQ-V100V-104J	ECQ-V100V-104J	ECQ-V100V-104J					ECQ-V100V-104J	ECQ-V100V-104J	ECQ-V100V-104J	
*C7406	ECQ-V100V-104J	ECQ-V100V-104J	ECQ-V100V-104J	ECQ-V100V-104J	ECQ-V100V-104J	ECQ-V100V-104J					ECQ-V100V-104J	ECQ-V100V-104J	ECQ-V100V-104J	
*R7401	KTR18EZPJ105	KTR18EZPJ105	KTR18EZPJ105	KTR18EZPJ105	KTR18EZPJ105	KTR18EZPJ105					KTR18EZPJ105	KTR18EZPJ105	KTR18EZPJ105	
*R7402	KTR18EZPJ105	KTR18EZPJ105	KTR18EZPJ105	KTR18EZPJ105	KTR18EZPJ105	KTR18EZPJ105					KTR18EZPJ105	KTR18EZPJ105	KTR18EZPJ105	
*R7403	RS25J-10	RS25J-10	RS25J-10	RS25J-10	RS25J-10	RS25J-10					RS25J-10	RS25J-10	RS25J-10	
*R7405	RN72K2E-154JE	RN72K2E-154JE	RN72K2E-154JE	RN72K2E-154JE	RN72K2E-154JE	RN72K2E-154JE					RN72K2E-154JE	RN72K2E-154JE	RN72K2E-154JE	
*R7406	RN72K2E-154JE	RN72K2E-154JE	RN72K2E-154JE	RN72K2E-154JE	RN72K2E-154JE	RN72K2E-154JE					RN72K2E-154JE	RN72K2E-154JE	RN72K2E-154JE	
*R7408	RN72K2E-913JE	RN72K2E-913JE	RN72K2E-913JE	RN72K2E-913JE	RN72K2E-913JE	RN72K2E-913JE					RN72K2E-913JE	RN72K2E-913JE	RN72K2E-913JE	
*P4001B	NPLG-4P151	NPLG-4P151	NPLG-4P151	NPLG-4P151	NPLG-4P151	NPLG-4P151					NPLG-4P151	NPLG-4P151	NPLG-4P151	
*P7401	NPLG-3P150	NPLG-3P150	NPLG-3P150	NPLG-3P150	NPLG-3P150	NPLG-3P150					NPLG-3P150	NPLG-3P150	NPLG-3P150	

1A	SC-LX801(B)MDC
1B	SC-LX801(B)MGP
1T	SC-LX801(B)MJJ
1C	SC-LX901(B)MDC
1D	SC-LX901(B)MGP
1D	SC-LX901(S)MGP
1D	SC-LX901(B)MHB
1W	SC-LX901(B)MJJ
1E	TX-RZ1100(B)MDC
1F	TX-RZ1100(B)MGP
1F	TX-RZ1100(S)MGP
1F	TX-RZ1100(B)MHB
1F	TX-RZ1100(B)MGR
1G	TX-RZ3100(B)MDC
1H	TX-RZ3100(B)MGP
1H	TX-RZ3100(S)MGP
1H	TX-RZ3100(B)MHB
1H	TX-RZ3100(B)MGR
1J	DRX-7(B)MDD
1K	DRX-7(B)MGA
1L	DRX-8(B)MDD
1M	DRX-8(B)MGR
1M	DRX-8(B)MGA
1X	DRX-8(B)MJJ
1N	PR-RZ5100(B)MDC
1P	PR-RZ5100(B)MGP
1P	PR-RZ5100(B)MHB
1P	PR-RZ5100(B)MGR
1Q	DRC-8(B)MDD
1R	DRC-8(B)MGR
1R	DRC-8(B)MGA
1Z	DRC-8(B)MJJ

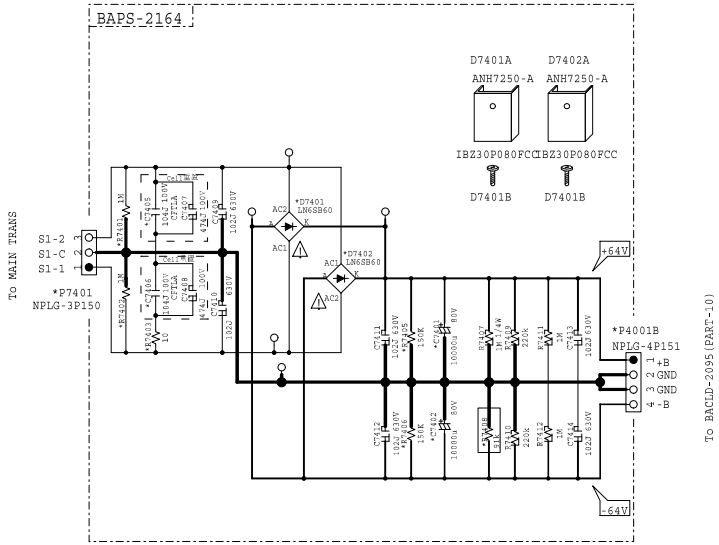

MODEL No.SC-LX801/901,TZ-RZ1100/3100,PR-RZ5100

SCHEMATIC DIAGRAM(PART-8) PRIMARY SHIELD SECTION

reference	1A	1B	1C	1D	1E	1F	1G	1H
*P5751	TER21-0130V	TER21-0130V	TER21-0130V	TER21-0130V	TER21-0130V	TER21-0130V	TER21-0130V	TER21-0130V
*P5752	TER21-0130V	TER21-0130V	TER21-0130V	TER21-0130V	TER21-0130V	TER21-0130V	TER21-0130V	TER21-0130V
*P5753	TER21-0130V	TER21-0130V	TER21-0130V	TER21-0130V	TER21-0130V	TER21-0130V	TER21-0130V	TER21-0130V

reference	1J	1K	1L	1M	1N	1P	1Q	1R	1T	1W	1X	1Z
*P5751	-	-	-	-	TER21-0130V	TER21-0130V	-	-	TER21-0130V	TER21-0130V	-	-
*P5752	-	-	-	-	TER21-0130V	TER21-0130V	-	-	TER21-0130V	TER21-0130V	-	-
*P5753	-	-	-	-	TER21-0130V	TER21-0130V	-	-	TER21-0130V	TER21-0130V	-	TER21-0130V

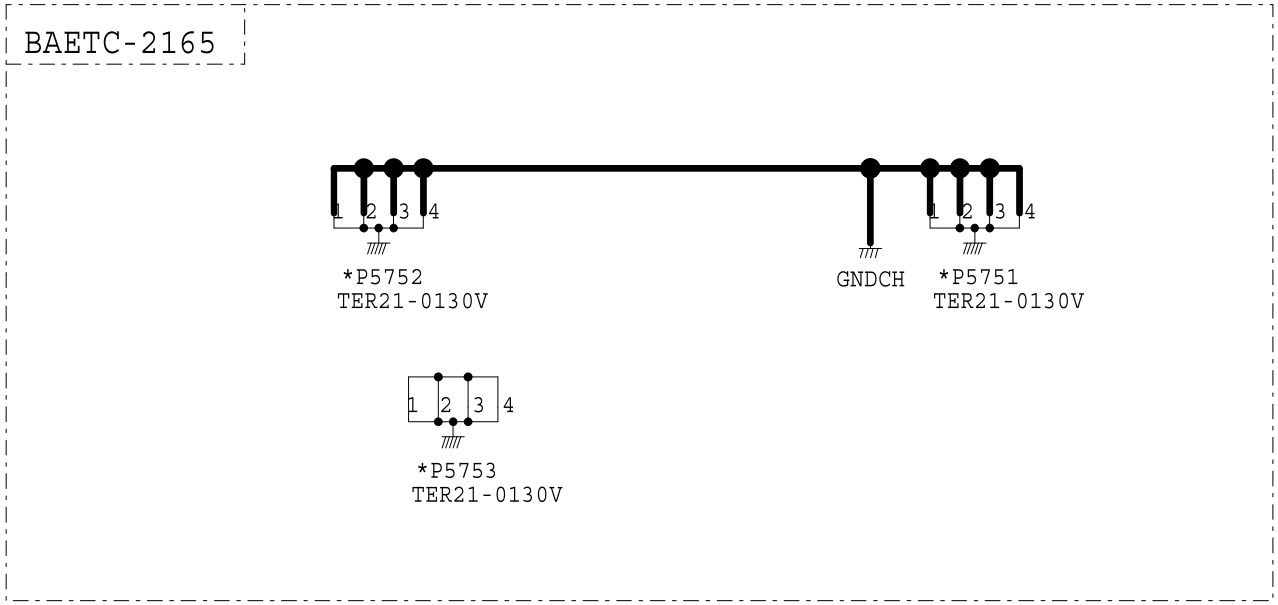

1A	SC-LX801(B)MDC
1B	SC-LX801(B)MGP
1T	SC-LX801(B)MJJ
1C	SC-LX901(B)MDC
1D	SC-LX901(B)MGP
1D	SC-LX901(S)MGP
1D	SC-LX901(B)MHB
1W	SC-LX901(B)MJJ
1E	TX-RZ1100(B)MDC
1F	TX-RZ1100(B)MGP
1F	TX-RZ1100(S)MGP
1F	TX-RZ1100(B)MHB
1F	TX-RZ1100(B)MGR
1G	TX-RZ3100(B)MDC
1H	TX-RZ3100(B)MGP
1H	TX-RZ3100(S)MGP
1H	TX-RZ3100(B)MHB
1H	TX-RZ3100(B)MGR
1N	PR-RZ5100(B)MDC
1P	PR-RZ5100(B)MGP
1P	PR-RZ5100(B)MHB
1P	PR-RZ5100(B)MGR

MODEL No.SC-LX801/901 SCHEMATIC DIAGRAM(PART-8) PRE BRIDGE_M_P SECTION

reference	1A	1B	1C	1D	1E	1F	1G	1H	1J	1K	1L	1M	1N	1P	1Q	1R	1T	1W	1X	1Z
*P661A	IMSA-9111B-28	IMSA-9111B-28	IMSA-9111B-28	IMSA-9111B-28													IMSA-9111B-28	IMSA-9111B-28		
*P9001A	IMSA-9111B-28	IMSA-9111B-28	IMSA-9111B-28	IMSA-9111B-28													IMSA-9111B-28	IMSA-9111B-28		

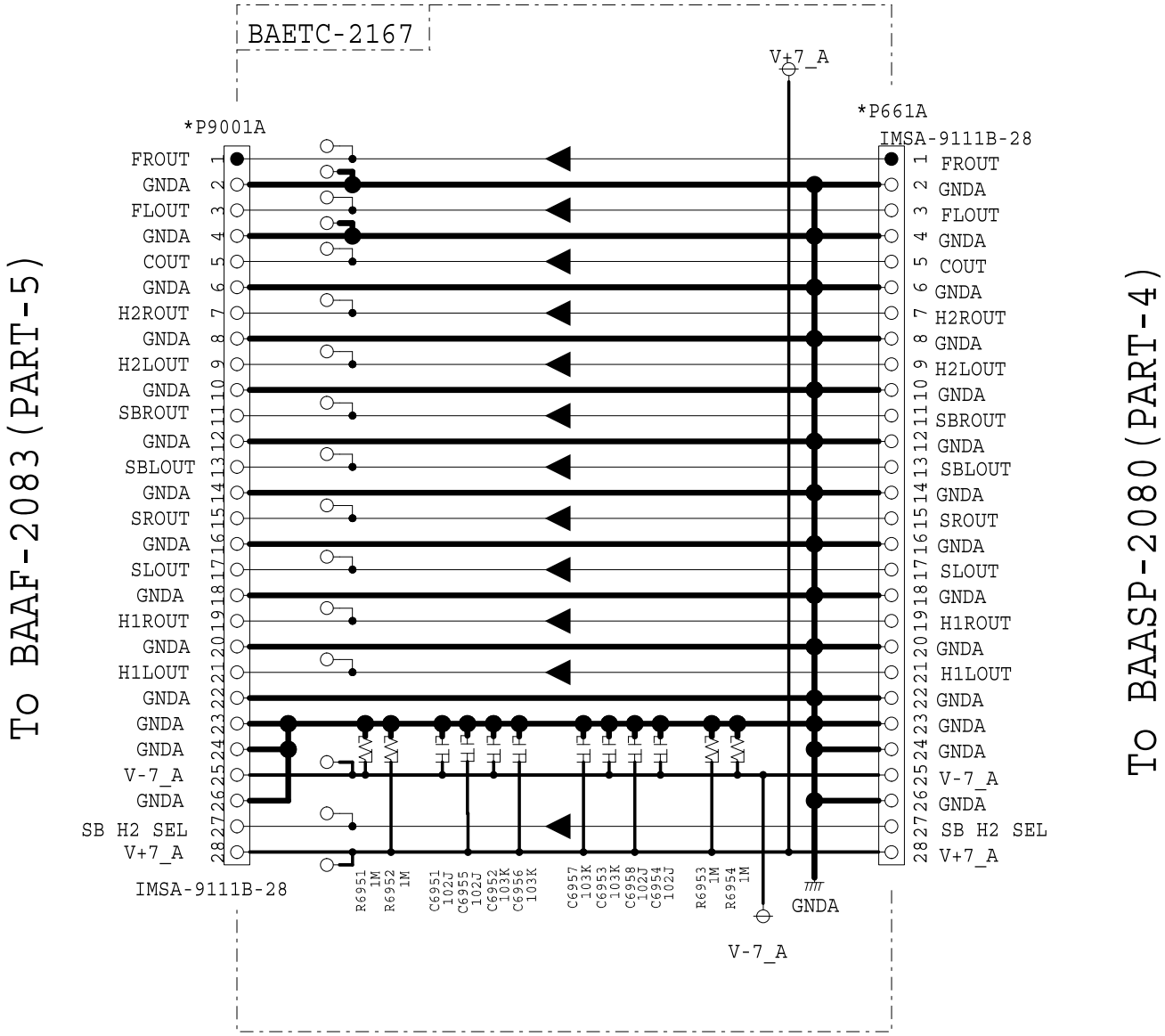

1A	SC-LX801(B)MDC
1B	SC-LX801(B)MGP
1T	SC-LX801(B)MJJ
1C	SC-LX901(B)MDC
1D	SC-LX901(B)MGP
1D	SC-LX901(S)MGP
1D	SC-LX901(B)MHB
1W	SC-LX901(B)MJJ

MODEL No.SC-LX801/901,TZ-RZ1100/3100,DRX-7/R1,PR-RZ5100,DRC-R1

SCHEMATIC DIAGRAM(PART-8) A REG BRIDGE SECTION

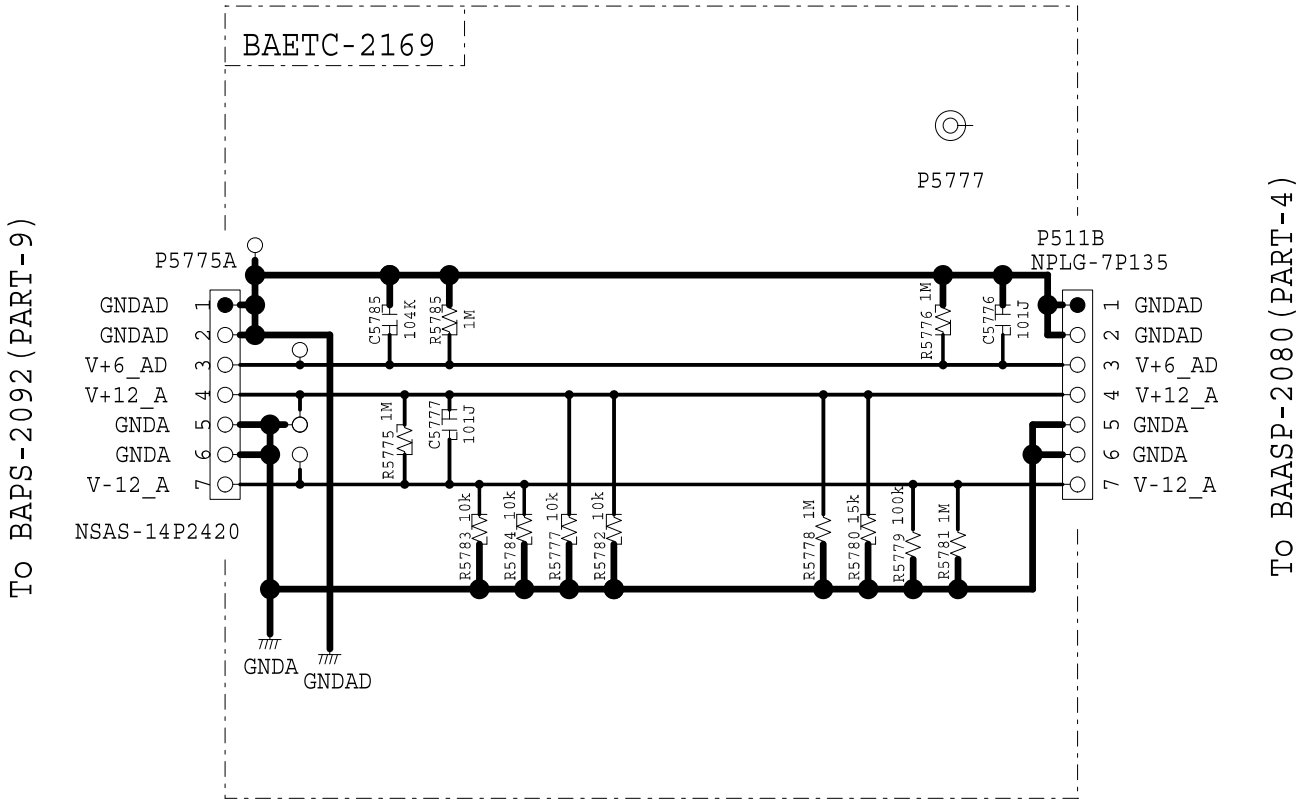

1A SC-LX801(B)MDC
1B SC-LX801(B)MGP
1T SC-LX801(B)MJJ
1C SC-LX901(B)MDC
1D SC-LX901(B)MGP
1D SC-LX901(S)MGP
1D SC-LX901(B)MHB
1W SC-LX901(B)MJJ
1E TX-RZ1100(B)MDC
1F TX-RZ1100(B)MGP
1F TX-RZ1100(S)MGP
1F TX-RZ1100(B)MHB
1F TX-RZ1100(B)MGR
1G TX-RZ3100(B)MDC
1H TX-RZ3100(B)MGP
1H TX-RZ3100(S)MGP
1H TX-RZ3100(B)MHB
1H TX-RZ3100(B)MGR
1J DRX-7(B)MDD
1K DRX-7(B)MGA
1L DRX-8(B)MDD
1M DRX-8(B)MGR
1M DRX-8(B)MGA
1X DRX-8(B)MJJ
1N PR-RZ5100(B)MDC
1P PR-RZ5100(B)MGP
1P PR-RZ5100(B)MHB
1P PR-RZ5100(B)MGR
1Q DRC-8(B)MDD
1R DRC-8(B)MGR
1R DRC-8(B)MGA
1Z DRC-8(B)MJJ

MODEL No.SC-LX801/901,TZ-RZ1100/3100,DRX-7/R1,PR-RZ5100,DRC-R1

SCHEMATIC DIAGRAM(PART-8) IR AMP FFC GUARD SECTION

BAETC-2170

PR-RZ5100,DRC-8=NM

*P6071

260261

CB-71683(L=50)

1A SC-LX801(B)MDC
1B SC-LX801(B)MGP
1T SC-LX801(B)MJJ
1C SC-LX901(B)MDC
1D SC-LX901(B)MGP
1D SC-LX901(S)MGP
1D SC-LX901(B)MHB
1W SC-LX901(B)MJJ
1E TX-RZ1100(B)MDC
1F TX-RZ1100(B)MGP
1F TX-RZ1100(S)MGP
1F TX-RZ1100(B)MHB
1F TX-RZ1100(B)MGR
1G TX-RZ3100(B)MDC
1H TX-RZ3100(B)MGP
1H TX-RZ3100(S)MGP
1H TX-RZ3100(B)MHB
1H TX-RZ3100(B)MGR
1J DRX-7(B)MDD
1K DRX-7(B)MGA
1L DRX-8(B)MDD
1M DRX-8(B)MGR
1M DRX-8(B)MGA
1X DRX-8(B)MJJ
1N PR-RZ5100(B)MDC
1P PR-RZ5100(B)MGP
1P PR-RZ5100(B)MHB
1P PR-RZ5100(B)MGR
1Q DRC-8(B)MDD
1R DRC-8(B)MGR
1R DRC-8(B)MGA
1Z DRC-8(B)MJJ

reference	1A	1B	1C	1D	1E	1F	1G	1H
*P6071	CB-71683(L=50)	CB-71683(L=50)	CB-71683(L=50)	CB-71683(L=50)	CB-71683(L=50)	CB-71683(L=50)	CB-71683(L=50)	CB-71683(L=50)

reference	1J	1K	1L	1M	1N	1P	1Q	1R	1T	1W	1X	1Z
*P6071	CB-71683(L=50)	CB-71683(L=50)	CB-71683(L=50)	CB-71683(L=50)	-	-	-	-	CB-71683(L=50)	CB-71683(L=50)	CB-71683(L=50)	-

MODEL No.SC-LX801/901,TZ-RZ1100/3100,DRX-7/R1

SCHEMATIC DIAGRAM(PART-8) B CABLE GUARD SECTION

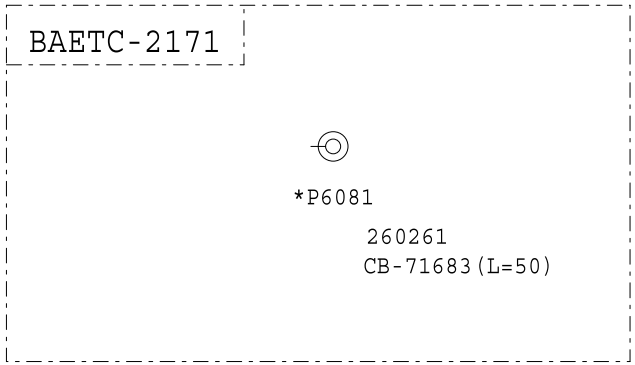

1A	SC-LX801(B)MDC
1B	SC-LX801(B)MGP
1T	SC-LX801(B)MJJ
1C	SC-LX901(B)MDC
1D	SC-LX901(B)MGP
1D	SC-LX901(S)MGP
1D	SC-LX901(B)MHB
1W	SC-LX901(B)MJJ
1E	TX-RZ1100(B)MDC
1F	TX-RZ1100(B)MGP
1F	TX-RZ1100(S)MGP
1F	TX-RZ1100(B)MHB
1F	TX-RZ1100(B)MGR
1G	TX-RZ3100(B)MDC
1H	TX-RZ3100(B)MGP
1H	TX-RZ3100(S)MGP
1H	TX-RZ3100(B)MHB
1H	TX-RZ3100(B)MGR
1J	DRX-7(B)MDD
1K	DRX-7(B)MGA
1L	DRX-8(B)MDD
1M	DRX-8(B)MGR
1M	DRX-8(B)MGA
1X	DRX-8(B)MJJ

reference	1A	1B	1C	1D	1E	1F	1G	1H
*P6081	CB-71683(L=50)	CB-71683(L=50)	CB-71683(L=50)	CB-71683(L=50)	CB-71683(L=50)	CB-71683(L=50)	CB-71683(L=50)	CB-71683(L=50)

reference	1J	1K	1L	1M	1N	1P	1Q	1R	1T	1W	1X	1Z
*P6081	CB-71683(L=50)	CB-71683(L=50)	CB-71683(L=50)	CB-71683(L=50)	-	-	-	-	CB-71683(L=50)	CB-71683(L=50)	CB-71683(L=50)	-

MODEL No.SC-LX801/901,TX-RZ-1100/3100,DRX-7/R1,PR-RZ5100,DRC-R1

SCHEMATIC DIAGRAM(PART-8) D-AUDIO BRIDGE SECTION

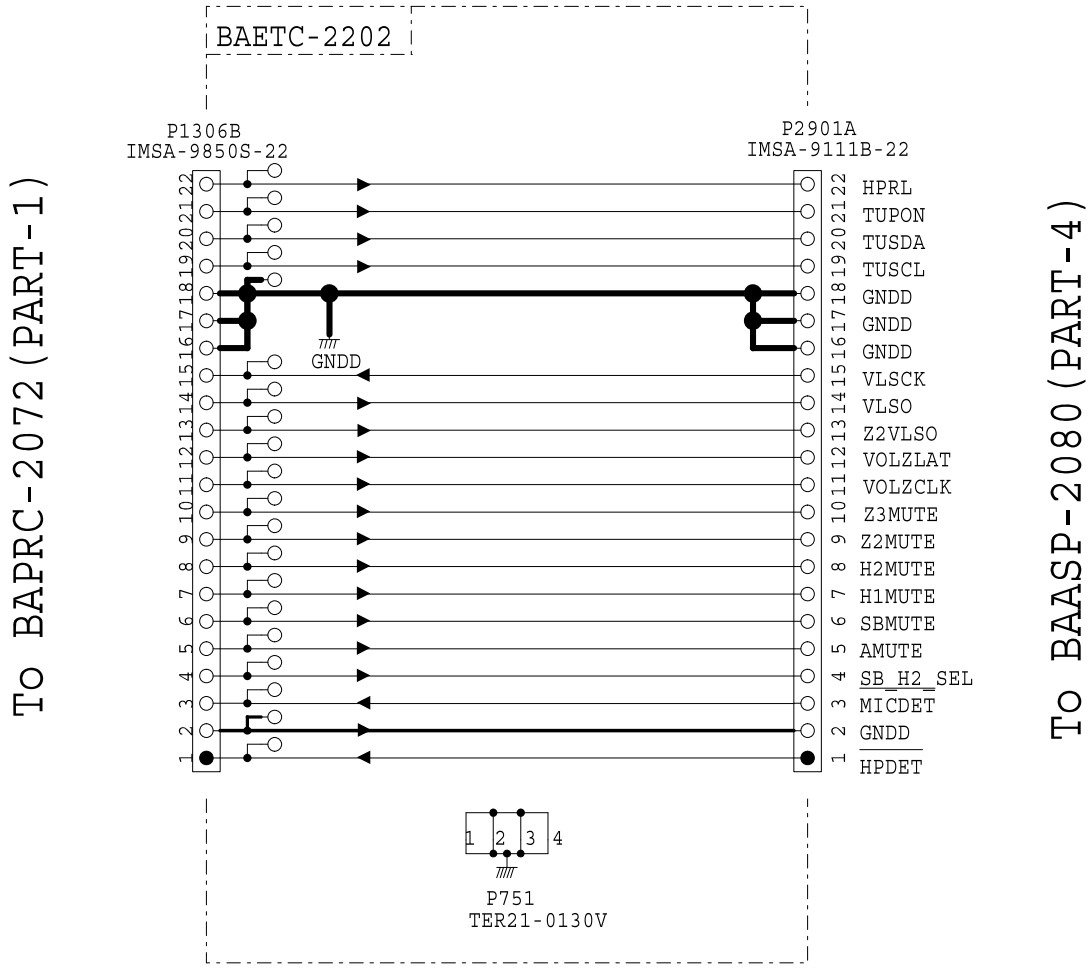

1A SC-LX801(B)MDC
1B SC-LX801(B)MGP
1T SC-LX801(B)MJJ
1C SC-LX901(B)MDC
1D SC-LX901(B)MGP
1D SC-LX901(S)MGP
1D SC-LX901(B)MHB
1W SC-LX901(B)MJJ

MODEL No.SC-LX801/901,TZ-RZ1100/3100,DRX-7/R1,PR-RZ5100,DRC-R1

SCHEMATIC DIAGRAM(PART-8) TUNER SECTION

reference	1A	1B	1C	1D	1E	1F	1G	1H	1J
*Q1	RZ5B801-0001E2	RZ5B801-0002E2	RZ5B801-0001E2	RZ5B801-0002E2	RZ5B801-0001E2	RZ5B801-0001E2	RZ5B801-0001E2	RZ5B801-0002E2	RZ5B801-0001E2
*P1	NTM-1PDSC437	NTM-1PDSC438	NTM-1PDSC437	NTM-1PDSC438	NTM-1PDSC437	NTM-1PDSC438	NTM-1PDSC437	NTM-1PDSC438	NTM-1PDSC437

reference	1K	1L	1M	1N	1P	1Q	1R	1T	1W
*Q1	RZ5B801-0002E2	RZ5B801-0001E2	RZ5B801-0002E2	RZ5B801-0001E2	RZ5B801-0002E2	RZ5B801-0001E2	RZ5B801-0002E2	RZ5B801-0001E2	RZ5B801-0001E2
*P1	NTM-1PDSC438	NTM-1PDSC437	NTM-1PDSC438	NTM-1PDSC437	NTM-1PDSC438	NTM-1PDSC437	NTM-1PDSC438	NTM-1PDSC437	NTM-1PDSC437

reference	1X	1Z
*Q1	RZ5B801-0001E2	RZ5B801-0001E2
*P1	NTM-1PDSC437	NTM-1PDSC437

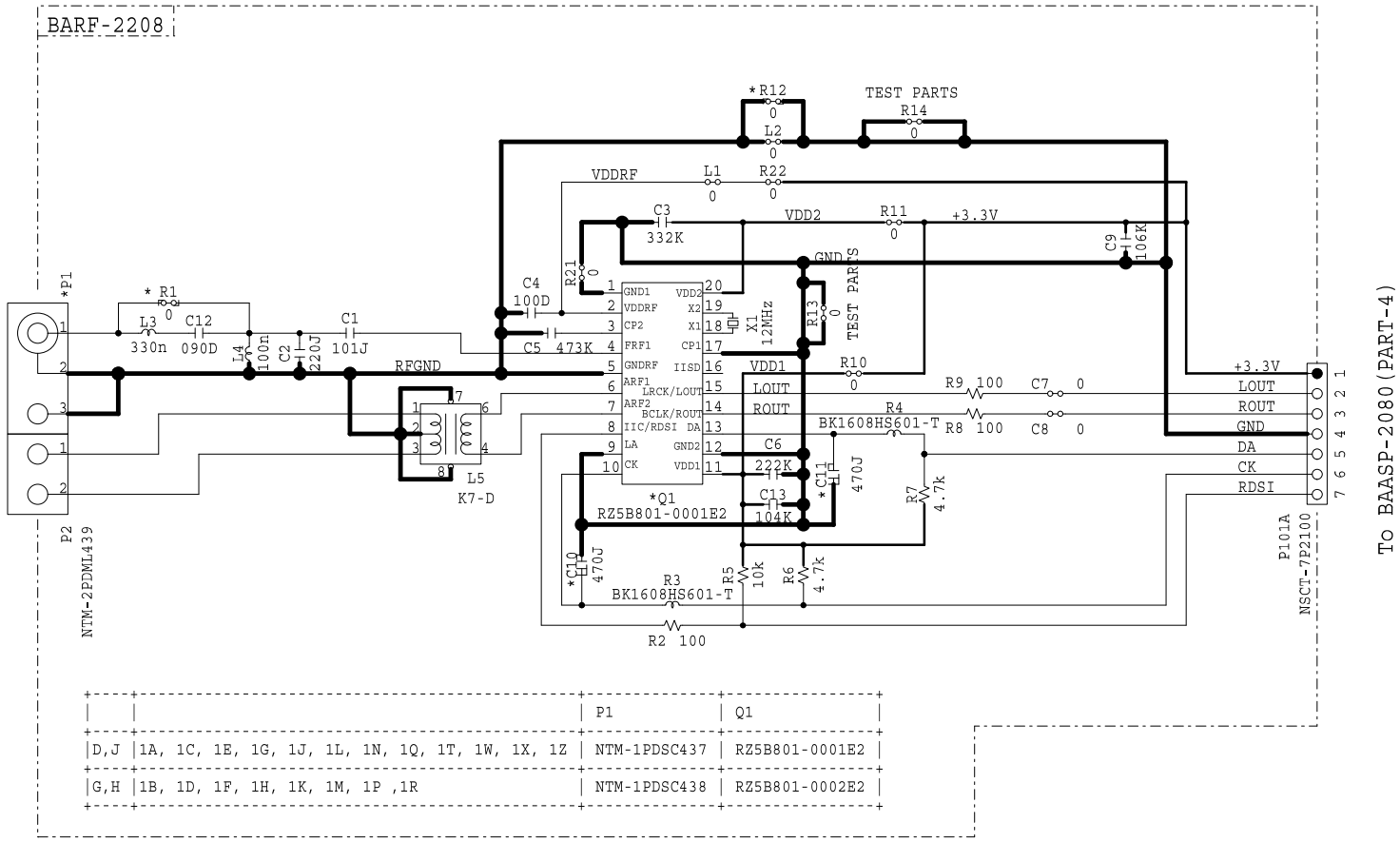

		P1	Q1
D,J	1A, 1C, 1E, 1G, 1J, 1L, 1N, 1Q, 1T, 1W, 1X, 1Z	NTM-1PDSC437	RZ5B801-0001E2
G,H	1B, 1D, 1F, 1H, 1K, 1M, 1P ,1R	NTM-1PDSC438	RZ5B801-0002E2

1A	SC-LX801(B)MDC
1B	SC-LX801(B)MGP
1T	SC-LX801(B)MJJ
1C	SC-LX901(B)MDC
1D	SC-LX901(B)MGP
1D	SC-LX901(S)MGP
1D	SC-LX901(B)MHB
1W	SC-LX901(B)MJJ
1E	TX-RZ1100(B)MDC
1F	TX-RZ1100(B)MGP
1F	TX-RZ1100(S)MGP
1F	TX-RZ1100(B)MHB
1F	TX-RZ1100(B)MGR
1G	TX-RZ3100(B)MDC
1H	TX-RZ3100(B)MGP
1H	TX-RZ3100(S)MGP
1H	TX-RZ3100(B)MHB
1H	TX-RZ3100(B)MGR
1J	DRX-7(B)MDD
1K	DRX-7(B)MGA
1L	DRX-8(B)MDD
1M	DRX-8(B)MGR
1M	DRX-8(B)MGA
1X	DRX-8(B)MJJ
1N	PR-RZ5100(B)MDC
1P	PR-RZ5100(B)MGP
1P	PR-RZ5100(B)MHB
1P	PR-RZ5100(B)MGR
1Q	DRC-8(B)MDD
1R	DRC-8(B)MGR
1R	DRC-8(B)MGA
1Z	DRC-8(B)MJJ

MODEL No.SC-LX801/901,TZ-RZ1100/3100,DRX-7/R1

SCHEMATIC DIAGRAM(PART-8) FAN_CONNECT SECTION

reference	1A	1B	1C	1D	1E	1F	1G	1H	1J
*P5931	NPLG-3P131	NPLG-3P131	NPLG-3P131	NPLG-3P131	NPLG-3P131	NPLG-3P131	NPLG-3P131	NPLG-3P131	NPLG-3P131
*P5932	CB-71683(L=50)	CB-71683(L=50)	CB-71683(L=50)	CB-71683(L=50)	CB-71683(L=50)	CB-71683(L=50)	CB-71683(L=50)	CB-71683(L=50)	CB-71683(L=50)
*P5933	CB-71683(L=50)	CB-71683(L=50)	CB-71683(L=50)	CB-71683(L=50)	CB-71683(L=50)	CB-71683(L=50)	CB-71683(L=50)	CB-71683(L=50)	CB-71683(L=50)
*P7201B	NPLG-3P131	NPLG-3P131	NPLG-3P131	NPLG-3P131	NPLG-3P131	NPLG-3P131	NPLG-3P131	NPLG-3P131	NPLG-3P131

reference	1K	1L	1M	1N	1P	1Q	1R	1T	1W	1X	1Z
*P5931	NPLG-3P131	NPLG-3P131	NPLG-3P131	-	-	-	-	NPLG-3P131	NPLG-3P131	NPLG-3P131	-
*P5932	CB-71683(L=50)	CB-71683(L=50)	CB-71683(L=50)	-	-	-	-	CB-71683(L=50)	CB-71683(L=50)	CB-71683(L=50)	-
*P5933	CB-71683(L=50)	CB-71683(L=50)	CB-71683(L=50)	-	-	-	-	CB-71683(L=50)	CB-71683(L=50)	CB-71683(L=50)	-
*P7201B	NPLG-3P131	NPLG-3P131	NPLG-3P131	-	-	-	-	NPLG-3P131	NPLG-3P131	NPLG-3P131	-

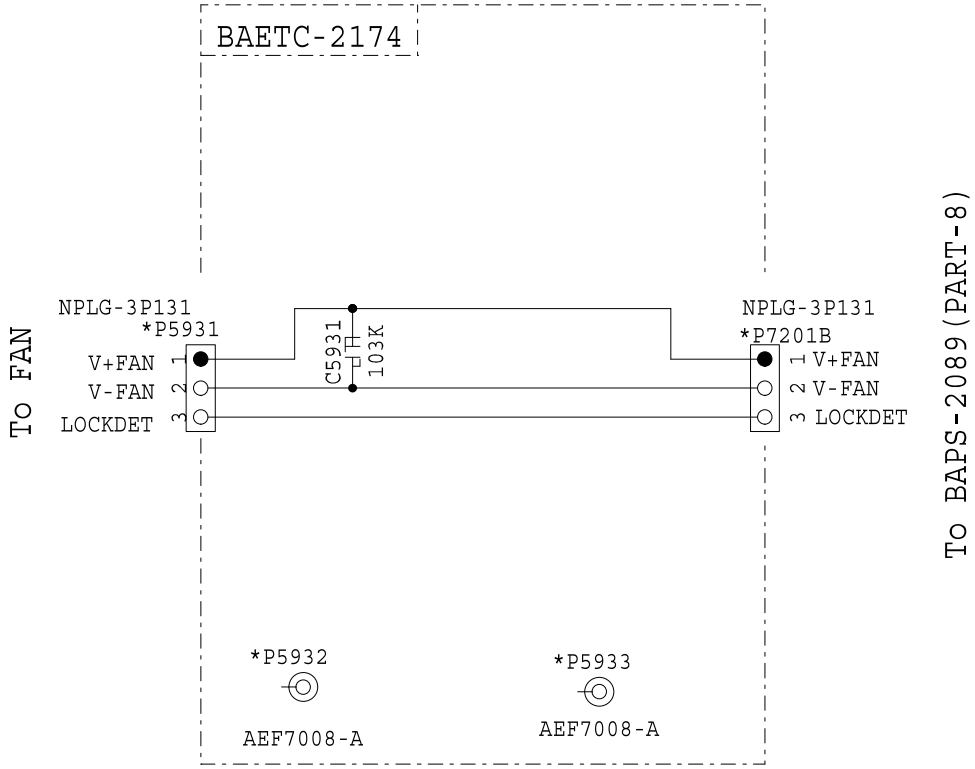

1A	SC-LX801(B)MDC
1B	SC-LX801(B)MGP
1T	SC-LX801(B)MJJ
1C	SC-LX901(B)MDC
1D	SC-LX901(B)MGP
1D	SC-LX901(S)MGP
1D	SC-LX901(B)MHB
1W	SC-LX901(B)MJJ
1E	TX-RZ1100(B)MDC
1F	TX-RZ1100(B)MGP
1F	TX-RZ1100(S)MGP
1F	TX-RZ1100(B)MHB
1F	TX-RZ1100(B)MGR
1G	TX-RZ3100(B)MDC
1H	TX-RZ3100(B)MGP
1H	TX-RZ3100(S)MGP
1H	TX-RZ3100(B)MHB
1H	TX-RZ3100(B)MGR
1J	DRX-7(B)MDD
1K	DRX-7(B)MGA
1L	DRX-8(B)MDD
1M	DRX-8(B)MGR
1M	DRX-8(B)MGA
1X	DRX-8(B)MJJ

MODEL No.SC-LX801/901/TX-RZ1100/3100/DRX-7/R1/PR-RZ5100/DCR-R1

SCHEMATIC DIAGRAM (PART-9) REG SECTION

reference	1A	1B	1C	1D	1E	1F	1G	1H
*C9507	CE04W25V-3300M(SMG)	CE04W25V-3300M(SMG)	CE04W25V-3300M(SMG)	CE04W25V-3300M(SMG)	CE04W25V-3300M(UTSP)	CE04W25V-3300M(UTSP)	CE04W25V-3300M(UTSP)	CE04W25V-3300M(UTSP)
*C9508	CE04W25V-3300M(SMG)	CE04W25V-3300M(SMG)	CE04W25V-3300M(SMG)	CE04W25V-3300M(SMG)	CE04W25V-3300M(UTSP)	CE04W25V-3300M(UTSP)	CE04W25V-3300M(UTSP)	CE04W25V-3300M(UTSP)
*C9515	CE04W35V-220M(SMG)	CE04W35V-220M(SMG)	CE04W35V-220M(SMG)	CE04W35V-220M(SMG)	CE04W35V-220M(UTSP)	CE04W35V-220M(UTSP)	CE04W35V-220M(UTSP)	CE04W35V-220M(UTSP)
*C9516	CE04W35V-220M(SMG)	CE04W35V-220M(SMG)	CE04W35V-220M(SMG)	CE04W35V-220M(SMG)	CE04W35V-220M(UTSP)	CE04W35V-220M(UTSP)	CE04W35V-220M(UTSP)	CE04W35V-220M(UTSP)
*C9522	CE04W25V-2200M(SMG)	CE04W25V-2200M(SMG)	CE04W25V-2200M(SMG)	CE04W25V-2200M(SMG)	-	-	-	-
*C9524	CE04W10V-220M(SMG)	CE04W10V-220M(SMG)	CE04W10V-220M(SMG)	CE04W10V-220M(SMG)	CE04W10V-220M(UTSP)	CE04W10V-220M(UTSP)	CE04W10V-220M(UTSP)	CE04W10V-220M(UTSP)
*C9527	-	-	-	-	CE04W25V-2200M(UTSP)	CE04W25V-2200M(UTSP)	CE04W25V-2200M(UTSP)	CE04W25V-2200M(UTSP)

reference	1J	1K	1L	1M	1N	1P	1Q	1R
*C9507	CE04W25V-3300M(UTSP)	CE04W25V-3300M(UTSP)	CE04W25V-3300M(UTSP)	CE04W25V-3300M(UTSP)	CE04W25V-3300M(UTSP)	CE04W25V-3300M(UTSP)	CE04W25V-3300M(UTSP)	CE04W25V-3300M(UTSP)
*C9508	CE04W25V-3300M(UTSP)	CE04W25V-3300M(UTSP)	CE04W25V-3300M(UTSP)	CE04W25V-3300M(UTSP)	CE04W25V-3300M(UTSP)	CE04W25V-3300M(UTSP)	CE04W25V-3300M(UTSP)	CE04W25V-3300M(UTSP)
*C9515	CE04W35V-220M(UTSP)	CE04W35V-220M(UTSP)	CE04W35V-220M(UTSP)	CE04W35V-220M(UTSP)	CE04W35V-220M(UTSP)	CE04W35V-220M(UTSP)	CE04W35V-220M(UTSP)	CE04W35V-220M(UTSP)
*C9516	CE04W35V-220M(UTSP)	CE04W35V-220M(UTSP)	CE04W35V-220M(UTSP)	CE04W35V-220M(UTSP)	CE04W35V-220M(UTSP)	CE04W35V-220M(UTSP)	CE04W35V-220M(UTSP)	CE04W35V-220M(UTSP)
*C9522	-	-	-	-	-	-	-	-
*C9524	CE04W10V-220M(UTSP)	CE04W10V-220M(UTSP)	CE04W10V-220M(UTSP)	CE04W10V-220M(UTSP)	CE04W10V-220M(UTSP)	CE04W10V-220M(UTSP)	CE04W10V-220M(UTSP)	CE04W10V-220M(UTSP)
*C9527	CE04W25V-2200M(UTSP)	CE04W25V-2200M(UTSP)	CE04W25V-2200M(UTSP)	CE04W25V-2200M(UTSP)	CE04W25V-2200M(UTSP)	CE04W25V-2200M(UTSP)	CE04W25V-2200M(UTSP)	CE04W25V-2200M(UTSP)

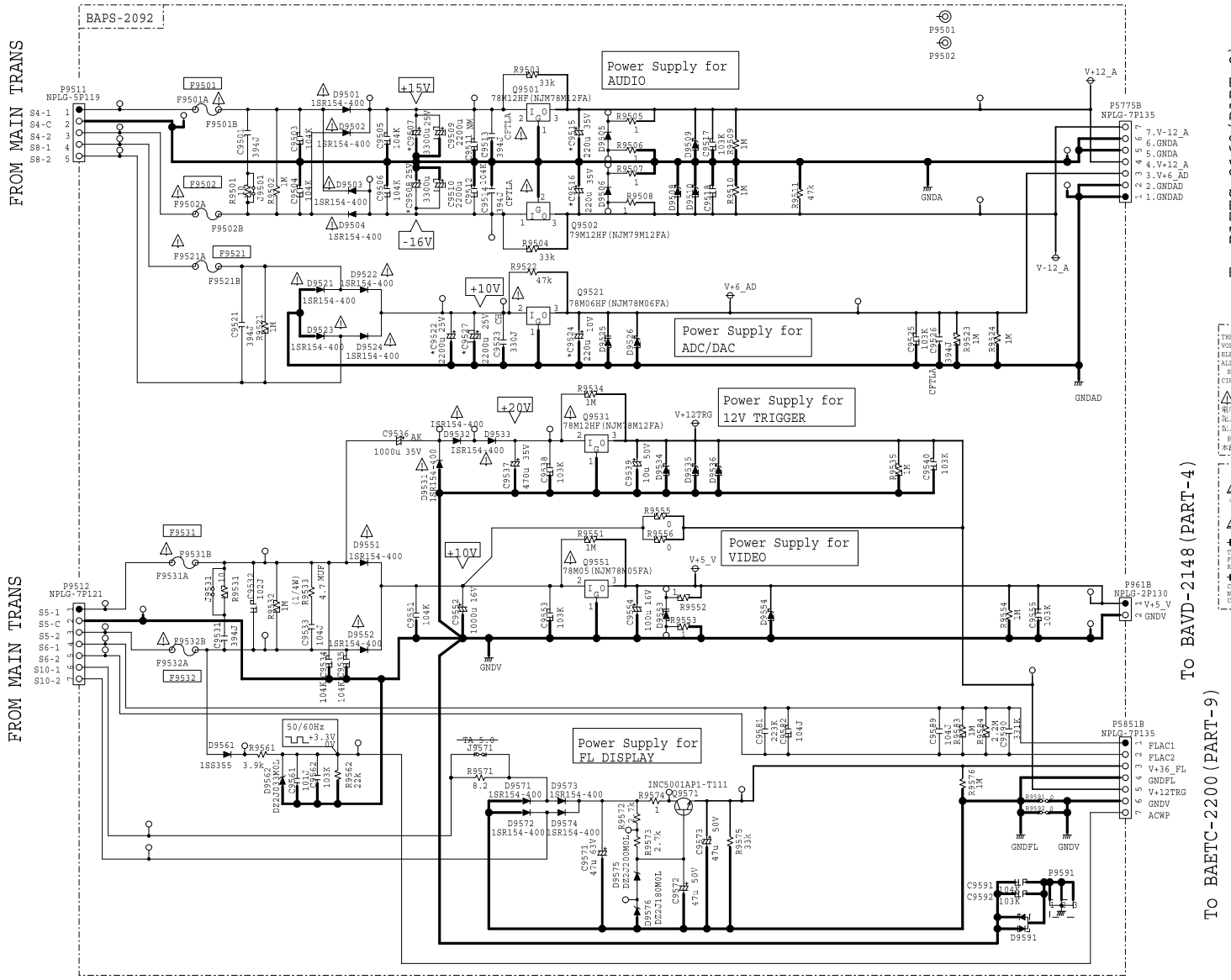

1. RESISTORS
Unit: k-kΩ, M-MΩ or Ω unless otherwise noted.
Rated Power: 1/16W unless otherwise noted.
Toleranee: (J)5% unless otherwise noted.
MUF : RD1/4MUF
2. CAPACITORS
Unit: p-pF or u-uF unless otherwise noted.
Ratings: Capacity(F)/Voltage(V) unless otherwise noted.
CH : CCSRCH , CFTLA : CFTLA
NP : CEANP , AK : CEAK
NO MARKED : CKSRYB or CEAT
3. NM: No Mount

THE COMPONENTS IDENTIFIED MARK ⚠ ARE CRITICAL FOR SAFETY, REPLACE ONLY WITH PART NUMBER SPECIFIED.
VOLTAGE (MEASURED WITH VOLTMETER) IS DC VOLTAGE. (NO INPUT SIGNAL)
ELECTRLYTIC CAPACITORS ARE IN uF/WV.
ALL CAPACITORS ARE IN pF/50WV UNLESS OTHERWISE NOTED.
EX) 030 -> 3pF, 330 -> 33pF, 331 -> 330pF, 333 -> 0.033uF
CIRCUIT IS SUBJECT TO CHANGE FOR IMPROVEMENT.

⚠ 用は火災、感電の危険に関与する部品の為、必ず指定部品を使用の事。
電圧表示は無信号時に測定した直流電圧を示す。
記入なき電解コンデンサの単位はuF/WVである。
記入なきコンデンサの単位はpF/50WVである。
例) 030 -> 3pF, 330 -> 33pF, 331 -> 330pF, 333 -> 0.033uF
本配線図は基本配線図につき性能改善等により予告なく変更する事がある。

CAUTION
FOR CONTINUED PROTECTION AGAINST FIRE HAZARD,
REPLACE ONLY WITH FUSE OF SAME TYPE AND RATING INDICATED.

ATTENTION
AFIN D'ASSURER UNE PROTECTION PERMANENTE CONTRE LES RISQUES D'INCENDIE,
REMPLACER UNIQUEMENT PAR UN FUSIBLE DE MEME TYPE ET CALIBRATION COMME INDIQUE.

THIS SYMBOL LOCATED NEAR THE FUSE INDICATES THAT THE FUSE USED IS SLOW OPERATING TYPE
FOR CONTINUED PROTECTION AGAINST FIRE FUSE HAZARD, REPLACE WITH SAME TYPE FUSE.
RATING REFER TO THE MAKING ADJACENT TO THE SYMBOL.

CE SYMBOLE INDIQUE QUE LE FUSIBLE UTLISE EST A LENT, E POUR UNEPROTECTION PERMANENT,
N'UTILISER QUE DES FUSIBLES DE MEME TYPE.
CE DARNIER EST INDIQUE LA QU LE PRESENT SYMBOL EST APPOSE.

MODEL No.SC-LX801/901/TX-RZ1100/3100/DRX-7/R1/PR-RZ5100/DRC-R1

SCHEMATIC DIAGRAM (PART-9) FRONT BRIDGE SECTION

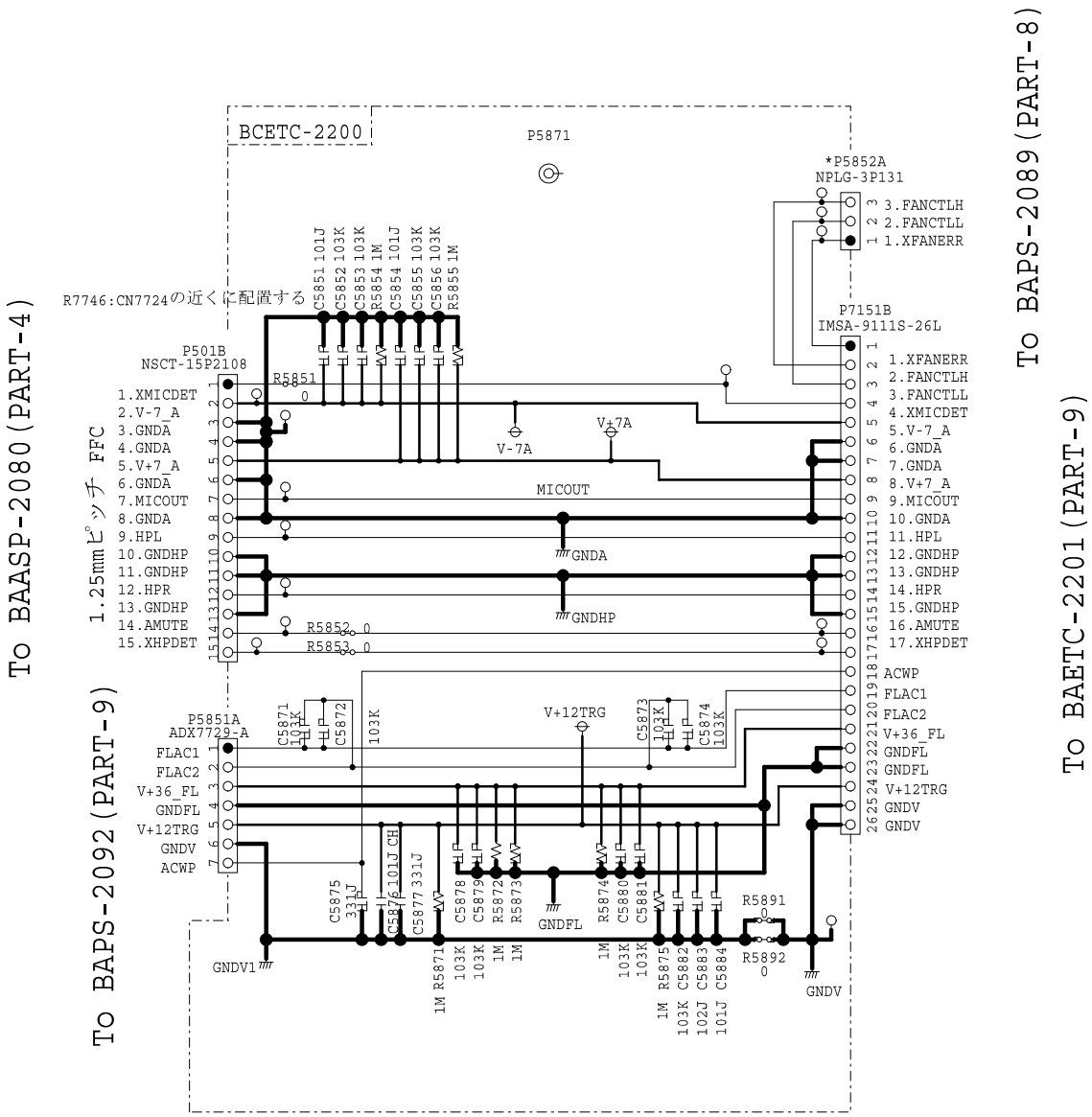

reference	1A	1B	1C	1D	1E	1F	1G	1H	1J	1K	1L	1M	1N	1P	1Q	1R
*P5852A	NPLG-3P131	NPLG-3P131	NPLG-3P131	NPLG-3P131	NPLG-3P131	NPLG-3P131	NPLG-3P131	NPLG-3P131	NPLG-3P131	NPLG-3P131	NPLG-3P131	NPLG-3P131	-	-	-	-

MODEL No.SC-LX801/901,TX-RZ1100/3100,DRX-7/R1,PR-RZ5100,DRC-R1

SCHEMATIC DIAGRAM (PART-9) SIDE BRIDGE SECTION

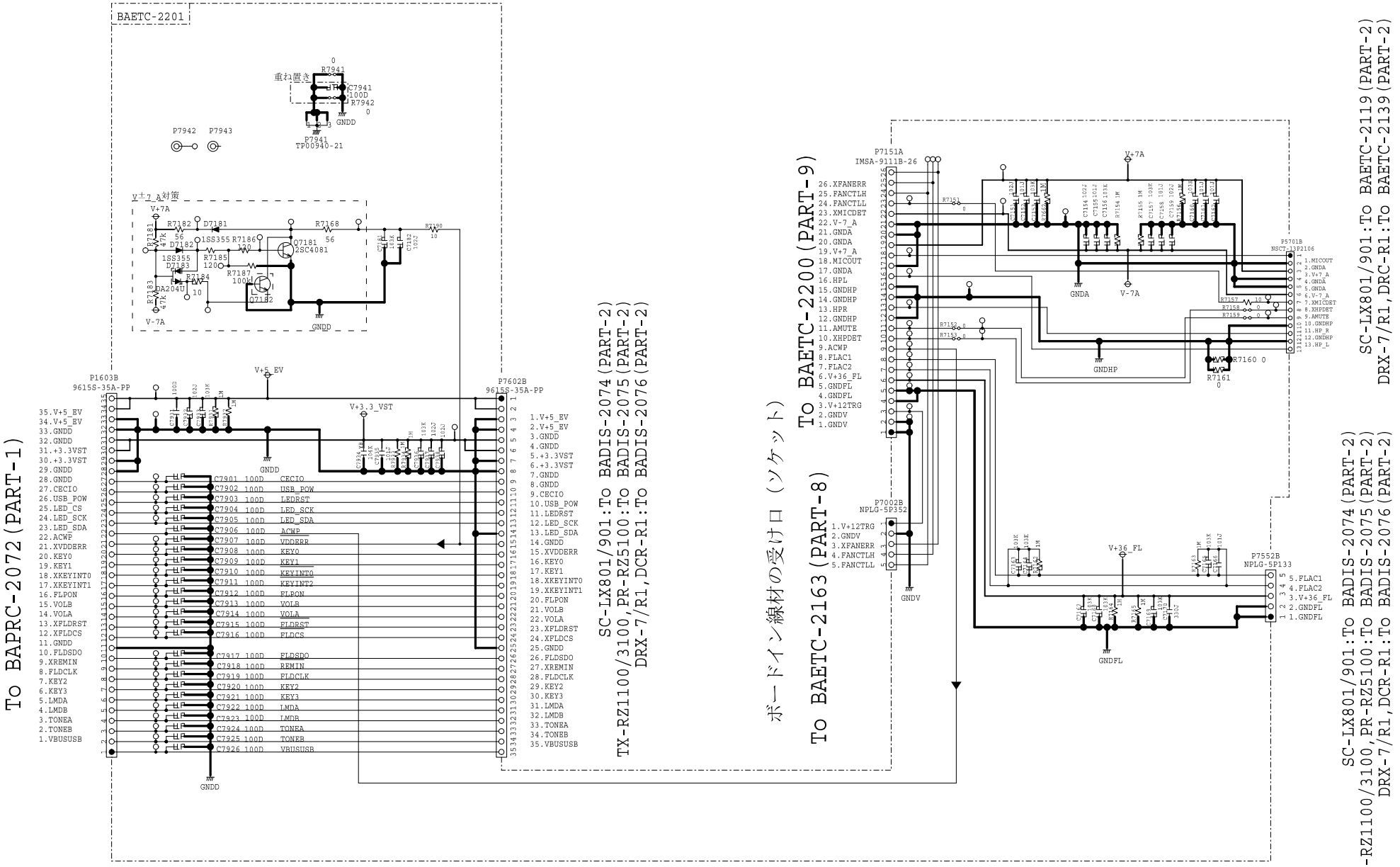

MODEL No.SC-LX801/901

SCHEMATIC DIAGRAM(PART-9) CONNECT_M SECTION

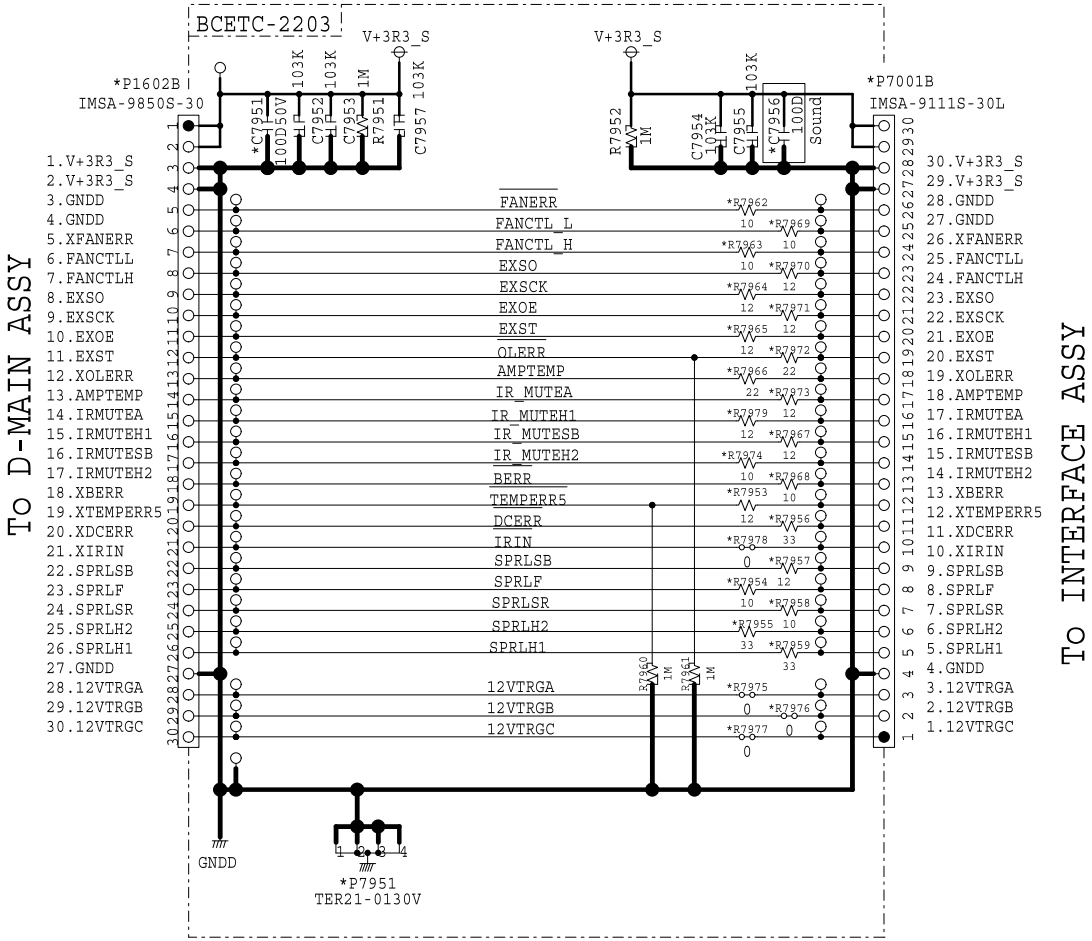

reference	1A	1B	1C	1D
*C7951	CC725CH1H-100D1	CC725CH1H-100D1	CC725CH1H-100D1	CC725CH1H-100D1
*C7956	CC725CH1H-100D1	CC725CH1H-100D1	CC725CH1H-100D1	CC725CH1H-100D1
*R7953	RN72K1J-120JE	RN72K1J-120JE	RN72K1J-120JE	RN72K1J-120JE
*R7954	RN72K1J-100JE	RN72K1J-100JE	RN72K1J-100JE	RN72K1J-100JE
*R7955	RN72K1J-330JE	RN72K1J-330JE	RN72K1J-330JE	RN72K1J-330JE
*R7956	RN72K1J-330JE	RN72K1J-330JE	RN72K1J-330JE	RN72K1J-330JE
*R7957	RN72K1J-120JE	RN72K1J-120JE	RN72K1J-120JE	RN72K1J-120JE
*R7958	RN72K1J-100JE	RN72K1J-100JE	RN72K1J-100JE	RN72K1J-100JE
*R7959	RN72K1J-330JE	RN72K1J-330JE	RN72K1J-330JE	RN72K1J-330JE
*R7962	RN72K1J-100JE	RN72K1J-100JE	RN72K1J-100JE	RN72K1J-100JE
*R7963	RN72K1J-100JE	RN72K1J-100JE	RN72K1J-100JE	RN72K1J-100JE
*R7964	RN72K1J-120JE	RN72K1J-120JE	RN72K1J-120JE	RN72K1J-120JE
*R7965	RN72K1J-120JE	RN72K1J-120JE	RN72K1J-120JE	RN72K1J-120JE
*R7966	RN72K1J-220JE	RN72K1J-220JE	RN72K1J-220JE	RN72K1J-220JE
*R7967	RN72K1J-120JE	RN72K1J-120JE	RN72K1J-120JE	RN72K1J-120JE
*R7968	RN72K1J-100JE	RN72K1J-100JE	RN72K1J-100JE	RN72K1J-100JE
*R7969	RN72K1J-100JE	RN72K1J-100JE	RN72K1J-100JE	RN72K1J-100JE
*R7970	RN72K1J-120JE	RN72K1J-120JE	RN72K1J-120JE	RN72K1J-120JE
*R7971	RN72K1J-120JE	RN72K1J-120JE	RN72K1J-120JE	RN72K1J-120JE
*R7972	RN72K1J-220JE	RN72K1J-220JE	RN72K1J-220JE	RN72K1J-220JE
*R7973	RN72K1J-120JE	RN72K1J-120JE	RN72K1J-120JE	RN72K1J-120JE
*R7974	RN72K1J-100JE	RN72K1J-100JE	RN72K1J-100JE	RN72K1J-100JE
*R7975	RN72K1J-000JE_Simuke	RN72K1J-000JE_Simuke	RN72K1J-000JE_Simuke	RN72K1J-000JE_Simuke
*R7976	RN72K1J-000JE_Simuke	RN72K1J-000JE_Simuke	RN72K1J-000JE_Simuke	RN72K1J-000JE_Simuke
*R7977	RN72K1J-000JE_Simuke	RN72K1J-000JE_Simuke	RN72K1J-000JE_Simuke	RN72K1J-000JE_Simuke
*R7978	RN72K1J-000JE_Simuke	RN72K1J-000JE_Simuke	RN72K1J-000JE_Simuke	RN72K1J-000JE_Simuke
*R7979	RN72K1J-120JE	RN72K1J-120JE	RN72K1J-120JE	RN72K1J-120JE
*P1602B	IMSA-9850S-30	IMSA-9850S-30	IMSA-9850S-30	IMSA-9850S-30
*P7001B	IMSA-9111S-30L	IMSA-9111S-30L	IMSA-9111S-30L	IMSA-9111S-30L
*P7951	TER21-0130V	TER21-0130V	TER21-0130V	TER21-0130V

reference	1E	1F	1G	1H	1J	1K	1L	1M	1N	1P	1Q	1R
*C7951												
*C7956												
*R7953												
*R7954												
*R7955												
*R7956												
*R7957												
*R7958												
*R7959												
*R7962												
*R7963												
*R7964												
*R7965												
*R7966												
*R7967												
*R7968												
*R7969												
*R7970												
*R7971												
*R7972												
*R7973												
*R7974												
*R7975												
*R7976												
*R7977												
*R7978												
*R7979												
*P1602B												
*P7001B												
*P7951												

MODEL No.SC-LX701/801/901,TX-RZ1100/3100,DRX-7/R1,PR-RZ5100,DRC-R1

SCHEMATIC DIAGRAM (PART-9) USB RECT_M SECTION

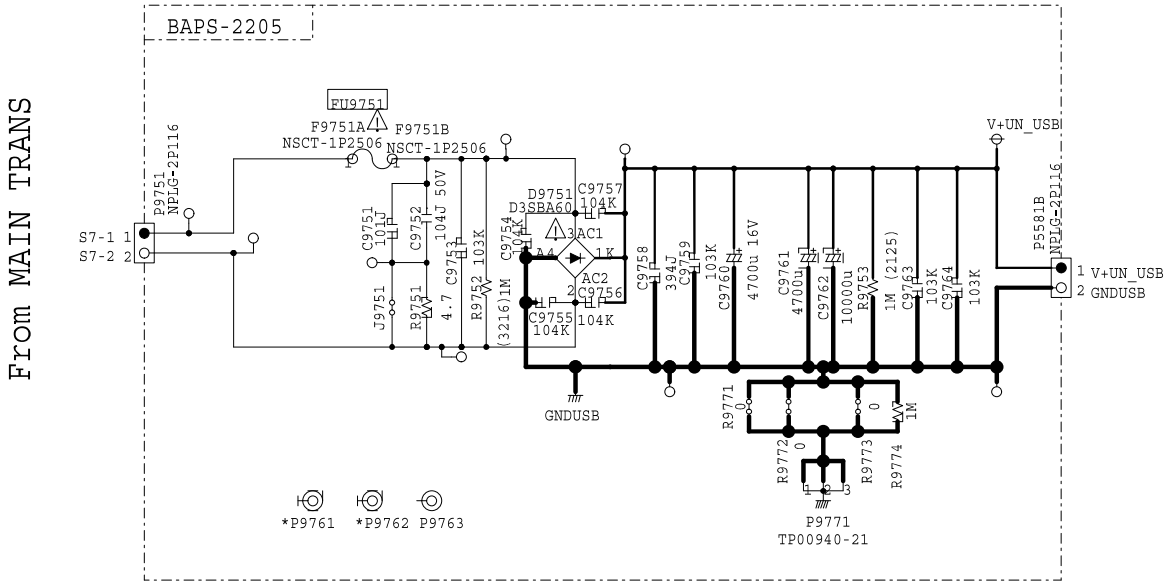

SC-LX801/901:To BAHDM-2086(PART-6)
TX-RZ110/3100,DRX-7/R1,PR-RZ5100,DRC-R1:To BAHDM-2087(PART-6)

reference	1A	1B	1C	1D	1E	1F	1G	1H	1J	1K	1L	1M	1N	1P	1Q	1R
*P9761									CB-71683(L=50)	CB-71683(L=50)	CB-71683(L=50)	CB-71683(L=50)			CB-71683(L=50)	CB-71683(L=50)
*P9762									CB-71683(L=50)	CB-71683(L=50)	CB-71683(L=50)	CB-71683(L=50)			CB-71683(L=50)	CB-71683(L=50)

THE COMPONENTS IDENTIFIED MARK ⚠ ARE CRITICAL FOR SAFETY, REPLACE ONLY WITH PART NUMBER SPECFIED.
VOLTAGE (MEASURED WITH VOLTMETER) IS DC VOLTAGE. (NO INPUT SIGNAL)
ELECTRLYTIC CAPACITORS (ｰﾋﾞｷｬﾌﾟ) ARE IN uF/WV.
ALL CAPACITORS ARE IN pF/50WV UNLESS OTHERWISE NOTED.
EX) 030 -> 3pF, 330 -> 33pF, 331 -> 330pF, 333 -> 0.033uF
CIRCUIT IS SUBJECT TO CHANGE FOR IMPROVEMENT.

⚠印は火災、感電の危険に関与する部品の為、必ず指定部品を使用の事。
電圧表示は無信号時に測定した直流電圧を示す。
記入なき電解コンデンサの単位はuF/WVである。
記入なきコンデンサの単位はpF/50WVである。
（例）030 -> 3pF, 330 -> 33pF, 331 -> 330pF, 333 -> 0.033uF
本配線図は基本配線図につき性能改善等により予告なく変更する事がある。

MODEL No.SC-LX801/901

SCHEMATIC DIAGRAM (PART-9) CONTROL_P SECTION

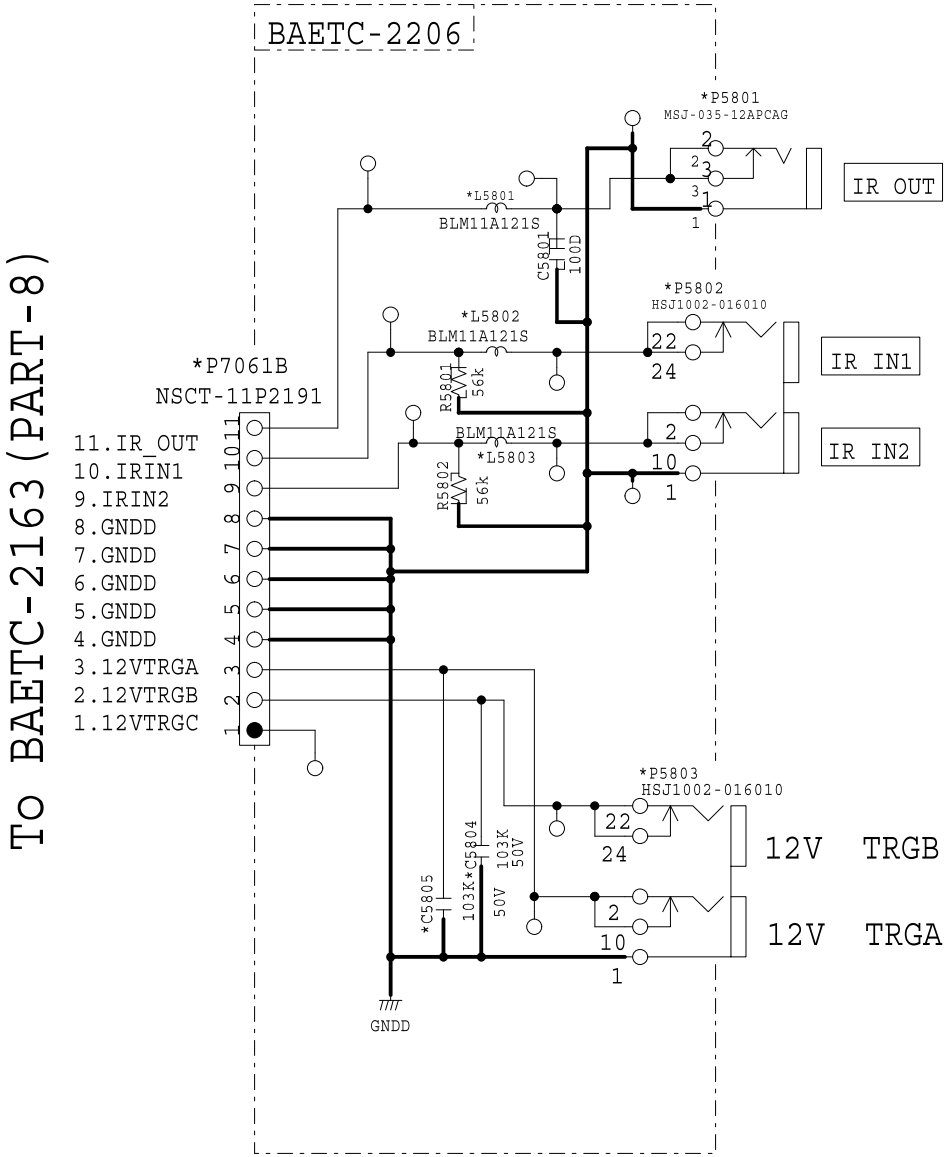

reference	1A	1B	1C
*L5801	BLM11A121S	BLM11A121S	BLM11A121S
*L5802	BLM11A121S	BLM11A121S	BLM11A121S
*L5803	BLM11A121S	BLM11A121S	BLM11A121S
*C5804	CK725B1H-103K	CK725B1H-103K	CK725B1H-103K
*C5805	CK725B1H-103K	CK725B1H-103K	CK725B1H-103K
*P5801	MSJ-035-12APCAG	MSJ-035-12APCAG	MSJ-035-12APCAG
*P5802	HSJ1002-016010	HSJ1002-016010	HSJ1002-016010
*P5803	HSJ1002-016010	HSJ1002-016010	HSJ1002-016010
*P7061B	NSCT-11P2191	NSCT-11P2191	NSCT-11P2191

reference	1D	1E	1F	1G	1H	1J	1K	1L	1M	1N	1P	1Q	1R
*L5801	BLM11A121S												
*L5802	BLM11A121S												
*L5803	BLM11A121S												
*C5804	CK725B1H-103K												
*C5805	CK725B1H-103K												
*P5801	MSJ-035-12APCAG												
*P5802	HSJ1002-016010												
*P5803	HSJ1002-016010												
*P7061B	NSCT-11P2191												

Schematic Diagram

MODEL No.SC-LX801/SC-LX901/TX-RZ1100/TX-RZ3100/DRX-7/DRX-R1

BACLD-2095(1/7)

SCHEMATIC DIAGRAM(PART-10) D-AMP SECTION

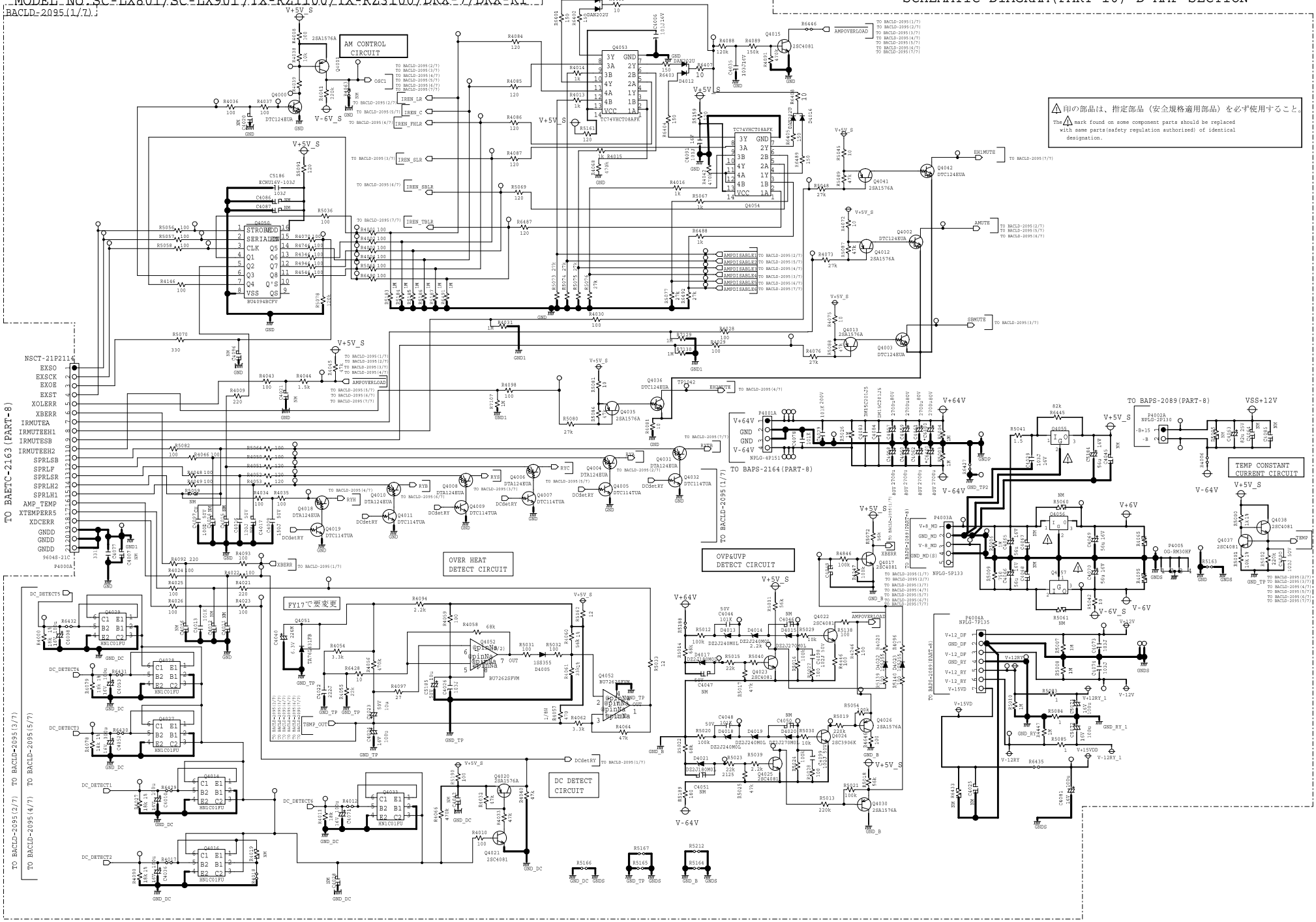

Schematic Diagram

MODEL No.SC-LX801/SC-LX901/TX-RZ1100/TX-RZ3100/DRX-7/DRX-R1

SCHEMATIC DIAGRAM(PART-10) D-AMP SECTION

BACLD-2095(2/7)

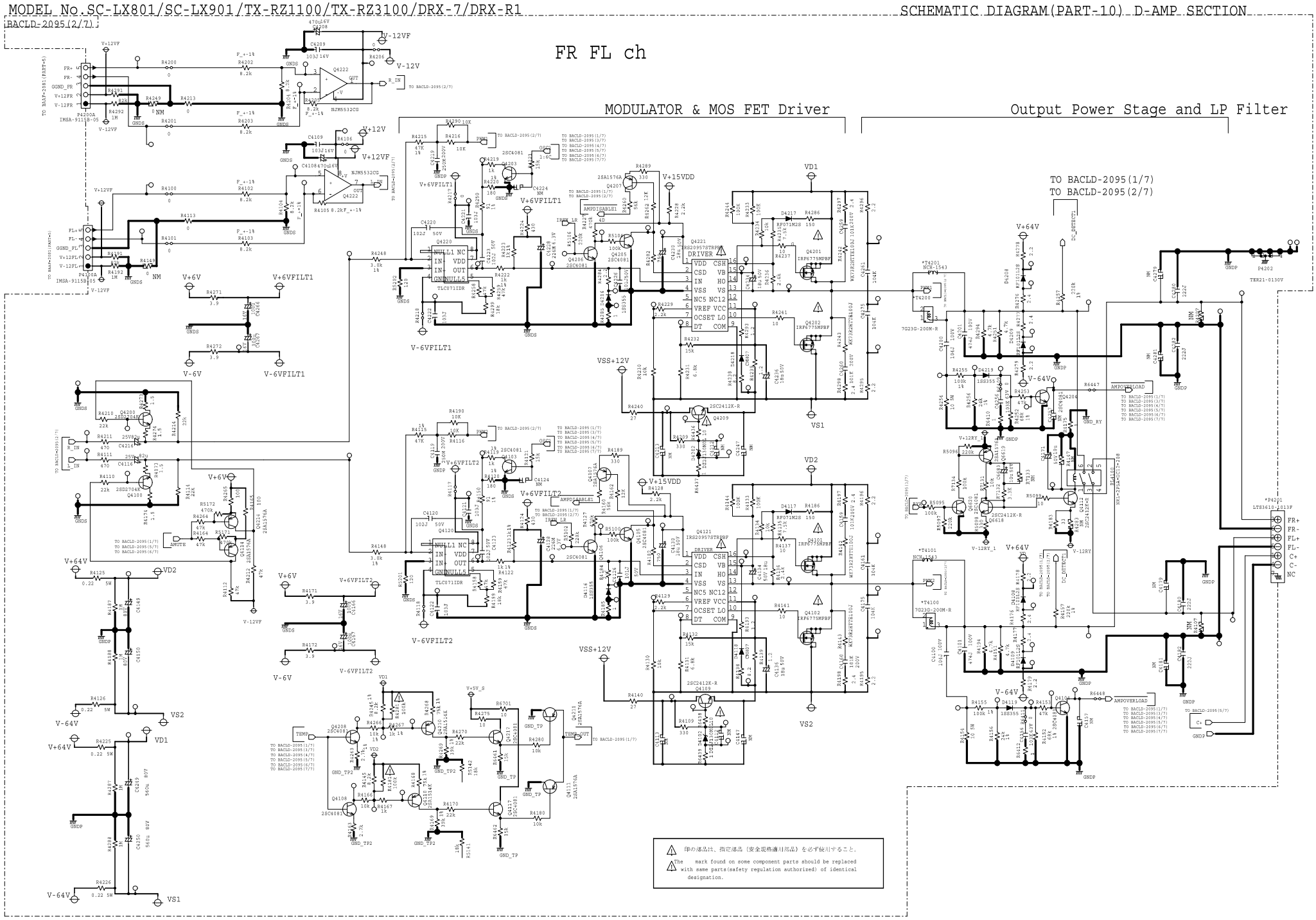

MODEL No.SC-LX801/SC-LX901/TX-RZ1100/TX-RZ3100/DRX-7/DRX-R1

SCHEMATIC DIAGRAM(PART-10) D-AMP SECTION

BACLD-2095(3/7)

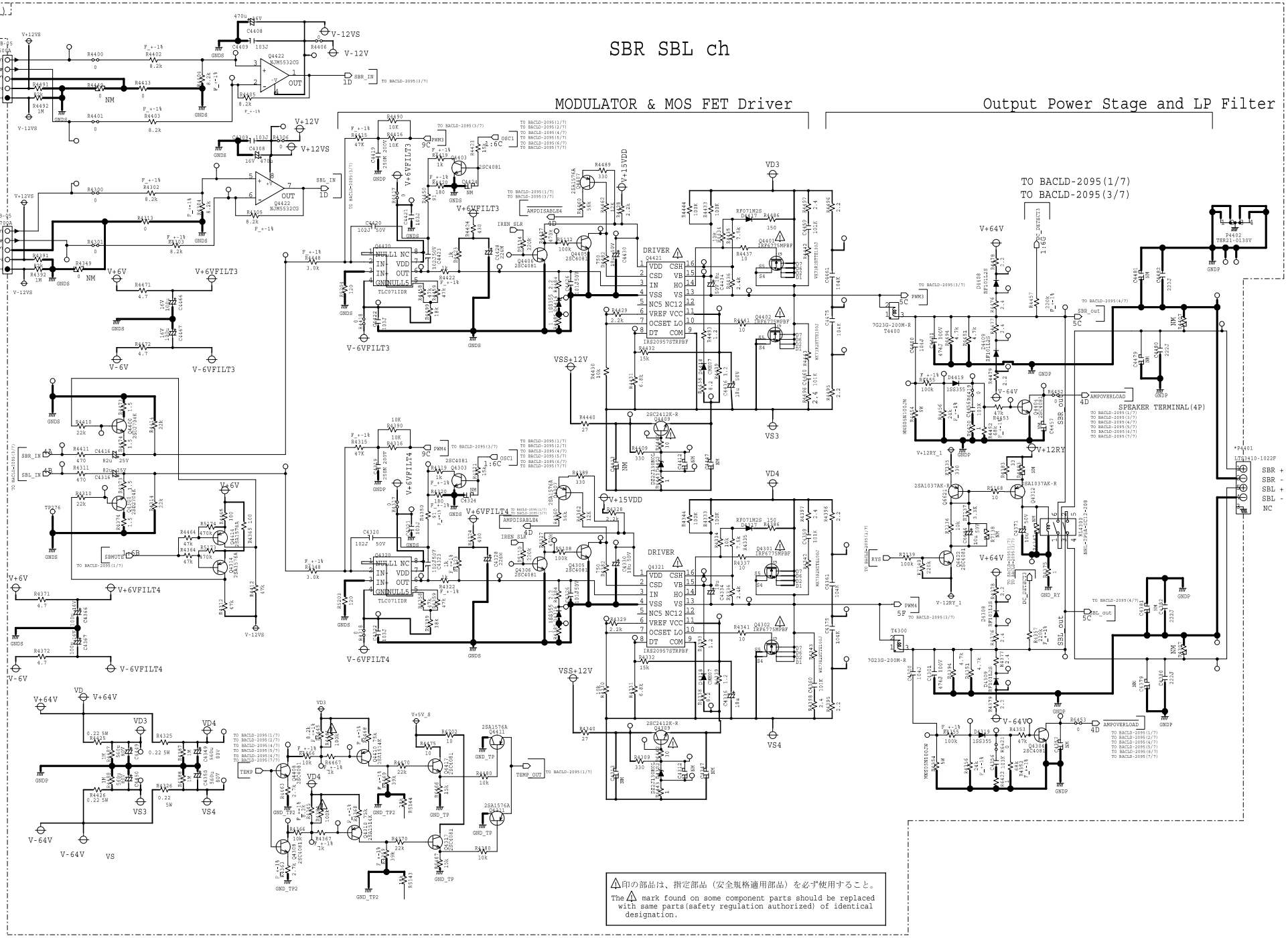

Schematic Diagram

MODEL No.SC-LX801/SC-LX901/TX-RZ1100/TX-RZ3100/DRX-7/DRX-R

SCHEMATIC DIAGRAM(PART-10) D-AMP SECTION

BACLD-2095(4/7)

⚠印の部品は、指定部品（安全規格適用部品）を必ず使用すること。

The ⚠ mark found on some component parts should be replaced with same parts(safety regulation authorized) of identical designation.

H2R H2L ch

MODULATOR & MOS FET Driver

Output Power Stage and LP Filter

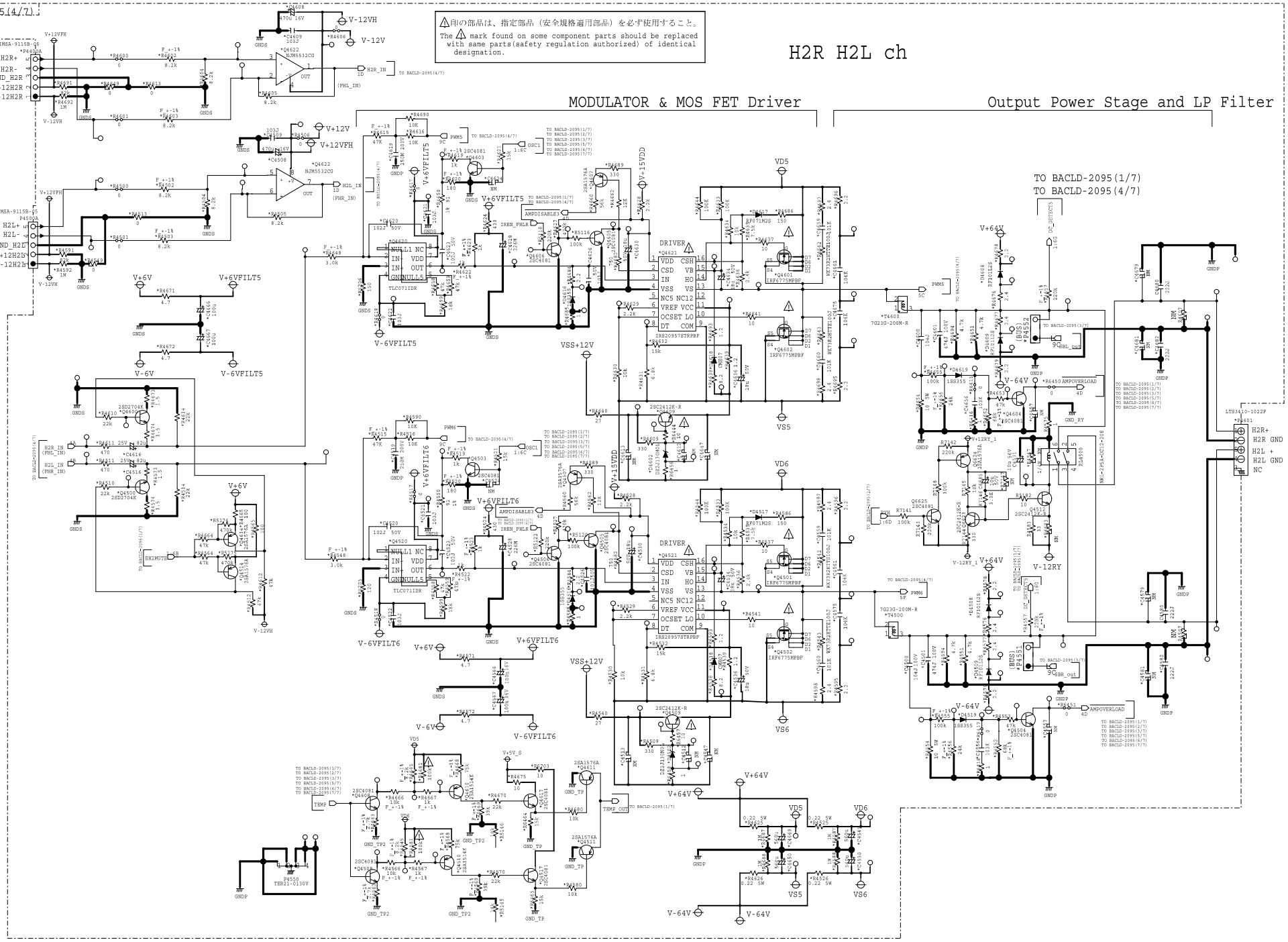

Schematic Diagram

MODEL No.SC-LX801/SC-LX901/TX-RZ1100/TX-RZ3100/DRX-7/DRX-R1

SCHEMATIC DIAGRAM(PART-10) D-AMP SECTION

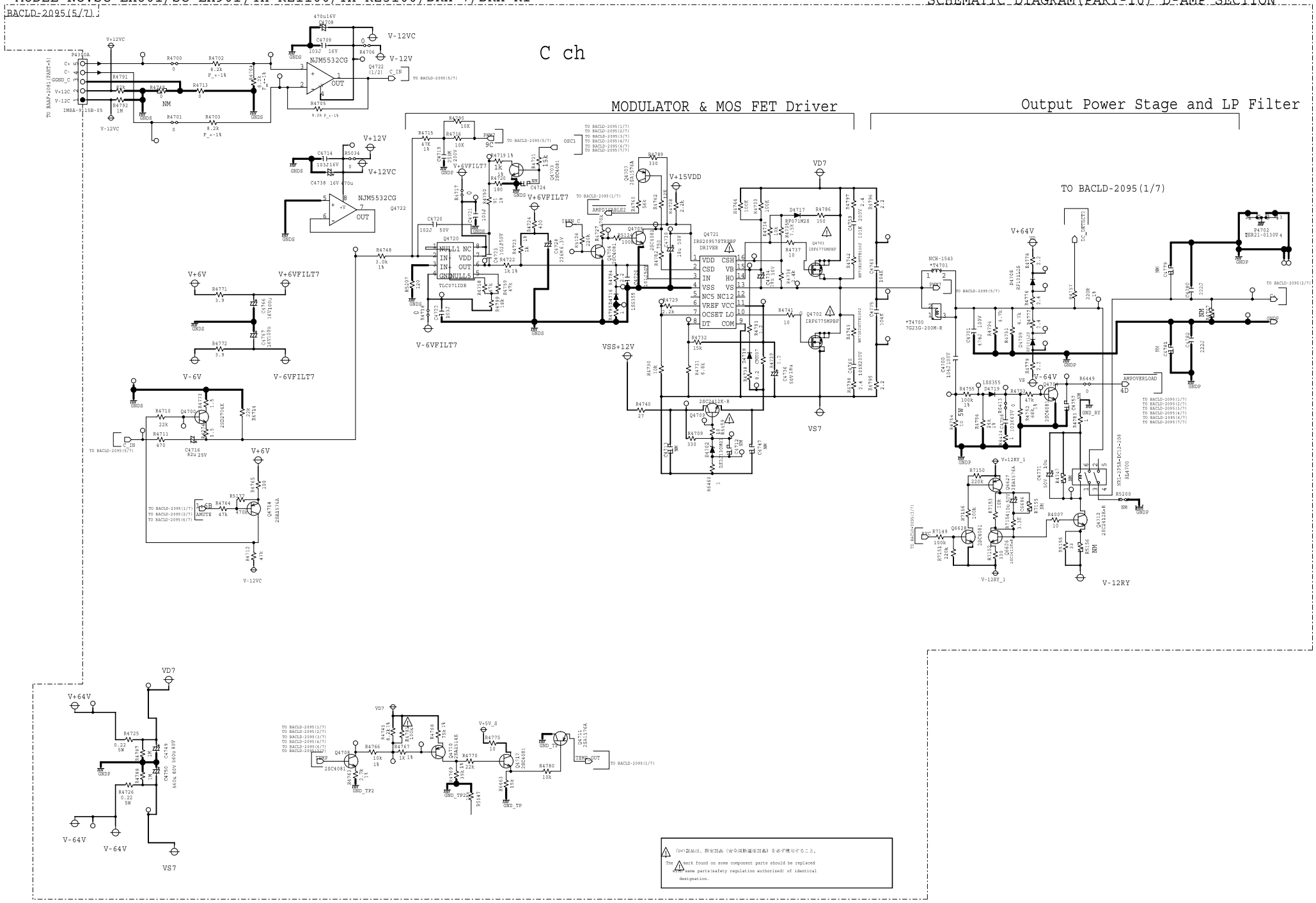

(jis)記号は、指定部品（安全規格適用部品）を必ず使用すること。

The ⚠ mark found on some component parts should be replaced with same parts(safety regulation authorized) of identical designation.

Schematic Diagram

MODEL No.SC-LX801/SC-LX901/TX-RZ1100/TX-RZ3100/DRX-7/DRX-R1

SCHEMATIC DIAGRAM(PART-10) D-AMP SECTION

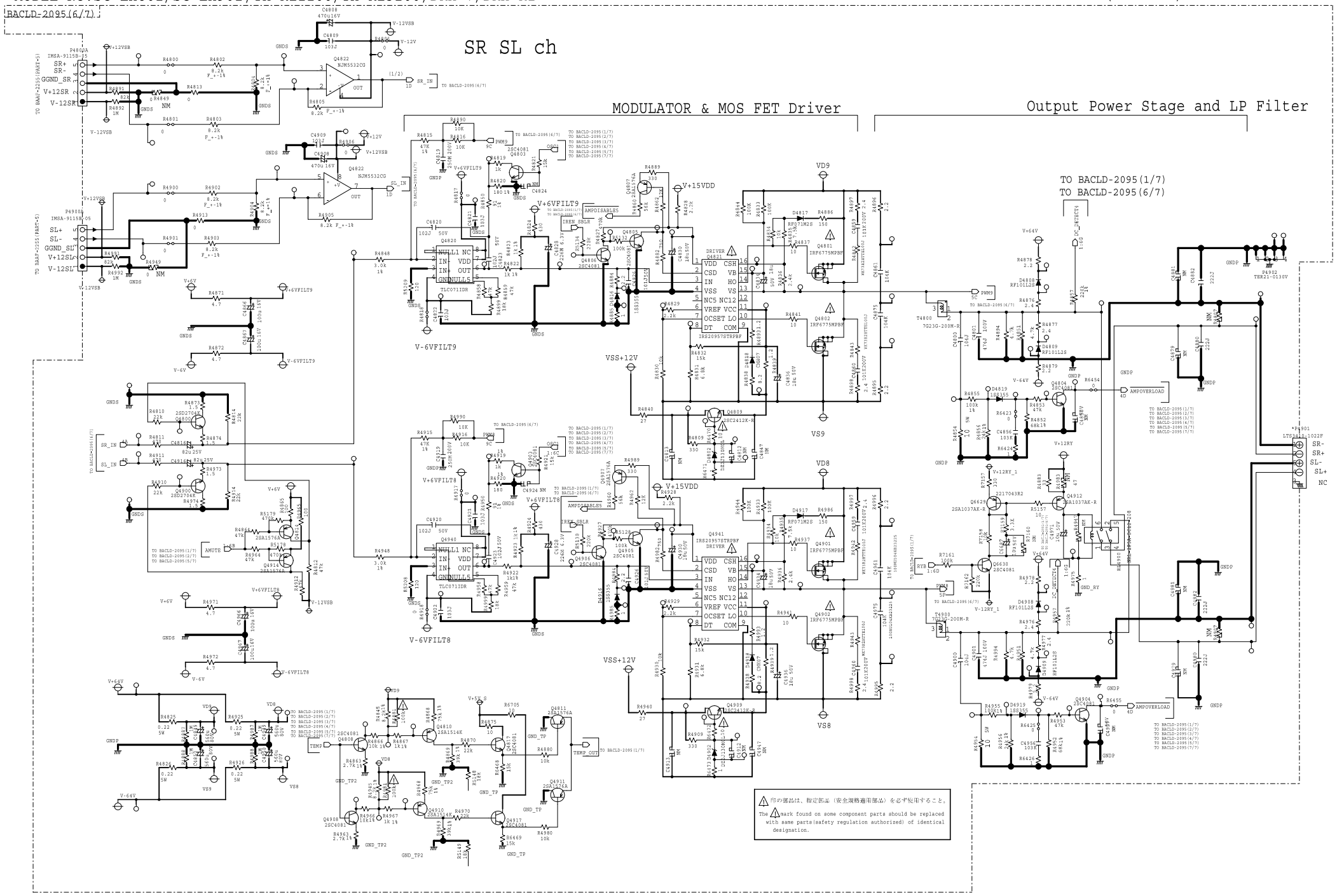

MODEL No.SC-LX801/SC-LX901/TX-RZ1100/TX-RZ3100/DRX-7/DRX-R

SCHEMATIC DIAGRAM(PART-10) D-AMP SECTION

BACLD-2095(7/7)

FROM/TO IR INTERFACE ASSY

H1R H1L ch

MODULATOR & MOS FET Driver

Output Power Stage and LP Filter

TO BACLD-2095(1/7)
TO BACLD-2095(7/7)

⚠ 印の部品は、指定部品（安全規格適用部品）を必ず使用すること。
The ⚠ mark found on some component parts should be replaced with same parts(safety regulation authorized) of identical designation.

Schematic Diagram

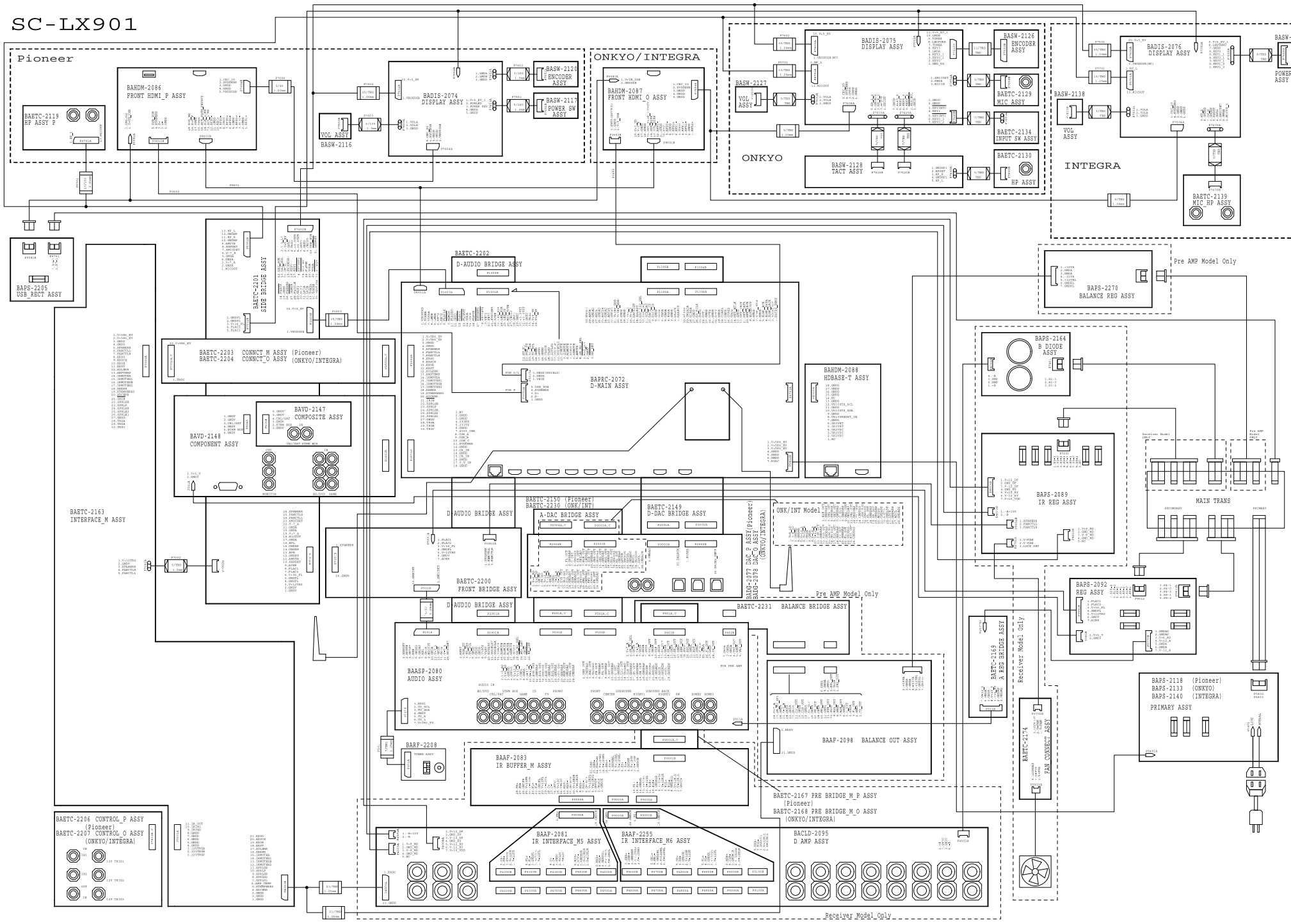

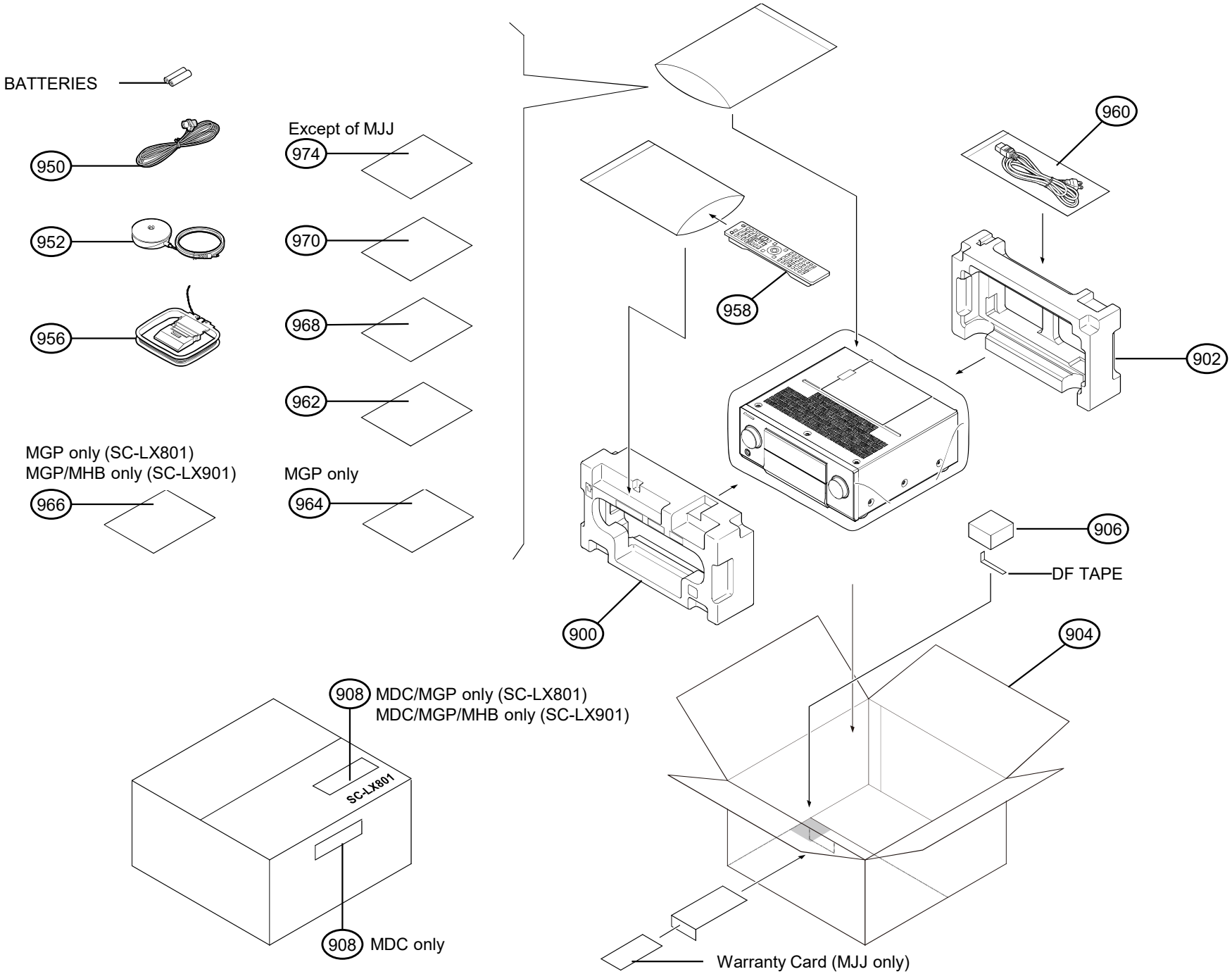
BATTERIES
950
952
956
Except of MJJ
974
970
968
962
MGP only (SC-LX801)
MGP/MHB only (SC-LX901)
966
MGP only
964
960
958
902
906
DF TAPE
900
904
908 MDC/MGP only (SC-LX801)
MDC/MGP/MHB only (SC-LX901)
SC-LX801
908 MDC only
Warranty Card (MJJ only)

Overview

Exploded View

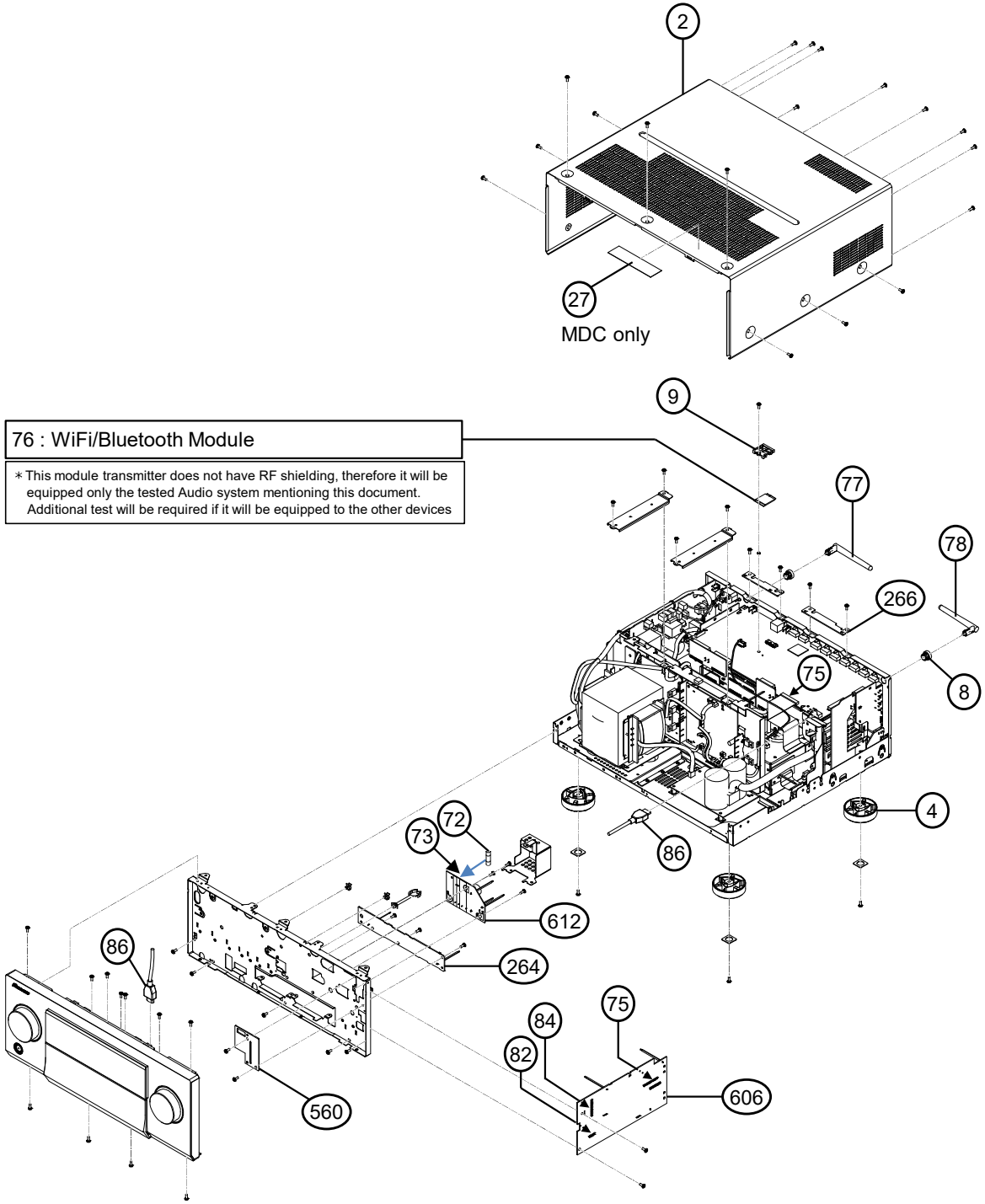

∗WiFi & Bluetooth Module has already been certificated by FCC and IC.

Information to the user.
Indicate "Contains FCC ID: TX2-RTL8821AE", "Contains IC: 6317A-RTL8821AE" and following information to the host device installed.

This device complies with part 15 of the FCC Rules. Operation is subject to the following two conditions: (1) This device may not cause harmful interference, and (2) this device must accept any interference received, including interference that may cause undesired operation.

Describe the following sentence to a user's manual of the host device.

[For FCC]
FCC CAUTION
Changes or modifications not expressly approved by the party responsible for compliance could void the user's authority to operate the equipment.

Note: This equipment has been tested and found to comply with the limits for a Class B digital device, pursuant to part 15 of the FCC Rules. These limits are designed to provide reasonable protection against harmful interference in a residential installation. This equipment generates, uses and can radiate radio frequency energy and, if not installed and used in accordance with the instructions, may cause harmful interference to radio communications.
However, there is no guarantee that interference will not occur in a particular installation. If this equipment does cause harmful interference to radio or television reception, which can be determined by turning the equipment off and on, the user is encouraged to try to correct the interference by one or more of the following measures:
—Reorient or relocate the receiving antenna.
—Increase the separation between the equipment and receiver.
—Connect the equipment into an outlet on a circuit different from that to which the receiver is connected.
—Consult the dealer or an experienced radio/TV technician for help.

This transmitter must not be co-located or operated in conjunction with any other antenna or transmitter.

This equipment complies with FCC radiation exposure limits set forth for an uncontrolled environment and meets the FCC radio frequency (RF) Exposure Guidelines in Supplement C to OET65. This equipment has very low levels of RF energy that it deemed to comply without maximum permissive exposure evaluation (MPE). But it is desirable that it should be installed and operated keeping the radiator at least 20cm or more away from person's body (excluding extremities: hands, wrists, feet and ankles).

[For IC]
CAN ICES-3 B/NMB-3 B

This device complies with Industry Canada licence-exempt RSS standard(s). Operation is subject to the following two conditions: (1) this device may not cause interference, and (2) this device must accept any interference, including interference that may cause undesired operation of the device.

Le présent appareil est conforme aux CNR d'Industrie Canada applicables aux appareils radio exempts dlicence. L'exploitation est autorisée aux deux conditions suivantes : (1) l'appareil ne doit pas produire de brouillage, et (2) l'utilisateur de l'appareil doit accepter tout brouillage radioélectrique subi, même si le brouillage est susceptible d'en compromettre le fonctionnement.

This equipment complies with IC radiation exposure limits set forth for an uncontrolled environment and meets RSS-102 of the IC radio frequency (RF) Exposure rules. This equipment has very low levels of RF energy that it deemed to comply without maximum permissive exposure evaluation (MPE). But it is desirable that it should be installed and operated keeping the radiator at least 20cm or more away from person's body (excluding extremities: hands, wrists, feet and ankles).
Cet équipement est conforme aux limites d'exposition aux rayonnements énoncées pour un environnement non contrôlé et respecte les règles d'exposition aux fréquences radioélectriques (RF) CNR-102 de l'IC. Cet équipement émet une énergie RF très faible qui est considérée conforme sans évaluation de l'exposition maximale autorisée. Cependant, cet équipement doit être installé et utilisé en gardant une distance de 20 cm ou plus entre le dispositif rayonnant et le corps (à l'exception des extrémités : mains, poignets, pieds et chevilles).

Rear1

Exploded View

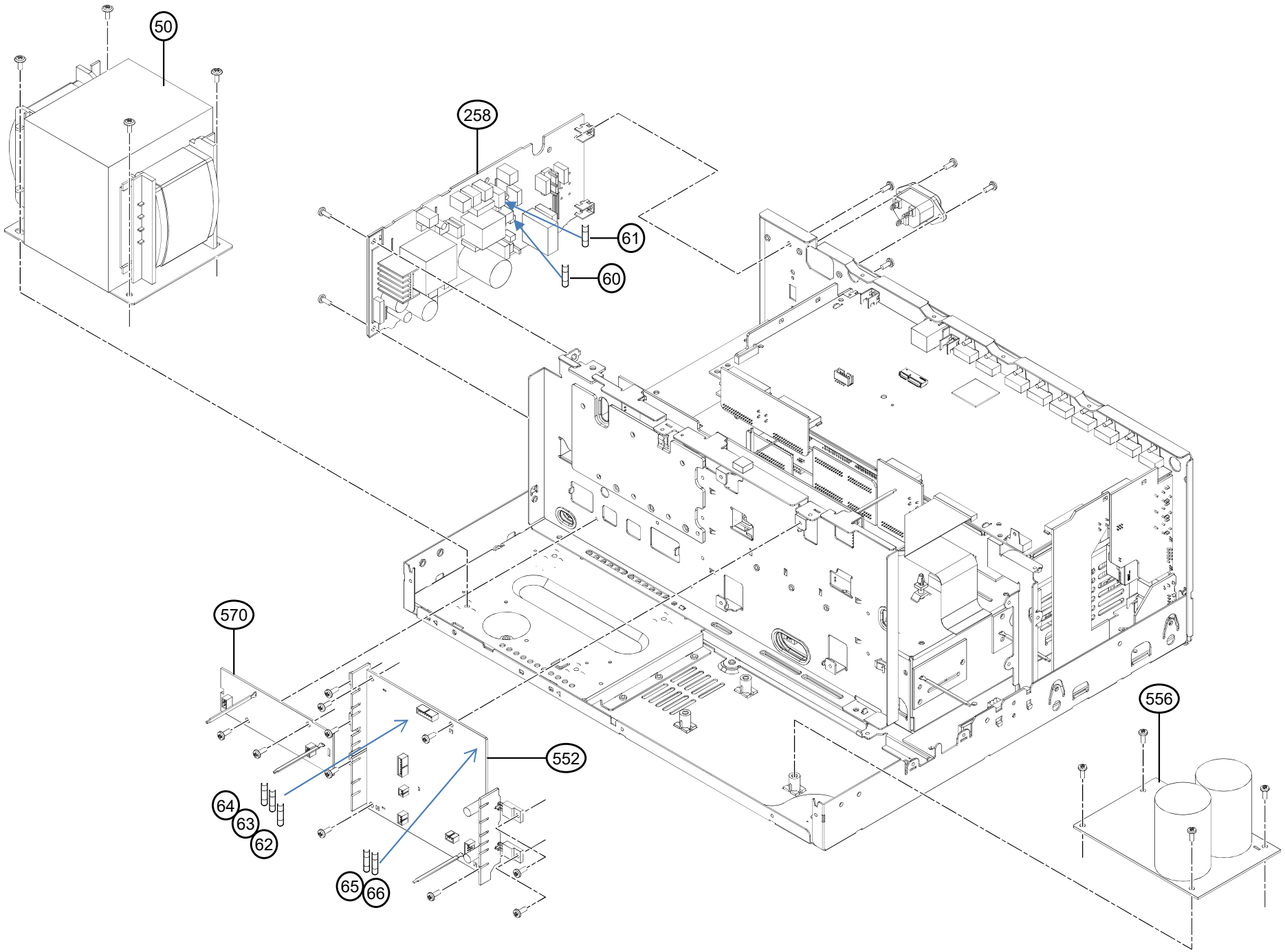

SC-LX801/901

Rear2

Exploded View

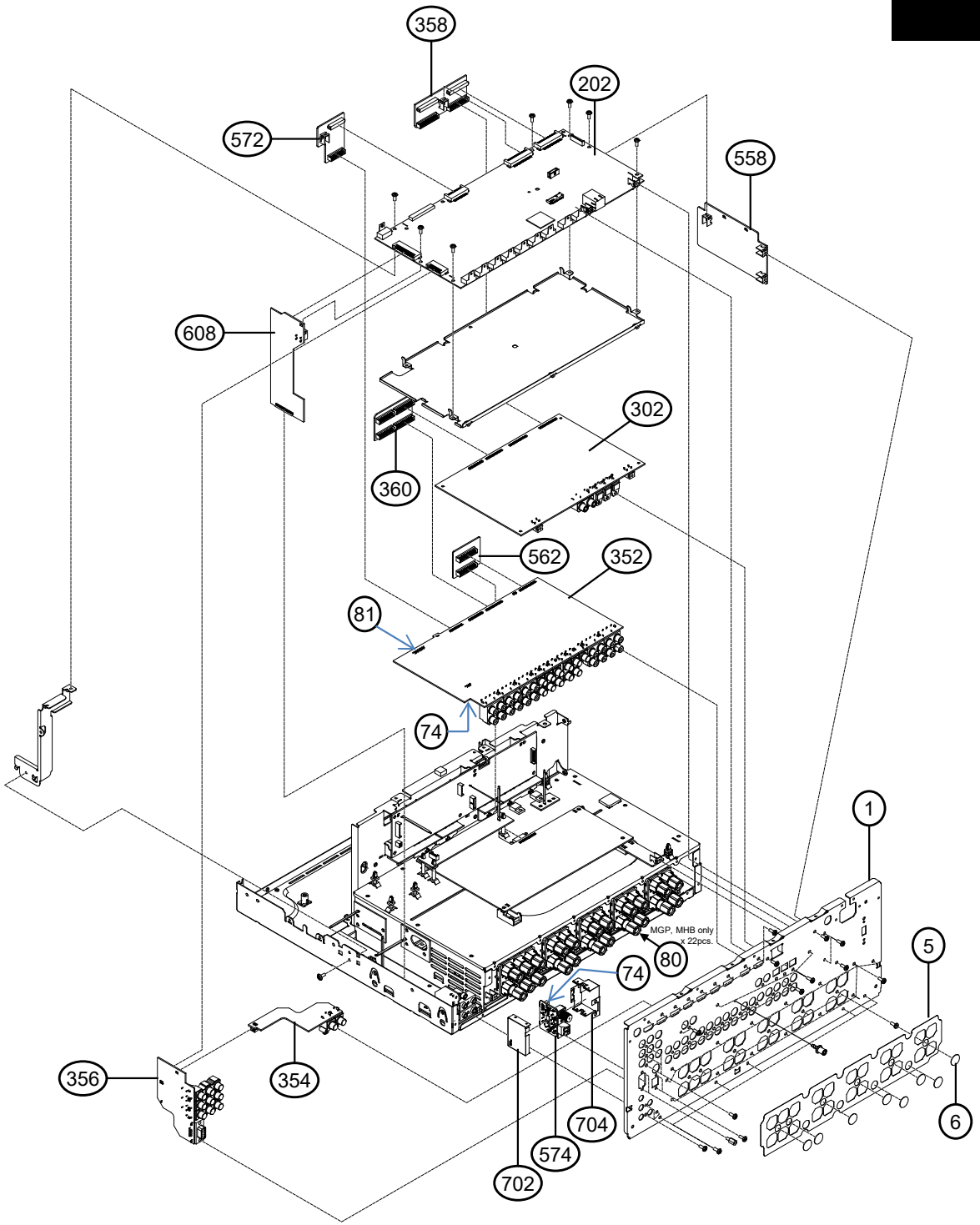

SC-LX801/901

Exploded View

Rear3

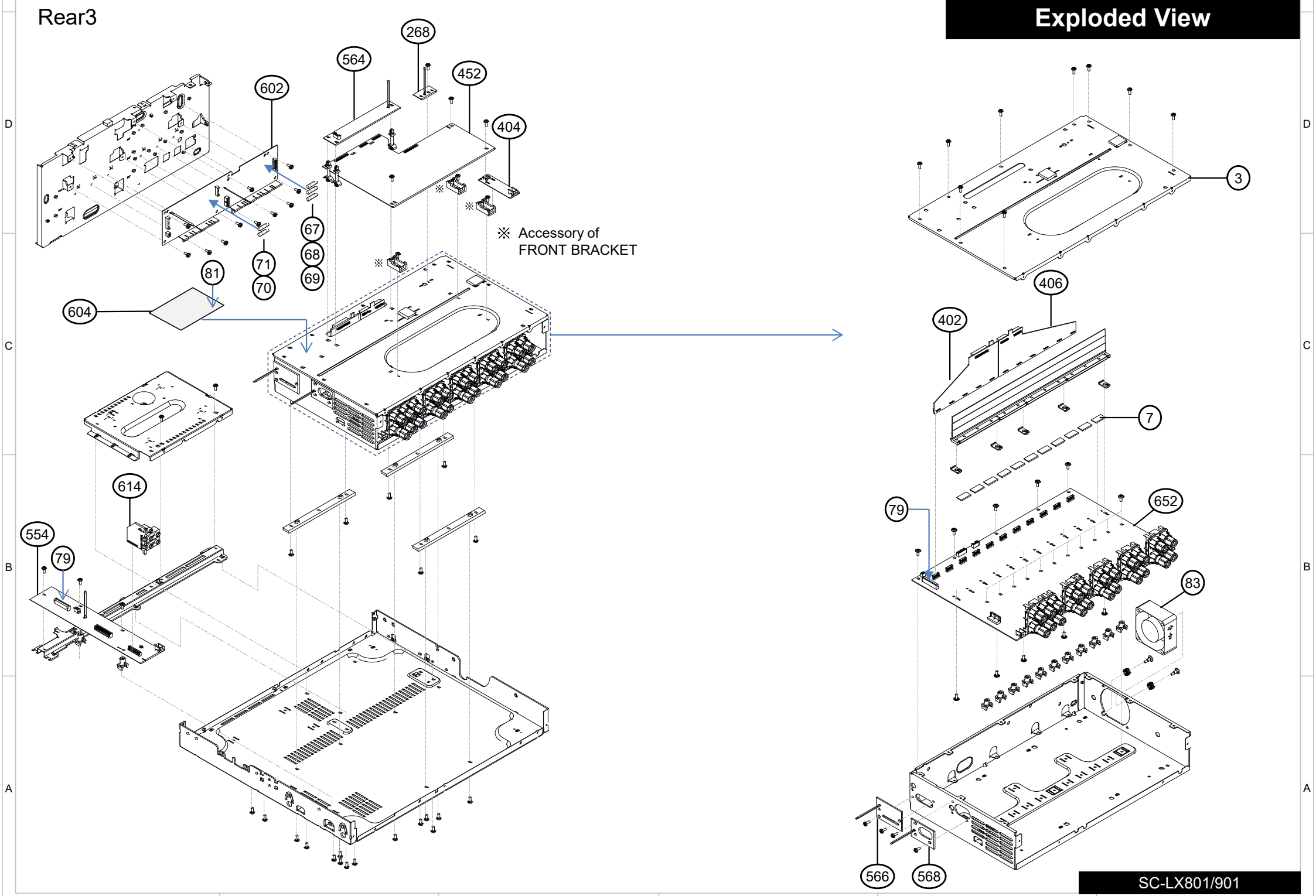

SC-LX801/901

Front

Exploded View

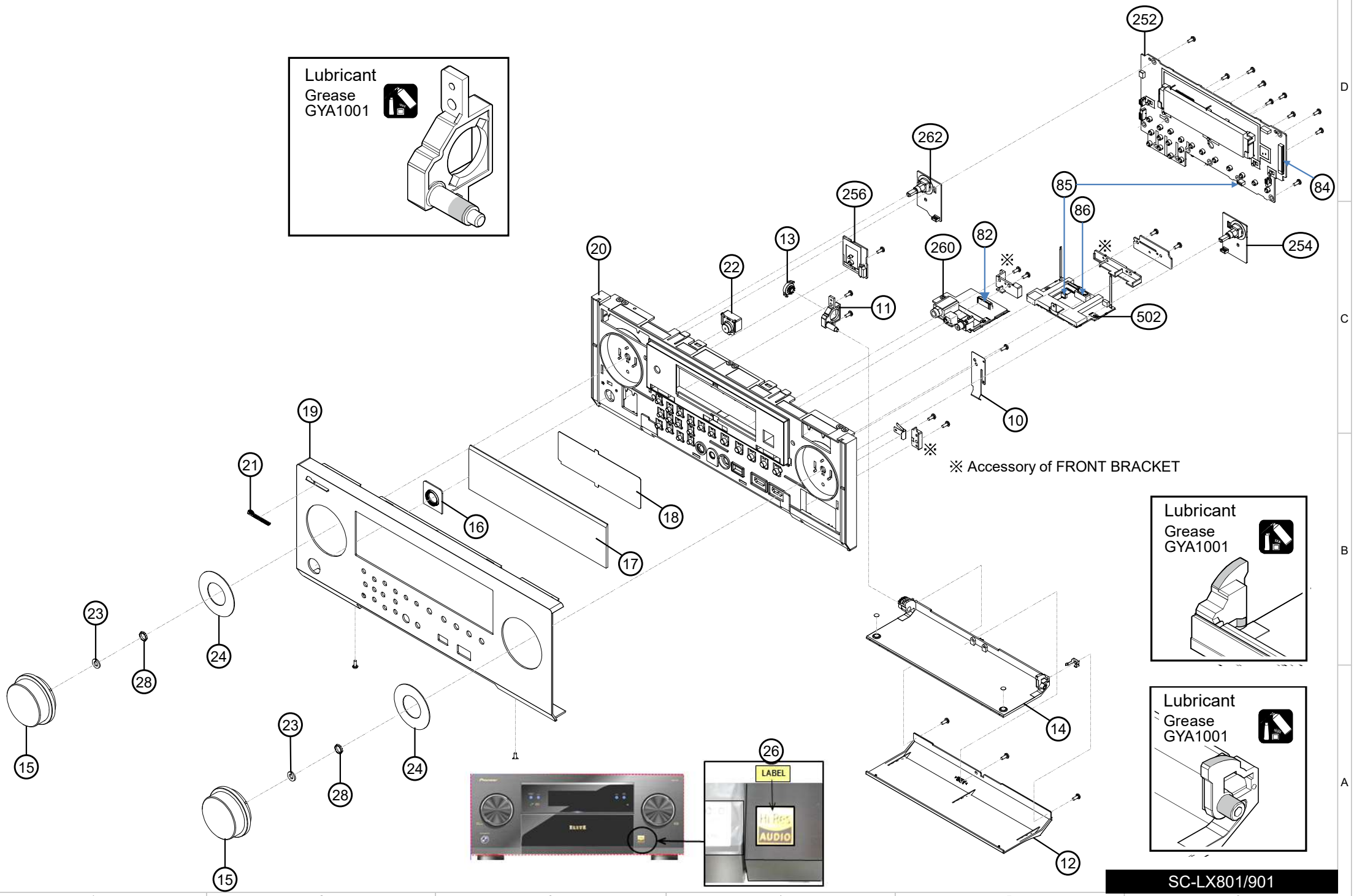

Operation check

About Button Action

Use the following expression simplify description button operation.

Example-1 :
[TV/CD] + [ON/STANDBY] → [BD/DVD]
Means press and hold [ON/STANDBY] button while pressing [TV/CD] button,
then press [BD/DVD] button.

Example-2 :
[DISPLAY] + [ON/STANDBY] x 2 → [DIMMER] or [RT/PTY/TP]
Means press and hold [ON/STANDBY] button two times while pressing [DISPLAY] button,
then press [DIMMER] or [RT/PTY/TP] button.

How to check MAIN Checksum

Step1 : Set VOL Level = -42

Step2 : [DIMMER] + [ON/STANDBY] x 2 → [ENTER]

Initial Setting for Shipping (Service Information is also cleared.)

Step1 : Set VOL Level = -42

Step2 : [MULTI ZONE MUSIC] + [ON/STANDBY] → [Return] x 2

Display "All Clear" of FL tube and AVR goes standby.

Step3 : Unplug the power cord

How to check FL Tube and LED Operation

Step1 : Set VOL Level = -42

Step2 : [RETURN] + [ON/STANDBY] → [DIMMER]

Lit all FL-Segment and LED.

Step3 : [TuneUP]

Lit '23456789ABCDEF'.

Step4 : [TuneUP]

Lit a even number segment.

Step5 : [TuneUP]

Lit an odd number segment.

Step6 : [TuneUP]

Lit 'DIMMER CHECK: 255'.

Step7 : [TuneUP]

The Destination setting is displayed.

SC-LX901(B)MDC

<Note>

1. Parts marked by "**NSP**" are generally unavailable because they are not in our Master Spare Parts List.
2. The ! mark found on some component parts indicates the importance of the safety factor of the part.
   Therefore, when replacing, be sure to use parts of identical designation.

: NSP

(B) : Black color model
<MDC> : 120V
Canadian/USA/(Mexico) model

REF. NO.	PART NAME	DESCRIPTION	Q'TY	PART NO. (SN)	REMARKS
[Cabinet, Chassis, Screws, Nuts]					
1	REAR PANEL	LX901MDC	1	27124770A	**N**
2	COVER	LX901(B) (Bent)	1	28210156	**N**
3	COVER	(IR)LX901	1	28210161B	
4	BOTTOM LEG	(PI)(B)	4	27175479	
5	SHEET	SP_LX901	1	29096191	
6	CUSHION CIRCLE 14B	.	8	AED7081-A	
7	HEAT COND SHEET	.	11	AEB7434-A	
8	BUSH/ANT	.	2	AMR7706-B	
9	HOLDER	(PLUG)	1	27191418A	
10	DOOR SPRING (SUS)	.	1	ABK7061-A	
11	SHAFT/DOR	.	1	AMR7704-A	
12	DOOR PANEL	MHU	1	ANB7645-A	**N**
13	DAMPER/DOR	.	1	AXA7159-A	
14	DOOR BASE LX85	.	1	AMR7565-B	
15	VOL.KNOB	LX85(AL)	2	AAA7064-C	**N**
16	POWER RING LX85(PLS)	.	1	AAK8571-A	
17	CLEAR PLATE	ELITE	1	28192486	
18	FILTER 07KU(PC)	.	1	AAK8443-A	
19	FRONT PANEL	LX901(B)ELITE	1	27213884A	
20	FRONT BRACKET	(DC)	1	27111640	**N**
21	BADGE	(ELITE)	1	28135325	**N**
22	STDBY BTN LX85 ASSY	.	1	AAD7804-A	
23	RING	.	2	ABH7213-A	
24	VOL STABILIZER LX85	.	2	AEC7644-A	
26	LABEL	.	1	AAX8244-A	
27	LABEL	(fwup-wo-dtsx)set	1	29393389	**N**
28	NUT	NK90FTC	2	865190	
[Transformers, Coils]					
50	POWER TRANSFORMER	NPT-1676D	1	2302172	**!, N**
[Switches, Terminals, Wires]					
60	FUSE	10A-UL/T-233	1	252330GR	**!**
61	FUSE	215002.MXP	1	252400	**!**
62	FUSE	1.25A-UL/T-233	1	252318GR	**!**
63	FUSE	1A-UL/T-233	1	252317GR	**!**
64	FUSE	1A-UL/T-233	1	252317GR	**!**
65	FUSE	1.25A-UL/T-233	1	252318GR	**!**
66	FUSE	1.25A-UL/T-233	1	252318GR	**!**
67	FUSE	1.25A-UL/T-233	1	252318GR	**!**
68	FUSE	1.25A-UL/T-233	1	252318GR	**!**
69	FUSE	1.25A-UL/T-233	1	252318GR	**!**
70	FUSE	1.25A-UL/T-233	1	252318GR	**!**
71	FUSE	1.25A-UL/T-233	1	252318GR	**!**
72	FUSE	2A-UL/T-233	1	252320GR	**!**
74	FLEXIBLE FLAT CABLE	NCFC7-070712	1	2047070712	**N**
75	FLEXIBLE FLAT CABLE	NCFC5-351512	1	2045351512	**N**
76	ASSEMBLED PWB	WCBN806L	1	24150135	**N**
77	WIFI BT ANTENNA	RFDPA870918EMLB302	1	2050102	**N**
78	WIFI BT ANTENNA	RFDPA870940EMLB303	1	2050103	**N**
79	FLEXIBLE FLAT CABLE	NCFC7-210812	1	204321045	**N**
81	FLEXIBLE FLAT CABLE	ADD7725-A	1	204315043	

82	FLEXIBLE FLAT CABLE	NCFC7-133012	1	2047133012	N	
83	FAN	2410RL-04W-S29-C07	1	24502340		
84	FLEXIBLE FLAT CABLE	NCFC5-351212	1	2045351212	N	
85	FLEXIBLE FLAT CABLE	ADD7783-A	1	204405062		
86	CORD ASSEMBLY	TYX1622-114047	1	2010519		
[Frontend, Units]						
200	**PARENT PC BOARD AS**	**BAPRC-2072-1E-P**	**1**	**1B5142072-1E901MDC**	**N**	**Parent**
202	Processing circuit pc board AS	BAPRC-2072-1E	1	1B5142072-1E-C901MDC	N	Child
250	**PARENT PC BOARD AS**	**BADIS-2074-1J-P**	**1**	**1B5142074-1J**	**N**	**Parent**
252	Display circuit pc board AS	BADIS-2074-1J	1	1B5142074-1J-C	N	Child
254	Switch circuit pc board AS	BASW-2116-1J	1	1B5142116-1J-C	N	Child
256	Switch circuit pc board AS	BASW-2117-1J	1	1B5142117-1J-C	N	Child
258	Power supply circuit pc board AS	BAPS-2118-1J	1	1B5142118-1J-C	N	Child
260	Et cetra pc board AS	BAETC-2119-1J	1	1B5142119-1J-C	N	Child
262	Switch circuit pc board AS	BASW-2120-1J	1	1B5142120-1J-C	N	Child
264	Et cetra pc board AS	BAETC-2121-1J	1	1B5142121-1J-C	N	Child
266	Et cetra pc board AS	BAETC-2186-1J	1	1B5142186-1J-C	N	Child
268	Et cetra pc board AS	BAETC-2216-1J	1	1B5142216-1J-C	N	Child
300	**PARENT PC BOARD AS**	**BADG-2077-1E-P**	**1**	**1B5142077-1E**	**N**	**Parent**
302	Digital circuit pc board AS	BADG-2077-1E	1	1B5142077-1E-C	N	Child
350	**PARENT PC BOARD AS**	**BAASP-2080-1E-P**	**1**	**1B5142080-1E**	**N**	**Parent**
352	Audio signal processor circuit pc board AS	BAASP-2080-1E	1	1B5142080-1E-C	N	Child
354	Video circuit pc board AS	BAVD-2147-1E	1	1B5142147-1E-C	N	Child
356	Video circuit pc board AS	BAVD-2148-1E	1	1B5142148-1E-C	N	Child
358	Et cetra pc board AS	BAETC-2149-1E	1	1B5142149-1E-C	N	Child
360	Et cetra pc board AS	BAETC-2150-1E	1	1B5142150-1E-C	N	Child
400	**PARENT PC BOARD AS**	**BAAF-2081-1B-P**	**1**	**1B5142081-1B**	**N**	**Parent**
402	Audio freqency circuit pc board AS	BAAF-2081-1B	1	1B5142081-1B-C		Child
404	Et cetra pc board AS	BAETC-2157-1B	1	1B5142157-1B-C		Child
406	Audio freqency circuit pc board AS	BAAF-2255-1B	1	1B5142255-1B-C		Child
450	**PARENT PC BOARD AS**	**BAAF-2083-1C-P**	**1**	**1B5142083-1C**	**N**	**Parent**
452	Audio freqency circuit pc board AS	BAAF-2083-1C	1	1B5142083-1C-C	N	Child
500	**PARENT PC BOARD AS**	**BAHDM-2086-1E-P**	**1**	**1B5142086-1E**	**N**	**Parent**
502	HDMI circuit pc board AS	BAHDM-2086-1E	1	1B5142086-1E-C	N	Child
550	**PARENT PC BOARD AS**	**BAPS-2089-1C-P**	**1**	**1B5142089-1C**	**N**	**Parent**
552	Power supply circuit pc board AS	BAPS-2089-1C	1	1B5142089-1C-C	N	Child
554	Et cetra pc board AS	BAETC-2163-1C	1	1B5142163-1C-C	N	Child
556	Power supply circuit pc board AS	BAPS-2164-1C	1	1B5142164-1C-C	N	Child
558	Et cetra pc board AS	BAETC-2165-1C	1	1B5142165-1C-C	N	Child
560	Et cetra pc board AS	BAETC-2166-1C	1	1B5142166-1C-C	N	Child
562	Et cetra pc board AS	BAETC-2167-1C	1	1B5142167-1C-C	N	Child
564	Et cetra pc board AS	BAETC-2169-1C	1	1B5142169-1C-C	N	Child
566	Et cetra pc board AS	BAETC-2170-1C	1	1B5142170-1C-C	N	Child
568	Et cetra pc board AS	BAETC-2171-1C	1	1B5142171-1C-C	N	Child
570	Et cetra pc board AS	BAETC-2174-1C	1	1B5142174-1C-C	N	Child
572	Et cetra pc board AS	BAETC-2202-1C	1	1B5142202-1C-C	N	Child
574	Radio freqency circuit pc board AS	BARF-2208-1C	1	1B5142208-1C-C	N	Child
600	**PARENT PC BOARD AS**	**BAPS-2092-1A-P**	**1**	**1B5142092-1A**	**N**	**Parent**
602	Power supply circuit pc board AS	BAPS-2092-1A	1	1B5142092-1A-C	N	Child
604	Et cetra pc board AS	BAETC-2200-1A	1	1B5142200-1A-C	N	Child
606	Et cetra pc board AS	BAETC-2201-1A	1	1B5142201-1A-C	N	Child
608	Et cetra pc board AS	BAETC-2203-1A	1	1B5142203-1A-C	N	Child
612	Power supply circuit pc board AS	BAPS-2205-1A	1	1B5142205-1A-C	N	Child
614	Et cetra pc board AS	BAETC-2206-1A	1	1B5142206-1A-C	N	Child
650	**PARENT PC BOARD AS**	**BACLD-2095-1D-P**	**1**	**1B5142095-1D**	**N**	**Parent**
652	ClassD amplifier circuit pc board AS	BACLD-2095-1D	1	1B5142095-1D-C	N	Child
702	SHIELD CASE	(TUNER-BTM)	1	27225207A	N	
704	SHIELD CASE	(UPPER)	1	27225208		

[Packing]					
900	PAD	.	1	AHA7502-B	N
902	PAD	.	1	AHA7500-B	N
904	CARTON	LX901(DC)	1	29055652	
906	PACKING PAD/S	.	1	AHA7499-A	N
908	LABEL	(fwup-wo-dtsx)CNT	2	29393391	N
[Accessories]					
950	FM ANT AS	Type W	1	292191	
952	MIC	KHM0018-010010	1	245051	
954	WARRANTY CARD	(Pi-elite2016)	1	29365228A	NSP
956	ANTENNA COIL	AM LOOP-ANTENNA	1	232207	
956 or	ANTENNA COIL	AM LOOP ANTENNA (S&O)	(1)	232216	
958	REMOTE CONTROL TRANSMITTER	RC-927R	1	24140927	
960	POWER SUPPLY CORD	ADG7118-A(122111/16)	1	253454VOL	!
962	INSTRUCTION MANUAL	LX901MDC(En,Fr)	1	29402402	N
968	INSTRUCTION MANUAL	Safety_Pio_16Hi_U3(EnFrEs)	1	29402496	N
970	INSTRUCTION SHEET	(Google cast)	1	29355956	
974	INSTRUCTION SHEET	(FWupdate-Fireconnect)	1	29355967	N

BAAF-2081-1B

<Note>

1. Parts marked by "**NSP**" are generally unavailable because they are not in our Master Spare Parts List.
2. The ! mark found on some component parts indicates the importance of the safety factor of the part.
   Therefore, when replacing, be sure to use parts of identical designation.

: NSP

REF. NO.	PART NAME	DESCRIPTION	Q'TY	PART NO. (SN)	REMARKS
[Switches, Terminals, Wires]					

BAAF-2083-1C

<Note>

1. Parts marked by "**NSP**" are generally unavailable because they are not in our Master Spare Parts List.
2. The ! mark found on some component parts indicates the importance of the safety factor of the part.
   Therefore, when replacing, be sure to use parts of identical designation.

: NSP

REF. NO.	PART NAME	DESCRIPTION	Q'TY	PART NO. (SN)	REMARKS
[Semi-conductors]					
[Capacitors]					
[Resistors]					
[Switches, Terminals, Wires]					

BAASP-2080-1E

<Note>

1. Parts marked by "**NSP**" are generally unavailable because they are not in our Master Spare Parts List.
2. The ! mark found on some component parts indicates the importance of the safety factor of the part.
   Therefore, when replacing, be sure to use parts of identical designation.

: NSP

REF. NO.	PART NAME	DESCRIPTION	Q'TY	PART NO. (SN)	REMARKS
[Semi-conductors]					
Q301	HYBRID IC	BD34704KS2	1	22242977R3	
Q321	HYBRID IC	NJW1194	1	22242893R2	
Q371	HYBRID IC	NJW1194	1	22242893R2	
Q511	TRANSISTOR	2SD2400A-D	1	2202734	
Q512	TRANSISTOR	2SB1569A-D	1	2202724	
Q571	HYBRID IC	BD34704KS2	1	22242977R3	
[Capacitors]					
C103	SMG C	CE04W25V-47M(SMG)	1	395054707ST	
C104	SMG C	CE04W25V-47M(SMG)	1	395054707ST	
C115	SMG C	CE04W10V-220M(SMG)	1	395032217ST	
C116	SMG C	CE04W10V-220M(SMG)	1	395032217ST	
C117	SMG C	CE04W50V-10M(SMG)	1	395081007ST	
C118	SMG C	CE04W50V-10M(SMG)	1	395081007ST	
C121	SMG C	CE04W16V-220M(SMG)	1	395042217ST	
C122	SMG C	CE04W16V-220M(SMG)	1	395042217ST	
C135	ELECTROLYTIC CAPACITOR	CE04W16V-56M(LXY)	1	3500244ST	
C136	ELECTROLYTIC CAPACITOR	CE04W16V-56M(LXY)	1	3500244ST	
C139	SMG C	CE04W50V-22M(SMG)	1	395082207ST	
C140	SMG C	CE04W50V-22M(SMG)	1	395082207ST	
C145	SMG C	CE04W50V-22M(SMG)	1	395082207ST	
C146	SMG C	CE04W50V-22M(SMG)	1	395082207ST	
C155	SMG C	CE04W50V-22M(SMG)	1	395082207ST	
C156	SMG C	CE04W50V-22M(SMG)	1	395082207ST	
C165	SMG C	CE04W50V-22M(SMG)	1	395082207ST	
C166	SMG C	CE04W50V-22M(SMG)	1	395082207ST	
C175	SMG C	CE04W50V-22M(SMG)	1	395082207ST	
C176	SMG C	CE04W50V-22M(SMG)	1	395082207ST	
C185	SMG C	CE04W50V-22M(SMG)	1	395082207ST	
C186	SMG C	CE04W50V-22M(SMG)	1	395082207ST	
C203	SMG C	CE04W50V-22M(SMG)	1	395082207ST	
C204	SMG C	CE04W50V-22M(SMG)	1	395082207ST	
C232	SMG C	CE04W50V-22M(SMG)	1	395082207ST	
C263	SMG C	CE04W50V-22M(SMG)	1	395082207ST	
C264	SMG C	CE04W50V-22M(SMG)	1	395082207ST	
C283	SMG C	CE04W50V-22M(SMG)	1	395082207ST	
C284	SMG C	CE04W50V-22M(SMG)	1	395082207ST	
C2955	SMG C	CE04W25V-47M(SMG)	1	395054707ST	
C2956	SMG C	CE04W25V-47M(SMG)	1	395054707ST	
C301	ELECTROLYTIC CAPACITOR	CE04W10V-100M(KY)	1	3500272ST	
C302	ELECTROLYTIC CAPACITOR	CE04W10V-100M(KY)	1	3500272ST	
C321	SMG C	CE04W25V-47M(SMG)	1	395054707ST	
C322	SMG C	CE04W25V-47M(SMG)	1	395054707ST	
C323	SMG C	CE04W16V-100M(SMG)	1	395041017ST	
C324	SMG C	CE04W16V-100M(SMG)	1	395041017ST	
C329	SMG C	CE04W50V-4.7M(SMG)	1	395080477ST	
C330	SMG C	CE04W50V-4.7M(SMG)	1	395080477ST	
C331	SMG C	CE04W50V-10M(SMG)	1	395081007ST	
C337	SMG C	CE04W50V-10M(SMG)	1	395081007ST	
C338	SMG C	CE04W50V-10M(SMG)	1	395081007ST	
C353	ELECTROLYTIC CAPACITOR	CE04W16V-56M(LXY)	1	3500244ST	

C354	ELECTROLYTIC CAPACITOR	CE04W16V-56M(LXY)	1	3500244ST	
C371	SMG C	CE04W25V-47M(SMG)	1	395054707ST	
C372	SMG C	CE04W25V-47M(SMG)	1	395054707ST	
C373	SMG C	CE04W16V-100M(SMG)	1	395041017ST	
C374	SMG C	CE04W16V-100M(SMG)	1	395041017ST	
C379	SMG C	CE04W50V-4.7M(SMG)	1	395080477ST	
C380	SMG C	CE04W50V-4.7M(SMG)	1	395080477ST	
C381	SMG C	CE04W50V-10M(SMG)	1	395081007ST	
C387	SMG C	CE04W50V-10M(SMG)	1	395081007ST	
C388	SMG C	CE04W50V-10M(SMG)	1	395081007ST	
C431	SMG C	CE04W50V-22M(SMG)	1	395082207ST	
C432	SMG C	CE04W50V-22M(SMG)	1	395082207ST	
C441	SMG C	CE04W50V-1M(SMG)	1	395080107ST	
C442	SMG C	CE04W50V-1M(SMG)	1	395080107ST	
C449	SMG C	CE04W16V-470M(SMG)	1	395044717T	
C450	SMG C	CE04W16V-470M(SMG)	1	395044717T	
C453	SMG C	CE04W25V-100M(SMG)	1	395051017ST	
C454	SMG C	CE04W25V-100M(SMG)	1	395051017ST	
C475	SMG C	CE04W25V-47M(SMG)	1	395054707ST	
C476	SMG C	CE04W25V-47M(SMG)	1	395054707ST	
C481	SMG C	CE04W16V-100M(SMG)	1	395041017ST	
C482	SMG C	CE04W16V-100M(SMG)	1	395041017ST	
C501	SMG C	CE04W16V-100M(SMG)	1	395041017ST	
C502	SMG C	CE04W16V-100M(SMG)	1	395041017ST	
C519	SMG C	CE04W50V-2.2M(SMG)	1	395080227ST	
C520	SMG C	CE04W50V-2.2M(SMG)	1	395080227ST	
C529	SMG C	CE04W50V-10M(SMG)	1	395081007ST	
C530	SMG C	CE04W50V-10M(SMG)	1	395081007ST	
C543	SMG C	CE04W25V-100M(SMG)	1	395051017ST	
C546	SMG C	CE04W16V-100M(SMG)	1	395041017ST	
C551	SMG C	CE04W16V-100M(SMG)	1	395041017ST	
C552	SMG C	CE04W16V-100M(SMG)	1	395041017ST	
C571	ELECTROLYTIC CAPACITOR	CE04W10V-100M(KY)	1	3500272ST	
C572	ELECTROLYTIC CAPACITOR	CE04W10V-100M(KY)	1	3500272ST	
C581	SMG C	CE04W50V-10M(SMG)	1	395081007ST	
C582	SMG C	CE04W50V-10M(SMG)	1	395081007ST	
C583	SMG C	CE04W50V-10M(SMG)	1	395081007ST	
C584	SMG C	CE04W50V-10M(SMG)	1	395081007ST	
C585	ELECTROLYTIC CAPACITOR	CE04W50V-18M(LXY)	1	3500246ST	
C586	ELECTROLYTIC CAPACITOR	CE04W50V-18M(LXY)	1	3500246ST	
C603	SMG C	CE04W50V-22M(SMG)	1	395082207ST	
C604	SMG C	CE04W50V-22M(SMG)	1	395082207ST	
C623	SMG C	CE04W50V-22M(SMG)	1	395082207ST	
C624	SMG C	CE04W50V-22M(SMG)	1	395082207ST	
C641	ELECTROLYTIC CAPACITOR	CE04W25V-100M(KY)	1	3500273ST	
C642	ELECTROLYTIC CAPACITOR	CE04W25V-100M(KY)	1	3500273ST	
C671	SMG C	CE04W50V-10M(SMG)	1	395081007ST	
C672	SMG C	CE04W50V-10M(SMG)	1	395081007ST	
C681	SMG C	CE04W50V-10M(SMG)	1	395081007ST	
C682	SMG C	CE04W50V-10M(SMG)	1	395081007ST	
C701	SMG C	CE04W50V-10M(SMG)	1	395081007ST	
C702	SMG C	CE04W50V-10M(SMG)	1	395081007ST	
C801	SMG C	CE04W50V-10M(SMG)	1	395081007ST	
C802	SMG C	CE04W50V-10M(SMG)	1	395081007ST	
C803	SMG C	CE04W50V-10M(SMG)	1	395081007ST	
C804	SMG C	CE04W50V-10M(SMG)	1	395081007ST	
C805	SMG C	CE04W50V-10M(SMG)	1	395081007ST	
C806	SMG C	CE04W50V-10M(SMG)	1	395081007ST	
C821	SMG C	CE04W16V-100M(SMG)	1	395041017ST	
C831	SMG C	CE04W16V-100M(SMG)	1	395041017ST	
C841	SMG C	CE04W16V-100M(SMG)	1	395041017ST	

C847	SMG C	CE04W50V-1M(SMG)	1	395080107ST	
C848	SMG C	CE04W50V-1M(SMG)	1	395080107ST	
C849	SMG C	CE04W50V-1M(SMG)	1	395080107ST	
C851	SMG C	CE04W6.3V-470M(SMG)	1	395024717T	
C852	SMG C	CE04W6.3V-470M(SMG)	1	395024717T	
C853	SMG C	CE04W6.3V-470M(SMG)	1	395024717T	
C895	SMG C	CE04W16V-100M(SMG)	1	395041017ST	
[Resistors]					
[Switches, Terminals, Wires]					
P111	PIN JACK	RCA-207AG-01	1	25046060	
P131	PIN JACK	RCA-232G-00-02	1	25046061	
P141	PIN JACK	RCA-421EG-00-11	1	25046063	
P161	PIN JACK	RCA-421EG-00-11	1	25046063	
P181	PIN JACK	RCA-232G-00-02	1	25046061	
P201	PIN JACK	RCA-232G-00-02	1	25046061	
P231	PIN JACK	NPJ-1PDB804	1	25046076	
P241	PIN JACK	RCA-232G-00-06	1	25046062	
P261	PIN JACK	RCA-421EG-00-11	1	25046063	
P601	PIN JACK	RCA-421EG-00-11	1	25046063	
P671	PIN JACK	RCA-421EG-00-11	1	25046063	
P701	PIN JACK	MSP-2510V-25-GILT-ABS(O13	1	25046050	
P702	PIN JACK	MSP-2510V-25-GILT-ABS(O13	1	25046050	
P801	PIN JACK	MSD-243V-50-GILT(O133)	1	25046045	
P802	PIN JACK	MSD-243V-50-GILT(O133)	1	25046045	
P803	PIN JACK	MSD-243V-50-GILT(O133)	1	25046045	
RL551	RELAY	NRL-2P2A-DC24-208	1	25065728	

BACLD-2095-1D

<Note>

1. Parts marked by "**NSP**" are generally unavailable because they are not in our Master Spare Parts List.
2. The ! mark found on some component parts indicates the importance of the safety factor of the part.
   Therefore, when replacing, be sure to use parts of identical designation.

: NSP

REF. NO.	PART NAME	DESCRIPTION	Q'TY	PART NO. (SN)	REMARKS
[Semi-conductors]					
[Transformers, Coils]					
T4100	COIL	7G23G-200M-R	1	231519	
T4200	COIL	7G23G-200M-R	1	231519	
T4300	COIL	7G23G-200M-R	1	231519	
T4400	COIL	7G23G-200M-R	1	231519	
T4500	COIL	7G23G-200M-R	1	231519	
T4600	COIL	7G23G-200M-R	1	231519	
T4700	COIL	7G23G-200M-R	1	231519	
T4800	COIL	7G23G-200M-R	1	231519	
T4900	COIL	7G23G-200M-R	1	231519	
T6500	COIL	7G23G-200M-R	1	231519	
T6600	COIL	7G23G-200M-R	1	231519	
[Capacitors]					
C4008	SMG C	CE04W16V-100M(SMG)	1	395041017T	
C4010	SMG C	CE04W16V-100M(SMG)	1	395041017T	
C4023	SMG C	CE04W50V-10M(SMG)	1	395081007T	
C4024	SMG C	CE04W16V-100M(SMG)	1	395041017T	
C4036	SMG C	CE04W16V-100M(SMG)	1	395041017T	
C4052	SMG C	CE04W16V-100M(SMG)	1	395041017T	
C4053	SMG C	CE04W16V-100M(SMG)	1	395041017T	
C4057	ELECTROLYTIC CAPACITOR	CE69W80V-2700M_LGU1K27	1	3504536	
C4058	ELECTROLYTIC CAPACITOR	CE69W80V-2700M_LGU1K27	1	3504536	
C4059	ELECTROLYTIC CAPACITOR	CE69W80V-2700M_LGU1K27	1	3504536	
C4060	ELECTROLYTIC CAPACITOR	CE69W80V-2700M_LGU1K27	1	3504536	
C4061	ELECTROLYTIC CAPACITOR	CE69W80V-2700M_LGU1K27	1	3504536	
C4062	ELECTROLYTIC CAPACITOR	CE69W80V-2700M_LGU1K27	1	3504536	
C4063	ELECTROLYTIC CAPACITOR	CE04W25V-82M(LXY)	1	3500245T	
C4065	ELECTROLYTIC CAPACITOR	CE04W16V-56M(LXY)	1	3500244T	
C4066	ELECTROLYTIC CAPACITOR	CE04W16V-56M(LXY)	1	3500244T	
C4069	ELECTROLYTIC CAPACITOR	CE04W16V-56M(LXY)	1	3500244T	
C4070	ELECTROLYTIC CAPACITOR	CE04W16V-56M(LXY)	1	3500244T	
C4071	SMG C	CE04W16V-100M(SMG)	1	395041017T	
C4081	SMG C	CE04W16V-100M(SMG)	1	395041017T	
C4083	MICA CAPACITOR	DM15C201J5	1	3600032	
C4084	MICA CAPACITOR	DM15C201J5	1	3600032	
C4108	ELECTROLYTIC CAPACITOR	CE04W16V-470M(KY_H15)	1	3500274	
C4116	ELECTROLYTIC CAPACITOR	CE04W25V-82M(LXY)	1	3500245T	
C4130	ELECTROLYTIC CAPACITOR	CE04W50V-18M(LXY)	1	3500246ST	
C4134	ELECTROLYTIC CAPACITOR	CE04W50V-18M(LXY)	1	3500246ST	
C4136	ELECTROLYTIC CAPACITOR	CE04W50V-18M(LXY)	1	3500246ST	
C4149	ELECTROLYTIC CAPACITOR	UKT1K561MHMAPDCV	1	3500254S	
C4150	ELECTROLYTIC CAPACITOR	UKT1K561MHMAPDCV	1	3500254S	
C4166	SMG C	CE04W16V-100M(SMG)	1	395041017T	
C4167	SMG C	CE04W16V-100M(SMG)	1	395041017T	
C4171	SMG C	CE04W50V-10M(SMG)	1	395081007T	
C4208	ELECTROLYTIC CAPACITOR	CE04W16V-470M(KY_H15)	1	3500274	
C4216	ELECTROLYTIC CAPACITOR	CE04W25V-82M(LXY)	1	3500245T	
C4230	ELECTROLYTIC CAPACITOR	CE04W50V-18M(LXY)	1	3500246ST	
C4234	ELECTROLYTIC CAPACITOR	CE04W50V-18M(LXY)	1	3500246ST	
C4236	ELECTROLYTIC CAPACITOR	CE04W50V-18M(LXY)	1	3500246ST	

C4249	ELECTROLYTIC CAPACITOR	UKT1K561MHMAPDCV	1	3500254S	
C4250	ELECTROLYTIC CAPACITOR	UKT1K561MHMAPDCV	1	3500254S	
C4266	SMG C	CE04W16V-100M(SMG)	1	395041017T	
C4267	SMG C	CE04W16V-100M(SMG)	1	395041017T	
C4308	ELECTROLYTIC CAPACITOR	CE04W16V-470M(KY_H15)	1	3500274	
C4316	ELECTROLYTIC CAPACITOR	CE04W25V-82M(LXY)	1	3500245T	
C4330	ELECTROLYTIC CAPACITOR	CE04W50V-18M(LXY)	1	3500246ST	
C4334	ELECTROLYTIC CAPACITOR	CE04W50V-18M(LXY)	1	3500246ST	
C4336	ELECTROLYTIC CAPACITOR	CE04W50V-18M(LXY)	1	3500246ST	
C4349	ELECTROLYTIC CAPACITOR	UKT1K561MHMAPDCV	1	3500254S	
C4350	ELECTROLYTIC CAPACITOR	UKT1K561MHMAPDCV	1	3500254S	
C4366	SMG C	CE04W16V-100M(SMG)	1	395041017T	
C4367	SMG C	CE04W16V-100M(SMG)	1	395041017T	
C4371	SMG C	CE04W50V-10M(SMG)	1	395081007T	
C4408	ELECTROLYTIC CAPACITOR	CE04W16V-470M(KY_H15)	1	3500274	
C4416	ELECTROLYTIC CAPACITOR	CE04W25V-82M(LXY)	1	3500245T	
C4430	ELECTROLYTIC CAPACITOR	CE04W50V-18M(LXY)	1	3500246ST	
C4434	ELECTROLYTIC CAPACITOR	CE04W50V-18M(LXY)	1	3500246ST	
C4436	ELECTROLYTIC CAPACITOR	CE04W50V-18M(LXY)	1	3500246ST	
C4449	ELECTROLYTIC CAPACITOR	UKT1K561MHMAPDCV	1	3500254S	
C4450	ELECTROLYTIC CAPACITOR	UKT1K561MHMAPDCV	1	3500254S	
C4466	SMG C	CE04W16V-100M(SMG)	1	395041017T	
C4467	SMG C	CE04W16V-100M(SMG)	1	395041017T	
C4508	ELECTROLYTIC CAPACITOR	CE04W16V-470M(KY_H15)	1	3500274	
C4516	ELECTROLYTIC CAPACITOR	CE04W25V-82M(LXY)	1	3500245T	
C4530	ELECTROLYTIC CAPACITOR	CE04W50V-18M(LXY)	1	3500246ST	
C4534	ELECTROLYTIC CAPACITOR	CE04W50V-18M(LXY)	1	3500246ST	
C4536	ELECTROLYTIC CAPACITOR	CE04W50V-18M(LXY)	1	3500246ST	
C4549	ELECTROLYTIC CAPACITOR	UKT1K561MHMAPDCV	1	3500254S	
C4550	ELECTROLYTIC CAPACITOR	UKT1K561MHMAPDCV	1	3500254S	
C4566	SMG C	CE04W16V-100M(SMG)	1	395041017T	
C4567	SMG C	CE04W16V-100M(SMG)	1	395041017T	
C4571	SMG C	CE04W50V-10M(SMG)	1	395081007T	
C4608	ELECTROLYTIC CAPACITOR	CE04W16V-470M(KY_H15)	1	3500274	
C4616	ELECTROLYTIC CAPACITOR	CE04W25V-82M(LXY)	1	3500245T	
C4630	ELECTROLYTIC CAPACITOR	CE04W50V-18M(LXY)	1	3500246ST	
C4634	ELECTROLYTIC CAPACITOR	CE04W50V-18M(LXY)	1	3500246ST	
C4636	ELECTROLYTIC CAPACITOR	CE04W50V-18M(LXY)	1	3500246ST	
C4649	ELECTROLYTIC CAPACITOR	UKT1K561MHMAPDCV	1	3500254S	
C4650	ELECTROLYTIC CAPACITOR	UKT1K561MHMAPDCV	1	3500254S	
C4666	SMG C	CE04W16V-100M(SMG)	1	395041017T	
C4667	SMG C	CE04W16V-100M(SMG)	1	395041017T	
C4708	ELECTROLYTIC CAPACITOR	CE04W16V-470M(KY_H15)	1	3500274	
C4716	ELECTROLYTIC CAPACITOR	CE04W25V-82M(LXY)	1	3500245T	
C4730	ELECTROLYTIC CAPACITOR	CE04W50V-18M(LXY)	1	3500246ST	
C4734	ELECTROLYTIC CAPACITOR	CE04W50V-18M(LXY)	1	3500246ST	
C4736	ELECTROLYTIC CAPACITOR	CE04W50V-18M(LXY)	1	3500246ST	
C4738	ELECTROLYTIC CAPACITOR	CE04W16V-470M(KY_H15)	1	3500274	
C4749	ELECTROLYTIC CAPACITOR	UKT1K561MHMAPDCV	1	3500254S	
C4750	ELECTROLYTIC CAPACITOR	UKT1K561MHMAPDCV	1	3500254S	
C4766	SMG C	CE04W16V-100M(SMG)	1	395041017T	
C4767	SMG C	CE04W16V-100M(SMG)	1	395041017T	
C4771	SMG C	CE04W50V-10M(SMG)	1	395081007T	
C4808	ELECTROLYTIC CAPACITOR	CE04W16V-470M(KY_H15)	1	3500274	
C4816	ELECTROLYTIC CAPACITOR	CE04W25V-82M(LXY)	1	3500245T	
C4830	ELECTROLYTIC CAPACITOR	CE04W50V-18M(LXY)	1	3500246ST	
C4834	ELECTROLYTIC CAPACITOR	CE04W50V-18M(LXY)	1	3500246ST	
C4836	ELECTROLYTIC CAPACITOR	CE04W50V-18M(LXY)	1	3500246ST	
C4849	ELECTROLYTIC CAPACITOR	UKT1K561MHMAPDCV	1	3500254S	
C4850	ELECTROLYTIC CAPACITOR	UKT1K561MHMAPDCV	1	3500254S	
C4866	SMG C	CE04W16V-100M(SMG)	1	395041017T	

C4867	SMG C	CE04W16V-100M(SMG)	1	395041017T	
C4908	ELECTROLYTIC CAPACITOR	CE04W16V-470M(KY_H15)	1	3500274	
C4916	ELECTROLYTIC CAPACITOR	CE04W25V-82M(LXY)	1	3500245T	
C4930	ELECTROLYTIC CAPACITOR	CE04W50V-18M(LXY)	1	3500246ST	
C4934	ELECTROLYTIC CAPACITOR	CE04W50V-18M(LXY)	1	3500246ST	
C4936	ELECTROLYTIC CAPACITOR	CE04W50V-18M(LXY)	1	3500246ST	
C4949	ELECTROLYTIC CAPACITOR	UKT1K561MHMAPDCV	1	3500254S	
C4950	ELECTROLYTIC CAPACITOR	UKT1K561MHMAPDCV	1	3500254S	
C4966	SMG C	CE04W16V-100M(SMG)	1	395041017T	
C4967	SMG C	CE04W16V-100M(SMG)	1	395041017T	
C4971	SMG C	CE04W50V-10M(SMG)	1	395081007T	
C5071	SMG C	CE04W16V-100M(SMG)	1	395041017T	
C5072	SMG C	CE04W16V-100M(SMG)	1	395041017T	
C5184	ELECTROLYTIC CAPACITOR	CE04W16V-56M(LXY)	1	3500244T	
C5185	SMG C	CE04W50V-10M(SMG)	1	395081007T	
C6400	ELECTROLYTIC CAPACITOR	CE69W80V-2700M_LGU1K27	1	3504536	
C6401	ELECTROLYTIC CAPACITOR	CE69W80V-2700M_LGU1K27	1	3504536	
C6508	ELECTROLYTIC CAPACITOR	CE04W16V-470M(KY_H15)	1	3500274	
C6516	ELECTROLYTIC CAPACITOR	CE04W25V-82M(LXY)	1	3500245T	
C6530	ELECTROLYTIC CAPACITOR	CE04W50V-18M(LXY)	1	3500246ST	
C6534	ELECTROLYTIC CAPACITOR	CE04W50V-18M(LXY)	1	3500246ST	
C6536	ELECTROLYTIC CAPACITOR	CE04W50V-18M(LXY)	1	3500246ST	
C6549	ELECTROLYTIC CAPACITOR	UKT1K561MHMAPDCV	1	3500254S	
C6550	ELECTROLYTIC CAPACITOR	UKT1K561MHMAPDCV	1	3500254S	
C6566	SMG C	CE04W16V-100M(SMG)	1	395041017T	
C6567	SMG C	CE04W16V-100M(SMG)	1	395041017T	
C6571	SMG C	CE04W50V-10M(SMG)	1	395081007T	
C6608	ELECTROLYTIC CAPACITOR	CE04W16V-470M(KY_H15)	1	3500274	
C6616	ELECTROLYTIC CAPACITOR	CE04W25V-82M(LXY)	1	3500245T	
C6630	ELECTROLYTIC CAPACITOR	CE04W50V-18M(LXY)	1	3500246ST	
C6634	ELECTROLYTIC CAPACITOR	CE04W50V-18M(LXY)	1	3500246ST	
C6636	ELECTROLYTIC CAPACITOR	CE04W50V-18M(LXY)	1	3500246ST	
C6649	ELECTROLYTIC CAPACITOR	UKT1K561MHMAPDCV	1	3500254S	
C6650	ELECTROLYTIC CAPACITOR	UKT1K561MHMAPDCV	1	3500254S	
C6666	SMG C	CE04W16V-100M(SMG)	1	395041017T	
C6667	SMG C	CE04W16V-100M(SMG)	1	395041017T	
C6683	SMG C	CE04W50V-10M(SMG)	1	395081007T	
C6684	SMG C	CE04W50V-10M(SMG)	1	395081007T	
C6685	SMG C	CE04W50V-10M(SMG)	1	395081007T	
C6686	SMG C	CE04W50V-10M(SMG)	1	395081007T	
C6687	SMG C	CE04W50V-10M(SMG)	1	395081007T	
C6688	SMG C	CE04W50V-10M(SMG)	1	395081007T	
[Resistors]					
R4125	METAL PLATE RESISTOR	RGC5-0.22-OHM-K	1	4000284	
R4126	METAL PLATE RESISTOR	RGC5-0.22-OHM-K	1	4000284	
R4154	CEMENT RESISTOR	MNS05N100JW	1	4800083	
R4225	METAL PLATE RESISTOR	RGC5-0.22-OHM-K	1	4000284	
R4226	METAL PLATE RESISTOR	RGC5-0.22-OHM-K	1	4000284	
R4254	CEMENT RESISTOR	MNS05N100JW	1	4800083	
R4325	METAL PLATE RESISTOR	RGC5-0.22-OHM-K	1	4000284	
R4326	METAL PLATE RESISTOR	RGC5-0.22-OHM-K	1	4000284	
R4354	CEMENT RESISTOR	MNS05N100JW	1	4800083	
R4425	METAL PLATE RESISTOR	RGC5-0.22-OHM-K	1	4000284	
R4426	METAL PLATE RESISTOR	RGC5-0.22-OHM-K	1	4000284	
R4454	CEMENT RESISTOR	MNS05N100JW	1	4800083	
R4525	METAL PLATE RESISTOR	RGC5-0.22-OHM-K	1	4000284	
R4526	METAL PLATE RESISTOR	RGC5-0.22-OHM-K	1	4000284	
R4554	CEMENT RESISTOR	MNS05N100JW	1	4800083	
R4625	METAL PLATE RESISTOR	RGC5-0.22-OHM-K	1	4000284	
R4626	METAL PLATE RESISTOR	RGC5-0.22-OHM-K	1	4000284	
R4654	CEMENT RESISTOR	MNS05N100JW	1	4800083	

R4725	METAL PLATE RESISTOR	RGC5-0.22-OHM-K	1	4000284	
R4726	METAL PLATE RESISTOR	RGC5-0.22-OHM-K	1	4000284	
R4754	CEMENT RESISTOR	MNS05N100JW	1	4800083	
R4825	METAL PLATE RESISTOR	RGC5-0.22-OHM-K	1	4000284	
R4826	METAL PLATE RESISTOR	RGC5-0.22-OHM-K	1	4000284	
R4854	CEMENT RESISTOR	MNS05N100JW	1	4800083	
R4925	METAL PLATE RESISTOR	RGC5-0.22-OHM-K	1	4000284	
R4926	METAL PLATE RESISTOR	RGC5-0.22-OHM-K	1	4000284	
R4954	CEMENT RESISTOR	MNS05N100JW	1	4800083	
R6525	METAL PLATE RESISTOR	RGC5-0.22-OHM-K	1	4000284	
R6526	METAL PLATE RESISTOR	RGC5-0.22-OHM-K	1	4000284	
R6554	CEMENT RESISTOR	MNS05N100JW	1	4800083	
R6625	METAL PLATE RESISTOR	RGC5-0.22-OHM-K	1	4000284	
R6626	METAL PLATE RESISTOR	RGC5-0.22-OHM-K	1	4000284	
R6654	CEMENT RESISTOR	MNS05N100JW	1	4800083	
[Switches, Terminals, Wires]					
P4201	TERMINAL	LTS3610-1011F	1	25060536	
P4401	TERMINAL	LTS3410-1020F	1	25060537	
P4601	TERMINAL	LTS3410-1020F	1	25060537	
P4901	TERMINAL	LTS3410-1020F	1	25060537	
P6501	TERMINAL	LTS3410-1020F	1	25060537	
RL4100	RELAY	NRL-2P5A-DC12-208	1	25065733	
RL4300	RELAY	NRL-2P5A-DC12-208	1	25065733	
RL4500	RELAY	NRL-2P5A-DC12-208	1	25065733	
RL4700	RELAY	NRL-2P5A-DC12-208	1	25065733	
RL4900	RELAY	NRL-2P5A-DC12-208	1	25065733	
RL6500	RELAY	NRL-2P5A-DC12-208	1	25065733	

BADG-2077-1E

<Note>

1. Parts marked by "**NSP**" are generally unavailable because they are not in our Master Spare Parts List.
2. The ! mark found on some component parts indicates the importance of the safety factor of the part.
   Therefore, when replacing, be sure to use parts of identical designation.

: NSP

REF. NO.	PART NAME	DESCRIPTION	Q'TY	PART NO. (SN)	REMARKS
[Semi-conductors]					
[Transformers, Coils]					
[Capacitors]					
C2008	SMG C	CE04W16V-220M(SMG)	1	395042217ST	
C2010	SMG C	CE04W16V-1000M(SMG)	1	395041027S	
C2015	SMG C	CE04W16V-220M(SMG)	1	395042217ST	
C2213	SMG C	CE04W16V-220M(SMG)	1	395042217ST	
C2217	SMG C	CE04W16V-100M(SMG)	1	395041017ST	
C2218	SMG C	CE04W16V-100M(SMG)	1	395041017ST	
C2302	SMG C	CE04W16V-220M(SMG)	1	395042217ST	
C2303	SMG C	CE04W25V-47M(SMG)	1	395054707ST	
C2306	SMG C	CE04W16V-220M(SMG)	1	395042217ST	
C2308	SMG C	CE04W25V-47M(SMG)	1	395054707ST	
C2352	SMG C	CE04W16V-220M(SMG)	1	395042217ST	
C2353	SMG C	CE04W25V-47M(SMG)	1	395054707ST	
C2356	SMG C	CE04W16V-220M(SMG)	1	395042217ST	
C2358	SMG C	CE04W25V-47M(SMG)	1	395054707ST	
C2402	ELECTROLYTIC CAPACITOR	CE04W16V-56M(LXY)	1	3500244ST	
C2404	ELECTROLYTIC CAPACITOR	CE04W16V-56M(LXY)	1	3500244ST	
C2471	ELECTROLYTIC CAPACITOR	CE04W16V-56M(LXY)	1	3500244ST	
C2491	ELECTROLYTIC CAPACITOR	CE04W16V-56M(LXY)	1	3500244ST	
C2511	ELECTROLYTIC CAPACITOR	CE04W16V-56M(LXY)	1	3500244ST	
C2531	ELECTROLYTIC CAPACITOR	CE04W16V-56M(LXY)	1	3500244ST	
C2551	ELECTROLYTIC CAPACITOR	CE04W16V-56M(LXY)	1	3500244ST	
C2571	ELECTROLYTIC CAPACITOR	CE04W16V-56M(LXY)	1	3500244ST	
C2591	ELECTROLYTIC CAPACITOR	CE04W16V-56M(LXY)	1	3500244ST	
C2611	ELECTROLYTIC CAPACITOR	CE04W16V-56M(LXY)	1	3500244ST	
C2631	ELECTROLYTIC CAPACITOR	CE04W16V-56M(LXY)	1	3500244ST	
C2651	ELECTROLYTIC CAPACITOR	CE04W16V-56M(LXY)	1	3500244ST	
C2671	ELECTROLYTIC CAPACITOR	CE04W16V-56M(LXY)	1	3500244ST	
C2691	ELECTROLYTIC CAPACITOR	CE04W16V-56M(LXY)	1	3500244ST	
C2711	ELECTROLYTIC CAPACITOR	CE04W16V-56M(LXY)	1	3500244ST	
C2743	SMG C	CE04W35V-100M(SMG)	1	395061017ST	
C2744	SMG C	CE04W35V-100M(SMG)	1	395061017ST	
C2751	SMG C	CE04W16V-220M(SMG)	1	395042217ST	
C2760	ELECTROLYTIC CAPACITOR	CE04W16V-56M(LXY)	1	3500244ST	
C2764	ELECTROLYTIC CAPACITOR	CE04W10V-100M(ZL)	1	3500269ST	
C2765	ELECTROLYTIC CAPACITOR	CE04W16V-56M(LXY)	1	3500244ST	
C2773	ELECTROLYTIC CAPACITOR	CE04W10V-100M(ZL)	1	3500269ST	
C2777	ELECTROLYTIC CAPACITOR	CE04W10V-100M(ZL)	1	3500269ST	
C2782	SMG C	CE04W25V-47M(SMG)	1	395054707ST	
C2806	ELECTROLYTIC CAPACITOR	CE04W10V-100M(ZL)	1	3500269ST	
C2811	SMG C	CE04W25V-47M(SMG)	1	395054707ST	
C2831	SMG C	CE04W50V-22M(SMG)	1	395082207ST	
C2832	SMG C	CE04W50V-22M(SMG)	1	395082207ST	
C2839	SMG C	CE04W50V-10M(SMG)	1	395081007ST	
C2840	SMG C	CE04W50V-10M(SMG)	1	395081007ST	
C2856	ELECTROLYTIC CAPACITOR	CE04W10V-100M(ZL)	1	3500269ST	
C2861	SMG C	CE04W25V-47M(SMG)	1	395054707ST	
C2881	SMG C	CE04W50V-22M(SMG)	1	395082207ST	
C2882	SMG C	CE04W50V-22M(SMG)	1	395082207ST	

C2889	SMG C	CE04W50V-10M(SMG)	1	395081007ST	
C2890	SMG C	CE04W50V-10M(SMG)	1	395081007ST	
[Resistors]					
[Switches, Terminals, Wires]					
P2201	PIN JACK	NPJ-2PDO803	1	25046075	
P2202	PHOTO COUPLER	JSR1165-001recieving	1	24120143	
P2203	PHOTO COUPLER	JSR1165-001recieving	1	24120143	
P2204	PHOTO COUPLER	JSR1165-001recieving	1	24120143	

BADIS-2074-1J

<Note>

1. Parts marked by "**NSP**" are generally unavailable because they are not in our Master Spare Parts List.
2. The ! mark found on some component parts indicates the importance of the safety factor of the part.
   Therefore, when replacing, be sure to use parts of identical designation.

: NSP

REF. NO.	PART NAME	DESCRIPTION	Q'TY	PART NO. (SN)	REMARKS
[Semi-conductors]					
D5411	DIODE	D2SB60A	1	22380366F	
D5412	DIODE	SARS01	1	22380397	
D5413	DIODE	SARS01	1	22380397	
D5451	DIODE	FMEN-220A	1	22380396	
D5962	LED	SLR343BC4T	1	225470	
D7554	LED	SLR343BC4T	1	225470	
D7555	LED	SLR343BC4T	1	225470	
D7556	LED	SLR343BC4T	1	225470	
D7557	LED	SLR343BC4T	1	225470	
D7558	LED	SLR343BC4T	1	225470	
Q5411	HYBRID IC	STR2A153	1	22242995	
Q5412	PHOTO COUPLER	TLP781(GR)	1	24120175	
Q7558	FLUORESCENT TUBE	016MT097GINYK	1	212286A	
Q7652	REMOTE SENSOR	GP1UE274XKC4	1	24130029	
Q7652or	REMOTE SENSOR	R2113TH-5AD	(1)	24130033	**N**
[Transformers, Coils]					
L5401	CHOKE COIL	PFC2225C	1	231490	
L5411	LINE FILTER	HF2318-A213Y0R8-01	1	231492	
L5451	CHOKE COIL	RP1315BNP-100M	1	231466M100	
T5411	POWER TRANSFORMER	ATK7006-A	1	2302140	**!**
[Capacitors]					
C5403	CERAMIC CAPACITOR	DE2F3KY103MA4BM02	1	3300083	
C5411	IS TYPE CAPACITOR	LE104-MX-C3.5	1	3800049S	**!**
C5412	ELECTROLYTIC CAPACITOR	CE69W400V-100M(KMM)	1	3504524	
C5413	ELECTROLYTIC CAPACITOR	CE04W50V-22M(LXZ)	1	3500248T	**N**
C5414	FILM C	ECQE6222KF	1	3700116	
C5421	IS TYPE CAPACITOR	DE1E3KX152MB5BA01	1	3300062S	**!**
C5422	IS TYPE CAPACITOR	DE1E3KX152MB5BA01	1	3300062S	**!**
C5451	ELECTROLYTIC CAPACITOR	CE04W10V-4700M(LXZ)	1	3500247S	
C5453	PW TYPE ELECTROLYTIC CAPACITOR	CE04W10V-470M(PW)	1	393734717T	
C5712	SMG C	CE04W50V-10M(SMG)	1	395081007T	
C5717	SMG C	CE04W16V-100M(SMG)	1	395041017T	
C5718	SMG C	CE04W16V-100M(SMG)	1	395041017T	
C7588	SMG C	CE04W25V-47M(SMG)	1	395054707T	
C7655	SMG C	CE04W16V-100M(SMG)	1	395041017T	
[Resistors]					
R5414	RESISTOR	ERG1DJ154P	1	4000283F	
R5415	METAL OXIDE FILM RESISTOR	ERG1SJ680P	1	4400045	
R5416	METAL RESISTOR	ERX1SJR68H	1	4500343	
R7577	NON-FLAMMABLE CARBON FILM RESISTC	R25J-10	1	415471004T	
R7587	NON-FLAMMABLE CARBON FILM RESISTC	R25J-10	1	415471004T	
[Switches, Terminals, Wires]					
P5702	ST JACK	MSJ-035-12APCAG	1	25046035	
P5705	ST JACK	MSJ-064-13ABAGGR(O133)	1	25046036	
RL5401	RELAY	NRL-1P10A-DC5-207	1	25065731	
S5941	ROTARY ENCODER	XREB12504PVB30FINB1-2-24	1	25065729	**N**
S5981	ROTARY ENCODER	XREB12505PVB30FINB1-2-12	1	25065730	**N**

BAHDM-2086-1E

<Note>

1. Parts marked by "**NSP**" are generally unavailable because they are not in our Master Spare Parts List.
2. The ! mark found on some component parts indicates the importance of the safety factor of the part.
   Therefore, when replacing, be sure to use parts of identical designation.

: NSP

REF. NO.	PART NAME	DESCRIPTION	Q'TY	PART NO. (SN)	REMARKS
[Semi-conductors]					
[Transformers, Coils]					
[Capacitors]					
[Resistors]					
[Switches, Terminals, Wires]					

BAPRC-2072-1E

<Note>

1. Parts marked by "**NSP**" are generally unavailable because they are not in our Master Spare Parts List.
2. The ! mark found on some component parts indicates the importance of the safety factor of the part.
   Therefore, when replacing, be sure to use parts of identical designation.

: NSP

REF. NO.	PART NAME	DESCRIPTION	Q'TY	PART NO. (SN)	REMARKS
[Semi-conductors]					
[Transformers, Coils]					
[Capacitors]					
[Resistors]					
[Switches, Terminals, Wires]					

BAPS-2089-1C

<Note>

1. Parts marked by "**NSP**" are generally unavailable because they are not in our Master Spare Parts List.
2. The ! mark found on some component parts indicates the importance of the safety factor of the part.
   Therefore, when replacing, be sure to use parts of identical designation.

: NSP

REF. NO.	PART NAME	DESCRIPTION	Q'TY	PART NO. (SN)	REMARKS
[Semi-conductors]					
D7401	DIODE	LN6SB60	1	22380399	
D7402	DIODE	LN6SB60	1	22380399	
Q7211	TRANSISTOR	2SD2400A-D	1	2202734	
Q7212	TRANSISTOR	2SB1569A-D	1	2202724	
Q7241	HYBRID IC	78M15HF(NJM78M15FA)	1	222780155JRC	
Q7251	HYBRID IC	78M12HF(NJM78M12FA)	1	222780125JRC	
Q7252	HYBRID IC	79M12HF(NJM79M12FA)	1	222790125JRC	
Q7271	HYBRID IC	78M08HF(NJM78M08FA)	1	222780085JRC	
Q7272	HYBRID IC	79M08HF(NJM79M08FA)	1	222790085JRC	
Q7273	HYBRID IC	78M15HF(NJM78M15FA)	1	222780155JRC	
X1	CRYSTAL	HC-49S 9B12.000MHz	1	3010533	
[Transformers, Coils]					
L5	ANTENNA COIL	K7-D	1	232212	
[Capacitors]					
C7213	SMG C	CE04W16V-100M(SMG)	1	395041017T	
C7214	SMG C	CE04W16V-100M(SMG)	1	395041017T	
C7215	SMG C	CE04W50V-10M(SMG)	1	395081007T	
C7219	SMG C	CE04W50V-10M(SMG)	1	395081007T	
C7221	SMG C	CE04W25V-47M(SMG)	1	395054707T	
C7241	SMG C	CE04W25V-2200M(SMG)	1	395052227S	
C7244	SMG C	CE04W50V-22M(SMG)	1	395082207T	
C7246	SMG C	CE04W35V-220M(SMG)	1	395062217T	
C7251	SMG C	CE04W25V-2200M(SMG)	1	395052227S	
C7252	SMG C	CE04W25V-2200M(SMG)	1	395052227S	
C7255	SMG C	CE04W35V-220M(SMG)	1	395062217T	
C7256	SMG C	CE04W35V-220M(SMG)	1	395062217T	
C7271	SMG C	CE04W16V-2200M(SMG)	1	395042227S	
C7272	SMG C	CE04W16V-2200M(SMG)	1	395042227S	
C7293	SMG C	CE04W16V-220M(SMG)	1	395042217T	
C7294	SMG C	CE04W16V-220M(SMG)	1	395042217T	
C7298	SMG C	CE04W35V-220M(SMG)	1	395062217T	
C7401	ELECTROLYTIC CAPACITOR	CE69W80V-10000M_LKS1K10	1	3504527	
C7402	ELECTROLYTIC CAPACITOR	CE69W80V-10000M_LKS1K10	1	3504527	
[Resistors]					
R7211	NON-FLAMMABLE CARBON FILM RESISTC	R25J-1.0K	1	415471024T	
R7213	NON-FLAMMABLE CARBON FILM RESISTC	R25J-1.0K	1	415471024T	
R7403	NON-FLAMMABLE CARBON FILM RESISTC	R25J-10	1	415471004T	
[Switches, Terminals, Wires]					
P1	TERMINAL	NTM-1PDSC437	1	25060515	
P2	TERMINAL	NTM-2PDML439	1	25060517	

BAPS-2092-1A

<Note>

1. Parts marked by "**NSP**" are generally unavailable because they are not in our Master Spare Parts List.
2. The ! mark found on some component parts indicates the importance of the safety factor of the part.
   Therefore, when replacing, be sure to use parts of identical designation.

: NSP

REF. NO.	PART NAME	DESCRIPTION	Q'TY	PART NO. (SN)	REMARKS
[Semi-conductors]					
D9751	DIODE	D3SBA60	1	22380272F	
Q9501	HYBRID IC	78M12HF(NJM78M12FA)	1	222780125JRC	
Q9502	HYBRID IC	79M12HF(NJM79M12FA)	1	222790125JRC	
Q9521	HYBRID IC	78M06HF(NJM78M06FA)	1	222780065JRC	
Q9531	HYBRID IC	78M12HF(NJM78M12FA)	1	222780125JRC	
Q9551	HYBRID IC	78M05(NJM78M05FA)	1	222780055JRC	
[Transformers, Coils]					
[Capacitors]					
C9507	SMG C	CE04W25V-3300M(SMG)	1	395053327S	**N**
C9508	SMG C	CE04W25V-3300M(SMG)	1	395053327S	**N**
C9515	SMG C	CE04W35V-220M(SMG)	1	395062217T	
C9516	SMG C	CE04W35V-220M(SMG)	1	395062217T	
C9522	SMG C	CE04W25V-2200M(SMG)	1	395052227S	**N**
C9524	SMG C	CE04W10V-220M(SMG)	1	395032217T	
C9536	SMG C	CE04W35V-1000M(SMG)	1	395061027S	**N**
C9537	SMG C	CE04W35V-470M(SMG)	1	395064717S	**N**
C9539	SMG C	CE04W50V-10M(SMG)	1	395081007T	
C9552	SMG C	CE04W16V-1000M(SMG)	1	395041027S	**N**
C9554	SMG C	CE04W16V-100M(SMG)	1	395041017T	
C9571	SMG C	CE04W63V-47M(SMG)	1	395074707T	**N**
C9572	SMG C	CE04W50V-47M(SMG)	1	395084707T	
C9573	SMG C	CE04W50V-47M(SMG)	1	395084707T	
C9760	SMG C	CE04W16V-4700M(SMG)	1	395044727S	**N**
[Resistors]					
R9533	NON-FLAMMABLE CARBON FILM RESISTC	R25J-4.7	1	415470474T	
[Switches, Terminals, Wires]					
P5801	ST JACK	MSJ-035-12APCAG	1	25046035	
P5802	ST JACK	HSJ1002-016010	1	25046044	
P5803	ST JACK	HSJ1002-016010	1	25046044	

SC-LX901(B)MGP

<Note>

1. Parts marked by "**NSP**" are generally unavailable because they are not in our Master Spare Parts List.
2. The ! mark found on some component parts indicates the importance of the safety factor of the part.
   Therefore, when replacing, be sure to use parts of identical designation.

: NSP

(B) : Black color model
<MGP> : 220-230V
CE(European) model

REF. NO.	PART NAME	DESCRIPTION	Q'TY	PART NO. (SN)	REMARKS
[Cabinet, Chassis, Screws, Nuts]					
1	REAR PANEL	LX901MGP	1	27124771A	**N**
2	COVER	LX901(B) (Bent)	1	28210156	**N**
3	COVER	(IR)LX901 (Bent)	1	28210161B	
4	BOTTOM LEG	(PI)(G)	4	27175481	
5	SHEET	SP_LX901	1	29096191	
6	CUSHION CIRCLE 14B	.	8	AED7081-A	
7	HEAT COND SHEET	.	11	AEB7434-A	
8	BUSH/ANT	.	2	AMR7706-B	
9	HOLDER	(PLUG)	1	27191418A	
10	DOOR SPRING (SUS)	.	1	ABK7061-A	
11	SHAFT/DOR	.	1	AMR7704-A	
12	DOOR	SHS	1	ANB7644-A	**N**
13	DAMPER/DOR	.	1	AXA7159-A	
14	DOOR BASE LX85	.	1	AMR7565-B	
15	VOL.KNOB	LX85(AL)	2	AAA7064-C	**N**
16	POWER RING LX85(PLS)	.	1	AAK8571-A	
17	CLEAR PLATE	.	1	28192487	
18	FILTER	81HY(PC)	1	AAK8459-A	**N**
19	FRONT PANEL	LX901(B)	1	27213885A	
20	FRONT BRACKET	OTHER	1	27111641	**N**
21	BADGE	(PI)(B)	1	28135324	**N**
22	STDBY BTN LX85 ASSY	.	1	AAD7804-A	
23	RING	.	2	ABH7213-A	
24	VOL STABILIZER LX85	.	2	AEC7644-A	
26	LABEL	.	1	AAX8244-A	
28	NUT	NK90FTC	2	865190	
[Transformers, Coils]					
50	POWER TRANSFORMER	NPT-1676PQ	1	2302173	**!, N**
[Switches, Terminals, Wires]					
60	FUSE	5A-SE-EAK FUSE	1	252078GR	**!**
61	FUSE	215004.MXP	1	252408	**!**
62	FUSE	1A-SE-EAK FUSE	1	252070GR	**!**
63	FUSE	0.8A-SE-EAK FSBFUSE	1	252069GR	**!**
64	FUSE	0.8A-SE-EAK FSBFUSE	1	252069GR	**!**
65	FUSE	1A-SE-EAK FUSE	1	252070GR	**!**
66	FUSE	1A-SE-EAK FUSE	1	252070GR	**!**
67	FUSE	0.8A-SE-EAK FSBFUSE	1	252069GR	**!**
68	FUSE	0.8A-SE-EAK FSBFUSE	1	252069GR	**!**
69	FUSE	1A-SE-EAK FUSE	1	252070GR	**!**
70	FUSE	1A-SE-EAK FUSE	1	252070GR	**!**
71	FUSE	1A-SE-EAK FUSE	1	252070GR	**!**
72	FUSE	1.6A-SE-EAK IECFUSE	1	252073GR	**!, N**
73	LABEL	T1.6AL250V	1	29361769	
74	FLEXIBLE FLAT CABLE	NCFC7-070712	1	2047070712	**N**
75	FLEXIBLE FLAT CABLE	NCFC5-351512	1	2045351512	**N**
76	ASSEMBLED PWB	WCBN806L	1	24150135	**N**
77	WIFI BT ANTENNA	RFDPA870918EMLB302	1	2050102	**N**
78	WIFI BT ANTENNA	RFDPA870940EMLB303	1	2050103	**N**
79	FLEXIBLE FLAT CABLE	NCFC7-210812	1	204321045	**N**
80	P RIVET	JB-407A-C	22	880052	

81	FLEXIBLE FLAT CABLE	ADD7725-A	1	204315043		
82	FLEXIBLE FLAT CABLE	NCFC7-133012	1	2047133012	N	
83	FAN	2410RL-04W-S29-C07	1	24502340		
84	FLEXIBLE FLAT CABLE	NCFC5-351212	1	2045351212	N	
85	FLEXIBLE FLAT CABLE	ADD7783-A	1	204405062		
86	CORD ASSEMBLY	TYX1622-114047	1	2010519		
[Frontend, Units]						
200	**PARENT PC BOARD AS**	**BAPRC-2072-1F-P**	**1**	**1B5142072-1F901MGP**	**N**	**Parent**
202	Processing circuit pc board AS	BAPRC-2072-1F	1	1B5142072-1F-C901MGP	N	Child
250	**PARENT PC BOARD AS**	**BADIS-2074-1K-P**	**1**	**1B5142074-1K**	**N**	**Parent**
252	Display circuit pc board AS	BADIS-2074-1K	1	1B5142074-1K-C	N	Child
254	Switch circuit pc board AS	BASW-2116-1K	1	1B5142116-1K-C	N	Child
256	Switch circuit pc board AS	BASW-2117-1K	1	1B5142117-1K-C	N	Child
258	Power supply circuit pc board AS	BAPS-2118-1K	1	1B5142118-1K-C	N	Child
260	Et cetra pc board AS	BAETC-2119-1K	1	1B5142119-1K-C	N	Child
262	Switch circuit pc board AS	BASW-2120-1K	1	1B5142120-1K-C	N	Child
264	Et cetra pc board AS	BAETC-2121-1K	1	1B5142121-1K-C	N	Child
266	Et cetra pc board AS	BAETC-2186-1K	1	1B5142186-1K-C	N	Child
268	Et cetra pc board AS	BAETC-2216-1K	1	1B5142216-1K-C	N	Child
300	**PARENT PC BOARD AS**	**BADG-2077-1F-P**	**1**	**1B5142077-1F**	**N**	**Parent**
302	Digital circuit pc board AS	BADG-2077-1F	1	1B5142077-1F-C	N	Child
350	**PARENT PC BOARD AS**	**BAASP-2080-1F-P**	**1**	**1B5142080-1F**	**N**	**Parent**
352	Audio signal processor circuit pc board AS	BAASP-2080-1F	1	1B5142080-1F-C	N	Child
354	Video circuit pc board AS	BAVD-2147-1F	1	1B5142147-1F-C	N	Child
356	Video circuit pc board AS	BAVD-2148-1F	1	1B5142148-1F-C	N	Child
358	Et cetra pc board AS	BAETC-2149-1F	1	1B5142149-1F-C	N	Child
360	Et cetra pc board AS	BAETC-2150-1F	1	1B5142150-1F-C	N	Child
400	**PARENT PC BOARD AS**	**BAAF-2081-1B-P**	**1**	**1B5142081-1B**	**N**	**Parent**
402	Audio freqency circuit pc board AS	BAAF-2081-1B	1	1B5142081-1B-C		Child
404	Et cetra pc board AS	BAETC-2157-1B	1	1B5142157-1B-C		Child
406	Audio freqency circuit pc board AS	BAAF-2255-1B	1	1B5142255-1B-C		Child
450	**PARENT PC BOARD AS**	**BAAF-2083-1D-P**	**1**	**1B5142083-1D**	**N**	**Parent**
452	Audio freqency circuit pc board AS	BAAF-2083-1D	1	1B5142083-1D-C	N	Child
500	**PARENT PC BOARD AS**	**BAHDM-2086-1F-P**	**1**	**1B5142086-1F**	**N**	**Parent**
502	HDMI circuit pc board AS	BAHDM-2086-1F	1	1B5142086-1F-C	N	Child
550	**PARENT PC BOARD AS**	**BAPS-2089-1D-P**	**1**	**1B5142089-1D**	**N**	**Parent**
552	Power supply circuit pc board AS	BAPS-2089-1D	1	1B5142089-1D-C	N	Child
554	Et cetra pc board AS	BAETC-2163-1D	1	1B5142163-1D-C	N	Child
556	Power supply circuit pc board AS	BAPS-2164-1D	1	1B5142164-1D-C	N	Child
558	Et cetra pc board AS	BAETC-2165-1D	1	1B5142165-1D-C	N	Child
560	Et cetra pc board AS	BAETC-2166-1D	1	1B5142166-1D-C	N	Child
562	Et cetra pc board AS	BAETC-2167-1D	1	1B5142167-1D-C	N	Child
564	Et cetra pc board AS	BAETC-2169-1D	1	1B5142169-1D-C	N	Child
566	Et cetra pc board AS	BAETC-2170-1D	1	1B5142170-1D-C	N	Child
568	Et cetra pc board AS	BAETC-2171-1D	1	1B5142171-1D-C	N	Child
570	Et cetra pc board AS	BAETC-2174-1D	1	1B5142174-1D-C	N	Child
572	Et cetra pc board AS	BAETC-2202-1D	1	1B5142202-1D-C	N	Child
574	Radio freqency circuit pc board AS	BARF-2208-1D	1	1B5142208-1D-C	N	Child
600	**PARENT PC BOARD AS**	**BAPS-2092-1B-P**	**1**	**1B5142092-1B**	**N**	**Parent**
602	Power supply circuit pc board AS	BAPS-2092-1B	1	1B5142092-1B-C	N	Child
604	Et cetra pc board AS	BAETC-2200-1B	1	1B5142200-1B-C	N	Child
606	Et cetra pc board AS	BAETC-2201-1B	1	1B5142201-1B-C	N	Child
608	Et cetra pc board AS	BAETC-2203-1B	1	1B5142203-1B-C	N	Child
612	Power supply circuit pc board AS	BAPS-2205-1B	1	1B5142205-1B-C	N	Child
614	Et cetra pc board AS	BAETC-2206-1B	1	1B5142206-1B-C	N	Child
650	**PARENT PC BOARD AS**	**BACLD-2095-1E-P**	**1**	**1B5142095-1E**	**N**	**Parent**
652	ClassD amplifier circuit pc board AS	BACLD-2095-1E	1	1B5142095-1E-C	N	Child
702	SHIELD CASE	(TUNER-BTM)	1	27225207A	N	
704	SHIELD CASE	(UPPER)	1	27225208		

[Packing]					
900	PAD	.	1	AHA7502-B	N
902	PAD	.	1	AHA7500-B	N
904	CARTON	LX901(GP)	1	29055653	
906	PACKING PAD/S	.	1	AHA7499-A	N
908	LABEL	(fwup-wo-dtsx)CNT_EU	1	29393393	
[Accessories]					
950	FM ANT AS	Type W	1	292191	
952	MIC	KHM0018-010010	1	245051	
954	WARRANTY CARD	(Pi-EU2016)	1	29365227A	NSP
956	ANTENNA COIL	AM LOOP-ANTENNA	1	232207	
956 or	ANTENNA COIL	AM LOOP ANTENNA (S&O)	(1)	232216	
958	REMOTE CONTROL TRANSMITTER	RC-927R	1	24140927	
960	POWER SUPPLY CORD	ADG7119-A	1	253468VOL	!
962	INSTRUCTION MANUAL	LX901MGP(En,Fr,Es)	1	29402403	N
964	INSTRUCTION MANUAL	LX901MGP(It,De,Ni)	1	29402404	N
966	INSTRUCTION MANUAL	LX901MGP(Ru)	1	29402405	N
968	INSTRUCTION MANUAL	Safety_Pio_16Hi_U9	1	29402498	N
970	INSTRUCTION SHEET	(Google cast)	1	29355956	
974	INSTRUCTION SHEET	(FWupdate-Fireconnect)	1	29355967	N

BAAF-2081-1B

<Note>

1. Parts marked by **"NSP"** are generally unavailable because they are not in our Master Spare Parts List.
2. The ! mark found on some component parts indicates the importance of the safety factor of the part.
   Therefore, when replacing, be sure to use parts of identical designation.

: NSP

REF. NO.	PART NAME	DESCRIPTION	Q'TY	PART NO. (SN)	REMARKS
[Switches, Terminals, Wires]					

BAAF-2083-1D

<Note>

1. Parts marked by **"NSP"** are generally unavailable because they are not in our Master Spare Parts List.
2. The ! mark found on some component parts indicates the importance of the safety factor of the part.
   Therefore, when replacing, be sure to use parts of identical designation.

: NSP

REF. NO.	PART NAME	DESCRIPTION	Q'TY	PART NO. (SN)	REMARKS
[Semi-conductors]					
[Capacitors]					
[Resistors]					
[Switches, Terminals, Wires]					

BAASP-2080-1F

<Note>

1. Parts marked by "**NSP**" are generally unavailable because they are not in our Master Spare Parts List.
2. The ! mark found on some component parts indicates the importance of the safety factor of the part.
   Therefore, when replacing, be sure to use parts of identical designation.

: NSP

REF. NO.	PART NAME	DESCRIPTION	Q'TY	PART NO. (SN)	REMARKS
[Semi-conductors]					
Q301	HYBRID IC	BD34704KS2	1	22242977R3	
Q321	HYBRID IC	NJW1194	1	22242893R2	
Q371	HYBRID IC	NJW1194	1	22242893R2	
Q511	TRANSISTOR	2SD2400A-D	1	2202734	
Q512	TRANSISTOR	2SB1569A-D	1	2202724	
Q571	HYBRID IC	BD34704KS2	1	22242977R3	
[Capacitors]					
C103	SMG C	CE04W25V-47M(SMG)	1	395054707ST	
C104	SMG C	CE04W25V-47M(SMG)	1	395054707ST	
C115	SMG C	CE04W10V-220M(SMG)	1	395032217ST	
C116	SMG C	CE04W10V-220M(SMG)	1	395032217ST	
C117	SMG C	CE04W50V-10M(SMG)	1	395081007ST	
C118	SMG C	CE04W50V-10M(SMG)	1	395081007ST	
C121	SMG C	CE04W16V-220M(SMG)	1	395042217ST	
C122	SMG C	CE04W16V-220M(SMG)	1	395042217ST	
C135	ELECTROLYTIC CAPACITOR	CE04W16V-56M(LXY)	1	3500244ST	
C136	ELECTROLYTIC CAPACITOR	CE04W16V-56M(LXY)	1	3500244ST	
C139	SMG C	CE04W50V-22M(SMG)	1	395082207ST	
C140	SMG C	CE04W50V-22M(SMG)	1	395082207ST	
C145	SMG C	CE04W50V-22M(SMG)	1	395082207ST	
C146	SMG C	CE04W50V-22M(SMG)	1	395082207ST	
C155	SMG C	CE04W50V-22M(SMG)	1	395082207ST	
C156	SMG C	CE04W50V-22M(SMG)	1	395082207ST	
C165	SMG C	CE04W50V-22M(SMG)	1	395082207ST	
C166	SMG C	CE04W50V-22M(SMG)	1	395082207ST	
C175	SMG C	CE04W50V-22M(SMG)	1	395082207ST	
C176	SMG C	CE04W50V-22M(SMG)	1	395082207ST	
C185	SMG C	CE04W50V-22M(SMG)	1	395082207ST	
C186	SMG C	CE04W50V-22M(SMG)	1	395082207ST	
C203	SMG C	CE04W50V-22M(SMG)	1	395082207ST	
C204	SMG C	CE04W50V-22M(SMG)	1	395082207ST	
C232	SMG C	CE04W50V-22M(SMG)	1	395082207ST	
C263	SMG C	CE04W50V-22M(SMG)	1	395082207ST	
C264	SMG C	CE04W50V-22M(SMG)	1	395082207ST	
C283	SMG C	CE04W50V-22M(SMG)	1	395082207ST	
C284	SMG C	CE04W50V-22M(SMG)	1	395082207ST	
C2955	SMG C	CE04W25V-47M(SMG)	1	395054707ST	
C2956	SMG C	CE04W25V-47M(SMG)	1	395054707ST	
C301	ELECTROLYTIC CAPACITOR	CE04W10V-100M(KY)	1	3500272ST	
C302	ELECTROLYTIC CAPACITOR	CE04W10V-100M(KY)	1	3500272ST	
C321	SMG C	CE04W25V-47M(SMG)	1	395054707ST	
C322	SMG C	CE04W25V-47M(SMG)	1	395054707ST	
C323	SMG C	CE04W16V-100M(SMG)	1	395041017ST	
C324	SMG C	CE04W16V-100M(SMG)	1	395041017ST	
C329	SMG C	CE04W50V-4.7M(SMG)	1	395080477ST	
C330	SMG C	CE04W50V-4.7M(SMG)	1	395080477ST	
C331	SMG C	CE04W50V-10M(SMG)	1	395081007ST	
C337	SMG C	CE04W50V-10M(SMG)	1	395081007ST	
C338	SMG C	CE04W50V-10M(SMG)	1	395081007ST	
C353	ELECTROLYTIC CAPACITOR	CE04W16V-56M(LXY)	1	3500244ST	

C354	ELECTROLYTIC CAPACITOR	CE04W16V-56M(LXY)	1	3500244ST	
C371	SMG C	CE04W25V-47M(SMG)	1	395054707ST	
C372	SMG C	CE04W25V-47M(SMG)	1	395054707ST	
C373	SMG C	CE04W16V-100M(SMG)	1	395041017ST	
C374	SMG C	CE04W16V-100M(SMG)	1	395041017ST	
C379	SMG C	CE04W50V-4.7M(SMG)	1	395080477ST	
C380	SMG C	CE04W50V-4.7M(SMG)	1	395080477ST	
C381	SMG C	CE04W50V-10M(SMG)	1	395081007ST	
C387	SMG C	CE04W50V-10M(SMG)	1	395081007ST	
C388	SMG C	CE04W50V-10M(SMG)	1	395081007ST	
C431	SMG C	CE04W50V-22M(SMG)	1	395082207ST	
C432	SMG C	CE04W50V-22M(SMG)	1	395082207ST	
C441	SMG C	CE04W50V-1M(SMG)	1	395080107ST	
C442	SMG C	CE04W50V-1M(SMG)	1	395080107ST	
C449	SMG C	CE04W16V-470M(SMG)	1	395044717T	
C450	SMG C	CE04W16V-470M(SMG)	1	395044717T	
C453	SMG C	CE04W25V-100M(SMG)	1	395051017ST	
C454	SMG C	CE04W25V-100M(SMG)	1	395051017ST	
C475	SMG C	CE04W25V-47M(SMG)	1	395054707ST	
C476	SMG C	CE04W25V-47M(SMG)	1	395054707ST	
C481	SMG C	CE04W16V-100M(SMG)	1	395041017ST	
C482	SMG C	CE04W16V-100M(SMG)	1	395041017ST	
C501	SMG C	CE04W16V-100M(SMG)	1	395041017ST	
C502	SMG C	CE04W16V-100M(SMG)	1	395041017ST	
C519	SMG C	CE04W50V-2.2M(SMG)	1	395080227ST	
C520	SMG C	CE04W50V-2.2M(SMG)	1	395080227ST	
C529	SMG C	CE04W50V-10M(SMG)	1	395081007ST	
C530	SMG C	CE04W50V-10M(SMG)	1	395081007ST	
C543	SMG C	CE04W25V-100M(SMG)	1	395051017ST	
C546	SMG C	CE04W16V-100M(SMG)	1	395041017ST	
C551	SMG C	CE04W16V-100M(SMG)	1	395041017ST	
C552	SMG C	CE04W16V-100M(SMG)	1	395041017ST	
C571	ELECTROLYTIC CAPACITOR	CE04W10V-100M(KY)	1	3500272ST	
C572	ELECTROLYTIC CAPACITOR	CE04W10V-100M(KY)	1	3500272ST	
C581	SMG C	CE04W50V-10M(SMG)	1	395081007ST	
C582	SMG C	CE04W50V-10M(SMG)	1	395081007ST	
C583	SMG C	CE04W50V-10M(SMG)	1	395081007ST	
C584	SMG C	CE04W50V-10M(SMG)	1	395081007ST	
C585	ELECTROLYTIC CAPACITOR	CE04W50V-18M(LXY)	1	3500246ST	
C586	ELECTROLYTIC CAPACITOR	CE04W50V-18M(LXY)	1	3500246ST	
C603	SMG C	CE04W50V-22M(SMG)	1	395082207ST	
C604	SMG C	CE04W50V-22M(SMG)	1	395082207ST	
C623	SMG C	CE04W50V-22M(SMG)	1	395082207ST	
C624	SMG C	CE04W50V-22M(SMG)	1	395082207ST	
C641	ELECTROLYTIC CAPACITOR	CE04W25V-100M(KY)	1	3500273ST	
C642	ELECTROLYTIC CAPACITOR	CE04W25V-100M(KY)	1	3500273ST	
C671	SMG C	CE04W50V-10M(SMG)	1	395081007ST	
C672	SMG C	CE04W50V-10M(SMG)	1	395081007ST	
C681	SMG C	CE04W50V-10M(SMG)	1	395081007ST	
C682	SMG C	CE04W50V-10M(SMG)	1	395081007ST	
C701	SMG C	CE04W50V-10M(SMG)	1	395081007ST	
C702	SMG C	CE04W50V-10M(SMG)	1	395081007ST	
C801	SMG C	CE04W50V-10M(SMG)	1	395081007ST	
C802	SMG C	CE04W50V-10M(SMG)	1	395081007ST	
C803	SMG C	CE04W50V-10M(SMG)	1	395081007ST	
C804	SMG C	CE04W50V-10M(SMG)	1	395081007ST	
C805	SMG C	CE04W50V-10M(SMG)	1	395081007ST	
C806	SMG C	CE04W50V-10M(SMG)	1	395081007ST	
C821	SMG C	CE04W16V-100M(SMG)	1	395041017ST	
C831	SMG C	CE04W16V-100M(SMG)	1	395041017ST	
C841	SMG C	CE04W16V-100M(SMG)	1	395041017ST	

C847	SMG C	CE04W50V-1M(SMG)	1	395080107ST	
C848	SMG C	CE04W50V-1M(SMG)	1	395080107ST	
C849	SMG C	CE04W50V-1M(SMG)	1	395080107ST	
C851	SMG C	CE04W6.3V-470M(SMG)	1	395024717T	
C852	SMG C	CE04W6.3V-470M(SMG)	1	395024717T	
C853	SMG C	CE04W6.3V-470M(SMG)	1	395024717T	
C895	SMG C	CE04W16V-100M(SMG)	1	395041017ST	
[Resistors]					
[Switches, Terminals, Wires]					
P111	PIN JACK	RCA-207AG-01	1	25046060	
P131	PIN JACK	RCA-232G-00-02	1	25046061	
P141	PIN JACK	RCA-421EG-00-11	1	25046063	
P161	PIN JACK	RCA-421EG-00-11	1	25046063	
P181	PIN JACK	RCA-232G-00-02	1	25046061	
P201	PIN JACK	RCA-232G-00-02	1	25046061	
P231	PIN JACK	NPJ-1PDB804	1	25046076	
P241	PIN JACK	RCA-232G-00-06	1	25046062	
P261	PIN JACK	RCA-421EG-00-11	1	25046063	
P601	PIN JACK	RCA-421EG-00-11	1	25046063	
P671	PIN JACK	RCA-421EG-00-11	1	25046063	
P701	PIN JACK	MSP-2510V-25-GILT-ABS(O13	1	25046050	
P702	PIN JACK	MSP-2510V-25-GILT-ABS(O13	1	25046050	
P801	PIN JACK	MSD-243V-50-GILT(O133)	1	25046045	
P802	PIN JACK	MSD-243V-50-GILT(O133)	1	25046045	
P803	PIN JACK	MSD-243V-50-GILT(O133)	1	25046045	
RL551	RELAY	NRL-2P2A-DC24-208	1	25065728	

BACLD-2095-1E

<Note>

1. Parts marked by "**NSP**" are generally unavailable because they are not in our Master Spare Parts List.
2. The ! mark found on some component parts indicates the importance of the safety factor of the part.
   Therefore, when replacing, be sure to use parts of identical designation.

: NSP

REF. NO.	PART NAME	DESCRIPTION	Q'TY	PART NO. (SN)	REMARKS
[Semi-conductors]					
[Transformers, Coils]					
T4100	COIL	7G23G-200M-R	1	231519	
T4200	COIL	7G23G-200M-R	1	231519	
T4300	COIL	7G23G-200M-R	1	231519	
T4400	COIL	7G23G-200M-R	1	231519	
T4500	COIL	7G23G-200M-R	1	231519	
T4600	COIL	7G23G-200M-R	1	231519	
T4700	COIL	7G23G-200M-R	1	231519	
T4800	COIL	7G23G-200M-R	1	231519	
T4900	COIL	7G23G-200M-R	1	231519	
T6500	COIL	7G23G-200M-R	1	231519	
T6600	COIL	7G23G-200M-R	1	231519	
[Capacitors]					
C4008	SMG C	CE04W16V-100M(SMG)	1	395041017T	
C4010	SMG C	CE04W16V-100M(SMG)	1	395041017T	
C4023	SMG C	CE04W50V-10M(SMG)	1	395081007T	
C4024	SMG C	CE04W16V-100M(SMG)	1	395041017T	
C4036	SMG C	CE04W16V-100M(SMG)	1	395041017T	
C4052	SMG C	CE04W16V-100M(SMG)	1	395041017T	
C4053	SMG C	CE04W16V-100M(SMG)	1	395041017T	
C4057	ELECTROLYTIC CAPACITOR	CE69W80V-2700M_LGU1K27	1	3504536	
C4058	ELECTROLYTIC CAPACITOR	CE69W80V-2700M_LGU1K27	1	3504536	
C4059	ELECTROLYTIC CAPACITOR	CE69W80V-2700M_LGU1K27	1	3504536	
C4060	ELECTROLYTIC CAPACITOR	CE69W80V-2700M_LGU1K27	1	3504536	
C4061	ELECTROLYTIC CAPACITOR	CE69W80V-2700M_LGU1K27	1	3504536	
C4062	ELECTROLYTIC CAPACITOR	CE69W80V-2700M_LGU1K27	1	3504536	
C4063	ELECTROLYTIC CAPACITOR	CE04W25V-82M(LXY)	1	3500245T	
C4065	ELECTROLYTIC CAPACITOR	CE04W16V-56M(LXY)	1	3500244T	
C4066	ELECTROLYTIC CAPACITOR	CE04W16V-56M(LXY)	1	3500244T	
C4069	ELECTROLYTIC CAPACITOR	CE04W16V-56M(LXY)	1	3500244T	
C4070	ELECTROLYTIC CAPACITOR	CE04W16V-56M(LXY)	1	3500244T	
C4071	SMG C	CE04W16V-100M(SMG)	1	395041017T	
C4081	SMG C	CE04W16V-100M(SMG)	1	395041017T	
C4083	MICA CAPACITOR	DM15C201J5	1	3600032	
C4084	MICA CAPACITOR	DM15C201J5	1	3600032	
C4108	ELECTROLYTIC CAPACITOR	CE04W16V-470M(KY_H15)	1	3500274	
C4116	ELECTROLYTIC CAPACITOR	CE04W25V-82M(LXY)	1	3500245T	
C4130	ELECTROLYTIC CAPACITOR	CE04W50V-18M(LXY)	1	3500246ST	
C4134	ELECTROLYTIC CAPACITOR	CE04W50V-18M(LXY)	1	3500246ST	
C4136	ELECTROLYTIC CAPACITOR	CE04W50V-18M(LXY)	1	3500246ST	
C4149	ELECTROLYTIC CAPACITOR	UKT1K561MHMAPDCV	1	3500254S	
C4150	ELECTROLYTIC CAPACITOR	UKT1K561MHMAPDCV	1	3500254S	
C4166	SMG C	CE04W16V-100M(SMG)	1	395041017T	
C4167	SMG C	CE04W16V-100M(SMG)	1	395041017T	
C4171	SMG C	CE04W50V-10M(SMG)	1	395081007T	
C4208	ELECTROLYTIC CAPACITOR	CE04W16V-470M(KY_H15)	1	3500274	
C4216	ELECTROLYTIC CAPACITOR	CE04W25V-82M(LXY)	1	3500245T	
C4230	ELECTROLYTIC CAPACITOR	CE04W50V-18M(LXY)	1	3500246ST	
C4234	ELECTROLYTIC CAPACITOR	CE04W50V-18M(LXY)	1	3500246ST	
C4236	ELECTROLYTIC CAPACITOR	CE04W50V-18M(LXY)	1	3500246ST	

C4249	ELECTROLYTIC CAPACITOR	UKT1K561MHMAPDCV	1	3500254S	
C4250	ELECTROLYTIC CAPACITOR	UKT1K561MHMAPDCV	1	3500254S	
C4266	SMG C	CE04W16V-100M(SMG)	1	395041017T	
C4267	SMG C	CE04W16V-100M(SMG)	1	395041017T	
C4308	ELECTROLYTIC CAPACITOR	CE04W16V-470M(KY_H15)	1	3500274	
C4316	ELECTROLYTIC CAPACITOR	CE04W25V-82M(LXY)	1	3500245T	
C4330	ELECTROLYTIC CAPACITOR	CE04W50V-18M(LXY)	1	3500246ST	
C4334	ELECTROLYTIC CAPACITOR	CE04W50V-18M(LXY)	1	3500246ST	
C4336	ELECTROLYTIC CAPACITOR	CE04W50V-18M(LXY)	1	3500246ST	
C4349	ELECTROLYTIC CAPACITOR	UKT1K561MHMAPDCV	1	3500254S	
C4350	ELECTROLYTIC CAPACITOR	UKT1K561MHMAPDCV	1	3500254S	
C4366	SMG C	CE04W16V-100M(SMG)	1	395041017T	
C4367	SMG C	CE04W16V-100M(SMG)	1	395041017T	
C4371	SMG C	CE04W50V-10M(SMG)	1	395081007T	
C4408	ELECTROLYTIC CAPACITOR	CE04W16V-470M(KY_H15)	1	3500274	
C4416	ELECTROLYTIC CAPACITOR	CE04W25V-82M(LXY)	1	3500245T	
C4430	ELECTROLYTIC CAPACITOR	CE04W50V-18M(LXY)	1	3500246ST	
C4434	ELECTROLYTIC CAPACITOR	CE04W50V-18M(LXY)	1	3500246ST	
C4436	ELECTROLYTIC CAPACITOR	CE04W50V-18M(LXY)	1	3500246ST	
C4449	ELECTROLYTIC CAPACITOR	UKT1K561MHMAPDCV	1	3500254S	
C4450	ELECTROLYTIC CAPACITOR	UKT1K561MHMAPDCV	1	3500254S	
C4466	SMG C	CE04W16V-100M(SMG)	1	395041017T	
C4467	SMG C	CE04W16V-100M(SMG)	1	395041017T	
C4508	ELECTROLYTIC CAPACITOR	CE04W16V-470M(KY_H15)	1	3500274	
C4516	ELECTROLYTIC CAPACITOR	CE04W25V-82M(LXY)	1	3500245T	
C4530	ELECTROLYTIC CAPACITOR	CE04W50V-18M(LXY)	1	3500246ST	
C4534	ELECTROLYTIC CAPACITOR	CE04W50V-18M(LXY)	1	3500246ST	
C4536	ELECTROLYTIC CAPACITOR	CE04W50V-18M(LXY)	1	3500246ST	
C4549	ELECTROLYTIC CAPACITOR	UKT1K561MHMAPDCV	1	3500254S	
C4550	ELECTROLYTIC CAPACITOR	UKT1K561MHMAPDCV	1	3500254S	
C4566	SMG C	CE04W16V-100M(SMG)	1	395041017T	
C4567	SMG C	CE04W16V-100M(SMG)	1	395041017T	
C4571	SMG C	CE04W50V-10M(SMG)	1	395081007T	
C4608	ELECTROLYTIC CAPACITOR	CE04W16V-470M(KY_H15)	1	3500274	
C4616	ELECTROLYTIC CAPACITOR	CE04W25V-82M(LXY)	1	3500245T	
C4630	ELECTROLYTIC CAPACITOR	CE04W50V-18M(LXY)	1	3500246ST	
C4634	ELECTROLYTIC CAPACITOR	CE04W50V-18M(LXY)	1	3500246ST	
C4636	ELECTROLYTIC CAPACITOR	CE04W50V-18M(LXY)	1	3500246ST	
C4649	ELECTROLYTIC CAPACITOR	UKT1K561MHMAPDCV	1	3500254S	
C4650	ELECTROLYTIC CAPACITOR	UKT1K561MHMAPDCV	1	3500254S	
C4666	SMG C	CE04W16V-100M(SMG)	1	395041017T	
C4667	SMG C	CE04W16V-100M(SMG)	1	395041017T	
C4708	ELECTROLYTIC CAPACITOR	CE04W16V-470M(KY_H15)	1	3500274	
C4716	ELECTROLYTIC CAPACITOR	CE04W25V-82M(LXY)	1	3500245T	
C4730	ELECTROLYTIC CAPACITOR	CE04W50V-18M(LXY)	1	3500246ST	
C4734	ELECTROLYTIC CAPACITOR	CE04W50V-18M(LXY)	1	3500246ST	
C4736	ELECTROLYTIC CAPACITOR	CE04W50V-18M(LXY)	1	3500246ST	
C4738	ELECTROLYTIC CAPACITOR	CE04W16V-470M(KY_H15)	1	3500274	
C4749	ELECTROLYTIC CAPACITOR	UKT1K561MHMAPDCV	1	3500254S	
C4750	ELECTROLYTIC CAPACITOR	UKT1K561MHMAPDCV	1	3500254S	
C4766	SMG C	CE04W16V-100M(SMG)	1	395041017T	
C4767	SMG C	CE04W16V-100M(SMG)	1	395041017T	
C4771	SMG C	CE04W50V-10M(SMG)	1	395081007T	
C4808	ELECTROLYTIC CAPACITOR	CE04W16V-470M(KY_H15)	1	3500274	
C4816	ELECTROLYTIC CAPACITOR	CE04W25V-82M(LXY)	1	3500245T	
C4830	ELECTROLYTIC CAPACITOR	CE04W50V-18M(LXY)	1	3500246ST	
C4834	ELECTROLYTIC CAPACITOR	CE04W50V-18M(LXY)	1	3500246ST	
C4836	ELECTROLYTIC CAPACITOR	CE04W50V-18M(LXY)	1	3500246ST	
C4849	ELECTROLYTIC CAPACITOR	UKT1K561MHMAPDCV	1	3500254S	
C4850	ELECTROLYTIC CAPACITOR	UKT1K561MHMAPDCV	1	3500254S	
C4866	SMG C	CE04W16V-100M(SMG)	1	395041017T	

C4867	SMG C	CE04W16V-100M(SMG)	1	395041017T	
C4908	ELECTROLYTIC CAPACITOR	CE04W16V-470M(KY_H15)	1	3500274	
C4916	ELECTROLYTIC CAPACITOR	CE04W25V-82M(LXY)	1	3500245T	
C4930	ELECTROLYTIC CAPACITOR	CE04W50V-18M(LXY)	1	3500246ST	
C4934	ELECTROLYTIC CAPACITOR	CE04W50V-18M(LXY)	1	3500246ST	
C4936	ELECTROLYTIC CAPACITOR	CE04W50V-18M(LXY)	1	3500246ST	
C4949	ELECTROLYTIC CAPACITOR	UKT1K561MHMAPDCV	1	3500254S	
C4950	ELECTROLYTIC CAPACITOR	UKT1K561MHMAPDCV	1	3500254S	
C4966	SMG C	CE04W16V-100M(SMG)	1	395041017T	
C4967	SMG C	CE04W16V-100M(SMG)	1	395041017T	
C4971	SMG C	CE04W50V-10M(SMG)	1	395081007T	
C5071	SMG C	CE04W16V-100M(SMG)	1	395041017T	
C5072	SMG C	CE04W16V-100M(SMG)	1	395041017T	
C5184	ELECTROLYTIC CAPACITOR	CE04W16V-56M(LXY)	1	3500244T	
C5185	SMG C	CE04W50V-10M(SMG)	1	395081007T	
C6400	ELECTROLYTIC CAPACITOR	CE69W80V-2700M_LGU1K27	1	3504536	
C6401	ELECTROLYTIC CAPACITOR	CE69W80V-2700M_LGU1K27	1	3504536	
C6508	ELECTROLYTIC CAPACITOR	CE04W16V-470M(KY_H15)	1	3500274	
C6516	ELECTROLYTIC CAPACITOR	CE04W25V-82M(LXY)	1	3500245T	
C6530	ELECTROLYTIC CAPACITOR	CE04W50V-18M(LXY)	1	3500246ST	
C6534	ELECTROLYTIC CAPACITOR	CE04W50V-18M(LXY)	1	3500246ST	
C6536	ELECTROLYTIC CAPACITOR	CE04W50V-18M(LXY)	1	3500246ST	
C6549	ELECTROLYTIC CAPACITOR	UKT1K561MHMAPDCV	1	3500254S	
C6550	ELECTROLYTIC CAPACITOR	UKT1K561MHMAPDCV	1	3500254S	
C6566	SMG C	CE04W16V-100M(SMG)	1	395041017T	
C6567	SMG C	CE04W16V-100M(SMG)	1	395041017T	
C6571	SMG C	CE04W50V-10M(SMG)	1	395081007T	
C6608	ELECTROLYTIC CAPACITOR	CE04W16V-470M(KY_H15)	1	3500274	
C6616	ELECTROLYTIC CAPACITOR	CE04W25V-82M(LXY)	1	3500245T	
C6630	ELECTROLYTIC CAPACITOR	CE04W50V-18M(LXY)	1	3500246ST	
C6634	ELECTROLYTIC CAPACITOR	CE04W50V-18M(LXY)	1	3500246ST	
C6636	ELECTROLYTIC CAPACITOR	CE04W50V-18M(LXY)	1	3500246ST	
C6649	ELECTROLYTIC CAPACITOR	UKT1K561MHMAPDCV	1	3500254S	
C6650	ELECTROLYTIC CAPACITOR	UKT1K561MHMAPDCV	1	3500254S	
C6666	SMG C	CE04W16V-100M(SMG)	1	395041017T	
C6667	SMG C	CE04W16V-100M(SMG)	1	395041017T	
C6683	SMG C	CE04W50V-10M(SMG)	1	395081007T	
C6684	SMG C	CE04W50V-10M(SMG)	1	395081007T	
C6685	SMG C	CE04W50V-10M(SMG)	1	395081007T	
C6686	SMG C	CE04W50V-10M(SMG)	1	395081007T	
C6687	SMG C	CE04W50V-10M(SMG)	1	395081007T	
C6688	SMG C	CE04W50V-10M(SMG)	1	395081007T	
[Resistors]					
R4125	METAL PLATE RESISTOR	RGC5-0.22-OHM-K	1	4000284	
R4126	METAL PLATE RESISTOR	RGC5-0.22-OHM-K	1	4000284	
R4154	CEMENT RESISTOR	MNS05N100JW	1	4800083	
R4225	METAL PLATE RESISTOR	RGC5-0.22-OHM-K	1	4000284	
R4226	METAL PLATE RESISTOR	RGC5-0.22-OHM-K	1	4000284	
R4254	CEMENT RESISTOR	MNS05N100JW	1	4800083	
R4325	METAL PLATE RESISTOR	RGC5-0.22-OHM-K	1	4000284	
R4326	METAL PLATE RESISTOR	RGC5-0.22-OHM-K	1	4000284	
R4354	CEMENT RESISTOR	MNS05N100JW	1	4800083	
R4425	METAL PLATE RESISTOR	RGC5-0.22-OHM-K	1	4000284	
R4426	METAL PLATE RESISTOR	RGC5-0.22-OHM-K	1	4000284	
R4454	CEMENT RESISTOR	MNS05N100JW	1	4800083	
R4525	METAL PLATE RESISTOR	RGC5-0.22-OHM-K	1	4000284	
R4526	METAL PLATE RESISTOR	RGC5-0.22-OHM-K	1	4000284	
R4554	CEMENT RESISTOR	MNS05N100JW	1	4800083	
R4625	METAL PLATE RESISTOR	RGC5-0.22-OHM-K	1	4000284	
R4626	METAL PLATE RESISTOR	RGC5-0.22-OHM-K	1	4000284	
R4654	CEMENT RESISTOR	MNS05N100JW	1	4800083	

R4725	METAL PLATE RESISTOR	RGC5-0.22-OHM-K	1	4000284	
R4726	METAL PLATE RESISTOR	RGC5-0.22-OHM-K	1	4000284	
R4754	CEMENT RESISTOR	MNS05N100JW	1	4800083	
R4825	METAL PLATE RESISTOR	RGC5-0.22-OHM-K	1	4000284	
R4826	METAL PLATE RESISTOR	RGC5-0.22-OHM-K	1	4000284	
R4854	CEMENT RESISTOR	MNS05N100JW	1	4800083	
R4925	METAL PLATE RESISTOR	RGC5-0.22-OHM-K	1	4000284	
R4926	METAL PLATE RESISTOR	RGC5-0.22-OHM-K	1	4000284	
R4954	CEMENT RESISTOR	MNS05N100JW	1	4800083	
R6525	METAL PLATE RESISTOR	RGC5-0.22-OHM-K	1	4000284	
R6526	METAL PLATE RESISTOR	RGC5-0.22-OHM-K	1	4000284	
R6554	CEMENT RESISTOR	MNS05N100JW	1	4800083	
R6625	METAL PLATE RESISTOR	RGC5-0.22-OHM-K	1	4000284	
R6626	METAL PLATE RESISTOR	RGC5-0.22-OHM-K	1	4000284	
R6654	CEMENT RESISTOR	MNS05N100JW	1	4800083	
[Switches, Terminals, Wires]					
P4201	TERMINAL	LTS3610-1011F	1	25060536	
P4401	TERMINAL	LTS3410-1020F	1	25060537	
P4601	TERMINAL	LTS3410-1020F	1	25060537	
P4901	TERMINAL	LTS3410-1020F	1	25060537	
P6501	TERMINAL	LTS3410-1020F	1	25060537	
RL4100	RELAY	NRL-2P5A-DC12-208	1	25065733	
RL4300	RELAY	NRL-2P5A-DC12-208	1	25065733	
RL4500	RELAY	NRL-2P5A-DC12-208	1	25065733	
RL4700	RELAY	NRL-2P5A-DC12-208	1	25065733	
RL4900	RELAY	NRL-2P5A-DC12-208	1	25065733	
RL6500	RELAY	NRL-2P5A-DC12-208	1	25065733	

BADG-2077-1F

<Note>

1. Parts marked by "**NSP**" are generally unavailable because they are not in our Master Spare Parts List.
2. The ! mark found on some component parts indicates the importance of the safety factor of the part.
   Therefore, when replacing, be sure to use parts of identical designation.

: NSP

REF. NO.	PART NAME	DESCRIPTION	Q'TY	PART NO. (SN)	REMARKS
[Semi-conductors]					
[Transformers, Coils]					
[Capacitors]					
C2008	SMG C	CE04W16V-220M(SMG)	1	395042217ST	
C2010	SMG C	CE04W16V-1000M(SMG)	1	395041027S	
C2015	SMG C	CE04W16V-220M(SMG)	1	395042217ST	
C2213	SMG C	CE04W16V-220M(SMG)	1	395042217ST	
C2217	SMG C	CE04W16V-100M(SMG)	1	395041017ST	
C2218	SMG C	CE04W16V-100M(SMG)	1	395041017ST	
C2302	SMG C	CE04W16V-220M(SMG)	1	395042217ST	
C2303	SMG C	CE04W25V-47M(SMG)	1	395054707ST	
C2306	SMG C	CE04W16V-220M(SMG)	1	395042217ST	
C2308	SMG C	CE04W25V-47M(SMG)	1	395054707ST	
C2352	SMG C	CE04W16V-220M(SMG)	1	395042217ST	
C2353	SMG C	CE04W25V-47M(SMG)	1	395054707ST	
C2356	SMG C	CE04W16V-220M(SMG)	1	395042217ST	
C2358	SMG C	CE04W25V-47M(SMG)	1	395054707ST	
C2402	ELECTROLYTIC CAPACITOR	CE04W16V-56M(LXY)	1	3500244ST	
C2404	ELECTROLYTIC CAPACITOR	CE04W16V-56M(LXY)	1	3500244ST	
C2471	ELECTROLYTIC CAPACITOR	CE04W16V-56M(LXY)	1	3500244ST	
C2491	ELECTROLYTIC CAPACITOR	CE04W16V-56M(LXY)	1	3500244ST	
C2511	ELECTROLYTIC CAPACITOR	CE04W16V-56M(LXY)	1	3500244ST	
C2531	ELECTROLYTIC CAPACITOR	CE04W16V-56M(LXY)	1	3500244ST	
C2551	ELECTROLYTIC CAPACITOR	CE04W16V-56M(LXY)	1	3500244ST	
C2571	ELECTROLYTIC CAPACITOR	CE04W16V-56M(LXY)	1	3500244ST	
C2591	ELECTROLYTIC CAPACITOR	CE04W16V-56M(LXY)	1	3500244ST	
C2611	ELECTROLYTIC CAPACITOR	CE04W16V-56M(LXY)	1	3500244ST	
C2631	ELECTROLYTIC CAPACITOR	CE04W16V-56M(LXY)	1	3500244ST	
C2651	ELECTROLYTIC CAPACITOR	CE04W16V-56M(LXY)	1	3500244ST	
C2671	ELECTROLYTIC CAPACITOR	CE04W16V-56M(LXY)	1	3500244ST	
C2691	ELECTROLYTIC CAPACITOR	CE04W16V-56M(LXY)	1	3500244ST	
C2711	ELECTROLYTIC CAPACITOR	CE04W16V-56M(LXY)	1	3500244ST	
C2743	SMG C	CE04W35V-100M(SMG)	1	395061017ST	
C2744	SMG C	CE04W35V-100M(SMG)	1	395061017ST	
C2751	SMG C	CE04W16V-220M(SMG)	1	395042217ST	
C2760	ELECTROLYTIC CAPACITOR	CE04W16V-56M(LXY)	1	3500244ST	
C2764	ELECTROLYTIC CAPACITOR	CE04W10V-100M(ZL)	1	3500269ST	
C2765	ELECTROLYTIC CAPACITOR	CE04W16V-56M(LXY)	1	3500244ST	
C2773	ELECTROLYTIC CAPACITOR	CE04W10V-100M(ZL)	1	3500269ST	
C2777	ELECTROLYTIC CAPACITOR	CE04W10V-100M(ZL)	1	3500269ST	
C2782	SMG C	CE04W25V-47M(SMG)	1	395054707ST	
C2806	ELECTROLYTIC CAPACITOR	CE04W10V-100M(ZL)	1	3500269ST	
C2811	SMG C	CE04W25V-47M(SMG)	1	395054707ST	
C2831	SMG C	CE04W50V-22M(SMG)	1	395082207ST	
C2832	SMG C	CE04W50V-22M(SMG)	1	395082207ST	
C2839	SMG C	CE04W50V-10M(SMG)	1	395081007ST	
C2840	SMG C	CE04W50V-10M(SMG)	1	395081007ST	
C2856	ELECTROLYTIC CAPACITOR	CE04W10V-100M(ZL)	1	3500269ST	
C2861	SMG C	CE04W25V-47M(SMG)	1	395054707ST	
C2881	SMG C	CE04W50V-22M(SMG)	1	395082207ST	
C2882	SMG C	CE04W50V-22M(SMG)	1	395082207ST	

C2889	SMG C	CE04W50V-10M(SMG)	1	395081007ST	
C2890	SMG C	CE04W50V-10M(SMG)	1	395081007ST	
[Resistors]					
[Switches, Terminals, Wires]					
P2201	PIN JACK	NPJ-2PDO803	1	25046075	
P2202	PHOTO COUPLER	JSR1165-001recieving	1	24120143	
P2203	PHOTO COUPLER	JSR1165-001recieving	1	24120143	
P2204	PHOTO COUPLER	JSR1165-001recieving	1	24120143	

BADIS-2074-1K

<Note>

1. Parts marked by "**NSP**" are generally unavailable because they are not in our Master Spare Parts List.
2. The ! mark found on some component parts indicates the importance of the safety factor of the part.
   Therefore, when replacing, be sure to use parts of identical designation.

: NSP

REF. NO.	PART NAME	DESCRIPTION	Q'TY	PART NO. (SN)	REMARKS
[Semi-conductors]					
D5411	DIODE	D2SB60A	1	22380366F	
D5412	DIODE	SARS01	1	22380397	
D5413	DIODE	SARS01	1	22380397	
D5451	DIODE	FMEN-220A	1	22380396	
D5962	LED	SLR343BC4T	1	225470	
D7554	LED	SLR343BC4T	1	225470	
D7555	LED	SLR343BC4T	1	225470	
D7556	LED	SLR343BC4T	1	225470	
D7557	LED	SLR343BC4T	1	225470	
D7558	LED	SLR343BC4T	1	225470	
Q5411	HYBRID IC	STR2A153	1	22242995	
Q5412	PHOTO COUPLER	TLP781(GR)	1	24120175	
Q7558	FLUORESCENT TUBE	016MT097GINYK	1	212286A	
Q7652	REMOTE SENSOR	GP1UE274XKC4	1	24130029	
Q7652or	REMOTE SENSOR	R2113TH-5AD	(1)	24130033	**N**
[Transformers, Coils]					
L5401	CHOKE COIL	PFC2225C	1	231490	
L5411	LINE FILTER	HF2318-A303Y0R6-01	1	231501	
L5451	CHOKE COIL	RP1315BNP-100M	1	231466M100	
T5411	POWER TRANSFORMER	ATK7006-A	1	2302140	**!**
[Capacitors]					
C5403	CERAMIC CAPACITOR	DE2F3KY103MA4BM02	1	3300083	
C5411	IS TYPE CAPACITOR	LE104-MX-C3.5	1	3800049S	**!**
C5412	ELECTROLYTIC CAPACITOR	CE69W400V-100M(KMM)	1	3504524	
C5413	ELECTROLYTIC CAPACITOR	CE04W50V-22M(LXZ)	1	3500248T	**N**
C5414	FILM C	ECQE6222KF	1	3700116	
C5421	IS TYPE CAPACITOR	DE1E3KX152MB5BA01	1	3300062S	**!**
C5422	IS TYPE CAPACITOR	DE1E3KX152MB5BA01	1	3300062S	**!**
C5451	ELECTROLYTIC CAPACITOR	CE04W10V-4700M(LXZ)	1	3500247S	
C5453	PW TYPE ELECTROLYTIC CAPACITOR	CE04W10V-470M(PW)	1	393734717T	
C5712	SMG C	CE04W50V-10M(SMG)	1	395081007T	
C5717	SMG C	CE04W16V-100M(SMG)	1	395041017T	
C5718	SMG C	CE04W16V-100M(SMG)	1	395041017T	
C7588	SMG C	CE04W25V-47M(SMG)	1	395054707T	
C7655	SMG C	CE04W16V-100M(SMG)	1	395041017T	
[Resistors]					
R5414	RESISTOR	ERG1DJ154P	1	4000283F	
R5415	METAL OXIDE FILM RESISTOR	ERG1SJ680P	1	4400045	
R5416	METAL RESISTOR	ERX1SJR68H	1	4500343	
R7577	NON-FLAMMABLE CARBON FILM RESISTC	R25J-10	1	415471004T	
R7587	NON-FLAMMABLE CARBON FILM RESISTC	R25J-10	1	415471004T	
[Switches, Terminals, Wires]					
P5702	ST JACK	MSJ-035-12APCAG	1	25046035	
P5705	ST JACK	MSJ-064-13ABAGGR(O133)	1	25046036	
RL5401	RELAY	NRL-1P10A-DC5-207	1	25065731	
S5941	ROTARY ENCODER	XREB12504PVB30FINB1-2-24	1	25065729	**N**
S5981	ROTARY ENCODER	XREB12505PVB30FINB1-2-12	1	25065730	**N**

BAHDM-2086-1F

<Note>

1. Parts marked by "**NSP**" are generally unavailable because they are not in our Master Spare Parts List.
2. The ! mark found on some component parts indicates the importance of the safety factor of the part.
   Therefore, when replacing, be sure to use parts of identical designation.

: NSP

REF. NO.	PART NAME	DESCRIPTION	Q'TY	PART NO. (SN)	REMARKS
[Semi-conductors]					
[Transformers, Coils]					
[Capacitors]					
[Resistors]					
[Switches, Terminals, Wires]					

BAPRC-2072-1F

<Note>

1. Parts marked by "**NSP**" are generally unavailable because they are not in our Master Spare Parts List.
2. The ! mark found on some component parts indicates the importance of the safety factor of the part.
   Therefore, when replacing, be sure to use parts of identical designation.

: NSP

REF. NO.	PART NAME	DESCRIPTION	Q'TY	PART NO. (SN)	REMARKS
[Semi-conductors]					
[Transformers, Coils]					
[Capacitors]					
[Resistors]					
[Switches, Terminals, Wires]					

BAPS-2089-1D

<Note>

1. Parts marked by "**NSP**" are generally unavailable because they are not in our Master Spare Parts List.
2. The ! mark found on some component parts indicates the importance of the safety factor of the part.
   Therefore, when replacing, be sure to use parts of identical designation.

: NSP

REF. NO.	PART NAME	DESCRIPTION	Q'TY	PART NO. (SN)	REMARKS
[Semi-conductors]					
D7401	DIODE	LN6SB60	1	22380399	
D7402	DIODE	LN6SB60	1	22380399	
Q7211	TRANSISTOR	2SD2400A-D	1	2202734	
Q7212	TRANSISTOR	2SB1569A-D	1	2202724	
Q7241	HYBRID IC	78M15HF(NJM78M15FA)	1	222780155JRC	
Q7251	HYBRID IC	78M12HF(NJM78M12FA)	1	222780125JRC	
Q7252	HYBRID IC	79M12HF(NJM79M12FA)	1	222790125JRC	
Q7271	HYBRID IC	78M08HF(NJM78M08FA)	1	222780085JRC	
Q7272	HYBRID IC	79M08HF(NJM79M08FA)	1	222790085JRC	
Q7273	HYBRID IC	78M15HF(NJM78M15FA)	1	222780155JRC	
X1	CRYSTAL	HC-49S 9B12.000MHz	1	3010533	
[Transformers, Coils]					
L5	ANTENNA COIL	K7-D	1	232212	
[Capacitors]					
C7213	SMG C	CE04W16V-100M(SMG)	1	395041017T	
C7214	SMG C	CE04W16V-100M(SMG)	1	395041017T	
C7215	SMG C	CE04W50V-10M(SMG)	1	395081007T	
C7219	SMG C	CE04W50V-10M(SMG)	1	395081007T	
C7221	SMG C	CE04W25V-47M(SMG)	1	395054707T	
C7241	SMG C	CE04W25V-2200M(SMG)	1	395052227S	
C7244	SMG C	CE04W50V-22M(SMG)	1	395082207T	
C7246	SMG C	CE04W35V-220M(SMG)	1	395062217T	
C7251	SMG C	CE04W25V-2200M(SMG)	1	395052227S	
C7252	SMG C	CE04W25V-2200M(SMG)	1	395052227S	
C7255	SMG C	CE04W35V-220M(SMG)	1	395062217T	
C7256	SMG C	CE04W35V-220M(SMG)	1	395062217T	
C7271	SMG C	CE04W16V-2200M(SMG)	1	395042227S	
C7272	SMG C	CE04W16V-2200M(SMG)	1	395042227S	
C7293	SMG C	CE04W16V-220M(SMG)	1	395042217T	
C7294	SMG C	CE04W16V-220M(SMG)	1	395042217T	
C7298	SMG C	CE04W35V-220M(SMG)	1	395062217T	
C7401	ELECTROLYTIC CAPACITOR	CE69W80V-10000M_LKS1K10	1	3504527	
C7402	ELECTROLYTIC CAPACITOR	CE69W80V-10000M_LKS1K10	1	3504527	
[Resistors]					
R7211	NON-FLAMMABLE CARBON FILM RESISTC	R25J-1.0K	1	415471024T	
R7213	NON-FLAMMABLE CARBON FILM RESISTC	R25J-1.0K	1	415471024T	
R7403	NON-FLAMMABLE CARBON FILM RESISTC	R25J-10	1	415471004T	
[Switches, Terminals, Wires]					
P1	TERMINAL	NTM-1PDSC438	1	25060516	
P2	TERMINAL	NTM-2PDML439	1	25060517	

BAPS-2092-1B

<Note>

1. Parts marked by "**NSP**" are generally unavailable because they are not in our Master Spare Parts List.
2. The ! mark found on some component parts indicates the importance of the safety factor of the part.
   Therefore, when replacing, be sure to use parts of identical designation.

: NSP

REF. NO.	PART NAME	DESCRIPTION	Q'TY	PART NO. (SN)	REMARKS
[Semi-conductors]					
D9751	DIODE	D3SBA60	1	22380272F	
Q9501	HYBRID IC	78M12HF(NJM78M12FA)	1	222780125JRC	
Q9502	HYBRID IC	79M12HF(NJM79M12FA)	1	222790125JRC	
Q9521	HYBRID IC	78M06HF(NJM78M06FA)	1	222780065JRC	
Q9531	HYBRID IC	78M12HF(NJM78M12FA)	1	222780125JRC	
Q9551	HYBRID IC	78M05(NJM78M05FA)	1	222780055JRC	
[Transformers, Coils]					
[Capacitors]					
C9507	SMG C	CE04W25V-3300M(SMG)	1	395053327S	**N**
C9508	SMG C	CE04W25V-3300M(SMG)	1	395053327S	**N**
C9515	SMG C	CE04W35V-220M(SMG)	1	395062217T	
C9516	SMG C	CE04W35V-220M(SMG)	1	395062217T	
C9522	SMG C	CE04W25V-2200M(SMG)	1	395052227S	**N**
C9524	SMG C	CE04W10V-220M(SMG)	1	395032217T	
C9536	SMG C	CE04W35V-1000M(SMG)	1	395061027S	**N**
C9537	SMG C	CE04W35V-470M(SMG)	1	395064717S	**N**
C9539	SMG C	CE04W50V-10M(SMG)	1	395081007T	
C9552	SMG C	CE04W16V-1000M(SMG)	1	395041027S	**N**
C9554	SMG C	CE04W16V-100M(SMG)	1	395041017T	
C9571	SMG C	CE04W63V-47M(SMG)	1	395074707T	**N**
C9572	SMG C	CE04W50V-47M(SMG)	1	395084707T	
C9573	SMG C	CE04W50V-47M(SMG)	1	395084707T	
C9760	SMG C	CE04W16V-4700M(SMG)	1	395044727S	**N**
[Resistors]					
R9533	NON-FLAMMABLE CARBON FILM RESISTC	R25J-4.7	1	415470474T	
[Switches, Terminals, Wires]					
P5801	ST JACK	MSJ-035-12APCAG	1	25046035	
P5802	ST JACK	HSJ1002-016010	1	25046044	
P5803	ST JACK	HSJ1002-016010	1	25046044	

SC-LX901(B)MHB

<Note>

1. Parts marked by "**NSP**" are generally unavailable because they are not in our Master Spare Parts List.
2. The ! mark found on some component parts indicates the importance of the safety factor of the part.
   Therefore, when replacing, be sure to use parts of identical designation.

: NSP

(B) : Black color model
<MHB> : 220-230/240V
UK model

REF. NO.	PART NAME	DESCRIPTION	Q'TY	PART NO. (SN)	REMARKS
[Cabinet, Chassis, Screws, Nuts]					
1	REAR PANEL	LX901MHB	1	27124772A	**N**
2	COVER	LX901(B) (Bent)	1	28210156	**N**
3	COVER	(IR)LX901 (Bent)	1	28210161B	
4	BOTTOM LEG	(PI)(G)	4	27175481	
5	SHEET	SP_LX901	1	29096191	
6	CUSHION CIRCLE 14B	.	8	AED7081-A	
7	HEAT COND SHEET	.	11	AEB7434-A	
8	BUSH/ANT	.	2	AMR7706-B	
9	HOLDER	(PLUG)	1	27191418A	
10	DOOR SPRING (SUS)	.	1	ABK7061-A	
11	SHAFT/DOR	.	1	AMR7704-A	
12	DOOR	SHS	1	ANB7644-A	**N**
13	DAMPER/DOR	.	1	AXA7159-A	
14	DOOR BASE LX85	.	1	AMR7565-B	
15	VOL.KNOB	LX85(AL)	2	AAA7064-C	**N**
16	POWER RING LX85(PLS)	.	1	AAK8571-A	
17	CLEAR PLATE	.	1	28192487	
18	FILTER	81HY(PC)	1	AAK8459-A	**N**
19	FRONT PANEL	LX901(B)	1	27213885A	
20	FRONT BRACKET	OTHER	1	27111641	**N**
21	BADGE	(PI)(B)	1	28135324	**N**
22	STDBY BTN LX85 ASSY	.	1	AAD7804-A	
23	RING	.	2	ABH7213-A	
24	VOL STABILIZER LX85	.	2	AEC7644-A	
26	LABEL	.	1	AAX8244-A	
28	NUT	NK90FTC	2	865190	
[Transformers, Coils]					
50	POWER TRANSFORMER	NPT-1676PQ	1	2302173	**!, N**
[Switches, Terminals, Wires]					
60	FUSE	5A-SE-EAK FUSE	1	252078GR	**!**
61	FUSE	215004.MXP	1	252408	**!**
62	FUSE	1A-SE-EAK FUSE	1	252070GR	**!**
63	FUSE	0.8A-SE-EAK FSBFUSE	1	252069GR	**!**
64	FUSE	0.8A-SE-EAK FSBFUSE	1	252069GR	**!**
65	FUSE	1A-SE-EAK FUSE	1	252070GR	**!**
66	FUSE	1A-SE-EAK FUSE	1	252070GR	**!**
67	FUSE	0.8A-SE-EAK FSBFUSE	1	252069GR	**!**
68	FUSE	0.8A-SE-EAK FSBFUSE	1	252069GR	**!**
69	FUSE	1A-SE-EAK FUSE	1	252070GR	**!**
70	FUSE	1A-SE-EAK FUSE	1	252070GR	**!**
71	FUSE	1A-SE-EAK FUSE	1	252070GR	**!**
72	FUSE	1.6A-SE-EAK IECFUSE	1	252073GR	**!, N**
73	LABEL	T1.6AL250V	1	29361769	
74	FLEXIBLE FLAT CABLE	NCFC7-070712	1	2047070712	**N**
75	FLEXIBLE FLAT CABLE	NCFC5-351512	1	2045351512	**N**
76	ASSEMBLED PWB	WCBN806L	1	24150135	**N**
77	WIFI BT ANTENNA	RFDPA870918EMLB302	1	2050102	**N**
78	WIFI BT ANTENNA	RFDPA870940EMLB303	1	2050103	**N**
79	FLEXIBLE FLAT CABLE	NCFC7-210812	1	204321045	**N**
80	P RIVET	JB-407A-C	22	880052	

81	FLEXIBLE FLAT CABLE	ADD7725-A	1	204315043		
82	FLEXIBLE FLAT CABLE	NCFC7-133012	1	2047133012	N	
83	FAN	2410RL-04W-S29-C07	1	24502340		
84	FLEXIBLE FLAT CABLE	NCFC5-351212	1	2045351212	N	
85	FLEXIBLE FLAT CABLE	ADD7783-A	1	204405062		
86	CORD ASSEMBLY	TYX1622-114047	1	2010519		
[Frontend, Units]						
200	**PARENT PC BOARD AS**	**BAPRC-2072-1F-P**	**1**	**1B5142072-1F901MHB**	**N**	**Parent**
202	Processing circuit pc board AS	BAPRC-2072-1F	1	1B5142072-1F-C901MHB	N	Child
250	**PARENT PC BOARD AS**	**BADIS-2074-1L-P**	**1**	**1B5142074-1L**	**N**	**Parent**
252	Display circuit pc board AS	BADIS-2074-1L	1	1B5142074-1L-C	N	Child
254	Switch circuit pc board AS	BASW-2116-1L	1	1B5142116-1L-C	N	Child
256	Switch circuit pc board AS	BASW-2117-1L	1	1B5142117-1L-C	N	Child
258	Power supply circuit pc board AS	BAPS-2118-1L	1	1B5142118-1L-C	N	Child
260	Et cetra pc board AS	BAETC-2119-1L	1	1B5142119-1L-C	N	Child
262	Switch circuit pc board AS	BASW-2120-1L	1	1B5142120-1L-C	N	Child
264	Et cetra pc board AS	BAETC-2121-1L	1	1B5142121-1L-C	N	Child
266	Et cetra pc board AS	BAETC-2186-1L	1	1B5142186-1L-C	N	Child
268	Et cetra pc board AS	BAETC-2216-1L	1	1B5142216-1L-C	N	Child
300	**PARENT PC BOARD AS**	**BADG-2077-1F-P**	**1**	**1B5142077-1F**	**N**	**Parent**
302	Digital circuit pc board AS	BADG-2077-1F	1	1B5142077-1F-C	N	Child
350	**PARENT PC BOARD AS**	**BAASP-2080-1F-P**	**1**	**1B5142080-1F**	**N**	**Parent**
352	Audio signal processor circuit pc board AS	BAASP-2080-1F	1	1B5142080-1F-C	N	Child
354	Video circuit pc board AS	BAVD-2147-1F	1	1B5142147-1F-C	N	Child
356	Video circuit pc board AS	BAVD-2148-1F	1	1B5142148-1F-C	N	Child
358	Et cetra pc board AS	BAETC-2149-1F	1	1B5142149-1F-C	N	Child
360	Et cetra pc board AS	BAETC-2150-1F	1	1B5142150-1F-C	N	Child
400	**PARENT PC BOARD AS**	**BAAF-2081-1B-P**	**1**	**1B5142081-1B**	**N**	**Parent**
402	Audio freqency circuit pc board AS	BAAF-2081-1B	1	1B5142081-1B-C		Child
404	Et cetra pc board AS	BAETC-2157-1B	1	1B5142157-1B-C		Child
406	Audio freqency circuit pc board AS	BAAF-2255-1B	1	1B5142255-1B-C		Child
450	**PARENT PC BOARD AS**	**BAAF-2083-1D-P**	**1**	**1B5142083-1D**	**N**	**Parent**
452	Audio freqency circuit pc board AS	BAAF-2083-1D	1	1B5142083-1D-C	N	Child
500	**PARENT PC BOARD AS**	**BAHDM-2086-1F-P**	**1**	**1B5142086-1F**	**N**	**Parent**
502	HDMI circuit pc board AS	BAHDM-2086-1F	1	1B5142086-1F-C	N	Child
550	**PARENT PC BOARD AS**	**BAPS-2089-1D-P**	**1**	**1B5142089-1D**	**N**	**Parent**
552	Power supply circuit pc board AS	BAPS-2089-1D	1	1B5142089-1D-C	N	Child
554	Et cetra pc board AS	BAETC-2163-1D	1	1B5142163-1D-C	N	Child
556	Power supply circuit pc board AS	BAPS-2164-1D	1	1B5142164-1D-C	N	Child
558	Et cetra pc board AS	BAETC-2165-1D	1	1B5142165-1D-C	N	Child
560	Et cetra pc board AS	BAETC-2166-1D	1	1B5142166-1D-C	N	Child
562	Et cetra pc board AS	BAETC-2167-1D	1	1B5142167-1D-C	N	Child
564	Et cetra pc board AS	BAETC-2169-1D	1	1B5142169-1D-C	N	Child
566	Et cetra pc board AS	BAETC-2170-1D	1	1B5142170-1D-C	N	Child
568	Et cetra pc board AS	BAETC-2171-1D	1	1B5142171-1D-C	N	Child
570	Et cetra pc board AS	BAETC-2174-1D	1	1B5142174-1D-C	N	Child
572	Et cetra pc board AS	BAETC-2202-1D	1	1B5142202-1D-C	N	Child
574	Radio freqency circuit pc board AS	BARF-2208-1D	1	1B5142208-1D-C	N	Child
600	**PARENT PC BOARD AS**	**BAPS-2092-1B-P**	**1**	**1B5142092-1B**	**N**	**Parent**
602	Power supply circuit pc board AS	BAPS-2092-1B	1	1B5142092-1B-C	N	Child
604	Et cetra pc board AS	BAETC-2200-1B	1	1B5142200-1B-C	N	Child
606	Et cetra pc board AS	BAETC-2201-1B	1	1B5142201-1B-C	N	Child
608	Et cetra pc board AS	BAETC-2203-1B	1	1B5142203-1B-C	N	Child
612	Power supply circuit pc board AS	BAPS-2205-1B	1	1B5142205-1B-C	N	Child
614	Et cetra pc board AS	BAETC-2206-1B	1	1B5142206-1B-C	N	Child
650	**PARENT PC BOARD AS**	**BACLD-2095-1E-P**	**1**	**1B5142095-1E**	**N**	**Parent**
652	ClassD amplifier circuit pc board AS	BACLD-2095-1E	1	1B5142095-1E-C	N	Child
702	SHIELD CASE	(TUNER-BTM)	1	27225207A	N	
704	SHIELD CASE	(UPPER)	1	27225208		

[Packing]					
900	PAD	.	1	AHA7502-B	N
902	PAD	.	1	AHA7500-B	N
904	CARTON	LX901(HB)	1	29055700	
906	PACKING PAD/S	.	1	AHA7499-A	N
908	LABEL	(fwup-wo-dtsx)CNT_EU	1	29393393	
[Accessories]					
950	FM ANT AS	Type W	1	292191	
952	MIC	KHM0018-010010	1	245051	
956	ANTENNA COIL	AM LOOP-ANTENNA	1	232207	
956 or	ANTENNA COIL	AM LOOP ANTENNA (S&O)	(1)	232216	
958	REMOTE CONTROL TRANSMITTER	RC-927R	1	24140927	
960	POWER SUPPLY CORD	AS-BS	1	253425YUN	!
962	INSTRUCTION MANUAL	LX901MHB(En)	1	29402406	N
966	INSTRUCTION MANUAL	Ar(SC-LX901)	1	29402747	N
968	INSTRUCTION MANUAL	Safety_Pio_16Hi_U3(EnCtAr)	1	29402497	N
970	INSTRUCTION SHEET	(Google cast)	1	29355956	
974	INSTRUCTION SHEET	(FWupdate-Fireconnect)	1	29355967	N

BAAF-2081-1B

<Note>

1. Parts marked by "**NSP**" are generally unavailable because they are not in our Master Spare Parts List.
2. The ! mark found on some component parts indicates the importance of the safety factor of the part.
   Therefore, when replacing, be sure to use parts of identical designation.

: NSP

REF. NO.	PART NAME	DESCRIPTION	Q'TY	PART NO. (SN)	REMARKS
[Switches, Terminals, Wires]					

BAAF-2083-1D

<Note>

1. Parts marked by "**NSP**" are generally unavailable because they are not in our Master Spare Parts List.
2. The ! mark found on some component parts indicates the importance of the safety factor of the part.
   Therefore, when replacing, be sure to use parts of identical designation.

: NSP

REF. NO.	PART NAME	DESCRIPTION	Q'TY	PART NO. (SN)	REMARKS
[Semi-conductors]					
[Capacitors]					
[Resistors]					
[Switches, Terminals, Wires]					

BAASP-2080-1F

<Note>

1. Parts marked by "**NSP**" are generally unavailable because they are not in our Master Spare Parts List.
2. The ! mark found on some component parts indicates the importance of the safety factor of the part.
   Therefore, when replacing, be sure to use parts of identical designation.

: NSP

REF. NO.	PART NAME	DESCRIPTION	Q'TY	PART NO. (SN)	REMARKS
[Semi-conductors]					
Q301	HYBRID IC	BD34704KS2	1	22242977R3	
Q321	HYBRID IC	NJW1194	1	22242893R2	
Q371	HYBRID IC	NJW1194	1	22242893R2	
Q511	TRANSISTOR	2SD2400A-D	1	2202734	
Q512	TRANSISTOR	2SB1569A-D	1	2202724	
Q571	HYBRID IC	BD34704KS2	1	22242977R3	
[Capacitors]					
C103	SMG C	CE04W25V-47M(SMG)	1	395054707ST	
C104	SMG C	CE04W25V-47M(SMG)	1	395054707ST	
C115	SMG C	CE04W10V-220M(SMG)	1	395032217ST	
C116	SMG C	CE04W10V-220M(SMG)	1	395032217ST	
C117	SMG C	CE04W50V-10M(SMG)	1	395081007ST	
C118	SMG C	CE04W50V-10M(SMG)	1	395081007ST	
C121	SMG C	CE04W16V-220M(SMG)	1	395042217ST	
C122	SMG C	CE04W16V-220M(SMG)	1	395042217ST	
C135	ELECTROLYTIC CAPACITOR	CE04W16V-56M(LXY)	1	3500244ST	
C136	ELECTROLYTIC CAPACITOR	CE04W16V-56M(LXY)	1	3500244ST	
C139	SMG C	CE04W50V-22M(SMG)	1	395082207ST	
C140	SMG C	CE04W50V-22M(SMG)	1	395082207ST	
C145	SMG C	CE04W50V-22M(SMG)	1	395082207ST	
C146	SMG C	CE04W50V-22M(SMG)	1	395082207ST	
C155	SMG C	CE04W50V-22M(SMG)	1	395082207ST	
C156	SMG C	CE04W50V-22M(SMG)	1	395082207ST	
C165	SMG C	CE04W50V-22M(SMG)	1	395082207ST	
C166	SMG C	CE04W50V-22M(SMG)	1	395082207ST	
C175	SMG C	CE04W50V-22M(SMG)	1	395082207ST	
C176	SMG C	CE04W50V-22M(SMG)	1	395082207ST	
C185	SMG C	CE04W50V-22M(SMG)	1	395082207ST	
C186	SMG C	CE04W50V-22M(SMG)	1	395082207ST	
C203	SMG C	CE04W50V-22M(SMG)	1	395082207ST	
C204	SMG C	CE04W50V-22M(SMG)	1	395082207ST	
C232	SMG C	CE04W50V-22M(SMG)	1	395082207ST	
C263	SMG C	CE04W50V-22M(SMG)	1	395082207ST	
C264	SMG C	CE04W50V-22M(SMG)	1	395082207ST	
C283	SMG C	CE04W50V-22M(SMG)	1	395082207ST	
C284	SMG C	CE04W50V-22M(SMG)	1	395082207ST	
C2955	SMG C	CE04W25V-47M(SMG)	1	395054707ST	
C2956	SMG C	CE04W25V-47M(SMG)	1	395054707ST	
C301	ELECTROLYTIC CAPACITOR	CE04W10V-100M(KY)	1	3500272ST	
C302	ELECTROLYTIC CAPACITOR	CE04W10V-100M(KY)	1	3500272ST	
C321	SMG C	CE04W25V-47M(SMG)	1	395054707ST	
C322	SMG C	CE04W25V-47M(SMG)	1	395054707ST	
C323	SMG C	CE04W16V-100M(SMG)	1	395041017ST	
C324	SMG C	CE04W16V-100M(SMG)	1	395041017ST	
C329	SMG C	CE04W50V-4.7M(SMG)	1	395080477ST	
C330	SMG C	CE04W50V-4.7M(SMG)	1	395080477ST	
C331	SMG C	CE04W50V-10M(SMG)	1	395081007ST	
C337	SMG C	CE04W50V-10M(SMG)	1	395081007ST	
C338	SMG C	CE04W50V-10M(SMG)	1	395081007ST	
C353	ELECTROLYTIC CAPACITOR	CE04W16V-56M(LXY)	1	3500244ST	

C354	ELECTROLYTIC CAPACITOR	CE04W16V-56M(LXY)	1	3500244ST	
C371	SMG C	CE04W25V-47M(SMG)	1	395054707ST	
C372	SMG C	CE04W25V-47M(SMG)	1	395054707ST	
C373	SMG C	CE04W16V-100M(SMG)	1	395041017ST	
C374	SMG C	CE04W16V-100M(SMG)	1	395041017ST	
C379	SMG C	CE04W50V-4.7M(SMG)	1	395080477ST	
C380	SMG C	CE04W50V-4.7M(SMG)	1	395080477ST	
C381	SMG C	CE04W50V-10M(SMG)	1	395081007ST	
C387	SMG C	CE04W50V-10M(SMG)	1	395081007ST	
C388	SMG C	CE04W50V-10M(SMG)	1	395081007ST	
C431	SMG C	CE04W50V-22M(SMG)	1	395082207ST	
C432	SMG C	CE04W50V-22M(SMG)	1	395082207ST	
C441	SMG C	CE04W50V-1M(SMG)	1	395080107ST	
C442	SMG C	CE04W50V-1M(SMG)	1	395080107ST	
C449	SMG C	CE04W16V-470M(SMG)	1	395044717T	
C450	SMG C	CE04W16V-470M(SMG)	1	395044717T	
C453	SMG C	CE04W25V-100M(SMG)	1	395051017ST	
C454	SMG C	CE04W25V-100M(SMG)	1	395051017ST	
C475	SMG C	CE04W25V-47M(SMG)	1	395054707ST	
C476	SMG C	CE04W25V-47M(SMG)	1	395054707ST	
C481	SMG C	CE04W16V-100M(SMG)	1	395041017ST	
C482	SMG C	CE04W16V-100M(SMG)	1	395041017ST	
C501	SMG C	CE04W16V-100M(SMG)	1	395041017ST	
C502	SMG C	CE04W16V-100M(SMG)	1	395041017ST	
C519	SMG C	CE04W50V-2.2M(SMG)	1	395080227ST	
C520	SMG C	CE04W50V-2.2M(SMG)	1	395080227ST	
C529	SMG C	CE04W50V-10M(SMG)	1	395081007ST	
C530	SMG C	CE04W50V-10M(SMG)	1	395081007ST	
C543	SMG C	CE04W25V-100M(SMG)	1	395051017ST	
C546	SMG C	CE04W16V-100M(SMG)	1	395041017ST	
C551	SMG C	CE04W16V-100M(SMG)	1	395041017ST	
C552	SMG C	CE04W16V-100M(SMG)	1	395041017ST	
C571	ELECTROLYTIC CAPACITOR	CE04W10V-100M(KY)	1	3500272ST	
C572	ELECTROLYTIC CAPACITOR	CE04W10V-100M(KY)	1	3500272ST	
C581	SMG C	CE04W50V-10M(SMG)	1	395081007ST	
C582	SMG C	CE04W50V-10M(SMG)	1	395081007ST	
C583	SMG C	CE04W50V-10M(SMG)	1	395081007ST	
C584	SMG C	CE04W50V-10M(SMG)	1	395081007ST	
C585	ELECTROLYTIC CAPACITOR	CE04W50V-18M(LXY)	1	3500246ST	
C586	ELECTROLYTIC CAPACITOR	CE04W50V-18M(LXY)	1	3500246ST	
C603	SMG C	CE04W50V-22M(SMG)	1	395082207ST	
C604	SMG C	CE04W50V-22M(SMG)	1	395082207ST	
C623	SMG C	CE04W50V-22M(SMG)	1	395082207ST	
C624	SMG C	CE04W50V-22M(SMG)	1	395082207ST	
C641	ELECTROLYTIC CAPACITOR	CE04W25V-100M(KY)	1	3500273ST	
C642	ELECTROLYTIC CAPACITOR	CE04W25V-100M(KY)	1	3500273ST	
C671	SMG C	CE04W50V-10M(SMG)	1	395081007ST	
C672	SMG C	CE04W50V-10M(SMG)	1	395081007ST	
C681	SMG C	CE04W50V-10M(SMG)	1	395081007ST	
C682	SMG C	CE04W50V-10M(SMG)	1	395081007ST	
C701	SMG C	CE04W50V-10M(SMG)	1	395081007ST	
C702	SMG C	CE04W50V-10M(SMG)	1	395081007ST	
C801	SMG C	CE04W50V-10M(SMG)	1	395081007ST	
C802	SMG C	CE04W50V-10M(SMG)	1	395081007ST	
C803	SMG C	CE04W50V-10M(SMG)	1	395081007ST	
C804	SMG C	CE04W50V-10M(SMG)	1	395081007ST	
C805	SMG C	CE04W50V-10M(SMG)	1	395081007ST	
C806	SMG C	CE04W50V-10M(SMG)	1	395081007ST	
C821	SMG C	CE04W16V-100M(SMG)	1	395041017ST	
C831	SMG C	CE04W16V-100M(SMG)	1	395041017ST	
C841	SMG C	CE04W16V-100M(SMG)	1	395041017ST	

C847	SMG C	CE04W50V-1M(SMG)	1	395080107ST	
C848	SMG C	CE04W50V-1M(SMG)	1	395080107ST	
C849	SMG C	CE04W50V-1M(SMG)	1	395080107ST	
C851	SMG C	CE04W6.3V-470M(SMG)	1	395024717T	
C852	SMG C	CE04W6.3V-470M(SMG)	1	395024717T	
C853	SMG C	CE04W6.3V-470M(SMG)	1	395024717T	
C895	SMG C	CE04W16V-100M(SMG)	1	395041017ST	
[Resistors]					
[Switches, Terminals, Wires]					
P111	PIN JACK	RCA-207AG-01	1	25046060	
P131	PIN JACK	RCA-232G-00-02	1	25046061	
P141	PIN JACK	RCA-421EG-00-11	1	25046063	
P161	PIN JACK	RCA-421EG-00-11	1	25046063	
P181	PIN JACK	RCA-232G-00-02	1	25046061	
P201	PIN JACK	RCA-232G-00-02	1	25046061	
P231	PIN JACK	NPJ-1PDB804	1	25046076	
P241	PIN JACK	RCA-232G-00-06	1	25046062	
P261	PIN JACK	RCA-421EG-00-11	1	25046063	
P601	PIN JACK	RCA-421EG-00-11	1	25046063	
P671	PIN JACK	RCA-421EG-00-11	1	25046063	
P701	PIN JACK	MSP-2510V-25-GILT-ABS(O13	1	25046050	
P702	PIN JACK	MSP-2510V-25-GILT-ABS(O13	1	25046050	
P801	PIN JACK	MSD-243V-50-GILT(O133)	1	25046045	
P802	PIN JACK	MSD-243V-50-GILT(O133)	1	25046045	
P803	PIN JACK	MSD-243V-50-GILT(O133)	1	25046045	
RL551	RELAY	NRL-2P2A-DC24-208	1	25065728	

BACLD-2095-1E

<Note>

1. Parts marked by "**NSP**" are generally unavailable because they are not in our Master Spare Parts List.
2. The ! mark found on some component parts indicates the importance of the safety factor of the part.
   Therefore, when replacing, be sure to use parts of identical designation.

: NSP

REF. NO.	PART NAME	DESCRIPTION	Q'TY	PART NO. (SN)	REMARKS
[Semi-conductors]					
[Transformers, Coils]					
T4100	COIL	7G23G-200M-R	1	231519	
T4200	COIL	7G23G-200M-R	1	231519	
T4300	COIL	7G23G-200M-R	1	231519	
T4400	COIL	7G23G-200M-R	1	231519	
T4500	COIL	7G23G-200M-R	1	231519	
T4600	COIL	7G23G-200M-R	1	231519	
T4700	COIL	7G23G-200M-R	1	231519	
T4800	COIL	7G23G-200M-R	1	231519	
T4900	COIL	7G23G-200M-R	1	231519	
T6500	COIL	7G23G-200M-R	1	231519	
T6600	COIL	7G23G-200M-R	1	231519	
[Capacitors]					
C4008	SMG C	CE04W16V-100M(SMG)	1	395041017T	
C4010	SMG C	CE04W16V-100M(SMG)	1	395041017T	
C4023	SMG C	CE04W50V-10M(SMG)	1	395081007T	
C4024	SMG C	CE04W16V-100M(SMG)	1	395041017T	
C4036	SMG C	CE04W16V-100M(SMG)	1	395041017T	
C4052	SMG C	CE04W16V-100M(SMG)	1	395041017T	
C4053	SMG C	CE04W16V-100M(SMG)	1	395041017T	
C4057	ELECTROLYTIC CAPACITOR	CE69W80V-2700M_LGU1K27	1	3504536	
C4058	ELECTROLYTIC CAPACITOR	CE69W80V-2700M_LGU1K27	1	3504536	
C4059	ELECTROLYTIC CAPACITOR	CE69W80V-2700M_LGU1K27	1	3504536	
C4060	ELECTROLYTIC CAPACITOR	CE69W80V-2700M_LGU1K27	1	3504536	
C4061	ELECTROLYTIC CAPACITOR	CE69W80V-2700M_LGU1K27	1	3504536	
C4062	ELECTROLYTIC CAPACITOR	CE69W80V-2700M_LGU1K27	1	3504536	
C4063	ELECTROLYTIC CAPACITOR	CE04W25V-82M(LXY)	1	3500245T	
C4065	ELECTROLYTIC CAPACITOR	CE04W16V-56M(LXY)	1	3500244T	
C4066	ELECTROLYTIC CAPACITOR	CE04W16V-56M(LXY)	1	3500244T	
C4069	ELECTROLYTIC CAPACITOR	CE04W16V-56M(LXY)	1	3500244T	
C4070	ELECTROLYTIC CAPACITOR	CE04W16V-56M(LXY)	1	3500244T	
C4071	SMG C	CE04W16V-100M(SMG)	1	395041017T	
C4081	SMG C	CE04W16V-100M(SMG)	1	395041017T	
C4083	MICA CAPACITOR	DM15C201J5	1	3600032	
C4084	MICA CAPACITOR	DM15C201J5	1	3600032	
C4108	ELECTROLYTIC CAPACITOR	CE04W16V-470M(KY_H15)	1	3500274	
C4116	ELECTROLYTIC CAPACITOR	CE04W25V-82M(LXY)	1	3500245T	
C4130	ELECTROLYTIC CAPACITOR	CE04W50V-18M(LXY)	1	3500246ST	
C4134	ELECTROLYTIC CAPACITOR	CE04W50V-18M(LXY)	1	3500246ST	
C4136	ELECTROLYTIC CAPACITOR	CE04W50V-18M(LXY)	1	3500246ST	
C4149	ELECTROLYTIC CAPACITOR	UKT1K561MHMAPDCV	1	3500254S	
C4150	ELECTROLYTIC CAPACITOR	UKT1K561MHMAPDCV	1	3500254S	
C4166	SMG C	CE04W16V-100M(SMG)	1	395041017T	
C4167	SMG C	CE04W16V-100M(SMG)	1	395041017T	
C4171	SMG C	CE04W50V-10M(SMG)	1	395081007T	
C4208	ELECTROLYTIC CAPACITOR	CE04W16V-470M(KY_H15)	1	3500274	
C4216	ELECTROLYTIC CAPACITOR	CE04W25V-82M(LXY)	1	3500245T	
C4230	ELECTROLYTIC CAPACITOR	CE04W50V-18M(LXY)	1	3500246ST	
C4234	ELECTROLYTIC CAPACITOR	CE04W50V-18M(LXY)	1	3500246ST	
C4236	ELECTROLYTIC CAPACITOR	CE04W50V-18M(LXY)	1	3500246ST	

C4249	ELECTROLYTIC CAPACITOR	UKT1K561MHMAPDCV	1	3500254S	
C4250	ELECTROLYTIC CAPACITOR	UKT1K561MHMAPDCV	1	3500254S	
C4266	SMG C	CE04W16V-100M(SMG)	1	395041017T	
C4267	SMG C	CE04W16V-100M(SMG)	1	395041017T	
C4308	ELECTROLYTIC CAPACITOR	CE04W16V-470M(KY_H15)	1	3500274	
C4316	ELECTROLYTIC CAPACITOR	CE04W25V-82M(LXY)	1	3500245T	
C4330	ELECTROLYTIC CAPACITOR	CE04W50V-18M(LXY)	1	3500246ST	
C4334	ELECTROLYTIC CAPACITOR	CE04W50V-18M(LXY)	1	3500246ST	
C4336	ELECTROLYTIC CAPACITOR	CE04W50V-18M(LXY)	1	3500246ST	
C4349	ELECTROLYTIC CAPACITOR	UKT1K561MHMAPDCV	1	3500254S	
C4350	ELECTROLYTIC CAPACITOR	UKT1K561MHMAPDCV	1	3500254S	
C4366	SMG C	CE04W16V-100M(SMG)	1	395041017T	
C4367	SMG C	CE04W16V-100M(SMG)	1	395041017T	
C4371	SMG C	CE04W50V-10M(SMG)	1	395081007T	
C4408	ELECTROLYTIC CAPACITOR	CE04W16V-470M(KY_H15)	1	3500274	
C4416	ELECTROLYTIC CAPACITOR	CE04W25V-82M(LXY)	1	3500245T	
C4430	ELECTROLYTIC CAPACITOR	CE04W50V-18M(LXY)	1	3500246ST	
C4434	ELECTROLYTIC CAPACITOR	CE04W50V-18M(LXY)	1	3500246ST	
C4436	ELECTROLYTIC CAPACITOR	CE04W50V-18M(LXY)	1	3500246ST	
C4449	ELECTROLYTIC CAPACITOR	UKT1K561MHMAPDCV	1	3500254S	
C4450	ELECTROLYTIC CAPACITOR	UKT1K561MHMAPDCV	1	3500254S	
C4466	SMG C	CE04W16V-100M(SMG)	1	395041017T	
C4467	SMG C	CE04W16V-100M(SMG)	1	395041017T	
C4508	ELECTROLYTIC CAPACITOR	CE04W16V-470M(KY_H15)	1	3500274	
C4516	ELECTROLYTIC CAPACITOR	CE04W25V-82M(LXY)	1	3500245T	
C4530	ELECTROLYTIC CAPACITOR	CE04W50V-18M(LXY)	1	3500246ST	
C4534	ELECTROLYTIC CAPACITOR	CE04W50V-18M(LXY)	1	3500246ST	
C4536	ELECTROLYTIC CAPACITOR	CE04W50V-18M(LXY)	1	3500246ST	
C4549	ELECTROLYTIC CAPACITOR	UKT1K561MHMAPDCV	1	3500254S	
C4550	ELECTROLYTIC CAPACITOR	UKT1K561MHMAPDCV	1	3500254S	
C4566	SMG C	CE04W16V-100M(SMG)	1	395041017T	
C4567	SMG C	CE04W16V-100M(SMG)	1	395041017T	
C4571	SMG C	CE04W50V-10M(SMG)	1	395081007T	
C4608	ELECTROLYTIC CAPACITOR	CE04W16V-470M(KY_H15)	1	3500274	
C4616	ELECTROLYTIC CAPACITOR	CE04W25V-82M(LXY)	1	3500245T	
C4630	ELECTROLYTIC CAPACITOR	CE04W50V-18M(LXY)	1	3500246ST	
C4634	ELECTROLYTIC CAPACITOR	CE04W50V-18M(LXY)	1	3500246ST	
C4636	ELECTROLYTIC CAPACITOR	CE04W50V-18M(LXY)	1	3500246ST	
C4649	ELECTROLYTIC CAPACITOR	UKT1K561MHMAPDCV	1	3500254S	
C4650	ELECTROLYTIC CAPACITOR	UKT1K561MHMAPDCV	1	3500254S	
C4666	SMG C	CE04W16V-100M(SMG)	1	395041017T	
C4667	SMG C	CE04W16V-100M(SMG)	1	395041017T	
C4708	ELECTROLYTIC CAPACITOR	CE04W16V-470M(KY_H15)	1	3500274	
C4716	ELECTROLYTIC CAPACITOR	CE04W25V-82M(LXY)	1	3500245T	
C4730	ELECTROLYTIC CAPACITOR	CE04W50V-18M(LXY)	1	3500246ST	
C4734	ELECTROLYTIC CAPACITOR	CE04W50V-18M(LXY)	1	3500246ST	
C4736	ELECTROLYTIC CAPACITOR	CE04W50V-18M(LXY)	1	3500246ST	
C4738	ELECTROLYTIC CAPACITOR	CE04W16V-470M(KY_H15)	1	3500274	
C4749	ELECTROLYTIC CAPACITOR	UKT1K561MHMAPDCV	1	3500254S	
C4750	ELECTROLYTIC CAPACITOR	UKT1K561MHMAPDCV	1	3500254S	
C4766	SMG C	CE04W16V-100M(SMG)	1	395041017T	
C4767	SMG C	CE04W16V-100M(SMG)	1	395041017T	
C4771	SMG C	CE04W50V-10M(SMG)	1	395081007T	
C4808	ELECTROLYTIC CAPACITOR	CE04W16V-470M(KY_H15)	1	3500274	
C4816	ELECTROLYTIC CAPACITOR	CE04W25V-82M(LXY)	1	3500245T	
C4830	ELECTROLYTIC CAPACITOR	CE04W50V-18M(LXY)	1	3500246ST	
C4834	ELECTROLYTIC CAPACITOR	CE04W50V-18M(LXY)	1	3500246ST	
C4836	ELECTROLYTIC CAPACITOR	CE04W50V-18M(LXY)	1	3500246ST	
C4849	ELECTROLYTIC CAPACITOR	UKT1K561MHMAPDCV	1	3500254S	
C4850	ELECTROLYTIC CAPACITOR	UKT1K561MHMAPDCV	1	3500254S	
C4866	SMG C	CE04W16V-100M(SMG)	1	395041017T	

C4867	SMG C	CE04W16V-100M(SMG)	1	395041017T	
C4908	ELECTROLYTIC CAPACITOR	CE04W16V-470M(KY_H15)	1	3500274	
C4916	ELECTROLYTIC CAPACITOR	CE04W25V-82M(LXY)	1	3500245T	
C4930	ELECTROLYTIC CAPACITOR	CE04W50V-18M(LXY)	1	3500246ST	
C4934	ELECTROLYTIC CAPACITOR	CE04W50V-18M(LXY)	1	3500246ST	
C4936	ELECTROLYTIC CAPACITOR	CE04W50V-18M(LXY)	1	3500246ST	
C4949	ELECTROLYTIC CAPACITOR	UKT1K561MHMAPDCV	1	3500254S	
C4950	ELECTROLYTIC CAPACITOR	UKT1K561MHMAPDCV	1	3500254S	
C4966	SMG C	CE04W16V-100M(SMG)	1	395041017T	
C4967	SMG C	CE04W16V-100M(SMG)	1	395041017T	
C4971	SMG C	CE04W50V-10M(SMG)	1	395081007T	
C5071	SMG C	CE04W16V-100M(SMG)	1	395041017T	
C5072	SMG C	CE04W16V-100M(SMG)	1	395041017T	
C5184	ELECTROLYTIC CAPACITOR	CE04W16V-56M(LXY)	1	3500244T	
C5185	SMG C	CE04W50V-10M(SMG)	1	395081007T	
C6400	ELECTROLYTIC CAPACITOR	CE69W80V-2700M_LGU1K27	1	3504536	
C6401	ELECTROLYTIC CAPACITOR	CE69W80V-2700M_LGU1K27	1	3504536	
C6508	ELECTROLYTIC CAPACITOR	CE04W16V-470M(KY_H15)	1	3500274	
C6516	ELECTROLYTIC CAPACITOR	CE04W25V-82M(LXY)	1	3500245T	
C6530	ELECTROLYTIC CAPACITOR	CE04W50V-18M(LXY)	1	3500246ST	
C6534	ELECTROLYTIC CAPACITOR	CE04W50V-18M(LXY)	1	3500246ST	
C6536	ELECTROLYTIC CAPACITOR	CE04W50V-18M(LXY)	1	3500246ST	
C6549	ELECTROLYTIC CAPACITOR	UKT1K561MHMAPDCV	1	3500254S	
C6550	ELECTROLYTIC CAPACITOR	UKT1K561MHMAPDCV	1	3500254S	
C6566	SMG C	CE04W16V-100M(SMG)	1	395041017T	
C6567	SMG C	CE04W16V-100M(SMG)	1	395041017T	
C6571	SMG C	CE04W50V-10M(SMG)	1	395081007T	
C6608	ELECTROLYTIC CAPACITOR	CE04W16V-470M(KY_H15)	1	3500274	
C6616	ELECTROLYTIC CAPACITOR	CE04W25V-82M(LXY)	1	3500245T	
C6630	ELECTROLYTIC CAPACITOR	CE04W50V-18M(LXY)	1	3500246ST	
C6634	ELECTROLYTIC CAPACITOR	CE04W50V-18M(LXY)	1	3500246ST	
C6636	ELECTROLYTIC CAPACITOR	CE04W50V-18M(LXY)	1	3500246ST	
C6649	ELECTROLYTIC CAPACITOR	UKT1K561MHMAPDCV	1	3500254S	
C6650	ELECTROLYTIC CAPACITOR	UKT1K561MHMAPDCV	1	3500254S	
C6666	SMG C	CE04W16V-100M(SMG)	1	395041017T	
C6667	SMG C	CE04W16V-100M(SMG)	1	395041017T	
C6683	SMG C	CE04W50V-10M(SMG)	1	395081007T	
C6684	SMG C	CE04W50V-10M(SMG)	1	395081007T	
C6685	SMG C	CE04W50V-10M(SMG)	1	395081007T	
C6686	SMG C	CE04W50V-10M(SMG)	1	395081007T	
C6687	SMG C	CE04W50V-10M(SMG)	1	395081007T	
C6688	SMG C	CE04W50V-10M(SMG)	1	395081007T	
[Resistors]					
R4125	METAL PLATE RESISTOR	RGC5-0.22-OHM-K	1	4000284	
R4126	METAL PLATE RESISTOR	RGC5-0.22-OHM-K	1	4000284	
R4154	CEMENT RESISTOR	MNS05N100JW	1	4800083	
R4225	METAL PLATE RESISTOR	RGC5-0.22-OHM-K	1	4000284	
R4226	METAL PLATE RESISTOR	RGC5-0.22-OHM-K	1	4000284	
R4254	CEMENT RESISTOR	MNS05N100JW	1	4800083	
R4325	METAL PLATE RESISTOR	RGC5-0.22-OHM-K	1	4000284	
R4326	METAL PLATE RESISTOR	RGC5-0.22-OHM-K	1	4000284	
R4354	CEMENT RESISTOR	MNS05N100JW	1	4800083	
R4425	METAL PLATE RESISTOR	RGC5-0.22-OHM-K	1	4000284	
R4426	METAL PLATE RESISTOR	RGC5-0.22-OHM-K	1	4000284	
R4454	CEMENT RESISTOR	MNS05N100JW	1	4800083	
R4525	METAL PLATE RESISTOR	RGC5-0.22-OHM-K	1	4000284	
R4526	METAL PLATE RESISTOR	RGC5-0.22-OHM-K	1	4000284	
R4554	CEMENT RESISTOR	MNS05N100JW	1	4800083	
R4625	METAL PLATE RESISTOR	RGC5-0.22-OHM-K	1	4000284	
R4626	METAL PLATE RESISTOR	RGC5-0.22-OHM-K	1	4000284	
R4654	CEMENT RESISTOR	MNS05N100JW	1	4800083	

R4725	METAL PLATE RESISTOR	RGC5-0.22-OHM-K	1	4000284	
R4726	METAL PLATE RESISTOR	RGC5-0.22-OHM-K	1	4000284	
R4754	CEMENT RESISTOR	MNS05N100JW	1	4800083	
R4825	METAL PLATE RESISTOR	RGC5-0.22-OHM-K	1	4000284	
R4826	METAL PLATE RESISTOR	RGC5-0.22-OHM-K	1	4000284	
R4854	CEMENT RESISTOR	MNS05N100JW	1	4800083	
R4925	METAL PLATE RESISTOR	RGC5-0.22-OHM-K	1	4000284	
R4926	METAL PLATE RESISTOR	RGC5-0.22-OHM-K	1	4000284	
R4954	CEMENT RESISTOR	MNS05N100JW	1	4800083	
R6525	METAL PLATE RESISTOR	RGC5-0.22-OHM-K	1	4000284	
R6526	METAL PLATE RESISTOR	RGC5-0.22-OHM-K	1	4000284	
R6554	CEMENT RESISTOR	MNS05N100JW	1	4800083	
R6625	METAL PLATE RESISTOR	RGC5-0.22-OHM-K	1	4000284	
R6626	METAL PLATE RESISTOR	RGC5-0.22-OHM-K	1	4000284	
R6654	CEMENT RESISTOR	MNS05N100JW	1	4800083	
[Switches, Terminals, Wires]					
P4201	TERMINAL	LTS3610-1011F	1	25060536	
P4401	TERMINAL	LTS3410-1020F	1	25060537	
P4601	TERMINAL	LTS3410-1020F	1	25060537	
P4901	TERMINAL	LTS3410-1020F	1	25060537	
P6501	TERMINAL	LTS3410-1020F	1	25060537	
RL4100	RELAY	NRL-2P5A-DC12-208	1	25065733	
RL4300	RELAY	NRL-2P5A-DC12-208	1	25065733	
RL4500	RELAY	NRL-2P5A-DC12-208	1	25065733	
RL4700	RELAY	NRL-2P5A-DC12-208	1	25065733	
RL4900	RELAY	NRL-2P5A-DC12-208	1	25065733	
RL6500	RELAY	NRL-2P5A-DC12-208	1	25065733	

BADG-2077-1F

<Note>

1. Parts marked by "**NSP**" are generally unavailable because they are not in our Master Spare Parts List.
2. The ! mark found on some component parts indicates the importance of the safety factor of the part.
   Therefore, when replacing, be sure to use parts of identical designation.

: NSP

REF. NO.	PART NAME	DESCRIPTION	Q'TY	PART NO. (SN)	REMARKS
[Semi-conductors]					
[Transformers, Coils]					
[Capacitors]					
C2008	SMG C	CE04W16V-220M(SMG)	1	395042217ST	
C2010	SMG C	CE04W16V-1000M(SMG)	1	395041027S	
C2015	SMG C	CE04W16V-220M(SMG)	1	395042217ST	
C2213	SMG C	CE04W16V-220M(SMG)	1	395042217ST	
C2217	SMG C	CE04W16V-100M(SMG)	1	395041017ST	
C2218	SMG C	CE04W16V-100M(SMG)	1	395041017ST	
C2302	SMG C	CE04W16V-220M(SMG)	1	395042217ST	
C2303	SMG C	CE04W25V-47M(SMG)	1	395054707ST	
C2306	SMG C	CE04W16V-220M(SMG)	1	395042217ST	
C2308	SMG C	CE04W25V-47M(SMG)	1	395054707ST	
C2352	SMG C	CE04W16V-220M(SMG)	1	395042217ST	
C2353	SMG C	CE04W25V-47M(SMG)	1	395054707ST	
C2356	SMG C	CE04W16V-220M(SMG)	1	395042217ST	
C2358	SMG C	CE04W25V-47M(SMG)	1	395054707ST	
C2402	ELECTROLYTIC CAPACITOR	CE04W16V-56M(LXY)	1	3500244ST	
C2404	ELECTROLYTIC CAPACITOR	CE04W16V-56M(LXY)	1	3500244ST	
C2471	ELECTROLYTIC CAPACITOR	CE04W16V-56M(LXY)	1	3500244ST	
C2491	ELECTROLYTIC CAPACITOR	CE04W16V-56M(LXY)	1	3500244ST	
C2511	ELECTROLYTIC CAPACITOR	CE04W16V-56M(LXY)	1	3500244ST	
C2531	ELECTROLYTIC CAPACITOR	CE04W16V-56M(LXY)	1	3500244ST	
C2551	ELECTROLYTIC CAPACITOR	CE04W16V-56M(LXY)	1	3500244ST	
C2571	ELECTROLYTIC CAPACITOR	CE04W16V-56M(LXY)	1	3500244ST	
C2591	ELECTROLYTIC CAPACITOR	CE04W16V-56M(LXY)	1	3500244ST	
C2611	ELECTROLYTIC CAPACITOR	CE04W16V-56M(LXY)	1	3500244ST	
C2631	ELECTROLYTIC CAPACITOR	CE04W16V-56M(LXY)	1	3500244ST	
C2651	ELECTROLYTIC CAPACITOR	CE04W16V-56M(LXY)	1	3500244ST	
C2671	ELECTROLYTIC CAPACITOR	CE04W16V-56M(LXY)	1	3500244ST	
C2691	ELECTROLYTIC CAPACITOR	CE04W16V-56M(LXY)	1	3500244ST	
C2711	ELECTROLYTIC CAPACITOR	CE04W16V-56M(LXY)	1	3500244ST	
C2743	SMG C	CE04W35V-100M(SMG)	1	395061017ST	
C2744	SMG C	CE04W35V-100M(SMG)	1	395061017ST	
C2751	SMG C	CE04W16V-220M(SMG)	1	395042217ST	
C2760	ELECTROLYTIC CAPACITOR	CE04W16V-56M(LXY)	1	3500244ST	
C2764	ELECTROLYTIC CAPACITOR	CE04W10V-100M(ZL)	1	3500269ST	
C2765	ELECTROLYTIC CAPACITOR	CE04W16V-56M(LXY)	1	3500244ST	
C2773	ELECTROLYTIC CAPACITOR	CE04W10V-100M(ZL)	1	3500269ST	
C2777	ELECTROLYTIC CAPACITOR	CE04W10V-100M(ZL)	1	3500269ST	
C2782	SMG C	CE04W25V-47M(SMG)	1	395054707ST	
C2806	ELECTROLYTIC CAPACITOR	CE04W10V-100M(ZL)	1	3500269ST	
C2811	SMG C	CE04W25V-47M(SMG)	1	395054707ST	
C2831	SMG C	CE04W50V-22M(SMG)	1	395082207ST	
C2832	SMG C	CE04W50V-22M(SMG)	1	395082207ST	
C2839	SMG C	CE04W50V-10M(SMG)	1	395081007ST	
C2840	SMG C	CE04W50V-10M(SMG)	1	395081007ST	
C2856	ELECTROLYTIC CAPACITOR	CE04W10V-100M(ZL)	1	3500269ST	
C2861	SMG C	CE04W25V-47M(SMG)	1	395054707ST	
C2881	SMG C	CE04W50V-22M(SMG)	1	395082207ST	
C2882	SMG C	CE04W50V-22M(SMG)	1	395082207ST	

C2889	SMG C	CE04W50V-10M(SMG)	1	395081007ST	
C2890	SMG C	CE04W50V-10M(SMG)	1	395081007ST	
[Resistors]					
[Switches, Terminals, Wires]					
P2201	PIN JACK	NPJ-2PDO803	1	25046075	
P2202	PHOTO COUPLER	JSR1165-001recieving	1	24120143	
P2203	PHOTO COUPLER	JSR1165-001recieving	1	24120143	
P2204	PHOTO COUPLER	JSR1165-001recieving	1	24120143	

BADIS-2074-1L

<Note>

1. Parts marked by "**NSP**" are generally unavailable because they are not in our Master Spare Parts List.
2. The ! mark found on some component parts indicates the importance of the safety factor of the part.
   Therefore, when replacing, be sure to use parts of identical designation.

: NSP

REF. NO.	PART NAME	DESCRIPTION	Q'TY	PART NO. (SN)	REMARKS
[Semi-conductors]					
D5411	DIODE	D2SB60A	1	22380366F	
D5412	DIODE	SARS01	1	22380397	
D5413	DIODE	SARS01	1	22380397	
D5451	DIODE	FMEN-220A	1	22380396	
D5962	LED	SLR343BC4T	1	225470	
D7554	LED	SLR343BC4T	1	225470	
D7555	LED	SLR343BC4T	1	225470	
D7556	LED	SLR343BC4T	1	225470	
D7557	LED	SLR343BC4T	1	225470	
D7558	LED	SLR343BC4T	1	225470	
Q5411	HYBRID IC	STR2A153	1	22242995	
Q5412	PHOTO COUPLER	TLP781(GR)	1	24120175	
Q7558	FLUORESCENT TUBE	016MT097GINYK	1	212286A	
Q7652	REMOTE SENSOR	GP1UE274XKC4	1	24130029	
Q7652or	REMOTE SENSOR	R2113TH-5AD	(1)	24130033	**N**
[Transformers, Coils]					
L5401	CHOKE COIL	PFC2225C	1	231490	
L5411	LINE FILTER	HF2318-A303Y0R6-01	1	231501	
L5451	CHOKE COIL	RP1315BNP-100M	1	231466M100	
T5411	POWER TRANSFORMER	ATK7006-A	1	2302140	**!**
[Capacitors]					
C5403	CERAMIC CAPACITOR	DE2F3KY103MA4BM02	1	3300083	
C5411	IS TYPE CAPACITOR	LE104-MX-C3.5	1	3800049S	**!**
C5412	ELECTROLYTIC CAPACITOR	CE69W400V-100M(KMM)	1	3504524	
C5413	ELECTROLYTIC CAPACITOR	CE04W50V-22M(LXZ)	1	3500248T	**N**
C5414	FILM C	ECQE6222KF	1	3700116	
C5421	IS TYPE CAPACITOR	DE1E3KX152MB5BA01	1	3300062S	**!**
C5422	IS TYPE CAPACITOR	DE1E3KX152MB5BA01	1	3300062S	**!**
C5451	ELECTROLYTIC CAPACITOR	CE04W10V-4700M(LXZ)	1	3500247S	
C5453	PW TYPE ELECTROLYTIC CAPACITOR	CE04W10V-470M(PW)	1	393734717T	
C5712	SMG C	CE04W50V-10M(SMG)	1	395081007T	
C5717	SMG C	CE04W16V-100M(SMG)	1	395041017T	
C5718	SMG C	CE04W16V-100M(SMG)	1	395041017T	
C7588	SMG C	CE04W25V-47M(SMG)	1	395054707T	
C7655	SMG C	CE04W16V-100M(SMG)	1	395041017T	
[Resistors]					
R5414	RESISTOR	ERG1DJ154P	1	4000283F	
R5415	METAL OXIDE FILM RESISTOR	ERG1SJ680P	1	4400045	
R5416	METAL RESISTOR	ERX1SJR68H	1	4500343	
R7577	NON-FLAMMABLE CARBON FILM RESISTC	R25J-10	1	415471004T	
R7587	NON-FLAMMABLE CARBON FILM RESISTC	R25J-10	1	415471004T	
[Switches, Terminals, Wires]					
P5702	ST JACK	MSJ-035-12APCAG	1	25046035	
P5705	ST JACK	MSJ-064-13ABAGGR(O133)	1	25046036	
RL5401	RELAY	NRL-1P10A-DC5-207	1	25065731	
S5401	SLIDE SWITCH	SDKPA40700	1	25065734	
S5941	ROTARY ENCODER	XREB12504PVB30FINB1-2-24	1	25065729	**N**
S5981	ROTARY ENCODER	XREB12505PVB30FINB1-2-12	1	25065730	**N**

BAHDM-2086-1F

<Note>

1. Parts marked by "**NSP**" are generally unavailable because they are not in our Master Spare Parts List.
2. The ! mark found on some component parts indicates the importance of the safety factor of the part.
   Therefore, when replacing, be sure to use parts of identical designation.

: NSP

REF. NO.	PART NAME	DESCRIPTION	Q'TY	PART NO. (SN)	REMARKS
[Semi-conductors]					
[Transformers, Coils]					
[Capacitors]					
[Resistors]					
[Switches, Terminals, Wires]					

BAPRC-2072-1F

<Note>

1. Parts marked by "**NSP**" are generally unavailable because they are not in our Master Spare Parts List.
2. The ! mark found on some component parts indicates the importance of the safety factor of the part.
   Therefore, when replacing, be sure to use parts of identical designation.

: NSP

REF. NO.	PART NAME	DESCRIPTION	Q'TY	PART NO. (SN)	REMARKS
[Semi-conductors]					
[Transformers, Coils]					
[Capacitors]					
[Resistors]					
[Switches, Terminals, Wires]					

BAPS-2089-1D

<Note>

1. Parts marked by "**NSP**" are generally unavailable because they are not in our Master Spare Parts List.
2. The ! mark found on some component parts indicates the importance of the safety factor of the part.
   Therefore, when replacing, be sure to use parts of identical designation.

: NSP

REF. NO.	PART NAME	DESCRIPTION	Q'TY	PART NO. (SN)	REMARKS
[Semi-conductors]					
D7401	DIODE	LN6SB60	1	22380399	
D7402	DIODE	LN6SB60	1	22380399	
Q7211	TRANSISTOR	2SD2400A-D	1	2202734	
Q7212	TRANSISTOR	2SB1569A-D	1	2202724	
Q7241	HYBRID IC	78M15HF(NJM78M15FA)	1	222780155JRC	
Q7251	HYBRID IC	78M12HF(NJM78M12FA)	1	222780125JRC	
Q7252	HYBRID IC	79M12HF(NJM79M12FA)	1	222790125JRC	
Q7271	HYBRID IC	78M08HF(NJM78M08FA)	1	222780085JRC	
Q7272	HYBRID IC	79M08HF(NJM79M08FA)	1	222790085JRC	
Q7273	HYBRID IC	78M15HF(NJM78M15FA)	1	222780155JRC	
X1	CRYSTAL	HC-49S 9B12.000MHz	1	3010533	
[Transformers, Coils]					
L5	ANTENNA COIL	K7-D	1	232212	
[Capacitors]					
C7213	SMG C	CE04W16V-100M(SMG)	1	395041017T	
C7214	SMG C	CE04W16V-100M(SMG)	1	395041017T	
C7215	SMG C	CE04W50V-10M(SMG)	1	395081007T	
C7219	SMG C	CE04W50V-10M(SMG)	1	395081007T	
C7221	SMG C	CE04W25V-47M(SMG)	1	395054707T	
C7241	SMG C	CE04W25V-2200M(SMG)	1	395052227S	
C7244	SMG C	CE04W50V-22M(SMG)	1	395082207T	
C7246	SMG C	CE04W35V-220M(SMG)	1	395062217T	
C7251	SMG C	CE04W25V-2200M(SMG)	1	395052227S	
C7252	SMG C	CE04W25V-2200M(SMG)	1	395052227S	
C7255	SMG C	CE04W35V-220M(SMG)	1	395062217T	
C7256	SMG C	CE04W35V-220M(SMG)	1	395062217T	
C7271	SMG C	CE04W16V-2200M(SMG)	1	395042227S	
C7272	SMG C	CE04W16V-2200M(SMG)	1	395042227S	
C7293	SMG C	CE04W16V-220M(SMG)	1	395042217T	
C7294	SMG C	CE04W16V-220M(SMG)	1	395042217T	
C7298	SMG C	CE04W35V-220M(SMG)	1	395062217T	
C7401	ELECTROLYTIC CAPACITOR	CE69W80V-10000M_LKS1K10	1	3504527	
C7402	ELECTROLYTIC CAPACITOR	CE69W80V-10000M_LKS1K10	1	3504527	
[Resistors]					
R7211	NON-FLAMMABLE CARBON FILM RESISTC	R25J-1.0K	1	415471024T	
R7213	NON-FLAMMABLE CARBON FILM RESISTC	R25J-1.0K	1	415471024T	
R7403	NON-FLAMMABLE CARBON FILM RESISTC	R25J-10	1	415471004T	
[Switches, Terminals, Wires]					
P1	TERMINAL	NTM-1PDSC438	1	25060516	
P2	TERMINAL	NTM-2PDML439	1	25060517	

BAPS-2092-1B

<Note>

1. Parts marked by "**NSP**" are generally unavailable because they are not in our Master Spare Parts List.
2. The ! mark found on some component parts indicates the importance of the safety factor of the part.
   Therefore, when replacing, be sure to use parts of identical designation.

: NSP

REF. NO.	PART NAME	DESCRIPTION	Q'TY	PART NO. (SN)	REMARKS
[Semi-conductors]					
D9751	DIODE	D3SBA60	1	22380272F	
Q9501	HYBRID IC	78M12HF(NJM78M12FA)	1	222780125JRC	
Q9502	HYBRID IC	79M12HF(NJM79M12FA)	1	222790125JRC	
Q9521	HYBRID IC	78M06HF(NJM78M06FA)	1	222780065JRC	
Q9531	HYBRID IC	78M12HF(NJM78M12FA)	1	222780125JRC	
Q9551	HYBRID IC	78M05(NJM78M05FA)	1	222780055JRC	
[Transformers, Coils]					
[Capacitors]					
C9507	SMG C	CE04W25V-3300M(SMG)	1	395053327S	**N**
C9508	SMG C	CE04W25V-3300M(SMG)	1	395053327S	**N**
C9515	SMG C	CE04W35V-220M(SMG)	1	395062217T	
C9516	SMG C	CE04W35V-220M(SMG)	1	395062217T	
C9522	SMG C	CE04W25V-2200M(SMG)	1	395052227S	**N**
C9524	SMG C	CE04W10V-220M(SMG)	1	395032217T	
C9536	SMG C	CE04W35V-1000M(SMG)	1	395061027S	**N**
C9537	SMG C	CE04W35V-470M(SMG)	1	395064717S	**N**
C9539	SMG C	CE04W50V-10M(SMG)	1	395081007T	
C9552	SMG C	CE04W16V-1000M(SMG)	1	395041027S	**N**
C9554	SMG C	CE04W16V-100M(SMG)	1	395041017T	
C9571	SMG C	CE04W63V-47M(SMG)	1	395074707T	**N**
C9572	SMG C	CE04W50V-47M(SMG)	1	395084707T	
C9573	SMG C	CE04W50V-47M(SMG)	1	395084707T	
C9760	SMG C	CE04W16V-4700M(SMG)	1	395044727S	**N**
[Resistors]					
R9533	NON-FLAMMABLE CARBON FILM RESISTC	R25J-4.7	1	415470474T	
[Switches, Terminals, Wires]					
P5801	ST JACK	MSJ-035-12APCAG	1	25046035	
P5802	ST JACK	HSJ1002-016010	1	25046044	
P5803	ST JACK	HSJ1002-016010	1	25046044	

SC-LX901(S)MGP

<Note>

1. Parts marked by "**NSP**" are generally unavailable because they are not in our Master Spare Parts List.
2. The ! mark found on some component parts indicates the importance of the safety factor of the part.
   Therefore, when replacing, be sure to use parts of identical designation.

: NSP

(S) : Silver color model
<MGP> : 220-230V
CE(European) model

REF. NO.	PART NAME	DESCRIPTION	Q'TY	PART NO. (SN)	REMARKS
[Cabinet, Chassis, Screws, Nuts]					
1	REAR PANEL	LX901MGP	1	27124771A	**N**
2	COVER	LX901(S) (Bent)	1	28210157	**N**
3	COVER	(IR)LX901 (Bent)	1	28210161B	
4	BOTTOM LEG	(PI)(G)	4	27175481	
5	SHEET	SP_LX901	1	29096191	
6	CUSHION CIRCLE 14B	.	8	AED7081-A	
7	HEAT COND SHEET	.	11	AEB7434-A	
8	BUSH/ANT	.	2	AMR7706-B	
9	HOLDER	(PLUG)	1	27191418A	
10	DOOR SPRING (SUS)	.	1	ABK7061-A	
11	SHAFT/DOR	.	1	AMR7704-A	
12	DOOR	SLV	1	ANB7646-A	**N**
13	DAMPER/DOR	.	1	AXA7159-A	
14	BASE	SLD	1	AMR7636-A	**N**
15	KNOV ASSY	SLV	2	AAA7071-C	**N**
16	RING	STB	1	AAK8574-A	**N**
17	CLEAR PLATE	.	1	28192487	
18	FILTER	81HY(PC)	1	AAK8459-A	**N**
19	FRONT PANEL	LX901(S)	1	27213886A	
20	FRONT BRACKET	(Silver)	1	27111642	**N**
21	BADGE	(PI)(B)	1	28135324	**N**
22	BUTTON ASSY	STB	1	AAD7807-A	**N**
23	RING	.	2	ABH7213-A	
24	VOL STABILIZER LX85	.	2	AEC7644-A	
26	LABEL	.	1	AAX8244-A	
28	NUT	NK90FTC	2	865190	
[Transformers, Coils]					
50	POWER TRANSFORMER	NPT-1676PQ	1	2302173	**!, N**
[Switches, Terminals, Wires]					
60	FUSE	5A-SE-EAK FUSE	1	252078GR	**!**
61	FUSE	215004.MXP	1	252408	**!**
62	FUSE	1A-SE-EAK FUSE	1	252070GR	**!**
63	FUSE	0.8A-SE-EAK FSBFUSE	1	252069GR	**!**
64	FUSE	0.8A-SE-EAK FSBFUSE	1	252069GR	**!**
65	FUSE	1A-SE-EAK FUSE	1	252070GR	**!**
66	FUSE	1A-SE-EAK FUSE	1	252070GR	**!**
67	FUSE	0.8A-SE-EAK FSBFUSE	1	252069GR	**!**
68	FUSE	0.8A-SE-EAK FSBFUSE	1	252069GR	**!**
69	FUSE	1A-SE-EAK FUSE	1	252070GR	**!**
70	FUSE	1A-SE-EAK FUSE	1	252070GR	**!**
71	FUSE	1A-SE-EAK FUSE	1	252070GR	**!**
72	FUSE	1.6A-SE-EAK IECFUSE	1	252073GR	**!, N**
73	LABEL	T1.6AL250V	1	29361769	
74	FLEXIBLE FLAT CABLE	NCFC7-070712	1	2047070712	**N**
75	FLEXIBLE FLAT CABLE	NCFC5-351512	1	2045351512	**N**
76	ASSEMBLED PWB	WCBN806L	1	24150135	**N**
77	WIFI BT ANTENNA	RFDPA870918EMLB302	1	2050102	**N**
78	WIFI BT ANTENNA	RFDPA870940EMLB303	1	2050103	**N**
79	FLEXIBLE FLAT CABLE	NCFC7-210812	1	204321045	**N**
80	P RIVET	JB-407A-C	22	880052	

81	FLEXIBLE FLAT CABLE	ADD7725-A	1	204315043		
82	FLEXIBLE FLAT CABLE	NCFC7-133012	1	2047133012	N	
83	FAN	2410RL-04W-S29-C07	1	24502340		
84	FLEXIBLE FLAT CABLE	NCFC5-351212	1	2045351212	N	
85	FLEXIBLE FLAT CABLE	ADD7783-A	1	204405062		
86	CORD ASSEMBLY	TYX1622-114047	1	2010519		
[Frontend, Units]						
200	**PARENT PC BOARD AS**	**BAPRC-2072-1F-P**	**1**	**1B5142072-1F901MGP**	**N**	**Parent**
202	Processing circuit pc board AS	BAPRC-2072-1F	1	1B5142072-1F-C901MGP	N	Child
250	**PARENT PC BOARD AS**	**BADIS-2074-1K-P**	**1**	**1B5142074-1K**	**N**	**Parent**
252	Display circuit pc board AS	BADIS-2074-1K	1	1B5142074-1K-C	N	Child
254	Switch circuit pc board AS	BASW-2116-1K	1	1B5142116-1K-C	N	Child
256	Switch circuit pc board AS	BASW-2117-1K	1	1B5142117-1K-C	N	Child
258	Power supply circuit pc board AS	BAPS-2118-1K	1	1B5142118-1K-C	N	Child
260	Et cetra pc board AS	BAETC-2119-1K	1	1B5142119-1K-C	N	Child
262	Switch circuit pc board AS	BASW-2120-1K	1	1B5142120-1K-C	N	Child
264	Et cetra pc board AS	BAETC-2121-1K	1	1B5142121-1K-C	N	Child
266	Et cetra pc board AS	BAETC-2186-1K	1	1B5142186-1K-C	N	Child
268	Et cetra pc board AS	BAETC-2216-1K	1	1B5142216-1K-C	N	Child
300	**PARENT PC BOARD AS**	**BADG-2077-1F-P**	**1**	**1B5142077-1F**	**N**	**Parent**
302	Digital circuit pc board AS	BADG-2077-1F	1	1B5142077-1F-C	N	Child
350	**PARENT PC BOARD AS**	**BAASP-2080-1F-P**	**1**	**1B5142080-1F**	**N**	**Parent**
352	Audio signal processor circuit pc board AS	BAASP-2080-1F	1	1B5142080-1F-C	N	Child
354	Video circuit pc board AS	BAVD-2147-1F	1	1B5142147-1F-C	N	Child
356	Video circuit pc board AS	BAVD-2148-1F	1	1B5142148-1F-C	N	Child
358	Et cetra pc board AS	BAETC-2149-1F	1	1B5142149-1F-C	N	Child
360	Et cetra pc board AS	BAETC-2150-1F	1	1B5142150-1F-C	N	Child
400	**PARENT PC BOARD AS**	**BAAF-2081-1B-P**	**1**	**1B5142081-1B**	**N**	**Parent**
402	Audio freqency circuit pc board AS	BAAF-2081-1B	1	1B5142081-1B-C		Child
404	Et cetra pc board AS	BAETC-2157-1B	1	1B5142157-1B-C		Child
406	Audio freqency circuit pc board AS	BAAF-2255-1B	1	1B5142255-1B-C		Child
450	**PARENT PC BOARD AS**	**BAAF-2083-1D-P**	**1**	**1B5142083-1D**	**N**	**Parent**
452	Audio freqency circuit pc board AS	BAAF-2083-1D	1	1B5142083-1D-C	N	Child
500	**PARENT PC BOARD AS**	**BAHDM-2086-1F-P**	**1**	**1B5142086-1F**	**N**	**Parent**
502	HDMI circuit pc board AS	BAHDM-2086-1F	1	1B5142086-1F-C	N	Child
550	**PARENT PC BOARD AS**	**BAPS-2089-1D-P**	**1**	**1B5142089-1D**	**N**	**Parent**
552	Power supply circuit pc board AS	BAPS-2089-1D	1	1B5142089-1D-C	N	Child
554	Et cetra pc board AS	BAETC-2163-1D	1	1B5142163-1D-C	N	Child
556	Power supply circuit pc board AS	BAPS-2164-1D	1	1B5142164-1D-C	N	Child
558	Et cetra pc board AS	BAETC-2165-1D	1	1B5142165-1D-C	N	Child
560	Et cetra pc board AS	BAETC-2166-1D	1	1B5142166-1D-C	N	Child
562	Et cetra pc board AS	BAETC-2167-1D	1	1B5142167-1D-C	N	Child
564	Et cetra pc board AS	BAETC-2169-1D	1	1B5142169-1D-C	N	Child
566	Et cetra pc board AS	BAETC-2170-1D	1	1B5142170-1D-C	N	Child
568	Et cetra pc board AS	BAETC-2171-1D	1	1B5142171-1D-C	N	Child
570	Et cetra pc board AS	BAETC-2174-1D	1	1B5142174-1D-C	N	Child
572	Et cetra pc board AS	BAETC-2202-1D	1	1B5142202-1D-C	N	Child
574	Radio freqency circuit pc board AS	BARF-2208-1D	1	1B5142208-1D-C	N	Child
600	**PARENT PC BOARD AS**	**BAPS-2092-1B-P**	**1**	**1B5142092-1B**	**N**	**Parent**
602	Power supply circuit pc board AS	BAPS-2092-1B	1	1B5142092-1B-C	N	Child
604	Et cetra pc board AS	BAETC-2200-1B	1	1B5142200-1B-C	N	Child
606	Et cetra pc board AS	BAETC-2201-1B	1	1B5142201-1B-C	N	Child
608	Et cetra pc board AS	BAETC-2203-1B	1	1B5142203-1B-C	N	Child
612	Power supply circuit pc board AS	BAPS-2205-1B	1	1B5142205-1B-C	N	Child
614	Et cetra pc board AS	BAETC-2206-1B	1	1B5142206-1B-C	N	Child
650	**PARENT PC BOARD AS**	**BACLD-2095-1E-P**	**1**	**1B5142095-1E**	**N**	**Parent**
652	ClassD amplifier circuit pc board AS	BACLD-2095-1E	1	1B5142095-1E-C	N	Child
702	SHIELD CASE	(TUNER-BTM)	1	27225207A	N	
704	SHIELD CASE	(UPPER)	1	27225208		

[Packing]					
900	PAD	.	1	AHA7502-B	N
902	PAD	.	1	AHA7500-B	N
904	CARTON	LX901S(GP)	1	29055654	
906	PACKING PAD/S	.	1	AHA7499-A	N
908	LABEL	(fwup-wo-dtsx)CNT_EU	1	29393393	
[Accessories]					
950	FM ANT AS	Type W	1	292191	
952	MIC	KHM0018-010010	1	245051	
954	WARRANTY CARD	(Pi-EU2016)	1	29365227A	
956	ANTENNA COIL	AM LOOP-ANTENNA	1	232207	
956 or	ANTENNA COIL	AM LOOP ANTENNA (S&O)	(1)	232216	
958	REMOTE CONTROL TRANSMITTER	RC-927R	1	24140927	
960	POWER SUPPLY CORD	ADG7119-A	1	253468VOL	!
962	INSTRUCTION MANUAL	LX901MGP(En,Fr,Es)	1	29402403	N
964	INSTRUCTION MANUAL	LX901MGP(It,De,Ni)	1	29402404	N
966	INSTRUCTION MANUAL	LX901MGP(Ru)	1	29402405	N
968	INSTRUCTION MANUAL	Safety_Pio_16Hi_U9	1	29402498	N
970	INSTRUCTION SHEET	(Google cast)	1	29355956	
974	INSTRUCTION SHEET	(FWupdate-Fireconnect)	1	29355967	N

BAAF-2081-1B

<Note>

1. Parts marked by **"NSP"** are generally unavailable because they are not in our Master Spare Parts List.
2. The ! mark found on some component parts indicates the importance of the safety factor of the part.
   Therefore, when replacing, be sure to use parts of identical designation.

: NSP

REF. NO.	PART NAME	DESCRIPTION	Q'TY	PART NO. (SN)	REMARKS
[Switches, Terminals, Wires]					

BAAF-2083-1D

<Note>

1. Parts marked by **"NSP"** are generally unavailable because they are not in our Master Spare Parts List.
2. The ! mark found on some component parts indicates the importance of the safety factor of the part.
   Therefore, when replacing, be sure to use parts of identical designation.

: NSP

REF. NO.	PART NAME	DESCRIPTION	Q'TY	PART NO. (SN)	REMARKS
[Semi-conductors]					
[Capacitors]					
[Resistors]					
[Switches, Terminals, Wires]					

BAASP-2080-1F

<Note>

1. Parts marked by "**NSP**" are generally unavailable because they are not in our Master Spare Parts List.
2. The ! mark found on some component parts indicates the importance of the safety factor of the part.
   Therefore, when replacing, be sure to use parts of identical designation.

: NSP

REF. NO.	PART NAME	DESCRIPTION	Q'TY	PART NO. (SN)	REMARKS
[Semi-conductors]					
Q301	HYBRID IC	BD34704KS2	1	22242977R3	
Q321	HYBRID IC	NJW1194	1	22242893R2	
Q371	HYBRID IC	NJW1194	1	22242893R2	
Q511	TRANSISTOR	2SD2400A-D	1	2202734	
Q512	TRANSISTOR	2SB1569A-D	1	2202724	
Q571	HYBRID IC	BD34704KS2	1	22242977R3	
[Capacitors]					
C103	SMG C	CE04W25V-47M(SMG)	1	395054707ST	
C104	SMG C	CE04W25V-47M(SMG)	1	395054707ST	
C115	SMG C	CE04W10V-220M(SMG)	1	395032217ST	
C116	SMG C	CE04W10V-220M(SMG)	1	395032217ST	
C117	SMG C	CE04W50V-10M(SMG)	1	395081007ST	
C118	SMG C	CE04W50V-10M(SMG)	1	395081007ST	
C121	SMG C	CE04W16V-220M(SMG)	1	395042217ST	
C122	SMG C	CE04W16V-220M(SMG)	1	395042217ST	
C135	ELECTROLYTIC CAPACITOR	CE04W16V-56M(LXY)	1	3500244ST	
C136	ELECTROLYTIC CAPACITOR	CE04W16V-56M(LXY)	1	3500244ST	
C139	SMG C	CE04W50V-22M(SMG)	1	395082207ST	
C140	SMG C	CE04W50V-22M(SMG)	1	395082207ST	
C145	SMG C	CE04W50V-22M(SMG)	1	395082207ST	
C146	SMG C	CE04W50V-22M(SMG)	1	395082207ST	
C155	SMG C	CE04W50V-22M(SMG)	1	395082207ST	
C156	SMG C	CE04W50V-22M(SMG)	1	395082207ST	
C165	SMG C	CE04W50V-22M(SMG)	1	395082207ST	
C166	SMG C	CE04W50V-22M(SMG)	1	395082207ST	
C175	SMG C	CE04W50V-22M(SMG)	1	395082207ST	
C176	SMG C	CE04W50V-22M(SMG)	1	395082207ST	
C185	SMG C	CE04W50V-22M(SMG)	1	395082207ST	
C186	SMG C	CE04W50V-22M(SMG)	1	395082207ST	
C203	SMG C	CE04W50V-22M(SMG)	1	395082207ST	
C204	SMG C	CE04W50V-22M(SMG)	1	395082207ST	
C232	SMG C	CE04W50V-22M(SMG)	1	395082207ST	
C263	SMG C	CE04W50V-22M(SMG)	1	395082207ST	
C264	SMG C	CE04W50V-22M(SMG)	1	395082207ST	
C283	SMG C	CE04W50V-22M(SMG)	1	395082207ST	
C284	SMG C	CE04W50V-22M(SMG)	1	395082207ST	
C2955	SMG C	CE04W25V-47M(SMG)	1	395054707ST	
C2956	SMG C	CE04W25V-47M(SMG)	1	395054707ST	
C301	ELECTROLYTIC CAPACITOR	CE04W10V-100M(KY)	1	3500272ST	
C302	ELECTROLYTIC CAPACITOR	CE04W10V-100M(KY)	1	3500272ST	
C321	SMG C	CE04W25V-47M(SMG)	1	395054707ST	
C322	SMG C	CE04W25V-47M(SMG)	1	395054707ST	
C323	SMG C	CE04W16V-100M(SMG)	1	395041017ST	
C324	SMG C	CE04W16V-100M(SMG)	1	395041017ST	
C329	SMG C	CE04W50V-4.7M(SMG)	1	395080477ST	
C330	SMG C	CE04W50V-4.7M(SMG)	1	395080477ST	
C331	SMG C	CE04W50V-10M(SMG)	1	395081007ST	
C337	SMG C	CE04W50V-10M(SMG)	1	395081007ST	
C338	SMG C	CE04W50V-10M(SMG)	1	395081007ST	
C353	ELECTROLYTIC CAPACITOR	CE04W16V-56M(LXY)	1	3500244ST	

C354	ELECTROLYTIC CAPACITOR	CE04W16V-56M(LXY)	1	3500244ST	
C371	SMG C	CE04W25V-47M(SMG)	1	395054707ST	
C372	SMG C	CE04W25V-47M(SMG)	1	395054707ST	
C373	SMG C	CE04W16V-100M(SMG)	1	395041017ST	
C374	SMG C	CE04W16V-100M(SMG)	1	395041017ST	
C379	SMG C	CE04W50V-4.7M(SMG)	1	395080477ST	
C380	SMG C	CE04W50V-4.7M(SMG)	1	395080477ST	
C381	SMG C	CE04W50V-10M(SMG)	1	395081007ST	
C387	SMG C	CE04W50V-10M(SMG)	1	395081007ST	
C388	SMG C	CE04W50V-10M(SMG)	1	395081007ST	
C431	SMG C	CE04W50V-22M(SMG)	1	395082207ST	
C432	SMG C	CE04W50V-22M(SMG)	1	395082207ST	
C441	SMG C	CE04W50V-1M(SMG)	1	395080107ST	
C442	SMG C	CE04W50V-1M(SMG)	1	395080107ST	
C449	SMG C	CE04W16V-470M(SMG)	1	395044717T	
C450	SMG C	CE04W16V-470M(SMG)	1	395044717T	
C453	SMG C	CE04W25V-100M(SMG)	1	395051017ST	
C454	SMG C	CE04W25V-100M(SMG)	1	395051017ST	
C475	SMG C	CE04W25V-47M(SMG)	1	395054707ST	
C476	SMG C	CE04W25V-47M(SMG)	1	395054707ST	
C481	SMG C	CE04W16V-100M(SMG)	1	395041017ST	
C482	SMG C	CE04W16V-100M(SMG)	1	395041017ST	
C501	SMG C	CE04W16V-100M(SMG)	1	395041017ST	
C502	SMG C	CE04W16V-100M(SMG)	1	395041017ST	
C519	SMG C	CE04W50V-2.2M(SMG)	1	395080227ST	
C520	SMG C	CE04W50V-2.2M(SMG)	1	395080227ST	
C529	SMG C	CE04W50V-10M(SMG)	1	395081007ST	
C530	SMG C	CE04W50V-10M(SMG)	1	395081007ST	
C543	SMG C	CE04W25V-100M(SMG)	1	395051017ST	
C546	SMG C	CE04W16V-100M(SMG)	1	395041017ST	
C551	SMG C	CE04W16V-100M(SMG)	1	395041017ST	
C552	SMG C	CE04W16V-100M(SMG)	1	395041017ST	
C571	ELECTROLYTIC CAPACITOR	CE04W10V-100M(KY)	1	3500272ST	
C572	ELECTROLYTIC CAPACITOR	CE04W10V-100M(KY)	1	3500272ST	
C581	SMG C	CE04W50V-10M(SMG)	1	395081007ST	
C582	SMG C	CE04W50V-10M(SMG)	1	395081007ST	
C583	SMG C	CE04W50V-10M(SMG)	1	395081007ST	
C584	SMG C	CE04W50V-10M(SMG)	1	395081007ST	
C585	ELECTROLYTIC CAPACITOR	CE04W50V-18M(LXY)	1	3500246ST	
C586	ELECTROLYTIC CAPACITOR	CE04W50V-18M(LXY)	1	3500246ST	
C603	SMG C	CE04W50V-22M(SMG)	1	395082207ST	
C604	SMG C	CE04W50V-22M(SMG)	1	395082207ST	
C623	SMG C	CE04W50V-22M(SMG)	1	395082207ST	
C624	SMG C	CE04W50V-22M(SMG)	1	395082207ST	
C641	ELECTROLYTIC CAPACITOR	CE04W25V-100M(KY)	1	3500273ST	
C642	ELECTROLYTIC CAPACITOR	CE04W25V-100M(KY)	1	3500273ST	
C671	SMG C	CE04W50V-10M(SMG)	1	395081007ST	
C672	SMG C	CE04W50V-10M(SMG)	1	395081007ST	
C681	SMG C	CE04W50V-10M(SMG)	1	395081007ST	
C682	SMG C	CE04W50V-10M(SMG)	1	395081007ST	
C701	SMG C	CE04W50V-10M(SMG)	1	395081007ST	
C702	SMG C	CE04W50V-10M(SMG)	1	395081007ST	
C801	SMG C	CE04W50V-10M(SMG)	1	395081007ST	
C802	SMG C	CE04W50V-10M(SMG)	1	395081007ST	
C803	SMG C	CE04W50V-10M(SMG)	1	395081007ST	
C804	SMG C	CE04W50V-10M(SMG)	1	395081007ST	
C805	SMG C	CE04W50V-10M(SMG)	1	395081007ST	
C806	SMG C	CE04W50V-10M(SMG)	1	395081007ST	
C821	SMG C	CE04W16V-100M(SMG)	1	395041017ST	
C831	SMG C	CE04W16V-100M(SMG)	1	395041017ST	
C841	SMG C	CE04W16V-100M(SMG)	1	395041017ST	

C847	SMG C	CE04W50V-1M(SMG)	1	395080107ST	
C848	SMG C	CE04W50V-1M(SMG)	1	395080107ST	
C849	SMG C	CE04W50V-1M(SMG)	1	395080107ST	
C851	SMG C	CE04W6.3V-470M(SMG)	1	395024717T	
C852	SMG C	CE04W6.3V-470M(SMG)	1	395024717T	
C853	SMG C	CE04W6.3V-470M(SMG)	1	395024717T	
C895	SMG C	CE04W16V-100M(SMG)	1	395041017ST	
[Resistors]					
[Switches, Terminals, Wires]					
P111	PIN JACK	RCA-207AG-01	1	25046060	
P131	PIN JACK	RCA-232G-00-02	1	25046061	
P141	PIN JACK	RCA-421EG-00-11	1	25046063	
P161	PIN JACK	RCA-421EG-00-11	1	25046063	
P181	PIN JACK	RCA-232G-00-02	1	25046061	
P201	PIN JACK	RCA-232G-00-02	1	25046061	
P231	PIN JACK	NPJ-1PDB804	1	25046076	
P241	PIN JACK	RCA-232G-00-06	1	25046062	
P261	PIN JACK	RCA-421EG-00-11	1	25046063	
P601	PIN JACK	RCA-421EG-00-11	1	25046063	
P671	PIN JACK	RCA-421EG-00-11	1	25046063	
P701	PIN JACK	MSP-2510V-25-GILT-ABS(O13	1	25046050	
P702	PIN JACK	MSP-2510V-25-GILT-ABS(O13	1	25046050	
P801	PIN JACK	MSD-243V-50-GILT(O133)	1	25046045	
P802	PIN JACK	MSD-243V-50-GILT(O133)	1	25046045	
P803	PIN JACK	MSD-243V-50-GILT(O133)	1	25046045	
RL551	RELAY	NRL-2P2A-DC24-208	1	25065728	

BACLD-2095-1E

<Note>

1. Parts marked by "**NSP**" are generally unavailable because they are not in our Master Spare Parts List.
2. The ! mark found on some component parts indicates the importance of the safety factor of the part.
   Therefore, when replacing, be sure to use parts of identical designation.

: NSP

REF. NO.	PART NAME	DESCRIPTION	Q'TY	PART NO. (SN)	REMARKS
[Semi-conductors]					
[Transformers, Coils]					
T4100	COIL	7G23G-200M-R	1	231519	
T4200	COIL	7G23G-200M-R	1	231519	
T4300	COIL	7G23G-200M-R	1	231519	
T4400	COIL	7G23G-200M-R	1	231519	
T4500	COIL	7G23G-200M-R	1	231519	
T4600	COIL	7G23G-200M-R	1	231519	
T4700	COIL	7G23G-200M-R	1	231519	
T4800	COIL	7G23G-200M-R	1	231519	
T4900	COIL	7G23G-200M-R	1	231519	
T6500	COIL	7G23G-200M-R	1	231519	
T6600	COIL	7G23G-200M-R	1	231519	
[Capacitors]					
C4008	SMG C	CE04W16V-100M(SMG)	1	395041017T	
C4010	SMG C	CE04W16V-100M(SMG)	1	395041017T	
C4023	SMG C	CE04W50V-10M(SMG)	1	395081007T	
C4024	SMG C	CE04W16V-100M(SMG)	1	395041017T	
C4036	SMG C	CE04W16V-100M(SMG)	1	395041017T	
C4052	SMG C	CE04W16V-100M(SMG)	1	395041017T	
C4053	SMG C	CE04W16V-100M(SMG)	1	395041017T	
C4057	ELECTROLYTIC CAPACITOR	CE69W80V-2700M_LGU1K27	1	3504536	
C4058	ELECTROLYTIC CAPACITOR	CE69W80V-2700M_LGU1K27	1	3504536	
C4059	ELECTROLYTIC CAPACITOR	CE69W80V-2700M_LGU1K27	1	3504536	
C4060	ELECTROLYTIC CAPACITOR	CE69W80V-2700M_LGU1K27	1	3504536	
C4061	ELECTROLYTIC CAPACITOR	CE69W80V-2700M_LGU1K27	1	3504536	
C4062	ELECTROLYTIC CAPACITOR	CE69W80V-2700M_LGU1K27	1	3504536	
C4063	ELECTROLYTIC CAPACITOR	CE04W25V-82M(LXY)	1	3500245T	
C4065	ELECTROLYTIC CAPACITOR	CE04W16V-56M(LXY)	1	3500244T	
C4066	ELECTROLYTIC CAPACITOR	CE04W16V-56M(LXY)	1	3500244T	
C4069	ELECTROLYTIC CAPACITOR	CE04W16V-56M(LXY)	1	3500244T	
C4070	ELECTROLYTIC CAPACITOR	CE04W16V-56M(LXY)	1	3500244T	
C4071	SMG C	CE04W16V-100M(SMG)	1	395041017T	
C4081	SMG C	CE04W16V-100M(SMG)	1	395041017T	
C4083	MICA CAPACITOR	DM15C201J5	1	3600032	
C4084	MICA CAPACITOR	DM15C201J5	1	3600032	
C4108	ELECTROLYTIC CAPACITOR	CE04W16V-470M(KY_H15)	1	3500274	
C4116	ELECTROLYTIC CAPACITOR	CE04W25V-82M(LXY)	1	3500245T	
C4130	ELECTROLYTIC CAPACITOR	CE04W50V-18M(LXY)	1	3500246ST	
C4134	ELECTROLYTIC CAPACITOR	CE04W50V-18M(LXY)	1	3500246ST	
C4136	ELECTROLYTIC CAPACITOR	CE04W50V-18M(LXY)	1	3500246ST	
C4149	ELECTROLYTIC CAPACITOR	UKT1K561MHMAPDCV	1	3500254S	
C4150	ELECTROLYTIC CAPACITOR	UKT1K561MHMAPDCV	1	3500254S	
C4166	SMG C	CE04W16V-100M(SMG)	1	395041017T	
C4167	SMG C	CE04W16V-100M(SMG)	1	395041017T	
C4171	SMG C	CE04W50V-10M(SMG)	1	395081007T	
C4208	ELECTROLYTIC CAPACITOR	CE04W16V-470M(KY_H15)	1	3500274	
C4216	ELECTROLYTIC CAPACITOR	CE04W25V-82M(LXY)	1	3500245T	
C4230	ELECTROLYTIC CAPACITOR	CE04W50V-18M(LXY)	1	3500246ST	
C4234	ELECTROLYTIC CAPACITOR	CE04W50V-18M(LXY)	1	3500246ST	
C4236	ELECTROLYTIC CAPACITOR	CE04W50V-18M(LXY)	1	3500246ST	

C4249	ELECTROLYTIC CAPACITOR	UKT1K561MHMAPDCV	1	3500254S	
C4250	ELECTROLYTIC CAPACITOR	UKT1K561MHMAPDCV	1	3500254S	
C4266	SMG C	CE04W16V-100M(SMG)	1	395041017T	
C4267	SMG C	CE04W16V-100M(SMG)	1	395041017T	
C4308	ELECTROLYTIC CAPACITOR	CE04W16V-470M(KY_H15)	1	3500274	
C4316	ELECTROLYTIC CAPACITOR	CE04W25V-82M(LXY)	1	3500245T	
C4330	ELECTROLYTIC CAPACITOR	CE04W50V-18M(LXY)	1	3500246ST	
C4334	ELECTROLYTIC CAPACITOR	CE04W50V-18M(LXY)	1	3500246ST	
C4336	ELECTROLYTIC CAPACITOR	CE04W50V-18M(LXY)	1	3500246ST	
C4349	ELECTROLYTIC CAPACITOR	UKT1K561MHMAPDCV	1	3500254S	
C4350	ELECTROLYTIC CAPACITOR	UKT1K561MHMAPDCV	1	3500254S	
C4366	SMG C	CE04W16V-100M(SMG)	1	395041017T	
C4367	SMG C	CE04W16V-100M(SMG)	1	395041017T	
C4371	SMG C	CE04W50V-10M(SMG)	1	395081007T	
C4408	ELECTROLYTIC CAPACITOR	CE04W16V-470M(KY_H15)	1	3500274	
C4416	ELECTROLYTIC CAPACITOR	CE04W25V-82M(LXY)	1	3500245T	
C4430	ELECTROLYTIC CAPACITOR	CE04W50V-18M(LXY)	1	3500246ST	
C4434	ELECTROLYTIC CAPACITOR	CE04W50V-18M(LXY)	1	3500246ST	
C4436	ELECTROLYTIC CAPACITOR	CE04W50V-18M(LXY)	1	3500246ST	
C4449	ELECTROLYTIC CAPACITOR	UKT1K561MHMAPDCV	1	3500254S	
C4450	ELECTROLYTIC CAPACITOR	UKT1K561MHMAPDCV	1	3500254S	
C4466	SMG C	CE04W16V-100M(SMG)	1	395041017T	
C4467	SMG C	CE04W16V-100M(SMG)	1	395041017T	
C4508	ELECTROLYTIC CAPACITOR	CE04W16V-470M(KY_H15)	1	3500274	
C4516	ELECTROLYTIC CAPACITOR	CE04W25V-82M(LXY)	1	3500245T	
C4530	ELECTROLYTIC CAPACITOR	CE04W50V-18M(LXY)	1	3500246ST	
C4534	ELECTROLYTIC CAPACITOR	CE04W50V-18M(LXY)	1	3500246ST	
C4536	ELECTROLYTIC CAPACITOR	CE04W50V-18M(LXY)	1	3500246ST	
C4549	ELECTROLYTIC CAPACITOR	UKT1K561MHMAPDCV	1	3500254S	
C4550	ELECTROLYTIC CAPACITOR	UKT1K561MHMAPDCV	1	3500254S	
C4566	SMG C	CE04W16V-100M(SMG)	1	395041017T	
C4567	SMG C	CE04W16V-100M(SMG)	1	395041017T	
C4571	SMG C	CE04W50V-10M(SMG)	1	395081007T	
C4608	ELECTROLYTIC CAPACITOR	CE04W16V-470M(KY_H15)	1	3500274	
C4616	ELECTROLYTIC CAPACITOR	CE04W25V-82M(LXY)	1	3500245T	
C4630	ELECTROLYTIC CAPACITOR	CE04W50V-18M(LXY)	1	3500246ST	
C4634	ELECTROLYTIC CAPACITOR	CE04W50V-18M(LXY)	1	3500246ST	
C4636	ELECTROLYTIC CAPACITOR	CE04W50V-18M(LXY)	1	3500246ST	
C4649	ELECTROLYTIC CAPACITOR	UKT1K561MHMAPDCV	1	3500254S	
C4650	ELECTROLYTIC CAPACITOR	UKT1K561MHMAPDCV	1	3500254S	
C4666	SMG C	CE04W16V-100M(SMG)	1	395041017T	
C4667	SMG C	CE04W16V-100M(SMG)	1	395041017T	
C4708	ELECTROLYTIC CAPACITOR	CE04W16V-470M(KY_H15)	1	3500274	
C4716	ELECTROLYTIC CAPACITOR	CE04W25V-82M(LXY)	1	3500245T	
C4730	ELECTROLYTIC CAPACITOR	CE04W50V-18M(LXY)	1	3500246ST	
C4734	ELECTROLYTIC CAPACITOR	CE04W50V-18M(LXY)	1	3500246ST	
C4736	ELECTROLYTIC CAPACITOR	CE04W50V-18M(LXY)	1	3500246ST	
C4738	ELECTROLYTIC CAPACITOR	CE04W16V-470M(KY_H15)	1	3500274	
C4749	ELECTROLYTIC CAPACITOR	UKT1K561MHMAPDCV	1	3500254S	
C4750	ELECTROLYTIC CAPACITOR	UKT1K561MHMAPDCV	1	3500254S	
C4766	SMG C	CE04W16V-100M(SMG)	1	395041017T	
C4767	SMG C	CE04W16V-100M(SMG)	1	395041017T	
C4771	SMG C	CE04W50V-10M(SMG)	1	395081007T	
C4808	ELECTROLYTIC CAPACITOR	CE04W16V-470M(KY_H15)	1	3500274	
C4816	ELECTROLYTIC CAPACITOR	CE04W25V-82M(LXY)	1	3500245T	
C4830	ELECTROLYTIC CAPACITOR	CE04W50V-18M(LXY)	1	3500246ST	
C4834	ELECTROLYTIC CAPACITOR	CE04W50V-18M(LXY)	1	3500246ST	
C4836	ELECTROLYTIC CAPACITOR	CE04W50V-18M(LXY)	1	3500246ST	
C4849	ELECTROLYTIC CAPACITOR	UKT1K561MHMAPDCV	1	3500254S	
C4850	ELECTROLYTIC CAPACITOR	UKT1K561MHMAPDCV	1	3500254S	
C4866	SMG C	CE04W16V-100M(SMG)	1	395041017T	

C4867	SMG C	CE04W16V-100M(SMG)	1	395041017T	
C4908	ELECTROLYTIC CAPACITOR	CE04W16V-470M(KY_H15)	1	3500274	
C4916	ELECTROLYTIC CAPACITOR	CE04W25V-82M(LXY)	1	3500245T	
C4930	ELECTROLYTIC CAPACITOR	CE04W50V-18M(LXY)	1	3500246ST	
C4934	ELECTROLYTIC CAPACITOR	CE04W50V-18M(LXY)	1	3500246ST	
C4936	ELECTROLYTIC CAPACITOR	CE04W50V-18M(LXY)	1	3500246ST	
C4949	ELECTROLYTIC CAPACITOR	UKT1K561MHMAPDCV	1	3500254S	
C4950	ELECTROLYTIC CAPACITOR	UKT1K561MHMAPDCV	1	3500254S	
C4966	SMG C	CE04W16V-100M(SMG)	1	395041017T	
C4967	SMG C	CE04W16V-100M(SMG)	1	395041017T	
C4971	SMG C	CE04W50V-10M(SMG)	1	395081007T	
C5071	SMG C	CE04W16V-100M(SMG)	1	395041017T	
C5072	SMG C	CE04W16V-100M(SMG)	1	395041017T	
C5184	ELECTROLYTIC CAPACITOR	CE04W16V-56M(LXY)	1	3500244T	
C5185	SMG C	CE04W50V-10M(SMG)	1	395081007T	
C6400	ELECTROLYTIC CAPACITOR	CE69W80V-2700M_LGU1K27	1	3504536	
C6401	ELECTROLYTIC CAPACITOR	CE69W80V-2700M_LGU1K27	1	3504536	
C6508	ELECTROLYTIC CAPACITOR	CE04W16V-470M(KY_H15)	1	3500274	
C6516	ELECTROLYTIC CAPACITOR	CE04W25V-82M(LXY)	1	3500245T	
C6530	ELECTROLYTIC CAPACITOR	CE04W50V-18M(LXY)	1	3500246ST	
C6534	ELECTROLYTIC CAPACITOR	CE04W50V-18M(LXY)	1	3500246ST	
C6536	ELECTROLYTIC CAPACITOR	CE04W50V-18M(LXY)	1	3500246ST	
C6549	ELECTROLYTIC CAPACITOR	UKT1K561MHMAPDCV	1	3500254S	
C6550	ELECTROLYTIC CAPACITOR	UKT1K561MHMAPDCV	1	3500254S	
C6566	SMG C	CE04W16V-100M(SMG)	1	395041017T	
C6567	SMG C	CE04W16V-100M(SMG)	1	395041017T	
C6571	SMG C	CE04W50V-10M(SMG)	1	395081007T	
C6608	ELECTROLYTIC CAPACITOR	CE04W16V-470M(KY_H15)	1	3500274	
C6616	ELECTROLYTIC CAPACITOR	CE04W25V-82M(LXY)	1	3500245T	
C6630	ELECTROLYTIC CAPACITOR	CE04W50V-18M(LXY)	1	3500246ST	
C6634	ELECTROLYTIC CAPACITOR	CE04W50V-18M(LXY)	1	3500246ST	
C6636	ELECTROLYTIC CAPACITOR	CE04W50V-18M(LXY)	1	3500246ST	
C6649	ELECTROLYTIC CAPACITOR	UKT1K561MHMAPDCV	1	3500254S	
C6650	ELECTROLYTIC CAPACITOR	UKT1K561MHMAPDCV	1	3500254S	
C6666	SMG C	CE04W16V-100M(SMG)	1	395041017T	
C6667	SMG C	CE04W16V-100M(SMG)	1	395041017T	
C6683	SMG C	CE04W50V-10M(SMG)	1	395081007T	
C6684	SMG C	CE04W50V-10M(SMG)	1	395081007T	
C6685	SMG C	CE04W50V-10M(SMG)	1	395081007T	
C6686	SMG C	CE04W50V-10M(SMG)	1	395081007T	
C6687	SMG C	CE04W50V-10M(SMG)	1	395081007T	
C6688	SMG C	CE04W50V-10M(SMG)	1	395081007T	
[Resistors]					
R4125	METAL PLATE RESISTOR	RGC5-0.22-OHM-K	1	4000284	
R4126	METAL PLATE RESISTOR	RGC5-0.22-OHM-K	1	4000284	
R4154	CEMENT RESISTOR	MNS05N100JW	1	4800083	
R4225	METAL PLATE RESISTOR	RGC5-0.22-OHM-K	1	4000284	
R4226	METAL PLATE RESISTOR	RGC5-0.22-OHM-K	1	4000284	
R4254	CEMENT RESISTOR	MNS05N100JW	1	4800083	
R4325	METAL PLATE RESISTOR	RGC5-0.22-OHM-K	1	4000284	
R4326	METAL PLATE RESISTOR	RGC5-0.22-OHM-K	1	4000284	
R4354	CEMENT RESISTOR	MNS05N100JW	1	4800083	
R4425	METAL PLATE RESISTOR	RGC5-0.22-OHM-K	1	4000284	
R4426	METAL PLATE RESISTOR	RGC5-0.22-OHM-K	1	4000284	
R4454	CEMENT RESISTOR	MNS05N100JW	1	4800083	
R4525	METAL PLATE RESISTOR	RGC5-0.22-OHM-K	1	4000284	
R4526	METAL PLATE RESISTOR	RGC5-0.22-OHM-K	1	4000284	
R4554	CEMENT RESISTOR	MNS05N100JW	1	4800083	
R4625	METAL PLATE RESISTOR	RGC5-0.22-OHM-K	1	4000284	
R4626	METAL PLATE RESISTOR	RGC5-0.22-OHM-K	1	4000284	
R4654	CEMENT RESISTOR	MNS05N100JW	1	4800083	

R4725	METAL PLATE RESISTOR	RGC5-0.22-OHM-K	1	4000284	
R4726	METAL PLATE RESISTOR	RGC5-0.22-OHM-K	1	4000284	
R4754	CEMENT RESISTOR	MNS05N100JW	1	4800083	
R4825	METAL PLATE RESISTOR	RGC5-0.22-OHM-K	1	4000284	
R4826	METAL PLATE RESISTOR	RGC5-0.22-OHM-K	1	4000284	
R4854	CEMENT RESISTOR	MNS05N100JW	1	4800083	
R4925	METAL PLATE RESISTOR	RGC5-0.22-OHM-K	1	4000284	
R4926	METAL PLATE RESISTOR	RGC5-0.22-OHM-K	1	4000284	
R4954	CEMENT RESISTOR	MNS05N100JW	1	4800083	
R6525	METAL PLATE RESISTOR	RGC5-0.22-OHM-K	1	4000284	
R6526	METAL PLATE RESISTOR	RGC5-0.22-OHM-K	1	4000284	
R6554	CEMENT RESISTOR	MNS05N100JW	1	4800083	
R6625	METAL PLATE RESISTOR	RGC5-0.22-OHM-K	1	4000284	
R6626	METAL PLATE RESISTOR	RGC5-0.22-OHM-K	1	4000284	
R6654	CEMENT RESISTOR	MNS05N100JW	1	4800083	
[Switches, Terminals, Wires]					
P4201	TERMINAL	LTS3610-1011F	1	25060536	
P4401	TERMINAL	LTS3410-1020F	1	25060537	
P4601	TERMINAL	LTS3410-1020F	1	25060537	
P4901	TERMINAL	LTS3410-1020F	1	25060537	
P6501	TERMINAL	LTS3410-1020F	1	25060537	
RL4100	RELAY	NRL-2P5A-DC12-208	1	25065733	
RL4300	RELAY	NRL-2P5A-DC12-208	1	25065733	
RL4500	RELAY	NRL-2P5A-DC12-208	1	25065733	
RL4700	RELAY	NRL-2P5A-DC12-208	1	25065733	
RL4900	RELAY	NRL-2P5A-DC12-208	1	25065733	
RL6500	RELAY	NRL-2P5A-DC12-208	1	25065733	

BADG-2077-1F

<Note>

1. Parts marked by "**NSP**" are generally unavailable because they are not in our Master Spare Parts List.
2. The ! mark found on some component parts indicates the importance of the safety factor of the part.
   Therefore, when replacing, be sure to use parts of identical designation.

: NSP

REF. NO.	PART NAME	DESCRIPTION	Q'TY	PART NO. (SN)	REMARKS
[Semi-conductors]					
[Transformers, Coils]					
[Capacitors]					
C2008	SMG C	CE04W16V-220M(SMG)	1	395042217ST	
C2010	SMG C	CE04W16V-1000M(SMG)	1	395041027S	
C2015	SMG C	CE04W16V-220M(SMG)	1	395042217ST	
C2213	SMG C	CE04W16V-220M(SMG)	1	395042217ST	
C2217	SMG C	CE04W16V-100M(SMG)	1	395041017ST	
C2218	SMG C	CE04W16V-100M(SMG)	1	395041017ST	
C2302	SMG C	CE04W16V-220M(SMG)	1	395042217ST	
C2303	SMG C	CE04W25V-47M(SMG)	1	395054707ST	
C2306	SMG C	CE04W16V-220M(SMG)	1	395042217ST	
C2308	SMG C	CE04W25V-47M(SMG)	1	395054707ST	
C2352	SMG C	CE04W16V-220M(SMG)	1	395042217ST	
C2353	SMG C	CE04W25V-47M(SMG)	1	395054707ST	
C2356	SMG C	CE04W16V-220M(SMG)	1	395042217ST	
C2358	SMG C	CE04W25V-47M(SMG)	1	395054707ST	
C2402	ELECTROLYTIC CAPACITOR	CE04W16V-56M(LXY)	1	3500244ST	
C2404	ELECTROLYTIC CAPACITOR	CE04W16V-56M(LXY)	1	3500244ST	
C2471	ELECTROLYTIC CAPACITOR	CE04W16V-56M(LXY)	1	3500244ST	
C2491	ELECTROLYTIC CAPACITOR	CE04W16V-56M(LXY)	1	3500244ST	
C2511	ELECTROLYTIC CAPACITOR	CE04W16V-56M(LXY)	1	3500244ST	
C2531	ELECTROLYTIC CAPACITOR	CE04W16V-56M(LXY)	1	3500244ST	
C2551	ELECTROLYTIC CAPACITOR	CE04W16V-56M(LXY)	1	3500244ST	
C2571	ELECTROLYTIC CAPACITOR	CE04W16V-56M(LXY)	1	3500244ST	
C2591	ELECTROLYTIC CAPACITOR	CE04W16V-56M(LXY)	1	3500244ST	
C2611	ELECTROLYTIC CAPACITOR	CE04W16V-56M(LXY)	1	3500244ST	
C2631	ELECTROLYTIC CAPACITOR	CE04W16V-56M(LXY)	1	3500244ST	
C2651	ELECTROLYTIC CAPACITOR	CE04W16V-56M(LXY)	1	3500244ST	
C2671	ELECTROLYTIC CAPACITOR	CE04W16V-56M(LXY)	1	3500244ST	
C2691	ELECTROLYTIC CAPACITOR	CE04W16V-56M(LXY)	1	3500244ST	
C2711	ELECTROLYTIC CAPACITOR	CE04W16V-56M(LXY)	1	3500244ST	
C2743	SMG C	CE04W35V-100M(SMG)	1	395061017ST	
C2744	SMG C	CE04W35V-100M(SMG)	1	395061017ST	
C2751	SMG C	CE04W16V-220M(SMG)	1	395042217ST	
C2760	ELECTROLYTIC CAPACITOR	CE04W16V-56M(LXY)	1	3500244ST	
C2764	ELECTROLYTIC CAPACITOR	CE04W10V-100M(ZL)	1	3500269ST	
C2765	ELECTROLYTIC CAPACITOR	CE04W16V-56M(LXY)	1	3500244ST	
C2773	ELECTROLYTIC CAPACITOR	CE04W10V-100M(ZL)	1	3500269ST	
C2777	ELECTROLYTIC CAPACITOR	CE04W10V-100M(ZL)	1	3500269ST	
C2782	SMG C	CE04W25V-47M(SMG)	1	395054707ST	
C2806	ELECTROLYTIC CAPACITOR	CE04W10V-100M(ZL)	1	3500269ST	
C2811	SMG C	CE04W25V-47M(SMG)	1	395054707ST	
C2831	SMG C	CE04W50V-22M(SMG)	1	395082207ST	
C2832	SMG C	CE04W50V-22M(SMG)	1	395082207ST	
C2839	SMG C	CE04W50V-10M(SMG)	1	395081007ST	
C2840	SMG C	CE04W50V-10M(SMG)	1	395081007ST	
C2856	ELECTROLYTIC CAPACITOR	CE04W10V-100M(ZL)	1	3500269ST	
C2861	SMG C	CE04W25V-47M(SMG)	1	395054707ST	
C2881	SMG C	CE04W50V-22M(SMG)	1	395082207ST	
C2882	SMG C	CE04W50V-22M(SMG)	1	395082207ST	

C2889	SMG C	CE04W50V-10M(SMG)	1	395081007ST	
C2890	SMG C	CE04W50V-10M(SMG)	1	395081007ST	
[Resistors]					
[Switches, Terminals, Wires]					
P2201	PIN JACK	NPJ-2PDO803	1	25046075	
P2202	PHOTO COUPLER	JSR1165-001recieving	1	24120143	
P2203	PHOTO COUPLER	JSR1165-001recieving	1	24120143	
P2204	PHOTO COUPLER	JSR1165-001recieving	1	24120143	

BADIS-2074-1K

<Note>

1. Parts marked by "**NSP**" are generally unavailable because they are not in our Master Spare Parts List.
2. The ! mark found on some component parts indicates the importance of the safety factor of the part.
   Therefore, when replacing, be sure to use parts of identical designation.

: NSP

REF. NO.	PART NAME	DESCRIPTION	Q'TY	PART NO. (SN)	REMARKS
[Semi-conductors]					
D5411	DIODE	D2SB60A	1	22380366F	
D5412	DIODE	SARS01	1	22380397	
D5413	DIODE	SARS01	1	22380397	
D5451	DIODE	FMEN-220A	1	22380396	
D5962	LED	SLR343BC4T	1	225470	
D7554	LED	SLR343BC4T	1	225470	
D7555	LED	SLR343BC4T	1	225470	
D7556	LED	SLR343BC4T	1	225470	
D7557	LED	SLR343BC4T	1	225470	
D7558	LED	SLR343BC4T	1	225470	
Q5411	HYBRID IC	STR2A153	1	22242995	
Q5412	PHOTO COUPLER	TLP781(GR)	1	24120175	
Q7558	FLUORESCENT TUBE	016MT097GINYK	1	212286A	
Q7652	REMOTE SENSOR	GP1UE274XKC4	1	24130029	
Q7652or	REMOTE SENSOR	R2113TH-5AD	(1)	24130033	**N**
[Transformers, Coils]					
L5401	CHOKE COIL	PFC2225C	1	231490	
L5411	LINE FILTER	HF2318-A303Y0R6-01	1	231501	
L5451	CHOKE COIL	RP1315BNP-100M	1	231466M100	
T5411	POWER TRANSFORMER	ATK7006-A	1	2302140	**!**
[Capacitors]					
C5403	CERAMIC CAPACITOR	DE2F3KY103MA4BM02	1	3300083	
C5411	IS TYPE CAPACITOR	LE104-MX-C3.5	1	3800049S	**!**
C5412	ELECTROLYTIC CAPACITOR	CE69W400V-100M(KMM)	1	3504524	
C5413	ELECTROLYTIC CAPACITOR	CE04W50V-22M(LXZ)	1	3500248T	**N**
C5414	FILM C	ECQE6222KF	1	3700116	
C5421	IS TYPE CAPACITOR	DE1E3KX152MB5BA01	1	3300062S	**!**
C5422	IS TYPE CAPACITOR	DE1E3KX152MB5BA01	1	3300062S	**!**
C5451	ELECTROLYTIC CAPACITOR	CE04W10V-4700M(LXZ)	1	3500247S	
C5453	PW TYPE ELECTROLYTIC CAPACITOR	CE04W10V-470M(PW)	1	393734717T	
C5712	SMG C	CE04W50V-10M(SMG)	1	395081007T	
C5717	SMG C	CE04W16V-100M(SMG)	1	395041017T	
C5718	SMG C	CE04W16V-100M(SMG)	1	395041017T	
C7588	SMG C	CE04W25V-47M(SMG)	1	395054707T	
C7655	SMG C	CE04W16V-100M(SMG)	1	395041017T	
[Resistors]					
R5414	RESISTOR	ERG1DJ154P	1	4000283F	
R5415	METAL OXIDE FILM RESISTOR	ERG1SJ680P	1	4400045	
R5416	METAL RESISTOR	ERX1SJR68H	1	4500343	
R7577	NON-FLAMMABLE CARBON FILM RESISTC	R25J-10	1	415471004T	
R7587	NON-FLAMMABLE CARBON FILM RESISTC	R25J-10	1	415471004T	
[Switches, Terminals, Wires]					
P5702	ST JACK	MSJ-035-12APCAG	1	25046035	
P5705	ST JACK	MSJ-064-13ABAGGR(O133)	1	25046036	
RL5401	RELAY	NRL-1P10A-DC5-207	1	25065731	
S5941	ROTARY ENCODER	XREB12504PVB30FINB1-2-24	1	25065729	**N**
S5981	ROTARY ENCODER	XREB12505PVB30FINB1-2-12	1	25065730	**N**

BAHDM-2086-1F

<Note>

1. Parts marked by "**NSP**" are generally unavailable because they are not in our Master Spare Parts List.
2. The ! mark found on some component parts indicates the importance of the safety factor of the part.
   Therefore, when replacing, be sure to use parts of identical designation.

: NSP

REF. NO.	PART NAME	DESCRIPTION	Q'TY	PART NO. (SN)	REMARKS
[Semi-conductors]					
[Transformers, Coils]					
[Capacitors]					
[Resistors]					
[Switches, Terminals, Wires]					

BAPRC-2072-1F

<Note>

1. Parts marked by "**NSP**" are generally unavailable because they are not in our Master Spare Parts List.
2. The ! mark found on some component parts indicates the importance of the safety factor of the part.
   Therefore, when replacing, be sure to use parts of identical designation.

: NSP

REF. NO.	PART NAME	DESCRIPTION	Q'TY	PART NO. (SN)	REMARKS
[Semi-conductors]					
[Transformers, Coils]					
[Capacitors]					
[Resistors]					
[Switches, Terminals, Wires]					

BAPS-2089-1D

<Note>

1. Parts marked by "**NSP**" are generally unavailable because they are not in our Master Spare Parts List.
2. The ! mark found on some component parts indicates the importance of the safety factor of the part.
   Therefore, when replacing, be sure to use parts of identical designation.

: NSP

REF. NO.	PART NAME	DESCRIPTION	Q'TY	PART NO. (SN)	REMARKS
[Semi-conductors]					
D7401	DIODE	LN6SB60	1	22380399	
D7402	DIODE	LN6SB60	1	22380399	
Q7211	TRANSISTOR	2SD2400A-D	1	2202734	
Q7212	TRANSISTOR	2SB1569A-D	1	2202724	
Q7241	HYBRID IC	78M15HF(NJM78M15FA)	1	222780155JRC	
Q7251	HYBRID IC	78M12HF(NJM78M12FA)	1	222780125JRC	
Q7252	HYBRID IC	79M12HF(NJM79M12FA)	1	222790125JRC	
Q7271	HYBRID IC	78M08HF(NJM78M08FA)	1	222780085JRC	
Q7272	HYBRID IC	79M08HF(NJM79M08FA)	1	222790085JRC	
Q7273	HYBRID IC	78M15HF(NJM78M15FA)	1	222780155JRC	
X1	CRYSTAL	HC-49S 9B12.000MHz	1	3010533	
[Transformers, Coils]					
L5	ANTENNA COIL	K7-D	1	232212	
[Capacitors]					
C7213	SMG C	CE04W16V-100M(SMG)	1	395041017T	
C7214	SMG C	CE04W16V-100M(SMG)	1	395041017T	
C7215	SMG C	CE04W50V-10M(SMG)	1	395081007T	
C7219	SMG C	CE04W50V-10M(SMG)	1	395081007T	
C7221	SMG C	CE04W25V-47M(SMG)	1	395054707T	
C7241	SMG C	CE04W25V-2200M(SMG)	1	395052227S	
C7244	SMG C	CE04W50V-22M(SMG)	1	395082207T	
C7246	SMG C	CE04W35V-220M(SMG)	1	395062217T	
C7251	SMG C	CE04W25V-2200M(SMG)	1	395052227S	
C7252	SMG C	CE04W25V-2200M(SMG)	1	395052227S	
C7255	SMG C	CE04W35V-220M(SMG)	1	395062217T	
C7256	SMG C	CE04W35V-220M(SMG)	1	395062217T	
C7271	SMG C	CE04W16V-2200M(SMG)	1	395042227S	
C7272	SMG C	CE04W16V-2200M(SMG)	1	395042227S	
C7293	SMG C	CE04W16V-220M(SMG)	1	395042217T	
C7294	SMG C	CE04W16V-220M(SMG)	1	395042217T	
C7298	SMG C	CE04W35V-220M(SMG)	1	395062217T	
C7401	ELECTROLYTIC CAPACITOR	CE69W80V-10000M_LKS1K10	1	3504527	
C7402	ELECTROLYTIC CAPACITOR	CE69W80V-10000M_LKS1K10	1	3504527	
[Resistors]					
R7211	NON-FLAMMABLE CARBON FILM RESISTC	R25J-1.0K	1	415471024T	
R7213	NON-FLAMMABLE CARBON FILM RESISTC	R25J-1.0K	1	415471024T	
R7403	NON-FLAMMABLE CARBON FILM RESISTC	R25J-10	1	415471004T	
[Switches, Terminals, Wires]					
P1	TERMINAL	NTM-1PDSC438	1	25060516	
P2	TERMINAL	NTM-2PDML439	1	25060517	

BAPS-2092-1B

<Note>

1. Parts marked by "**NSP**" are generally unavailable because they are not in our Master Spare Parts List.
2. The ! mark found on some component parts indicates the importance of the safety factor of the part.
   Therefore, when replacing, be sure to use parts of identical designation.

: NSP

REF. NO.	PART NAME	DESCRIPTION	Q'TY	PART NO. (SN)	REMARKS
[Semi-conductors]					
D9751	DIODE	D3SBA60	1	22380272F	
Q9501	HYBRID IC	78M12HF(NJM78M12FA)	1	222780125JRC	
Q9502	HYBRID IC	79M12HF(NJM79M12FA)	1	222790125JRC	
Q9521	HYBRID IC	78M06HF(NJM78M06FA)	1	222780065JRC	
Q9531	HYBRID IC	78M12HF(NJM78M12FA)	1	222780125JRC	
Q9551	HYBRID IC	78M05(NJM78M05FA)	1	222780055JRC	
[Transformers, Coils]					
[Capacitors]					
C9507	SMG C	CE04W25V-3300M(SMG)	1	395053327S	**N**
C9508	SMG C	CE04W25V-3300M(SMG)	1	395053327S	**N**
C9515	SMG C	CE04W35V-220M(SMG)	1	395062217T	
C9516	SMG C	CE04W35V-220M(SMG)	1	395062217T	
C9522	SMG C	CE04W25V-2200M(SMG)	1	395052227S	**N**
C9524	SMG C	CE04W10V-220M(SMG)	1	395032217T	
C9536	SMG C	CE04W35V-1000M(SMG)	1	395061027S	**N**
C9537	SMG C	CE04W35V-470M(SMG)	1	395064717S	**N**
C9539	SMG C	CE04W50V-10M(SMG)	1	395081007T	
C9552	SMG C	CE04W16V-1000M(SMG)	1	395041027S	**N**
C9554	SMG C	CE04W16V-100M(SMG)	1	395041017T	
C9571	SMG C	CE04W63V-47M(SMG)	1	395074707T	**N**
C9572	SMG C	CE04W50V-47M(SMG)	1	395084707T	
C9573	SMG C	CE04W50V-47M(SMG)	1	395084707T	
C9760	SMG C	CE04W16V-4700M(SMG)	1	395044727S	**N**
[Resistors]					
R9533	NON-FLAMMABLE CARBON FILM RESISTC	R25J-4.7	1	415470474T	
[Switches, Terminals, Wires]					
P5801	ST JACK	MSJ-035-12APCAG	1	25046035	
P5802	ST JACK	HSJ1002-016010	1	25046044	
P5803	ST JACK	HSJ1002-016010	1	25046044	