Pioneer sound.vision.soul

Service Manual

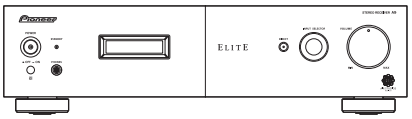

SX-A9-J

ORDER NO.
RRV3539

INTEGRATED AMPLIFIER

SX-A9-J
SX-A6-J

THIS MANUAL IS APPLICABLE TO THE FOLLOWING MODEL(S) AND TYPE(S).

Model	Type	Power Requirement	Remarks
SX-A9-J	KUXCN/CA	AC 120 V	
SX-A6-J	KUXCN/CA	AC 120 V	

For details, refer to "Important Check Points for good servicing".

PIONEER CORPORATION 4-1, Meguro 1-chome, Meguro-ku, Tokyo 153-8654, Japan
PIONEER ELECTRONICS (USA) INC. P.O. Box 1760, Long Beach, CA 90801-1760, U.S.A.
PIONEER EUROPE NV Haven 1087, Keetberglaan 1, 9120 Melsele, Belgium
PIONEER ELECTRONICS ASIACENTRE PTE. LTD. 253 Alexandra Road, #04-01, Singapore 159936
ⒸPIONEER CORPORATION 2007

T-ZZV MAY 2007 printed in japan

SAFETY INFORMATION

This service manual is intended for qualified service technicians; it is not meant for the casual do-it-yourselfer. Qualified technicians have the necessary test equipment and tools, and have been trained to properly and safely repair complex products such as those covered by this manual.

Improperly performed repairs can adversely affect the safety and reliability of the product and may void the warranty. If you are not qualified to perform the repair of this product properly and safely, you should not risk trying to do so and refer the repair to a qualified service technician.

WARNING

This product contains lead in solder and certain electrical parts contain chemicals which are known to the state of California to cause cancer, birth defects or other reproductive harm.

Health & Safety Code Section 25249.6 – Proposition 65

NOTICE

(FOR CANADIAN MODEL ONLY)

Fuse symbols (fast operating fuse) and/or (slow operating fuse) on PCB indicate that replacement parts must be of identical designation.

REMARQUE

(POUR MODÈLE CANADIEN SEULEMENT)

Les symboles de fusible (fusible de type rapide) et/ou (fusible de type lent) sur CCI indiquent que les pièces de remplacement doivent avoir la même désignation.

(FOR USA MODEL ONLY)

1. SAFETY PRECAUTIONS

The following check should be performed for the continued protection of the customer and service technician.

LEAKAGE CURRENT CHECK

Measure leakage current to a known earth ground (water pipe, conduit, etc.) by connecting a leakage current tester such as Simpson Model 229-2 or equivalent between the earth ground and all exposed metal parts of the appliance (input/output terminals, screwheads, metal overlays, control shaft, etc.). Plug the AC line cord of the appliance directly into a 120V AC 60 Hz outlet and turn the AC power switch on. Any current measured must not exceed 0.5 mA.

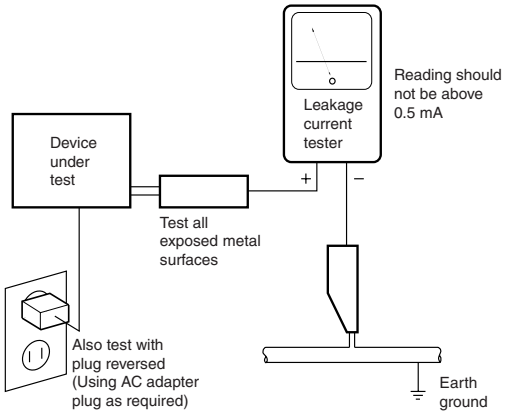

AC Leakage Test

ANY MEASUREMENTS NOT WITHIN THE LIMITS OUTLINED ABOVE ARE INDICATIVE OF A POTENTIAL SHOCK HAZARD AND MUST BE CORRECTED BEFORE RETURNING THE APPLIANCE TO THE CUSTOMER.

2. PRODUCT SAFETY NOTICE

Many electrical and mechanical parts in the appliance have special safety related characteristics. These are often not evident from visual inspection nor the protection afforded by them necessarily can be obtained by using replacement components rated for voltage, wattage, etc. Replacement parts which have these special safety characteristics are identified in this Service Manual.

Electrical components having such features are identified by marking with a ⚠ on the schematics and on the parts list in this Service Manual.

The use of a substitute replacement component which does not have the same safety characteristics as the PIONEER recommended replacement one, shown in the parts list in this Service Manual, may create shock, fire, or other hazards.

Product Safety is continuously under review and new instructions are issued from time to time. For the latest information, always consult the current PIONEER Service Manual. A subscription to, or additional copies of, PIONEER Service Manual may be obtained at a nominal charge from PIONEER.

[Important Check Points for Good Servicing]

In this manual, procedures that must be performed during repairs are marked with the below symbol.
Please be sure to confirm and follow these procedures.

1. Product safety

Please conform to product regulations (such as safety and radiation regulations), and maintain a safe servicing environment by following the safety instructions described in this manual.

① Use specified parts for repair.

Use genuine parts. Be sure to use important parts for safety.

② Do not perform modifications without proper instructions.

Please follow the specified safety methods when modification(addition/change of parts) is required due to interferences such as radio/TV interference and foreign noise.

③ Make sure the soldering of repaired locations is properly performed.

When you solder while repairing, please be sure that there are no cold solder and other debris.
Soldering should be finished with the proper quantity. (Refer to the example)

④ Make sure the screws are tightly fastened.

Please be sure that all screws are fastened, and that there are no loose screws.

⑤ Make sure each connectors are correctly inserted.

Please be sure that all connectors are inserted, and that there are no imperfect insertion.

⑥ Make sure the wiring cables are set to their original state.

Please replace the wiring and cables to the original state after repairs.
In addition, be sure that there are no pinched wires, etc.

⑦ Make sure screws and soldering scraps do not remain inside the product.

Please check that neither solder debris nor screws remain inside the product.

⑧ There should be no semi-broken wires, scratches, melting, etc. on the coating of the power cord.

Damaged power cords may lead to fire accidents, so please be sure that there are no damages.
If you find a damaged power cord, please exchange it with a suitable one.

⑨ There should be no spark traces or similar marks on the power plug.

When spark traces or similar marks are found on the power supply plug, please check the connection and advise on secure connections and suitable usage. Please exchange the power cord if necessary.

⑩ Safe environment should be secured during servicing.

When you perform repairs, please pay attention to static electricity, furniture, household articles, etc. in order to prevent injuries.
Please pay attention to your surroundings and repair safely.

2. Adjustments

To keep the original performance of the products, optimum adjustments and confirmation of characteristics within specification.
Adjustments should be performed in accordance with the procedures/instructions described in this manual.

3. Lubricants, Glues, and Replacement parts

Use grease and adhesives that are equal to the specified substance.
Make sure the proper amount is applied.

4. Cleaning

For parts that require cleaning, such as optical pickups, tape deck heads, lenses and mirrors used in projection monitors, proper cleaning should be performed to restore their performances.

5. Shipping mode and Shipping screws

To protect products from damages or failures during transit, the shipping mode should be set or the shipping screws should be installed before shipment. Please be sure to follow this method especially if it is specified in this manual.

CONTENTS

1. SPECIFICATIONS 5
2. EXPLODED VIEWS AND PARTS LIST 7
   2.1 SX-A9-J model 7
      2.1.1 PACKING (SX-A9-J) 7
      2.1.2 EXTERIOR (SX-A9-J) 8
   2.2 SX-A6-J model 11
      2.2.1 PACKING (SX-A6-J) 11
      2.2.2 EXTERIOR (SX-A6-J) 12
3. BLOCK DIAGRA AND SCHEMATIC DIAGRAM 16
   3.1 OVERALL BLOCK DIAGRAM 16
   3.2 OVERALL WIRING DIAGRAM 18
   3.3 FUNCTION and HEADPHONE ASSYS 20
   3.4 FRONT, MOTOR VR, REMOCON, STATION, POWER LED and VR ASSYS 22
   3.5 XM-READY/USB ASSY 24
   3.6 AMP LCH, AMP RCH, PROTECTION L-CH and PROTECTION R-CH ASSYS 26
   3.7 REG IC, SUB TRANS, POWER SW and POWER ASSYS 28
4. PCB CONNECTION DIAGRAM 30
   4.1 SUB TRANS and POWER SW ASSYS 31
   4.2 FANCTION and HEADPHONE ASSYS 32
   4.3 FRONT, REMOCON, POWER LED and VR ASSYS 34
   4.4 STATION and MOTOR VR ASSYS 36
   4.5 XM-READY/USB ASSY 38
   4.6 AMP LCH, PROTECTION L-CH and SPEAKER L-CH ASSY 40
   4.7 AMP RCH, PROTECTION R-CH and SPEAKER R-CH ASSY 42
   4.8 REG IC and POWER ASSYS 44
5. PCB PARTS LIST 46
6. ADJUSTMENT 54
7. GENERAL INFORMATION 55
   7.1 TROUBLE SHOOTIG 55
   7.2 SPECIFICATION OF PROTECTIVE OPERATION 56
   7.3 DISCHARGE OF POWER AMPLIFIER 56
   7.4 PCB LOCATION 57
   7.5 DISASSEMBLY 58
8. PANEL FACILITIES 62

1. SPECIFICATIONS

Amplifier section

Power output specification is for when power supply is 120 V.

- **Continuous power output (both channels driven at 20 Hz to 20 kHz)****

SX-A9-J

THD 0.2 %, 4 Ω . . . . . 70 W + 70 W
THD 0.2 %, 8 Ω . . . . . 55 W + 55 W

SX-A6-J

THD 0.2 % . . . . . 60 W +60 W
THD 0.2 % . . . . . 45 W + 45 W

- **FTC Continuous power output (both channels driven at 1 kHz)**

SX-A9-J

THD 1.0 %, 4 Ω . . . . . 65 W + 65 W
THD 1.0 %, 8 Ω . . . . . 55 W + 55 W

SX-A6-J

THD 1.0 %, 4 Ω . . . . . 53 W + 53 W
THD 1.0 %, 8 Ω . . . . . 43 W + 43 W

- **Total harmonic distortion****

20 Hz to 20 kHz, 25 W, 8 Ω . . . . . 0.05 %*

** Measured with DIRECT button switched on.*
*** Measured by Audio Spectrum Analyzer*

Audio section

- **Input (Sensitivity/Impedance)**

CD, TAPE, AUX . . . . . 200 mV/47 kΩ
PHONO (MM). . . . . 2.8 mV/47 kΩ
∗ PHONO (MC). . . . . 0.3 mV/100 Ω

- **Frequency response**

CD, TAPE, AUX, USB*. . . . . 5 Hz to 100 kHz $^{+0}_{-3}$ dB
PHONO (MM). . . . . 20 Hz to 20 kHz ±0.2 dB
∗ PHONO (MC). . . . . 20 Hz to 20 kHz ±0.3 dB

- **PHONO (MM) overload level**

1 kHz, THD 0.2 %. . . . . 60 mV

- **PHONO (MC) overload level**

∗ 1 kHz, THD 0.2 %. . . . . .6 mV

- **Output (Level/Impedance)**

TAPE REC. . . . . 200 mV/1 kΩ

- **Tone control**

Bass . . . . . ± 10 dB (100 Hz)
Treble . . . . . ± 10 dB (10 kHz)

- **Signal-to-Noise Ratio**

CD, TAPE, AUX (200 mV input). . . . . 103 dB
PHONO (MM, 2.8 mV input). . . . . 80 dB
PHONO (MC, 0.2 mV input) . . . . . 70 dB

- **FM Tuner Section**

Frequency Range. . . . . 87.5 MHz to 108 MHz
Usable Sensitivity . . . . . Mono:13.2 dBf, IHF (1.3 μV/ 75 Ω)
50 dB Quieting Sensitivity. . . . . Mono: 20.2 dB Stereo: 38.6 dBf
Signal-to-Noise Ratio. . . . . Mono: 73 dB (at 85 dBf) Stereo: 70 dB (at 85 dBf)
Distortion . . . . . Stereo: 0.5 % (1 kHz)
Alternate Channel Selectivity. . . . . 60 dB (400 kHz)
Stereo Separation . . . . . 40 dB (1 kHz)
Frequency Response. . . . . 30 Hz to 15 kHz (±1 dB)
Antenna Input (FTC) . . . . . 75 Ω unbalanced

- **AM Tuner Section**

Frequency Range . . . . . 530 kHz to 1700 kHz
Sensitivity (IHF, Loop antenna) . . . . . 350 μV/m
Signal-to-Noise Ratio . . . . . 50 dB
Antenna. . . . . Loop antenna

Power consumption

SX-A9-J . . . . . 200 W
SX-A6-J . . . . . 170 W
In standby . . . . . 0.6 W

Dimensions

SX-A9-J . . . . . .420 mm(W) x 113 mm(H) x 369 mm(D)
(16 $^{9}/_{16}$ in (W) x 4 $^{7}/_{16}$ in (H) x 14 $^{17}/_{32}$ in (D)
SX-A6-J . . . . . .420 mm(W) x 100 mm(H) x 359 mm(D)
(16 $^{9}/_{16}$ in (W) x 3 $^{15}/_{16}$ in (H) x 14 $^{1}/_{8}$ in (D)

Weight (with out package)

SX-A9-J . . . . . 10.8 kg (23 lb. 13 oz)
SX-A6-J . . . . . 10 kg (22 lb)

Accessories

Remote control. 1
Lithium battery (CR2025). 1
AM loop antenna 1
FM wire antenna. 1
Power cable. 1
Warranty card. 1
Operating instructions

Specifications and the design are subject to possible modifications without notice, due to improvements.

∗ : SX-A9-J Only

● Accessories

- Remote Control Unit
(SX-A9-J : 8300747000010-IL)
(SX-A6-J : 8300747300010-IL)

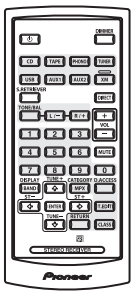

- Lithium Battery
(CR2025)

- AM Loop Antenna
(E605010130010-IL)

- FM Wire Antenna
(E605000030050-IL)

- Power Cable
(L068125130010-IL)

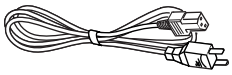

- Warranty Card
- Operating Instructions

2. EXPLODED VIEWS AND PARTS LIST

NOTES:
- *Parts marked by "NSP" are generally unavailable because they are not in our Master Spare Parts List.*
- *The ⚠ mark found on some component parts indicates the importance of the safety factor of the part. Therefore, when replacing, be sure to use parts of identical designation.*
- *Screws adjacent to ▼ mark on product are used for disassembly.*
- *For the applying amount of lubricants or glue, follow the instructions in this manual. (In the case of no amount instructions, apply as you think it appropriate.)*

2.1 SX-A9-J model

2.1.1 PACKING (SX-A9-J)

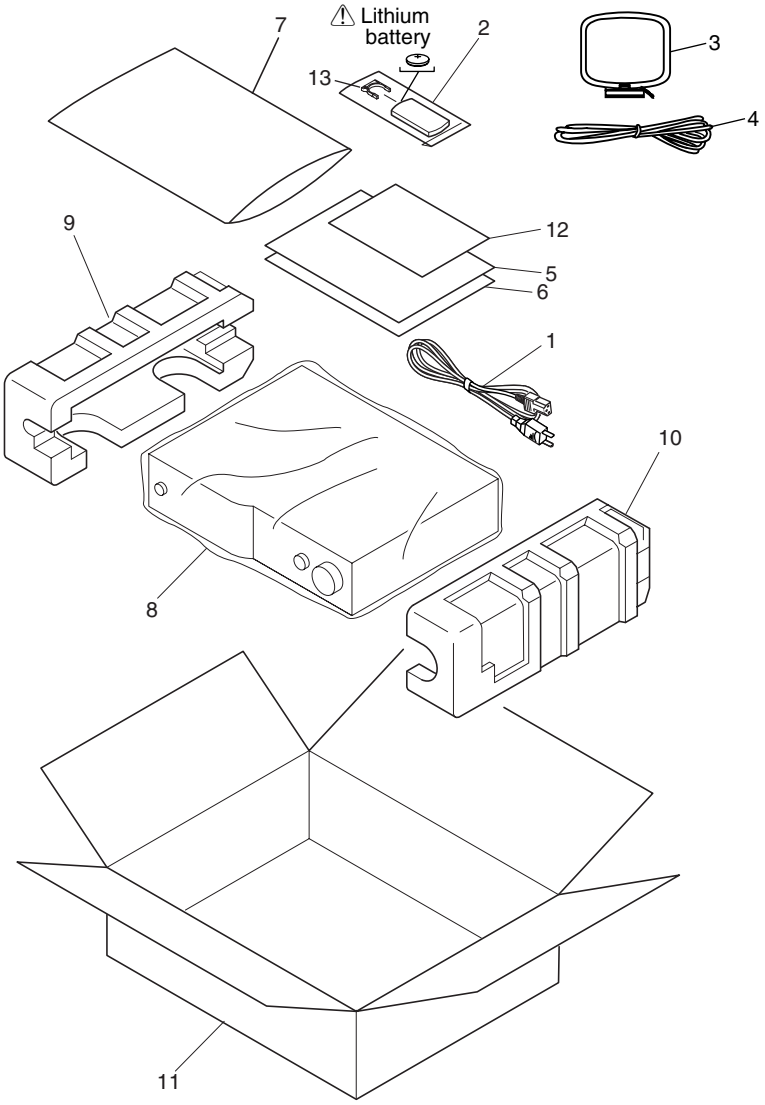

PACKING (SX-A9-J)

Mark	No.	Description	Part No.
⚠	1	POWER CABLE	L068125130010-IL
	2	REMOTE CONTROL	8300747000010-IL
	3	AM LOOP ANTENNA	E605010130010-IL
	4	FM WIRE ANTENNA	E605000030050-IL
	5	OPERATING INSTRUCTIONS (English)	5707000000180-IL
	6	OPERATING INSTRUCTIONS (French)	5707000000490-IL
NSP	7	POLYETHYLENE BAG	6337000240010-IL
	8	PE,SHEET	6327040022012-IL
	9	CUSHION,SNOW L	6230211534000-IL
	10	CUSHION,SNOW R	6230211544000-IL
	11	BOX,GIFT	6007210940020-IL
NSP	12	WARRANTY CARD	ARY7077
	13	BATTERY COVER B	AZN8024

2.1.2 EXTERIOR (SX-A9-J)

• SX-A9-J model

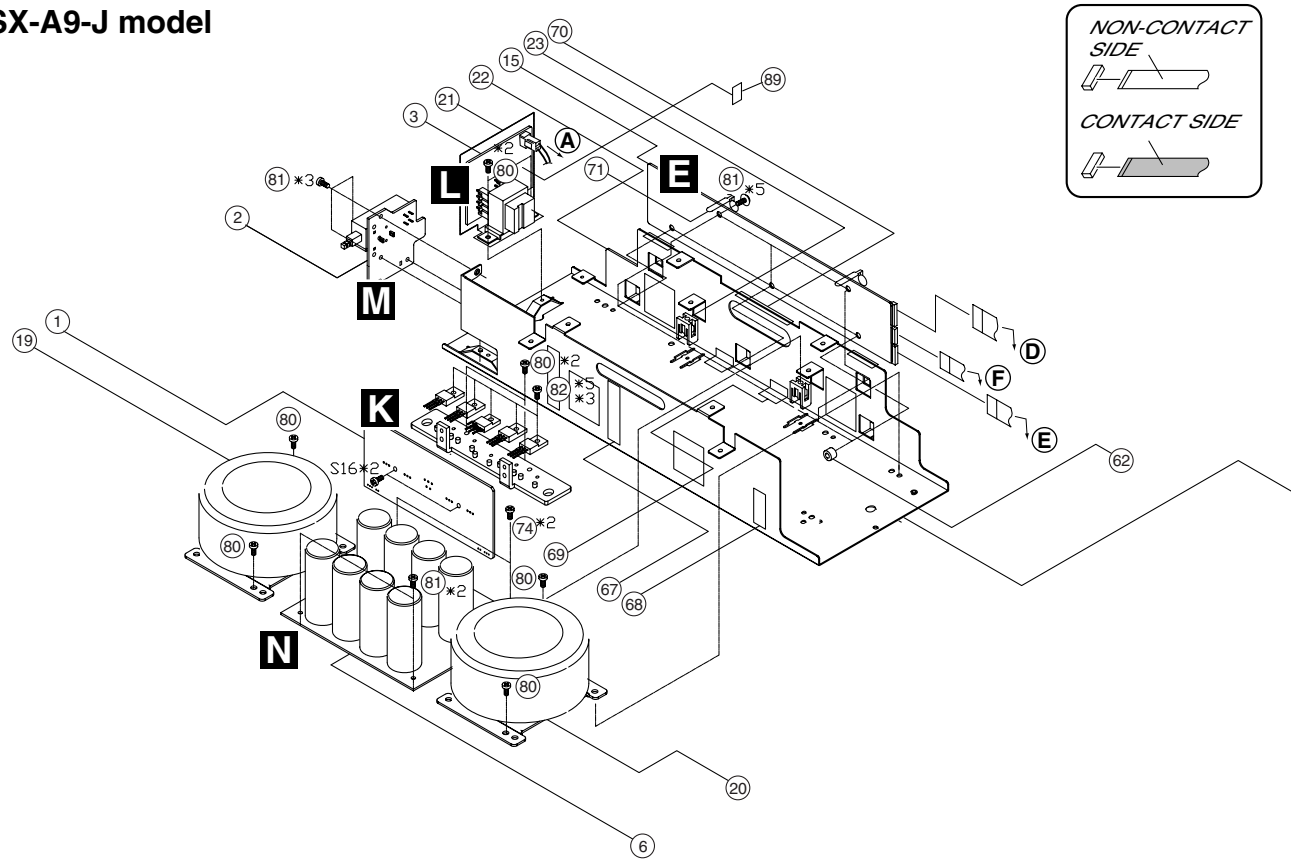

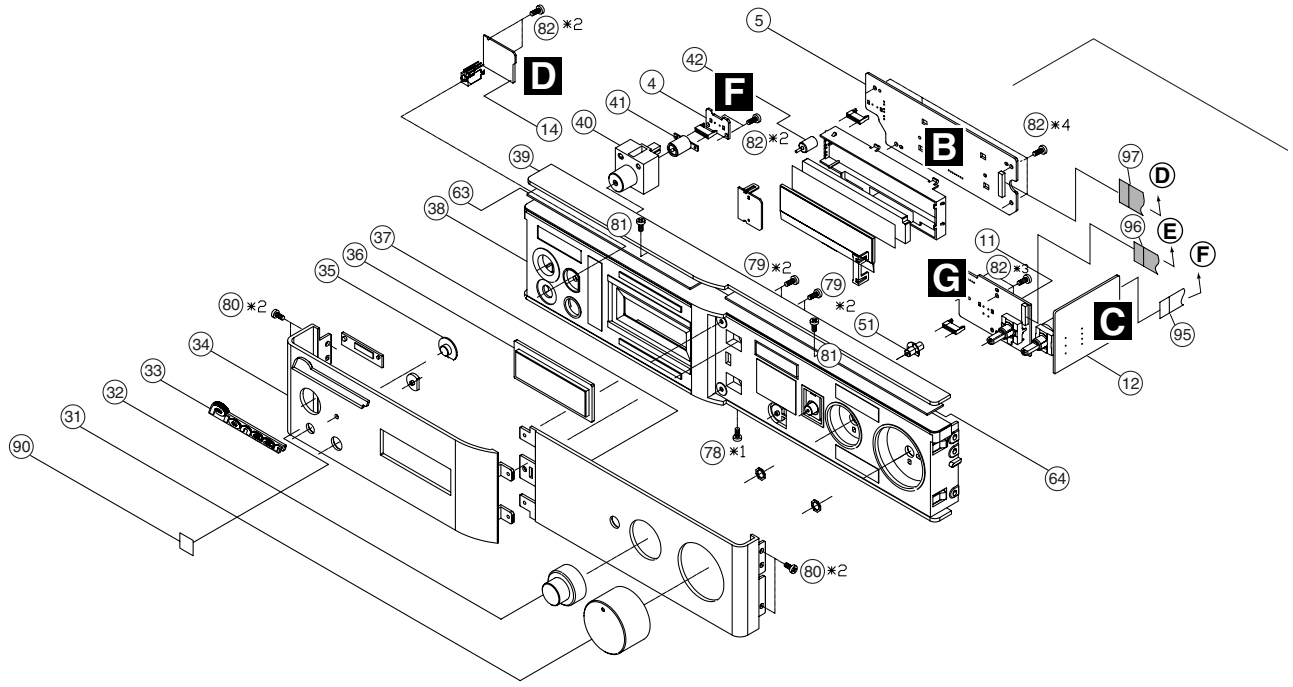

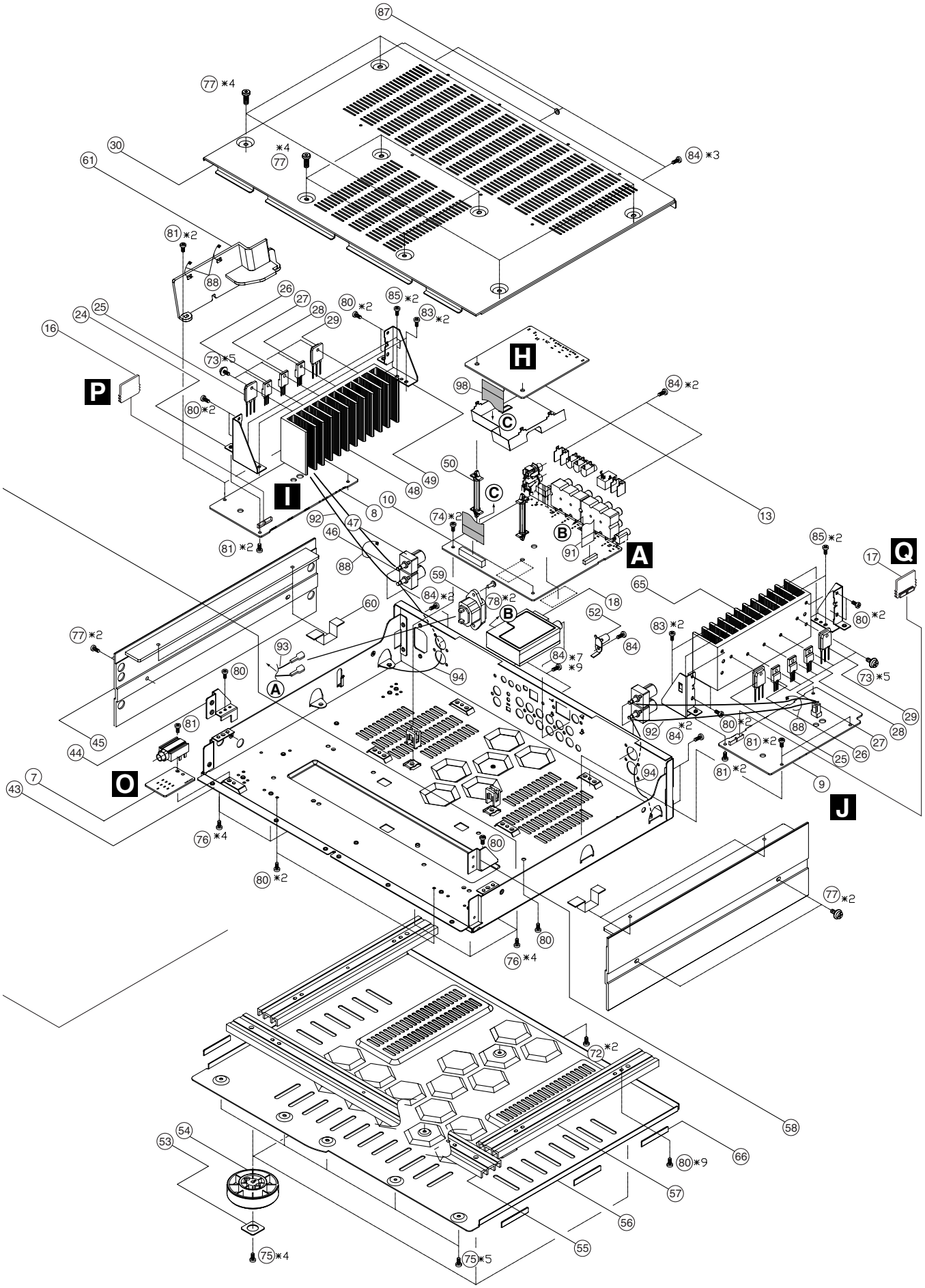
87
77 ✳4
30
61
✳4
77
84 ✳3
81 ✳2
88
26
27
28
29
80 ✳2
85 ✳2
83 ✳2
24
25
16
73 ✳5
P
H
98
84 ✳2
80 ✳2
C
50
48
49
I
10
8
92
47
46
74 ✳2
C
B
91
A
13
81 ✳2
88
85 ✳2
17
Q
59
84 ✳2
78 ✳2
65
60
18
B
52
83 ✳2
80 ✳2
77 ✳2
93
84
84 ✳7
✳9
94
A
80
73 ✳5
29
81
92
✳2
84
80 ✳2
88
28
27
45
44
81 ✳2
26
25
D
7
43
O
81 ✳2
9
J
76 ✳4
80
80 ✳2
77 ✳2
80
76 ✳4
E
72 ✳2
58
53
54
80 ✳9
66
57
56
F
55
75 ✳4
75 ✳5

• EXTERIOR (SX-A9)

Mark	No.	Description	Part No.
	1	REG IC Assy	7028065471020-IL
	2	POWER SW Assy	7028065357060-IL
	3	SUB TRANS Assy	702806535A070-IL
	4	POWER LED Assy	7028065358060-IL
	5	FRONT Assy	7028065354060-IL
	6	POWER Assy	7025065353070-IL
	7	HEADPHONE Assy	702806535B060-IL
	8	AMP LCH Assy	7028065351010-IL
	9	AMP RCH ASSY	7028065352010-IL
	10	FUNCTION Assy	7028065361070-IL
	11	VR Assy	7028065359060-IL
	12	MOTOR VR Assy	7028065355060-IL
	13	XM-READY/USB Assy	7028065362070-IL
	14	REMOCON Assy	7028065356060-IL
	15	STATION Assy	7028065461020-IL
	16	PROTECTION L-CH ASSY	7028065363010-IL
	17	PROTECTION R-CH ASSY	7028065364010-IL
	18	FM/AM TUNER UNIT	AXX7172
⚠	19	POWER TRANS L	8200900550020-IL
⚠	20	POWER TRANS R	8200900550070-IL
	21	PLATE SUB TRANS	4470211012000-IL
	22	BRACKER TRANS	4010212736000-IL
	23	SUPPORT PCB	4070001601010-IL
	24	BRACKER HEAT SINK L	4010212716000-IL
⚠	25	SEMI,TR	J5001386A0010-IL
⚠	26	SEMI,TR	2SA1859A
⚠	27	SEMI,TR	J5024137V0130-IL
⚠	28	SEMI,TR	2SC4883A
⚠	29	SEMI,TR	J5023519A0010-IL
	30	CABINET TOP COVER	3007210786000-IL
	31	KNOB VOLUME	5088211378000-IL
	32	KNOB INPUT	5088211368000-IL
	33	BADGE	VAM1124
	34	PANEL FRONT L	3067212778000-IL
	35	LENS REMOCON	3710210683000-IL
	36	WINDOW DISPLAY	5070212303000-IL
	37	PANEL FRONT R	3067212798010-IL
	38	FRAME PANEL	3217211301000-IL
	39	PLATE TOP	4477211028000-IL
	40	KNOB POWER	5087211391000-IL
	41	LENS POWER	3710210673000-IL
	42	LENS STAND BY	3710210693000-IL
NSP	43	CHASSIS MAIN & BACK	3207212016300-IL
	44	BRACKET FRAEM L	4010212696000-IL
	45	PANEL SIDE	3067212818000-IL
	46	TER,BOARD SCREW(BK)	G610040300000-IL
	47	TER,BOARD SCREW(RD)	G610040310000-IL
NSP	48	HEAT SINK MAIN L	2120210998000-IL
	49	BRACKER HEAT SINK R	4010212726000-IL
	50	SPACER SUPPORT	4300210023000-IL
	51	LENS DIRECT	3710210663000-IL
	52	TERMINAL GROUND	3790000090000-IL
	53	CUSHION FOOT	4050211605000-IL
	54	FOOT	4007210391000-IL
	55	BAR BOTTOM FRONT	1040000018000-IL
	56	COVER BOTTOM	4317212946000-IL
	57	BAR BOTTOM SIDE	1040000028000-IL
	58	BRACKET FRAME R	4010212706000-IL
	59	AC INLET	G430000180010-IL
	60	HOLDER CHIP	4320210591000-IL

Mark	No.	Description	Part No.
	61	HOLDER INLET CORD	4320210601000-IL
	62	CUSHION SCREW	4050211205000-IL
NSP	63	TAPE PLATE TOP(E)	1220210299000-IL
NSP	64	TAPE PLATE TOP(F)	1220210309000-IL
NSP	65	HEAT SINK MAIN R	2120211048000-IL
	66	CUSHION SIDE PANEL	4050211725000-IL
NSP	67	ACETAPE(15*80)	1220210059070-IL
NSP	68	ACETAPE(15*45)	1220210059050-IL
NSP	69	ACETAPE(33*50)	1220210319000-IL
NSP	70	ACETAPE(15*110)	1220210059000-IL
	71	CLAMP RETAINER COIL	4330210062000-IL
	72	SCREW (+2S 3*8 B-TYPE BK/BH)	B020030083B10-IL
	73	SCREW (+2S 3*14 P+S-WASHER ZNY/HH)	B018230141H11-IL
	74	SCREW (+2S 3*17 B-TYPE ZNY/BH)	B020030171B10-IL
	75	SCREW (+2S 3*17 B-TYPE BK/BH)	B020030173B10-IL
	76	SCREW (+2S 4*10 ZNY/HH)	B028940101B10-IL
	77	SCREW (+2S 4*10 B-TYPE CR-PLATE)	1500040103P41-IL
	78	SCREW (+2S 3*8 B-TYPE FH/CU)	B020030086F10-IL
	79	SCREW (+2S 3*10 B-TYPE BH/CU)	B020030106B10-IL
	80	SCREW (+2S 3*8 B-TYPE(DOT) BH/CU)	B020030086B11-IL
	81	SCREW (+2S 3*8 B-TYPE WASHER BH/CU)	B028030086B10-IL
	82	SCREW (+2S 3*8 B-TYPE BH/CU)	B020030086B10-IL
	83	SCREW (+2S 3*6 B-TYPE BH/CU)	B020030066B10-IL
	84	SCREW (+3S 3*10 B-T(DOT) BH/CU))	B020030106B11-IL
	85	SCREW (+3S 3*6 +2S 3*6 B-TYPE(DUT) BH/CU))	B020030066B11-IL
	86	••••••••	
	87	WASHER	1530210132000-IL
	88	CLAMP	4330040343010-IL
	89	LABEL RATING	5527042410010-IL
NSP	90	ENERGY STAR LABEL	AAX8022
	91	CABLE, FLAT CARD (TUNER UNIT)	N712110943810-IL
	92	CN, WIRE 2P (CN711 AMP LCH/ CN712 AMP RCH)	L000121020210-IL
	93	CN, WIRE 2P (CN301 SUB TRANS)	L000201020130-IL
	94	1P WIRE LUGPIN (TER, BOARD SCREW)	N602121010310-IL
	95	CABLE, FLAT CARD 1.25 7P (CN606 MOTOR VR - CN9916 STATION)	N712071343810-IL
	96	CABLE, FLAT CARD 1.25 10P (CN607 VR - CN9915 STATION)	N712102633810-IL
	97	CABLE, FLAT CARD 14P (CN608 FRONT - CN9914 STATION)	N712143633810-IL
	98	CABLE, FLAT CARD 1.25 23P (CN102 FUNCTION - CN501 XM READY/USB)	N712230943810-IL

2.2 SX-A6-J model
2.2.1 PACKING (SX-A6-J)

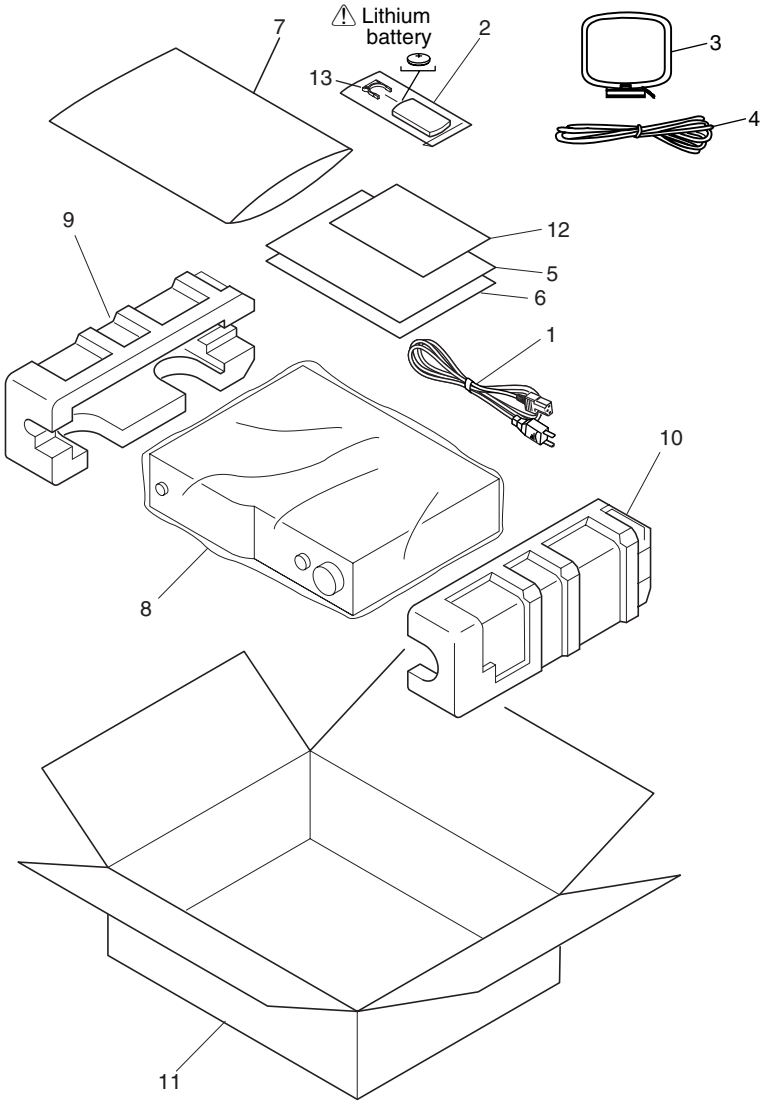

• **PACKING (SX-A6-J)**

Mark	No.	Description	Part No.
⚠	1	POWER CABLE	L068125130010-IL
	2	REMOTE CONTROL	8300747300010-IL
	3	AM LOOP ANTENNA	E605010130010-IL
	4	FM WIRE ANTENNA	E605000030050-IL
	5	OPERATING INSTRUCTIONS (English)	5707000000130-IL
	6	OPERATING INSTRUCTIONS (French)	5707000000480-IL
NSP	7	POLYETHYLENE BAG	6337000240010-IL
	8	PE,SHEET	6327040022012-IL
	9	CUSHION,SNOW L	6230211514000-IL
	10	CUSHION,SNOW R	6230211524000-IL
	11	BOX,GIFT	6007210930020-IL
NSP	12	WARRANTY CARD	ARY7077
	13	BATTERY COVER B	AZN8024

Mark	No.	Description	Part No.

2.2.2 EXTERIOR (SX-A6-J)

• **SX-A6-J model**

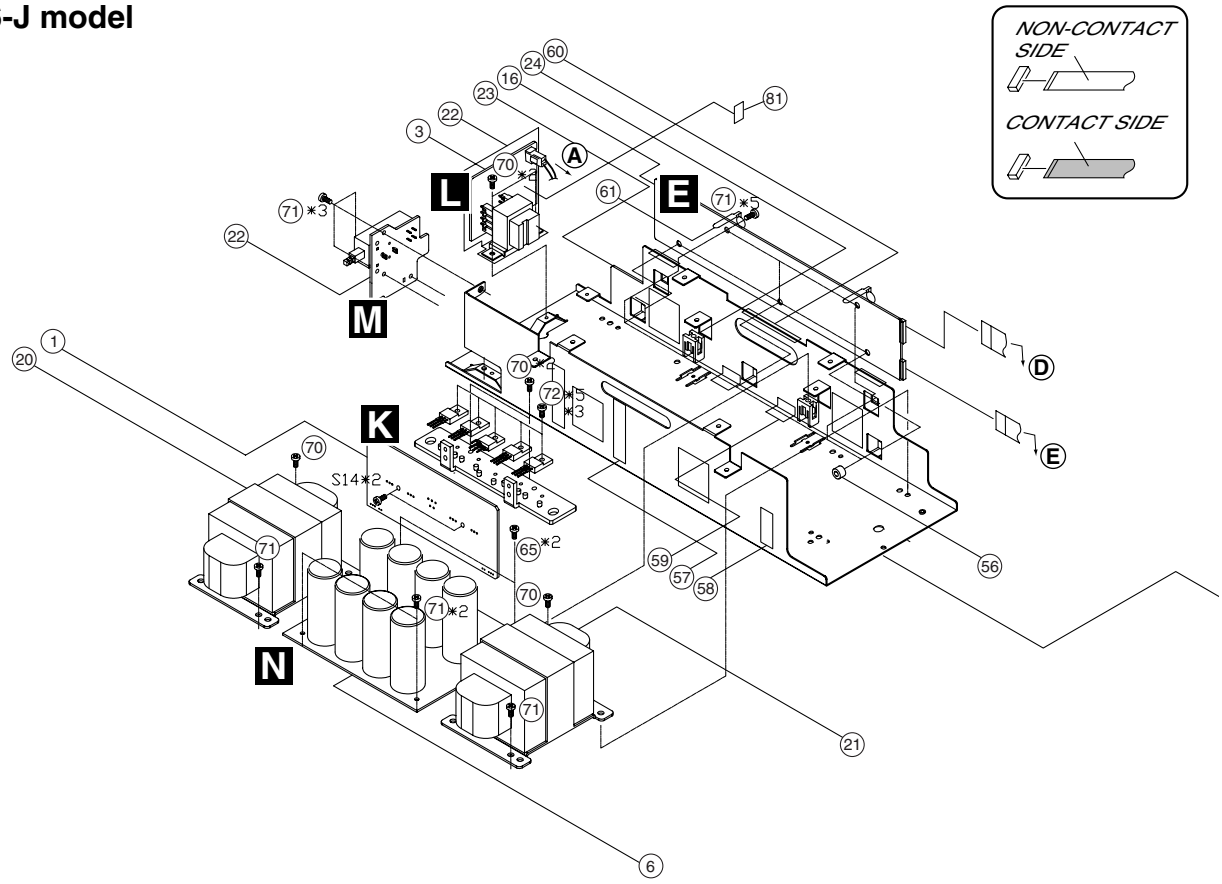

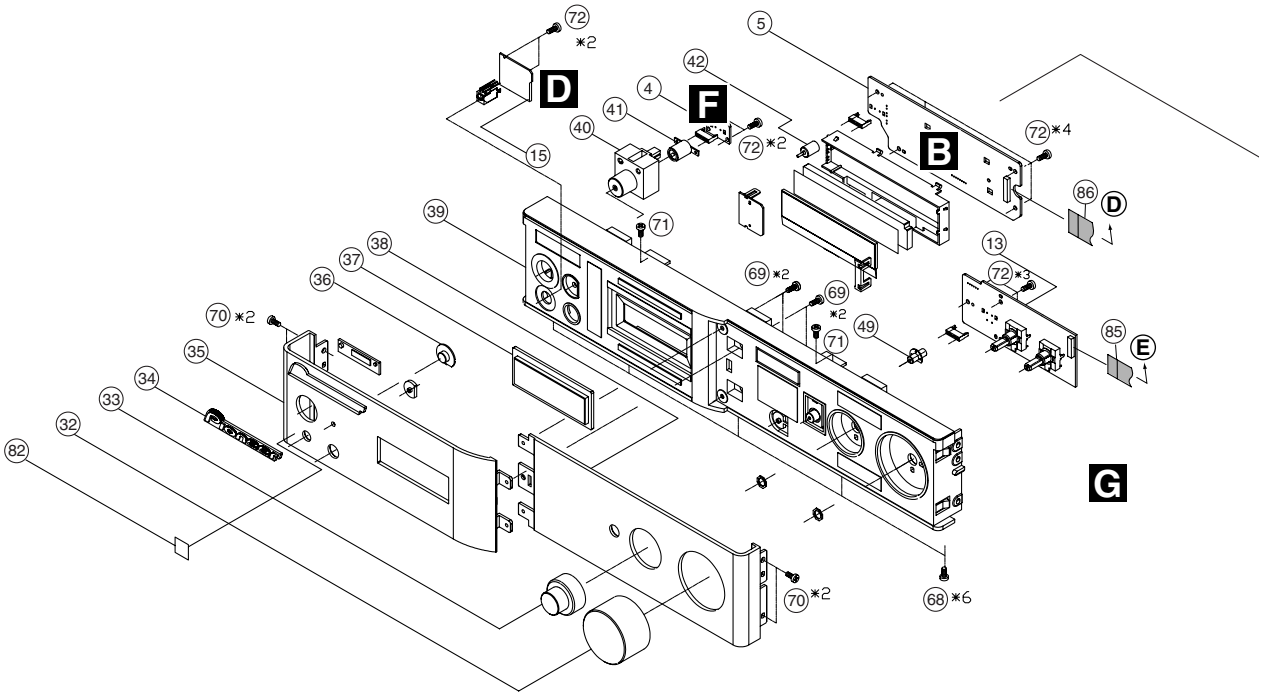

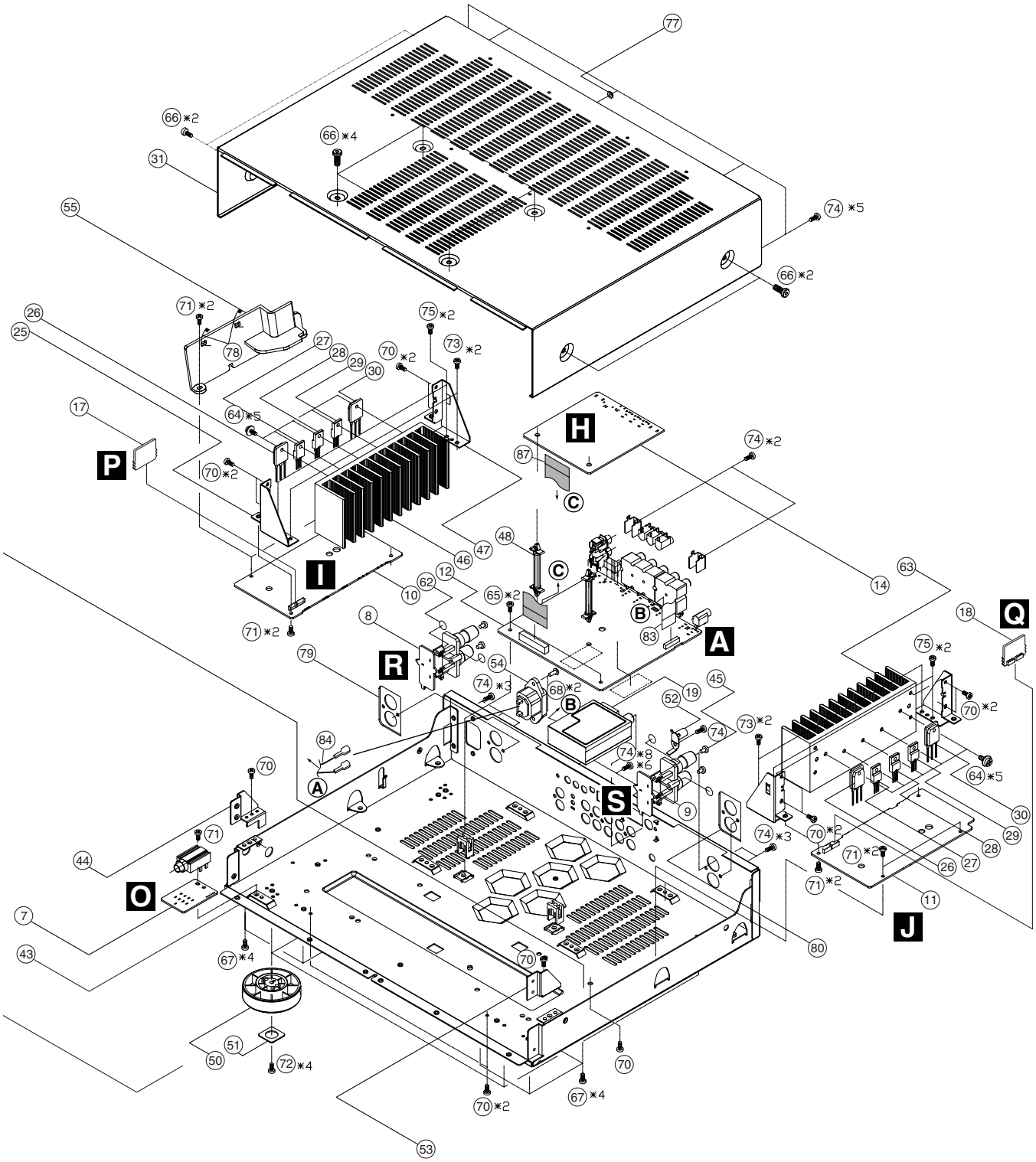
77
66 ✳2
66 ✳4
31
55
74 ✳5
66 ✳2
71 ✳2
26
25
78
27
28
29
30
75 ✳2
70 ✳2
73 ✳2
17
64 ✳5
P
70 ✳2
H
87
74 ✳2
C
48
46
47
12
62
10
I
65 ✳2
14
63
B
83
A
18
Q
71 ✳2
8
R
79
54
74 ✳3
68 ✳2
45
52
19
75 ✳2
70 ✳2
74
73 ✳2
84
74 ✳8
✳6
64 ✳5
70
A
S
9
30
29
71
74 ✳3
70 ✳2
28
44
71 ✳2
26
27
71 ✳2
O
11
7
J
80
43
67 ✳4
70
51
50
72 ✳4
70
67 ✳4
70 ✳2
53

• EXTERIOR (SX-A6-J)

Mark	No.	Description	Part No.
	1	REG IC Assy	7028065471020-IL
	2	POWER SW Assy	7028065357010-IL
	3	SUB TRANS Assy	702806535A020-IL
	4	POWER LED Assy	7028065358010-IL
	5	FRONT Assy	7028065354010-IL
	6	POWER Assy	7025065353020-IL
	7	HEADPHONE Assy	702806535B060-IL
	8	SPEAKER L-CH Assy	7028065462010-IL
	9	SPEAKER R-CH Assy	7028065463010-IL
	10	AMP LCH Assy	7028065351010-IL
	11	AMP RCH ASSY	7028065352010-IL
	12	FUNCTION Assy	7028065361020-IL
	13	VR Assy	7028065359010-IL
	14	XM-READY/USB Assy	7028065362020-IL
	15	REMOCON Assy	7028065356010-IL
	16	STATION Assy	7028065461010-IL
	17	PROTECTION L-CH ASSY	7028065363010-IL
	18	PROTECTION R-CH ASSY	7028065364010-IL
	19	FM/AM TUNER UNIT	AXX7172
⚠	20	TRANS MAIN L	8200660550350-IL
⚠	21	TRANS MAIN R	8200660550400-IL
	22	PLATE SUB TRANS	4470211012000-IL
	23	BRACKER TRANS	4010212736000-IL
	24	SUPPORT PCB	4070001601010-IL
	25	BRACKER HEAT SINK L	4010212716000-IL
⚠	26	SEMI,TR	J5001386A0010-IL
⚠	27	SEMI,TR	2SA1859A
⚠	28	SEMI,TR	J5024137V0130-IL
⚠	29	SEMI,TR	2SC4883A
⚠	30	SEMI,TR	J5023519A0010-IL
	31	CABINET TOP COVER	3007210796000-IL
	32	KNOB VOLUME	5088211388000-IL
	33	KNOB INPUT	5088211368000-IL
	34	BADGE	VAM1124
	35	PANEL FRONT L	3067212788000-IL
	36	LENS REMOCON	3710210683000-IL
	37	WINDOW DISPLAY	5070212303000-IL
	38	PANEL FRONT R	3067212808010-IL
	39	FRAME PANEL	3217211311000-IL
	40	KNOB POWER	5087211391000-IL
	41	LENS POWER	3710210673000-IL
	42	LENS STAND BY	3710210693000-IL
NSP	43	CHASSIS MAIN & BACK	3207212016100-IL
	44	BRACKET FRAEM L	4010212696000-IL
	45	BUSHING TERMINAL	2410040353010-IL
NSP	46	HEAT SINK MAIN L Assy	2120210998000-IL
	47	BRACKER HEAT SINK R	4010212726000-IL
	48	SPACER SUPPORT	4300210023000-IL
	49	LENS DIRECT	3710210663000-IL
	50	FOOT	4007210391000-IL
	51	CUSHION FOOT	4050211605000-IL
	52	TERMINAL GROUND	3790000090000-IL
	53	BRACKET FRAME R	4010212706000-IL
	54	AC INLET	G430000180010-IL
	55	HOLDER INLET CORD	4320210601000-IL

Mark	No.	Description	Part No.
	56	CUSHION SCREW	4050211205000-IL
NSP	57	ACETAPE(15*80)	1220210059070-IL
NSP	58	ACETAPE(15*45)	1220210059050-IL
NSP	59	ACETAPE(33*50)	1220210319000-IL
NSP	60	ACETAPE(15*110)	1220210059000-IL
	61	CLAMP RETAINER COIL	4330210062000-IL
	62	CUSHION CAP SCREW	4050211745000-IL
NSP	63	HEAT SINK MAIN R	2120211048000-IL
	64	SCREW (+2S 3*14 P+S-WASHER ZNY/HH)	B018230141H11-IL
	65	SCREW (+2S 4*10 ZNY/HH)	B020030171B10-IL
	66	SCREW	1500040103P41-IL
	67	SCREW (1500040104P41S)	B028940101B10-IL
	68	SCREW (+2S 3*8 B-TYPE FH/CU)	B020030086F10-IL
	69	SCREW (+2S 3*10 B-TYPE BH/CU)	B020030106B10-IL
	70	SCREW (+2S 3*8 B-TYPE(DOT) BH/CU)	B020030086B11-IL
	71	SCREW (+2S 3*8 B-TYPE WASHER BH/CU)	B028030086B10-IL
	72	SCREW (+2S 3*8 B-TYPE BH/CU)	B020030086B10-IL
	73	SCREW (+2S 3*6 B-TYPE BH/CU)	B020030066B10-IL
	74	SCREW (+3S 3*10 B-T(DOT) BH/CU))	B020030106B11-IL
	75	SCREW (+2S 3*6 B-TYPE(DOT) BH/CU)	B020030066B11-IL
	76	••••••••	
	77	WASHER	1530210132000-IL
	78	CLAMP	4330040343010-IL
	79	SHEET SPEAKER L	1217210482000-IL
	80	SHEET SPEAKER R	1217210482010-IL
	81	LABEL RATING	5527042410010-IL
NSP	82	ENERGY STAR LABEL	AAX8022
	83	CABLE, FLAT CARD (TUNER UNIT)	N712110943810-IL
	84	CN, WIRE 2P (CN301 SUB TRANS)	L000201020130-IL
	85	CABLE, FLAT CARD 1.25 10P (CN607 VR - CN9915 STATION)	N712102633810-IL
	86	CABLE, FLAT CARD 14P (CN608 FRONT - CN9914 STATION)	N712143633810-IL
	87	CABLE, FLAT CARD 1.25 23P (CN102 FUNCTION - CN501 XM READY/USB)	N712230943810-IL

A

B

C

D

E

F

3. BLOCK DIAGRA AND SCHEMATIC DIAGRAM

3.1 OVERALL BLOCK DIAGRAM

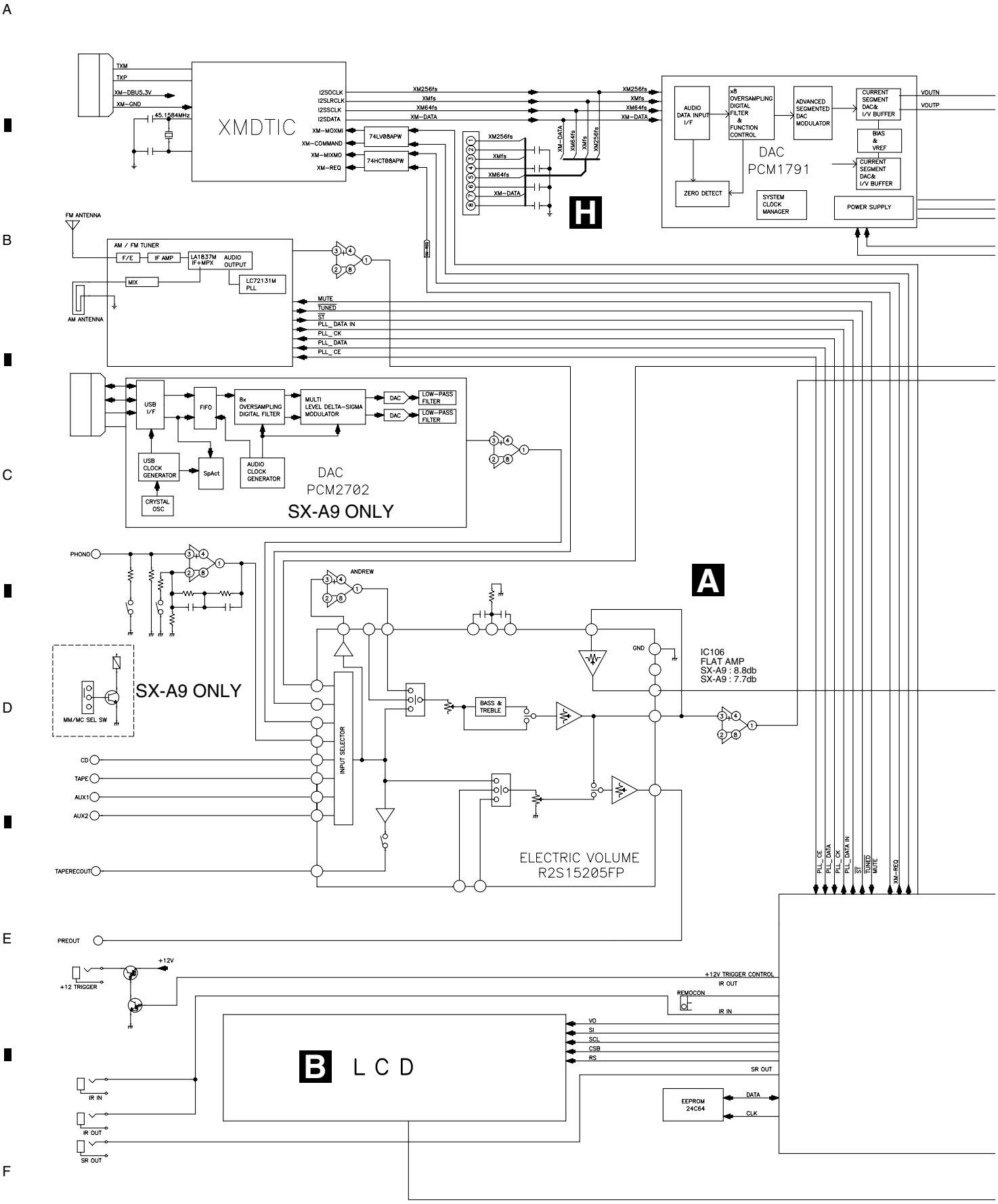

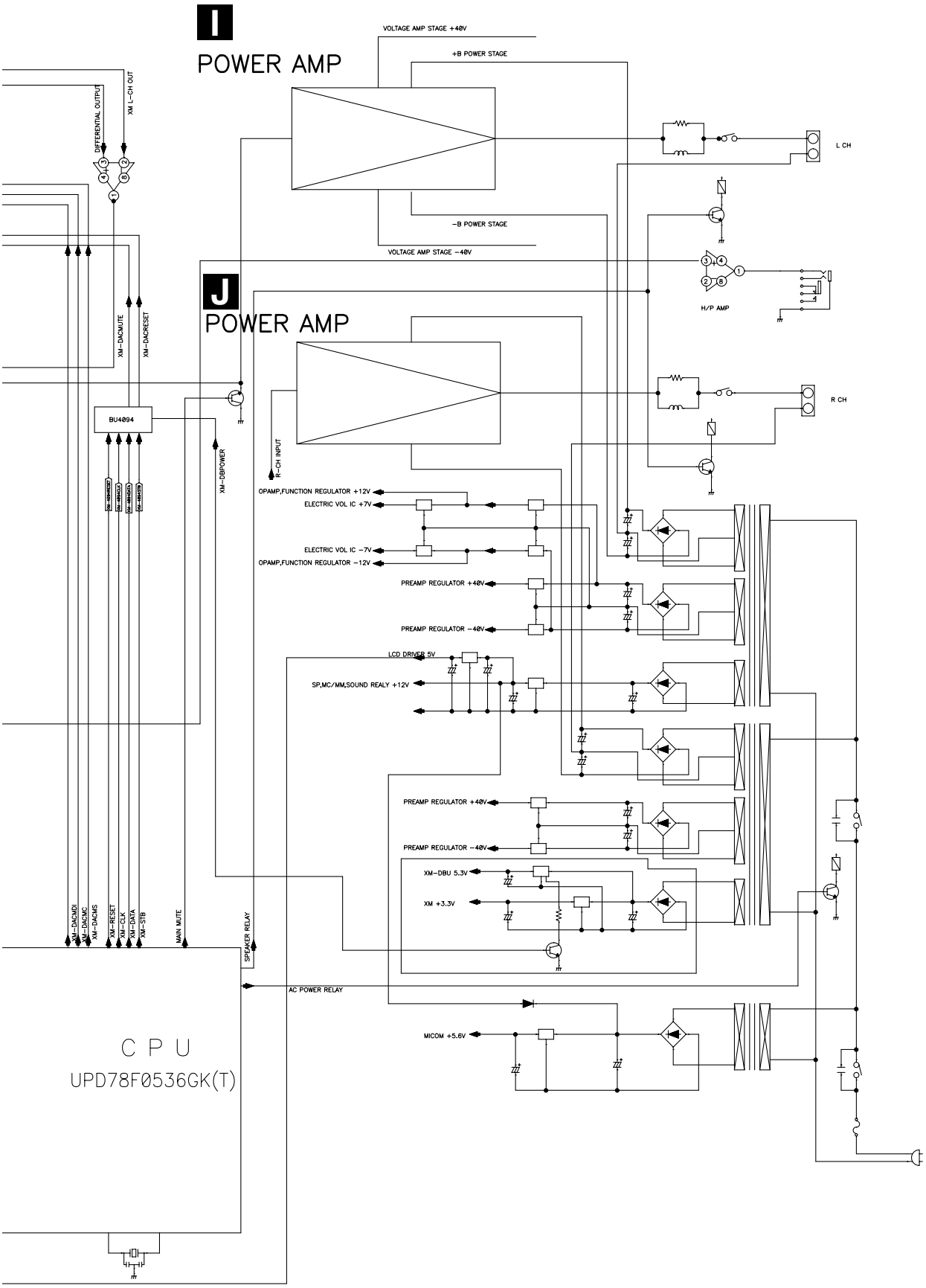
I
POWER AMP
VOLTAGE AMP STAGE +40V
+B POWER STAGE
-B POWER STAGE
VOLTAGE AMP STAGE -40V
L CH
H/P AMP
J
POWER AMP
R CH
DIFFERENTIAL OUTPUT
XM L-CH OUT
XM-DACMUTE
XM-DACRESET
BU4094
XM-DBPOWER
R-CH INPUT
OPAMP,FUNCTION REGULATOR +12V
ELECTRIC VOL IC +7V
ELECTRIC VOL IC -7V
OPAMP,FUNCTION REGULATOR -12V
PREAMP REGULATOR +40V
PREAMP REGULATOR -40V
LCD DRIVER 5V
SP,MC/MM,SOUND REALY +12V
PREAMP REGULATOR +40V
PREAMP REGULATOR -40V
XM-DBU 5.3V
XM +3.3V
XM-DACMDI
XM-DACMC
XM-DACMS
XM-RESET
XM-CLK
XM-DATA
XM-STB
MAIN MUTE
SPEAKER RELAY
AC POWER RELAY
MICOM +5.6V
C P U
UPD78F0536GK(T)

3.2 OVERALL WIRING DIAGRAM

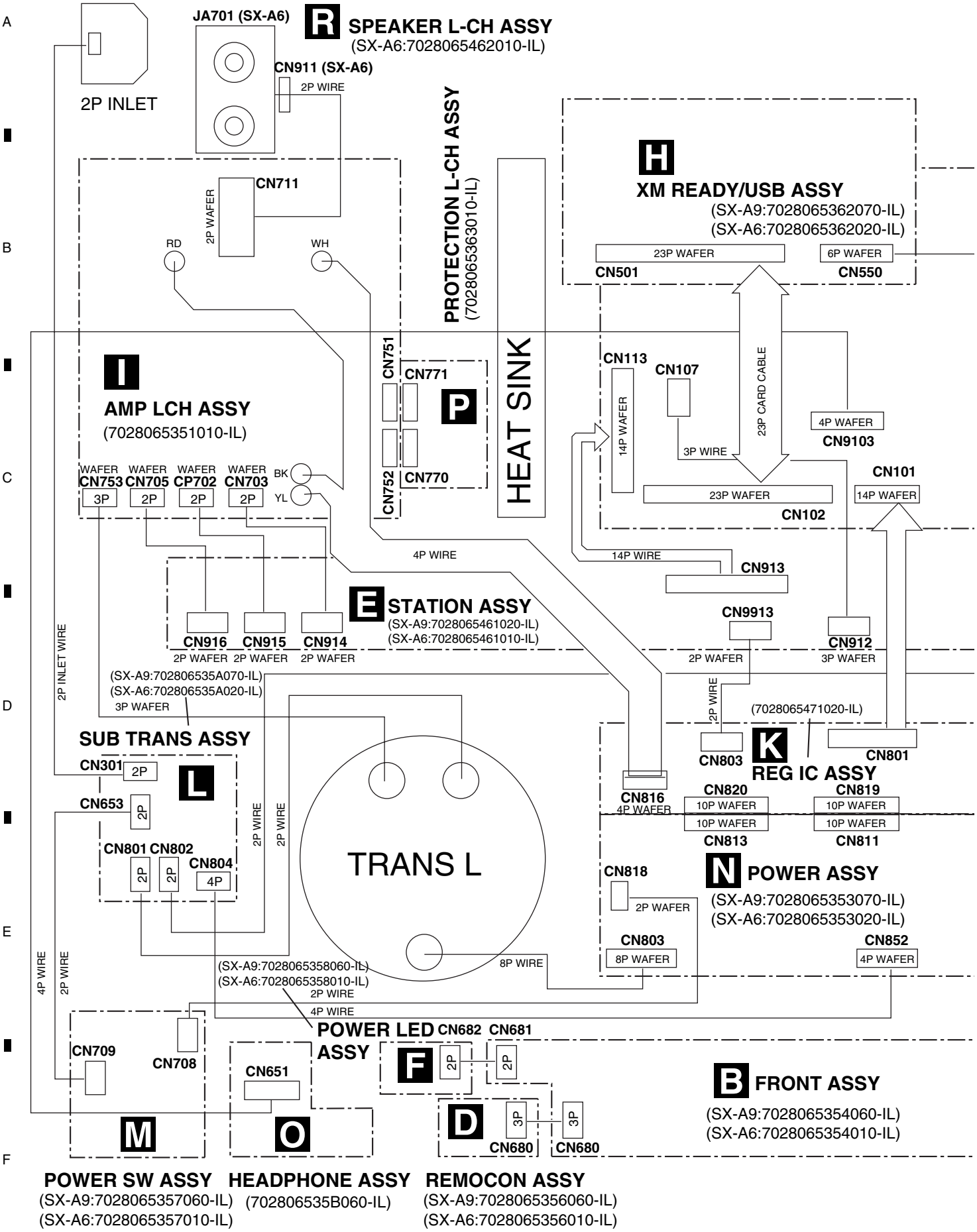

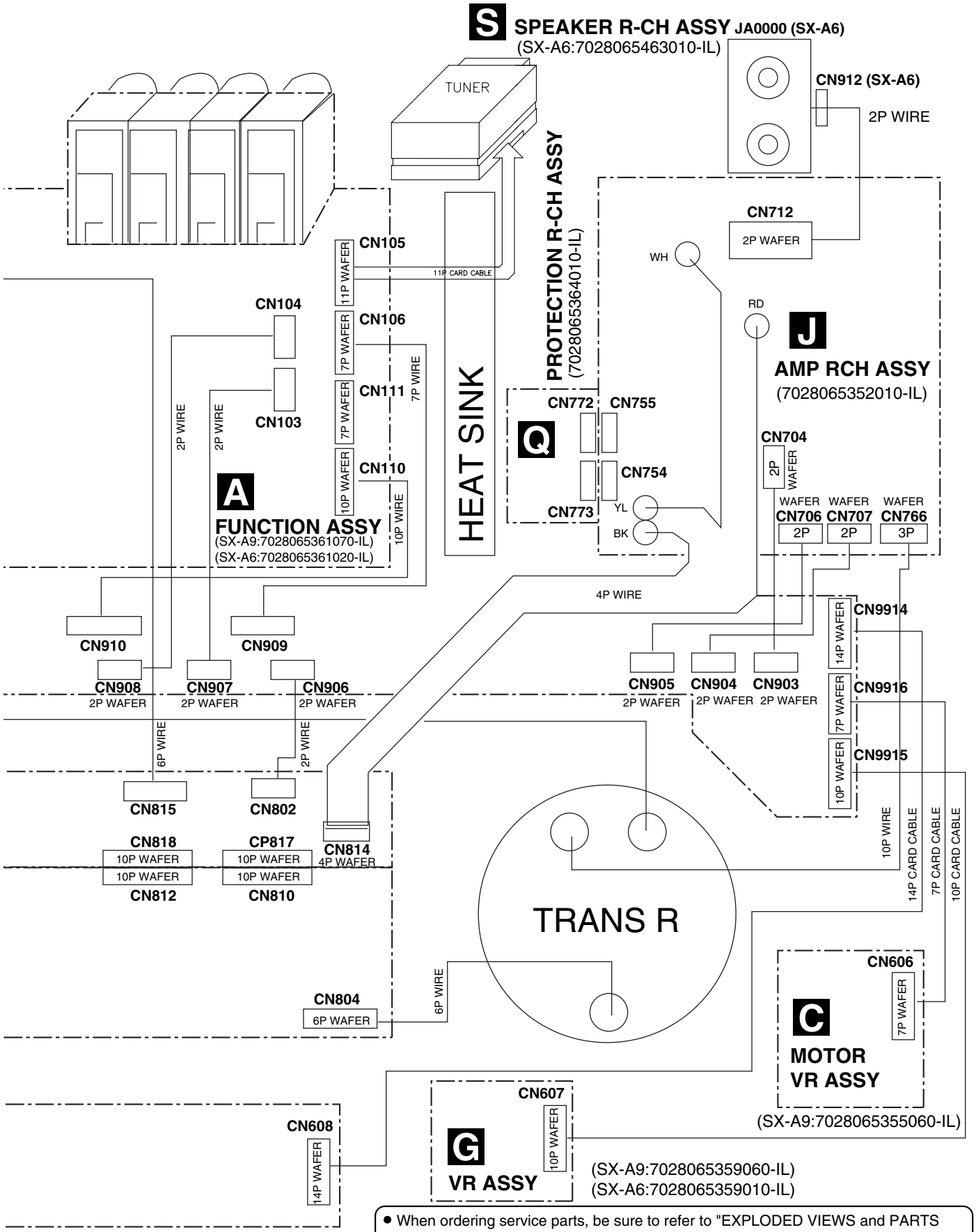

- When ordering service parts, be sure to refer to "EXPLODED VIEWS and PARTS LIST" or "PCB PARTS LIST".
- The ⚠ mark found on some component parts indicates the importance of the safety factor of the part. Therefore, when replacing, be sure to use parts of identical designation.

3.3 FUNCTION and HEADPHONE ASSYS

A FUNCTION ASSY (SX-A9:7028065361070-IL) (SX-A6:7028065361020-IL)

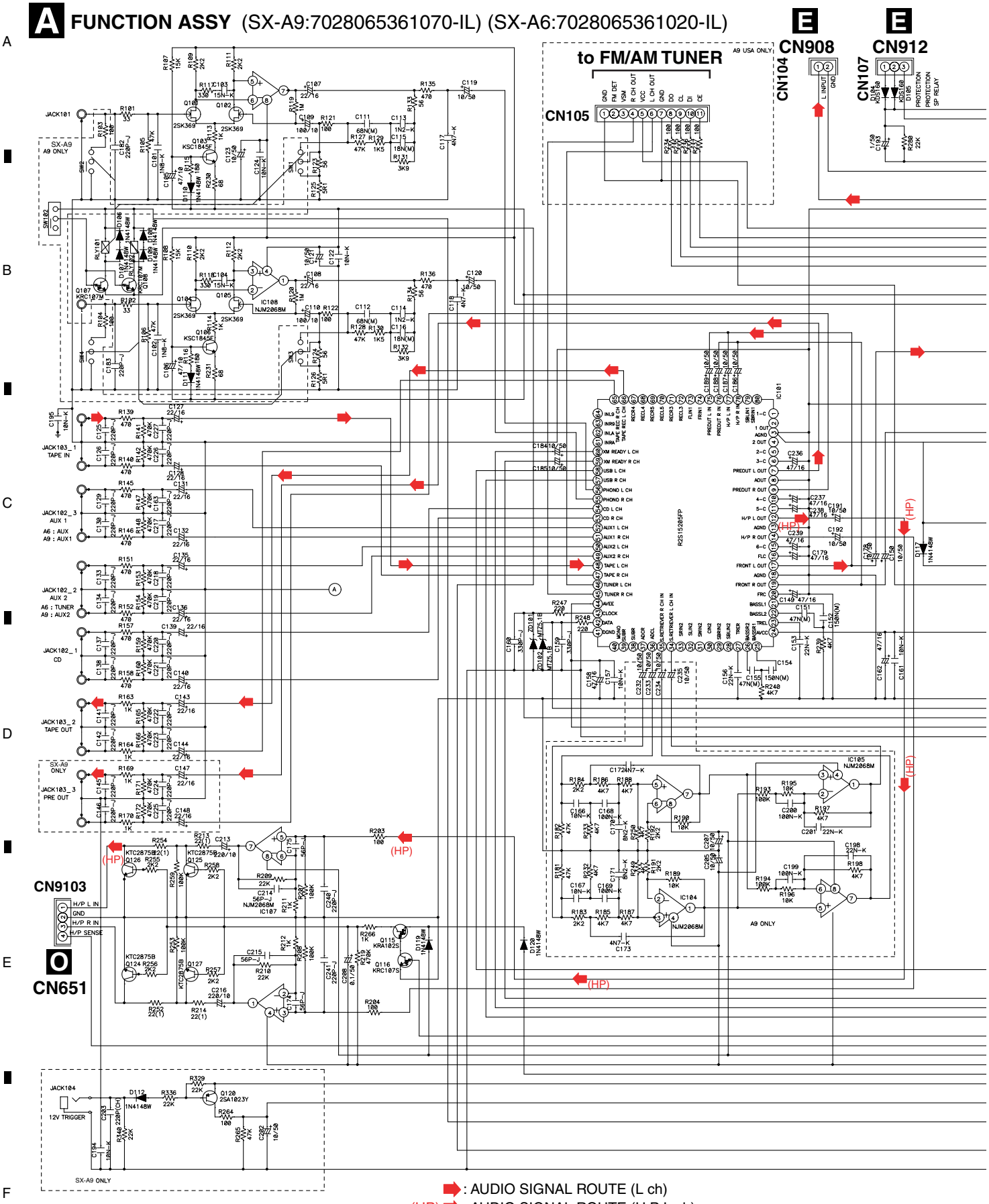

➡ : AUDIO SIGNAL ROUTE (L ch)

(HP) ➡ : AUDIO SIGNAL ROUTE (H.P L ch)

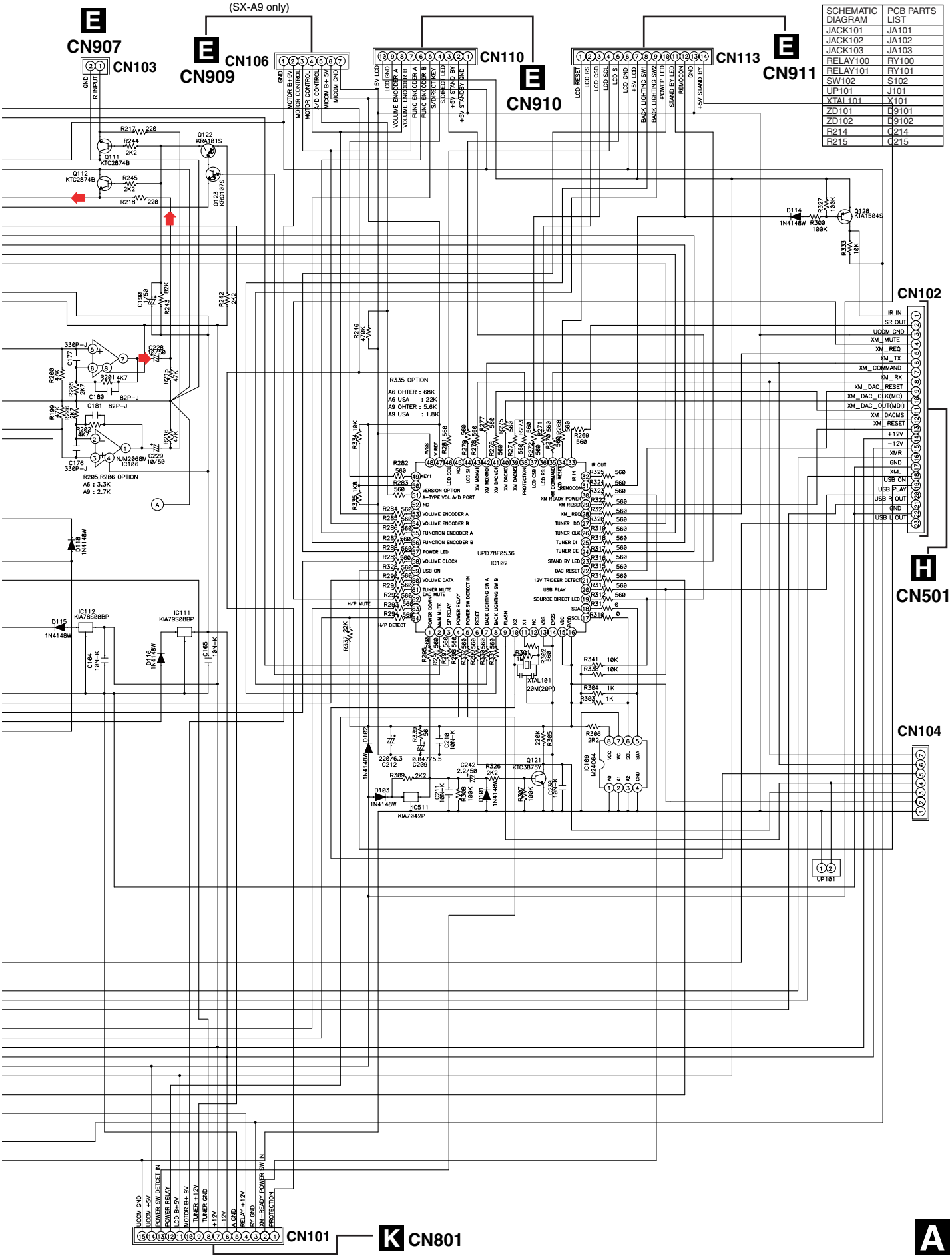

SCHEMATIC DIAGRAM	PCB PARTS LIST
JACK101	JA101
JACK102	JA102
JACK103	JA103
RELAY100	RY100
RELAY101	RY101
SW102	S102
UP101	J101
XTAL101	X101
ZD101	D9101
ZD102	D9102
R214	G214
R215	G215

3.4 FRONT, MOTOR VR, REMOCON, STATION, POWER LED and VR ASSYS

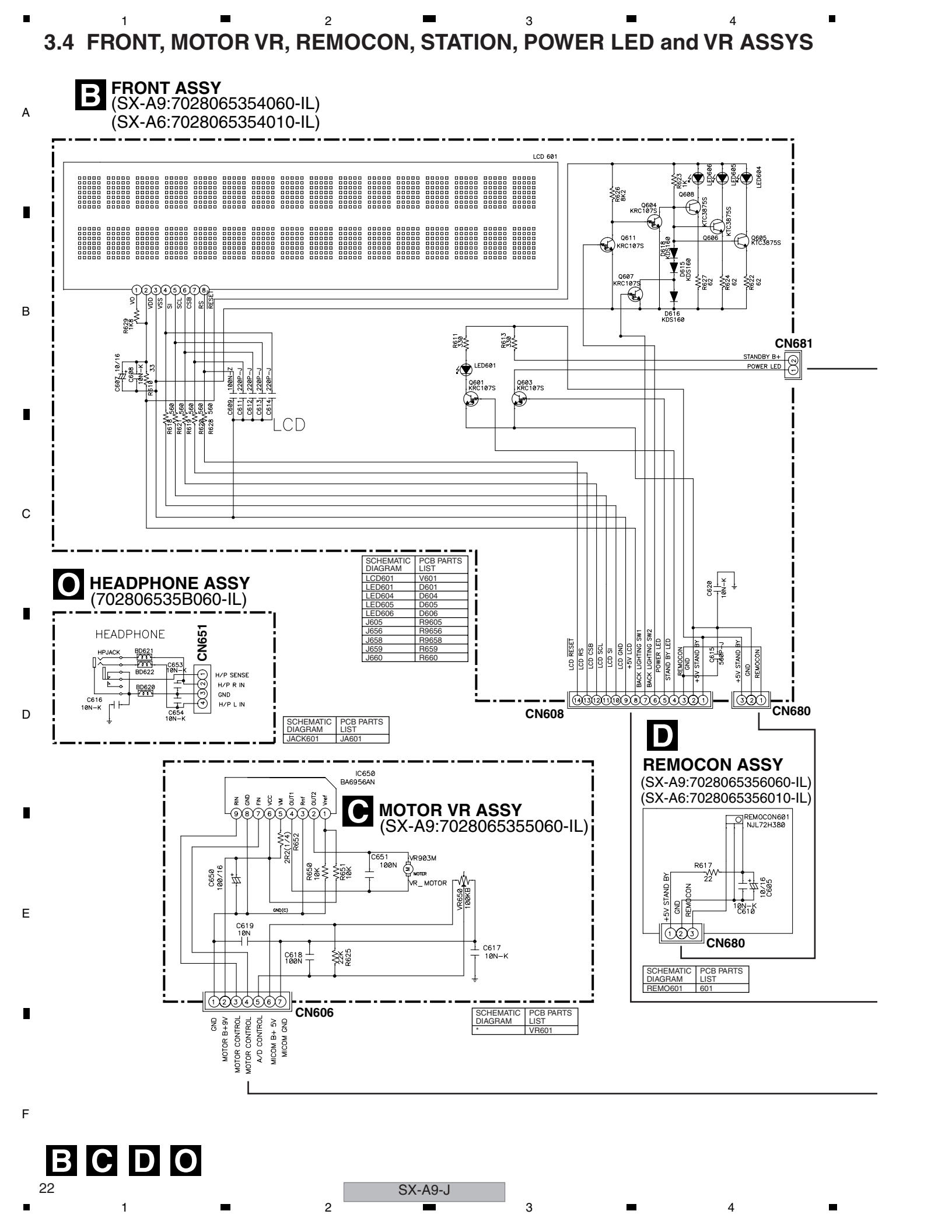

SCHEMATIC DIAGRAM	PCB PARTS LIST
LCD601	V601
LED601	D601
LED604	D604
LED605	D605
LED606	D606
J605	R9605
J656	R9656
J658	R9658
J659	R659
J660	R660

SCHEMATIC DIAGRAM	PCB PARTS LIST
JACK601	JA601

SCHEMATIC DIAGRAM	PCB PARTS LIST
REMO601	601

SCHEMATIC DIAGRAM	PCB PARTS LIST
*	VR601

B C D O

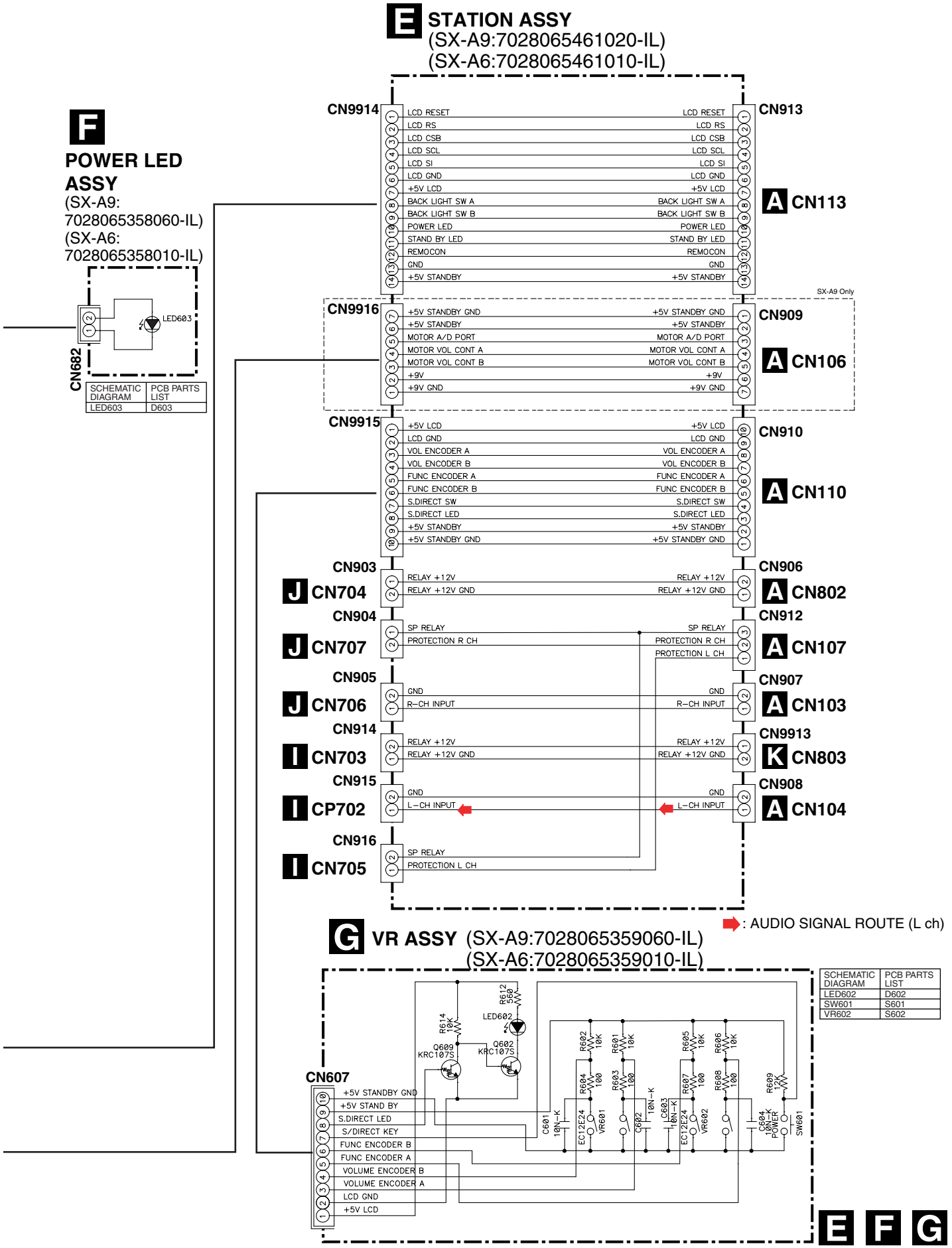
E STATION ASSY
(SX-A9:7028065461020-IL)
(SX-A6:7028065461010-IL)
F
POWER LED ASSY
(SX-A9: 7028065358060-IL)
(SX-A6: 7028065358010-IL)
CN682
LED603
SCHEMATIC DIAGRAM | PCB PARTS LIST
LED603 | D603
CN9914
LCD RESET
LCD RS
LCD CSB
LCD SCL
LCD SI
LCD GND
+5V LCD
BACK LIGHT SW A
BACK LIGHT SW B
POWER LED
STAND BY LED
REMOCON
GND
+5V STANDBY
CN913
A CN113
SX-A9 Only
CN9916
+5V STANDBY GND
+5V STANDBY
MOTOR A/D PORT
MOTOR VOL CONT A
MOTOR VOL CONT B
+9V
+9V GND
CN909
A CN106
CN9915
VOL ENCODER A
VOL ENCODER B
FUNC ENCODER A
FUNC ENCODER B
S.DIRECT SW
S.DIRECT LED
CN910
A CN110
CN903
J CN704
RELAY +12V
RELAY +12V GND
CN906
A CN802
CN904
J CN707
SP RELAY
PROTECTION R CH
PROTECTION L CH
CN912
A CN107
CN905
J CN706
GND
R-CH INPUT
CN907
A CN103
CN914
I CN703
CN9913
K CN803
CN915
I CP702
L-CH INPUT
CN908
A CN104
CN916
I CN705
: AUDIO SIGNAL ROUTE (L ch)
G VR ASSY (SX-A9:7028065359060-IL)
(SX-A6:7028065359010-IL)
SCHEMATIC DIAGRAM | PCB PARTS LIST
LED602 | D602
SW601 | S601
VR602 | S602
CN607
+5V STANDBY GND
+5V STAND BY
S.DIRECT LED
S/DIRECT KEY
FUNC ENCODER B
FUNC ENCODER A
VOLUME ENCODER B
VOLUME ENCODER A
LCD GND
+5V LCD
R612 560
LED602
R614 10K
Q609 KRC107S
Q602 KRC107S
R602 10K
R601 10K
R605 10K
R606 10K
R604 100
R603 100
R607 100
R608 100
R609 1K
C601 10N-K
C602 10N-K
C603 10N-K
C604 10N-K
EC12E24
VR601
VR602
POWER
SW601
E F G

3.5 XM-READY/USB ASSY

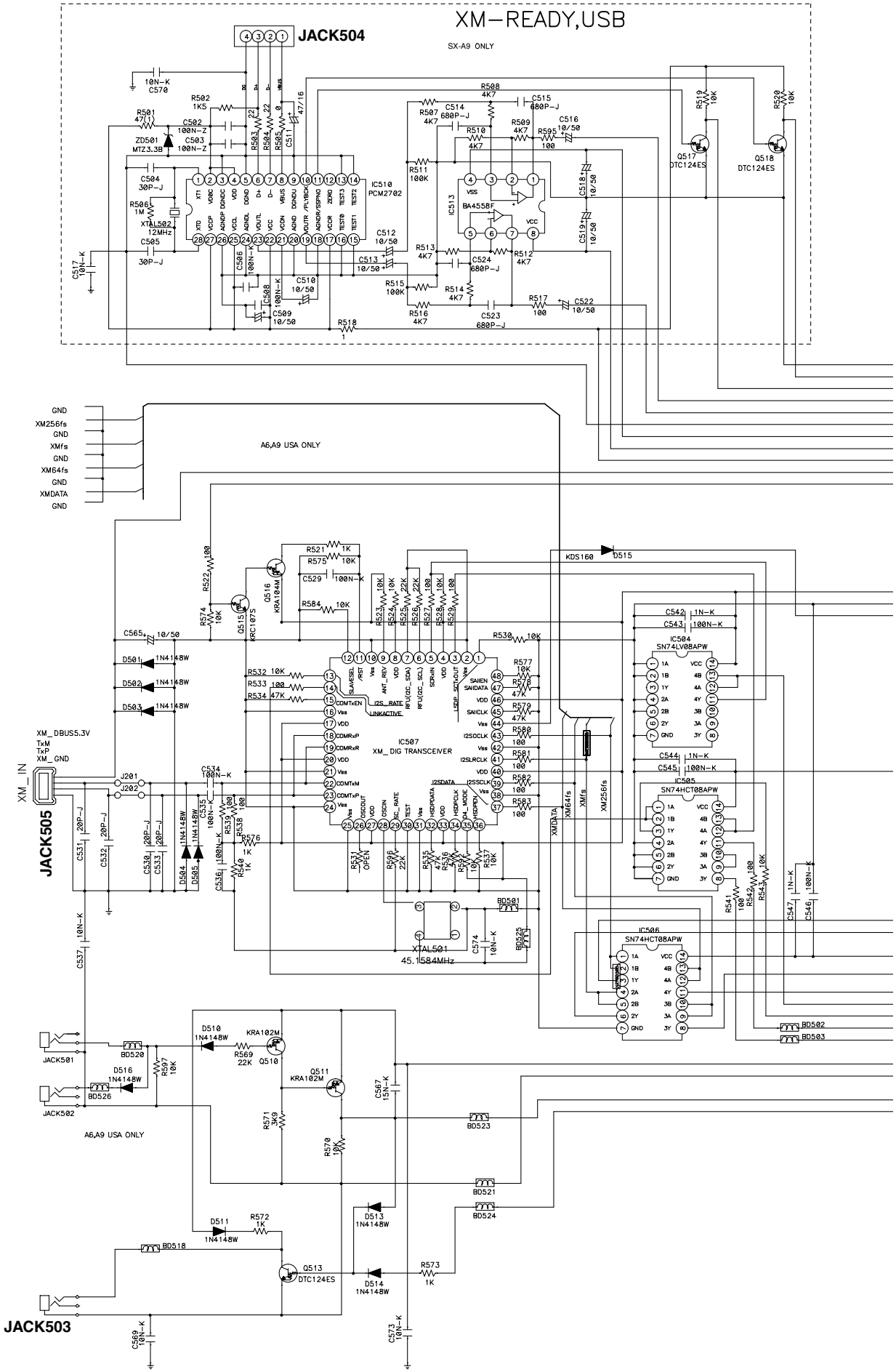

H XM-READY/USB ASSY ASSY

(SX-A9:7028065361070-IL)
(SX-A6:7028065361020-IL)

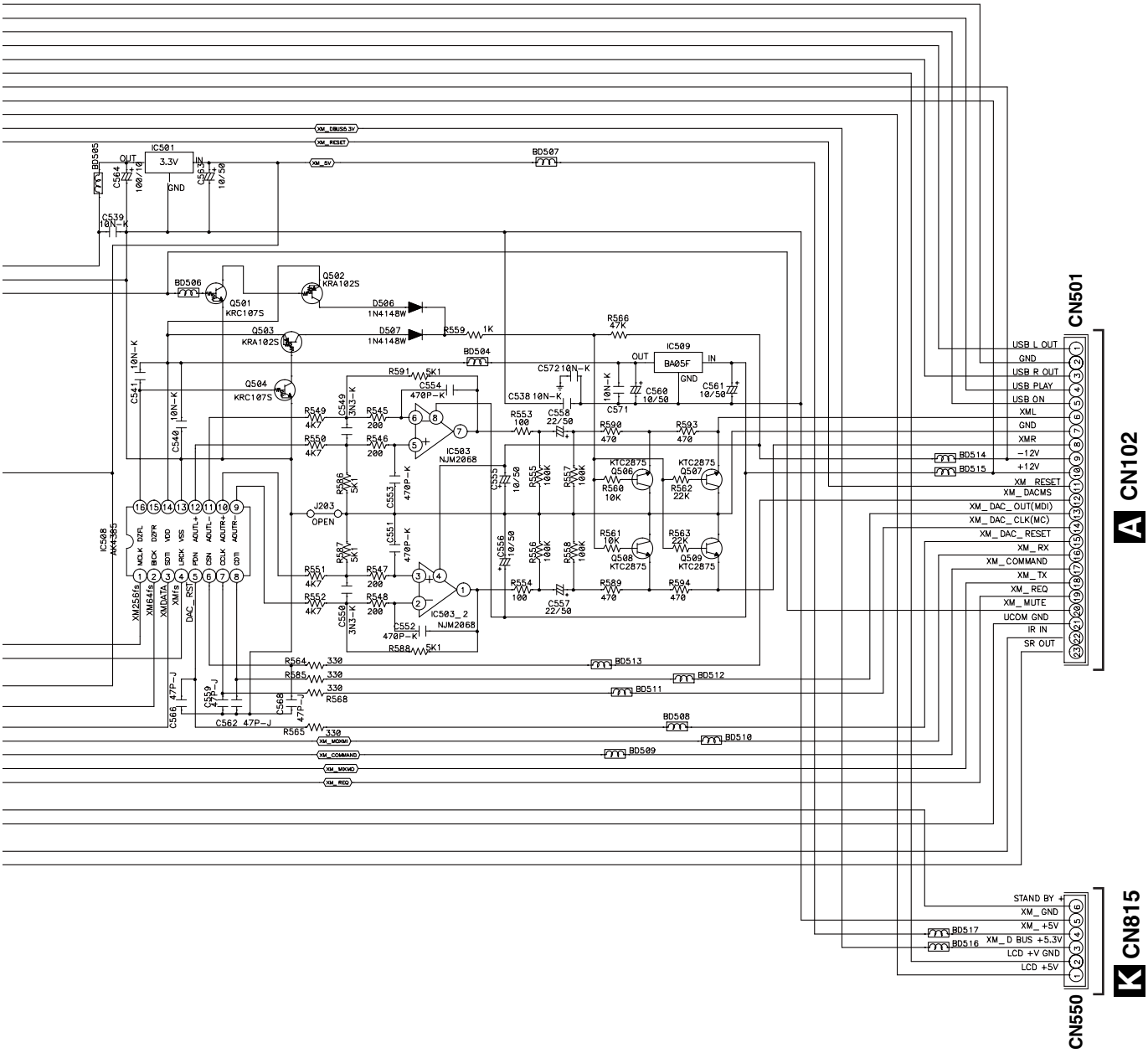

3.6 AMP LCH, AMP RCH, PROTECTION L-CH and PROTECTION R-CH ASSYS

I AMP L CH ASSY
(7028065351010-IL)

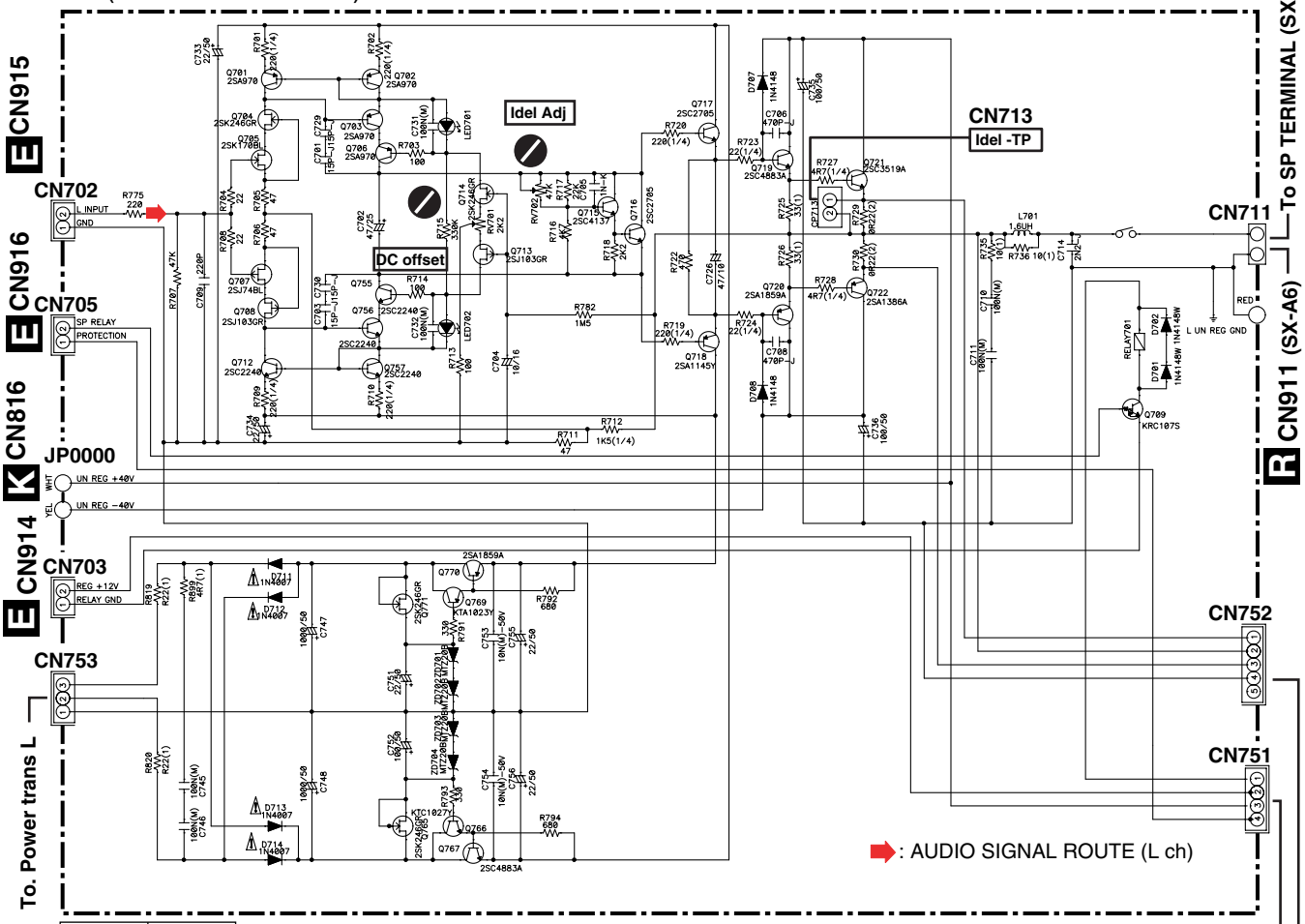

SCHEMATIC DIAGRAM	PCB PARTS LIST
RV701	VR701
RV702	VR702
RELAY701	RY701
ZD701	D9701
ZD702	D9702
ZD703	D9703
ZD704	D9704
LED701	D8701
LED702	D8702
ZD707	D707
ZD708	D708

P PROTECTION L-CH ASSY
(7028065363010-IL)

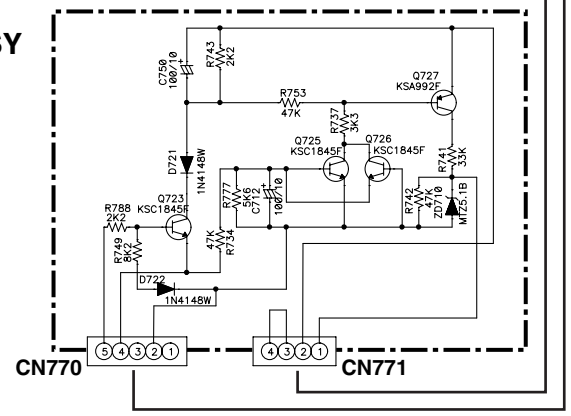

J AMP R CH ASSY
(7028065352010-IL)

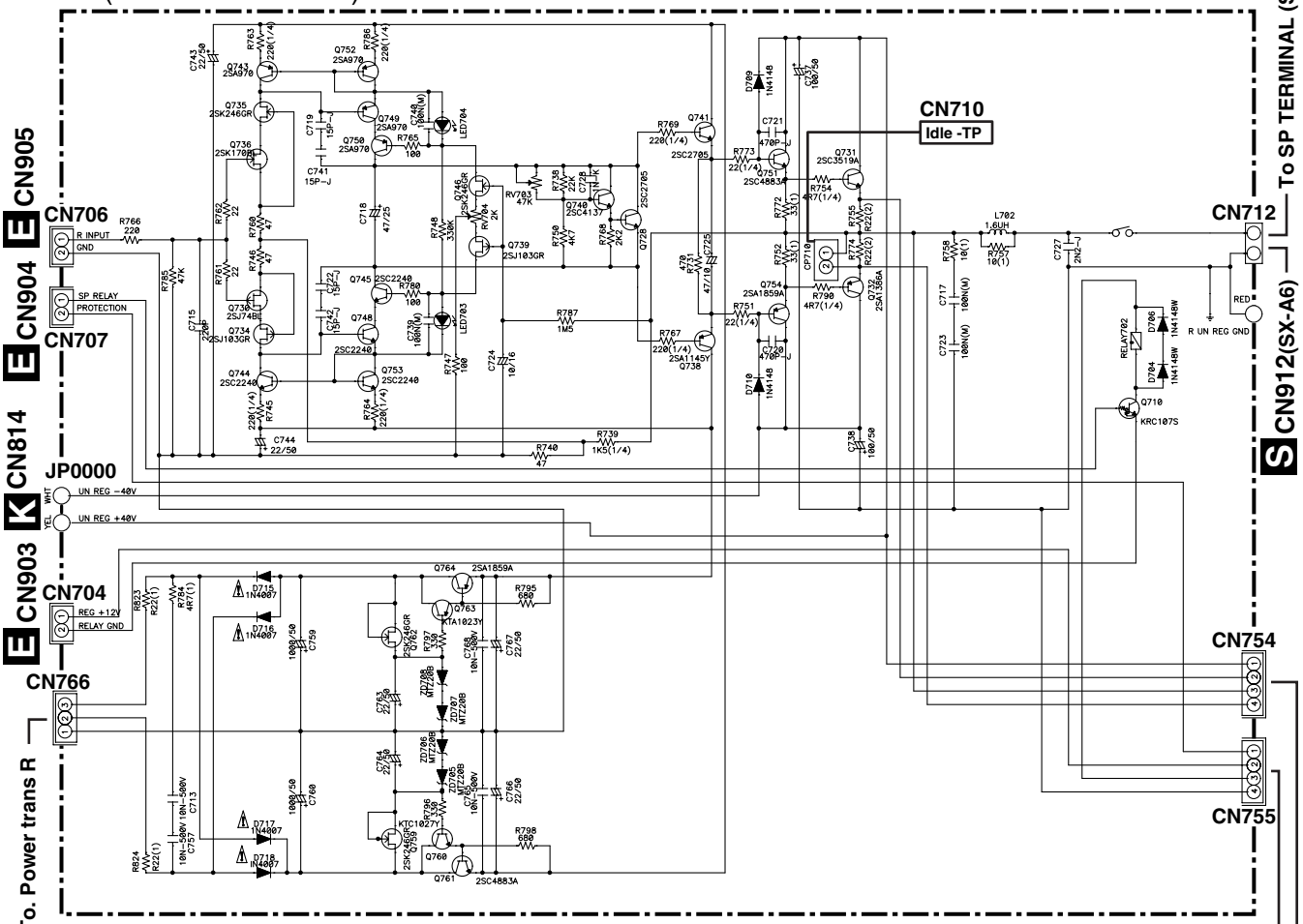

SCHEMATIC DIAGRAM	PCB PARTS LIST
RELAY702	RY702
RV703	VR703
RV704	VR704
ZD706	D706
LED703	D703
ZD705	D705
J716	R9716
J718	R9718
J719	R9719
J720	R9720
J721	R9721
J722	R9722
J729	R9729
J730	R9730
J732	R9732
J735	R9735
J739	R9739
J751	R9751
J752	R9752
J754	R9754
J755	R9755
J756	R9756
J757	R9757
J758	R9758
J759	R9759
J760	R9760

Q PROTECTION R-CH ASSY
(7028065364010-IL)

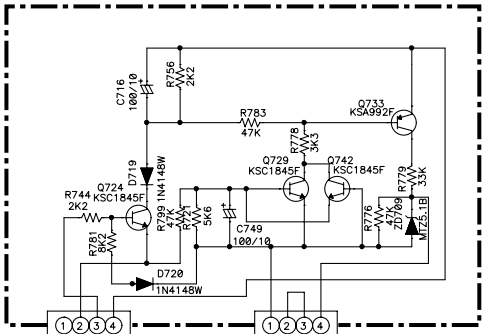

3.7 REG IC, SUB TRANS, POWER SW and POWER ASSYS

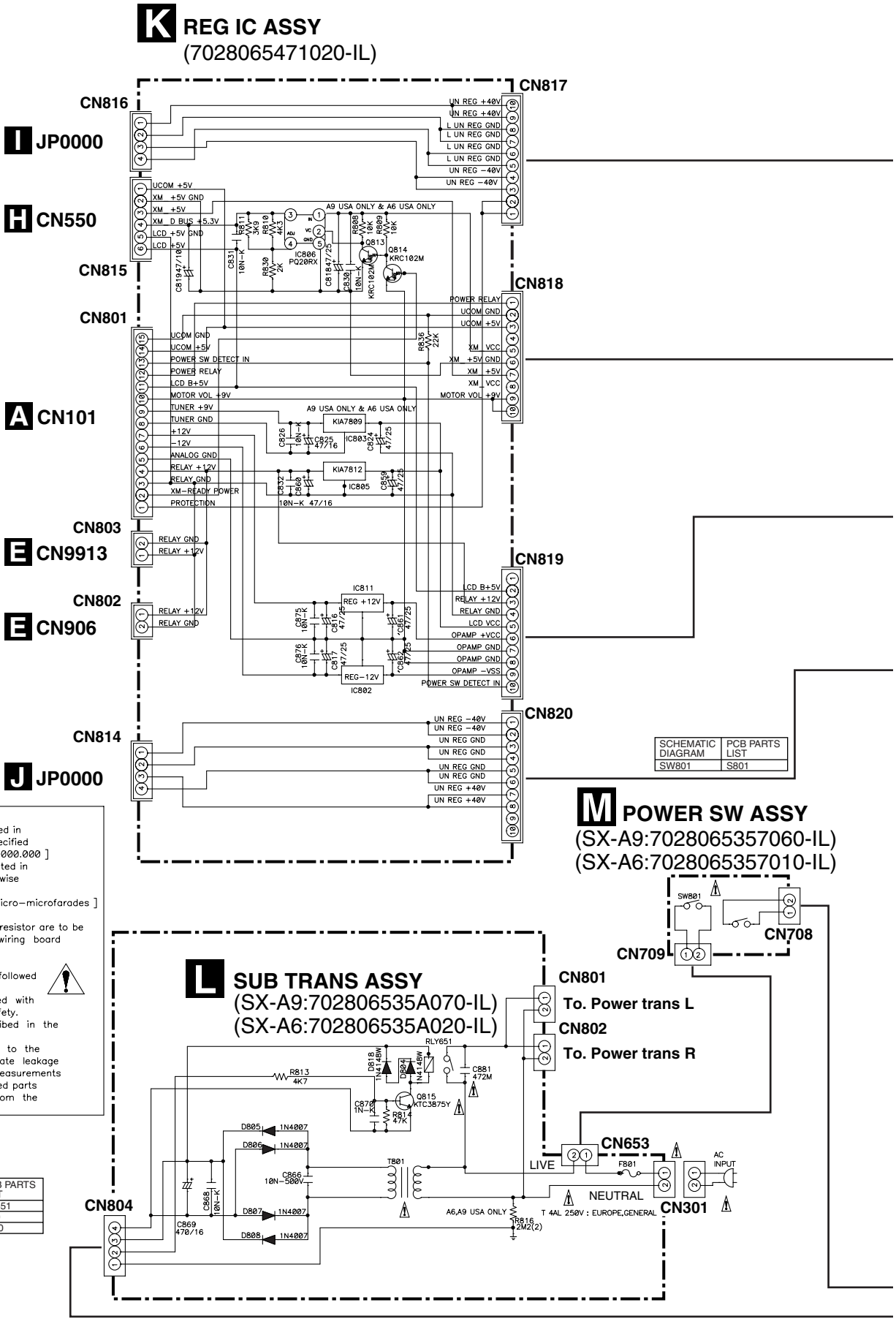

SCHEMATIC DIAGRAM	PCB PARTS LIST
SW801	S801

NOTES
1. Resistor values are indicated in ohms unless otherwise specified
[k = 1.000 m = 1.000.000]
2. Capacitor values are indicated in microfarades unless otherwise specified.
[p = micro−microfarades]
3. : These resistor are to be segregated from printed wiring board or other acessible parts.
CAUTION
Safety precaution to be followed during servicing
1] Since those parts marked with are critical parts for safety. use only the one described in the parts list
2] Before returning the set to the customer make appropriate leakage current or resistance measurements to determine the exposed parts are prorerly insulated from the supply circuit.

SCHEMATIC DIAGRAM	PCB PARTS LIST
RLY651	RY651
*	FU0
*	0000

K L M

N POWER ASSY

(SX-A9:7028065353070-IL)
(SX-A6:7028065353020-IL)

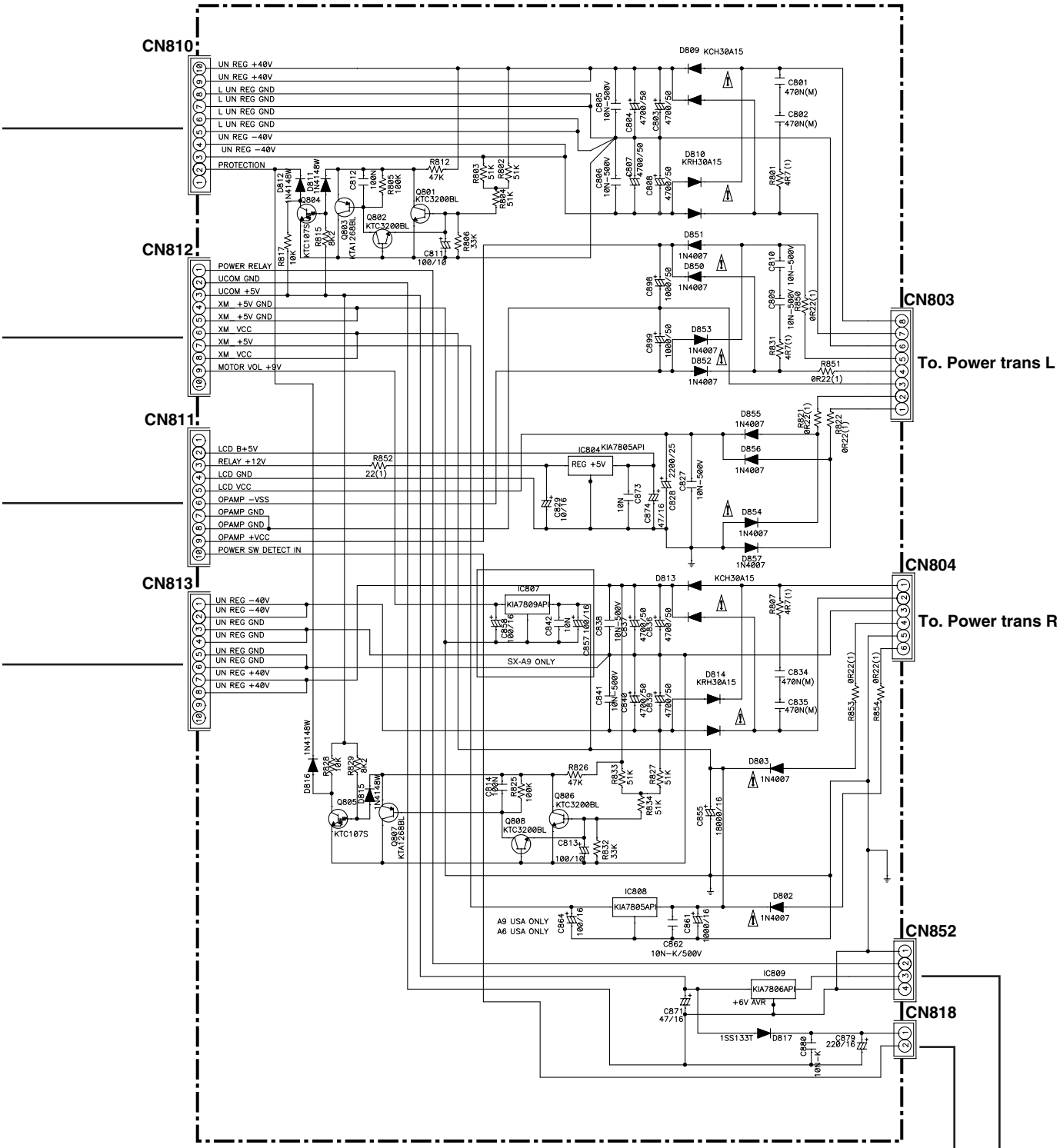

SCHEMATIC DIAGRAM	PCB PARTS LIST
J811	R811
J812	R9812
J866	R866
J867	R867

• NOTE FOR FUSE REPLACEMENT

CAUTION - FOR CONTINUED PROTECTION AGAINST RISK OF FIRE. REPLACE WITH SAME TYPE AND RATINGS OF FUSE.

4. PCB CONNECTION DIAGRAM

NOTE FOR PCB DIAGRAMS :

1. Part numbers in PCB diagrams match those in the schematic diagrams.
2. A comparison between the main parts of PCB and schematic diagrams is shown below.

Symbol In PCB Diagrams	Symbol In Schematic Diagrams	Part Name
B C E	B C E B C E	Transistor
B C E	B C E B C E	Transistor with resistor
D G S	D G S D G S	Field effect transistor
		Resistor array
		3-terminal regulator

3. The parts mounted on this PCB include all necessary parts for several destinations.
   For further information for respective destinations, be sure to check with the schematic diagram.
4. View point of PCB diagrams.

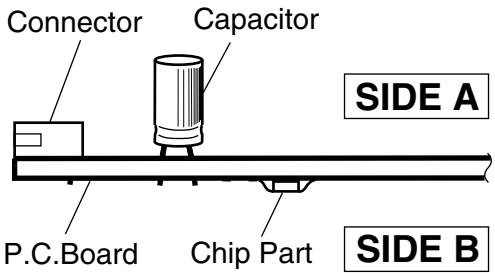

4.1 SUB TRANS and POWER SW ASSYS

SIDE A **SIDE A**

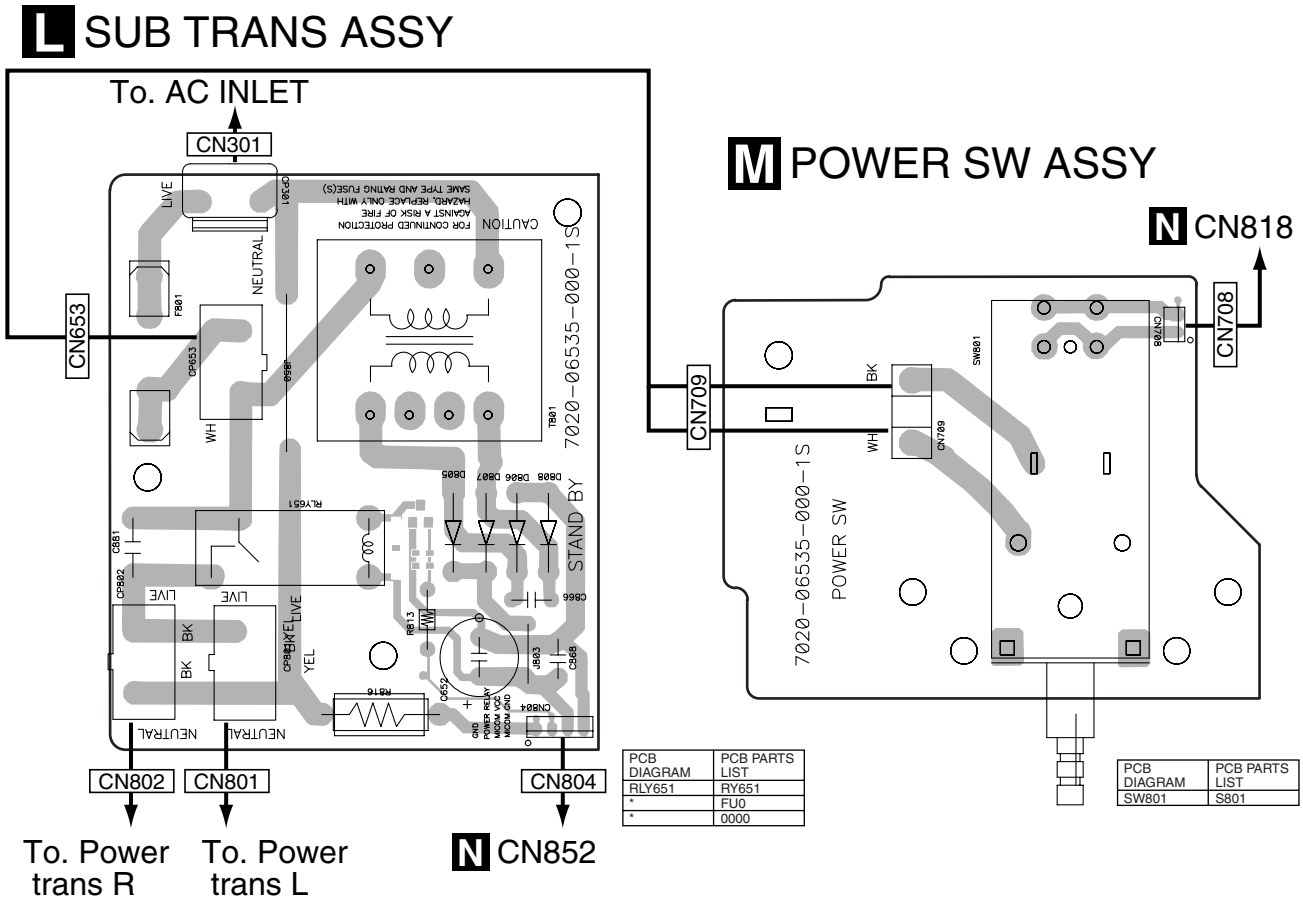

PCB DIAGRAM	PCB PARTS LIST
RLY651	RY651
*	FU0
*	0000

PCB DIAGRAM	PCB PARTS LIST
SW801	S801

SIDE B **SIDE B**

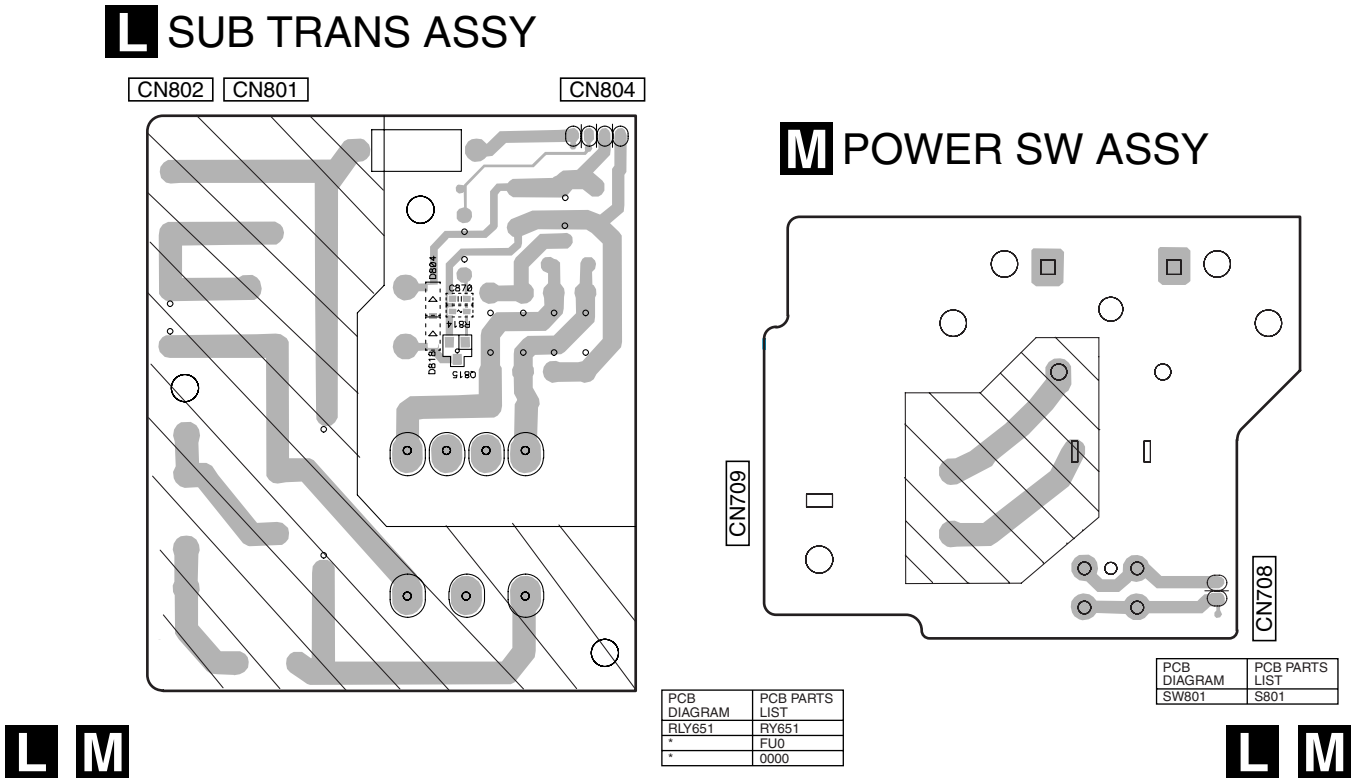

PCB DIAGRAM	PCB PARTS LIST
RLY651	RY651
*	FU0
*	0000

PCB DIAGRAM	PCB PARTS LIST
SW801	S801

L M L M

4.2 FANCTION and HEADPHONE ASSYS

SIDE A

SIDE A

A FUNCTION ASSY

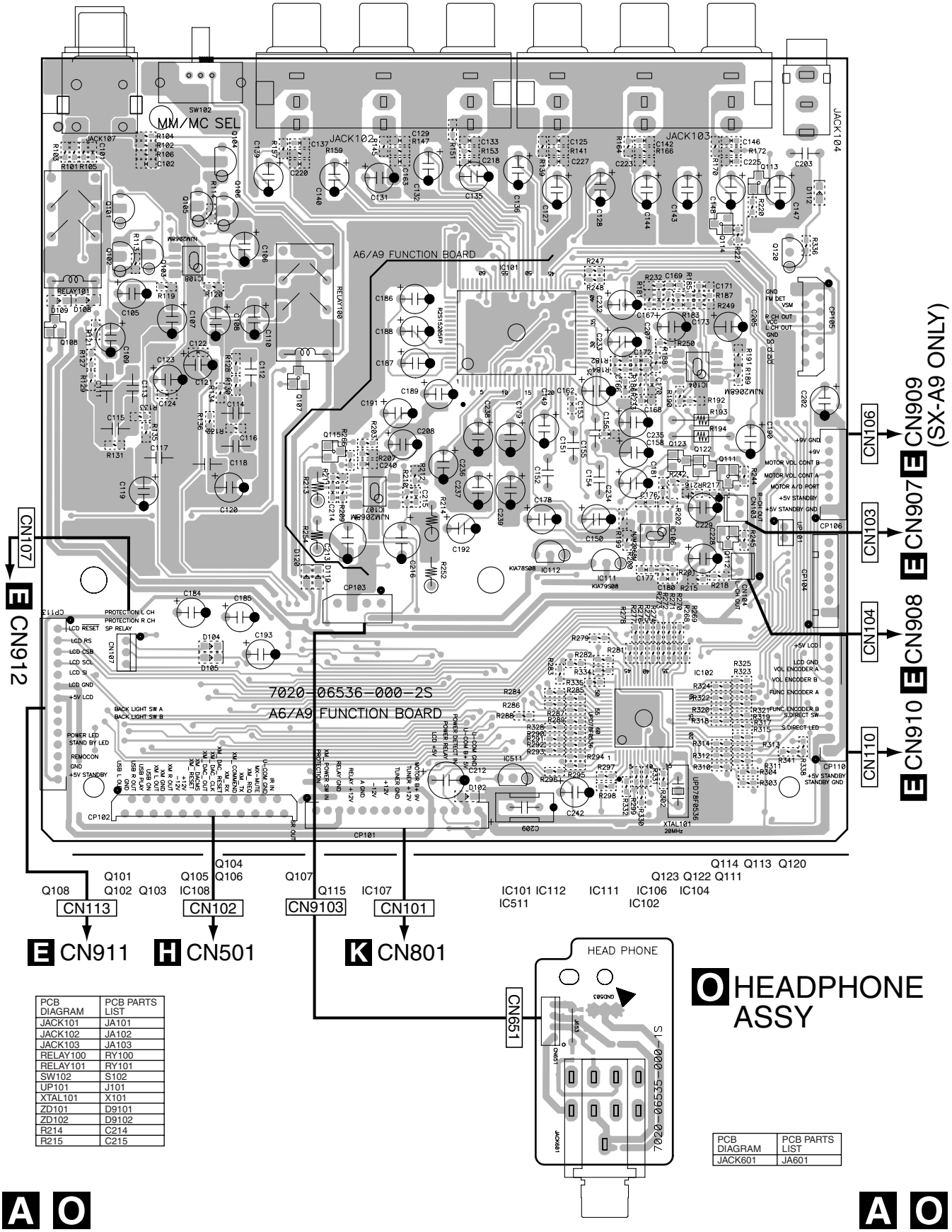

PCB DIAGRAM	PCB PARTS LIST
JACK101	JA101
JACK102	JA102
JACK103	JA103
RELAY100	RY100
RELAY101	RY101
SW102	S102
UP101	J101
XTAL101	X101
ZD101	D9101
ZD102	D9102
R214	C214
R215	C215

PCB DIAGRAM	PCB PARTS LIST
JACK601	JA601

A O

A O

SIDE B

SIDE B

A FUNCTION ASSY

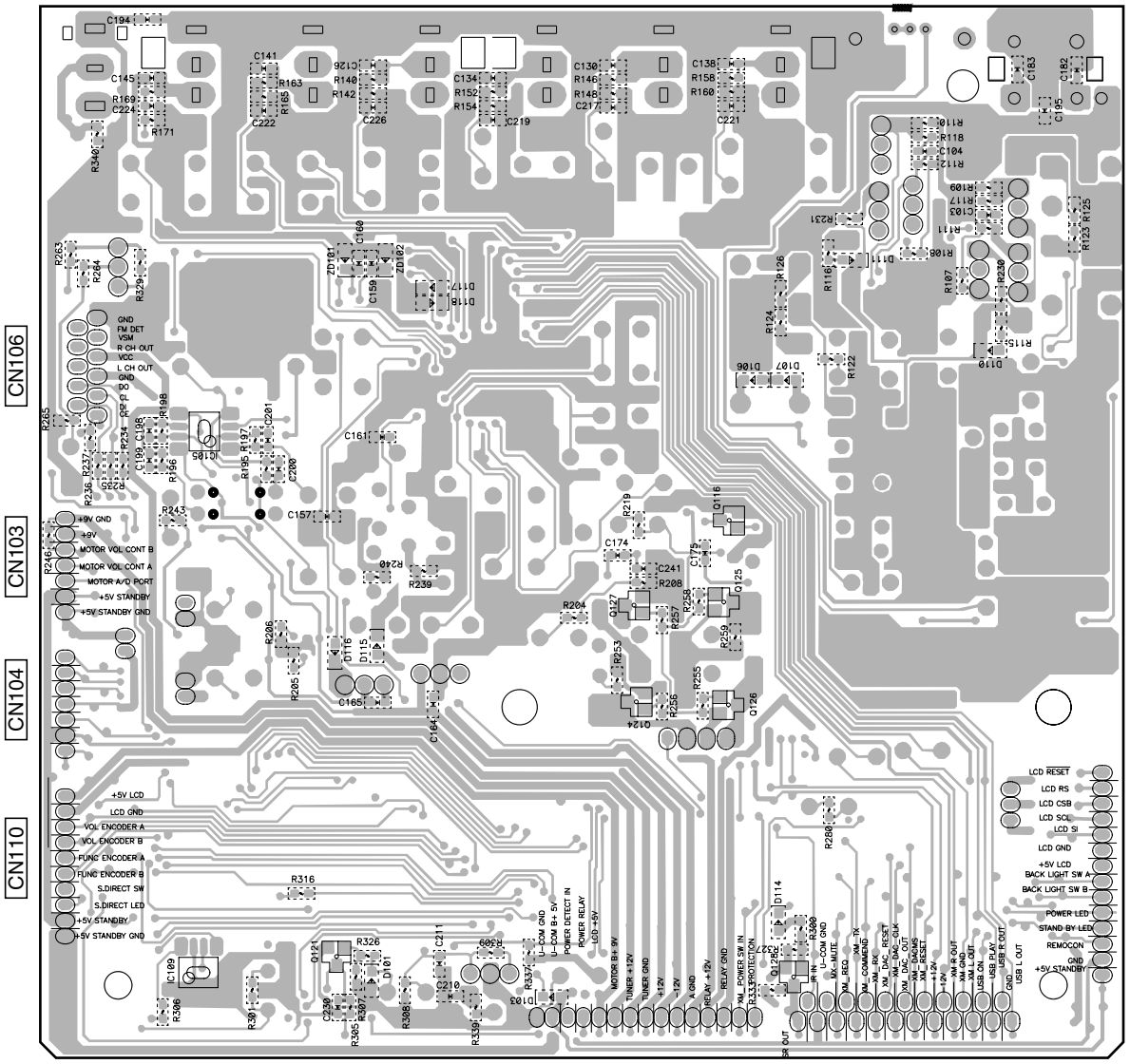

IC105
IC109

Q121

Q127

Q124

Q116
Q125
Q126

Q128

CN9103

CN101

CN102

CN113

O HEADPHONE ASSY

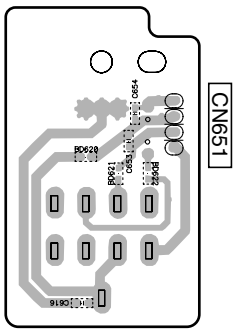

PCB DIAGRAM	PCB PARTS LIST
JACK601	JA601

PCB DIAGRAM	PCB PARTS LIST
JACK101	JA101
JACK102	JA102
JACK103	JA103
RELAY100	RY100
RELAY101	RY101
SW102	S102
UP101	J101
XTAL101	X101
ZD101	D9101
ZD102	D9102
R214	C214
R215	C215

A O

A O

4.3 FRONT, REMOCON, POWER LED and VR ASSYS

SIDE A

PCB DIAGRAM	PCB PARTS LIST
LED603	D603

SIDE A

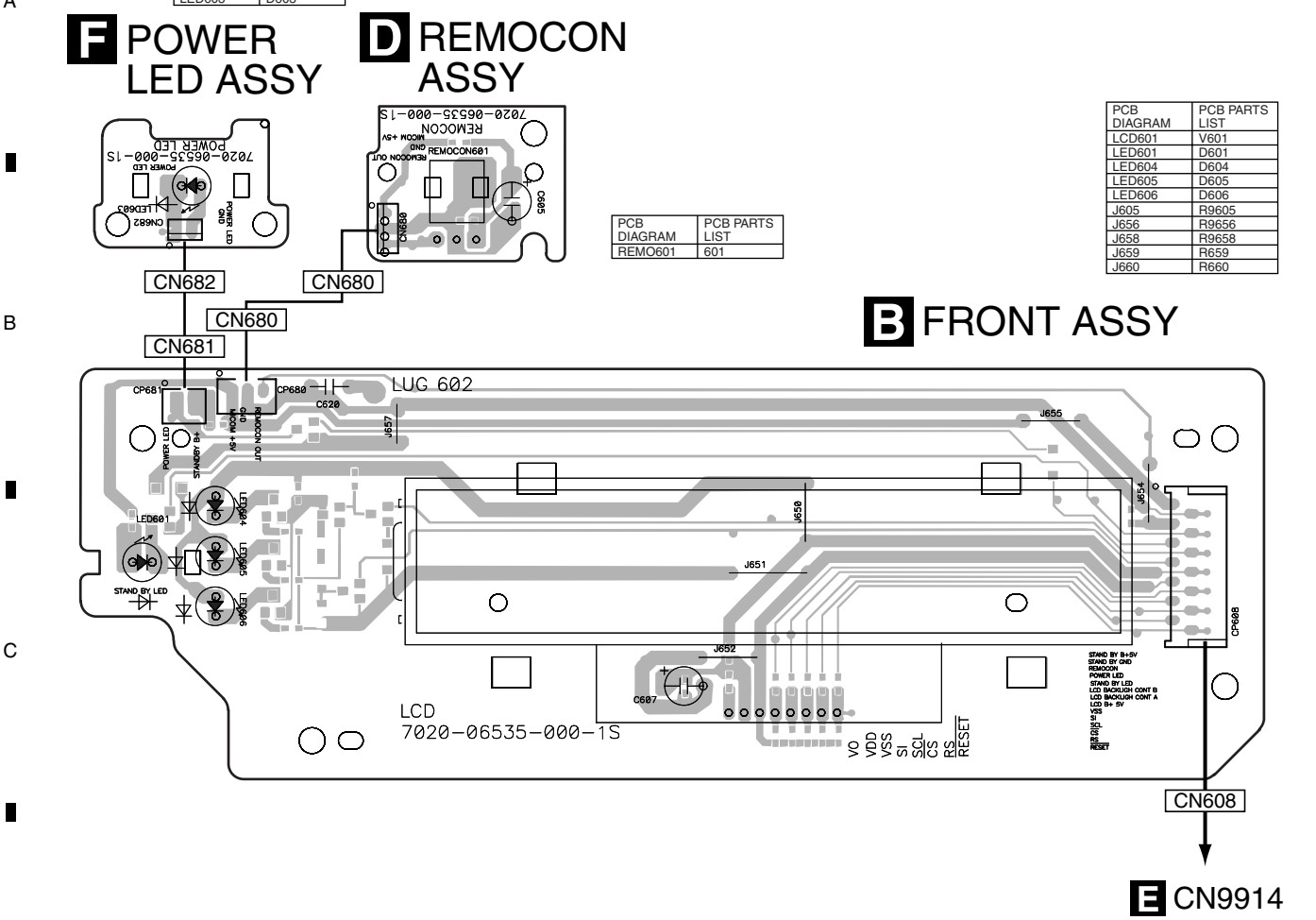

PCB DIAGRAM	PCB PARTS LIST
REMO601	601

PCB DIAGRAM	PCB PARTS LIST
LCD601	V601
LED601	D601
LED604	D604
LED605	D605
LED606	D606
J605	R9605
J656	R9656
J658	R9658
J659	R659
J660	R660

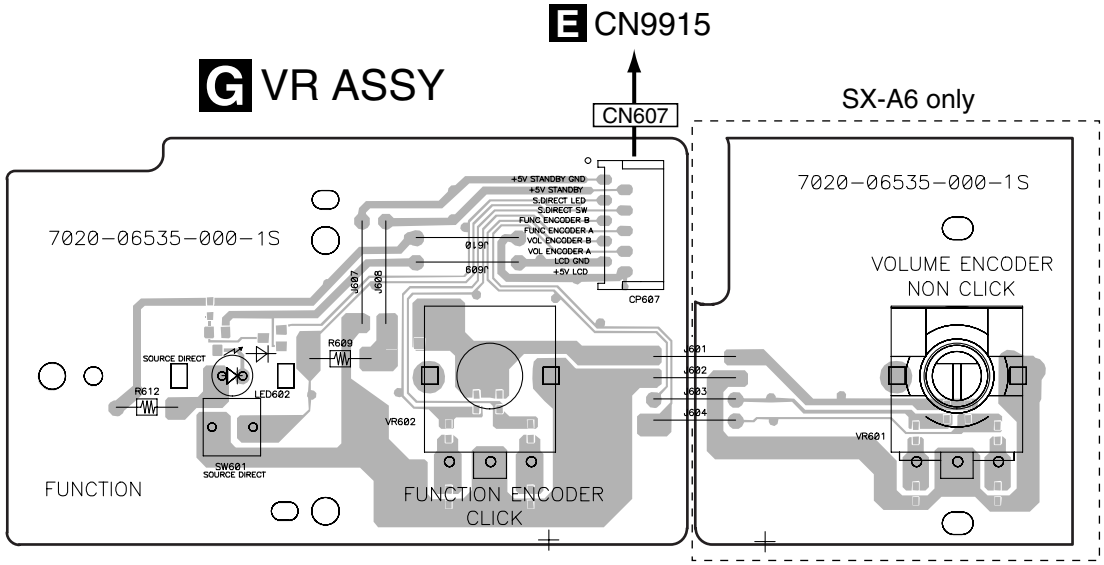

PCB DIAGRAM	PCB PARTS LIST
LED602	D602
SW601	S601
VR602	S602

B D F G

B D F G

SIDE B

SIDE B

PCB DIAGRAM	PCB PARTS LIST
LED603	D603

D REMOCON ASSY

F POWER LED ASSY

PCB DIAGRAM	PCB PARTS LIST
REMO601	601

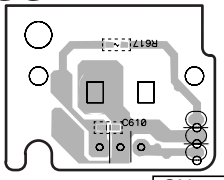

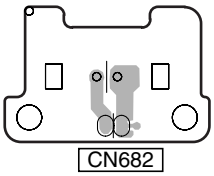

PCB DIAGRAM	PCB PARTS LIST
LCD601	V601
LED601	D601
LED604	D604
LED605	D605
LED606	D606
J605	R9605
J656	R9656
J658	R9658
J659	R659
J660	R660

B FRONT ASSY

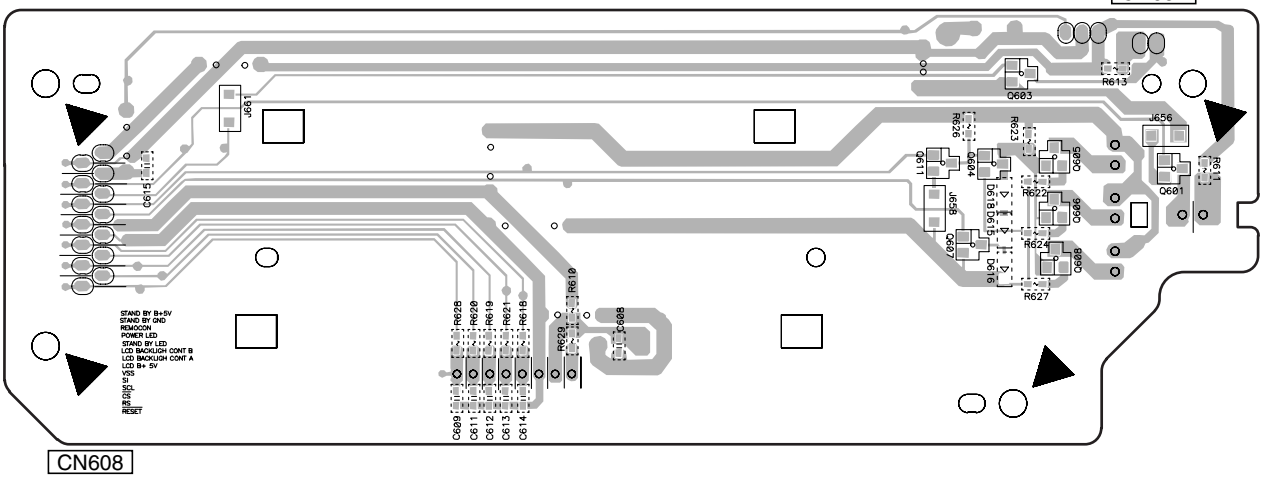

G VR ASSY

SX-A6 only

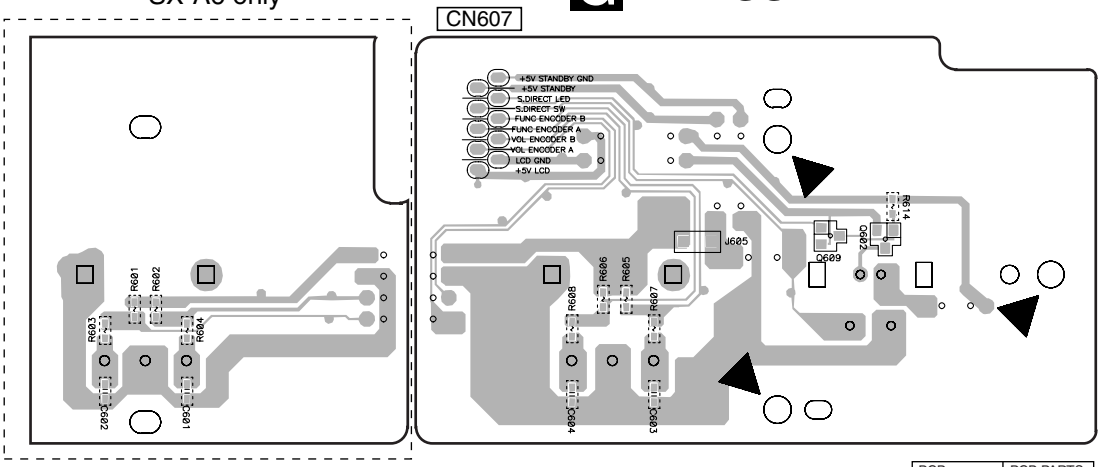

PCB DIAGRAM	PCB PARTS LIST
LED602	D602
SW601	S601
VR602	S602

B D F G

B D F G

4.4 STATION and MOTOR VR ASSYS

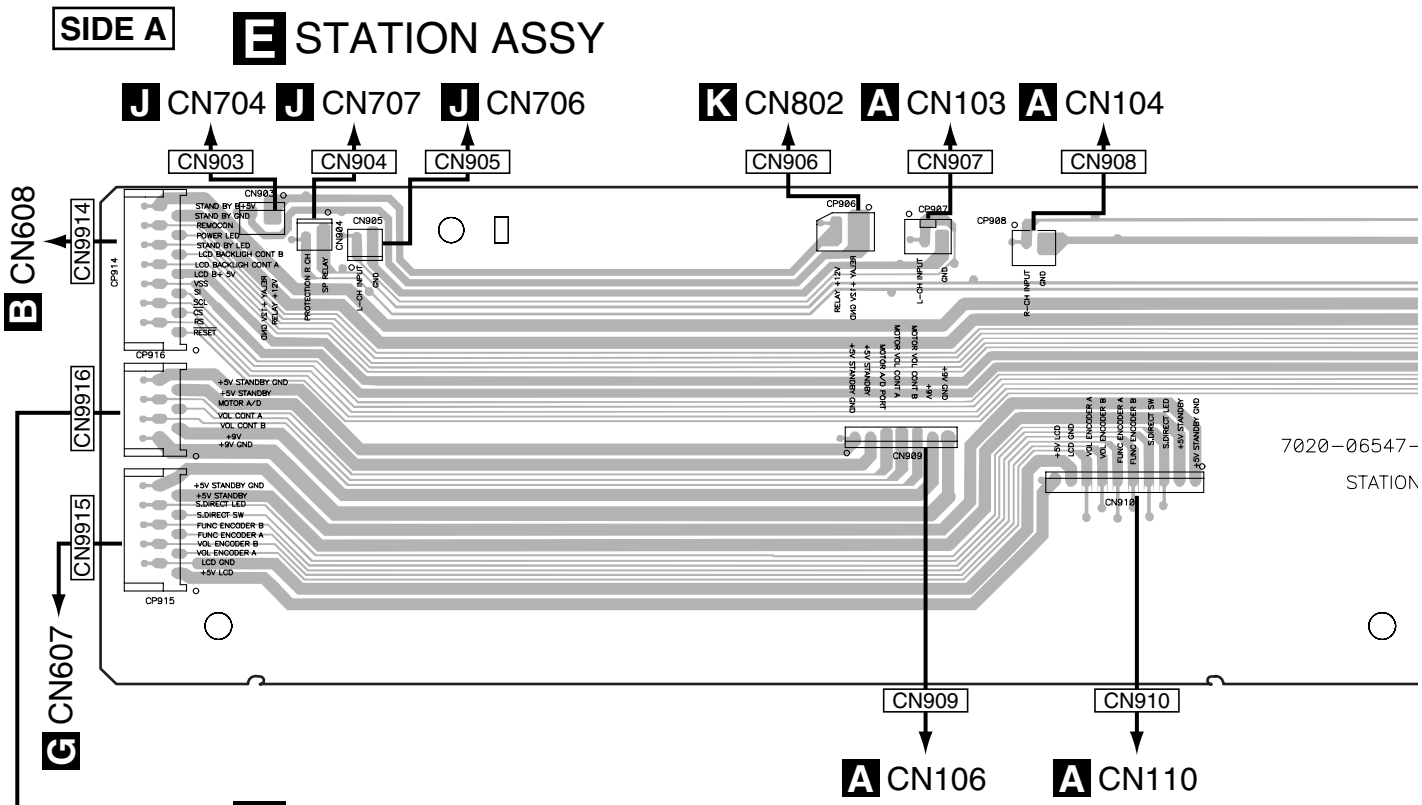

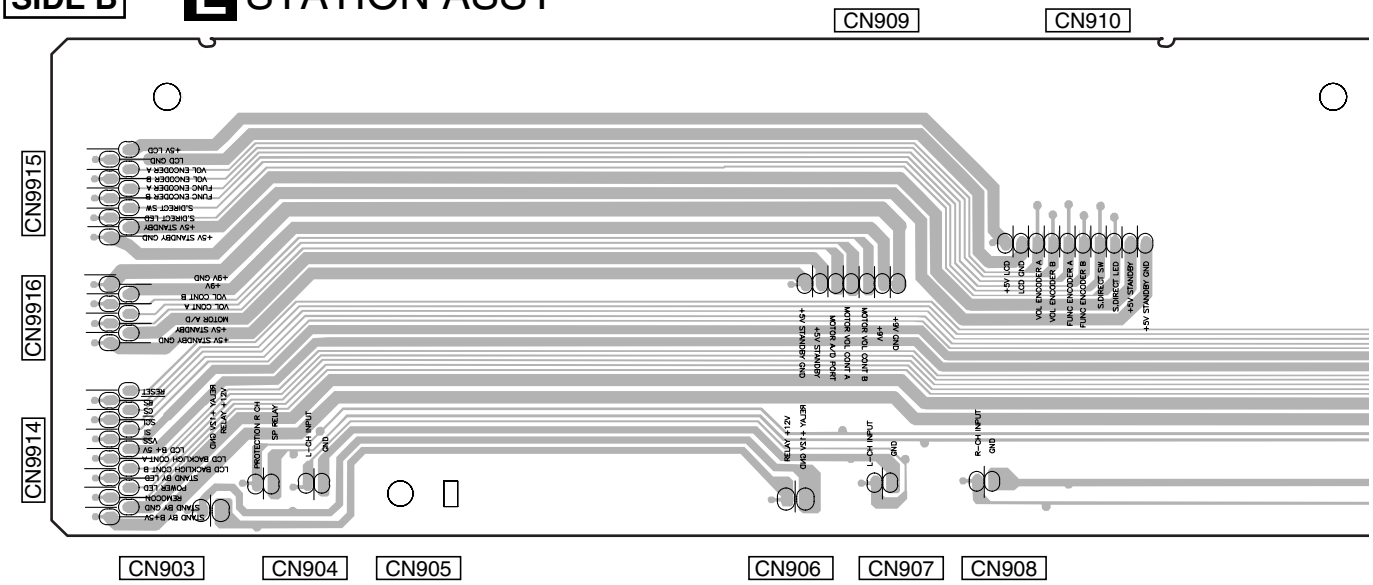

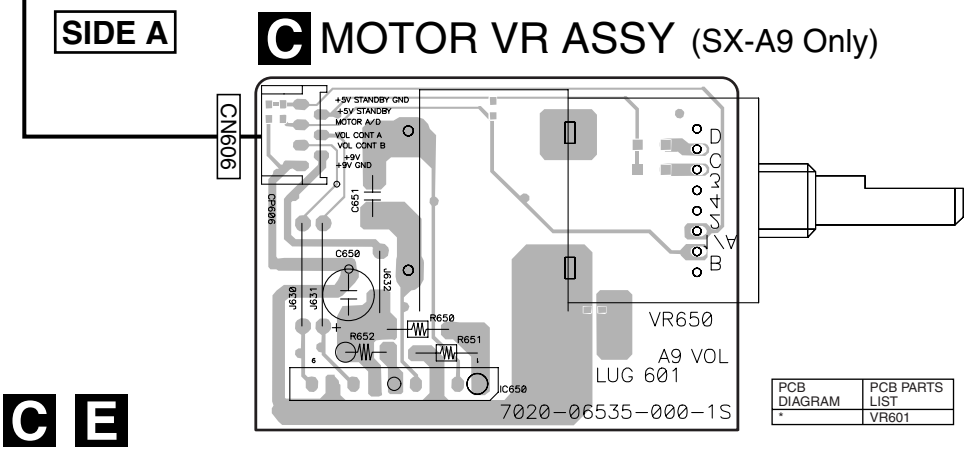

PCB DIAGRAM	PCB PARTS LIST
*	VR601

C E

SIDE A

A CN107 K CN803 I CN703 I CN702 I CN705

CN912 CN9913 CN914 CN915 CN916

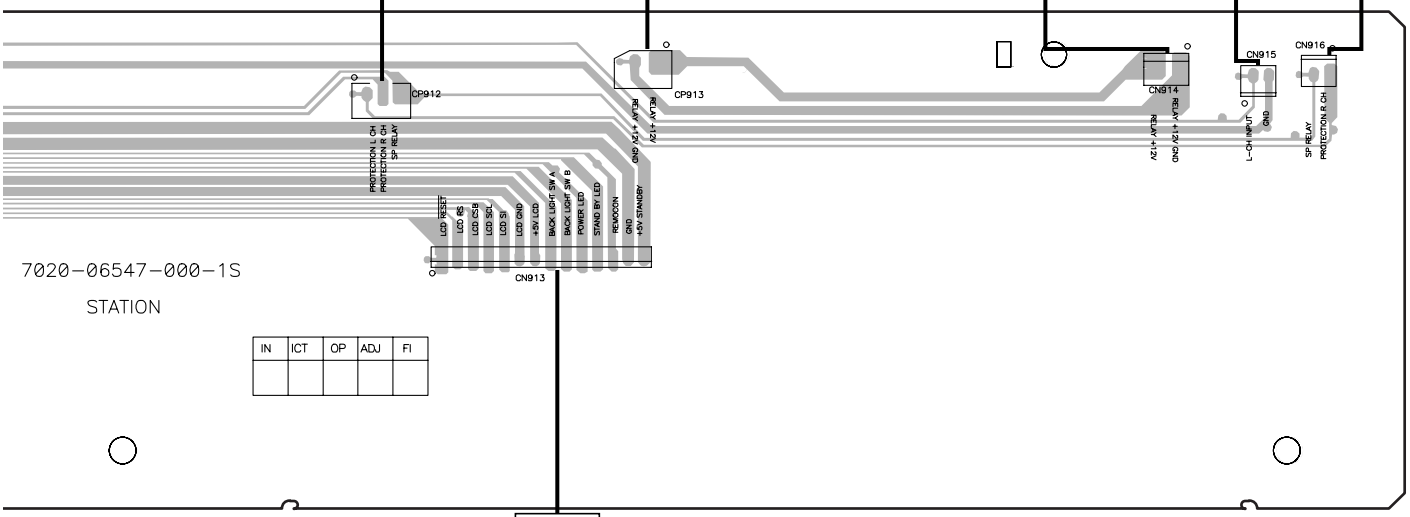

7020-06547-000-1S

STATION

IN	ICT	OP	ADJ	FI

CN913

A CN113

SIDE B

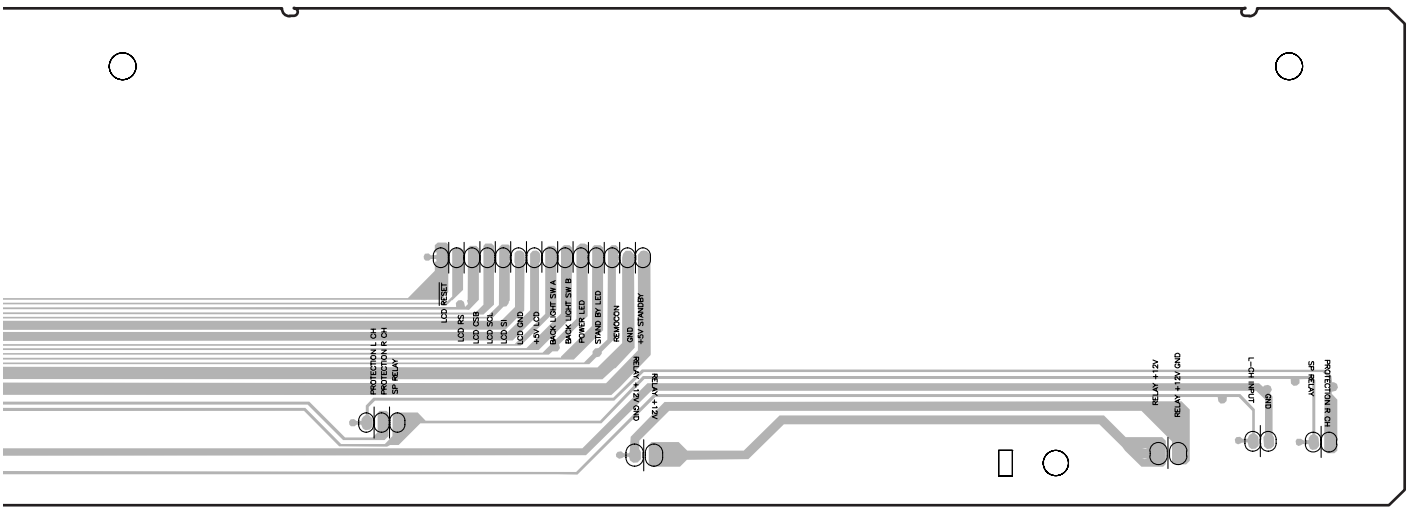

CN912 CN9913 CN914 CN914 CN916

C MOTOR VR ASSY (SX-A9 Only)

SIDE B

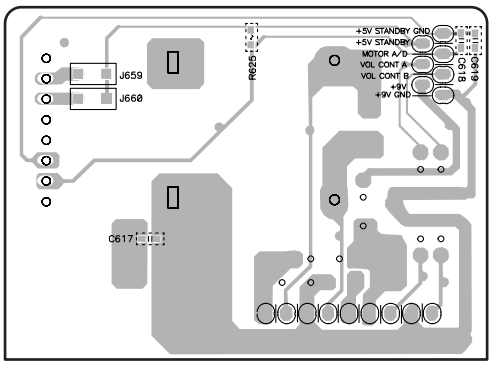

CN696

PCB DIAGRAM	PCB PARTS LIST
*	VR601

C E

4.5 XM-READY/USB ASSY

SIDE A

SIDE A

H XM READY/USB ASSY

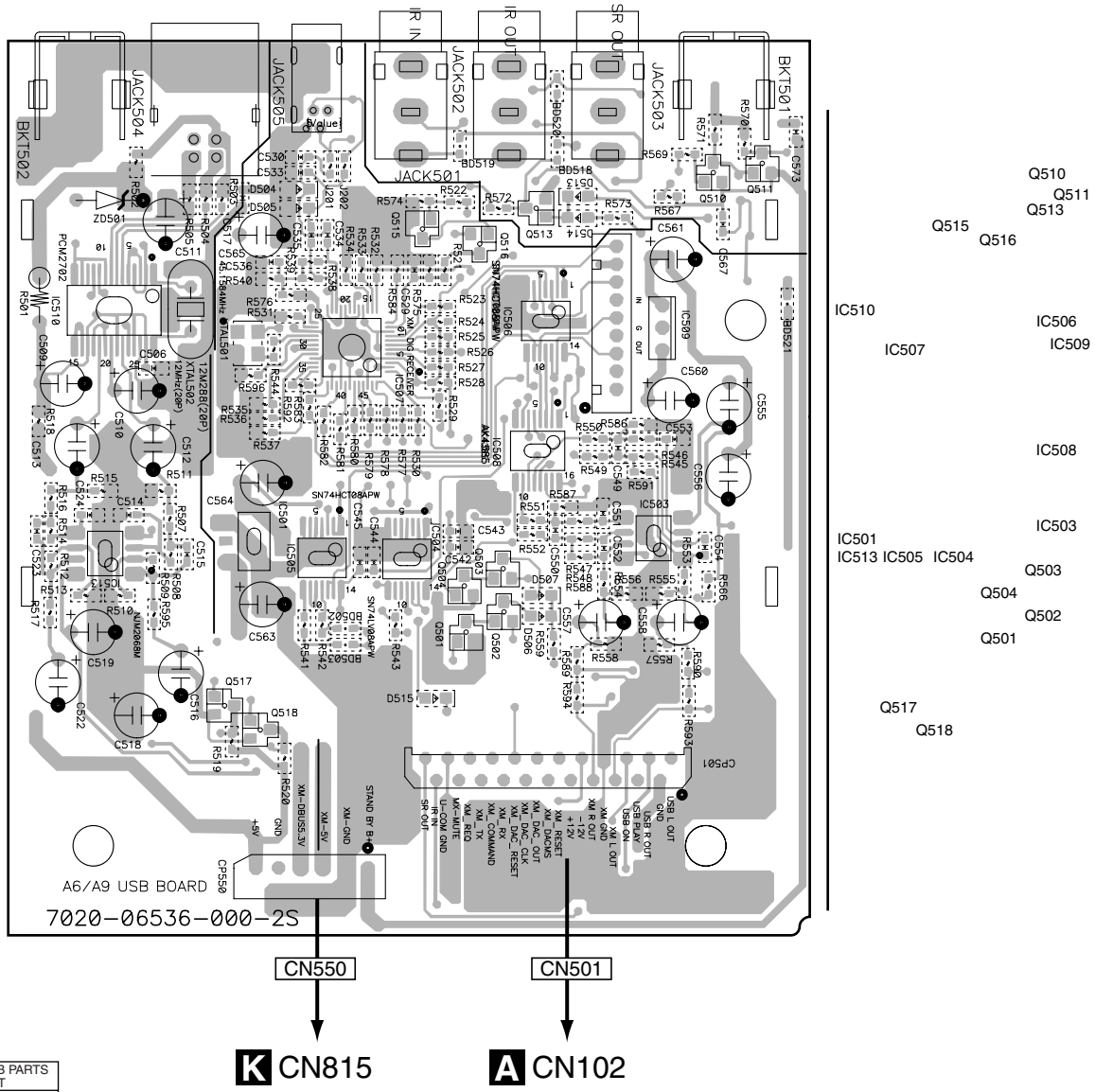

K CN815

A CN102

PCB DIAGRAM	PCB PARTS LIST
BKT501	501
BKT502	502
JACK503	JA503
JACK504	JA504
XTAL502	X502
ZD501	D501
GND502	502
GND503	503

H H

SIDE B

SIDE B

H XM READY/USB ASSY

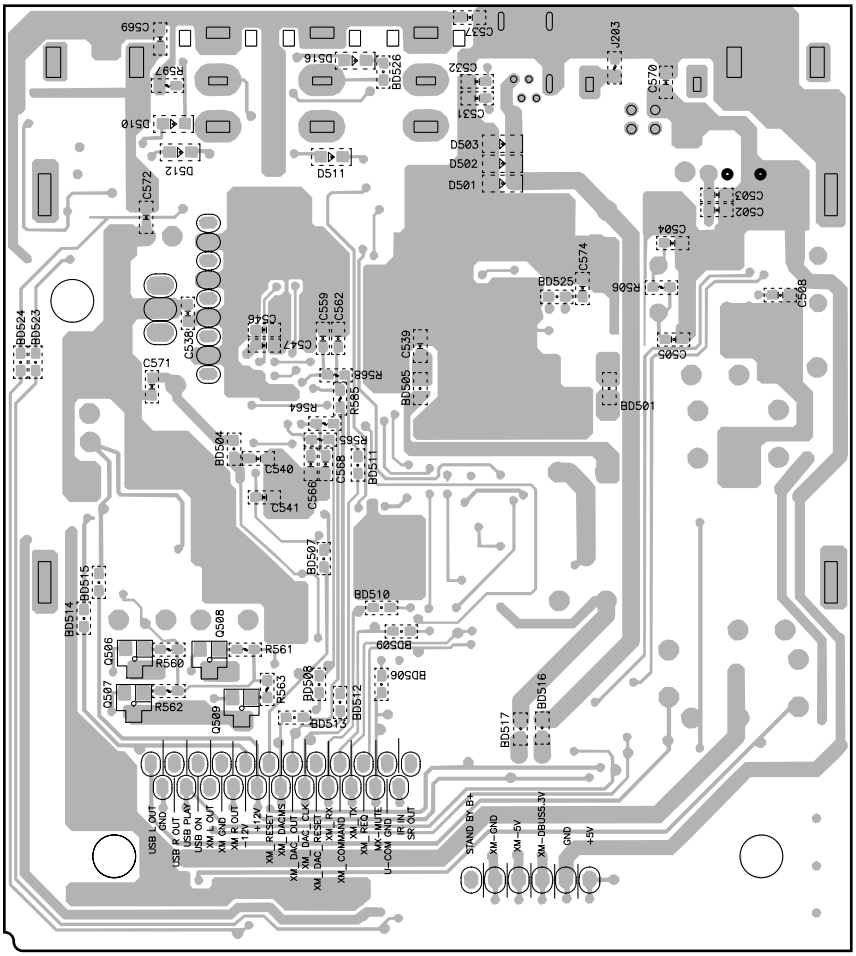

CN501 CN550

PCB DIAGRAM	PCB PARTS LIST
BKT501	501
BKT502	502
JACK503	JA503
JACK504	JA504
XTAL502	X502
ZD501	D501
GND502	502
GND503	503

4.6 AMP LCH, PROTECTION L-CH and SPEAKER L-CH ASSY

SIDE A

SIDE A

PCB DIAGRAM	PCB PARTS LIST
RV701	VR701
RV702	VR702
RELAY701	RY701
ZD701	D9701
ZD702	D9702
ZD703	D9703
ZD704	D9704
LED701	D8701
LED702	D8702
ZD707	D707
ZD708	D708

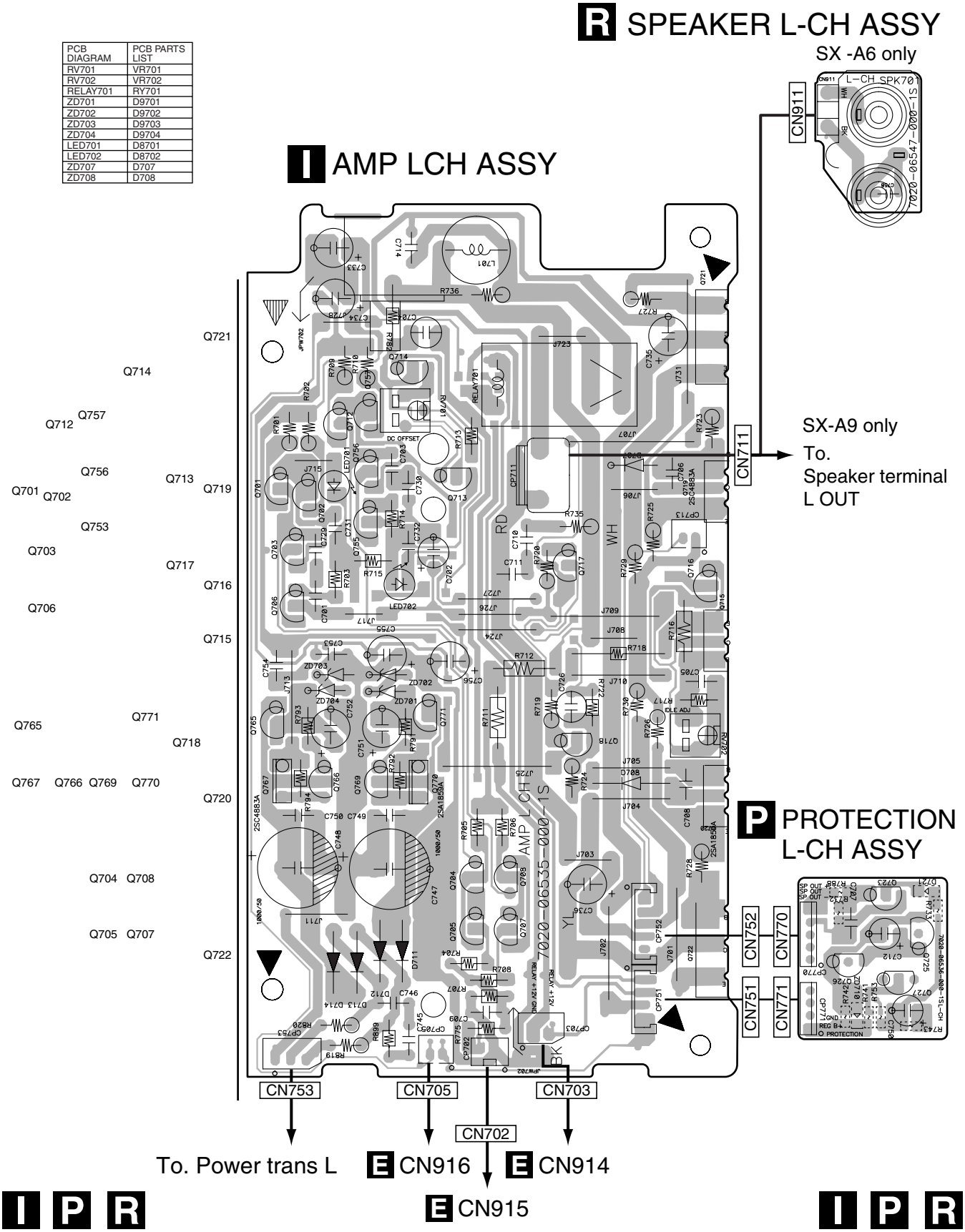

SIDE B

SIDE B

R SPEAKER L-CH ASSY

SX-A6 only

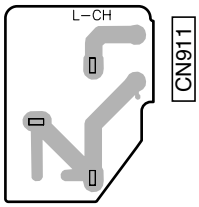

PCB DIAGRAM	PCB PARTS LIST
RV701	VR701
RV702	VR702
RELAY701	RY701
ZD701	D9701
ZD702	D9702
ZD703	D9703
ZD704	D9704
LED701	D8701
LED702	D8702
ZD707	D707
ZD708	D708

I AMP LCH ASSY

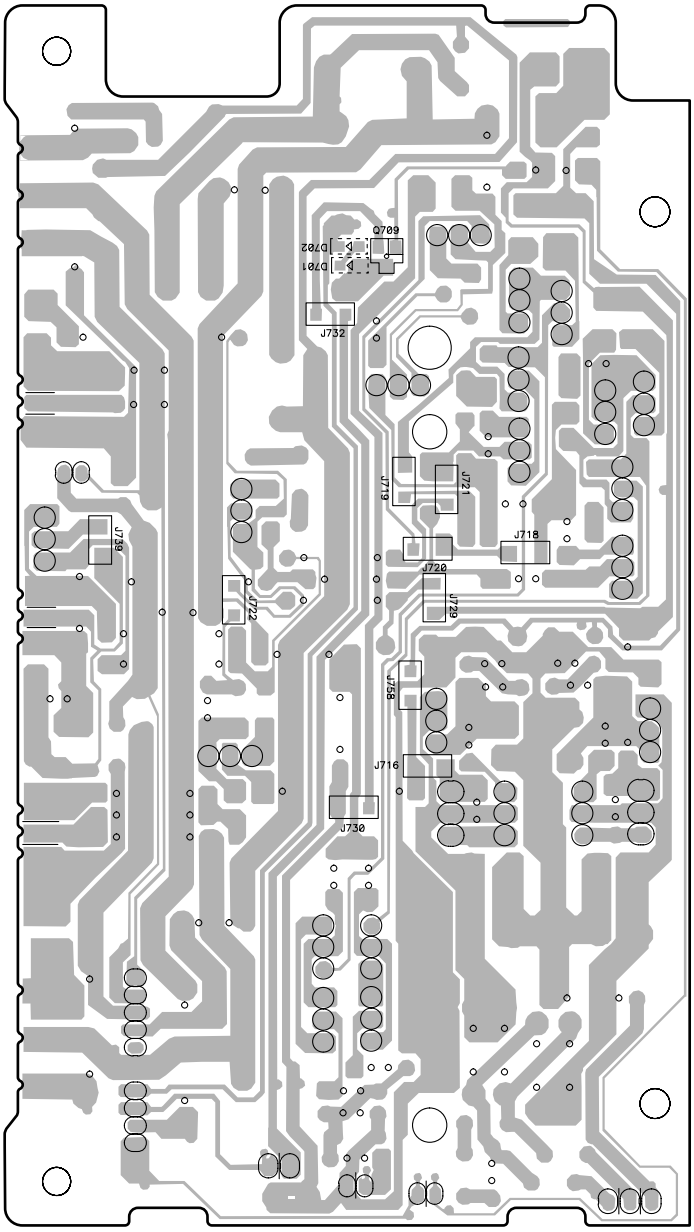

P PROTECTION L-CH ASSY

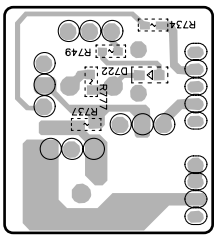

I P R

I P R

4.7 AMP RCH, PROTECTION R-CH and SPEAKER R-CH ASSY

SIDE A

SIDE A

PCB DIAGRAM	PCB PARTS LIST
RELAY702	RY702
RV703	VR703
RV704	VR704
ZD706	D706
LED703	D703
ZD705	D705
J716	R9716
J718	R9718
J719	R9719
J720	R9720
J721	R9721
J722	R9722
J729	R9729
J730	R9730
J732	R9732
J735	R9735
J739	R9739
J751	R9751
J752	R9752
J754	R9754
J755	R9755
J756	R9756
J757	R9757
J758	R9758
J759	R9759
J760	R9760

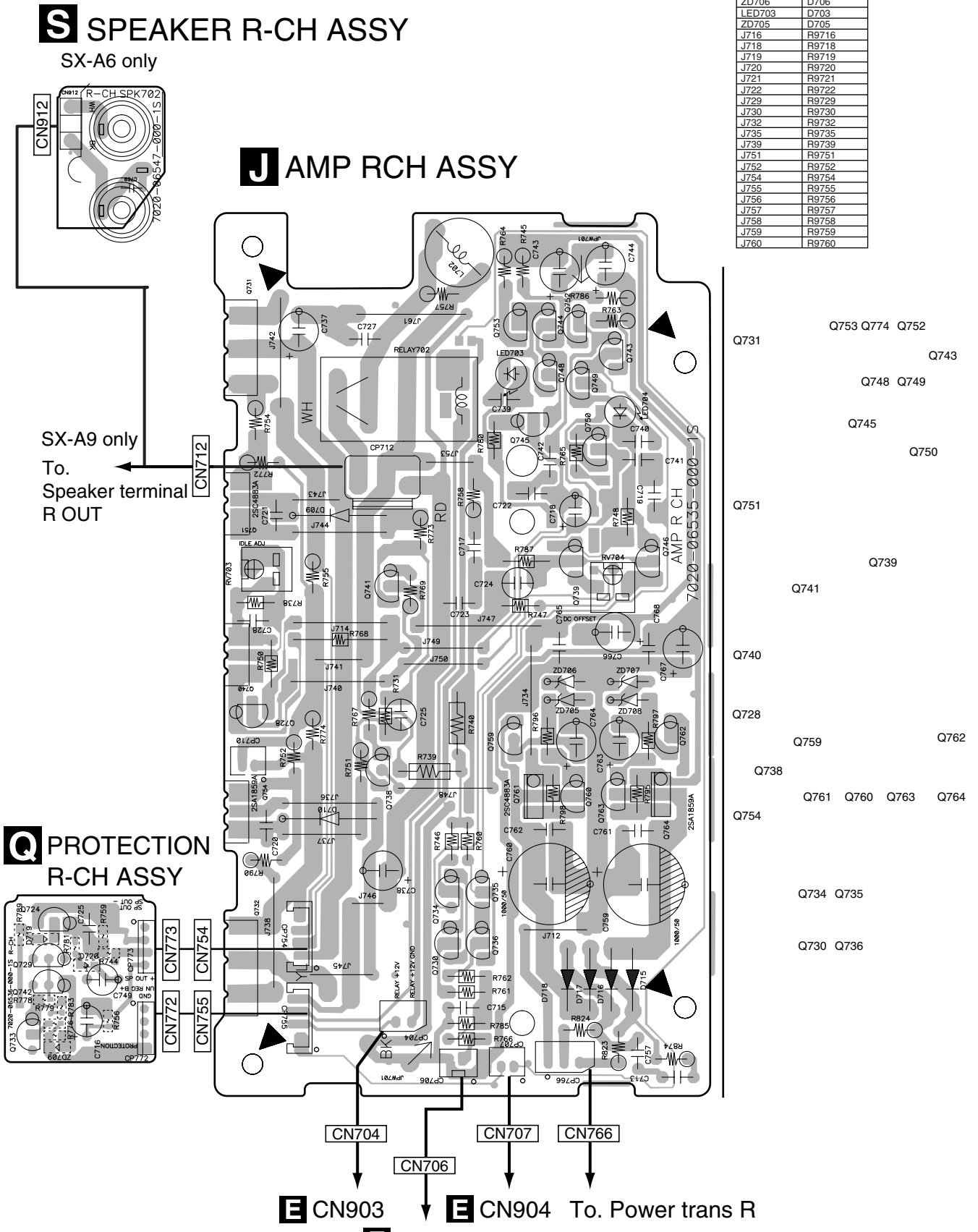

J Q S

J Q S

SIDE B

SIDE B

S SPEAKER R-CH ASSY

SX-A6 only

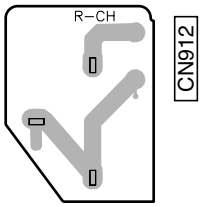

J AMP RCH ASSY

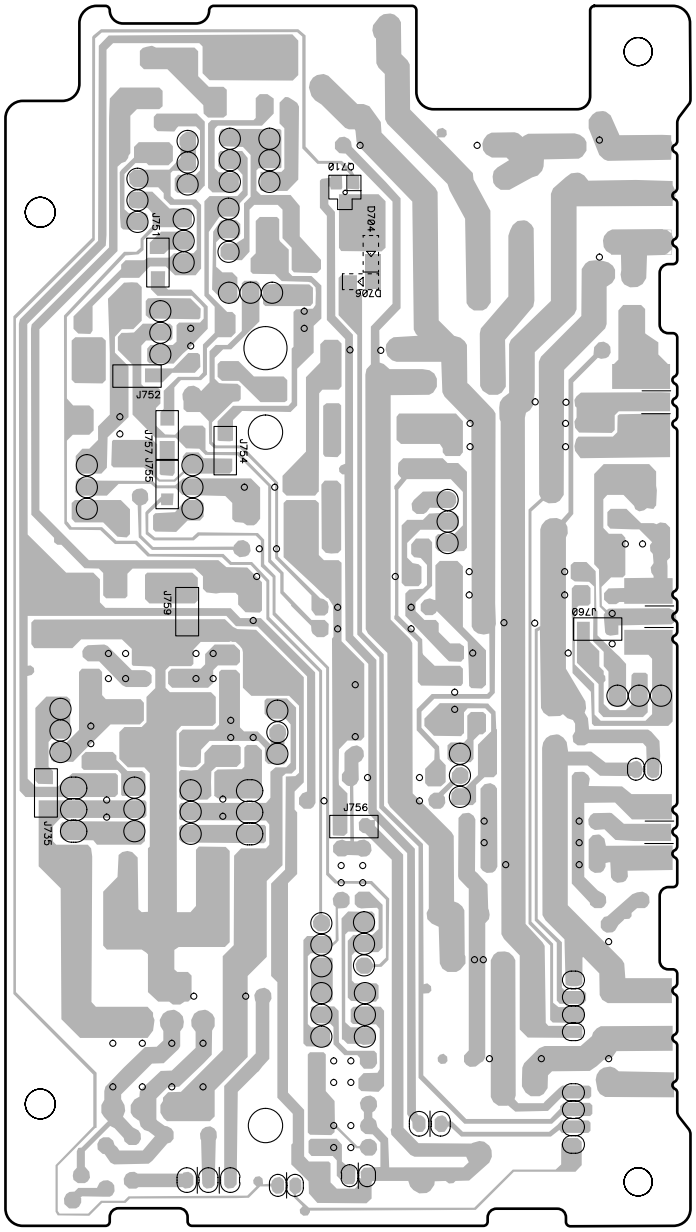

PCB DIAGRAM	PCB PARTS LIST
RELAY702	RY702
RV703	VR703
RV704	VR704
ZD706	D706
LED703	D703
ZD705	D705
J716	R9716
J718	R9718
J719	R9719
J720	R9720
J721	R9721
J722	R9722
J729	R9729
J730	R9730
J732	R9732
J735	R9735
J739	R9739
J751	R9751
J752	R9752
J754	R9754
J755	R9755
J756	R9756
J757	R9757
J758	R9758
J759	R9759
J760	R9760

Q PROTECTION R-CH ASSY

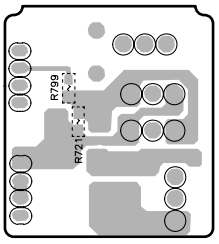

J Q S

J Q S

4.8 REG IC and POWER ASSYS

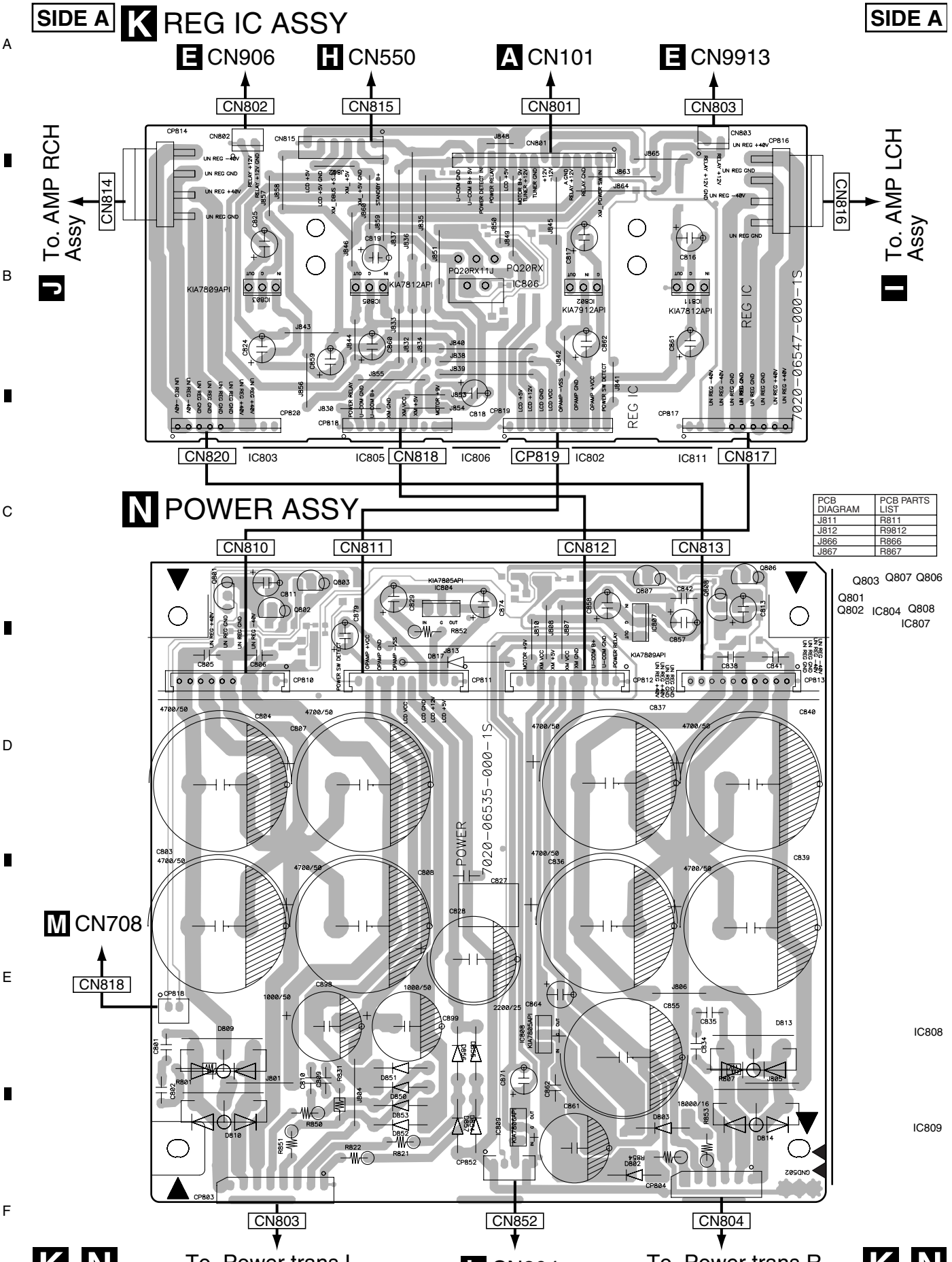

PCB DIAGRAM	PCB PARTS LIST
J811	R811
J812	R9812
J866	R866
J867	R867

SIDE B

SIDE B

K REG IC ASSY

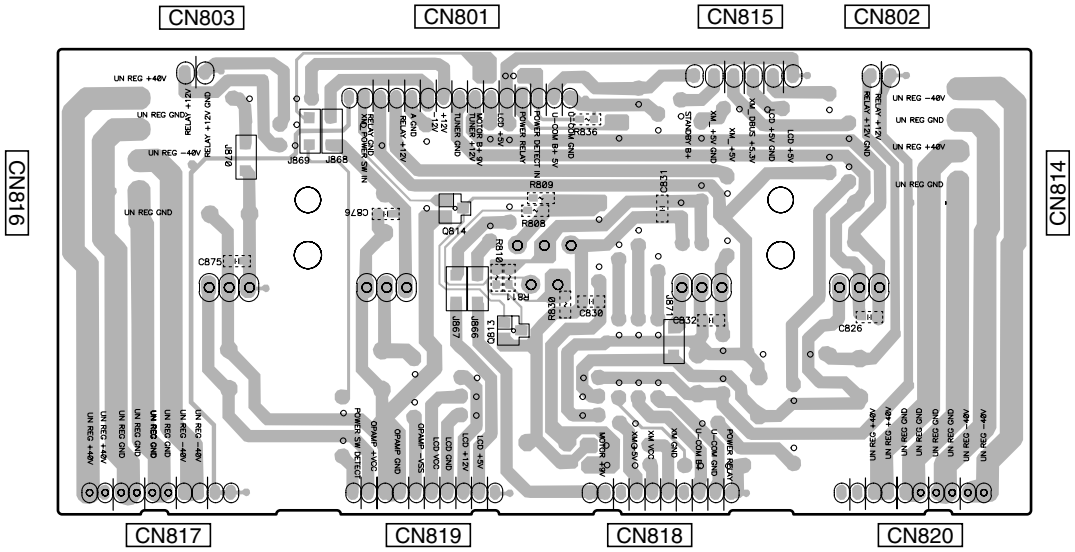

N POWER ASSY

PCB DIAGRAM	PCB PARTS LIST
J811	R811
J812	R9812
J866	R866
J867	R867

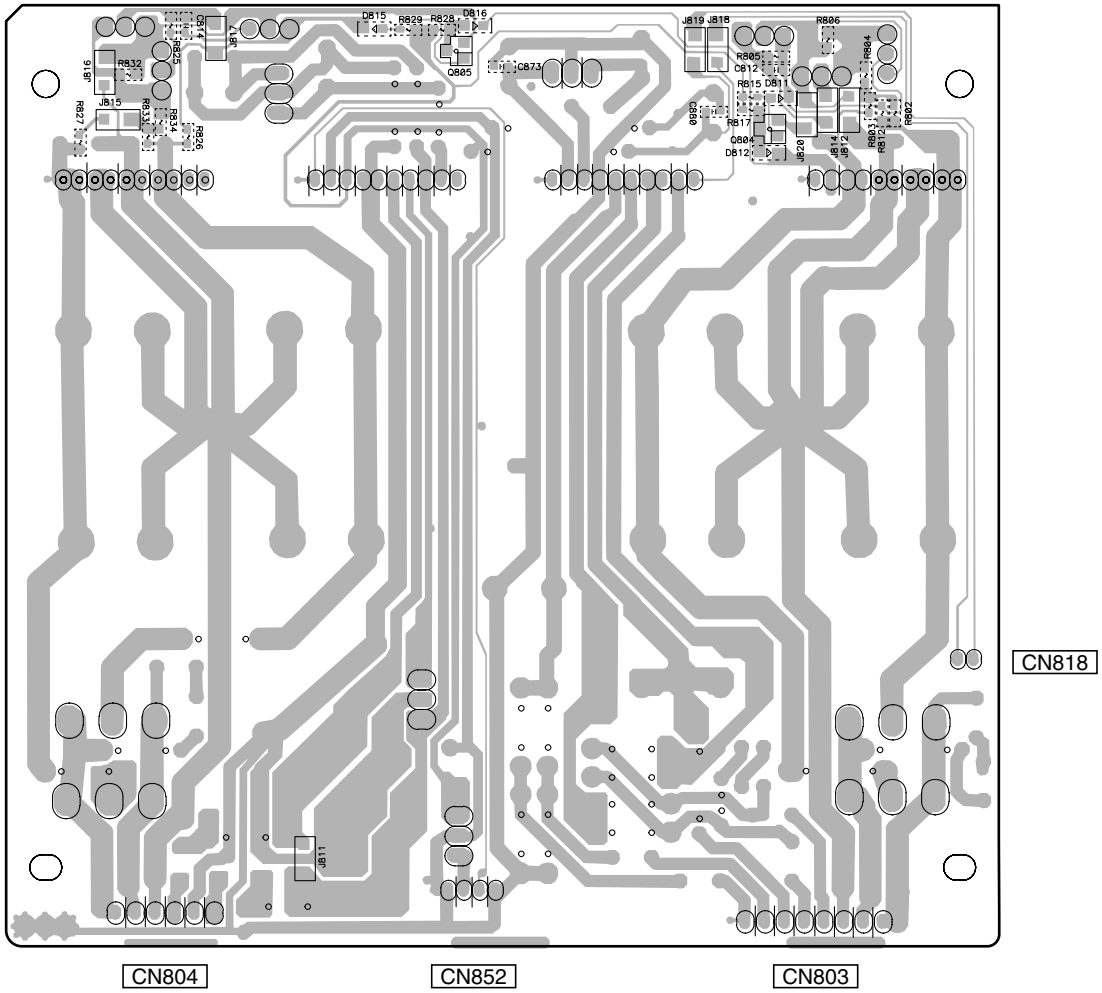

K N

K N

5. PCB PARTS LIST

NOTES:
- *Parts marked by "NSP" are generally unavailable because they are not in our Master Spare Parts List.*
- *The ⚠ mark found on some component parts indicates the importance of the safety factor of the part. Therefore, when replacing, be sure to use parts of identical designation.*
- *When ordering resistors, first convert resistance values into code form as shown in the following examples.*

Ex.1 When there are 2 effective digits (any digit apart from 0), such as 560 ohm and 47k ohm (tolerance is shown by J=5%, and K=10%).

560 Ω → 56 x 10^1 → 561 ..... RD1/4PU561J
47k Ω → 47 x 10^3 → 473 ..... RD1/4PU473J
0.5 Ω → R50 ..... RN2HR50K
1 Ω → 1R0 ..... RS1P1R0K

Ex.2 When there are 3 effective digits (such as in high precision metal film resistors).

5.62k Ω → 562 x 10^1 → 5621 ..... RN1/4PC5621F

LIST OF ASSEMBLIES

Mark	Symbol and Description	SX-A9-J	SX-A6-J
NSP	1..PCB TOTAL ASSY	7025HA0604020-IL	7025HA0603020-IL
	2.SUB TRANS ASSY	702806535A070-IL	702806535A020-IL
	2.HEADPHONE ASSY	702806535B060-IL	702806535B060-IL
	2.AMP LCH ASSY	7028065351010-IL	7028065351010-IL
	2.AMP RCH ASSY	7028065352010-IL	7028065352010-IL
	2.POWER ASSY	7028065353070-IL	7028065353020-IL
	2.FRONT ASSY	7028065354060-IL	7028065354010-IL
	2.MOTOR VR ASSY	7028065355060-IL	Not used
	2.REMOCON ASSY	7028065356060-IL	7028065356010-IL
	2.POWER SW ASSY	7028065357060-IL	7028065357010-IL
	2.POWER LED ASSY	7028065358060-IL	7028065358010-IL
	2.VR ASSY	7028065359060-IL	7028065359010-IL
NSP	1..PCB TOTAL ASSY	7025HA0604021-IL	7025HA0603021-IL
	2.FUNCTION ASSY	7028065361070-IL	7028065361020-IL
	2.XM-READY/USB ASSY	7028065362070-IL	7028065362020-IL
	2.PROTECTION L-CH ASSY	7028065363010-IL	7028065363010-IL
	2.PROTECTION R-CH ASSY	7028065364010-IL	7028065364010-IL
NSP	1..PCB TOTAL ASSY	7025HA0604022-IL	7025HA0603022-IL
	2.STATION ASSY	7028065461020-IL	7028065461010-IL
	2.SPEAKER L-CH ASSY	Not used	7028065462010-IL
	2.SPEAKER R-CH ASSY	Not used	7028065463010-IL
	2.REG IC ASSY	7028065471020-IL	7028065471020-IL
	1..FM/AM TUNRT UNIT	AXX7172	AXX7172

■ CONTRAST OF PCB ASSEMBLIES

B FRONT ASSY

7028065354060-IL and 7028065354010-IL are constructed the same except for the following:

Mark	Symbol and Description	7028065354060-IL	7028065354010-IL
	Q601, Q603, Q604, Q607, Q611	D010221167160-IL	J522107S00210-IL
	STOPPER	4380210081000-IL	Not used

D REMOCON ASSY

7028065356060-IL and 7028065356010-IL are constructed the same except for the following:

Mark	Symbol and Description	7028065356060-IL	7028065356010-IL
	C116	D040100083130-IL	Not used
	C605	Not used	D040100083130-IL

E STATION ASSY

7028065461020-IL and 7028065461010-IL are constructed the same except for the following:

Mark	Symbol and Description	7028065461020-IL	7028065461010-IL
	CN909	L000141070010-IL	Not used
	CN9916	L131100700010-IL	Not used

F POWER LED ASSY

7028065358060-IL and 7028065358010-IL are constructed the same except for the following:

Mark	Symbol and Description	7028065358060-IL	7028065358010-IL
	C653, C654	Not used	D000221167070-IL
	R610	Not used	RS1/16S561J

G VR ASSY

7028065359060-IL and 7028065359010-IL are constructed the same except for the following:

Mark	Symbol and Description	7028065359060-IL	7028065359010-IL
	C601, C602	Not used	D011103777163-IL
	R601, R602	Not used	RS1/16S103J
	R603, R604	Not used	RS1/16S101J
	VR601	Not used	G121162401200-IL

L SUB TRANS ASSY

Although 702806535A070-IL and 702806535A020-IL are different in part number, they have the same components.

N POWER ASSY

7028065353070-IL and 7028065353020-IL are constructed the same except for the following:

Mark	Symbol and Description	7028065353070-IL	7028065353020-IL
	IC807	J126780900020-IL	Not used
	C829	Not used	D040100083050-IL
	C842, C862	D00410359D050-IL	Not used
	C857, C858	D040101083070-IL	Not used
	C861	Not used	D040102083030-IL
	R811	RS1/8S0R0J	Not used

■ PCB PARTS LIST FOR SX-A9-J UNLESS OTHER WISE NOTED

Mark	No.	Description	Part No.
A	**FUNCTION ASSY (SX-A9-J)**		
	SEMICONDUCTORS		
	IC 101		J084152050010-IL
	IC 102		J020780536000-IL
	IC 104-108		J121206800020-IL
	IC 109		J000240640010-IL
	IC 111		J126790800090-IL
	IC 112		J126780800190-IL
	IC 511		J125704200010-IL
	Q 101,102,104,105		J5410369G0010-IL
	Q 103,106		J5021845F0000-IL
	Q 107,108,116,123		J522107S00210-IL
	Q 111,112,124-127		J5222875B0010-IL
	Q 115		J520010200210-IL
	Q 120		J5001023Y0050-IL
	Q 121		J522038750210-IL
	Q 122		J520010100010-IL
	Q 128		J520015040150-IL
	D 101-112,114-120		K005041480020-IL
	D 9101,9102		K06605R14P400-IL
	MISCELLANEOUS		
	J 101		L424000040000-IL
	JA 102,103		G603617AG04GY-IL
	JA 104		G401PJ3080100-IL
	JA 107		G601207AEGG02-IL
	RY100,101		G680240202030-IL
	S 102		G060112011010-IL
	X 101		E830200010010-IL
	CN0		L000121010100-IL
	CN0		L000600010010-IL
	CN101		L101220150000-IL
	CN102		L131112300010-IL
	CN103		L000161020080-IL
	CN104		L000161020070-IL
	CN105		L131111100010-IL
	CN106		L101220070000-IL
	CN107		L000141030100-IL
	CN110		L101220100000-IL
	CN113		L101220140000-IL
	CN9101		L101020000010-IL
	CN9103		L102526700400-IL
	CN9104		L101530140710-IL
	0		7020065360001-IL
	0		1220210059020-IL
	RESISTORS		
	R 193,194		C00001046P520-IL
	R 213,214,252,254		C060022065050-IL
	Other Resistors		RS1/16S###J
	CAPACITORS		
	C 101,102		D011182777160-IL
	C 103,104		D011153777160-IL
	C 105,106		D040470082060-IL
	C 107,108,127,128		D040220083070-IL
	C 109,110		D040101082090-IL
	C 111,112		D020683167060-IL

Mark No.	Description	Part No.
C 113,114		D004122287050-IL
C 115,116		D020183078060-IL
C 117,118		D004472277050-IL
C 119-121,123,150		D040100087070-IL
C 122,124,157,161		D011103777160-IL
C 125,126,129,130		D010221167160-IL
C 131,132,135,136		D040220083070-IL
C 133,134,137,138		D010221167160-IL
C 139,140,143,144		D040220083070-IL
C 141,142,145,146		D010221167160-IL
C 147,148		D040220083070-IL
C 149,158,162,179		D040470083080-IL
C 151,155		D020473167050-IL
C 152,154		D020154078050-IL
C 153,156,198,201		D011223777160-IL
C 159,160,176,177		D010331167160-IL
C 163,182,183		D010221167160-IL
C 164-167,210,211		D011103777160-IL
C 168,169,199,200		D011104577161-IL
C 170,171		D011822777160-IL
C 172,173		D011472777160-IL
C 174,175,214,215		D010560167160-IL
C 178,184-189,191		D040100087070-IL
C 180,181		D010820167160-IL
C 190,193		D040010087150-IL
C 192,205,207,228		D040100087070-IL
C 203		D000221167070-IL
C 208		D0400R1087050-IL
C 209		D090473904010-IL
C 212		D040221081060-IL
C 213,216		D040221082090-IL
C 217-227,240,241		D010221167160-IL
C 229,232-235		D040100087070-IL
C 230		D011103777160-IL
C 236-239		D040470083080-IL
C 242		D0402R2087160-IL

A FUNCTION ASSY (SX-A6-J)

SEMICONDUCTORS

IC 101		J084152050010-IL
IC 102		J020780536000-IL
IC 106-108		J121206800020-IL
IC 109		J000240640010-IL
IC 111		J126790800090-IL
IC 112		J126780800190-IL
IC 511		J125704200010-IL
Q 101,102,104,105		J5410369G0010-IL
Q 103,106		J5021845F0000-IL
Q 111,112,124-127		J5222875B0010-IL
Q 115		J520010200210-IL
Q 116,123		J522107S00210-IL
Q 120		J5001023Y0050-IL
Q 121		J522038750210-IL
Q 122		J520010100010-IL
Q 128		J520015040150-IL
D 101-105,110-112		K005041480020-IL
D 114-120		K005041480020-IL
D 9101,9102		K06605R14P400-IL

MISCELLANEOUS

JA 101		G601207BG020Y-IL
JA 102		G603617AG04GY-IL
JA 103		G602617AG020Y-IL
JA 104		G401PJ3080100-IL
JA 107		G601207AEGG02-IL
X 101		E830200010010-IL
CN101		L101020000010-IL
CN102		L131112300010-IL
CN103		L000161020080-IL
CN104		L000161020070-IL
CN107		L000141030100-IL
CN110		L101220100000-IL
CN113		L101220140000-IL
CN9101		L101220150000-IL
CN9103		L102526700400-IL
CN9104		L101530140710-IL
0		1220210059020-IL

RESISTORS

R 213,214,252,254		C060022065050-IL
Other Resistors		RS1/16S###J

CAPACITORS

C 101,102,104,105		J5410369G0010-IL
C 103,106		J5021845F0000-IL
C 103		G602617AG020Y-IL
C 107		G601207AEGG02-IL
C 111,112		J5222875B0010-IL
C 113,114		D004122287050-IL
C 115		J520010200210-IL
C 115,116		D020183078060-IL
C 116		J522107S00210-IL
C 117,118		D004472277050-IL
C 119-121,123,150		D040100087070-IL
C 122,124,157,161		D011103777160-IL
C 125,126,129,130		D010221167160-IL
C 127,128,131,132		D040220083070-IL
C 133,134,137,138		D010221167160-IL
C 135,136,139,140		D040220083070-IL
C 141,142,163,182		D010221167160-IL
C 143		D040220083070-IL
C 149,158,162,179		D040470083080-IL
C 151,155		D020473167050-IL
C 152,154		D020154078050-IL
C 153,156,198,201		D011223777160-IL
C 159,160,176,177		D010331167160-IL
C 164-167,210,211		D011103777160-IL
C 174,175,214,215		D010560167160-IL
C 178,184-189,191		D040100087070-IL
C 180,181		D010820167160-IL
C 183,217-221,223		D010221167160-IL
C 190,193		D040010087150-IL
C 192,202,228,229		D040100087070-IL
C 199,200		D011104577161-IL
C 202		D004103097060-IL
C 203		D000221167070-IL
C 208		D0400R1087050-IL
C 209		D090473904010-IL
C 212		D040221081060-IL
C 213,216		D040221082090-IL

Mark No.	Description	Part No.
C 226,227,240,241		D010221167160-IL
C 230		D011103777160-IL
C 236-239		D040470083080-IL
C 242		D0402R2087160-IL

B FRONT ASSY

SEMICONDUCTORS

Q 601,603,604,607		J522107S00210-IL
Q 605,606,608		J522038750210-IL
Q 611		J522107S00210-IL
D 601		K500032101061-IL
D 604-606		K500059000010-IL
D 615,616,618		K005041480020-IL

MISCELLANEOUS

V 601		AAV7111
CN608		L131101400010-IL
CN680		L101220030000-IL
CN681		L101220020000-IL
0		4310212961000-IL
0		4380210081000-IL
0		5070212313000-IL
0		1210210382000-IL
0		3050210051000-IL
0		4310212951000-IL
602		N602121010310-IL

RESISTORS

R 9656,9658,9661		RS1/8S0R0J
Other Resistors		RS1/16S###J

CAPACITORS

C 607		D040100083050-IL
C 608,609		D011103777163-IL
C 611-614		D010221167160-IL
C 615		D010561167160-IL
C 620		D004103277050-IL

C MOTOR VR ASSY (SX-A9-J Only)

SEMICONDUCTORS

IC 650		J127695600010-IL

MISCELLANEOUS

VR650		C495121400360-IL
CN606		L131100700010-IL
0		8410400010040-IL
0		N602121010310-IL

RESISTORS

R 650		C00001036P520-IL
R 652		C0602R2063050-IL
R 659,660		RS1/8S0R0J
Other Resistors		RS1/16S###J

CAPACITORS

C 617-619		D011103777163-IL
C 650		D040101083070-IL
C 651		D006104597050-IL

D REMOCON ASSY

MISCELLANEOUS

601		E940633800000-IL
CN680		L000800030110-IL
All Resistors		RS1/16S###J

CAPACITORS

C 605		D040100083130-IL
C 610		D011103777160-IL

E STATION ASSY

MISCELLANEOUS

CN903,914		L000800020160-IL
CN904,916		L000800020170-IL
CN905		L000800020140-IL
CN906,9913		L102526700200-IL
CN907		L101530140210-IL
CN908		L101220020000-IL
CN909		L000141070010-IL
CN910		L000101100080-IL
CN912		L101220030000-IL
CN913		L000101140070-IL
CN915		L000800020150-IL
CN9914		L131101400010-IL
CN9915		L131101000020-IL
CN9916		L131100700010-IL

F POWER LED ASSY

SEMICONDUCTORS

D 603		K500036000080-IL

MISCELLANEOUS

CN682		L000800020170-IL
0		4380210081000-IL

G VR ASSY

SEMICONDUCTORS

Q 602,609		J522010200210-IL
D 602		K500032101061-IL

MISCELLANEOUS

S 601		G180000270010-IL
S 602		G121162400050-IL
CN607		L131101000020-IL
0		4380210081000-IL
0		N602121010310-IL

RESISTORS

R 609		C00001236P520-IL
R 612		C00005616P520-IL
R 9605		RS1/8S0R0J
Other Resistors		RS1/16S###J

CAPACITORS

C 603,604		D011103777163-IL
C 606		D004103097060-IL

Mark No.	Description	Part No.

H XM-READY/USB ASSY (SX-A9-J)

SEMICONDUCTORS

IC 501		J126111733020-IL
IC 503,513		J121206800020-IL
IC 504		J040740800230-IL
IC 505,506		J040740800240-IL
IC 507		J080260200040-IL
IC 508		J042438500010-IL
IC 509		J126050000020-IL
IC 510		J042270200010-IL
Q 501,504,513,515		J522107S00210-IL
Q 502,503,510,511		J520010200210-IL
Q 506-509		J5222875B0010-IL
Q 516		J520010400210-IL
Q 517,518		J522107S00210-IL
D 501-515		K005041480020-IL
D 9501		K06003R344520-IL

MISCELLANEOUS

L 501-515,517-521		D340160800060-IL
L 523,524		D340160800060-IL
JA 501		G401PJ3080100-IL
JA 502,503		G40130802000Y-IL
JA 504		G480670680010-IL
JA 505		L109040000020-IL
X 501		E855451584020-IL
X 502		E80012R000080-IL
CN10		L101530140910-IL
CN501		L131112300010-IL
CN550		L102526700600-IL
0		3070210286000-IL
501,502		3070045526010-IL

RESISTORS

R 501		C060022063050-IL
Other Resistors		RS1/16S###J

CAPACITORS

C 0,511		D040470083080-IL
C 502,503,506,508		D011104577161-IL
C 504,505		D010300167160-IL
C 509,510,512,513		D040100087070-IL
C 514,515,523,524		D010681167160-IL
C 516,518,519,522		D040100087070-IL
C 517,569-571,573		D011103777160-IL
C 529,534-536,543		D011104577161-IL
C 530-533		D010200167160-IL
C 542,544		D011102777160-IL
C 545		D011104577161-IL
C 549,550		D011332777160-IL
C 551-554		D011471767160-IL
C 555,556,560,561		D040100087070-IL
C 557,558		D040220087060-IL
C 559,562,566,568		D010470167160-IL
C 563,565		D040100087070-IL
C 564		D040101082090-IL
C 567		D011153777160-IL

H XM-READY/USB ASSY (SX-A6-J)

SEMICONDUCTORS

IC 501		J126111733020-IL
IC 503		J121206800020-IL
IC 504		J040740800230-IL
IC 505,506		J040740800240-IL
IC 507		J080260200040-IL
IC 508		J042438500010-IL
IC 509		J126050000020-IL
Q 501,504,513,515		J522107S00210-IL
Q 502,503,510,511		J520010200210-IL
Q 506-509		J5222875B0010-IL
Q 516		J520010400210-IL
D 501-515		K005041480020-IL

MISCELLANEOUS

L 501-521,523,524		D340160800060-IL
JA 501		G401PJ3080100-IL
JA 502,503		G40130802000Y-IL
JA 505		L109040000020-IL
X 501		E855451584020-IL
CN10		L101530140910-IL
CN501		L131112300010-IL
CN550		L102526700600-IL
501,502		3070045526010-IL

RESISTORS

All Resistors		RS1/16S###J

CAPACITORS

C 529,534-536,543		D011104577161-IL
C 530-533		D010200167160-IL
C 542,544		D011102777160-IL
C 545		D011104577161-IL
C 549,550		D011332777160-IL
C 551-554		D011471767160-IL
C 555,556,560,561		D040100087070-IL
C 557,558		D040220087060-IL
C 559,562,566,568		D010470167160-IL
C 563,565		D040100087070-IL
C 564		D040101082090-IL
C 567		D011153777160-IL
C 569-571		D011103777160-IL

I AMP LCH ASSY

SEMICONDUCTORS

Q 701-703,706		2SA970
Q 704,714,765,771		J5410246G0000-IL
Q 705		2SK170
Q 707		J5400074B0010-IL
Q 708,713		2SJ103
Q 712,755-757		2SC2240
Q 716,717		2SC2705
Q 718		2SA1145
Q 766		J5021027Y0020-IL
Q 769		J5001023Y0050-IL
Q 770		2SA1859A
D 701,702		K005041480020-IL
D 703,704,9701,9702		K06020R044520-IL
D 707,708		1SS133
D 711-714		K000400700520-IL
D 8701,8702		K500036000080-IL

MISCELLANEOUS

Mark No.	Description	Part No.
L 701		D3301R6100000-IL
J 0		L000281040051-IL
J 702		L000161010030-IL
VR701		C541202115000-IL
VR702		C541503115000-IL
RY701		G680120528010-IL
CN702		L101530140210-IL
CN703		L102526700200-IL
CN705,713		L101220020000-IL
CN711		L108202000220-IL
CN751		L101100040410-IL
CN752		L101100040510-IL
CN753		L102526700300-IL
0		7020065350001-IL
RESISTORS		
R 701,702,709,710		C060022163050-IL
R 711		C000047063520-IL
R 712		C000015263520-IL
R 719,720		C060022163050-IL
R 723,724		C060022063050-IL
R 725,726		C060033065050-IL
R 727,728		C0604R7063050-IL
R 729,730		C060R22066050-IL
R 735,736		C060010065050-IL
R 782		C00001556P520-IL
R 819,820		C060R22065050-IL
R 899		C0004R706P520-IL
R 9716,9718-9722,9729		RS1/8S0R0J
R 9730,9732,9739,9758		RS1/8S0R0J
Other Resistors		RD1/4PU###J
CAPACITORS		
C 701,703,729,730		D000150167070-IL
C 702		CEAT470M25
C 704		CEANP100M16
C 705		D004102277050-IL
C 706,708		D000330167060-IL
C 709		D02027116C050-IL
C 710,711,731,732		D020104167050-IL
C 714		D004222277050-IL
C 726		CEANP470M10
C 733,734,751,752		CEAT220M50
C 735,736		CEAT101M50
C 745,746		D020223167050-IL
C 747,748		CEAT102M50
C 753,754		D020103167050-IL
C 755,756		CEAT220M50

J AMP RCH ASSY

Mark No.	Description	Part No.
SEMICONDUCTORS		
Q 728,741		2SC2705
Q 730		J5400074B0010-IL
Q 734,739		2SJ103
Q 735,746,759,762		J5410246G0000-IL
Q 736		2SK170
Q 738		2SA1145
Q 743,749,750,752		2SA970
Q 744,745,748,753		2SC2240
Q 760		J5021027Y0020-IL
Q 761		2SC4883A
Q 763		J5001023Y0050-IL
Q 764		2SA1859A
D 703,9704		K500036000080-IL
D 704,706		K005041480020-IL
D 705,707,708,9706		K06020R044520-IL
D 709,710		1SS133
D 715-718		K000400700520-IL
MISCELLANEOUS		
L 702		D3301R6100000-IL
J 0		L000281040061-IL
J 701		L000161010030-IL
VR703		C541503115000-IL
VR704		C541202115000-IL
RY702		G680120528010-IL
CN704		L102526700200-IL
CN706		L101530140210-IL
CN707,710		L101220020000-IL
CN712		L108202000220-IL
CN754,755		L101100040410-IL
CN766		L102526700300-IL
RESISTORS		
R 739		C000015263520-IL
R 740		C000047063520-IL
R 745,763,764,767		C060022163050-IL
R 751,773		C060022063050-IL
R 752,772		C060033065050-IL
R 754,784,790		C0604R7063050-IL
R 755,774		C060R22066050-IL
R 757,758		C060010065050-IL
R 769,786		C060022163050-IL
R 787		C00001556P520-IL
R 823,824		C060R22065050-IL
R 9735,9751,9752		RS1/8S0R0J
R 9754-9757,9759,9760		RS1/8S0R0J
Other Resistors		RD1/4PU###J
CAPACITORS		
C 713,757		D020223167050-IL
C 715		D02027116C050-IL
C 717,723,739,740		D020104167050-IL
C 718		CEAT470M25
C 719,722,741,742		D000150067050-IL
C 720,721		D004471067060-IL
C 724		CEANP100M16
C 725		CEANP470M10
C 727		D004222277050-IL
C 728		D004102277050-IL
C 737,738		CEAT101M50
C 743,744,763,764		CEAT220M50
C 759,760		CEAT102M50
C 765,768		D020103167050-IL
C 766,767		CEAT220M50

K REG IC ASSY

Mark No.	Description	Part No.
SEMICONDUCTORS		
IC 802		J126791200060-IL
IC 803		J126780900020-IL
IC 805,811		J126781200040-IL
IC 806		J126201100020-IL
Q 813,814		J522010200210-IL

Mark No.	Description	Part No.
	MISCELLANEOUS	
CN801		L000101150080-IL
CN802,803		L000800020180-IL
CN810-813		L101100031010-IL
CN814,816		L104359780420-IL
CN815		L000141060020-IL
0		7020065470001-IL
0		B020030086B10-IL
0		B020030081B10-IL
	RESISTORS	
R 781,866-870		RS1/8S0R0J
Other Resistors		RS1/16S###J
	CAPACITORS	
C 816-818,824,825		D040470084070-IL
C 819		D040470082120-IL
C 826,830-832,875		D011103597160-IL
C 859-862		D040470084070-IL
C 876		D011103597160-IL
	L SUB TRANS ASSY	
	SEMICONDUCTORS	
Q 815		J522038750210-IL
D 804,818		K005041480020-IL
D 805-808		K000400700520-IL
	MISCELLANEOUS	
F 651,801		G645000050010-IL
RY651		G680090502010-IL
T 801		8200280150340-IL
CN301		L108202000220-IL
CN653		L108353280260-IL
CN801		L108353280290-IL
CN802		L108353280270-IL
CN804		L000351040100-IL
0		5507000000640-IL
0		N751228001110-IL
	RESISTORS	
R 813		C00004726P520-IL
R 816		C060022564520-IL
Other Resistors		RS1/16S###J
	CAPACITORS	
C 652		D040471083080-IL
C 866		D00410359D050-IL
C 868		D004103277050-IL
C 870		D011102777160-IL
C 881		D00847208H010-IL
	M POWER SW ASSY	
	MISCELLANEOUS	
S 801		VSA1005
CN708		L000301020060-IL
CN709		L000121020220-IL
	N POWER ASSY	
	SEMICONDUCTORS	
IC 804,808		J126780500110-IL
IC 807		J126780900020-IL
IC 809		J126780600130-IL
Q 801,802,806,808		J5023200B0050-IL
Q 803,807		J5001268B0050-IL
Q 804,805		J522107S00210-IL
D 802,803,850-857		K000400700520-IL
D 809,813		K120301500010-IL
D 810,814		K120301500020-IL
D 811,812,815,816		K005041480020-IL
D 817		1SS133
	MISCELLANEOUS	
CN803		L102526700800-IL
CN804		L102526700600-IL
CN810-813		L101100041010-IL
CN818		L101220020000-IL
CN852		L101220040000-IL
502		3790040886000-IL
	RESISTORS	
R 801,807,831		C0004R706P520-IL
R 811,9812,9814-9820		RS1/8S0R0J
R 821,822,850,851		C060R22065050-IL
R 852		C060022065060-IL
R 853,854		C060R22065050-IL
Other Resistors		RS1/16S###J
	CAPACITORS	
C 801,802,834,835		D020474069050-IL
C 803,804,807,808		D046472087000-IL
C 805,806,809,810		D00410359D050-IL
C 811,813		D040101082050-IL
C 812,814		D011104577161-IL
C 827,838,841,842		D00410359D050-IL
C 828		D040222084030-IL
C 836,837,839,840		D046472087000-IL
C 855		D040183083001-IL
C 857,858,864		D040101083070-IL
C 862		D00410359D050-IL
C 871,874		D040470083080-IL
C 873,880		D011103777163-IL
C 879		D040221083110-IL
C 898,899		D040102087010-IL
	O HEADPHONE ASSY	
	MISCELLANEOUS	
503		3790040886000-IL
L 620-622		D340160800060-IL
JA 601		G402PJ612AG0Y-IL
CN651		L000501040040-IL
	CAPACITORS	
C 616,653,654		D011103777163-IL
	P PROTECTION L-CH ASSY	
	SEMICONDUCTORS	
Q 723,725,726		J5021845F0000-IL
Q 727		J5000992F0050-IL
D 710		K06605R14P400-IL
D 721,722		K005041480020-IL
	MISCELLANEOUS	

Mark No.	Description	Part No.
CN770		L101100030510-IL
CN771		L101100030410-IL

RESISTORS

All Resistors		RS1/16S###J

CAPACITORS

C 712,750		D040101082090-IL

Q PROTECTION R-CH ASSY

SEMICONDUCTORS

Q 724,729,742		J5021845F0000-IL
Q 733		J5000992F0050-IL
D 709		K06605R14P400-IL
D 719,720		K005041480020-IL

MISCELLANEOUS

CN772,773		L101100030410-IL

RESISTORS

All Resistors		RS1/16S###J

CAPACITORS

C 716,749		D040101082090-IL

R SPEAKER L-CH ASSY (SX-A6-J Only)

MISCELLANEOUS

JA 701		G611202H0100Y-IL
CN911		L000101030230-IL

S SPEAKER R-CH ASSY (SX-A6-J Only)

MISCELLANEOUS

JA 0		G611202H0100Y-IL
CN912		L000101030230-IL

FM/AM TUNER UNIT

FM/AM TUNER UNIIT has no service part.

6. ADJUSTMENT

6.1 Idle Current and DC offset Adjustment

1. Idle Current Adjustment

- **Measurement Points:** AMP Lch Assy : R729
  AMP Rch Assy : R774
- **Adjustment Points:** AMP Lch Assy : VR702
  AMP Rch Assy : VR703
- **Procedure**
  ① Turn on the power
  ② Connect a digital voltmeter to both ends of resistor of the measurement point. (70 mV of AMP Lch: R729 and AMP Rch: R774).
  ③ Perform aging for more than five minute.
  ④ Slowly turn the adjustment VR clockwise so that the voltage becomes in the readjustment of 60 mV
- **Adjustment Point and Measurement Points**.... see fig1.

2. DC Offset Adjustment

- **Measurement Points:** AMP Lch Assy : SP terminal
  AMP Rch Assy : SP terminal
- **Adjustment Points:** AMP Lch Assy : VR701
  AMP Rch Assy : VR704
- **Procedure**
  ① The voltage of SP terminal is adjusted to 0 ± 10 mV. (8 Ω Speaker dummy connection)
- **Adjustment Point and Measurement Points**.... see fig1.

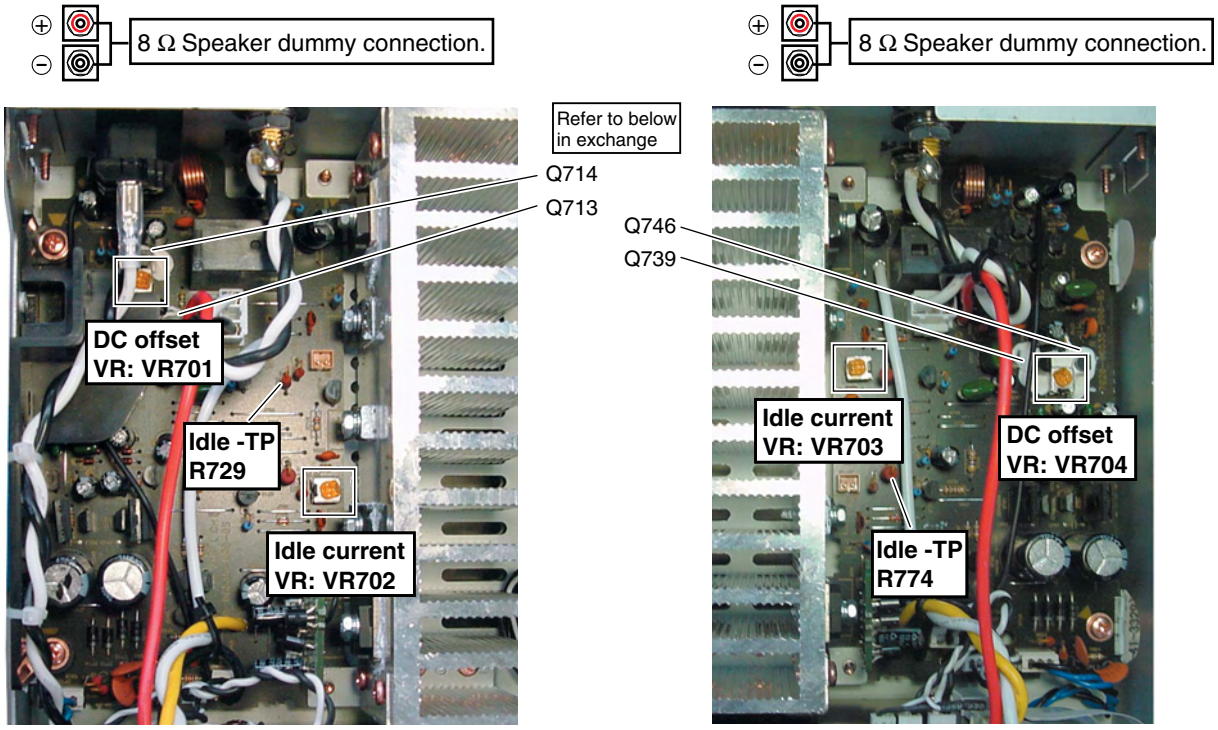

I AMP Lch Assy

[fig 1.]

J AMP Rch Assy

Caution when transistors (Q713, Q714, Q739 and Q746) are replaced

Please cover the leads of the transistors at Silicon bond for the variation prevention of DC Offset when you have exchanged transistors.

7. GENERAL INFORMATION

7.1 TROUBLE SHOOTIG

FUSE F801 is blown.	→ **N POWER ASSY** Check whether D809, D810, D813 or D814 is damaged.
LCD BACK LIGHTING is not lit.	→ Check whether +5V is output at OUT PUT of IC804 REG IC. Check the voltage drop at resistor R852 22Ω. Check the voltage drops at resistors R821, R822 0.22Ω.
MICOM is not functioning.	→ Check whether +6V is output at OUT PUT of IC809. **A FUNCTION ASSY** Check whether XTAL101 is oscillating properly. Check whether RESET IC of IC511 is functioning properly.
When SPEAKER PROTECTION is engaged	**I AMP L CH ASSY** **J AMP R CH ASSY** Check whether POWER TR is functioning properly. Check whether R730, R729 /0.22Ω of L-CH and R774, R755 /0.22Ω of R-CH are damaged. Check whether + power supply and - power supply are supplied.
ELECTRONIC VOLUME is not functioning.	→ **A FUNCTION ASSY** Check whether +8V is output at OUT PUT of IC112, and whether -8V is output at OUT PUT of IC111. Check whether data is input to PIN42, 43 of IC101.
When there is no sound	→ Check the operation status of Q111, Q112 MUTE TR.
HEAT SINK is overheated.	**I AMP L CH ASSY** **J AMP R CH ASSY** Check whether IDLE is adjusted at 52mv+/-10mV without load.
MOTOR VOLUME is not functioning.	→ **N POWER ASSY** Check whether +9V is output at OUT PUT of IC807. **C MOTOR VR ASSY** Check whether MOTOR DRIVE IC of IC650 is functioning properly.

7.2 SPECIFICATION OF PROTECTIVE OPERATION

*When SPEAKER OUT is overloaded, turn off SPEAKER RELAY immediately and turn off power supply RELAY. Then, blinks the STAND BY LED.

*When DC voltage is detected at SPEAKER OUT, turn off SPEAKER RELAY and power supply RELAY. Then, blinks the STAND BY LED.

After that, normal operation MODE will be resumed by turning power supply SW off/on.
Similarly, normal operation MODE will be resumed by reconnecting the power cord.

7.3 DISCHARGE OF POWER AMPLIFIER

1. Turn off the power of the product.
2. Discharge both ends of capacitor of Power Assy by short-circuiting (connector GND and +, connector GND and -) using a resistor with 200Ω/10W (and above) for 30 seconds.

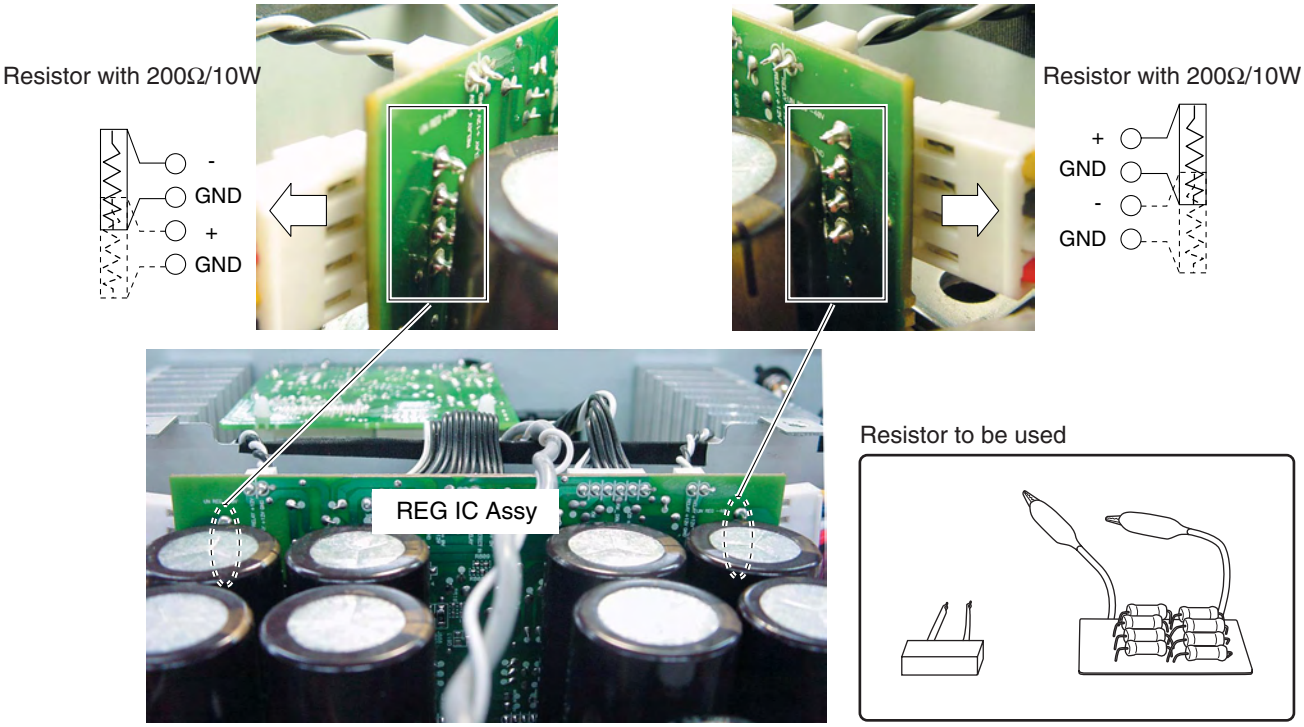

7.4 PCB LOCATION

• SX-A9 model

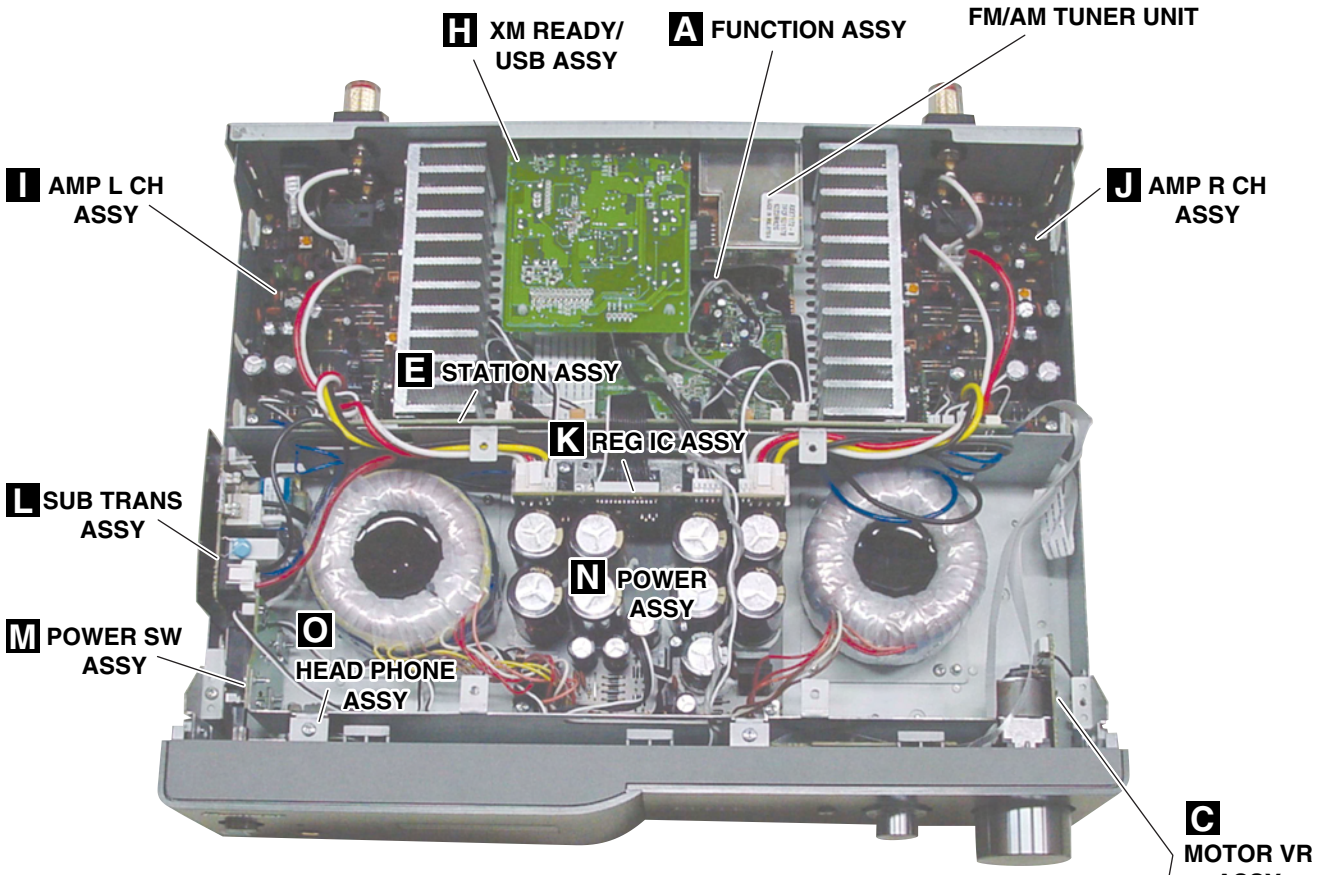

• Top view

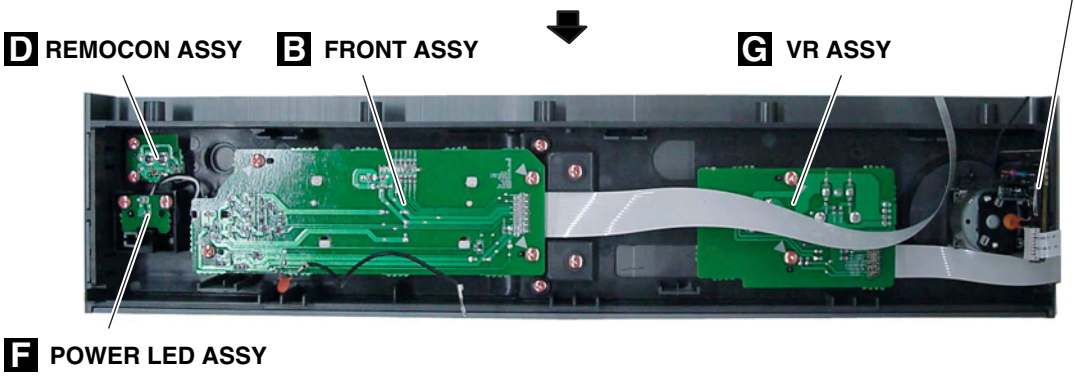

• Front view

7.5 DISASSEMBLY

Note : Even if the unit shown in the photos and illustrations in this manual may differ from your product, the procedures described here are common.

Disassembly

• SX-A6 model

1 Cabinet top cover

① Remove 13 screws.
② Remove the cabinet top cover.

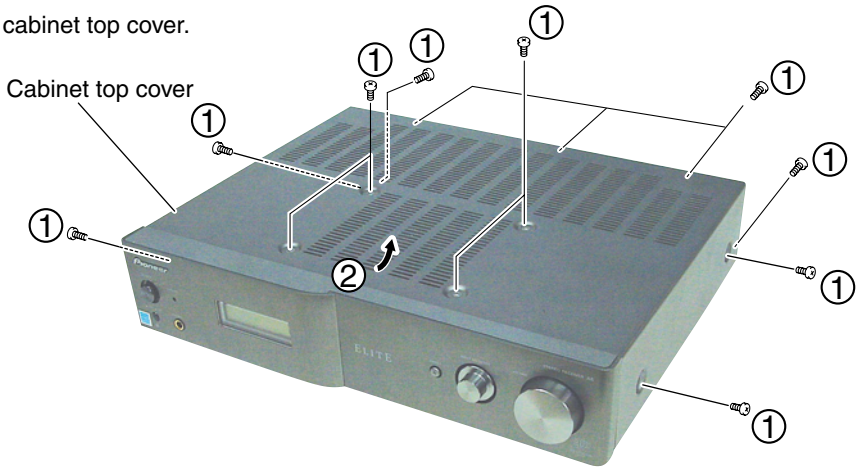

2 FM/AM TUNER UNIT

① Remove 2 screws.

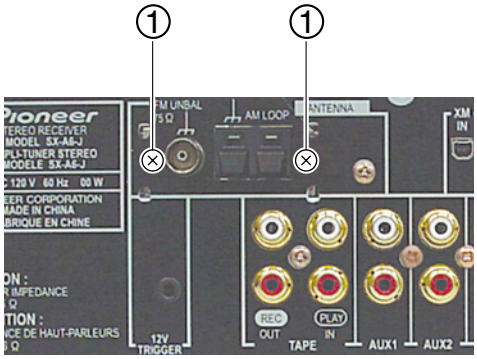

② Remove FM/AM TUNER UNIT

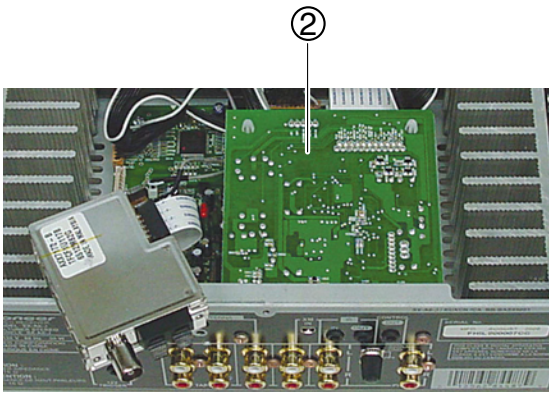

3 FUNCTION Ass'y

① Remove 7 screws.

② Remove spacers (2 locations) on the board.
③ Remove XM-READY/USB Assy.
④ Remove 2 screws.
⑤ Remove FUNCTION Assy.

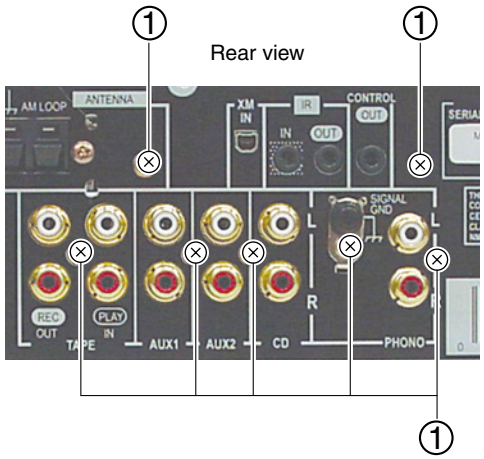

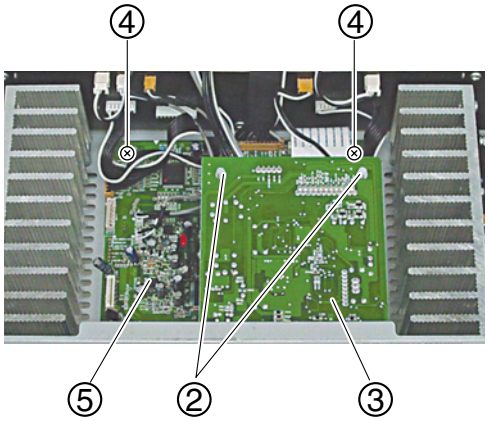

4 Front Panel

① Remove the 6 screws.

② Remove the 6 screws.
③ Remove the front panel section.

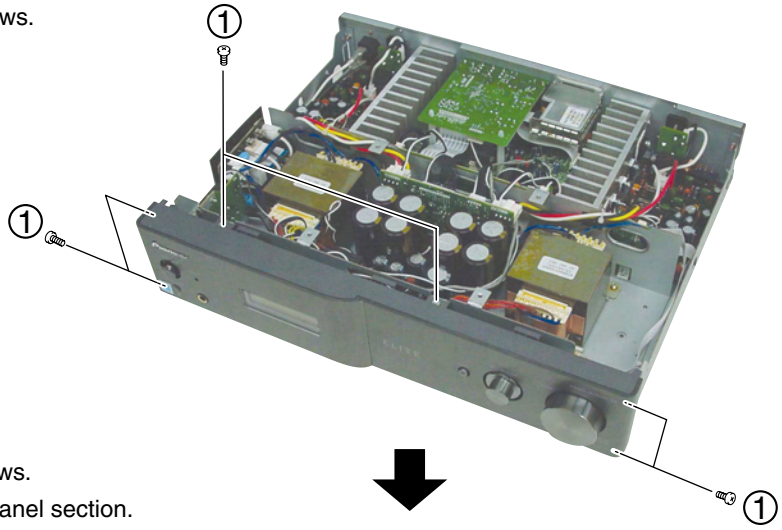

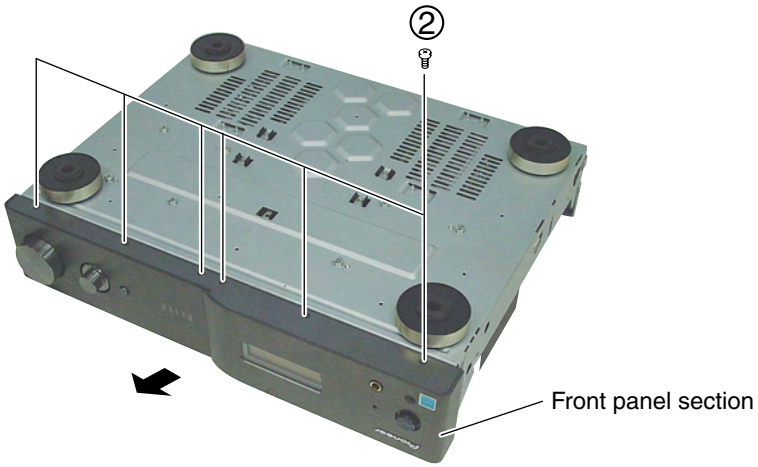

Note : Even if the unit shown in the photos and illustrations in this manual may differ from your product, the procedures described here are common.

Disassembly

• SX-A9 model

1 Cabinet top cover

① Remove 4 screws.
② Remove 4 screws. (Left, Right)
③ Remove 4 screws. (Rear section)

Note:
Even if the portion of the round (⌔) mark does not remove the screw, the cabinet top cover separates.

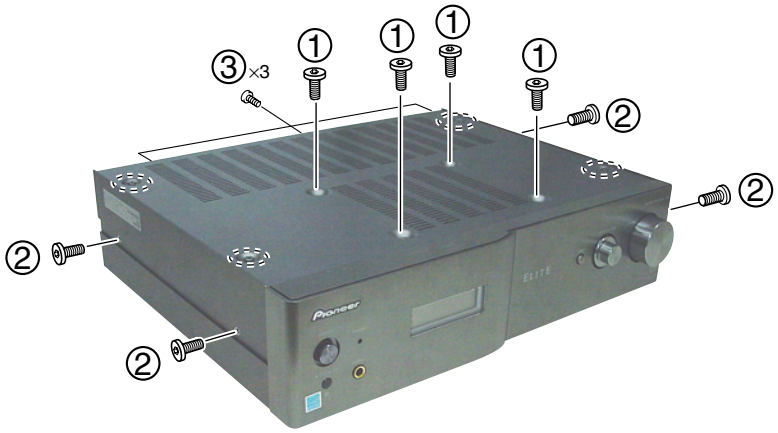

2 FM/AM TUNER UNIT

① Remove 2 screws.

② Remove FM/AM TUNER UNIT

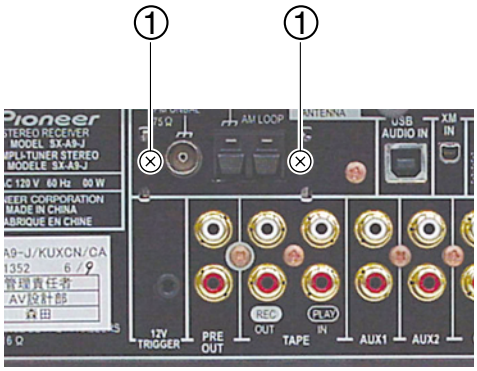

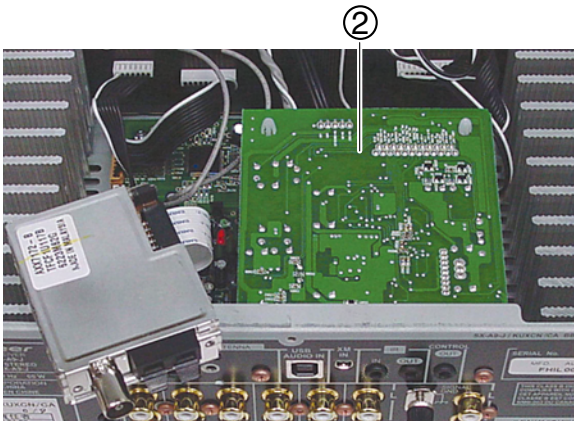

3 FUNCTION Ass'y

① Remove 8 screws.

② Remove spacers (2 locations) on the board.

③ Remove XM-READY/USB Assy.

④ Remove 2 screws.

⑤ Remove FUNCTION Assy.

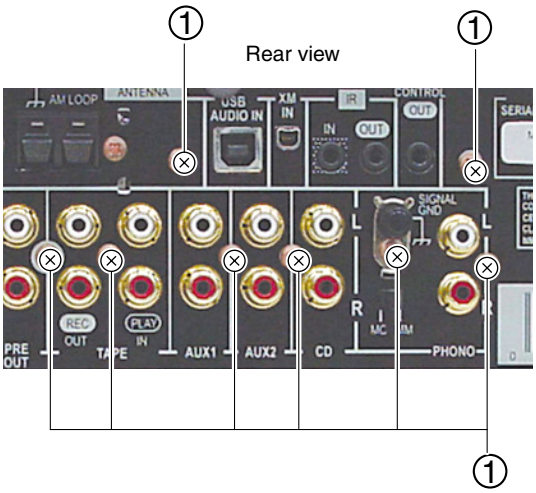

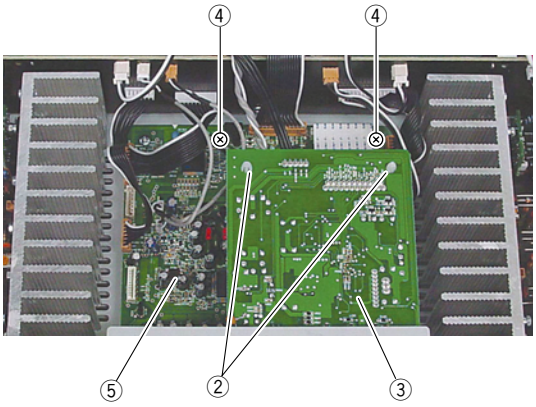

4 Front Panel

① Remove the 2 screws.

② Remove the 4 screws. (Left, Right)

③ Remove the 5 screws. (Botoom side)

④ Remove the 1 screws. (Botoom side)

⑤ Remove the flexible cable.

⑥ Remove the Front panel.

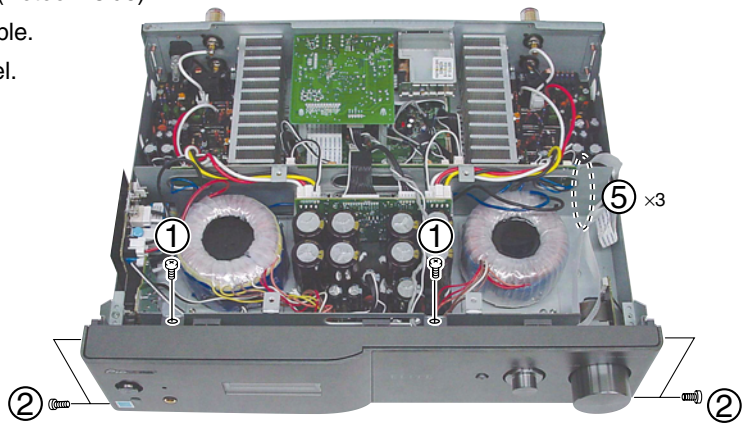

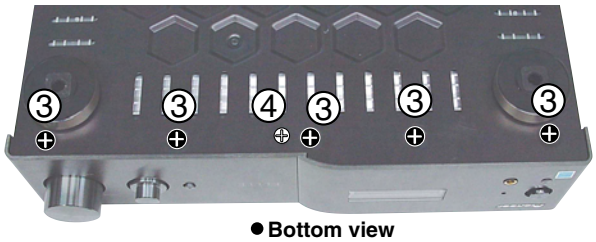

● **Bottom view**

8. PANEL FACILITIES

Front panel

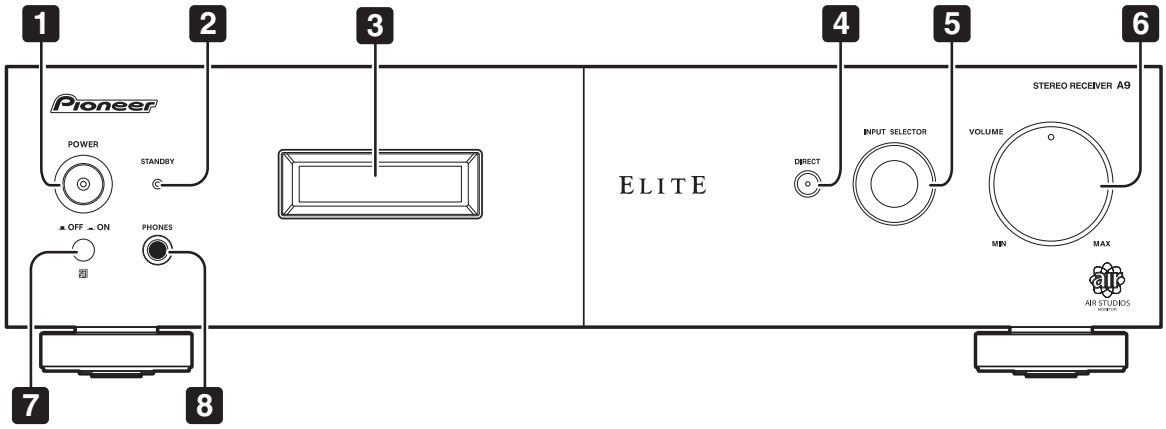

1 POWER OFF ON

2 Standby indicator

3 Character display

4 DIRECT
Press to switch the Direct listening feature on or off.

5 INPUT SELECTOR dial
Selects an input source.

6 MASTER VOLUME

7 Remote sensor

8 PHONES jack
Use to connect headphones (when connected, there is no sound output from speakers).

Display

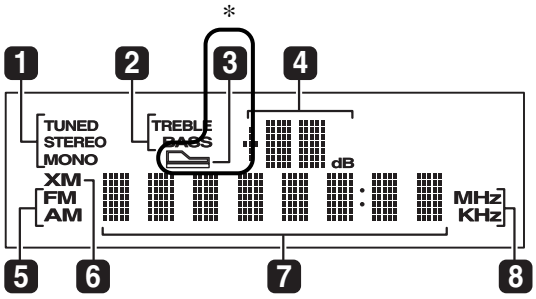

1 Tuner Indicators
TUNED – Lights when a broadcast is being received.
STEREO – Lights when a stereo FM broadcast is being received in auto stereo mode.
MONO – Lights when the MPX button is used to select mono mode.

2 Tone control indicators
TREBLE – Lights when high-range tone adjustment is applied.
BASS – Lights when low-range tone adjustment is applied.

3 Sound Retriever indicator
Lights when the Sound Retriever function is enabled. *

4 Master volume level

5 FM – Lights when FM broadcasts are received.
AM – Lights when AM broadcasts are received.

6 XM – Lights when XM radio broadcasts are received.

7 Character display
Displays various system information.

8 MHz – Lights when an FM frequency is displayed.
KHz – Lights when an AM frequency is displayed.

* : SX-A9-J Only

Remote control

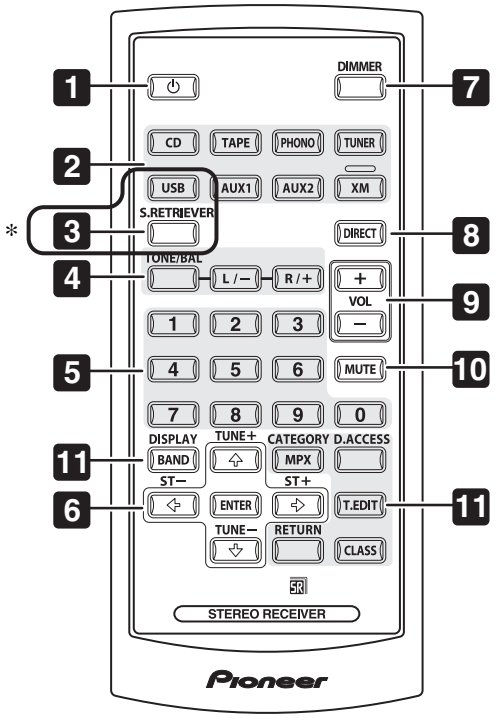

1 ⏻
Switches the receiver between standby and on.

2 Input selector buttons
Press to select an input source.

3 S. RETRIEVER *
Press to switch the Sound Retriever on/off.

4 TONE/BAL controls
Use to adjust the tone and balance.

5 Number buttons
Use the number buttons to directly select a radio frequency.

6 ⬅➡⬇⬆ (TUNE/ST) /ENTER
Use the **TUNE +/–** buttons to find radio frequencies and use **ST +/–** to find preset stations.

7 DIMMER
Dims or brightens the display (or switches the backlight off).

8 DIRECT
Press to access Direct listening.

9 VOLUME +/–
Use to set the listening volume.

10 MUTE
Mutes/unmutes the sound.

11 Tuner and XM Radio controls
DISPLAY (XM Radio only) **–** Switches between named station presets and radio frequencies**.**
BAND (Tuner only) **–** Switches between the AM and FM bands.
CATEGORY (XM Radio only) – Press to browse digital radio broadcasts.
MPX (Tuner only) **–** Switches between stereo and mono reception of FM broadcasts.
D.ACCESS – Press to access a radio station directly using the number buttons.
T.EDIT – Memorizes/names stations for recall.
CLASS – Switches between the three banks of radio station presets.
RETURN (XM Radio only) – Press to confirm and exit the current menu.

* : SX-A9-J Only