PIONEER®
The Art of Entertainment

Service Manual

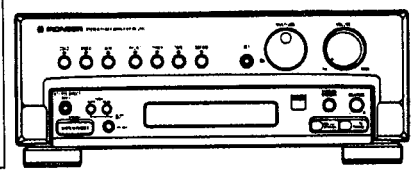

ORDER NO.
RRV1397

STEREO TUNER AMPLIFIER

SX-J990

THIS MANUAL IS APPLICABLE TO THE FOLLOWING MODEL(S) AND TYPE(S).

Type	Model	Power Requirement	The voltage can be converted by the following method.
	SX-J990		
SD	○	AC110V/120–127V/220-230V/240V	With the voltage selector
S/DF	○	AC110V/120–127V/220-230V/240V	With the voltage selector
SD/TA	○	AC110V/120–127V/220-230V/240V	With the voltage selector

- **This product is a component of a system. For the system composition, packing, accessories, instruction manuals etc., refer to the service manual RRV 1396 for Z-AV990R.**
- **This product does not function properly when independent; to avoid malfunctions, be sure to connect it to the prescribed system component(s), otherwise damage may result.**

CONTENTS

PIONEER ELECTRONIC CORPORATION 4-1, Meguro 1-Chome, Meguro-ku, Tokyo 153, Japan
PIONEER ELECTRONICS SERVICE INC. P.O. Box 1760, Long Beach, CA 90801-1760, U.S.A.
PIONEER ELECTRONIC [EUROPE] N.V. Haven 1087 Keetberglaan 1, 9120 Melsele, Belgium
PIONEER ELECTRONICS ASIACENTRE PTE. LTD. 501 Orchard Road, #10-00 Lane Crawford Place, Singapore 0923

T-DFK OCT. 1995 Printed in Japan

1. EXPLODED VIEWS AND PARTS LIST

NOTES :

- *Parts marked by "NSP" are generally unavailable because they are not in our Master Spare Parts List.*
- *The ⚠ mark found on some component parts indicates the importance of the safety factor of the part. Therefore, when replacing, be sure to use parts of identical designation.*
- *Parts marked by "◉" are not always kept in stock. Their delivery time may be longer than usual or they may be unavailable.*

1.1 EXTERIOR

Parts List

Mark	No.	Description	Parts No.
	1	MAIN ASSY	RWZ3664
	2	FUNC ASSY	RWZ3644
NSP	3	TRANS ASSY	RWZ3645
NSP	4	PRIMARY ASSY	RWZ3684
	5	VOL ASSY	RWZ3643
	6	VOLTSEL ASSY	RWZ3647
	7	FRONT ASSY	RWZ3649
NSP	8	H.P. ASSY	RWZ3650
	9	VIDEO ASSY	RWZ3651
NSP	10	SP ASSY	RWZ3653
	11	FM/AM TUNER MODULE	AXQ1012
	12	POWER AMP MODULE	AXQ7023
	13	STRAIN RELIEF	CM-22B
	14	SCREW	VBZ35P080FMC
⚠	15	LEAD CARD 40P	RDD1346
⚠	16	FUSE (T1.6A, FU4, FU5)	AEK1056
⚠	17	FUSE (T3.15A, FU6, FU7)	AEK1059
⚠	18	FUSE (T4A, FU1, FU2)	AEK1060
⚠	19	FUSE (T2A, FU3)	AEK1057
⚠	20	POWER TRANSFORMAR (T)	RTT1302
⚠	21	AC POWER CORD	VDG1058
	22	SCREW	ABA1005
	23	SCREW (4 x 8)	ABA1184
NSP	24	PCB SPACER	AEC1188
NSP	25	PCB SUPPORT	AEC1217
NSP	26	PCB SPACER (3 x 8)	AEC1371
NSP	27	PCB SPACER (3 x 12)	AEC1372
NSP	28	PCB MOLD	AMR1525
NSP	29	PCB MOLD	AMR2115
NSP	30	CHASSIS	ANA1193
NSP	31	CORD STOPPER	DNF1128
	32	PLATE	PNM1158
	33	INSULATOR	PNW1912
	34	FOOT	REC1263
	35	REAR PANEL SX	RNA1988
	36	INSULATOR SPACER	RNK2174
	37	BARRIER (PVC)	AEC7005
	38	FUNCTION BUTTON	RAC2046
	39	SET BUTTON SX	RAC2047
	40	TIMER BUTTON	RAC2048
	41	POWER BUTTON SX	RAC2049
	42	VOLUME KNOB	RAC2050
	43	JOG KNOB	RAC2051
	44	MIC KNOB	RAC2052
	45	----------	
	46	FL PANEL SX	RAH2651
	47	KNOB CAP A	RNK2169
	48	FUNCTION LENS	RNK2170
	49	SET LENS SX	RNK2171
	50	STAND–BY LENS	RNK2172
	51	KNOB CAP B	RNK2173
	52	FRONT PANEL SX	RNT1228
	53	NAME PLATE	VAM1032
	54	SCREW	BBZ30P080FZK
	55	SCREW	BBZ30P140FMC
	56	SCREW	BBZ30P180FMC
	57	BONNET	REA1222
	58	SCREW	BBZ30P080FMC
	59	FLANGE NUT	ANB1006
	60	BINDER	Z09–057

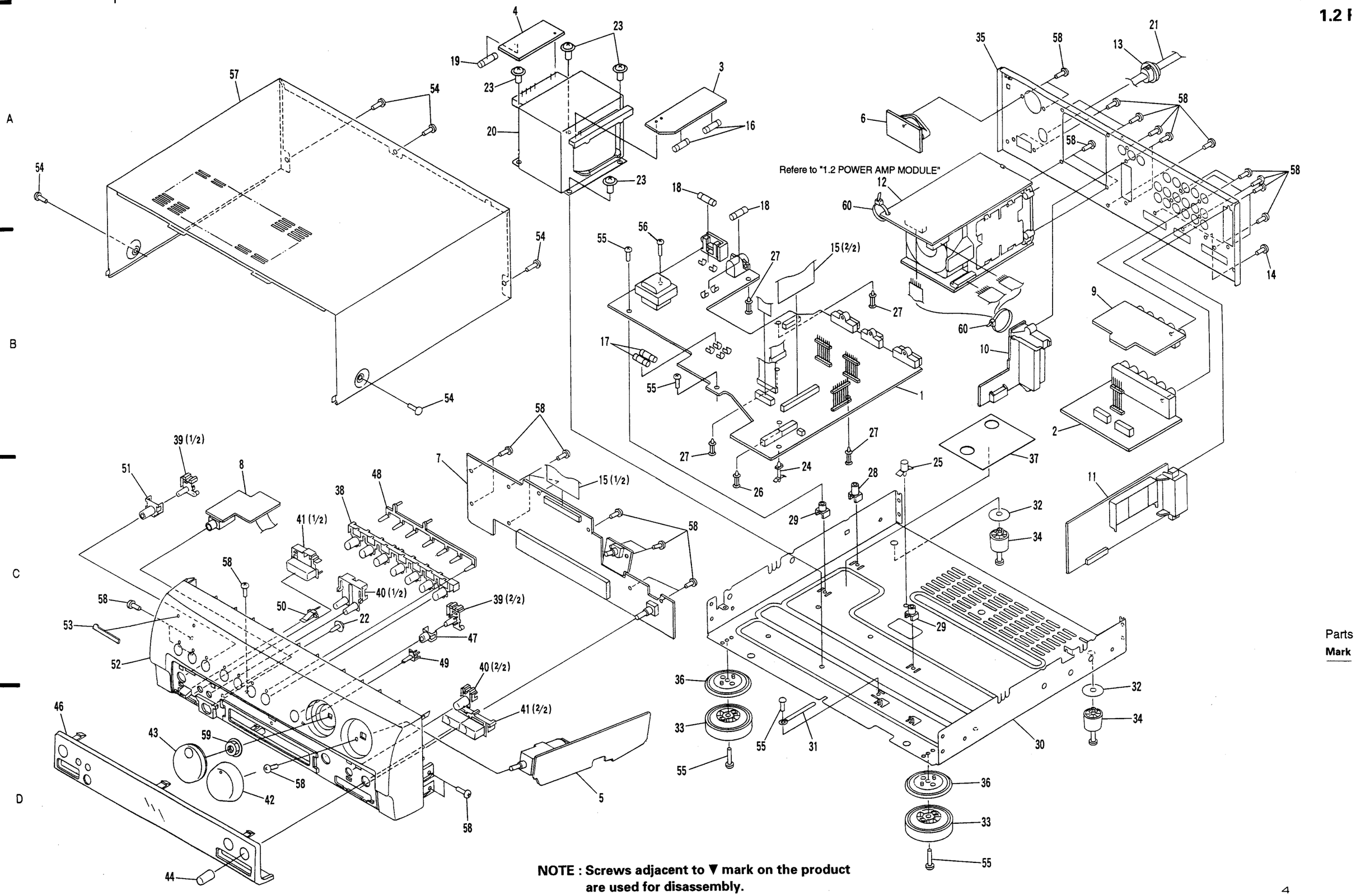

NOTE : Screws adjacent to ▼ mark on the product are used for disassembly.

Parts Mark

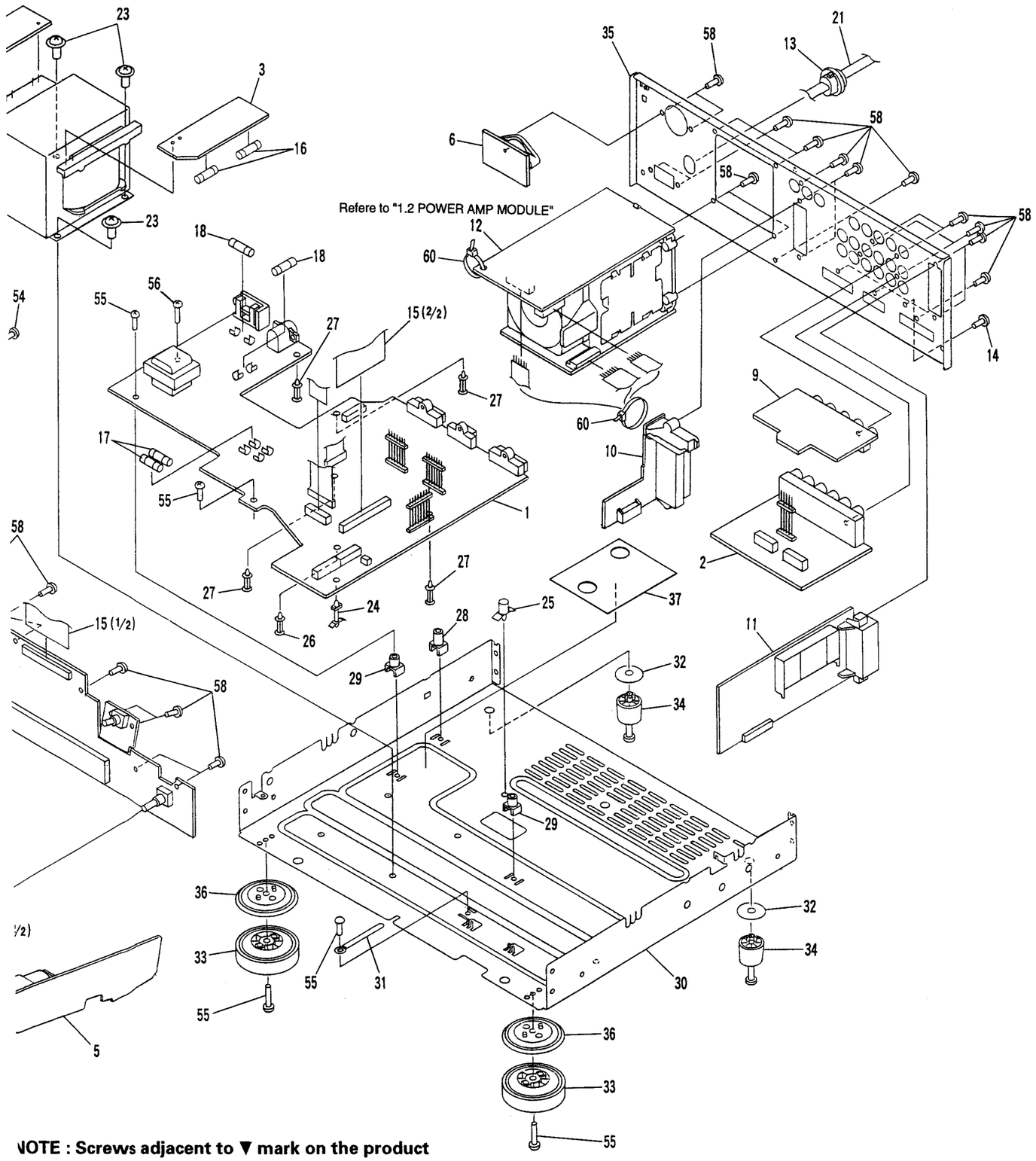

NOTE : Screws adjacent to ▼ mark on the product are used for disassembly.

1.2 POWER AMP MODULE

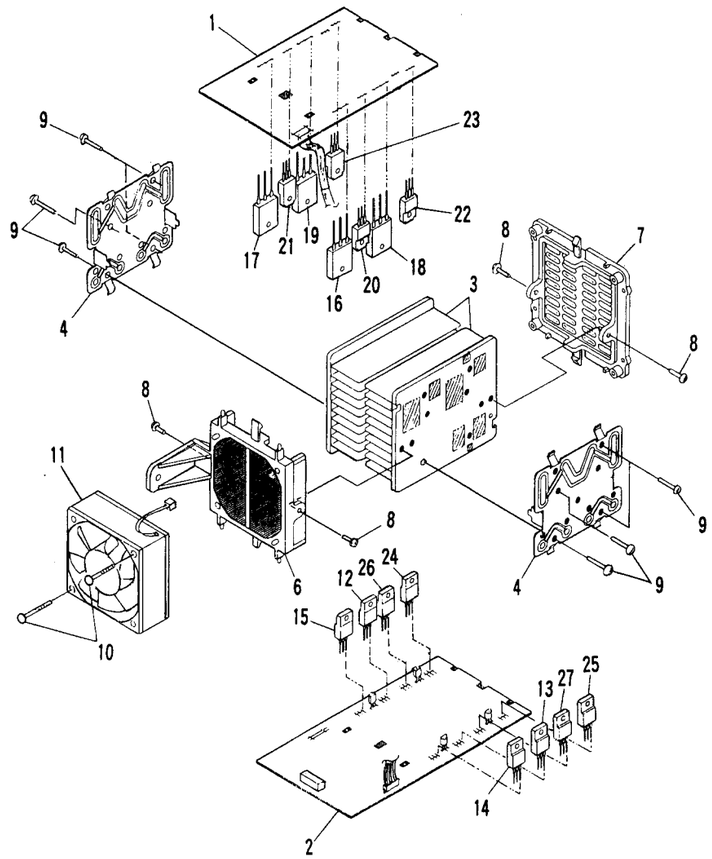

Note: Ensure that silicon grease does not adhere to the MOLD A (No.6) and MOLD B (No.7).

Parts List

Mark	No.	Description	Parts No.
	1	FRONT 100W ASSY	AWZ7927
	2	REAR REGULATOR ASSY	AWZ7928
	3	HEAT SINK (AL)	ANH7007
	4	BRACKET	ANG1868
	5	----------	
	6	MOLD A	AMR2594
	7	MOLD B	AMR2595
	8	SCREW (3 x 10)	ABA1021
	9	SCREW	BBZ30P140FZK
	10	SCREW	BBZ30P350FZK
	11	FAN MOTOR	AXM1019
	12	REGULATOR IC (IC7401)	NJM7812FAS
	13	REGULATOR IC (IC7402)	NJM7912FA
	14	REGULATOR IC (IC7403)	NJM7812FAS
	15	REGULATOR IC (IC7404)	NJM7805FAS

Mark	No.	Description	Parts No.
⚠	16	TRANSISTOR (Q7511)	2SA1264N
⚠	17	TRANSISTOR (Q7512)	2SA1264N
⚠	18	TRANSISTOR (Q7513)	2SC3181N
⚠	19	TRANSISTOR (Q7514)	2SC3181N
	20	TRANSISTOR (Q7503)	2SC4793
	21	TRANSISTOR (Q7504)	2SC4793
	22	TRANSISTOR (Q7509)	2SA1837
	23	TRANSISTOR (Q7510)	2SA1837
⚠	24	TRANSISTOR (Q7111)	2SB1274
⚠	25	TRANSISTOR (Q7112)	2SB1274
⚠	26	TRANSISTOR (Q7113)	2SD1913
⚠	27	TRANSISTOR (Q7114)	2SD1913

2. SCHEMATIC AND PCB CONNECTION DIAGRAMS

2. 1 OVERALL SCHEMATIC DIAGRAM

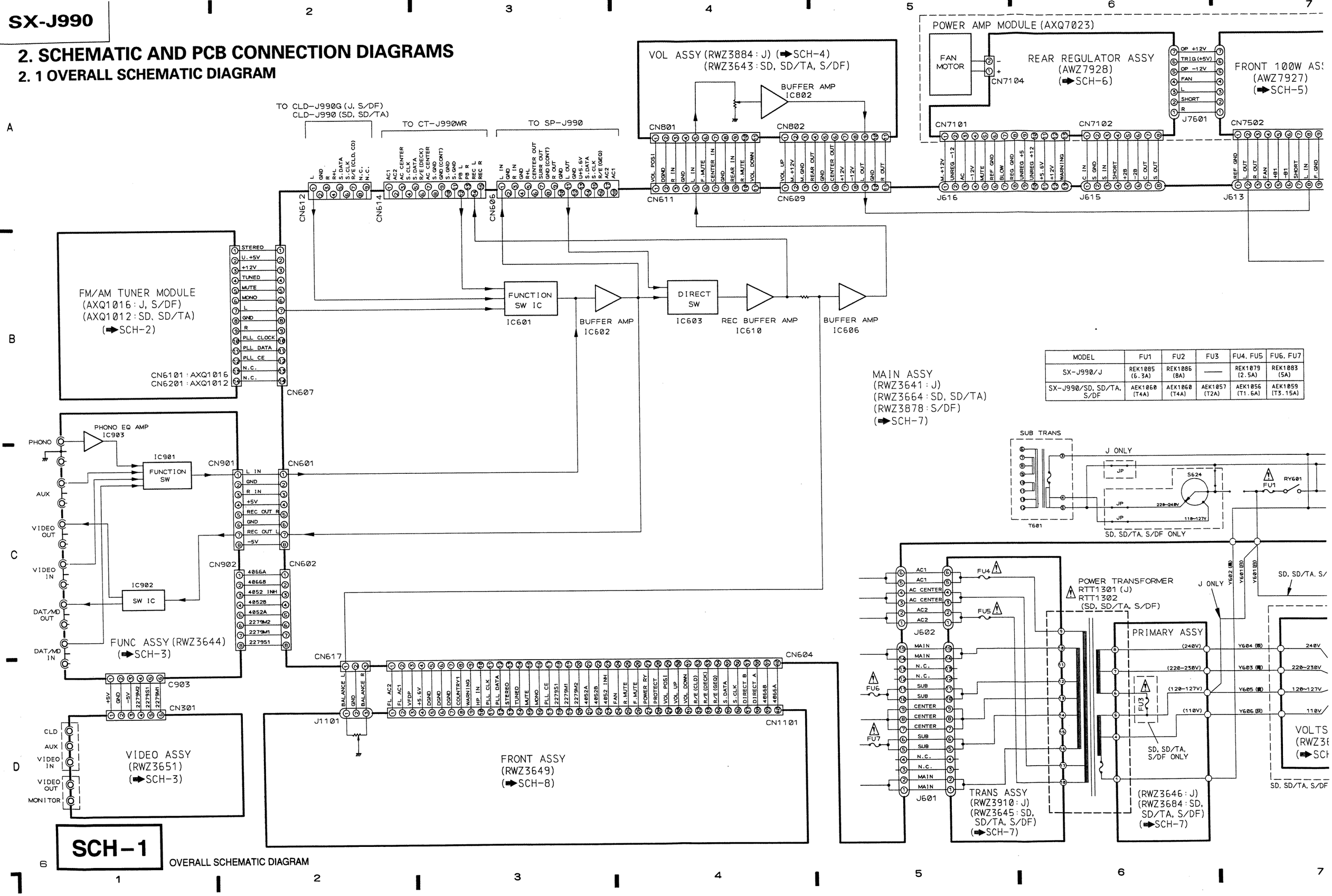

MODEL	FU1	FU2	FU3	FU4, FU5	FU6, FU7
SX-J990/J	REK1085 (6.3A)	REK1086 (8A)	——	REK1079 (2.5A)	REK1083 (5A)
SX-J990/SD, SD/TA, S/DF	AEK1060 (T4A)	AEK1060 (T4A)	AEK1057 (T2A)	AEK1056 (T1.6A)	AEK1059 (T3.15A)

SCH-1 OVERALL SCHEMATIC DIAGRAM

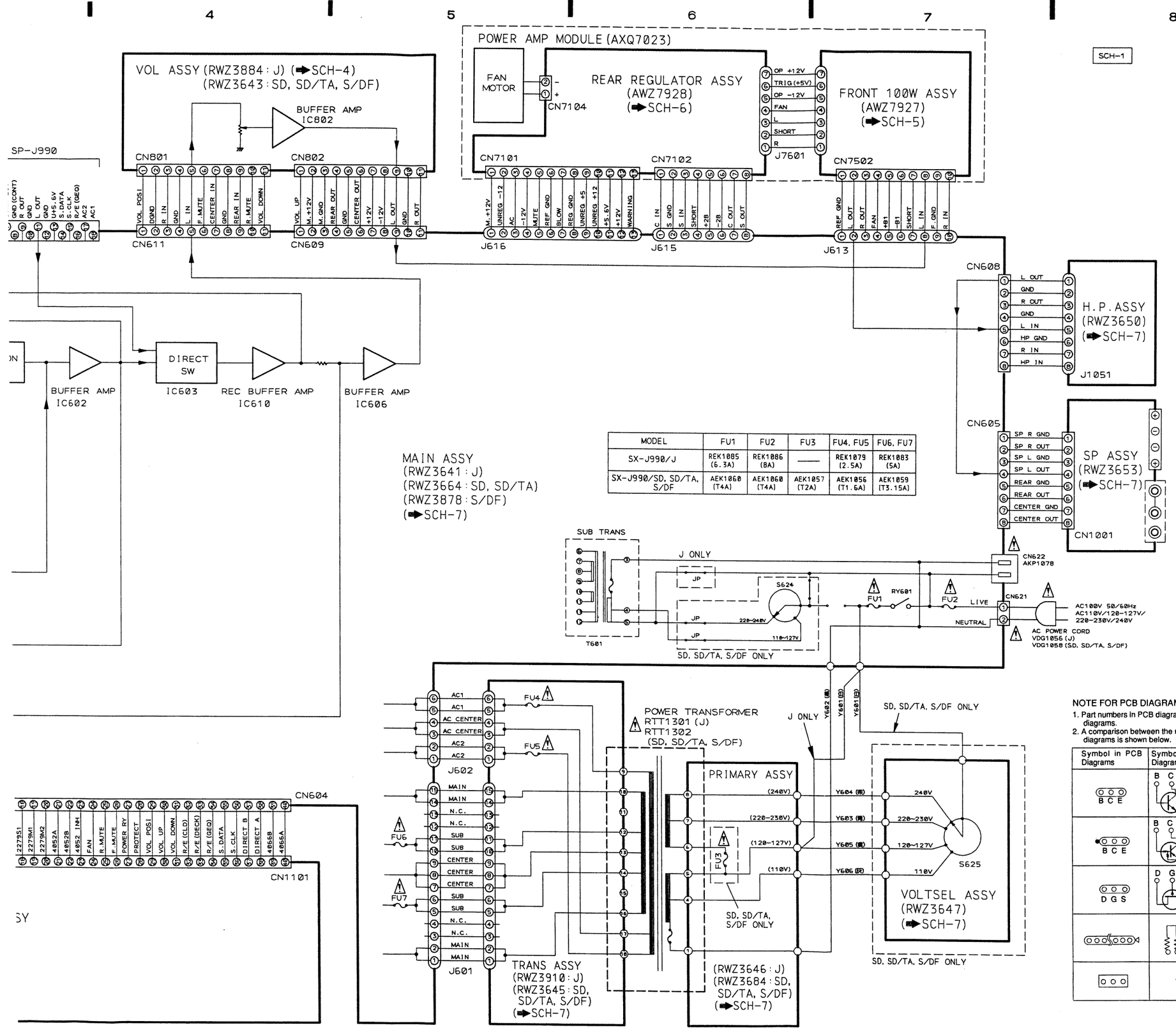

MODEL	FU1	FU2	FU3	FU4, FU5	FU6, FU7
SX-J990/J	REK1085 (6.3A)	REK1086 (8A)	——	REK1079 (2.5A)	REK1083 (5A)
SX-J990/SD, SD/TA, S/DF	AEK1060 (T4A)	AEK1060 (T4A)	AEK1057 (T2A)	AEK1056 (T1.6A)	AEK1059 (T3.15A)

NOTE FOR SCHEMATIC DIAGRAMS (Type 1A)

1. **When ordering service parts, be sure to refer to "PARTS LIST of EXPLODED VIEWS" or "PCB PARTS LIST".**
2. **Since these are basic circuits, some parts of them or the values of some components may be changed for improvement.**
3. **RESISTORS:**
   Unit: k:kΩ, M:MΩ, or Ω unless otherwise noted.
   Rated power: 1/4W, 1/6W, 1/8W, 1/10W unless otherwise noted.
   Tolerance: (F): ±1%, (G): ±2%, (K): ±10%, (M): ±20% or ±5% unless otherwise noted.
4. **CAPACITORS:**
   Unit: p:pF or μF unless otherwise noted.
   Ratings: capacitor (μF)/ voltage (V) unless otherwise noted.
   Rated voltage: 50V except for electrolytic capacitors.
5. **COILS:**
   Unit: m:mH or μH unless otherwise noted.
6. **VOLTAGE AND CURRENT:**
   V : Signal voltage at rated output.
   or ← V :
   DC voltage (V) at no input signal unless otherwise noted.
   Value in ( ) is DC voltage at rated power.
   ⇦ mA or ← mA :
   DC current at no input signal unless otherwise noted.
7. **OTHERS:**
   - ⊘ or ● : Adjusting point.
   - : Measurement point.
   - The ⚠ mark found on some component parts indicates the importance of the safety factor of the parts. Therefore, when replacing, be sure to use parts of identical designation.
8. **SCH-□ ON THE SCHEMATIC DIAGRAM:**
   - SCH-□ indicates the drawing number of the schematic diagram. (SCH stands for schematic diagram.)
9. **SWITCHES** (Underline indicates switch position):

FRONT ASSY
S1101 : FM/AM/STATION
S1102 : AUTO TUNING
S1103 : STATION MEMORY
S1104 : SOURCE DIRECT (DEMO)
S1105 : TIMER MODE
S1106 : SET
S1107 : TIMER ON/OFF
S1108 : SYSTEM POWER STANDBY/ON
S1109 : CD/LD
S1110 : VIDEO
S1111 : AUX
S1112 : PHONO
S1113 : TUNER
S1114 : TAPE
S1115 : DAT/MD

NOTE FOR PCB DIAGRAMS:

1. Part numbers in PCB diagrams match those in the schematic diagrams.
2. A comparison between the main parts of PCB and schematic diagrams is shown below.

Symbol in PCB Diagrams	Symbol in Schematic Diagrams	Part Name
B C E	B C E B C E	Transistor
B C E	B C E B C E	Transistor with resistor
D G S	D G S D G S	Field effect transistor
		Resistor array
		3- terminal regulator

NOTE FOR PCB DIAGRAMS:

1. Part numbers in PCB diagrams match those in the schematic diagrams.
2. A comparison between the main parts of PCB and schematic diagrams is shown below.

Symbol in PCB Diagrams	Symbol in Schematic Diagrams	Part Name
Q504 E Q504	Q504 Q504	Transistor
D203 D203	D203	Diode
C513 C513	C513	Capacitor (Polarized)

3. The transistor terminal marked with E or ⊏ shows the emitter.
4. The diode terminal marked with ◎ or ⊏ shows cathode side.
5. The capacitor terminal marked with ◎ or ⊏ shows negative terminal.

OVERALL SCHEMATIC DIAGRAM **SCH-1**

2. 2 FM/AM TUNER MODULE

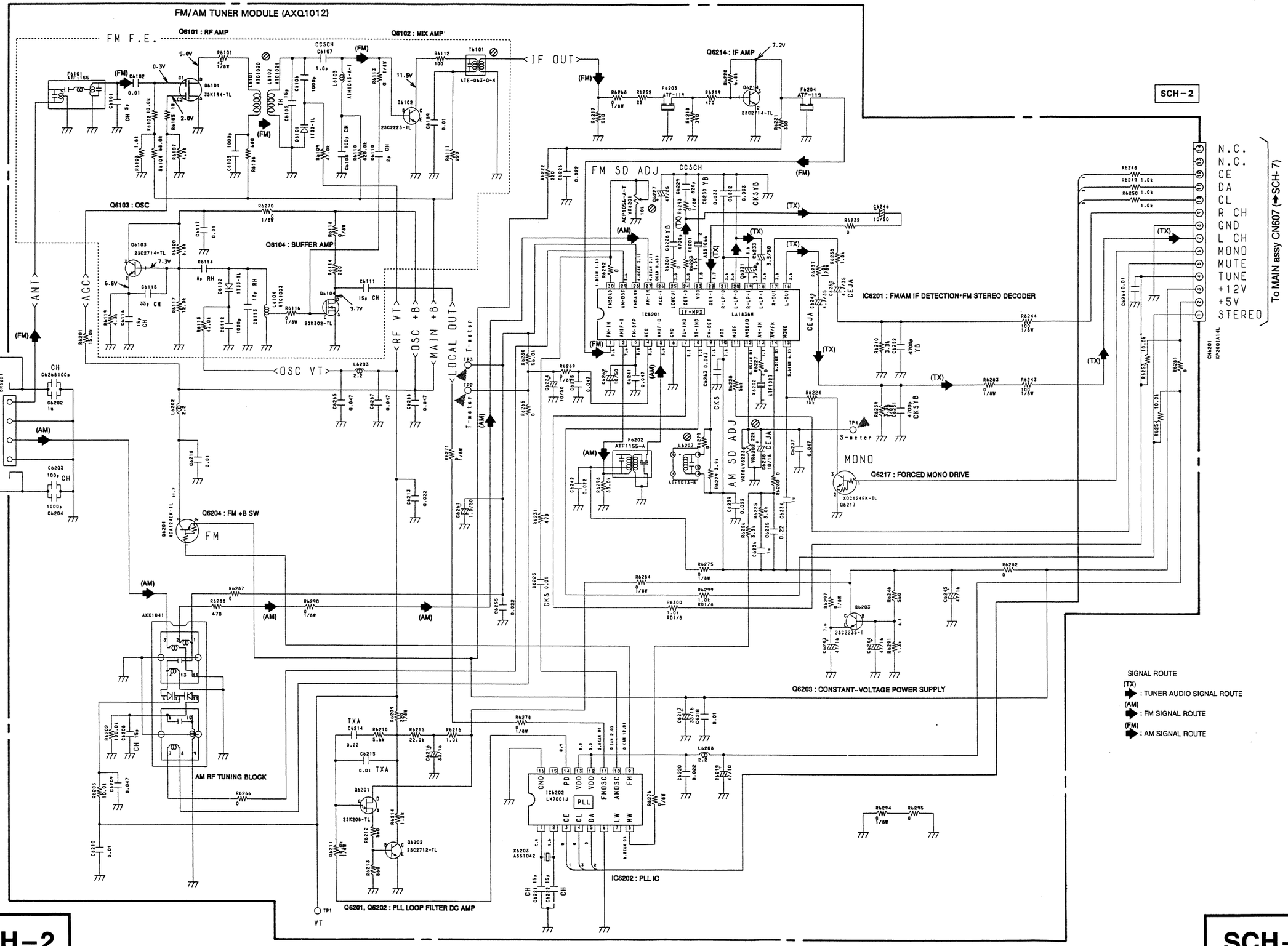

FM/AM TUNER MODULE SCH-2

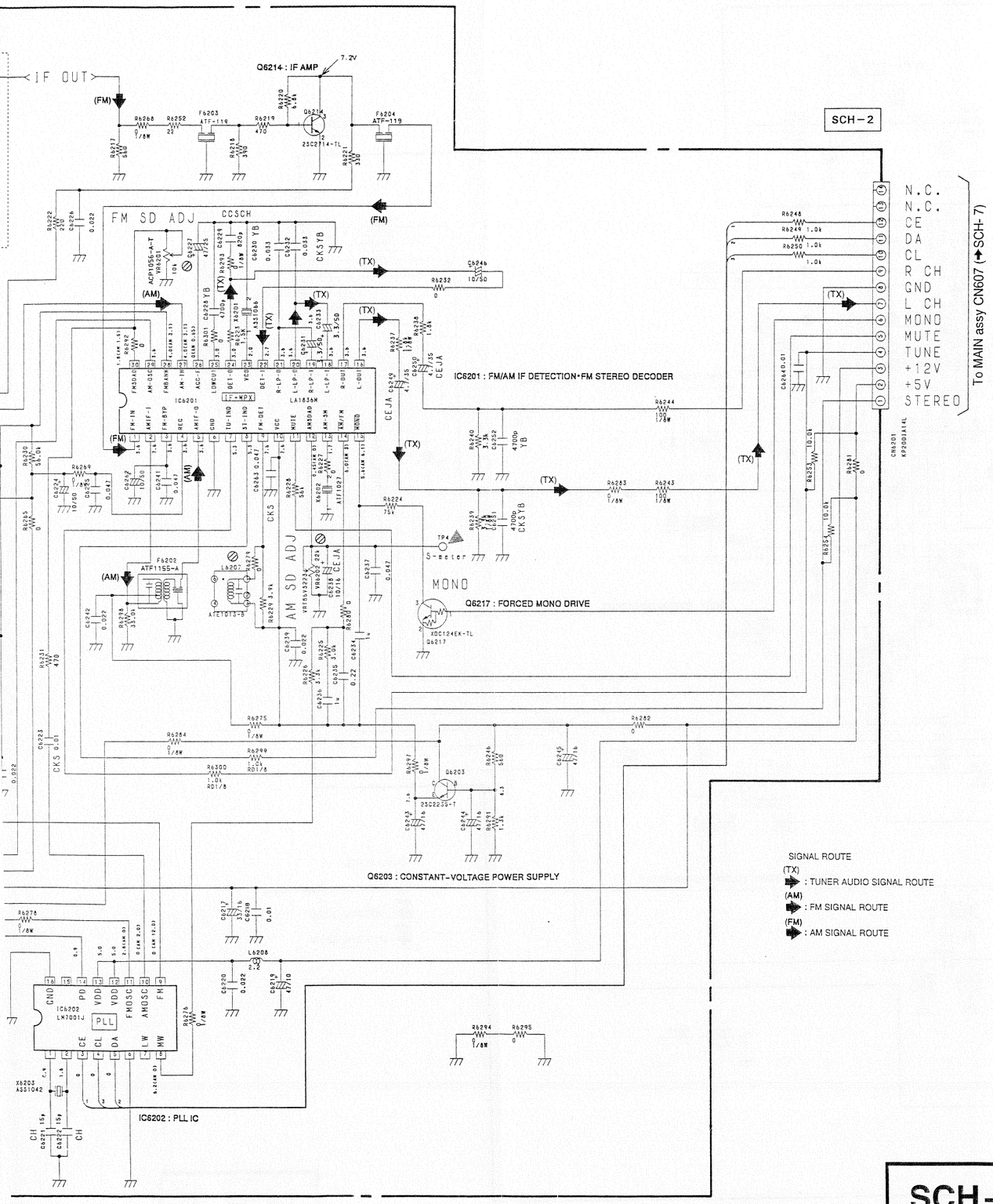

FM/AM TUNER MODULE

SCH – 2

FM/AM TUNER MODULE

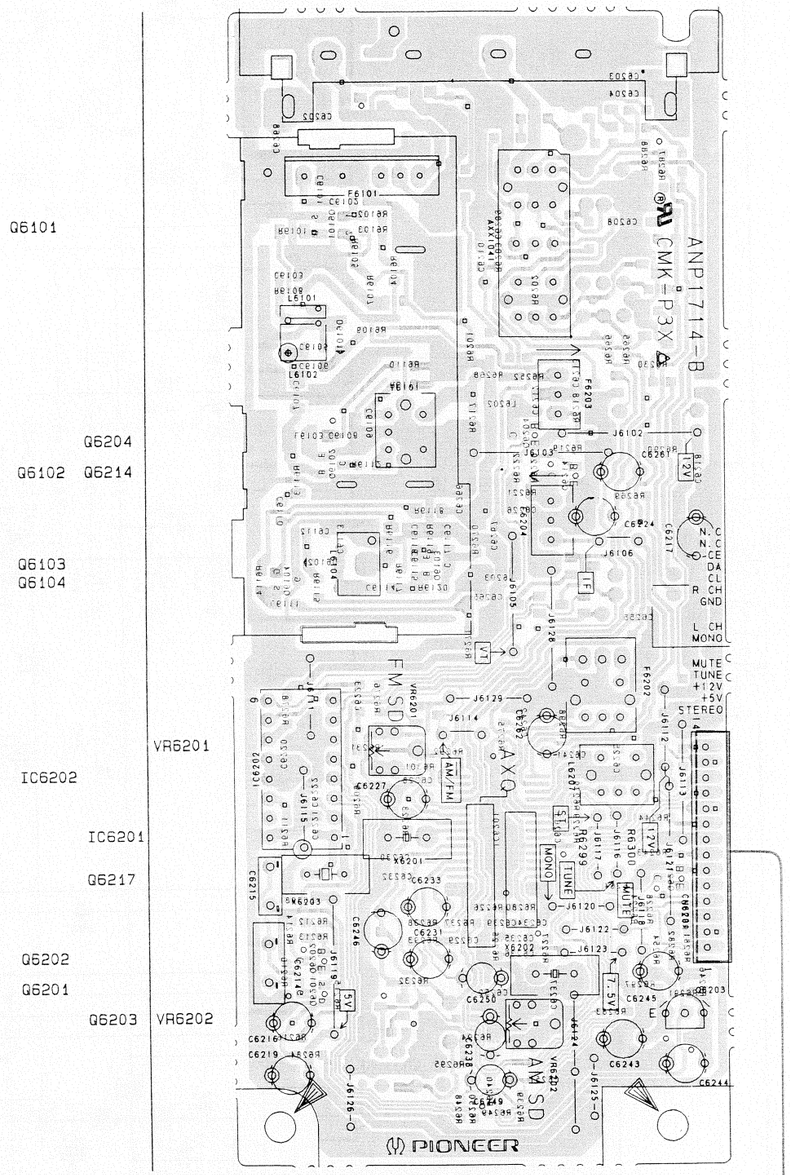

• This diagram is viewed from the mounted parts side.

2. 3 FUNC ASSY AND VIDEO ASSY

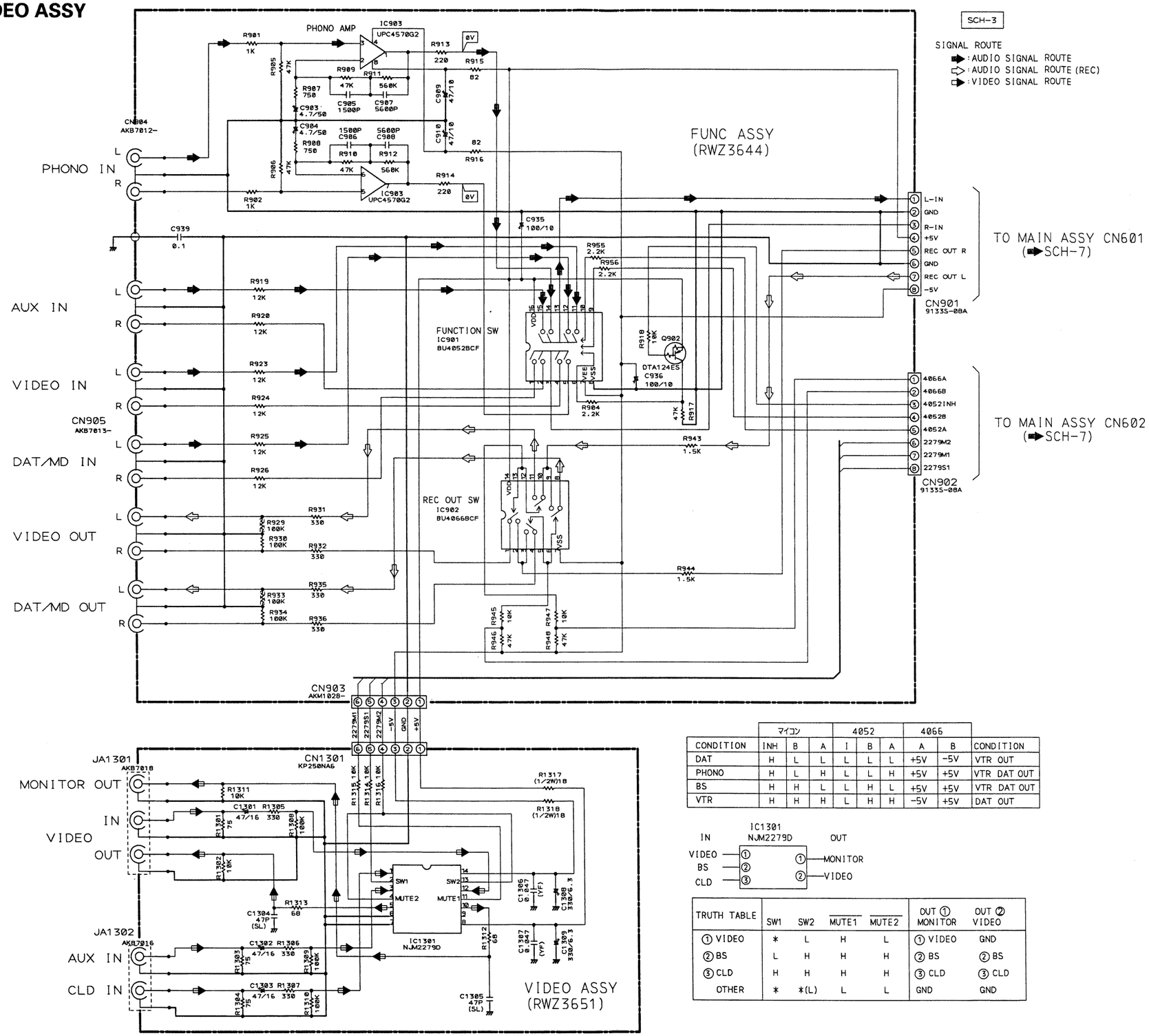

CONDITION	マイコン INH	B	A	4052 I	B	A	4066 A	B	CONDITION
DAT	H	L	L	L	L	L	+5V	-5V	VTR OUT
PHONO	H	L	H	L	L	H	+5V	+5V	VTR DAT OUT
BS	H	H	L	L	H	L	+5V	+5V	VTR DAT OUT
VTR	H	H	H	L	H	H	-5V	+5V	DAT OUT

TRUTH TABLE	SW1	SW2	$\overline{MUTE1}$	$\overline{MUTE2}$	OUT ① MONITOR	OUT ② VIDEO
① VIDEO	*	L	H	L	① VIDEO	GND
② BS	L	H	H	H	② BS	② BS
③ CLD	H	H	H	H	③ CLD	③ CLD
OTHER	*	*(L)	L	L	GND	GND

The parts mounted
for several destinati
For further informati
to check with the sc

このＰＣＢ図にマウントし
各仕向地の情報は、回路図

SCH-3

SIGNAL ROUTE
- AUDIO SIGNAL ROUTE
- AUDIO SIGNAL ROUTE (REC)
- VIDEO SIGNAL ROUTE

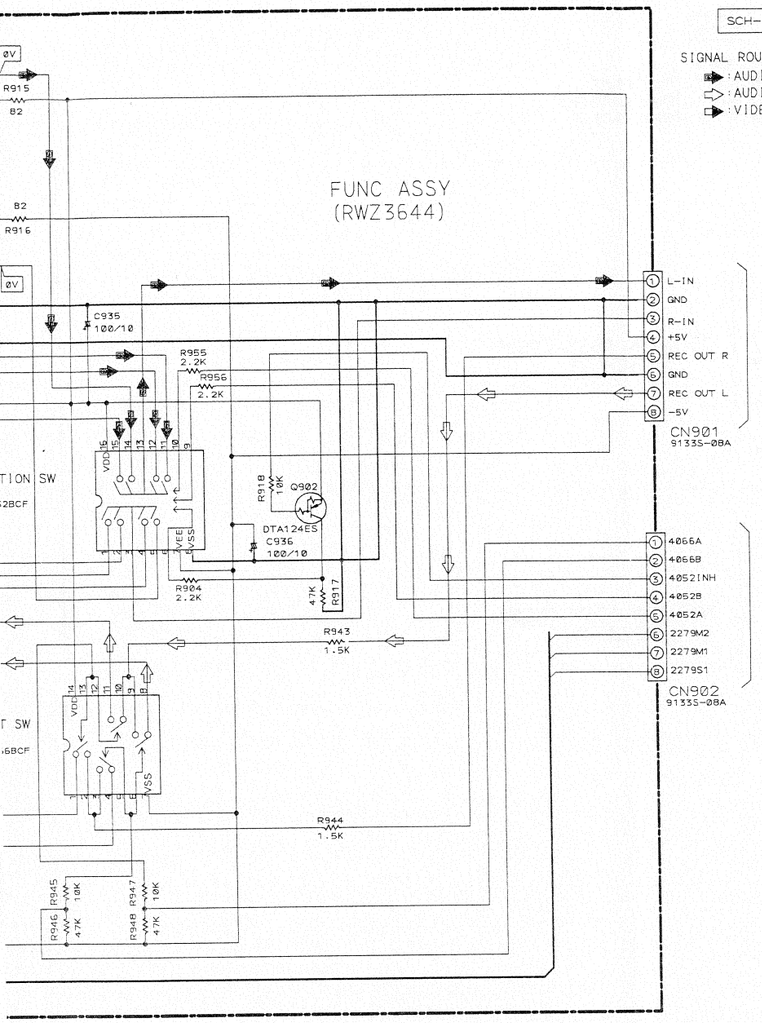

	マイコン			4052			4066		
CONDITION	INH	B	A	I	B	A	A	B	CONDITION
DAT	H	L	L	L	L	L	+5V	-5V	VTR OUT
PHONO	H	L	H	L	L	H	+5V	+5V	VTR DAT OUT
BS	H	H	L	L	H	L	+5V	+5V	VTR DAT OUT
VTR	H	H	H	L	H	H	-5V	+5V	DAT OUT

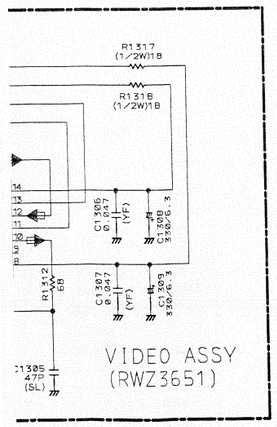

IC1301
NJM2279D

IN		OUT	
VIDEO	①	①	MONITOR
BS	②	②	VIDEO
CLD	③		

TRUTH TABLE	SW1	SW2	$\overline{MUTE1}$	$\overline{MUTE2}$	OUT ① MONITOR	OUT ② VIDEO
① VIDEO	*	L	H	L	① VIDEO	GND
② BS	L	H	H	H	② BS	② BS
③ CLD	H	H	H	H	③ CLD	③ CLD
OTHER	*	*(L)	L	L	GND	GND

PCB-2

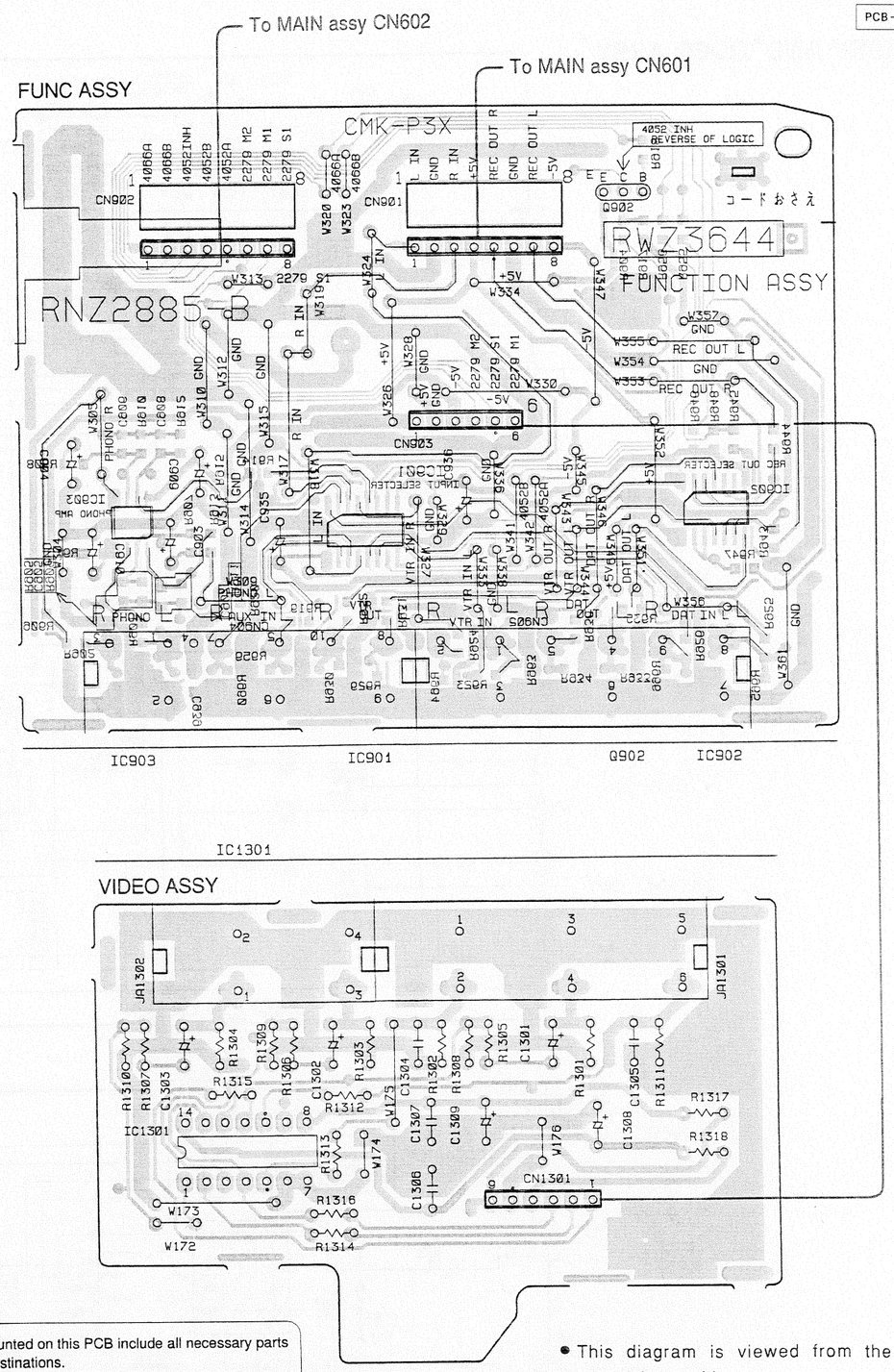

The parts mounted on this PCB include all necessary parts for several destinations.
For further information for respective destinations, be sure to check with the schematic diagram.

このＰＣＢ図にマウントしている部品は複数の仕向地を含んでいます。
各仕向地の情報は、回路図で確認するようにしてください。

- This diagram is viewed from the mounted parts side.
- この図は部品取付面側から見た図です。

FUNC ASSY, VIDEO ASSY

SCH-3

PCB-3

2. 4 VOL ASSY

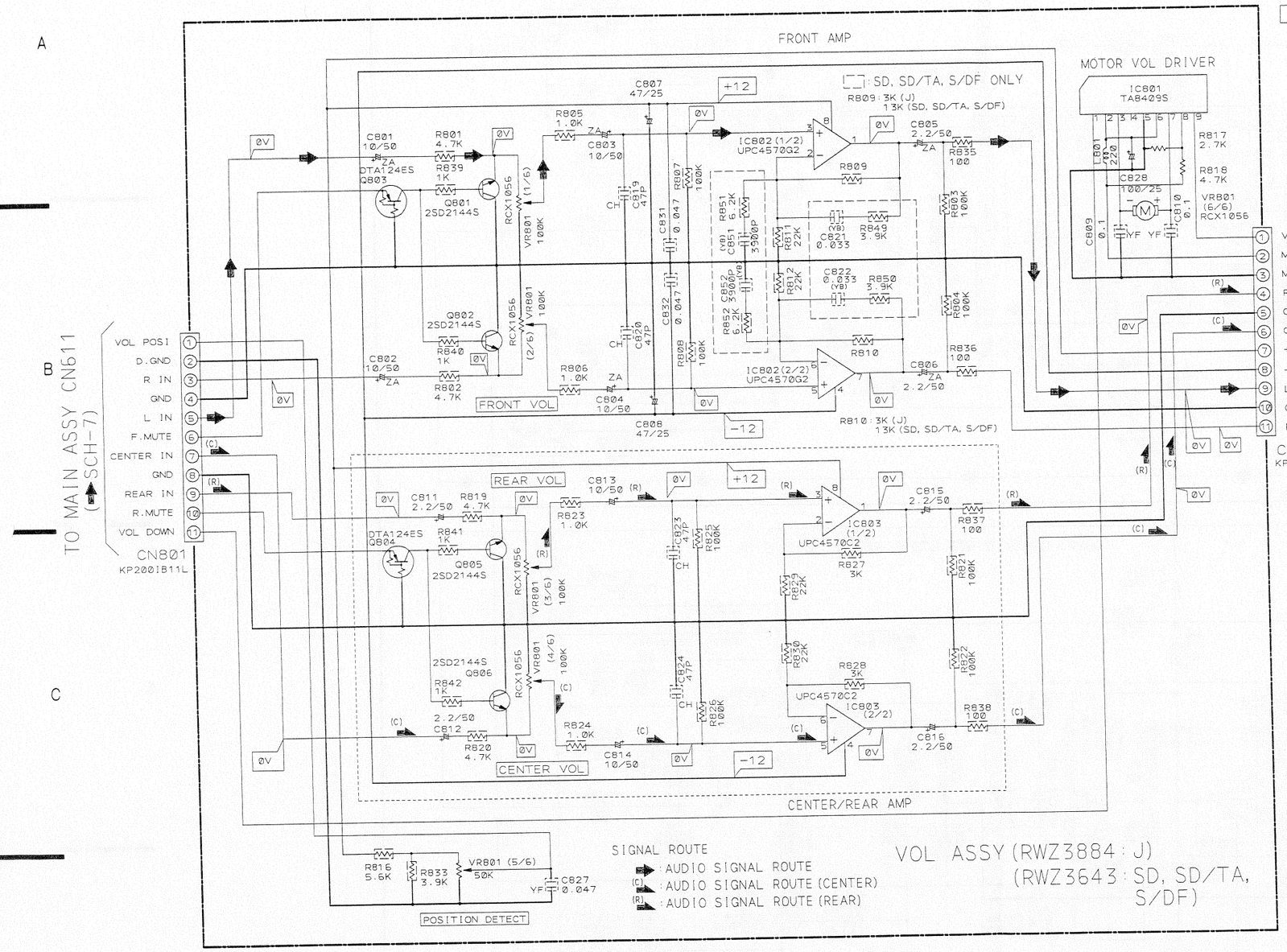

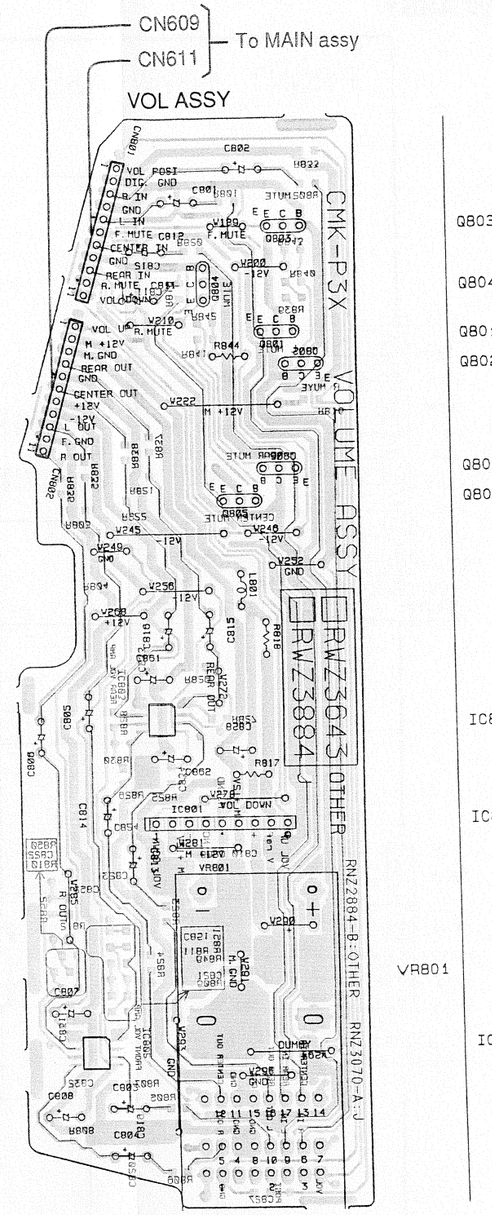

- This diagram is viewed from the mounted parts side.
- この図は部品取付面側から見た図です。

The parts mounted on this PCB include all necessary parts for several destinations.
For further information for respective destinations, be sure to check with the schematic diagram.

このＰＣＢ図にマウントしている部品は複数の仕向地を含んでいます。
各仕向地の情報は、回路図で確認するようにしてください。

2. 5 FRONT 100W ASSY

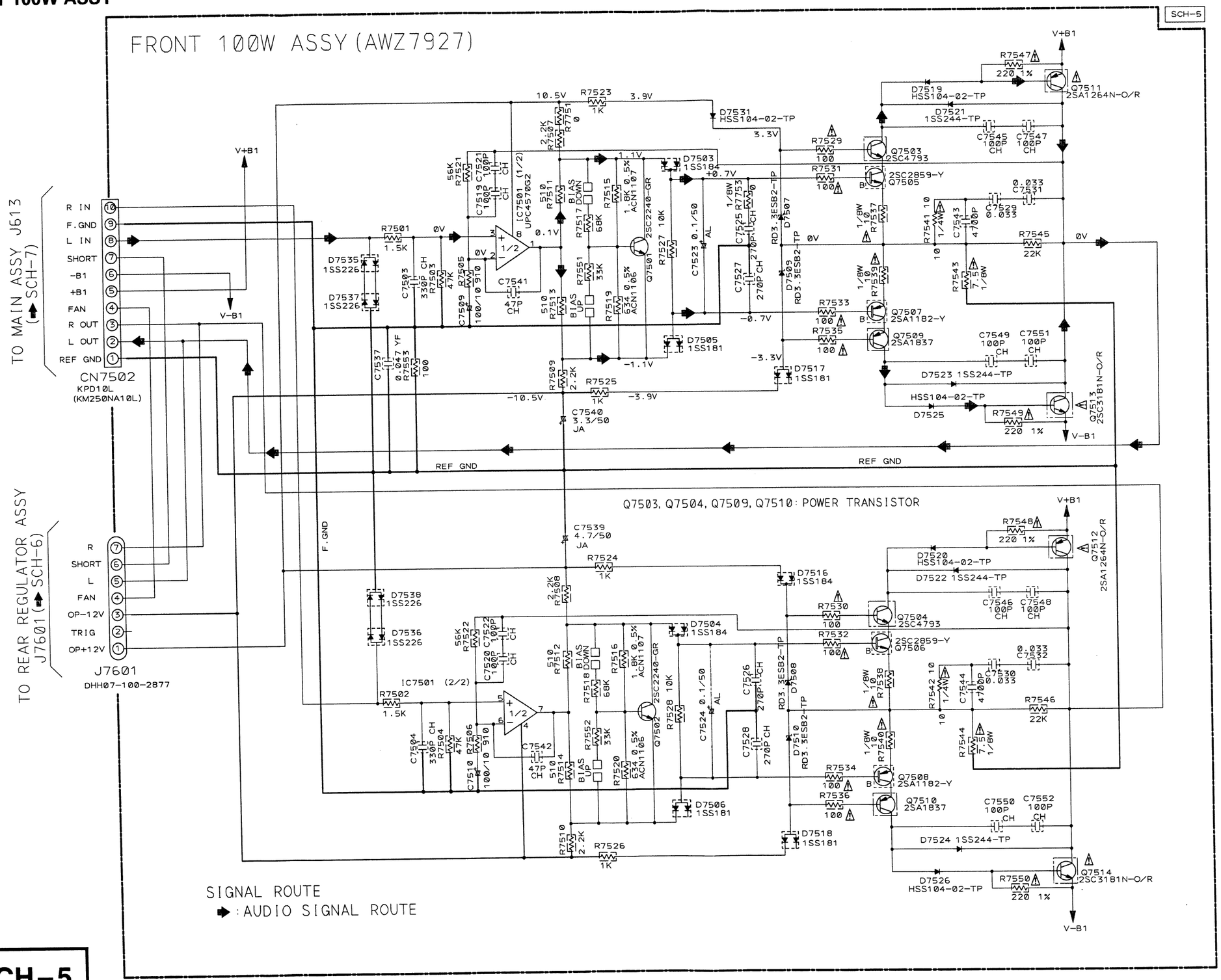

SCH-5
FRONT 100W ASSY

PCB－4

FRONT 100W ASSY

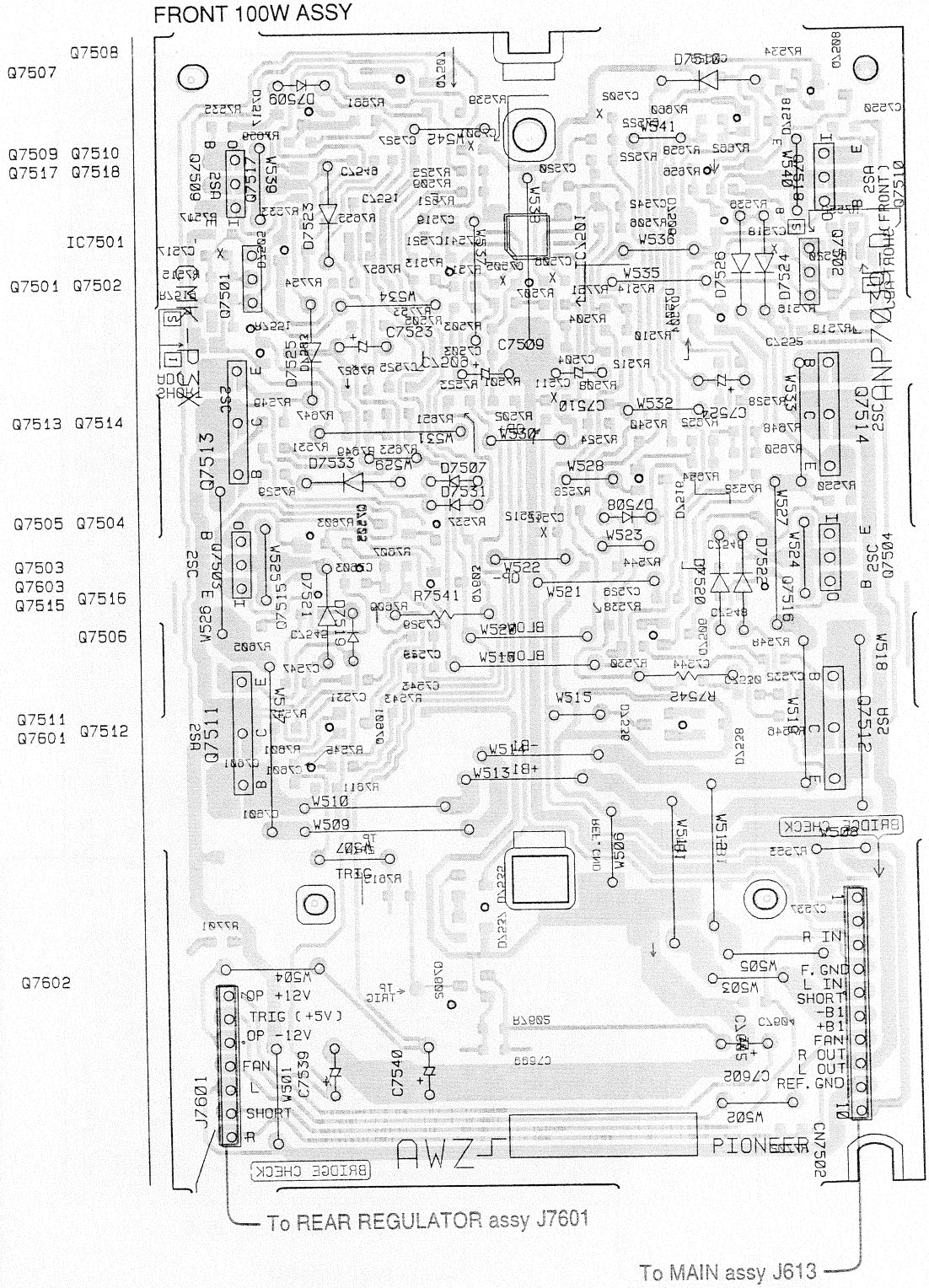

The parts mounted on this PCB include all necessary parts for several destinations.
For further information for respective destinations, be sure to check with the schematic diagram.

このＰＣＢ図にマウントしている部品は複数の仕向地を含んでいます。
各仕向地の情報は、回路図で確認するようにしてください。

- This diagram is viewed from the mounted parts side.
- この図は部品取付面側から見た図です。

PCB－5

2. 6 REAR REGULATOR ASSY

REAR REGULATOR ASSY

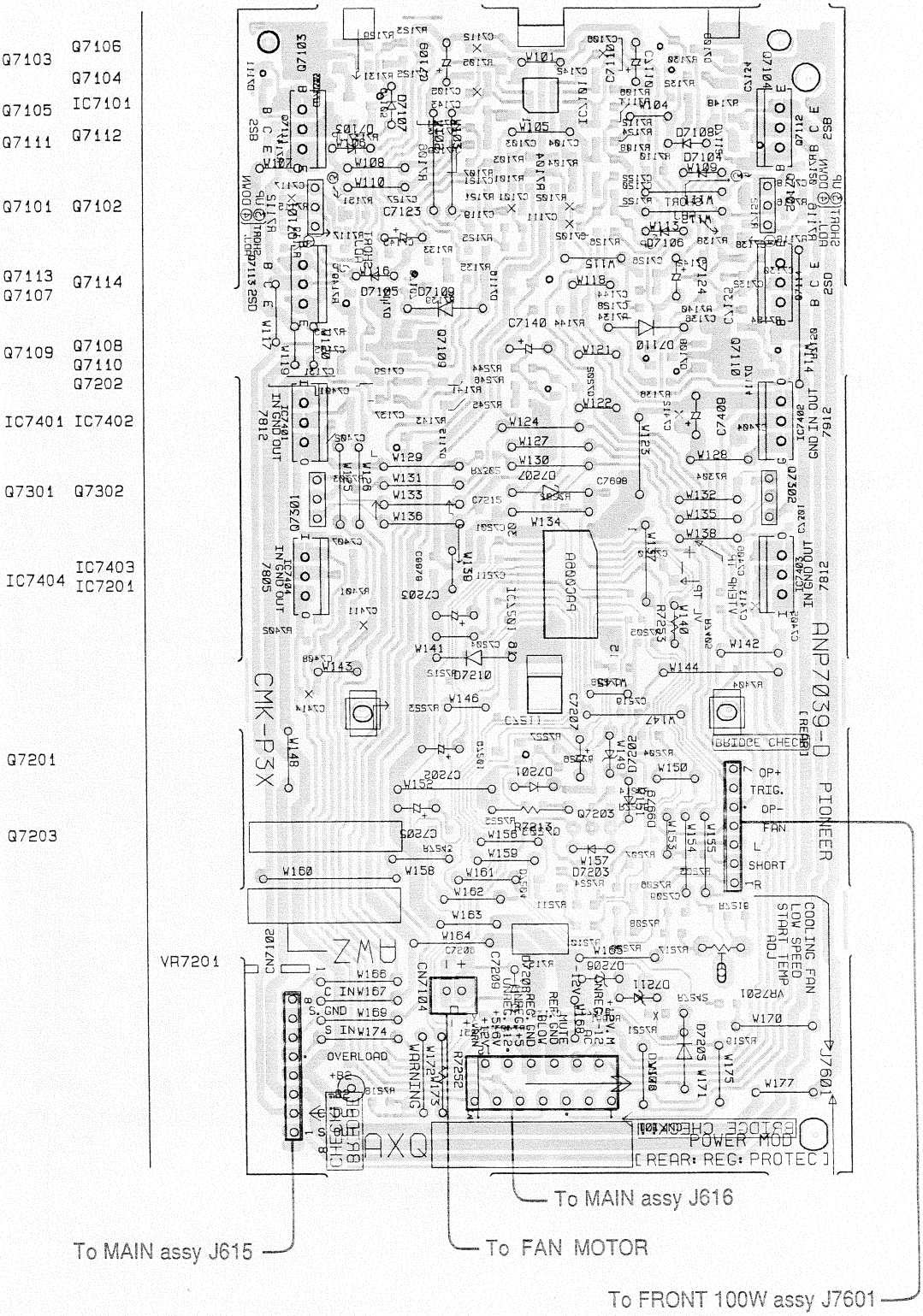

The parts mounted on this PCB include all necessary parts for several destinations.
For further information for respective destinations, be sure to check with the schematic diagram.

このＰＣＢ図にマウントしている部品は複数の仕向地を含んでいます。
各仕向地の情報は、回路図で確認するようにしてください。

- This diagram is viewed from the mounted parts side.
- この図は部品取付面側から見た図です。

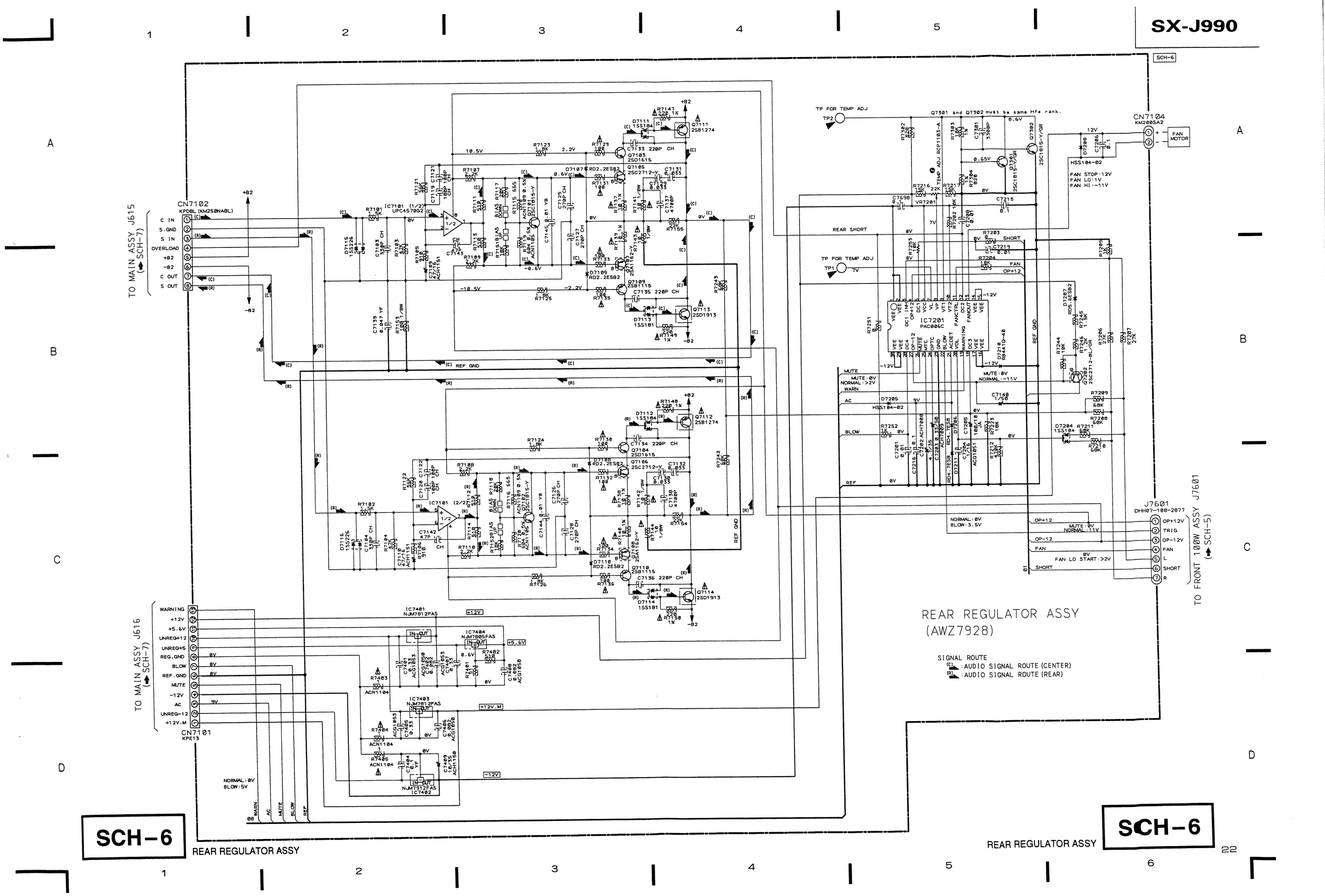
SCH-6
CN7102
KPDBL (KM250NA8L)
TO MAIN ASSY J615 (SCH-7)
C IN
S.GND
S IN
OVERLOAD
+B2
-B2
C OUT
S OUT
IC7101 (1/2)
UPC4570G2
IC7101 (2/2)
Q7101 2SC1815-Y
Q7102 2SC1815-Y
Q7103 2SD1615
Q7104 2SD1615
Q7105 2SC2712-Y
Q7106 2SC2712-Y
Q7107 2SA1162-Y
Q7108 2SA1162-Y
Q7109 2SB1115
Q7110 2SB1115
Q7111 2SB1274
Q7112 2SB1274
Q7113 2SD1913
Q7114 2SD1913
REF GND
TP FOR TEMP ADJ
TP2
TP1
Q7301 and Q7302 must be same Hfe rank.
CN7104
KM200SA2
FAN MOTOR
HSS104-02
FAN STOP:12V
FAN LO:1V
FAN HI:-11V
REAR SHORT
SHORT
FAN
OP+12
IC7201
PAC006C
MUTE
MUTE:0V
NORMAL:>2V
NORMAL:-11V
WARN
AC
BLOW
REF
NORMAL:0V
BLOW:3.5V
FAN LO START:>2V
J7601
DHH07-100-2877
OP+12V
TRIG
OP-12V
FAN
L
SHORT
R
TO FRONT 100W ASSY J7601 (SCH-5)
REAR REGULATOR ASSY
(AWZ7928)
SIGNAL ROUTE
(C):AUDIO SIGNAL ROUTE (CENTER)
(R):AUDIO SIGNAL ROUTE (REAR)
TO MAIN ASSY J616 (SCH-7)
CN7101
KPE13
WARNING
+12V
+5.6V
UNREG+12
UNREG+5
REG.GND
BLOW
REF.GND
MUTE
-12V
AC
UNREG-12
+12V.M
IC7401
NJM7812FAS
IC7404
NJM7805FAS
IC7403
NJM7812FAS
IC7402
NJM7912FAS
NORMAL:0V
BLOW:5V
SCH-6
REAR REGULATOR ASSY

2. 7 MAIN ASSY, TRANS ASSY, PRIMARY ASSY, H.P. ASSY, SP ASSY AND VOLTSEL ASSY

- This diagram is viewed from the mounted parts side.
- この図は部品取付面側から見た図です。

The parts mounted on this PCB include all necessary parts for several destinations.
For further information for respective destinations, be sure to check with the schematic diagram.

このPCB図にマウントしている部品は複数の仕向地を含んでいます。
各仕向地の情報は、回路図で確認するようにしてください。

PCB－6

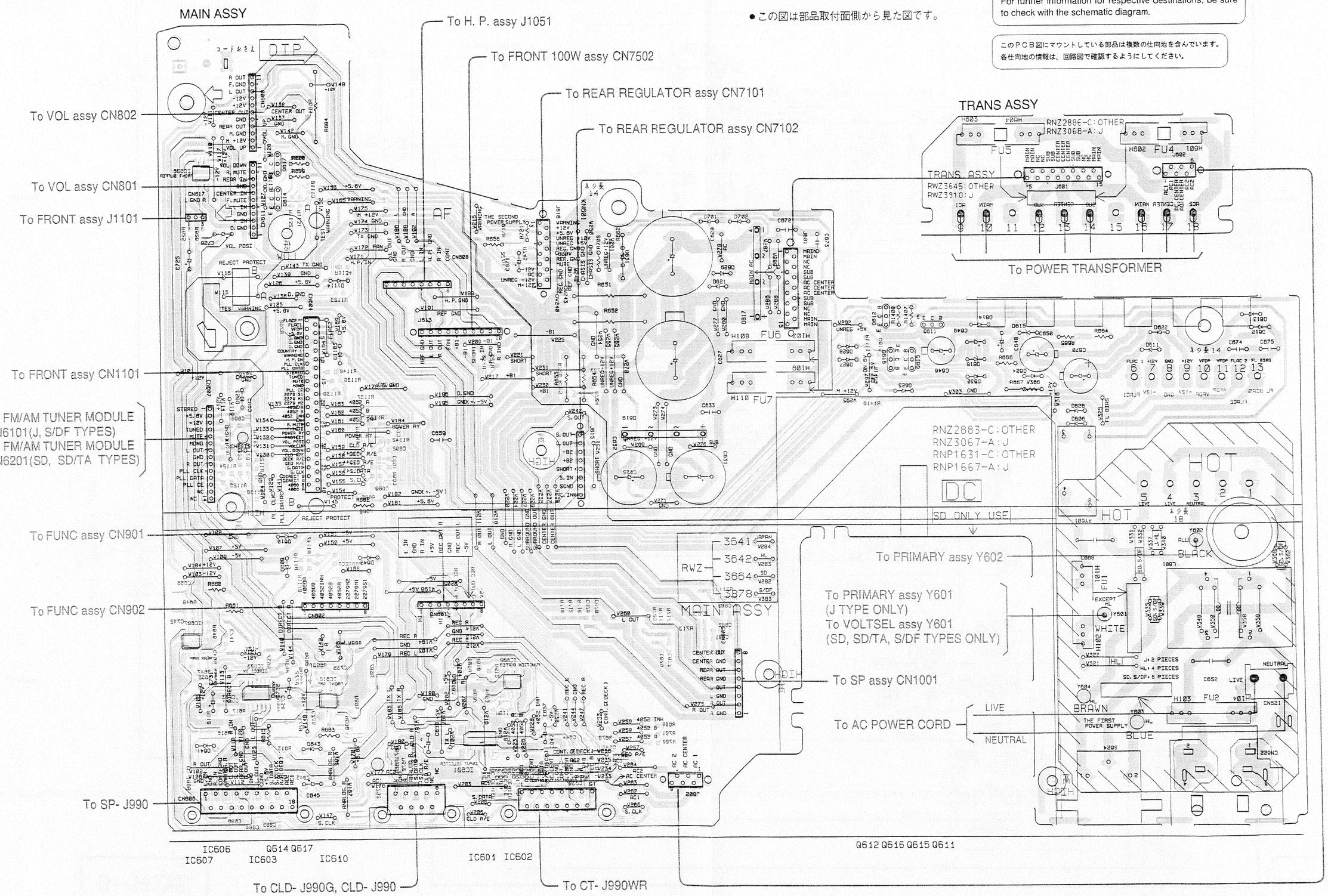

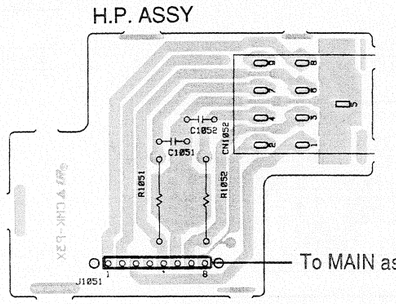

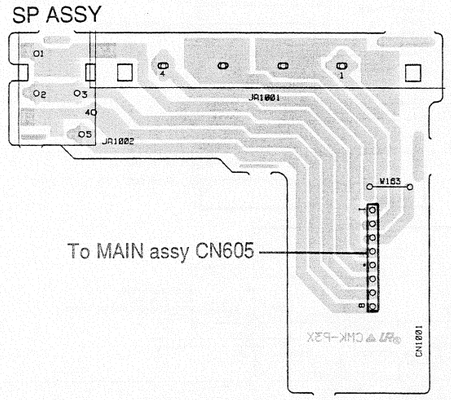

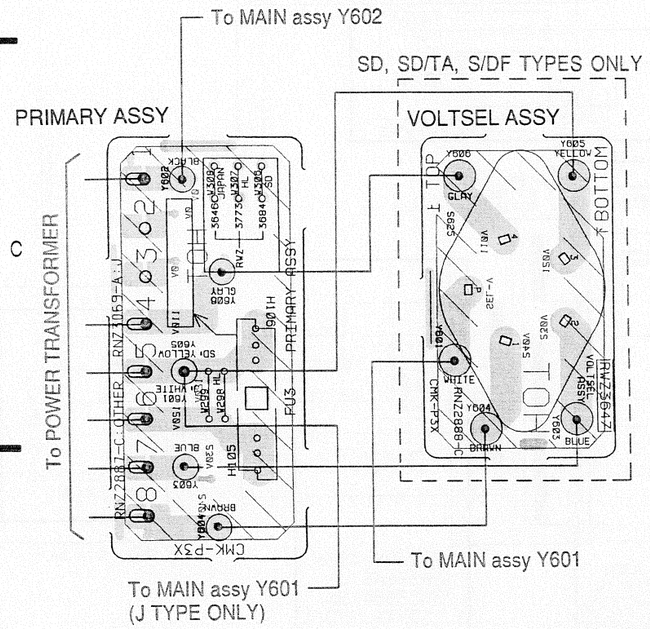

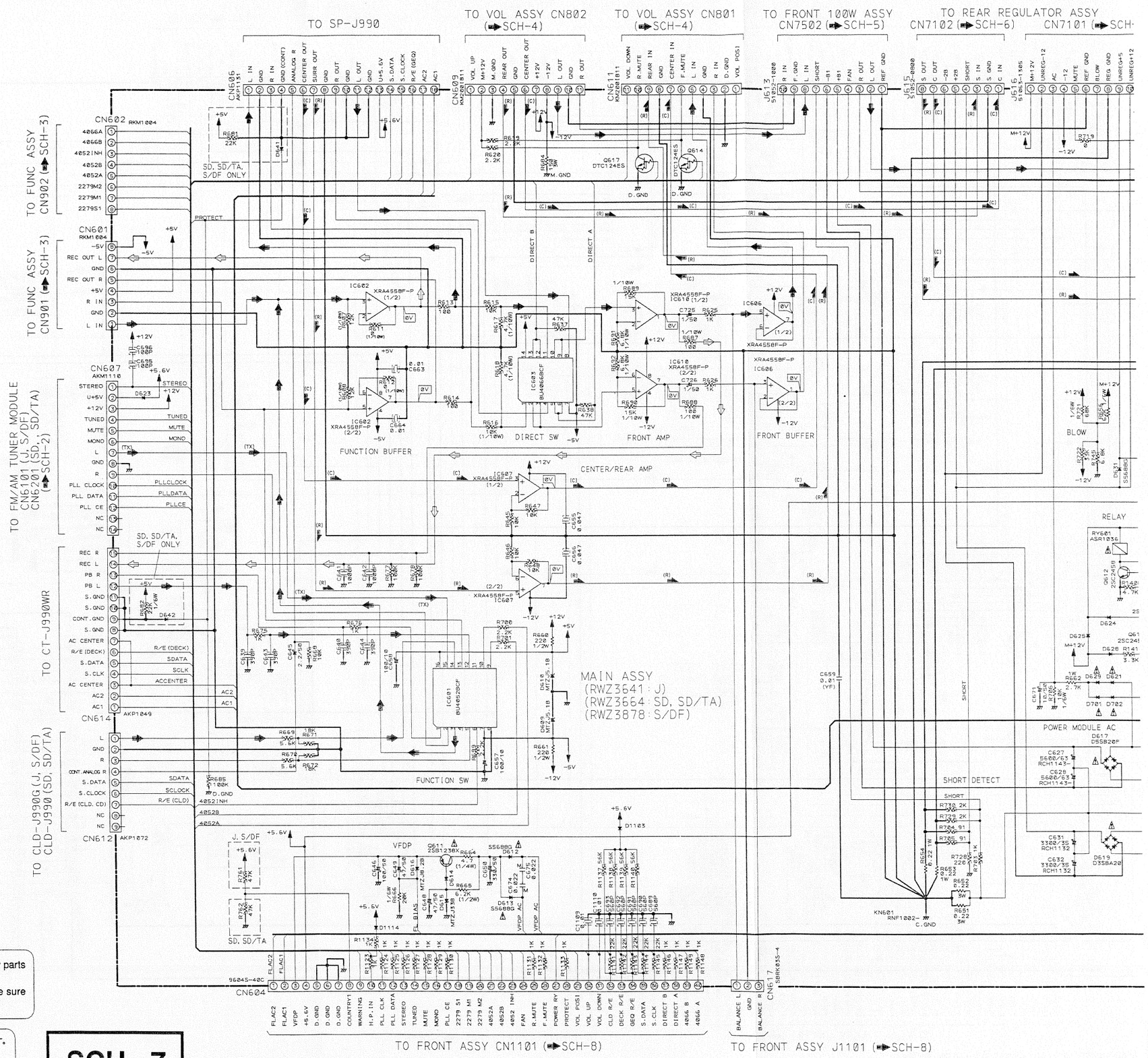

- This diagram is viewed from the mounted parts side.
- この図は部品取付面側から見た図です。

The parts mounted on this PCB include all necessary parts for several destinations.
For further information for respective destinations, be sure to check with the schematic diagram.

このＰＣＢ図にマウントしている部品は複数の仕向地を含んでいます。
各仕向地の情報は、回路図で確認するようにしてください。

SCH-7

MAIN ASSY, TRANS ASSY, PRIMARY ASSY,
H.P. ASSY, SP ASSY, VOLT SEL ASSY

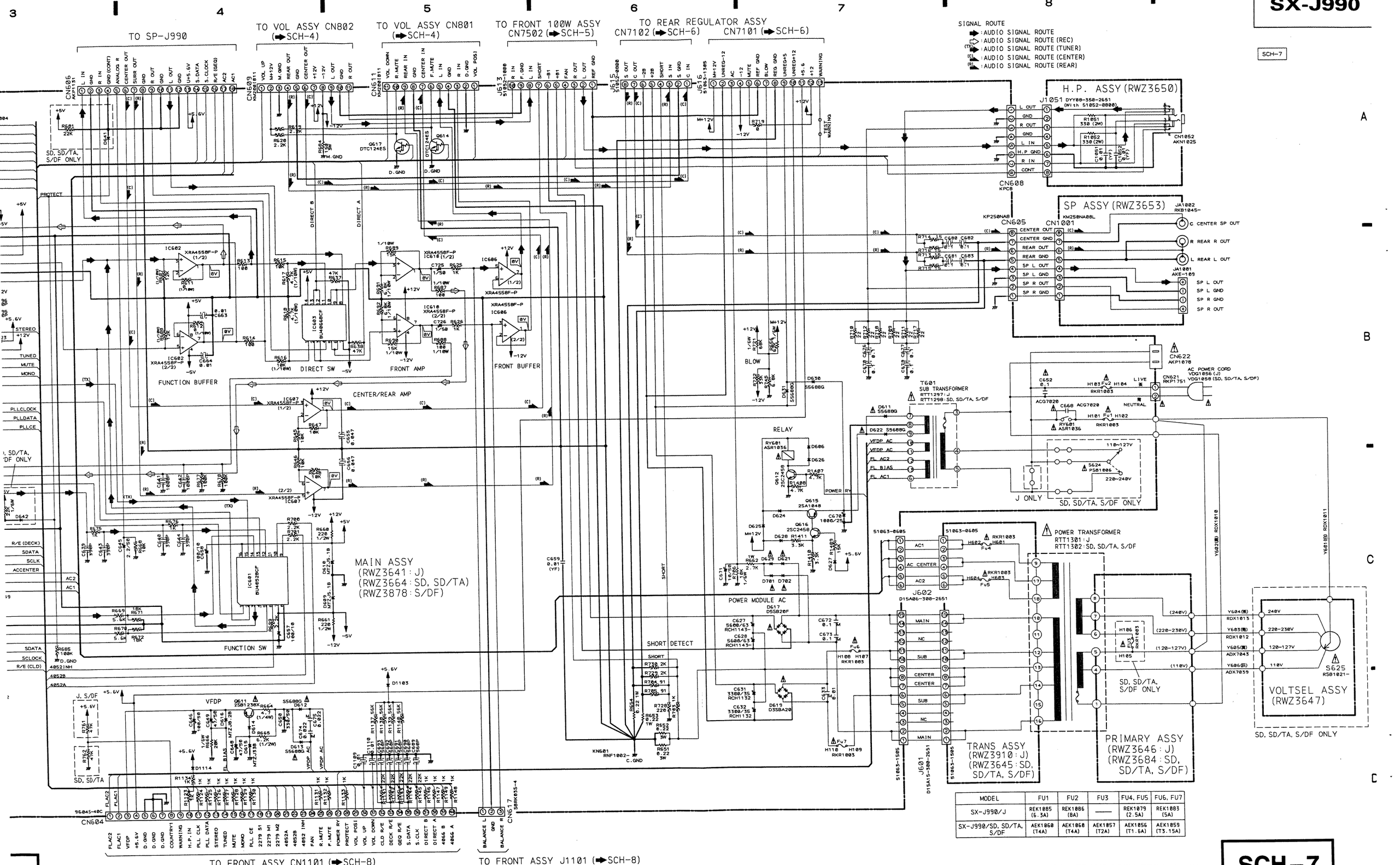

MODEL	FU1	FU2	FU3	FU4, FU5	FU6, FU7
SX-J990/J	REK1085 (6.3A)	REK1086 (8A)	——	REK1079 (2.5A)	REK1083 (5A)
SX-J990/SD, SD/TA, S/DF	AEK1060 (T4A)	AEK1060 (T4A)	AEK1057 (T2A)	AEK1056 (T1.6A)	AEK1059 (T3.15A)

2. 8 FRONT ASSY

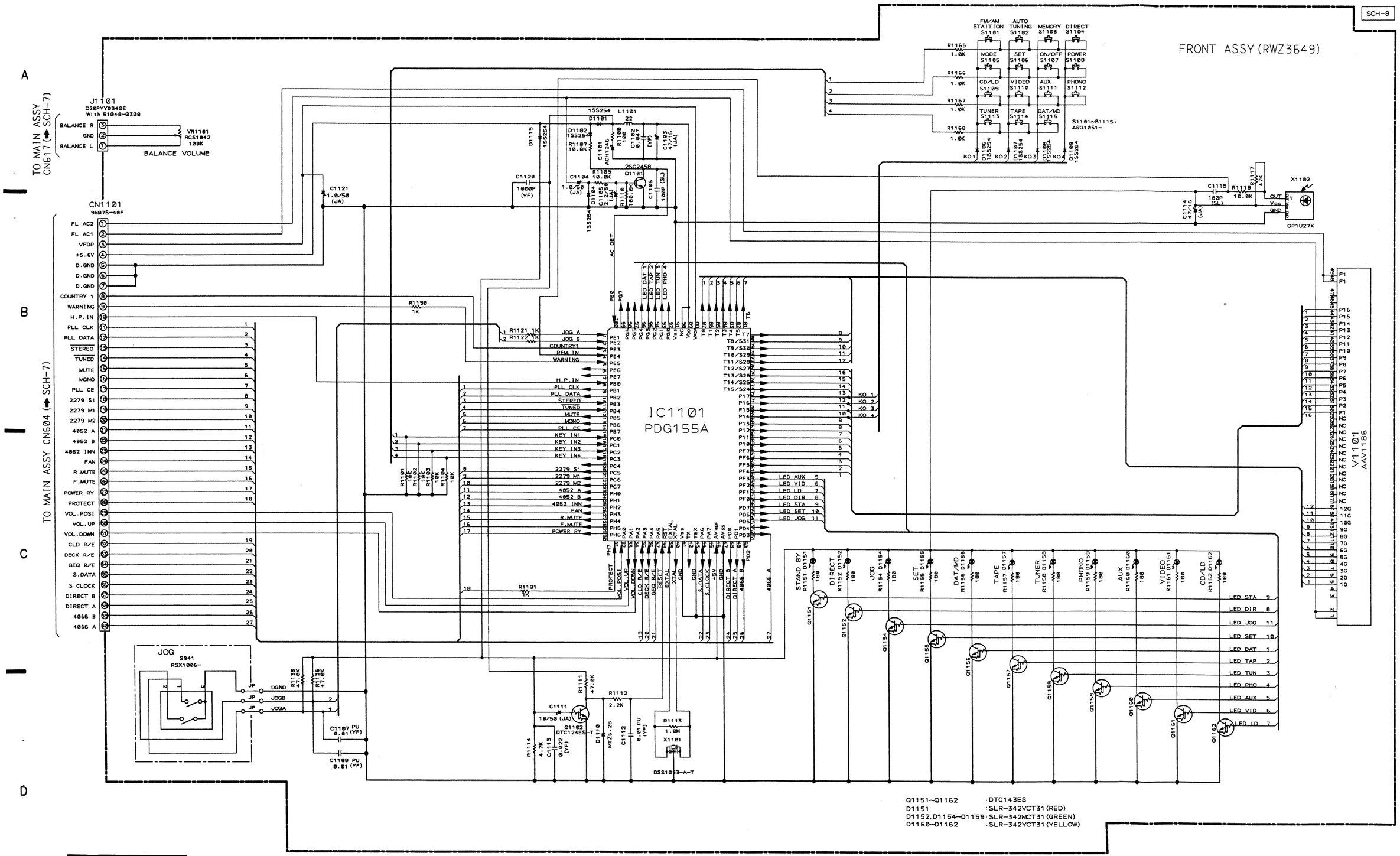

- This diag
mounted p
- この図は部

The parts mou
for several de
For further inf
to check with

このPCB図にマ
各仕向地の情報は

SCH-8 FRONT ASSY

FRONT ASSY **SCH-8**

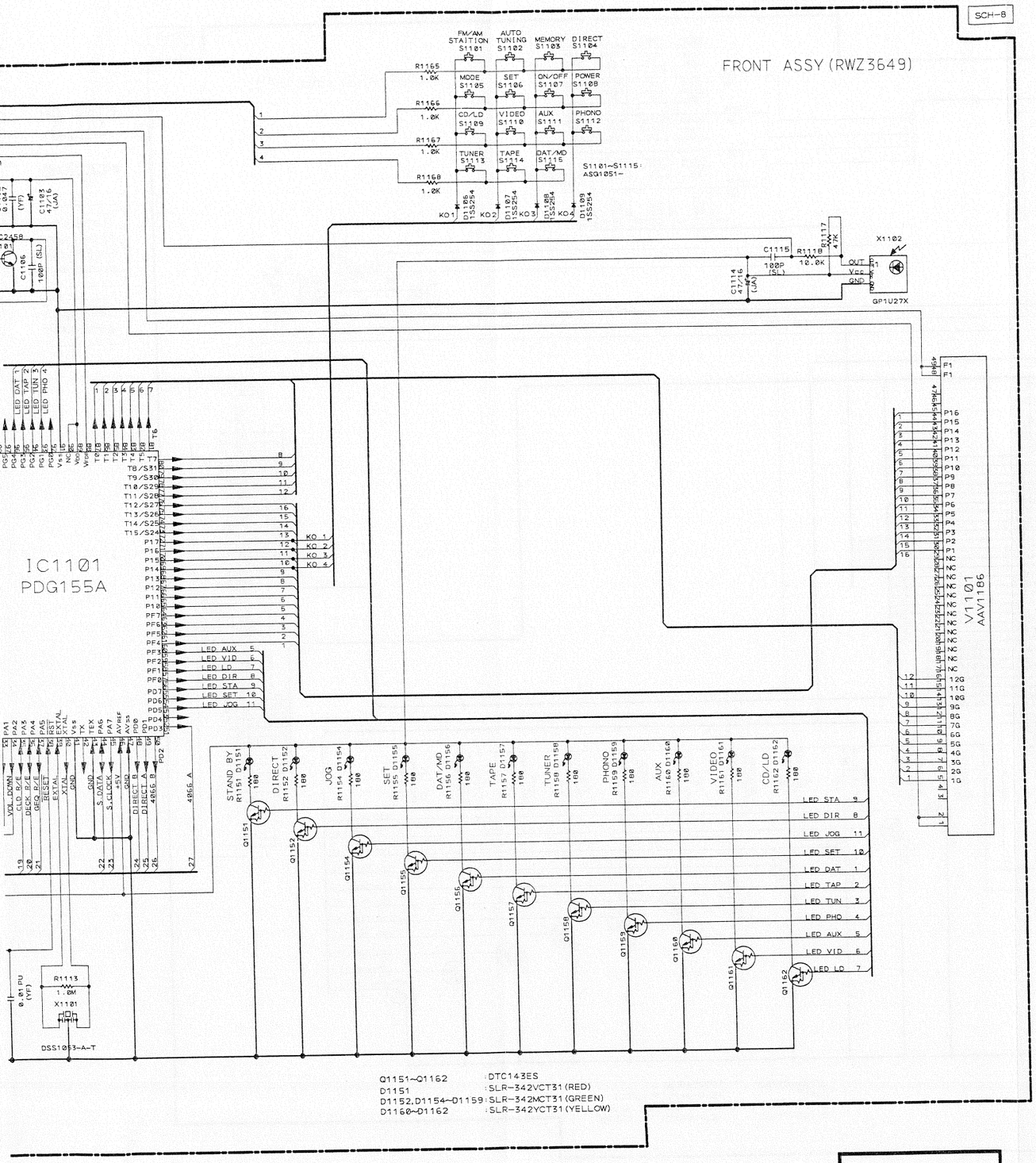

FRONT ASSY

SCH-8

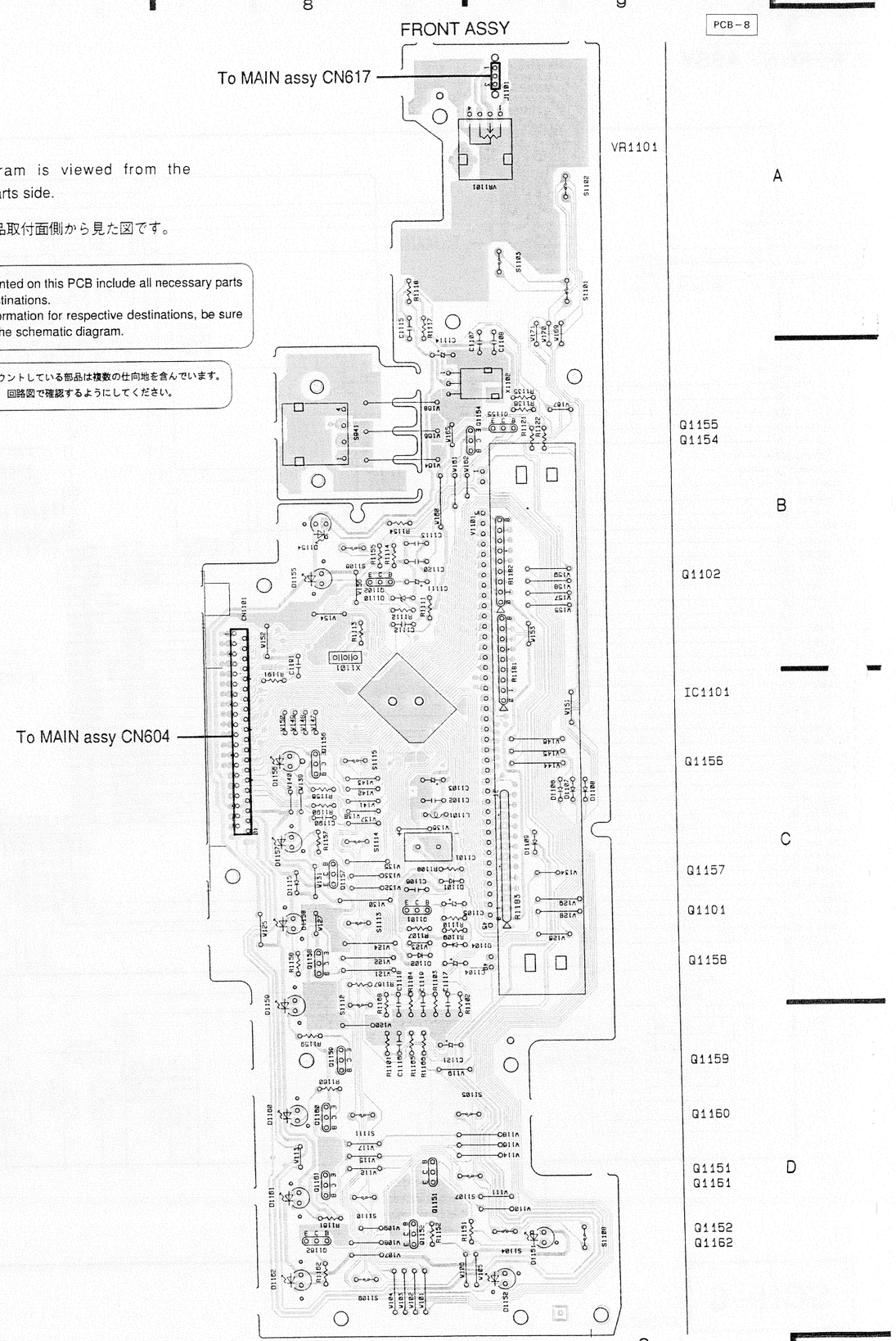

- This diagram is viewed from the mounted parts side.
- この図は部品取付面側から見た図です。

The parts mounted on this PCB include all necessary parts for several destinations.
For further information for respective destinations, be sure to check with the schematic diagram.

このＰＣＢ図にマウントしている部品は複数の仕向地を含んでいます。
各仕向地の情報は、回路図で確認するようにしてください。

3. PCB PARTS LIST

NOTES :

- *Parts marked by " NSP " are generally unavailable because they are not in our Master Spare Parts List.*
- *The ⚠ mark found on some component parts indicates the importance of the safety factor of the part. Therefore, when replacing, be sure to use parts of identical designation.*
- *Parts marked by " ◉ " are not always kept in stock. Their delivery time may be longer than usual or they may be unavailable.*
- *When ordering resistors, first convert resistance values into code form as shown in the following examples.*

Ex. 1 *When there are 2 effective digits (any digit apart from 0), such as 560 ohm and 47k ohm (tolerance is shown by J = 5%, and K = 10%).*

560Ω → 56 x 10¹ = 561 ..... *RD1/8PM [5][6][1] J*
47kΩ → 47 x 10³ = 473 ..... *RD1/4PS [4][7][3] J*
0.5Ω → 0R5 ..... *RN2H [0][R][5] K*
1Ω → 010 ..... *RS1P [0][1][0] K*

Ex. 2 *When there are 3 effective digits (such as in high precision metal film resistors).*

5.62kΩ → 562 x 10¹ = 5621 ..... *RM1/4PC [5][6][2][1] F*

Mark	No.	Description	Parts No.
LIST OF ASSEMBLIES			
NSP		SXAF ASSY	RWK1003
		├MAIN ASSY	RWZ3664
		├FUNC ASSY	RWZ3644
NSP		├TRANS ASSY	RWZ3645
NSP		├PRIMARY ASSY	RWZ3684
		├VOL ASSY	RWZ3643
		└VOLTSEL ASSY	RWZ3647
NSP		SXDISP ASSY	RWM1853
		├FRONT ASSY	RWZ3649
NSP		├H. P. ASSY	RWZ3650
		├VIDEO ASSY	RWZ3651
NSP		└SP ASSY	RWZ3653
		FM/AM TUNER MODULE	AXQ1012
		POWER AMP MODULE	AXQ7023
		├FRONT 100W ASSY	AWZ7927
		└REAR REGULATOR ASSY	AWZ7928
MAIN ASSY			
SEMICONDUCTORS			
		IC601	BU4052BCF
		IC603	BU4066BCF
		IC602, IC606, IC607, IC610	XRA4558F–P
		Q615	2SA1048
	⚠	Q611	2SB1238X
		Q612, Q616	2SC2458
		Q614, Q617	DTC124ES
		D1103, D1114, D606, D614	1SS254
	⚠	D621	1SS254
		D623–D628	1SS254
	⚠	D629	1SS254
		D641, D642	1SS254
	⚠	D701, D702	1SS254
	⚠	D619	D3SBA20 (B)
	⚠	D617	D5SB20F
		D615	MTZJ33B
		D609, D610	MTZJ5.1B
		D616	MTZJ8.2B
	⚠	D611–D613, D622	S5688G
		D630, D631	S5688G
SWITCHES AND RELAYS			
	⚠	S624 VOLTAGE SELECTOR	PSB1006
	⚠	RY601	ASR1036

Mark	No.	Description	Parts No.
TRANSFORMER			
	⚠	T601	RTT1298
CAPACITORS			
	⚠	C652, C668 (10000pF/250V)	ACG7020
		C639, C640, C643, C644	CCSQSL391J50
		C725, C726	CEAS010M50
		C671	CEAS100M50
		C657, C658	CEAS101M10
		C646	CEAS101M50
		C670	CEAS102M25
		C645	CEAS2R2M50
		C650	CEAS331M50
		C648, C649	CEAS470M50
		C659	CKCYF103Z50
		C641, C642	CKSQYB102K50
		C663, C664	CKSQYB103K50
		C655, C656	CKSQYB473K50
		C689–C693	CKSQYB561K50
		C1109, C1110	CKSQYF103Z50
		C676–C683	CKSQYF104Z50
		C633	CQMA103J50
		C672, C673	CQMA104J50
		C674, C675	CQMA223J50
		C631, C632 (3300 μF/35V)	RCH1132
		C627, C628 (5600 μF/63V)	RCH1143
RESISTORS			
		R660, R661	RD1/2VM221J
		R665	RD1/2VM622J
		R664	RD1/4VM4R7J
		R615, R706	RD1/6PM103J
		R666	RD1/6PM203J
		R619, R620	RD1/6PM222J
		R682	RD1/6PM223J
		R1407, R1408	RD1/6PM472J
		R656	RD1/6PM623J
		R721	RD1/6PM683J
		R662	RS1LMF272J
		R653, R654	RS1LMFR22J
		R684	RS3LMF151J
		R651, R652	RS3LMFR22J
		Other Resistors	RS1/10S□□□J

Mark	No.	Description	Parts No.
OTHERS			
	J615	CABLE HOLDER (8P)	51052-0800
	J613	CABLE HOLDER (8P)	51052-1000
	J602	CABLE HOLDER (8P)	51063-0605
	J616	CABLE HOLDER (8P)	51063-1305
	J601	CABLE HOLDER (8P)	51063-1505
	CN604	40P FFC CONNECTOR	9604S-40C
	CN607	PLUG 14P	AKM1110
	CN614	SOCKET (15P)	AKP1049
	CN612	SOCKET (9P)	AKP1072
⚠	CN622	AC SOCKET 1-P	AKP1078
	CN606	SOCKET (18P)	AKP1131
	CN609, CN611	PLUG 11P	KM200IB11
	CN605	SOCKET (8P)	KP250NA8
	CN608	JUMPER CONNECTOR 8P	KPC8
	CN601, CN602	PLUG (8P)	RKM1004
⚠	CN621	AC CODE SOCKET	RKP1751
	H101-H104, H107-H110	FUSE HOLDER	RKR1003
	KN601	EARTH METAL FITTING	RNF1002
		PCB BINDER	VEF1040

FUNC ASSY

Mark	No.	Description	Parts No.
SEMICONDUCTORS			
	IC901		BU4052BCF
	IC902		BU4066BCF
	IC903		UPC4570G2
	Q902		DTA124ES
CAPACITORS			
	C935, C936		CEAS101M10
	C909, C910		CEAS470M10
	C903, C904		CEAS4R7M50
	C905, C906		CKSQYB152K50
	C907, C908		CKSQYB562K50
	C939		CKSQYF104Z50
RESISTORS			
	All Resistors		RS1/10S□□□J
OTHERS			
	CN901, CN902	8P BOARD CONNECTOR	9133S-08A
	CN904	PIN JACK (6P)	AKB7012
	CN905	PIN JACK (6P)	AKB7013
	CN903	PLUG (6P)	AKM1028
		PCB BINDER	VEF1040

TRANS ASSY

Mark	No.	Description	Parts No.
OTHERS			
	J602	CABLE HOLDER (6P)	51063-0605
	J601	CABLE HOLDER (15P)	51063-1505
	H601-H604	FUSE HOLDER	RKR1003

PRIMARY ASSY

Mark	No.	Description	Parts No.
OTHERS			
	Y602	BOARD-IN READ WIRE	RDX1010
	H105, H106	FUSE HOLDER	RKR1003

VOL ASSY

Mark	No.	Description	Parts No.
SEMICONDUCTORS			
	IC801		TA8409S
	IC802, IC803		UPC4570G2
	Q801, Q802, Q805, Q806		2SD2144S
	Q803, Q804		DTA124ES
COILS AND FILTERS			
	L801		LAU221J
CAPACITORS			
	C819, C820, C823, C824		CCSQCH470J50
	C813, C814		CEAS100M50
	C828		CEAS101M25
	C811, C812, C815, C816		CEAS2R2M50
	C807, C808		CEAS470M25
	C801-C804		CEZA100M50
	C805, C806		CEZA2R2M50
	C851, C852		CKSQYB392K50
	C831, C832		CKSQYB473K50
	C821, C822		CKSQYB333K25
	C809, C810		CKSQYF104Z50
	C827		CKSQYF473Z50
RESISTORS			
	VR801 (100k Ω-4B×4)		RCX1056
	R817		RD1/6PM272J
	R818		RD1/6PM472J
	Other Resistors		RS1/10S□□□J
OTHERS			
	CN801, CN802	11P SOCKET	KP200IB11L

VOLTSEL ASSY

Mark	No.	Description	Parts No.
OTHERS			
	Y606	BOARD-IN READ WIRE	ADX7039
	Y605	BOARD-IN READ WIRE	ADX7043
	Y601	BOARD-IN READ WIRE	RDX1011
	Y603	BOARD-IN READ WIRE	RDX1012
	Y604	BOARD-IN READ WIRE	RDX1013
⚠	S625	VOLTAGE SELECTOR	RSB1021

FRONT ASSY

Mark	No.	Description	Parts No.
SEMICONDUCTORS			
	IC1101		PDG155A
	Q1101		2SC2458
	Q1102		DTC124ES
	Q1151, Q1152, Q1154-Q1162		DTC143ES
	D1101, D1102, D1104, D1106-D1109		1SS254
	D1115		1SS254
	D1110		MTZ6.2B
	D1152, D1154-D1159		SLR-342MCT31
	D1151		SLR-342VCT31
	D1160-D1162		SLR-342YCT31
COILS AND FILTERS			
	L1101		LAU220J
SWITCHES AND RELAYS			
	S1101-S1115		ASG1051
	S941		RSX1006
CAPACITORS			
	C1101 (0.047F/5.5V)		ACH1246
	C1106, C1115		CCCSL101J50
	C1104, C1121		CEJA010M50
	C1111		CEJA100M50
	C1105		CEJA2R2M50

Mark	No.	Description	Parts No.
	C1103, C1114		CEJA470M16
	C1120		CKCYB102K50
	C1113		CKCYF223Z50
	C1102		CKCYF473Z50
	C1107, C1108, C1112		CKPUYF103Z25
RESISTORS			
	VR1101 (100k Ω–B)		RCS1042
	Other Resistors		RD1/6PM□□□J
OTHERS			
	J1101	CABLE HOLDER (3P)	51048–0300
	CN1101	40P FFC CONNCTOR	9607S–40F
	V1101	FL TUBE	AAV1186
		FL HOLDER	AMR7038
	X1101 (8.00 MHz)		DSS1053
	X1102	REMOTE RECEIVER UNIT	GP1U27X

H. P. ASSY

Mark	No.	Description	Parts No.
CAPACITORS			
	C1051, C1052		CKCYF103Z50
RESISTORS			
	R1051, R1052		RS2LMF331J
OTHERS			
	J1051	CABLE HOLDER (8P)	51052–0800
	CN1052	HEADPHONE JACK	AKN1025

VIDEO ASSY

Mark	No.	Description	Parts No.
SEMICONDUCTORS			
	IC1301		NJM2279D
CAPACITORS			
	C1304, C1305		CCCSL470J50
	C1308, C1309		CEAS331M6R3
	C1301–C1303		CEAS470M16
	C1306, C1307		CKCYF473Z50
RESISTORS			
	R1317, R1318		RD1/2VM180J
	Other Resistors		RD1/6PM□□□J
OTHERS			
	JA1302	PIN JACK (2P)	AKB7016
	JA1301	RCA PIN JACK (3P)	AKB7018
	CN1301	SOCKET 6–P	KP250NA6

SP ASSY

Mark	No.	Description	Parts No.
OTHERS			
	JA1001	SPEAKER TERMINAL 4–P	AKE–109
	CN1001	8P PLUG	KM250NA8L
	JA1002	PIN JACK (3P)	RKB1045

FM/AM TUNER MODULE

Mark	No.	Description	Parts No.
SEMICONDUCTORS			
	IC6201		LA1836M
	IC6202		LM7001J
	Q6102		2SC2223
	Q6203		2SC2235
	Q6202		2SC2712
	Q6103, Q6214		2SC2714
	Q6201		2SK208
	Q6104		2SK302
	Q6101		3SK194
	Q6204		XDA124EK
	Q6217		XDC124EK
	D6101, D6102		1T33
COILS AND FILTERS			
	L6104		ATC1003
	L6101		ATC1020
	L6102		ATC1021
	L6207		ATE1013
	F6203, F6204		ATF–119
	F6101		ATF–155
	F6202		ATF1155
	L6103 (2.2 μH)		ATH1043
	L6202, L6203, L6208		LCTA2R2J3225
TRANSFORMERS			
	T6101		ATE–063
CAPACITORS			
	C6202, C6234, C6236 (1 μF/16V)		ACG1051
	C6107		CCSCH010C50
	C6229		CCSCH821J50
	C6110		CCSQCH020C50
	C6101		CCSQCH050C50
	C6108, C6203, C6268		CCSQCH101J50
	C6111, C6116, C6208, C6221, C6222		CCSQCH150J50
	C6115		CCSQCH330J50
	C6114		CCSQRH080D50
	C6113		CCSQRH180J50
	C6105		CCSQTH150J50
	C6261		CEAS010M50
	C6224, C6246, C6262		CEAS100M50
	C6227		CEAS101M10
	C6216, C6217		CEAS330M16
	C6231, C6233		CEAS3R3M50
	C6219		CEAS470M10
	C6243–C6245		CEAS470M16
	C6238		CEJA100M16
	C6249, C6250		CEJA4R7M35
	C6215		CFTXA103J50
	C6214		CFTXA224J50
	C6103, C6106, C6112, C6204		CKSQYB102K50
	C6102, C6109, C6117, C6210, C6264		CKSQYB103K50
	C6213		CKSQYB223K50
	C6230		CKSQYB333K50
	C6228, C6252		CKSQYB472K50
	C6209, C6237, C6265, C6267		CKSQYB473K50
	C6212, C6218		CKSQYF103Z50
	C6220, C6226, C6239, C6242, C6255		CKSQYF223Z50
	C6235		CKSQYF224Z25
	C6225, C6241, C6266		CKSQYF473Z50
	C6232		CKSYB333K50
	C6251		CKSYB472K50
	C6223		CKSYF103Z50
	C6263		CKSYF473Z50
RESISTORS			
	VR6201 (10k Ω)		ACP1056
	VR6202		VRTB6VS223
	R6299, R6300		RD1/8PM102J
	R6113, R6116, R6118, R6268–R6271		RS1/8S000J
	R6275, R6276, R6278, R6283, R6284		RS1/8S000J
	R6290, R6293, R6294, R6297		RS1/8S000J

Mark	No.	Description	Parts No.
	R6243, R6244		RS1/8S101J
	R6211		RS1/8S103J
	R6237		RS1/8S182J
	R6209		RS1/8S221J
	R6239		RS1/8S332J
	R6101		RS1/8S470J
	Other Resistors		RS1/10S□□□J

OTHERS

BN6201	ANNTENA TERMINAL 4-P	AKA1016
CN6201	14P SOCKET	KP200IA14L
X6203 (7.200 MHz)		ASS1042
X6201 (456 kHz)		ASS1066
X6202 (450 kHz)		ATF1027
	AM RF TUNING BLOCK	AXX1041

FRONT 100W ASSY

SEMICONDUCTORS

Mark	No.	Description	Parts No.
	IC7501		UPC4570G2 (5)
	Q7507, Q7508		2SA1182
	Q7501, Q7502		2SC2240
	Q7505, Q7506		2SC2859
	D7505, D7506, D7517, D7518		1SS181
	D7503, D7504, D7516		1SS184
	D7535–D7538		1SS226
	D7521–D7524		1SS244
	D7519, D7520, D7525, D7526, D7531		HSS104–02
	D7507–D7510		RD3.3ESB2

CAPACITORS

Mark	No.	Description	Parts No.
	C7519–C7522, C7545–C7552		CCSQCH101J50
	C7525–C7528		CCSQCH271J50
	C7503, C7504		CCSQCH331J50
	C7541, C7542		CCSQCH470J50
	C7523, C7524		CEALR10M50
	C7509, C7510		CEAS101M10
	C7540		CEJA3R3M50
	C7539		CEJA4R7M50
	C7529–C7532		CKSQYB333K50
	C7543, C7544		CKSQYB472K50
	C7537		CKSQYF473Z50

RESISTORS

Mark	No.	Description	Parts No.
	R7515, R7516 (1.8k Ω)		ACN1107
⚠	R7541, R7542		RD1/4PMF100J
	R7519, R7520		RN1/10SE621D
⚠	R7547–R7550		RS1/10S2200F
	R7753		RS1/8S000J
⚠	R7537–R7540		RS1/8S100J
	R7553		RS1/8S101J
⚠	R7543, R7544		RS1/8S7R5J
	Other Resistors		RS1/10S□□□J

REAR REGULATOR ASSY

SEMICONDUCTORS

Mark	No.	Description	Parts No.
	IC7201		PAC006C
	IC7101		UPC4570G2
	Q7107, Q7108		2SA1162
	Q7109, Q7110		2SB1115
	Q7101, Q7102, Q7301, Q7302		2SC1815
	Q7105, Q7106, Q7202		2SC2712
	Q7103, Q7104		2SD1615
	D7113, D7114		1SS181
	D7111, D7112, D7204		1SS184
	D7115, D7116		1SS226
	D7205, D7208		HSS104–02
	D7210		RB441Q–40
	D7107–D7110		RD2.2ESB2
	D7206, D7211		RD4.7ESB
	D7207		RD5.6ESB2

CAPACITORS

Mark	No.	Description	Parts No.
	C7402, C7406, C7408 (0.082 μF/25V)		ACG1050
	C7204 (1 μF/16V)		ACG1051
	C7401, C7405, C7407 (0.33 μF/50V)		ACG1053
	C7409 (10 μF/35V)		ACH1150
	C7109, C7110 (47 μF/16V)		ACH1151
	C7119–C7122		CCSQCH101J50
	C7133–C7136		CCSQCH221J50
	C7125–C7128		CCSQCH271J50
	C7103, C7104		CCSQCH331J50
	C7142, C7143		CCSQCH470J50
	C7202		CEANL4R7M50
	C7140		CEAS010M50
	C7205		CEJA101M10
	C7203		CEJAR33M50
	C7697		CKDYB103K50
	C7144, C7145, C7201, C7208, C7219		CKSQYB103K50
	C7301		CKSQYB332K50
	C7129–C7132		CKSQYB333K50
	C7206, C7215, C7216, C7404, C7698		CKSQYF104Z50
	C7137, C7138		CKSQYF472Z50
	C7139		CKSQYF473Z50

RESISTORS

Mark	No.	Description	Parts No.
	VR7201 (22 k Ω)		RCP1103
⚠	R7403–R7405 (1 Ω)		ACN1104
	R7119, R7120 (604 Ω)		ACN1105
	R7115, R7116 (665 Ω)		ACN1109
	R7252		RD1/6PM102J
	R7253		RD1/6PM103J
⚠	R7137–R7140		RS1/10S0100F
	R7303		RS1/10S1002F
⚠	R7147–R7150		RS1/10S2200F
	R7304		RS1/10S8200F
⚠	R7141–R7144		RS1/8S100J
	R7153		RS1/8S101J
	Other Resistors		RS1/10S□□□J

OTHERS

CN7101	13P JUMPER CONNECTOR	KPE13

4. ADJUSTMENTS

4.1 TUNER SECTION

■ FM Tuner Section

- Set the mode selector to FM BAND.
- Connect the wiring as shown in Fig. 1.

● For SD and SD/TA types (AXQ1012)

Step No.	Adjustment Title	FM SG (1kHz, ±75kHz dev.)		Reception Frequency Display	Adjustment Location	Specifications
		Frequency (MHz)	Level (dBμV)			
1	Center Adjustment	98 Non modulation	80 or more	—	L6207	Adjust so that the DC voltage between IC6201-Pin 4 and Pin 28 (or ⊕ leads of C6224 and C6261) becomes 0V±50mV.
2	Front End Sencitivity	98	10-30	98MHz	L6102 T6101	Adjust so that the DC voltage between the IC6201-Pin 12 and GND (or ⊕ leads of C6238 and GND) becomes at maximum level.
3	Stereo Distortion	98	80	98MHz	T6101	Minimize the distortion with 1/8 rotation of the core.
4	TUNED IND. Lighting Level	98	15±2	98MHz	VR6201	Adjust so that the indicator of TUNED IND. starts to light up.

Notes:

- *Before adjusting, make sure there is no gap between L6101 and L6102. If there is a gap between them, bring them into contact with each other first, and then make adjustments.*
- *Make indicator adjustments in order of AM →FM.*

● For S/DF type (AXQ1016)

Step No.	Adjustment Title	FM SG (1kHz, ±75kHz dev.)		Reception Frequency Display	Adjustment Location	Specifications
		Frequency (MHz)	Level (dBμV)			
1	Center Adjustment	83 Non modulation	80 or more	83MHz	L6109	Adjust so that the DC voltage between Pin 4 and Pin 28 of IC6101 becomes 0V±50mV. (Both ends R6141)
2	Front End Sencitivity	83	10-30	83MHz	L6104 L6102 T6101	Adjust so that the DC voltage of the Pin12 of IC6101 (S-meter) becomes at maximum level.
3	TUNED IND. Lighting Level	83	15±2	838MHz	VR6101	Adjust so that the indicator of TUNED IND. starts to light up.

Notes:

- *Before adjusting, make sure there is no gap between L6101 and L6102 and between L6103 and L6104. If there is a gap between them, bring them into contact with each other first, and then make adjustments.*
- *Make indicator adjustments in order of AM →FM.*

■ AM Tuner Section

- Set the mode selector to AM BAND.
- Connect the wiring as shown in Fig. 1.

● For SD and SD/TA types (AXQ1012)

Step No.	Adjustment Title	AM SG (400Hz, 30% Mod.)		Reception Frequency Display	Adjustment Location	Specifications
		Frequency (kHz)	Level (dBμV/m)			
1	TUNED IND. Lighting Level	999	47±2	999kHz*1	VR6202	Adjust so that the indicator of TUNED IND. starts to light up.

● For S/DF type (AXQ1016)

Step No.	Adjustment Title	AM SG (400Hz, 30% Mod.)		Reception Frequency Display	Adjustment Location	Specifications
		Frequency (kHz)	Level (dBμV/m)			
1	TUNED IND. Lighting Level	999	47±2	999kHz*1	VR6102	Adjust so that the indicator of TUNED IND. starts to light up.

**1 : For the area using 10kHz step, frequencies should be 1000kHz.*

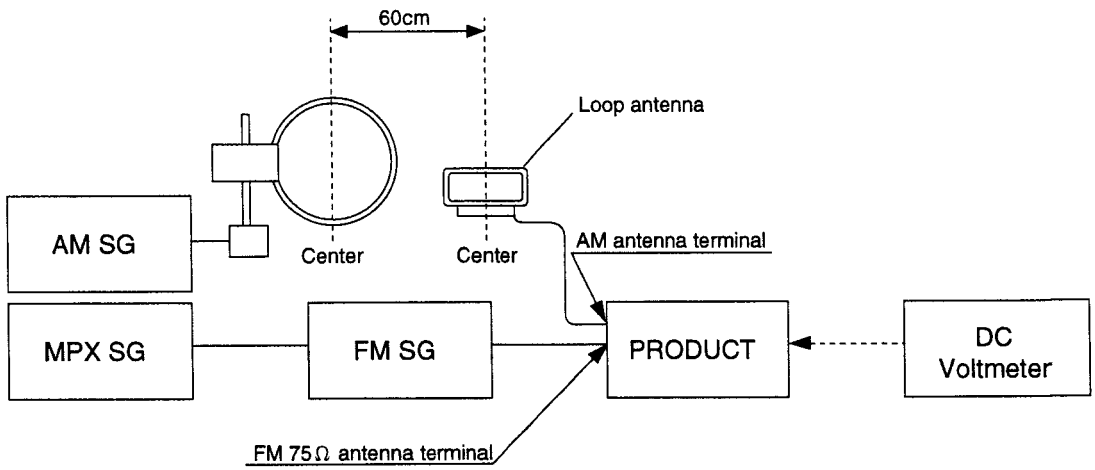

Fig. 1 AM and FM Adjustment Wiring Diagram

FM/AM TUNER MODULE (AXQ1012)

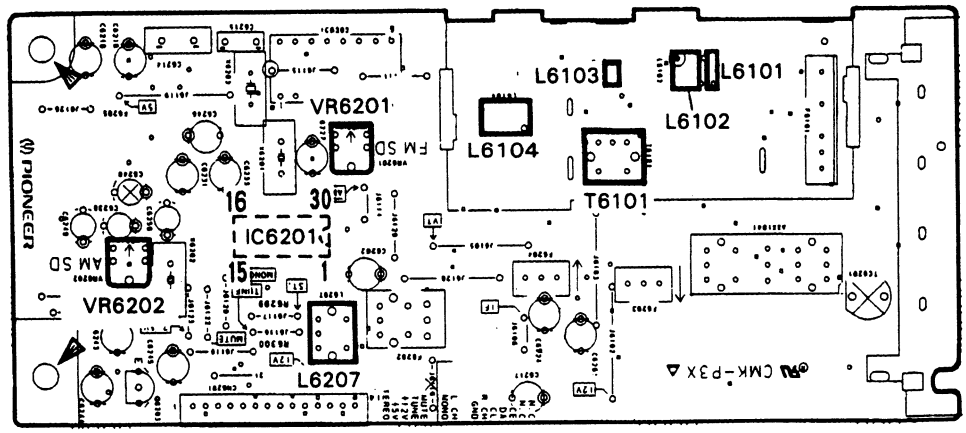

FM/AM TUNER MODULE (AXQ1016)

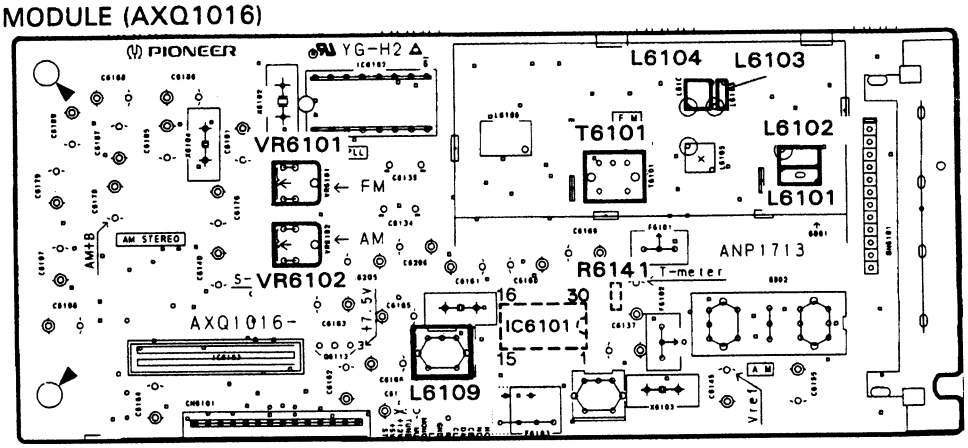

Fig. 2 Adjustment Point

4.2 POWER AMP MODULE SECTION (REFER TO FIG. 2–1.)

1. Handling Precautions

- Since the heat sink and transistor metallic parts are connected to the Front Amp output, make sure they do not contact the GND (chassis) or other circuits.
- Since there is residual high voltage in the Power Amp Module Assy ±B1 (FRONT ASSY FOR 100W) and ±B2 (REAR, PWR, PRTEC ASSY) even when the power is OFF, caution should be exercised. (If necessary, the voltage should be discharged).
- When handling the Power Amp Module Assy, make sure you do not touch the fan motor blade.

2. Adjustment and Confirmation of Idle Current

- Basically, the idle current needs to be confirmed when replacing a power transistor, driver transistor, or bias transistor, or when the entire split board Assy of the Power Amp Module Assy has been replaced.
- Make sure the heat sink has cooled sufficiently before measuring the idle current. (Temperature should be the same as room temperature; 25°C is ideal, if possible.)
- Idle current stipulated value: 3–100mA.

■ Front Amp Side (FRONT ASSY FOR 100W)

Step	Measurement	Item	Remarks
1	Lch side	Short both sides of C7144 (C7124) and C7145 (C7123) on the Rear Amp side.	Do not operate the Rear Amp side.
2		Insert a resistor (0.22 Ω, 3W or more) in series in the connector CN7502 +B1 (or–B1) line (terminal No. 5 or 6). (Refer to Fig. 2–2.)	For measuring voltage at both sides of resistor
3		Short both sides of C7524.	Do not operate Rch side.
4		Turn the power ON, wait 6 seconds, and then measure the resistance voltage in Step 2.	Lch Idle current I=V/0.22 (Ω)
5	Rch side	• Same as Steps 1 and 2 above. • Short both sides of C7523.	Do not operate Lch side.
6		Turn the power ON under the above conditions, and after 6 seconds measure the resistance voltage in Step 2.	
7	——	If the measured idle current is greater than 100mA, perform the following procedure.	
8	Lch side	Short between the Point Ⓐ pattern in Fig. 2–4 using solder.	Connect R7517 to R7515 in a parallel circuit.
9	Rch side	Short between the Point Ⓑ pattern in Fig. 2–4 using solder.	Connect R7518 to R7516 in a parallel circuit.
10	——	After performing Steps 8 and 9, remeasure the idle current and confirm that it is below 100mA.	
11	——	If the idle current is below 3mA, perform the following procedure.	
12	Lch side	Short between the point Ⓒ pattern in Fig.2–4 using solder.	Connect R7551 to R7519 in a parallel circuit.
13	Rch side	Short between the point Ⓓ pattern in Fig.2–4 using solder.	Connect R7552 to R7520 in a parallel circuit.
14	——	After performing step 12 and 13, remeasure the idle current and confirm that it is greater than 3mA (within 3–100mA).	

■ Rear Amp Side (REAR REGULATOR ASSY)

Step	Measurement	Item	Remarks
1	Center amp side	Short both sides of C7523 and C7524 on the Front Amp side.	Do not operate the Front Amp side.
2		Insert a resistor (0.22 Ω, 2W or more) in series in the connector CN7102 +B2 (or –B2) line (terminal No. 5 or 6). (Refer to Fig. 2–3.)	For measuring voltage at both sides of resistor
3		Short both sides of C7145 (C7123) on the Surround Amp side.	Do not operate the Surround Amp.
4		Turn the power ON, wait 6 seconds, and then measure the resistance voltage in Step 2.	Idle current: I = V/0.22 (Ω)
5	Surround amp side	• Same as Steps 1 and 2 above. • Short both sides of C7144 (C7124) on Center Amp side.	Do not operate Center Amp.
6		Turn the power ON under the conditions in Steps 1 and 2, and after 6 seconds measure the resistance voltage in Step 2.	
7	——	If the measured idle current is greater than 100mA, perform the following procedure.	
8	Center amp side	Short between the Point Ⓔ pattern in Fig. 2–5 using solder.	Connect R7117 to R7115 in a parallel circuit.
9	Surround amp side	Short between the Point Ⓕ pattern in Fig. 2–5 using solder.	Connect R7118 to R7116 in a parallel circuit.
10	——	After performing Steps 8 and 9, remeasure the idle current and confirm that it is below 100mA.	
11	——	If the idle current is below 10mA, perform the following procedure.	
12	Center amp side	Short between the point Ⓖ pattern in Fig.2–5 using solder.	Connect R7151 to R7119 in a parallel circuit.
13	Surround amp side	Short between the point Ⓗ pattern in Fig.2–5 using solder.	Connect R7152 to R7120 in a parallel circuit.
14	——	After performing step 12 and 13 remeasure the idle current and confirm that it is greater than 10mA (within 10–100mA).	

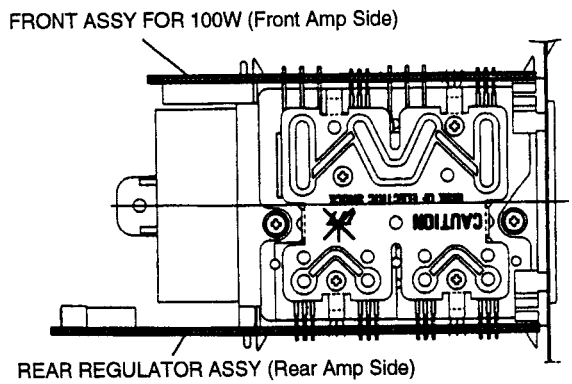

Fig. 2-1 PCB Location of Power Amp Module

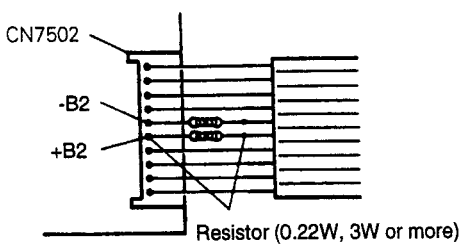

Fig. 2-2 FRONT 100W ASSY

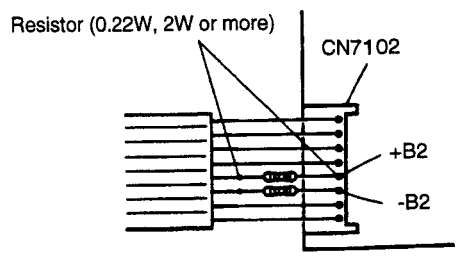

Fig. 2-3 REAR REGULATOR ASSY

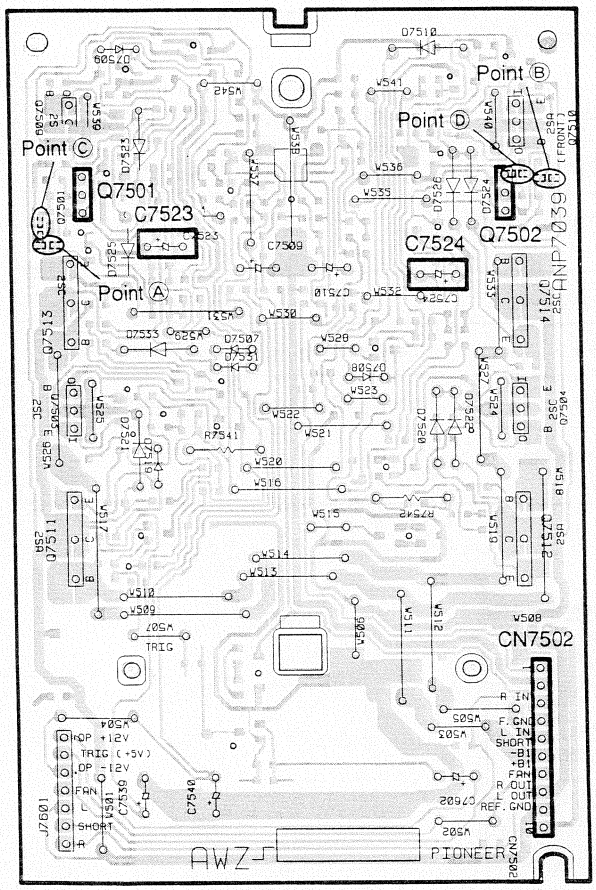

Fig. 2-4 FRONT 100W ASSY

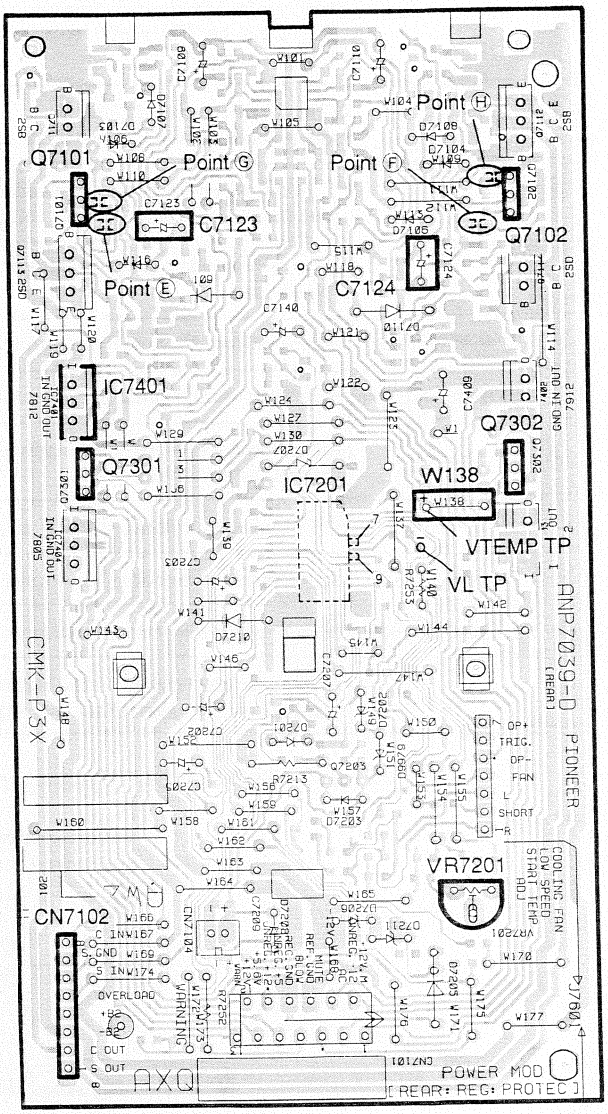

Fig. 2-5 REAR REGULATOR ASSY

3. Adjusting the Operating Temperature Setting of the Fan Motor (VR7201)

This adjustment is necessary when IC7401 (+12V regulator), Q7301 and Q7302 (temperature sensors), IC7201 (protection IC) or VR7201 has been replaced, or when the entire split board Assy of the Power Amp Module has been replaced.

■ Adjustment-Related Cautions

- Make sure the heat sink has sufficiently cooled (is the same as room temperature Ta.)
- Once the power has been turned ON, make measurements and adjustments as quickly as possible. (If too much time is taken, the heat sink temperature will rise, and the measurements will deviate from the Ta measurement point.)

■ Adjustment

1. Connect a voltmeter between VTEMP and VL (or between IC7201 terminals No.9 and 7). (Refer to Fig. 2–6.)
2. Determine the fan motor operating temperature setting by means of the following formula. (Tolerance is within ±30mV.)
   Formula: (75°C – Ta) x 19 (mV)
   Ta: ambient temperature (°C)
3. Adjust VR7201 so that the voltage between VTEMP and VL is the value obtained from the above formula.
   For example:
   when the room temperature is 25°C,
   set value = (75 – 25) x 19 (mV)
   = 950mV (tolerance within ±30mV).

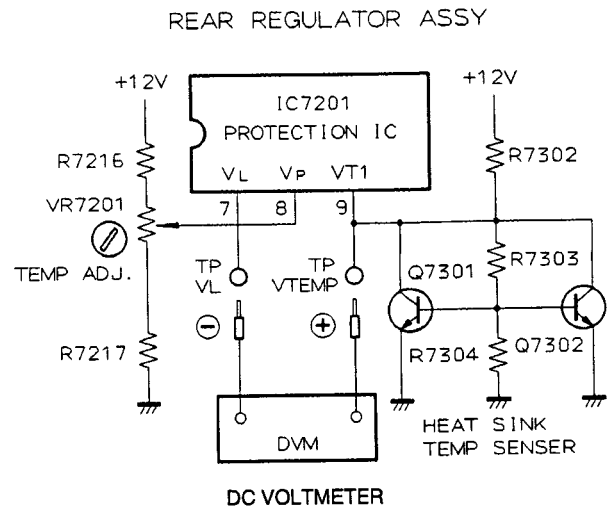

Fig. 2-6 Adjustment of Operating Temperature Setting of Fan Motor

5. IC INFORMATION

- *The information shown in the list is basic information and may not correspond exactly to that shown in the schematic diagrams.*

■ NJM2279D (IC1301 : VIDEO ASSY)

● VIDEO SWITCH IC

● Pin Assignment (Top View)

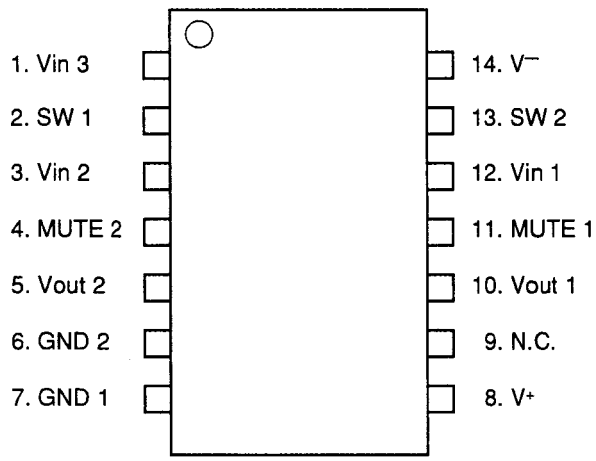

● BLOCK DIAGRAM

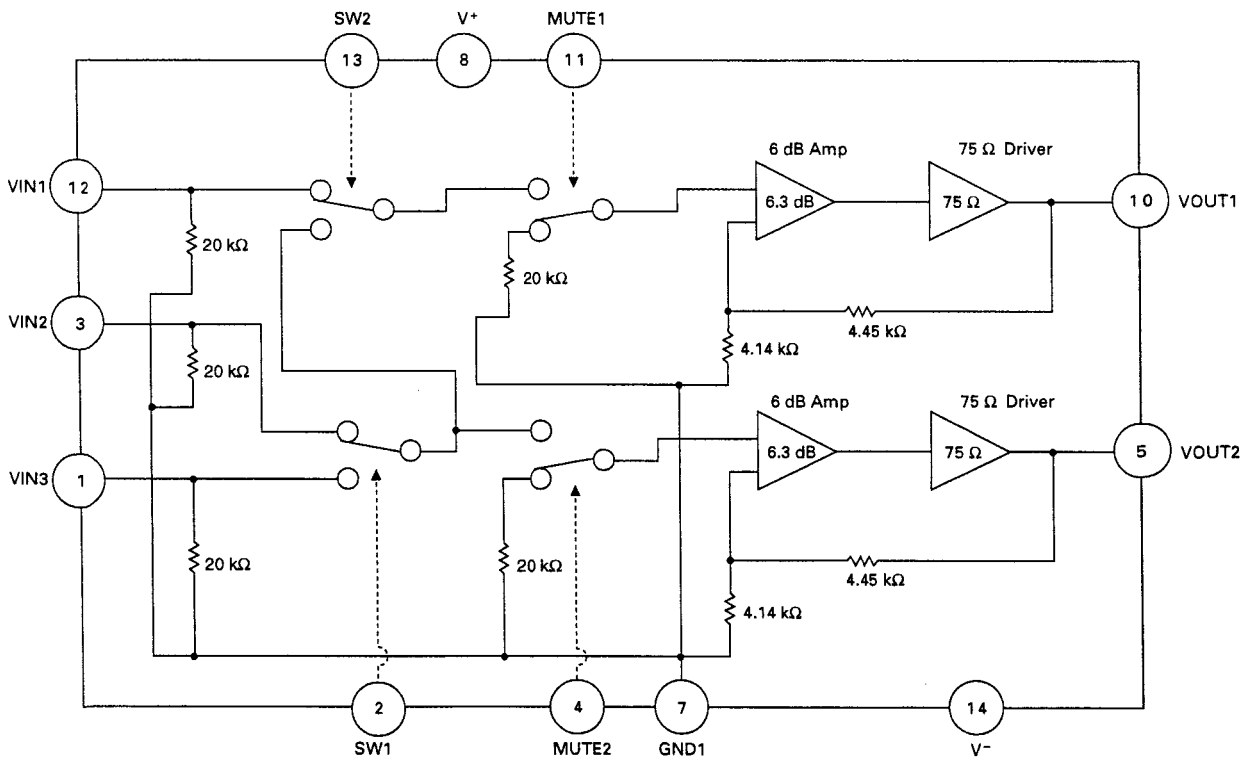

■ PDG155A (IC1101 : FRONT ASSY)

● System Control Micro-computer

● Pin Function

No.	Name	Function	I/O	Description
1	PE1/EC1/INT1	JOGA	I	Jog pulse input
2	PE2/INT2	JOGB	I	
3	PE3/INT3/NMI	COUNTRY 1	I	Dispatch switchover input H: JAPAN L: EX
4	PE4/RMC	REMOCON	I	Remote control signal input
5	PE5/CTL	WARNING	I	Power module WARNING input L: Normal H: Power OFF due to abnormal condition
6	PE6/PWM	NC	O	L
7	PE7/T0/ADJ	NC	O	L
8	PB0/CINT	H.P.IN	I	Headphone connection detection H: Undetected L: Detect/audio mute (REAR, CENTER)
9	PB1/CSO	PLL CLOCK	O	PLL IC LM7001 Serial clock
10	PB2/SCKO	PLL DATA	O	PLL IC LM7001 Serial Data
11	PB3/SI0	STEREO	I	Tuner stereo broadcast reception discrimination H: — L: STEREO
12	PB4/SO0	TUNED	I	Tuner tuning discrimination H: — L: TUNED
13	PB5/SCK1	MUTE	O	Tuner audio mute control H: MUTE L: —
14	PB6/SI1	MONO	O	Tuner forced monaural H: MONO L: AUTO STEREO
15	PB7/SO1	PLL CE	O	PLL IC LM7001 chip enable H: CE L: —
16 | 19	PC0/KR0 | PC3/KR3	KEYIN 1 | KEYIN 4	I	Key scan return input
20	PC4/KR4	NC	O	L
21	PC5/KR5	2279 S1	O	VIDEO SELECTOR NJM2279 Control
22	PC6/KR6	2279 M1	O	
23	PC7/KR7	2279 M2	O	
24	PH0	4052 A	O	AUDIO SELECTOR Control
25	PH1	4052 B	O	
26	PH2	4052 INH	O	
27	PH3	FAN	O	Power module control H: Fan On L: Fan Off
28	PH4	REAR MUTE	O	REAR, CENTER mute control H: — L: MUTE
29	PH5	FRONT MUTE	O	FRONT mute control H: — L: MUTE
30	PH6	POWER RY	O	Power relay control H: POWER ON L: POWER OFF
31	PH7	PROTECT	I	Machine connection detection (JAPAN model L fixed) L: OK H: Unconnected NG: POWER OFF

	CD/LD	VIDEO	AUX	PHONO	TAPE	TUNER	DAT/MD
2279 S1	H	*	L	*	*	*	*
2279 M1	H	H	H	L	L	L	L
2279 M2	H	L	H	L	L	L	L
4052 A	H	H	L	H	L	L	L
4052 B	L	H	H	L	L	H	L
4052 INH	L	L	H	H	L	L	H

No.	Name	Function	I/O	Description
32	PA0/AN0	VOL POSI	I	Volume location detection (ADC)
33	PA1/AN1	VOL UP	O	Motor drive TA8409S control
34	PA2/AN2	VOL DOWN	O	
35	PA3/AN3	CLD R/E	I/O	System bus CLD transmission request/approval I: Wait for request L: Approval
36	PA4/AN4	DECK R/E	I/O	System bus DECK transmission request/approval I: Wait for request L: Approval
37	PA5/AN5	GEQ R/E	I/O	System bus processor transmission request/approval I: Wait for request L: Approval
38	RST	RESET	I	CPU RESET input L: RESET H: —
39	EXTAL	OSC	I	8MHz ceramic oscillator connection
40	XTAL	OSC	O	
41	VSS	D.GND	–	D.GND
42	TX	NC	O	——
43	TEX	D.GND	I	D.GND
44	PA6/AN6	S.DATA	I/O	System bus serial data input and output
45	PA7/AN7	S.CLOCK	O	System bus serial clock output
46	AVref	+ 5V	I	AD standard voltage input
47	AVss	D.GND	I	ADC GND
48	PD0/S0	DIRECT B	O	DIRECT signal switchover control
49	PD1/S1	DIRECT A	O	
50	PD2/S2	4066 B	O	VIDEO OUT switchover control; FUNCTION: 4066 B, 4066 A; VIDEO: H, L; DAT/MD: L, H; OTHER: H, H; H : + 5V, L : – 5V
51	PD3/S3	4066 A	O	
52	PD4/S4	NC	O	L
53	PD5/S5	JOG LED	O	JOG LED CONTROL H: Illuminated L: extinguished
54	PD6/S6	SET LED	O	SET LED CONTROL H: Illuminated L: extinguished
55	PD7/S7	STANDBY LED	O	STANDBY LED CONTROL H: Illuminated L: extinguished
56	PF0/S8	DIRECT LED	O	DIRECT LED CONTROL H: Illuminated L: extinguished
57	PF1/S9	CD/LD LED	O	CD/LD LED CONTROL H: Illuminated L: extinguished
58	PF2/S10	VIDEO LED	O	VIDEO LED CONTROL H: Illuminated L: extinguished
59	PF3/S11	AUX LED	O	AUX LED CONTROL H: Illuminated L: extinguished
60 | 63	PF4/S12 | PF7/S15	P1 | P4	O	FDP CONTROL ANODE
64 | 71	PI0/S16 | PI7/S23	P5 | P12	O	

No.	Name	Function	I/O	Description
72 | 75	T15/S24 | T12/S27	P13 | P16	O	FDP CONTROL ANODE
76 | 79	T11/S28 | T8/S31	12G | 9G	O	FDP CONTROL GRID
80 | 87	T7 | T0	8G | 1G	O	
88	Vfdp	– 28V	–	
89	VDD	+ 5V	–	FDP BLANKING VOLTAGE
90	NC	+ 5V	–	
91	VSS	D.GND	–	
92	PG0/RT00	NC	O	
93	PG1/RT01	PHONO LED	O	PHONO LED CONTROL H: Illuminated L: extinguished
94	PG2/RT02	TUNER LED	O	TUNER LED CONTROL H: Illuminated L: extinguished
95	PG3/RT03	TAPE LED	O	TAPE LED CONTROL H: Illuminated L: extinguished
96	PG4	DAT/MD LED	O	DAT/MD LED CONTROL H: Illuminated L: extinguished
97	PG5	NC	O	L
98	PG6	NC	O	L
99	PG7	NC	O	L
100	PE0/EC0/INT0	AC 50/60	I	AC PULSE INPUT (For Clock and Power monitoring)

6. FL INFORMATION

■ AAV1186 (V1101: FRONT ASSY)

● FL Tube

● Pin Assignment

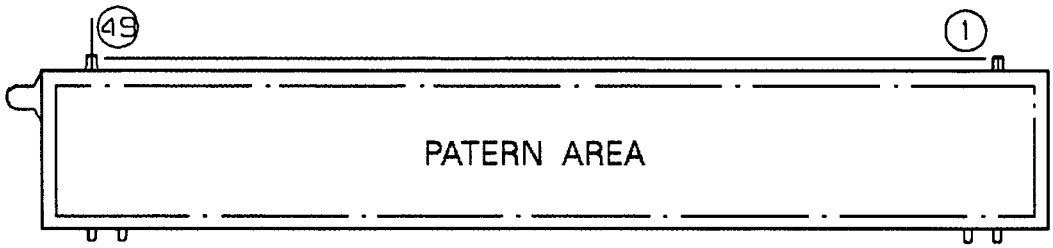

● Pin Connection

PIN NO.	49	48	47	46	45	44	43	42	41	40	39	38	37	36	35	34	33	32	31	30	29	28	27	26	25	24	23	22	21	20	19	18	17	16	15	14	13	12	11	10	9	8	7	6	5	4	3	2	1
CONNECTION	F2	F2	NP	NP	1G	2G	3G	4G	5G	6G	7G	8G	9G	10G	11G	12G	NC	NC	NC	NC	NC	NC	NC	NC	NC	NC	NC	NC	NC	NC	PC1	PC2	PC3	PC4	PC5	PC6	PC7	PC8	PC9	PC10	PC11	PC12	PC13	PC14	PC15	PC16	NP	NP	F1	F1

● Grid Assignment

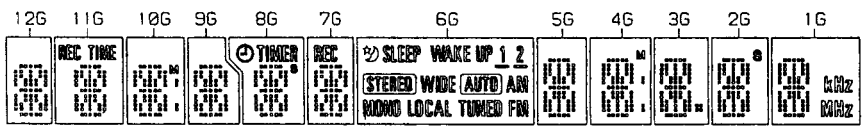

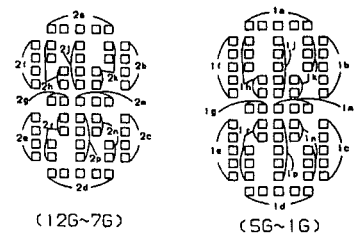

● Anode Connection

	12G	11G	10G	9G	8G	7G	6G	5G	4G	3G	2G	1G
P1	2a	2a	2a	2a	2a	2a	SLEEP	1a	1a	1a	1a	1a
P2	2j	2j	2j	2j	2j	2j	WAKE UP 1 2	1j	1j	1j	1j	1j
P3	2h	2h	2h	2h	2h	2h	–(1)	1h	1h	1h	1h	1h
P4	2k	2k	2k	2k	2k	2k	–(2)	1k	1k	1k	1k	1k
P5	2b	2b	2b	2b	2b	2b	STEREO	1b	1b	1b	1b	1b
P6	2f	2f	2f	2f	2f	2f	WIDE	1f	1f	1f	1f	1f
P7	2m	2m	2m	2m	2m	2m	AUTO	1m	1m	1m	1m	1m
P8	2g	2g	2g	2g	2g	2g	AM	1g	1g	1g	1g	1g
P9	2c	2c	2c	2c	2p	2c	MONO	1c	1c	1c	1c	1c
P10	2e	2e	2e	2e	2e	2e	LOCAL	1e	1e	1e	1e	1e
P11	2r	2r	2r	2r	2r	2r	TUNED	1r	1r	1r	1r	1r
P12	2n	2n	2n	2n	2n	2n	FM	1n	1n	1n	1n	1n
P13	2p	2p	2p	2p	2p	2p	–	1p	1p	1p	1p	1p
P14	2d	2d	2d	2d	2d	2d	–	1d	1d	1d	1d	1d
P15	–	REC	M	–	TIMER	REC	–	–	M	–	–	kHz
P16	–	TIME	:	–	S	–	–	–	:	M	S	MHz

7. FOR S/DF AND SD/TA TYPES

NOTES :

- *Parts marked by "NSP" are generally unavailable because they are not in our Master Spare Parts List.*
- *The ⚠ mark found on some component parts indicates the importance of the safety factor of the part. Therefore, when replacing, be sure to use parts of identical designation.*
- *Parts marked by "◉" are not always kept in stock. Their delivery time may be longer than usual or they may be unavailable.*
- *When ordering resistors, first convert resistance values into code form as shown in the following examples.*

Ex. 1 *When there are 2 effective digits (any digit apart from 0), such as 560 ohm and 47k ohm (tolerance is shown by J = 5%, and K = 10%).*

560Ω → 56 x 10^1 = 561 ..... RD1/8PM [5][6][1] J
47kΩ → 47 x 10^3 = 473 ..... RD1/4PS [4][7][3] J
0.5Ω → 0R5 ..... RN2H [0][R][5] K
1Ω → 010 ..... RS1P [0][1][0] K

Ex. 2 *When there are 3 effective digits (such as in high precision metal film resistors).*

5.62kΩ → 562 x 10^1 = 5621 ..... RM1/4PC [5][6][2][1] F

■ CONTRAST OF MISCELLANEOUS PARTS

SX-J990/S/DF, SD/TA and SD have the same construction except for the following :

Mark	Symbol & Description	Part No.			Remarks
		SD TYPE	S/DF TYPE	SD/TA TYPE	
NSP	SXAF assy	RWK1003	RWK1010	RWK1003	
	MAIN assy	RWZ3664	RWZ3878	RWZ3664	
	FM/AM TUNER MODULE	AXQ1012	AXQ1016	AXQ1012	
	Rear panel	RNA 1988	RNA 2000	RNA2061	

MAIN Assy

RWZ3878 and RWZ3664 have the same construvtion except for the following :

Mark	Symbol & Description	Part No.		Remarks
		RWZ3664	RWZ3878	
	R761	RS1/10S473J	Not used	
	R762	Not used	RS1/10S473J	

■ PCB PARTS LIST

Mark	No.	Description	Parts No.
FM/AM TUNER MODULE (AXQ1016)			
SEMICONDUCTORS			
	IC6101		LA1836M
	IC6102		LM7001J
	IC6103		MC13020M
	Q6117		2SA1162
	Q6102		2SC2223
	Q6113		2SC2235
	Q6110, Q6115, Q6116, Q6121–Q6124		2SC2712
	Q6103, Q6107, Q6119, Q6120		2SC2714
	Q6111		2SK208
	Q6104, Q6105		2SK302
	Q6101		3SK194
	Q6106, Q6109		XDA124EK
	Q6112, Q6118		XDC124EK
	Q6108, Q6114		XDC143EK
	D6106		1SS181
	D6101, D6102, D6104		1SV228
COILS AND FILTERS			
	T6102		ATB1010
	L6106		ATC1008
	L6101		ATC1025
	L6102		ATC1026
	L6103		ATC1027
	L6104		ATC1028
	T6101		ATE-063
	L6109		ATE1013
	F6102		ATF-107
	F6101		ATF-119
	F6103		ATF1144
	L6107		ATH1043
	L6108, L6110		LCTA2R2J3225
CAPACITORS			
	C6191-C6194 (0.082 μ F/25V)		ACG1050
	C6129, C6153, C6154, C6199, C6200 (1 μ F/16V)		ACG1051
	C6120		CCSCH150J50
	C6111		CCSQCH010C50
	C6112, C6122		CCSQCH020C50
	C6113		CCSQCH101J50
	C6157, C6177		CCSQCH102J50
	C6141, C6142		CCSQCH150J50
	C6183		CCSQCH470J50
	C6119		CCSQUJ060D50
	C6118		CCSQUJ080D50
	C6101, C6116		CCSQUJ150J50
	C6106		CCSQUJ270J50
	C6107, C6117		CCSQUJ330J50
	C6185, C6186		CEANLR47M50
	C6165, C6166, C6190		CEAS010M50
	C6137, C6145, C6169, C6205		CEAS100M50
	C6155		CEAS101M10
	C6164, C6197, C6198		CEAS101M25
	C6179, C6188		CEAS2R2M50
	C6206		CEAS330M16
	C6140, C6162, C6163, C6178, C6187		CEAS470M25
	C6189		CEAS4R7M50
	C6160, C6161, C6176		CEJA100M16
	C6181		CEJA470M16
	C6135		CFTXA103J50
	C6134		CFTXA394J50
	C6132		CKCYX473M16
	C6105, C6115, C6125, C6126, C6128		CKSQYB102K50
	C6167, C6168		CKSQYB102K50
	C6102, C6103, C6114, C6121, C6124		CKSQYB103K50
	C6136, C6139, C6144, C6170, C6172		CKSQYB103K50
	C6182, C6184		CKSQYB103K50
	C6195, C6196		CKSQYB222K50
	C6131, C6143		CKSQYB223K50
	C6173–C6175, C6180		CKSQYB332K50
	C6158, C6159		CKSQYB333K50
	C6156		CKSQYB472K50
	C6201		CKSQYF104Z50
	C6152		CKSQYF224Z25
	C6138, C6146-C6150, C6171		CKSQYF473Z50
	C6123		CKSYB103K50
	C6207		CKSYF103Z50
RESISTORS			
	VR6101 (10k Ω)		ACP1043
	VR6102 (22k Ω)		ACP1044
	R6115, R6119, R6123, R6127		RS1/8S000J
	R6217, R6218		RS1/8S000J
	R6137		RS1/8S331J
	R6112		RS1/8S473J
	R6141		RS1/8S563J
	Other Resistors		RS1/10S□□□J
OTHERS			
	BN6101	4P ANTENNA TERMINAL AG PCB	AKA1016
	X6102 (7.200MHz)		ANP1713
	X6101 (456kHz)		ASS1042
	X6104 (3.60MHz)		ASS1066
	X6103 (450kHz)		ASS1086
		AM RF TUNING BLOCK	ATF1027
	CN6101	14P PLUG	AXX1044
			KP200IA14L

■ SCHEMATIC AND PCB DIAGRAMS

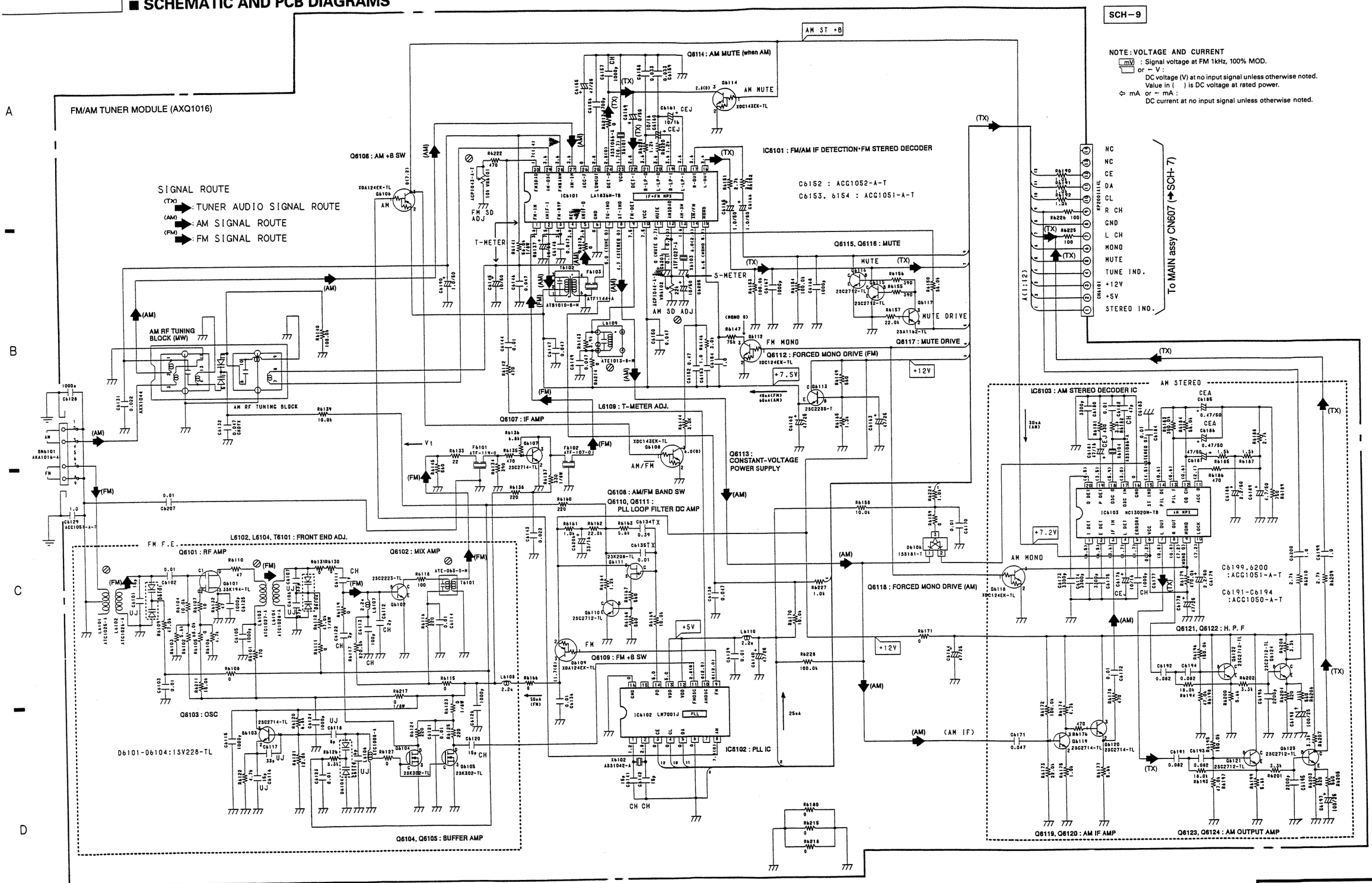

FM/AM TUNER MODULE

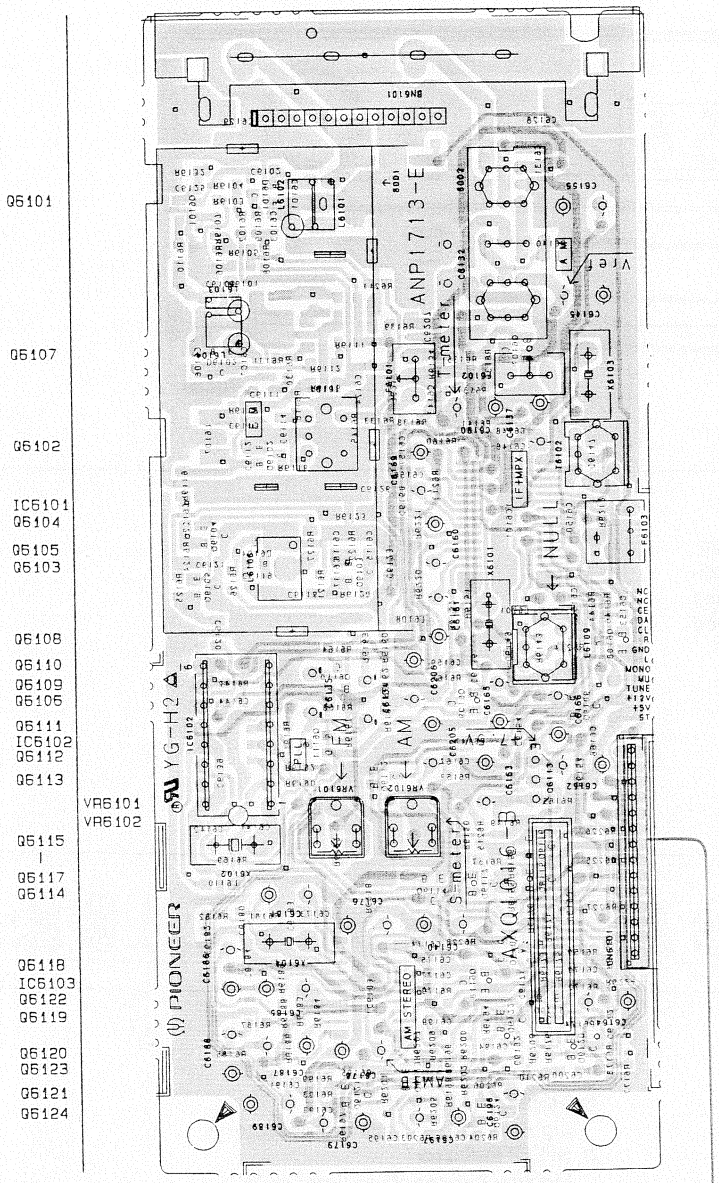

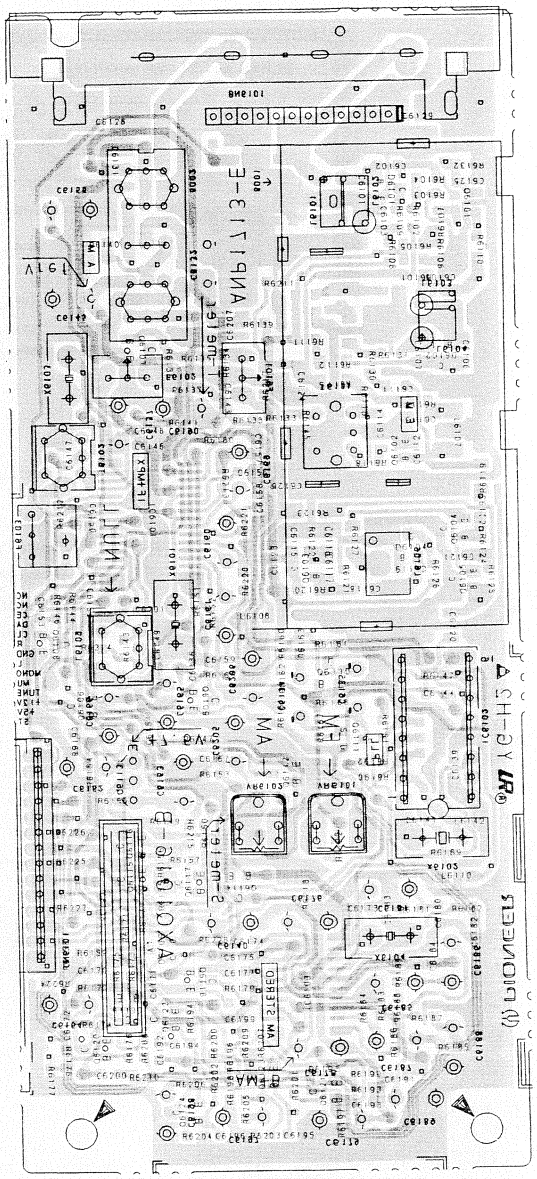

- This diagram is viewed from the pink colored foil side.
- This PCB is double sided.

- This diagram is viewed from the gray colored foil side.
- This PCB is double sided.

8. PANEL FACILITIES

FRONT PANEL FACILITIES

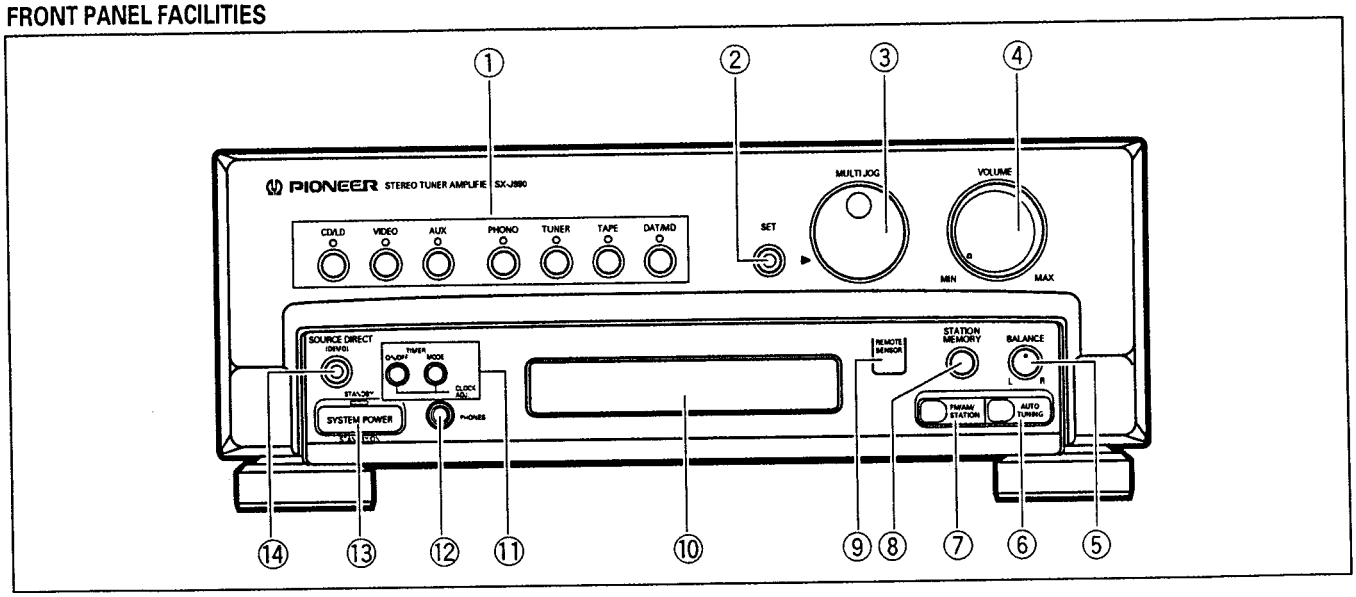

This unit is provided with an illuminated guide function.

When performing operations on pages designated with this mark, lighted or flashing indicators show which buttons should be pressed next, or which indicators should be changed next.

① **Input selector buttons (CD/LD, VIDEO, AUX, PHONO, TUNER, TAPE, DAT/MD)**
② **SET button**
③ **MULTI JOG dial**
④ **VOLUME control**
⑤ **BALANCE control**
⑥ **AUTO TUNING button**
⑦ **FM/AM/STATION button**
⑧ **STATION MEMORY button**
⑨ **REMOTE SENSOR**
⑩ **Display**
⑪ **TIMER ON/OFF button**
TIMER MODE button
[CLOCK ADJ. (adjust) buttons]
⑫ **Headphone jack (PHONES)**
⑬ **SYSTEM POWER STANDBY/ON switch/STANDBY indicator**
This is the switch for electric power.
ON: When set to the ON position, power is supplied and the unit becomes operational.
STANDBY: When set to the STANDBY position, the main power flow is cut and the unit is no longer fully operational. A minute flow of power feeds the unit to maintain operation readiness.
When only the time is indicated in the display section, the unit is in STANDBY.
⑭ **SOURCE DIRECT (DEMO) button**

DISPLAY SECTION

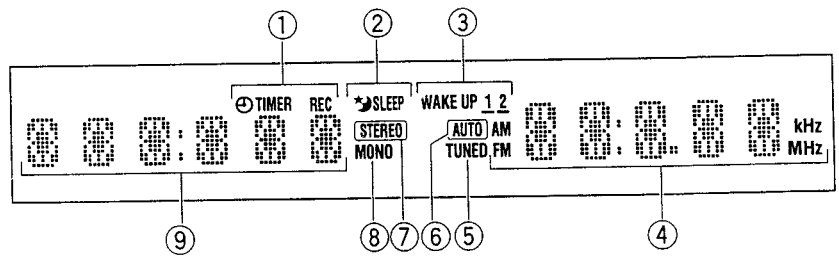

① **TIMER REC indicator**
Lights during recording timer setting.
② **SLEEP indicator**
Lights when the sleep timer is ON.
③ **WAKE UP 1, 2 indicator**
Lights to indicate the selected timer during wake up timer setting.
④ Displays station frequencies and operating status.
⑤ **TUNED indicator**
Lights when a broadcast station is received.
⑥ **AUTO indicator**
Lights during automatic tuning.
⑦ **STEREO indicator**
Lights during FM stereo broadcast reception.
⑧ **MONO indicator**
Lights when the remote control unit's MONO button is ON during stereo FM broadcast reception.
⑨ Displays time and operating status.

REMOTE CONTROL UNIT

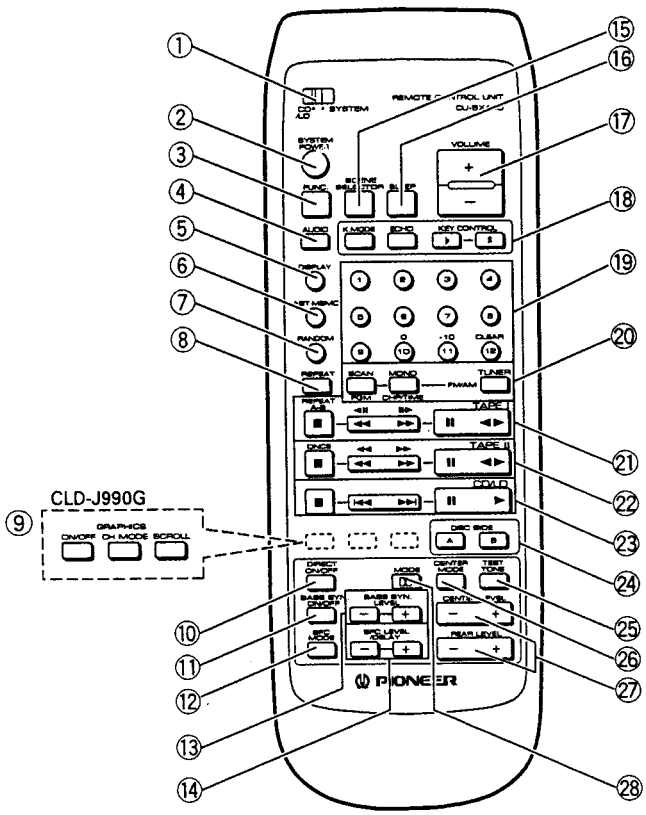

① **CD/LD•SYSTEM selector switch**
② **SYSTEM POWER button**
③ **FUNC. button (input selector button)**
The input function switches in the following order each time the button is pressed:

CD/LD → VIDEO → AUX → PHONO → TUNER → TAPE → DAT/MD → CD/LD

④ **AUDIO button**
⑤ **DISPLAY button**
⑥ **Last memory button (LAST MEMO.)**
⑦ **RANDOM button**
⑧ **REPEAT button**
⑨ **GRAPHICS buttons (ON/OFF, CH MODE, SCROLL) (CLD-J990G only.)**
⑩ **DIRECT ON/OFF button**
⑪ **BASS SYN. (synthe) ON/OFF button**
⑫ **SFC MODE button**
⑬ **BASS SYN. (synthe) LEVEL buttons (–, +)**
⑭ **SFC LEVEL/DELAY buttons (–, +)**
⑮ **SCENE SELECTOR button**
⑯ **SLEEP button**
⑰ **VOLUME control button (+/–)**
⑱ **KARAOKE buttons (K. MODE, ECHO, KEY CONTROL)**
⑲ **Number buttons**
⑳ **TUNER operation buttons**
- FM/AM button
- MONO button (functions as chapter/time (CHP/TIME) button when CD/LD•SYSTEM selector switch is set to CD/LD).
- SCAN button (functions as program (PGM) button when CD/LD•SYSTEM selector switch is set to CD/ LD).

㉑ **TAPE I operation buttons**
◄► : Play
II : Pause
◄◄ ►► : Fast forward/rewind button (functions as still/frame advance button when CD/LD•SYSTEM selector switch is set to CD/LD).
■ : Stop (functions as REPEAT A-B button when CD/LD•SYSTEM selector switch is set to CD/LD).

㉒ **TAPE II operation buttons**
◄► : Play
II : Pause
◄◄ ►► : Fast forward/rewind button (functions as fast forward/reverse button when CD/LD•SYSTEM selector switch is set to CD/LD).
■ : Stop (functions as ONCE button when CD/LD•SYSTEM selector switch is set to CD/LD).

㉓ **CD/LD operating buttons**
► : Play
II : Pause
|◄◄ ►►| : Track search
■ : Stop

㉔ **DISC SIDE A/B buttons**
㉕ **TEST TONE button**
㉖ **CENTER MODE button**
㉗ **Surround adjust buttons**
CENTER LEVEL (–/+)
REAR LEVEL (–/+)
㉘ **Dolby MODE button**

REAR PANEL FACILITIES

① **FM/AM ANTENNA terminals**
Antennas must be connected to these terminals: otherwise you will not be able to receive stations.

② **Input/Output jacks**
VIDEO IN: Connect to the video output jack of the CD CDV LD player.
PHONO IN: Connect the output cord of the turntable to these jacks.
AUX IN: Enables connection to the video and audio output jacks of video components such as an LD player.
VIDEO:
OUT: Connect to VCR video and audio input jacks.
IN: Connect to VCR video and audio output jacks.
DAT/MD:
OUT: Connect to the analog audio input jacks of the digital audio tape deck.
IN: Connect to the analog audio output jacks of the digital audio tape deck.
MONITOR OUT:
Connect to the VIDEO input jacks of your television or video deck.

③ **CENTER SPEAKER jack**
Connect to the center speaker.

NOTE:
Connect a speaker system having a nominal impedance ranging from 8 Ω to 16 Ω or more.

④ **SURROUND SPEAKERS jacks**
Connect to the Surround speaker system.

NOTE:
Connect a speaker system having a nominal impedance of 16 Ω or more.

⑤ **TWO VOLTAGE SELECTORS**

⑥ **AC OUTLET (UNSWITCHED 100 W MAX)**
Power supplied through this outlet is turned on and off by the tuner amplifier's POWER switch. Total electrical power consumption of connected equipment should not exceed 100 W. The CD CDV LD player's power cord can be connected.

NOTE:
Do not connect appliances with high power consumption such as heaters, irons, monitors, or television sets to the AC OUTLET in order to avoid overheating or fire risk.

⑦ **Power cord**
Connect the power cord to a household power outlet.

⑧ **SPEAKERS terminals**

NOTE:
Connect a speaker system having a nominal impedance ranging from 8 Ω to 16 Ω.

⑨ **CASSETTE DECK jack**
Connect the cassette deck system cable here.

⑩ **CLD PLAYER jack**
Connect the CD CDV LD player system cable here.

⑪ **Ground terminal (GND)**
Connect the ground lead of the turntable here .

⑫ **SOUND FIELD PROCESSOR jack**
Connect the sound field processor cable here.

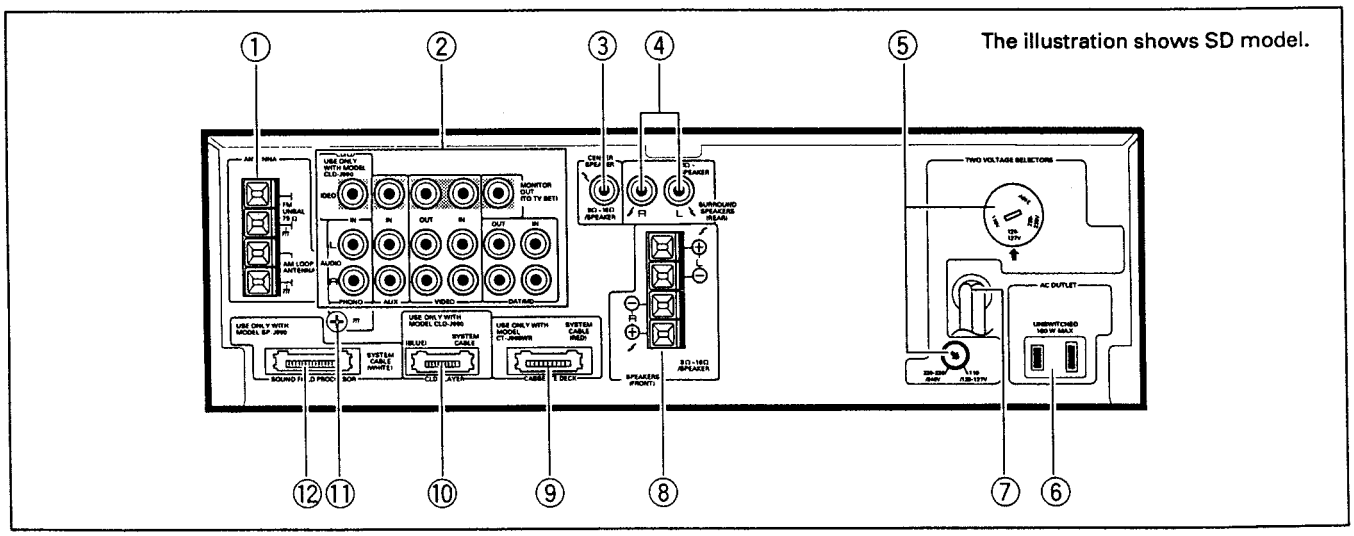

9. SPECIFICATIONS

■ STEREO TUNER AMPLIFIER

FM Tuner Section

Frequency range
- SD and HL models ..... 87.5 MHz to 108 MHz
- S/DF model ..... 76.0 MHz to 108 MHz

Antenna Input ..... 75 Ω unbalanced

MW (AM) Tuner Section

Frequency range
- SD and HL models
  - 9 kHz step ..... 531 kHz to 1,602 kHz
  - 10 kHz step ..... 530 kHz to 1,700 kHz
- S/DF model
  - 9 kHz step ..... 522 kHz to 1,629 kHz
  - 10 kHz step ..... 530 kHz to 1,700 kHz

Antenna ..... Loop antenna

Amplifier Section

Continuous average power output of 67 watts* per channel, min., at 8 ohms, from 70 Hz to 20,000 Hz with no more than 0.9 % total harmonic distortion.**

Continuous Power Output (RMS)
- Front ..... 100 W + 100 W (1 kHz, T.H.D 10 %, 8 Ω)
- Rear ..... 25 W (1 kHz, T.H.D 10 %, 16 Ω x 2)
- Center ..... 25 W (1 kHz, T.H.D 10 %, 8 Ω)

Peak music power ..... 1600 W
Total Harmonic Distortion (1 kHz, 50 W, 8 Ω) ..... 0.1 %**

* Measured pursuant to the Federal Trade Commission's Trade Regulation rule on Power Output Claims for Amplifiers.
** Measured By Audio Spectrum Analyzer.

Power Supply/Miscellaneous

Power requirements
- SD and S/DF models ..... AC 110/120 – 127/220 – 230/240 V (switchable), 50/60 Hz
- HL model ..... AC 220 – 230/240 V (switchable), 50/60 Hz

Power consumption ..... 240 W
AC outlets: unswitched (x 1) ..... 100 W MAX
Dimensions ..... 360 (W) x 366.5 (D) x 135 (H) mm
Weight ..... 7.8 kg