PIONEER®
The future of sound and vision.

Service Manual

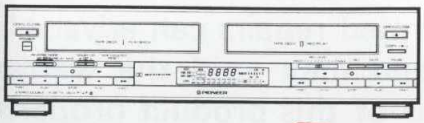

ORDER NO.
ARP1967

STEREO DOUBLE CASSETTE DECK

T-J7

T-J7 HAS FOLLOWING VERSIONS :

Type	Power requirement	Export destination
KU	AC120V only	U.S.A.
HE	AC220V, 240V (switchable)	European continent
HB	AC220V, 240V (switchable)	United Kingdom

- This manual is applicable to the KU, HE and HB types.
- As to the HE and HB types, refer to page 68.
- Ce manuel pour le service comprend les explications de réglage en français.
- Este manual de servicio trata del método ajuste escrito en español.

CONTENTS

PIONEER ELECTRONIC CORPORATION 4-1, Meguro 1-Chome, Meguro-ku, Tokyo 153, Japan
PIONEER ELECTRONICS SERVICE INC. P.O. Box 1760, Long Beach, California 90801 U.S.A.
PIONEER ELECTRONICS OF CANADA, INC. 505 Cochrane Drive, Markham, Ontario L3R 8E3 Canada
PIONEER ELECTRONIC [EUROPE] N.V. Keetberglaan 1, 2740 Beveren, Belgium
PIONEER ELECTRONICS AUSTRALIA PTY. LTD. 178-184 Boundary Road, Braeside, Victoria 3195, Australia TEL: [03] 580-9911

SI MAR. 1990 Printed in Japan

This service manual is intended for qualified service technicians; it is not meant for the casual do-it-yourselfer. Qualified technicians have the necessary test equipment and tools, and have been trained to properly and safely repair complex products such as those covered by this manual.
Improperly performed repairs can adversely affect the safety and reliability of the product and may void the warranty. If you are not qualified to perform the repair of this product properly and safely, you should not risk trying to do so and refer the repair to a qualified service technician.

WARNING
Lead in solder used in this product is listed by the California Health and Welfare agency as a known reproductive toxicant which may cause birth defects or other reproductive harm (California Health & Safety Code, Section 25249.5).
When servicing or handling circuit boards and other components which contain lead in in solder, avoid unprotected skin contact with the solder. Also, when soldering do not inhale any smoke or fumes produced.

1. SAFETY INFORMATION

(FOR USA MODEL ONLY)

1. SAFETY PRECAUTIONS

The following check should be performed for the continued protection of the customer and service technician.

LEAKAGE CURRENT CHECK

Measure leakage current to a known earth ground (water pipe, conduit, etc.) by connecting a leakage current tester such as Simpson Model 229-2 or equivalent between the earth ground and all exposed metal parts of the appliance (input/output terminals, screwheads, metal overlays, control shaft, etc.). Plug the AC line cord of the appliance directly into a 120V AC 60Hz outlet and turn the AC power switch on. Any current measured must not exceed 0.5mA.

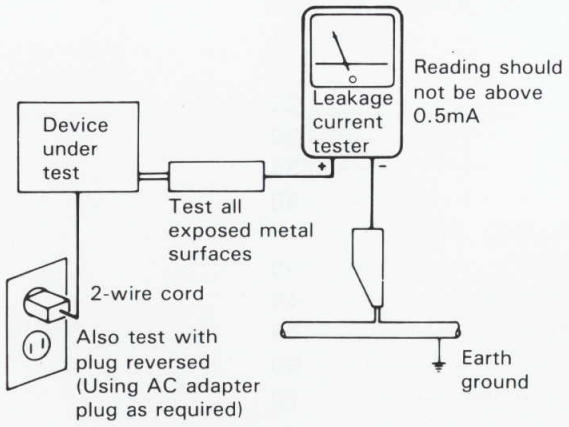

AC Leakage Test

ANY MEASUREMENTS NOT WITHIN THE LIMITS OUTLINED ABOVE ARE INDICATIVE OF A POTENTIAL SHOCK HAZARD AND MUST BE CORRECTED BEFORE RETURNING THE APPLIANCE TO THE CUSTOMER.

2. PRODUCT SAFETY NOTICE

Many electrical and mechanical parts in the appliance have special safety related characteristics. These are often not evident from visual inspection nor the protection afforded by them necessarily can be obtained by using replacement components rated for voltage, wattage, etc. Replacement parts which have these special safety characteristics are identified in this Service Manual.

Electrical components having such features are identified by marking with a ⚠ on the schematics and on the parts list in this Service Manual.
The use of a substitute replacement component which dose not have the same safety characteristics as the PIONEER recommended replacement one, shown in the parts list in this Service Manual, may create shock, fire, or other hazards.

Product Safety is continuously under review and new instructions are issued from time to time. For the latest information, always consult the current PIONEER Service Manual. A subscription to, or additional copies of, PIONEER Service Manual may be obtained at a nominal charge from PIONEER.

2. EXPLODED VIEWS AND PARTS LIST

2.1 EXTERIOR

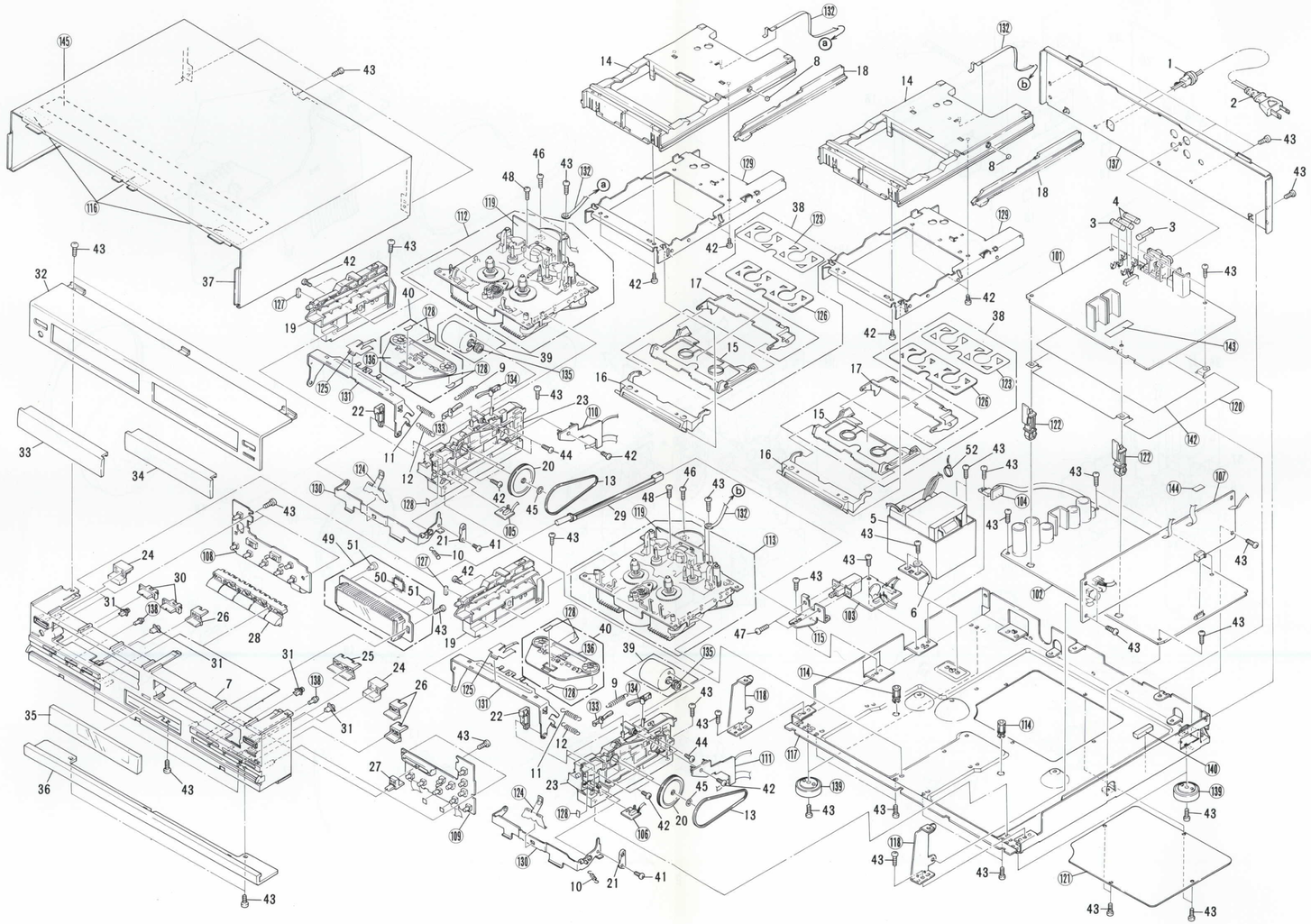

NOTES :

- Parts without part number cannot be supplied.
- The ⚠ mark found on some component parts indicates the impotance of the safety factor of the part. Therefore, when replacing, be sure to use parts of identical designation.
- Parts marked by "⊙" are not always kept in stock. Their delivery time may be longer than usual or they may be unavailable.

Parts List of Exterior

Mark	No.	Part No.	Description
⚠	1	CM−22C	Strain relief
⚠	2	PDG1002	AC power cord
⚠	3	REK−076	FU701, FU702 Fuse (400mA)
⚠	4	REK−081	FU703, FU704 Fuse (2A)
⚠	5	RTT1121	Power transformer
	6	RNH−184	Cord stopper
	7	RNT1067	Panel stay
	8	PBP−007	Steel ball ϕ 5
	9	RBH1235	Switch lever spring
	10	RBH1236	Release arm spring
	11	RBH1237	Clamp lever spring
	12	RBH1238	Clamp lever spring
	13	REB1107	Drive belt
	14	RNK1508	Tray
	15	RNK1509	Cassette plate
	16	RNK1510	Plate lever (F)
	17	RNK1511	Plate lever (R)
	18	RNK1512	Cam rack gear
	19	RNK1513	Loading base (L)
	20	RNK1517	Pulley gear
	21	RNK1519	Arm tip
	22	RNK1520	Clamp lever
	23	RXA1287	Loading base (R) assembly
	24	RAC1393	O/C knob
	25	RAC1396	Button (A)
	26	RAC1397	Button (B)
	27	RAC1401	VR knob
	28	RAC1403	Operation knob
	29	RAC1405	Power knob
	30	RAC1406	Slide knob
	31	RNK1486	Indicator lens (D)
	32	RAH1572	Front panel (Upper)
	33	RAH1573	Tray name plate (L)
	34	RAH1574	Tray name plate (R)
	35	RAH1670	Display cover
	36	RAH1575	Front panel (LW)
	37	RXX1243	Bonnet
	38	RXX1244	Cassette plate assembly
	39	RXX1245	Loading motor assembly
	40	RXX1246	Clamper base assembly
	41	BBZ20P040FMC	Screw
	42	BBZ26P060FMC	Screw
	43	BBZ30P080FZK	Screw
	44	PMZ30P080FMC	Screw
	45	WT16D032D025	Washer
	46	BBZ30P180FMC	Screw
	47	PMA30P060FMC	Screw
	48	BBZ30P060FMC	Screw
	49	RXA1280	LCD unit
	50	LC7582	IC
	51	REL1002	Lamp
	52	REC−371	Binder
	101		AMPW unit
	102		CONT unit
	103		PWSW unit
	104		PWTR unit
	105		MESW1 unit
	106		MESW2 unit
	107		RECA unit
	108		OPSW1 unit
	109		OPSW2 unit
	110		CNME1 unit
	111		CNME2 unit
	112		Mechanism unit (DECK I)
	113		Mechanism unit (DECK II)
	114		P.C.B. mold
	115		Switch angle
	116		Cushion
	117		Main chassis
	118		P.C.B. holder
	119		Shield plate
	120		Shield plate
	121		Under plate
	122		P.C.B. support
	123		Stabilizer panel
	124		Cassette pressure
	125		Clamper base spring
	126		Stabilizer sheet
	127		Stopper
	128		Clamp felt
	129		Tray base
	130		Release arm
	131		Clamp arm
	132		GND
	133		Switch lever (F)
	134		Switch lever (R)
	135		Motor pulley
	136		Clamper base
	137		Rear panel
	138		Indicator lens
	139		Insulator assembly
	140		Rubber spacer
	141		.....
	142		Shield sheet
	143		Shield tape
	144		Shield tape
	145		Absorber plate

Parts List of Mechanism Unit (Deck I)

Mark	No.	Part No.	Description
	1	RD ⅙PM181J	Resistor
	2	RKP1339	Wire connector (QS)
	3	RKP1340	Wire connector (PB)
	4	RLA1130	Shaft
	5	RLA1132	Planger
	6	RPB1035	PB head
	7	RSG1018	Push switch
	8	RXM1029	Motor assembly
	9	RXM1033	Motor assembly (Main)
	10	RXP1010	Solenoid
	11	SPI−320−AB	Quick sensor
	12	SPI33534FG	Photo transistor
	13	RBA−096	Screw
	14	REB−545	Cushion (Motor)
	15	RNK1530	Lead holder
	16	RXA1306	Hold plate assembly
	17	RBF1033	Washer (1.7×0.25)
	18	REC1002	Spacer
	19	RXA1304	Pulley
	20	WA21D040D025	Washer
	21	REB1112	Main belt
	22	REB1115	Main belt
	23	RXA1183	Pinch roller assembly
	24	RXA1295	Flywheel assembly
	25	RXA1296	Pinch roller assembly (L)
	26	RXA1303	Flywheel assembly
	27	RBA1076	Screw (2.6×6.4)
	28	RBF−057	Washer
	29	RXA1184	TU reel assembly
	30	RXA1248	Idler assembly
	31	PMZ14P050FNI	Screw
	32	WA21D070D013	Washer
	33	RBA1080	Azimuth screw
	34	RBK1029	Azimuth spring
	35	RBL−085	Rotation spring
	36	RBL1003	Head base spring
	37	RXA1293	Head housing assembly
	38	RBH1239	Slide spring
	39	RNK1525	Play arm
	40	RNK1526	Cam gear
	41	RNK1527	REC detection lever
	42	PBZ30P080FMC	Screw
	43	PRZ26P080FMC	Screw
	44	RBA1077	Screw (2.0×5)
	45	RBA1081	Screw (M2.6×25)
	46	RBA1082	Screw (2.6×4)
	47	REC−371	Binder
	48	WA26D045D025	Washer
	49	RNK1543	PACK detection lever
	101		P.C. Board
	102		Reflection plate
	103		Motor bracket
	104		Chassis assembly
	105		Head base
	106		Slide plate

2.2 MECHANISM UNIT (DECK I)

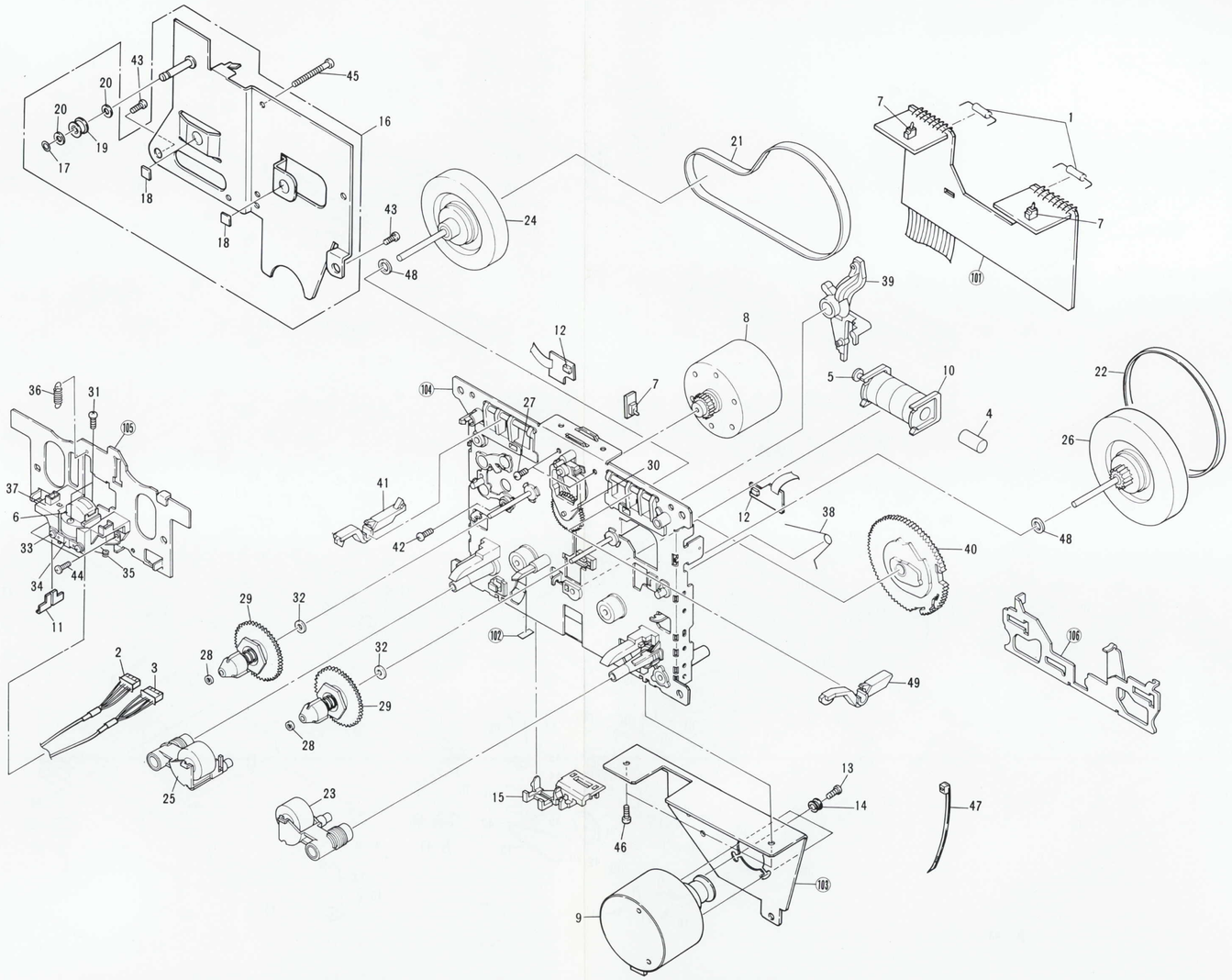

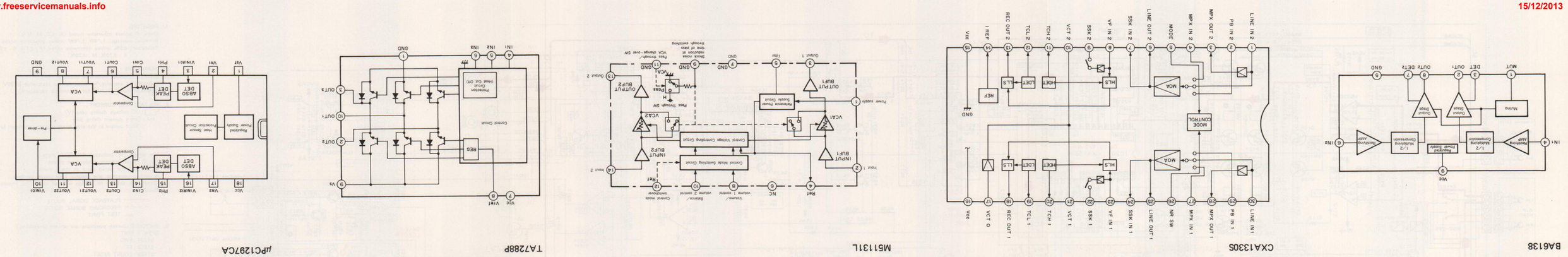

2.3 MECHANISM UNIT (DECK II)

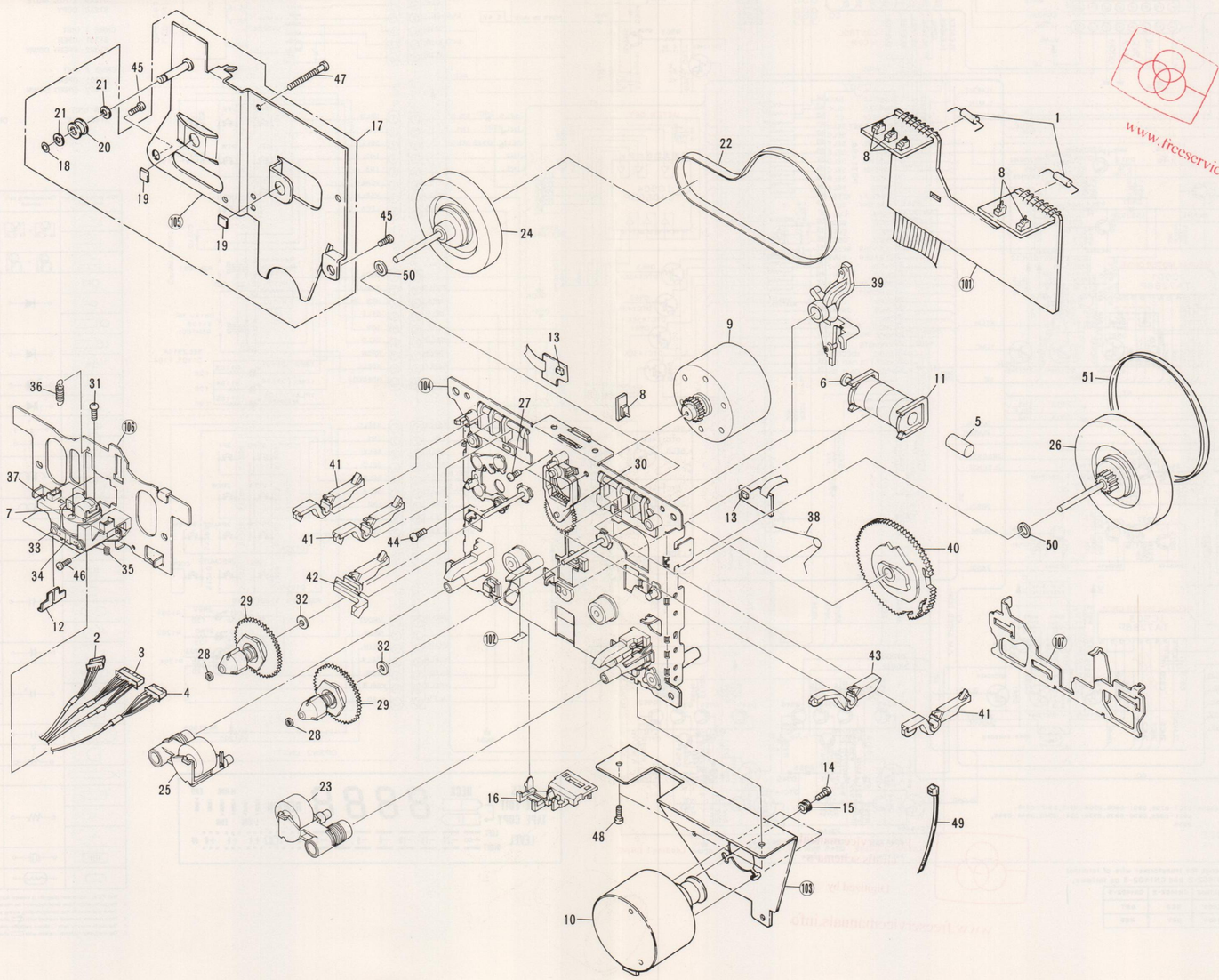

Parts List of Mechanism unit (Deck II)

Mark	No.	Part No.	Description
	1	RD ⅛PM181J	Resistor
	2	RKP1337	Wire connector (E)
	3	RKP1338	Wire connector (R/P)
	4	RKP1339	Wire connector (QS)
	5	RLA1130	Shaft
	6	RLA1132	Planger
	7	RPB1034	R/P, E head
	8	RSG1018	Push switch
	9	RXM1029	Motor assembly
	10	RXM1033	Motor assembly (Main)
	11	RXP1010	Solenoid
	12	SPI-320-AB	Quick sensor
	13	SPI33534FG	Photo transistor
	14	RBA-096	Screw
	15	REB-545	Cushion (Motor)
	16	RNK1530	Lead holder
	17	RXA1306	Hold plate assembly
	18	RBF1033	Washer (1.7×0.25)
	19	REC1002	Spacer
	20	RXA1304	Pulley
	21	WA21D040D025	Washer
	22	REB1112	Main belt
	23	RXA1183	Pinch roller assembly
	24	RXA1295	Flywheel assembly
	25	RXA1296	Pinch roller assembly (L)
	26	RXA1303	Flywheel assembly
	27	RBA1076	Screw (2.6×6.4)
	28	RBF-057	Washer
	29	RXA1184	TU reel assembly
	30	RXA1248	Idler assembly
	31	PMZ14P050FNI	Screw
	32	WA21D070D013	Washer
	33	RBA1080	Azimuth screw
	34	RBK1029	Azimuth spring
	35	RBL-085	Rotation spring
	36	RBL1003	Head base spring
	37	RXA1293	Head housing assembly
	38	RBH1239	Slide spring
	39	RNK1525	Play arm
	40	RNK1526	Cam gear
	41	RNK1527	REC detection lever
	42	RNK1529	Metal detection lever
	43	RNK1543	PACK detection lever
	44	PBZ30P080FMC	Screw
	45	PRZ26P080FMC	Screw
	46	RBA1077	Screw (2.0×5)
	47	RBA1081	Screw (M2.6×25)
	48	RBA1082	Screw (2.6×4)
	49	REC-371	Binder
	50	WA26D045D025	Washer
	51	REB1115	Main belt
	101		P.C. Board
	102		Reflection plate
	103		Motor bracket
	104		Chassis assembly
	105		Flywheel assembly
	106		Head base
	107		Slide plate

3. SCHEMATIC DIAGRAM

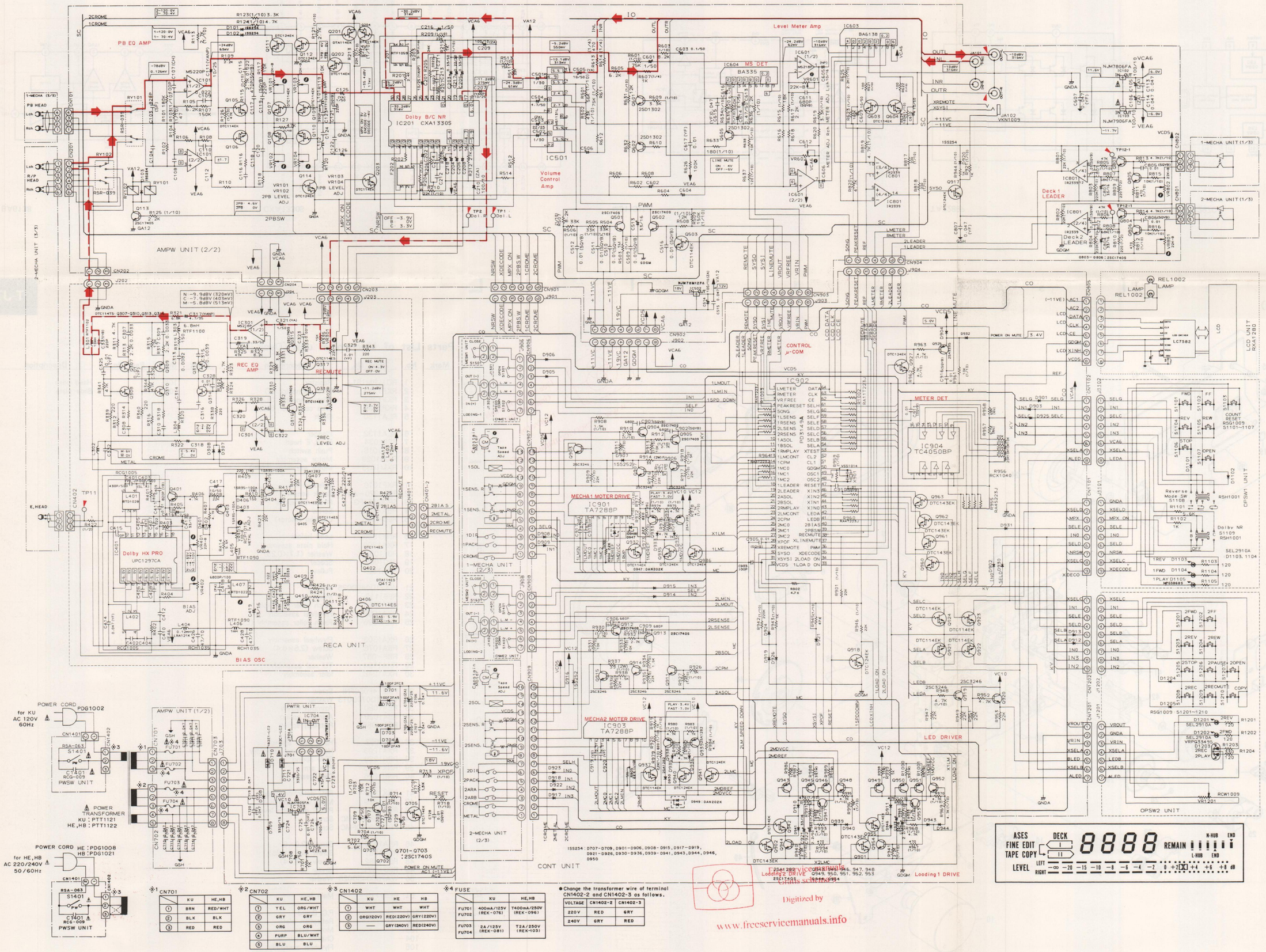

1. RESISTORS :
Units : Ω unless otherwise noted (K : kΩ, M : MΩ)
Norminal wattage : 1/4W, 1/6W unless otherwise noted
Tolerance : ±5% unless otherwise noted (F : ±1%, G : ±2%, K : ±10%, M : ±20%)

2. CAPACITORS :
Units : μF unless otherwise noted (P : pF)
Indicated as capacity/voltage ; voltage resistance is 50V unless otherwise noted (except for electrolytic capacitors)

3. VOLTAGE AND CURRENT :
▭ : DC voltage during play (V)
mA : Direct current diring play
( ) Direct current in the stop mode is shown between brackets

4. OTHERS
The arrows (➡) indicated the signal route.
The ⊘ marks indicate adjustment points.
Always use the noted parts at the ⚠ marks.
※ marked capacitor and resistor have parts numbers.
Circuits are subject to change without notice for improvement purposes.
PLAYBACK SIGNAL ROUTE
RECORDING SIGNAL ROUTE
TEST POINT

5. SWITCHES (Switch positions are shown underlined.)
OPSW 1 UNIT
S1101 : FWD
S1102 : FF
S1103 : COUNT RESET
S1104 : REV
S1105 : REW
S1106 : STOP
S1107 : OPEN
S1108 : REVERSE MODE ⇄ ⇉ ⊖
S1109 : DOLBY NR B–OFF–C

OPSW 2 UNIT
S1201 : 2 FWD
S1202 : 2 FF
S1203 : 2 REV
S1204 : 2 REW
S1205 : 2 STOP
S1206 : 2 PAUSE
S1207 : 2 OPEN
S1208 : 2 REC
S1209 : 2 REC MUTE
S1210 : COPY

CNME 1 UNIT
S1301 : OPEN
S1302 : SPEED DOWN

CNME 2 UNIT
S1401 : OPEN
S1402 : SPEED DOWN

PWSW UNIT
S1401 : PW ON–OFF

P.C.B. pattern diagram indication	Corresponding part symbol	Part name
		Transistor
		FET
		Diode
		Zenner diode
		LED
		Varactor
		Tact switch
		Inductor
		Coil
		Transformer
		Filter
		Ceramic capacitor
		Mylar capacitor
		Styrol capacitor
		Electrolytic capacitor (Non polarized)
		Electrolytic capacitor (Noseless)
		Electrolytic capacitor (Polarized)
		Electrolytic capacitor (Polarized)
		Power capacitor
		Semi-fixed resistor
		Resistor array
		Resistor
		Resonator
		Thermistor

1. This P.C.B. connection diagram is viewed from the parts mounted side.
2. The parts which have been mounted on the board can be replaced with those shown with the corresponding wiring symbols listed in the above Table.
3. The capacitor terminal marked with ⊂⊃ shows negative terminal.
4. The diode marked with ▷ shows cathode side.
5. The transistor terminal marked with ▭ shows emitter.

※1 CN701

	KU	HE,HB
①	BRN	RED/WHT
②	BLK	BLK
③	RED	RED

※2 CN702

	KU	HE,HB
①	YEL	ORG/WHT
②	GRY	GRY
③	ORG	ORG
④	PURP	BLU/WHT
⑤	BLU	BLU

※3 CN1402

	KU	HE	HB
①	WHT	WHT	WHT
②	ORG(120V)	RED(220V)	GRY(220V)
③	—	GRY(240V)	RED(240V)

※4 FUSE

	KU	HE,HB
FU701 FU702	400mA/125V (REK-076)	T400mA/250V (REK-096)
FU703 FU704	2A/125V (REK-081)	T2A/250V (REK-103)

● Change the transformer wire of terminal CN1402-2 and CN1402-3 as follows.

VOLTAGE	CN1402-2	CN1402-3
220V	RED	GRY
240V	GRY	RED

4. P.C. BOARDS CONNECTION DIAGRAM

- View from component side

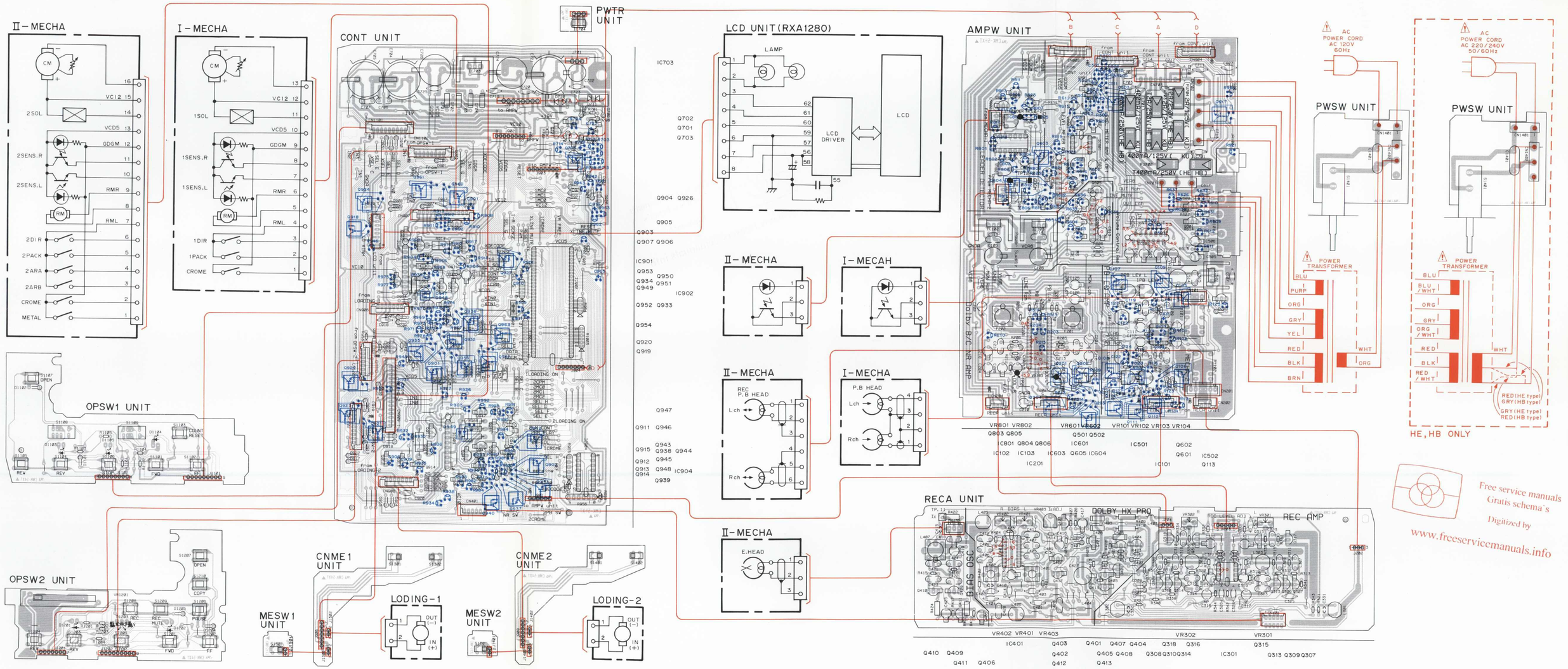

4. P.C. BOARDS CONNECTION DIAGRAM

• View from soldering side

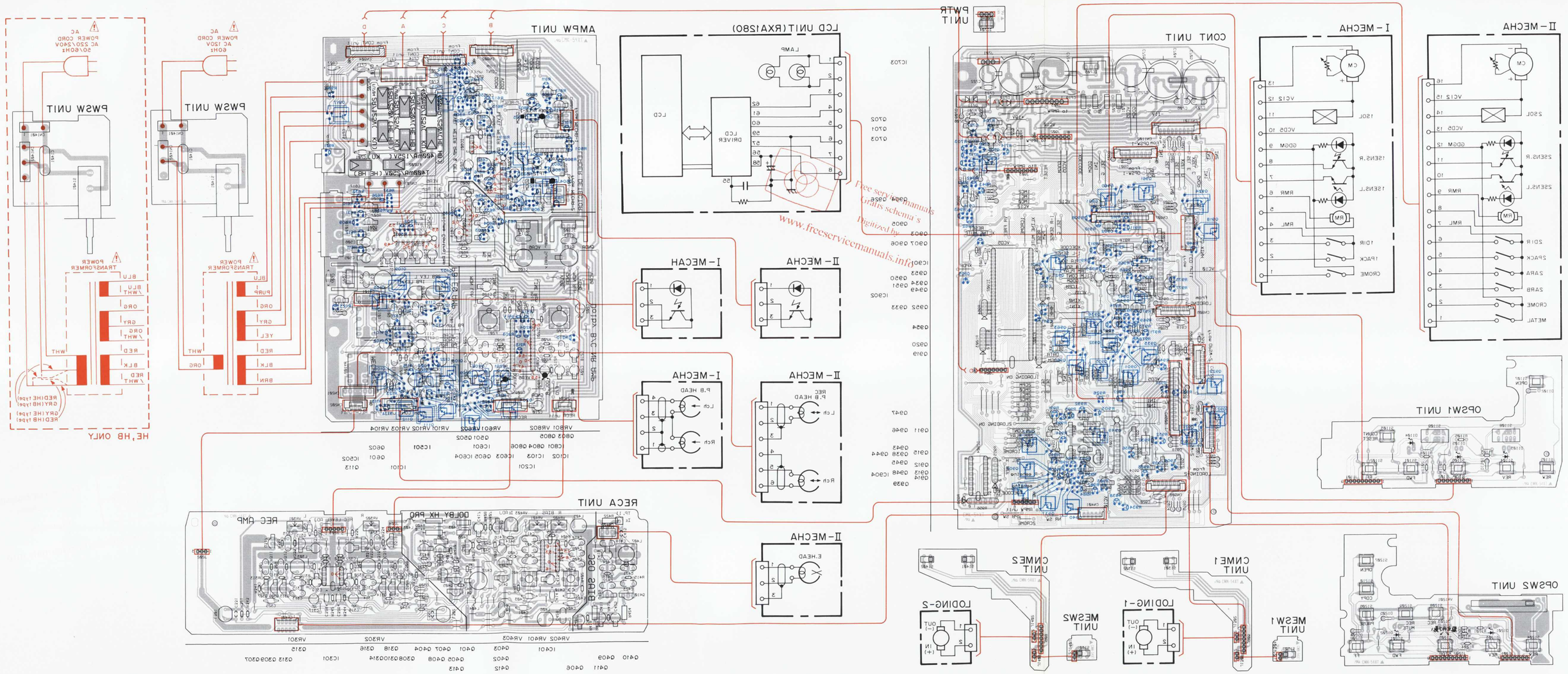

5. PACKING

Parts List

Mark	No.	Part No.	Description
	1	RHA1040	Pad (F)
	2	RHA1041	Pad (R)
	3	RHG1158	Packing case
	4	RHX-034	Sheet
	5	RDE1023	Control cord (S)
	6	RRB1056	Operating instructions (English)
	7	RDE1025	Connection cord
	101		Connection cord assembly

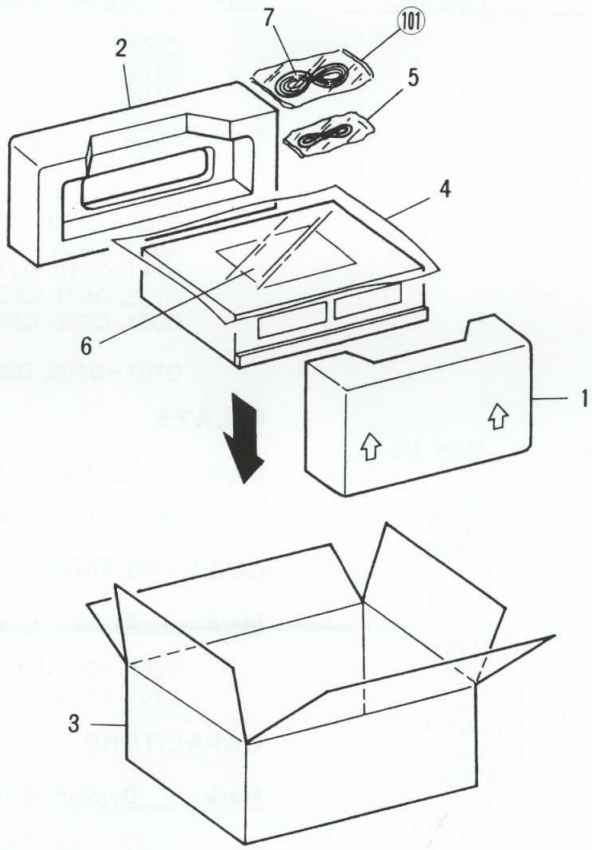

6. ELECTRICAL PARTS LIST

NOTES :

- Parts without part number cannot be supplied.
- Parts marked by "⊙" are not always kept in stock. Their delivery time may be longer than usual or they may be unavailable.
- The ⚠ mark found on some component parts indicates the impotance of the safety factor of the part. Therefore, when replacing, be sure to use parts of identical designation.
- When ordering resistors, first convert resistance values into code form as shown in the following examples.

Ex.1 When there are 2 effective digits (any digit apart from 0), such as 560 ohm and 47k ohm (tolerance is shown by J=5%, and K=10%).

560 Ω	56×10^1	561	RD1/4PS 5 6 1 J
47k Ω	47×10^3	473	RD1/4PS 4 7 3 J
0.5 Ω	0R5		RN2H 0 R 5 K
1 Ω	010		RS1P 0 1 0 K

Ex.2 When there are 3 effective digits (such as in high precision metal film resistors).

5.62k Ω	562×10^1	5621	RN1/4SR 5 6 2 1 F

Miscellaneous Parts

P.C. BOARD ASSEMBLIES

Mark	Symbol & Description	Part No.
	AMPW unit	
	CONT unit	
	PWSW unit	
	PWTR unit	
	MESW1 unit	
	MESW2 unit	
	RECA unit	
	OPSW1 unit	
	OPSW2 unit	
	CNME1 unit	
	CNME2 unit	

OTHERS

Mark	Symbol & Description	Part No.
⚠	Strain relief	CM-22C
⚠	AC power cord	PDG1002
⚠	FU701, FU702 Fuse (400mA/125V)	REK-076
⚠	FU703, FU704 Fuse (2A/125V)	REK-081
⚠	Power transformer	RTT1121
	Loading motor assembly	RXX1245
	LCD unit	RXA1280
	IC	LC7582
	Lamp	REL1002

AMPW Unit

SEMICONDUCTORS

Mark	Symbol & Description	Part No.
	IC604	BA335
	IC603	BA6138
	IC201	CXA1330S
	IC801	IR2339
	IC501	M51131L
	IC601	M5218P
	IC101	M5220P
⚠	IC102	NJM7806FA
⚠	IC502	NJM78M12FA
⚠	IC103	NJM7906FA
	Q201, Q204	DTA114EK
	Q105-Q110, Q202, Q203, Q503 Q603, Q604	DTC114EK
	Q111, Q112, Q114, Q917	DTC124EK
	Q113, Q501, Q502, Q803-Q806	2SC1740S
	Q601, Q602, Q605	2SD1302
	D101-D103, D920	1SS254

RELAYS

Mark	Symbol & Description	Part No.
	RY101, RY102 Relay	RSR-039

COILS · FILTERS

Mark	Symbol & Description	Part No.
	F201, F202 MPX filter	RTF1059
	L101, L102 Coil (5.6mH)	RTF1099

CAPACITORS

Mark	Symbol & Description	Part No.
	C107, C108 (Tip capacitor)	CCSQCH101J50
	C605, C606	CEANP100M16
	C603, C604, C614, C616	CEASR10M50
	C217, C218	CEASR22M50
	C203-C206	CEASR33M50
	C613	CEASR47M50
	C216, C601, C602	CEAS010M50
	C609, C610	CEAS100M50
	C513, C803, C804	CEAS330M16
	C504	CEAS4R7M50

Mark	Symbol & Description	Part No.
	C111, C112, C201, C202, C207, C208	CEYANP100M25
	C125, C126, C501, C502	CEYA010M50
	C505, C506	CEYA100M50
	C105, C106, C209, C210	CEZA101M10
	C514	CEZA101M16
	C503	CEZA220M25
	C211–C214	CFTXA222J50
	C109, C110, C115, C116	CFTXA223J50
	C113, C114, C515	CFTXA473J50
	C617	CKCYF103Z50
	C607, C615, C701–C703, C710–C714, C807	CKCYF473Z50
	C509–C512, C516, C801, C802, C805, C806	CKSQYB103K50
	C119–C122 (Chip capacitor)	CKSQYB221K50
	C123, C124 (Chip capacitor)	CKSQYB391K50
	C117, C118 (Chip capacitor)	CKSQYB471K50
	C611, C612 (Chip capacitor)	CKSQYB681K50
	C103, C104	CQSF821J50

RESISTORS

Mark	Symbol & Description	Part No.
	R809, R810	RD½LF221J
	VR101–VR104, VR601, VR602, VR801, VR802 Semi-fixed (22k)	VRTB6VS223
	R607, R608, R613, R614	RDR¼PM□□□J
	R105–R110, R117–R120, R201, R202, R205–R208, R212, R511, R512, R605, R606	RD⅙PM□□□J
	Other resistors (Chip resistor)	RS 1/10 S□□□J

OTHERS

Mark	Symbol & Description	Part No.
	CN703 Jumper connector 8P	KPC8
	JA101 Pin jack 4P	RKB1003
	JA102 Stereo mini headphone jack	VKN1009

CONT Unit

SEMICONDUCTORS

Mark	Symbol & Description	Part No.
⚠	IC703	NJM7805FA
	IC902	PD3149A
	IC901, IC903	TA7288P
	IC904	TC4050BP
	Q705, Q921–Q924, Q932, Q937, Q942, Q955	DTC114EK
	Q918, Q927, Q935, Q936, Q940, Q941	DTC124EK
	Q901, Q902, Q960–Q963	DTC143EK
	Q933, Q934, Q938, Q939, Q943, Q945–Q953	2SA1282
	Q926	2SA933S
	Q701–Q703, Q904, Q905, Q912, Q913, Q944, Q954	2SC1740S
	Q903, Q906, Q907, Q911, Q914, Q915, Q919, Q920	2SC3246
⚠	D706	MTZ3.6B
⚠	D711	1B2C1–LC2
⚠	D710	1B2Z1–LC2
	D907, D916	1SS252
	D947(D948), D949 (Chip diode array)	DAN202K
	D707–D709, D901–D906, D908–D915, D917–D919, D921–D926, D930–D936, D939–D941, D943, D944, D946, D950	1SS254
⚠	D702, D704	10DF2FA9
⚠	D701, D703	10DF2FC3

CAPACITORS

Mark	Symbol & Description	Part No.
	C708	CEAS010M50
	C729	CEAS100M50
	C921, C923	CEAS330M16
	C922, C924	CEAS2R2M50
	C724	CEAS332M16
	C721	CEAS332M25
	C709	CEAS4R7M50
	C722	CEAS471M16
	C726	CEAS472M6R3
	C704, C705	CEZA222M25
	C706, C707	CFTXA473J50
	C723, C725, C917, C918–C920	CKCYF103Z50
	C719, C720	CKCYF473Z50
	C727, C728, C905, C910, C911, C916 (Chip capacitor)	CKSQYB103K50
	C901, C902, C906, C909 (Chip capacitor)	CKSQYB681K50
	C903	CCCCH101J50

RESISTORS

Mark	Symbol & Description	Part No.
	R1002	RA11T223J
	R964	RA3T223J
	R955	RA4S223J
	R960	RA4T223J
	R1003	RA5T223J
	R956 R/2R Rudder resistor (10k)	RCX1040
	R986, R998	RS1LMF010J
	R988, R989, R1000, R1001	RS1LMF390J
	R914, R937	RS2LMF390J
	R957, R958	RN⅙PQ□□□□F
	R701, R702, R902, R947, R949, R951–R953, R987, R999	RD⅙PM□□□J
	Other resistors (Chip resistor)	RS 1/10 S□□□J

OTHERS

Mark	Symbol & Description	Part No.
	X901 Ceramic resonator	VSS1014

PWSW Unit

SWITCH

Mark	Symbol & Description	Part No.
⚠	S1401 Power switch (POWER)	RSA-063

CAPACITOR

Mark	Symbol & Description	Part No.
⚠	C1401 (0.047 μ)	RCG-009

PWTR Unit

SEMICONDUCTOR

Mark	Symbol & Description	Part No.
⚠	IC704	NJM78M12FA

MESW1 Unit

SWITCH

Mark	Symbol & Description	Part No.
	S1501 Push switch (OPEN/CLOSE)	PSH1008

MESW2 Unit

SWITCH

Mark	Symbol & Description	Part No.
	S1601 Push switch (OPEN/CLOSE)	PSH1008

RECA Unit

SEMICONDUCTORS

Mark	Symbol & Description	Part No.
	IC301	M5218P
	IC401	UPC1297CA
	Q412	DTA114ES
	Q317, Q318, Q402, Q405, Q406, Q408, Q413	DTC114ES
	Q307-Q310, Q313, Q314	DTC114TS
	Q315, Q316	2SC1740S
	Q404, Q407	2SA1282
	Q401, Q403	2SA933S
	Q409-Q411	2SC3243
	D403, D405, D406	1SR35-100A
	D307, D308, D401, D402, D407	1SS254

COILS

Mark	Symbol & Description	Part No.
	L403, L404 Radial inductor	LRA121K
	L407 Oscillator coil	RTD1022
	L401, L402 Step-up coil	RTD1028
	L405, L406 Coil (1mH)	RTF1090
	L303, L304 Coil (6.8mH)	RTF1100
	L301, L302 Coil (10mH)	RTF1102

CAPACITORS

Mark	Symbol & Description	Part No.
	C403, C404	CCCSL101K500
	C417	CEAS100M50
	C427	CEAS221M10
	C413, C419	CEAS330M16
	C416, C425	CEAS4R7M50
	C317, C318	CEYANP4R7M35
	C319, C320	CEYAR33M50
	C321, C322	CEYA010M50
	C411, C412	CFTXA103J50
	C323, C324	CFTXA182J50
	C407, C408, C421	CFTXA223J50
	C307-C310, C423, C424	CFTXA332J50
	C315, C316	CFTXA392J50
	C405, C406	CFTXA473J50
	C422	CFTXA682J50
	C313, C314	CFTXA822J50
	C325, C326, C328, C329	CKCYF103Z50
	C414	CKCYF473Z50
	C415	CKPUYB101K50
	C331, C332	CKPUYB221K50
	C409, C410	CKPUYB821K50
	C418	CQPA682J100
	C401, C402 (430p/500)	RCG1005
	C426, C428 (47 μ F/10V)	RCH1035

RESISTORS

Mark	Symbol & Description	Part No.
	VR403 (100 Ω -B)	RCP1015
	R410	RS1LMF151J
	R409	RS1LMF221J
	VR301, VR302, VR401, VR402 Semi-fixed (22k)	VRTB6HS223
	R422, R424, R426	RD½LF□□□J
	Other resistors	RD⅙PM□□□J

OPSW1 Unit

SEMICONDUCTORS

Mark	Symbol & Description	Part No.
	D1105	MPG3868S
	D1103, D1104	SEL2910A
	D1101, D1102	1SS254

SWITCHES

Mark	Symbol & Description	Part No.
	S1101-S1107 Tact switch (►, ►►, TAPE COUNTER RESET, ◄, ◄◄, ■, OPEN/CLOSE)	RSG1009
	S1108, S1109 Slide switch (REVERSE MODE, DOLBY NR)	RSH1001

RESISTORS

Mark	Symbol & Description	Part No.
	All resistors	RD⅙PM□□□J

OPSW2 Unit

SEMICONDUCTORS

Mark	Symbol & Description	Part No.
	D1201, D1202	SEL2910A
	D1203	VRPG3349S
	D1204, D1205	1SS254

SWITCHES

Mark	Symbol & Description	Part No.
	S1201–S1210 Tact switch (►, ►►, ◄, ◄◄, PAUSE, OPEN/CLOSE, REC, MUTE, COPY)	RSG1009

RESISTORS

Mark	Symbol & Description	Part No.
	VR1201 Slide VR (100kB) (REC LEVEL)	RCW1009
	Other resistors	RD ⅙ PM□□□J

CNME1 Unit

SWITCHES

Mark	Symbol & Description	Part No.
	S1301, S1302 Push switch	PSH1008

CNME2 Unit

SWITCHES

Mark	Symbol & Description	Part No.
	S1401, S1402 Push switch	PSH1008

7. ADJUSTMENTS

7.1 MECHANICAL ADJUSTMENT

1. Tape Speed Adjustment

Mode	Test tape	Adjustment position	Specification rating (playback frequency)
PLAY	Play the STD-301 tape (3kHz)	Capstan motor adjustment control	3000Hz ±5Hz

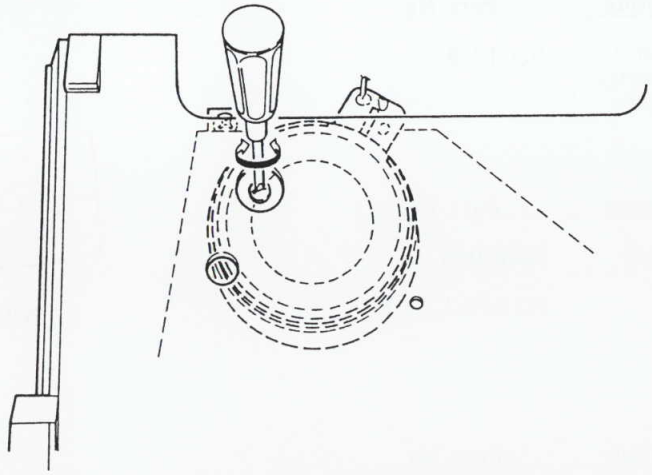

Fig. 7-1

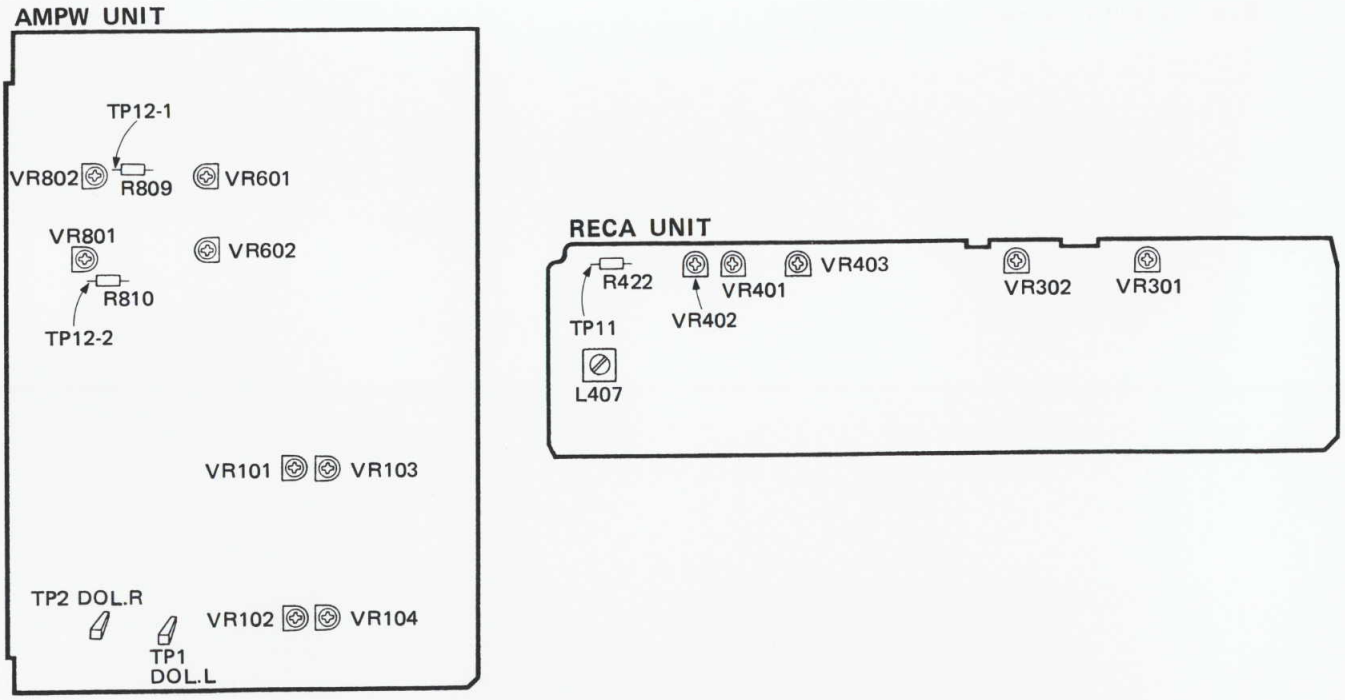

Fig. 7-2 Adjusting Points

7.2 ELECTRICAL ADJUSTMENTS

Adjustment Conditions

1. The mechanical adjustments must be completed first.
2. The head must be cleaned and demagnetized.
3. Turn power on allow the deck to warm up for at least a few minutes before commencing any electrical adjustments.
4. The reference signal is 0dBv=1Vrms.
5. Connect a 50 kΩ (or between 47k to 52 kΩ) load resistance to the output terminals.
6. Unless otherwise specified, the DOLBY NR switches are set to OFF.

Test Tapes

STD-331B	: Playback adjustments (See Fig. 7-3)
STD-630	: NORMAL blank tape
STD-620	: CrO_2 blank tape
STD-610	: METAL blank tape

Playback sections

1. Head azimuth adjustment.
2. Playback level adjustment.

Recording sections

1. Bias oscillator adjustment.
2. Erase current adjustment.
3. Recording bias adjustment.
4. Recording level adjustment.
5. Level meter adjustment.
6. Leader tape detection operation adjustment.

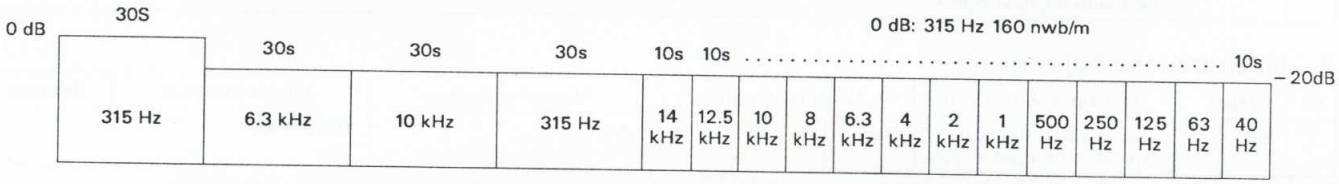

Fig. 7-3 Constants of the test tape STD-331B

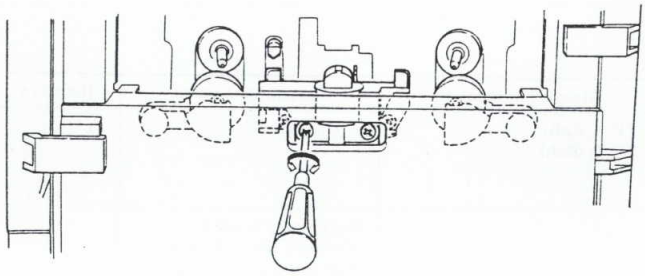

Fig. 7-4 Head azimuth adjustment

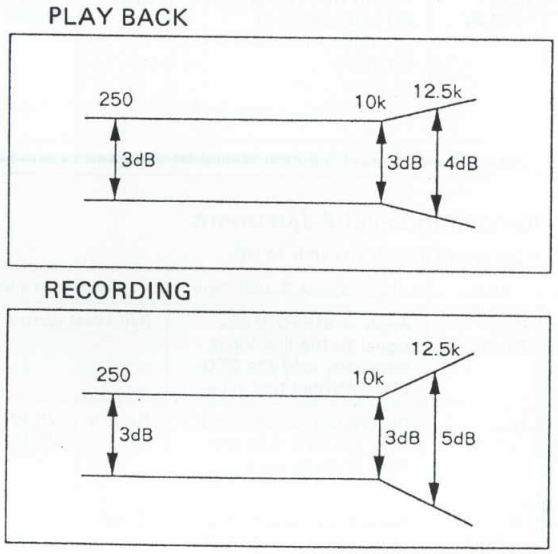

Fig. 7-5 Frequency response zone

PLAYBACK SECTION

1. Head Azimuth Adjustment

• Turn VR103, 104 (Deck I) or VR101, 102 (Deck II) to mechanical center positions.

No.	Mode	Input signal & test tape	Adjustment location	Measuring location	Adjustment value	Remarks
1.	PLAY	Play the 10 kHz/−20 dB section of STD-331B test tape.	Head azimuth adjustment screw. (See Fig. 7-4)	LINE OUT L/R terminals	Maximum playback signal level.	(both FWD and REV)
2.	STOP	Lock the screw with screw lock after completing adjustment.				

2. Playback level Adjustment

• This adjustment must be performed with great care, as it determines the DOLBY NR level.

No.	Mode	Input signal & test tape	Adjustment location		Measuring location	Adjustment value	Remarks
1.	PLAY	Play the 315 Hz/0 dB section of the STD-331B test tape.	Deck I	VR103 (Lch) VR104 (Rch)	TP. 1 (Lch) TP. 2 (Rch)	−10.7 dBv	
			Deck II	VR101 (Lch) VR102 (Rch)			

RECORDING SECTION

1. Bias Oscillator Adjustment

No.	Mode	Input signal & test tape	Adjustment location		Measuring location	Adjustment value	Remarks
1.	REC	Load the STD-610 test tape with no input signal.	Deck II	L 407	TP. 11	105 kHz $^{+3\ kHz}_{-1\ kHz}$	

2. Erase Current Adjustment

No.	Mode	Input signal & test tape	Adjustment location		Measuring location	Adjustment value	Remarks
1.	REC	Load the STD-610 test tape with no input signal.	Deck II	VR403	TP. 11	165 mV AC	

3. Recording Bias Adjustment

No.	Mode	Input signal & test tape	Adjustment location		Measuring location	Adjustment value	Remarks
1.	REC/ PAUSE	Apply a 315 Hz/−20 dBv signal to the line input terminals, load the STD-630 (Normal) test tape.			LINE OUT L/R terminals		
2.	REC → PLAY	Record the 315 Hz and 6.3 kHz signals at −20 dBv input level and playback.	Deck II	VR401 (Lch) VR402 (Rch)		Repeatedly record, playback and adjust so that the playback level of 6.3 kHz signal becomes +1.0 dB ± 0.5 dB when compared with the 315 Hz signal.	
3.	After the adjustment, caution should be exercised to avoid under bias by checking the distortion rate.						

4. Recording Level Adjustment

• Set the DOLBY NR switch to ON.

No.	Mode	Input signal & test tape	Adjustment location		Measuring location	Adjustment value	Remarks
1.	REC/ PAUSE	Apply a 315 Hz/0 dBv signal to the line Input terminals, load the STD-630 (Normal) test tape.	Rec Level control volume		TP. 1 (Lch) TP. 2 (Rch)	−11.2 dBv	
2.	REC →PLAY	Record the above signal onto the STD-630 test tape, and playback.	Deck II	VR301 (Lch) VR302 (Rch)	TP. 1 (Lch) TP. 2 (Rch)	Repeatedly record, playback and adjust so that the playback signal level becomes −11.2dBv.	
3.	REC →PLAY	Record the above signal onto the STD-620 (CrO_2) test tape, and playback.	Check			−11.2 dBv ± 1.5 dB	
4.	REC →PLAY	Record the above signal onto the STD-610 (Metal) test tape, and playback.	Check			−11.2 dBv ± 1.5 dB	

5. Level Meter Adjustment

• This adjustment must be performed with great care as it determines the automatic recording level.

No.	Mode	Input signal & test tape	Adjustment location		Measuring location	Adjustment value	Remarks
1.	REC/ PAUSE	Apply a 315 Hz/ – 10 dBv (316 mV) signal to the Line Input terminals.	Deck II	VR601 (Lch) VR602 (Rch)	TP. 1 (Lch) TP. 2 (Rch)	Check that the level indicators "0 dB" light up at – 11.2 dBv.	

6. Leader Tape Detection Operation Adjustment

No.	Mode	Input signal & test tape	Adjustment location		Measuring location	Adjustment value	Remarks
1.	PLAY	No input-load an empty cassette half.	Deck I	VR802	TP. 12-1	1.0V ± 0.1V (DC)	
			Deck II	VR801	TP. 12-2		
2.	Check that the leader tape detection operation is correctly performed (inboth FWD and REV directions when in endless reverse mode).						

7. RÉGLAGE

7.1 RÉGLAGES MÉCANIQUES

1. Réglage de la vitesse de défilement de la bande

Mode	Bande d'essai	Position de réglage	Spécifications nominales (fréquence de lecture)
PLAY	Reproducre la bande STD-301 (3kHz)	Contrôle à du réglage du moteur de cabestar	3000Hz ±5Hz

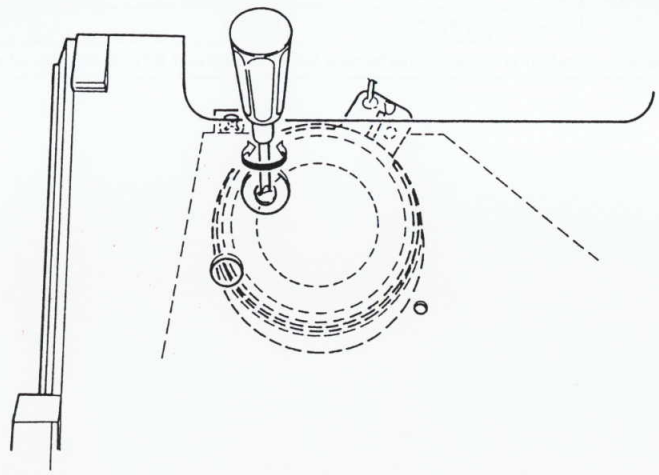

Fig. 7-1

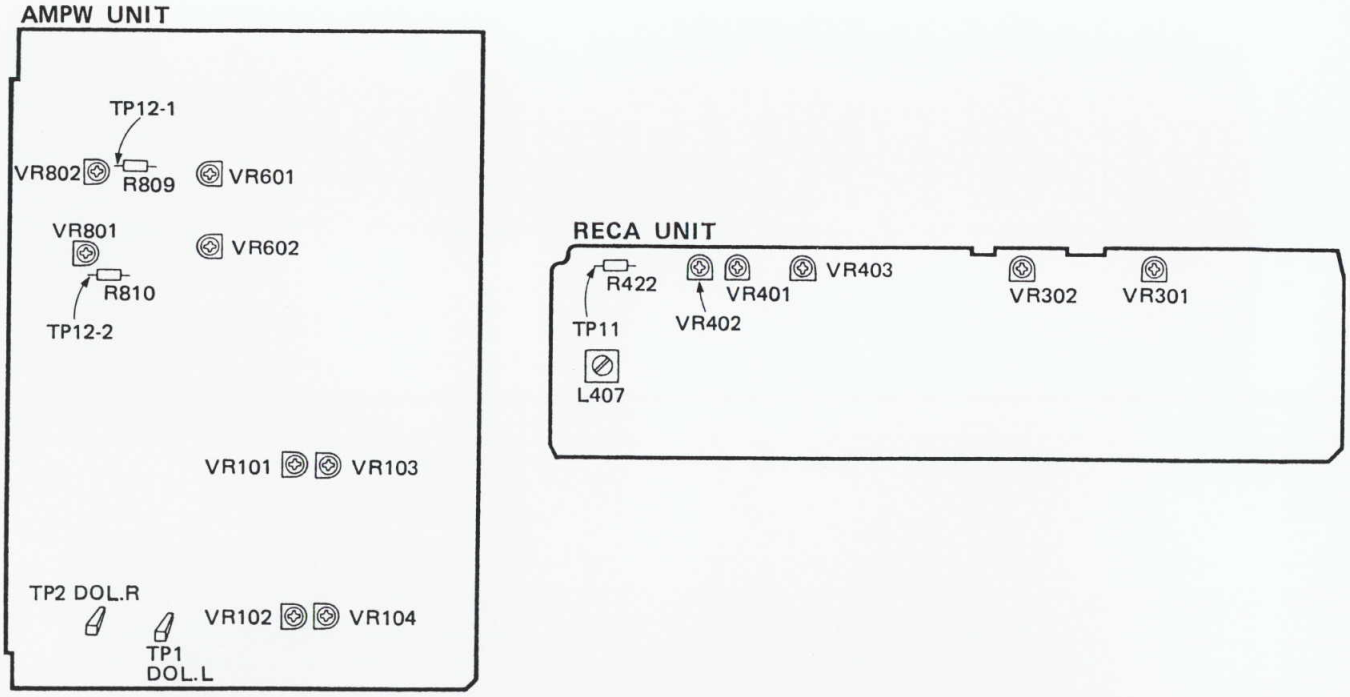

Fig. 7-2 Points de réglage

7.2 REGLAGES ELECTRIQUES

Conditions de réglage

1. Les réglages mécaniques doivent tout d'abord être terminés.
2. La tête doit être nettoyée et démagnétisée.
3. Mettre la platine sous tension et la laisser chauffer pendant au moins quelques minutes avant de commencer les réglages électriques.
4. Le signal de référence est 0 dBv=1 Vrms.
5. Connecter une résistance de charge de 50 kΩ (ou de 47kΩ à 52 kΩ) aux bornes de sortie.
6. Sauf indication contraire, les commutateurs DOLBY NR doivent être réglés sur la position OFF.

Bandes d'essai

STD-331B	: Réglages de la lecture (Voir Fig. 7-3)
STD-630	: Bande vierge de type normal
STD-620	: Bande vierge de type chrome
STD-610	: Bande vierge de type métal

Sections de lecture

1. Réglage de l'azimut de la tête.
2. Réglage du niveau de lecture.

Sections d'enregistrement

1. Réglage de l'oscillateur de polarisation.
2. Réglage du courant d'effacement.
3. Réglage de la polarisation d'enregistrement.
4. Réglage du niveau d'enregistrement.
5. Réglage de l'indicateur de niveau.
6. Réglage du fonctionnement de la détection de bande amorce.

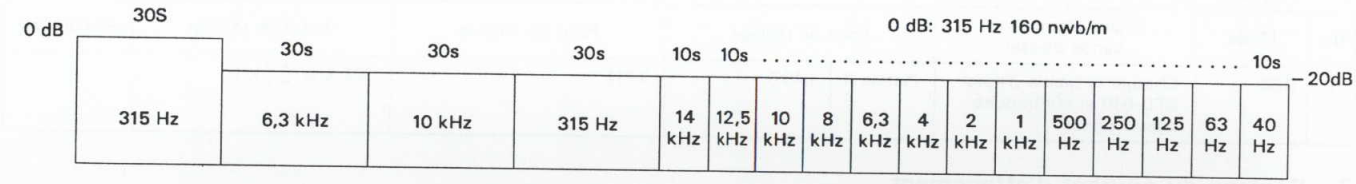

Fig. 7-3 Constantes de la bande d'essai STD-331B

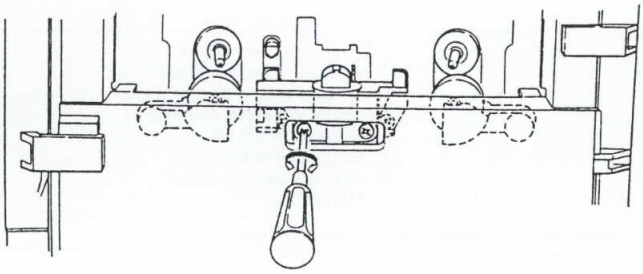

Fig. 7-4 Réglage de l'azimut de la tête

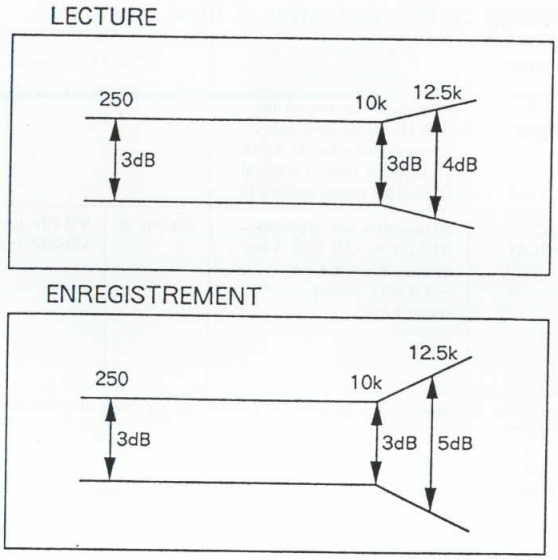

Fig. 7-5 Zone de réponse en fréquence

SECTION DE LECTURE

1. Réglage de l'azimut de la tête

• Tourner VR103, 104 (Platine I) ou VR101, 102 (Platine II) sur leur position centrale mécanique.

No.	Mode	Signal d'entrée et bande d'essai	Point de réglage	Point de mesure	Valeur de réglage	Remarques
1.	PLAY	Reproduire la section 10 kHz/ – 20 dB de la bande d'essai STD-331B.	Vis de réglage de l'azimut de la tête. (Voir Fig. 7-4)	Bornes G/D de sortie de ligne (LINE OUT L/R)	Niveau du signal de lecture maximum.	(A la fois en sens avant (FWD) et en sens inverse (REV))
2.	STOP	Verrouiller la vis avec le verrouillage de vis après avoir terminé le réglage.				

2. Réglage du niveau de lecture

• Ce réglage doit être effectué avec beaucoup de soin, car il détermine le niveau DOLBY NR.

No.	Mode	Signal d'entrée et bande d'essai	Point de réglage		Point de mesure	Valeur de réglage	Remarques
1.	PLAY	Reproduire la section 315 Hz/0 dB de la bande d'essai STD-331B.	Platine I	VR103 (can. G) VR104 (can. D)	TP.1 (can. G) TP.2 (can. D)	– 10,7 dBv	
			Platine II	VR101 (can. G) VR102 (can. D)			

SECTION D'ENREGISTREMENT

1. Réglage de l'oscillateur de polarisation

No.	Mode	Signal d'entrée et bande d'essai	Point de réglage		Point de mesure	Valeur de réglage	Remarques
1.	REC	Charger la bande d'essai STD-610 et n'introduire aucun signal.	Platine II	L407	TP.11	105 kHz $^{+3}_{-1}$ kHz	

2. Réglage du courant d'effacement

No.	Mode	Signal d'entrée et bande d'essai	Point de réglage		Point de mesure	Valeur de réglage	Remarques
1.	REC	Charger la bande d'essai STD-610 et n'introduire aucun signal.	Platine II	VR403	TP.11	165 mV CA	

3. Réglage de la polarisation d'enregistrement

No.	Mode	Signal d'entrée et bande d'essai	Point de réglage		Point de mesure	Valeur de réglage	Remarques
1.	REC/ PAUSE	Appliquer un signal de 315 Hz/ – 20 dBv aux bornes d'entrée de ligne, charger la bande d'essai STD-630 (type normal).			Bornes G/D de sortie de ligne (LINE OUT L/R)		
2.	REC →PLAY	Enregistrer les signaux 315 Hz et 6,3 kHz à un niveau d'entrée de – 20 dBv et les reproduire.	Platine II	VR401 (can. G) VR402 (can. D)		Enregistrer, reproduire et régler de manière répétée de sorte que le niveau de lecture du signal 6,3 kHz devienne + 1,0 dB ± 0,5 dB lorsqu'il est comparé avec le signal 315 Hz.	
3.	Après le réglage, des précautions doivent être prises afin d'éviter une sous-polarisation en vérifiant le taux de distorsion.						

4. Réglage du niveau d'enregistrement

• Régler le commutateur DOLBY NR sur la position ON.

No.	Mode	Signal d'entrée et bande d'essai	Point de réglage		Point de mesure	Valeur de réglage	Remarques
1.	REC/ PAUSE	Appliquer un signal de 315 Hz/0 dBv aux bornes d'entrée de ligne, charger la bande d'essai STD-630 (type normal).	Volume de la commande de niveau d'enregistrement.		TP.1 (can. G) TP.2 (can. D)	– 11,2 dBv	
2.	REC →PLAY	Enregistrer le signal ci-dessus sur la bande d'essai STD-630 et le reproduire.	Platine II	VR301 (can. G) VR302 (can. D)	TP.1 (can. G) TP.2 (can. D)	Enregistrer, reproduire et régler de manière répétée de sorte que le niveau du signal de lecture devienne – 11,2 dBv.	
3.	REC/ →PLAY	Enregistrer le signal ci-dessus sur la bande d'essai STD-620 (type chrome) et le reproduire.	Vérifier			– 11,2 dBv ± 1,5 dB	
4.	REC →PLAY	Enregistrer le signal ci-dessus sur la bande d'essai STD-610 (type métal) et le reproduire.	Vérifier			– 11,2 dBv ± 1,5 dB	

5. Réglage de l'indicateur de niveau

• Ce réglage doit être effectué avec beaucoup de soin, car il détermine le niveau d'enregistrement automatique.

No.	Mode	Signal d'entrée et bande d'essai	Point de réglage		Point de mesure	Valeur de réglage	Remarques
1.	REC/ PAUSE	Appliquer un signal de 315 Hz/– 10 dBv (316 mV) aux bornes d'entrée de ligne.	Platine II	VR601 (can.G) VR602 (can.D)	TP.1 (can.G) TP.2 (can.D)	Régler de sorte que les indicateurs de niveau "0 dB" s'allument jusqu'à – 11,2 dBv.	

6. Réglage du fonctionnement de la détection de bande amorce

No.	Mode	Signal d'entrée et bande d'essai	Point de réglage		Point de mesure	Valeur de réglage	Remarques
1.	PLAY	Pas d'entrée - Charger une moitié de cassette vide.	Platine I	VR802	TP.12-1	1,0V ± 0,1V (CC)	
			Platine II	VR801	TP.12-2		
2.	Vérifier que l'opération de détection de bande amorce s'effectue correctement (à la fois dans le sens avant (FWD) et inverse (REV) dans le mode d'inversion sans fin).						

7. AJUSTE

7.1 AJUSTE MECANICOS

1. Ajuste de la velocidad de la cinta			
Modo	Cinta de prueba	Posición de ajuste	Valor de especificación (frecuencia de reproducción)
PLAY	Reproducir la STD-301 (3kHz)	Control de ajuste del motor del eje	3000Hz ± 5Hz

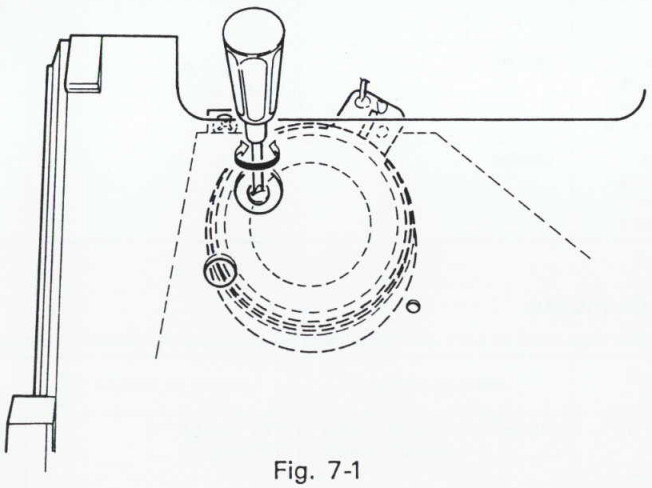

Fig. 7-1

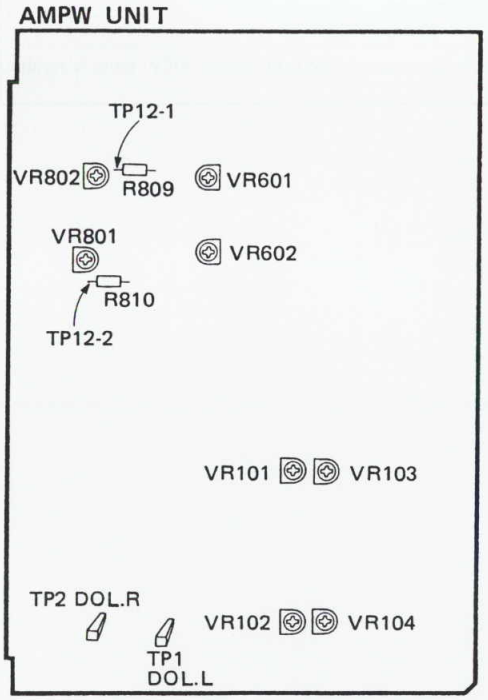

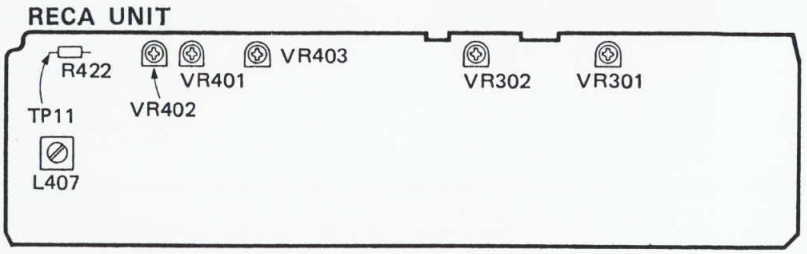

Fig. 7-2 Puntos de ajuste

7.2 AJUSTES ELÉCTRICOS

Condiciones de ajuste

1. Los ajustes mecánicos deben efectuarse primero.
2. La cabeza debe estar limpia y desmagnetizada.
3. Encienda la alimentación para permitir que la platina se caliente al menos durante unos minutos antes de realizar cualquier ajuste eléctrico.
4. La señal de referencia es 0 dBv=1 Vrms.
5. Conecte una resistencia de carga de 50 kΩ (o de 47 a 52 kΩ) a los terminales de salida.
6. A menos que se indique lo contrario, coloque el interruptor DOLBY NR en la posición OFF.

Cintas de prueba

STD-331B : Ajustes de reproducción (Ver Fig. 7-3)
STD-630 : Cinta virgen normal
STD-620 : Cinta virgen de CrO_2
STD-610 : Cinta virgen de metal

Secciones de reproducción

1. Ajuste de azimuth de la cabeza
2. Ajuste del nivel de reproducción

Secciones de grabación

1. Ajuste del oscilador de polarización
2. Ajuste de la corriente de borrado
3. Ajuste de la polarización de grabación
4. Ajuste del nivel de grabación
5. Adjuste del medidor de nivel
6. Ajuste de la operación de detección del extremo inicial de la cinta

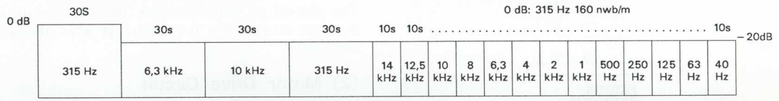

Fig 7-3 Constantes de la cinta de prueba STD-331B

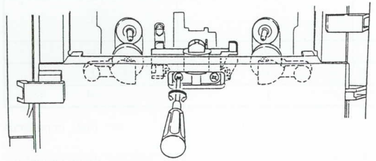

Fig 7-4 Ajuste de azimuth de la cabeza

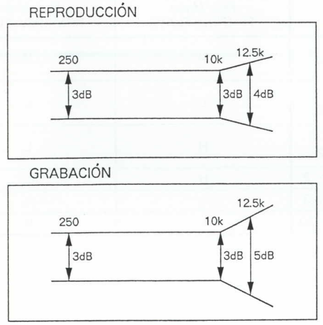

Fig 7-5 Zona de respuesta de frecuencia

SECCIÓN DE REPRODUCCIÓN

1. Ajuste de azimuth de la cabeza

• Coloque VR103/104 (platina I) y VR101/102 (platina II) en sus posiciones de centro mecánico.

N.º	Modo	Señal de entrada y cinta de prueba	Punto de ajuste	Punto de medición	Valor de ajuste	Comentarios
1.	PLAY	Reproduzca la sección de 10 kHz/– 20 dB de la cinta de prueba STD-331B.	Tornillo de ajuste de azimuth de la cabeza. (vea la Fig 7-4)	Terminales LINE OUT L/R	Nivel máximo de la señal de reproducción.	(tanto en avance como en retroceso)
2.	STOP	Tras el ajuste, aplique fijador al tornillo.				

2. Ajuste del nivel de reproducción

• Este ajuste debe realizarse con gran cuidado, pues determina el nivel del sistema Dolby.

N.º	Modo	Señal de entrada y cinta de prueba	Punto de ajuste		Punto de medición	Valor de ajuste	Comentarios
1.	PLAY	Reproduzca la sección de 315 Hz/0 dB de la cinta de prueba STD-331B.	Platina I	VR103 (izq.) VR104 (der.)	TP.1 (izq.) TP.2 (der.)	– 10,7 dBv	
			Platina II	VR101 (izq.) VR102 (der.)			

SECCIÓN DE GRABACIÓN

1. Ajuste del oscilador de polarización

N.º	Modo	Señal de entrada y cinta de prueba	Punto de ajuste		Punto de medición	Valor de ajuste	Comentarios
1.	REC	Cargue la cinta de prueba STD-610, sin aplicar ninguna señal de entrada.	Platina II	L 407	TP.11	105 kHz $^{+3}_{-1}$ kHz	

2. Ajuste de la corriente de borrado

N.º	Modo	Señal de entrada y cinta de prueba	Punto de ajuste		Punto de medición	Valor de ajuste	Comentarios
1.	REC	Cargue la cinta de prueba STD-610, sin aplicar ninguna señal de entrada.	Platina II	VR403	TP.11	165 mV AC	

3. Ajuste de la polarización de grabación

N.º	Modo	Señal de entrada y cinta de prueba	Punto de ajuste		Punto de medición	Valor de ajuste	Comentarios
1.	REC/ PAUSE	Aplique una señal de 315 Hz/– 20 dBv a los terminales de entrada de línea y cargue la cinta de prueba STD-630(normal).			Terminales LINE OUT L/R		
2.	REC →PLAY	Grabe las señales de 315 Hz y 6,3 kHz a un nivel de entrada de – 20 dBv, y luego reprodúzcalas.	Platina II	VR401 (izq.) VR402 (der.)		Grabe, reproduzca y ajuste repetidamente hasta que el nivel de reproducción de la señal de 6,3 kHz sea 1,0 dB ± 0,5 dB mayor que el de la señal de 315 Hz.	
3.	Una vez finalizado el ajuste, compruebe el porcentaje de distorsión para evitar la subpolarización.						

4. Ajuste del nivel de grabación

• Coloque el interruptor DOLBY NR en ON.

N.º	Modo	Señal de entrada y cinta de prueba	Punto de ajuste		Punto de medición	Valor de ajuste	Comentarios
1.	REC/ PAUSE	Aplique una señal de 315 Hz/0 dBv a los terminales de entrada de línea y cargue la cinta de prueba STD-630 (normal).	Control de nivel de grabación.		TP.1 (izq.) TP.2 (der.)	– 11.2 dBv	
2.	REC →PLAY	Grabe la señal de arriba en la cinta de prueba STD-630 y luego reprodúzcala.	Platina II	VR301 (izq.) VR302 (der.)	TP.1 (izq.) TP.2 (der.)	Grabe, reproduzca y ajuste repetidamente hasta que el nivel de la señal reproducida sea – 11.2 dBv.	
3.	REC →PLAY	Grabe la señal de arriba en la cinta de prueba STD-620 (CrO2) y luego reprodúzcala.	Verifique			– 11.2 dBv ± 1.5 dB	
4.	REC →PLAY	Grabe la señal de arriba en la cinta de prueba STD-610 (metal) y luego reprodúzcala.	Verifique			– 11,2 dBv ± 1,5 dB	

5. Adjuste del medidor de nivel

• Este ajuste debe realizarse con gran cuidado, pues determina el nivel del sistema Dolby.

N.º	Modo	Señal de entrada y cinta de prueba	Punto de ajuste		Punto de medición	Valor de ajuste	Comentarios
1.	REC/ PAUSE	Aplique una señal de 315 Hz/– 10 dBv (316 mV) a los terminales de entrada de línea.	Platina II	VR601 (izq.) VR602 (der.)	TP.1 (izq.) TP.2 (der.)	Ajuste de modo que los indicadores de nivel de 0 dB se enciendan a un nivel de – 11,2 dBv.	

6. Ajuste de la operación de detección del extremo inicial de la cinta

N.º	Modo	Señal de entrada y cinta de prueba	Punto de ajuste		Punto de medición	Valor de ajuste	Comentarios
1.	PLAY	Cargue un cassette vacío, sin aplicar ninguna entrada.	Platina I	VR802	TP.12-1	1.0V ± 0.1V (DC)	
			Platina II	VR801	TP.12-2		
2.	Confirme que la función de detección del extremo inicial de la cinta funcione correctamente (en el modo de inversión sin fin, compruebe tanto en la dirección de avance como en la de retroceso).						

8. BLOCK DIAGRAM

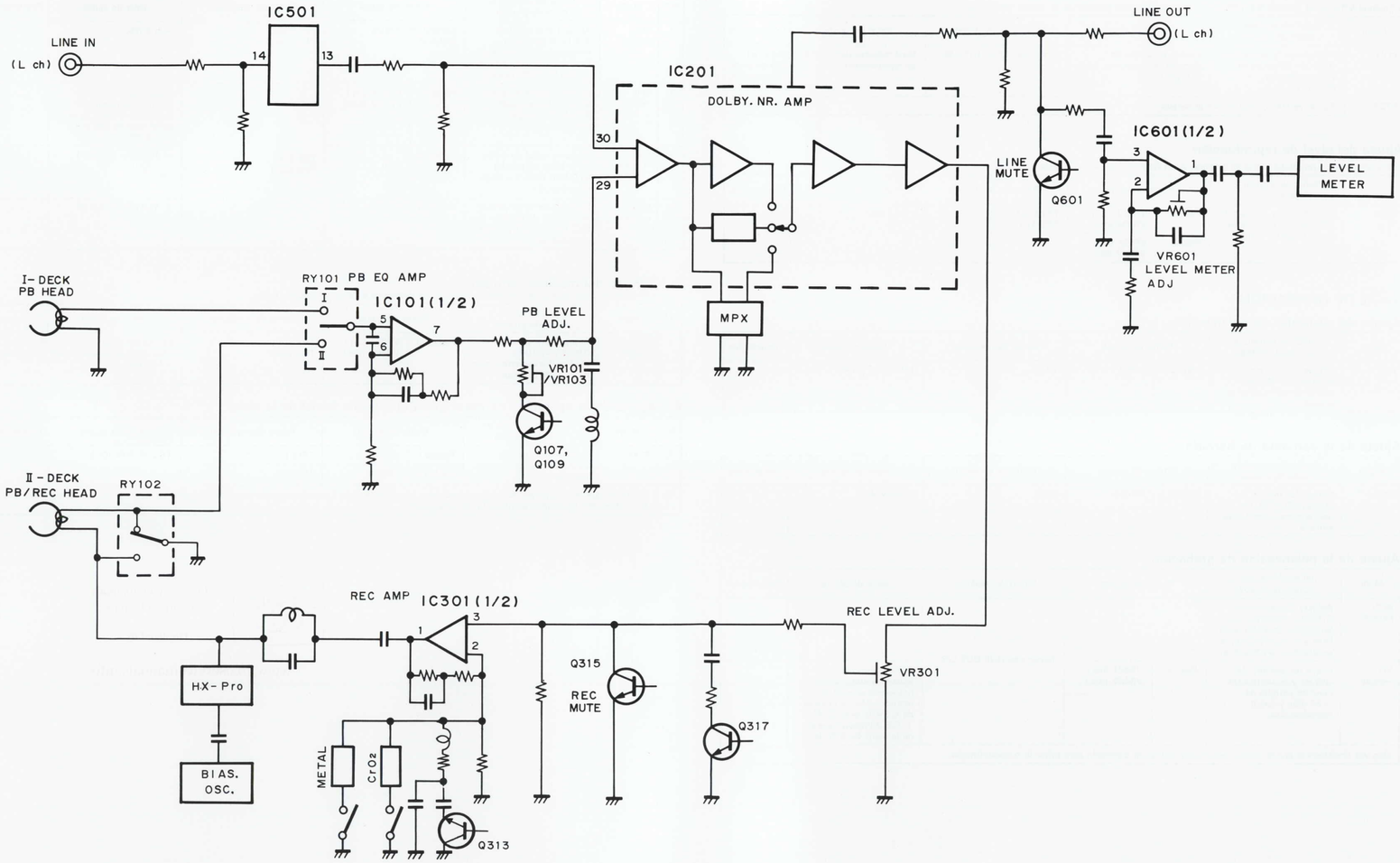

9. FOR LOADING MOTOR AND REEL MOTOR DRIVING CIRCUITS

(1) Tray Loading Operation

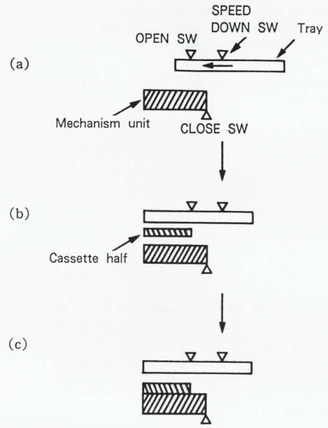

Operation Mode	OPEN SW	SPEED DOWN SW	CLOSE SW
(a) Tray open state	ON	OFF	OFF
(b) Cassette loading operation	OFF	ON	OFF
(c) Cassette loaded state	OFF	ON	ON

When the tray status changes from the open state to the closed state, the tray is moved in the direction of arrow either by key-in operation or by the tray push-in operation, from the tray open state shown in Fig. (a). Next, when the tray is closed, the loading mechanism performs the cassette loading operation. At that time, SPEED DOWN switch for switching the loading motor speed is turned on (Fig. (b)).
CLOSE switch is turned on the moment the cassette loading has been completed.
The process of transition from the closed state to the open state is just the reverse of what has been described.

(2) Motor Drive Circuit

IC901 and IC902 (TA7288P) perform a switchover between the FF (FWD PLAY) and the REW (REV PLAY) of the reel motor and between the opening operation and the closing operation of the loading motor based on 3 bit data of MTC0 to MTC2.

		Reel Motor FF (FWD PLAY)	Reel Motor REW (REV PLAY)	Loading Motor OPEN	Loading Motor CLOSE
(Pin 4) MC0		H	H	L	L
(Pin 8) MC1		L	L	H	H
(Pin 6) MC2		H	L	H	L
Output terminal	Pin 2	H	L	∞	∞
	Pin 3	∞	∞	H	L
	Pin 10	L	H	L	H

∞ : High Impedance

The reel motor makes constant voltage drive (constant torque drive), while the loading motor makes constant speed drive. Pin 8 (Vref) and pin 9 (Vs) of IC901 (IC902) are switched over for a change-over of the above drive systems.

(3) Constant Speed Drive Circuit

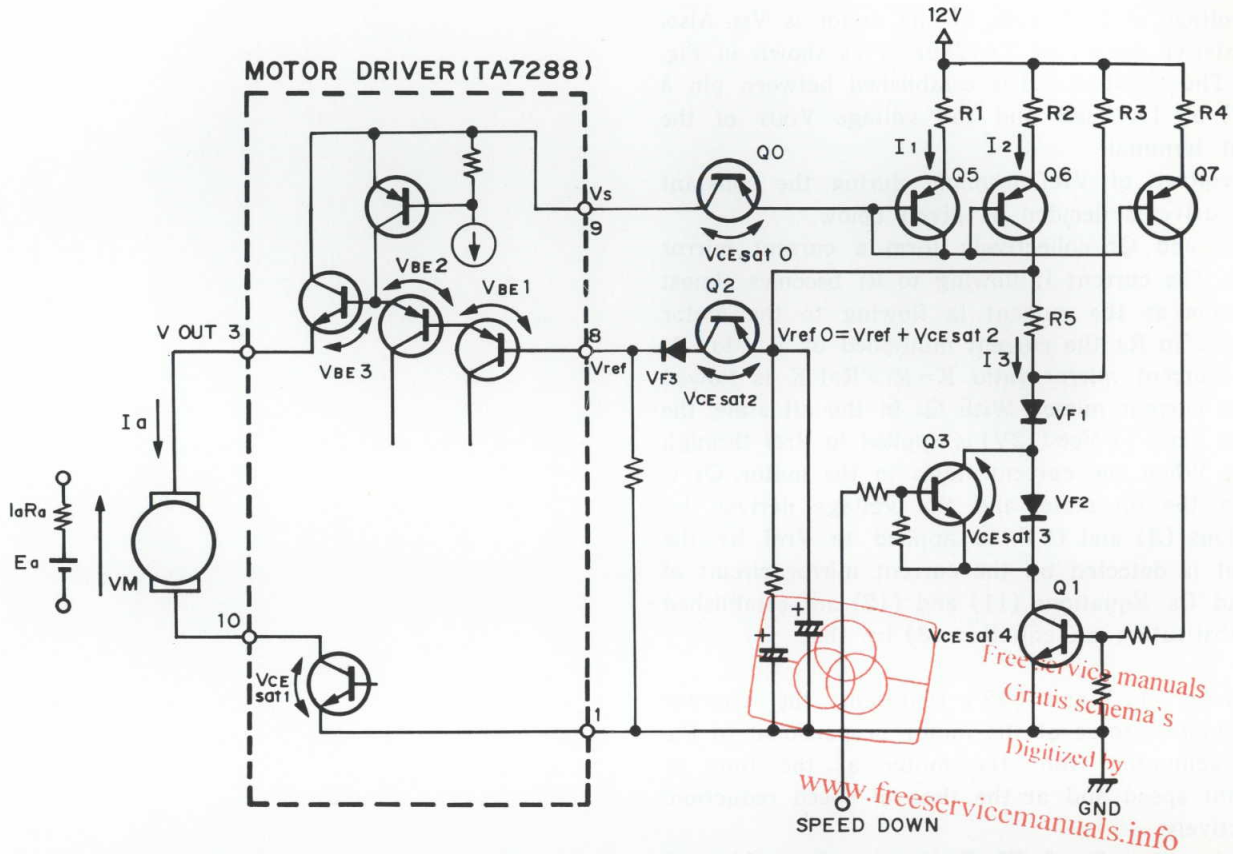

Fig. 9−1

Ia : Motor winding current
Ra : Motor winding resistance
Ea : Motor counter electromotive force
Q_0, Q_2 : Constant speed servo/constant voltage drive switchover TR

$V_{OUT} = V_M + V_{CEsat1}$
$= Ea + RaIa + V_{CEsat1}$ ····· (1)
$V_{OUT} = V_{ref} + V_{BE1} + V_{BE2} - V_{BE3}$ ····· (2)
$\fallingdotseq V_{ref} + V_{BE1}$ ····· (2)'
At time of speed reduction ⇨
$V_{ref} = R_5I_3 + V_{F1} + V_{CEsat3} + V_{CEsat4} - V_{CEsat2} - V_{F3}$ ····· (3)
At time of constant speed ⇨
$V_{ref} = R_5I_3 + V_{F1} + V_{F2} + V_{CEsat4} - V_{CEsat2} - V_{F3}$ ····· (3)'
$I_2 = R_1/R_2 \cdot I_1 = KI_1$ ····· (4)
$I_1 \fallingdotseq Ia$ ····· (5)
$I_2 \fallingdotseq I_3$ ····· (6)

From equations (4), (5) and (6),
$I_3 = KIa$ ····· (7)

From equations (1) and (2)'
$Ea + RaIa + V_{CEsat1} = V_{ref} + V_{BE1}$ ····· (8)

Substituting the equation (8) by equations (3) and (3)'

At time of speed reduction
$Ea = V_{F1} + V_{CEsat3} + V_{CEsat4} - V_{CEsat2} - V_{F3} - V_{CEsat1} + V_{BE1} - (Ra - KR_5)\ Ia$ ····· (11)

At time of constant speed
$Ea = V_{F1} + V_{F2} + V_{CEsat4} - V_{CEsat2} - V_{F3} - V_{CEsat1} + V_{BE1} - (Ra - KR_5)\ Ia$ ····· (12)

Referring to Fig. 9−1, the equation (1) is established when the counter electromotive force of the motor is Ea, the current flowing to the motor is Ia, and the voltage at both ends of the motor is V_M. Also, the internal circuit of TA7288P is as shown in Fig. 9−1. The equation (2) is established between pin 8 (Vref) of TA7288P and the voltage V_{OUT} of the output terminal.
The voltage of Vref terminal during the constant speed drive is decided as given below.
Q_5, Q_6, and Q_7 collectively form a current mirror circuit. The current I_1 flowing to R_1 becomes almost the same as the current Ia flowing to the motor winding. To R_2, the current multiplied by R_1−to−R_2 ratio (current mirror ratio $K=R_1/R_2$) K is flowed by the current mirror. With Q_4 in the off state, the voltage close to Vcc (12V) is applied to Vref through R_3, R_5. When the current flows to the motor, Q_4 is put in the on state, and the voltage derived by equations (3) and (3)' is applied to Vref by the current I_2 detected by the current mirror circuit of Q_5 and Q_6. Equations (11) and (12) are established by substituting an equation (8) by that.

Equations (11) and (12) represent the counter electromotive force of the motor proportional to the RPM generated from the motor at the time of constant speed and at the time of speed reduction, respectively.
Assuming that $R_5=1/K \cdot Ra$ in equations (11) and (12), the counter electromotive force of the motor becomes constant at a certain value. Therefore, the motor RPM can be arbitrarily set by VF_1 and VF_2 in spite of changes in motor load.
The foregoing is theory of constant speed drive.

Fig. 9−2 and Fig. 9−3 show the circuit at constant speed drive and that at constant voltage drive, respectively.
Using Q934 and Q952, Vcc of motor drive IC (IC901) is switched, thereby switching over Vref by Q933 and Q953.

The function of Q901 :
This transistor is turned on except by key−in operation, that is, when OPEN switch of the tray is placed in the off state from the on state (when closing the tray by hand). With Q901 in the off state, the start current of the motor is considerably large until Q954 is turned on, and the tray speed is increased as well (several 10 mS). In this improved model, the design is so made that Q901 is turned on when pressed by hand for improving the feeling of pressing it by hand. This makes it possible to ensure the constant tray speed.

Function of Transistors

Q934, Q952 : Switchover of motor drive Vs.
Q933, Q953 : Switchover of motor drive Vref.
Q936 : Switchover of Q933, Q934, Q952 and Q953.
Q955 : Switchover of Vref at constant speed and that at speed reduction.
Q954 : Motor brush sulfating prevention.
Q949, Q950, Q951 : For detection of a current mirror.
Q901 : Smoother tray operation when pressed by hand.

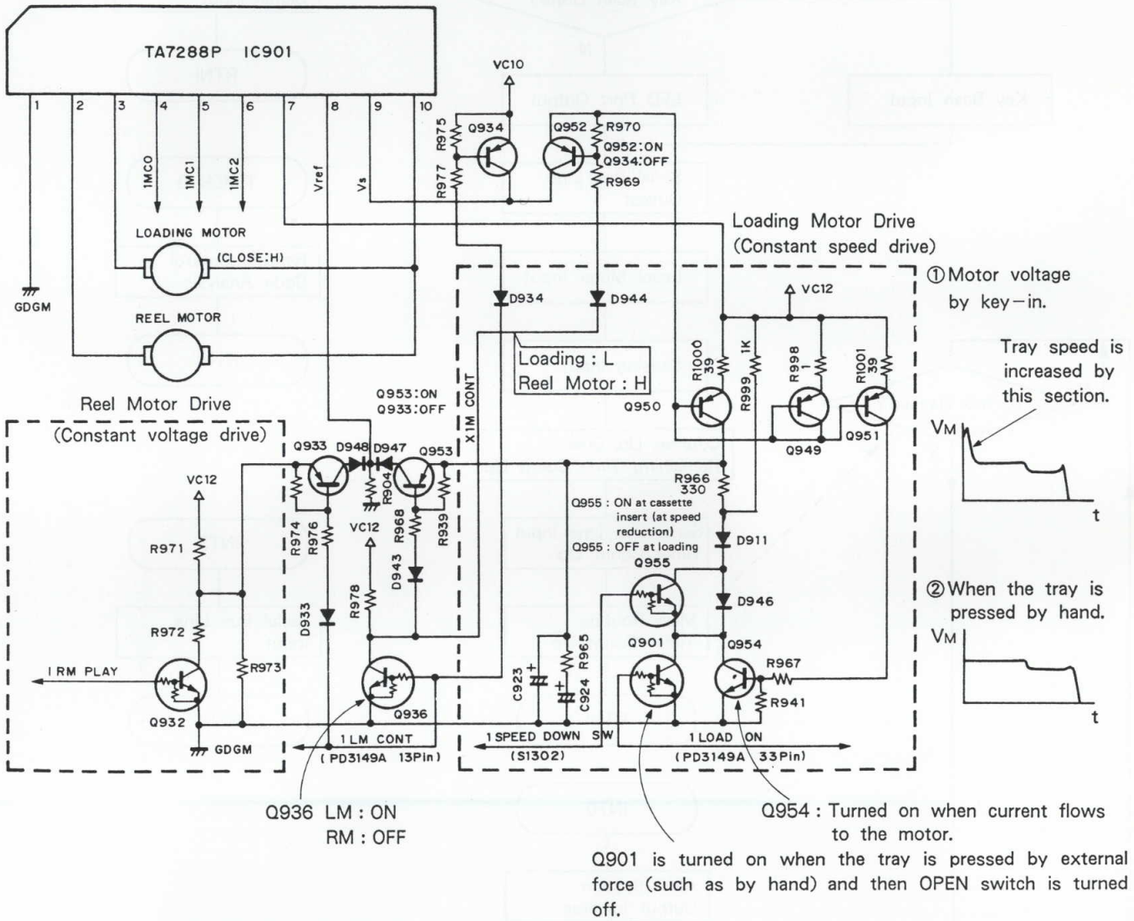

Fig. 9−2 Constant Speed Drive Circuit (at Time of Loading Drive)

Function of Transistors

Q934, Q952 : Switchover of motor drive IC Vs.
Q933, Q953 : Switchover of motor drive IC Vref.
Q936 : Switchover of Q933, Q934, Q952 and Q953.
Q932 : Switchover of Vref at fast reel motor operation and that at time of PLAY.

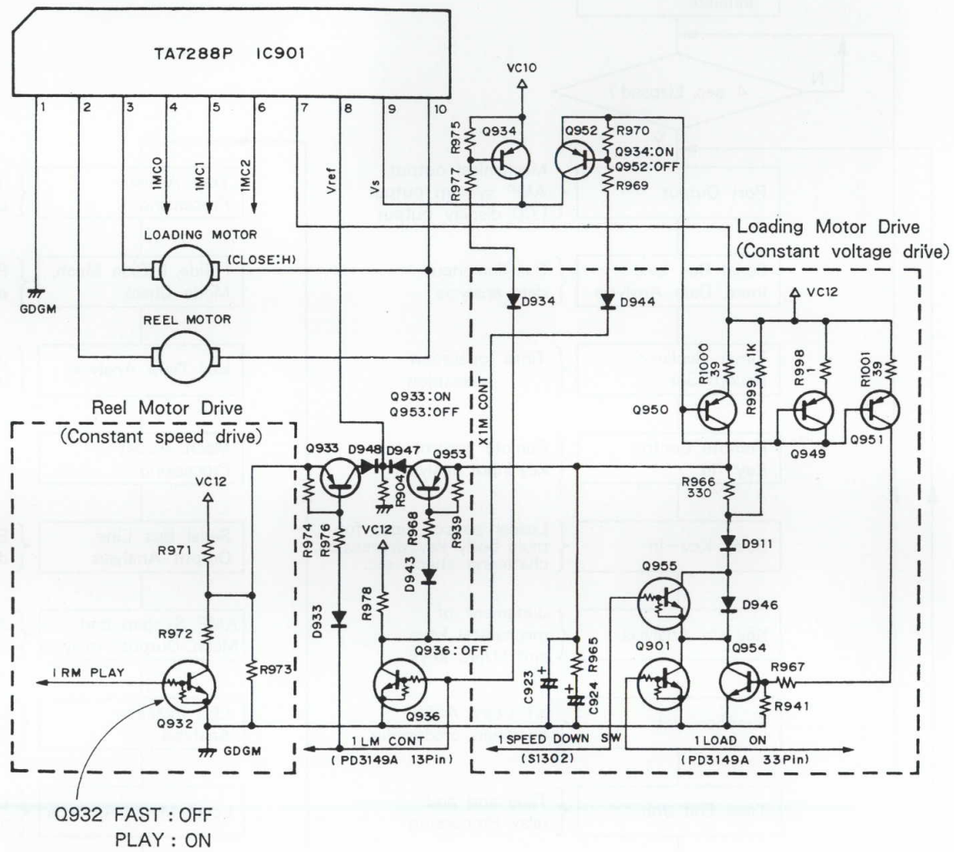

Fig. 9−3 Constant Voltage Drive Circuit (At Time of Reel Motor Drive)

10. IC DESCRIPTIONS (PD3149A)

● System Control Microcomputer

10.1 Simple Flow Chart of PD3149A

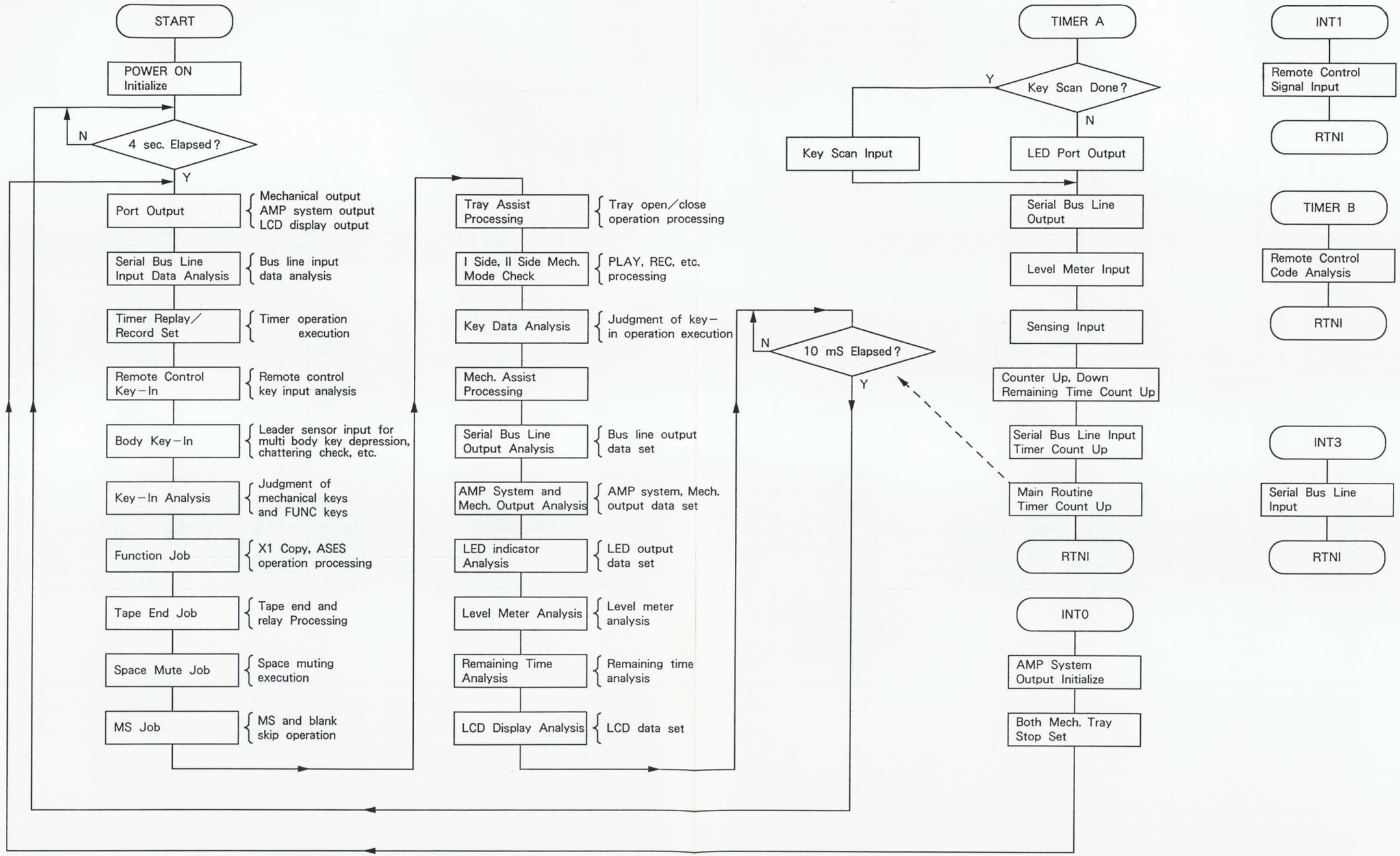

Fig. 10-1 PD3149A Simple Flow Chart

10.2 PD3149A Port Configuration

1	METER L	LCD DATA	64
2	METER R	LCD CLK	63
3	VR FREE	LCD CE	62
4	PEAK RESET	SEL H	61
5	SONG	SEL G	60
6	1-SENS L	SEL F	59
7	1-SENS R	SEL E	58
8	2-SENS L	SEL D	57
9	2-SENS R	SEL C	56
10	1-SOL A	SEL B	55
11	1-SOL B	SEL A	54
12	1-RM PLAY	$\overline{\text{TEST}}$	53
13	1-LM CONT	CL 2	52
14	1-CPM	CL 1	51
15	1-MC0	GND	50
16	1-MC1	OSC1	49
17	1-MC2	OSC2	48
18	1-LEADER	RESET	47
19	2-LEADER	$\overline{\text{KEYIN 3}}$	46
20	2-SOL A	$\overline{\text{KEYIN 2}}$	45
21	2-SOL B	$\overline{\text{KEYIN 1}}$	44
22	2-RM PLAY	$\overline{\text{KEYIN 0}}$	43
23	2-LM CONT	LED A	42
24	2-CPM	LED B	41
25	2-MC0	2-BIAS	40
26	2-MC1	2-PB SW	39
27	2-MC2	REC MUTE	38
28	$\overline{\text{POWER OFF}}$	$\overline{\text{LINE MUTE}}$	37
29	$\overline{\text{REMOTE}}$	PWM	36
30	SO	$\overline{\text{DECODE}}$	35
31	$\overline{\text{ST}}$	2-LOAD ON	34
32	VCC	1-LOAD ON	33

Fig. 10-2 PD3149A Port Configuration

10.3 CPU Terminal Description

No.	Name	Description
1	METER L	Input terminal of level meter on L CH side and peak search input terminal at ASES mode.
2	METER R	Input terminal of level meter on R CH side.
3	VR FREE	Outputs "H" level to switch the control of recording level over to PWM output (pin 36) at ASES mode.
4	PEAK RESET	Switches between "H" level/ "L" level once every 20 mS during the peak search.
5	SONG	MS signal input terminal. "H" level is during program operation and "L" level is between program operations.
6	1−SENS L	Left−side sensing input terminal for reel board of Mech. I.
7	1−SENS R	Right−side sensing input terminal for reel board of Mech. I.
8	2−SENS L	Left−side sensing input terminal for reel board of Mech. II.
9	2−SENS R	Right−side sensing input terminal for reel board of Mech. II.
10	1−SOL A	Solenoid output terminal of Mechanism I. Turned on at "H" level.
11	1−SOL B	Output terminal for power reduction control of the solenoid for Mech. I. The power is reduced at "H" level.
12	1−RM PLAY	Voltage control output terminal for the motor of Mech. I during playback.
13	1−LM CONT	Voltage control output terminal for the loading motor of Mech. I side tray.
14	1−CPM	Capstan output terminal for Mech. I.
15	1−MC0	Motor output terminals for Mech. I and tray. Mechanism operation and tray operation are switched over based on the 3 bit data of MTC0 to MTC2.
16	1−MC1	
17	1−MC2	
18	1−LEADER	Input terminal for leader tape sensing signal of Mech. I.
19	2−LEADER	Input terminal for leader tape sensing signal of Mech. II.
20	2−SOL A	Output terminal for the solenoid of Mech. II. Turned on at "H" level.
21	2−SOL B	Output terminal for controlling the power reduction of solenoid of Mech. II. The power is reduced at "H" level.
22	2−RM PLAY	Voltage control output terminal for the reel motor of Mech. II during playback.
23	2−LM CONT	Voltage control output terminal for the loading motor of Mech. II side tray.
24	2−CPM	Capstan output terminal of Mech. II.
25	2−MC0	Output for the motor of Mech. II and tray. Mechanism operation and tray operation are switched over based on 3 bit data of MTC0 to MTC2.
26	2−MC1	
27	2−MC2	
28	$\overline{\text{POWER OFF}}$	POWER OFF input terminal.
29	$\overline{\text{REMOTE}}$	Remote control input terminal.
30	SO	Serial communications output terminal.
31	$\overline{\text{SI}}$	Serial communications input terminal.
32	VCC	Power terminal.

No.	Name	Description
33	1−LOAD ON	Outputs "H" level when the tray is pushed in. It controls the loading motor voltage.
34	2−LOAD ON	
35	$\overline{\text{DECODE}}$	Outputs "L" level during playback or MS. It switches the Dolby IC over to the play side.
36	PWM	Output terminal for controlling the electronic volume at ASES mode.
37	$\overline{\text{LINE MUTE}}$	Output terminal for "L" level to mute the line output.
38	REC MUTE	Output terminal for "H" level to mute the signals of the recording system.
39	2−PB SW	Outputs "H" level during playback or MS. It switches the head amplifier system of Mech. II over to the play side.
40	2−BIAS	Outputs "H" level for generating a bias signal during recording.
41	LED B	LED lighting output terminal.
42	LED A	LED lighting output terminal.
43	$\overline{\text{KEYIN0}}$	Key matrix input terminal.
44	$\overline{\text{KEYIN1}}$	Key matrix input terminal.
45	$\overline{\text{KEYIN2}}$	Key matrix input terminal.
46	$\overline{\text{KEYIN3}}$	Key matrix input terminal.
47	RESET	Resets the microcomputer at "H" level input.
48	OSC2	Clock input terminal.
49	OSC1	Clock input terminal.
50	GND	Ground terminal.
51	CL1	NC
52	CL2	NC
53	$\overline{\text{TEST}}$	Test terminal, which is normally kept at "H" level.
54	SEL A	(SEL A to D terminals) Key matrix output terminals and LED output terminals.
55	SEL B	
56	SEL C	
57	SEL D	
58	SEL E	(SEL E to H terminals) Key matrix output terminals and reference level output terminals of level meter scanning.
59	SEL F	
60	SEL G	
61	SEL H	
62	LCD CE	CE output terminal to LCD driver IC.
63	LCD CLK	CLK output terminal to LCD driver IC.
64	LCD DATA	Data output terminal to LCD driver IC.

Table 10−1 CPU Terminal Description

10.4 POWER ON Initialize

10.4.1 CPU Reset

When the power is on, the CPU is reset by applying a pulse wave of "H" level to pin 47 (RESET) of the microprocessor. Resetting the CPU causes the process to be started from the head of the program. During a period from power on to resetting, each port of the CPU is placed in a high impedance state. It is therefore necessary to keep the voltage at "H" level or "L" level using an external parts.

10.4.2 Port Initialize

Immediately after power on resetting, the port of the amplifier is put in a stop state.

10.4.3 Mechanism and Tray Initialize

The initialize operation of the mechanism and tray with the power on is classified depending upon the tray open or closed state.

(1) When tray open sensing SW is on
Neither tray or mechanism does make initialize operation. (This is considered the same as the initialize finished state.)

(2) When tray close sensing SW is on
Turn the capstan motor for 1260 mS to place the mechanism in the stop state.

(3) When both the tray open sensing SW and close sensing SW are off
Close the tray.

Above operations (1) through (3) are performed sequentially on the I side and the II side.
Key−in is not accepted for about four seconds because the circuits of the amplifier system is unstable immediately after power on. But transmission and reception of signals over the serial bus line are made.

10.5 POWER OFF Processing

10.5.1 Deck Processing as Single Unit

When the power switch of the deck is turned off, pin 28 ($\overline{\text{POWER OFF}}$) senses the falling edge which is forced "L" level, to allow the processing of POWER OFF by interruption.

(1) When the tray close sensing SW is on
Set the amplifier system in the stop state to prevent noise generation and tape noise from being recorded on the tape. Next, both mechanisms should be put in the stop state. During the operation of assistance to the mechanisms for the stop state, no keys on the main body and remote control can be accepted.

(2) When tray close sensing SW is off
Stop the loading motor.

10.5.2 Processing as a System

When the power is turned off by POWER switch of the CD tuner (FD−J7), system bus line data "POWER OFF" is sent to the deck from the CD tuner (FD−J7). The deck sends system bus line data "Don't Care" within one second and makes the following process. (See Fig. 10−3)

(1) When the tray close sensing SW is ON
Place the mechanism and the amplifier system in the stop state. After mechanism assistance, system bus line data "STOP" is sent to the CD tuner (FD−J7).

(2) When the tray close sensing SW is OFF
When the tray is closed, system bus line data "STOP" is sent.

10.5.3 POWER OFF Reset

After turning the power off, but before it really turns off, a pulse wave is generated at the reset input, so that the CPU is reset. If Vcc is in a steady state without CPU resetting, the CPU performs normal processing.

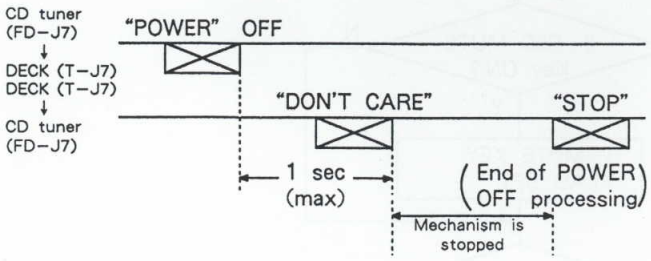

Fig. 10-3 System Bus Line Timing Chart when Power is OFF

10.6 Key and SW Input Processing

10.6.1 Key-In Processing

The main body key is fetched at every 10 mS interval, the falling edge of $\overline{\text{KEYIN0}}$ to $\overline{\text{KEYIN3}}$ are recognized as the key input. And more than triple pressing is disabled.
With regard to "STOP" and "COUNTER RESET" keys, the state input is always accepted, and to "REC MUTE", "REC" and "PLAY" may sometimes accept a state input. The key matrix table is given in Table 10-2.

10.6.1.1 Chattering Check

The edge input key is turned from off to on and continues to be in the on state for two cycles. This continued condition is then judged as an edge, and when the state input continues to be on for two cycles or more, it is judged as a state.

10.6.1.2 When Double Pressing is Accepted

Keys which can be accepted for double pressing are "OPEN/CLOSE", "STOP", "REC MUTE", "COUNTER RESET", "REC" and "PLAY" keys. Keys which necessarily become enabled are "STOP", "COUNTER RESET" and "REC MUTE" keys, and operation of other keys are described below. Incidentally, "OPEN/CLOSE" key is for edge input, and other keys for state input.

(1) "OPEN/CLOSE" Key
When this key is duplicated with STOP key of mechanism on the same side, STOP key takes preference, but it is enabled in other cases.

(2) "REC" and "PLAY" Keys
Double pressing of "REC" key and "PLAY" key in effects makes selection of REC without going through REC/PAUSE.

(3) "REC" and "REC MUTE" Keys
During space mute, when "REC" and "REC MUTE" keys are double pressed, the space mute continues, but when "REC MUTE" key is released, "REC" key is processed by state and the REC is selected.

	$\overline{\text{KEYIN0}}$	$\overline{\text{KEYIN1}}$	$\overline{\text{KEYIN2}}$	$\overline{\text{KEYIN3}}$
SEL A	II-FWD	II-REV	II-STOP	II-REC
SEL B	II-FF	II-REW	II-PAUSE	II-REC MUTE
SEL C	I-FWD	I-REV	I-STOP	
SEL D	I-FF	I-REW	II-OPEN/CLOSE	I-OPEN/CLOSE
SEL E	COUNTER RESET		COPY	

Table 10-2 Key Matrix Table

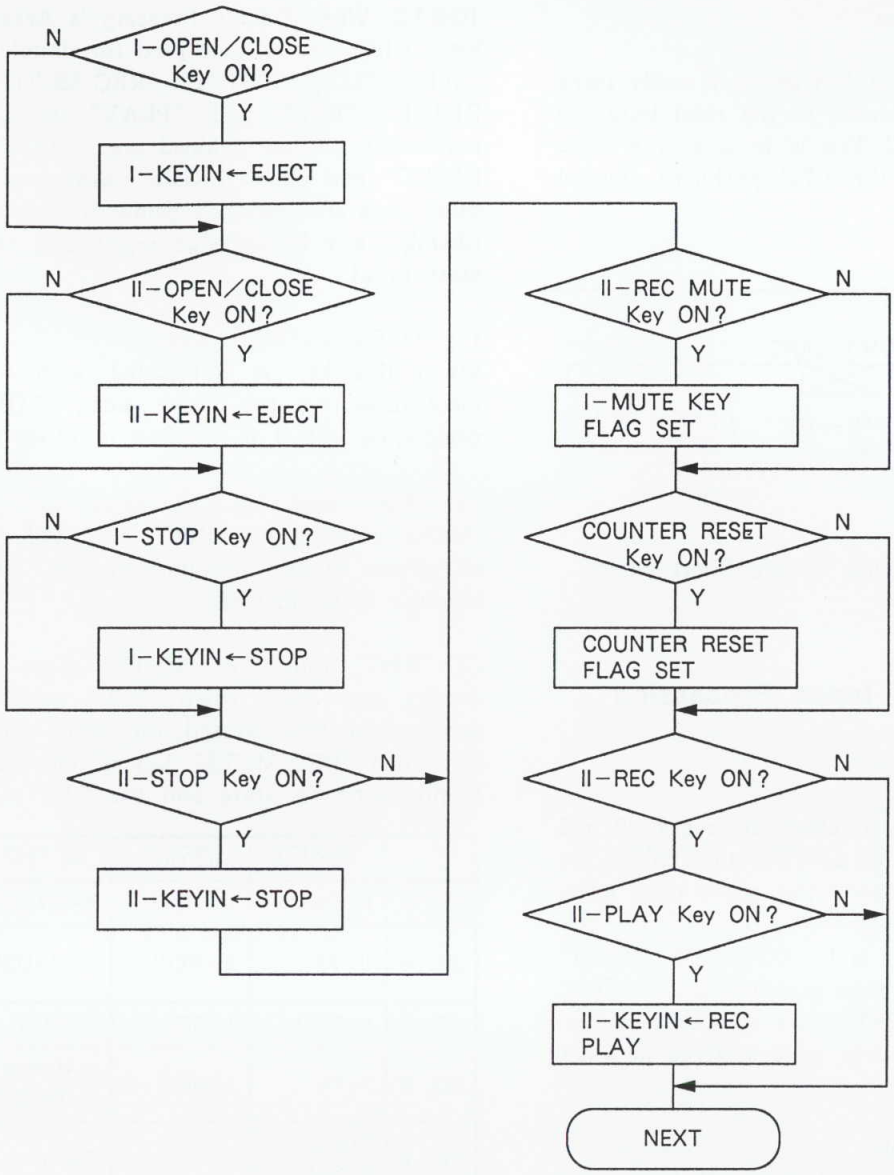

Fig. 10-4 Multi (Double) Pressing Flow Chart

10.6.2 SW Input Processing

Mechanism and tray switches are input within the same key matrix as that for the body key. The SW input matrix table is given in Table 10−3.

10.6.2.1 Tray SW

(1) OPEN SW

This switch senses that the tray remains open when on. Also, the fact that the tray has been pushed by the falling edge input is sensed.

(2) CLOSE SW

This switch senses that the tray has been closed by the rising edge input. Also, after tray close assistance, the mechanism operation is inhibited unless the switch is on.

10.6.2.2 Mechanism SW

(1) DIR SW

When making power on initialize, the direction of the head is judged reverse when the switch is on, but it is judged forward when off.

(2) PACK SW

The cassette half is judged to be present with the switch on. Also, the cassette half input and output are judged by edge sensing, to switch the counters I/II.

(3) $\overline{\text{AR}}$ SW (REC INH)

Recording is inhibited with the switch OFF. $\overline{\text{AR A}}$ inhibits the recording of forward direction, and $\overline{\text{AR B}}$ inhibits the recording of the reverse direction.

(4) Reverse Mode SW

(a) ⊂⊃ Mode SW

With the switch turned on, relay to the other mechanism is made after REV play is completed. (Also, RELAY/SKIP operation is made.)

(b) ⇄ Mode SW

No reverse operation is made with the switch ON.

(c) ⊃ Mode SW

When the switches mentioned in (a) and (b) are both off, the ⊃ mode is selected to stop the mechanism at the end of REV play of one−side mechanism.

	$\overline{\text{KEYIN0}}$	$\overline{\text{KEYIN1}}$	$\overline{\text{KEYIN2}}$	$\overline{\text{KEYIN3}}$
SEL F	I−OPEN	I−CLOSE	II−OPEN	II−CLOSE
SEL G	I−DIR	I−PACK	⊂⊃	⇄
SEL H	II−DIR	II−PACK	II−$\overline{\text{AR A}}$	II−$\overline{\text{AR B}}$

Table 10−3 Mechanism and Tray SW Matrix Table

10.7 LED Indicator

The LED indicator lights with the matrix. "SEL A−D" is used for key scan. The LED is caused to light at timing such as shown in Fig. 10−5, thereby preventing it from being overlapped by key scan timing.

Also, the indicator of II−PLAY/REC makes use of 2−color LED. The LED matrix table is given in Table 10−4, the LED indicator lighting table in Table 10−5, and examples of LED lighting are shown in Fig. 10−5.

Example : During stop with both mechanisms in FWD (See Table 10−4)

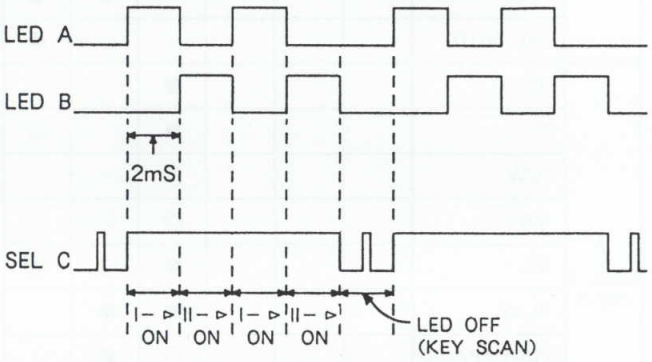

Fig. 10−5

	SEL A	SEL B	SEL C	SEL D
LED A	I− ◁	II−PLAY	I− ▷	I−PLAY
LED B	II− ◁	II−REC	II− ▷	

Table 10−4 LED Matrix Table

		I			II		
		REV IND	PLAY IND	FWD IND	REV IND	REC/PLAY IND	FWD IND
Mech. II (FWD)	STOP						●
	FF						◎
	REW				◎		●
	MS+					◎	◎
	MS−				◎	◎	●
	PLAY					●	●
	PLAY/PAUSE					●	○
	REC/PAUSE					●*	○
	REC					●*	●
	REC MUTE					○*	●
Mech. II (REV)	STOP				●		
	FF				●		◎
	REW				◎		
	MS+				◎	◎	
	MS−				●	◎	◎
	PLAY				●	●	
	PLAY/PAUSE				○	●	
	REC/PAUSE				○	●*	
	REC				●	●*	
	REC MUTE				●	○*	
COPY (FWD)	REC		●	●		●*	●
	REC/PAUSE		●	●		●*	○
	REC MUTE		●	●		○*	●

●····Lit ●*···· (Red) Lit
○····320 mS Blinking ○*····320 mS (Red) Blinking
◎····160 mS Blinking

II side PLAY/REC indicator lights green during PLAY and red during REC.

Table 10−5 LED Indicator Lighting Table

10.8 System Bus Line

With two bus lines SI and SO, system operation among the CD tuner, amplifier, and deck is made.

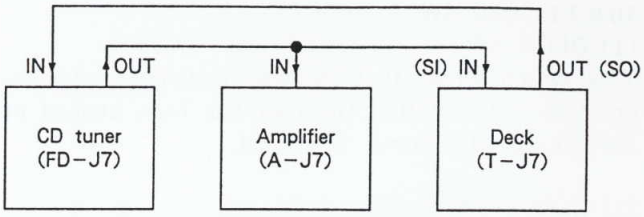

Fig. 10−6 System Bus Line

10.8.1 Communications Format

Communications are made by serial 8 bit data. The least significant 4 bits become communications data between the CD tuner and the deck.
Communications data (auto function, etc.) from the deck to the amplifier is sent to the CD tuner where it is analyzed by the CD tuner and then sent to the amplifier.

10.8.2 Contents of Communications

The following system operations are made over the system bus line :
(1) Auto function operation.
(2) Timer (REC, PLAY) operation.
(3) ASES operation.
(4) Mechanism mode information transmission.
(5) Operation at time of power OFF.

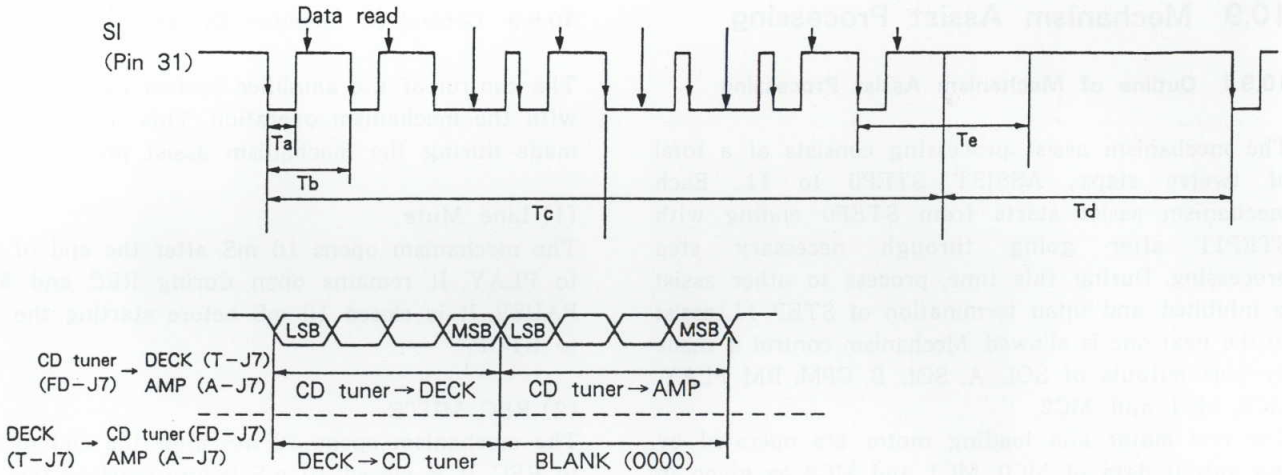

	Min	Typ	Max	Unit
Ta	10	10	15	μ sec
Tb	1.5	1.95	2.5	msec
Tc	———	Tb×8	———	msec
Td	Tb×16	Tb×20	Tb×24	msec
Te	———	Tb×4	———	msec

① If the level at pin 31 (SI) where in excess of Ta (10 μ sec) has elapsed from the falling edge is "H", data is read as "1", but if it is "L", data is read "0".

② If there is no falling edge between the falling edge and Te (Tb×4), the end of command is judged, and the data is analyzed if it is 8 bit data. (Invalid except for 8 bits)

Fig. 10−7 System Bus Line Format

10.9 Mechanism Assist Processing

10.9.1 Outline of Mechanism Assist Processing

The mechanism assist processing consists of a total of twelve steps, ASSIST STEP0 to 11. Each mechanism assist starts from STEP0 ending with STEP11 after going through necessary step processing. During this time, process to other assist is inhibited, and upon termination of STEP 11, assist to the next one is allowed. Mechanism control is made by port outputs of SOL A, SOL B, CPM, RM PLAY, MC0, MC1 and MC2.
The reel motor and loading motor are operated by the output data of MC0, MC1 and MC2 as given in the table below.

	Reel Motor FF (FWD PLAY)	Reel Motor REW (REV PLAY)	Loading Motor OPEN	Loading Motor CLOSE
MC0	H	H	L	L
MC1	L	L	H	H
MC2	H	L	H	L

Table 10−6 Motor Control Data Output Table

10.9.2 Mechanism Assist Stagger Processing

To prevent the assist operation of both mechanisms being overlapped, and the load applied to the power from being too large, the overlap of the assist processes of mechanisms I and II with each other is inhibited by the "stagger" processing. This processing is such that, when one mechanism begins to assist, priority is given to the processing. Assist of the other mechanism starts after assist of the earlier one. If assist start simultaneously takes place, priority is given to mechanism II. (During COPY)

10.9.3 Control of Amplifier System

The control of the amplifier system has much to do with the mechanism operation. This control is being made during the mechanism assist processing.

(1) Line Mute
The mechanism opens 10 mS after the end of assist to PLAY. It remains open during REC and REC/PAUSE. It is closed 10 mS before starting the assist to STOP.

(2) REC MUTE
The mechanism opens 10 mS after the end of assist to REC. It is closed 10 mS before starting the assist from REC to STOP (REC/PAUSE).

(3) PB SW
During the assist to mechanism II play, the level becomes "H" at the same time as SOL A ON. It is "H" during PLAY.

(4) BIAS
During the assist to mechanism II recording, the level becomes "H" at the same time as SOL A ON. It is "H" during REC.

10.9.4 Types of Mechanism Assist Mode

The mechanism assist mode can be classified by the difference of the amplifier system. Basically, it can be classified into four types, namely, the PLAY∗ mode, STOP∗ mode, FAST mode and MS mode.

PLAY∗MODE	STOP∗MODE	FAST MODE	MS MODE
FWD PLAY REV PLAY	FWD PLAY/PAUSE REV PLAY/PAUSE		
FWD REC REV REC	FWD REC/PAUSE REV REC/PAUSE		
	STOP		
		FF REW	
			FWD CUE (MS+) FWD REVIEW (MS−) REV CUE (MS−) REV REVIEW (MS+)

Table 10−7 Classification of Mechanism Assist Modes

10.9.5 Mode Transition between Mechanisms

The mechanism has only one each of line mute, Dolby IC, etc. Therefore, simultaneously coexisting modes for both mechanisms are limited. The PLAY mode and REC mode, or PLAY mode of both mechanisms will never be simultaneously selected except during COPY.

10.9.6 Mechanism Basic Mode Transition

This mechanism makes assist processing via the STOP mode except for some assist operations. For further details, refer to Table 10−7.

10.9.7 SHORT REW Operation During STOP→REC, REC/PAUSE→REC Assist

At the time of assist to REC, the short REW operation is performed to eliminate remaining noise and noise during REC→STOP (REC/PAUSE). This operation refers to tape rewinding operation by turning the reel for 30 mS at the PLAY speed during the assist to REC. But this operation is limited only for changing the STOP* mode to the REC mode. It is not made when a change is made from FWD to REV during REC.

10.9.8 Solenoid Power Reduction Function

In this mechanism, the solenoid is ON during PLAY and MS. The assist is done by SOL A when starting the assist, and a switchover is made to the power reduction SOL B nearly at the end of assist. (See Fig. 10−8)

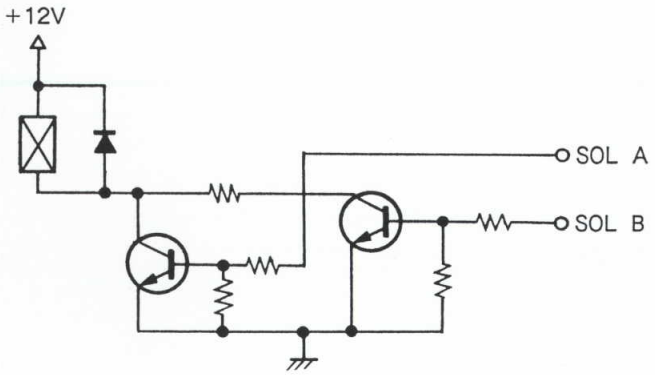

Fig. 10−8 Solenoid Power Reducing Circuit

II −KEYIN / NOW MODE			STOP		FF, REW		FWD, REV, PAUSE		REC, MUTE	
I	II		I	II	I	II	I	II	I	II
STOP	STOP		STOP	STOP	STOP	FAST	STOP	PLAY①	STOP	REC②＊
FAST	STOP		FAST	STOP	FAST	FAST	FAST	PLAY①	FAST	REC②＊
MS	STOP		MS	STOP	MS	FAST	STOP①	PLAY①	STOP	REC②＊
PLAY	STOP		PLAY	STOP	PLAY	FAST	STOP①	PLAY①	STOP	REC②＊
STOP	FAST		STOP	STOP	STOP	FAST	STOP	PLAY①	STOP	FAST
FAST	FAST		FAST	STOP	FAST	FAST	FAST	PLAY①	FAST	FAST
MS	FAST		MS	STOP	MS	FAST	STOP①	PLAY①	MS	FAST
PLAY	FAST		PLAY	STOP	PLAY	FAST	STOP①	PLAY①	PLAY	FAST
STOP	MS		STOP	STOP	STOP	MS	STOP	PLAY①	STOP	MS
FAST	MS		FAST	STOP	FAST	MS	FAST	PLAY①	FAST	MS
STOP	PLAY＊		STOP	STOP	STOP	MS	STOP	PLAY＊	STOP	PLAY＊
FAST	PLAY＊		FAST	STOP	FAST	MS	FAST	PLAY＊	FAST	PLAY＊
STOP	REC＊		STOP	STOP	STOP	FAST	STOP	REC＊	STOP	REC＊
FAST	REC＊		FAST	STOP	FAST	FAST	FAST	REC＊	FAST	REC＊

※ The same applies at the time of 1 mechanism key−in of mechanism I.

REC＊ : REC, REC／PAUSE, REC MUTE
PLAY＊: PLAY, PLAY／PAUSE
FAST : FF, REW
MS : CUE, REVIEW
① Except when the key−in is for "PAUSE".
② Except when the key−in is for "REC MUTE".

Table 10−8 Mutual Mode Transition of Mechanisms

		KEY INPUT							
		STOP	FF	REW	FWD	REV	REC	PAUSE	MUTE
DIR FWD	STOP	STOP	FF	REW	FWD PLAY	REV PLAY	REC/ PAUSE	——	——
	FF	STOP	——	REW*	FWD PLAY*	REV PLAY*	——		——
	REW	STOP	FF*	——	FWD PLAY*	REV PLAY*	——	——	——
	CUE (MS+)	STOP	——	REVIEW (MS−)	FWD PALY*	REV PLAY*	——	——	——
	REVIEW (MS−)	STOP	CUE (MS+)	——	FWD PLAY*	REV PLAY*	——	——	——
	PLAY	STOP	CUE (MS+)	REVIEW (MS−)	——	REV PLAY*	——	PLAY/ PAUSE	——
	PLAY/ PAUSE	STOP	CUE (MS+)	REVIEW (MS−)	FWD PLAY	REV PLAY	REC/ PAUSE	PLAY	——
	REC	STOP	FF*	REW*	——	REV REC*	——	REC/ PAUSE	REC MUTE
	REC/ PAUSE	STOP	FF	REW	FWD REC	REV REC	——	REC	REC MUTE
	REC MUTE	STOP	FF*	REW*	——	REV REC*	REC	REC/ PAUSE	——

—— indicates no change in status.
* is via STOP mode.

Table 10−9 Basic Mode Transition

FUNC-TION	DECK 1	DECK 2	$\overline{\text{LINE}}$ $\overline{\text{MUTE}}$	REC MUTE	2-BIAS	2-PB SW
	STOP	STOP OR FAST	L	H	L	L
	PLAY		H	H	L	L
	FAST		L	H	L	L
	MS		L	H	L	L
	STOP OR FAST	STOP	L	H	L	L
		PLAY	H	H	L	H
		FAST	L	H	L	L
		MS	L	H	L	H
		REC	H	L	H	L
		REC/P	H	H	L	L
		REC M	H	H	H	L
COPY	PLAY	REC	H	L	H	L
		REC/P	H	H	L	L
		REC M	H	H	H	L

In the above table, REC/P indicates REC/PAUSE, and REC M indicates REC MUTE.

Table 10-10 Amplifier System Control

10.10 Tray Open and Close Operations

10.10.1 Open Operation

If "OPEN/CLOSE" key is pressed while the tray is closed or during the close operation, the tray is opened. But it does not open in the following cases:

(1) When the trays of both I side and II side do not open
During tape copy operation.

(2) When the tray of II side does not open
During the REC or ASES.

10.10.2 Close Operation

If "OPEN/CLOSE" key and the mechanism operation key are pressed while the tray is open or during the open operation, the tray makes close operation. But no close operation can be performed with "II-PAUSE" key or "II-REC MUTE" key. When the tray is closed by using the mechanism operation key, the mechanism operation is made.
Also, the tray makes close operation when pushed in by hand while the tray is open, but the speed at the start of close operation is slower than the normal close operation for improved feeling.
If the operation does not come to an end in six seconds, the operation changes from OPEN to CLOSE, or CLOSE to OPEN.

10.11 Tape End Processing (Reverse Operation at Tape End)

10.11.1 Leader Tape Sensing

The mechanism is provided with a leader tape sensor. Tape end processing is initiated upon sensing the rising edge of the sensor output.
At the time of REC, reversing from FWD to REV starts after running for 510 mS following the edge sensing to prevent an incomplete erasing.
During PLAY, when reversing from FWD to REV, the operation starts after running 190 mS.
At the start of PLAY and REC, an input from the sensor is unstable. No operation is made for 10 seconds after starting the assist process for prevention of erratic operation. (Leader Mask Timer)
But no reversal is made even when the leader tape has been sensed in the following case, and the mechanism stops at the tape end.
(1) When the reverse mode is ⇄.
(2) REV PLAY is made when the reverse mode is ⊃.
(3) Final playback side when the reverse mode is ⊂⊃.
(4) In REV REC.

10.11.2 Tape End Sensing (Sensing)

When the tape end processing is not made upon leader tape sensing, the tape end process is made by sensing the tape end (Sensing).
If the sensing input remains unchanged for two seconds either at "H" or "L" level, this is judged as the tape end, and the tape end processing is started. During REC or PLAY, the tape end processing is not made for four seconds from the start of assist. (Sensing Mask Timer)

10.12 Space Mute Function

10.12.1 Auto Space Mute Function

When "REC MUTE" key is pressed during REC or REC/PAUSE, the REC MUTE of the amplifier system is turned ON, and a blank portion is automatically created on the tape for 4.5 seconds. REC/PAUSE is selected after an elapse of 4.5 seconds. Also, when "REC" key is pressed during the space mute, the space mute operation is released, and normal REC is performed again.

10.12.2 Manual Space Mute Function

If "REC MUTE" key is still kept on pressing after an elapse of 4.5 seconds during the auto space mute operation, the space mute operation is continued. The REC/PAUSE is selected upon turning off "REC MUTE" key.

10.13 Music Search Function

10.13.1 Music Search (MS)

The MS mode is selected by pressing either FF or REW key during PLAY. FF running is called Cue, and REW running is called Review. The Cue from FWD PLAY and the Review from REV PLAY are "MS+". The Review from the FWD PLAY and the Cue from the REV PLAY are "MS−". MS+ searches the head of the next program, and MS− searches the head of the program currently being played (the previous music if between programs).

10.13.2 MS Timing

A search between programs or during a program is judged based on the output of IC BA335 for music search. If the level is "H", it is judged as during a program, and if "L", judged as between programs.

(a) MS+
→ Running Direction

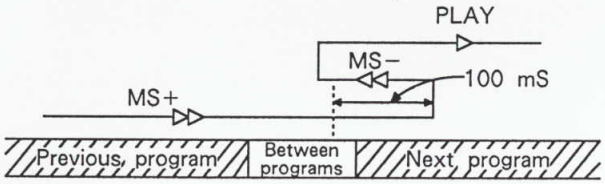

The tape runs in the forward running direction in the MS mode. After search the head of the next program, the tape runs for 100 mS, and PLAY is made by finding the end of the program following the reversal.

Fig. 10−9 MS+ Operation

(b) MS−
→ Running Direction

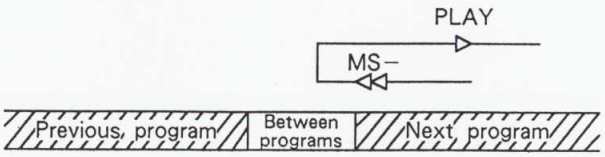

The tape runs in reverse direction of current running in the MS mode. PLAY is made when the end of the program is found.

Fig. 10−10 MS− Operation

10.13.3 Jumped Program Selection Function

Jumped program selection can be made by pressing either FF key or REW key repeatedly during PLAY or MS. For example, the head of a program three beyond can be searched by pressing FF key three times during FWD PLAY. Further, a search can be made as many programs ahead as FF key pressing times, up to fifteen programs. Similarly in the MS− direction, a search up to fifteen programs beyond can be made.

10.13.4 Tape End Processing in the MS Mode

(1) MS+
Reverse operation is made according to the reverse mode (⇄, ⇄, ⊂⊃). The MS operation continues even after reversal.
But the MS operation is discontinued, and PLAY is made when relayed.

(2) MS−
The tape stops at the tape end.

10.13.5 Erratic Operation of MS Program Selection

(1) Sensing Error Between Programs
The falling output delay of the IC sensing between programs is about 80 mS. Time between programs of less than two second duration may not be sensed in some cases.

(2) Play Error of Program Head Sensing
If the time between programs is less than 4.5 seconds, the latter part of the previous program may be played when the play mode is set following the program head sensing.

(3) Program Head Sensing Error in the MS+ Operation
When searching a program head in the MS+ operation, an overrun is made after sensing the program head, and then MS− operation is performed. In the MS− operation, the play mode is selected if the program head cannot be found within two seconds.

10.13.6 Blanking Skip Function

When the reverse mode is ⊂⊃, the blanking skip function is acted. If a blank section continues for 15 seconds, the MS+ operation is automatically selected, to search the program head.

10.14 Functions

10.14.1 Tape Copy Function

Tape copy operation is performed from mechanism I to mechanism II using "TAPE COPY" key. This key acceptance is limited at this time, and the mechanism operation key accepts only "I–STOP", "II–STOP", "II–REC", "II–PAUSE" and "II–REC MUTE".
The release of tape copy operation is done by using either "I–STOP" key or "II–STOP" key.

10.14.2 ASES Function

The play sound of the CD of the CD tuner (FD–J7) is automatically recorded by pressing "ASES" key of the furnished remote controller for the CD tuner (FD–J7). The ASES function can be classified into three types below.

(1) Normal ASES
After the peak search and leader tape pass (10 seconds) with "ASES" key, the recording starts. This recording begins forcibly from the FWD direction. Tape end process is made in the same manner as the normal recording, and the ASES mode is finished at the tape end, or the CD end, or by pressing "II–STOP" key or "STOP" key of the CD tuner. (See Fig. 10–12)

(2) Edit ASES
"ASES" key should be pressed after editing programs with the CD tuner. The recording starts in the same way as (1) above. The CD tuner stands by in a pause state when the playback of the programs on the side A has been finished, and the pause state of the CD is released by the command issued after deck reversal. The ASES mode finishing procedure is the same as described in (1). (See Fig. 10–13)

(3) FINE ASES
This mode begins upon pressing "ASES" key following the "COMPU PROGRAM" with the CD tuner. The operation as a deck is the same as given in (2) above. (See Fig. 10–13)

10.14.2.1 Peak Search Function

After pressing "ASES" key, the peak search is initiated by the "PEAK START" command. Now, the mechanism mode becomes the REC/PAUSE. The playback sound 60 times faster than the CD should be input, and the electronic volume adjusted by the output of PWM terminal (pin 36) to bring the peak level near the range of +4 to +6 dB (meter reading). The recording level cannot be manually adjusted during the ASES.
The flow chart of the peak search function is shown in Fig. 10–11.

10.14.2.2 Auto Leader Pass Function

The leader tape pass is performed for about 10 seconds after starting the FWD REC following the peak search. This function is to start the playback of the CD after the leader tape section has passed when starting the recording from the head of a tape. The leader tape pass is carried out for about 10 seconds after starting the REV REC even when reversal is made by the sensing process.

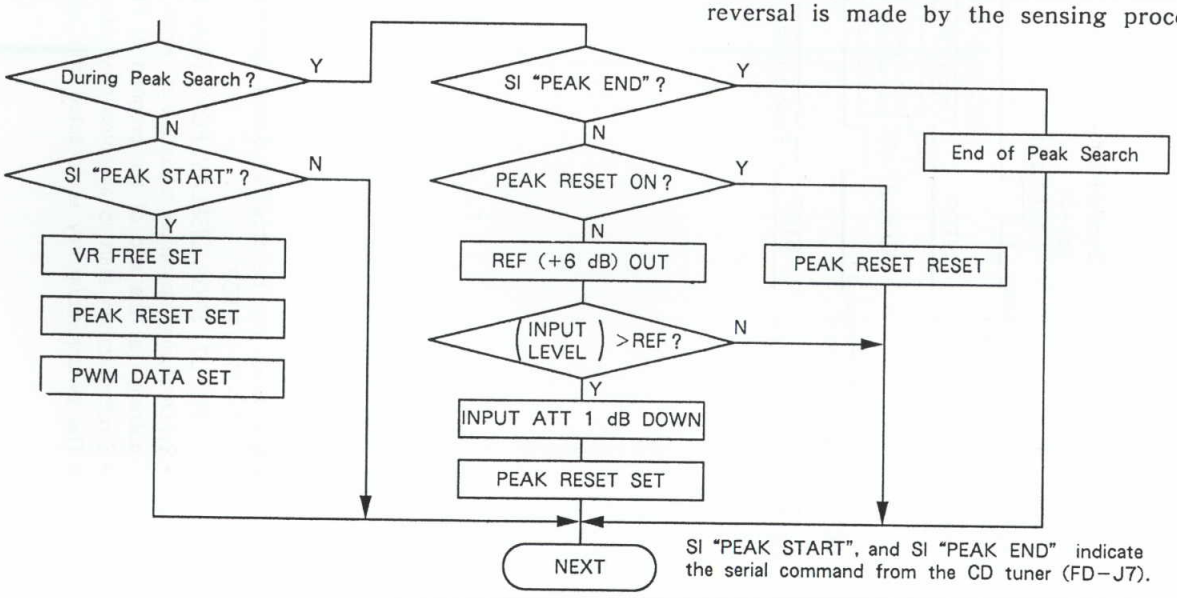

Fig. 10–11 Flow Chart of Peak Search Function

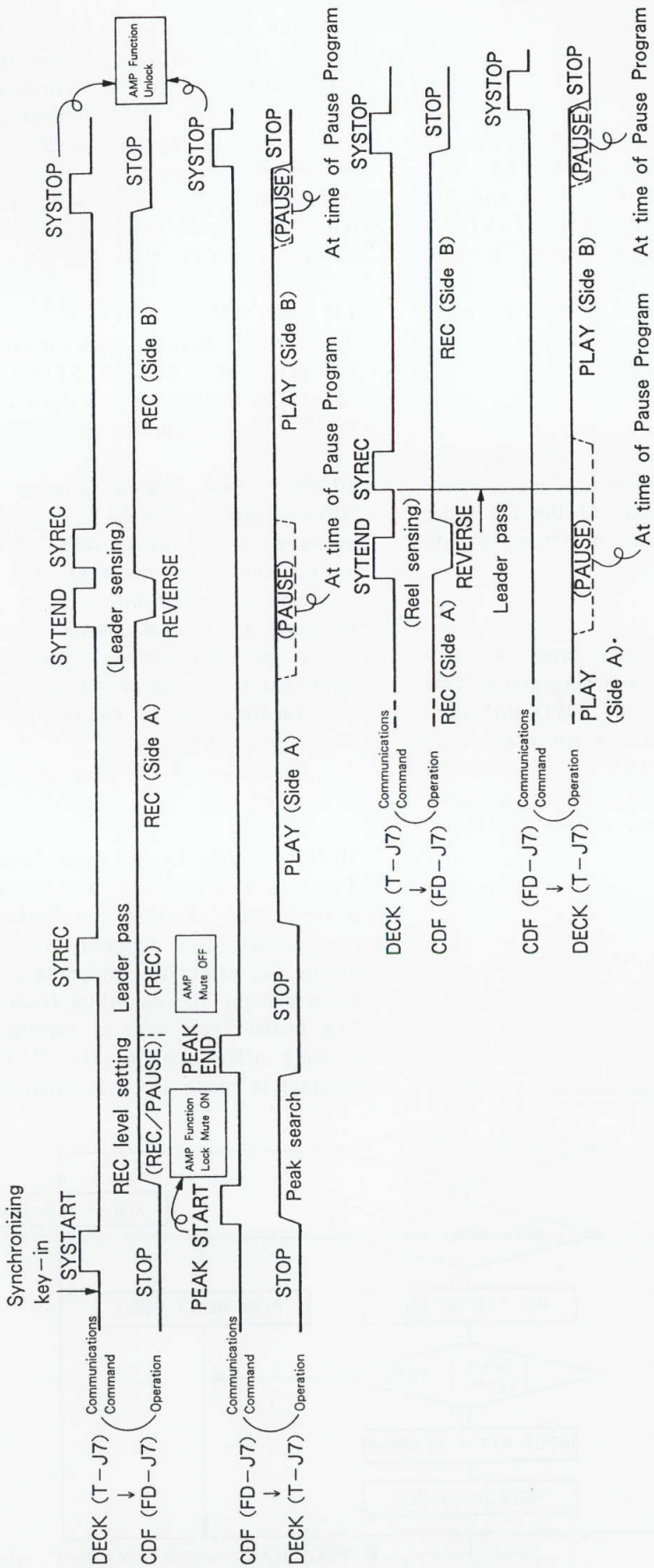

- Key which can be accepted during synchronizing operation
  T-J7 : STOP
  FD-J7 : STOP, DISPLAY, PLAY (Only at time of pause program release)
- Synchronizing operation is completed when SYSTOP is output by pressing STOP key of T-J7 or FD-J7, or by the STOP operation at the end of the program of FD-J7.
- Synchronization start is accepted only when the FD-J7 is in the CD position, the disk in, and in the stopped state.
- The synchronizing key is accepted only when the T-J7 is with the tape in.

Fig. 10-12 Normal ASES Operation

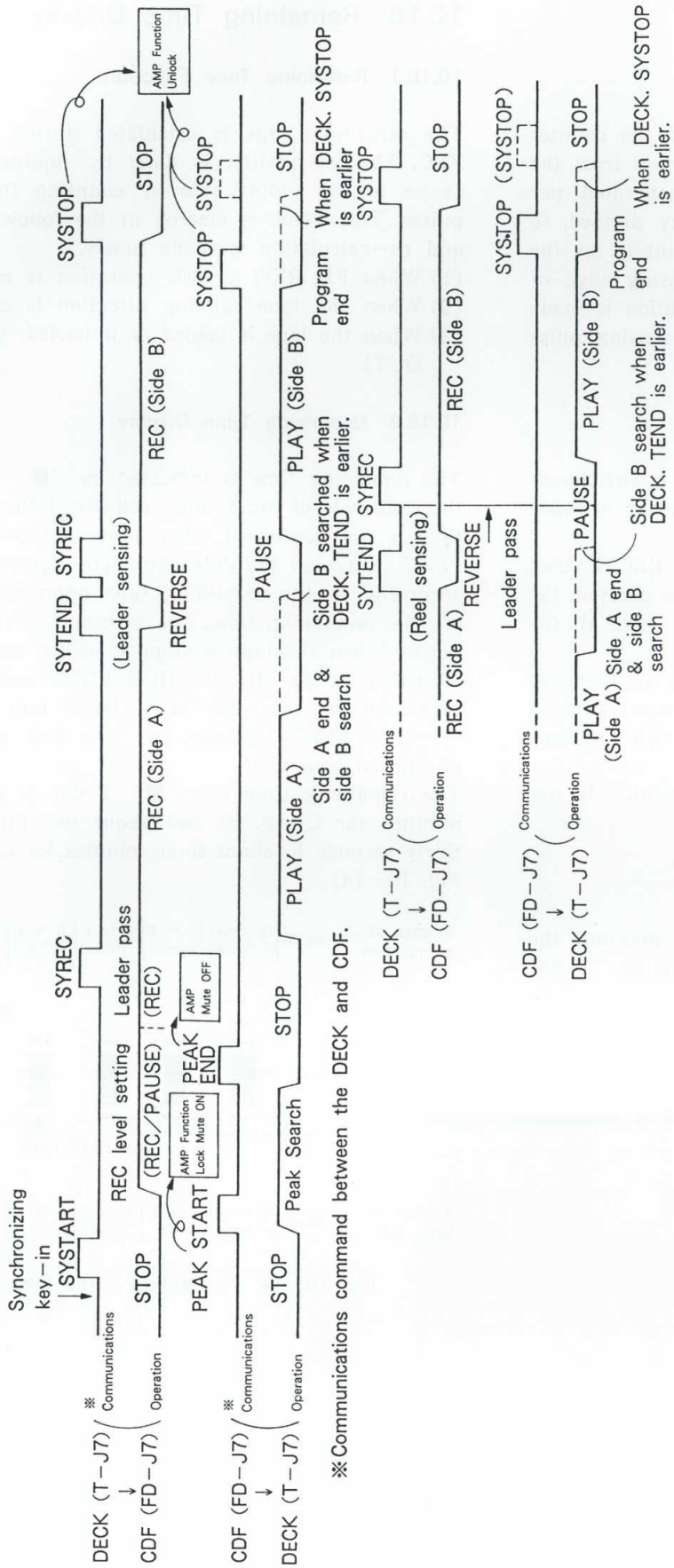

- Key which can be accepted during synchronizing operation
  T-J7 : STOP
  FD-J7 : STOP DISPLAY (PLAY is not accepted.)
- Synchronizing operation is completed when SYSTOP is output by pressing STOP key of T-J7 or FD-J7, or by the STOP operation at the end of program of FD-J7.
- Synchronizing start is accepted only when FD-J7 is in the CD position, disk in, and in the stop state.
- The synchronizing key is accepted only when T-J7 is with a tape in.

Fig. 10-13 Edit ASES and FINE ASES Operation

10.15 Counter Function

10.15.1 Counter

The count up and down operations of the counter are performed with the sensing pulse input from the reel board. Six sensing pulses are generated per rotation of it, and these are frequency divided, to attain "3" count per rotation. To count it up, the count up operation is made at the rising edge of the pulse ; to count it down, the operation is made at the falling edge of the pulse. The sensing pulse is fetched by 2 mS interrupt.

10.15.2 Counter I/II Switchover

A dedicated key is not provided for a switchover between I side and II side, but switchover is made in the following cases :

(1) When STOP, FWD, REV, FF, REW, REC, PAUSE or MUTE key of the I or II side is pressed, the counter is switched over to the side of the pressed key.

(2) When the tape is loaded or unloaded, a switchover is made to the side on which the tape has been loaded later, or to the side on which the tape has already been loaded.

But even in the above cases, the counter is not switched over during MS.

10.15.3 Counter Reset

The counter is reset to "0000" by pressing the counter reset key. The counter remains at "0000" while this key is being pressed.

10.16 Remaining Time Display Function

10.16.1 Remaining Time Function

The remaining tape is calculated during PLAY or REC. This calculation is done by finding the reel cycles of the supply side by counting the sensing pulses. This value is cleared in the following cases, and re−calculation is made newly.

(1) When FF, REW or MS operation is made.

(2) When the tape running direction is changed.

(3) When the tape is loaded or unloaded. (PACK IN, OUT)

10.16.2 Remaining Time Display

The remaining time is indicated by "■" 6 dots on the right side of the 4−digit counter. If the remaining time is not confirmed when moving from STOP to PLAY (REC), all the dots blink. The lighting is made according to the remaining tape upon confirmation of the remaining time, the extreme left dot only blinks. When the tape is stopped before confirmation, all the dots go off. "L−HUB END" indicates the tape end in the case of a large hub use, and "N−HUB END" indicates the tape end in the case of normal hub use.

The remaining time per "■" 1 dot, is about two minutes for C−46, 60, and about two minutes and thirty seconds to about three minutes for C−90. (See Fig. 10−14)

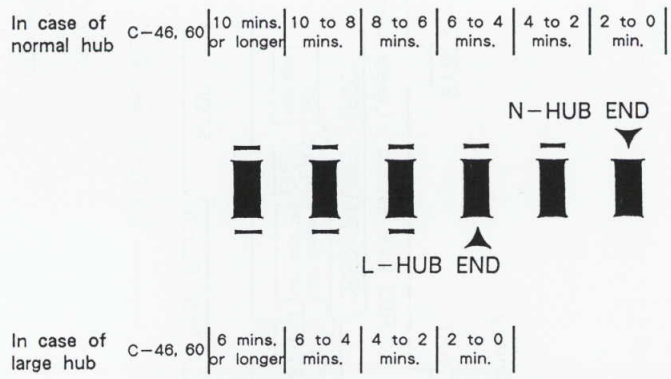

Fig. 10−14 Remaining Time Display

10.17 Timer Function

As system functions, timer recording and playback are available. The timer is owned by the CD tuner (FD−J7).
It is the system bus line communications data sent from the CD tuner, and the recording and playback are done by the deck.

(1) Timer Recording
Timer recording is done only while the mechanism II is being stopped. The source to be recorded at that time is limited to the tuner.

(2) Timer Play
The priority sequence of the system is given to CD→DECK→TUNER. When a disc is not in the CD tuner (FD−J7), the timer play data is sent to the deck (T−J7). The priority of operation at that time is given to I side. If a tape is not inserted into the I side, the II side is played.

10.18 LCD Display

LCD display is made by sending display data to the dedicated driver LC7582 over three bus lines.
(1) Copy Display
"TAPE COPY ⊏→" is displayed during the COPY mode.

(2) Counter I/II Display
The current counter is displayed by "I" and "II" located to the left of the 4−digit counter. Either one side is lit at all time.

(3) Cassette Half Presence/Absence Display
"⊂" surrounding "I" and "II" of the counter I/II display indicates that the cassette half exists on the I side, and "⊃" indicates that it is on the II side.

(4) Level Meter Display
This display lights by interlocking with the LINE MUTE during PLAY and REC.

11. FOR HE AND HB TYPES

NOTES :

- Parts without part number cannot be supplied.
- The ⚠ mark found on some component parts indicates the impotance of the safety factor of the part. Therefore, when replacing, be sure to use parts of identical designation.
- Parts marked by "⊙" are not always kept in stock. Their delivery time may be longer than usual or they may be unavailable.

The T−J7/HE and HB types are the same as the T−J7/KU type with the exception of the following sections.

Mark	Symbol & Description	Part No.			Remarks
		T−J7/KU type	T−J7/HE type	T−J7/HB type	
⚠	Power transformer (120V)	RTT1121	.....	.....	
⚠	Power transformer (220V/240V)	.....	RTT1122	RTT1122	
⚠	Strain relief	CM−22C	CM−22B	CM−22B	
⚠	AC power cord	PDG1002	PDG1008	PDG1021	
⚠	FU701, FU702 Fuse (400mA/125V)	REK−076	.....	.....	
⚠	FU701, FU702 Fuse (T400mA/250V)	.....	REK−096	REK−096	
⚠	FU703, FU704 Fuse (2A/125V)	REK−081	.....	.....	
⚠	FU703, FU704 Fuse (T2A/250V)	.....	REK−103	REK−103	
	Operating instructions	.....	RRD1066	.....	

12. SPECIFICATIONS

System ..... 4 track, 2-channel stereo
Heads ..... "Hard Permalloy" recording/playback head x 1
"Hard Permalloy" playback head x 1
"Ferrite" erasing head x 1
Motor ..... DC servo motor (capstan) x 2
DC motor (reel) x 2
DC motor (loading) x 2
Wow and Flutter ..... No more than 0.055% (WRMS)
No more than ±0.14% (DIN)
Fast Winding Time ..... Approximately 90 seconds (C-60 tape)

Frequency Response
-20 dB recording:
Normal tape ..... 20 to 17,500 Hz, ±6 dB
Chrome tape ..... 20 to 18,000 Hz, ±6 dB
Metal tape ..... 20 to 20,000 Hz, ±6 dB
Signal-to-Noise Ratio
Dolby NR OFF ..... More than 58 dB

Noise Reduction Effect
Dolby NR B type ON ..... More than 10 dB (at 5 kHz)
Dolby NR C type ON ..... More than 19 dB (at 5 kHz)

Harmonic Distortion ..... No more than 1.0% (0 dB)
Input (Sensitivity)
LINE (INPUT) ..... 63 mV (Input impedance 50 kΩ)
Output (Reference level)
LINE (OUTPUT) ..... 316 mV (Output impedance 4.9 kΩ)

Subfunctions
- DOLBY NR B/C types
- DOLBY HX PRO
- Music search over ±15 selections
- 4-digit digital tape counter
- LCD peak level meter (12 seg + ∞)
- Automatic space recording mute
- One-touch recording pause
- Automatic tape selector
- Automatic quick reverse
- Cassette stabilizer
- Relay playback
- Tape copy with synchro start/stop function
- Remaining tape time indicators
- Reverse mode (⇄, ⊃, ↻)
- Skip operation with ↻ setting
- Power eject/lead in
- Recording level slide control
- System remote control compatible

Miscellaneous
Power Requirements
U.S., Canadian models ..... AC 120 V, 60 Hz
European model ..... a.c. 220 Volts ~, 50/60 Hz
U.K. model ..... a.c. 240 Volts ~, 50/60 Hz
Multi-voltage models ..... AC 110 V/120 V - 127 V/ 220 V/240 V (switchable), 50/60 Hz
Power Consumption
U.S., Canadian, Multi-voltage models ..... 25 W
European, U.K. models ..... 28 W
Dimensions ..... 360 (W) x 90 (H) x 324 (D) mm
14-3/16 (W) x 3-9/16 (H) x 12- 3/4 (D) in
Weight (without package) ..... 6.3 kg (13 lb 14 oz)

Accessories
Operating instructions 1
Connection cord with pin plugs 2
System remote control cord 1

NOTE:
Specifications and design subject to possible modifications without notice due to improvements.

13. PANEL FACILITIES

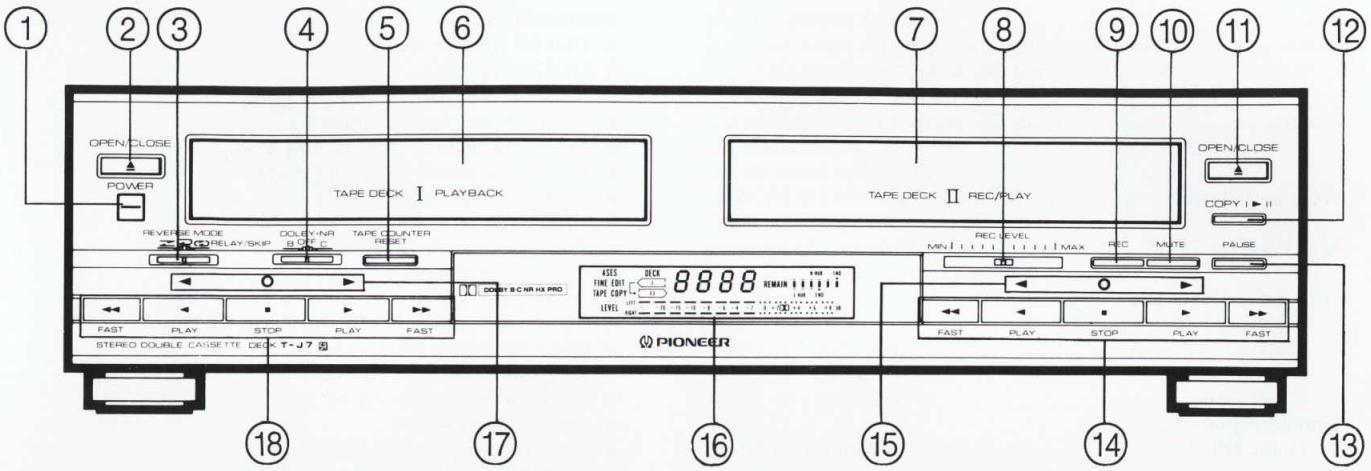

- Deck I is used for playback only. Deck II can be used for both playback and recording.

① POWER switch

② Deck I Cassette Table Open/Close button (OPEN/CLOSE)

Press to open or close the cassette table.
(Deck II Cassette Table Open/Close button operates in the same manner.)

Note:
This button functions only when the power is turned on.

③ REVERSE MODE switch

(Used for both Deck I and Deck II.)
Selects the tape transport mode.

Single-side mode ⇄:
Single-side playback
Single-side recording (Deck II only)
Stops at the end of the tape.

Two-side mode ⊃:
When PLAY ► is pressed, both sides of the tape are played (recorded) automatically. When PLAY ◄ is pressed, playback (recording) stops at the end of one side.

Repeat mode ⊂⊃ RELAY/SKIP:
When a tape is set in either Deck I or Deck II (not both), the two sides of the tape are played back repeatedly 32 sides (16 times each side). During recording (Deck II only), recording stops at the end of the second side after both sides have been recorded. When tapes are set in both Deck I and Deck II, the two tapes are alternately played (Relay playback) 15 times in succession, for a maximum of 32 sides.
Also, the blank-skip playback function automatically functions in this mode.

④ DOLBY* NR switch

(Used for both Deck I and Deck II.)
When recording, use this switch to select whether the Dolby Noise Reduction function is set to OFF, B type NR, or C type NR. During playback, set the Dolby NR mode to the same mode which was selected during recording.

*

- *Dolby noise reduction and HX PRO headroom extension manufactured under license from Dolby Laboratories Licensing*
- *Corporation. HX PRO originated by Bang & Olufsen. "Dolby", the double-D symbol DD and "HX PRO" are trademarks of Dolby Laboratories Licensing Corporation.*

⑤ TAPE COUNTER RESET button

(Used for both Deck I and Deck II.)
Resets the tape counter display to 0000.

⑥ Deck I Cassette Table

When OPEN/CLOSE is pressed, the cassette table opens toward you. Place a cassette tape on the table with the exposed side facing away from you. To close the table, press OPEN/CLOSE one more time.
(Deck II Cassette Table operates in the same manner.)

⑦ Deck II Cassette Table

⑧ REC LEVEL (Recording Level) adjustment knob

⑨ REC (Record) button

(Deck II only)
When this button is pressed, the deck enters record-standby mode. Recording begins when PLAY (► or ◄) is pressed, or when PAUSE is pressed.

⑩ Recording Mute button (MUTE)

(Deck II only)
When this button is pressed during recording, a blank, non-recorded section approximately 4 seconds long is created on the tape and then the deck enters record-pause mode.

⑪ Deck II Cassette Table Open/Close button (OPEN/CLOSE)

⑫ COPY I ► II button

Press to copy a tape from Deck I to Deck II.

⑬ PAUSE button

(Deck II only)
Press to temporarily stop tape transport during playback or recording. To resume playback or recording, press PAUSE again. (You can also resume playback by pressing ► or ◄ .) Tape transport cannot be paused during fast-forward or fast-reverse operation.
This button is also pressed to start recording.

⑭ Deck II operation buttons

⑮ Deck II Tape Transport indicators

► : Indicates that the tape is running in the forward direction.
● : Lights green during playback. Lights red during recording.
◄ : Indicates that the tape is running in the reverse direction.

⑯ Display Window

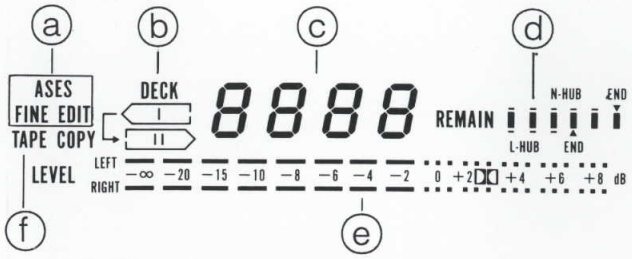

ⓐ ASES/FINE EDIT indicators

The A.S.E.S. function operates when this unit is connected to the FD-J7 stereo CD tuner. When A.S.E.S. is operating, "ASES" lights in the display window. When A.S.E.S. is operating while the CD tuner is in Compu Edit mode, both "ASES" and "FINE EDIT" light in the display window. For a detailed explanation of A.S.E.S., refer to the operating instructions provided with the FD-J7.

ⓑ DECK indicators

" ⊂ " lights in the display window when a tape is set in Deck I, and " ⊃ " lights when a tape is set in Deck II. "I" lights when the tape counter for Deck I is currently being displayed, and "II" lights when the Deck II tape counter is being displayed.

ⓒ Tape Counter

The number displayed by the tape counter changes according to the running of the tape, enabling the counter to be used as a guide for gauging the current tape position.
During music search, the tape counter displays the number of selections to be skipped.

ⓓ Remaining Tape Time indicators

When the length of tape remaining becomes short, these indicators show the approximate amount of tape time left before the end is reached. When the end of the tape approaches, the indicators blink and then go out one by one in succession.

ⓔ LEVEL indicators

These indicators show the recording levels of the left and right channels during recording, and the recorded levels of the left and right channels during playback.
The DD mark indicates the reference level of the Dolby NR system.

ⓕ TAPE COPY indicator

Lights when a tape is being copied from Deck I to Deck II.

⑰ Deck I Tape Transport indicators

► : Indicates that the tape is running in the forward direction.
● : Lights during playback.
◄ : Indicates that the tape is running in the reverse direction.

⑱ Deck I operation buttons

(Deck II operation buttons operate in the same manner.)
STOP ■ : Press to stop tape transport.
PLAY ► : Plays the face-up side of the cassette tape (the side facing up when the tape is placed in the deck). (Forward Playback)
FAST ►► : Quickly advances the tape toward the end of the face-up side and toward the start of the face-down side. When pressed during playback, the deck skips the number of selections (max. 15 selections) equal to the number of times the button is pressed, and playback begins at the beginning of the designated selection.

FAST ◄◄ : Quickly advances the tape toward the start of the face-up side and toward the end of the face-down side. When pressed during playback, the deck skips the number of selections (max. 15 selections) equal to the number of times the button is pressed, and playback begins at the beginning of the designated selection.
PLAY ◄ : Plays the face-down side of the cassette tape (the side facing down when the tape is placed in the deck). (Reverse Playback)

Tape Counter

Indicates the current tape running position using a four-digit numerical display. The counter can be reset to 0000 by pressing TAPE COUNTER RESET.

Tape Counter Display Automatic Switching Function

When the power is switched on:
Tapes loaded in both decks → Deck I counter displayed
No tape loaded in either deck → Deck I counter displayed
Tape loaded in one deck only → The counter for the deck containing the tape is displayed.
During normal operation:
When a tape is placed in a deck → The counter for that deck is displayed.
When tapes are present in both decks and then one of the tapes is removed → The counter for the deck still containing a tape is displayed.
When an operation button located beneath one of the cassette table doors is pressed → The counter for the corresponding deck is displayed.
When a tape is placed in one of the decks while the other deck is operating → The counter for the tape inserted last is displayed.

When you wish to manually switch the counter display, press the operation button corresponding to the current operation of the deck for which the counter is to be displayed.
For example: If you wish to switch the counter display from Deck I to Deck II while Deck II is recording, press Deck II's REC button.

- **Deck I display**

- **Deck II display**

- **Display during Music Search operation**