AM／FM STEREO TUNER MODEL TX-900 (K)

CIRCUIT DIAGRAMS AND ALIGNMENT INSTRUCTIONS

TX-900

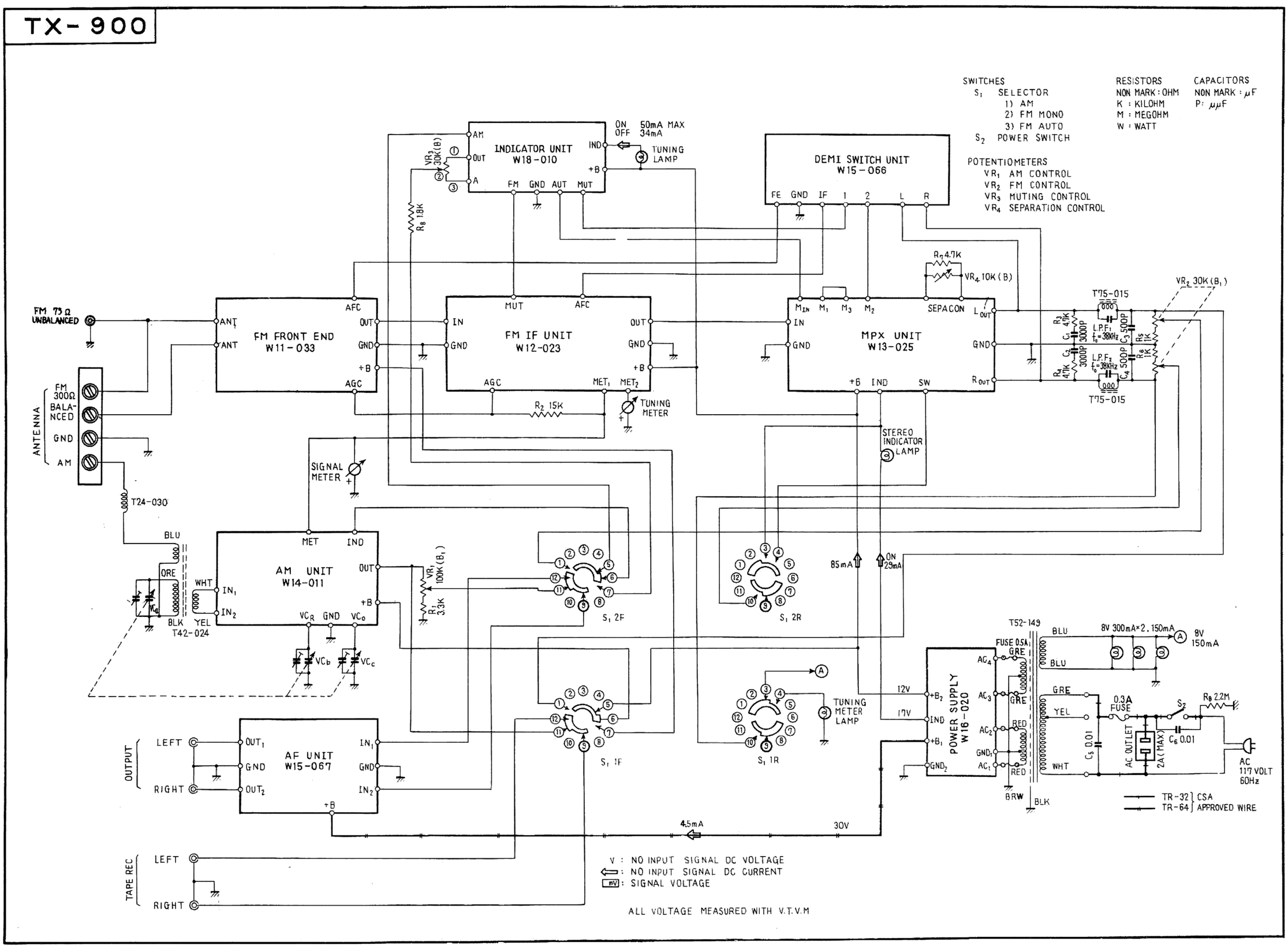

INDICATOR UNIT W18-010

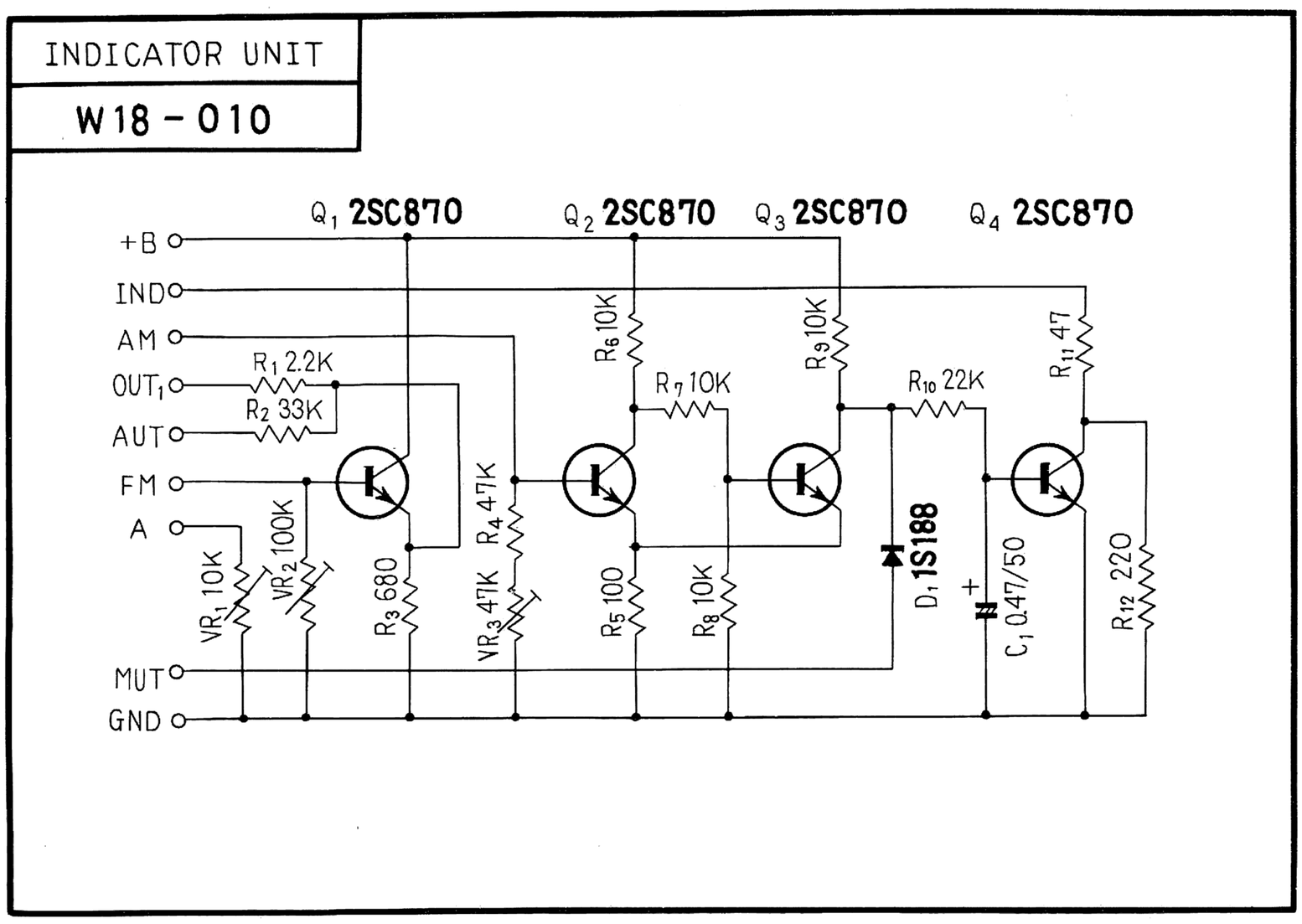

DEMI SWITCH UNIT
W15 - 066

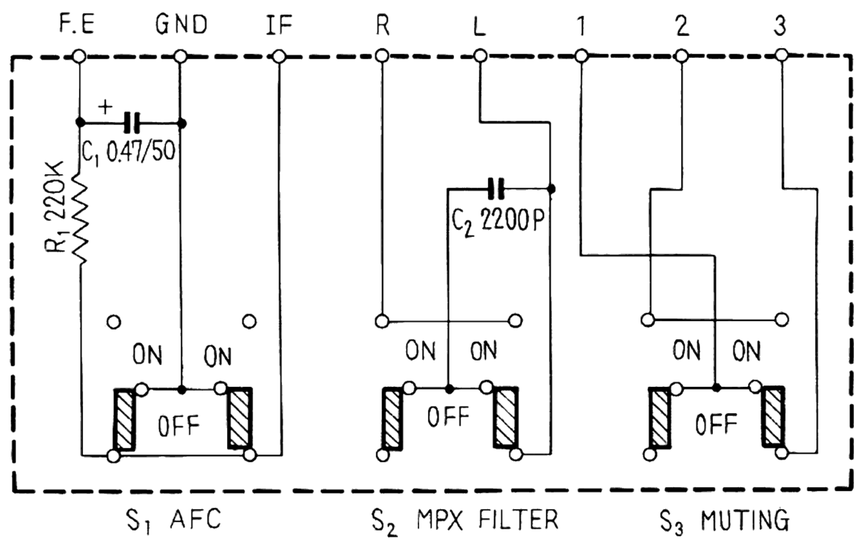

FM FRONT END
W11 - 033

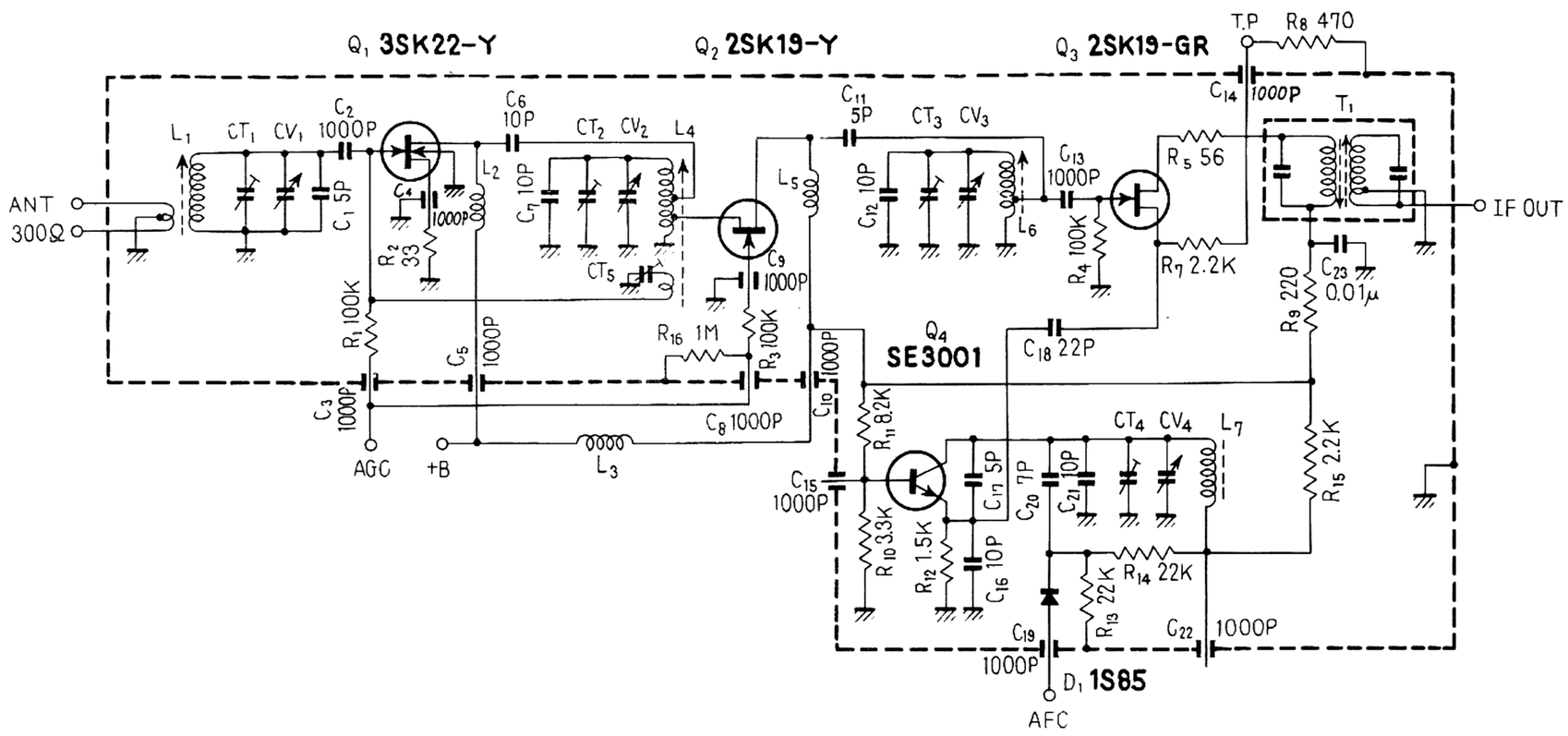

FM IF UNIT
W12 - 023

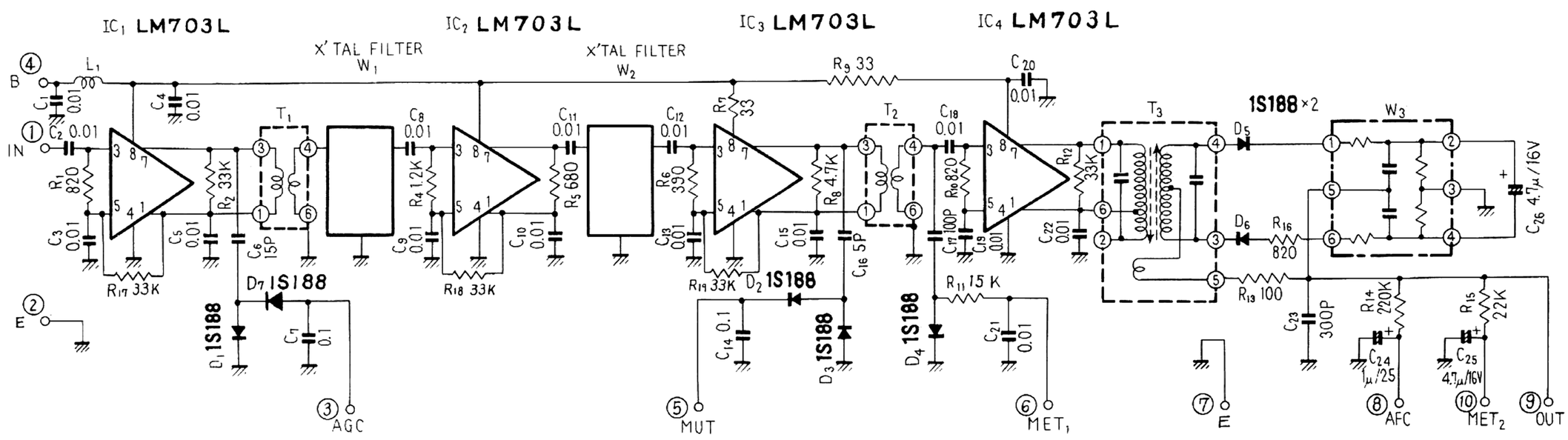

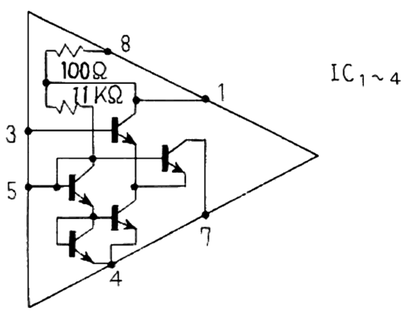

MPX UNIT
W13-025

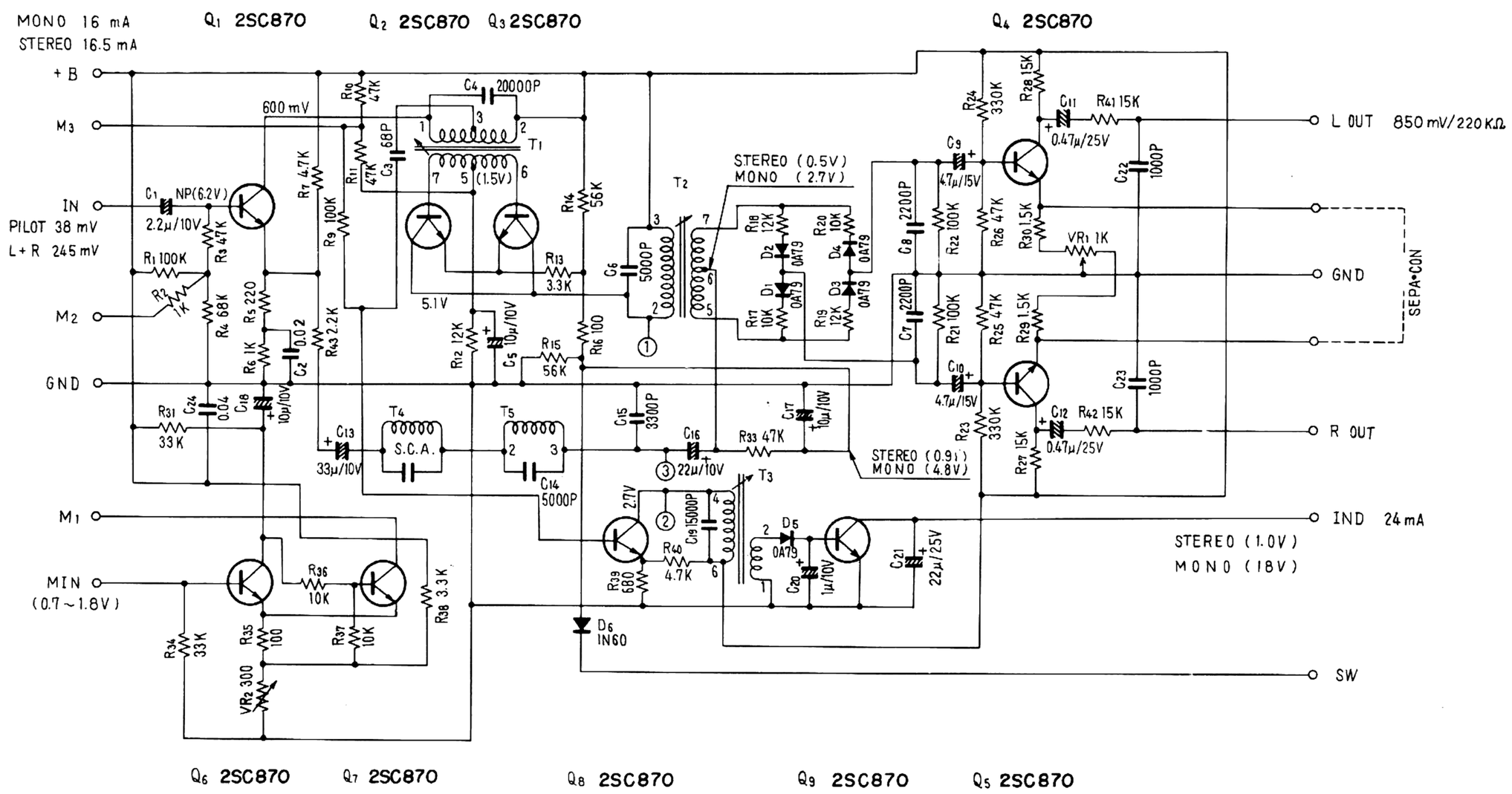

AM TUNER UNIT
W14-011

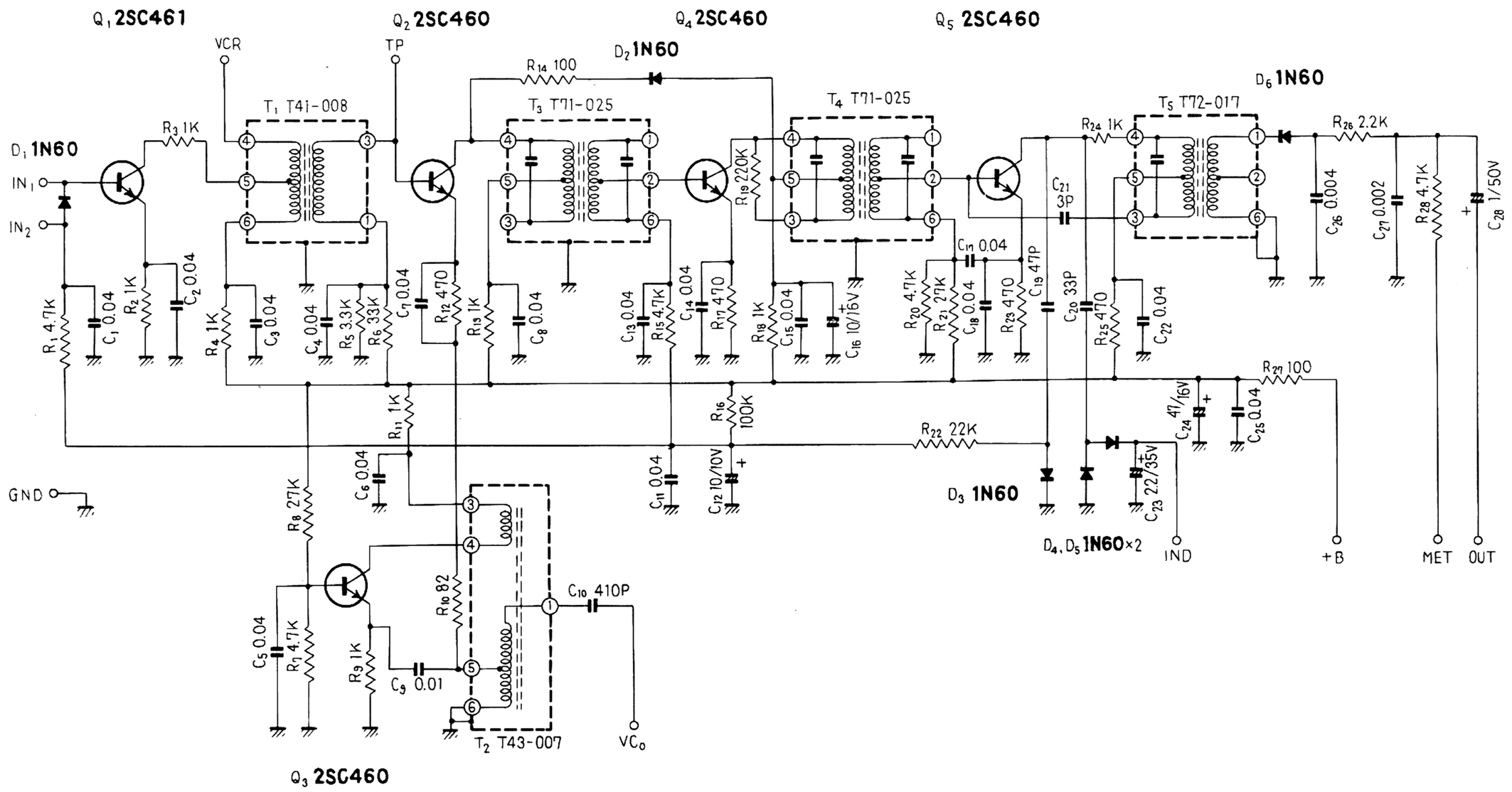

AF UNIT

W15 - 067

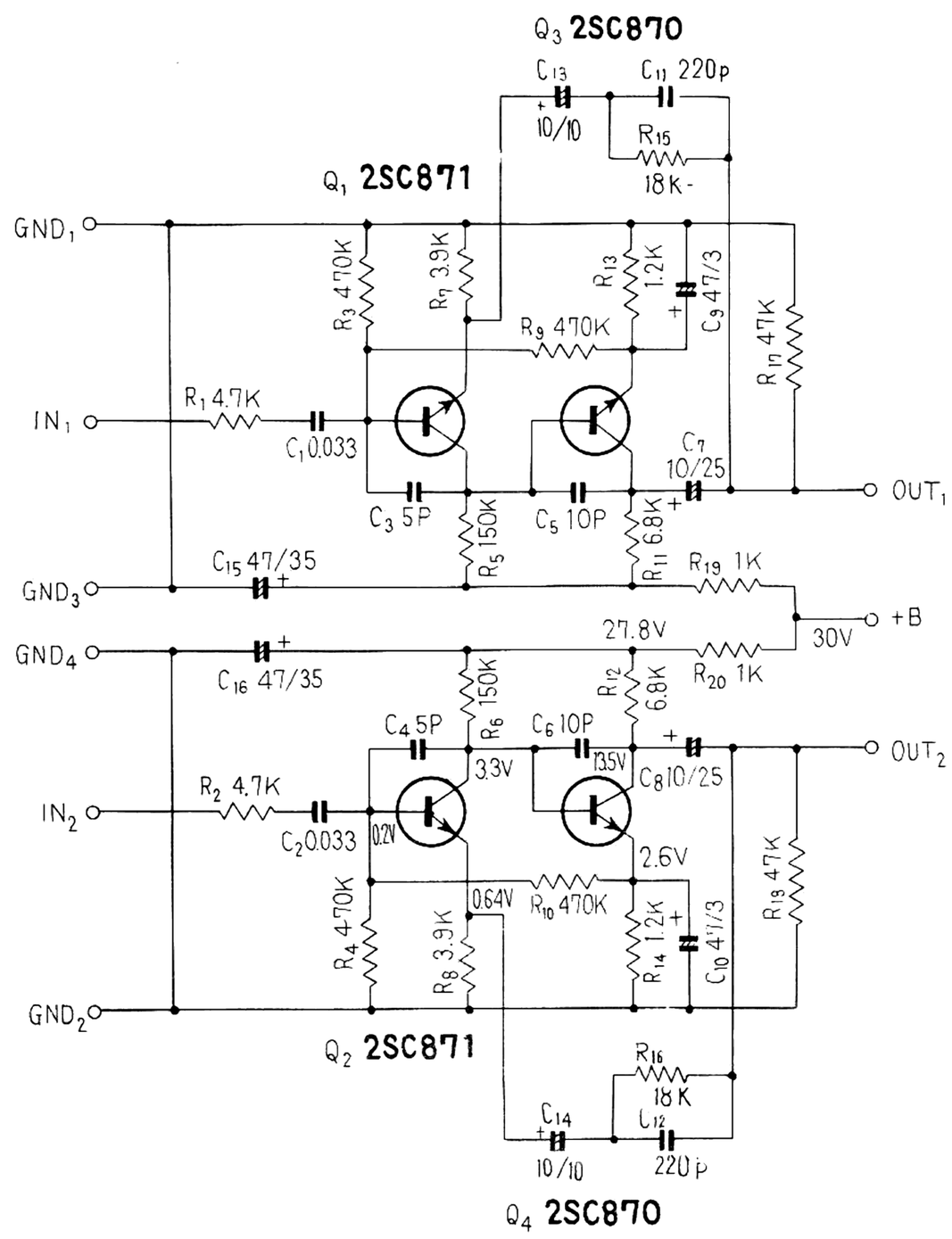

POWER SUPPLY UNIT

W16 - 020

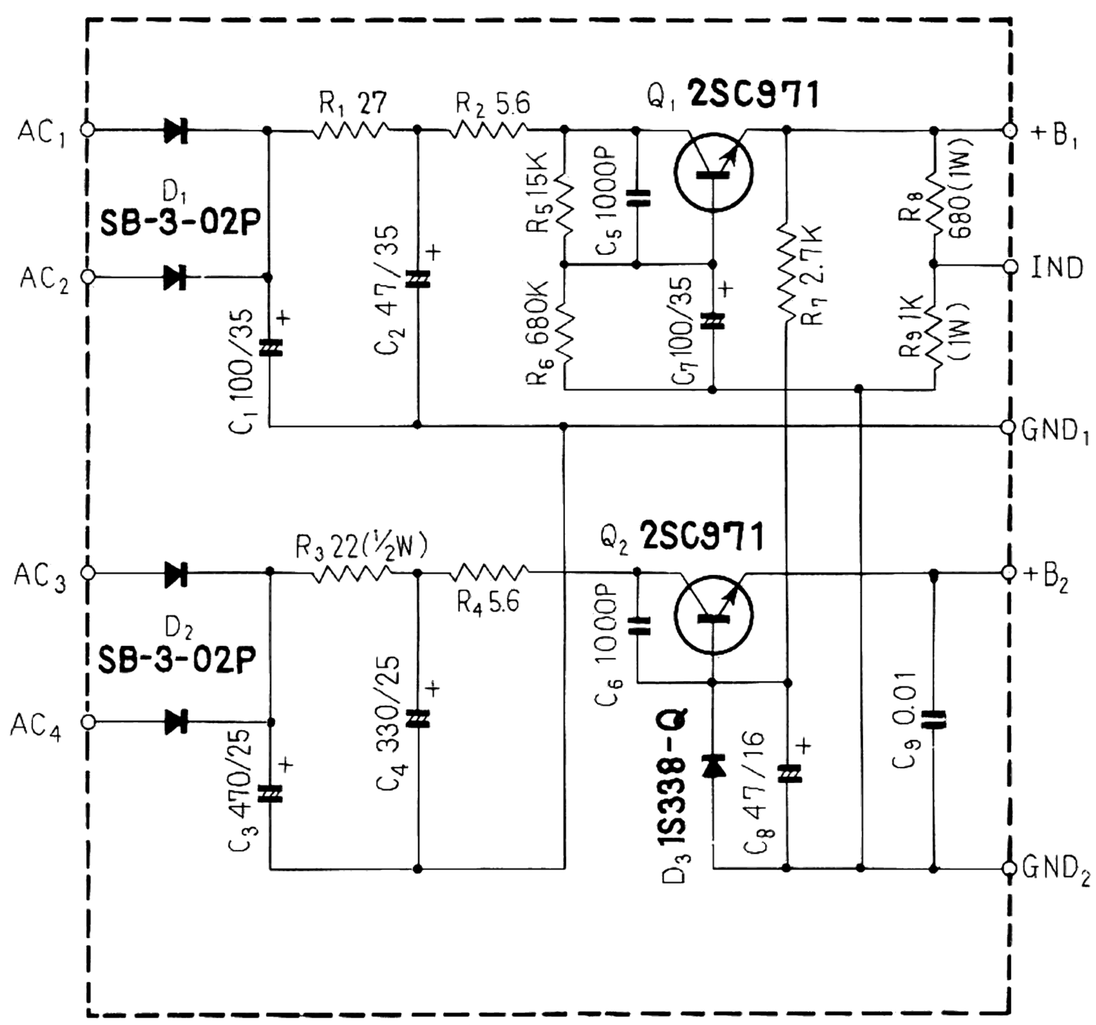

ALIGNMENT INSTRUCTION

Please read these Instructions with extreme care before attempting alignment.

* Test Equipment

1) Standard Signal Generator 2) VTVM, DC, AC
3) Oscilloscope

* Attention on Alignment

1) Signal Generator Input: always use the minimum generator input that provides a satisfactory output indication.
2) When connecting the test equipment to the input, use a shielded wire that is as short as possible.

* VTVM and Oscilloscope should de connected in parallel at the output.

ALIGNMENT OF AM SECTION

Position of switch: SELECTOR ..... AM
Output Level Control Setting: Fully Counterclockwise

STEPS	Input		Level	Dial Setting	Output Equipment Connections	Alignment	
	Equipment Connections	Frequency				Adjust	Remarks
1	Sweep Generator T. P	455kHz	70dB	Point of no interference as near as 1,605kHz	VTVM Oscilloscope OUT	T_3 T_4 T_5	Adjust for maximum deflection and symmetrical characteristics
2	Signal Generator Antenna terminal through dummy	600kHz	50dB (400Hz, 30%)	600kHz	VTVM OUT	T_2	Adjust for maximum deflect ion
3	〃	1,400kHz	〃	1,400kHz	〃	CT_3	〃
4	Repeat STEPS 2 and 3 several times						
5	〃	600kHz	〃	600kHz	〃	T_1 Ferrite Antenna (Adjusting core)	〃
6	〃	1,400kHz	〃	1,400kHz	〃	CT_1 CT_2	〃
7	Repeat STEPS 5 and 6 several times						

www.hifiengine.com

ALIGNMENT OF FM SECTION

Disconnect IF lead of Frontend unit from the IN terminal of IF unit

Position of Switch: Selector..... FM MONO
AFC..... OFF

Output Level Control Setting: Fully Counterclockwise

STEPS	Input			Dial Setting	Output Equipment Connections	Alignment	
	Equipment Connections	Frequency	Level			Adjust	Remarks
1	Sweep Generator IN	10.7MHz	40dB		Oscilloscope MET	T_1 T_2	Adjust for maximum sensitivity and symmetrical characteristics
2	〃	〃	80dB		〃		Check symmetry of characteristic curve
3	Remove electrolytic capacitor C_{26} (4.7μF) from detector circuit						
4	〃	〃	40dB		〃 OUT	T_3	Adjust the primary core of T_3 so that slope of straight portion of "S" curve will become the steepest and adjust the secondary core so that the center of "S" curve will coincide with the center of the marker
5	Connect IF terminal of Fronted unit to IN terminal of IF unit						
6	〃 FM Antenna terminal	〃	〃	Point of no interference as near as 87MHz	〃 MET	T_1 of Fontend T_1 T_2	Adjust for maximum sensitivity and symmetrical characteristics
7	〃	〃	80dB	〃	〃		Check symmetry of characteristic curve
8	〃	〃	40dB	〃	〃	T_3	Repeat STEP 4
9	Connect electrolytic capacitor C_{26} (4.7μF) back to where it was						
10	Signal Generator FM Antenna terminal	90MHz	20dB (400Hz, 30%)	90MHz	VTVM Oscilloscope OUT	L_7	Adjust for maximum deflection
11	〃	106MHz	〃 (〃)	106MHz	〃	CT_4	〃
12	Repeat STEPS 10 and 11 several times						
13	〃	90MHz	〃 (〃)	90MHz	〃	L_1 L_4 L_6	〃
14	〃	106MHz	〃 (〃)	106MHz	〃	CT_1, CT_2 CT_3	〃
15	Repeat STEPS 13 and 14 several times						

www.hifiengine.com

ALIGNMENT OF FM MPX SECTION

Position of Switch : SELECTOR.....FM AUTO
AFC...OFF, MUTING.....OFF
Output Level Control Setting : Fully Counterclockwise
Input Signal: Main (L+R) 40.5kHz Deviation (60%)
19kHz Pilot 7.5kHz Deviation (10%)

STEPS	Circuit to be adjusted	Input		Connect VTVM	Alignment	
		Connections	Signal		Adjust	Remarks
1	19kHz Trap	Oscillator to IN	19kHz 38mV	AC VTVM 〃 ③	T_5	Adjust for minimum deflection
2	19kHz and 38kHz stage	MPX Generator to FM Antenna terminal	L− R	OUT L or R	T_2	Adjust for maximum deflection
3	Separation Control	〃	L or R	〃 OUT R or L	VR_4	Adjust for minimum deflection of the other channel
4	〃	〃	L + R	〃 OUT L and R	VR_1	Adjust for less than 2dB in the difference of output
5	Repeat STEPS 3 and 4 several times					
6	Stereo Indicator light	〃	Pilot	〃 ②	T_1 T_3	Adjust for maximum deflection
7	〃	〃	Main 15 dB	〃	VR_2	Adjust to light stereo indicator lamp when MPX signal is applied

www.hifiengine.com

Printed in Japan

www.hifiengine.com