Pioneer sound.vision.soul

Service Manual

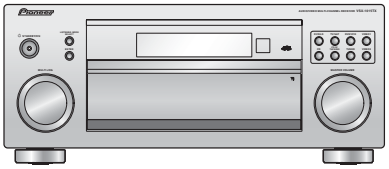

VSX-1015TX-K

ORDER NO.
RRV3113

AUDIO/VIDEO MULTI-CHANNEL RECEIVER

VSX-1015TX-K
VSX-1015TX-S

THIS MANUAL IS APPLICABLE TO THE FOLLOWINGMODEL(S) AND TYPE(S).

Model	Type	Power Requirement	Remarks
VSX-1015TX-K	KUXJC	AC120V	
VSX-1015TX-S	KUXJC	AC120V	

For details, refer to "Important Check Points for Good Servicing".

PIONEER CORPORATION 4-1, Meguro 1-chome, Meguro-ku, Tokyo 153-8654, Japan
PIONEER ELECTRONICS (USA) INC. P.O. Box 1760, Long Beach, CA 90801-1760, U.S.A.
PIONEER EUROPE NV Haven 1087, Keetberglaan 1, 9120 Melsele, Belgium
PIONEER ELECTRONICS ASIACENTRE PTE. LTD. 253 Alexandra Road, #04-01, Singapore 159936
ⒸPIONEER CORPORATION 2005

T-ZZK FEB. 2005 printed in Japan

SAFETY INFORMATION

This service manual is intended for qualified service technicians; it is not meant for the casual do-it-yourselfer. Qualified technicians have the necessary test equipment and tools, and have been trained to properly and safely repair complex products such as those covered by this manual.

Improperly performed repairs can adversely affect the safety and reliability of the product and may void the warranty. If you are not qualified to perform the repair of this product properly and safely, you should not risk trying to do so and refer the repair to a qualified service technician.

WARNING

This product contains lead in solder and certain electrical parts contain chemicals which are known to the state of California to cause cancer, birth defects or other reproductive harm.

Health & Safety Code Section 25249.6 – Proposition 65

NOTICE

(FOR CANADIAN MODEL ONLY)

Fuse symbols (fast operating fuse) and/or (slow operating fuse) on PCB indicate that replacement parts must be of identical designation.

REMARQUE

(POUR MODÈLE CANADIEN SEULEMENT)

Les symboles de fusible (fusible de type rapide) et/ou (fusible de type lent) sur CCI indiquent que les pièces de remplacement doivent avoir la même désignation.

(FOR USA MODEL ONLY)

1. SAFETY PRECAUTIONS

The following check should be performed for the continued protection of the customer and service technician.

LEAKAGE CURRENT CHECK

Measure leakage current to a known earth ground (water pipe, conduit, etc.) by connecting a leakage current tester such as Simpson Model 229-2 or equivalent between the earth ground and all exposed metal parts of the appliance (input/output terminals, screwheads, metal overlays, control shaft, etc.). Plug the AC line cord of the appliance directly into a 120V AC 60 Hz outlet and turn the AC power switch on. Any current measured must not exceed 0.5 mA.

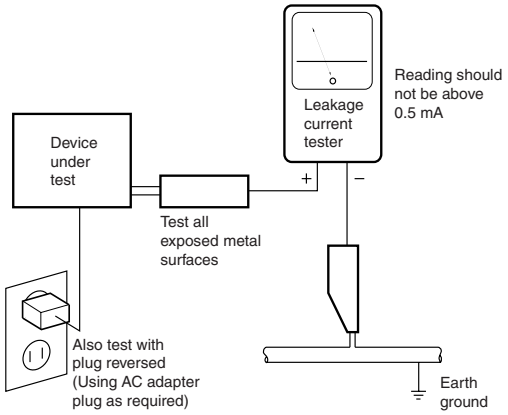

AC Leakage Test

ANY MEASUREMENTS NOT WITHIN THE LIMITS OUTLINED ABOVE ARE INDICATIVE OF A POTENTIAL SHOCK HAZARD AND MUST BE CORRECTED BEFORE RETURNING THE APPLIANCE TO THE CUSTOMER.

2. PRODUCT SAFETY NOTICE

Many electrical and mechanical parts in the appliance have special safety related characteristics. These are often not evident from visual inspection nor the protection afforded by them necessarily can be obtained by using replacement components rated for voltage, wattage, etc. Replacement parts which have these special safety characteristics are identified in this Service Manual.

Electrical components having such features are identified by marking with a ⚠ on the schematics and on the parts list in this Service Manual.

The use of a substitute replacement component which does not have the same safety characteristics as the PIONEER recommended replacement one, shown in the parts list in this Service Manual, may create shock, fire, or other hazards.

Product Safety is continuously under review and new instructions are issued from time to time. For the latest information, always consult the current PIONEER Service Manual. A subscription to, or additional copies of, PIONEER Service Manual may be obtained at a nominal charge from PIONEER.

[Important Check Points for Good Servicing]

In this manual, procedures that must be performed during repairs are marked with the below symbol.
Please be sure to confirm and follow these procedures.

1. Product safety

Please conform to product regulations (such as safety and radiation regulations), and maintain a safe servicing environment by following the safety instructions described in this manual.

① Use specified parts for repair.

Use genuine parts. Be sure to use important parts for safety.

② Do not perform modifications without proper instructions.

Please follow the specified safety methods when modification(addition/change of parts) is required due to interferences such as radio/TV interference and foreign noise.

③ Make sure the soldering of repaired locations is properly performed.

When you solder while repairing, please be sure that there are no cold solder and other debris.
Soldering should be finished with the proper quantity. (Refer to the example)

④ Make sure the screws are tightly fastened.

Please be sure that all screws are fastened, and that there are no loose screws.

⑤ Make sure each connectors are correctly inserted.

Please be sure that all connectors are inserted, and that there are no imperfect insertion.

⑥ Make sure the wiring cables are set to their original state.

Please replace the wiring and cables to the original state after repairs.
In addition, be sure that there are no pinched wires, etc.

⑦ Make sure screws and soldering scraps do not remain inside the product.

Please check that neither solder debris nor screws remain inside the product.

⑧ There should be no semi-broken wires, scratches, melting, etc. on the coating of the power cord.

Damaged power cords may lead to fire accidents, so please be sure that there are no damages.
If you find a damaged power cord, please exchange it with a suitable one.

⑨ There should be no spark traces or similar marks on the power plug.

When spark traces or similar marks are found on the power supply plug, please check the connection and advise on secure connections and suitable usage. Please exchange the power cord if necessary.

⑩ Safe environment should be secured during servicing.

When you perform repairs, please pay attention to static electricity, furniture, household articles, etc. in order to prevent injuries.
Please pay attention to your surroundings and repair safely.

2. Adjustments

To keep the original performance of the products, optimum adjustments and confirmation of characteristics within specification.
Adjustments should be performed in accordance with the procedures/instructions described in this manual.

3. Lubricants, Glues, and Replacement parts

Use grease and adhesives that are equal to the specified substance.
Make sure the proper amount is applied.

4. Cleaning

For parts that require cleaning, such as optical pickups, tape deck heads, lenses and mirrors used in projection monitors, proper cleaning should be performed to restore their performances.

5. Shipping mode and Shipping screws

To protect products from damages or failures during transit, the shipping mode should be set or the shipping screws should be installed before shipment. Please be sure to follow this method especially if it is specified in this manual.

CONTENTS

SAFETY INFORMATION 2
1. SPECIFICATIONS 6
2. EXPLODED VIEWS AND PARTS LIST 7
2.1 PACKING 7
2.2 EXTERIOR SECTION 8
2.3 CHASSIS SECTION 10
2.4 REAR PANEL SECTION 12
2.5 HEAT SINK SECTION 14
2.6 FRONT PANEL SECTION 16
3. BLOCK DIAGRAM AND SCHEMATIC DIAGRAM 18
3.1 BLOCK DIAGRAM 18
3.1.1 BLOCK DIAGRAM 18
3.1.2 VIDEO and DISPLAY SECTIONS 20
3.1.3 DSP SECTION 22
3.1.4 POWER SUPPLY SECTION 24
3.2 OVERALL WIRING DIAGRAM 26
3.3 MULTI CH I/O and AUDIO CONNECT ASSYS 28
3.4 COMPOSITE V ASSY 30
3.5 S VIDEO ASSY 32
3.6 COMPONENT ASSY 34
3.7 OPTICAL-IN,H.P,FRONT-IN,FRONT-IN CONNECT ASSYS 36
3.8 MAIN CONTROL ASSY (1/3) 38
3.9 MAIN CONTROL ASSY (2/3) 40
3.10 MAIN CONTROL ASSY (3/3) 42
3.11 DSP ASSY (1/2) 44
3.12 DSP ASSY (1/2) 46
3.13 VOLUME, DISPLAY and MULTI JOG ASSYS 48
3.14 POWER AMP IN and POWER PROTECT ASSYS 50
3.15 POWER AMP-L and POSI 1 L ASSYS 52
3.16 POWER AMP-R and POSI 1 R ASSYS 54
3.17 REGULATOR ASSY 56
3.18 TRANS 2-1, TRANS 2-2, DIODE, VH TR and SP/PS ASSYS 58
3.19 REAR TOP, TRANS SIDE, TRANS 1 and PRIMARY ASSYS 60
4. PCB CONNECTION DIAGRAM 62
4.1 MULTI CH I/O ASSY 63
4.2 AUDIO CONNECT ASSY 64
4.3 COMPOSITE V ASSY 65
4.4 S VIDEO ASSY 66
4.5 VIDEO SIDE and OPTICAL-IN ASSYS 67
4.6 COMPONENT ASSY 68
4.7 FRONT IN and FRONT-IN CONNECT ASSYS 69
4.8 MAIN CONTROL ASSY 70
4.9 DISPLAY ASSY 74
4.10 DISPLAY ASSY 76
4.11 HEADPHONE, VOLUME and MULTI JOG ASSYS 78
4.12 POWER AMP-L and POSI 1 L ASSYS 80
4.13 POWER AMP-R and POSI 1 R ASSYS 84
4.14 REGULATOR ASSY 88
4.15 SP / PS ASSY 92
4.16 TRANS 2-1, DIODE and VH TR ASSYS 94
4.17 TRANS SIDE ASSY 96
4.18 TRANS 2-2, TRANS 1 and PRIMARY ASSYS 98
4.19 REAR TOP ASSY 100
4.20 POWER AMP IN ASSY 101
5. PCB PARTS LIST 102
6. ADJUSTMENT 110
7. GENERAL INFORMATION 111
7.1 DIAGNOSIS 111
7.1.1 PROTECTION CIRCUIT CONTROL SPECIFICATION 111
7.1.2 HOW TO DIAGNOSE THE AMPLIFIER SECTION 113
7.1.3 HOW TO DIAGNOSE THE UNIT WITH THE POWER AMPLIFIER SECTION REMOVED 114
7.1.4 DISASSEMBLY 117
7.1.5 TROUBLE SHOOTING OF THE DSP ASSY 121
7.2 PARTS 130
7.2.1 IC 130

7.3 CLEANING 133
8. PANEL FACILITIES 134

A

B

C

D

E

F

1. SPECIFICATIONS

Amplifier section

Continuous average power output of 120 watts* per channel, min., at 8 ohms, from 20 Hz to 20,000 Hz with no more than 0.2% total harmonic distortion (front).**

Continuous Power Output

Front. . . . . 120 W + 120 W (20 Hz-20 kHz, 8 Ω, 0.2%)
Center . . . . . 120 W (20 Hz-20 kHz, 8 Ω, 0.2%)
Surround . . . . . 120 W + 120 W (20 Hz-20 kHz, 8 Ω, 0.2%)
Surround back
. . . . . 120 W + 120 W (20 Hz-20 kHz, 8 Ω, 0.2%)

Continuous Power Output

Front. . . . . .150 W + 150 W (1 kHz, 6 Ω, 1.0%)
Center . . . . . .150 W (1 kHz, 6 Ω, 1.0%)
Surround . . . . . .150 W + 150 W (1 kHz, 6 Ω, 1.0%)
Surround back . . . . . .150 W + 150 W (1 kHz, 6 Ω, 1.0%)

Total harmonic distortion
. . . . . 0.09% (20 Hz-20 kHz, 110 W, 8 Ω)

Audio Section

Input (Sensitivity/Impedance)
LINE. . . . . 335 mV/47 kΩ
Frequency Response
LINE. . . . . .5 Hz to 100,000 Hz $^{+0}_{-3}$ dB
Output (Level/Impedance)
REC . . . . . 335 mV/2.2 kΩ
Tone Control
BASS . . . . . .± 6 dB (100 Hz)
TREBLE . . . . . .± 6 dB (10 kHz)
LOUDNESS. . . . . +4/+2 dB (100Hz/10 kHz)
(at volume position –40 dB)
Signal-to-Noise Ratio (IHF, short circuited, A network)
LINE. . . . . 103 dB
Signal-to-Noise Ratio [EIA, at 1W (1kHz)]
LINE. . . . . 83 dB

* Measured pursuant to the Federal Trade Commission's Trade Regulation rule on Power Output Claims for Amplifiers
** Measured by Audio Spectrum Analyzer

Composite Video / S-Video Section

Input (Sensitivity/Impedance) . . . . . 1 Vp-p/75 Ω
Output (Level/Impedance). . . . . 1 Vp-p/75 Ω
Signal-to-Noise Ratio . . . . . 65 dB
Frequency Response . . . . . 5 Hz to 10 MHz $^{+0}_{-3}$ dB

Component Video Section

Input (Sensitivity/Impedance) . . . . . 1 Vp-p/75 Ω
Output (Level/Impedance). . . . . 1 Vp-p/75 Ω
Signal-to-Noise Ratio . . . . . 65 dB
Frequency Response . . . . . 5 Hz to 100 MHz $^{+0}_{-3}$ dB

FM Tuner Section

Frequency Range . . . . . .87.5 MHz to 108 MHz
Usable Sensitivity . . . . . .Mono: 13.2 dBf, IHF (1.3 μV/75 Ω)
50 dB Quieting Sensitivity . . . . . Mono: 20.2 dBf
Stereo: 38.6 dBf
Signal-to-Noise Ratio . . . . . .Mono: 73 dB (at 85 dBf)
Stereo: 70 dB (at 85 dBf)
Distortion . . . . . .Stereo: 0.5% (1 kHz)
Alternate Channel Selectivity . . . . . .60 dB (400 kHz)
Stereo Separation . . . . . .40 dB (1 kHz)
Frequency Response . . . . . .30 Hz to 15 kHz ± 1dB
Antenna Input . . . . . 75 Ω unbalanced

AM Tuner Section

Frequency Range . . . . . 530 kHz to 1,700 kHz
Sensitivity (IHF, Loop antenna) . . . . . .350 μV/m
Selectivity . . . . . 25 dB
Signal-to-Noise Ratio . . . . . 50 dB
Antenna . . . . . Loop antenna

Miscellaneous

Power Requirements. . . . . .AC 120 V, 60 Hz
Power Consumption . . . . . .480 W, 630 VA
In standby . . . . . 0.43 W
AC Outlet . . . . . (switched) 100 W MAX.
Dimensions . . . . . 420 (W) x 173 (H) x 465 (D) mm
(16 9/16 (W) x 6 13/16 (H) x 18 5/16 (D) in.)
Weight (without package). . . . . 15.4 kg (34 lb)

Furnished Parts

Microphone (for Auto MCACC setup). 1
AA/IEC R6P dry cell batteries 2
Remote control 1
AM loop antenna. 1
FM wire antenna 1
Warranty card 1
Operating instructions

Note

- Specifications and the design are subject to possible modifications without notice, due to improvements.

Manufactured under license from Dolby Laboratories. "Dolby", "Pro Logic", and the double-D symbol are trademarks of Dolby Laboratories.

"DTS", "DTS-ES", "Neo:6" and "DTS 96/24" are trademarks of Digital Theater Systems, Inc.

● Accessories

- Setup microphone (APM7006)

- Remote control unit (AXD7381)

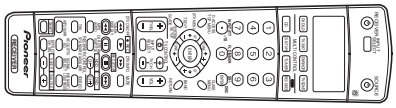

- AA/IEC R6P dry cell batteries x2

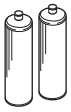

- AM loop antenna (ATB7013)

- FM wire antenna (ADH7030)

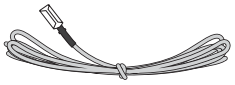

- Warranty card
- Operating instructions

2. EXPLODED VIEWS AND PARTS LIST

NOTES:
- *Parts marked by "NSP" are generally unavailable because they are not in our Master Spare Parts List.*
- *The ⚠ mark found on some component parts indicates the importance of the safety factor of the part. Therefore, when replacing, be sure to use parts of identical designation.*
- *Screws adjacent to ▼ mark on product are used for disassembly.*
- *For the applying amount of lubricants or glue, follow the instructions in this manual. (In the case of no amount instructions, apply as you think it appropriate.)*

2.1 PACKING

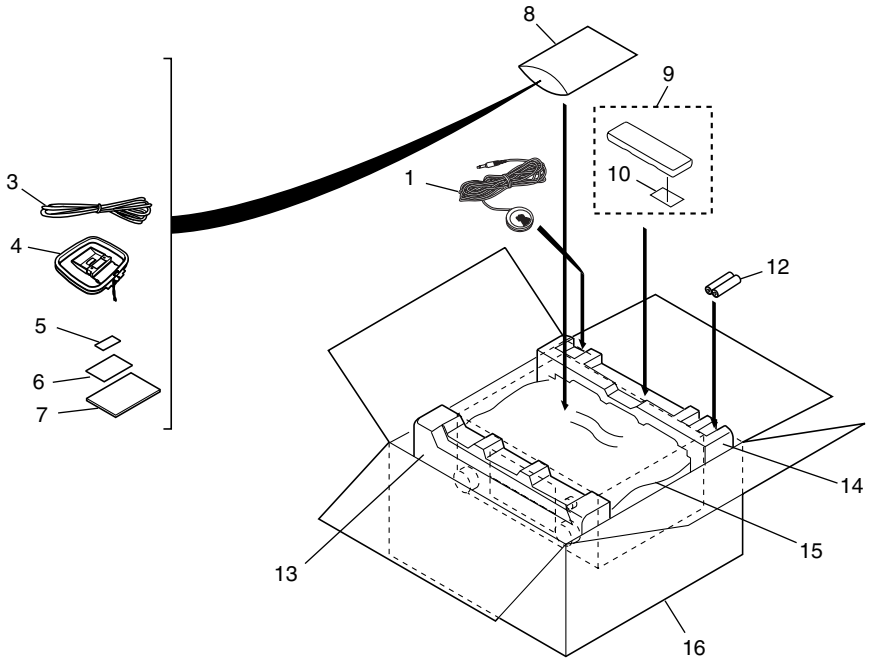

(1) PACKING PARTS LIST

Mark	No.	Description	Part No.
	1	Setup Microphone	APM7006
	2	••••••	
	3	FM Wire Antenna	ADH7030
	4	AM Loop Antenna	ATB7013
	5	Caution Sheet SP,E	ARM7083
NSP	6	Warranty Card	ARY7045
	7	Operating Instructions (English)	ARB7326
NSP	8	Literature Bag	AHG7117
	9	Remote Control Unit	AXD7381
	10	Battery Cover	XZN3140
	11	••••••	
NSP	12	AA/IEC R6P Dry Cell Batteries	VEM1031
	13	Front Pad V2	AHA7442
	14	Rear Pad V2	AHA7443
	15	Packing Sheet	RHC1023
	16	Packing Case	See Contrast table (2)

(2) CONTRAST TABLE

VSX-1015TX-S/KUXJC and VSX-1015TX-K/KUXJC are constructed the same except for the following:

Mark	No.	Symbol and Description	VSX-1015TX-K /KUXJC	VSX-1015TX-S /KUXJC
	16	Packing Case 1015/KU	AHD8328	Not used
	16	Packing Case 1015/SK	Not used	AHD8383

2.2 EXTERIOR SECTION

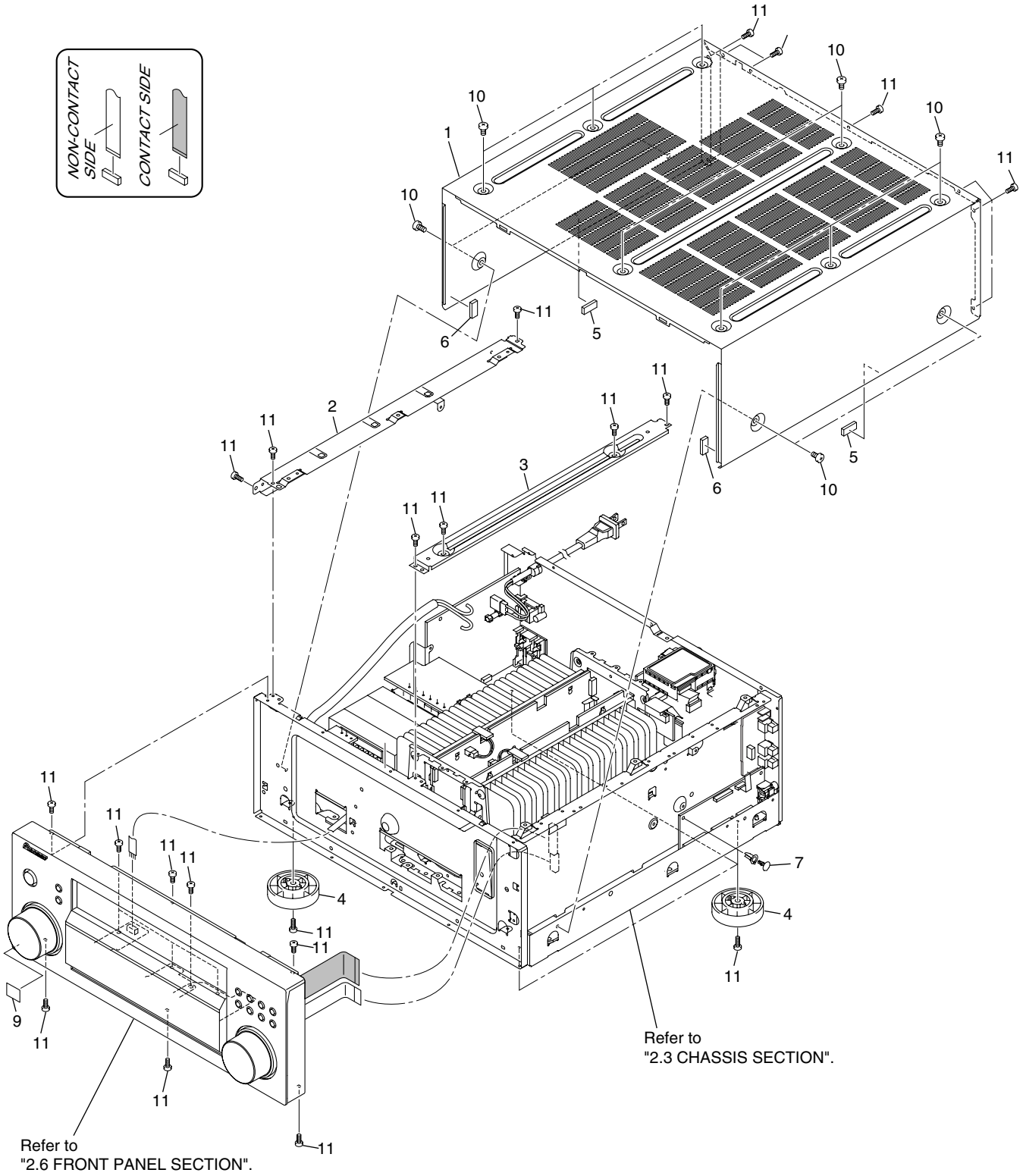

(1) EXTERIOR SECTION PARTS LIST

Mark	No.	Description	Part No.
	1	Bonnet Case	See Contrast table (2)
	2	Left Beam	ANG7401
	3	Center Beam	ANG7482
	4	Insulator	PNW2766
	5	Spacer (4.5 x 10 x 20)	AEB7355
	6	Spacer 45B (6 x 7 x 13)	AEB7264
	7	Nyron Rivet	AEC7408
	8	••••••	
NSP	9	Energy Star Label	AAX8022
	10	Screw	See Contrast table (2)
	11	Screw	BBZ30P080FCC

(2) CONTRAST TABLE

VSX-1015TX-S/KUXJC and VSX-1015TX-K/KUXJC are constructed the same except for the following:

Mark	No.	Symbol and Description	VSX-1015TX-K /KUXJC	VSX-1015TX-S /KUXJC
	1	Bonnet Case V1B	AZN7980	Not used
	1	Bonnet Case V1S	Not used	AZN7981
	10	Screw	BBZ40P080FTB	BBZ40P080FNI

2.3 CHASSIS SECTION

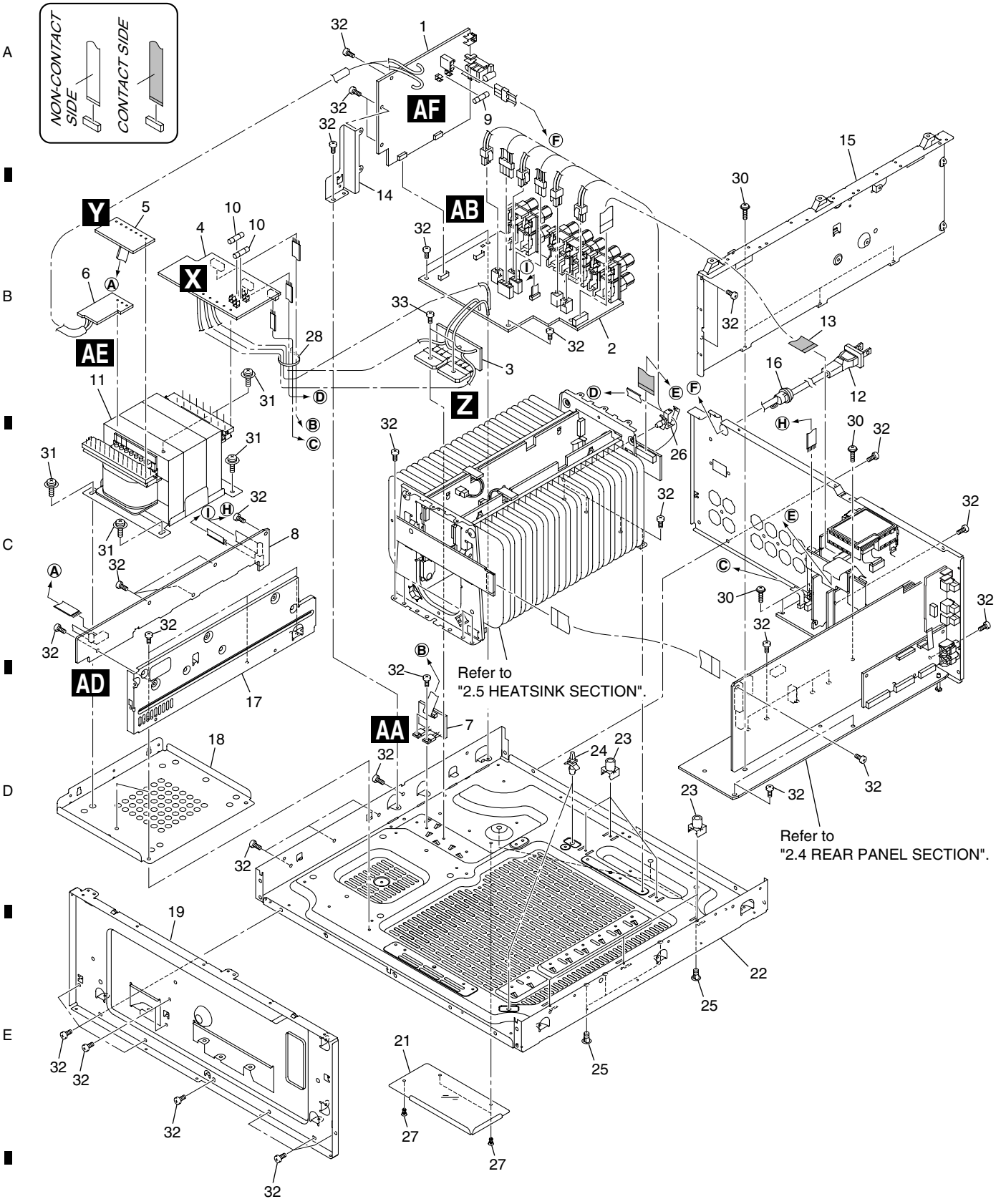

(1) CHASSIS SECTION PARTS LIST

Mark	No.	Description	Part No.
	1	PRIMARY Assy	AWX8384
	2	SP/PS Assy	AWX8686
NSP	3	DIODE Assy	AWX8376
	4	TRANS 2-1 Assy	AWX8372
	5	TRANS 2-2 Assy	AWX8371
	6	TRANS 1 Assy	AWX8383
	7	VH TR Assy	AWX8411
NSP	8	TRANS SIDE Assy	AWX8417
⚠	9	Fuse (FU1 : 10A)	VEK1029
⚠	10	Fuse (FU4, 5 : 2.5A)	REK1112
⚠	11	Power Transformer (T1501)	ATS7374
⚠	12	Power Cable	VDG1075
	13	Flexible Cable (12P)	ADD7477
	14	Primary Angle 56	ANG7526
	15	DSP Shield A V1	ANG7479
	16	Cord Stopper	CM-22C
	17	Under Beam V1	ANG7478
	18	Trans. Frame 45	ANG7399
NSP	19	Panel Stay V1	AND7066
	20	••••••	
	21	Screw Cover 45A	AEC7414
NSP	22	Under Base	ANA7161
	23	PCB Mold	AMR2534
	24	Locking Card Spacer	PNW2917
	25	Card Spacer	DNK2769
	26	Wire Saddle 5S	AEC7500
	27	Push Rivet	AEC7370
NSP	28	Binder (BK-1)	ZCA-BK1
	29	••••••	
	30	Screw	IBZ30P150FCC
	31	Screw	ABA7109
	32	Screw	BBZ30P080FCC
	33	Deco Screw	ABA7060

2.4 REAR PANEL SECTION

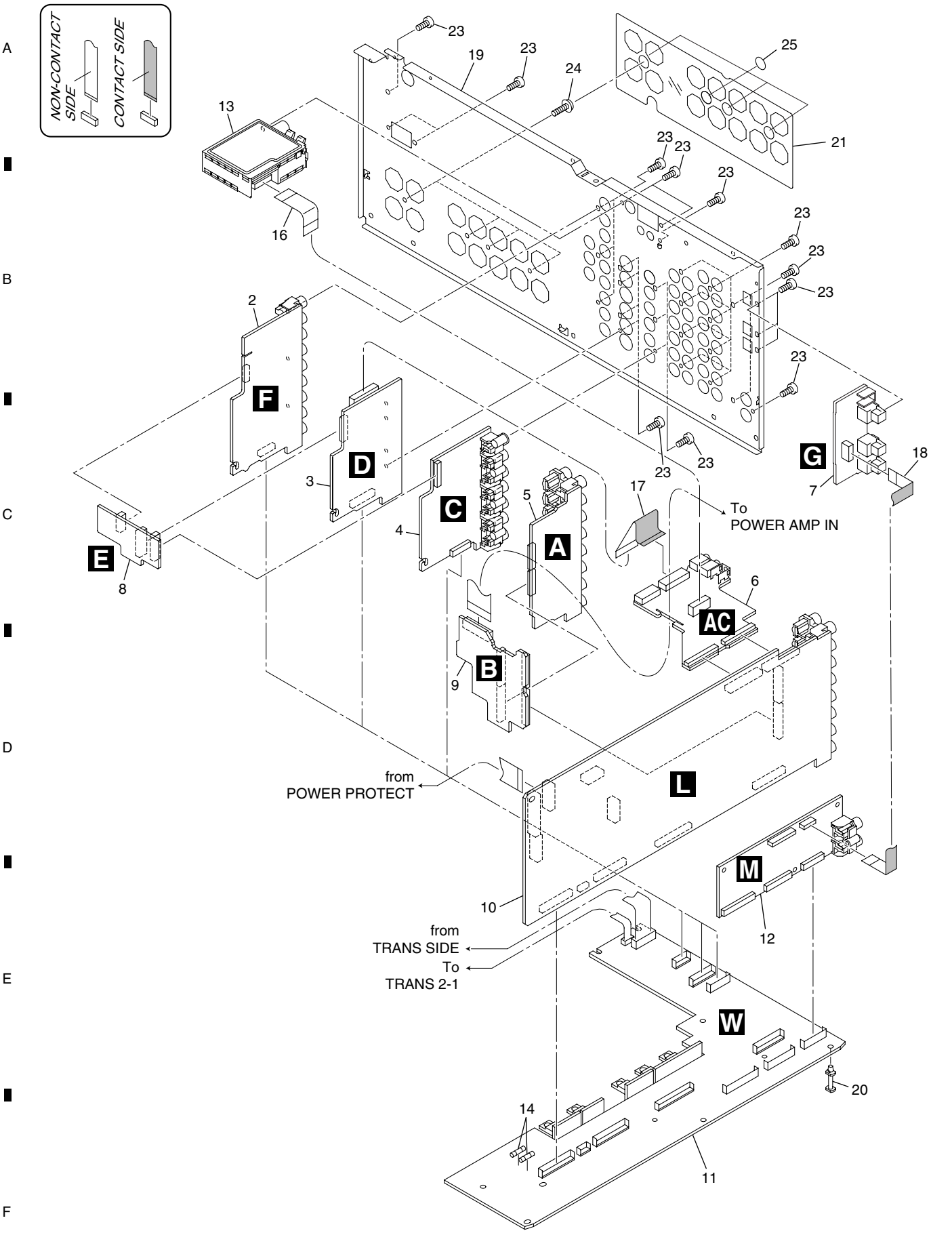

(1) REAR PANEL SECTION PARTS LIST

Mark	No.	Description	Part No.
	1	••••••	
	2	COMPONENT Assy	AWX8608
	3	S VIDEO Assy	AWX8607
	4	COMPOSITE V Assy	AWX8606
	5	MULTI CH I/O Assy	AWX8605
	6	REAR TOP Assy	AWX8397
	7	OPTICAL-IN Assy	AWX8617
NSP	8	VIDEO SIDE Assy	AWX8609
NSP	9	AUDIO CONNECT Assy	AWX8382
	10	MAIN CONTROL Assy	AWX8604
	11	REGULATOR Assy	AWX8677
	12	DSP Assy	AWX8572
	13	FM/AM TUNER Unit	AXX7172
⚠	14	Fuse (FU2501, 2502 : 3.15A)	REK1114
	15	••••••	
	16	Flexible Cable (11P)	ADD7476
	17	Flexible Cable (17P)	ADD7478
	18	Flexible Cable (10P)	ADD7501
	19	Rear Panel	See Contrast table (2)
	20	Card Spacer	AEC7502
	21	Speaker Sheet V1	AAK8176
	22	••••••	
	23	Screw	BBZ30P080FCC
	24	Screw	BBT30P100FCC
	25	Cushion Circle 14B	AED7081

(2) CONTRAST TABLE

VSX-1015TX-S/KUXJC and VSX-1015TX-K/KUXJC are constructed the same except for the following:

Mark	No.	Symbol and Description	VSX-1015TX-K /KUXJC	VSX-1015TX-S /KUXJC
	19	Rear Panel 1015KU	ANC8349	Not used
	19	Rear Panel 1015SK	Not used	ANC8361

2.5 HEAT SINK SECTION

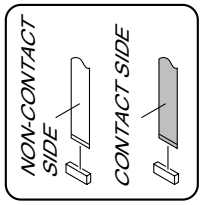

from AUDIO CONNECT

from SP/PS

To TRANS 2-1

from MAIN CONTROL

(1) HEAT SINK SECTION PARTS LIST

Mark	No.	Description	Part No.
	1	POWER AMP-L Assy	AWX8409
	2	POWER AMP-R Assy	AWX8404
	3	POWER AMP IN Assy	AWX8405
	4	POWER PROTECT Assy	AWX8406
NSP	5	POSI 1 L Assy	AWX8427
NSP	6	POSI 1 R Assy	AWX8426
	7	Flexible Cable (15P)	ADD7473
	8	Flexible Cable (18P)	ADD7479
NSP	9	Heat Sink 45	ANH7152
	10	H.S Angle V1	ANG7481
	11	PCB Angle 45	ANG7406
	12	Mica Sheet 45	AEE7047
NSP	13	Speed Clamp	AEC7445
	14	Nyron Rivet	AEC7408
	15	Screw	BBZ30P100FCC
	16	Screw	ABA7085

2.6 FRONT PANEL SECTION

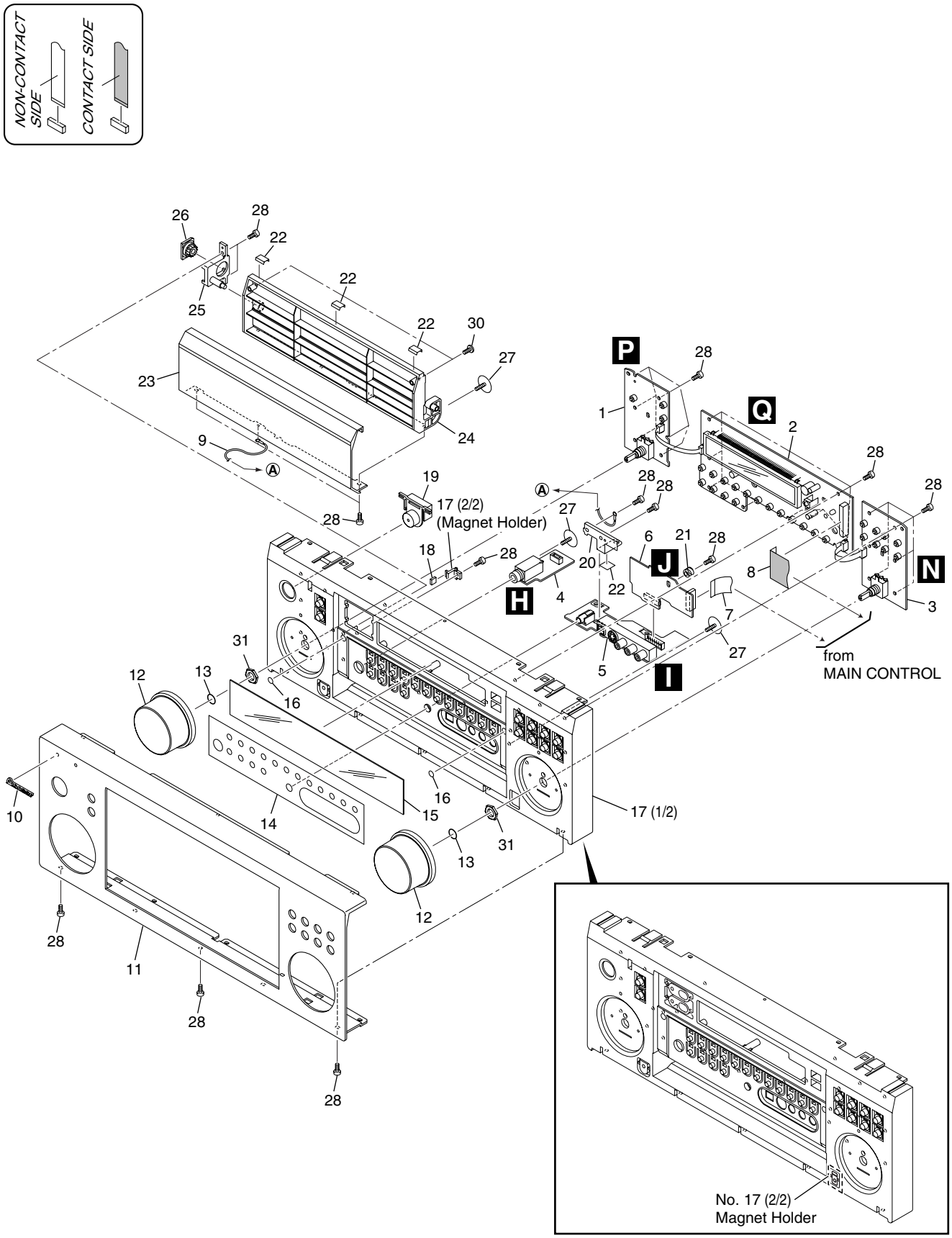

(1) FRONT PANEL SECTION PARTS LIST

Mark	No.	Description	Part No.
NSP	1	MULTI JOG Assy	AWX8618
	2	DISPLAY Assy	AWX8616
NSP	3	VOLUME Assy	AWX8378
NSP	4	HEADPHONE Assy	AWX8380
	5	FRONT-IN Assy	AWX8381
NSP	6	FRONT-IN CONNECT Assy	AWX8416
	7	Flexible Cable (15P)	ADD7473
	8	Flexible Cable (26P)	ADD7474
NSP	9	Earth Lead Wire	ADH7022
	10	Pioneer Badge	See Contrast table (2)
	11	F. Panel 1015KU	See Contrast table (2)
	12	Rotary Knob B	See Contrast table (2)
	13	Ring	ABH7213
	14	D. Sheet	See Contrast table (2)
	15	Window 1015KU	AAK8279
	16	Cushion Circle	See Contrast table (2)
	17	Panel Base	See Contrast table (2)
	18	Magnet 35	AMF7007
	19	Standby Button	See Contrast table (2)
	20	Earth Plate A	ANG7484
NSP	21	Earth Spring 35	ABH7193
	22	Cushion 11 x 11	AED7088
	23	Door	See Contrast table (2)
	24	Door Base	See Contrast table (2)
	25	Door Shaft 35	AMR7295
	26	Damper Assy (240)	AXA7136
	27	Screw	ABA7110
	28	Screw	BPZ30P100FTC
	29	••••••	
	30	••••••	
	31	Nut	NK90FCC

(2) CONTRAST TABLE

VSX-1015TX-S/KUXJC and VSX-1015TX-K/KUXJC are constructed the same except for the following:

Mark	No.	Symbol and Description	VSX-1015TX-K /KUXJC	VSX-1015TX-S /KUXJC
	10	Pioneer Badge	AAN7218	VAM1124
	11	F. Panel 1015KU	ANB7359	Not used
	11	F. Panel 1015SK	Not used	ANB7384
	12	Rotary Knob B	AAA7024	Not used
	12	Rotary Knob S	Not used	AAA7025
	14	D. Sheet 1014KU	AAK8180	Not used
	14	D. Sheet 1014SF	Not used	AAK8199
	16	Cushion Circle 6B	AED7083	Not used
	16	Cushion Circle 6S	Not used	AED7080
	17	Panel Base V1B	AMB7870	Not used
	17	Panel Base V1S	Not used	AMB7871
	19	Standby Button 915K ASSY	XAD3216	Not used
	19	Standby Button 915P ASSY	Not used	XAD3217
	23	Door 1015KU	ANB7361	Not used
	23	Door 1015SF	Not used	ANB7365
	24	Door Base V1B	AMR7477	Not used
	24	Door Base V1S	Not used	AMR7478

3. BLOCK DIAGRAM AND SCHEMATIC DIAGRAM

3.1 BLOCK DIAGRAM

3.1.1 BLOCK DIAGRAM

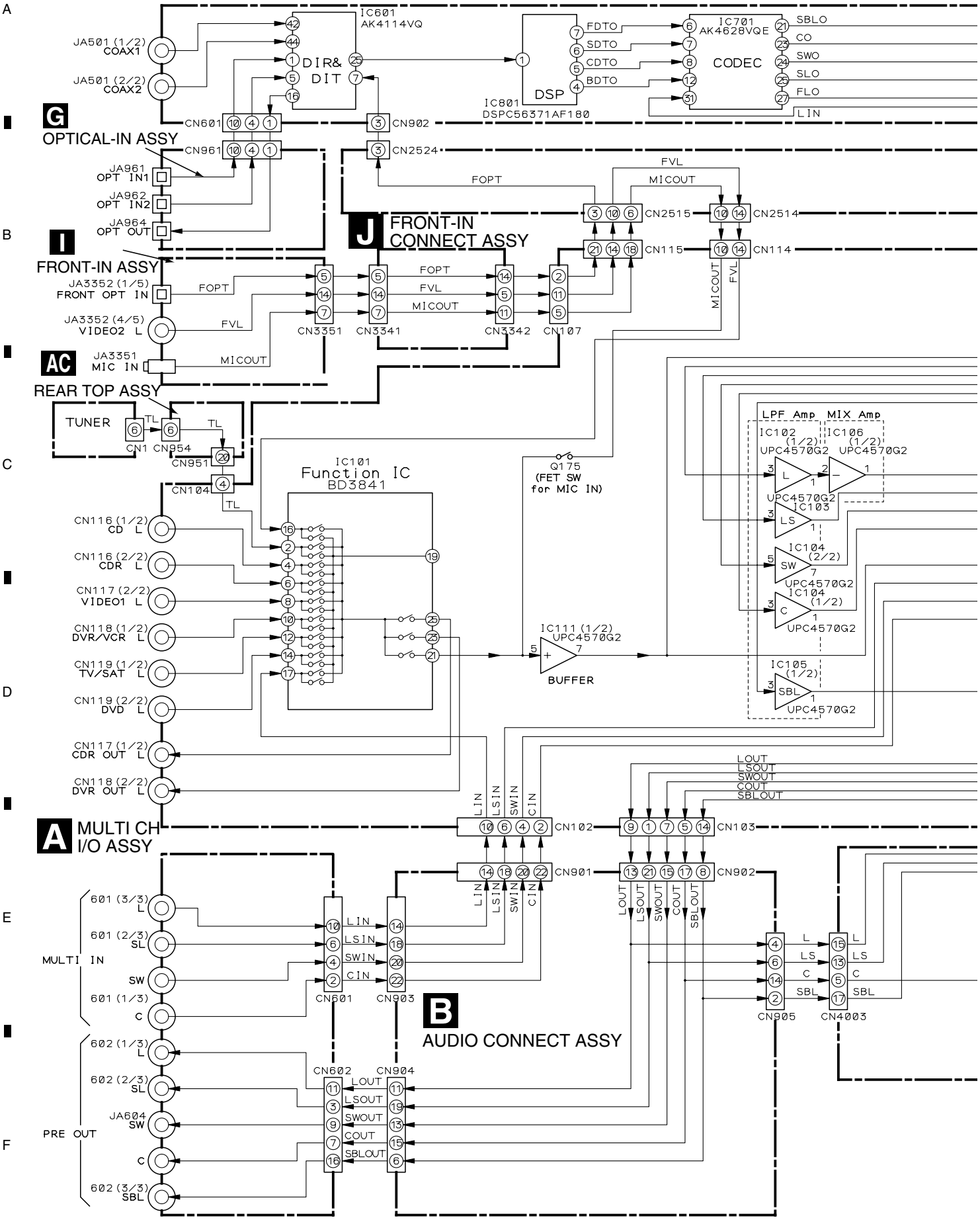

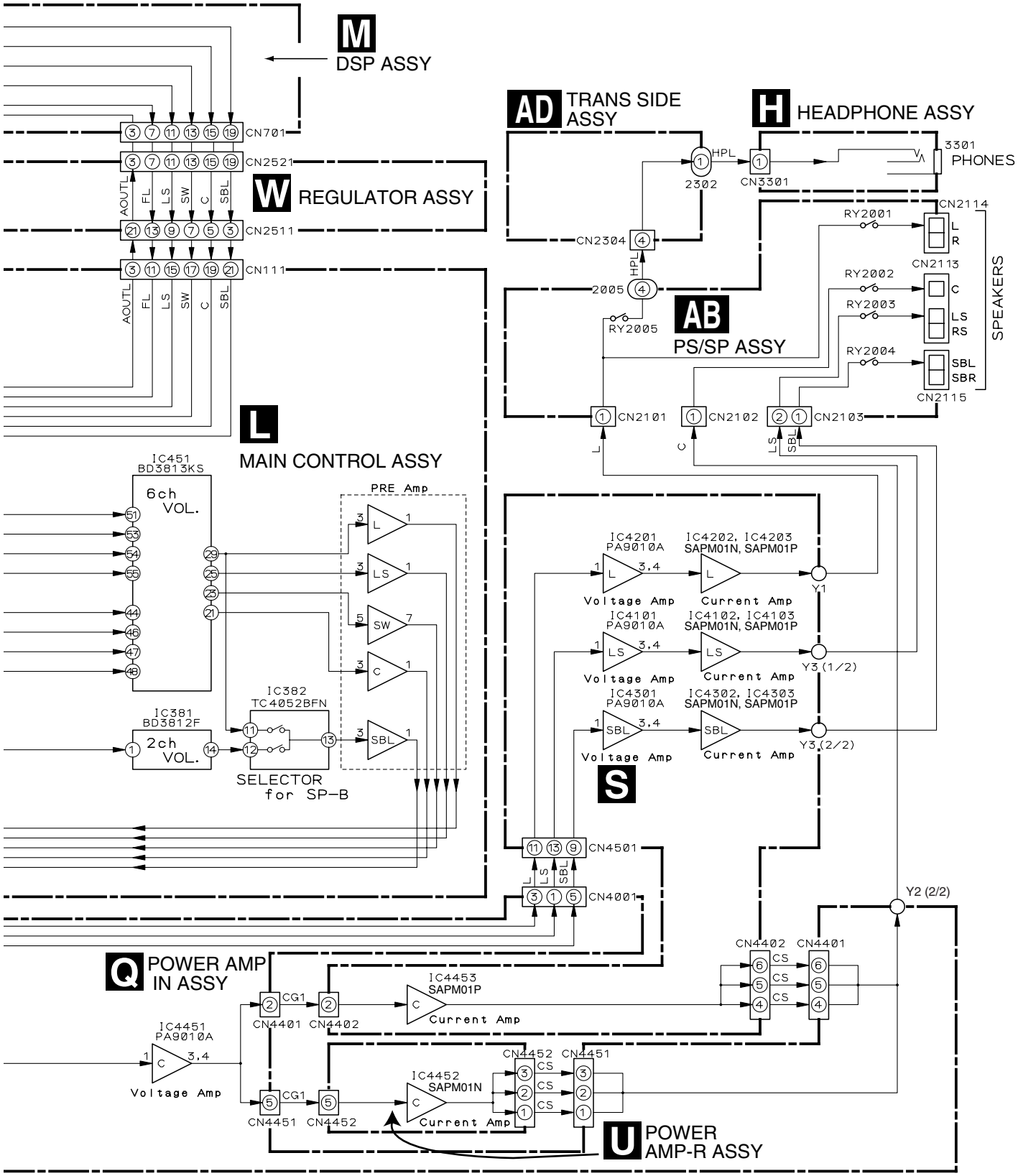
M
DSP ASSY
CN701
CN2521
W
REGULATOR ASSY
CN2511
CN111
AOUTL
FL
LS
SW
C
SBL
AD
TRANS SIDE ASSY
H
HEADPHONE ASSY
HPL
2302
CN3301
3301
PHONES
CN2304
2005
RY2005
AB
PS/SP ASSY
CN2114
RY2001
L
R
CN2113
RY2002
C
RY2003
LS
RS
RY2004
SBL
SBR
CN2115
SPEAKERS
CN2101
CN2102
CN2103
L
MAIN CONTROL ASSY
IC451
BD3813KS
6ch
VOL.
PRE Amp
IC381
BD3812F
2ch
VOL.
IC382
TC4052BFN
SELECTOR
for SP-B
IC4201
PA9010A
IC4202, IC4203
SAPM01N, SAPM01P
Voltage Amp
Current Amp
Y1
IC4101
PA9010A
IC4102, IC4103
SAPM01N, SAPM01P
Y3 (1/2)
IC4301
PA9010A
IC4302, IC4303
SAPM01N, SAPM01P
Y3 (2/2)
S
CN4501
CN4001
Y2 (2/2)
CN4402
CN4401
CS
Q
POWER AMP IN ASSY
CG1
IC4453
SAPM01P
IC4451
PA9010A
IC4452
SAPM01N
CN4452
CN4451
U
POWER AMP-R ASSY

3.1.2 VIDEO and DISPLAY SECTIONS

Video Block

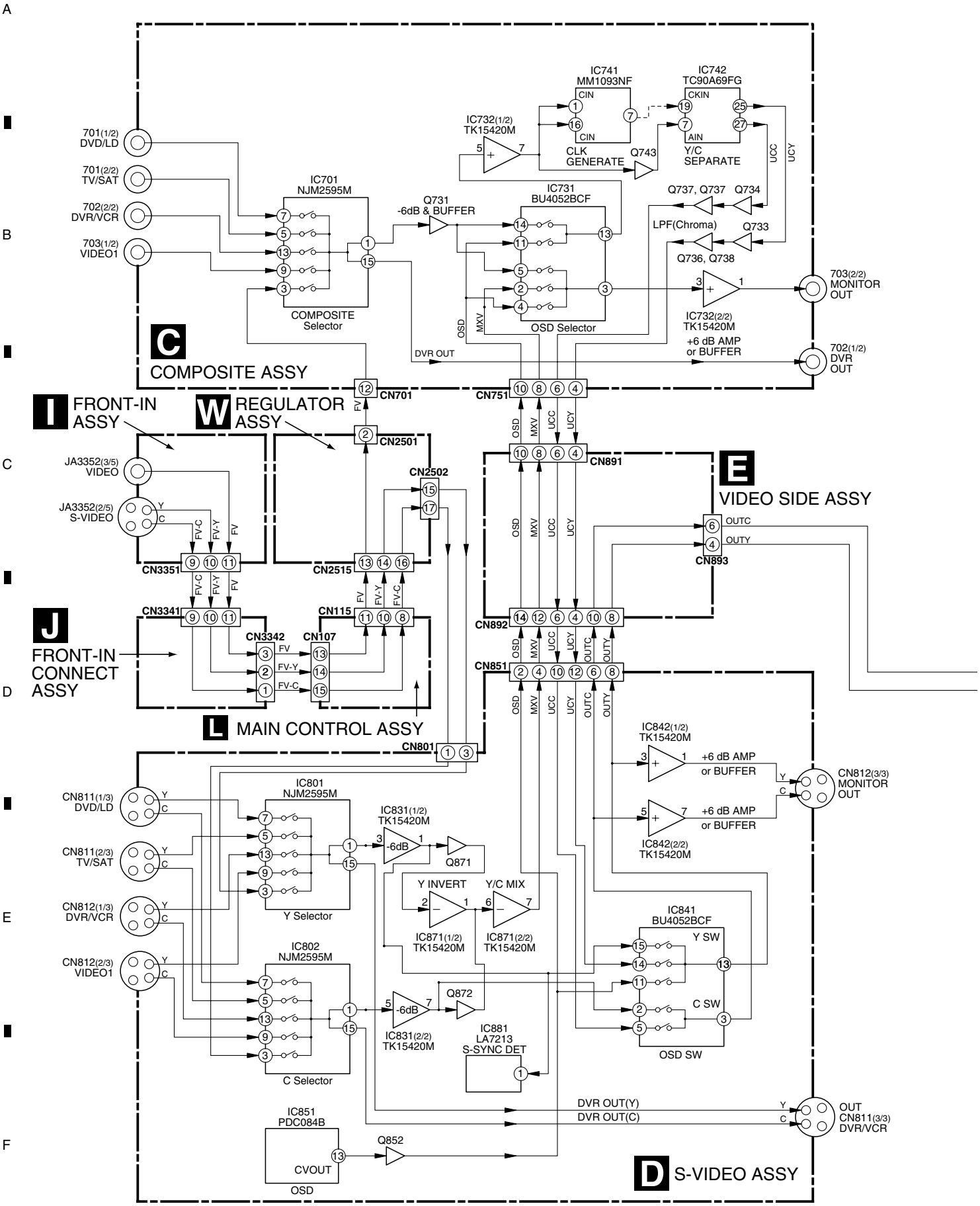

Display/SR Block

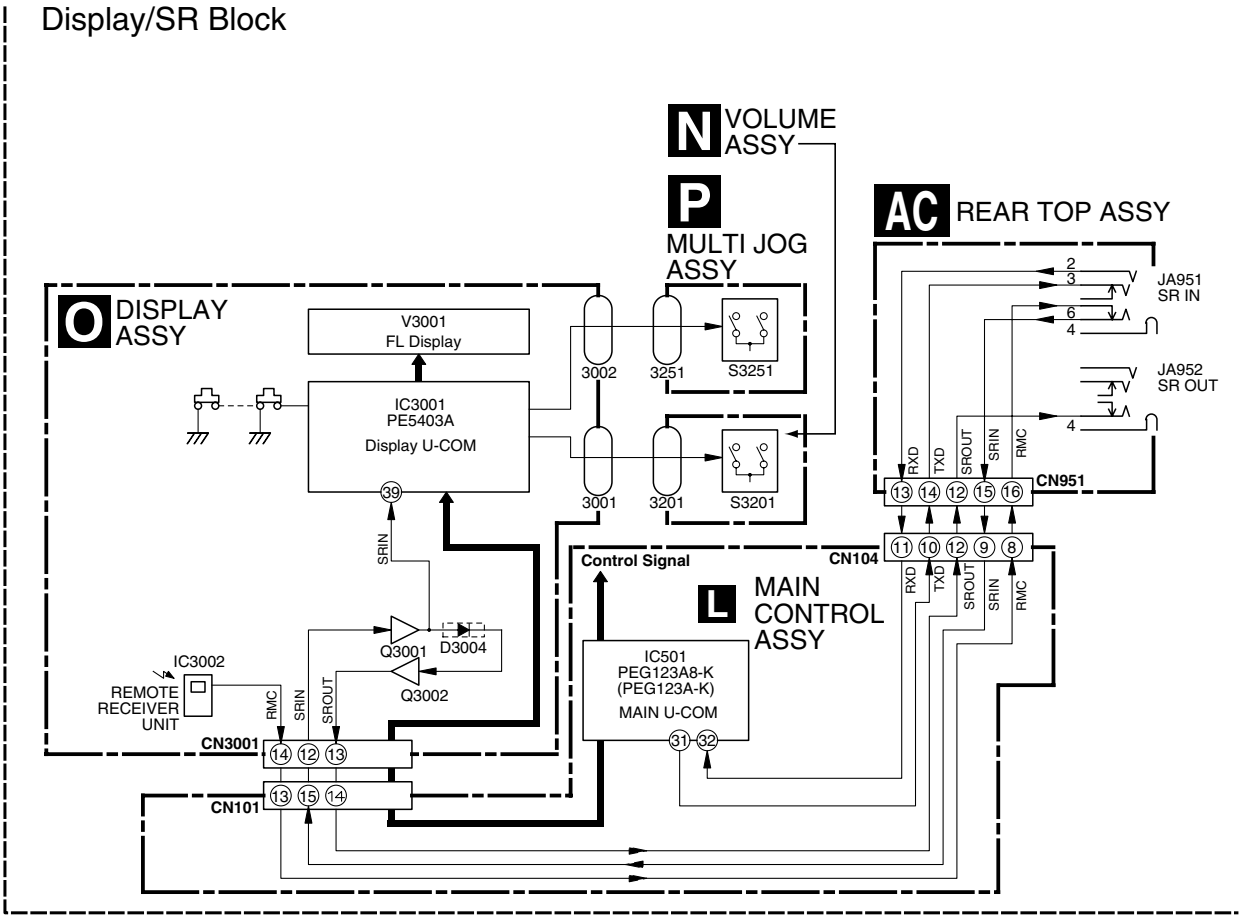

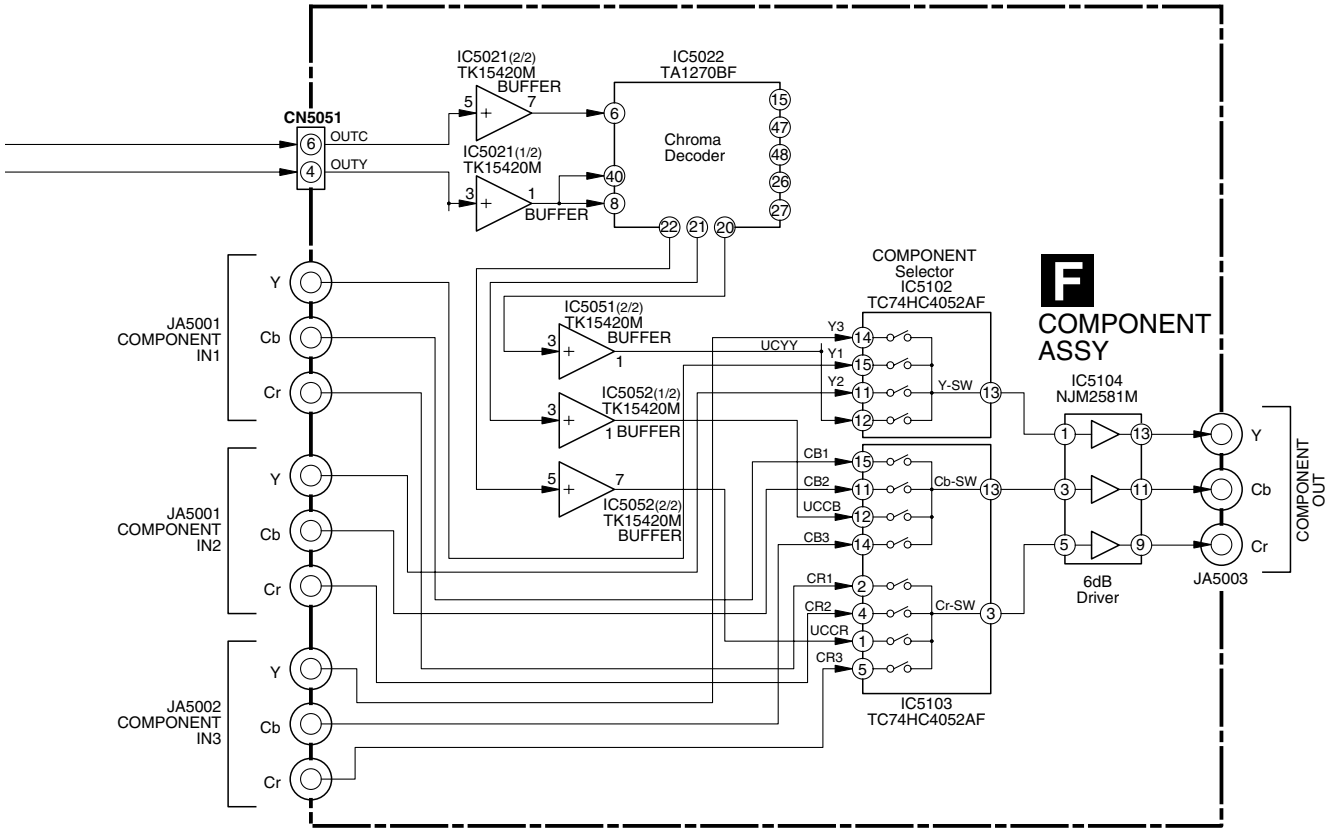

3.1.3 DSP SECTION

A

DSP Block

M DSP ASSY

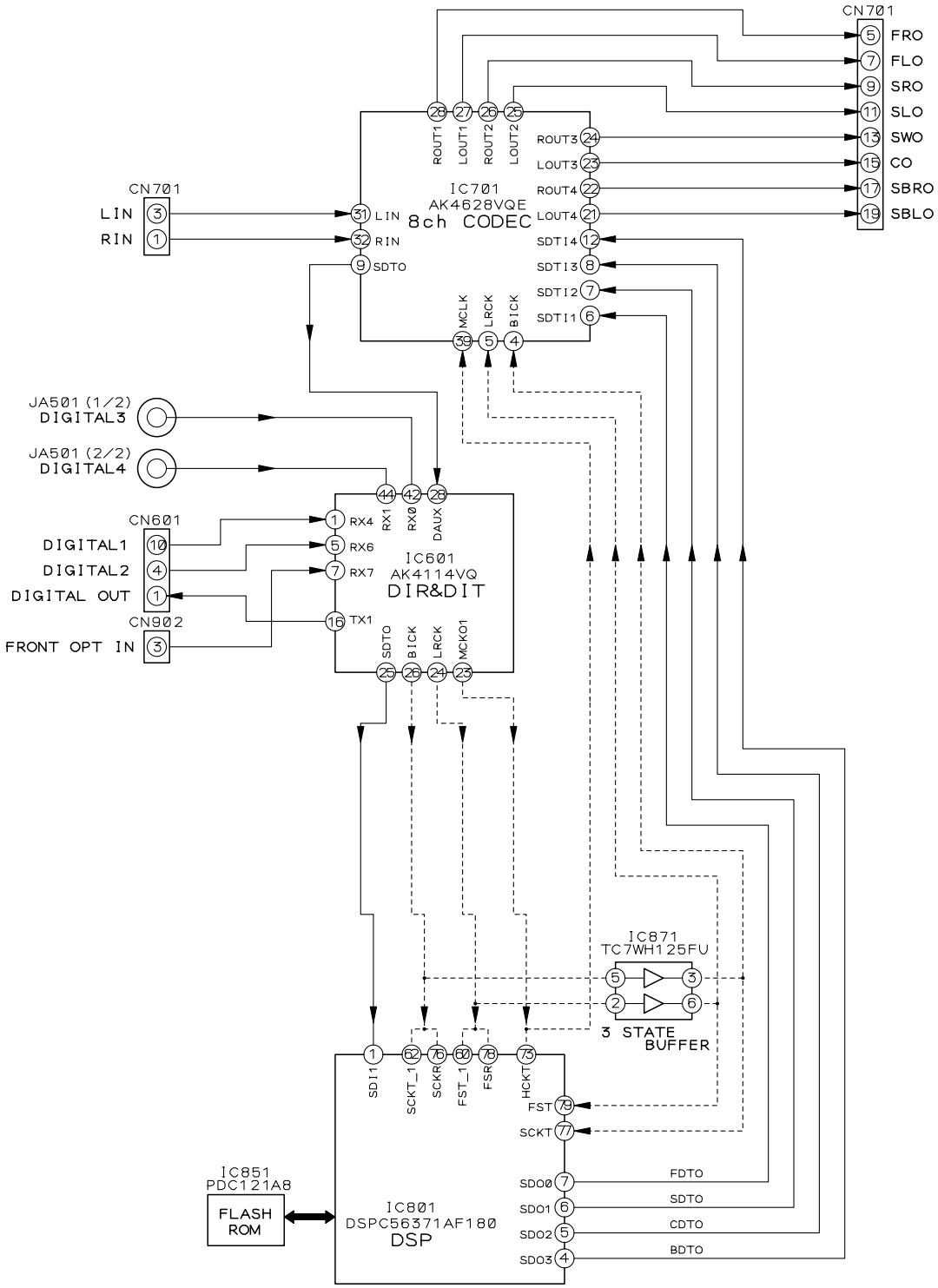

B C D E F

A

B

C

D

E

F

3.1.4 POWER SUPPLY SECTION

Power Supply Block

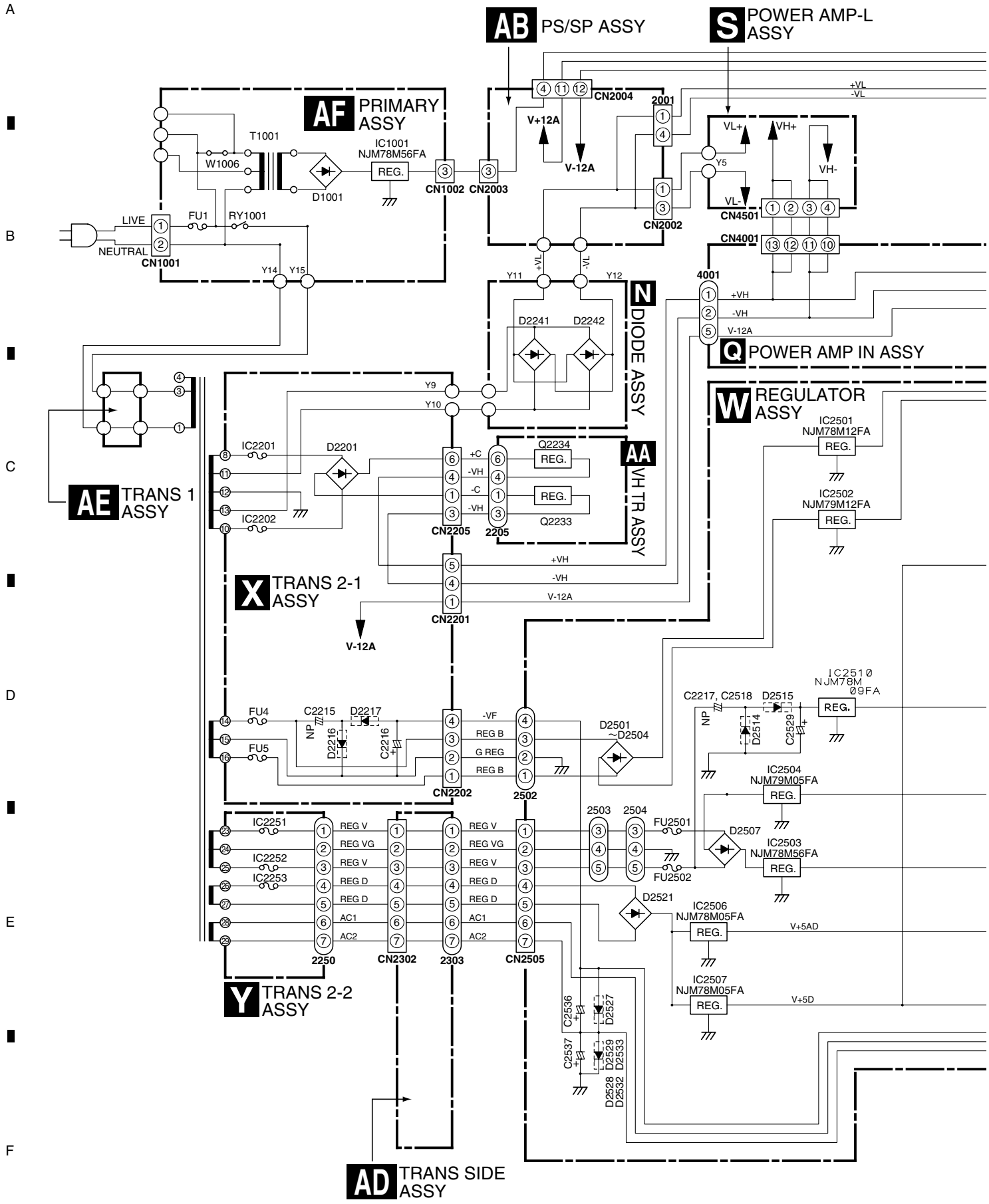

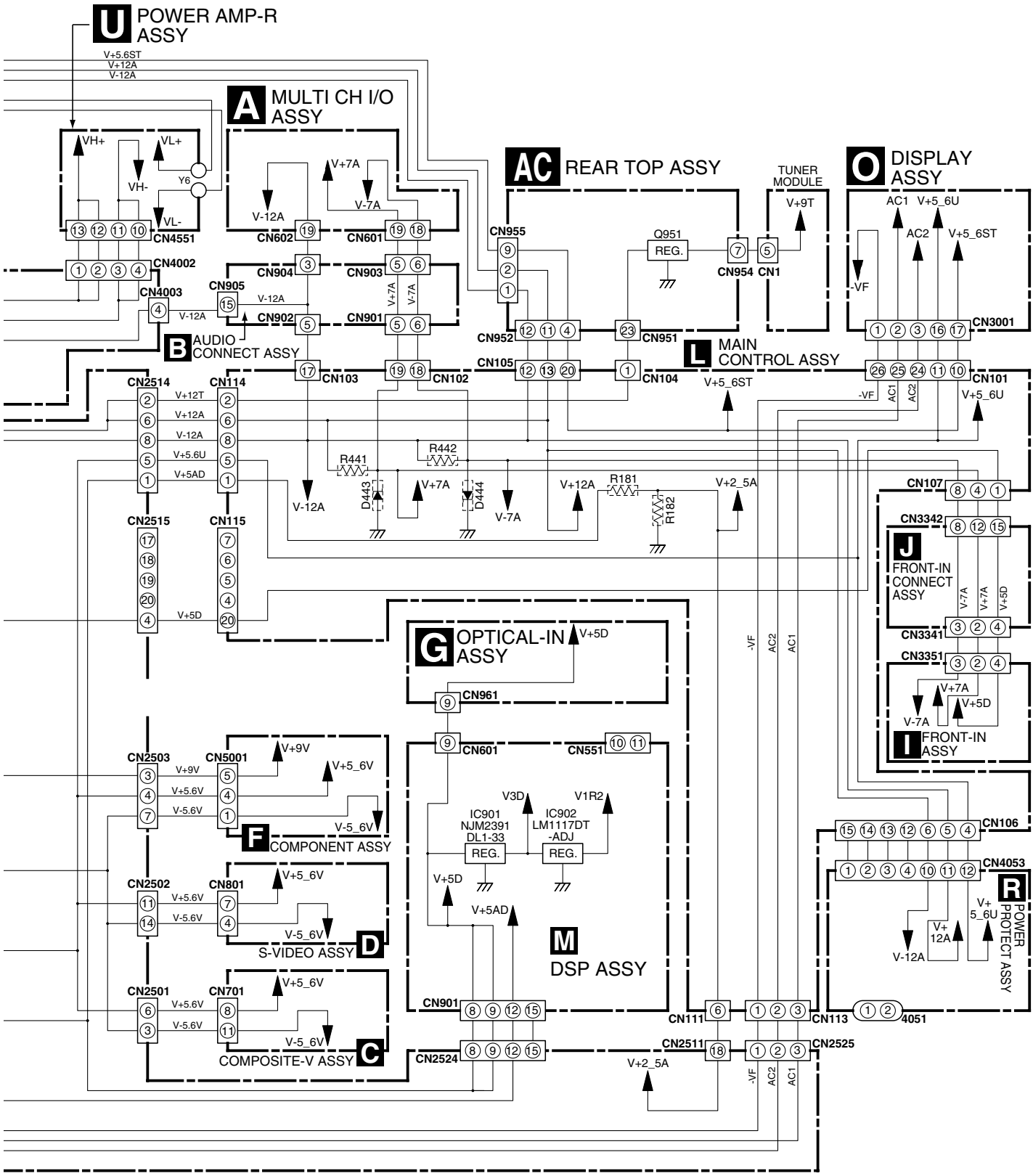
U POWER AMP-R ASSY
A MULTI CH I/O ASSY
AC REAR TOP ASSY
TUNER MODULE
O DISPLAY ASSY
B AUDIO CONNECT ASSY
L MAIN CONTROL ASSY
G OPTICAL-IN ASSY
J FRONT-IN CONNECT ASSY
I FRONT-IN ASSY
F COMPONENT ASSY
D S-VIDEO ASSY
C COMPOSITE-V ASSY
M DSP ASSY
R POWER PROTECT ASSY
IC901 NJM2391 DL1-33 REG.
IC902 LM1117DT -ADJ REG.
Q951 REG.
CN4551
CN4002
CN4003
CN905
CN602
CN601
CN904
CN903
CN902
CN901
CN955
CN954
CN1
CN952
CN951
CN105
CN104
CN3001
CN101
CN103
CN102
CN2514
CN114
CN2515
CN115
CN107
CN3342
CN3341
CN3351
CN961
CN551
CN2503
CN5001
CN2502
CN801
CN2501
CN701
CN106
CN4053
CN111
CN113
CN2511
CN2525
CN2524
R441
R442
D443
D444
R181
R182
V+5.6ST
V+12A
V-12A
V+12T
V+5.6U
V+5AD
V+5D
V+7A
V-7A
V+2_5A
V+5_6ST
V+5_6U
V+9T
V+9V
V+5_6V
V-5_6V
V+5.6V
V-5.6V
V3D
V1R2
V+5AD
-VF
AC1
AC2
4051

3.2 OVERALL WIRING DIAGRAM

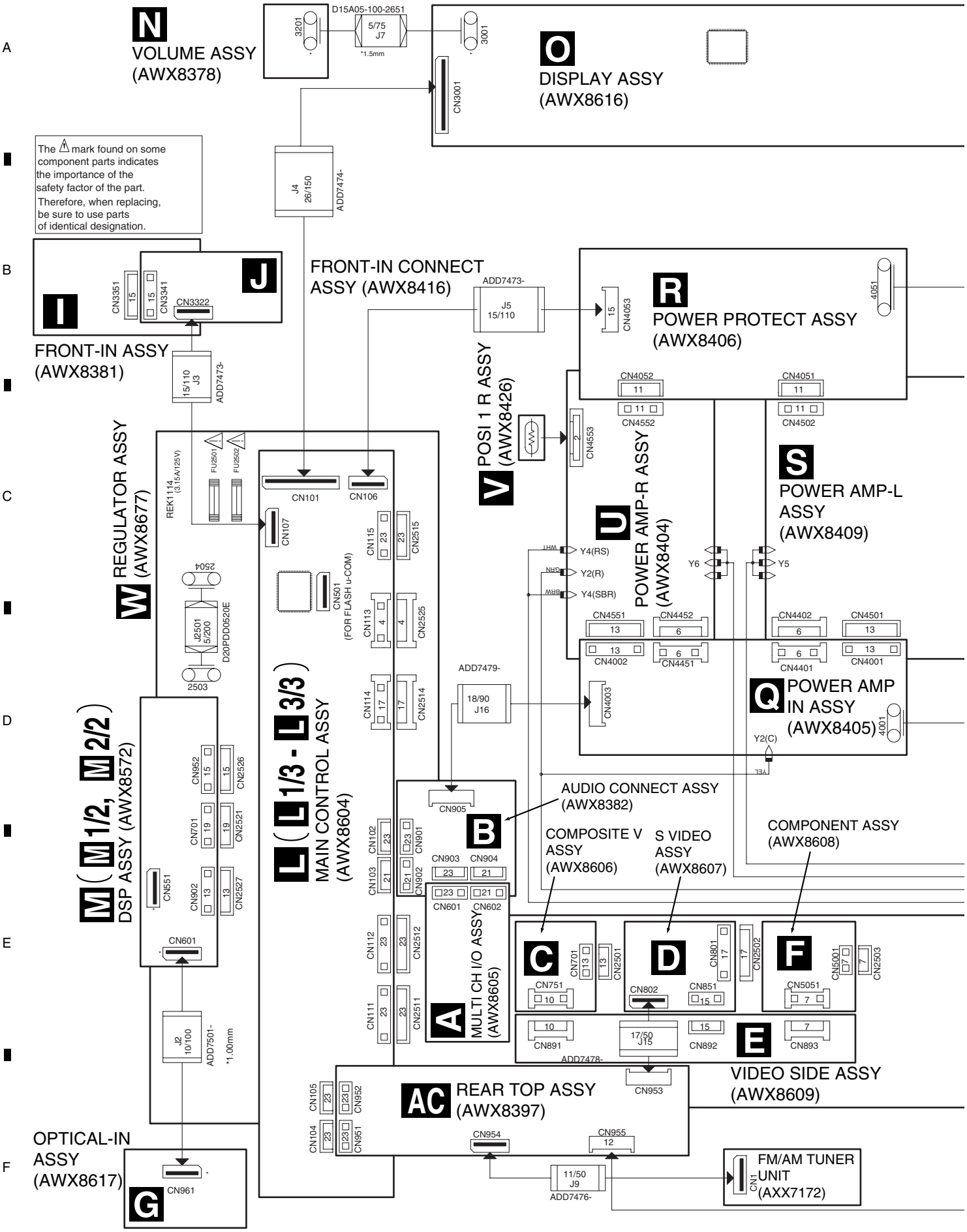

NOTES: • *When ordering service parts, be sure to refer to "EXPLODED VIEWS and PARTS LIST" or "PCB PARTS LIST".*
• *The ⚠ mark found on some component parts indicates the importance of the safety factor of the part. Therefore, when replacing, be sure to use parts of identical designation.*
• *: The power supply is shown with the marked box.*

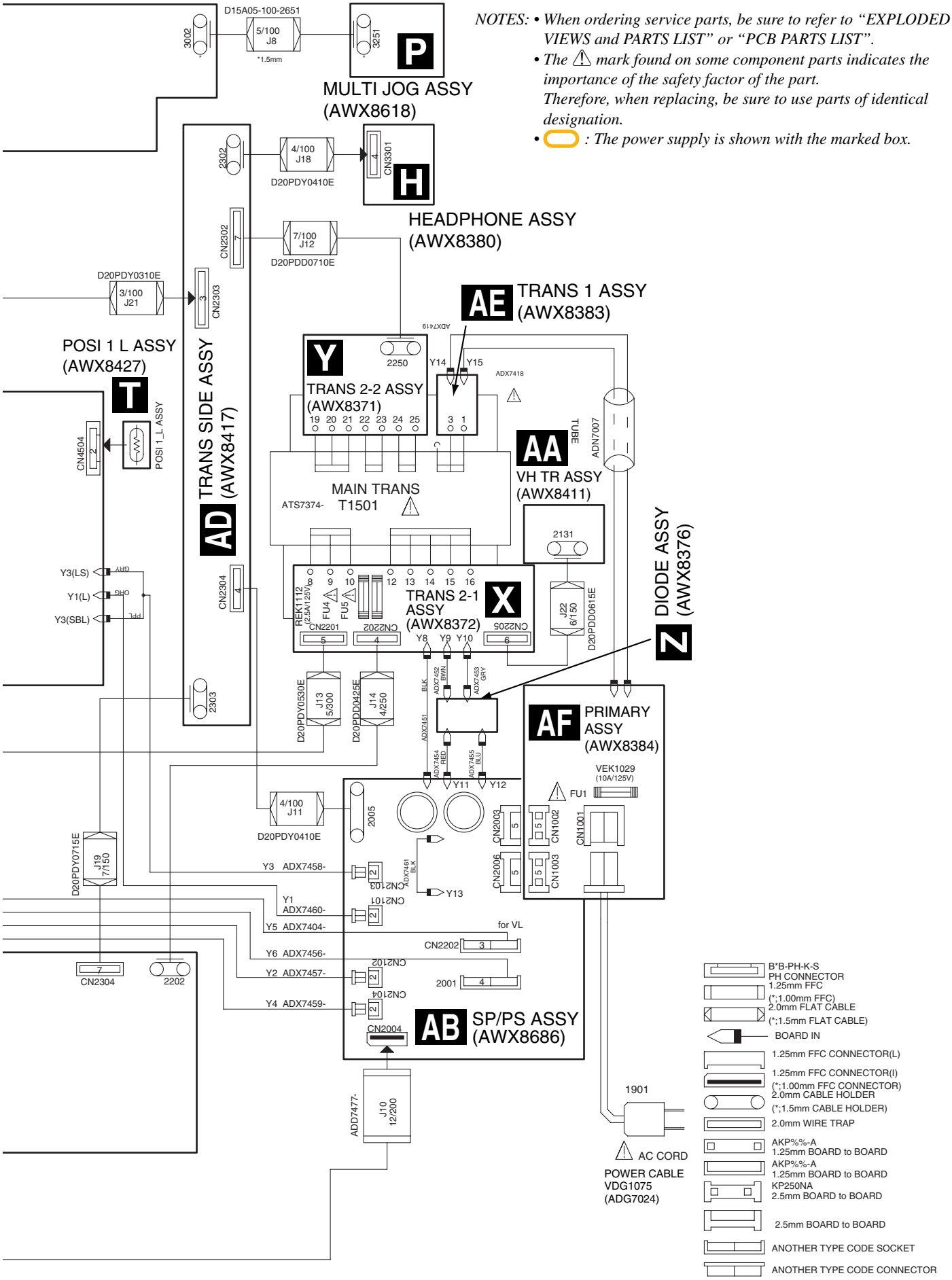

3.3 MULTI CH I/O and AUDIO CONNECT ASSYS

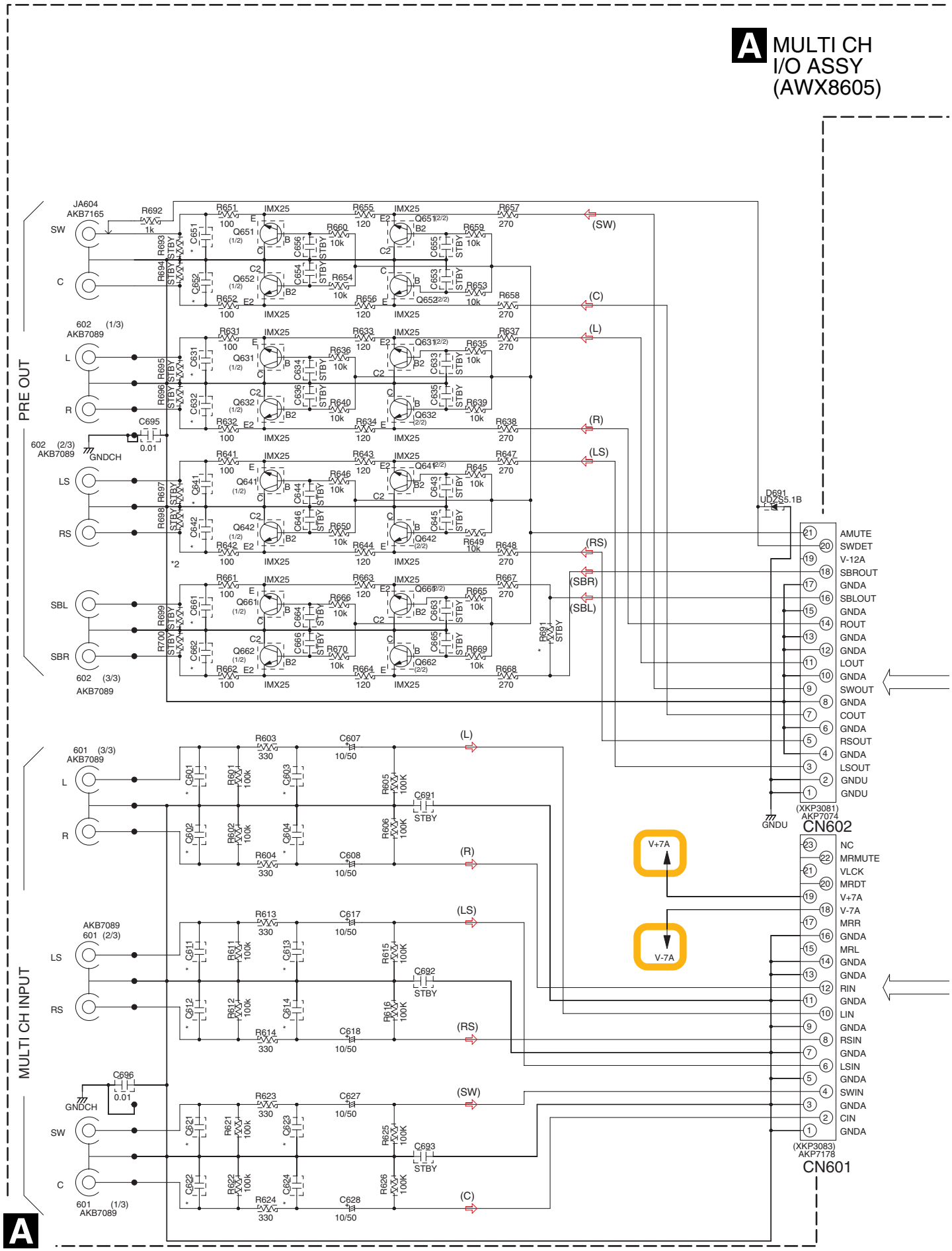

*			C631,C632,C641,C642, C651,C652,C661,C662	C601-C604, C611-C614, C621-C624
AWX8605	VSX-1015TX VSX-1015	/KU /SFL	STBY	STBY

NOTE

1.RESISTORS

Unit: k-kΩ, M-MΩ or Ω unless otherwise noted.
Rated power: 1/16W unless otherwise noted.
Tolerance: (J) ± 5% unless otherwise noted.

2.CAPACITORS

Unit: p-pF or μF unless otherwise noted.
Ratings: Capacity(μF)/Voltage(V) unless otherwise noted.
Rated Voltage: 50V expect for electrolytic capacitors.

⇨ : AUDIO SIGNAL FLOW

B AUDIO CONNECT ASSY (AWX8382)

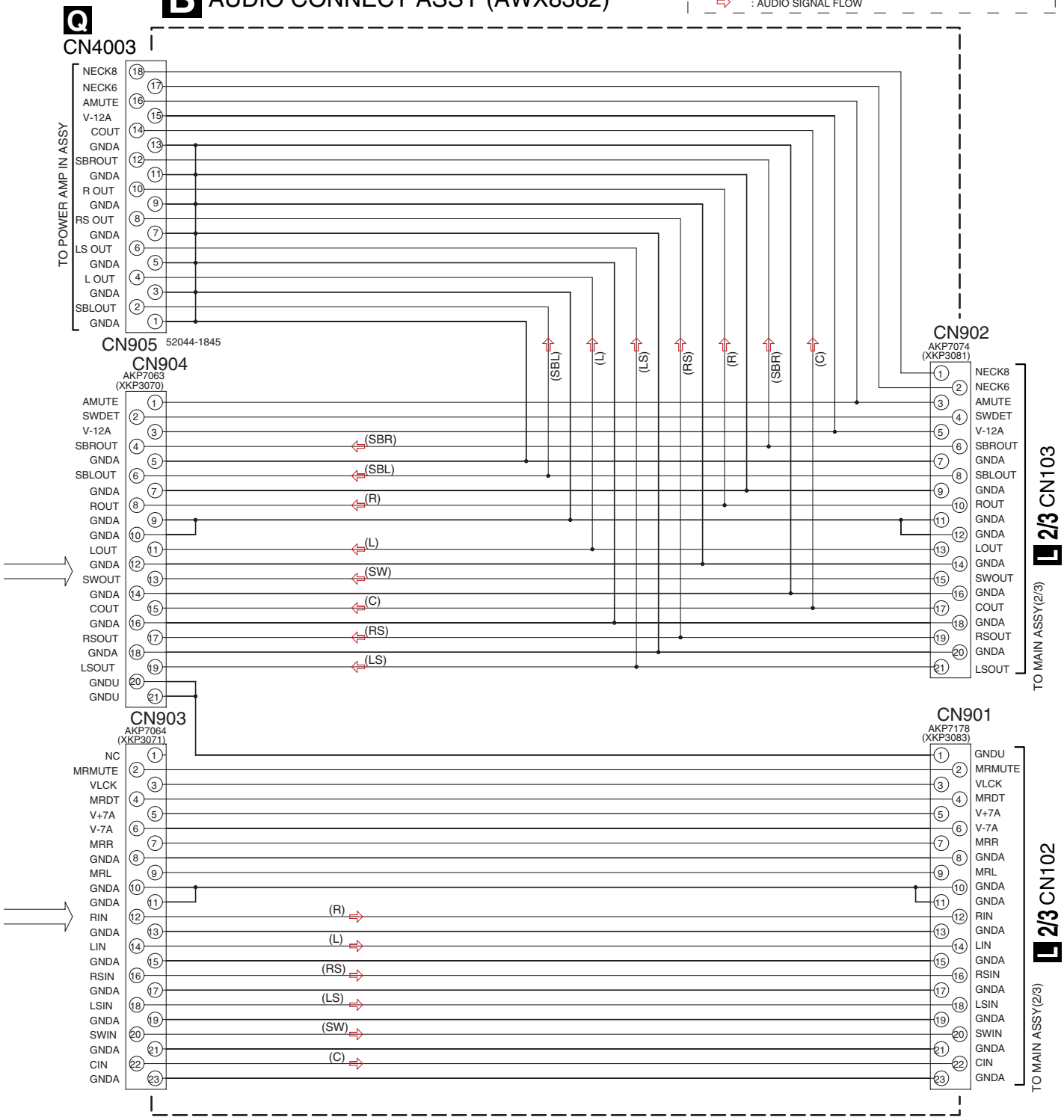

A B

3.4 COMPOSITE V ASSY

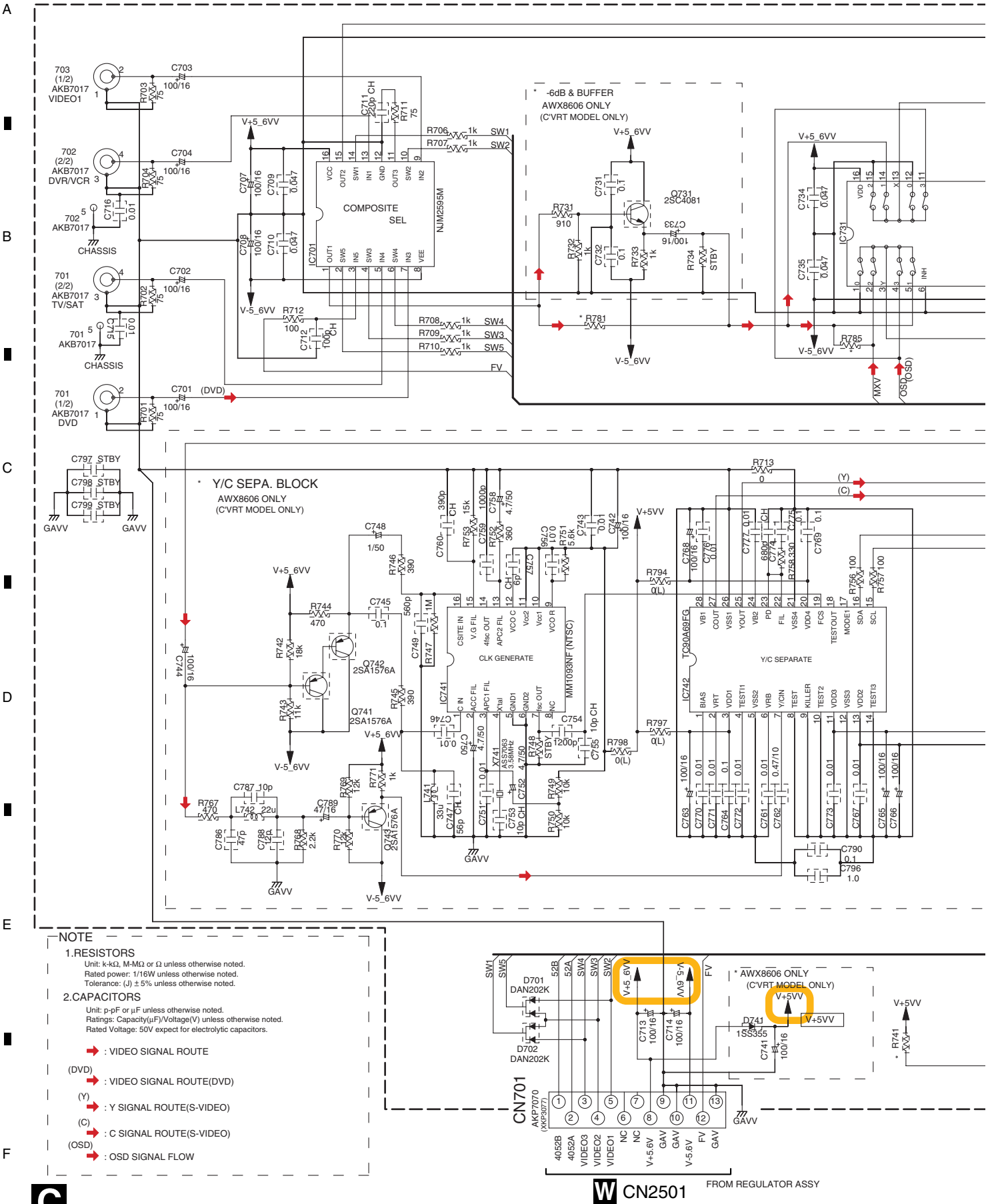

C

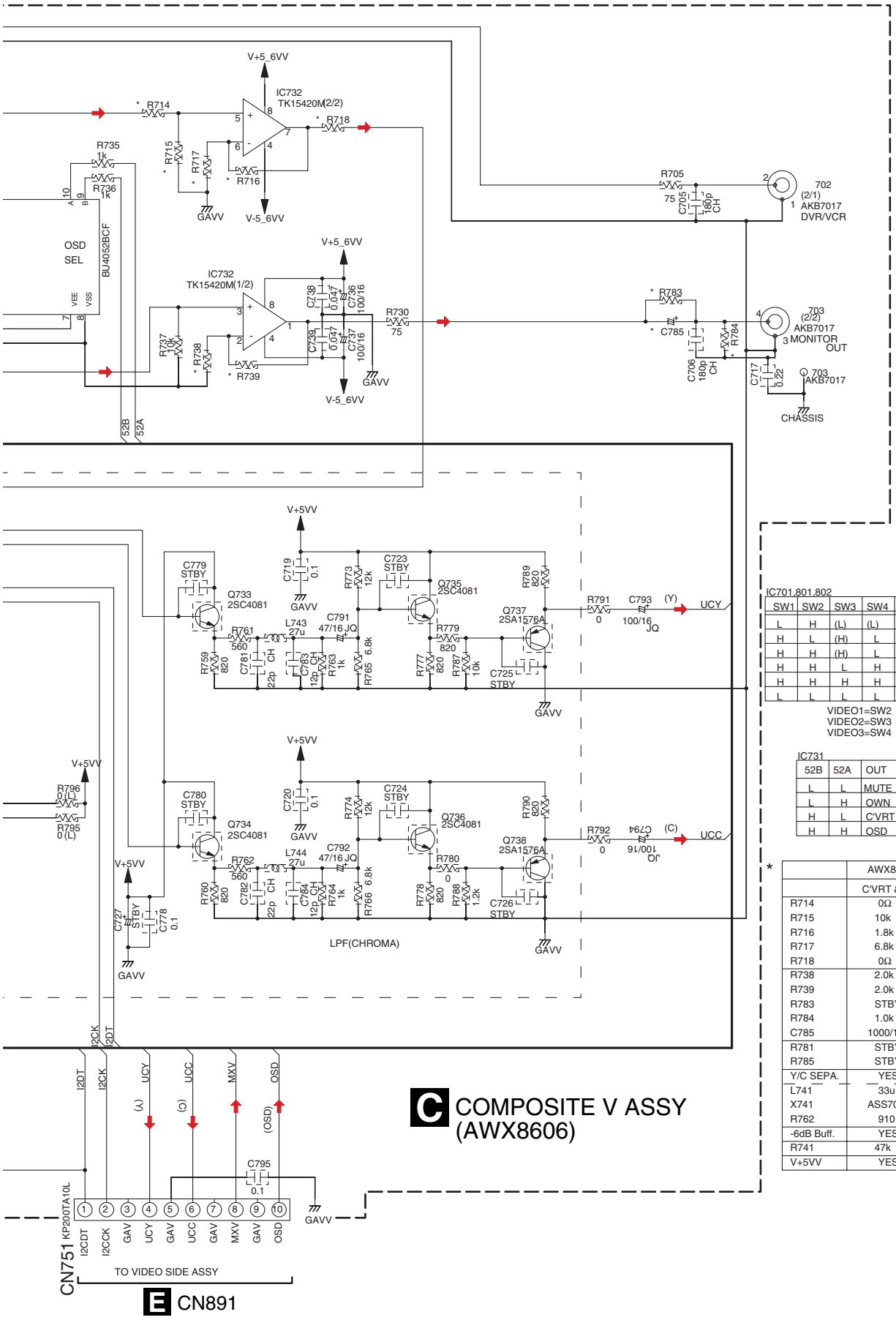

IC701,801,802

SW1	SW2	SW3	SW4	SW5	MON	VCR1	VCR2
L	H	(L)	(L)	H	VCR1	MUTE	VCR1
H	L	(H)	L	H	VCR2	VCR2	MUTE
H	H	(H)	L	H	DVD	DVD	DVD
H	H	L	H	H	TV	TV	TV
H	H	H	H	H	VIDEO	VIDEO	VIDEO
L	L	L	L	L	MUTE	MUTE	MUTE

VIDEO1=SW2
VIDEO2=SW3
VIDEO3=SW4

IC731

52B	52A	OUT
L	L	MUTE
L	H	OWN (NO SYNC DET)
H	L	C'VRT (SYNC DET)
H	H	OSD

*

	AWX8606
	C'VRT & OSD
R714	0Ω
R715	10k
R716	1.8k
R717	6.8k
R718	0Ω
R738	2.0k
R739	2.0k
R783	STBY
R784	1.0k
C785	1000/10
R781	STBY
R785	STBY
Y/C SEPA.	YES
L741	33u
X741	ASS7063
R762	910
-6dB Buff.	YES
R741	47k
V+5VV	YES

C

3.5 S VIDEO ASSY

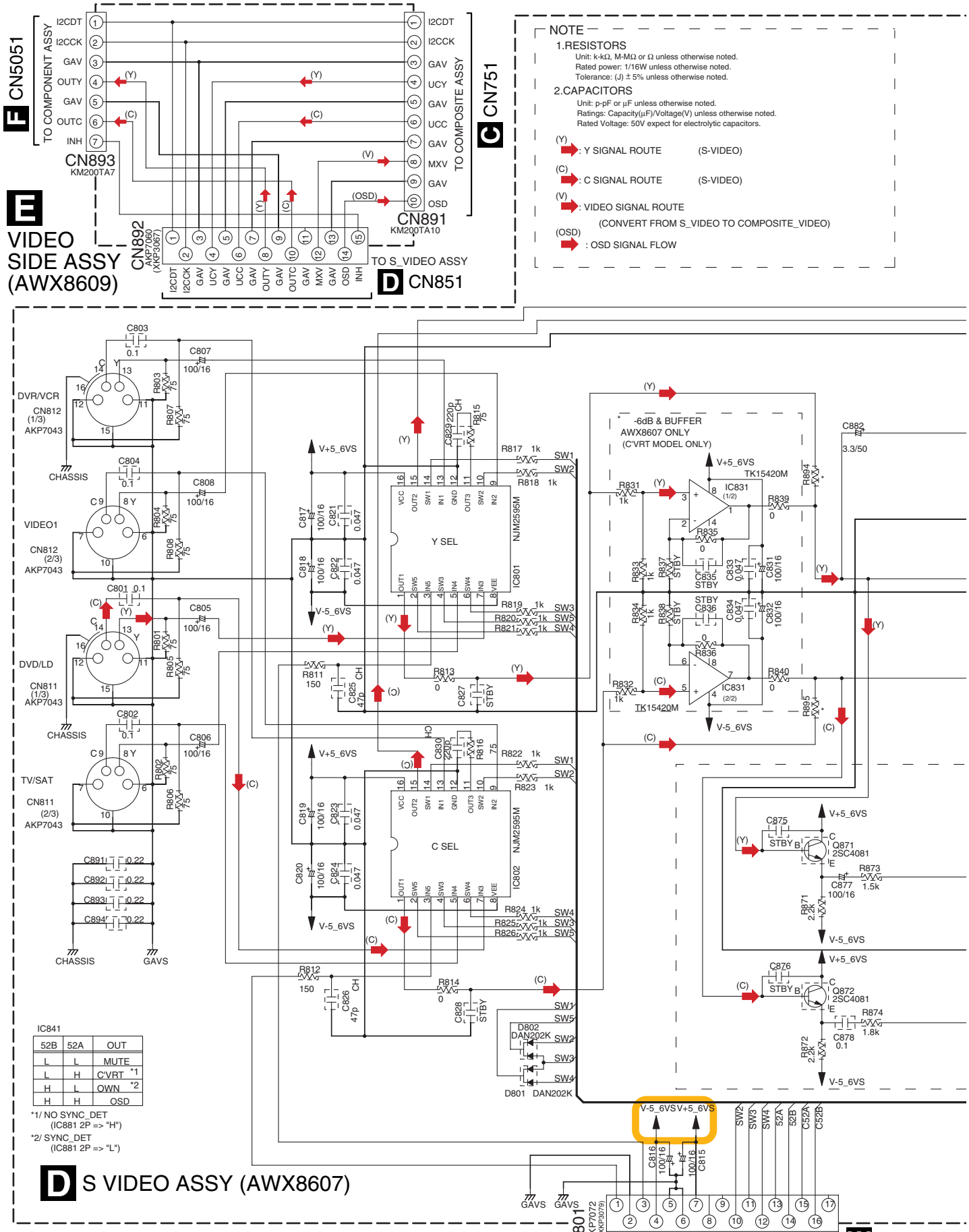

*

	AWX8607 C'VRT & OSD
R845	2.0k
R846	1.8k
R847,R848	2.0k
C884	1000/10
R893	STBY
R885,R886	10k
R894,R895	STBY
R899	STBY
R897	0Ω
R890	STBY
R891	0Ω
R856	9.1k
R857	10k
Y/C MIX	YES
-6dB Buff.	YES
S-SYNC DET.	YES

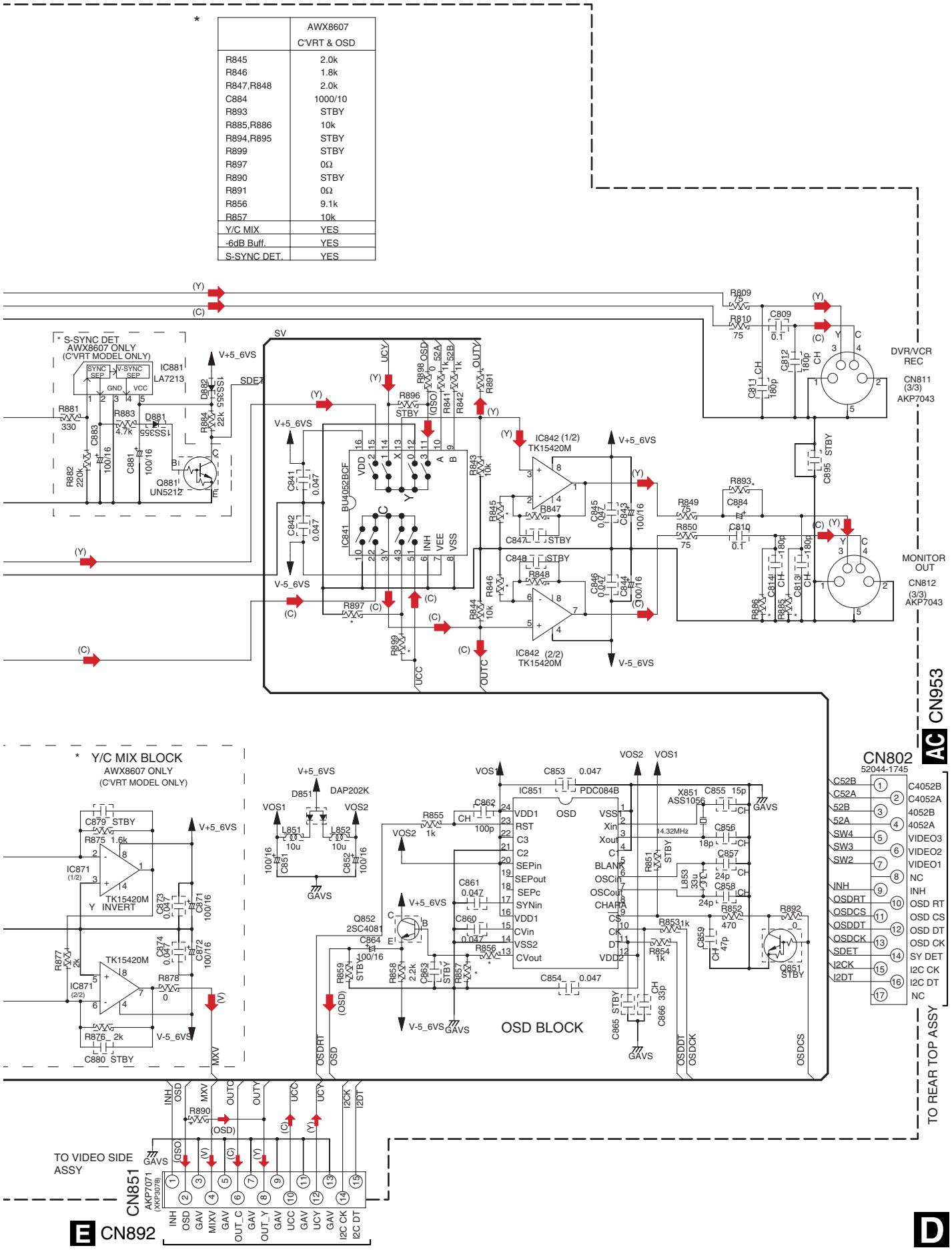

3.6 COMPONENT ASSY

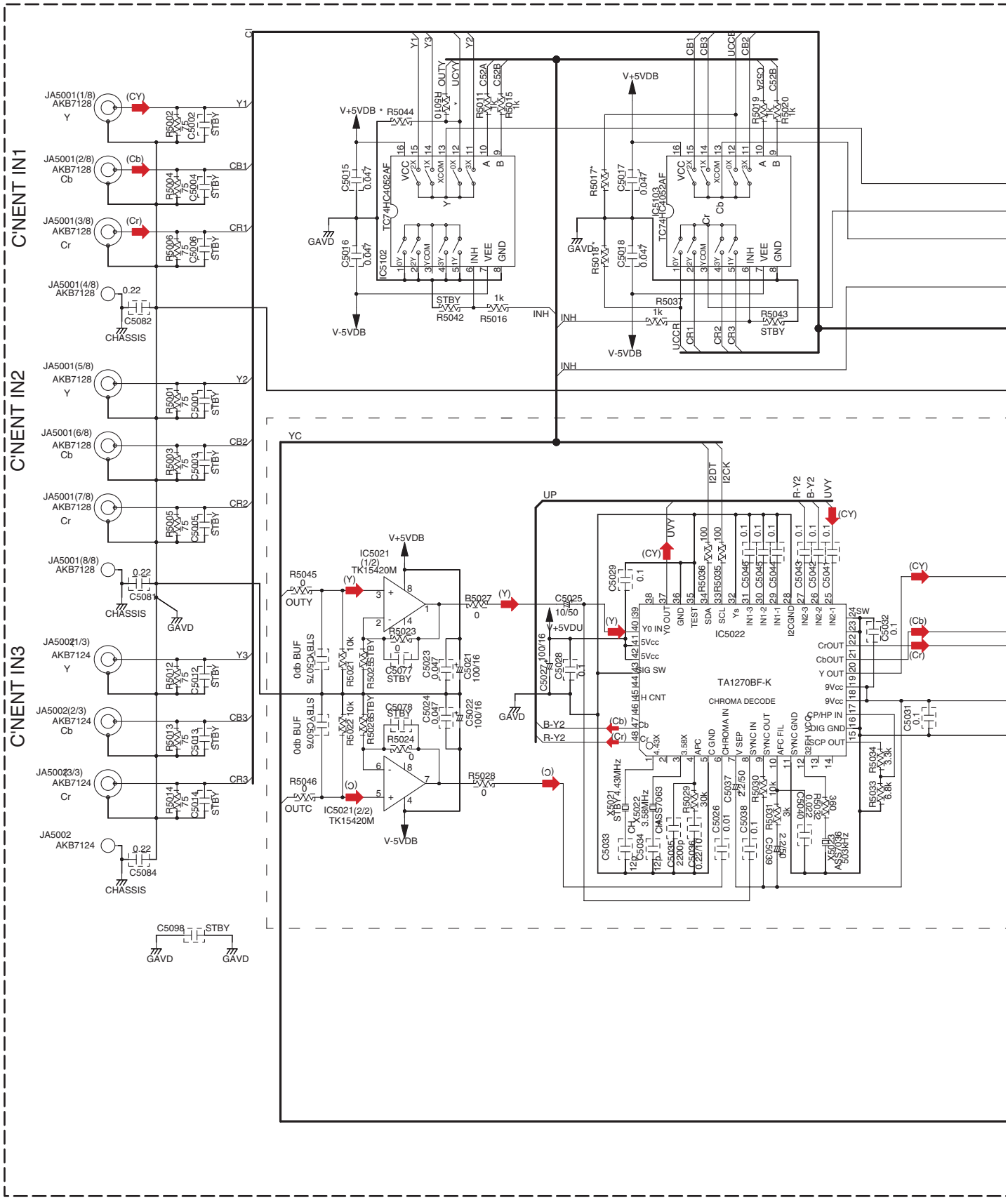

F COMPONENT (AWX8608)

TC74HC4052

INH	C52B	C52A	OUT
L	L	L	0X,0Y (COMVERT or OSD)
L	L	H	1X,1Y (IN3)
L	H	L	2X,2Y (IN1)
L	H	H	3X,3Y (IN2)
H	*	*	NONE (MUTE)

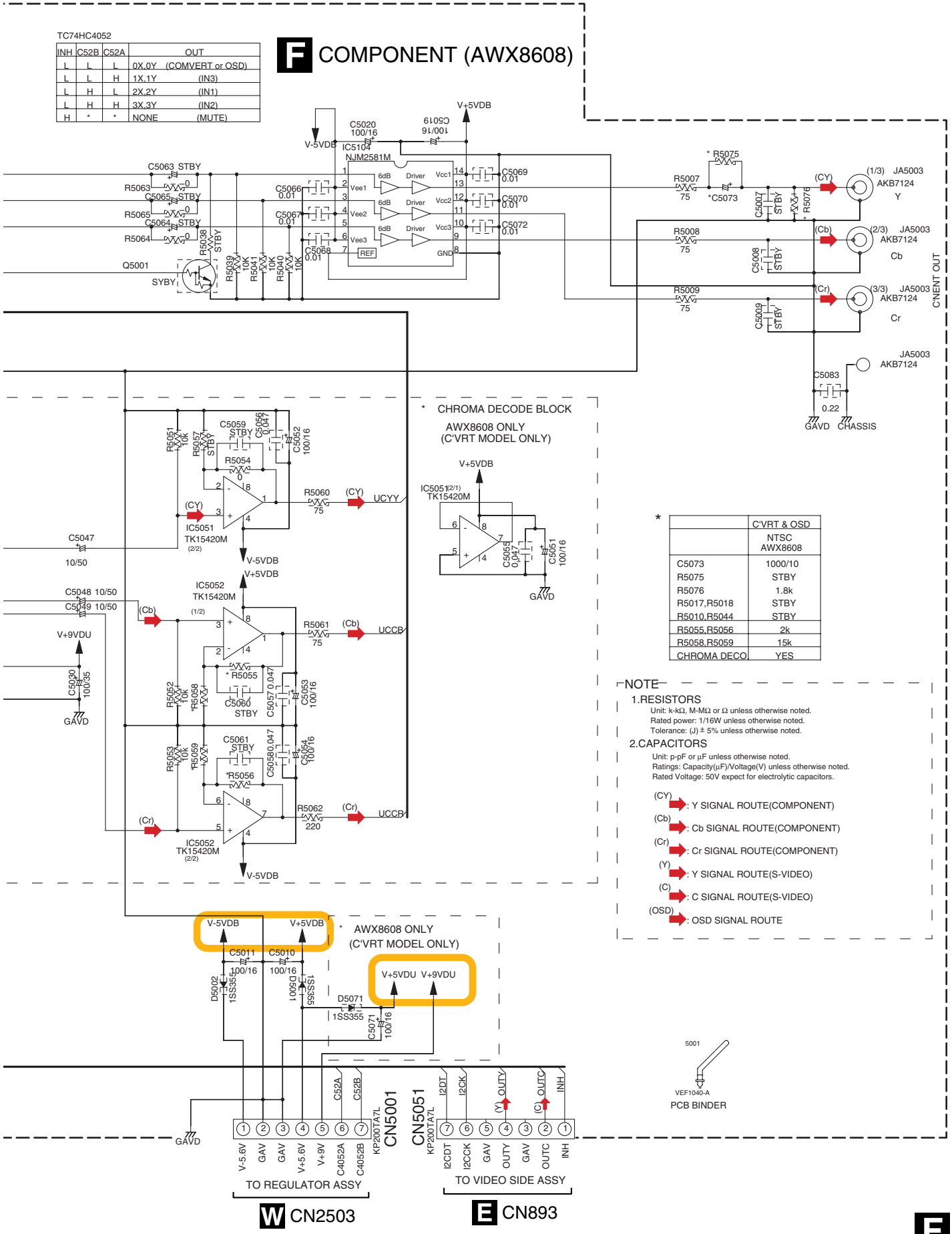

*

	C'VRT & OSD
	NTSC AWX8608
C5073	1000/10
R5075	STBY
R5076	1.8k
R5017,R5018	STBY
R5010,R5044	STBY
R5055,R5056	2k
R5058,R5059	15k
CHROMA DECO	YES

NOTE

1.RESISTORS
Unit: k-kΩ, M-MΩ or Ω unless otherwise noted.
Rated power: 1/16W unless otherwise noted.
Tolerance: (J) ± 5% unless otherwise noted.

2.CAPACITORS
Unit: p-pF or µF unless otherwise noted.
Ratings: Capacity(µF)/Voltage(V) unless otherwise noted.
Rated Voltage: 50V expect for electrolytic capacitors.

(CY) : Y SIGNAL ROUTE(COMPONENT)
(Cb) : Cb SIGNAL ROUTE(COMPONENT)
(Cr) : Cr SIGNAL ROUTE(COMPONENT)
(Y) : Y SIGNAL ROUTE(S-VIDEO)
(C) : C SIGNAL ROUTE(S-VIDEO)
(OSD) : OSD SIGNAL ROUTE

3.7 OPTICAL-IN,H.P,FRONT-IN,FRONT-IN CONNECT ASSYS

H HEADPHONE ASSY (AWX8380)

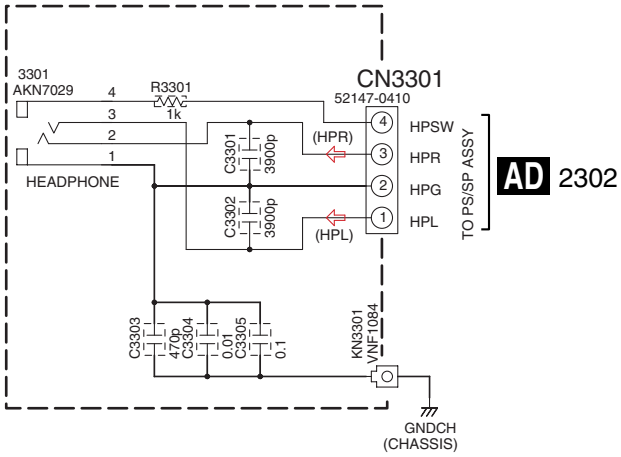

I FRONT-IN ASSY (AWX8381)

MIC AMP

JA3351
RKN1004
F3351
STBY
F3352
STBY
(MIC)
MIC IN
C3365
0.01
C3364
STBY
C3366
0.1
KN3351
VNF1084
GNDCH
(CHASSIS)
C3352
10/50
R3353
100
D3354
DAN217
IC3351 (1/2)
UPC4570G2
R3357
100
C3355
10/50
R3358
100k
D3351
UDZS5.1B
D3352
UDZS5.1B
V+7A
R3351
6.8k
C3351
470p
R3352
100k
C3353
100p
R3354
100k
R3356
470
R3355
33k
C3354
33p
R3360
1k
R3359
1k
OUT
IN
IC3352
STBY
C3356
STBY
C3357
10/50
D3353
UDZS5.1B
C3359
0.01
C3361
10/50
C3363
STBY
R3361
STBY
C3360
0.01
C3362
10/50
IC3351
UPC4570G2
(2/2)
V-7A
V+5D
FRONT OPT
JA3352 (1/5)
AKX7019
VCC
GND
VOUT
15 14 13
R3362
100
L3353
QTL1013
C3367
0.1
CN3351
AKP7060
(XKP3067)
GNDA
V+7A
V-7A
V+5D
FOPT
GNDD
MIC OUT
MIC DET
FV-C
FV-Y
FV
GAV
FV-R
FV-L
GNDA
TO FRONT CONNECT ASSY
VIDEO2 INPUT (FRONT)
S-VIDEO
JA3352(2/5)
JA3352
AKX7019
C3371
0.1
R3372
0
(FVC)
C3372
47/25
R3374
0
(FVY)
R3371
75
R3373
75
JA3352
AKX7019
VIDEO
JA3352 (3/5)
C3373
47/25
R3376
0
(FV)
R3375
75
C3374
STBY
(FVR)
(FVL)
C3387
10/16 JQ
C3388
10/16 JQ
R3389
100
R3390
100
R3393
47
R3394
47
C3376
0.01
C3378
0.1
C3375
STBY
C3394
0.01
C3395
0.1
C3393
STBY
KN3352
VNF1084
GNDCH
(CHASSIS)
JA3352
AKX7019
L
JA3352
(4/5)
R
JA3352
AKX7019
JA3352 (5/5)
R3397
0
R3383
220
C3383
10/16
JQ
R3387
220
L3357
STBY
C3396
1000p
C3381
220p
R3381
100k
R3395
0
R3385
100k
C3385
100p
CH
STBY
L3355
STBY
C3382
220p
R3382
100k
R3386
100k
C3386
100p
CH
C3377
STBY
R3391
15K
R3392
15K
C3379
STBY
C3389
0.01
C3391
JQ
33/25
C3390
0.01
C3392
JQ
33/25
L3356
STBY
R3396
0
R3384
220
C3384
10/16 JQ
R3388
220
Q3351
HN1C01FU(YGR)-T

H I

G OPTICAL-IN ASSY (AWX8617)

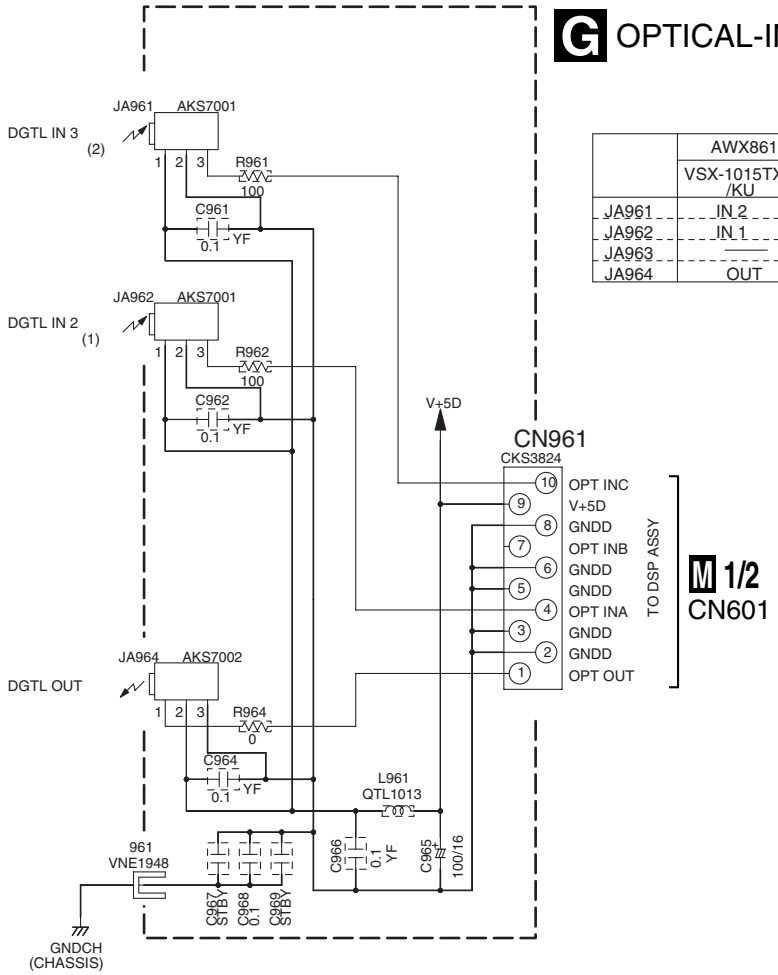

	AWX8617
	VSX-1015TX /KU
JA961	IN 2
JA962	IN 1
JA963	——
JA964	OUT

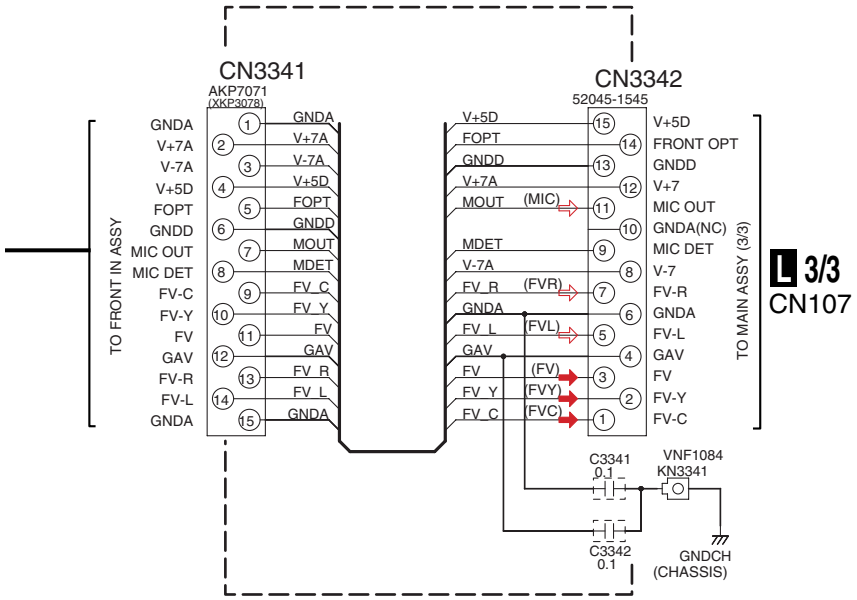

The ⚠ mark found on some component parts indicates the importance of the safety factor of the part. Therefore,when replacing,be sure to use parts of identical designation.

NOTE

1.RESISTORS
Unit: k-kΩ, M-MΩ or Ω unless otherwise noted.
Rated power: 1/16W unless otherwise noted.
Tolerance: (J) ±5% unless otherwise noted.

2.CAPACITORS
Unit: p-pF or μF unless otherwise noted.
Ratings: Capacity(μF)/Voltage(V) unless otherwise noted.
Rated Voltage: 50V expect for electrolytic capacitors.
JQ:CEJQ

⇨ : AUDIO SIGNAL FLOW
➡ : VIDEO SIGNAL FLOW

J FRONT-IN CONNECT ASSY (AWX8416)

3.8 MAIN CONTROL ASSY (1/3)

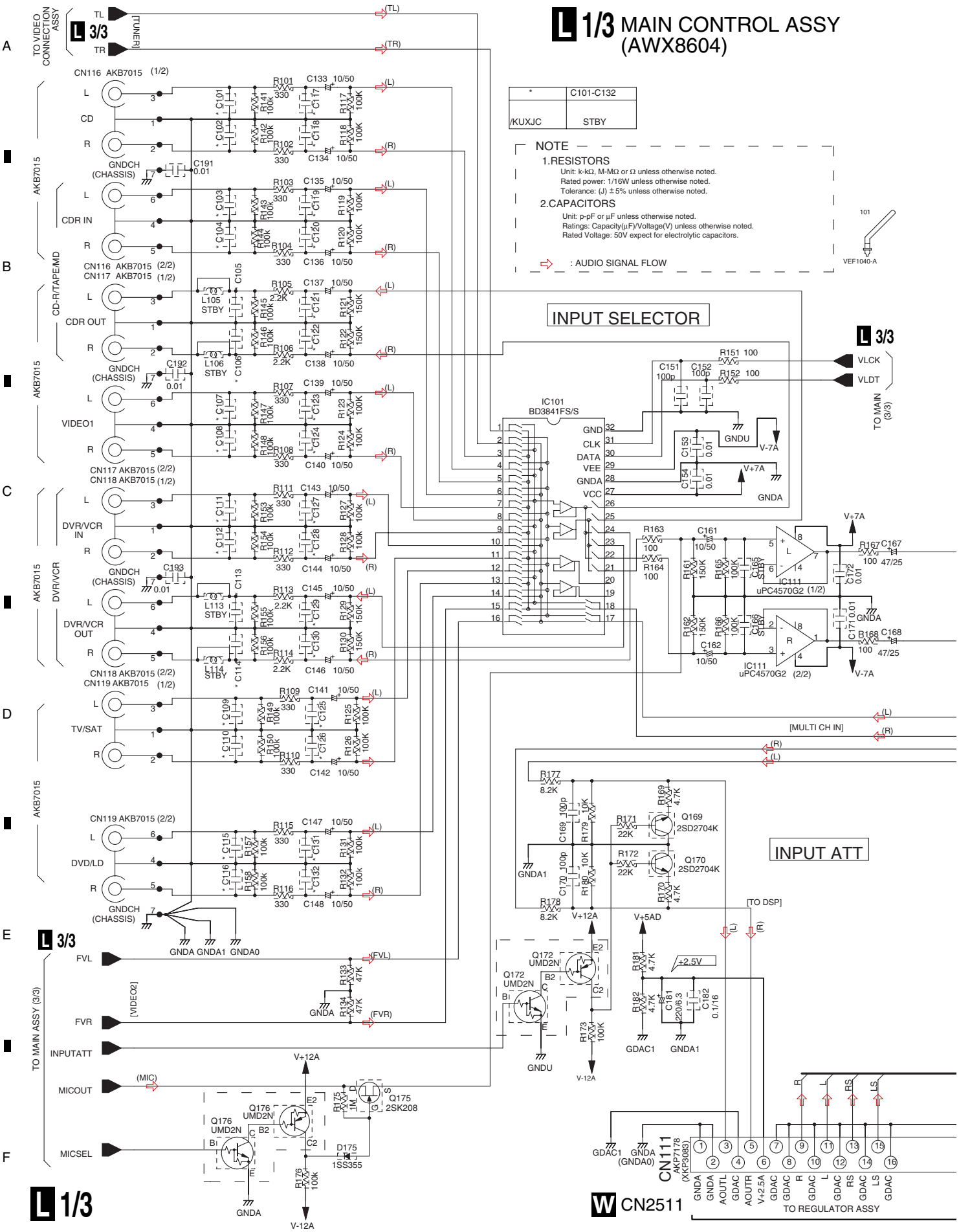

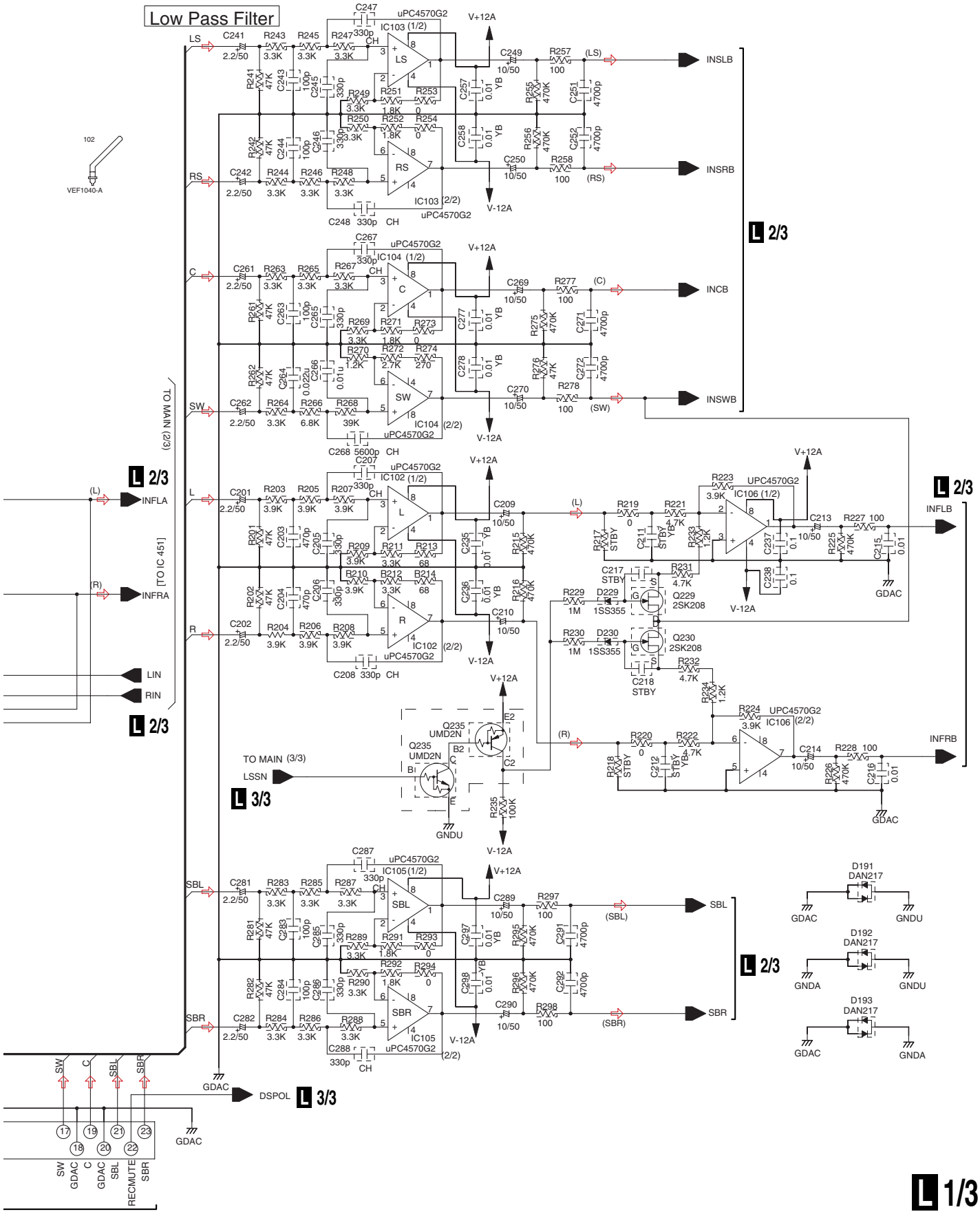
Low Pass Filter
LS
RS
C
SW
L
R
SBL
SBR
INSLB
INSRB
INCB
INSWB
INFLA
INFRA
INFLB
INFRB
LIN
RIN
TO MAIN (2/3)
[TO IC 451]
TO MAIN (3/3)
LSSN
DSPOL
GDAC
GNDU
GNDA
V+12A
V-12A
IC103 (1/2)
IC103 (2/2)
IC104 (1/2)
IC104 (2/2)
IC102 (1/2)
IC102 (2/2)
IC105 (1/2)
IC105 (2/2)
IC106 (1/2)
IC106 (2/2)
uPC4570G2
UPC4570G2
Q229 2SK208
Q230 2SK208
Q235 UMD2N
D191 DAN217
D192 DAN217
D193 DAN217
VEF1040-A
L 2/3
L 3/3
L 1/3

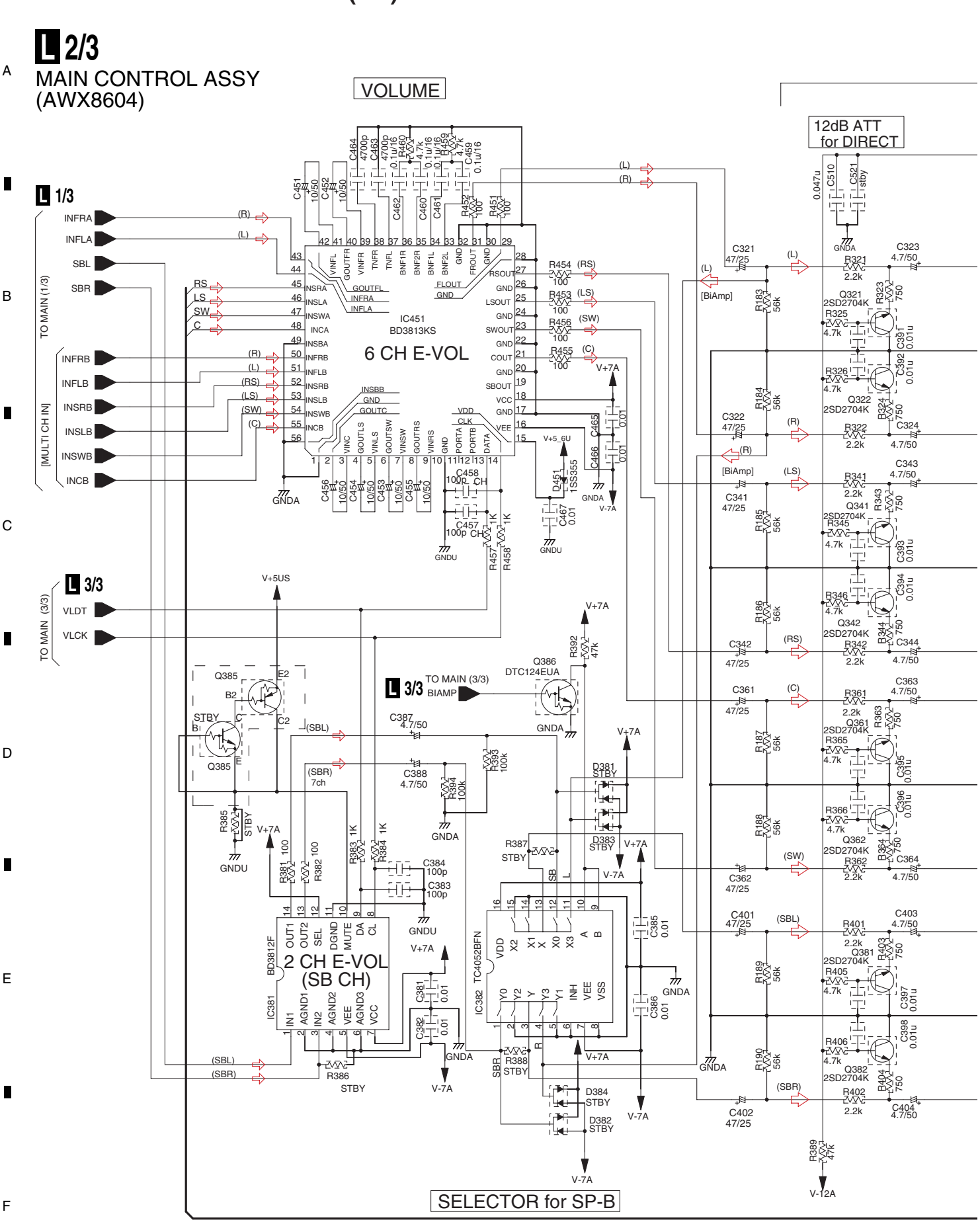
L 2/3
MAIN CONTROL ASSY
(AWX8604)
VOLUME
12dB ATT
for DIRECT
L 1/3
TO MAIN (1/3)
[MULTI CH IN]
INFRA
INFLA
SBL
SBR
INFRB
INFLB
INSRB
INSLB
INSWB
INCB
IC451
BD3813KS
6 CH E-VOL
L 3/3
TO MAIN (3/3)
VLDT
VLCK
Q385
STBY
Q386
DTC124EUA
TO MAIN (3/3)
BIAMP
BD3812F
IC381
2 CH E-VOL
(SB CH)
TC4052BFN
IC382
SELECTOR for SP-B
L 2/3

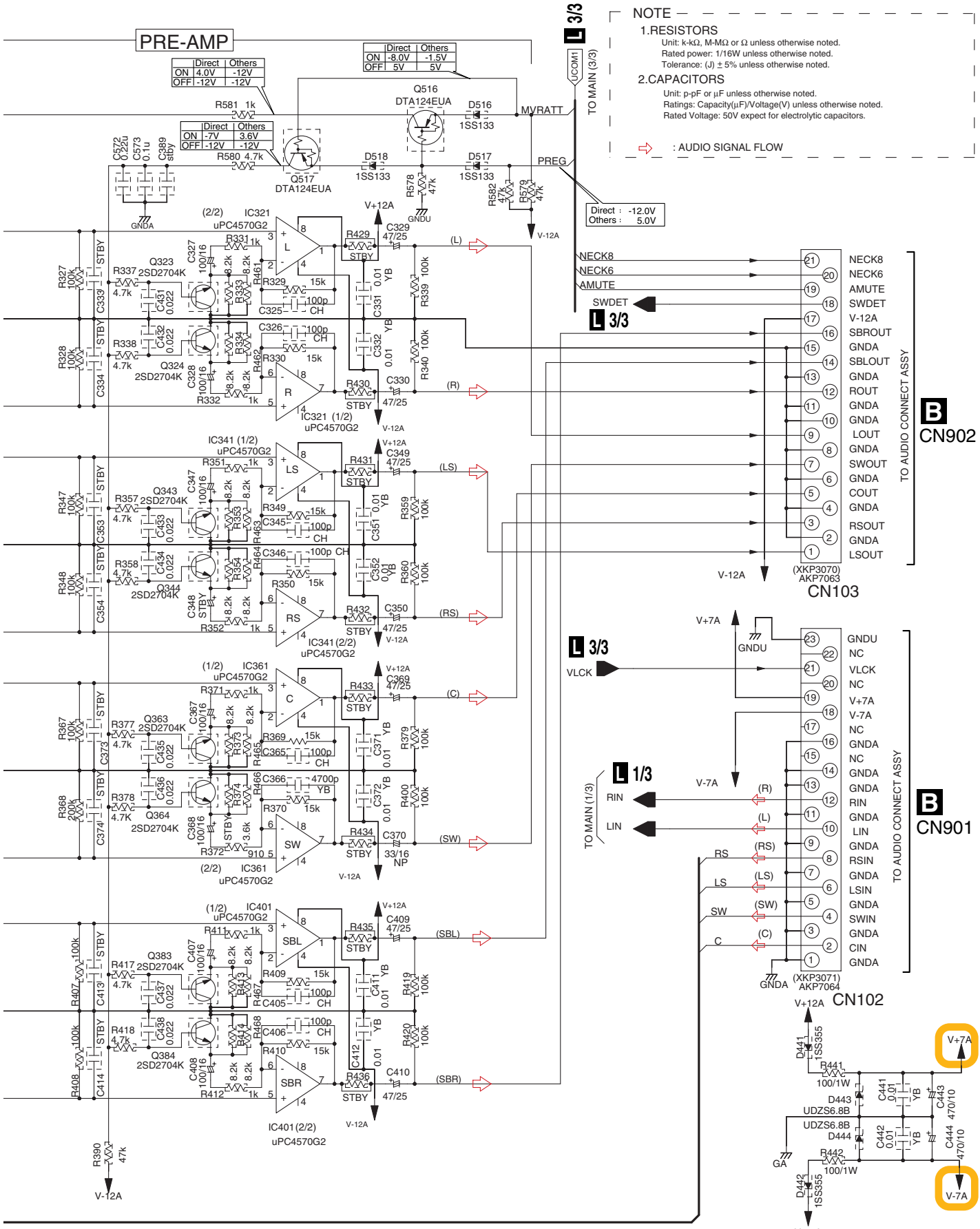
PRE-AMP
NOTE
1.RESISTORS
Unit: k-kΩ, M-MΩ or Ω unless otherwise noted.
Rated power: 1/16W unless otherwise noted.
Tolerance: (J) ± 5% unless otherwise noted.
2.CAPACITORS
Unit: p-pF or µF unless otherwise noted.
Ratings: Capacity(µF)/Voltage(V) unless otherwise noted.
Rated Voltage: 50V expect for electrolytic capacitors.
: AUDIO SIGNAL FLOW
L 3/3
TO MAIN (3/3)
UCOM1
MVRATT
PREG
Q516 DTA124EUA
Q517 DTA124EUA
D516 1SS133
D517 1SS133
D518 1SS133
R581 1k
R580 4.7k
R578 47k
R582 47k
R579 47k
C572 0.22u
C573 0.1u
C389 stby
GNDA
GNDU
V+12A
V-12A
Direct : -12.0V
Others : 5.0V
IC321 (2/2) uPC4570G2
IC321 (1/2) uPC4570G2
IC341 (1/2) uPC4570G2
IC341 (2/2) uPC4570G2
IC361 (1/2) uPC4570G2
IC361 (2/2) uPC4570G2
IC401 (1/2) uPC4570G2
IC401 (2/2) uPC4570G2
Q323 2SD2704K
Q324 2SD2704K
Q343 2SD2704K
Q344 2SD2704K
Q363 2SD2704K
Q364 2SD2704K
Q383 2SD2704K
Q384 2SD2704K
(L)
(R)
(LS)
(RS)
(C)
(SW)
(SBL)
(SBR)
NECK8
NECK6
AMUTE
SWDET
SBROUT
SBLOUT
ROUT
LOUT
SWOUT
COUT
RSOUT
LSOUT
GNDA
V-12A
(XKP3070) AKP7063
CN103
TO AUDIO CONNECT ASSY
B
CN902
VLCK
V+7A
V-7A
GNDU
NC
VLCK
RIN
LIN
RS
LS
SW
C
CIN
RSIN
LSIN
SWIN
(XKP3071) AKP7064
CN102
L 1/3
TO MAIN (1/3)
D441 1SS355
R441 100/1W
D443 UDZS6.8B
D444 UDZS6.8B
R442 100/1W
D442 1SS355
C441 0.01
C442 0.01
C443 470/10
C444 470/10
GA
R390 47k
L 2/3

3.10 MAIN CONTROL ASSY (3/3)

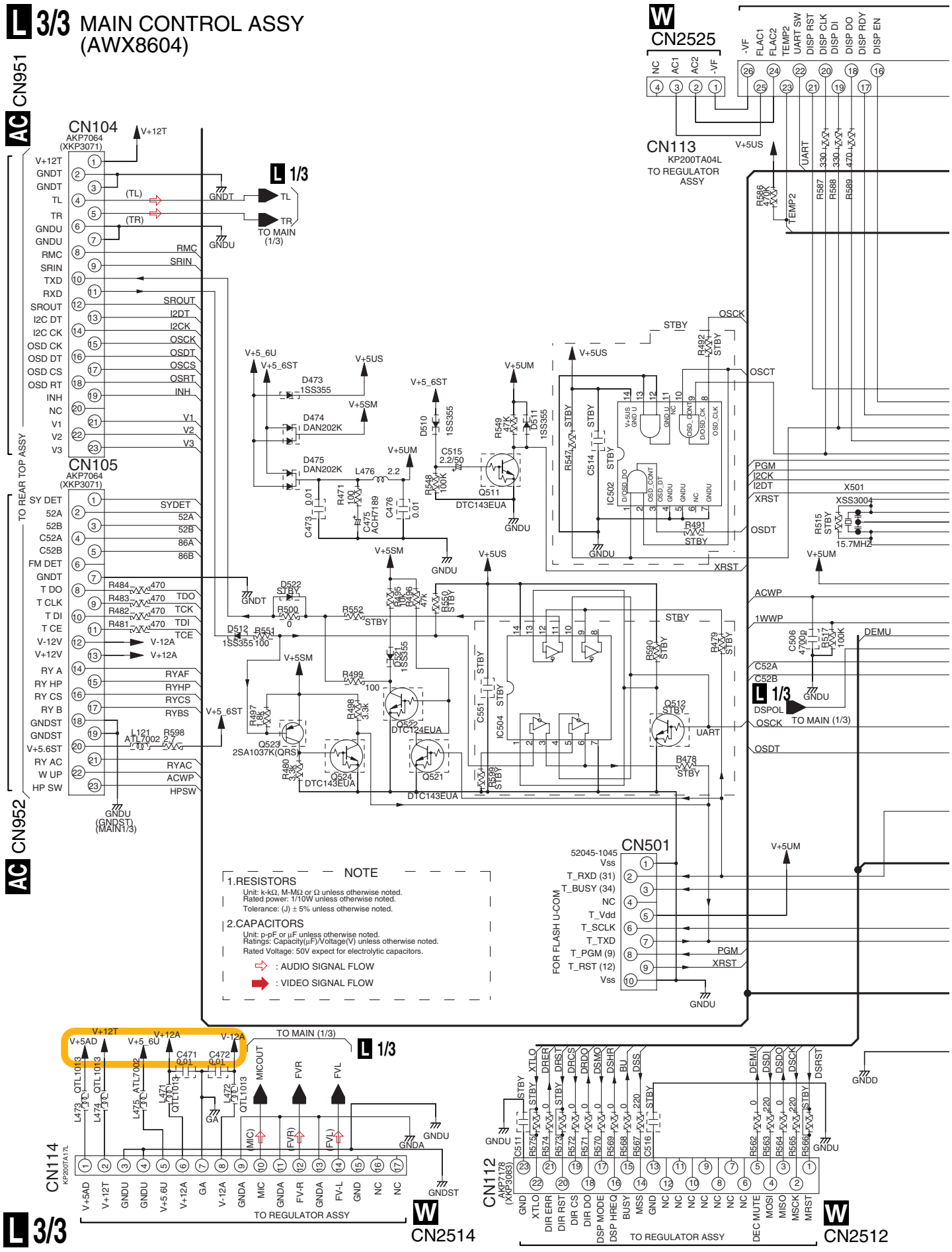

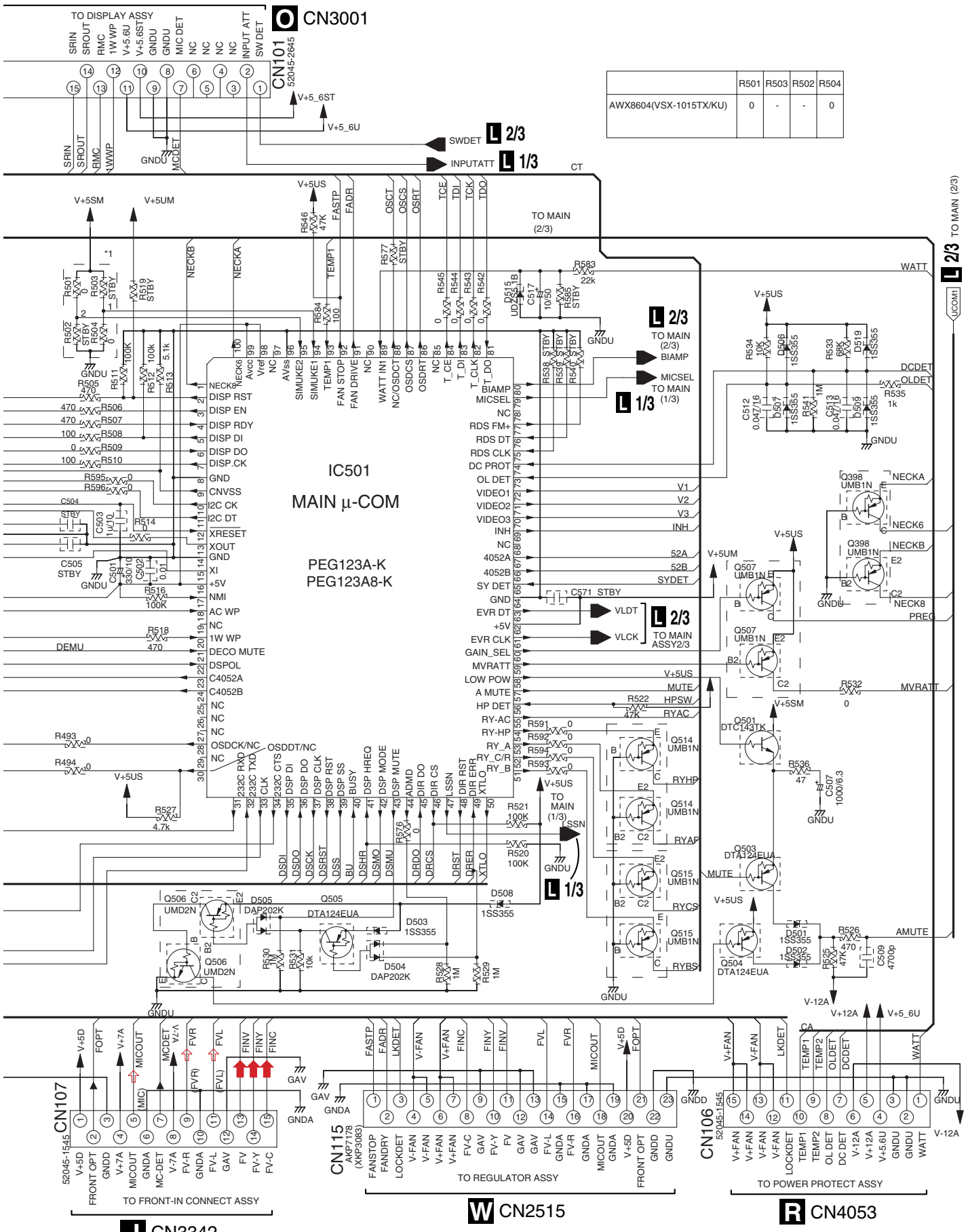

	R501	R503	R502	R504
AWX8604(VSX-1015TX/KU)	0	-	-	0

3.11 DSP ASSY (1/2)

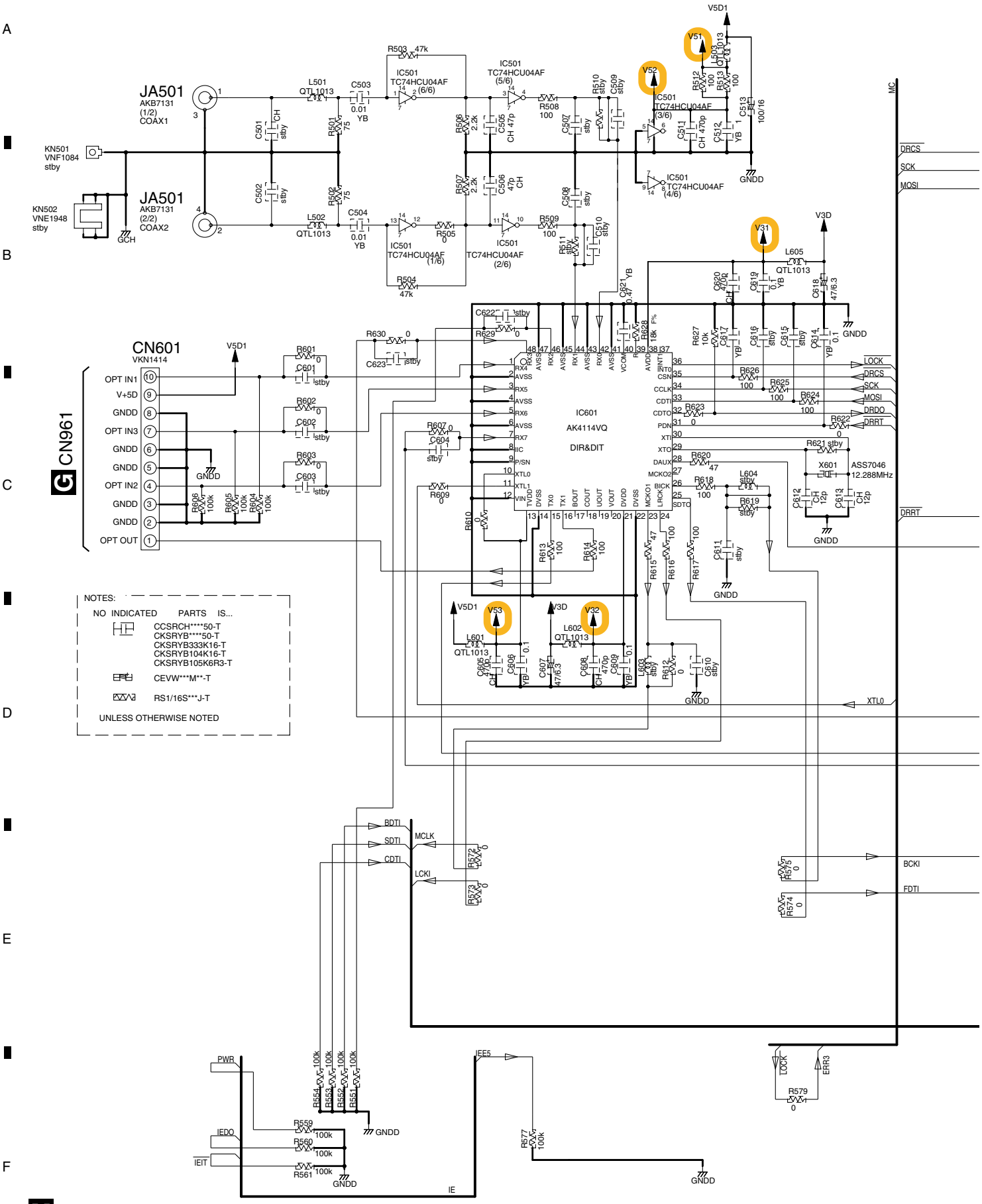

M 1/2

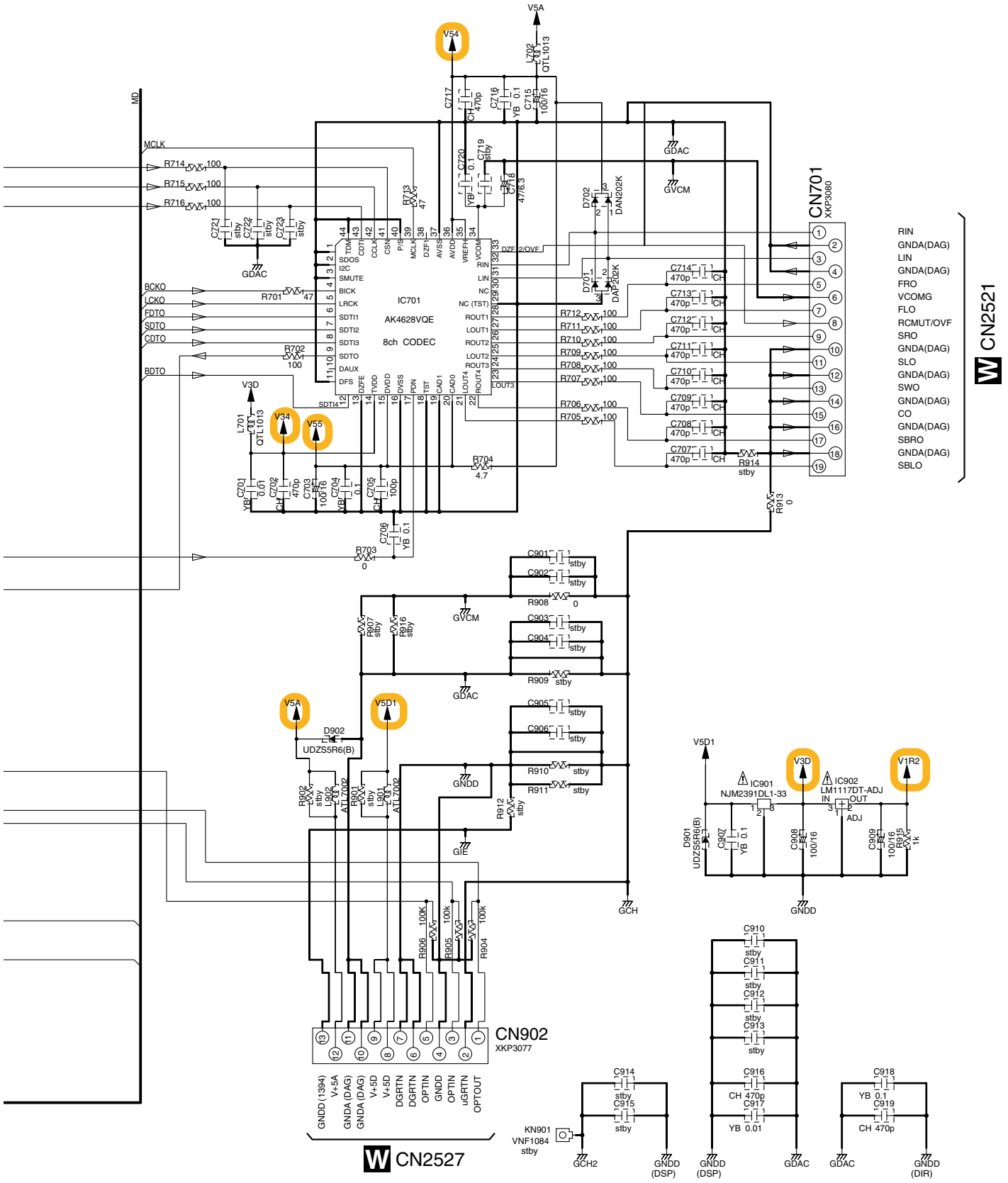

M 1/2 DSP ASSY (AWX8572)

3.12 DSP ASSY (1/2)

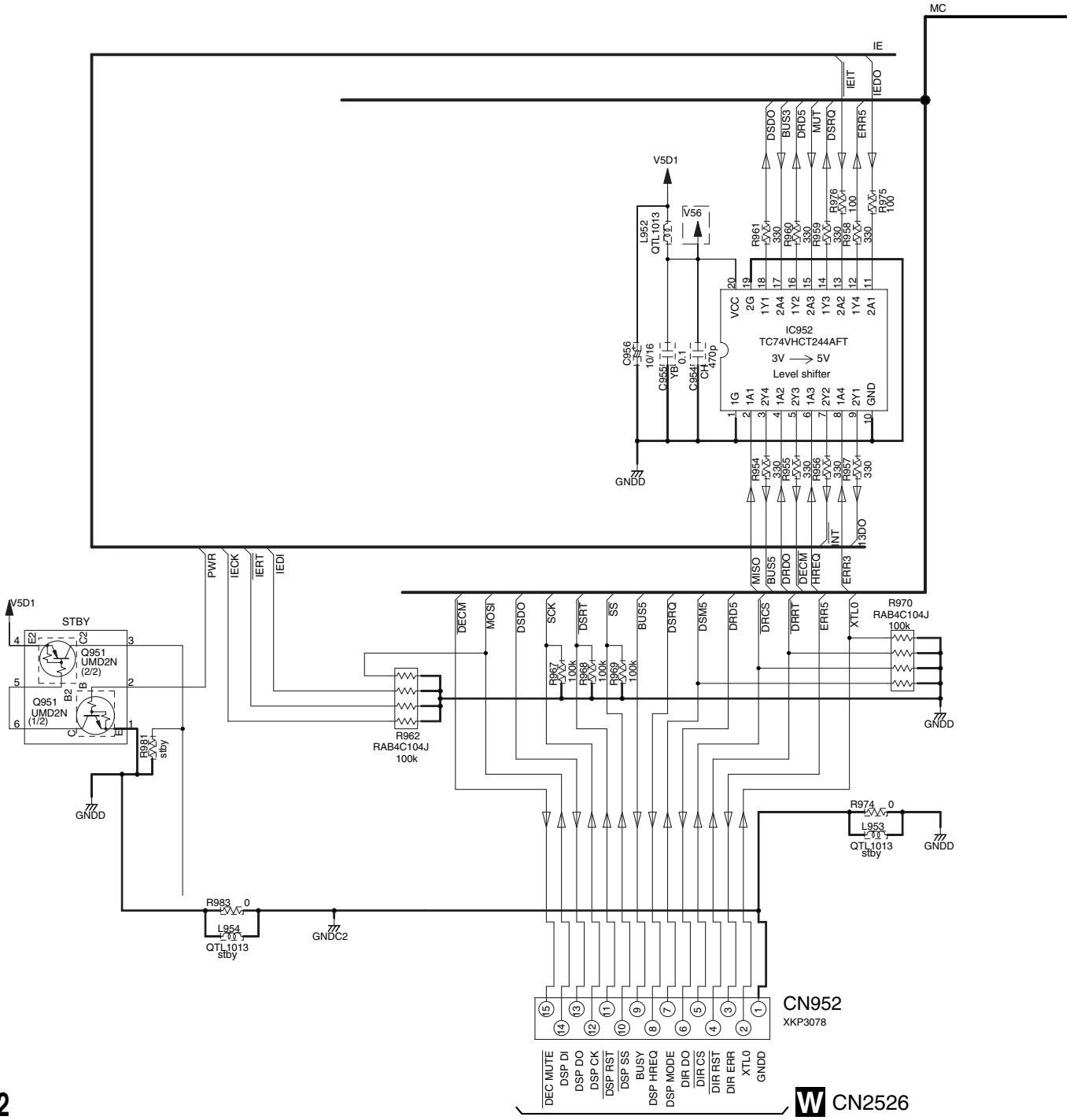

M 2/2

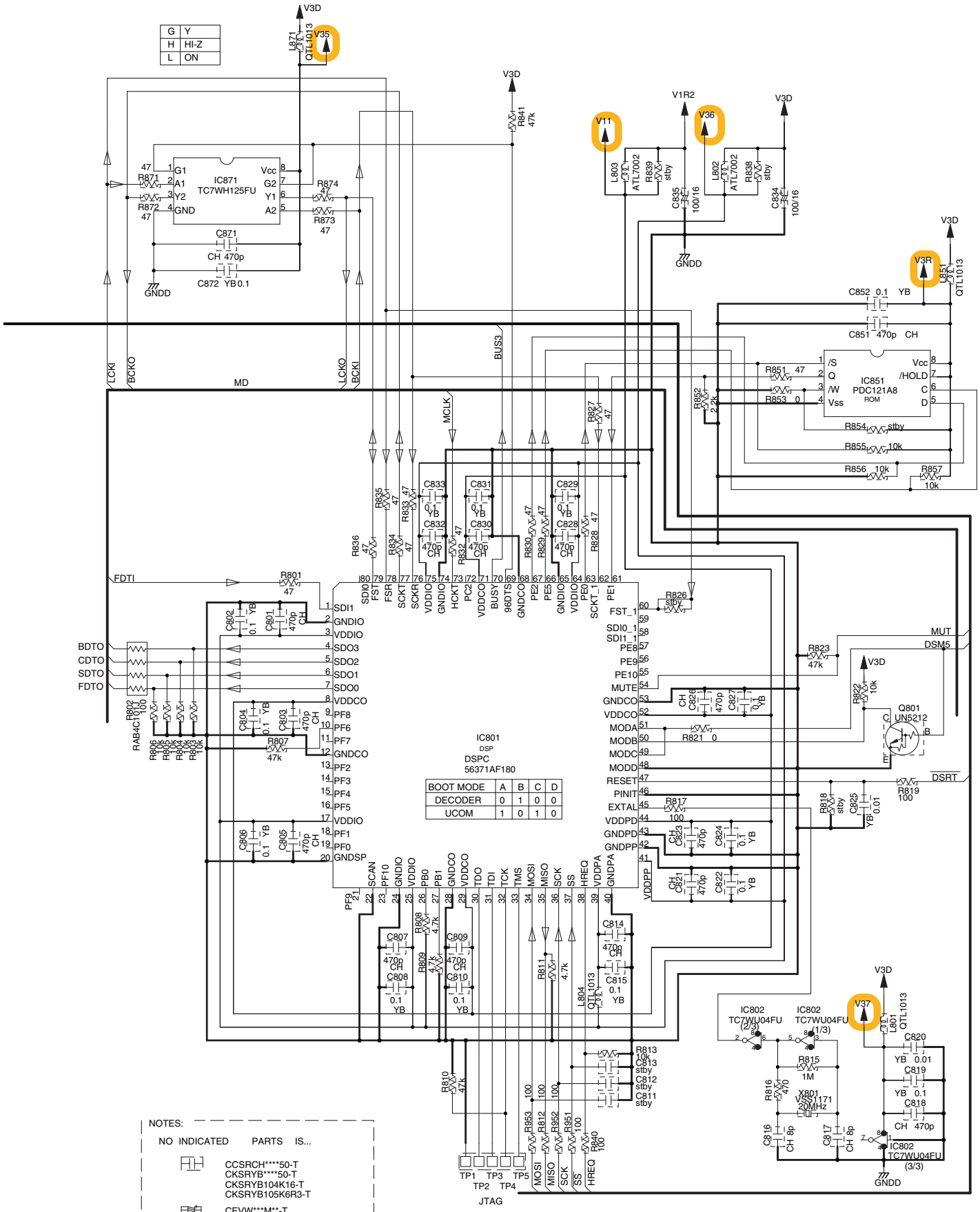

G	Y
H	HI-Z
L	ON

BOOT MODE	A	B	C	D
DECODER	0	1	0	0
UCOM	1	0	1	0

NOTES:

NO INDICATED PARTS IS...

CCSRCH****50-T
CKSRYB****50-T
CKSRYB104K16-T
CKSRYB105K6R3-T

CEVW***M**-T

RS1/16S***J-T

UNLESS OTHERWISE NOTED

M 2/2 DSP ASSY (AWX8572)

M 2/2

3.13 VOLUME, DISPLAY and MULTI JOG ASSYS

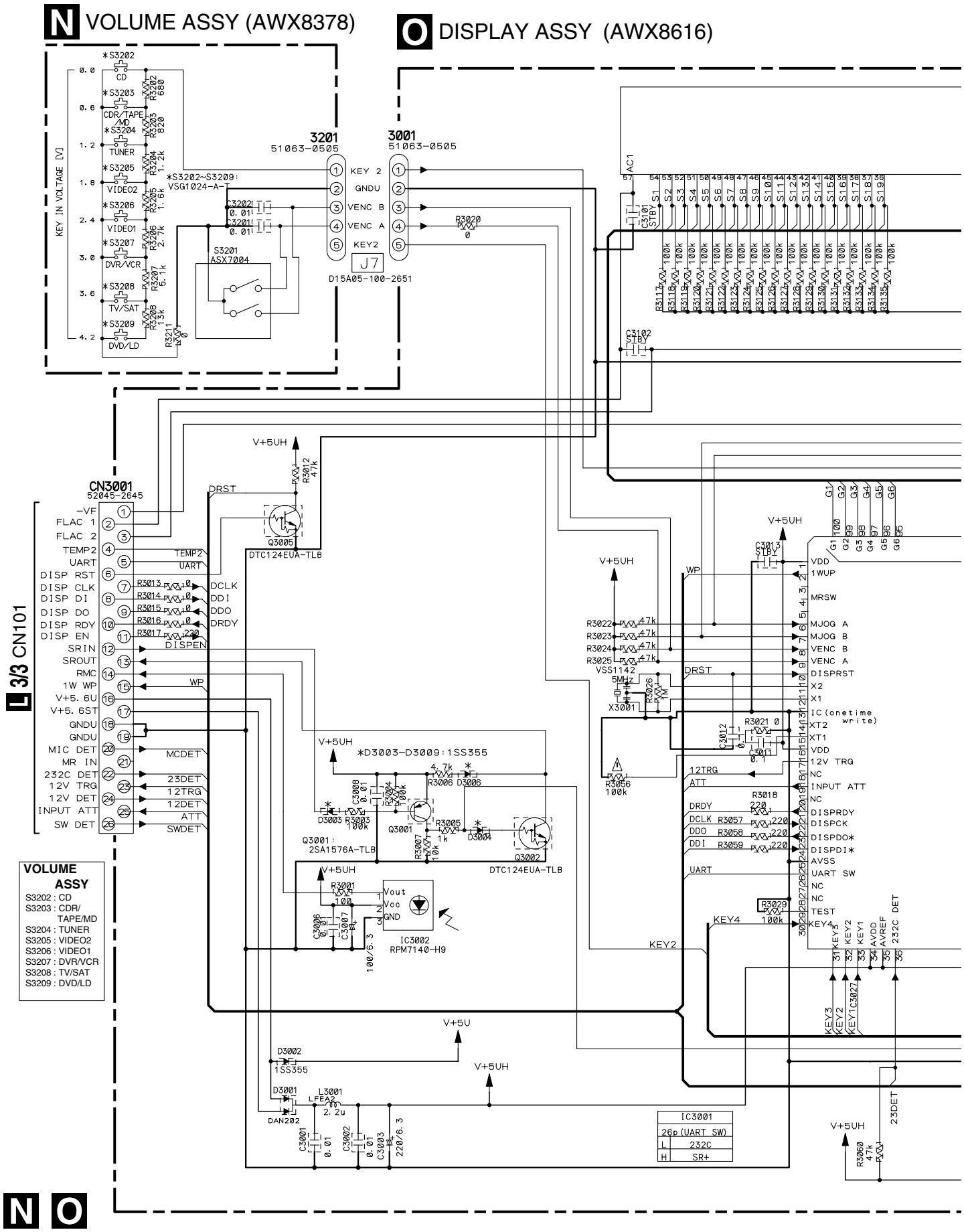

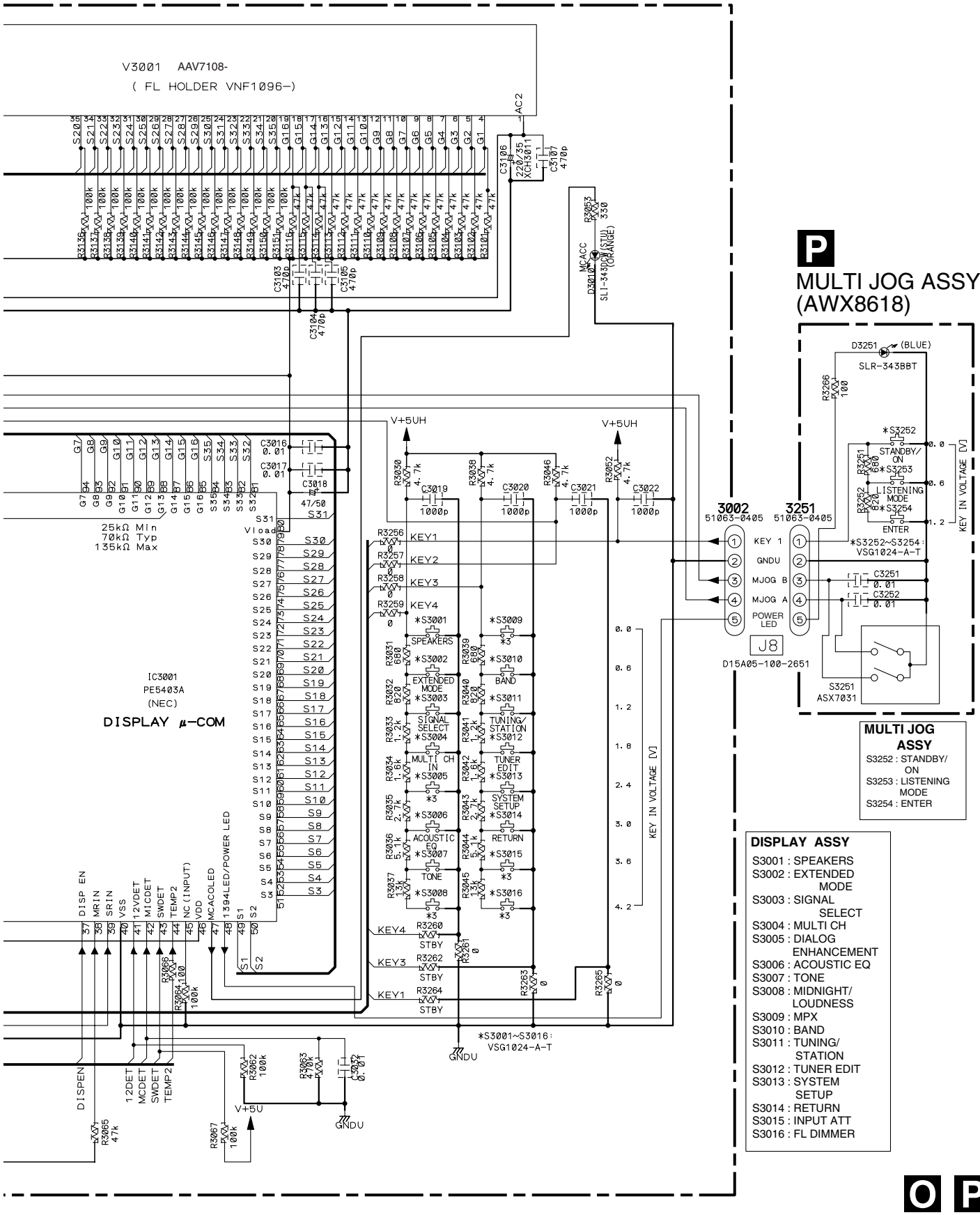
V3001 AAV7108-
(FL HOLDER VNF1096-)
P
MULTI JOG ASSY
(AWX8618)
D3251 (BLUE)
SLR-343BBT
*S3252
STANDBY/ ON
*S3253
LISTENING MODE
*S3254
ENTER
KEY IN VOLTAGE [V]
*S3252~S3254:
VSG1024-A-T
3002
51063-0405
3251
51063-0405
KEY 1
GNDU
MJOG B
MJOG A
POWER LED
J8
D15A05-100-2651
S3251
ASX7031
MULTI JOG ASSY
S3252 : STANDBY/ ON
S3253 : LISTENING MODE
S3254 : ENTER
DISPLAY ASSY
S3001 : SPEAKERS
S3002 : EXTENDED MODE
S3003 : SIGNAL SELECT
S3004 : MULTI CH
S3005 : DIALOG ENHANCEMENT
S3006 : ACOUSTIC EQ
S3007 : TONE
S3008 : MIDNIGHT/ LOUDNESS
S3009 : MPX
S3010 : BAND
S3011 : TUNING/ STATION
S3012 : TUNER EDIT
S3013 : SYSTEM SETUP
S3014 : RETURN
S3015 : INPUT ATT
S3016 : FL DIMMER
IC3001
PE5403A
(NEC)
DISPLAY μ-COM
25kΩ Min
70kΩ Typ
135kΩ Max
V+5UH
V+5U
GNDU
*S3001~S3016:
VSG1024-A-T
SPEAKERS
EXTENDED MODE
SIGNAL SELECT
MULTI CH IN
ACOUSTIC EQ
TONE
BAND
TUNING/ STATION
TUNER EDIT
SYSTEM SETUP
RETURN
KEY1
KEY2
KEY3
KEY4
STBY
DISP EN
MRIN
SRIN
VSS
12VDET
MICDET
SWDET
TEMP2
NC (INPUT)
VDD
MCACOLED
1394LED/POWER LED
DISPEN
12DET
MCDET
SWDET
TEMP2
MCACC
SLI-343DOR (STU) (ORANGE)

O P

3.14 POWER AMP IN and POWER PROTECT ASSYS

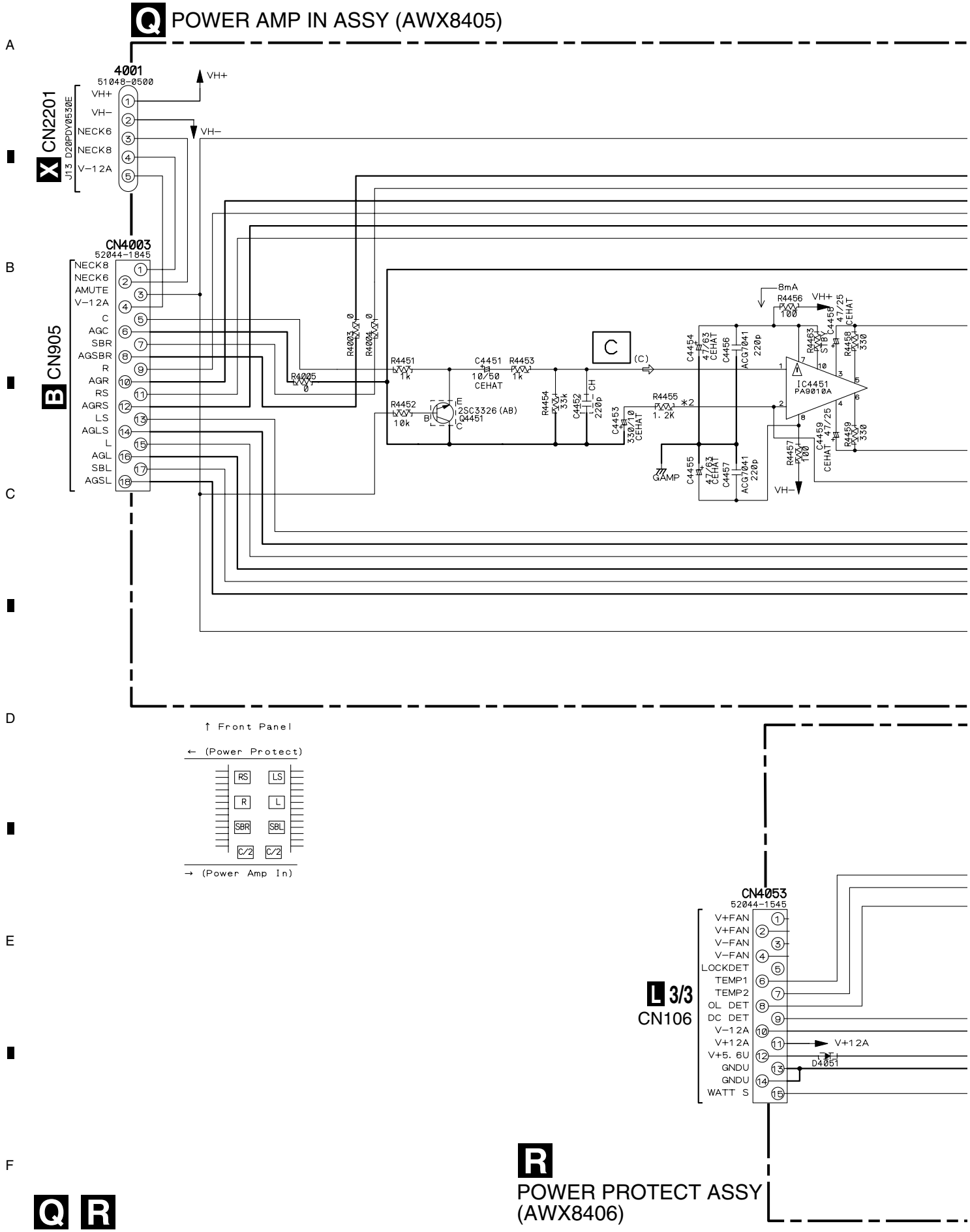

Q R

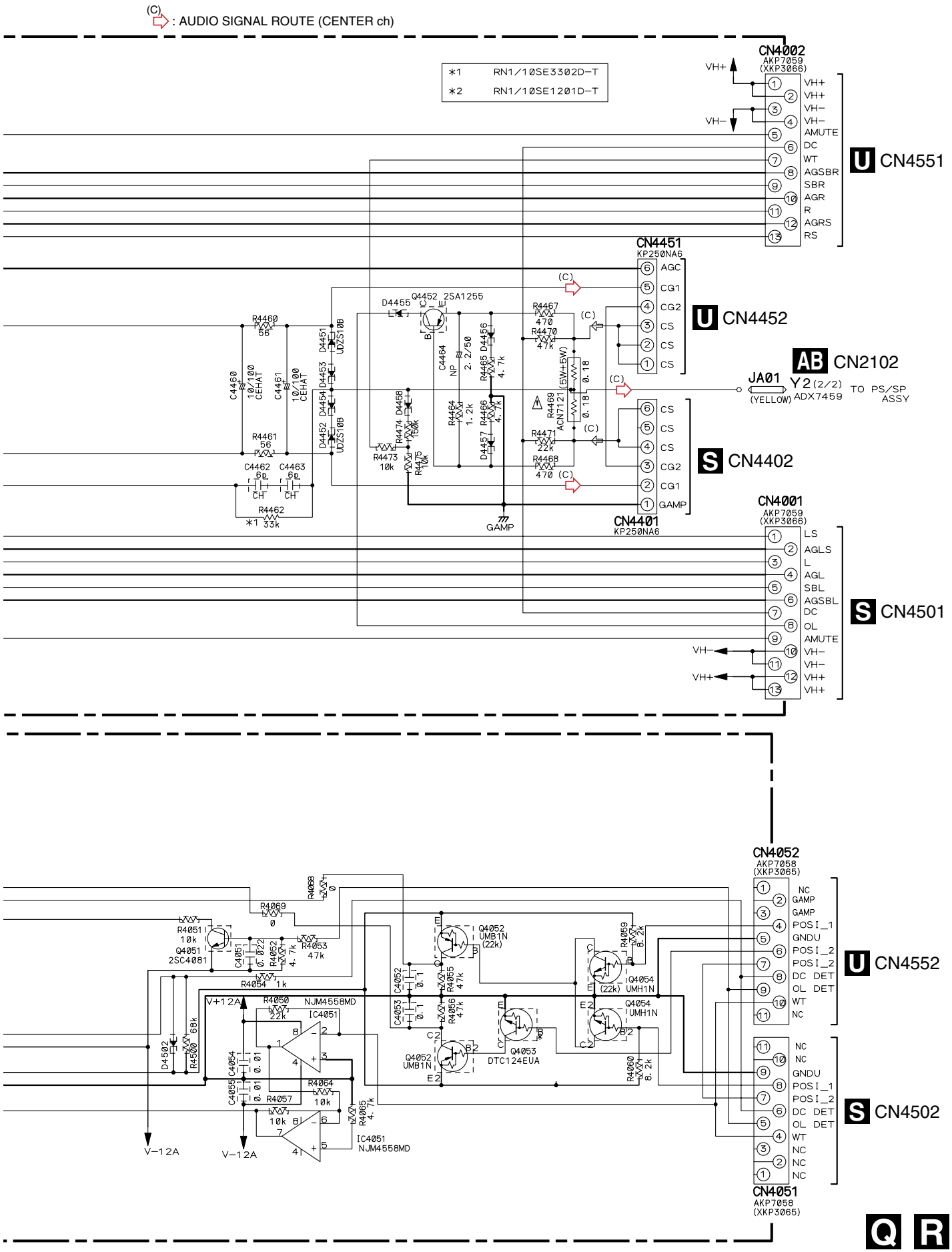
(C) : AUDIO SIGNAL ROUTE (CENTER ch)
*1 RN1/10SE3302D-T
*2 RN1/10SE1201D-T
CN4002
AKP7059
(XKP3066)
VH+
VH+
VH−
VH−
AMUTE
DC
WT
AGSBR
SBR
AGR
R
AGRS
RS
U CN4551
CN4451
KP250NA6
AGC
CG1
CG2
CS
CS
CS
U CN4452
AB CN2102
JA01
Y2 (2/2)
ADX7459
(YELLOW)
TO PS/SP ASSY
CS
CS
CS
CG2
CG1
GAMP
S CN4402
CN4401
KP250NA6
CN4001
AKP7059
(XKP3066)
LS
AGLS
L
AGL
SBL
AGSBL
DC
OL
AMUTE
VH−
VH−
VH+
VH+
S CN4501
Q4452 2SA1255
D4455
R4460 56
R4461 56
C4460 10/100 CEHAT
C4461 10/100 CEHAT
D4451 UDZS10B
D4453
D4454
D4452 UDZS10B
C4462 6p CH
C4463 6p CH
R4462 33k
*1
R4473 10k
R4474 150k
R4475 10k
D4458
C4464 NP
2.2/50
R4464 1.2k
R4465 4.7k
R4466 4.7k
D4456
D4457
R4467 470
R4470 47k
R4469 ACN7121 (5W+5W)
0.18
0.18
R4471 22k
R4468 470
GAMP
CN4052
AKP7058
(XKP3065)
NC
GAMP
GAMP
POSI_1
GNDU
POSI_2
POSI_2
DC DET
OL DET
WT
NC
U CN4552
NC
NC
GNDU
POSI_1
POSI_2
DC DET
OL DET
WT
NC
NC
NC
S CN4502
CN4051
AKP7058
(XKP3065)
R4068 0
R4069 0
R4051 10k
Q4051 2SC4081
C4051 0.022
R4052 4.7k
R4053 47k
R4054 1k
V+12A
R4050 22k
NJM4558MD
IC4051
D4502
R4500 68k
C4054 0.01
C4055 0.01
R4064 10k
R4057 10k
R4065 4.7k
IC4051 NJM4558MD
V−12A
V−12A
Q4052 UMB1N (22k)
C4052 0.1
C4053 0.1
R4055 47k
R4056 47k
Q4052 UMB1N
Q4053 DTC124EUA
R4059 8.2k
Q4054 UMH1N (22k)
Q4054 UMH1N
R4060 8.2k
Q R

3.15 POWER AMP-L and POSI 1 L ASSYS

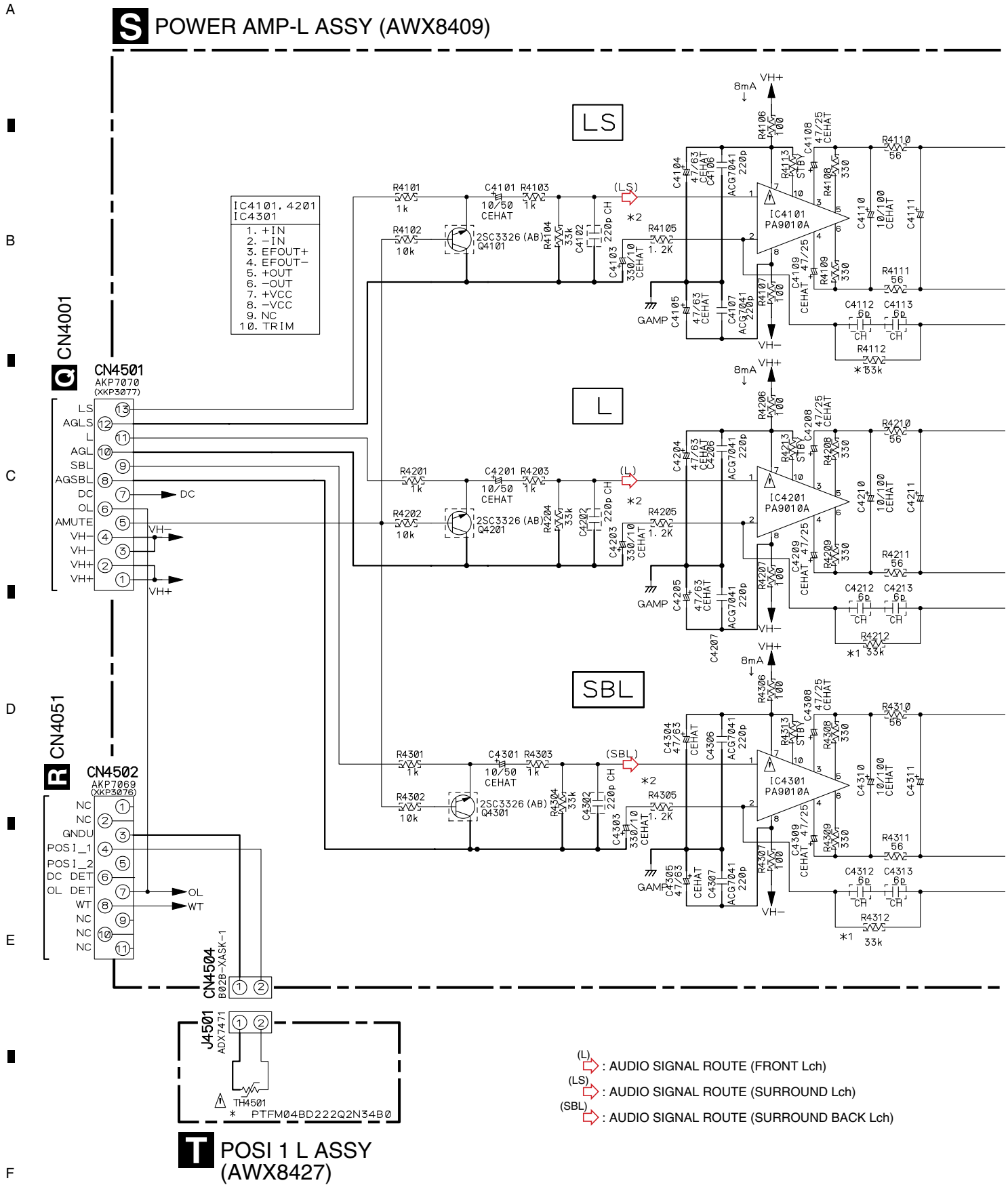

S T

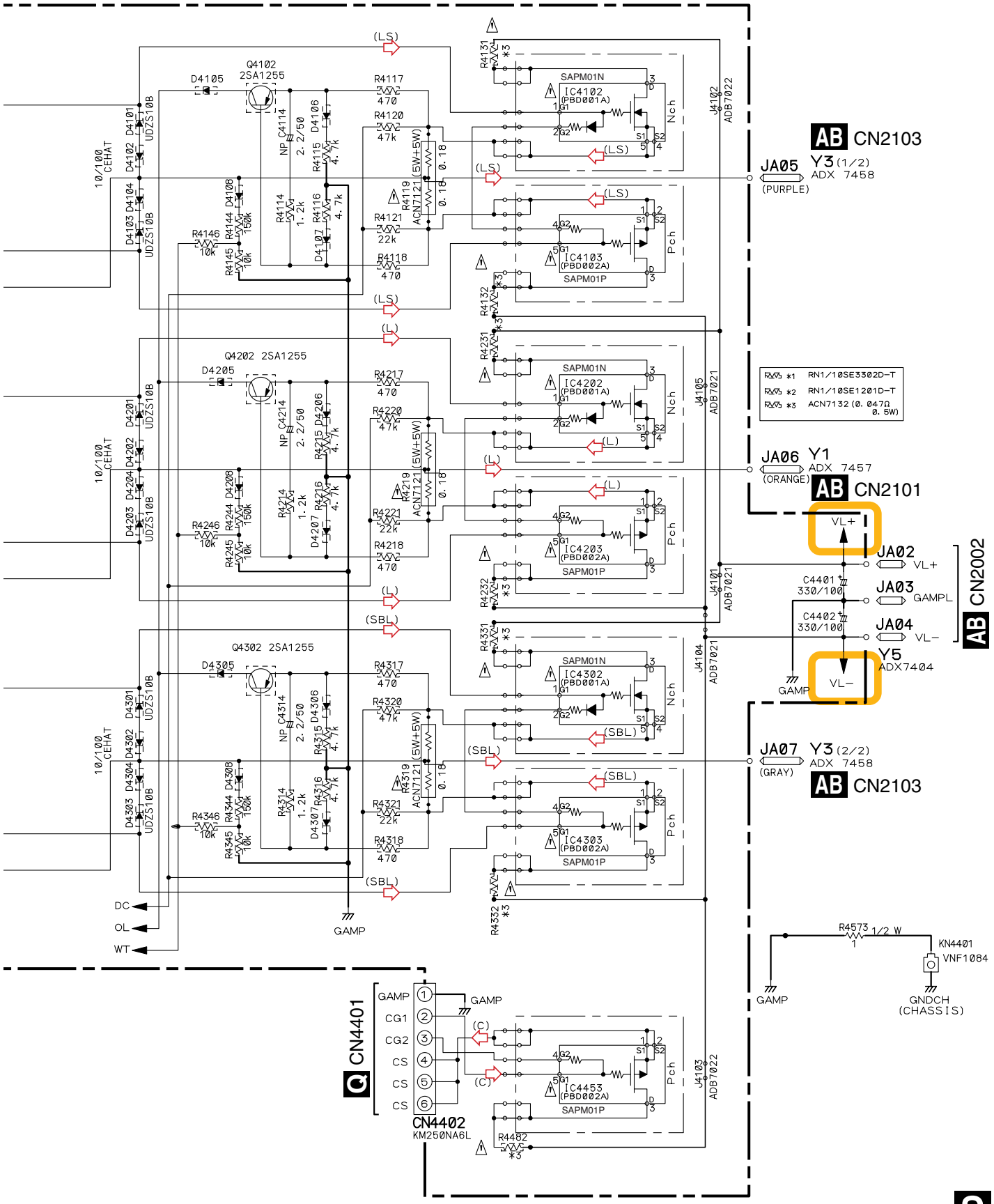
AB CN2103
JA05 Y3 (1/2) ADX 7458
(PURPLE)
JA06 Y1 ADX 7457
(ORANGE)
AB CN2101
JA02 VL+
JA03 GAMPL
JA04 VL−
AB CN2002
Y5 ADX7404
JA07 Y3 (2/2) ADX 7458
(GRAY)
AB CN2103
CN4401
CN4402 KM250NA6L
GAMP
CG1
CG2
CS
DC
OL
WT
R4573 1/2 W
KN4401 VNF1084
GNDCH (CHASSIS)
Q4102 2SA1255
Q4202 2SA1255
Q4302 2SA1255
IC4102 (PBD001A)
IC4103 (PBD002A)
IC4202 (PBD001A)
IC4203 (PBD002A)
IC4302 (PBD001A)
IC4303 (PBD002A)
IC4453 (PBD002A)
SAPM01N
SAPM01P
ACN7121 (5W+5W)
ADB7022
ADB7021
10/100 CEHAT
UDZS10B
*1 RN1/10SE3302D-T
*2 RN1/10SE1201D-T
*3 ACN7132 (0.047Ω 0.5W)

3.16 POWER AMP-R and POSI 1 R ASSYS

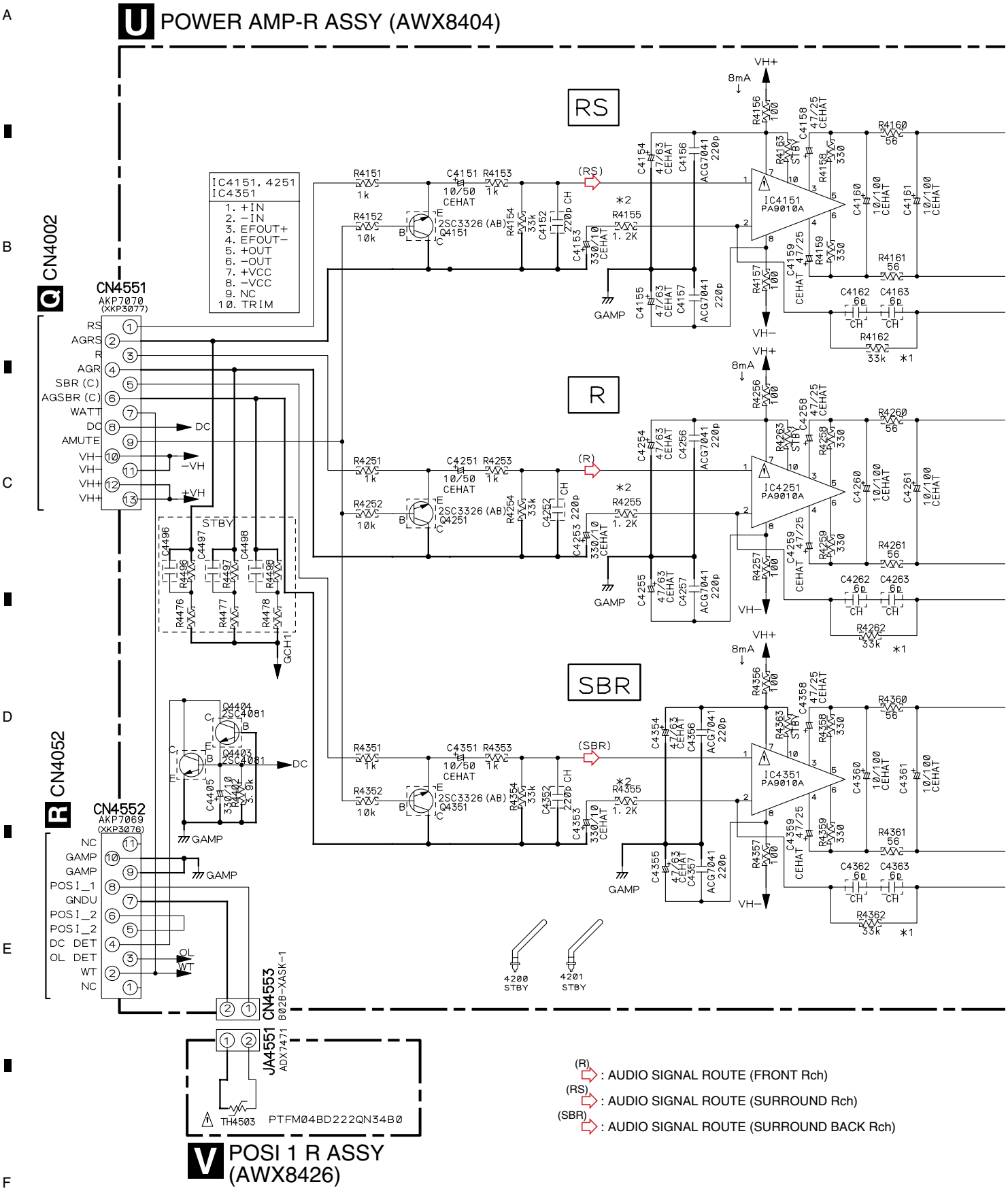

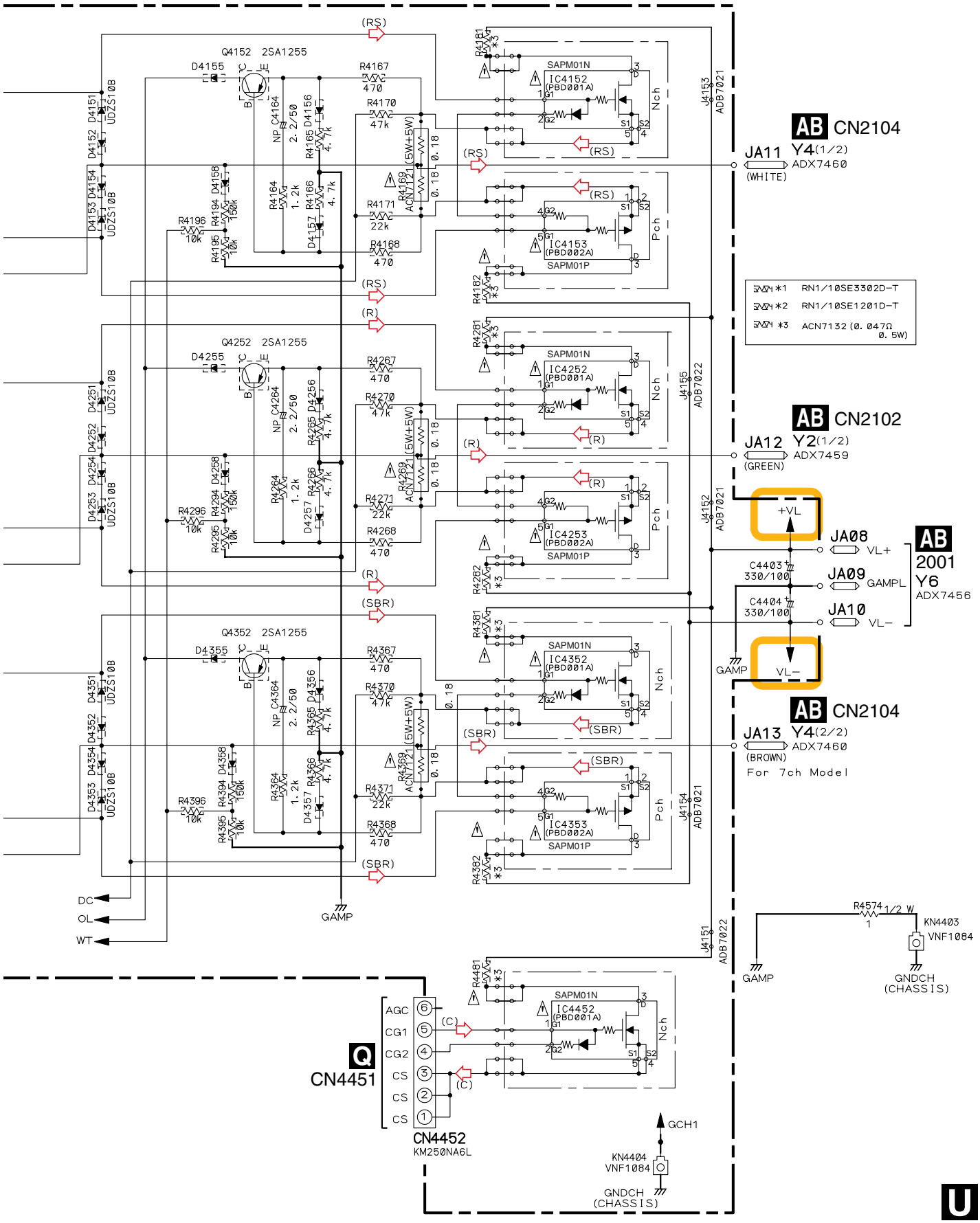
AB CN2104
JA11 Y4(1/2)
ADX7460
(WHITE)
AB CN2102
JA12 Y2(1/2)
ADX7459
(GREEN)
AB CN2104
JA13 Y4(2/2)
ADX7460
(BROWN)
For 7ch Model
AB 2001 Y6
ADX7456
JA08 VL+
JA09 GAMPL
JA10 VL−
+VL
VL−
GAMP
Q CN4451
CN4452
KM250NA6L
AGC
CG1
CG2
CS
CS
CS
DC
OL
WT
GCH1
KN4404
VNF1084
GNDCH (CHASSIS)
KN4403
VNF1084
R4574 1/2 W
1
SAPM01N
SAPM01P
IC4152 (PBD001A)
IC4153 (PBD002A)
IC4252 (PBD001A)
IC4253 (PBD002A)
IC4352 (PBD001A)
IC4353 (PBD002A)
IC4452 (PBD001A)
Nch
Pch
Q4152 2SA1255
Q4252 2SA1255
Q4352 2SA1255
*1 RN1/10SE3302D-T
*2 RN1/10SE1201D-T
*3 ACN7132 (0.047Ω 0.5W)

3.17 REGULATOR ASSY

W REGULATOR ASSY (AWX8677)

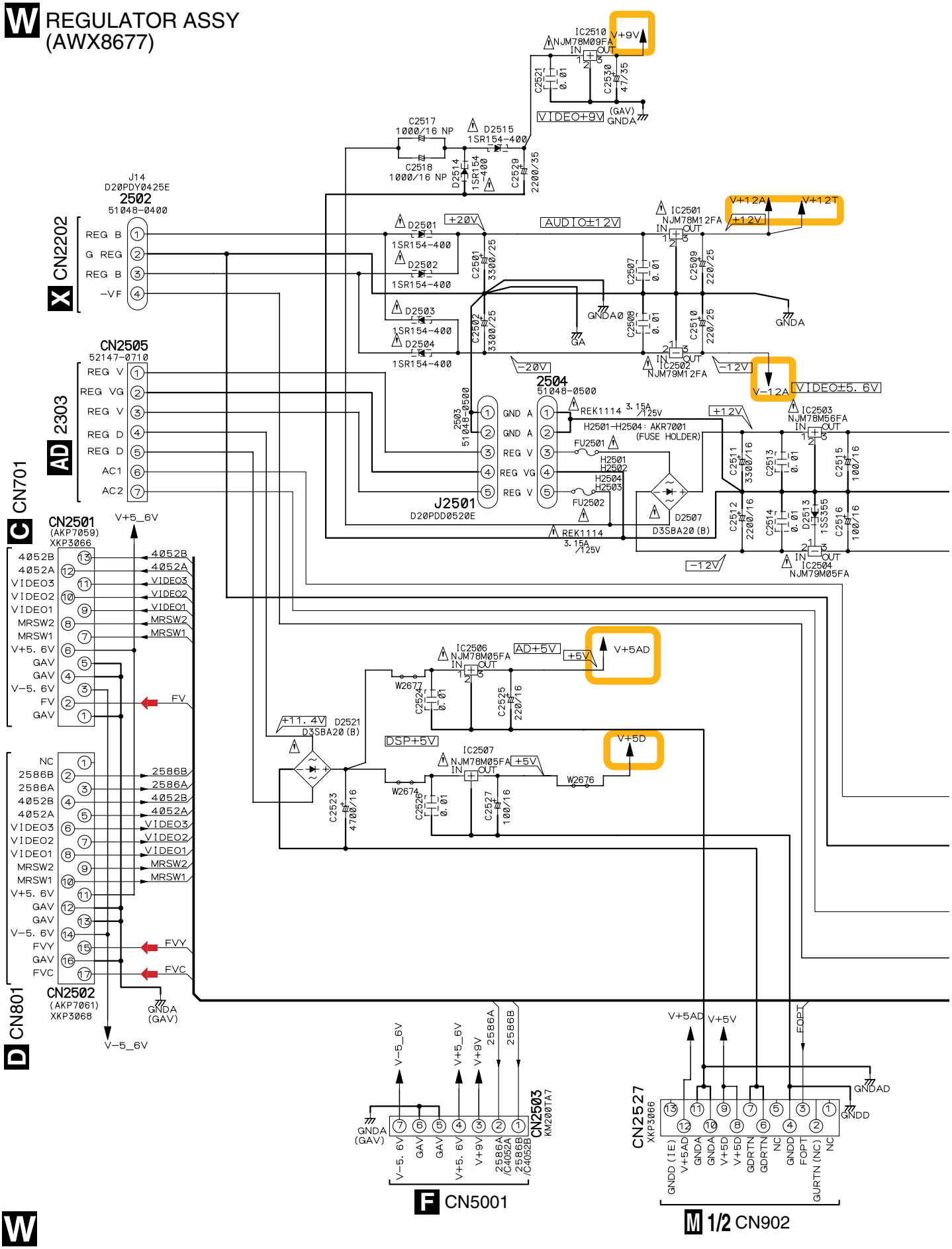

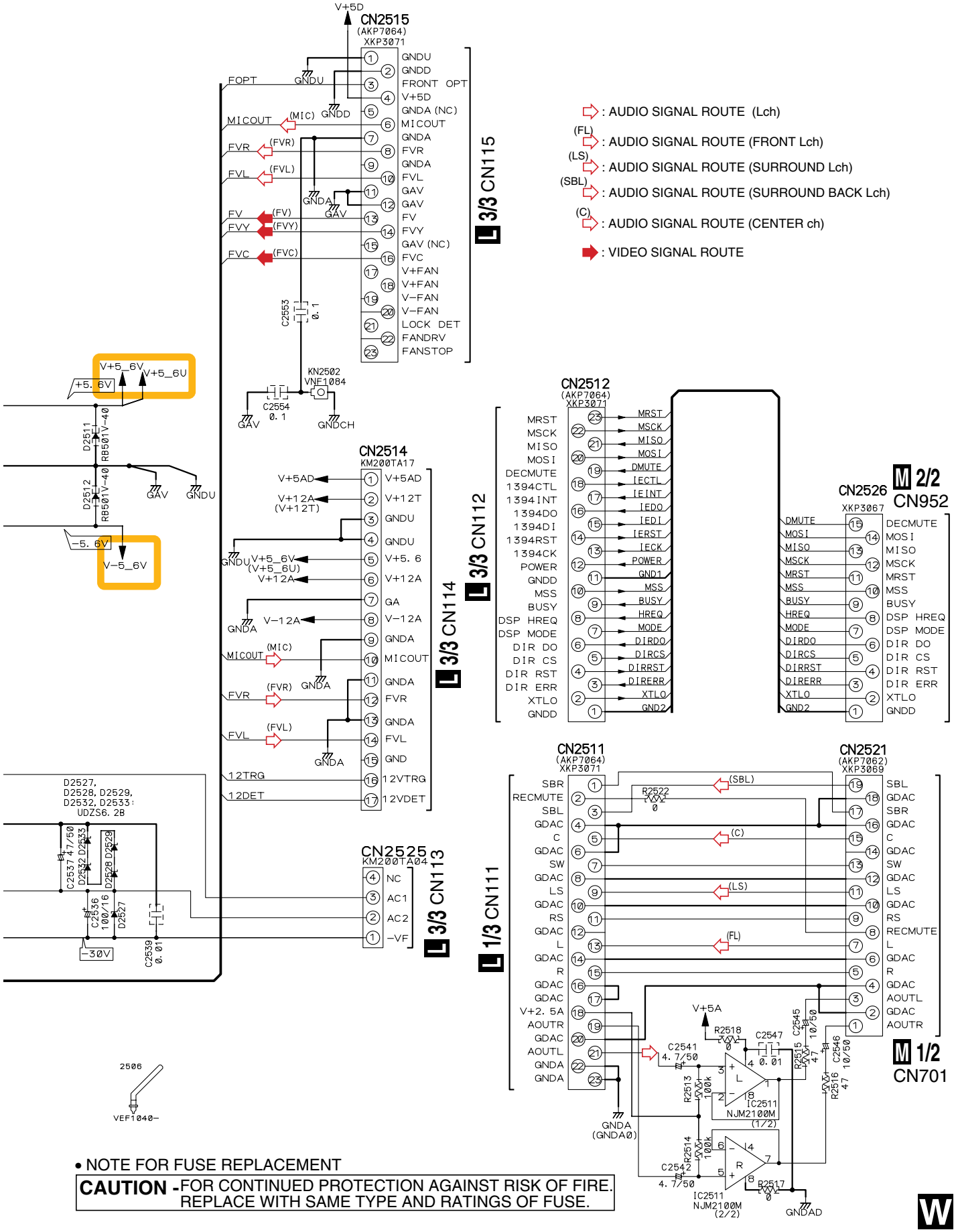

• NOTE FOR FUSE REPLACEMENT

CAUTION -FOR CONTINUED PROTECTION AGAINST RISK OF FIRE. REPLACE WITH SAME TYPE AND RATINGS OF FUSE.

3.18 TRANS 2-1, TRANS 2-2, DIODE, VH TR and SP/PS ASSYS

CAUTION : FOR CONTINUED PROTECTION AGAINST RISK OF FIRE. REPLACE ONLY WITH SAME TYPE NO. 491010 MFD, BY LITTELFUSE INK. FOR IC2251 AND IC2252.

CAUTION : FOR CONTINUED PROTECTION AGAINST RISK OF FIRE. REPLACE ONLY WITH SAME TYPE NO. 491007 MFD, BY LITTELFUSE INK. FOR IC2201 AND IC2202.

CAUTION : FOR CONTINUED PROTECTION AGAINST RISK OF FIRE. REPLACE ONLY WITH SAME TYPE NO. 491004 MFD, BY LITTELFUSE INK. FOR IC2253.

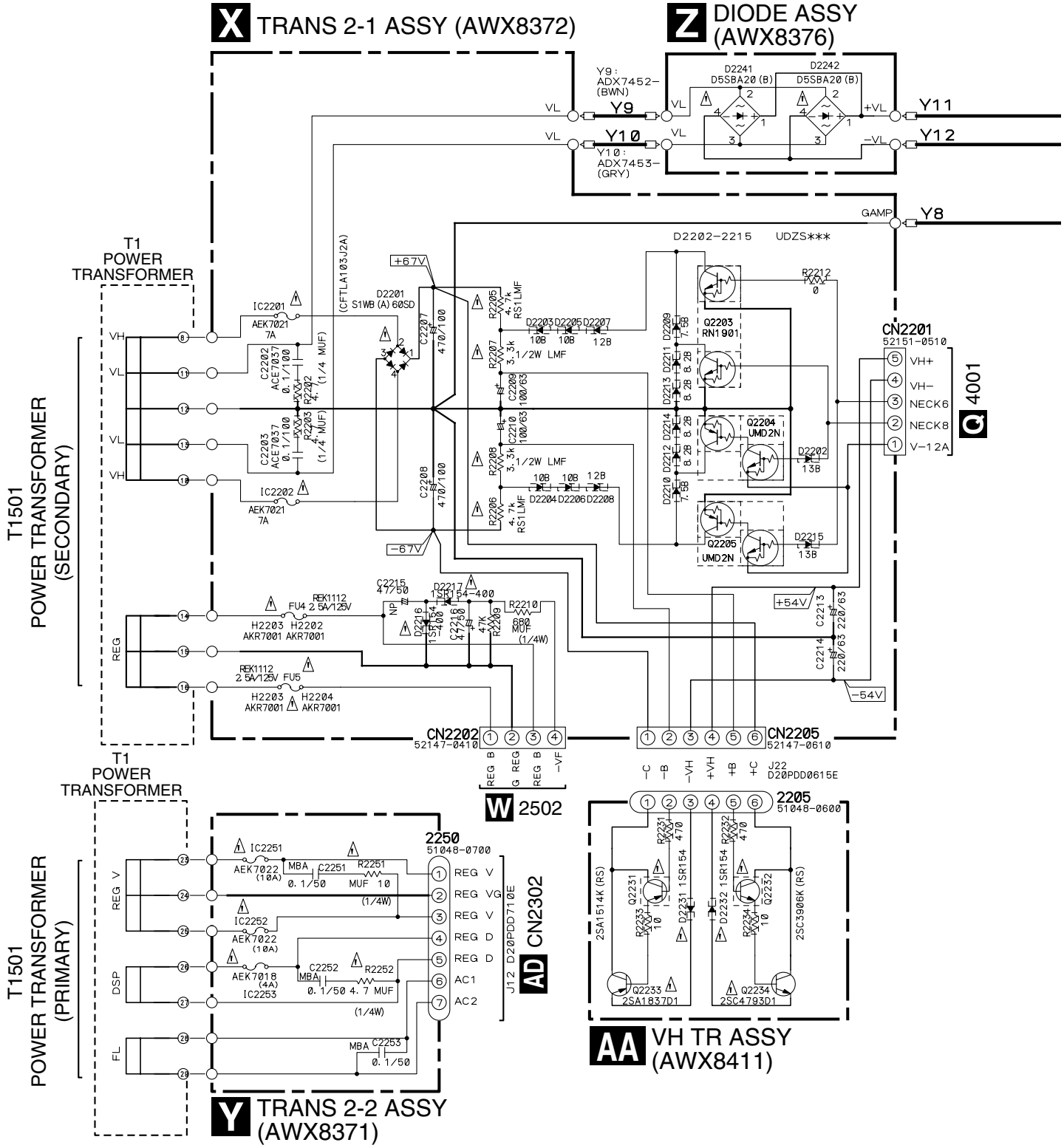

• NOTE FOR FUSE REPLACEMENT

CAUTION - FOR CONTINUED PROTECTION AGAINST RISK OF FIRE. REPLACE WITH SAME TYPE AND RATINGS OF FUSE.

X Y Z AA

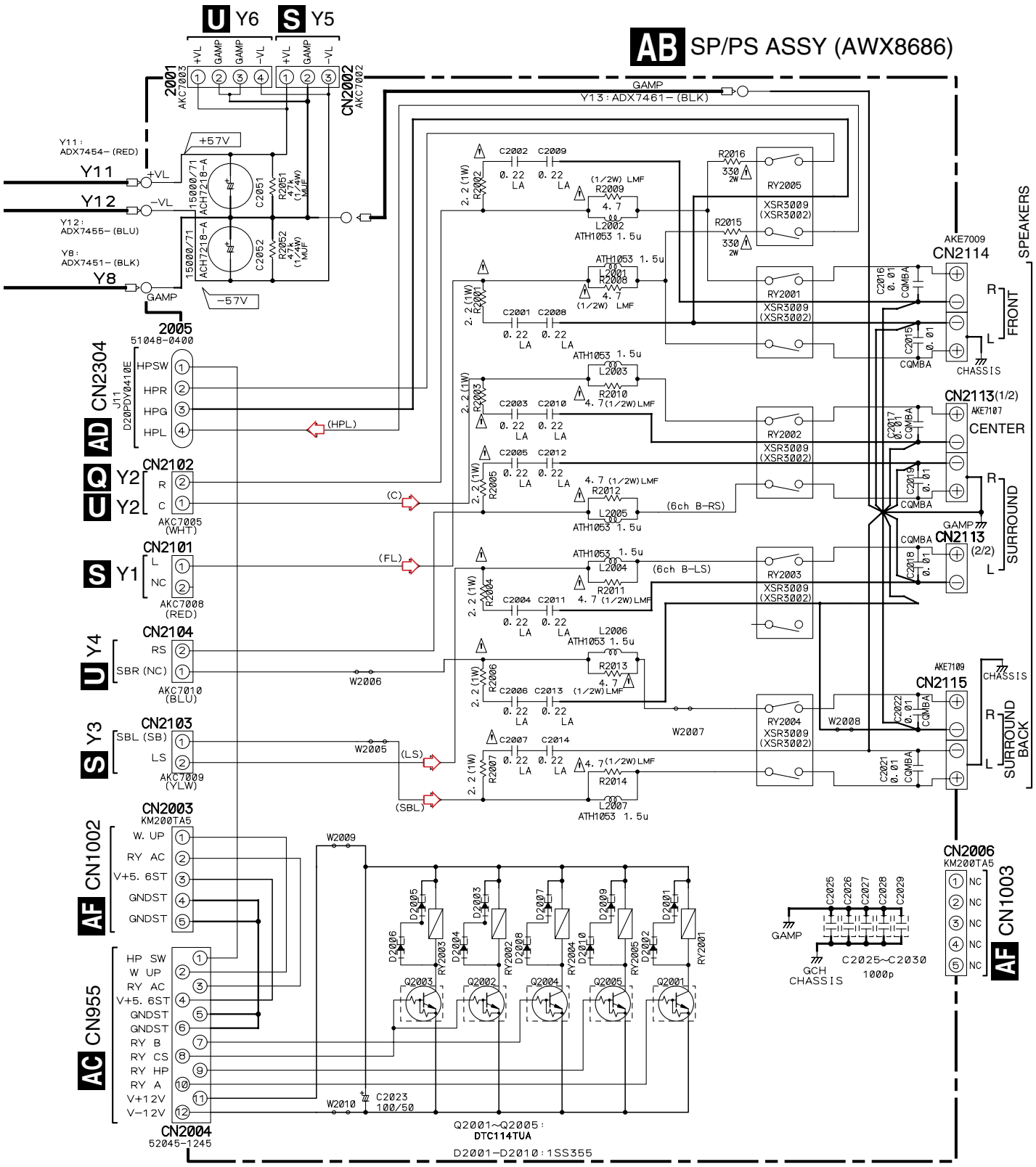

(FL) : AUDIO SIGNAL ROUTE (FRONT Lch)
(LS) : AUDIO SIGNAL ROUTE (SURROUND Lch)
(SBL) : AUDIO SIGNAL ROUTE (SURROUND BACK Lch)
(C) : AUDIO SIGNAL ROUTE (CENTER ch)
(HPL) : AUDIO SIGNAL ROUTE (PHONES Lch)

AB

3.19 REAR TOP, TRANS SIDE, TRANS 1 and PRIMARY ASSYS

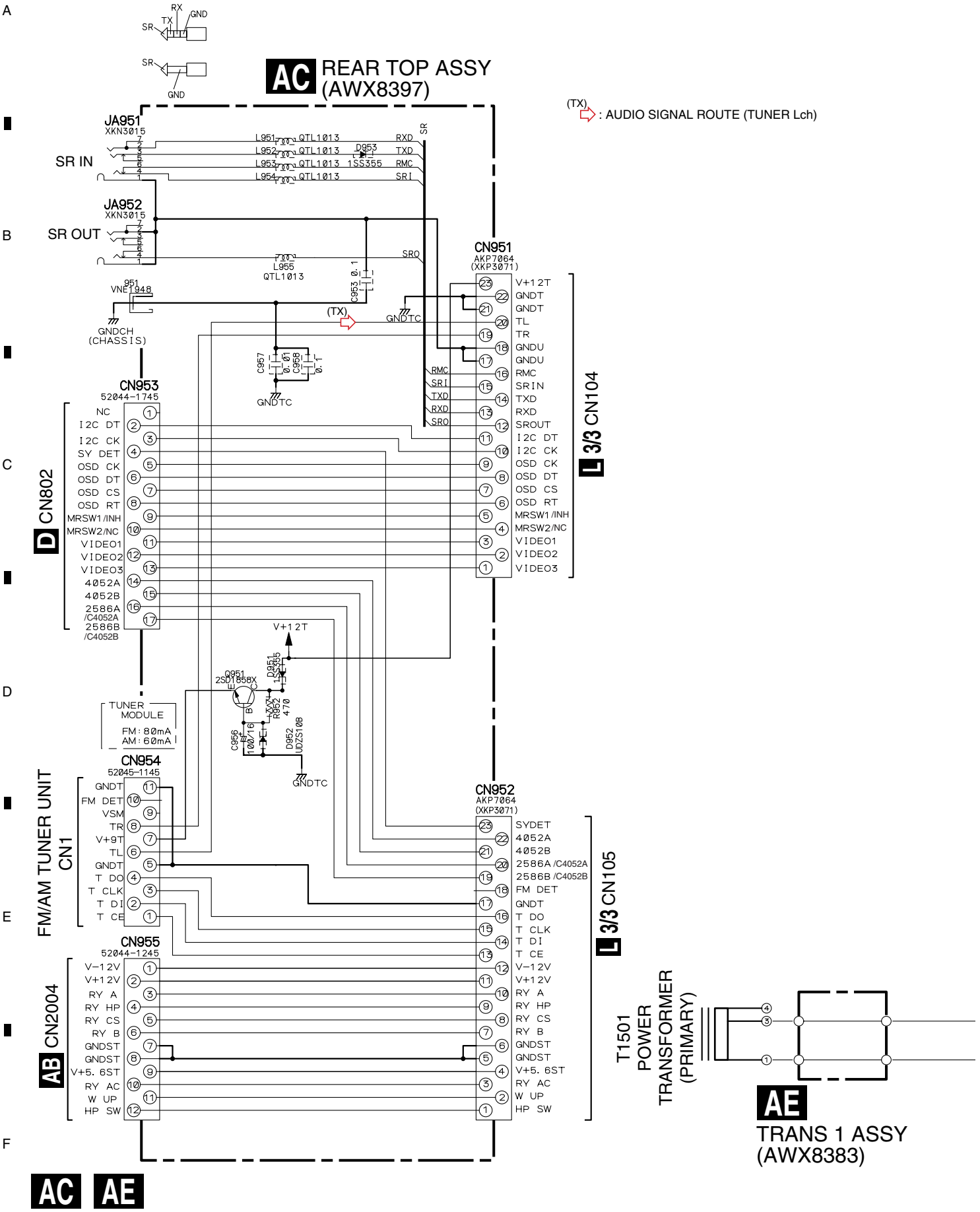

AD TRANS SIDE ASSY (AWX8417)

(HPL) ⇨ : AUDIO SIGNAL ROUTE (PHONES Lch)

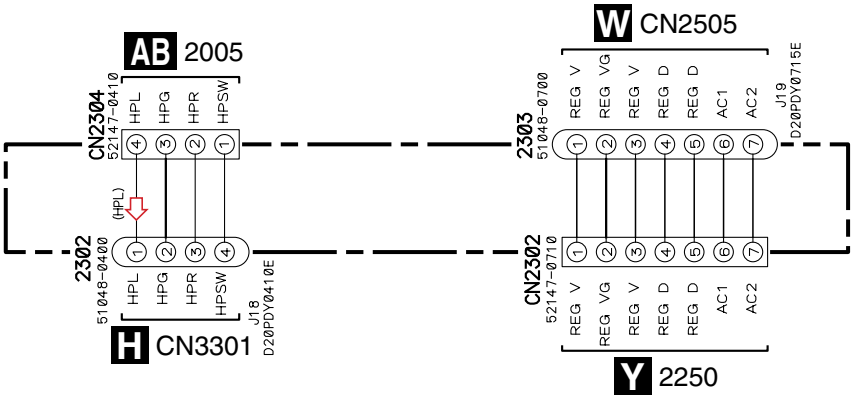

• NOTE FOR FUSE REPLACEMENT

CAUTION - FOR CONTINUED PROTECTION AGAINST RISK OF FIRE. REPLACE WITH SAME TYPE AND RATINGS OF FUSE.

AF PRIMARY ASSY (AWX8384)

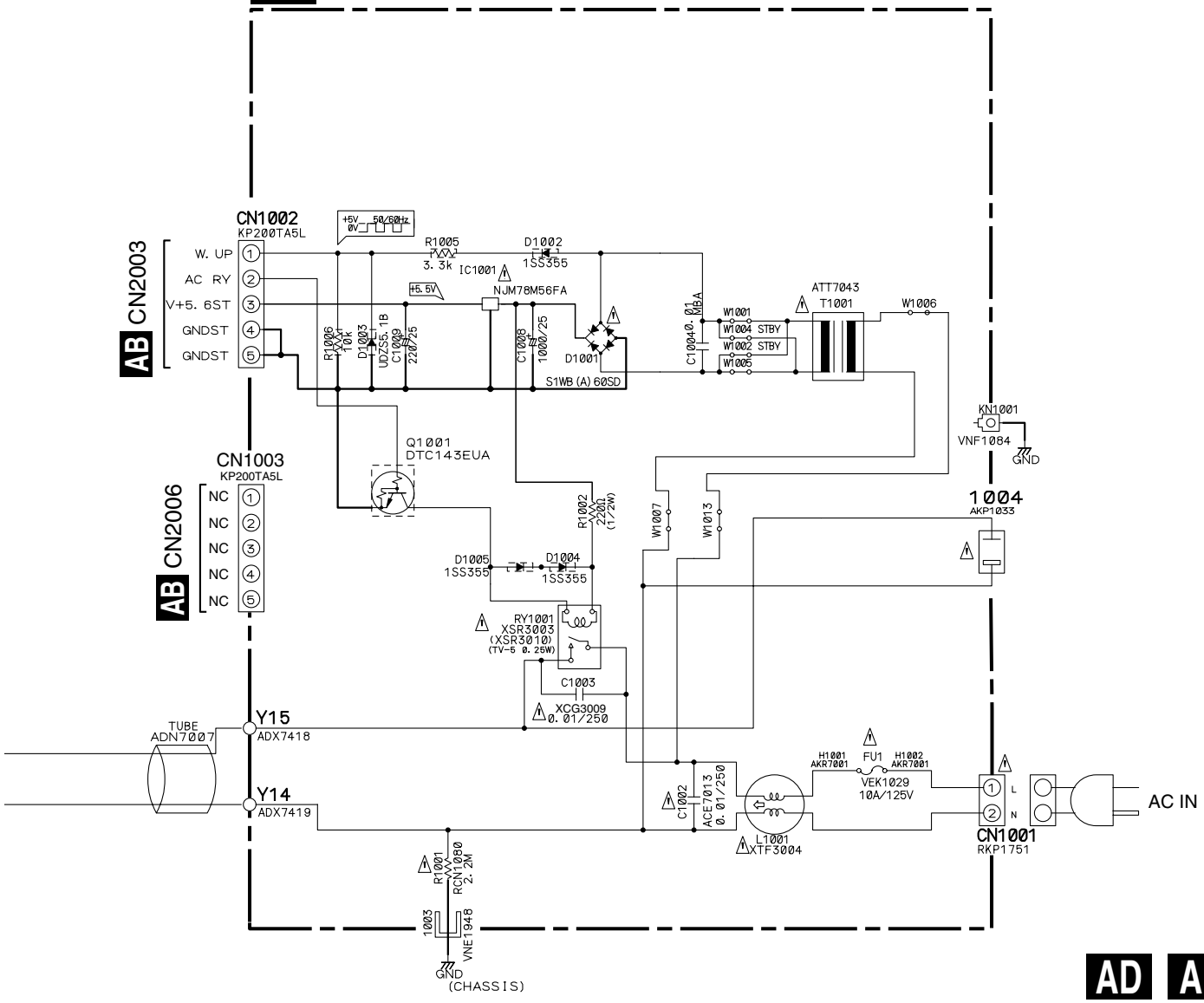

AD AF

4. PCB CONNECTION DIAGRAM

NOTE FOR PCB DIAGRAMS :

1. Part numbers in PCB diagrams match those in the schematic diagrams.
2. A comparison between the main parts of PCB and schematic diagrams is shown below.

Symbol In PCB Diagrams	Symbol In Schematic Diagrams	Part Name
B C E	B C E B C E	Transistor
B C E	B C E B C E	Transistor with resistor
D G S	D G S D G S	Field effect transistor
		Resistor array
		3-terminal regulator

3. The parts mounted on this PCB include all necessary parts for several destinations.
   For further information for respective destinations, be sure to check with the schematic diagram.
4. View point of PCB diagrams.

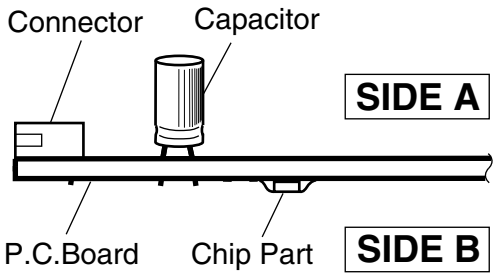

4.1 MULTI CH I/O ASSY

SIDE A **SIDE A**

A B C

A MULTI CH I/O ASSY

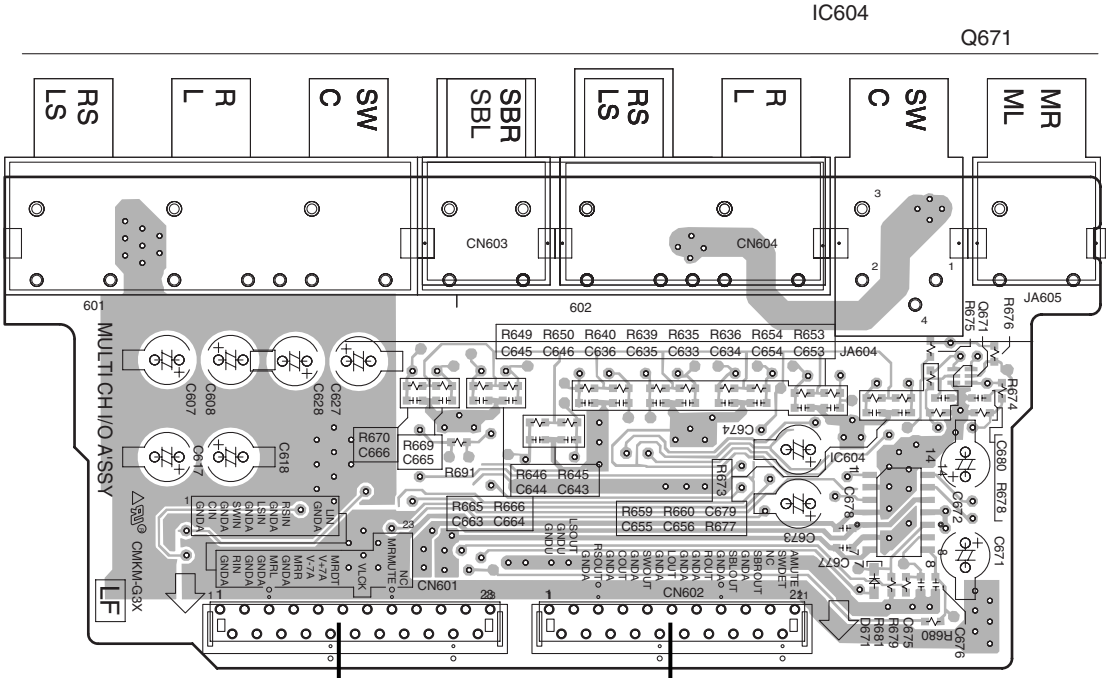

(ANP7533-B)

B CN903 **B** CN904

SIDE B **SIDE B**

D E

A MULTI CH I/O ASSY

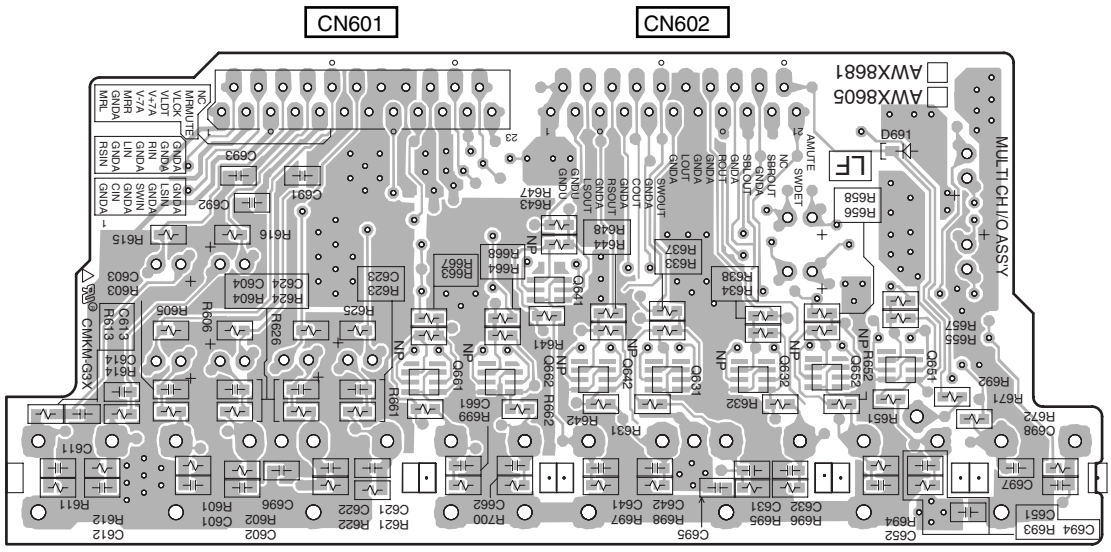

(ANP7533-B)

F

Q641
Q661 Q662 Q642 Q631 Q632 Q652 Q651

A **A**

4.2 AUDIO CONNECT ASSY

SIDE A

SIDE A

B AUDIO CONNECT ASSY

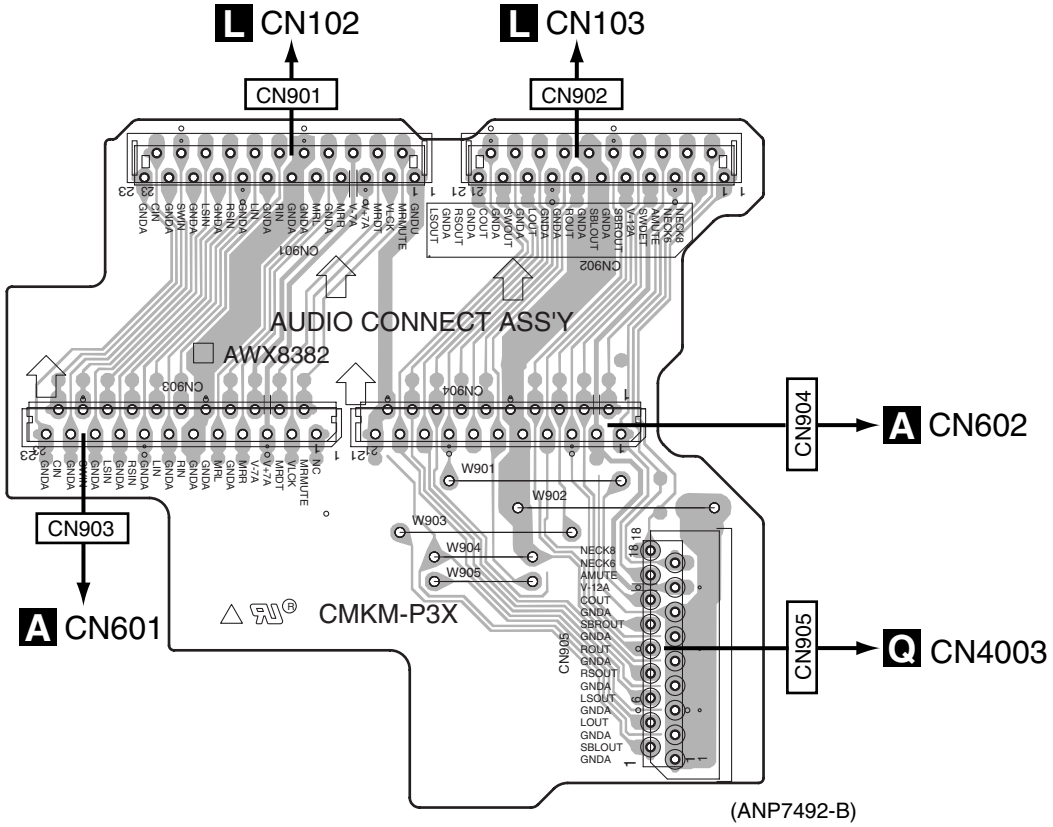

B AUDIO CONNECT ASSY

SIDE B

SIDE B

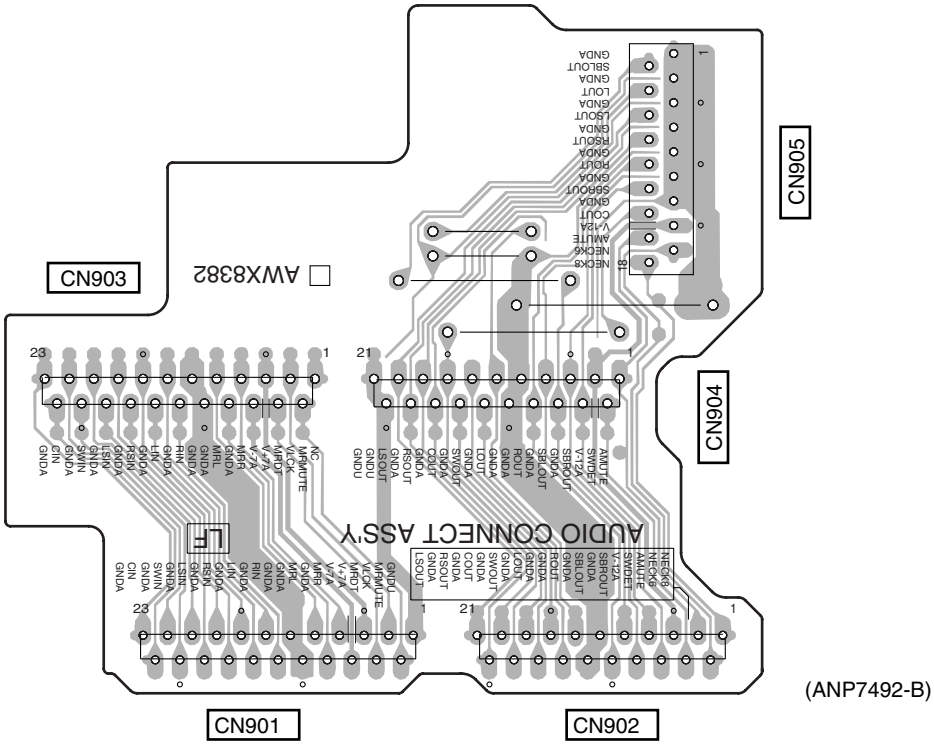

4.3 COMPOSITE V ASSY

SIDE A

SIDE A

C COMPOSITE V ASSY

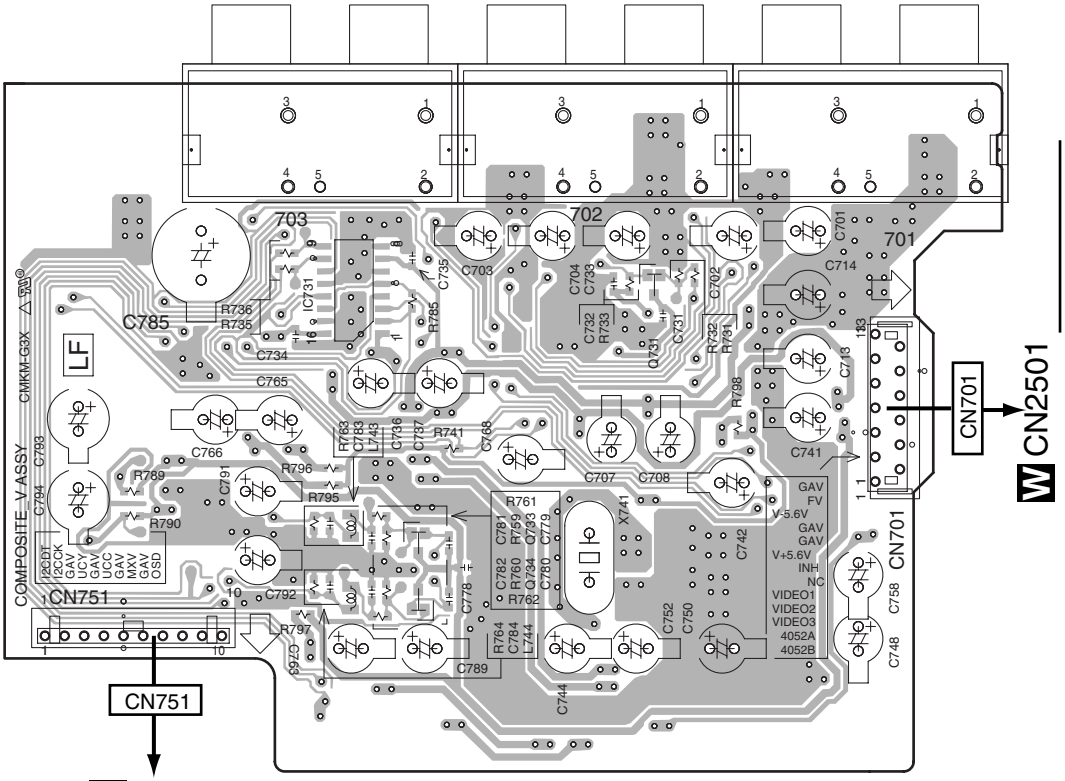

(ANP7533-B)

SIDE B

C COMPOSITE V ASSY

SIDE B

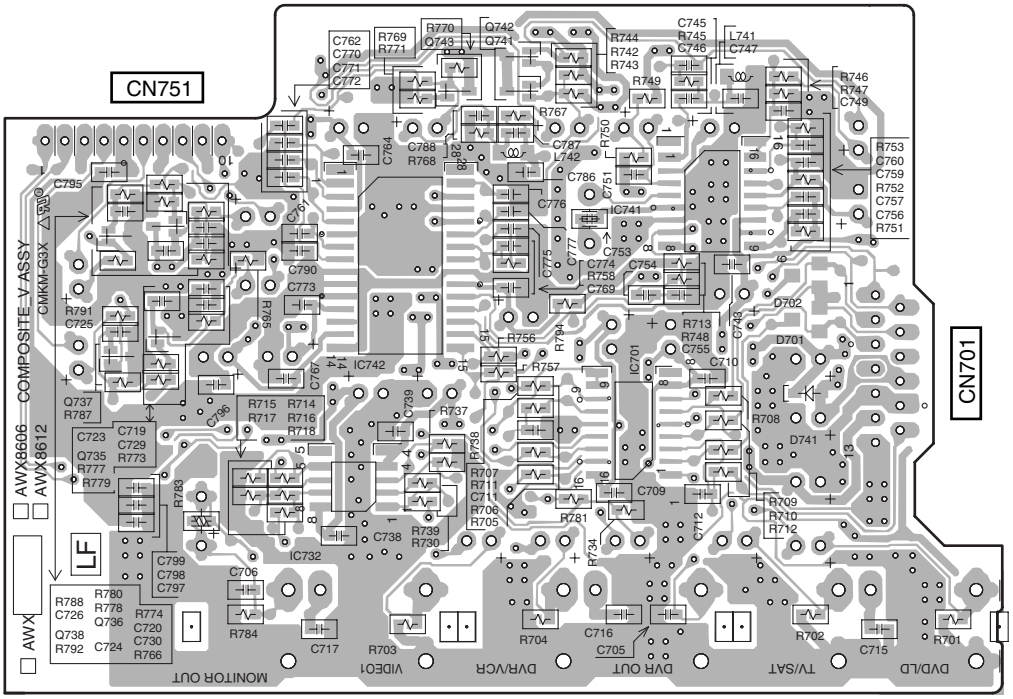

(ANP7533-B)

IC732	IC742	IC701	IC741
Q737	Q736	Q743	Q742
Q738	Q735		Q741

C **C**

4.4 S VIDEO ASSY

SIDE A

SIDE A

D S VIDEO ASSY

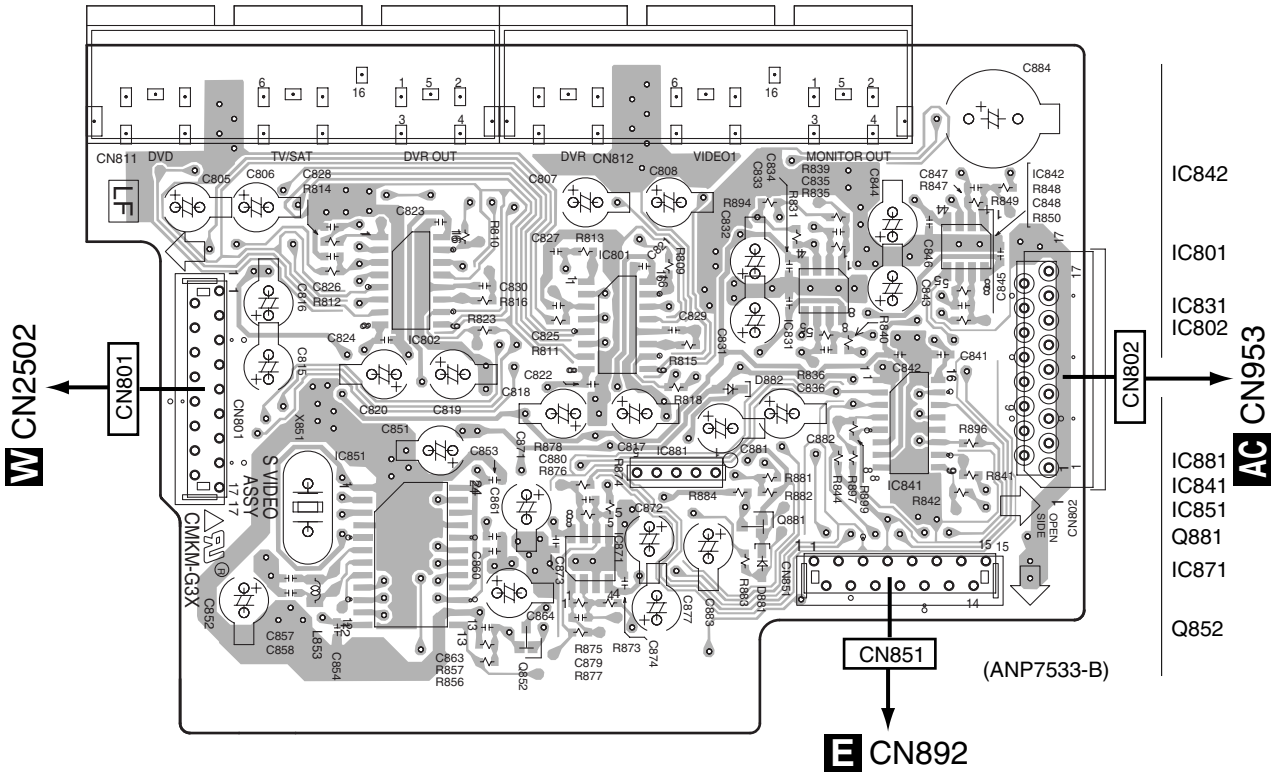

D S VIDEO ASSY

SIDE B

SIDE B

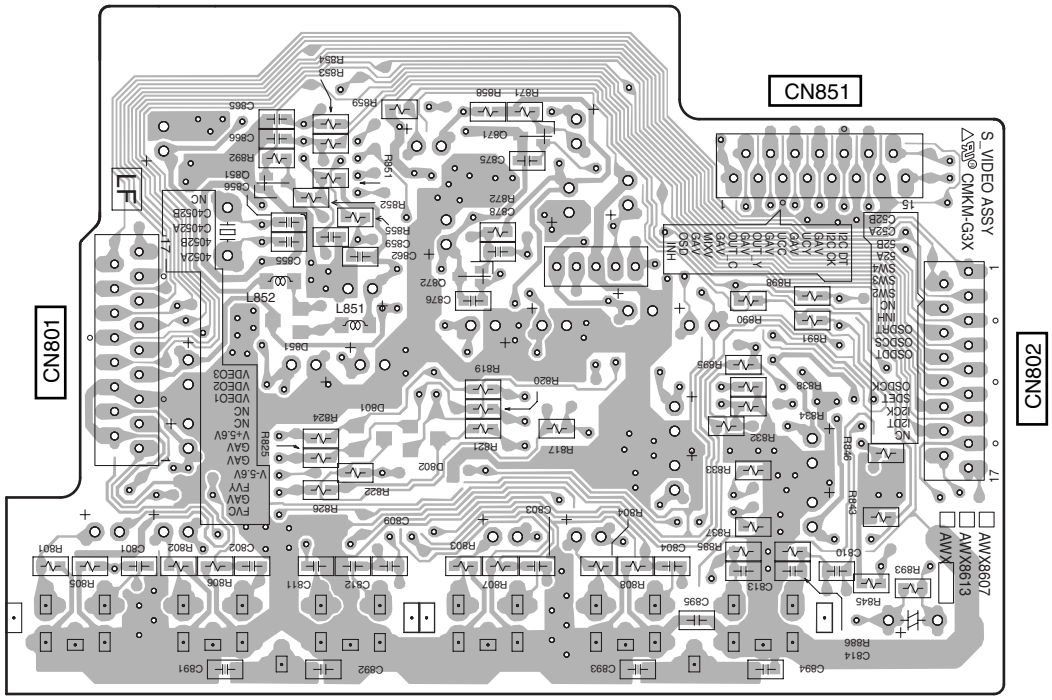

(ANP7533-B)

Q851 Q872 Q871

D D

4.5 VIDEO SIDE and OPTICAL-IN ASSYS

SIDE A

E VIDEO SIDE ASSY

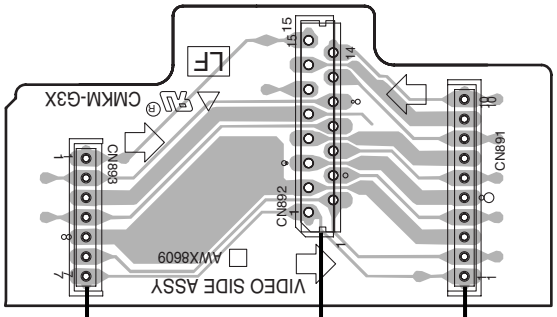

(ANP7533-B)

F CN5051 **D** CN851 **C** CN751

SIDE A

G OPTICAL-IN ASSY

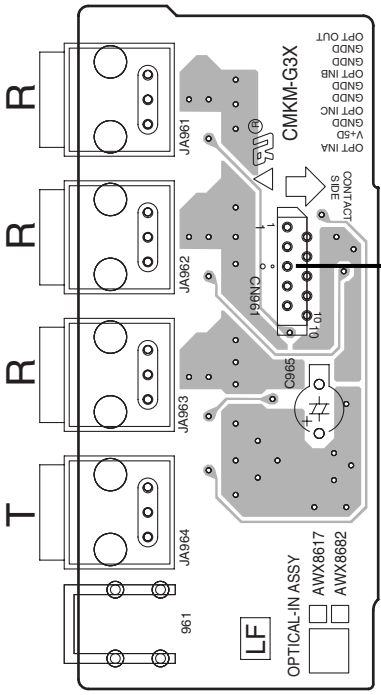

(ANP7533-B)

SIDE B

E VIDEO SIDE ASSY

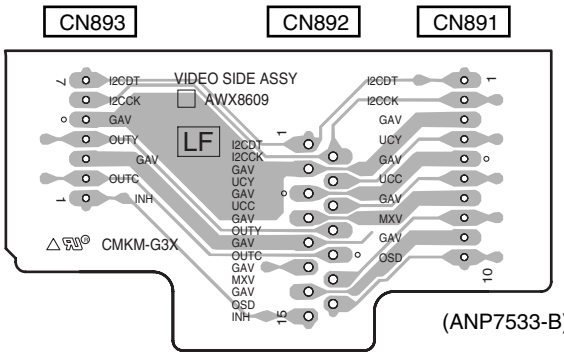

(ANP7533-B)

G OPTICAL-IN ASSY

SIDE B

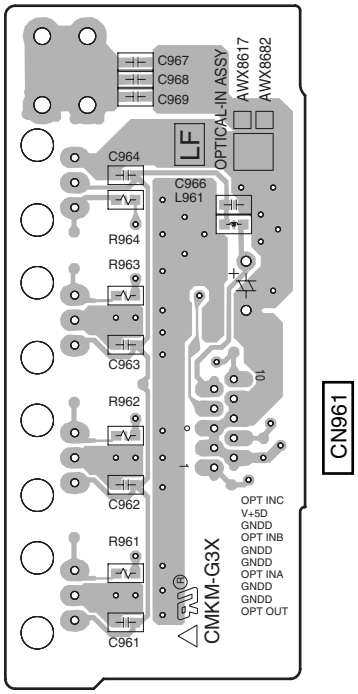

(ANP7533-B)

E **G** **E** **G**

4.6 COMPONENT ASSY

SIDE A

SIDE A

F COMPONENT ASSY

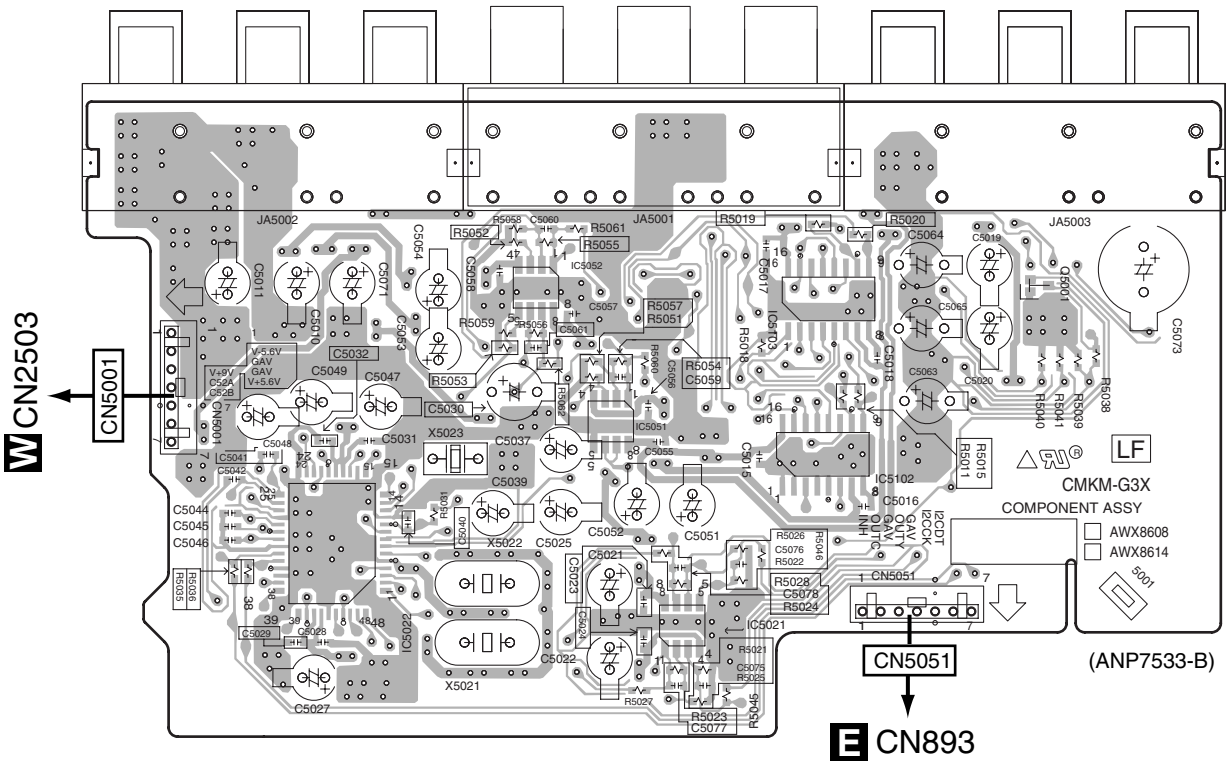

IC5022 IC5052 IC5021 IC5103 Q5001
IC5051 IC5102

SIDE B

SIDE B

F COMPONENT ASSY

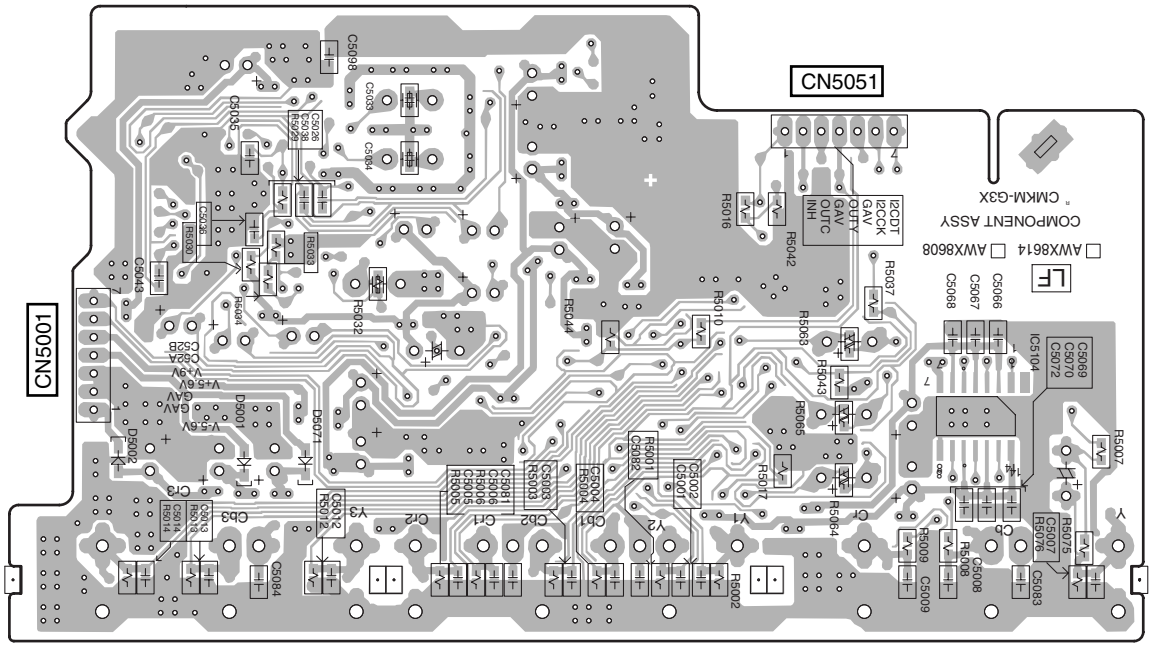

(ANP7533-B)

IC5104

4.7 FRONT IN and FRONT-IN CONNECT ASSYS

SIDE A

SIDE A

I FRONT IN ASSY

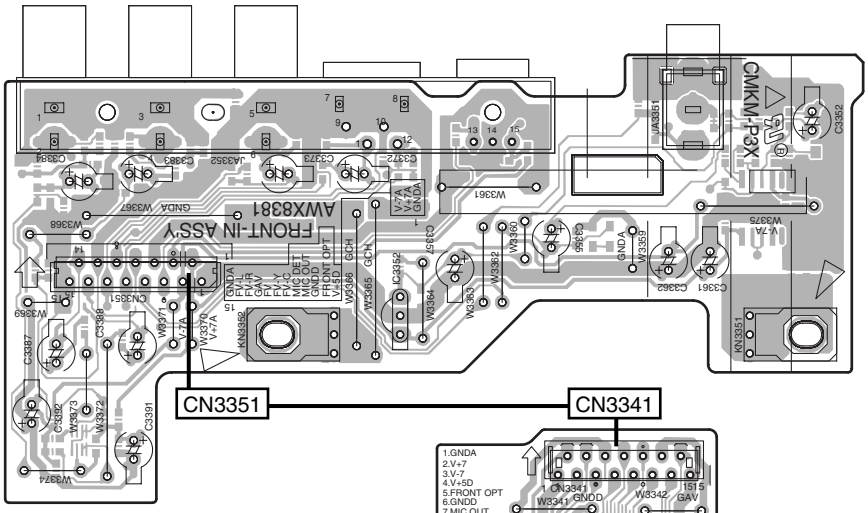

(ANP7492-B)

J FRONT-IN CONNECT ASSY

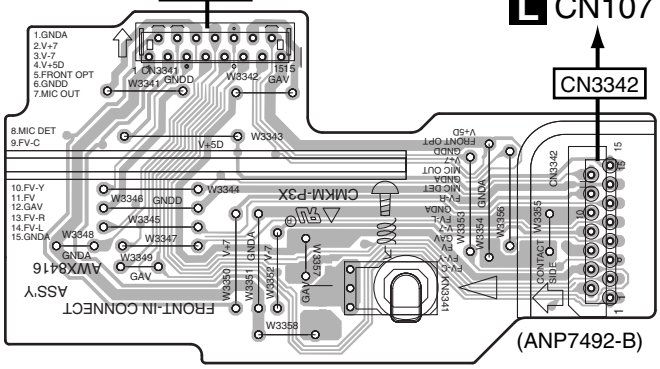

(ANP7492-B)

SIDE B

I FRONT IN ASSY

SIDE B

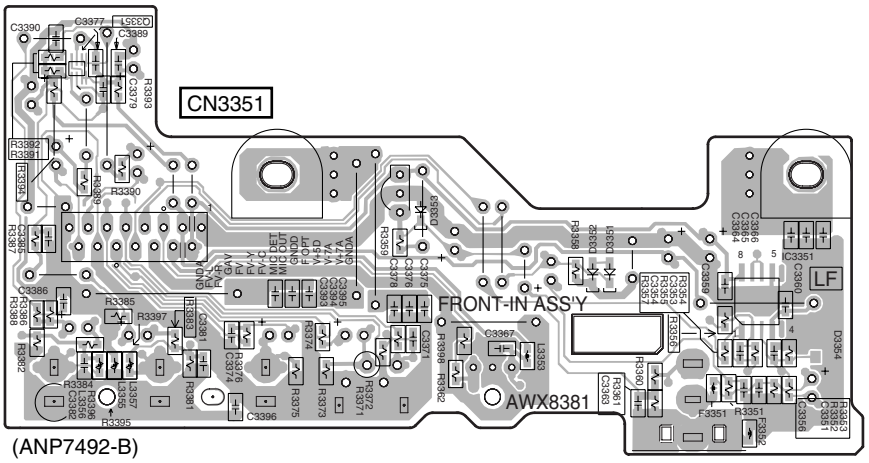

(ANP7492-B)

J FRONT-IN CONNECT ASSY

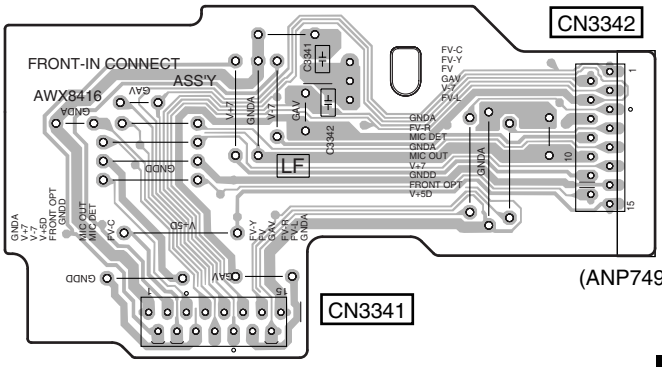

(ANP7492-B)

I J

I J

4.8 MAIN CONTROL ASSY

SIDE A

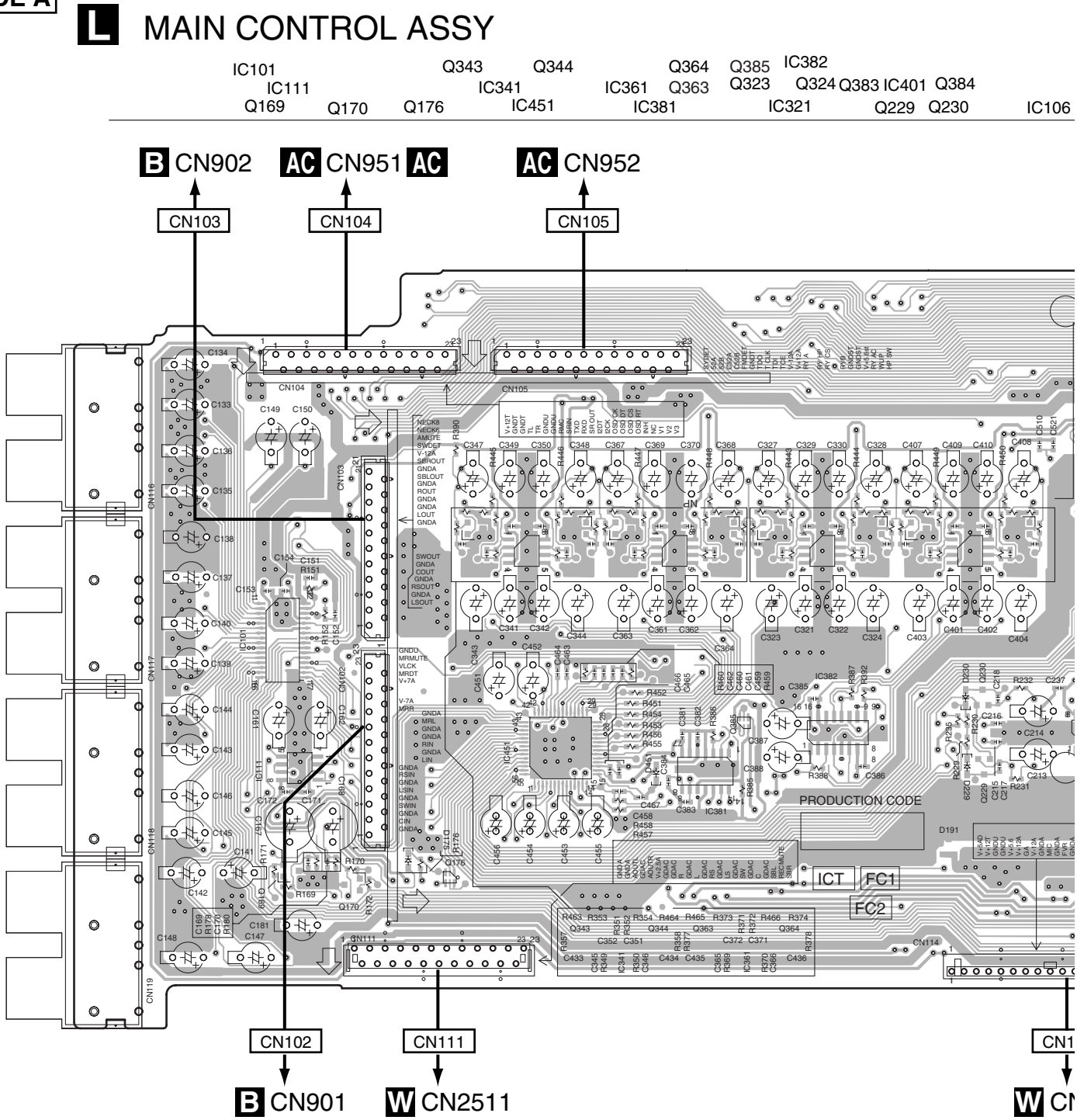

SIDE A

A

384 IC103 IC105 Q521 Q398
30 IC106 IC102 IC104 Q522 Q523 Q511 Q514 Q515
IC502 Q483 IC501 Q501 Q502 Q505 Q506

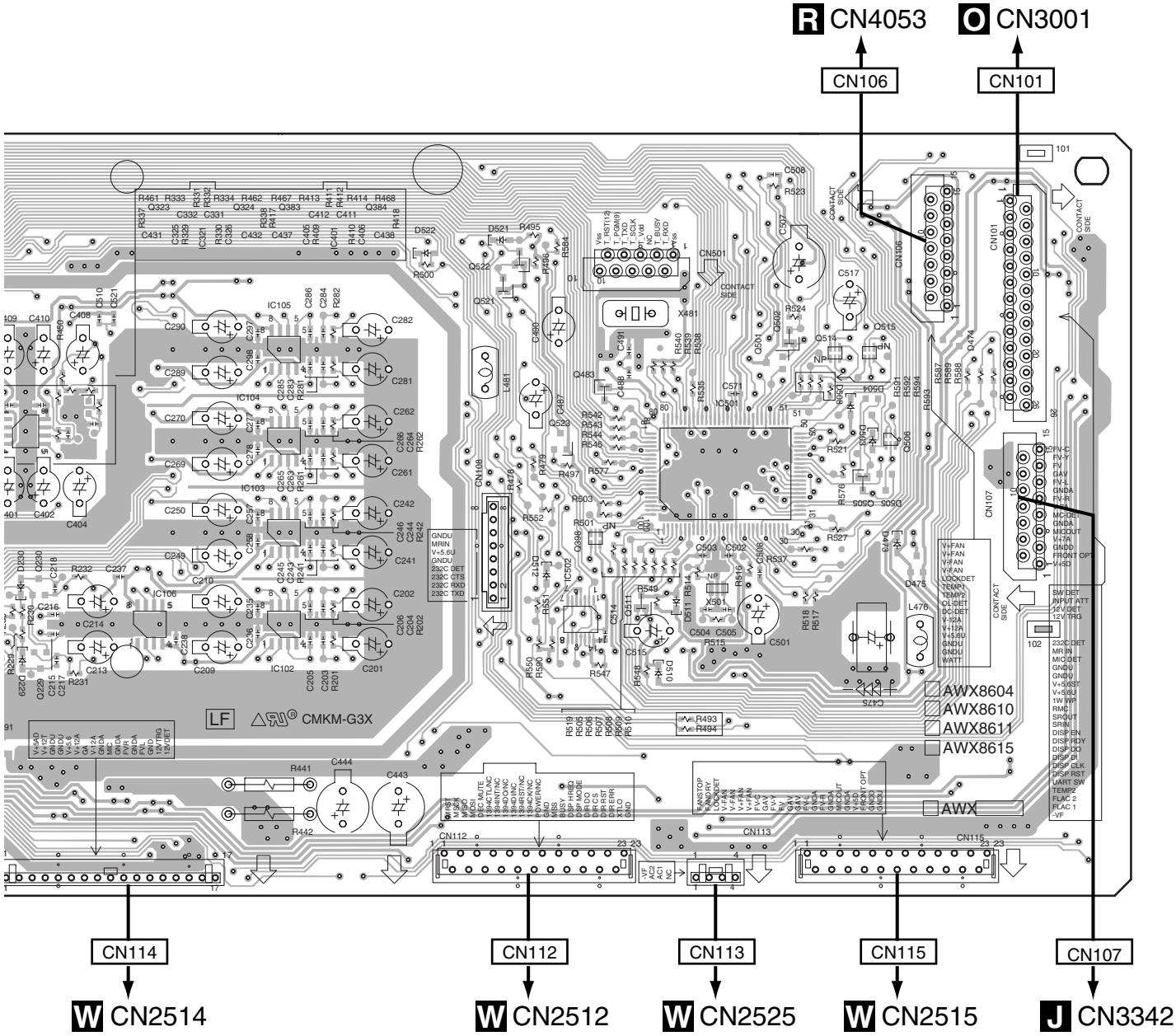

B

C

D

E

(ANP7533-B)

F

L

SIDE B

Q507 Q503 Q504 IC481 Q512 IC504 Q482 Q524 Q172 Q517 Q516 Q382

L MAIN CONTROL ASSY

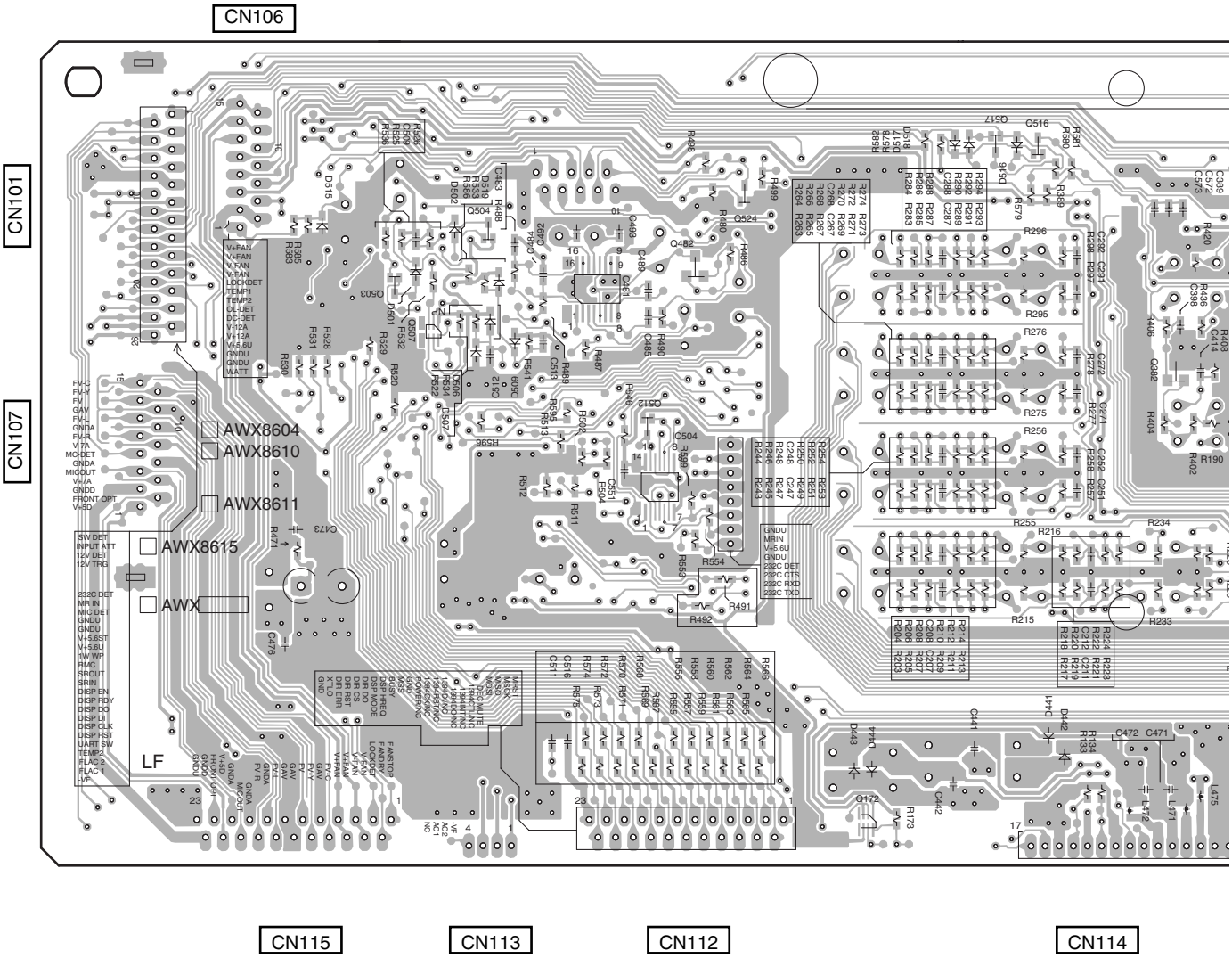

SIDE B

A

Q381 Q322
Q382 Q235 Q386 Q321 Q362 Q361 Q342 Q341 Q175

CN105

CN104

B

CN103

C

CN102

D

CMKM-G3X

N114

CN111

(ANP7533-B)

E

F

L

4.9 DISPLAY ASSY

SIDE A **SIDE A**

M DSP ASSY

- This diagram has four layers.
  In the two middle layers,
  mainy Vcc and GND are connected.

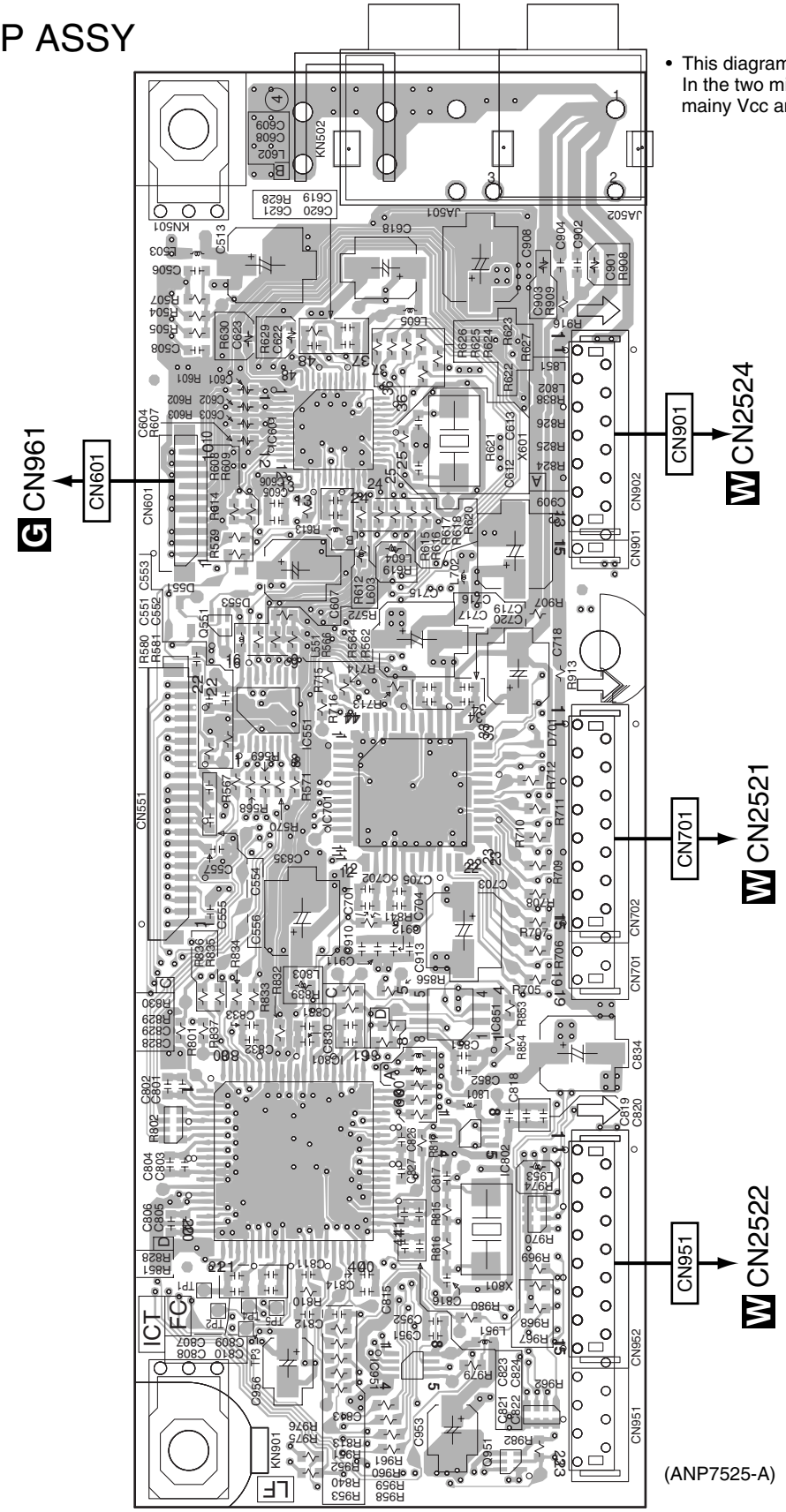

(ANP7525-A)

Q551 IC601 IC701 IC551 IC801 IC951 Q951 IC802 IC851

M M

SIDE B

SIDE B

M DSP ASSY

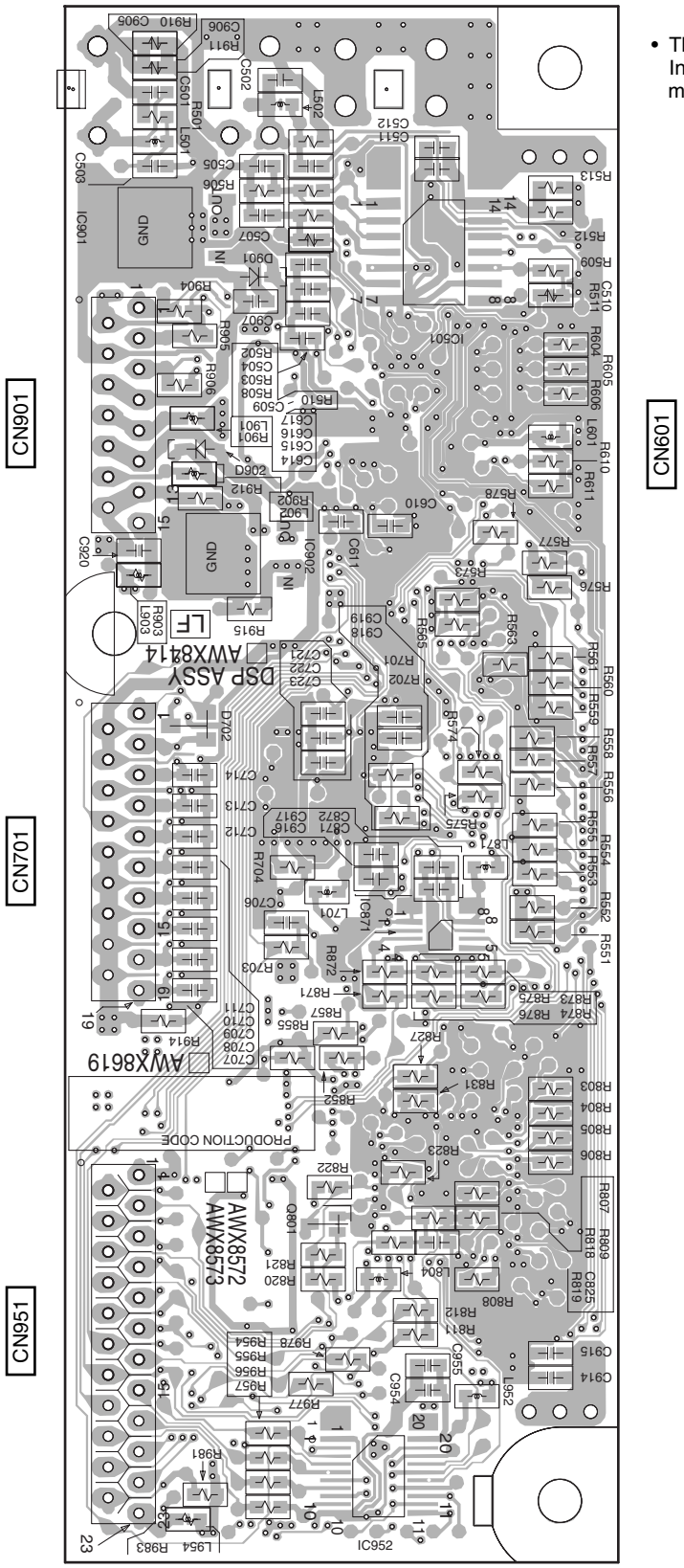

- This diagram has four layers.
  In the two middle layers,
  mainy Vcc and GND are connected.

(ANP7525-A)

IC901 Q801 IC902 IC952 IC871 IC501

M M

4.10 DISPLAY ASSY

SIDE A

O DISPLAY ASSY

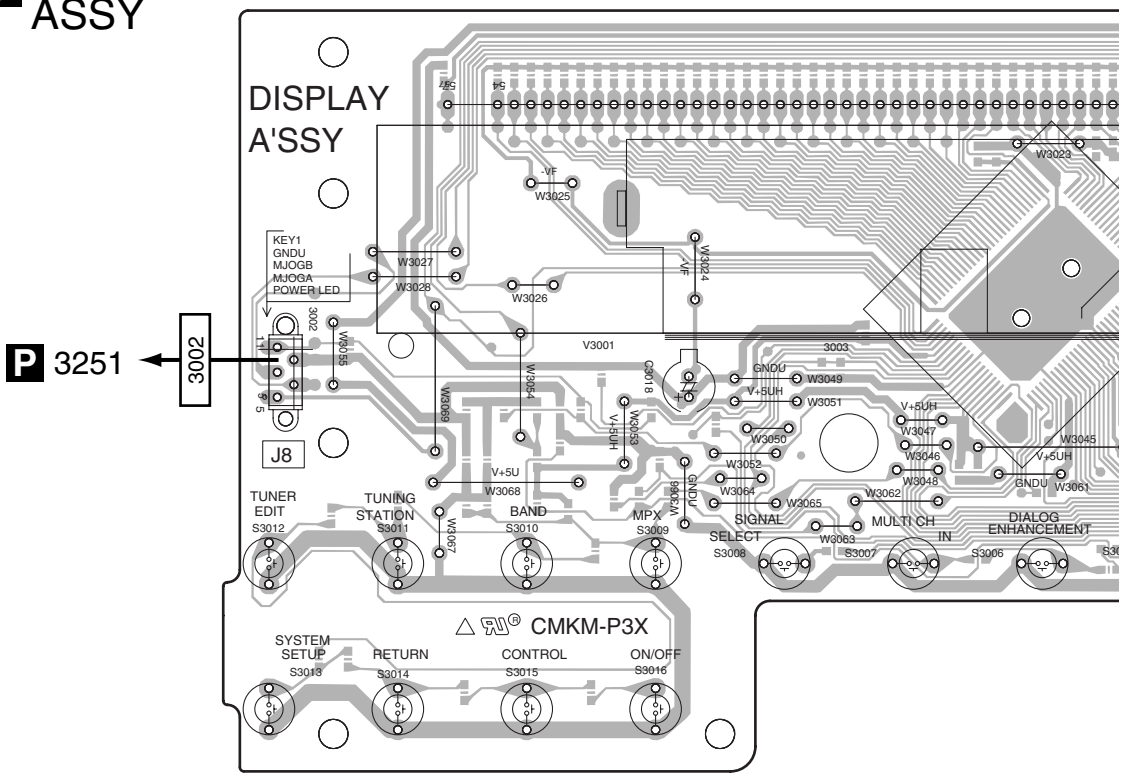

SIDE B

IC3001

O DISPLAY ASSY

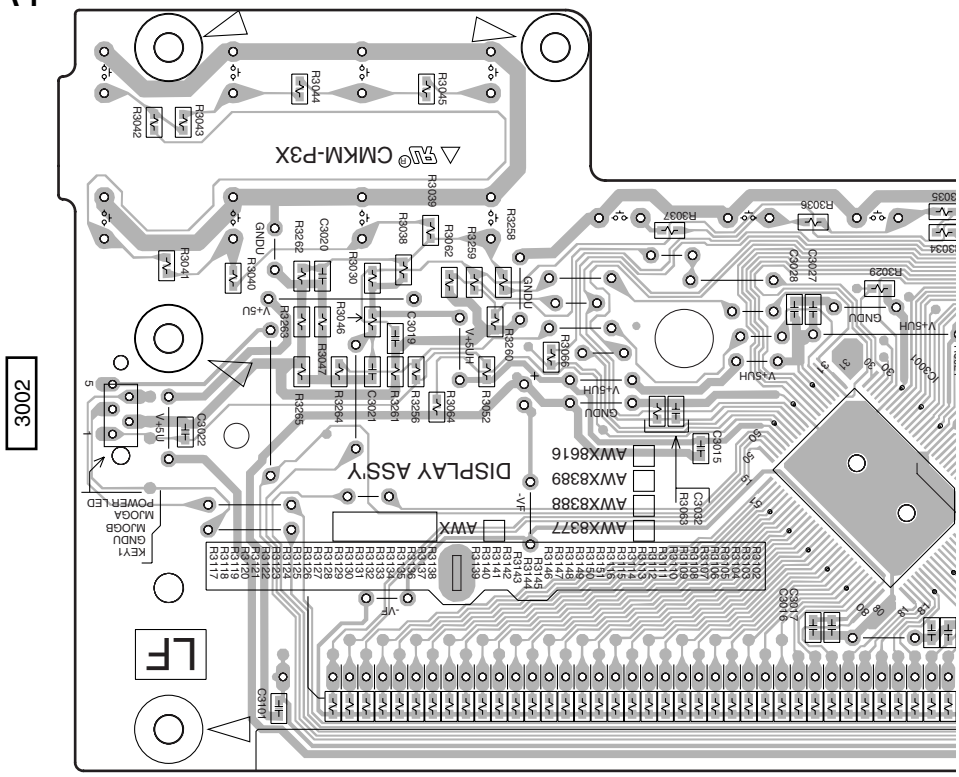

O

SIDE A

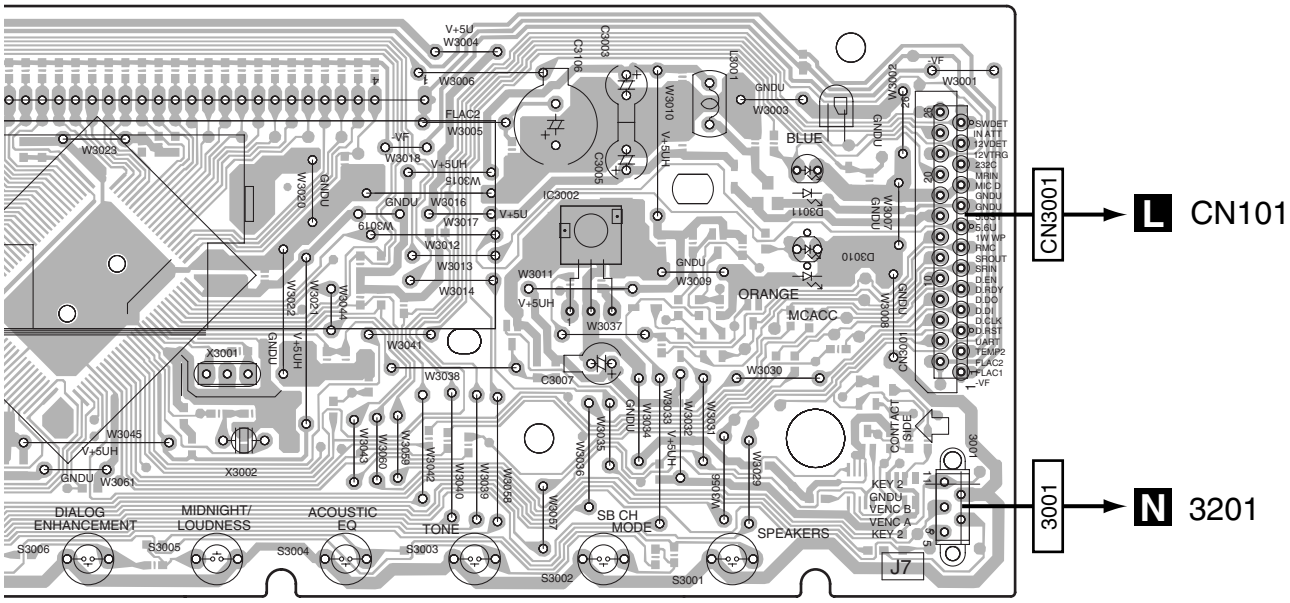

(ANP7492-B)

IC3002

C3001 Q3005 Q3001 Q3002 IC3003 Q3003 Q3004

SIDE B

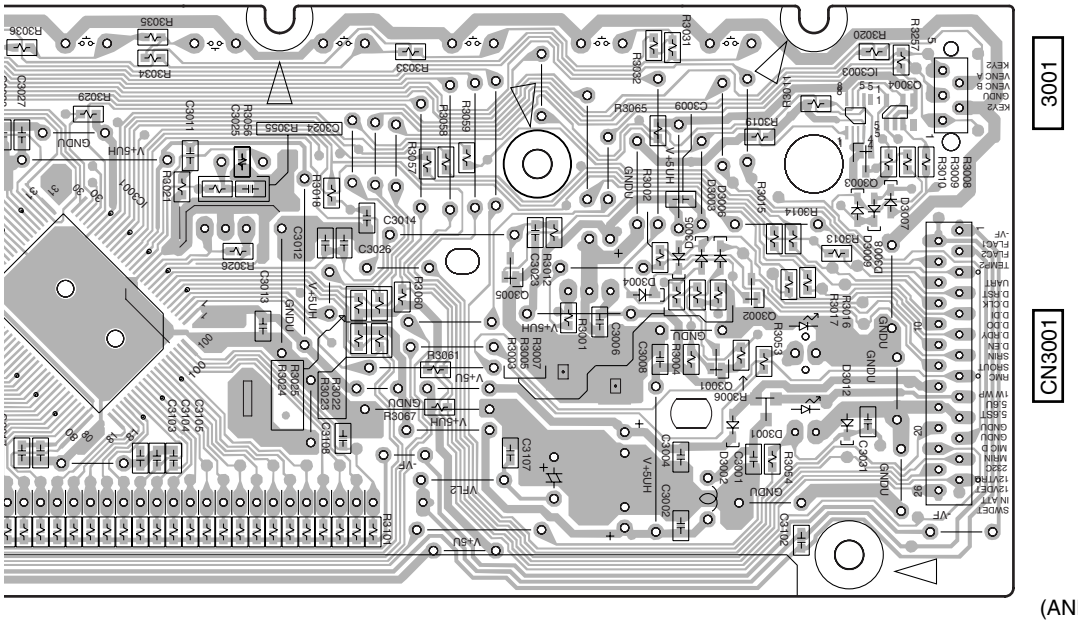

(ANP7492-B)

4.11 HEADPHONE, VOLUME and MULTI JOG ASSYS

SIDE A

SIDE A

N VOLUME ASSY

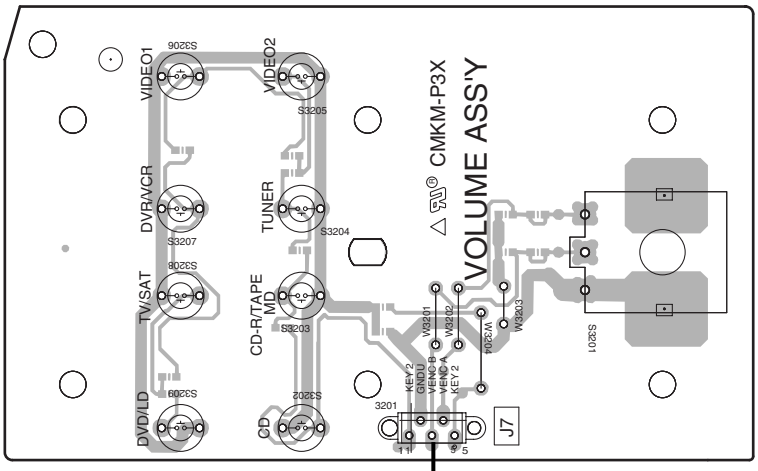

3201

(ANP7492-B)

O 3001

P MULTI JOG ASSY

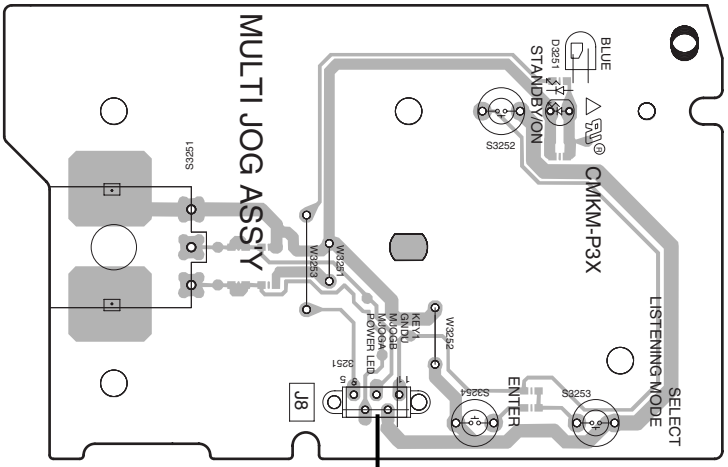

3251

(ANP7492-B)

O 3002

H HEADPHONE ASSY

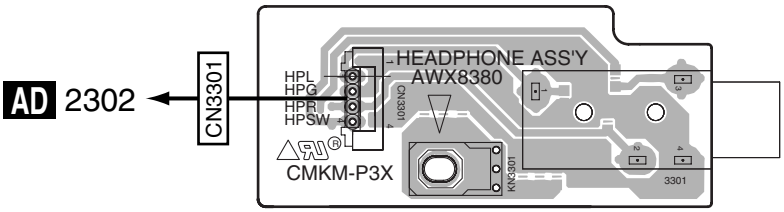

(ANP7492-B)

H N P

H N P

SIDE B

SIDE B

N VOLUME ASSY

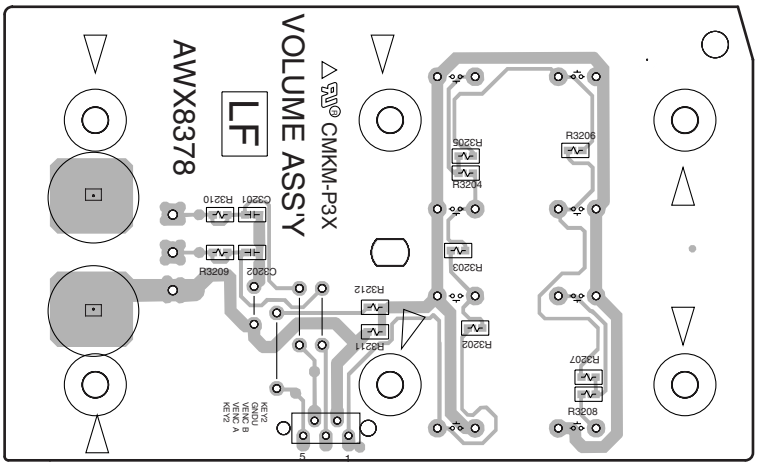

3201

(ANP7492-B)

P MULTI JOG ASSY

3251

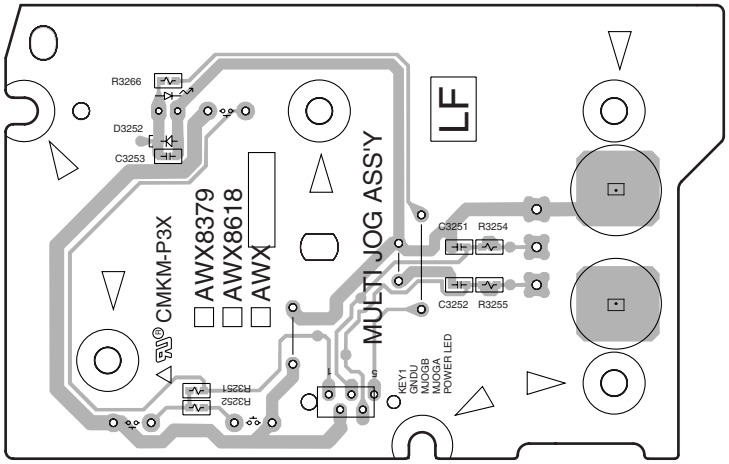

(ANP7492-B)

N HEADPHONE ASSY

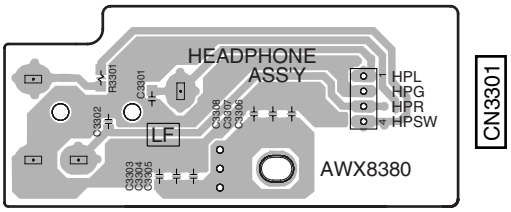

(ANP7492-B)

4.12 POWER AMP-L and POSI 1 L ASSYS

SIDE A

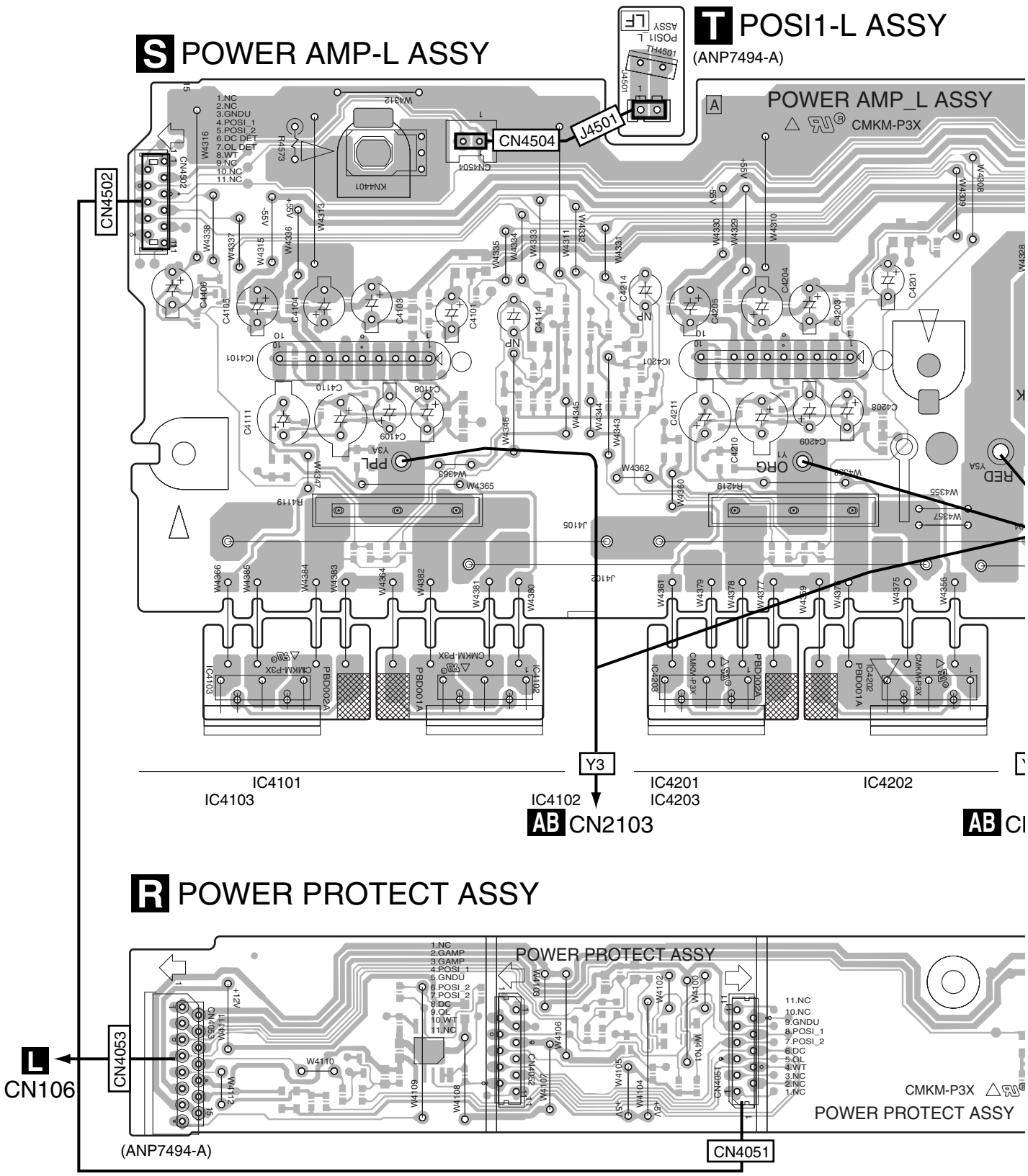

R S T

SIDE A

A

SY

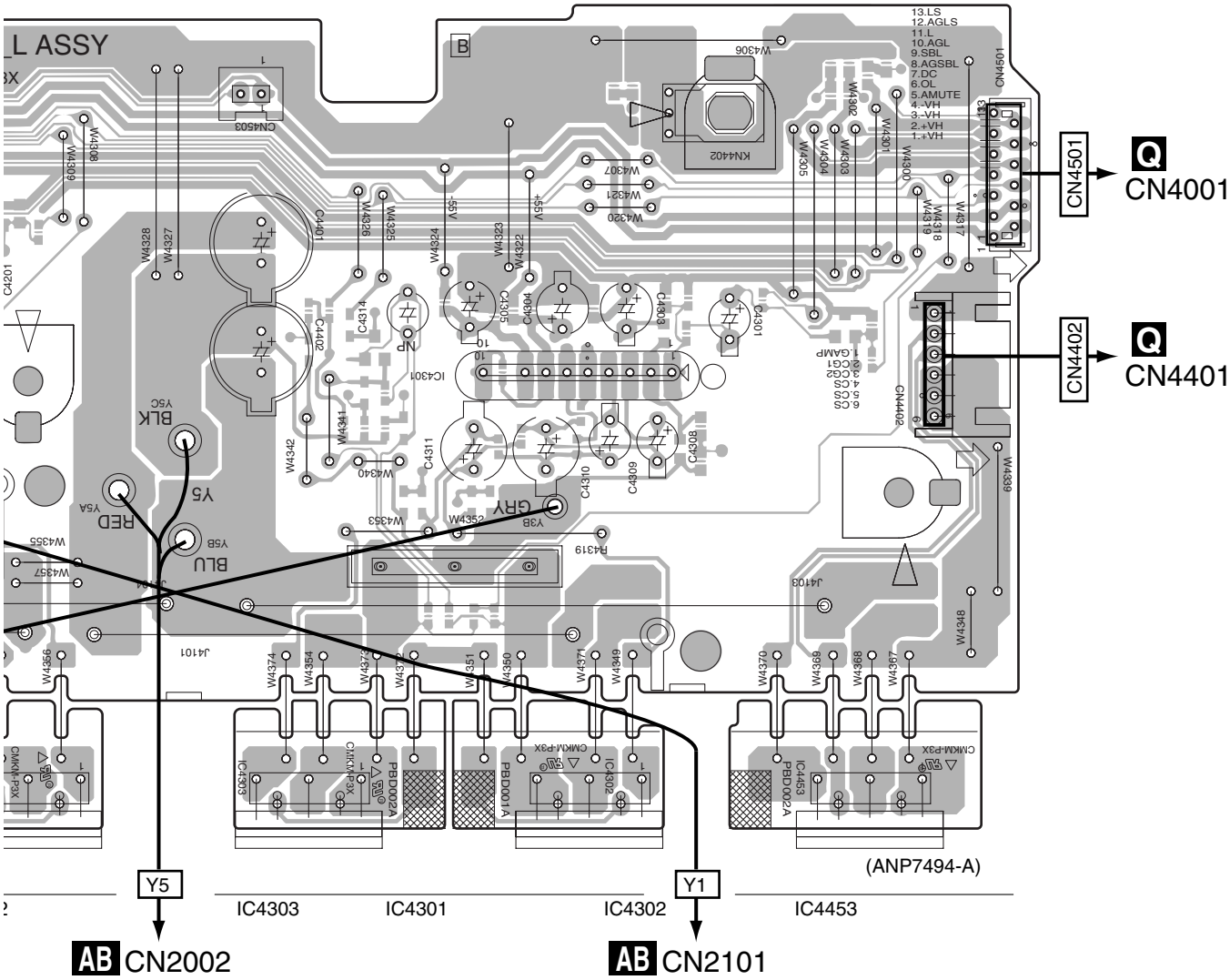

B

C

D

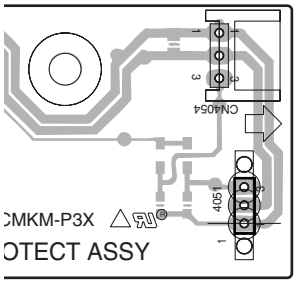

E

F

R S T

SIDE B

S POWER AMP-L ASSY

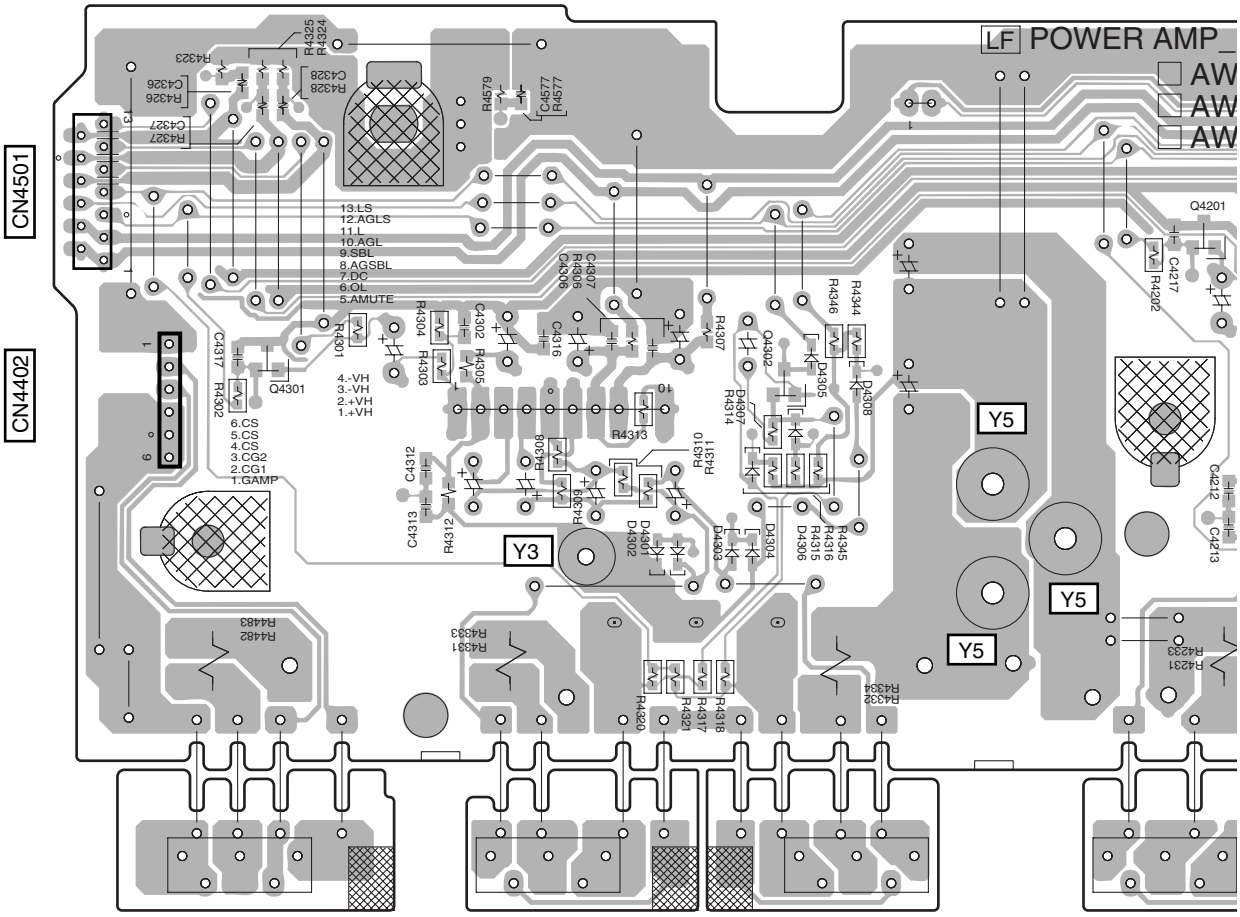

R POWER PROTECT ASSY

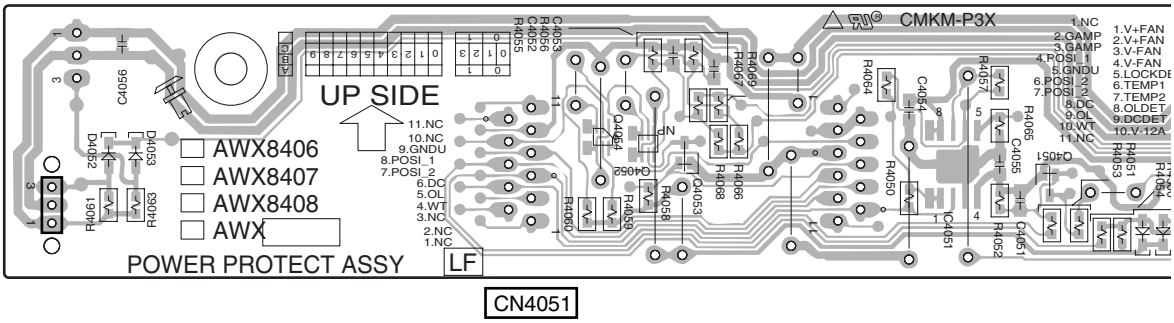

R S T

SIDE B

A

T POSI1-L ASSY
(ANP7494-A)

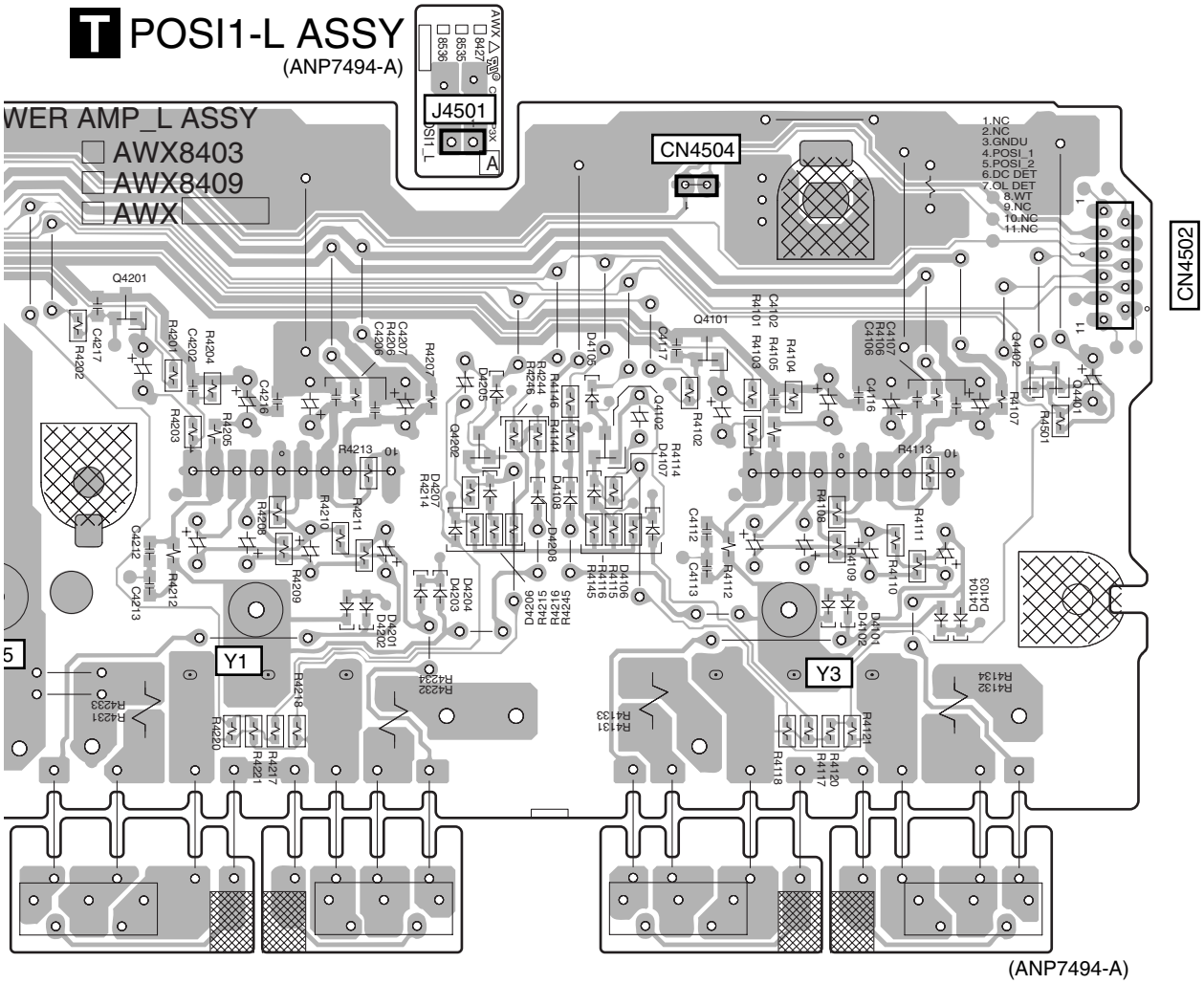

(ANP7494-A)

Q4201 Q4202 Q4102 Q4101 Q4402 Q4401

B

C

D

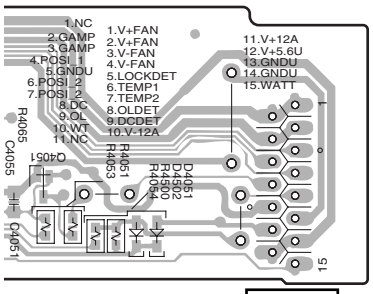

Q4051 Q4054
Q4053 Q4052
IC4051

(ANP7494-A)

E

F

R S T

4.13 POWER AMP-R and POSI 1 R ASSYS

SIDE A

U POWER AMP-R ASSY

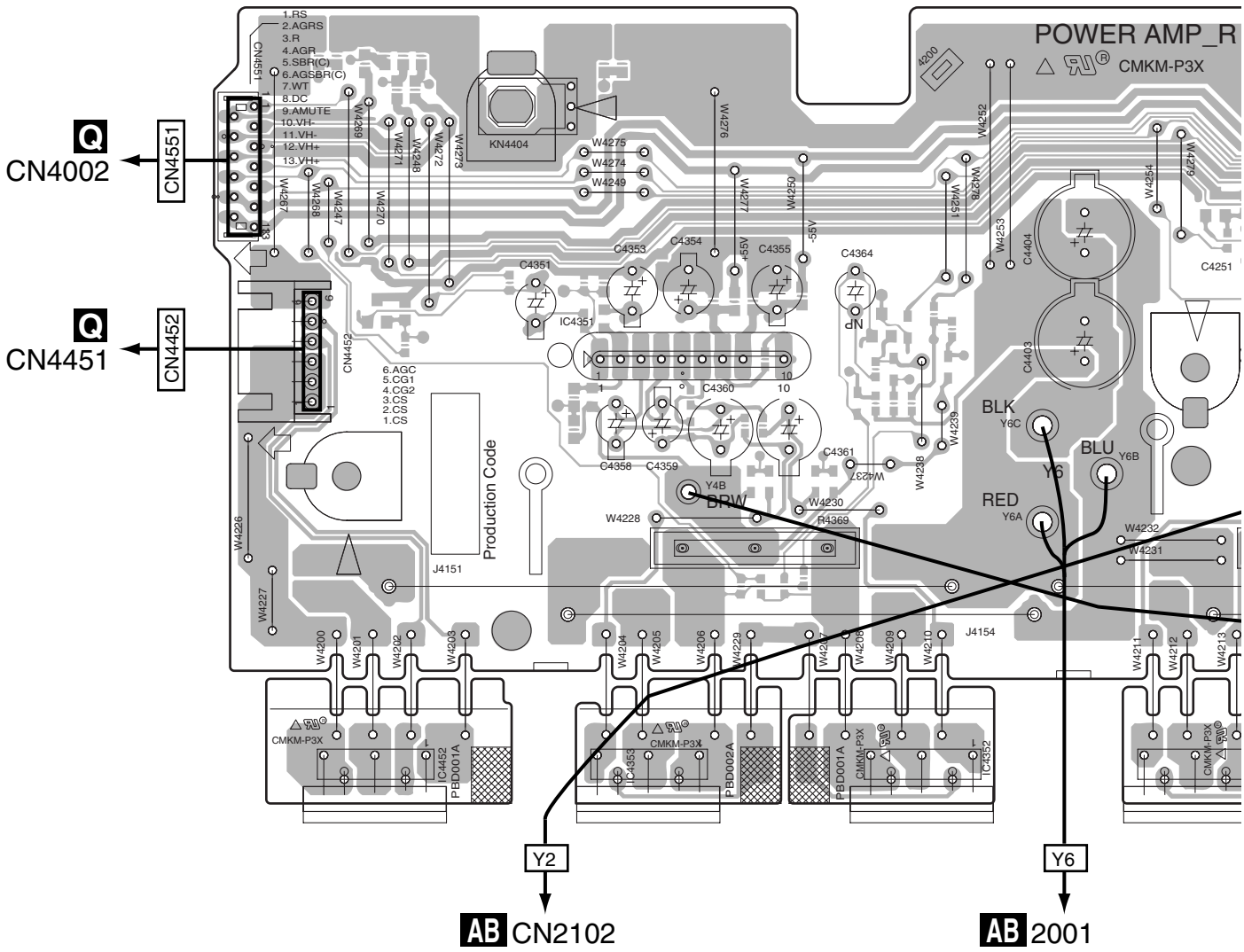

R POWER PROTECT ASSY

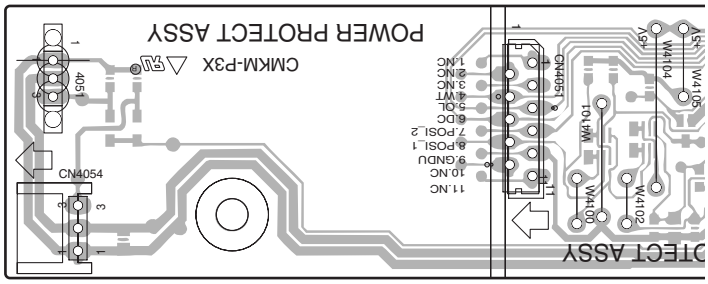

U V R

SIDE A

A

V POSI1-R ASSY
(ANP7494-A)

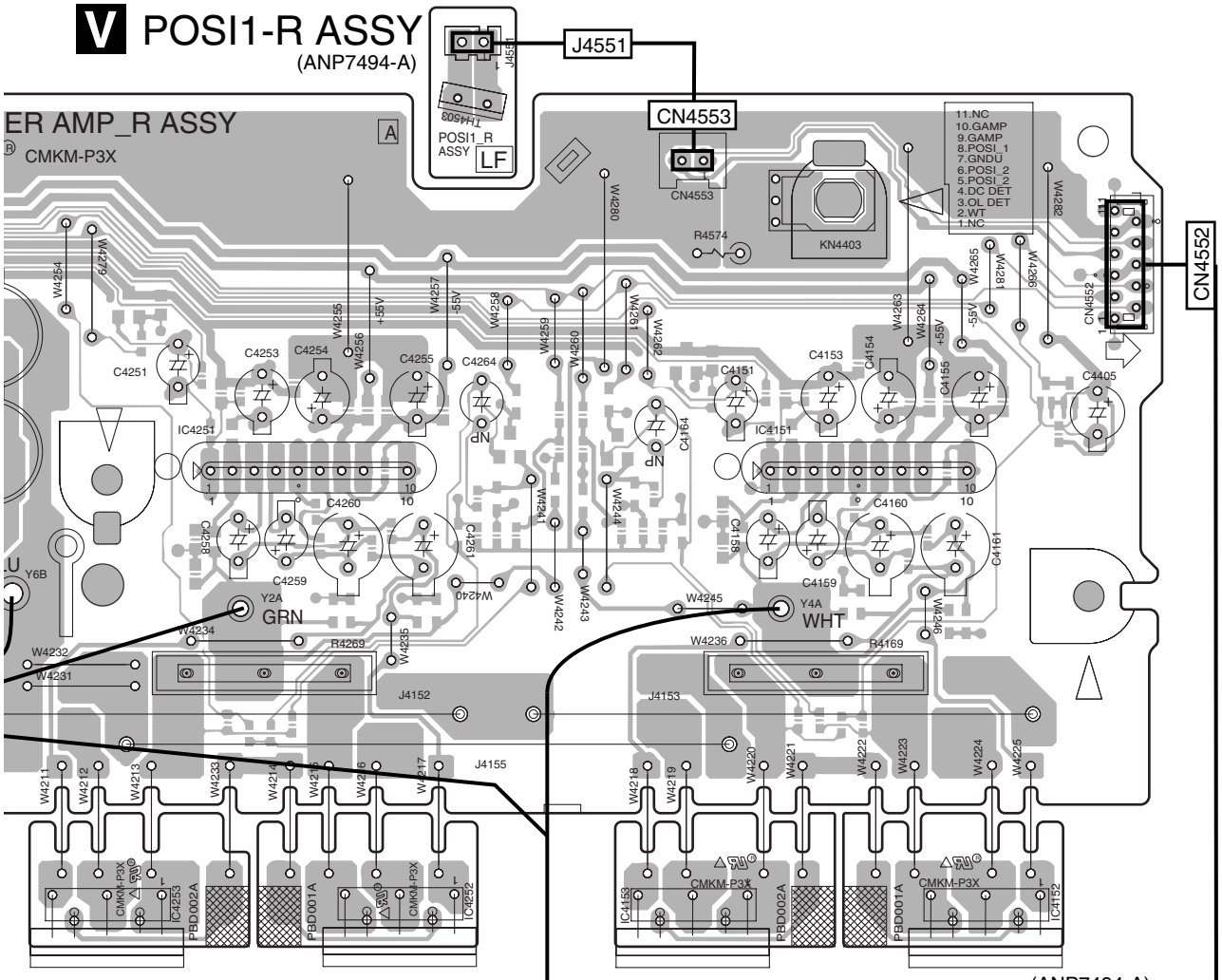

B

C

D

E

F

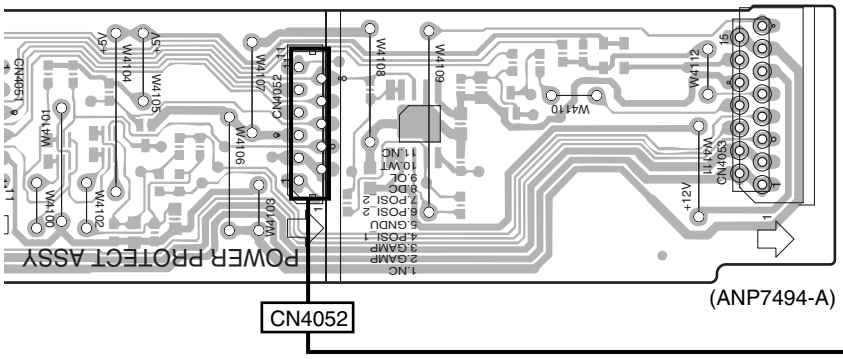

U V R

SIDE B

U POWER AMP-R ASSY

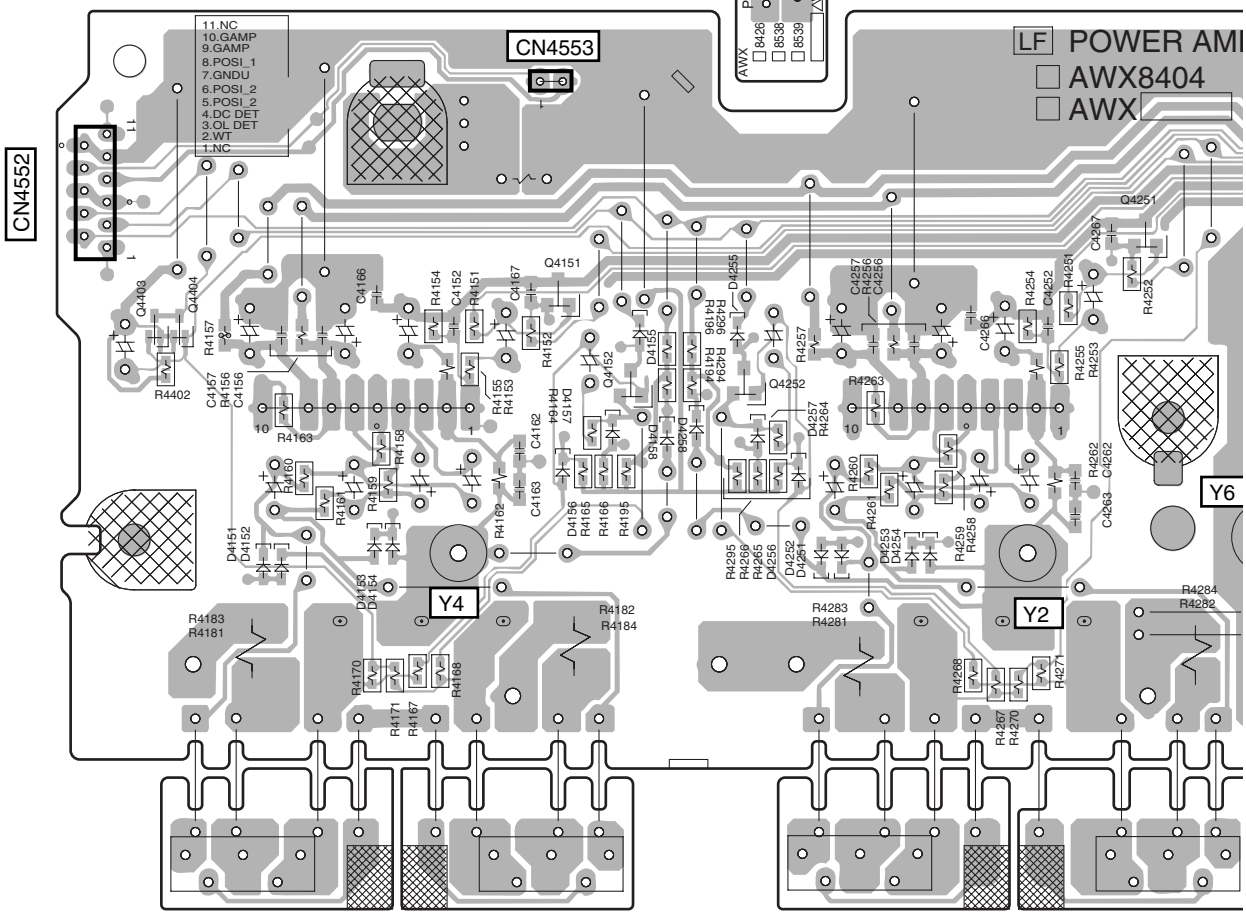

V POSI1-R ASSY

(ANP7494-A)

R POWER PROTECT ASSY

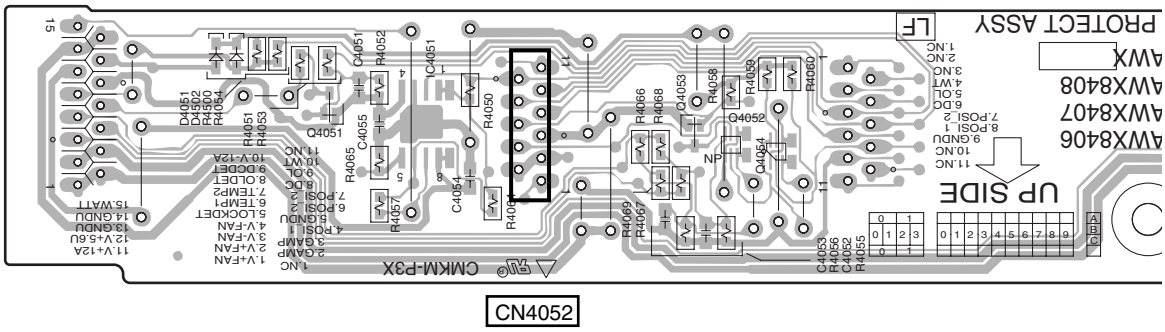

SIDE B

A

B

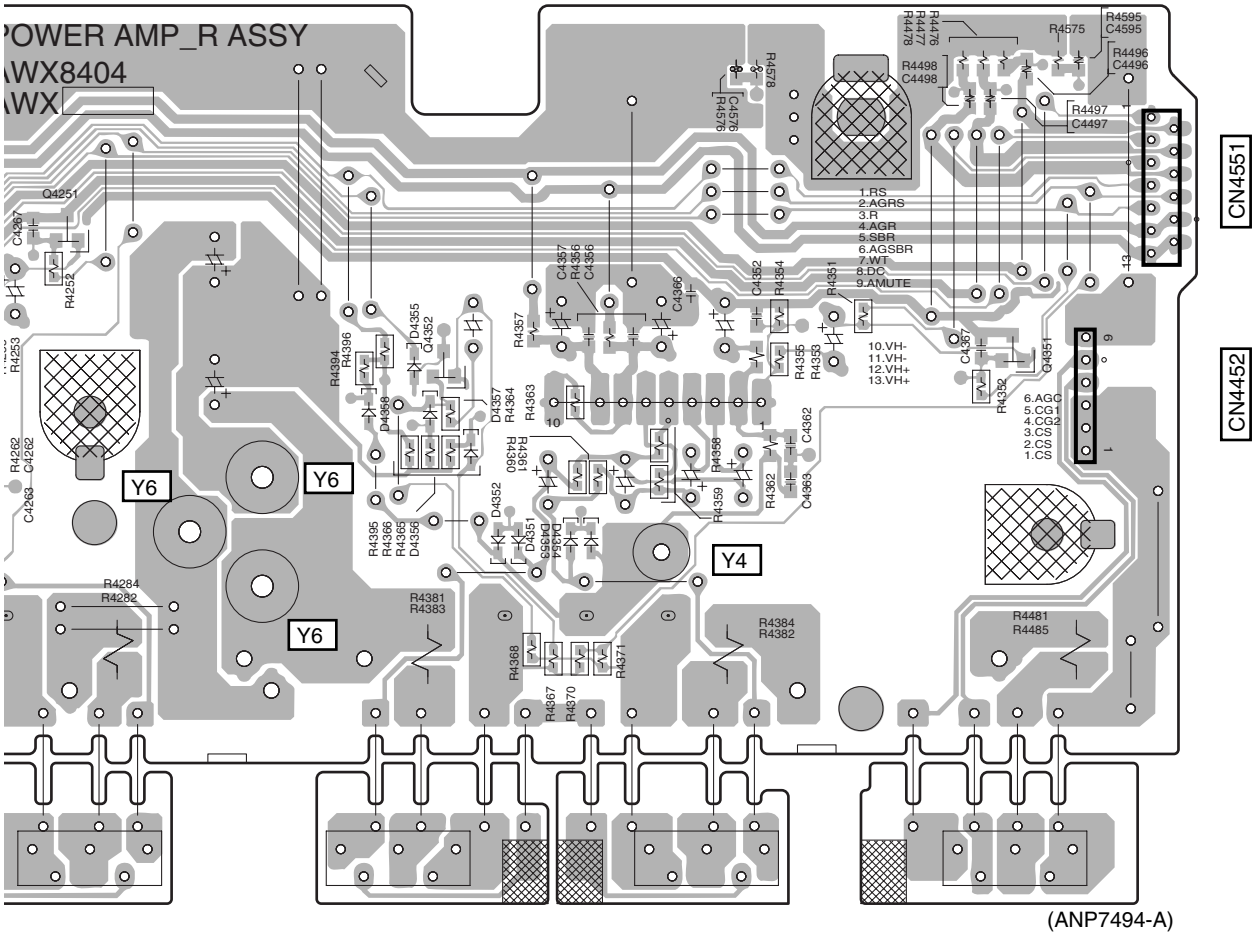

(ANP7494-A)

C

D

E

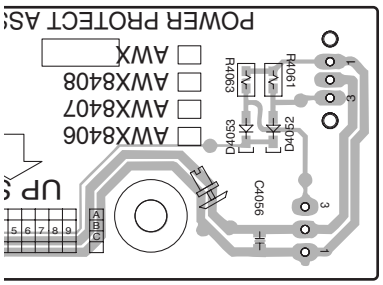

(ANP7494-A)

IC4051

Q4053 Q4052

Q4051

Q4054

F

4.14 REGULATOR ASSY

SIDE A

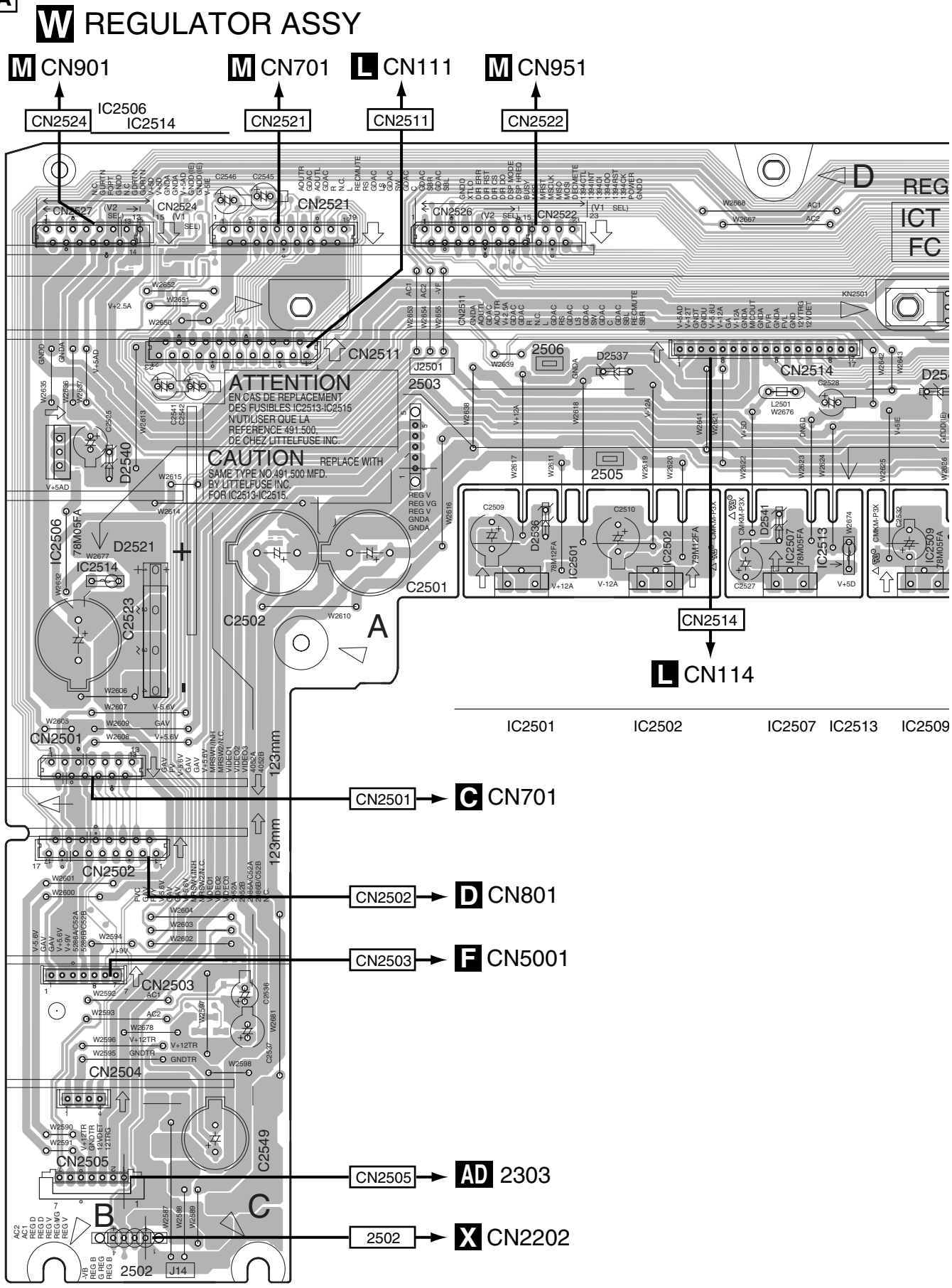

SIDE A

A

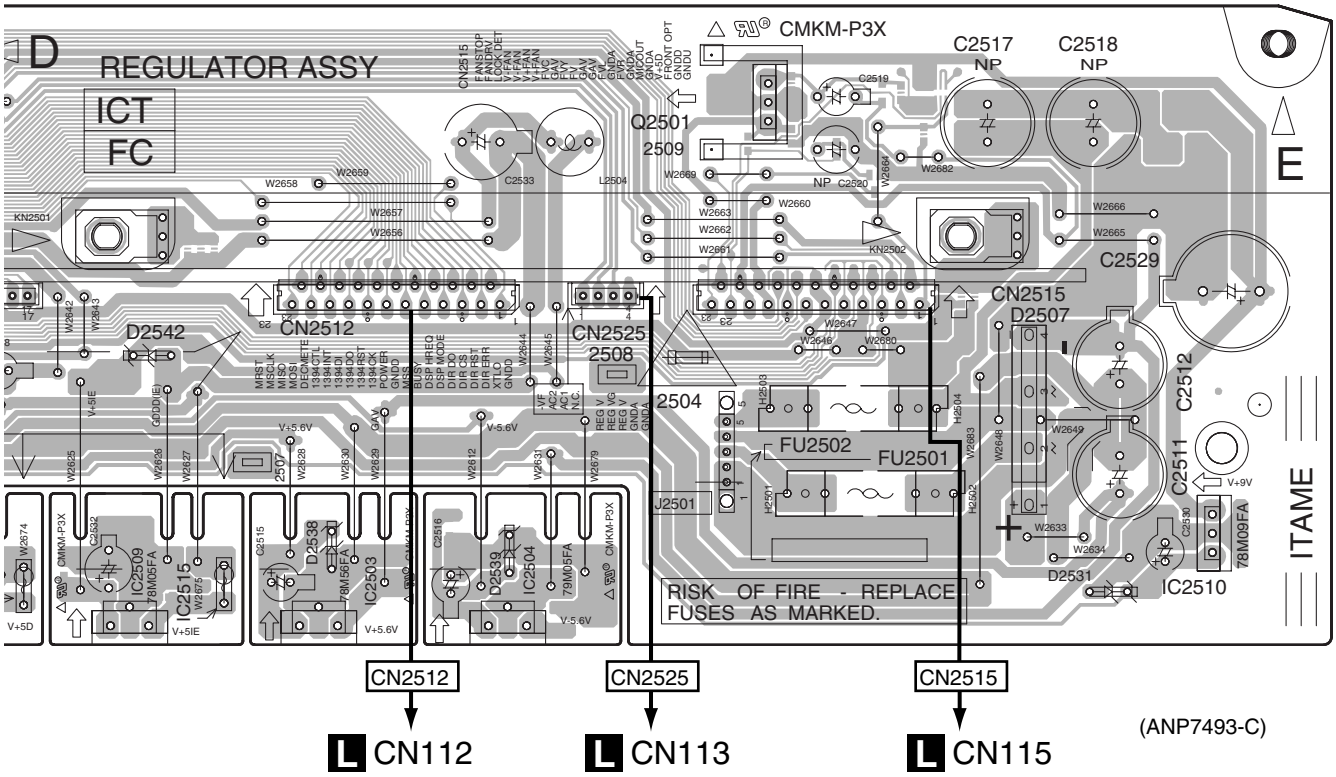

C2513 IC2509 IC2515 IC2503 IC2504 Q2501 IC2510

C

D

E

F

W

SIDE B

W REGULATOR ASSY

Q2502
IC2511
Q2504

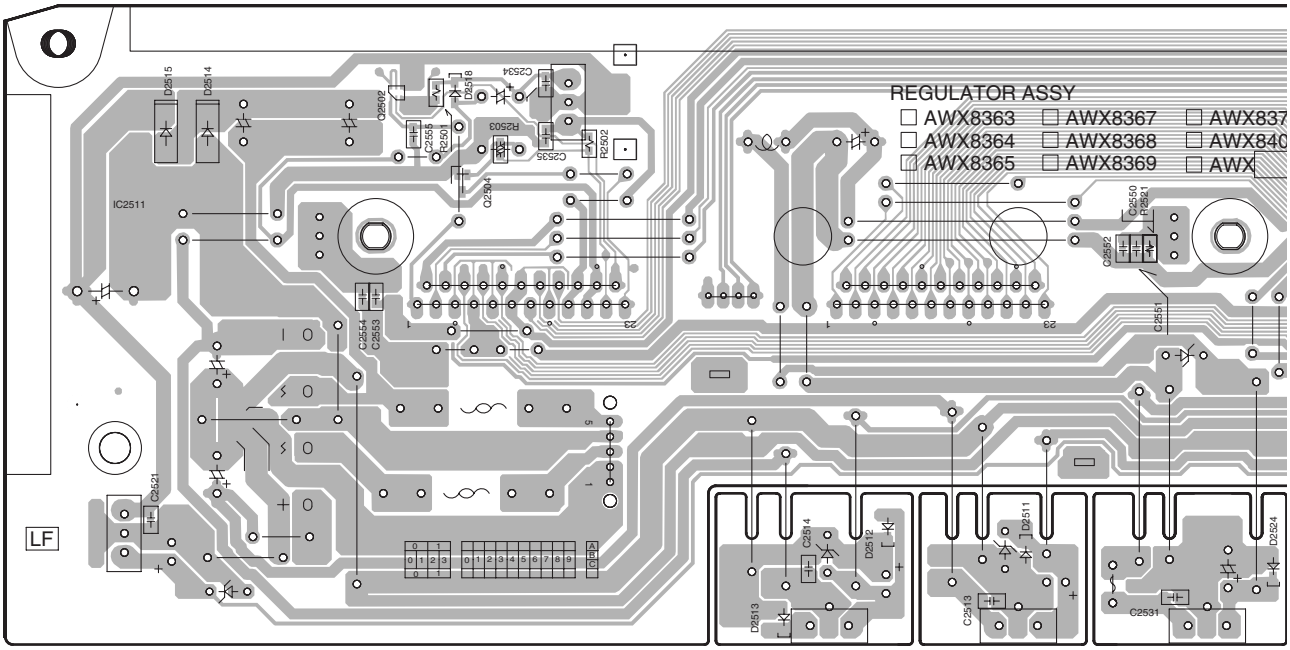

(ANP7493-C) CN2515 CN2525 CN2512

SIDE B

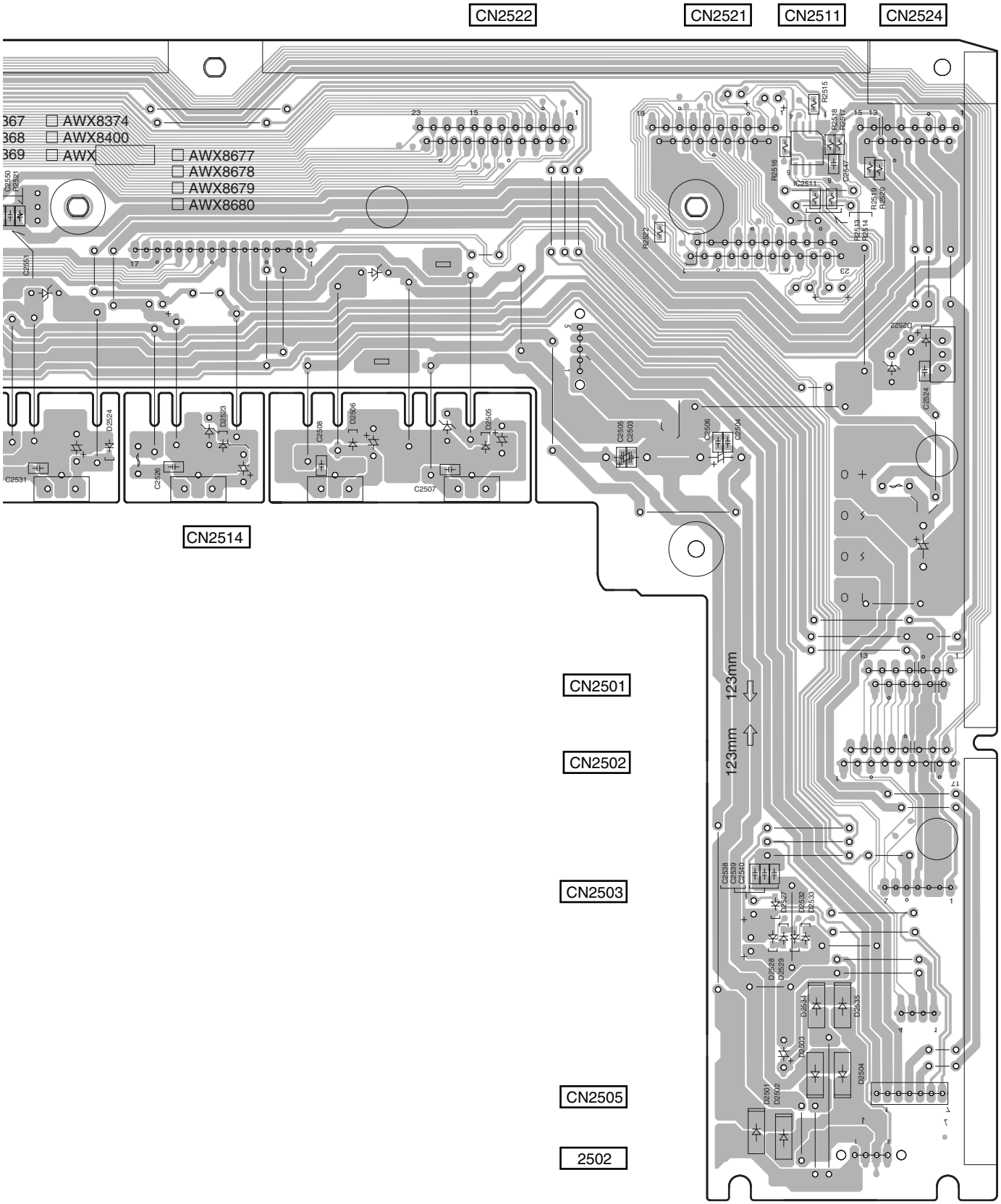
CN2522
CN2521
CN2511
CN2524
AWX8374
AWX8400
AWX
AWX8677
AWX8678
AWX8679
AWX8680
CN2514
CN2501
CN2502
CN2503
CN2505
2502
123mm
123mm

4.15 SP / PS ASSY

SIDE A

SIDE A

AB SP/PS ASSY

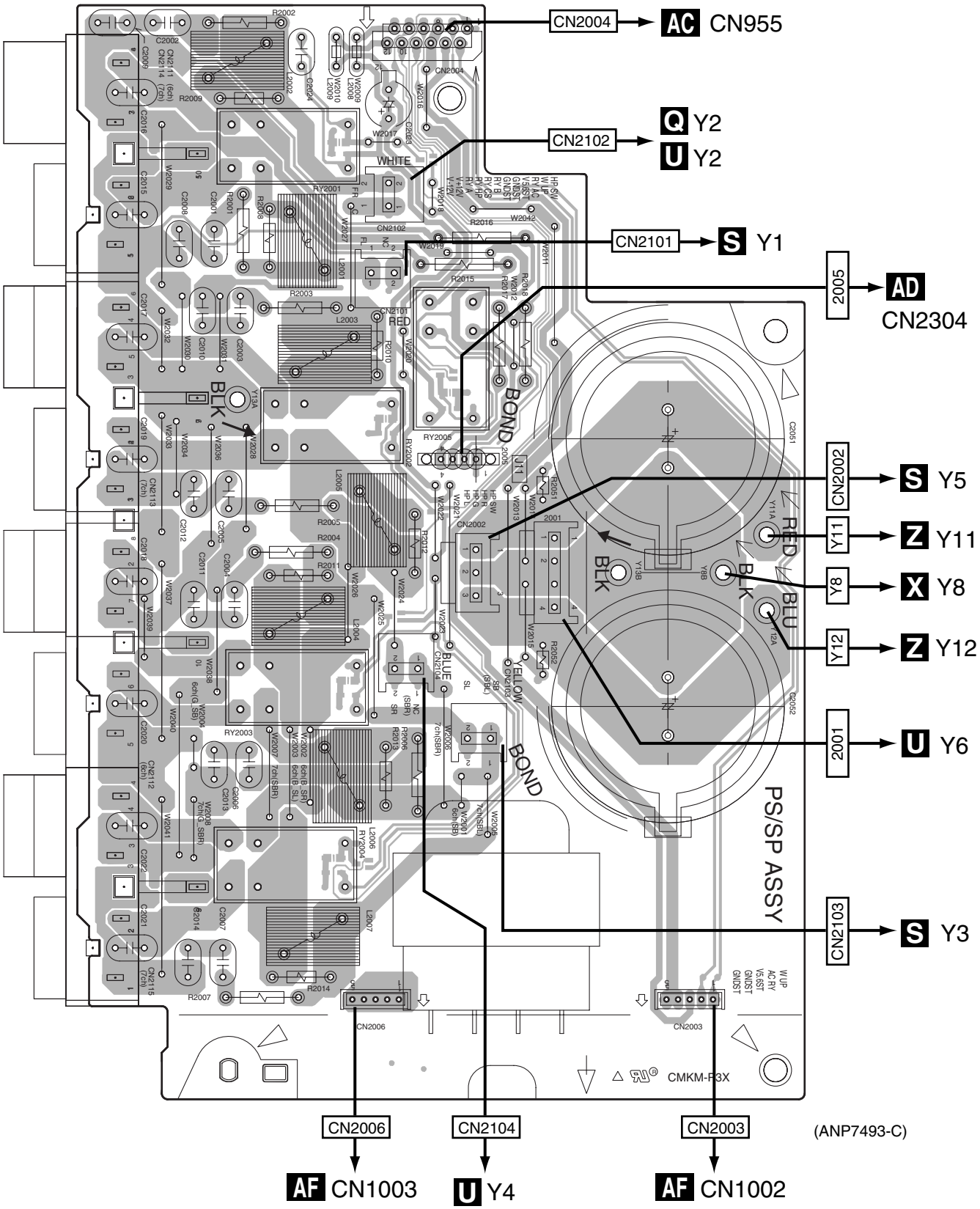

AB

AB

SIDE B

SIDE B

AB SP/PS ASSY

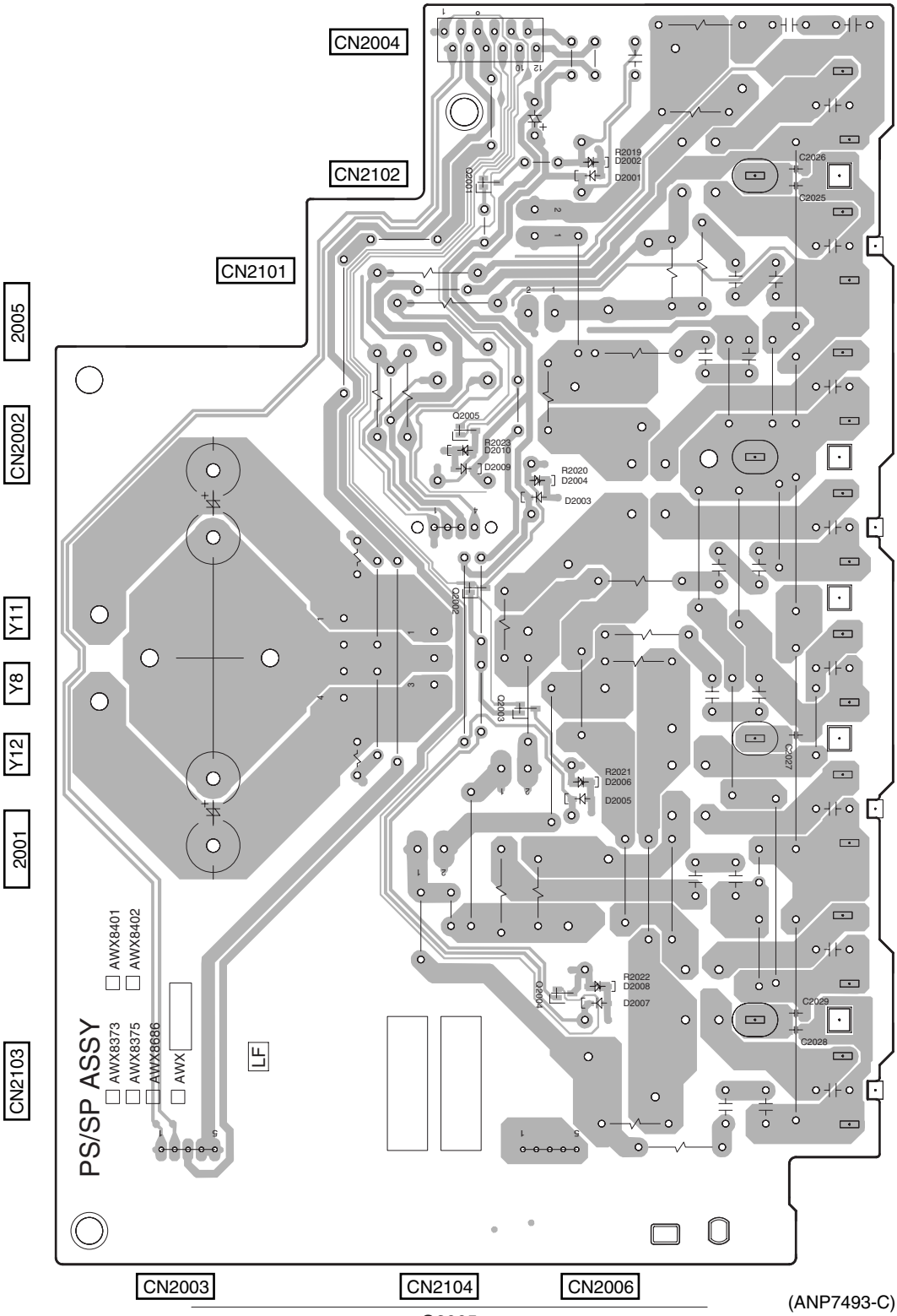

(ANP7493-C)

AB

AB

4.16 TRANS 2-1, DIODE and VH TR ASSYS

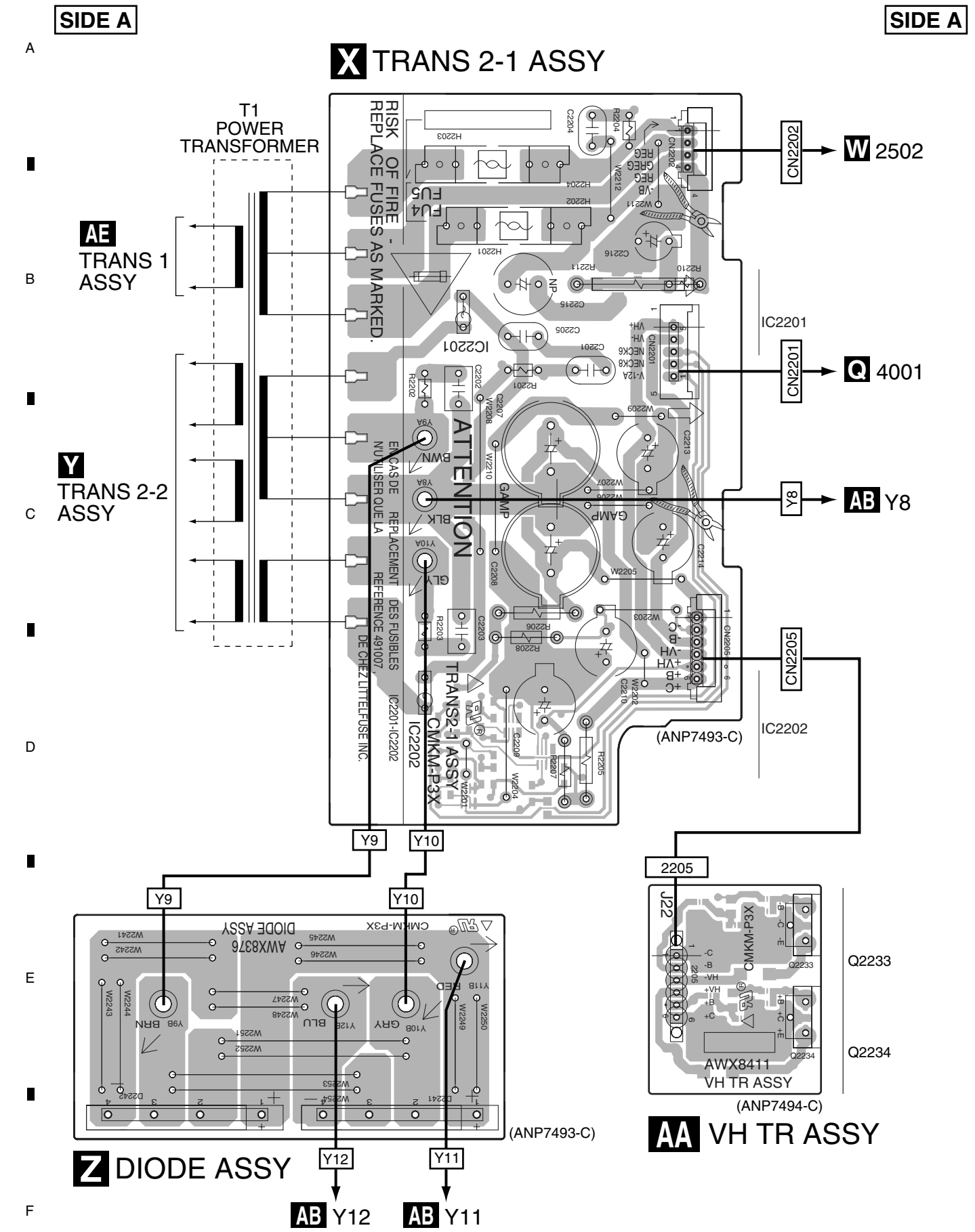

SIDE B

SIDE B

X TRANS 2-1 ASSY

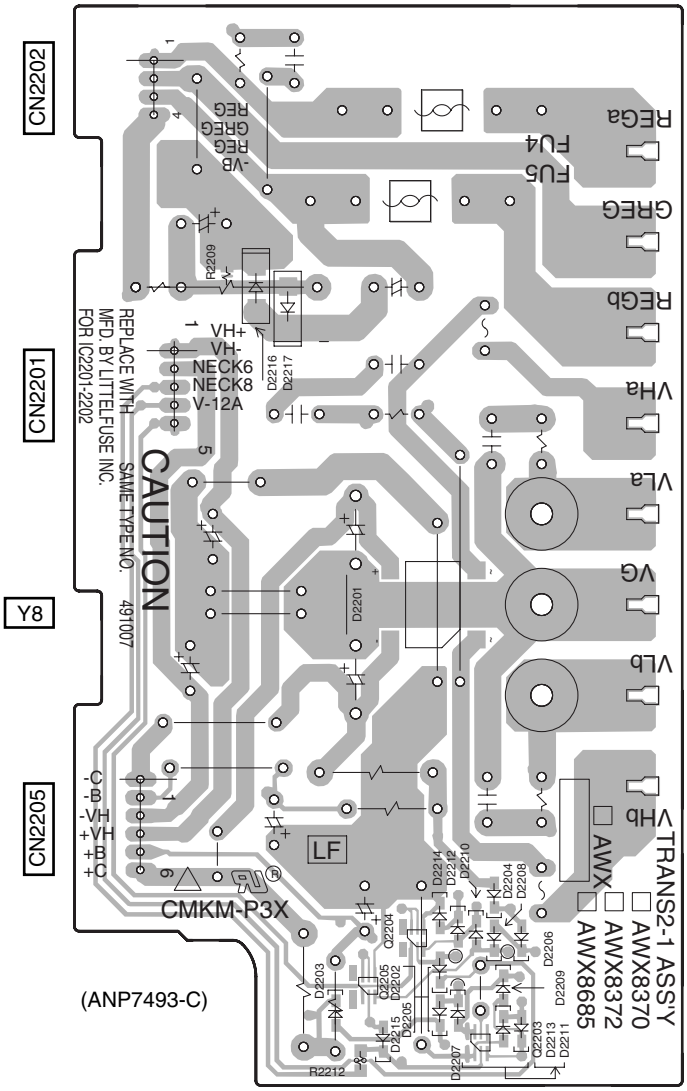

Q2204
Q2205
Q2203

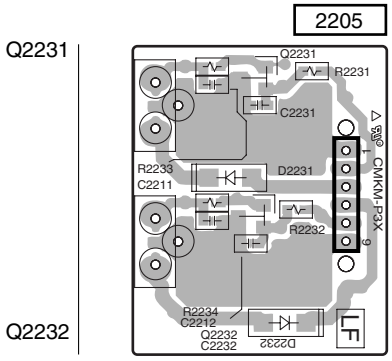

(ANP7494-C)

AA VH TR ASSY

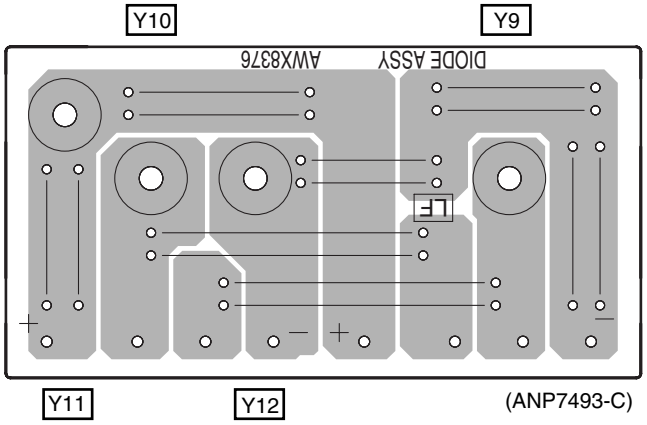

(ANP7493-C)

Z DIODE ASSY

X Z AA

X Z AA

4.17 TRANS SIDE ASSY

SIDE A

AD TRANS SIDE ASSY

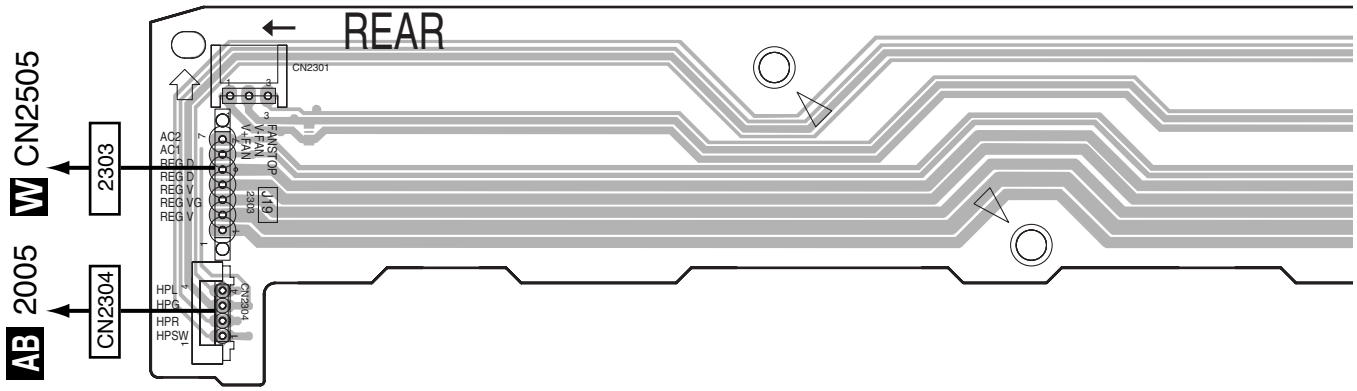

SIDE B

AD TRANS SIDE ASSY

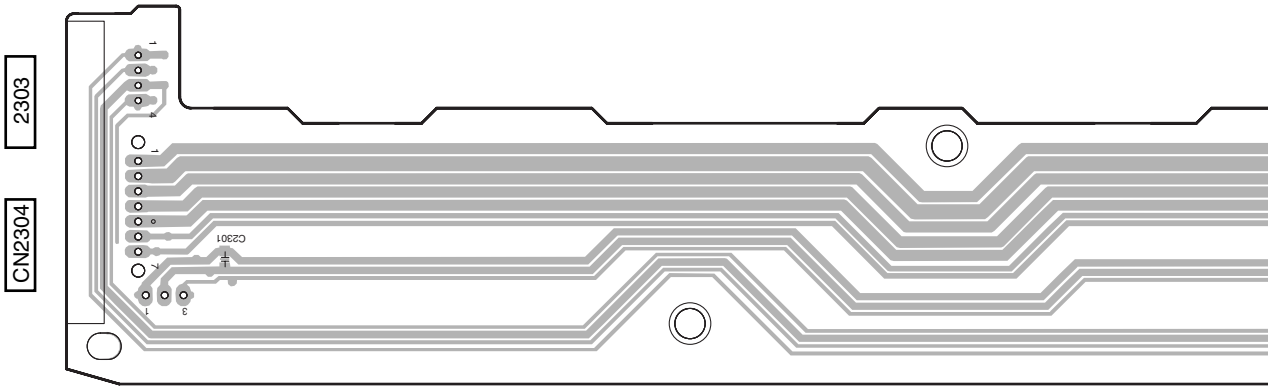

AD

SIDE A

A

B

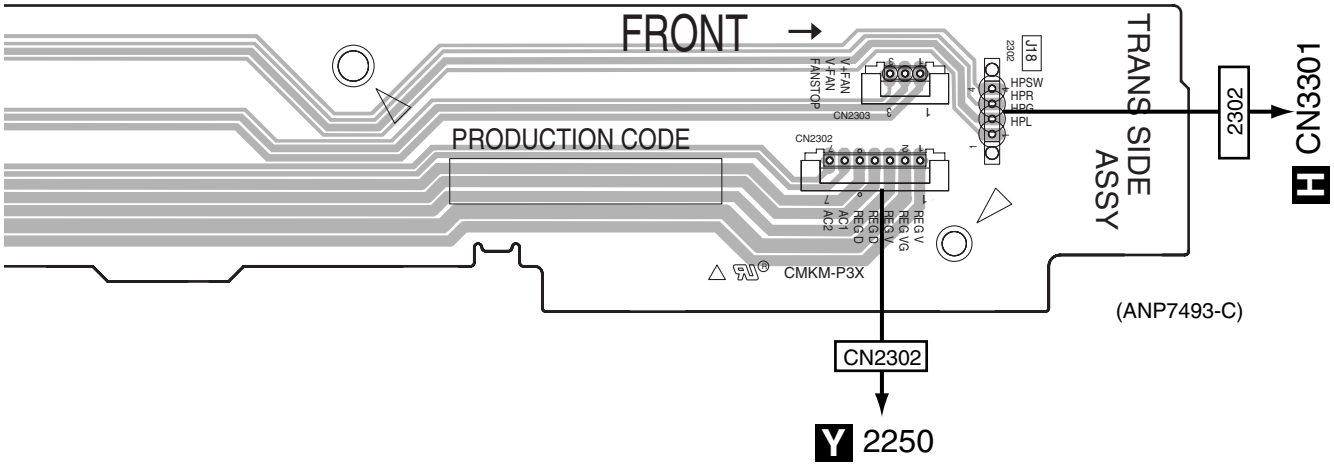

C

SIDE B

D

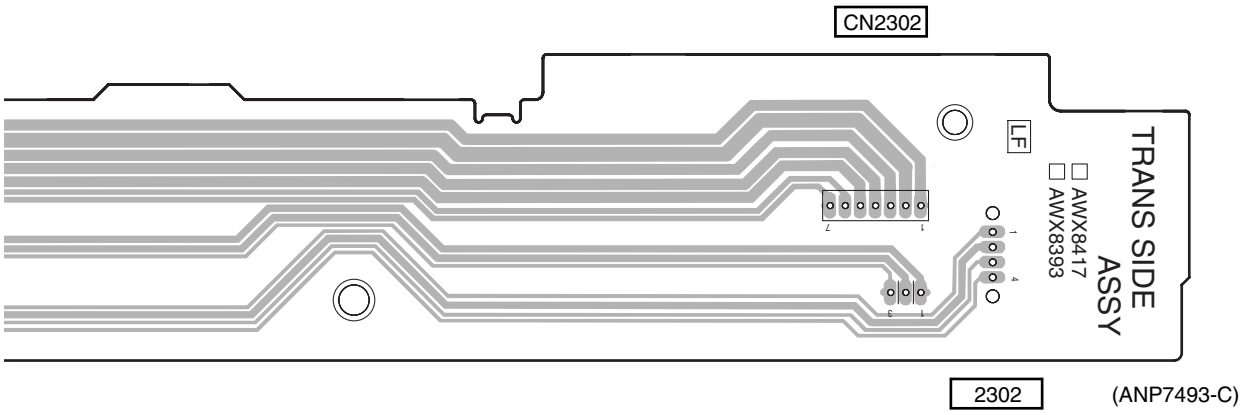

E

F

AD

4.18 TRANS 2-2, TRANS 1 and PRIMARY ASSYS

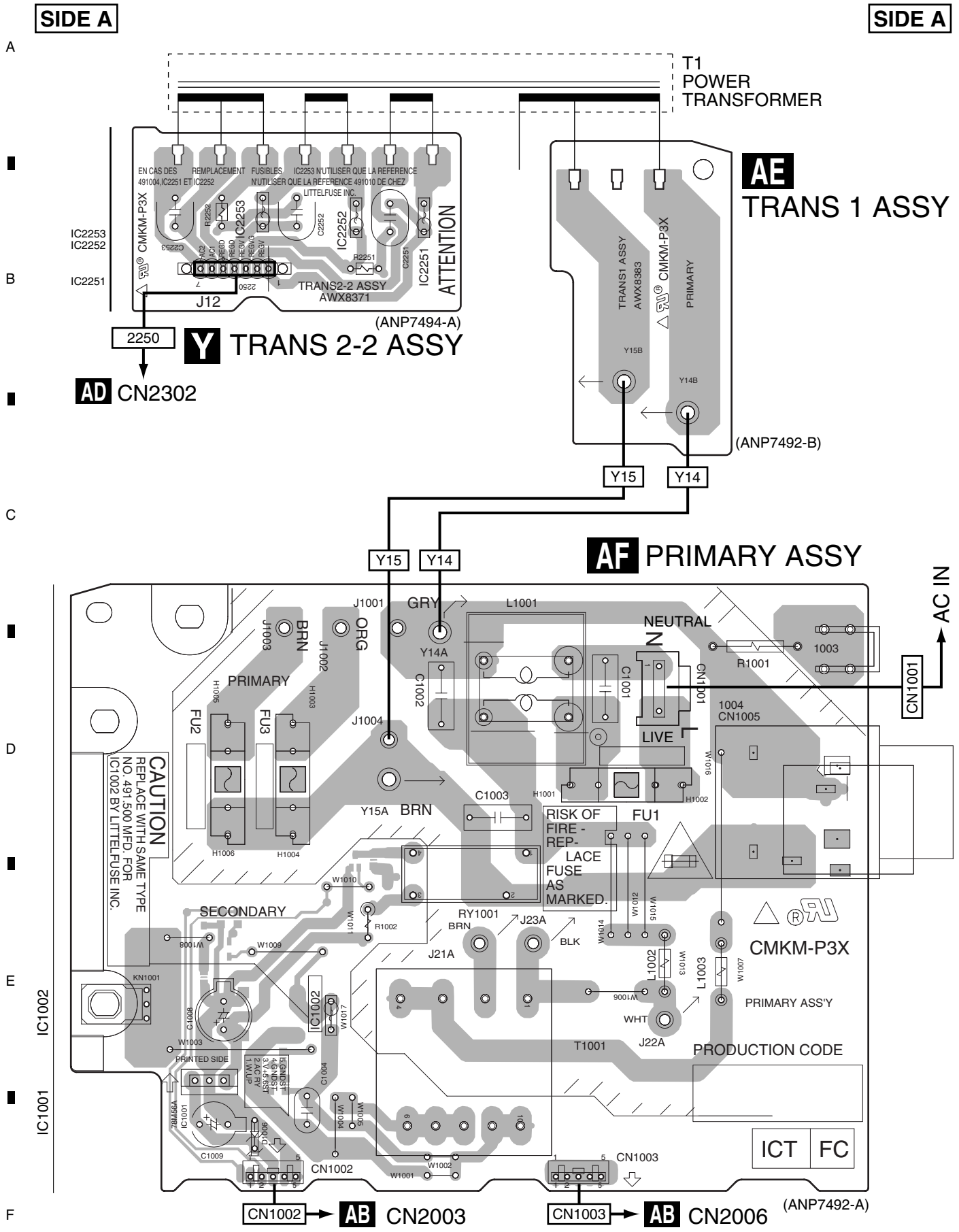

SIDE B

SIDE B

AE TRANS 1 ASSY

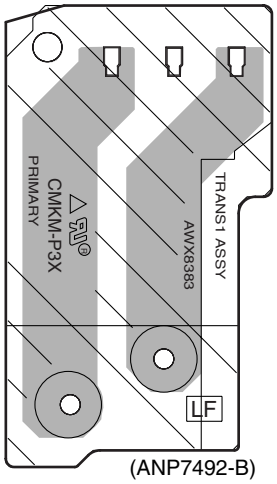

(ANP7492-B)

Y14 Y15

Y TRANS 2-2 ASSY

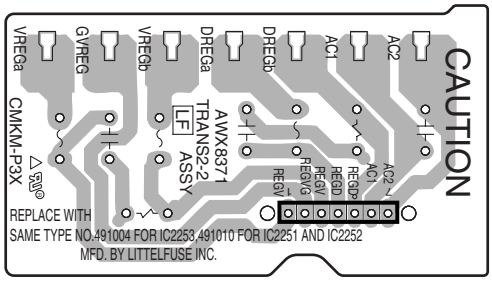

(ANP7494-A)

2250

AF PRIMARY ASSY

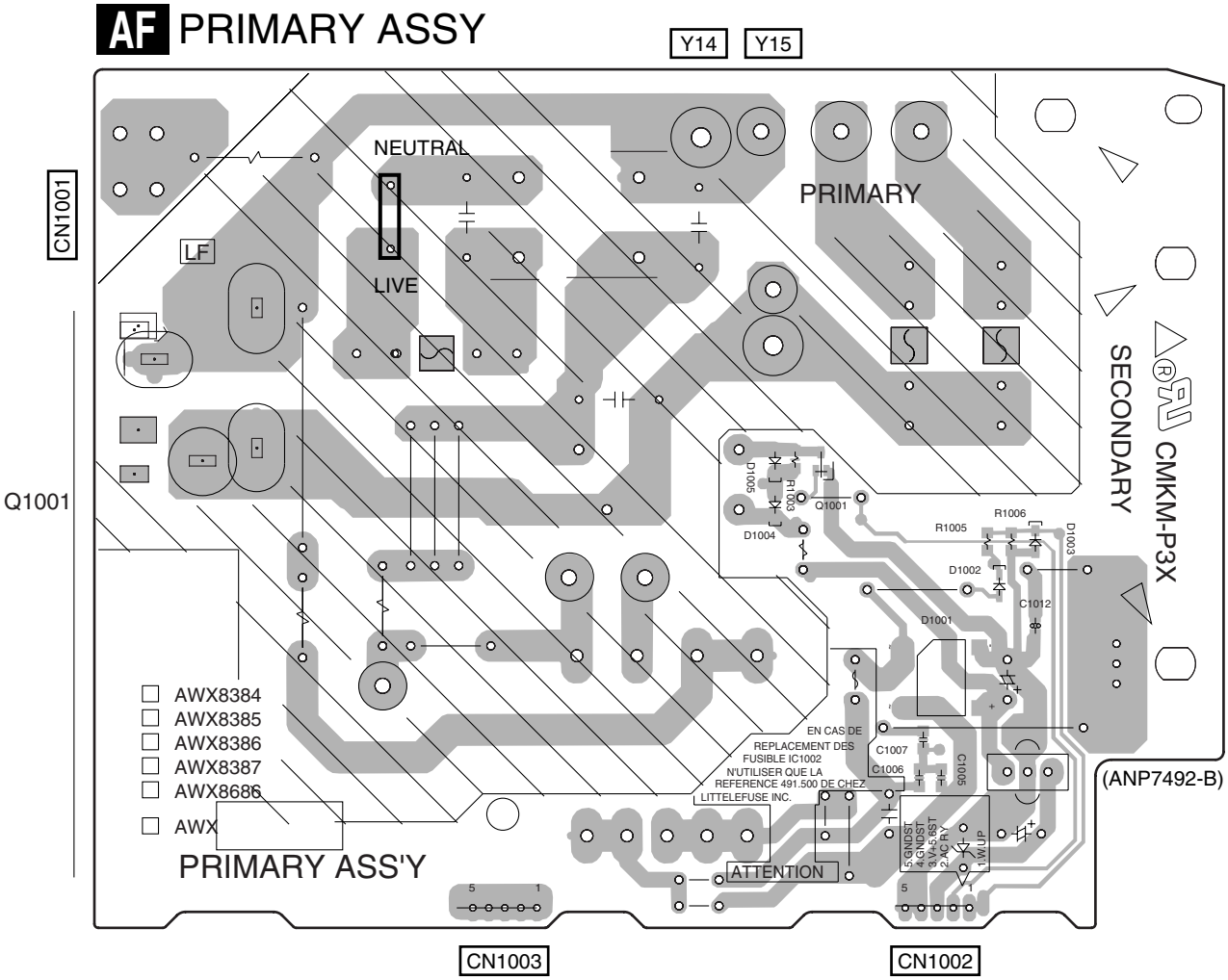

Y AE AF

Y AE AF

4.19 REAR TOP ASSY

SIDE A

SIDE A

AC REAR TOP ASSY

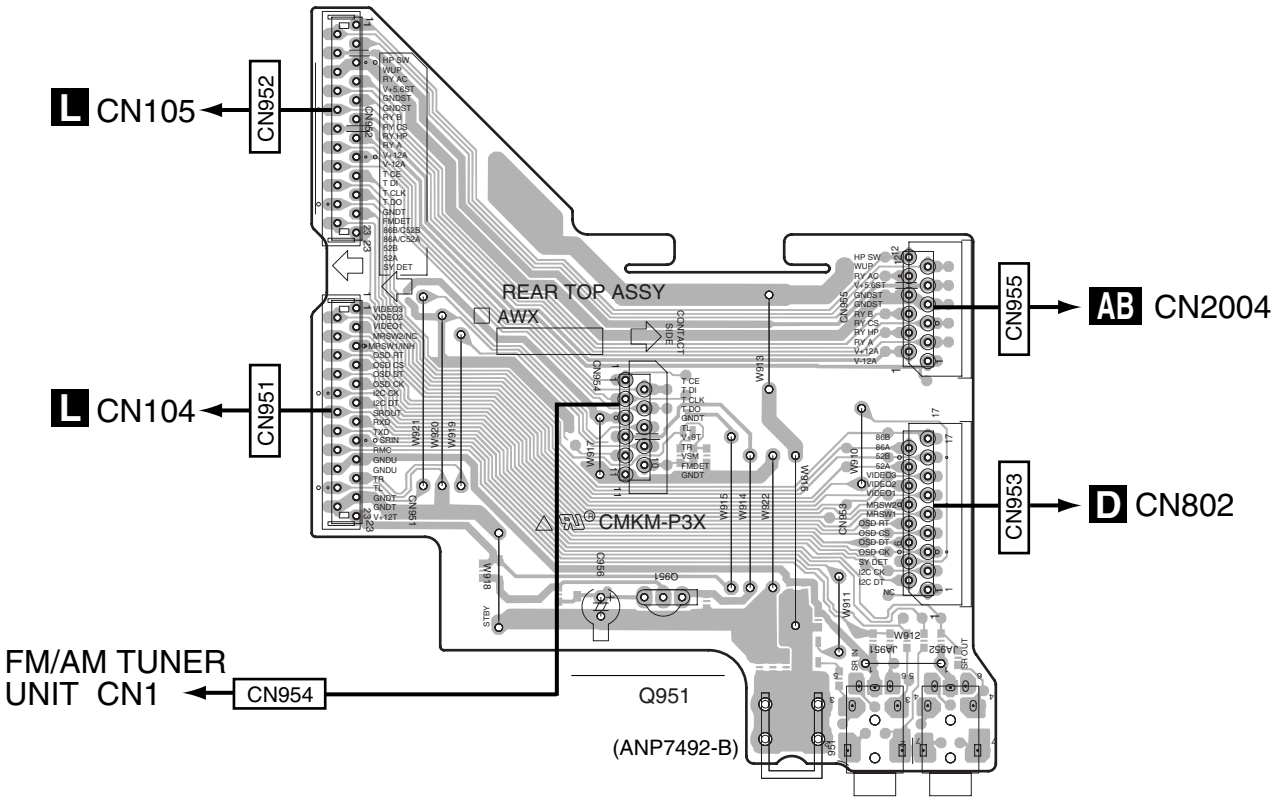

SIDE B

SIDE B

AC REAR TOP ASSY

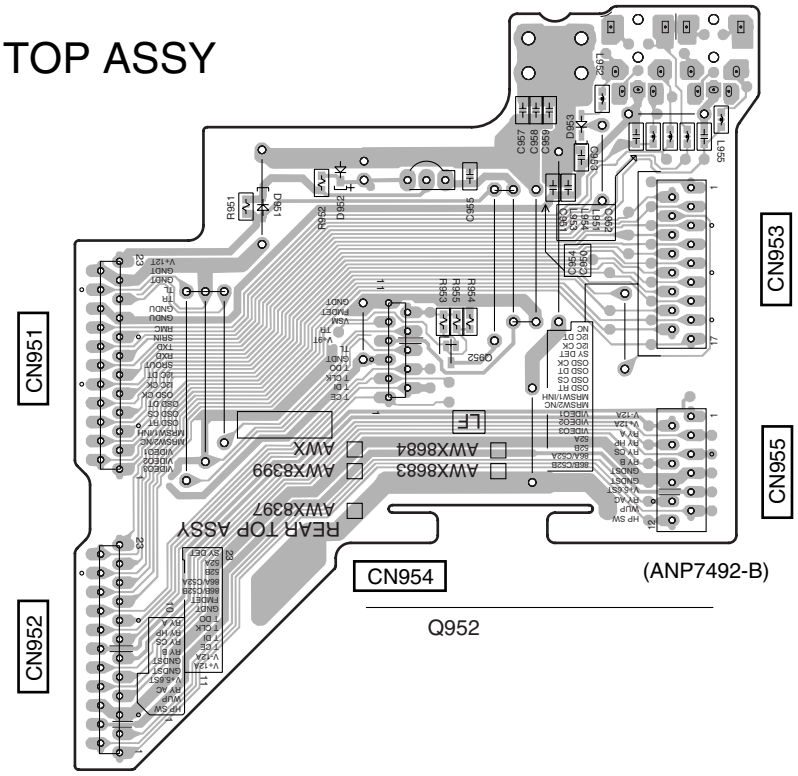

AC

AC

4.20 POWER AMP IN ASSY

SIDE A

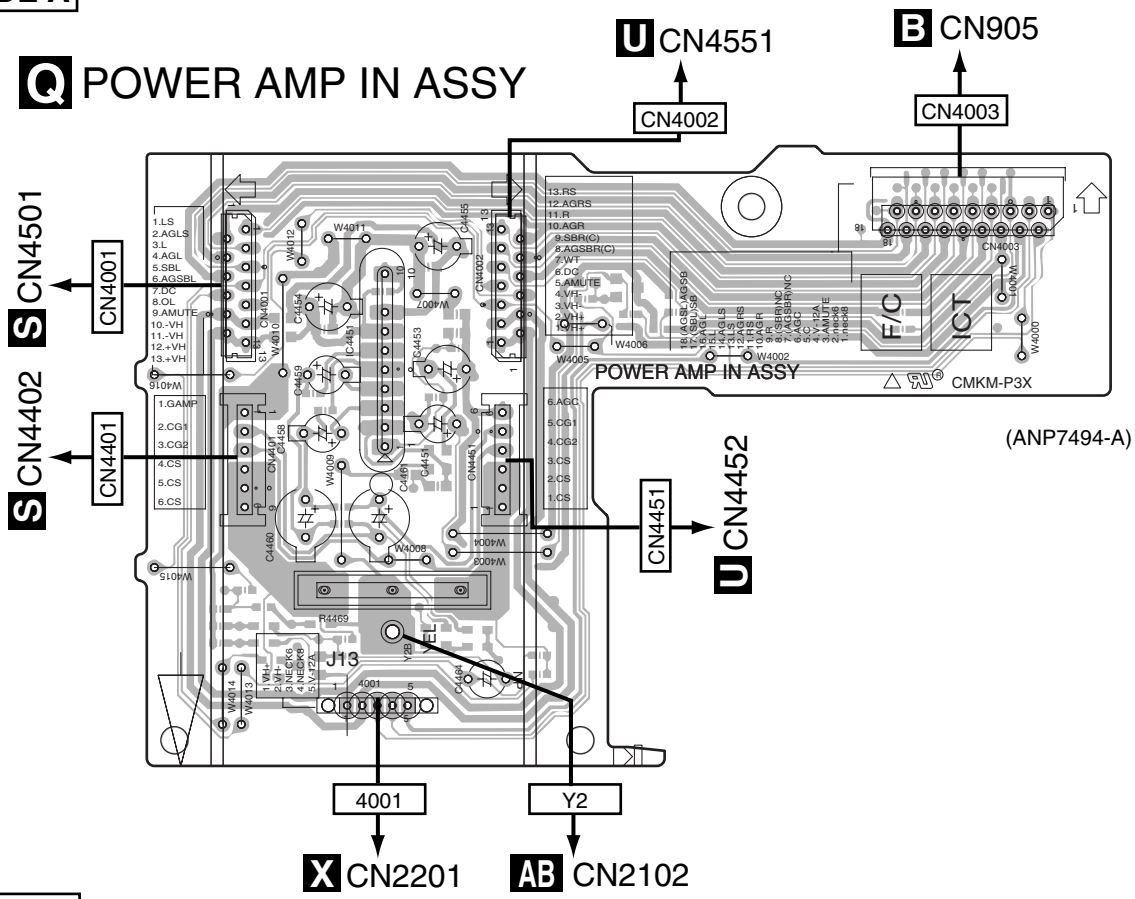

SIDE B

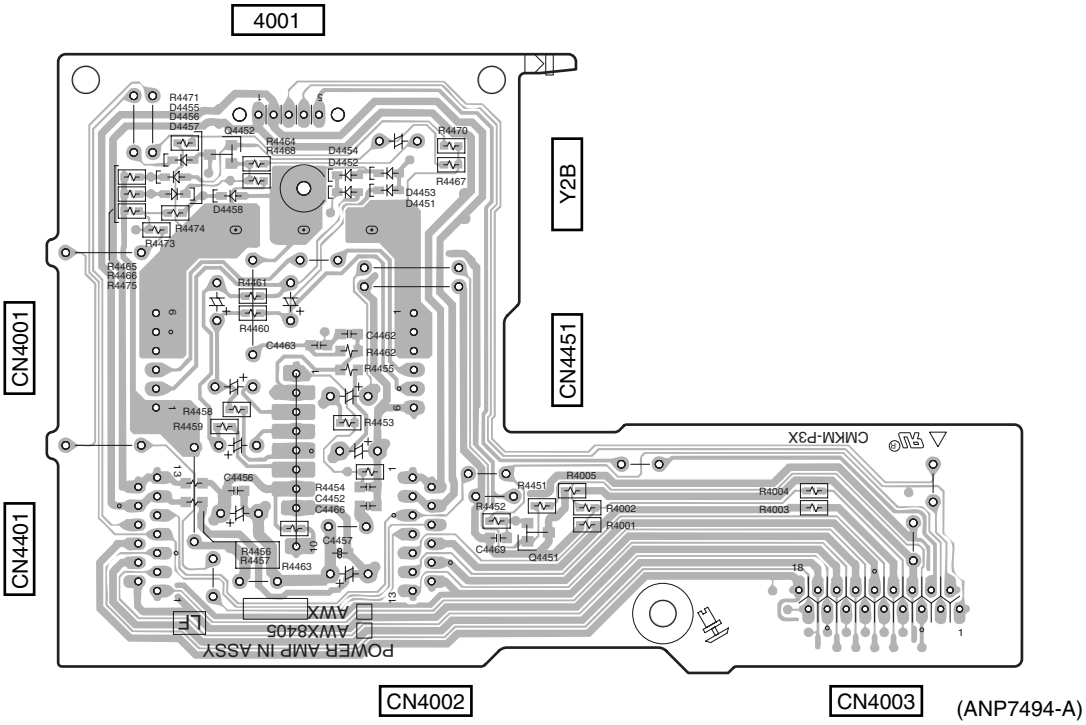

5. PCB PARTS LIST

NOTES:
- *Parts marked by "NSP" are generally unavailable because they are not in our Master Spare Parts List.*
- *The ⚠ mark found on some component parts indicates the importance of the safety factor of the part. Therefore, when replacing, be sure to use parts of identical designation.*
- *When ordering resistors, first convert resistance values into code form as shown in the following examples.*

Ex.1 When there are 2 effective digits (any digit apart from 0), such as 560 ohm and 47k ohm (tolerance is shown by J=5%, and K=10%).

560 Ω	→	56 x 10^1	→	561	RD1/4PU[5][6][1]J
47k Ω	→	47 x 10^3	→	473	RD1/4PU[4][7][3]J
0.5 Ω	→	R50			RN2H[R][5][0]K
1 Ω	→	1R0			RS1P[1][R][0]K

Ex.2 When there are 3 effective digits (such as in high precision metal film resistors).

5.62k Ω	→	562 x 10^1	→	5621	RN1/4PC[5][6][2][1]F

LIST OF WHOLE PCB ASSEMBLIES

Mark	No.	Description	Part No.
NSP	1	MAIN ASSY	AWK7866
	2	MAIN CONTROL ASSY	AWX8604
	2	MULTI I/O ASSY	AWX8605
	2	COMPOSITE V ASSY	AWX8606
	2	S VIDEO ASSY	AWX8607
	2	COMPONENT ASSY	AWX8608
	2	VIDEO SIDE ASSY	AWX8609
	2	OPTICAL-IN ASSY	AWX8617
NSP	1	COMPLEX ASSY	AWK7870
	2	VOLUME ASSY	AWX8378
	2	HEADPHONE ASSY	AWX8380
	2	FRONT-IN ASSY	AWX8381
	2	AUDIO CONNECT ASSY	AWX8382
	2	TRANS 1 ASSY	AWX8383
	2	PRIMARY ASSY	AWX8384
	2	REAR TOP ASSY	AWX8397
	2	FRONT-IN CONNECT ASSY	AWX8416
	2	DISPLAY ASSY	AWX8616
	2	MULTI JOG ASSY	AWX8618
NSP	1	SECONDARY ASSY	AWK7878
	2	TRANS 2-1 ASSY	AWX8372
	2	DIODE ASSY	AWX8376
	2	TRANS SIDE ASSY	AWX8417
	2	REGULATOR ASSY	AWX8677
	2	SP/PS ASSY	AWX8686
NSP	1	POWER AMP ASSY	AWK7826
	2	TRANS 2-2 ASSY	AWX8371
	2	POWER AMP-R ASSY	AWX8404
	2	POWER AMP IN ASSY	AWX8405
	2	POWER PROTECT ASSY	AWX8406
	2	POWER AMP -L ASSY	AWX8409
	2	VH TR ASSY	AWX8411
	2	POSI 1 L ASSY	AWX8427
	2	POSI 1 R ASSY	AWX8426
	1	DSP ASSY	AWX8572
	1	FM/AM TUNER UNIT	AXX7172

COMPLEX ASSY

OTHERS

Mark	No.	Description	Part No.
Y15		BOARD IN JUMPER	ADX7418
Y14		BOARD IN JUMPER	ADX7419
J7, J8		JUMPER WIRE	D15A05-100-2651

SECONDARY ASSY

OTHERS

Mark	No.	Description	Part No.
Y8		BOARD IN JUMPER	ADX7451
Y9		BOARD IN JUMPER	ADX7452
Y10		BOARD IN JUMPER	ADX7453
Y11		BOARD IN JUMPER	ADX7454
Y12		BOARD IN JUMPER	ADX7455
Y13		BOARD IN JUMPER	ADX7461
J2501		JUMPER WIRE 5P	D20PDD0520E
J11, J18		JUMPER WIRE 4P	D20PDY0410E
J14		JUMPER WIRE 4P	D20PDY0425E
J19		JUMPER WIRE 7P	D20PDY0715E

POWER AMP ASSY

OTHERS

Mark	No.	Description	Part No.
Y5		BOARD IN JUMPER	ADX7404
Y6		BOARD IN JUMPER	ADX7456
Y1		BOARD IN JUMPER	ADX7457
Y3		BOARD IN JUMPER	ADX7458
Y2		BOARD IN JUMPER	ADX7459
Y4		BOARD IN JUMPER	ADX7460
J13		JUMPER WIRE 5P	D20PDY0530E
J22		JUMPER WIRE 6P	D20PDY0615E
J12		JUMPER WIRE 7P	D20PDY0710E

A MULTI I/O ASSY

SEMICONDUCTORS

Mark	No.	Description	Part No.
Q631, Q632, Q641, Q642			IMX25
Q651, Q652, Q661, Q662			IMX25
D691			UDZS5R1(B)

CAPACITORS

Mark	No.	Description	Part No.
C607, C608, C617, C618			CEAT100M50
C627, C628			CEAT100M50
C695, C696			CKSRYB103K50

RESISTORS

Mark	No.	Description	Part No.
All Resistors			RS1/16S###J

OTHERS

Mark	No.	Description	Part No.
601, 602		6P PIN JACK	AKB7089
JA604		2P PIN jACK	AKB7165
CN602		21P SOCKET	XKP3081
CN601		23P SOCKET	XKP3083

Mark No.	Description	Part No.

B AUDIO CONNECT ASSY

OTHERS

CN905	18P FFC CONNECTOR	52044-1845
CN904	21P PLUG	AKP7063
CN903	23P PLUG	AKP7064
CN902	21P SOCKET	AKP7074
CN901	23P SOCKET	AKP7178

C COMPOSITE V ASSY

SEMICONDUCTORS

IC731	BU4052BCF
IC741	MM1093NF
IC701	NJM2595M
IC742	TC90A69FG
IC732	TK15420M
Q737, Q738, Q741–Q743	2SA1576A
Q731, Q733–Q736	2SC4081
D741	1SS355
D701, D702	DAN202K

COILS AND FILTERS

L742	LCYA220J2520
L743, L744	LCYA270J2520
L741	LCYA330J2520

CAPACITORS

C753, C755, C787	CCSRCH100D50
C712	CCSRCH101J50
C783, C784, C788	CCSRCH120J50
C705, C706	CCSRCH181J50
C781, C782	CCSRCH220J50
C711	CCSRCH221J50
C760	CCSRCH391J50
C786	CCSRCH470J50
C747	CCSRCH560J50
C774	CCSRCH681J50
C757	CCSRCH6R0D50
C701–C704, C707, C708	CEAT101M16
C713, C714, C733, C736, C737	CEAT101M16
C741, C742, C744, C763	CEAT101M16
C765, C766, C768	CEAT101M16
C785	CEAT102M10
C748	CEAT1R0M50
C789	CEAT470M16
C750, C752, C758	CEAT4R7M50
C793, C794	CEJQ101M16
C791, C792	CEJQ470M16
C759	CKSRYB102K50
C715, C716, C743, C746, C751	CKSRYB103K50
C756, C761, C767, C770–C773	CKSRYB103K50
C776, C777	CKSRYB103K50
C719, C720, C731, C732, C745	CKSRYB104K25
C764, C769, C775, C778, C790	CKSRYB104K25
C795	CKSRYB104K25
C796	CKSRYB105K6R3
C754	CKSRYB122K50
C717	CKSRYB224K16
C709, C710, C734, C735	CKSRYB473K25
C738, C739	CKSRYB473K25
C762	CKSRYB474K10
C749	CKSRYB561K50

Mark No.	Description	Part No.

RESISTORS

All Resistors	RS1/16S###J

OTHERS

X741	CRYSTAL RESONATOR (3.58MHz)	ASS7063
701–703	2P PIN JACK	AKB7017
CN751	10P SOCKET	KP200TA10L
CN701	13P SOCKET	XKP3077

D S VIDEO ASSY

SEMICONDUCTORS

IC841	BU4052BCF
IC881	LA7213
IC801, IC802	NJM2595M
IC851	PDC084B
IC831, IC842, IC871	TK15420M
Q852, Q871, Q872	2SC4081
Q881	UN5212
D881, D882	1SS355
D801, D802	DAN202K
D851	DAP202K

COILS AND FILTERS

L851, L852	LCYA100J2520
L853	LCYA330J2520

CAPACITORS

C862	CCSRCH101J50
C855	CCSRCH150J50
C856	CCSRCH180J50
C811–C814	CCSRCH181J50
C857, C858	CCSRCH240J50
C866	CCSRCH330J50
C825, C826, C859	CCSRCH470J50
C805–C808, C815–C820	CEAT101M16
C831, C832, C843, C844	CEAT101M16
C851, C852, C864, C871, C872	CEAT101M16
C877, C881, C883	CEAT101M16
C884	CEAT102M10
C882	CEAT3R3M50
C891–C894	CKSRYB103K50
C801–C804, C809, C810, C878	CKSRYB104K25
C829, C830	CKSRYB221K50
C821–C824, C833, C834	CKSRYB473K25
C841, C842, C845, C846	CKSRYB473K25
C853, C854, C860, C861	CKSRYB473K25
C873, C874	CKSRYB473K25

RESISTORS

All Resistors	RS1/16S###J

OTHERS

X851	CRYSTAL RESONATOR (14.32MHz)	ASS1056
CN802	17P FFC CONNECTOR	52044-1745
CN811, CN812	4P MINI DIN SOCKET	AKP7043
CN851	15P SOCKET	XKP3078
CN801	17P SOCKET	XKP3079

Mark No.	Description	Part No.

E VIDEO SIDE ASSY

OTHERS

CN891 10P PLUG	KM200TA10
CN893 7P PLUG	KM200TA7
CN892 15P PLUG	XKP3067

F COMPONENT ASSY

SEMICONDUCTORS

IC5104	NJM2581M
IC5022	TA1270BF
IC5102, IC5103	TC74HC4052AF
IC5021, IC5051, IC5052	TK15420M
D5001, D5002, D5071	1SS355

CAPACITORS

C5033, C5034	CCSRCH120J50
C5025, C5047-C5049	CEAT100M50
C5010, C5011, C5019-C5022, C5027	CEAT101M16
C5051-C5054, C5071	CEAT101M16
C5030	CEAT101M35
C5073	CEAT102M10
C5037, C5039	CEAT2R2M50
C5026, C5066-C5070, C5072	CKSRYB103K50
C5028, C5029, C5031, C5032, C5038	CKSRYB104K25
C5041-C5046	CKSRYB104K25
C5035	CKSRYB222K50
C5040	CKSRYB223K25
C5036	CKSRYB224K10
C5081-C5084	CKSRYB224K16
C5015-C5018, C5023, C5024	CKSRYB473K25
C5055-C5058	CKSRYB473K25

RESISTORS

All Resistors	RS1/16S###J

OTHERS

JA5002, JA5003 3P PIN JACK	AKB7124
JA5001 6P RCA PINJACK	AKB7128
X5023 CERAMIC RESONATOR (503KHz)	ASS7036
X5022 CRYSTAL RESONATOR (3.58MHz)	ASS7063
CN5001, CN5051 7P SOCKET	KP200TA7L
5001 PCB BINDER	VEF1040

G OPTICAL-IN ASSY

COILS AND FILTERS

L961 CHIP SOLID INDUCTOR	QTL1013

CAPACITORS

C965	CEAT101M16
C968	CKSRYB104K25
C961, C962, C964, C966	CKSRYF104Z25

RESISTORS

All Resistors	RS1/16S###J

OTHERS

JA961, JA962 OPT. LINK IN	AKS7001
JA964 OPT. LINK IN	AKS7002
CN961 CONNECTOR	VKN1186

Mark No.	Description	Part No.

961 SCREW PLATE	VNE1948

H HEADPHONE ASSY

CAPACITORS

C3303	CCSRCH471J50
C3304	CKSRYB103K50
C3305	CKSRYB104K25
C3301, C3302	CKSRYB392K50

RESISTORS

All Resistors	RS1/16S###J

OTHERS

CN3301 4P JUMPER CONNECTOR	52147-0410
3301 PHONE JACK	AKN7029
KN3301 WRAPPING TERMINAL	VNF1084

I FRONT-IN ASSY

SEMICONDUCTORS

IC3351	UPC4570G2-A
Q3351	HN1C01FU
D3354	DAN217
D3351-D3353	UDZS5R1(B)

COILS AND FILTERS

L3353 CHIP SOLID INDUCTOR	QTL1013

CAPACITORS

C3353, C3385, C3386	CCSRCH101J50
C3381, C3382	CCSRCH221J50
C3354	CCSRCH330J50
C3351	CCSRCH471J50
C3352, C3355, C3357, C3361, C3362	CEAT100M50
C3391, C3392	CEAT330M25
C3372, C3373	CEAT470M25
C3383, C3384, C3387, C3388	CEJQ100M16
C3396	CKSRYB102K50
C3359, C3360, C3365, C3376	CKSRYB103K50
C3389, C3390, C3394	CKSRYB103K50
C3366, C3367, C3371, C3378, C3395	CKSRYB104K25

RESISTORS

All Resistors	RS1/16S###J

OTHERS

CN3351 15P PLUG	AKP7060
JA3352 FRONT AV INPUT	AKX7019
JA3351 REMOTE CONTROL JACK	RKN1004
KN3351, KN3352 WRAPPING TERMINAL	VNF1084

J FRONT-IN CONNECT ASSY

CAPACITORS

C3341, C3342	CKSRYB104K25

OTHERS

CN3342 15P FFC CONNECTOR	52045-1545
CN3341 15P SOCKET	AKP7071
KN3341 WRAPPING TERMINAL	VNF1084

Mark No.	Description	Part No.

L MAIN CONTROL ASSY

SEMICONDUCTORS

	IC381	BD3812F
	IC451	BD3813KS
	IC101	BD3841FS
	IC501	PEG123A
	IC382	TC4052BFN
	IC102–IC106, IC111, IC321, IC341	UPC4570G2-A
	IC361, IC401	UPC4570G2-A
	Q523	2SA1037K
	Q169, Q170, Q321–Q324	2SD2704K
	Q341–Q344, Q361–Q364	2SD2704K
	Q381–Q384	2SD2704K
	Q175, Q229, Q230	2SK208
	Q503–Q505, Q516, Q517	DTA124EUA
	Q386, Q522	DTC124EUA
	Q511, Q521, Q524	DTC143EUA
	Q501	DTC143TK
	Q398, Q507, Q514, Q515	UMB1N
	Q172, Q176, Q235, Q506	UMD2N
	D175, D229, D230, D441, D442	1SS355
	D451, D473, D501–D503	1SS355
	D506–D512, D516–D519, D521	1SS355
	D474, D475	DAN202K
	D191–D193	DAN217
	D504, D505	DAP202K
	D515	UDZS5R1(B)
	D443, D444	UDZS6R8(B)

COILS AND FILTERS

	L121, L475 CHIP FERRITE BEAD	ATL7002
	L476	LFEA2R2J
	L471–L474 CHIP SOLID INDUCTOR	QTL1013

CAPACITORS

	C475 (0.33F/5.5V)	ACH7189
	C151, C152, C169, C170	CCSRCH101J50
	C243, C244, C263, C283, C284	CCSRCH101J50
	C325, C326, C345, C346, C365	CCSRCH101J50
	C383, C384, C405, C406	CCSRCH101J50
	C457, C458	CCSRCH101J50
	C205–C208, C245–C248, C265	CCSRCH331J50
	C267, C285–C288	CCSRCH331J50
	C203, C204	CCSRCH471J50
	C370	CEANP330M16
	C133–C148, C161, C162	CEAT100M50
	C209, C210, C213, C214	CEAT100M50
	C249, C250, C269, C270	CEAT100M50
	C289, C290, C451–C456, C517	CEAT100M50
	C327, C328, C347, C348	CEAT101M16
	C367, C368, C407, C408	CEAT101M16
	C507	CEAT102M6R3
	C181	CEAT221M6R3
	C201, C202, C241, C242	CEAT2R2M50
	C261, C262, C281, C282, C515	CEAT2R2M50
	C501	CEAT331M10
	C167, C168, C321, C322	CEAT470M25
	C329, C330, C341, C342	CEAT470M25
	C349, C350, C361, C362, C369	CEAT470M25
	C401, C402, C409, C410	CEAT470M25
	C443, C444	CEAT471M10
	C323, C324, C343, C344	CEAT4R7M50
	C363, C364, C387, C388	CEAT4R7M50
	C403, C404	CEAT4R7M50
	C153, C154, C171, C172	CKSRYB103K50
	C191–C193, C215, C216	CKSRYB103K50
	C235, C236, C257, C258, C266	CKSRYB103K50
	C277, C278, C297, C298	CKSRYB103K50
	C331, C332, C351, C352	CKSRYB103K50
	C371, C372, C381, C382	CKSRYB103K50
	C385, C386, C391–C398	CKSRYB103K50
	C411, C412, C441, C442	CKSRYB103K50
	C465–C467, C471–C473, C476	CKSRYB103K50
	C502	CKSRYB103K50
	C182, C237, C238, C459–C462	CKSRYB104K16
	C573	CKSRYB104K16
	C503	CKSRYB105K10
	C264	CKSRYB223K25
	C431–C438	CKSRYB223K50
	C572	CKSRYB224K16
	C251, C252, C271, C272	CKSRYB472K50
	C291, C292, C366, C463, C464	CKSRYB472K50
	C506, C509	CKSRYB472K50
	C512, C513	CKSRYB473K16
	C510	CKSRYB473K25
	C268	CKSRYB562K50

RESISTORS

	R441, R442	RS1LMF101J
	Other Resistors	RS1/16S###J

OTHERS

	X501 CERAMIC RESONATOR (15.7 MHz)	XSS3004
	CN501 10P FFC CONNECTOR	52045-1045
	CN106, CN107 15P FFC CONNECTOR	52045-1545
	CN101 26P FFC CONNECTOR	52045-2645
	CN116–CN119 4P PIN JACK	AKB7015
	CN114 17P SOCKET	KP200TA17L
	CN113 4P SOCKET	KP200TA4L
	101, 102 PCB BINDER	VEF1040
	CN103 21P PLUG	XKP3070
	CN102, CN104, CN105 23P PLUG	XKP3071
	CN111, CN112, CN115 23P SOCKET	XKP3083

M DSP ASSY

SEMICONDUCTORS

	IC601	AK4114VQ
	IC701	AK4628VQE
	IC801	DSPC56371AF180
⚠	IC902	LM1117DT-ADJ
⚠	IC901	NJM2391DL1-33
	IC851	PDC121A8
	IC501	TC74HCU04AF
	IC952	TC74VHCT244AFTS1
	IC871	TC7WH125FU
	IC802	TC7WU04FU
	Q801	UN5212
	D702	DAN202K

Mark No.	Description	Part No.
D701		DAP202K
D901, D902		UDZS5R6(B)
COILS AND FILTERS		
L802, L803, L901, L902	CHIP FERRITE BEAD	ATL7002
L501–L503, L601, L602, L605	CHIP SOLID INDUCTOR	QTL1013
L701, L702, L801, L804, L851	CHIP SOLID INDUCTOR	QTL1013
L871, L952	CHIP SOLID INDUCTOR	QTL1013
CAPACITORS		
C705		CCSRCH101J50
C612, C613		CCSRCH120J50
C505, C506		CCSRCH470J50
C511, C605, C608, C620, C702		CCSRCH471J50
C707–C714, C717, C801, C803		CCSRCH471J50
C805, C807, C809, C814, C818		CCSRCH471J50
C821, C823, C826, C828, C830		CCSRCH471J50
C832, C851, C871, C916, C919		CCSRCH471J50
C954		CCSRCH471J50
C816, C817		CCSRCH8R0D50
C956		CEVW100M16
C513, C703, C715, C834, C835		CEVW101M16
C908, C909		CEVW101M16
C607, C618, C718		CEVW470M6R3
C617		CKSRYB102K50
C503, C504, C701, C820, C825		CKSRYB103K50
C917		CKSRYB103K50
C606, C609, C614, C619, C704		CKSRYB104K16
C706, C716, C720, C802, C804		CKSRYB104K16
C806, C808, C810, C815, C819		CKSRYB104K16
C822, C824, C827, C829, C831		CKSRYB104K16
C833, C852, C872, C907, C918		CKSRYB104K16
C955		CKSRYB104K16
C512		CKSRYB105K6R3
C621		CKSRYB474K10
RESISTORS		
R802		RAB4C101J
R962, R970		RAB4C104J
R628		RS1/16S1802F
Other Resistors		RS1/16S###J
OTHERS		
X601	CRYSTAL RESONATOR (12.288MHz)	ASS7046
X801	CRYSTAL RESONATOR (20MHz)	VSS1171
JA501	2P PIN JACK	AKB7131
CN601	10P FFC CONNECTOR	VKN1414
CN902	13P SOCKET	XKP3077
CN952	15P SOCKET	XKP3078
CN701	19P SOCKET	XKP3080

N VOLUME ASSY

Mark No.	Description	Part No.
SWITCHES AND RELAYS		
S3201		ASX7004
S3202-S3209		VSG1024
CAPACITORS		
C3201, C3202		CKSRYB103K50
RESISTORS		
All Resistors		RS1/16S###J
OTHERS		
3201	5P CABLE HOLDER	51063-0505

O DISPLAY ASSY

Mark No.	Description	Part No.
SEMICONDUCTORS		
IC3001		PE5403A
IC3002		RPM7140-H9
Q3001		2SA1576A
Q3002, Q3005		DTC124EUA
D3002-D3004, D3006		1SS355
D3001		DAN202K
D3010		SLI-343DCW(STU)
COILS AND FILTERS		
L3001		LFEA2R2J
SWITCHES AND RELAYS		
S3001-S3016		VSG1024
CAPACITORS		
C3103-C3105, C3107		CCSRCH471J50
C3007		CEAT101M6R3
C3003		CEAT221M6R3
C3018		CEAT470M50
C3019-C3022		CKSRYB102K50
C3001, C3002, C3006, C3008		CKSRYB103K50
C3016, C3017, C3032		CKSRYB103K50
C3011, C3012		CKSRYB104K25
C3106 (221/35V)		XCH3011
RESISTORS		
⚠ R3056		RS1/16S104J
Other Resistors		RS1/16S###J
OTHERS		
X3001	CERAMIC RESONATOR (5MHz)	VSS1142
3001, 3002	5P CABLE HOLDER	51063-0505
CN3001	26P FFC CONNECTOR	52045-2645
V3001	FL TUBE	AAV7108

P MULTI JOG ASSY

Mark No.	Description	Part No.
SEMICONDUCTORS		
D3251		SLR-343BBT(GHJ)
SWITCHES AND RELAYS		
S3251		ASX7031
S3252-S3254		VSG1024
CAPACITORS		
C3251, C3252		CKSRYB103K50
RESISTORS		
All Resistors		RS1/16S###J
OTHERS		
3251	5P CABLE HOLDER	51063-0505

Mark No.	Description	Part No.

Q POWER AMP IN ASSY

SEMICONDUCTORS

	IC4451	PA9010A
	Q4452	2SA1255
	Q4451	2SC3326
	D4453-D4458	1SS355
	D4451, D4452	UDZS10(B)

CAPACITORS

	C4456, C4457 (221/100V)	ACG7041
	C4452	CCSRCH221J50
	C4462, C4463	CCSRCH6R0D50
	C4464	CEANP2R2M50
	C4460, C4461	CEHAT100M2A
	C4451	CEHAT100M50
	C4453	CEHAT331M10
	C4458, C4459	CEHAT470M25
	C4454, C4455	CEHAT470M63

RESISTORS

	R4469 (0.18Ω)	ACN7121
	R4455	RN1/10SE1201D
	R4462	RN1/10SE3302D
	Other Resistors	RS1/16S###J

OTHERS

	4001 5P CABLE HOLDER	51048-0500
	CN4003 18P FFC CONNECTOR	52044-1845
	CN4001, CN4002 13P PLUG	AKP7059
	CN4401, CN4451 6P SOCKET	KP250NA6

R POWER PROTECT ASSY

SEMICONDUCTORS

	IC4051	NJM4558MD
	Q4051	2SC4081
	Q4052	UMB1N
	Q4054	UMH1N
	D4051	1SS355

CAPACITORS

	C4054, C4055	CKSRYB103K50
	C4052, C4053	CKSRYB104K25
	C4051	CKSRYB223K50

RESISTORS

	All Resistors	RS1/16S###J

OTHERS

	CN4053 15P FFC CONNECTOR	52044-1545
	CN4051, CN4052 11P PLUG	AKP7058

S POWER AMP-L ASSY

SEMICONDUCTORS

⚠	IC4101, IC4201, IC4301	PA9010A
⚠	IC4102, IC4202, IC4302	SAPM01N
⚠	IC4103, IC4203, IC4303, IC4453	SAPM01P
	Q4102, Q4202, Q4302	2SA1255
	Q4101, Q4201, Q4301	2SC3326
	D4102, D4104-D4108, D4202	1SS355
	D4204-D4208, D4302, D4304-D4308	1SS355
	D4101, D4103, D4201, D4203, D4301	UDZS10(B)
	D4303	UDZS10(B)

CAPACITORS

	C4106, C4107, C4206, C4207 (221/100V)	ACG7041
	C4306, C4307 (221/100V)	ACG7041
	C4102, C4202, C4302	CCSRCH221J50
	C4112, C4113, C4212, C4213	CCSRCH6R0D50
	C4312, C4313	CCSRCH6R0D50
	C4114, C4214, C4314	CEANP2R2M50
	C4401, C4402	CEAT331M2A
	C4110, C4111, C4210, C4211	CEHAT100M2A
	C4310, C4311	CEHAT100M2A
	C4101, C4201, C4301	CEHAT100M50
	C4103, C4203, C4303	CEHAT331M10
	C4108, C4109, C4208, C4209	CEHAT470M25
	C4308, C4309	CEHAT470M25
	C4104, C4105, C4204, C4205	CEHAT470M63
	C4304, C4305	CEHAT470M63

RESISTORS

⚠	R4119, R4219, R4319 (0.18 Ω)	ACN7121
⚠	R4131, R4132, R4231, R4232	ACN7132
⚠	R4331, R4332, R4482 (0.047 Ω)	ACN7132
	R4573	RD1/2VM1R0J
	R4105, R4205, R4305	RN1/10SE1201D
	R4112, R4212, R4312	RN1/10SE3302D
	Other Resistors	RS1/16S###J

OTHERS

	CN4502 11P SOCKET	AKP7069
	CN4501 13P SOCKET	AKP7070
	CN4504 2P CONNECTOR	B02B-XASK-1
	CN4402 6P PLUG	KM250NA6L
	KN4401, KN4402 WRAPPING TERMINAL	VNF1084

T POSI 1 L ASSY

OTHERS

	J4501 2P CONNECTOR ASSY	ADX7471
⚠	TH4501 POSISTOR	PTFM04BD222Q2N34B0

U POWER AMP-R ASSY

SEMICONDUCTORS

⚠	IC4151, IC4251, IC4351	PA9010A
⚠	IC4152, IC4252, IC4352, IC4452	SAPM01N
⚠	IC4153, IC4253, IC4353	SAPM01P
	Q4152, Q4252, Q4352	2SA1255
	Q4151, Q4251, Q4351	2SC3326
	Q4403, Q4404	2SC4081
	D4152, D4154-D4158, D4252	1SS355
	D4254-D4258, D4352, D4354-D4358	1SS355
	D4151, D4153, D4251, D4253, D4351	UDZS10(B)
	D4353	UDZS10(B)

CAPACITORS

	C4156, C4157, C4256, C4257 (221/100V)	ACG7041

Mark No.	Description	Part No.
C4356, C4357	(221/100V)	ACG7041
C4152, C4252, C4352		CCSRCH221J50
C4162, C4163, C4262, C4263		CCSRCH6R0D50
C4362, C4363		CCSRCH6R0D50
C4164, C4264, C4364		CEANP2R2M50
C4405		CEAT331M10
C4403, C4404		CEAT331M2A
C4160, C4161, C4260, C4261		CEHAT100M2A
C4360, C4361		CEHAT100M2A
C4151, C4251, C4351		CEHAT100M50
C4153, C4253, C4353		CEHAT331M10
C4158, C4159, C4258, C4259		CEHAT470M25
C4358, C4359		CEHAT470M25
C4154, C4155, C4254, C4255		CEHAT470M63
C4354, C4355		CEHAT470M63

RESISTORS

⚠ R4169, R4269, R4369	(0.18 Ω/5W)	ACN7121
⚠ R4181, R4182, R4281, R4282	(0.047 Ω)	ACN7132
⚠ R4381, R4382, R4481	(0.047 Ω)	ACN7132
R4574		RD1/2VM1R0J
R4155, R4255, R4355		RN1/10SE1201D
R4162, R4262, R4362		RN1/10SE3302D
Other Resistors		RS1/16S###J

OTHERS

CN4552	11P SOCKET	AKP7069
CN4551	13P SOCKET	AKP7070
CN4553	2P CONNECTOR	B02B-XASK-1
CN4452	6P PLUG	KM250NA6L
KN4403, KN4404	WRAPPING TERMINAL	VNF1084

V POSI 1 R ASSY

OTHERS

J4551	2P CONNECTOR ASSY	ADX7471
⚠ TH4503	POSISTOR	PTFM04BD222Q2N34B0

W REGULATOR ASSY

SEMICONDUCTORS

IC2511		NJM2100M
⚠ IC2506, IC2507		NJM78M05FA
⚠ IC2510		NJM78M09FA
⚠ IC2501		NJM78M12FA
⚠ IC2503		NJM78M56FA
⚠ IC2504		NJM79M05FA
⚠ IC2502		NJM79M12FA
⚠ D2501-D2504, D2514,D2515		1SR154-400
D2513		1SS355
⚠ D2507, D2521		D3SBA20(B)
D2505, D2506, D2511, D2512		RB501V-40
D2527-D2529, D2532, D2533		UDZS6R2(B)

CAPACITORS

C2517, C2518		CEANP102M16
C2545, C2546		CEAT100M50
C2515, C2516, C2527, C2536		CEAT101M16
C2525		CEAT221M16
C2509, C2510		CEAT221M25
C2512		CEAT222M16
C2529		CEAT222M35
C2511		CEAT332M16
C2501, C2502		CEAT332M25
C2530		CEAT470M35
C2537		CEAT470M50
C2523		CEAT472M16
C2541, C2542		CEAT4R7M50
C2507, C2508, C2513, C2514, C2521		CKSRYB103K50
C2524, C2526, C2539, C2547, C2555		CKSRYB103K50
C2553, C2554		CKSRYB104K25

RESISTORS

All Resistors		RS1/16S###J

OTHERS

2502	4P CABLE HOLDER	51048-0400
2503, 2504	5P CABLE HOLDER	51048-0500
CN2505	7P JUMPER CONNECTOR	52147-0710
H2501-H2504	FUSE CLIP	AKR7001
CN2514	17P PLUG	KM200TA17
CN2525	4P PLUG	KM200TA4
CN2503	7P PLUG	KM200TA7
2507	PCB BINDER	VEF1040
KN2501, KN2502	WRAPPING TERMINAL	VNF1084
CN2501, CN2527	13P PLUG	XKP3066
CN2526	15P PLUG	XKP3067
CN2502	17P PLUG	XKP3068
CN2521	19P PLUG	XKP3069
CN2511, CN2512, CN2515	23P PLUG	XKP3071

X TRANS 2-1 ASSY

SEMICONDUCTORS

⚠ IC2201, IC2202	(7A)	AEK7021
Q2203		RN1901
Q2204, Q2205		UMD2N
⚠ D2216, D2217		1SR154-400
⚠ D2201		S1WB(A)60SD
D2203-D2206		UDZS10(B)
D2207, D2208		UDZS12(B)
D2202, D2215		UDZS13(B)
D2209, D2210		UDZS7R5(B)
D2211-D2214		UDZS8R2(B)

CAPACITORS

C2202, C2203	(0.1μF/100V)	ACE7037
C2215		CEANP470M50
C2209, C2210		CEAT101M63
C2213, C2214		CEAT221M63
C2216		CEAT470M50
C2207, C2208		CEAT471M2A

RESISTORS

⚠ R2207, R2208		RD1/2LMF332J
⚠ R2202, R2203		RD1/4MUF4R7J
R2210		RD1/4MUF681J
⚠ R2205, R2206		RS1LMF472J
Other Resistors		RS1/16S###J

OTHERS

CN2202	4P JUMPER CONNECTOR	52147-0410
CN2205	6P JUMPER CONNECTOR	52147-0610

Mark No.	Description	Part No.
H2201-H2204	FUSE CLIP	AKR7001

Y TRANS 2-2 ASSY

SEMICONDUCTORS

⚠ IC2253 (4A)		AEK7018
⚠ IC2251, IC2252 (10A)		AEK7022

CAPACITORS

C2251-C2253		CQMBA104J50

RESISTORS

⚠ R2251		RD1/4MUF100J
⚠ R2252		RD1/4MUF4R7J

OTHERS

2250	7P CABLE HOLDER	51048-0700

Z DIODE ASSY

SEMICONDUCTORS

⚠ D2241, D2242		D5SBA20(B)

AA VH TR ASSY

SEMICONDUCTORS

⚠ Q2231		2SA1514K
⚠ Q2233		2SA1837D1
⚠ Q2232		2SC3906K
⚠ Q2234		2SC4793D1
⚠ D2231, D2232		1SR154-400

RESISTORS

All Resistors		RS1/16S###J

OTHERS

2205	6P CABLE HOLDER	51048-0600

AB SP/PS ASSY

SEMICONDUCTORS

Q2001-Q2005		DTC114TUA
D2001-D2010		1SS355

COILS AND FILTERS

L2001-L2007	AF CHOKE COIL (1.5μH)	ATH1053

SWITCHES AND RELAYS

RY2001-RY2005		XSR3009

CAPACITORS

C2051, C2052	(15000μF/71V)	ACH7218
C2023		CEAT101M50
C2001-C2014		CFTLA224J50
C2025-C2029		CKSRYB102K50
C2015-C2019, C2021, C2022		CQMBA103J50

RESISTORS

R2051, R2052		RD1/4MUF473J
⚠ R2008-R2014		RS1/2LMF4R7J
⚠ R2001-R2007		RS1LMF2R2J
⚠ R2015, R2016		RS2LMF331J

OTHERS

2005	4P CABLE HOLDER	51048-0400
CN2004	12P FFC CONNECTOR	52045-1245
CN2113	6P SPEAKER TERMINAL	AKE7107
CN2114, CN2115	4P SPEAKER TERMINAL	AKE7109
CN2003, CN2006	5P PLUG	KM200TA5

AC REAR TOP ASSY

SEMICONDUCTORS

Q951		2SD1858X
D951, D953		1SS355
D952		UDZS10(B)

COILS AND FILTERS

L951–L955	CHIP SOLID INDUCTOR	QTL1013

CAPACITORS

C956		CEAT101M16
C957		CKSRYB103K50
C953, C958		CKSRYB104K25

RESISTORS

All Resistors		RS1/16S###J

OTHERS

CN955	12P FFC CONNECTOR	52044-1245
CN953	17P FFC CONNECTOR	52044-1745
CN954	11P FFC CONNECTOR	52045-1145
CN951, CN952	23P SOCKET	AKP7075
951	SCREW PLATE	VNE1948
JA951, JA952	4P MINI JACK + SW	XKN3015

AD TRANS SIDE ASSY

OTHERS

2302	4P CABLE HOLDER	51048-0400
2303	7P CABLE HOLDER	51048-0700
CN2304	4P JUMPER CONNECTOR	52147-0410
CN2302	7P JUMPER CONNECTOR	52147-0710

AE TRANS 1 ASSY

TRANS 1 Assy has no service parts.

AF PRIMARY ASSY

SEMICONDUCTORS

⚠ IC1001		NJM78M56FA
Q1001		DTC143EUA
D1002, D1004, D1005		1SS355
⚠ D1001		S1WB(A)60SD
D1003		UDZS5R1(B)

COILS AND FILTERS

⚠ L1001	LINE FILTER (0.3mH)	XTF3004

TRANSFORMERS

⚠ T1001		ATT7043

SWITCHES AND RELAYS

⚠ RY1001		XSR3003

CAPACITORS

⚠ C1002	(0.01 μF/275V)	ACE7013

Mark No.	Description	Part No.
	C1008	CEAT102M25
	C1009	CEAT221M25
	C1004	CQMBA103J50
⚠	C1003 (10000 pF/250V)	XCG3009

RESISTORS

⚠	R1001 (2.2MΩ)	RCN1080
	R1002	RD1/2VM221J
	Other Resistors	RS1/16S###J

OTHERS

⚠	1004 1P AC OUTLET	AKP1033
	H1001, H1002 FUSE CLIP	AKR7001
	CN1002, CN1003 5P SOCKET	KP200TA5L
⚠	CN1001 AC CORD SOCKET	RKP1751
	1003 SCREW PLATE	VNE1948
	KN1001 WRAPPING TERMINAL	VNF1084

FM/AM TUNER UNIT

FM/AM TUNER UNIT has no service part.

6. ADJUSTMENT

There is no information to be shown in this chapter.

7. GENERAL INFORMATION

7.1 DIAGNOSIS

7.1.1 PROTECTION CIRCUIT CONTROL SPECIFICATION

Microcomputer-related ports

DC_PROT (pin 74 of IC501: MAIN CONTROL Assy)
Input port : For DC detection
OL_DET (pin 73 of IC501: MAIN CONTROL Assy)
Input port : To detect overloading at the amplifier (Interrupt port)

FAN_STOP (pin 92 of IC501: MAIN CONTROL Assy)
Input port : To detect Fan forced stop
FAN_DRIVE (pin 91 of IC501: MAIN CONTROL Assy)
: For Fan on/off
TEMP2 (pin 44 of IC3001: DISPLAY Assy)
Input port : To detect temperature

The following control processes are activated immediately before the relay system is turned on upon power-on. The time is 4.8 seconds after power-on. (Control of the relay system is enabled 5.2 seconds after power-on.)
Only DC detection is enabled 2 seconds after power-on to activate it before other protection functions.

① DC detection (defect detection)

Only DC detection is enabled 2 seconds after power-on.
If there is a fault in the power amplifier or a high-level signal lower than5 Hz is input, the DC_PROT port becomes "L"
Detecting "L" the microcomputer performs the following operations:

1. System muting on
2. Speaker relay off (Control with the display microcomputer)

The warning indication "AMP ERR" appears on the FL display.

If this status continues for more than 3 seconds, the power is turned off (for Standby mode).
Do not accept the key input afterward.
(Flash it always till turns the primary side off.)
If the port becomes "H" within 3 seconds, the unit resets automatically.

DC_PROT port performs the chattering check for 1 msec.
In addition, there is the case that detection delays for maximum 20 msec because performs monitor of DC_PROT port with a main loop.
Even if turns the primary side off and turns on once again.
If detects DC once and turned the power off, do not accept the key input afterward.
However, power on is possible when the following key was pressed to be able to key input in the protection line and service.

1. Test mode (remote control code : A55F)
2. When the ENTER key and VIDEO 2 key are both held pressed for 2 seconds.
   (Be effective when turned the power off by DC detection regarding 2.)

② Overload detection (abnormality detection)

If the speaker terminals are short-circuited or low-load driving is detected, the OL_DET port becomes "L"
Detecting "L" edge interrupt in an interrupt process, the microcomputer performs the following operations:

1. System muting on
2. Speaker relay off (Control with the display microcomputer)
3. Power off (Standby mode)

③ Diagnostic mode

This mode is only for servicing and checking the circuit design, and not open to users.
When the VIDEO 1 key and ENTER key are both held pressed for 2 seconds in Standby mode, the power is turned on, and the number of times of each defect or Speaker relay off by abnormality detection is sequentially displayed on the FL display.

Displayed items:

- DC detection
- Overload detection
- Fan detection
- Temperature detection

Hold the VIDEO 1 key and ENTER key pressed for 2 seconds in Standby mode.

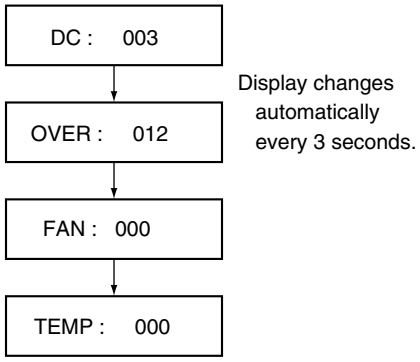

● Protection Process List

Item	Detection Method	Process	Warning Indication	Remarks
DC detection	Detects when the DC_PROT port becomes "L".	Turns muting on and speaker relay off, then turns off the power after 3 seconds.	Flashing "AMP ERR" for 3 seconds.	If the power is turned off, flashes the MCACC LED. Do not accept the POWER key. If the DC_DET port becomes "H" within 3 seconds, the unit resets automatically.
Overload detection	Detects when the OL_DET port becomes "L" (checks by interrupt).	Turns muting on and speaker relay off, and immediately turns off the power.	None	
Thermal shut down	Detects when the TEMP2 port becomes "H".	Turns muting on and speaker relay off, then turns off the power after 3 seconds.	Flashing "OVERHEAT" for 3 seconds	If the TEMP2 port becomes "L" within 3 seconds, the unit resets automatically. After the power off, the key input is possible once again.

• DC Detection circuit

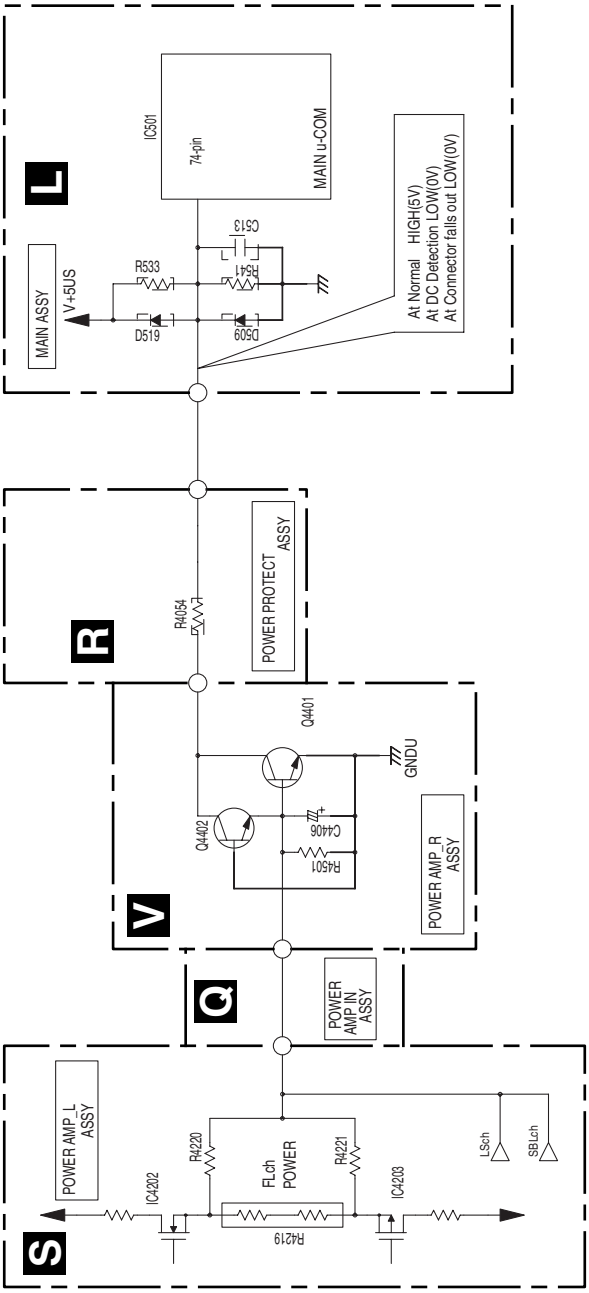

• Overload Detection circuit

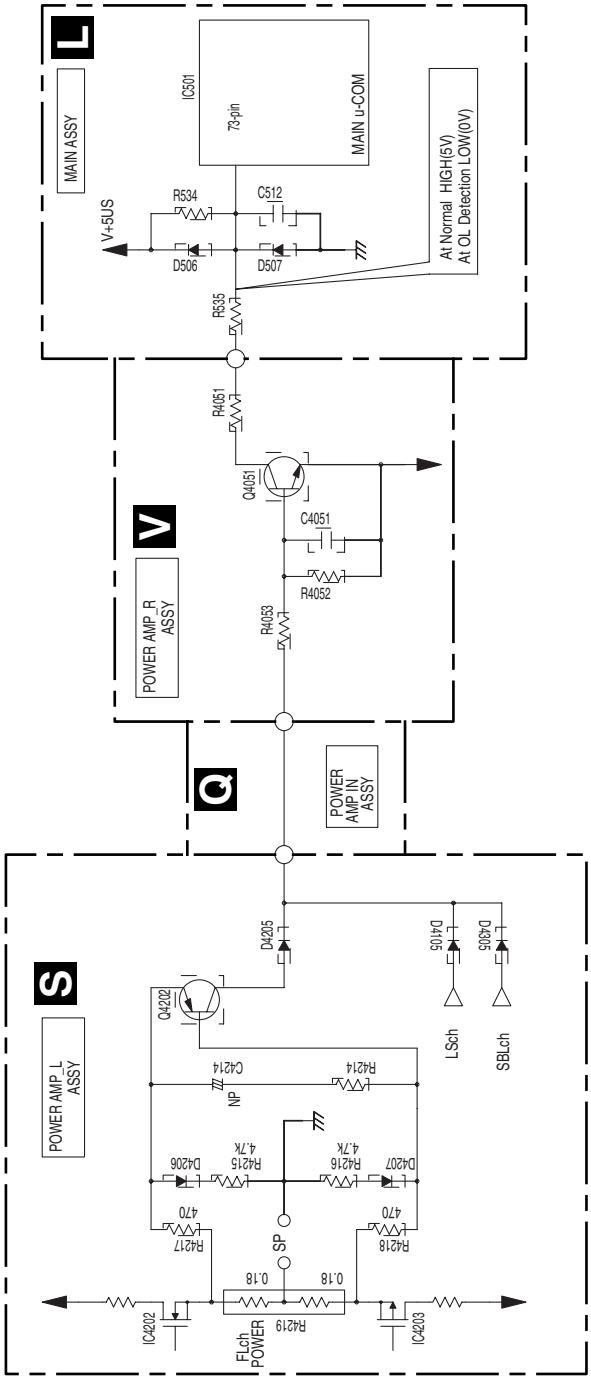

7.1.2 HOW TO DIAGNOSE THE AMPLIFIER SECTION

When DC detection worked (MCACC LED flashes for a long time) in the protection circuit of foregoing section (or there is not the speaker output, probably only 1CH), failure (damage) of the power amplifier section is considered.

Because this receiver cannot diagnose the amplifier section by an electricity state by structure, please diagnose it in the following steps.

Caution:
When release the STBY (MCACC LED flashes) state before repair, Because there is the case that the damage progresses when turns the power on once again, please be careful.

- According to a symptom, perform the following confirmation beforehand.

1. Are not Fuse and IC protector opening it?
2-a. When can turn on electricity, confirm that supply voltage of the point that can measure is appropriate.
2-b. Furthermore, confirm that voltage ((in a no signal) DC and the appropriate signal output) between GND and R2008-R2014 on the SP/PS Assy (Either of the amplifier side and the speaker terminal side is possible) (Or remove either of CN2101-2104) on the SP/PS Assy. And limit failure CH.

If was able to limit failure CH, diagnose the CH in the following steps.

- **Use the tester basically and check that each part is not damaged (resistance value / open / short circuit).**

About parts with damaged possibility, explain FL ch to an example in order.

1. R4231, R4232 (ACN7132: 0.047 Ω, 0.5W chip drain resistor)
   IC 4202, IC4203 (SAPM01N: Nch, SAPM01P: Pch output POWER MOS Tr.) /POWER AMP-L Assy

2. R4219 (ACN7121: 0.18 Ω .5W ×2 cement source resistor)
   R4217, R4218 (RS1/16S471J: 470 Ω chip resistor for protection circuit)
   D4201, D4203 (UDZS10B: 10V Zener diode for current limiting)
   D4202, D4204 (1SS355: Small signal diodes same as above)
   R4210, R4211 (RS1/16S560J: 56 Ω chip gate resistor)
   R4206, R4207 (RS1/16S101J:100 Ω chip IC4101 power filter resistor) /POWER AMP-L Assy

3. IC4201 (PA9010A: Power amplifier with output current bias Voltage step HIC) /POWER AMP-L Assy

4. Q2231 (2SA1514K) /VH TR Assy
   Q2232 (2SC3906K) /VH TR Assy
   Q2233 (2SA1837D1) /VH TR Assy
   Q2234 (2SC4793D1) /VH TR Assy

7.1.3 HOW TO DIAGNOSE THE UNIT WITH THE POWER AMPLIFIER SECTION REMOVED

Purpose:

When repairing this unit, the large Heat Sink Block obstructs access to some Assys.
If the Heat Sink Block is removed, as the posistor mounted on it is also disconnected, the protection circuit is activated, which disables failure diagnosis of these Assys while the unit is powered. With the method explained here, the Assys that cannot be diagnosed while the unit is powered because of the Heat Sink Block can be diagnosed by creating an artificial status of the posistor's being connected (by connecting a 100-ohm resistor under normal temperature).

Note: Use this method for diagnosing a failure other than possible failures inside the Heat Sink Block, such as those shown in the table below:

Symptoms that are highly suspected to be failures inside the Heat Sink Block	Possible causes
① No power with the MCACC LED flashing	DC detection has been activated to prevent further damage to the unit. Note: Refer to "7.1.2 How to diagnose the Amplifier Section" in the service manual.
② The unit turns itself off after "AMP ERR" was displayed on the FL display. Then it goes into state ① above.	
③ "OVERHEAT" is displayed on the FL display under normal temperature, then the unit turns itself off.	The peripheral circuits of the posistor inside the Power Amplifier Section are in failure. Note: A posistor is a kind of thermistor, and its resistance is approx. 100 ohms at normal room temperature.
④ The unit turns itself off without any indication on the FL	Overloaded amplifier, failure in the overload-detection circuit inside the Power Amplifier Section, etc.
⑤ "FAN STOP" is displayed on the FL display, then the unit turns itself off.	Disconnection of the Fan connector, failure in the fan. (Only for the models for Europe and those for other than North America and Japan)

Procedures:

① Remove the bonnet and center beam.

② Remove all the wires from the wire saddle.

③ Disconnect all six connectors connected between the Amplifier Assy and the SP/PS Assy.

• Remove the wires.

④ Disconnect the parallel wires from the connector CN2201. (If the wires are not easily disconnected, disconnect them with the connector attached, using a vacuum desoldering tool.)

⑤ Remove the eight screws that secure the Amplifier section.

• Disconnect the parallel wires.

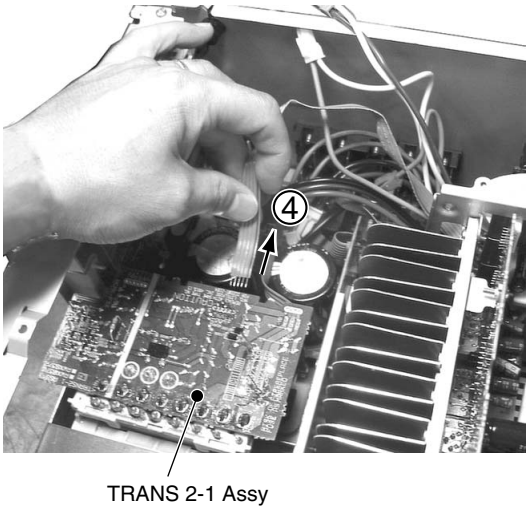

⑥ Remove the Power Amplifier, leaving the POWER PROTECT Assy intact.
- In this case, you can easily remove the Power Amplifier if the FFC cable connecting the POWER PROTECT Assy and the MAIN CONTROL Assy has been disconnected on either side.
- When removing the POWER PROTECT Assy, pull out the Assy while pushing on the board at the center from the rear side, for easier removal with less stress on the connector.

• Remove the POWER PROTECT Assy.

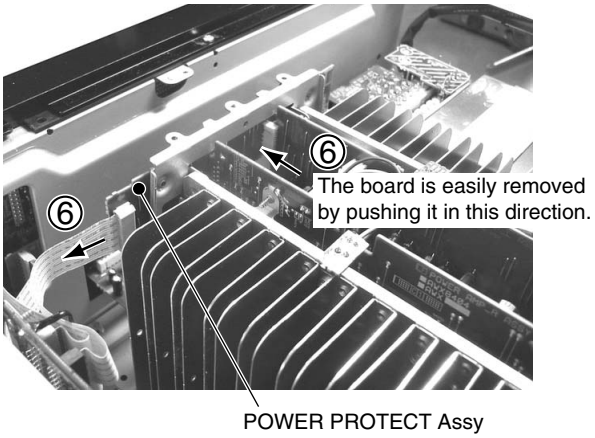

⑦ Jump with 100-ohm resistors in the following three places on the POWER PROTECT Assy:
ⓐ Between Pin 4 and Pin 5 of CN4052
ⓑ Between Pin 5 and Pin 6 of CN4052
ⓒ Between Pin 8 and Pin 9 of CN4051

• Jump with resistors.

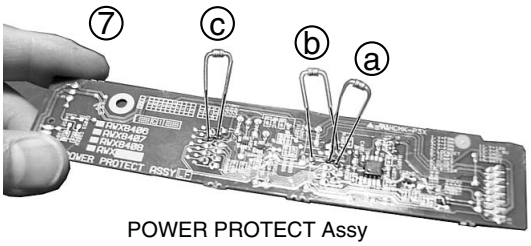

⑧ Secure the POWER PROTECT Assy so that it will not come into contact with metallic parts of the unit, such as the chassis. Then connect the POWER PROTECT Assy with the MAIN CONTROL Assy using an FFC cable and turn on the power. The unit will be turned on without the protection circuit activated.

• Turn on the power.

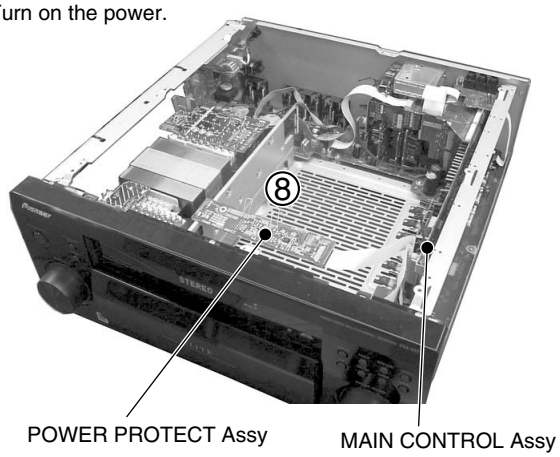

⑨ After finishing diagnoses, remove the three resistors inserted in Step ⑦, and before returning the Power Amplifier to its original position, discharge the electrolytic capacitors in the places shown in the table below.

- If connection is made without discharging the electrolytic capacitors, the resistors may be damaged by a surge of current.
- Discharge the electrolytic capacitor using a resistor, not by short-circuiting it. Using a tester, etc., completely discharge it until there is no remaining voltage.

Places to be discharged	Discharging methods
SP/PS Assy: C2051, C2052	Jump with a discharging resistor in CN2002 of the SP/PS Assy. (Photo 1)
POWER AMP L Assy: C4401, C4402	Jump with a discharging resistor on the connector side of CN2002 of the POWER AMP-L Assy. (Photo 2)
POWER AMP R Assy: C4403, C4404	While you still have CN2002 of the SP/PS Assy jumped with a discharging resistor, reconnect the connector to CN2001 of the SP/PS Assy. (Photo 2)
TRANS 2-1 Assy: C2213, C2214	Jump between each capacitor and ground. (Photos 3 and 4)

● Discharging resistors

In a case when one resistor is used

Wattage (W)	3	2	1
Recommended constant to be used (ohms)	3300	4700	10000
Miscellaneous			
Three-wire lead	ADX7404		
Three-core connector	RKP1751		

• **Discharging resistors**

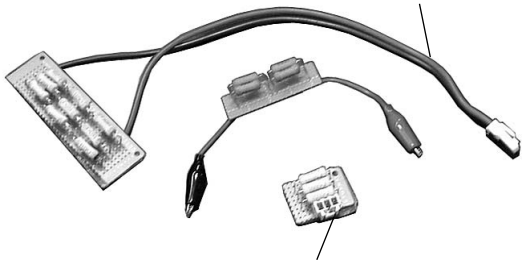

Photo 1: Discharging ±VL (SP/PS Assy: C2051, C2052)

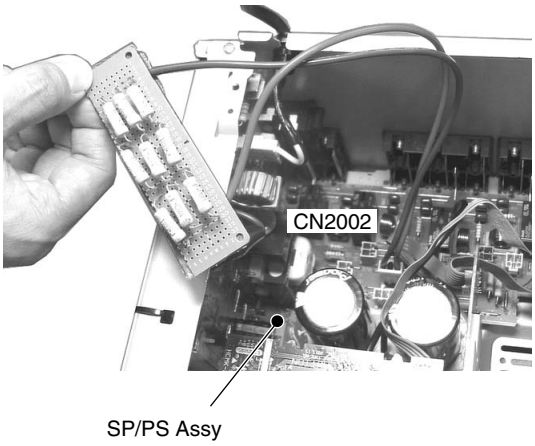

Photo 2: Discharging ±VL inside the POWER AMP-L and R Assys
Discharging of C4403 and C4404 of the POWER AMP-R Assy is also possible by reconnecting the connector to CN2001 of the POWER AMP-R Assy while keeping the discharging resistor connected to CN2002 of the SP/PS Assy connected.

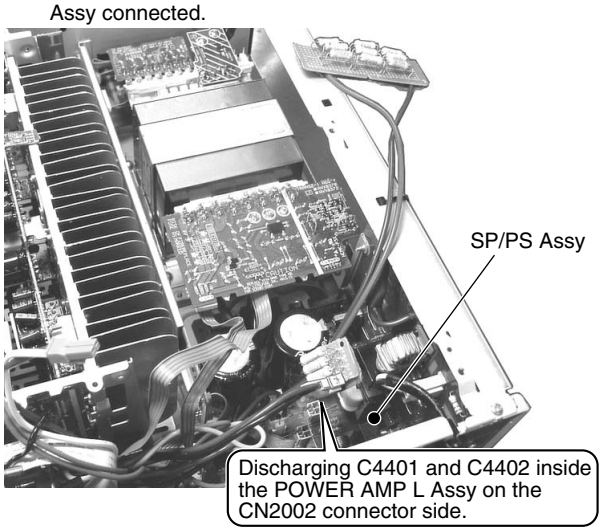

Photo 3: Discharging +VH (TRANS 2-1 Assy: C2213)

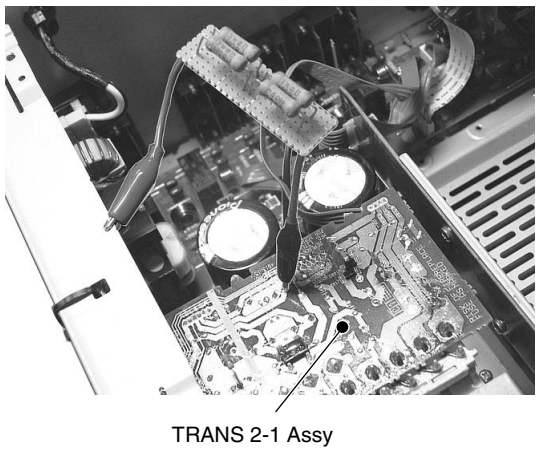

Photo 4: Discharging -VH (TRANS 2-1 Assy: C2214)

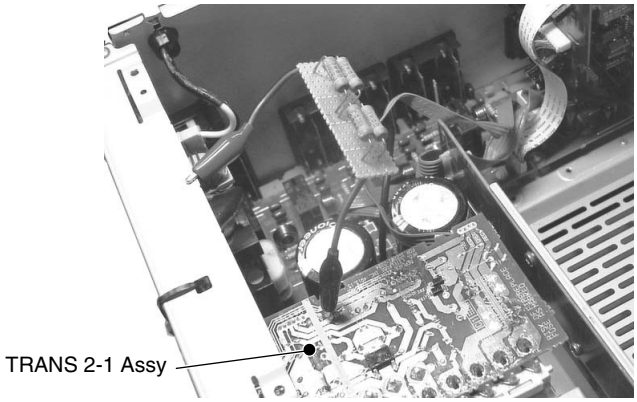

⑩ Reassemble the unit by following Steps ①-⑤ in reverse.

• When reconnecting the parallel wires to the connectors or reinserting the connectors, be careful of the direction.
If a wire is connected to the wrong side of the connector, or if the five wires are not connected correctly, the resistors may be damaged.

• Direction of wires

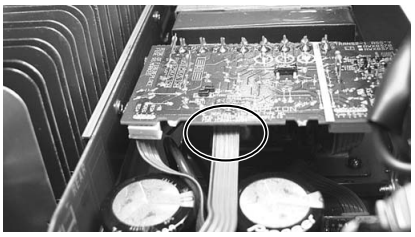

7.1.4 DISASSEMBLY

Note: Even if the unit shown in the photos and illustrations in this manual may differ from your product, the procedures described here are common.

1 Bonnet Case V1B and Heatsink Section

① Remove the bonnet case V1B by removing the twenty screws.
② Remove the two screws.
③ Remove the eight screws.
④ Disconnect the seven connectors.
⑤ Disconnect the two flexible cables.
⑥ Remove the heatsink section.

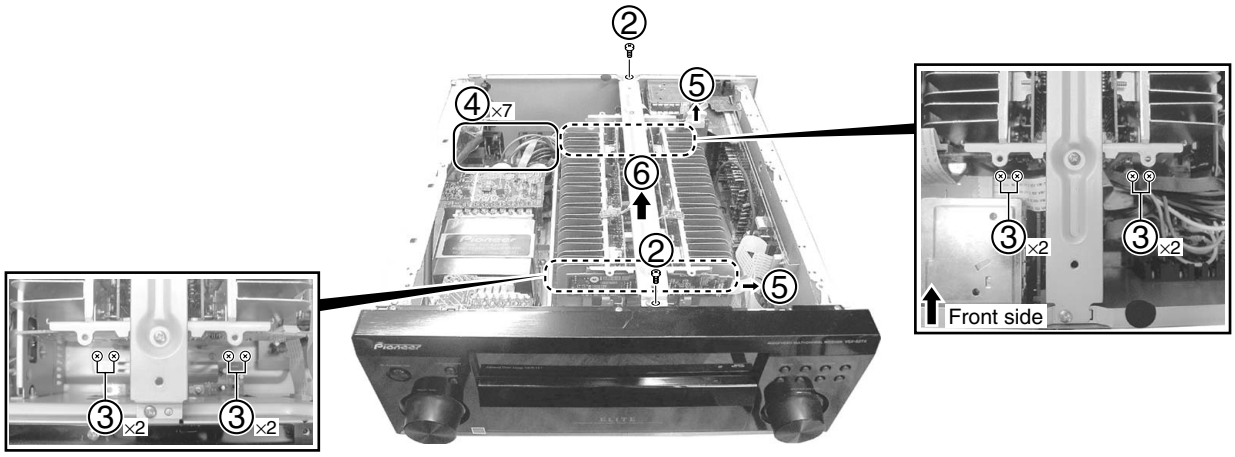

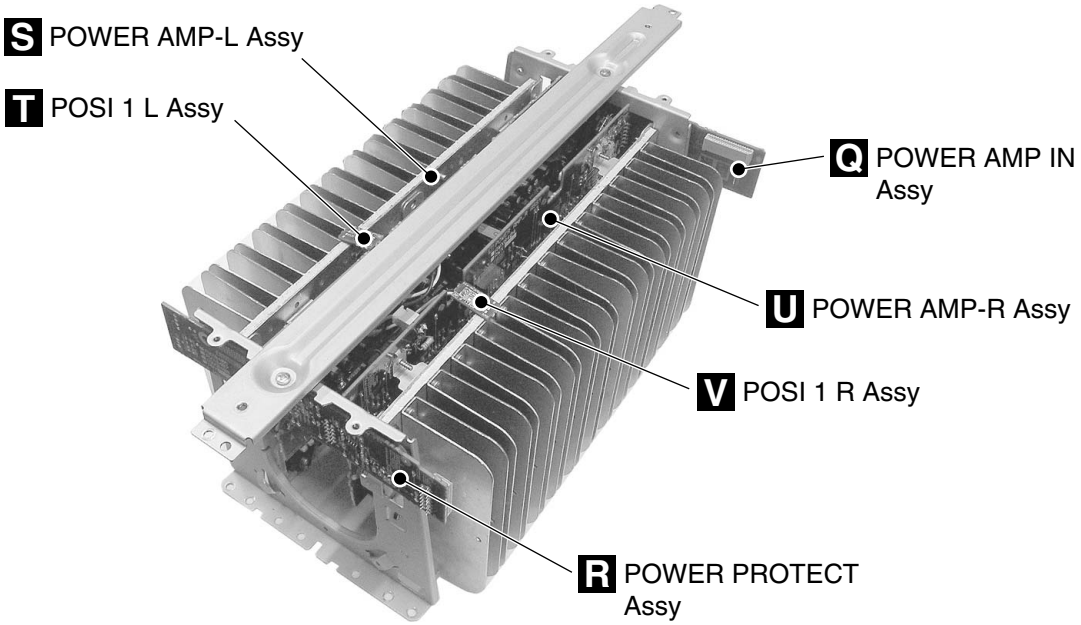

2 Front Panel Section

① Remove the six screws.
② Disconnect the two flexible cables.
③ Remove the four screws.
④ Unhook the two hooks.
⑤ Remove the front panel section.
⑥ Disconnect the one connector.

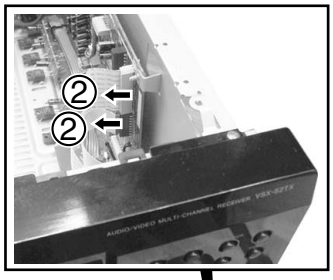

• Top view

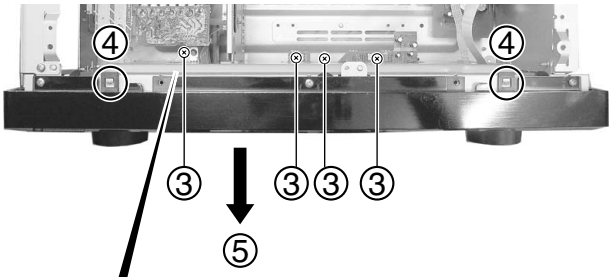

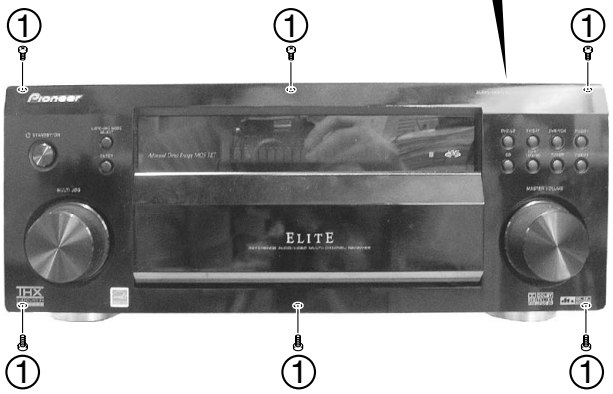

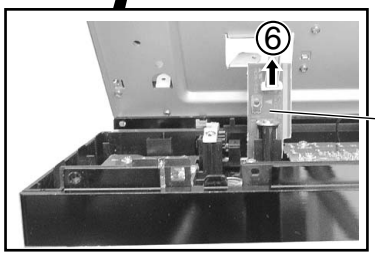

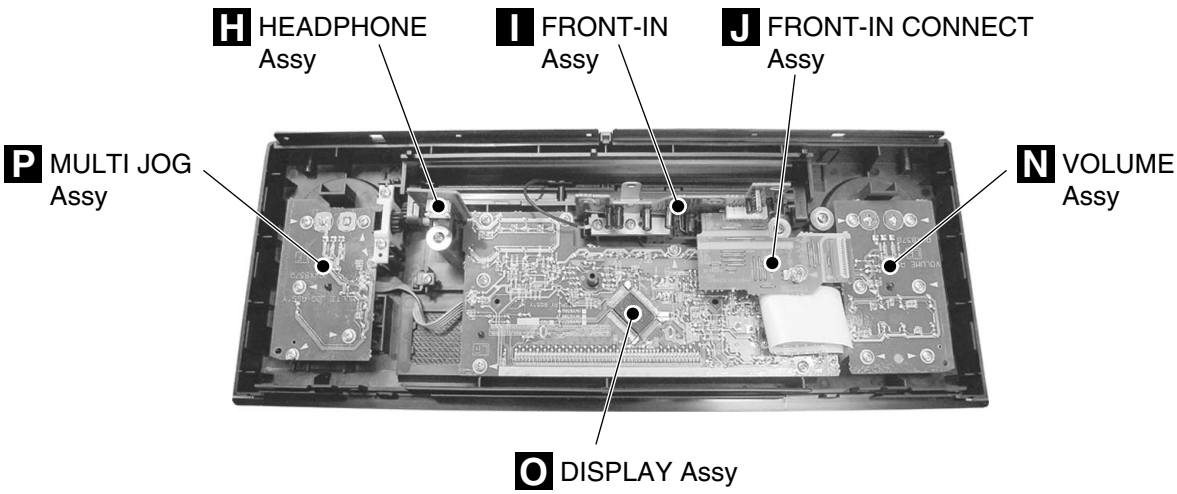

3 Rear Panel and Main Sections

① Remove the seven screws.
② Remove the three screws.

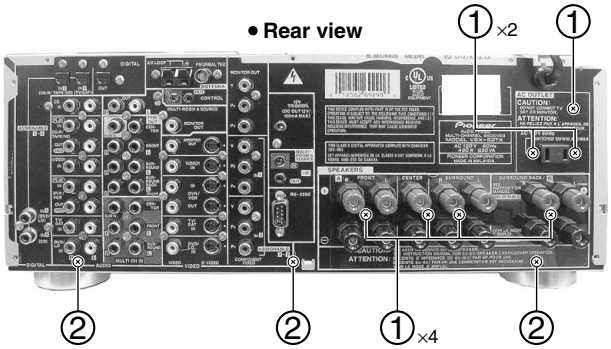

③ Remove the one screw.
④ Disconnect the one connector.
⑤ Remove the three screws.
⑥ Remove the five screws.
⑦ Remove the locking card spacer.
⑧ Disconnect the two connectors and the one flexible cable.

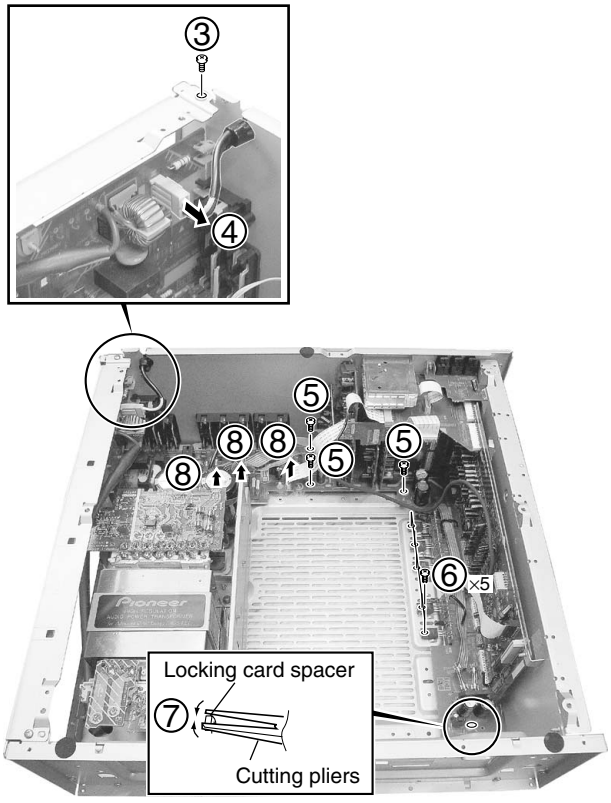

⑨ Remove the two screws.
⑩ Remove the three screws.
⑪ Remove the two screws.

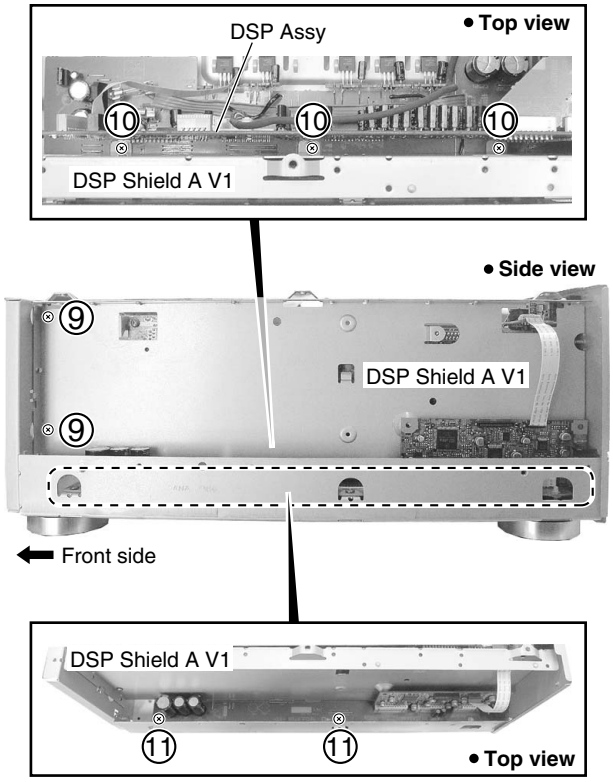

⑫ Remove the rear panel section with the main section.

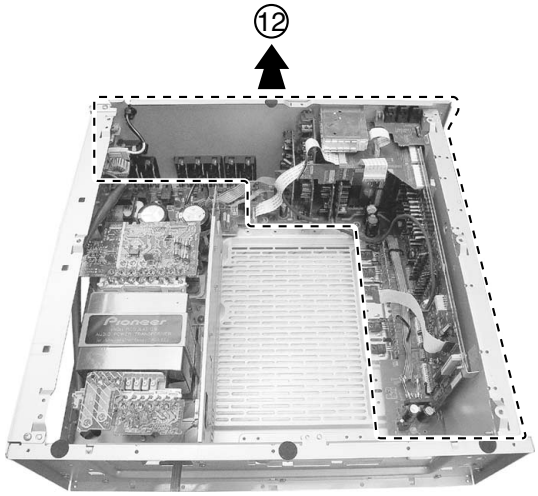

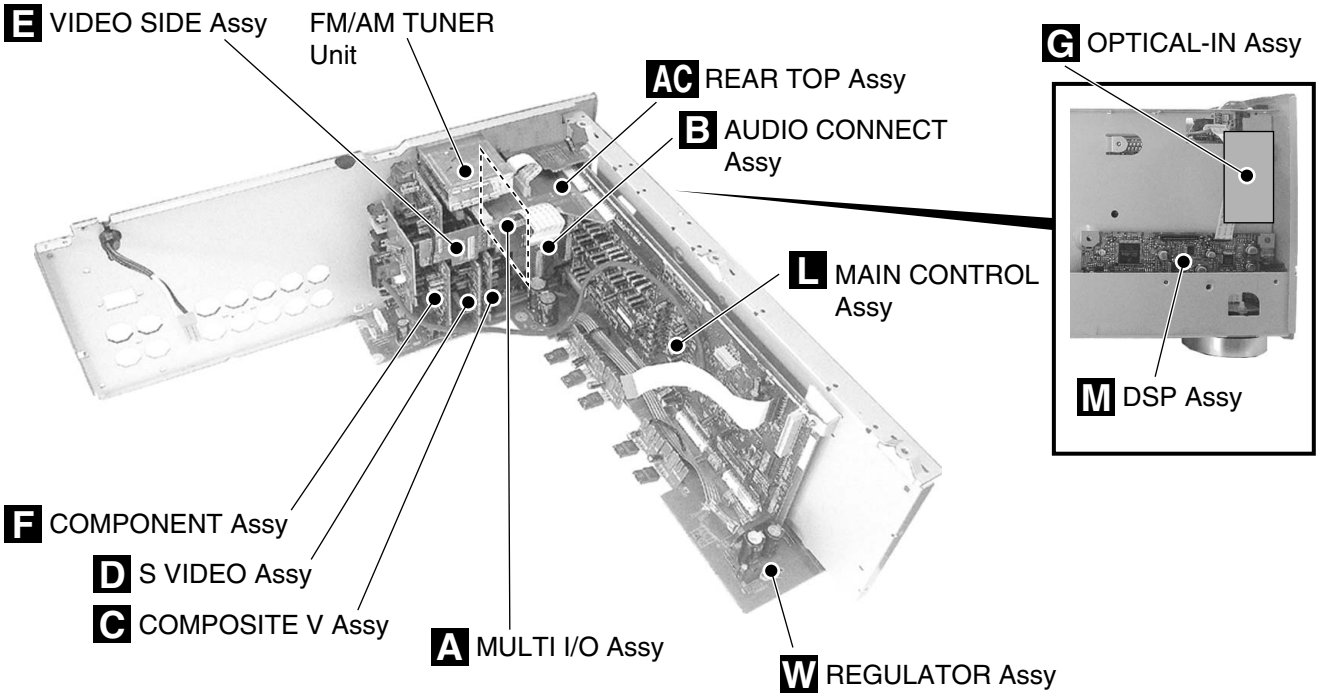
E VIDEO SIDE Assy
FM/AM TUNER Unit
AC REAR TOP Assy
B AUDIO CONNECT Assy
G OPTICAL-IN Assy
L MAIN CONTROL Assy
M DSP Assy
F COMPONENT Assy
D S VIDEO Assy
C COMPOSITE V Assy
A MULTI I/O Assy
W REGULATOR Assy

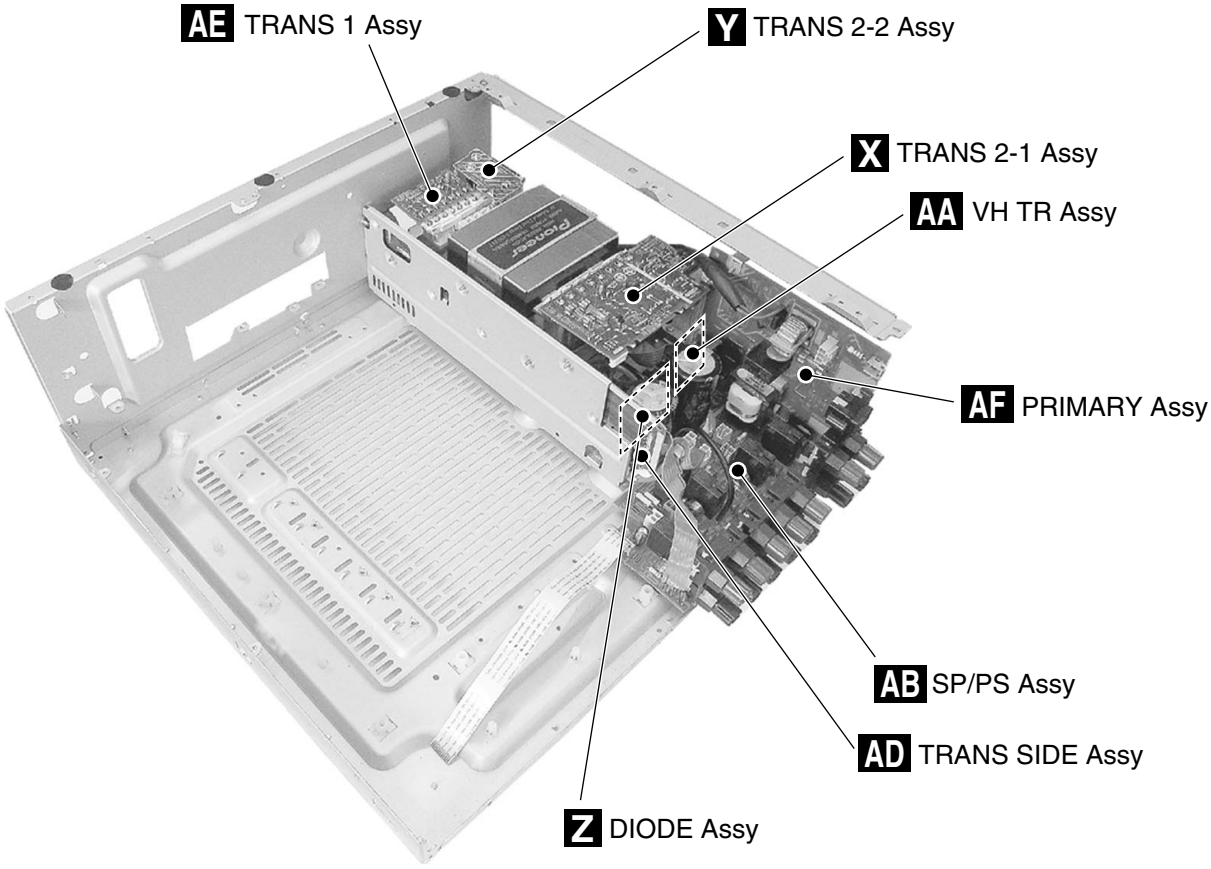
AE TRANS 1 Assy
Y TRANS 2-2 Assy
X TRANS 2-1 Assy
AA VH TR Assy
AF PRIMARY Assy
AB SP/PS Assy
AD TRANS SIDE Assy
Z DIODE Assy

7.1.5 TROUBLE SHOOTING OF THE DSP ASSY

- **When a sound is not out in the multi-channel signal playback or surround mode with the digital signal input.**
  (SurroundBack is not out with the setting.)
- Suppose CR to be poor contact and that is not damaged.
- This shows failure analysis of DSP Assy.

Step 0: Preliminary check

- Tighten the COAX Jack screws.
  (GND of the DSP module floats from the chassis. And this unit may not work normally, because the electric potential becomes unstable.)

Step 1: Mute pin

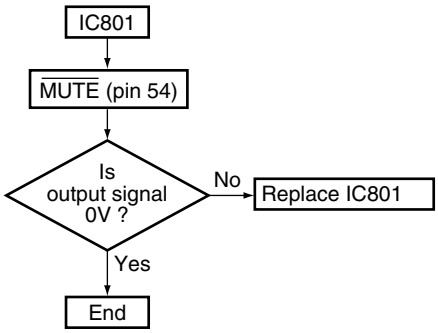

Step 2: B to B connector

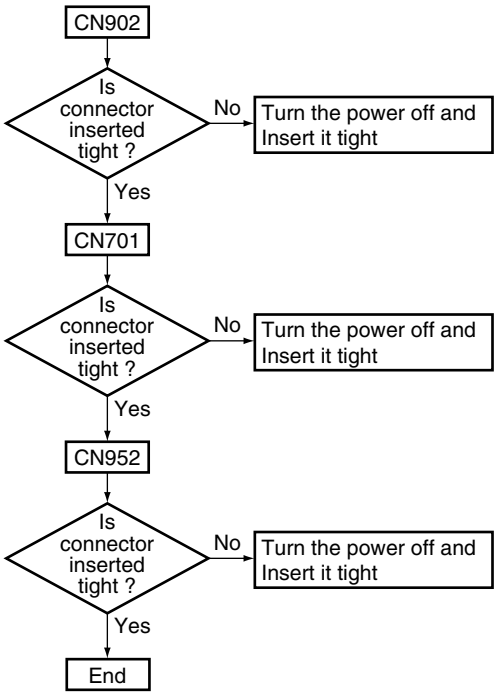

Step 3: Regulator IC

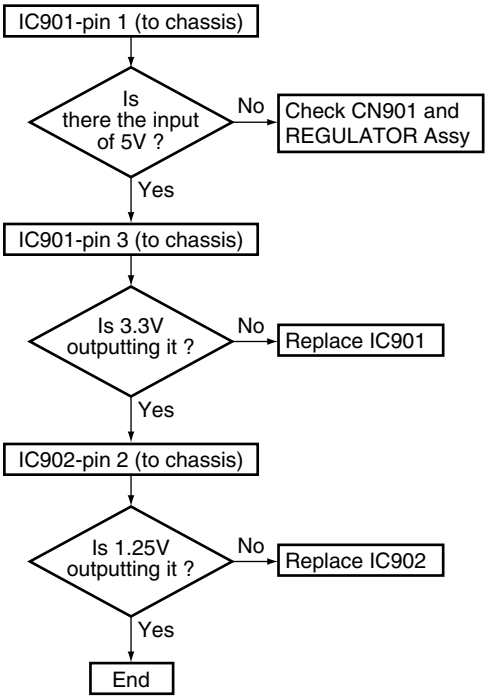

Step 4: 3 → 5V conversion

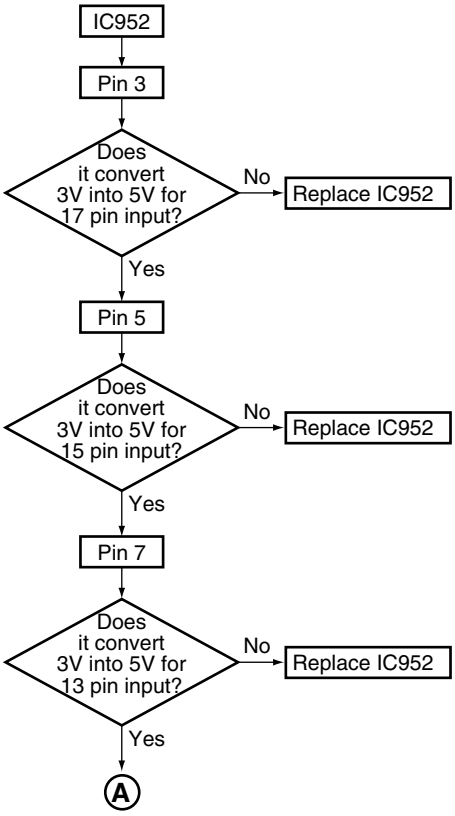

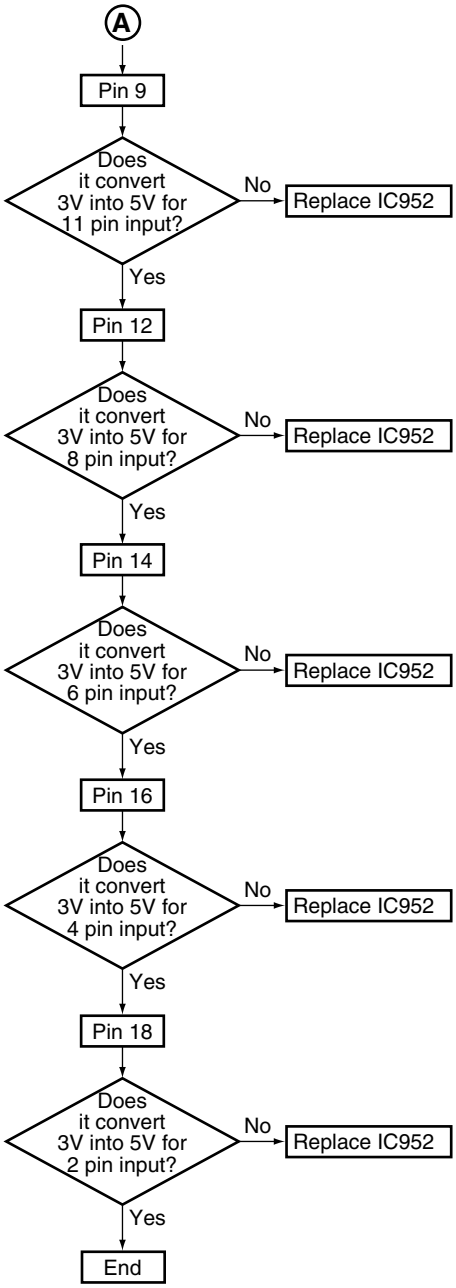
A
Pin 9
Does it convert 3V into 5V for 11 pin input?
No
Replace IC952
Yes
Pin 12
Does it convert 3V into 5V for 8 pin input?
No
Replace IC952
Yes
Pin 14
Does it convert 3V into 5V for 6 pin input?
No
Replace IC952
Yes
Pin 16
Does it convert 3V into 5V for 4 pin input?
No
Replace IC952
Yes
Pin 18
Does it convert 3V into 5V for 2 pin input?
No
Replace IC952
Yes
End

Step 5: DIR

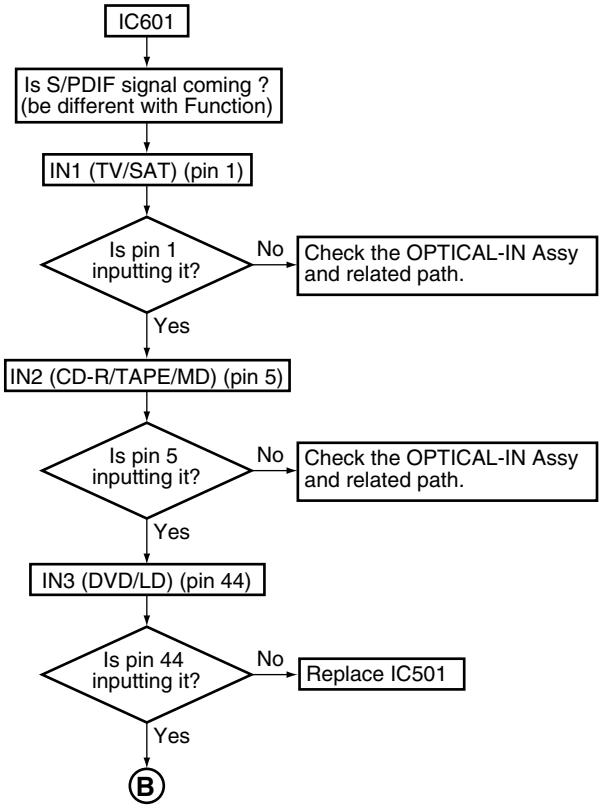
IC601
Is S/PDIF signal coming ? (be different with Function)
IN1 (TV/SAT) (pin 1)
Is pin 1 inputting it?
No
Check the OPTICAL-IN Assy and related path.
Yes
IN2 (CD-R/TAPE/MD) (pin 5)
Is pin 5 inputting it?
No
Check the OPTICAL-IN Assy and related path.
Yes
IN3 (DVD/LD) (pin 44)
Is pin 44 inputting it?
No
Replace IC501
Yes
B

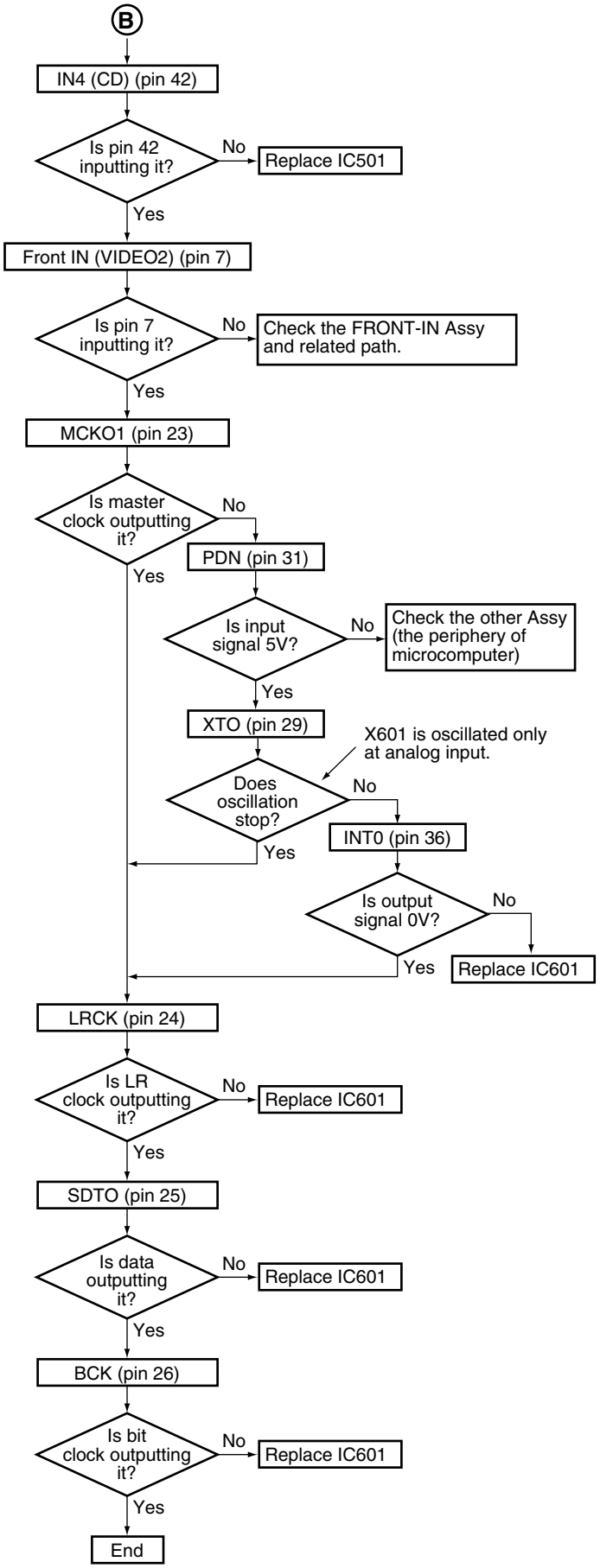

Step 6: X'tal

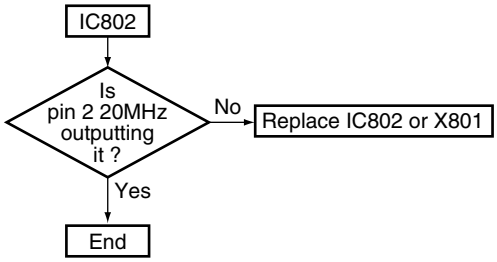

Step 7: DSP output (digital)

- **Digital output of each channel in the digital signal (there is a sound) input.**

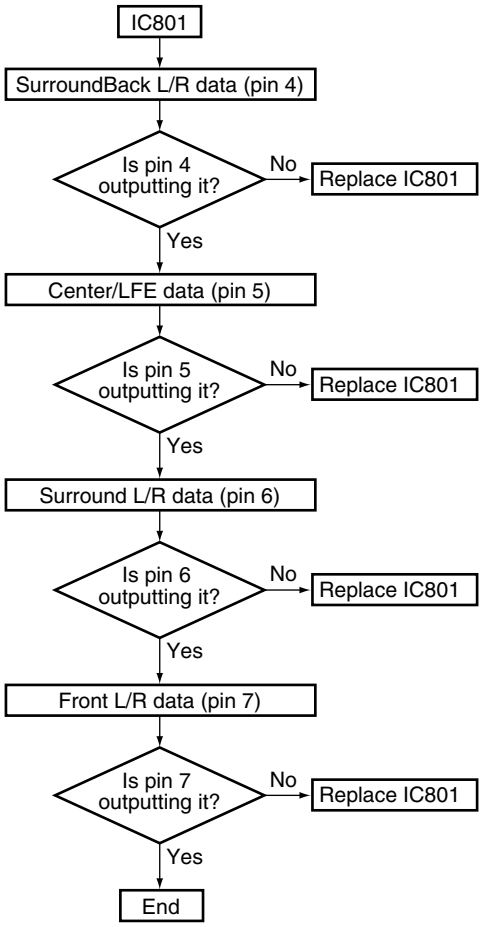

- **Each channel output in the digital signal (–∞ dB (there is no sound)) input.**

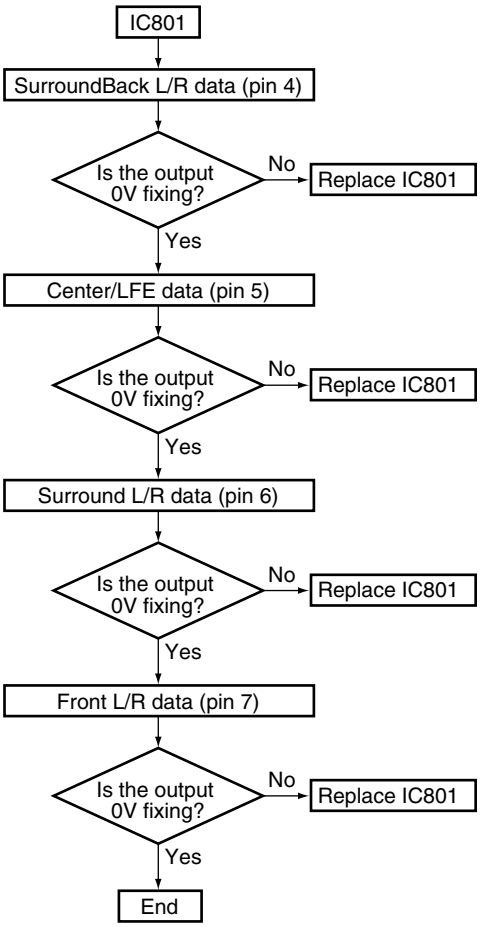

Step 8: Codec output (analog)

- **Analog output of each channel in the digital signal (there is a sound) input.**

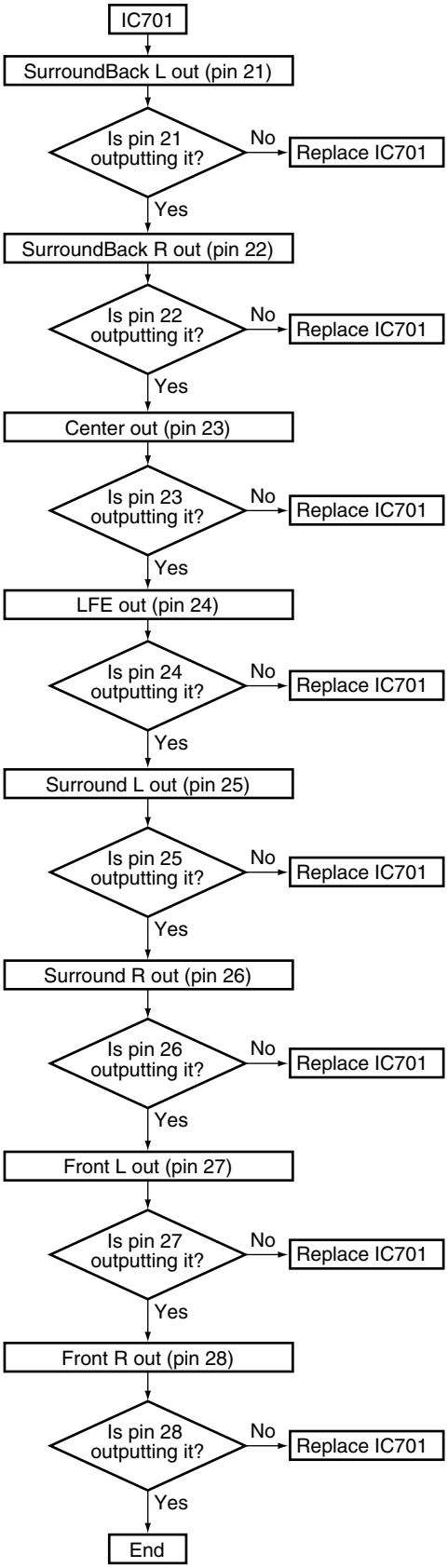

- **Each channel output in the digital signal (–∞ dB (there is no sound)) input.**

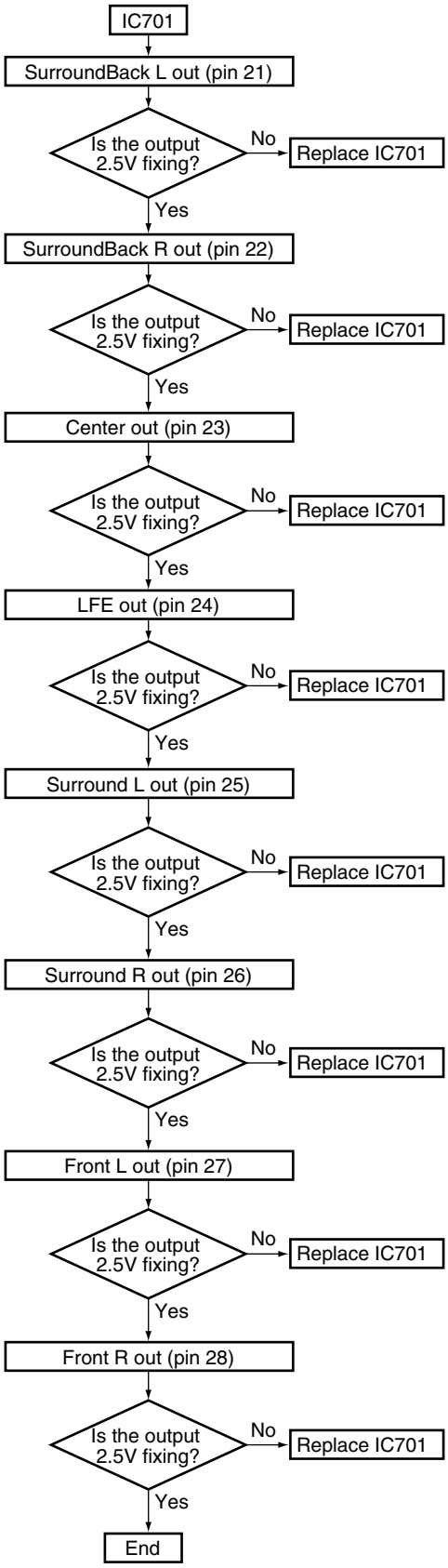

- **When MCACC is turned to ON**
  (SurroundBack is not out with the setting.)
- Suppose CR to be poor contact and that is not damaged.
- This shows failure analysis of DSP Assy.

Step 0: Preliminary check

- Tighten the COAX Jack screws.
  (GND of the DSP module floats from the chassis. And this unit may not work normally, because the electric potential becomes unstable.)

Step 1: Mute pin

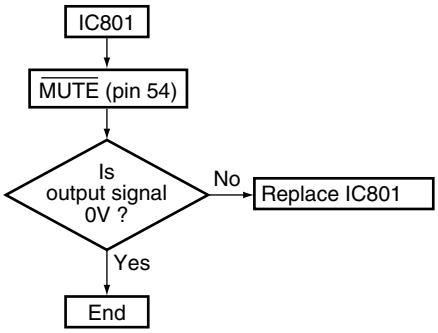

Step 2: B to B connector

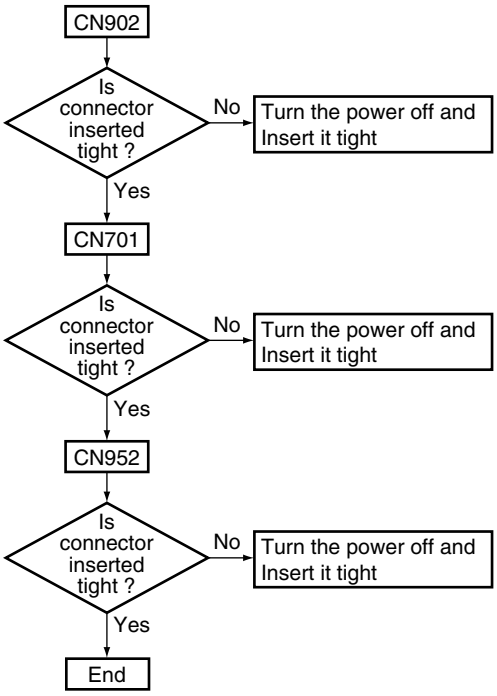

Step 3: Regulator IC

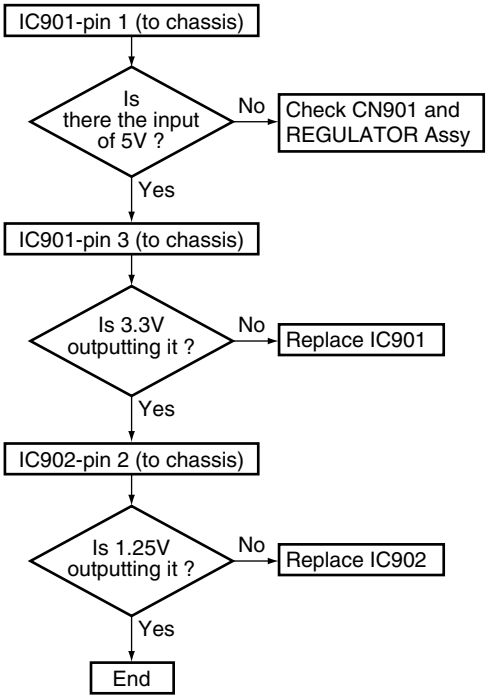

Step 4: 3 → 5V conversion

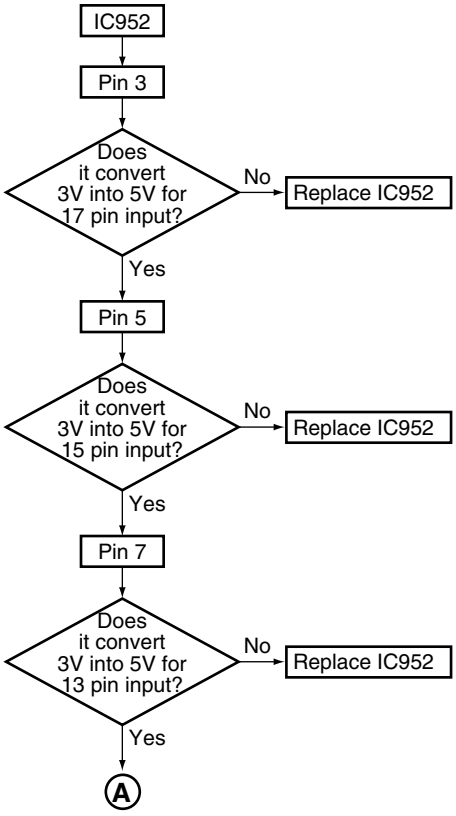

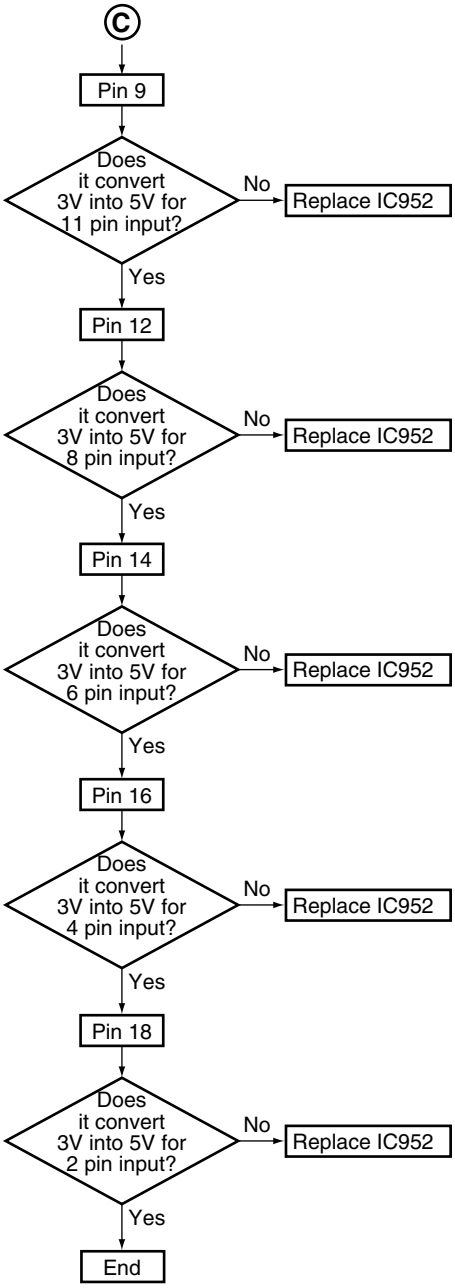
C
Pin 9
Does it convert 3V into 5V for 11 pin input?
No
Replace IC952
Yes
Pin 12
Does it convert 3V into 5V for 8 pin input?
No
Replace IC952
Yes
Pin 14
Does it convert 3V into 5V for 6 pin input?
No
Replace IC952
Yes
Pin 16
Does it convert 3V into 5V for 4 pin input?
No
Replace IC952
Yes
Pin 18
Does it convert 3V into 5V for 2 pin input?
No
Replace IC952
Yes
End

Step 5: X'tal

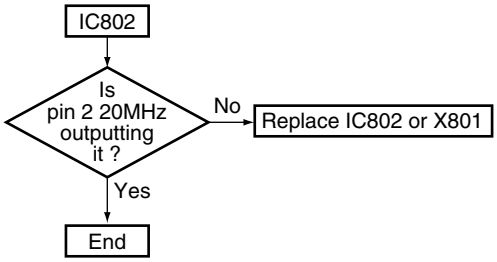
IC802
Is pin 2 20MHz outputting it ?
No
Replace IC802 or X801
Yes
End

Step 6: ROM

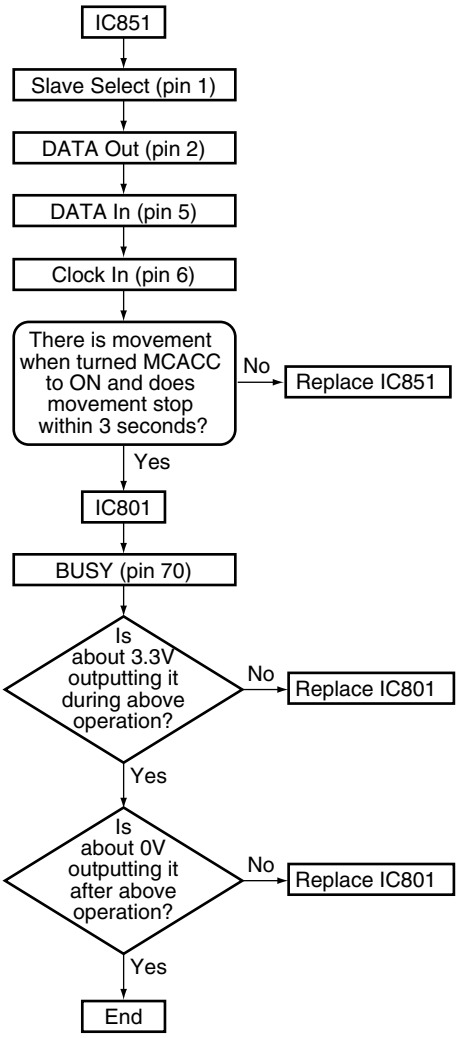

Step 7: DSP output (digital)

• Digital output when indicating each channel

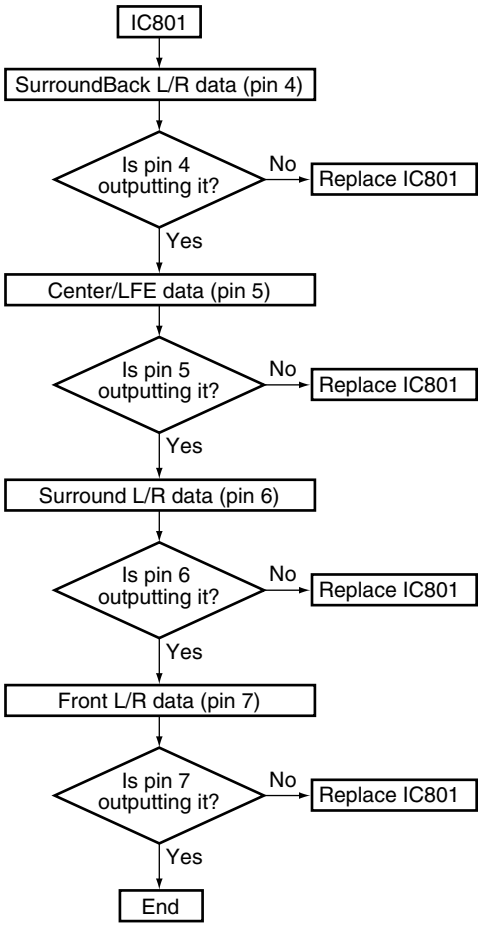

Step 8: Codec output (analog)

• Analog output when indicating each channel

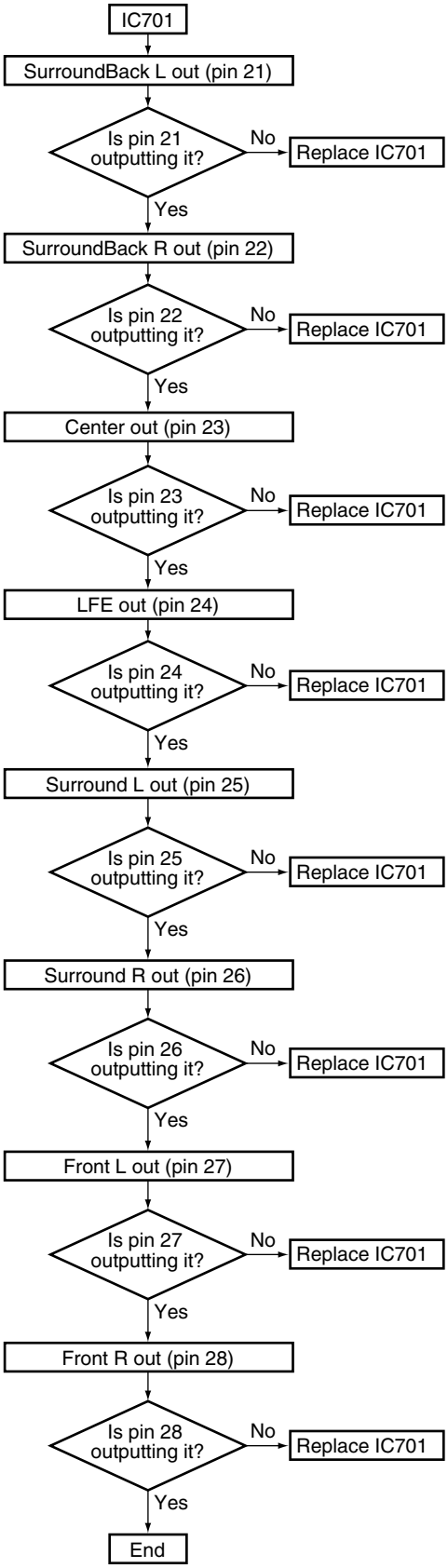

7.2 PARTS

7.2.1 IC

- The information shown in the list is basic information and may not correspond exactly to that shown in the schematic diagrams.

• List of IC

PEG123A

■ PEG123A (MAIN CONTROL ASSY: IC501)

• Main Microcomputer

● Pin Assignment (Top view)

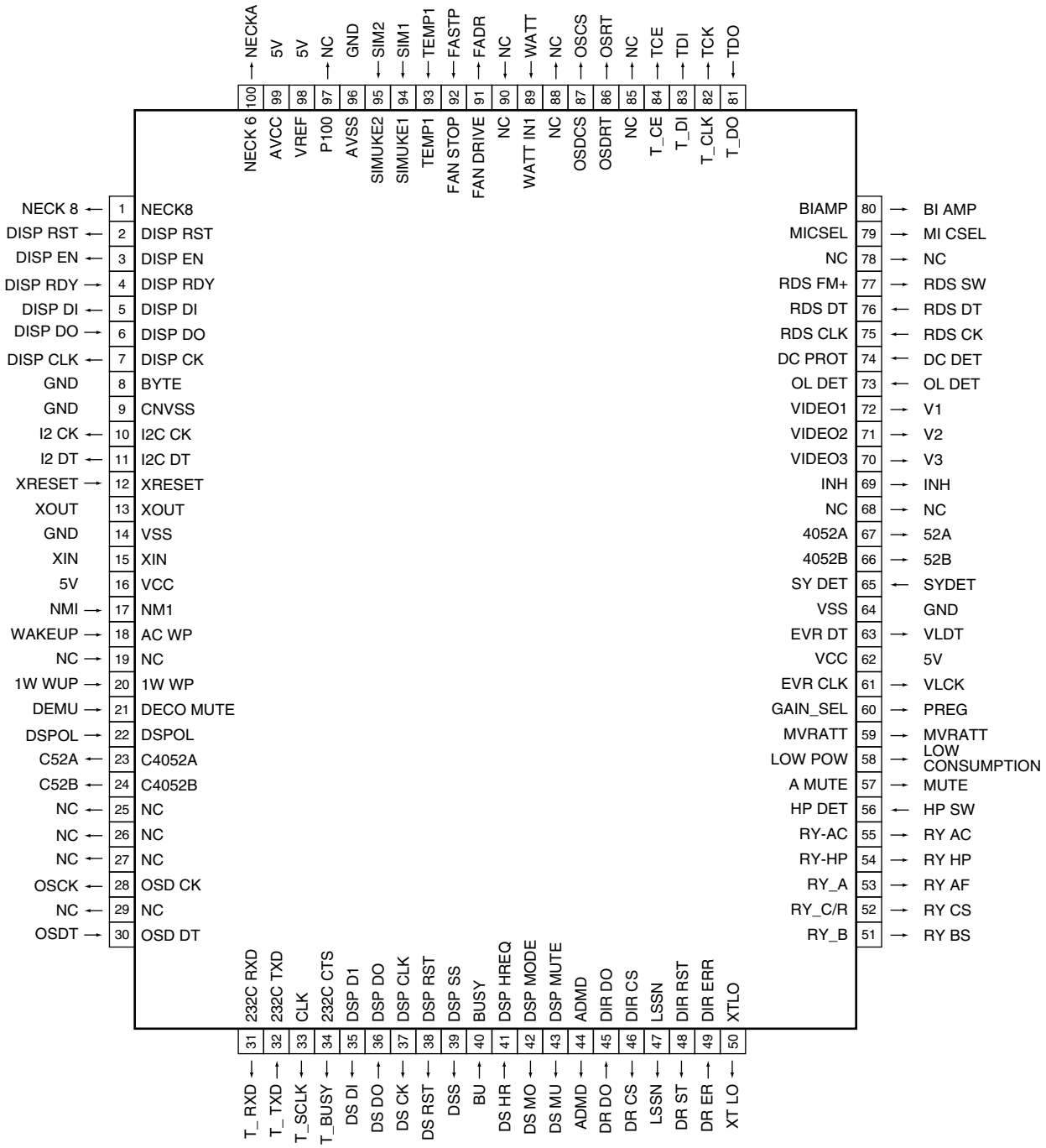

● Pin Function

No.	Pin Name	I/O	Pin Function	Active
1	NECK 8	O	Limiter control	H
2	DISP RST	O	Display microcomputer reset signal L: reset, H: release reset (pulldown)	L
3	DISP EN	O	Communication enabling signal to the display microcomputer	H
4	DISP RDY	I	Communication enabling signal from the display microcomputer	H
5	DISP DI	O	Communication data out signal with the display microcomputer (N ch open drain: pullup)	–
6	DISP DO	I	Communication data in signal with the display microcomputer (N ch open drain)	–
7	DISP CLK	O	Communication clock signal with the display microcomputer	–
8	GND	–	Ground	–
9	CNVSS	–	5.1kΩ pulldown	–
10	I2C CK	O	Communication clock signal with VIDEO CONVERTER IC (Y/C SEPARATOR IC, CHROMA DECODER IC)	–
11	I2C DT	O	Communication data signal with VIDEO CONVERTER IC (Y/C SEPARATOR IC, CHROMA DECODER IC)	–
12	XRESET	–	Reset	–
13	XOUT	–	Oscillator	–
14	GND	–	Ground	–
15	XIN	–	Oscillator	–
16	5V	–	5V power supply	–
17	NMI	I	Cannot use it as usual input port (100kΩ pullup)	–
18	WAKEUP	I	Wakeup	H
19	NC	–	NC	–
20	1W WUP	I	Wakeup signal at standby (from the display microcomputer) (pulldown)	H
21	DECO MUTE	I	Boot success detecting port of DSP	L
22	DSP OL	I	Communication enabling signal to the display microcomputer	H
23	C4052A	O	VIDEO Component SW Control	–
24	C4052B	O	VIDEO Component SW Control	–
25	NC	–	NC	–
26	NC	–	NC	–
27	NC	–	NC	–
28	OSD CK	O	Clock signal for OSD IC Control	–
29	NC	–	NC	–
30	OSD DT	O	Data signal for OSD IC Control	–
31	232C RXD	O	For 232C rewriting (data output)	–
32	232C TXD	I	For 232C rewriting (data input)	–
33	CLK	-	Not used (For rewriting)	–
34	232C CTS	O	For 232C rewriting (communication permission)	–
35	DSP DI	O	Communication data out signal with DSP, DIR	–
36	DSP DO	I	Communication data in signal with DSP	–
37	DSP CLK	O	Communication clock signal with the DSP, DIR	–
38	DSP RST	O	DSP reset signal L: reset, H: release reset	L
39	DSP SS	O	Slave select signal to DSP	L
40	BUSY	I	MCACC used	H
41	DSP HREQ	I	Error detection signal of DSP	H
42	DSP MODE	O	Mode selection of DSP (ROM/RAM) H: ROM mode, L: RAM (PPP) mode	H
43	DSP MUTE	O	DSP Assy mute	H
44	ADMD	O	DSP Analog/Digital select signal H : Digital, L : Analog	H
45	DIR DO	I	Communication data in signal with the DIR/DAC	–
46	DIR CS	O	Communication chip select signal with the DIR/DAC	L
47	LSSN	O	DSP SP Config : LSSN Setting	H
48	DIR RST	O	DIR reset signal	L
49	DIR ERR	I	Lock/Unlock signal from DIR	H
50	XTLO	O	Selection X'tal to DIR	L

No.	Pin Name	I/O	Pin Function	Active
51	RY BS	O	Speaker relay B ON/OFF	H
52	RY C/R	O	Rear / Center relay ON / OFF	H
53	RY A	O	Speaker relay A ON/OFF	H
54	RY- HP	O	Headphone relay ON / OFF	H
55	RY- AC	O	AC relay ON / OFF	H
56	HP DET	I	Headphone detection L: detected.	L
57	A MUTE	O	System mute L: Mute ON	L
58	LOW CONSUMPTION	O	Power supply control for system mute	L
59	MVR ATT	O	Master volume ATT control	L
60	GAIN SEL	O	Pregain select signal	H
61	EVR CLK	O	Clock signal for electronic volume and function SW	–
62	5V	–	5V power supply	–
63	EVR DT	O	Data signal for electronic volume and function SW	–
64	GND	–	Ground	–
65	SY DET	I	SYNC detection (S-VIDEO detection)	H
66	4052B	O	Output switching control signal of S-VIDEO and composite Video	–
67	4052A	O	Output switching control signal of S-VIDEO and composite Video	–
68	NC	–	NC	–
69	INH	O	Video component SW control	–
70	VIDEO3	O	Video input selector control	–
71	VIDEO2	O	Video input selector control	–
72	VIDEO1	O	Video input selector control	–
73	OL DET	I	Amp. overload detection L: Detection	L
74	DC PROT	I	DC detection L: Detection	L
75	RDS CLK	I	"L" fixed (Clock signal from RDS IC)	–
76	RDS DT	I	"L" fixed (Data signal from RDS IC)	–
77	RDS FM+	O	"L" fixed (Power supply control for RDS IC)	–
78	NC	–	NC	–
79	MICSEL	O	MIC select	H
80	BIAMP	O	Output switching control of surround back ch L : BiAMP, H : Normal	L
81	TUNED DO	I	Data input signal of tuner control	H
82	TUNER CLK	O	Clock signal of tuner control	H
83	TUNER DI	O	Data output signal of tuner control	L
84	TUNER CE	O	Chip select signal of tuner control	L
85	NC	–	NC	–
86	OSDRST	O	OSD-IC reset signal L: reset H: release reset	L
87	OSDCS	O	OSD-IC chip select signal	–
88	NC	–	NC	–
89	WATT IN1	I	Wattage detection Level detection with A/D	A/D
90	NC	–	Not used	–
91	FAN DRIVE	O	"L" fixed (FAN Control)	–
92	FAN STOP	I	"L" fixed (Fan forced stop detection)	–
93	TEMP1	I	Temperature detection H : abnormal	H
94	SIMUKE1	I	Destination read 1	A/D
95	SIMUKE2	I	Destination read 2	A/D
96	AVSS	–	Connect to VSS (Ground)	–
97	NC	–	NC	–
98	VREF	–	Connect to VCC	–
99	AVCC	–	Connect to VCC	–
100	NECK_6	O	ATT Control of VH (Power supply for Voltage Amplifier)	L

7.3 CLEANING

Before shipping out the product, be sure to clean the following positions by using the prescribed cleaning tools:

Position to be cleaned	Cleaning tools
Fans	Cleaning paper : GED-008

8. PANEL FACILITIES

Front panel

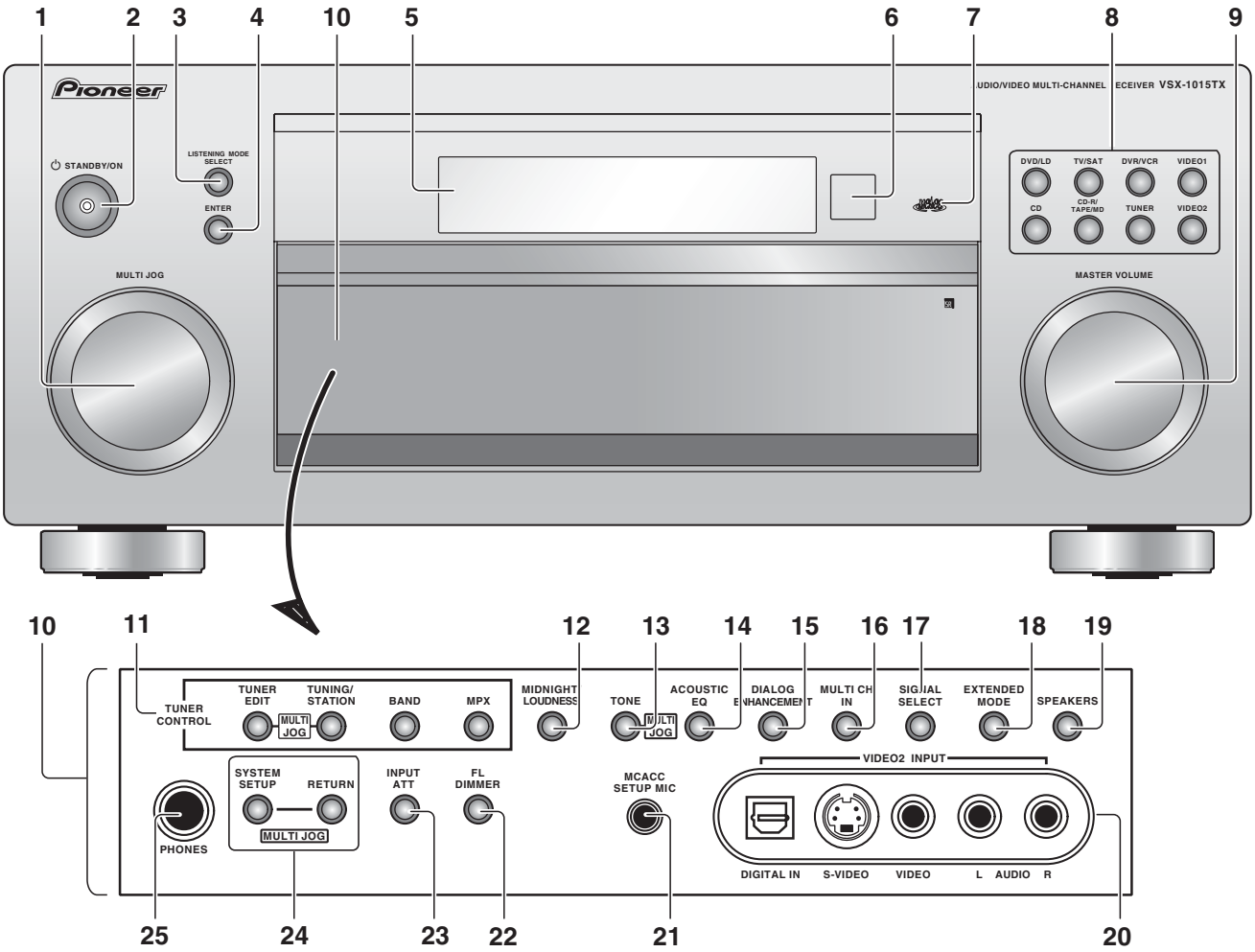

1 MULTI JOG dial
Use the **MULTI JOG** dial to select various settings and menu options.

2 ⏻ STANDBY/ON
Switches the receiver between on and standby. Power indicator lights when the receiver is on.

3 LISTENING MODE SELECT
Use with the **MULTI JOG** dial to select the various listening modes.

4 ENTER

5 Character display
See Display.

6 Remote sensor
Receives the signals from the remote control.

7 MCACC indicator
Lights when Acoustic Calibration EQ is on (Acoustic Calibration EQ is automatically set to **ALL CH ADJUST** after the Auto MCACC Setup or EQ Auto Setting is complete).

8 Input select buttons
Press to select an input source.

9 MASTER VOLUME dial

10 Front panel controls
To access the front panel controls, push gently on the lower third portion of the panel with your finger.

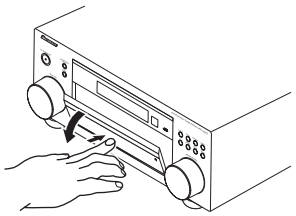

11 TUNER CONTROL

TUNER EDIT
Use with the **MULTI JOG** dial to memorize and name stations for recall.

TUNING/STATION
Use with the **MULTI JOG** dial to select station presets and radio frequencies.

BAND
Switches between AM and FM radio bands.

MPX
Press to receive a radio broadcast in mono.

12 MIDNIGHT/LOUDNESS
Use Midnight when listening to movie soundtracks at low volume. Use Loudness to boost the bass and treble at low volume.

13 TONE
When the **STEREO** mode is selected, press this button to access the bass and treble controls, which you can then adjust with the **MULTI JOG** dial.

14 ACOUSTIC EQ
Press to select an Acoustic Calibration EQ setting.

15 DIALOG ENHANCEMENT
Use to make dialog stand out when watching TV or a movie.

16 MULTI CH IN
Press to select the component connected to the **MULTI CH IN** terminals (for example, a DVD-Audio player). See Selecting the multichannel analog inputs.

17 SIGNAL SELECT
Use to select an input signal.

18 EXTENDED MODE
Selects the surround back channel mode or virtual surround back mode.

19 SPEAKERS
Use to change the speaker system.

20 VIDEO2 INPUT
See Connecting to the front panel video terminal.

21 MCACC SETUP MIC jack
Use to connect the supplied microphone.

22 FL DIMMER
Dims or brightens the display.

23 INPUT ATT
Attenuates (lowers) the level of an analog input signal to prevent distortion.

24 System Setup menu controls

SYSTEM SETUP
Use with the **MULTI JOG** dial to access the System Setup menu.

RETURN
Press to confirm and exit the current menu screen.

25 PHONES jack
Use to connect headphones. When the headphones are connected, there is no sound output from the speakers.

Rear panel

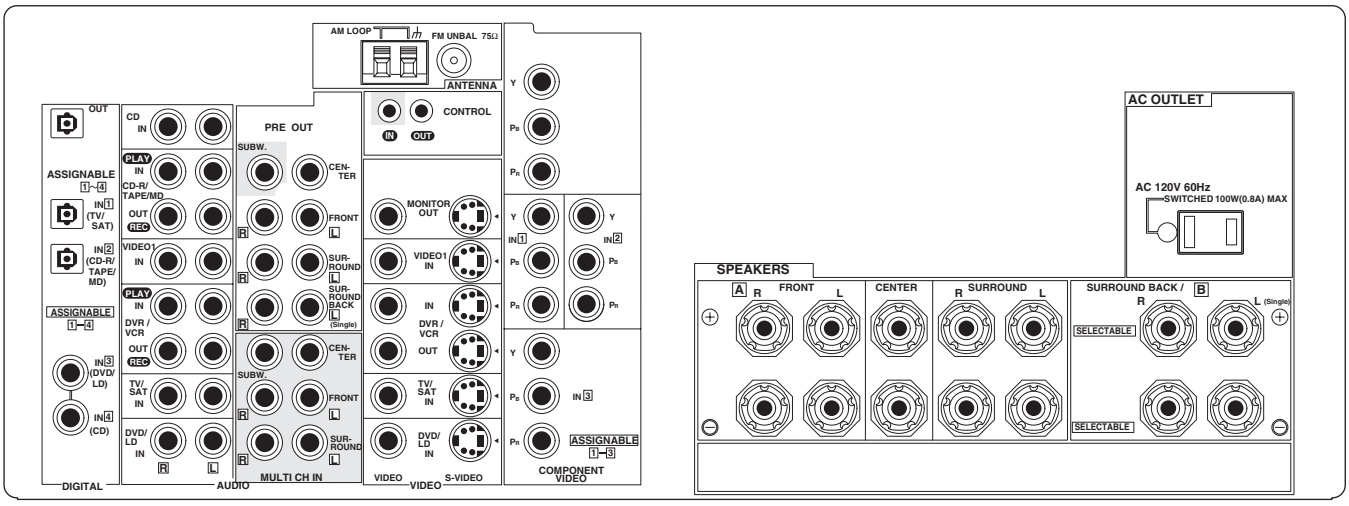

Display

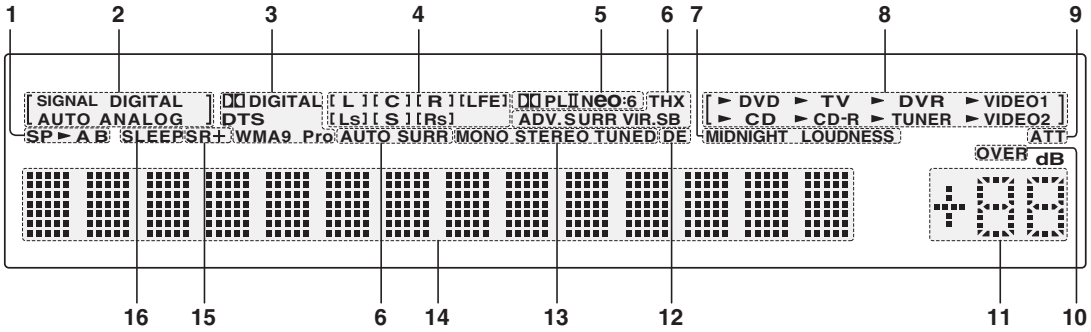

1 Speaker indicators
Lights to indicate the current speaker system, **A** and/or **B**.

2 SIGNAL SELECT indicators
Lights to indicate the type of input signal assigned for the current component:

AUTO
Lights when **AUTO** signal select is on.

DIGITAL
Lights when a digital audio signal is detected.

ANALOG
Lights when an analog signal is detected.

3 Digital format indicators

DIGITAL
Lights when a Dolby Digital encoded signal is detected.

DTS
Lights when a DTS encoded signal is detected.

WMA9 Pro
Lights to indicate decoding of a WMA9 Pro signal.

4 Program format indicators
These change according to which channels are active in Dolby and DTS encoded sources.

LS, **S** and **RS** will light at the same time to indicate 6.1channel sources.

- **L** – Left front channel
- **C** – Center channel
- **R** – Right front channel
- **LS** – Left surround channel
- **S** – Surround channel (mono) or surround back channel
- **RS** – Right surround channel
- **LFE** – Low frequency effects channel

5 Matrix decoding format indicators

PLII
This lights to indicate Pro Logic II / Pro Logic IIx decoding (see Listening in surround sound for more on this).

Neo:6
When one of the Neo:6 modes of the receiver is on, this lights to indicate Neo:6 processing (see Listening in surround sound for more on this).

6 Listening mode indicators
THX
Lights when one of the Home THX modes is selected.

VIR.SB
Lights during Virtual surround back processing.

ADV.SURR
Lights when one of the Advanced Surround modes has been selected.

AUTO SURR
Lights when the Auto Surround feature is switched on (see Auto playback).

7 MIDNIGHT / LOUDNESS
When Midnight or Loudness listening is switched on, the corresponding indicator shows in the display.

8 Input source indicators
Light to indicate the input source you have selected.

9 ATT
Lights when **INPUT ATT** is used to attenuate (reduce) the level of the analog input signal.

10 OVER
Lights to indicate that the level of an analog source is too high. Use the attenuator (**INPUT ATT**) to reduce it.

11 Master volume level
Shows the overall volume level. **–80dB** indicates the minimum level, and **+12dB** indicates the maximum level.

12 DE
Lights when Dialog Enhancement (**DIALOG E**) is switched on.

13 TUNER indicators

STEREO
Lights when a stereo FM broadcast is being received in auto stereo mode.

MONO
Lights when the mono mode is set using the **MPX** button.

TUNED
Lights when a broadcast is being received.

14 Character display
Displays various system information (for example, the reason an operation is not possible may flash in the display).

15 SR+
Lights when the SR+ control mode has been switched on (see Using the SR+ mode with a Pioneer plasma display).

16 SLEEP
Lights when the receiver is in sleep mode.

Remote control

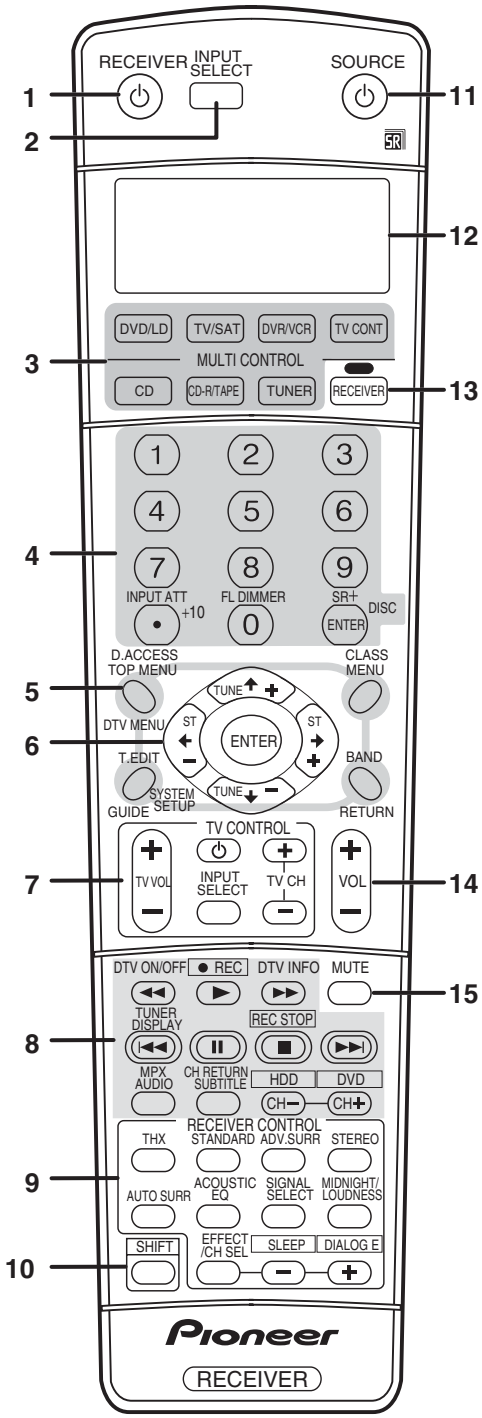

1 RECEIVER⏻
This switches between standby and on for this receiver.

2 INPUT SELECT
Use to select the input source.

3 MULTI CONTROL buttons
Press to select control of other components (see Controlling the rest of your system).

4 Number buttons and other receiver/component controls
Use the number buttons to directly select a radio frequency or the tracks on a CD, DVD, etc.

DISC (ENTER) can be used to enter commands for TV or DTV, and can also be used to select a disc in a multi-CD player.

The following are accessed by pressing the **RECEIVER** button first:

INPUT ATT
Attenuates (lowers) the level of an analog input signal to prevent distortion.

FL DIMMER
Dims or brightens the display.

SR+
Switches the SR+ mode on/off.

5 Tuner/component control buttons/SYSTEM SETUP
The following button controls (except **SYSTEM SETUP**) can be accessed after you have selected the corresponding **MULTI CONTROL** button (**TUNER**, **DVD/LD**, **TV/SAT**, etc.)

D. ACCESS
After pressing, you can access a radio station directly using the number buttons.

TOP MENU
Displays the disc 'top' menu of a DVD.

DTV MENU
Displays menus on a digital TV.

T. EDIT
Press to memorize and name a station for recall.

GUIDE
Displays the guides on a digital TV.

SYSTEM SETUP
(Press **RECEIVER** first to access)
Use to access the System Setup menu.

CLASS
Switches between the three banks (classes) of radio station presets.

MENU
Displays the disc menu of DVD-Video discs. It also displays TV and DTV menus.

BAND
Switches between the tuner AM and FM bands.

RETURN
Press to confirm and exit the current menu screen (also use to return to the previous menu with DVDs or to select closed captioning with DTV).

6 ⇦⇨⇧⇩ (TUNE/ST +/–) /ENTER
Use the arrow buttons when setting up your surround sound system. Also used to control DVD menus/options and for deck 1 of a double cassette deck player. Use the **TUNE +/–** buttons to find radio frequencies and use **ST +/–** to find preset stations.

7 TV CONTROL buttons
These buttons are dedicated to control the TV assigned to the **TV CONT** button. Thus if you only have one TV to hook up to this system assign it to the **TV CONT MULTI CONTROL** button. If you have two TVs, assign the main TV to the **TV CONT** button.

TV⏻
Use to turn on/off the power of the TV.

TV VOL +/–
Use to adjust the volume on your TV.

INPUT SELECT
Use to select the TV input signal.

TV CH +/–
Use to select channels.

8 Component control buttons
The main buttons (►, ■, etc.) are used to control a component after you have selected it using the **MULTI CONTROL** buttons.

The controls above these buttons can be accessed after you have selected the corresponding **MULTI CONTROL** button (for example **DVD/LD**, **DVR/VCR** or **TV/SAT** (when connected to a DTV)).

DTV ON/OFF
Switches a digital TV on/off.

DTV INFO
Use to bring up information screens on a digital TV.

TUNER DISPLAY
Switches between named station presets and radio frequencies.

MPX
Switches between stereo and mono reception of FM broadcasts. If the signal is weak then switching to mono will improve the sound quality.

AUDIO
Changes the audio language or channel on DVD discs.

CH RETURN
Returns to the last channel selected with DTV, SAT and some TVs.

SUBTITLE
Displays/changes the subtitles included in multilingual DVD-Video discs.

CH +/–
Use to select channels when using a TV, VCR, DVR, etc.

The following DVR controls can be accessed by pressing **SHIFT**:

● REC
Starts recording.

REC STOP
Stops recording.

HDD/DVD
These buttons switch between the hard disk and DVD controls for DVD/HDD recorders.

9 RECEIVER CONTROL buttons

THX
Press to select a Home THX listening mode.

STANDARD
Press for Standard decoding and to switch between the various Pro Logic IIx and Neo:6 options.

ADV. SURR
Use to switch between the various surround modes.

STEREO
Switches between direct and stereo playback. Direct playback bypasses the tone controls and any other signal processing for the most accurate reproduction of a source.

AUTO SURR
Press to have the receiver automatically detect what kind of source youíre playing and select multichannel or stereo playback as necessary.

ACOUSTIC EQ
Press to select an Acoustic Calibration EQ setting.

SIGNAL SELECT
Use to select an input signal.

MIDNIGHT/LOUDNESS
Use Midnight when listening to movie soundtracks at low volume. Use Loudness to boost the bass and treble at low volume.

EFFECT/CH SEL
Press repeatedly to select a channel, then use –/+ to adjust the level. Also adjusts the level of the Advanced Surround effects as well as Dolby Pro Logic IIx Music and Neo:6 Music parameters. You can then use the **+** and **–** buttons to make these adjustments.

+/–
Use to adjust the effect and channel levels, as well as to change Dolby Pro Logic IIx and Neo:6 Music parameter settings.

SLEEP (SHIFT & –)
Use to put the receiver in sleep mode and select the amount of time before the receiver turns off.

DIALOG E (SHIFT & +)
Use to make dialog stand out when watching TV or a movie.

10 SHIFT
Press to access the DVR controls (above the component control buttons) as well as some **RECEIVER** controls.

11 ⏻SOURCE
Press to turn on/off other components connected to the receiver.

12 Character display (LCD)
This display shows information when transmitting control signals.

The following commands are shown when you're setting the remote to control other components (see Controlling the rest of your system):

SETUP
Indicates the setup mode, from which you choose the options below.

PRESET
See Selecting preset codes directly.

LEARN
See Programming signals from other remote controls.

DIRECT F
See Direct function.

ERASE
See Erasing one of the remote control button settings.

RESET
See Erasing all of the remote control presets.

READ ID
See Confirming preset codes.

13 RECEIVER
Switches the remote to control the receiver (used to select the green commands above the number buttons (**INPUT ATT**, etc). Also use this button to set up surround sound.

14 VOL +/–
Use to set the listening volume.

15 MUTE
Mutes the sound or restores the sound if it has been muted (adjusting the volume also restores the sound).

Operating range of remote control unit

The remote control may not work properly if:

- There are obstacles between the remote control and the receiver's remote sensor.
- Direct sunlight or fluorescent light is shining onto the remote sensor.
- The receiver is located near a device that is emitting infrared rays.
- The receiver is operated simultaneously with another infrared remote control unit.

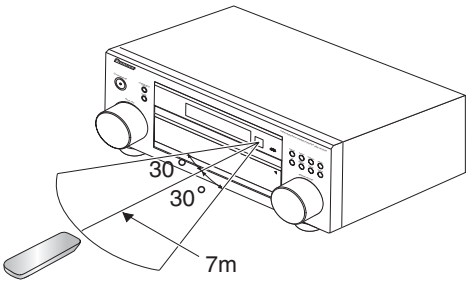

Using this receiver with a Pioneer plasma display

If you have a Pioneer plasma display, you can use an SR+ cable (see note below) to connect it to this unit and take advantage of various convenient features, such as automatic video input switching of the plasma display when the input is changed.

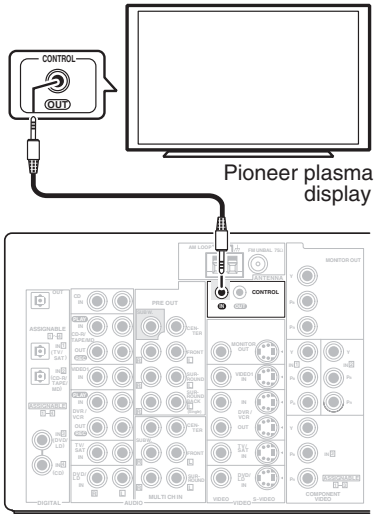

Important

- If you connect to a Pioneer plasma display using an SR+ cable, you will need to point the remote control at the plasma display remote sensor to control the receiver. In this case, you wonít be able to control the receiver using the remote control if you switch the plasma display off.

Note

- This receiver is compatible with all SR+ equipped Pioneer plasma displays from 2003 onward.

- **Use a 3-ringed miniplug SR+ cable to connect the CONTROL IN jack of this receiver with the CONTROL OUT jack of your plasma display.**

Before you can use the extra SR+ features, you need to make a few settings in the receiver. See SR+ Setup for Pioneer plasma displays for detailed instructions.

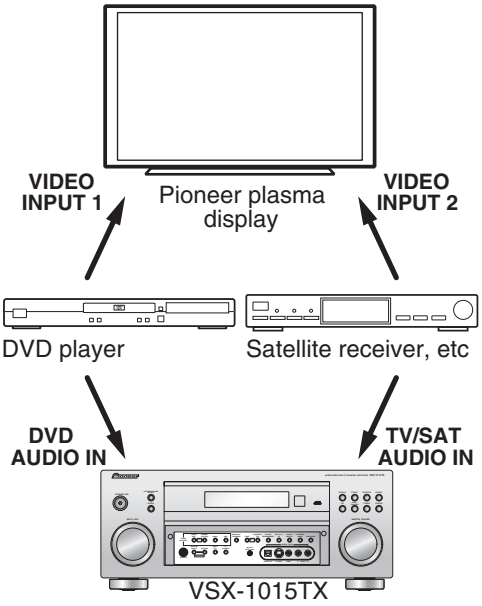

To make the most of the SR+ features, you should connect your source components (DVD player, etc.) in a slightly different way to that described in this chapter. For each component, connect the video output directly to the plasma display, and just connect the audio (analog and/or digital) to this receiver.

Note

- The 3-ringed SR+ cable from Pioneer is commercially available under the part number ADE7095. Contact the Pioneer Customer Support division for more information on obtaining an SR+ cable (you can also use a commercially available 3-ringed mini phone plug for the connection).

SERVICE PARTS
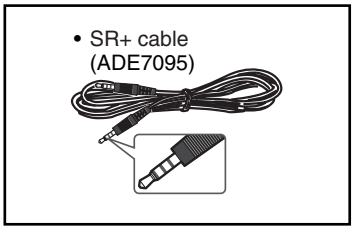
- SR+ cable (ADE7095)