Pioneer

Service Manual

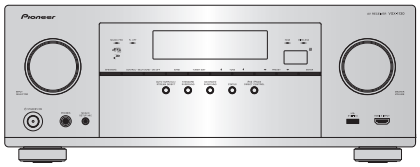

VSX-1130-K

ORDER NO.
RRV4597

AV Receiver

VSX-1130-K
VSX-90
VSA-1130

THIS MANUAL IS APPLICABLE TO THE FOLLOWING MODEL(S) AND TYPE(S).

Model	Type	Power Requirement	Remarks
VSX-1130-K	CUXESM	AC 120 V	
VSX-90	CUXE	AC 120 V	
VSA-1130	JXEV	AC 100 V	

THIS SERVICE MANUAL SHOULD BE USED TOGETHER WITH THE FOLLOWING MANUAL(S).

Model	Order No.	Remarks
VSX-1130-K, VSX-90	RRV4596	BLOCK DIAGRAM, EXPLODED VIEWS AND PARTS LIST etc.

PIONEER CORPORATION 1-1, Shin-ogura, Saiwai-ku, Kawasaki-shi, Kanagawa 212-0031, Japan
PIONEER ELECTRONICS (USA) INC. P.O. Box 1760, Long Beach, CA 90801-1760, U.S.A.
PIONEER EUROPE NV Haven 1087, Keetberglaan 1, 9120 Melsele, Belgium
PIONEER ELECTRONICS ASIACENTRE PTE. LTD. 253 Alexandra Road, #04-01, Singapore 159936
ⓒ**PIONEER CORPORATION 2015**

K-MZV MAY 2015 Printed in Japan

SAFETY INFORMATION

This service manual is intended for qualified service technicians; it is not meant for the casual do-it-yourselfer. Qualified technicians have the necessary test equipment and tools, and have been trained to properly and safely repair complex products such as those covered by this manual.

Improperly performed repairs can adversely affect the safety and reliability of the product and may void the warranty. If you are not qualified to perform the repair of this product properly and safely, you should not risk trying to do so and refer the repair to a qualified service technician.

WARNING

This product may contain a chemical known to the State of California to cause cancer, or birth defects or other reproductive harm.

Health & Safety Code Section 25249.6 - Proposition 65

(FOR USA MODEL ONLY)

1. SAFETY PRECAUTIONS

The following check should be performed for the continued protection of the customer and service technician.

LEAKAGE CURRENT CHECK

Measure leakage current to a known earth ground (water pipe, conduit, etc.) by connecting a leakage current tester such as Simpson Model 229-2 or equivalent between the earth ground and all exposed metal parts of the appliance (input/output terminals, screwheads, metal overlays, control shaft, etc.). Plug the AC line cord of the appliance directly into a 120 V AC 60 Hz outlet and turn the AC power switch on. Any current measured must not exceed 0.5 mA.

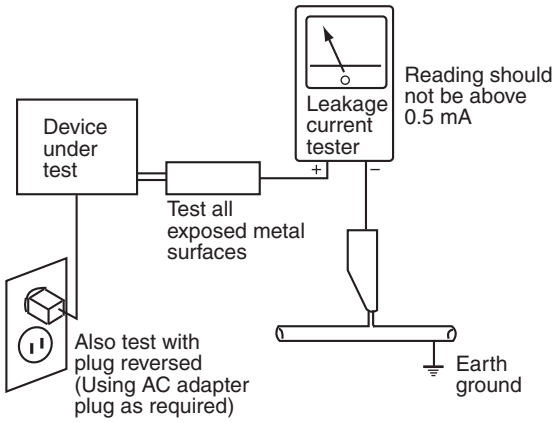

AC Leakage Test

ANY MEASUREMENTS NOT WITHIN THE LIMITS OUTLINED ABOVE ARE INDICATIVE OF A POTENTIAL SHOCK HAZARD AND MUST BE CORRECTED BEFORE RETURNING THE APPLIANCE TO THE CUSTOMER.

2. PRODUCT SAFETY NOTICE

Many electrical and mechanical parts in the appliance have special safety related characteristics. These are often not evident from visual inspection nor the protection afforded by them necessarily can be obtained by using replacement components rated for voltage, wattage, etc. Replacement parts which have these special safety characteristics are identified in this Service Manual.

Electrical components having such features are identified by marking with a ⚠ on the schematics and on the parts list in this Service Manual.

The use of a substitute replacement component which does not have the same safety characteristics as the PIONEER recommended replacement one, shown in the parts list in this Service Manual, may create shock, fire, or other hazards.

Product Safety is continuously under review and new instructions are issued from time to time. For the latest information, always consult the current PIONEER Service Manual. A subscription to, or additional copies of, PIONEER Service Manual may be obtained at a nominal charge from PIONEER.

CONTENTS

SAFETY INFORMATION 2
10. SCHEMATIC DIAGRAM 4
10.1 OVERALL WIRING DIAGRAM 4
10.2 MAIN ASSY 6
10.3 DMAIN ASSY (1/11) 8
10.4 DMAIN ASSY (2/11) 10
10.5 DMAIN ASSY (3/11) 12
10.6 DMAIN ASSY (4/11) 14
10.7 DMAIN ASSY (5/11) 16
10.8 DMAIN ASSY (6/11) 18
10.9 DMAIN ASSY (7/11) 20
10.10 DMAIN ASSY (8/11) 22
10.11 DMAIN ASSY (9/11) 24
10.12 DMAIN ASSY (10/11) 26
10.13 DMAIN ASSY (11/11) 28
10.14 OPTCO and BRIDGE ASSYS 32
10.15 AUDIO ASSY 34
10.16 CPU ASSY 36
10.17 AMP7 ASSY (1/2) 38
10.18 AMP7 ASSY (2/2) 40
10.19 FHDMI ASSY 42
10.20 TEMP, FRONT, HPMIC and INSEL ASSYS 44
10.21 SMPS ASSY 46
11. PCB CONNECTION DIAGRAM 48
11.1 MAIN ASSY 48
11.2 DMAIN ASSY 52
11.3 OPTCO ASSY 56
11.4 BRIDGE ASSY 57
11.5 AUDIO ASSY 58
11.6 CPU ASSY 60
11.7 AMP7 ASSY 64
11.8 FHDMI, TEMP, FRONT, HPMIC and INSEL ASSYS 66
11.9 SMPS ASSY 70
12. PCB PARTS LIST 71

10. SCHEMATIC DIAGRAM
10.1 OVERALL WIRING DIAGRAM

- When ordering service parts, be sure to refer to "EXPLODED VIEWS and PARTS LIST" or "PCB PARTS LIST".
- The ⚠ mark found on some component parts indicates the importance of the safety factor of the part. Therefore, when replacing, be sure to use parts of identical designation.
- : The power supply is shown with the marked box.

- 部品を発注する場合は、必ず「分解図と部品表」または「電気部品表」を参照してください。
- ⚠ 印の部品は、安全上重要な部品です。交換するときは、安全および性能維持のため必ず指定の部品をご使用ください。
- 印は電源の供給源を示しています。

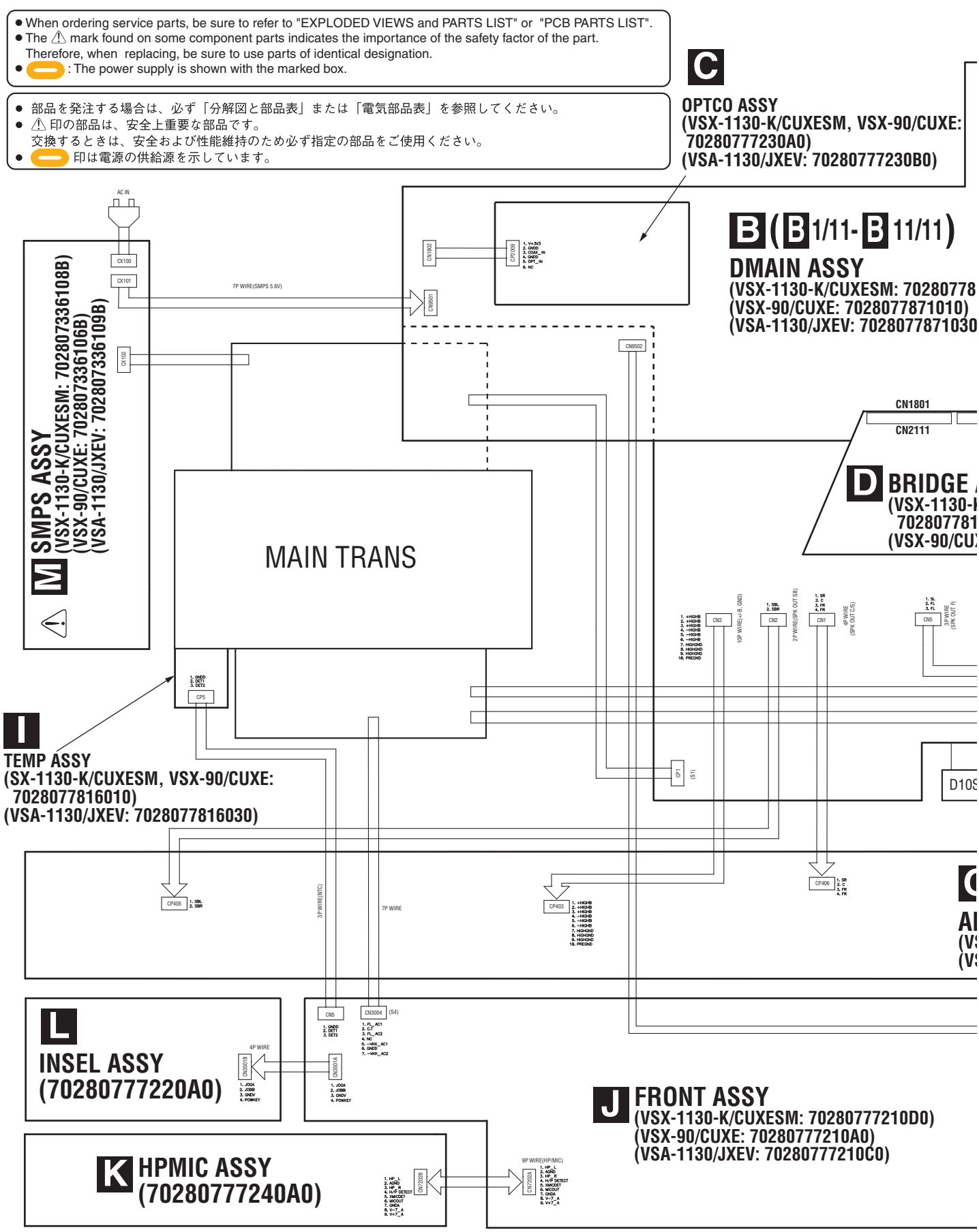

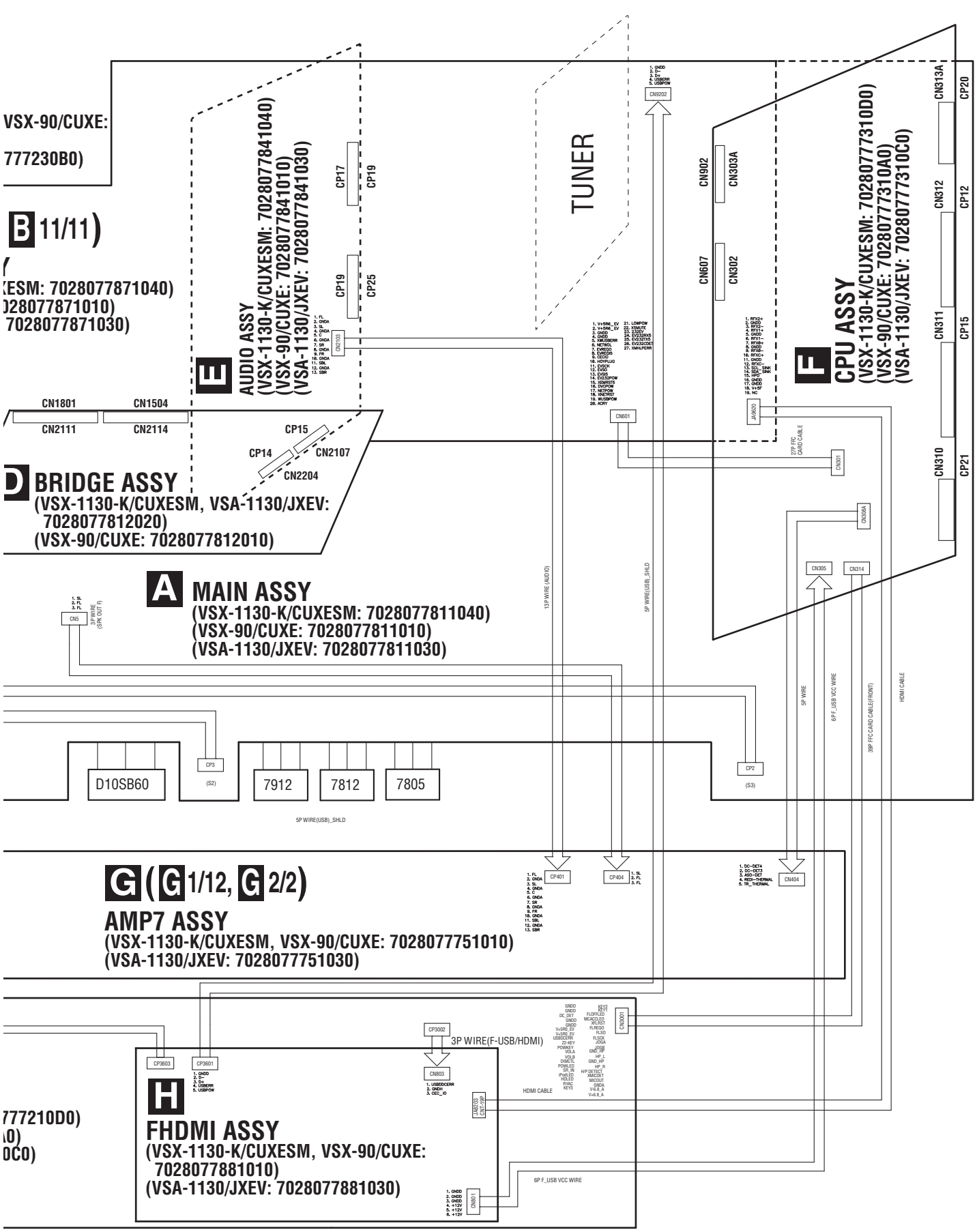
VSX-90/CUXE:
777230B0)
B 11/11)
XESM: 7028077871040)
028077871010)
7028077871030)
E
AUDIO ASSY
(VSX-1130-K/CUXESM: 7028077841040)
(VSX-90/CUXE: 7028077841010)
(VSA-1130/JXEV: 7028077841030)
CP17
CP19
CP19
CP25
TUNER
CN9202
CN902
CN303A
CN607
CN302
F
CPU ASSY
(VSX-1130-K/CUXESM: 7028077310D0)
(VSX-90/CUXE: 7028077310A0)
(VSA-1130/JXEV: 7028077310C0)
CN313A
CP20
CN312
CP12
CN311
CP15
CN310
CP21
CN1801
CN1504
CN2111
CN2114
CP15
CP14
CN2107
CN2204
D BRIDGE ASSY
(VSX-1130-K/CUXESM, VSA-1130/JXEV:
7028077812020)
(VSX-90/CUXE: 7028077812010)
A MAIN ASSY
(VSX-1130-K/CUXESM: 7028077811040)
(VSX-90/CUXE: 7028077811010)
(VSA-1130/JXEV: 7028077811030)
CN5
37P WIRE (SPK OUT F)
13P WIRE (AUDIO)
5P WIRE(USB)_SHLD
CN601
CN301
CN303A
CN305
CN314
5P WIRE
6P F_USB VCC WIRE
39P FFC CARD CABLE(FRONT)
HDMI CABLE
D10SB60
CP3
(S2)
7912
7812
7805
CP2
(S3)
5P WIRE(USB)_SHLD
G (G 1/12, G 2/2)
AMP7 ASSY
(VSX-1130-K/CUXESM, VSX-90/CUXE: 7028077751010)
(VSA-1130/JXEV: 7028077751030)
CP401
CP404
CN404
CN3001
CP3002
3P WIRE(F-USB/HDMI)
CP3603
CP3601
CN803
H
FHDMI ASSY
(VSX-1130-K/CUXESM, VSX-90/CUXE:
7028077881010)
(VSA-1130/JXEV: 7028077881030)
HDMI CABLE
6P F_USB VCC WIRE
CN801
777210D0)
0)
0C0)

10.2 MAIN ASSY

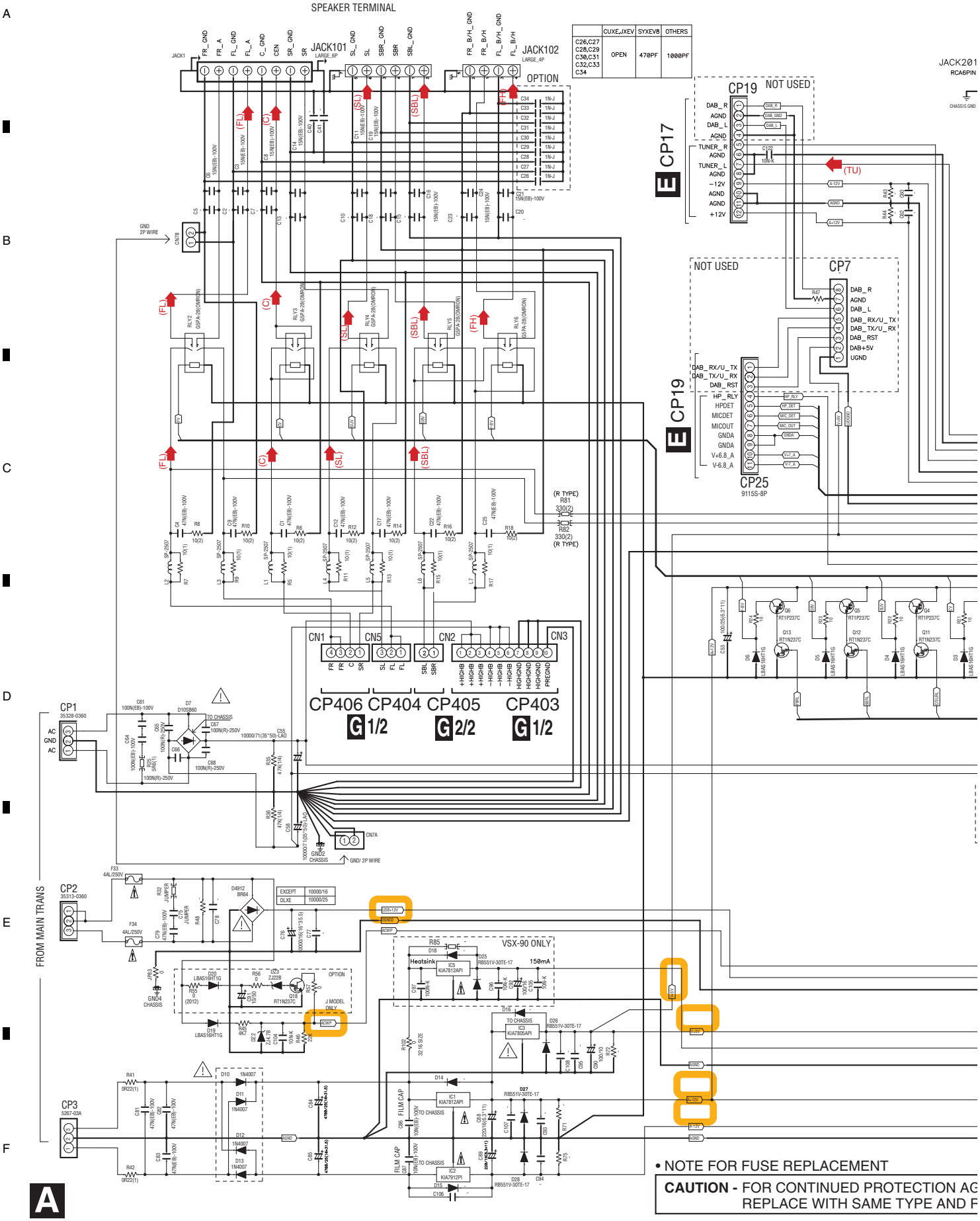

	CUXE,JXEV	SYXEV8	OTHERS
C26,C27 C28,C29 C30,C31 C32,C33 C34	OPEN	470PF	1000PF

A MAIN ASSY

(VSX-1130-K/CUXESM: 7028077811040)
(VSX-90/CUXE: 7028077811010)
(VSA-1130/JXEV: 7028077811030)

NJM41050VT LOGIC TABLE

	SW1	SW2	MUTE
IN2	H	L(OPEN)	H
IN3	-	H	H
MUTE	-	-	L(OPEN)

MODEL DISCRIMINATION

	OTHERS	J MODEL
J12	Oohm	NM
R69 R73 R76 R77 R78	NM	Oohm

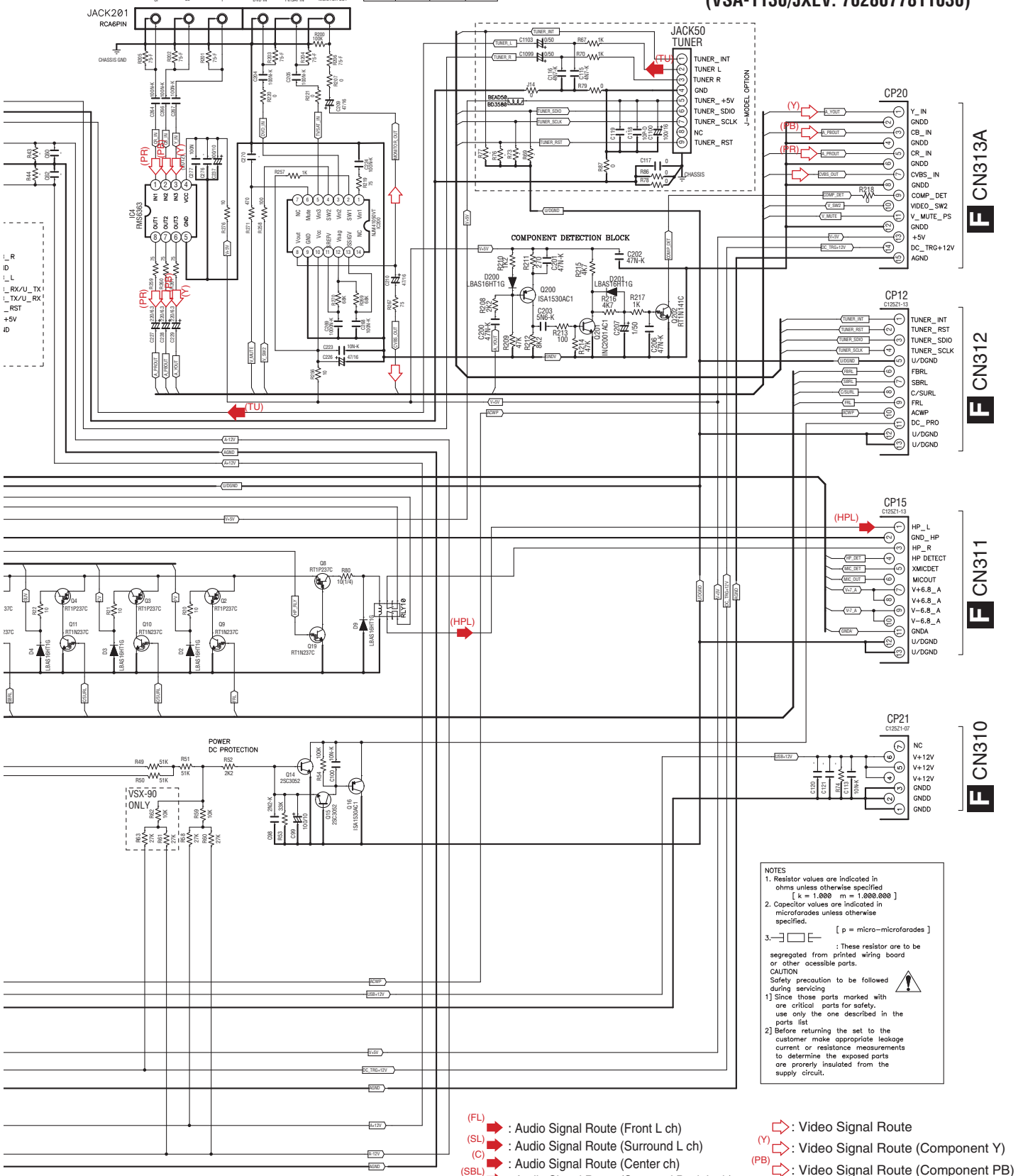

NOTES
1. Resistor values are indicated in ohms unless otherwise specified
[k = 1,000 m = 1,000,000]
2. Capacitor values are indicated in microfarades unless otherwise specified.
[p = micro-microfarades]
3. : These resistor are to be segregated from printed wiring board or other acessible parts.
CAUTION
Safety precaution to be followed during servicing
1] Since those parts marked with are critical parts for safety. use only the one described in the parts list
2] Before returning the set to the customer make appropriate leakage current or resistance measurements to determine the exposed parts are properly insulated from the supply circuit.

(FL) : Audio Signal Route (Front L ch)
(SL) : Audio Signal Route (Surround L ch)
(C) : Audio Signal Route (Center ch)
(SBL) : Audio Signal Route (Surround Back L ch)
(FH) : Audio Signal Route (Front Height L ch)
(TU) : Audio Signal Route (Tuner L ch)
(HPL) : Audio Signal Route (Headphone L ch)

: Video Signal Route
(Y) : Video Signal Route (Component Y)
(PB) : Video Signal Route (Component PB)
(PR) : Video Signal Route (Component PR)

ENT

PROTECTION AGAINST RISK OF FIRE, AME TYPE AND RATINGS OF FUSE.

10.3 DMAIN ASSY (1/11)

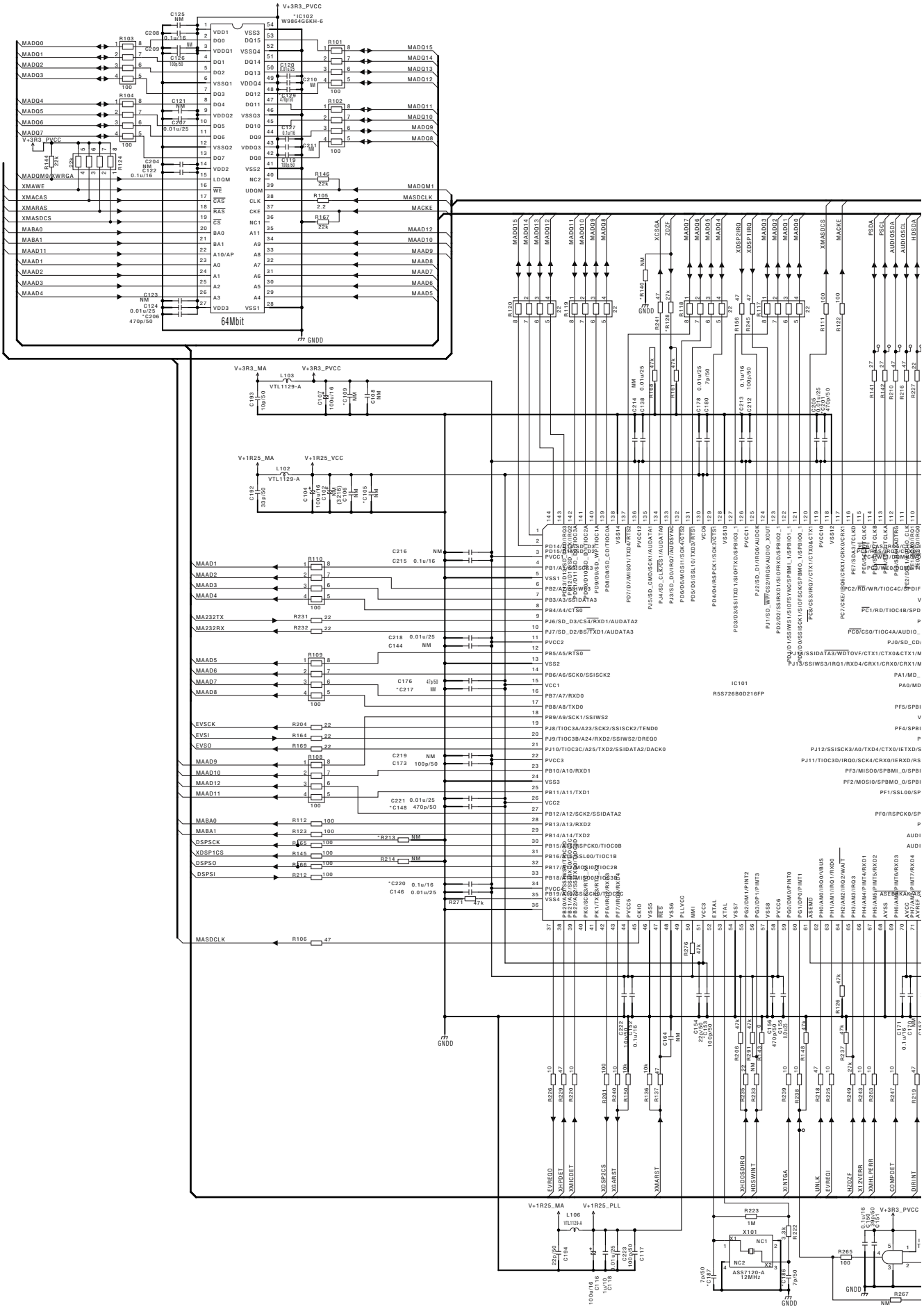

B 1/11

B 1/11 DMAIN ASSY

(VSX-1130-K/CUXESM: 7028077871040)
(VSX-90/CUXE: 7028077871010)
(VSA-1130/JXEV: 7028077871030)

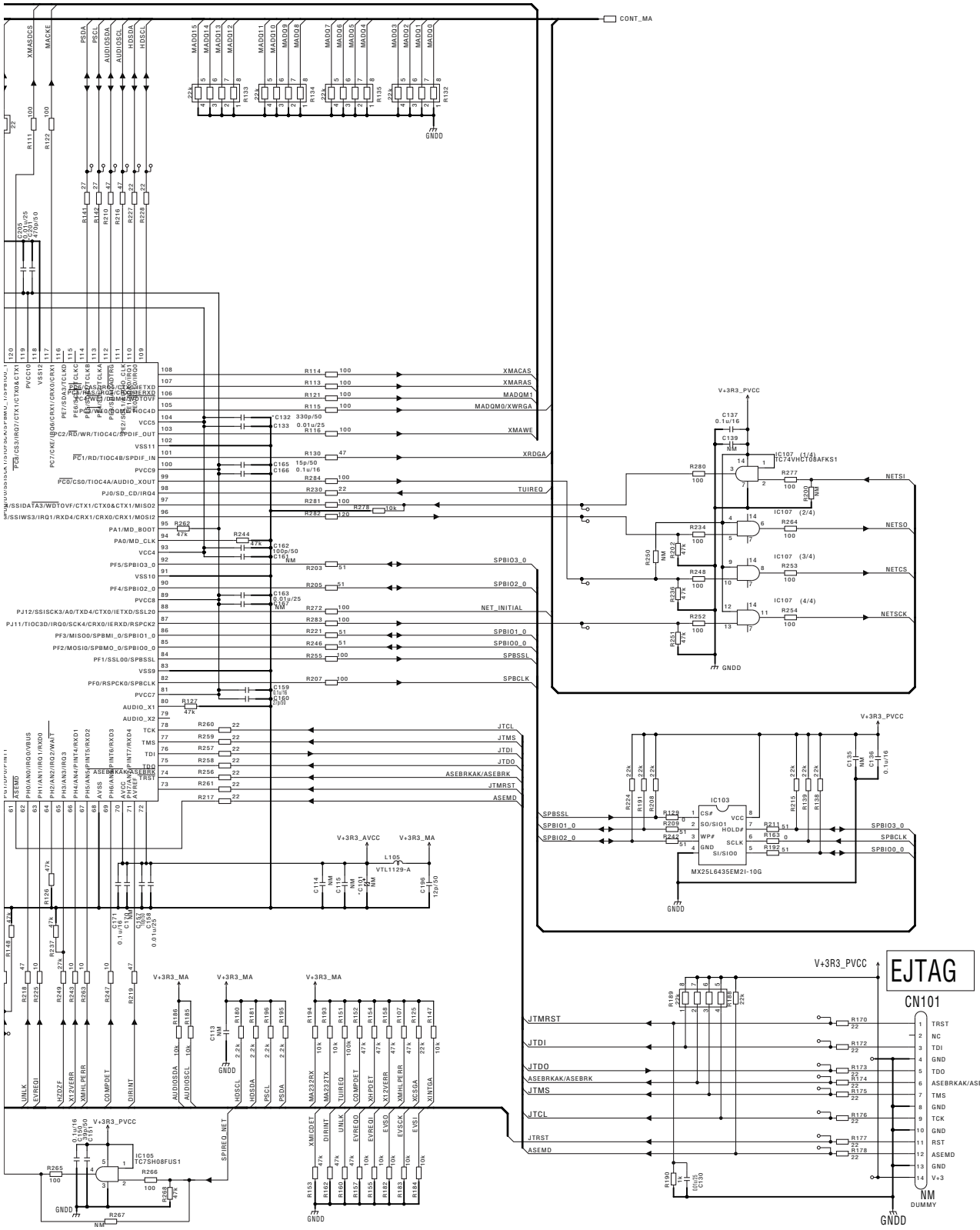

10.4 DMAIN ASSY (2/11)

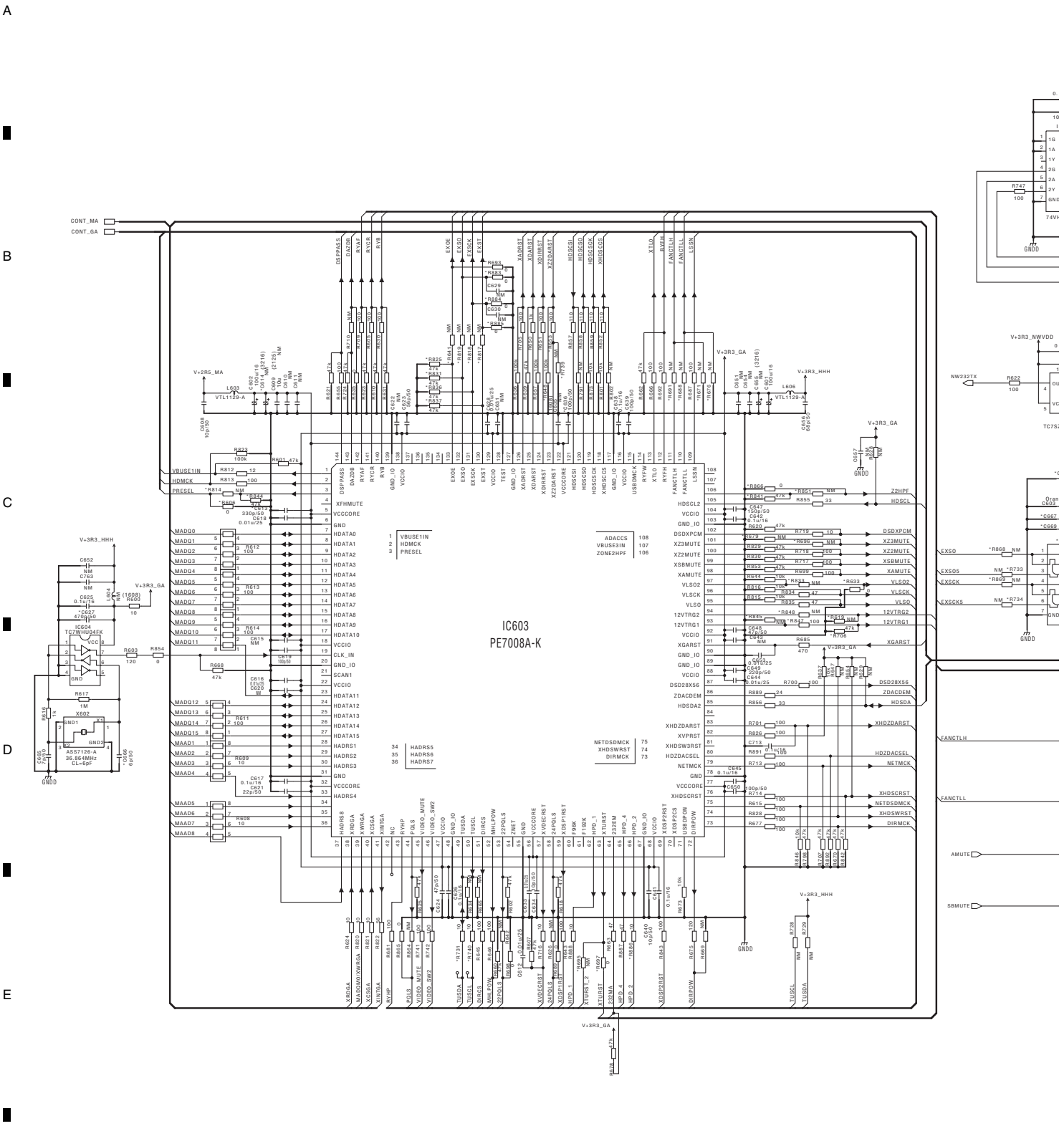

B 2/11 DMAIN ASSY

(VSX-1130-K/CUXESM: 7028077871040)
(VSX-90/CUXE: 7028077871010)
(VSA-1130/JXEV: 7028077871030)

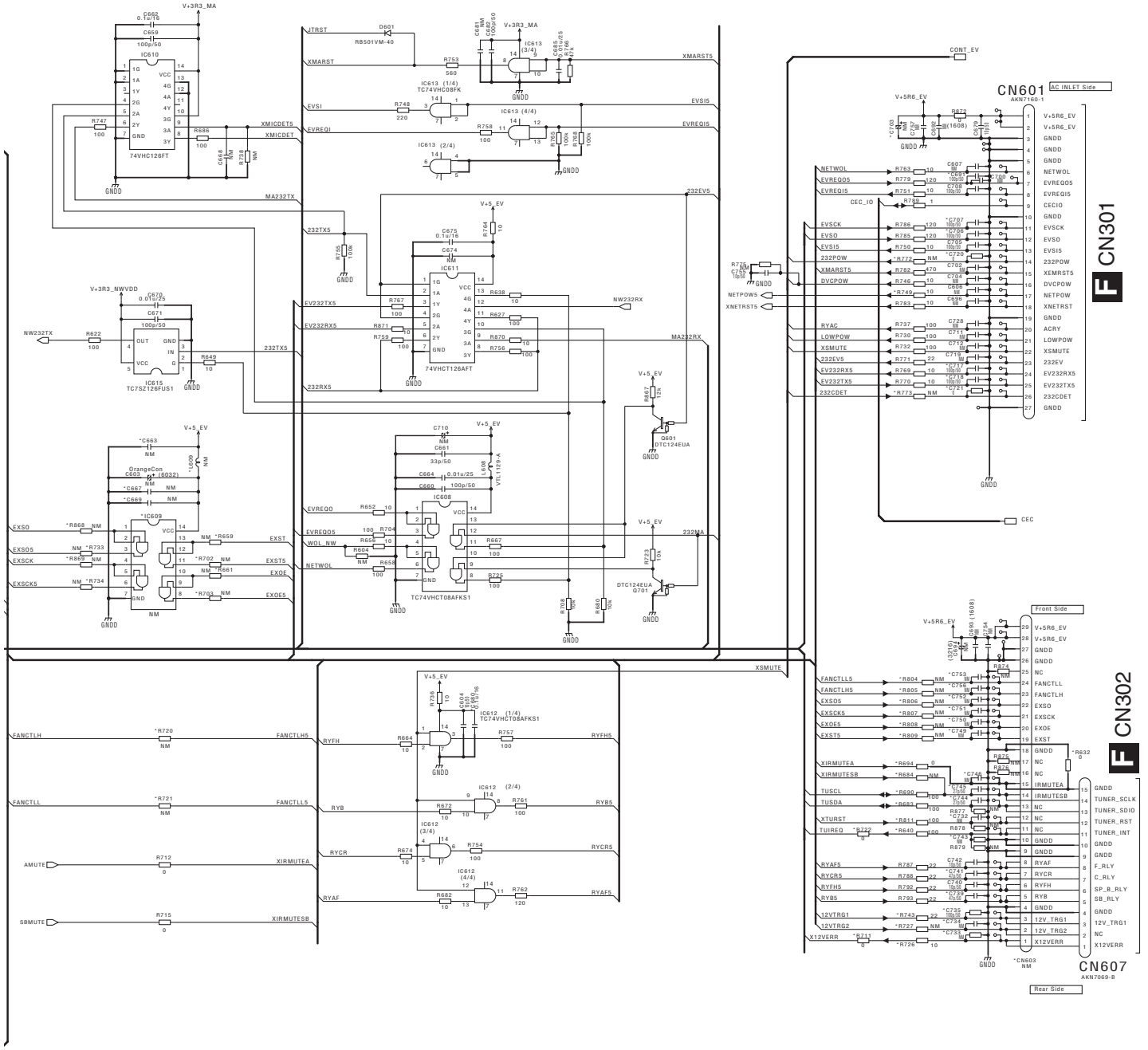

10.5 DMAIN ASSY (3/11)

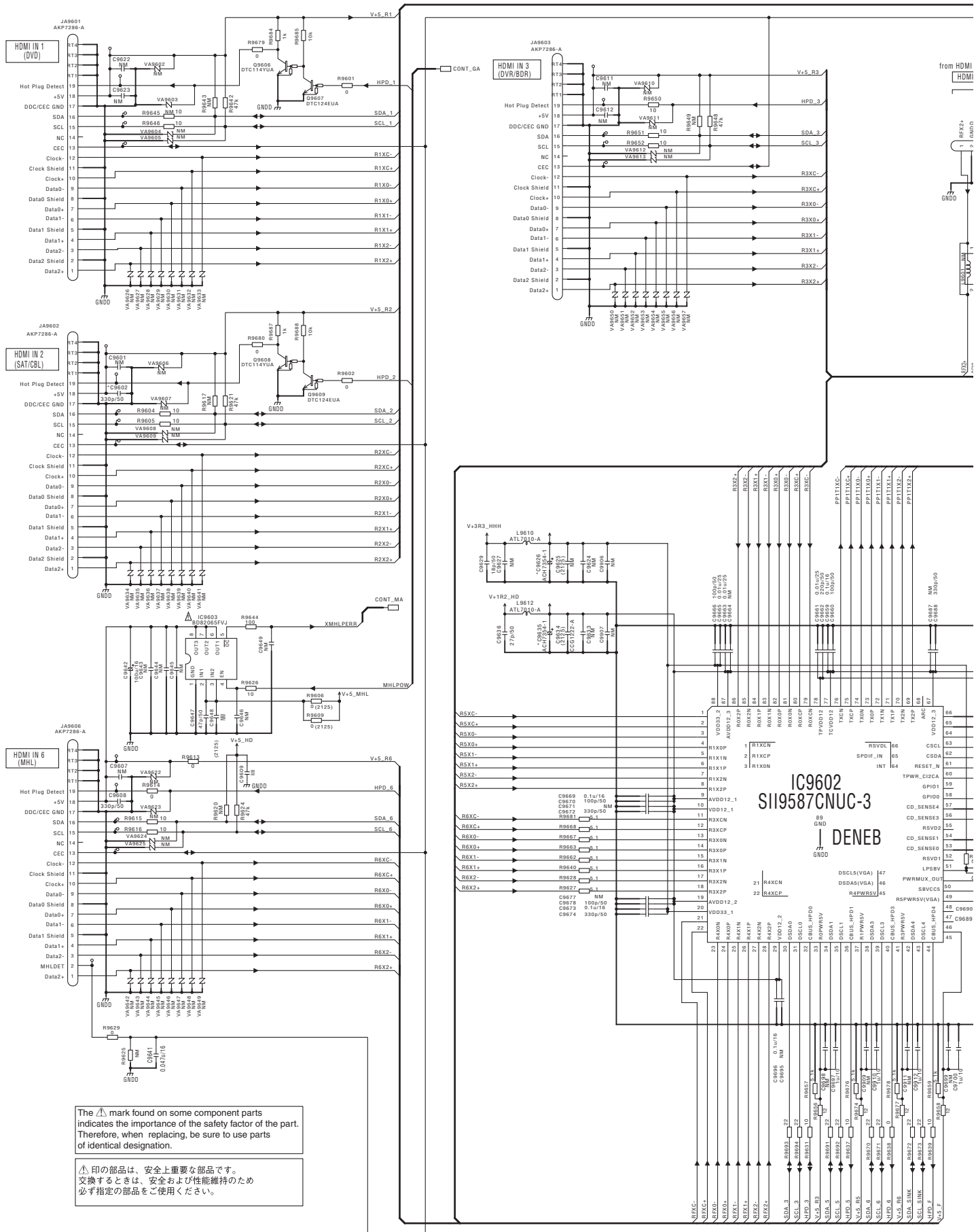

The ⚠ mark found on some component parts indicates the importance of the safety factor of the part. Therefore, when replacing, be sure to use parts of identical designation.

⚠ 印の部品は、安全上重要な部品です。
交換するときは、安全および性能維持のため
必ず指定の部品をご使用ください。

B 3/11

B 3/11 DMAIN ASSY

(VSX-1130-K/CUXESM: 7028077871040)
(VSX-90/CUXE: 7028077871010)
(VSA-1130/JXEV: 7028077871030)

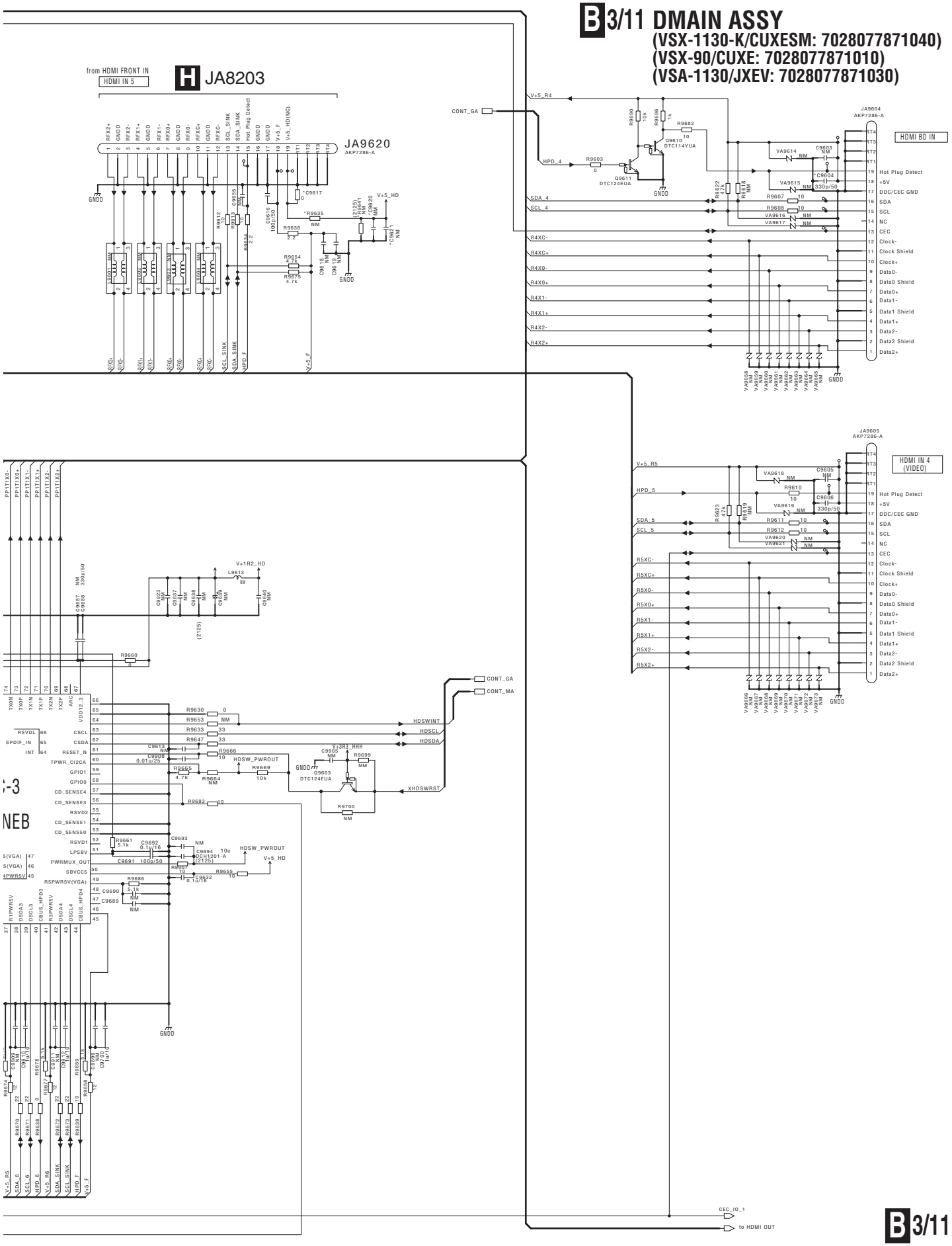

B 3/11

10.6 DMAIN ASSY (4/11)

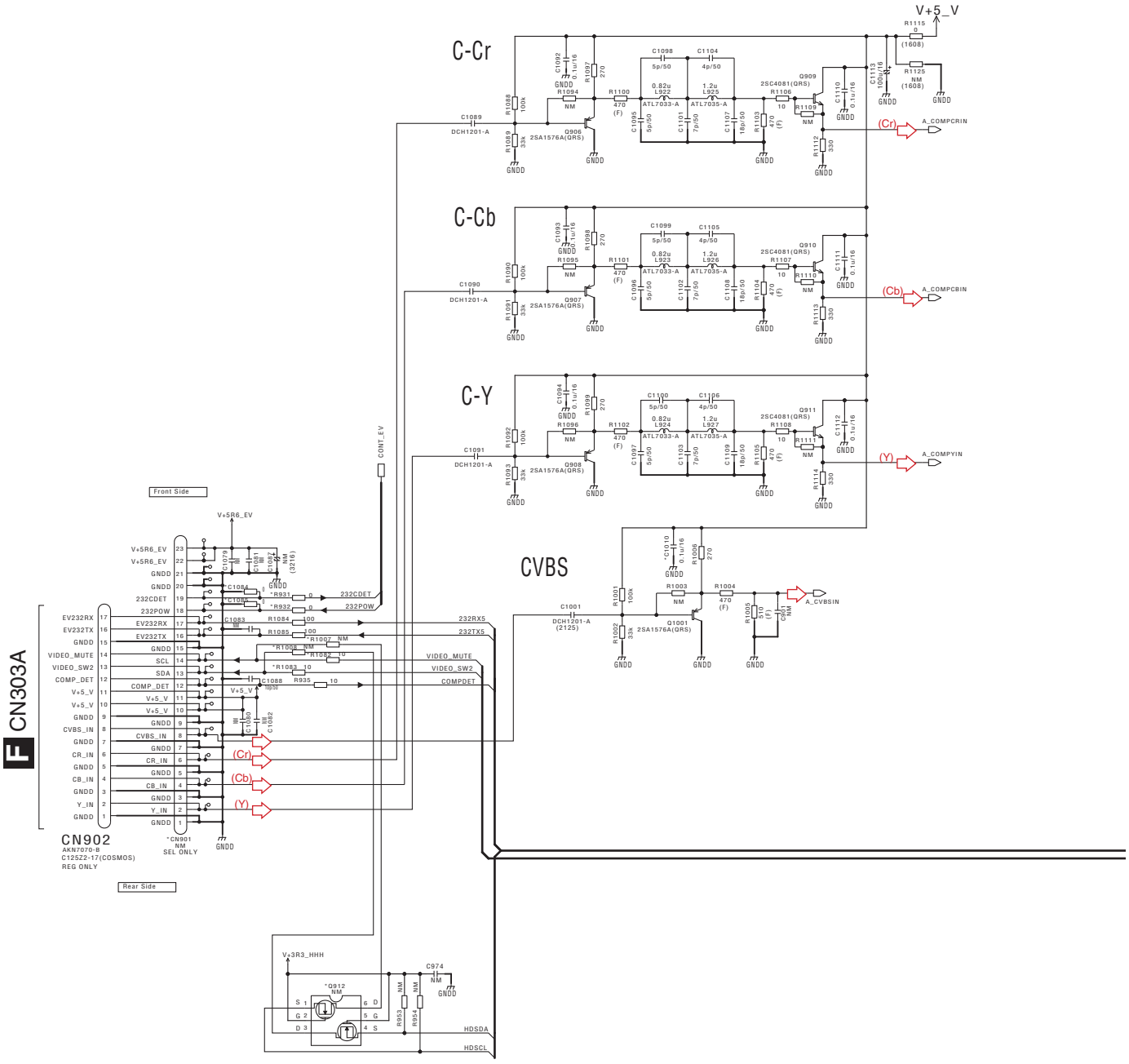

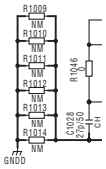

B 4/11 DMAIN ASSY

(VSX-1130-K/CUXESM: 7028077871040)
(VSX-90/CUXE: 7028077871010)
(VSA-1130/JXEV: 7028077871030)

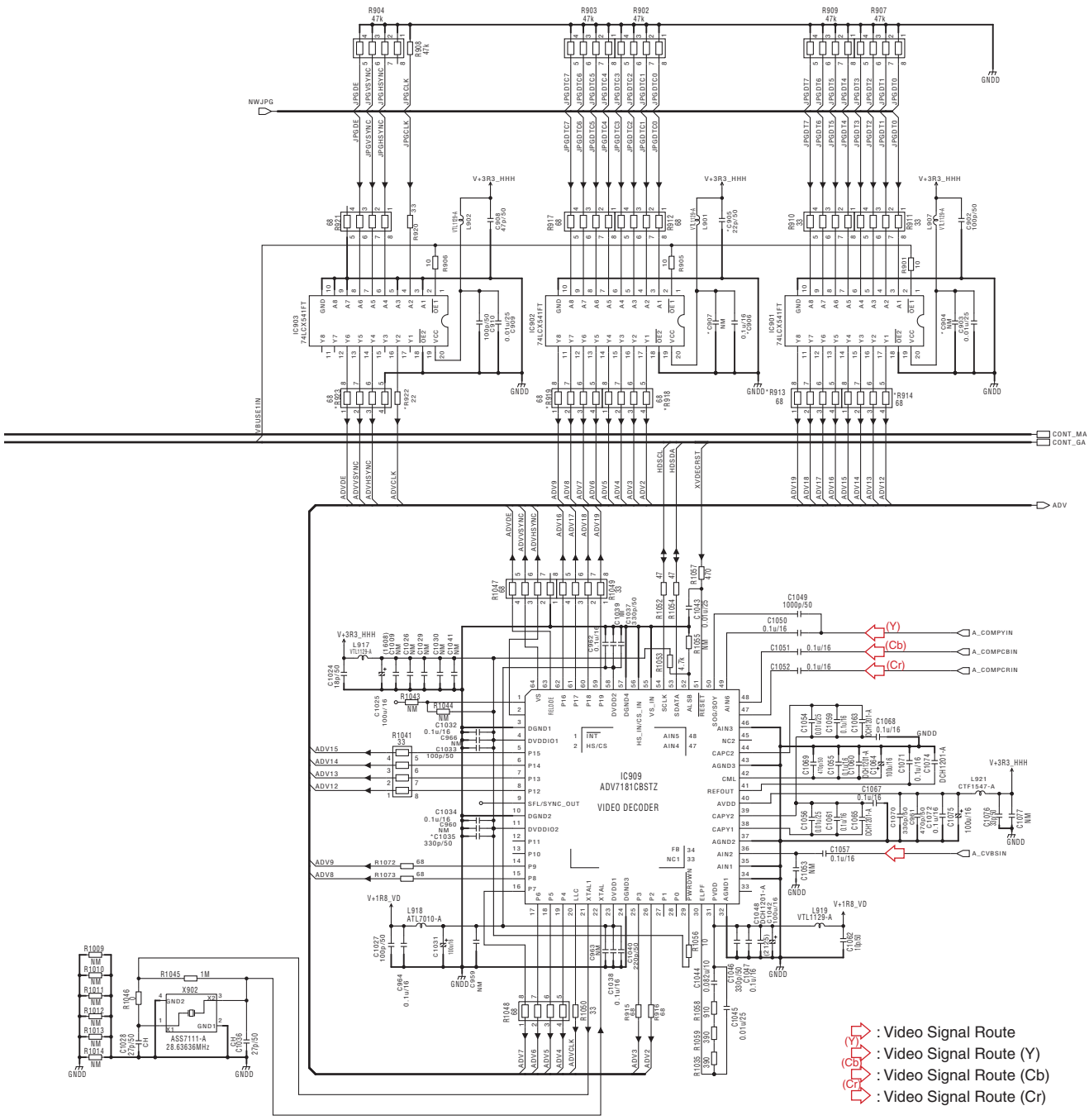

10.7 DMAIN ASSY (5/11)

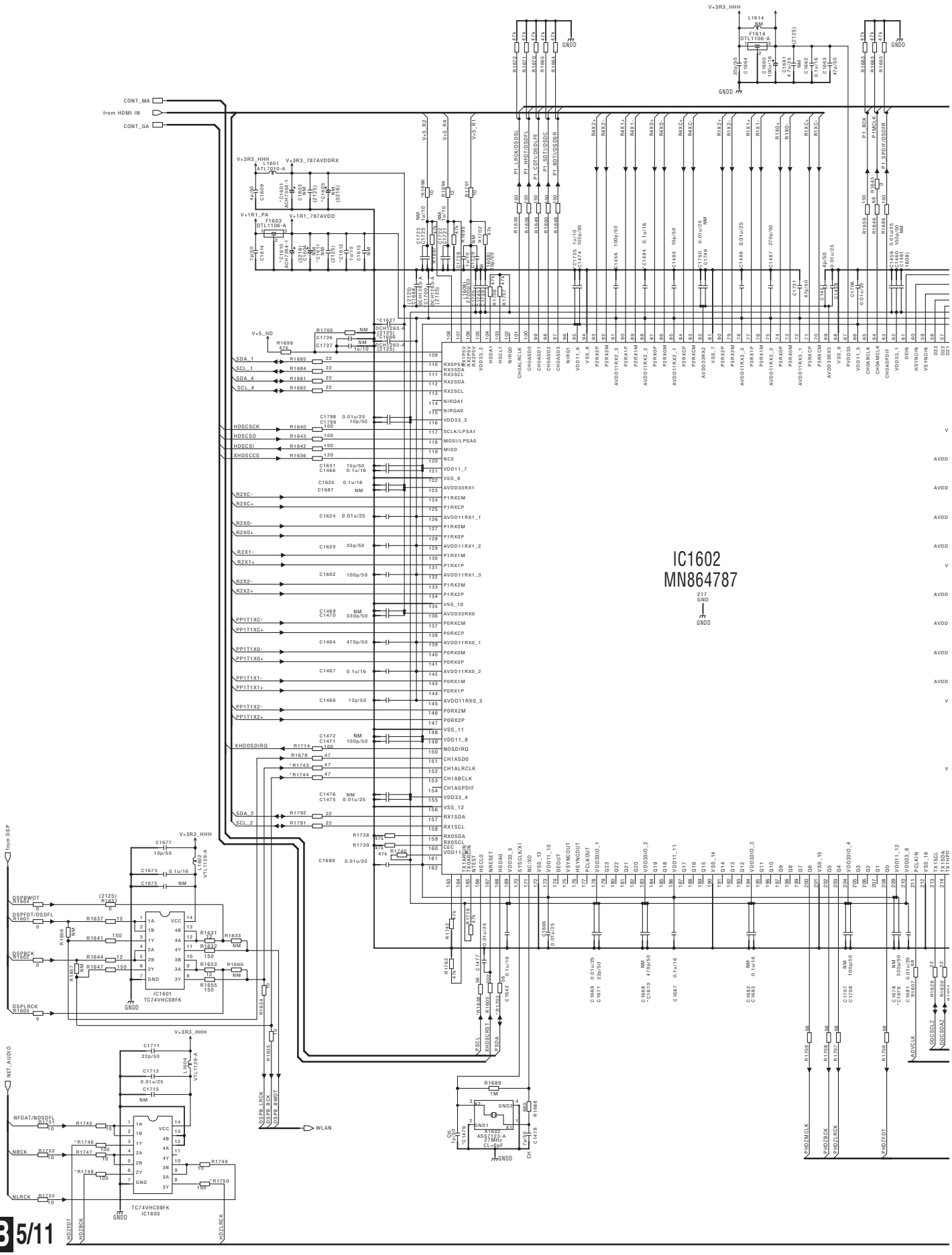

B 5/11

B 5/11 DMAIN ASSY

(VSX-1130-K/CUXESM: 7028077871040)
(VSX-90/CUXE: 7028077871010)
(VSA-1130/JXEV: 7028077871030)

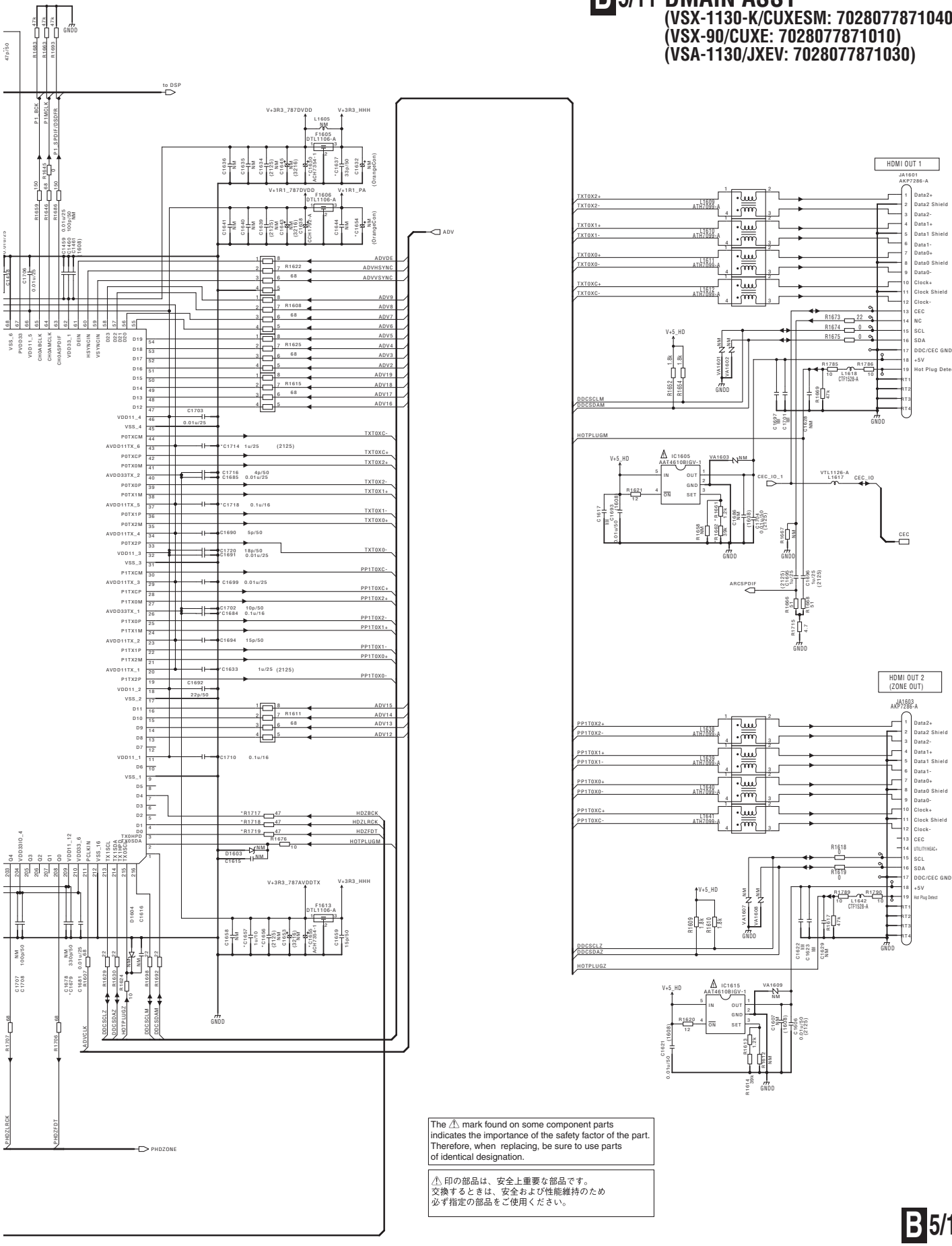

The ⚠ mark found on some component parts indicates the importance of the safety factor of the part. Therefore, when replacing, be sure to use parts of identical designation.

⚠ 印の部品は、安全上重要な部品です。
交換するときは、安全および性能維持のため
必ず指定の部品をご使用ください。

10.8 DMAIN ASSY (6/11)

: Audio Signal Route (L ch)
(D) : Audio Data Route
(FL_D) : Audio Data Route (Front L ch)
(SL_D) : Audio Data Route (Surround L ch)
(C_D) : Audio Data Route (Center ch)
(SBL_D) : Audio Data Route (Surround Back L ch)

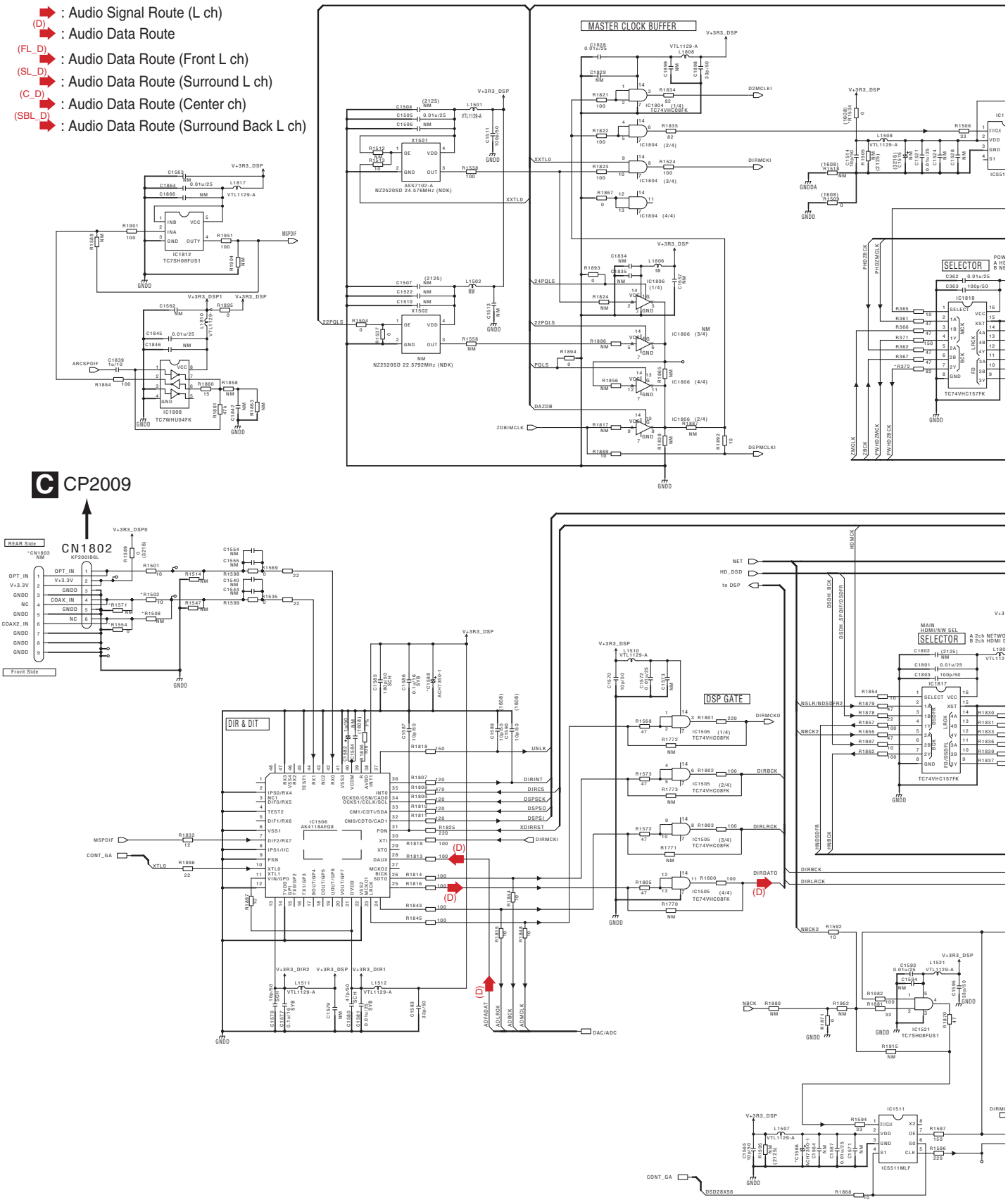

B 6/11 DMAIN ASSY

(VSX-1130-K/CUXESM: 7028077871040)
(VSX-90/CUXE: 7028077871010)
(VSA-1130/JXEV: 7028077871030)

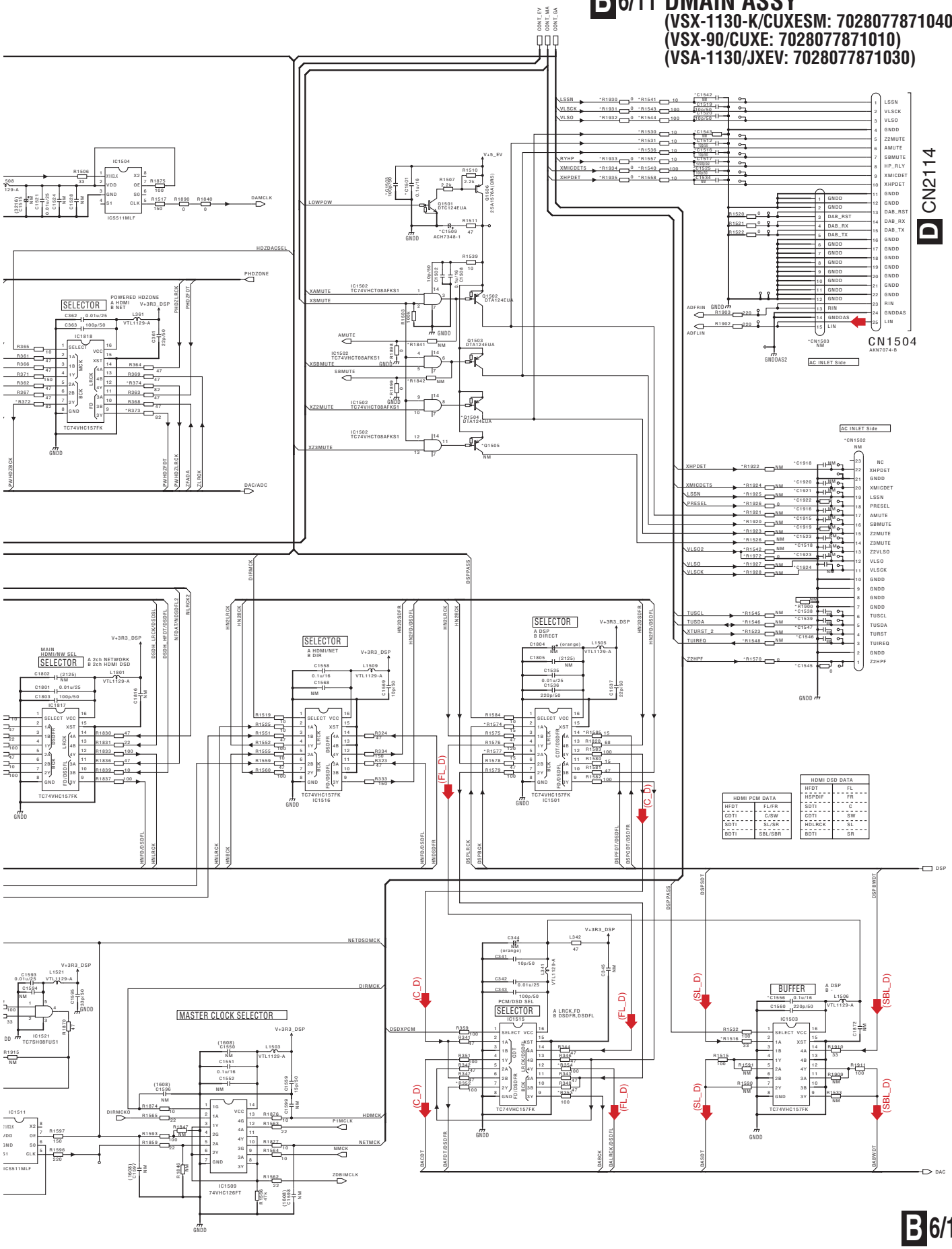

10.9 DMAIN ASSY (7/11)

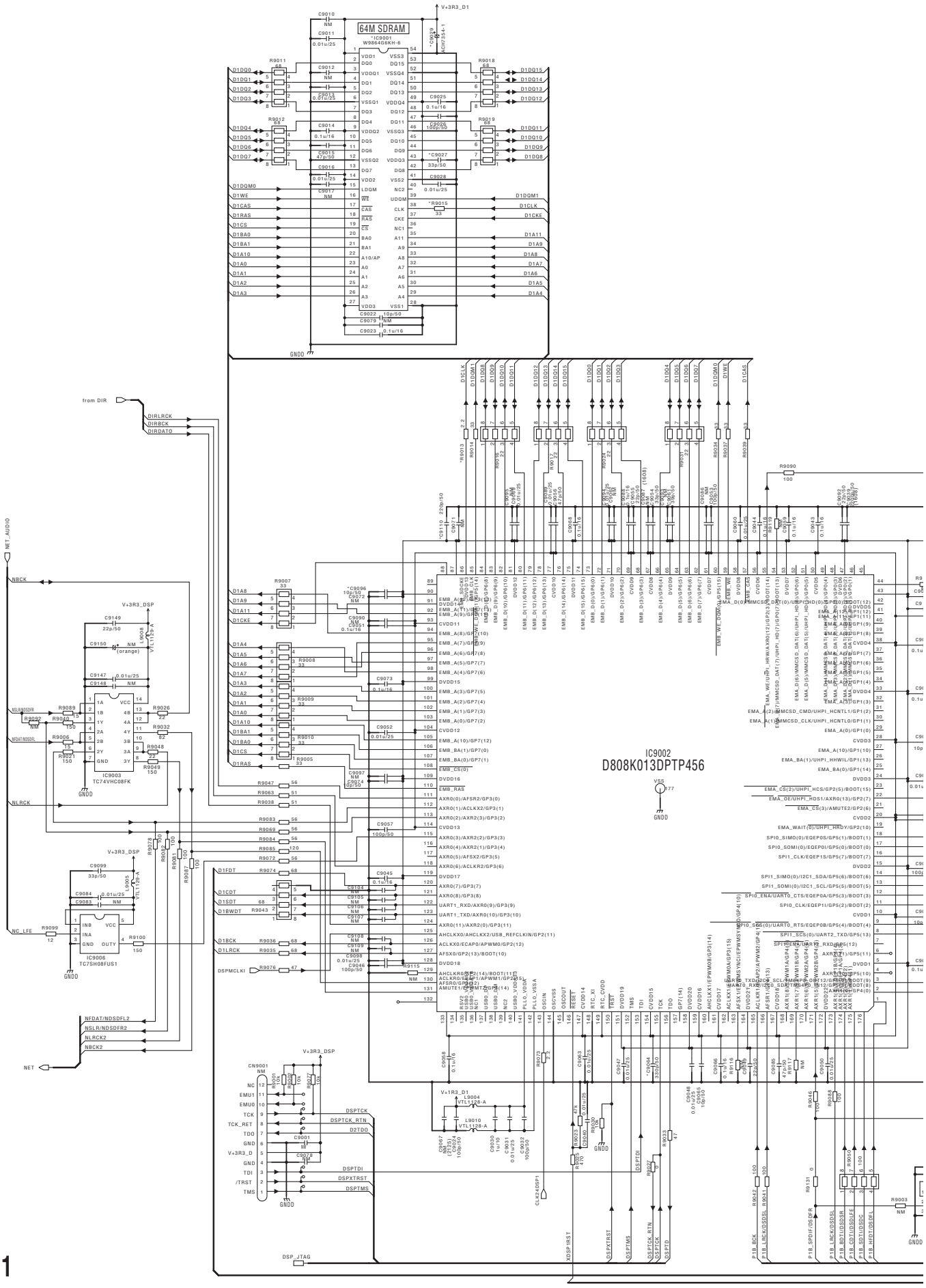

B 7/11 DMAIN ASSY

(VSX-1130-K/CUXESM: 7028077871040)
(VSX-90/CUXE: 7028077871010)
(VSA-1130/JXEV: 7028077871030)

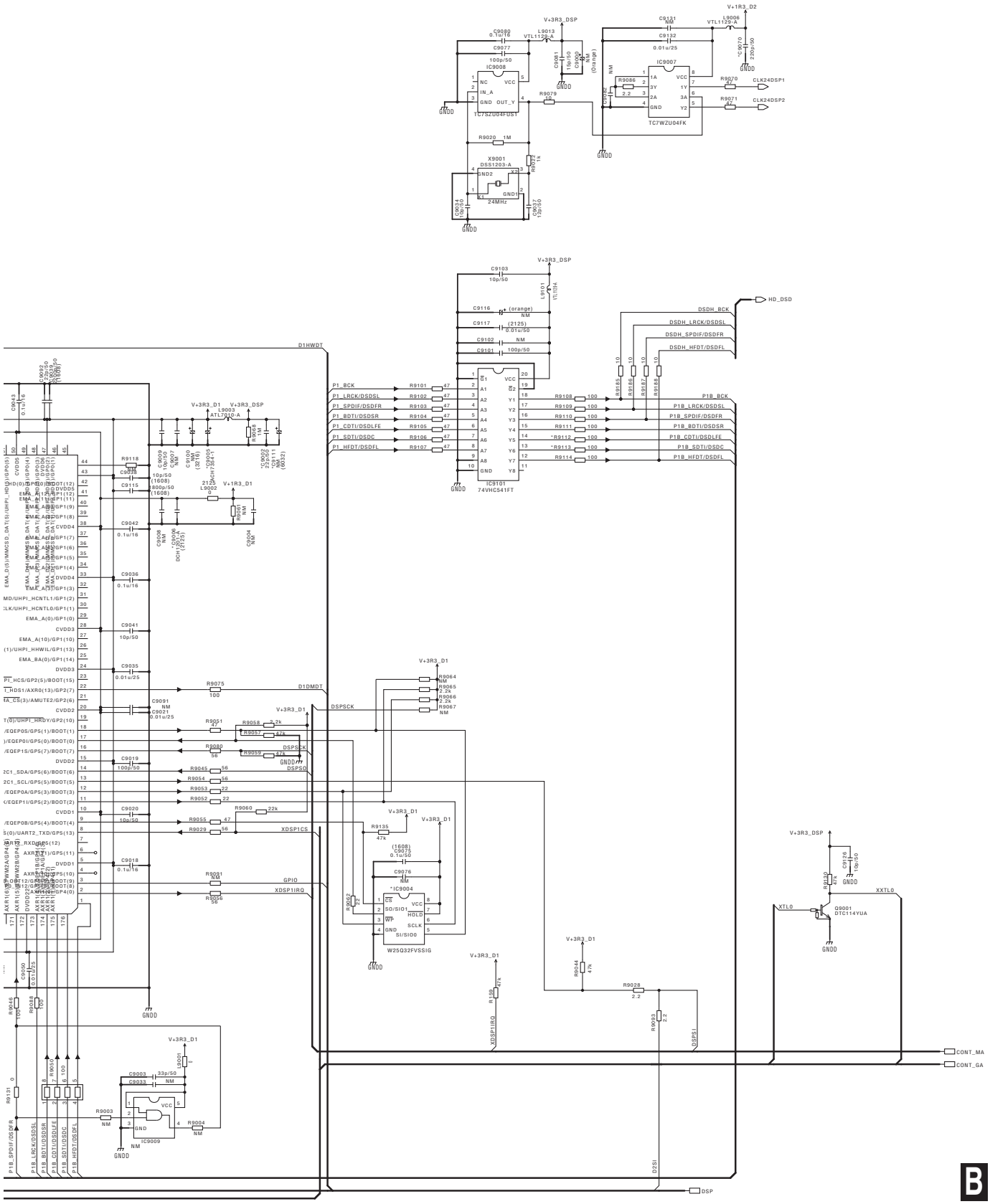

10.10 DMAIN ASSY (8/11)

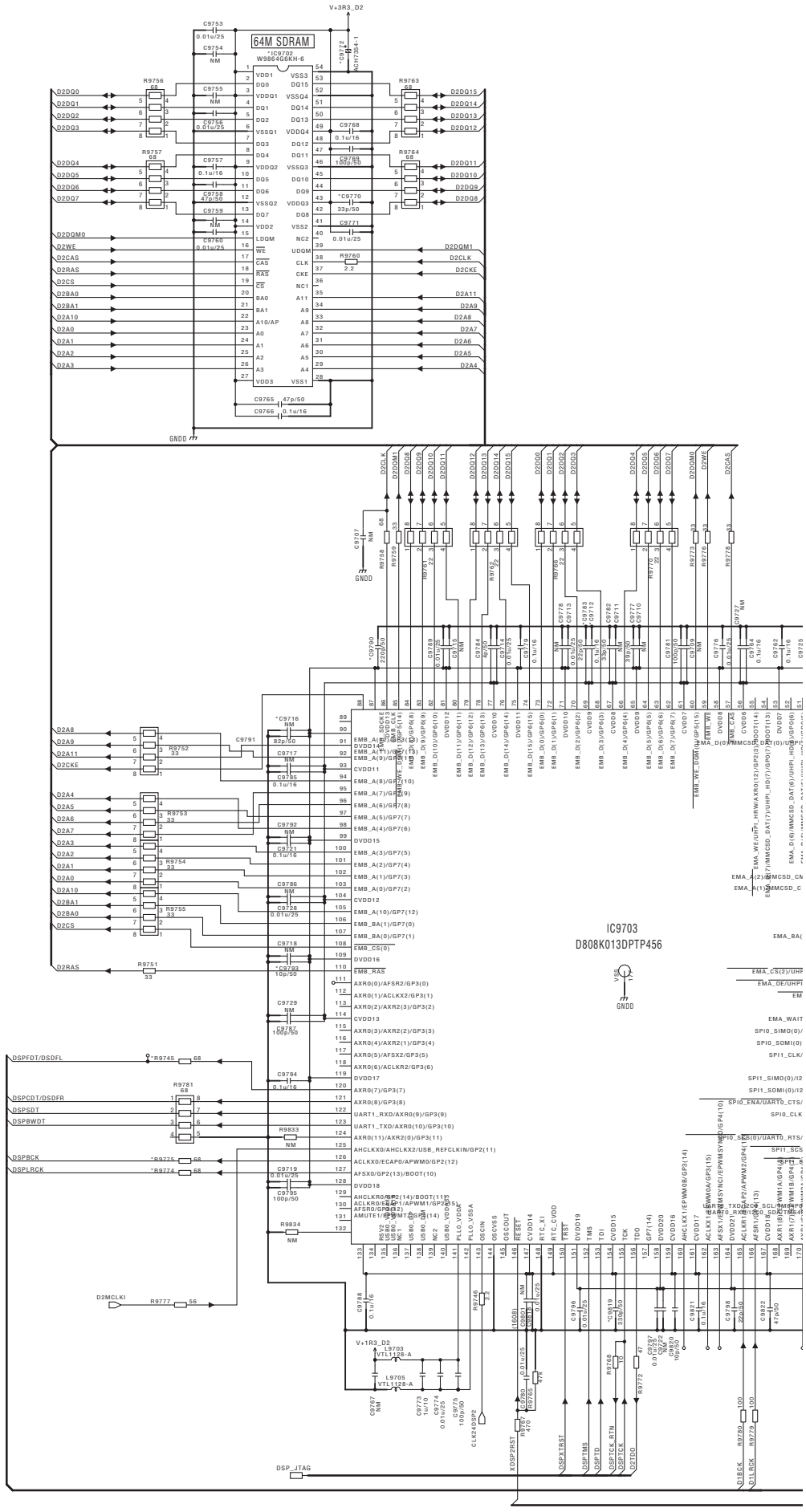

B 8/11

B 8/11 DMAIN ASSY

(VSX-1130-K/CUXESM: 7028077871040)
(VSX-90/CUXE: 7028077871010)
(VSA-1130/JXEV: 7028077871030)

A

B

C

D

E

F

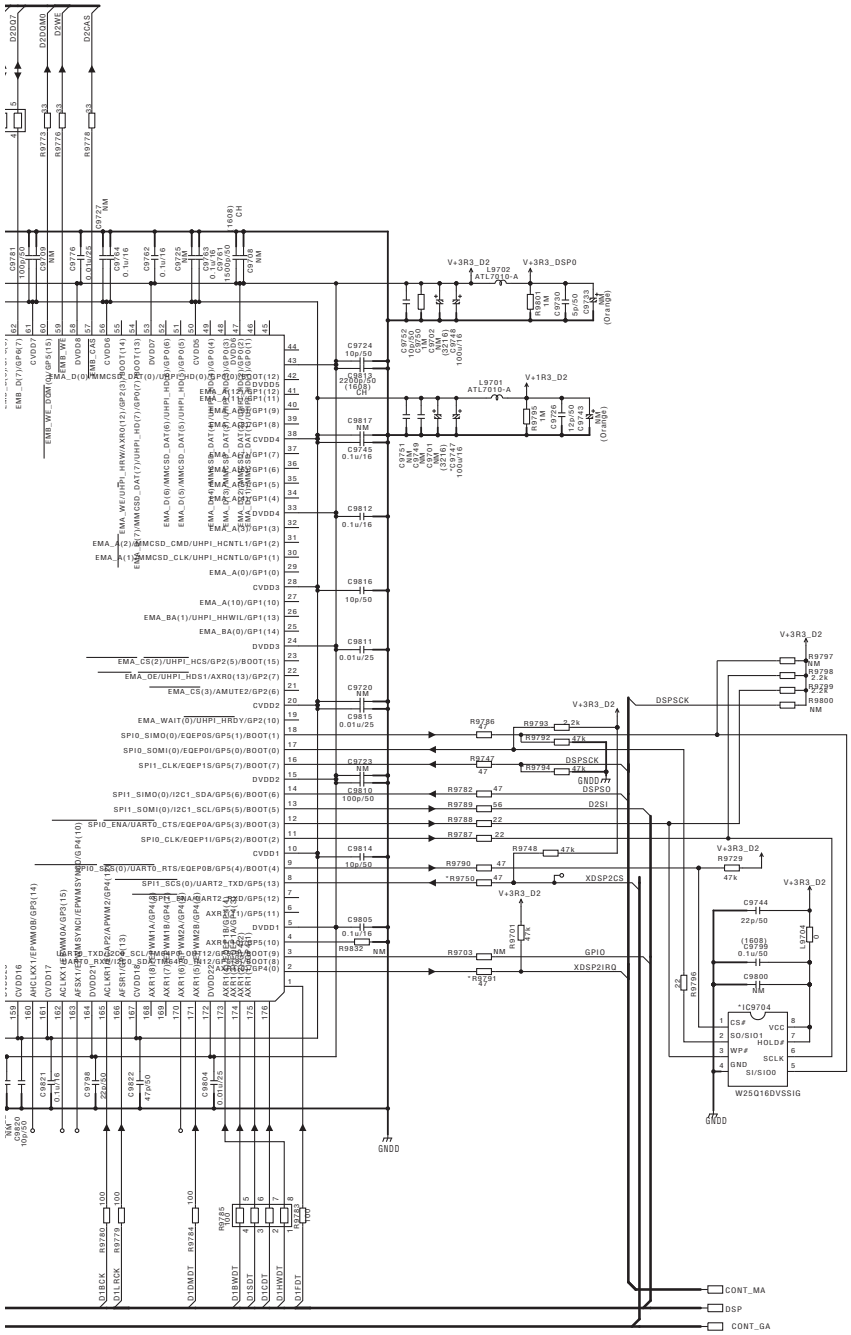

10.11 DMAIN ASSY (9/11)

: Audio Signal Route (L ch)
(FL) : Audio Signal Route (Front L ch)
(SL) : Audio Signal Route (Surround L ch)
(C) : Audio Signal Route (Center ch)
(SBL) : Audio Signal Route (Surround Back L ch)
(SW) : Audio Signal Route (Subwoofer ch)
(ZOL) : Audio Signal Route (Zone L ch)
(D) : Audio Data Route
(FL_D) : Audio Data Route (Front L ch)
(SL_D) : Audio Data Route (Surround L ch)
(C_D) : Audio Data Route (Center ch)
(SBL_D) : Audio Data Route (Surround Back L ch)
(SW_D) : Audio Data Route (Subwoofer ch)
(ZOL_D) : Audio Data Route (Zone L ch)

NOTE
1. RESISTORS
Unit: k-kΩ, M-MΩ or Ω unless otherwise noted.
Rate Power: 1/16w or METMORES-1/2w unless otherwise noted.
Tolerance: ±5% unless otherwise noted.
2. CAPACITORS
Unit: p-pF or u-uF unless otherwise noted.
Ratings: Capacity(F)/Voltage(V) unless otherwise noted.
YR-CEBYR, QYR-CEEQYR, SYR-CKSSYR, CH:CCSRCH, SCH:CCSSCH
AT:CKAT, BL-CKHAZL, QMX:CPMXSQ
3. NM: No Mount

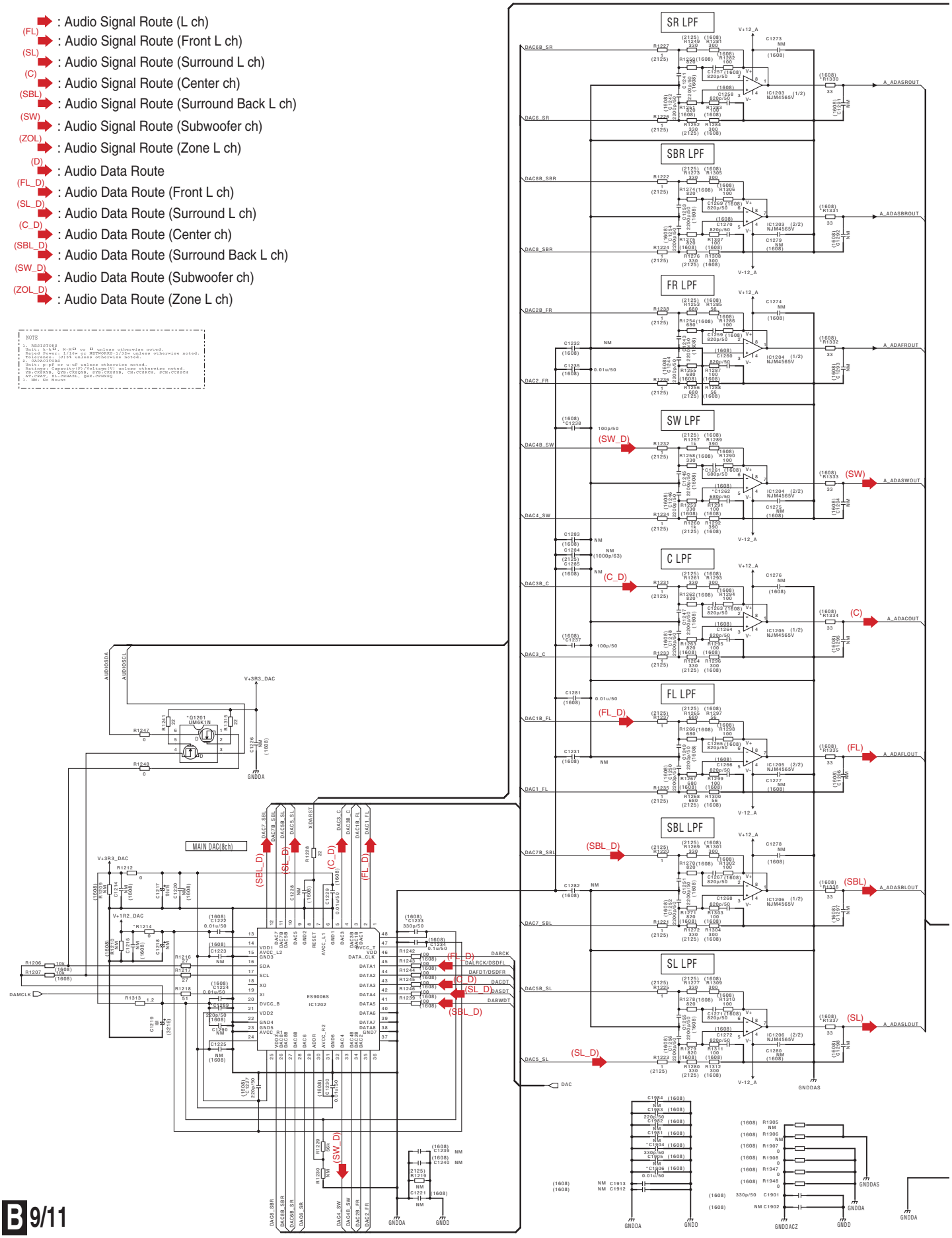

B 9/11 DMAIN ASSY

(VSX-1130-K/CUXESM: 7028077871040)
(VSX-90/CUXE: 7028077871010)
(VSA-1130/JXEV: 7028077871030)

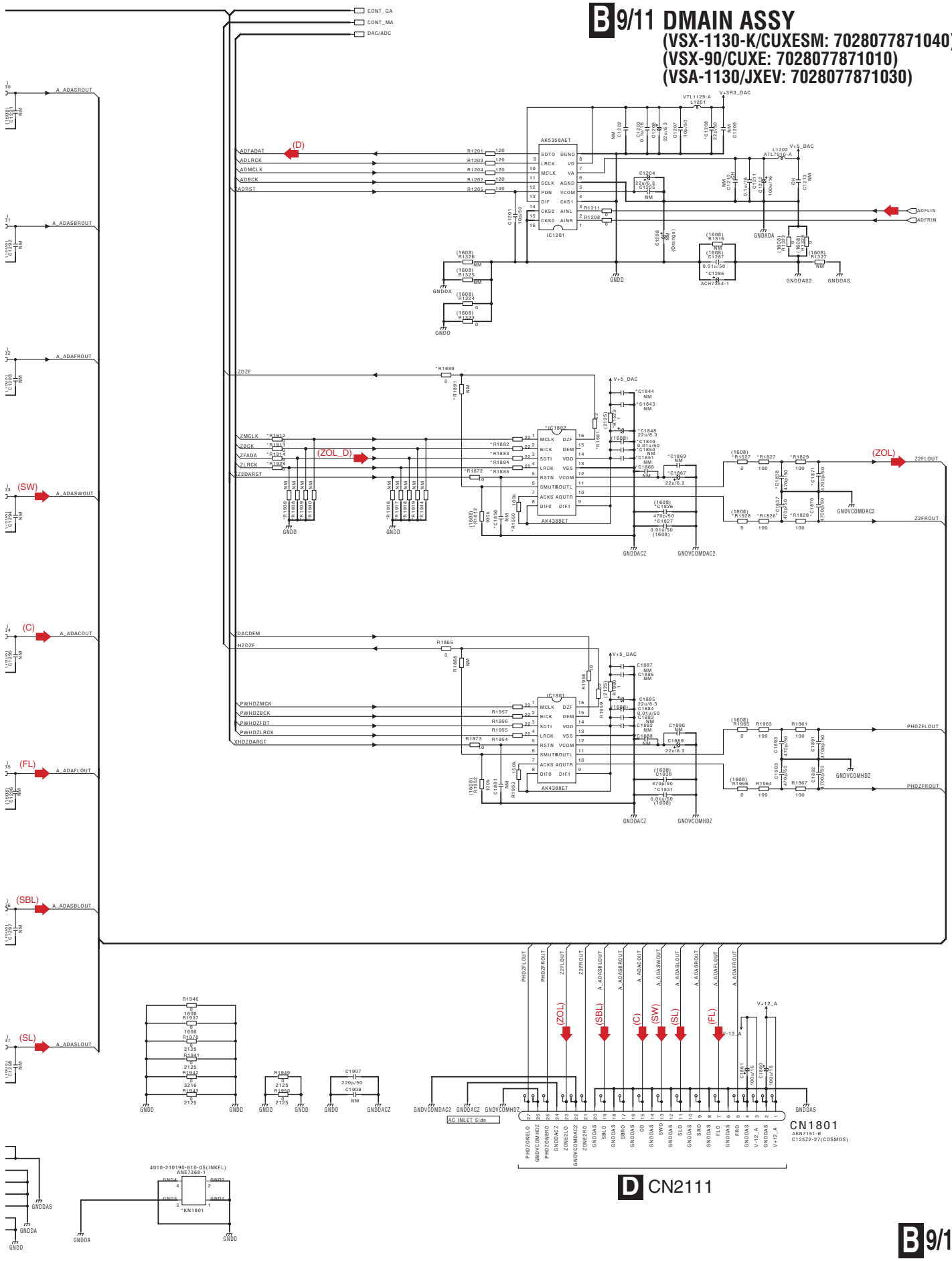

10.12 DMAIN ASSY (10/11)

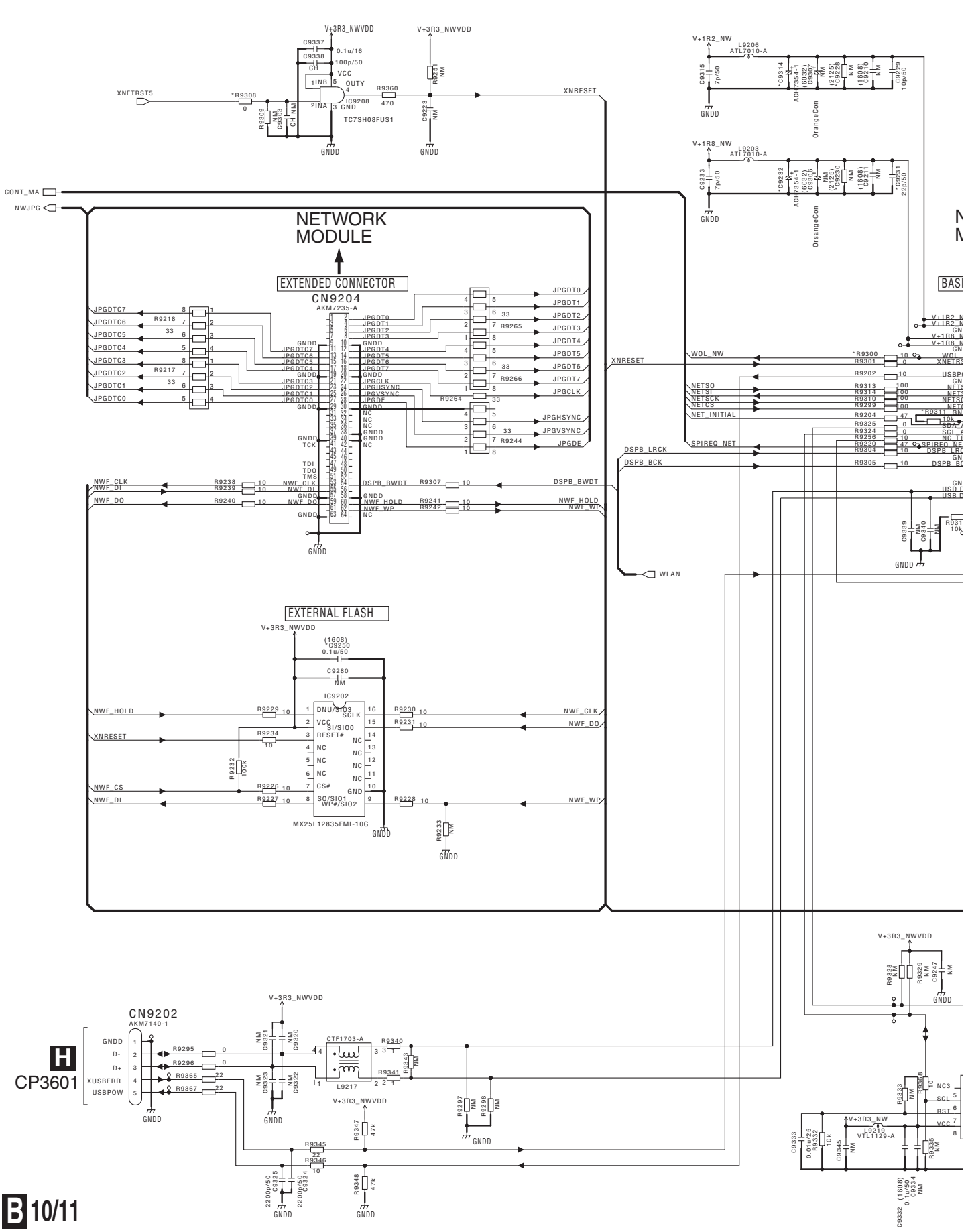

B 10/11 DMAIN ASSY

(VSX-1130-K/CUXESM: 7028077871040)
(VSX-90/CUXE: 7028077871010)
(VSA-1130/JXEV: 7028077871030)

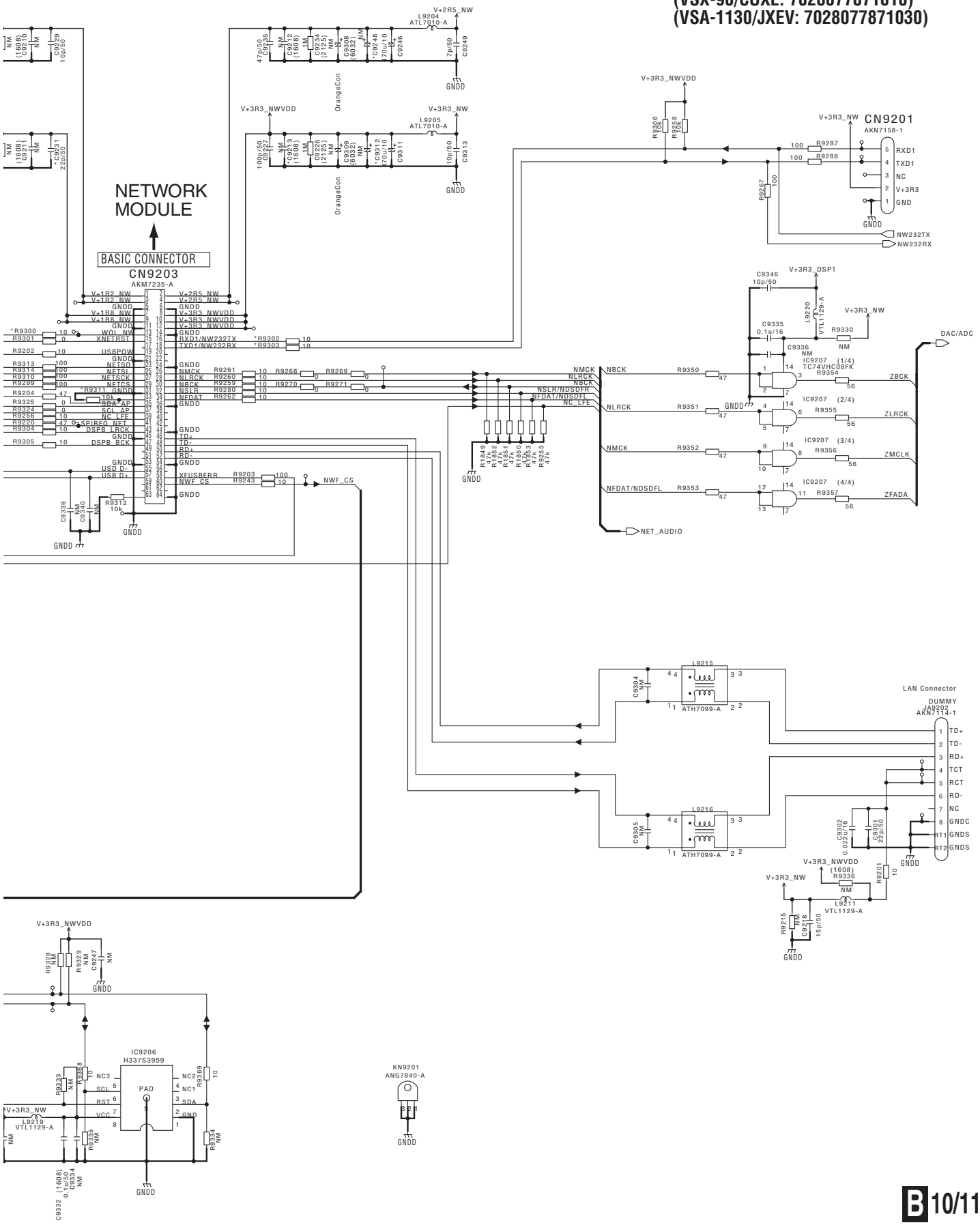

10.13 DMAIN ASSY (11/11)

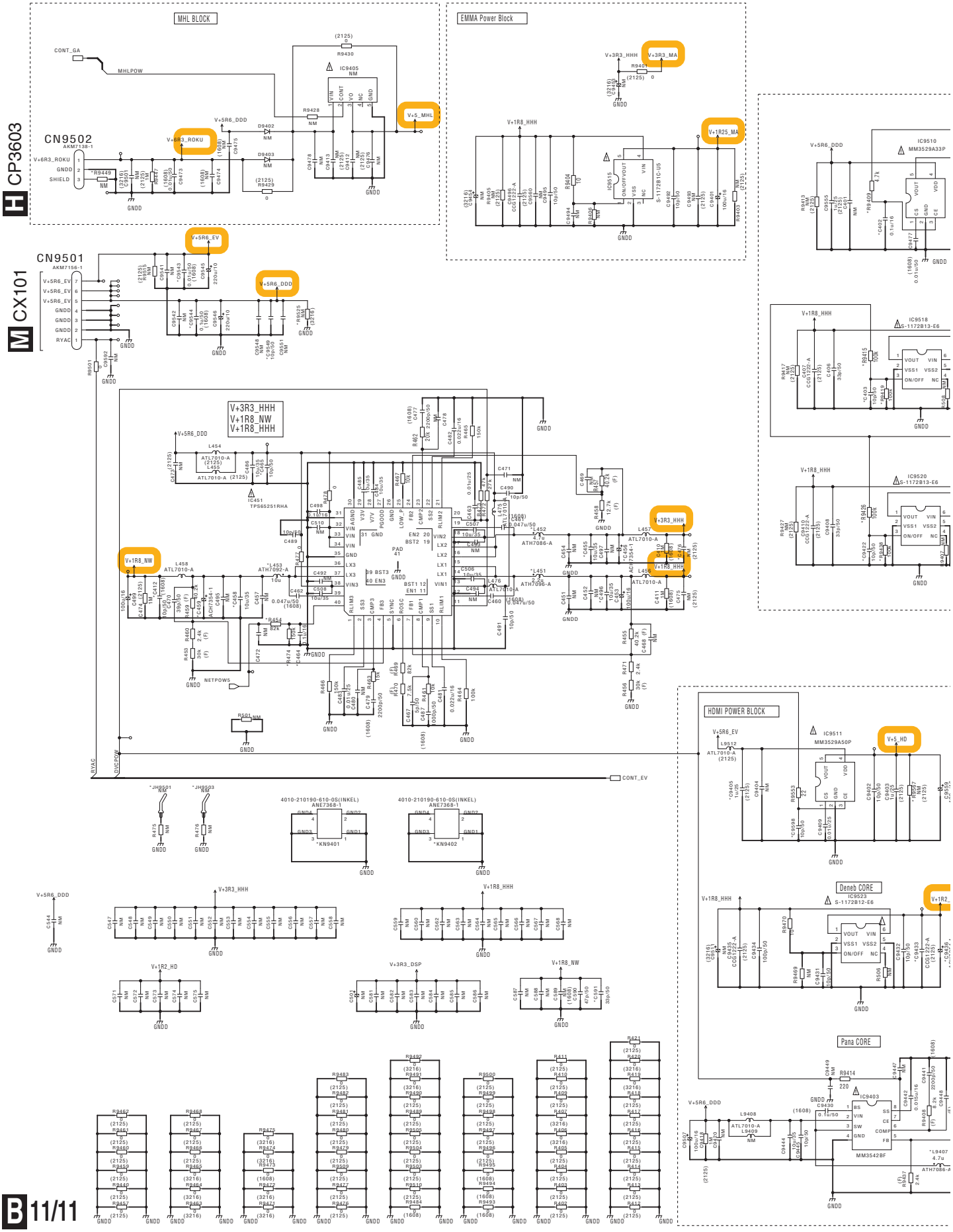

B 11/11 DMAIN ASSY

(VSX-1130-K/CUXESM: 7028077871040)
(VSX-90/CUXE: 7028077871010)
(VSA-1130/JXEV: 7028077871030)

All 1u/10 is DCH1246-A.
CCG1222-A is 4.7u/25.

The ⚠ mark found on some component parts indicates the importance of the safety factor of the part. Therefore, when replacing, be sure to use parts of identical designation.

⚠ 印の部品は、安全上重要な部品です。
交換するときは、安全および性能維持のため
必ず指定の部品をご使用ください。

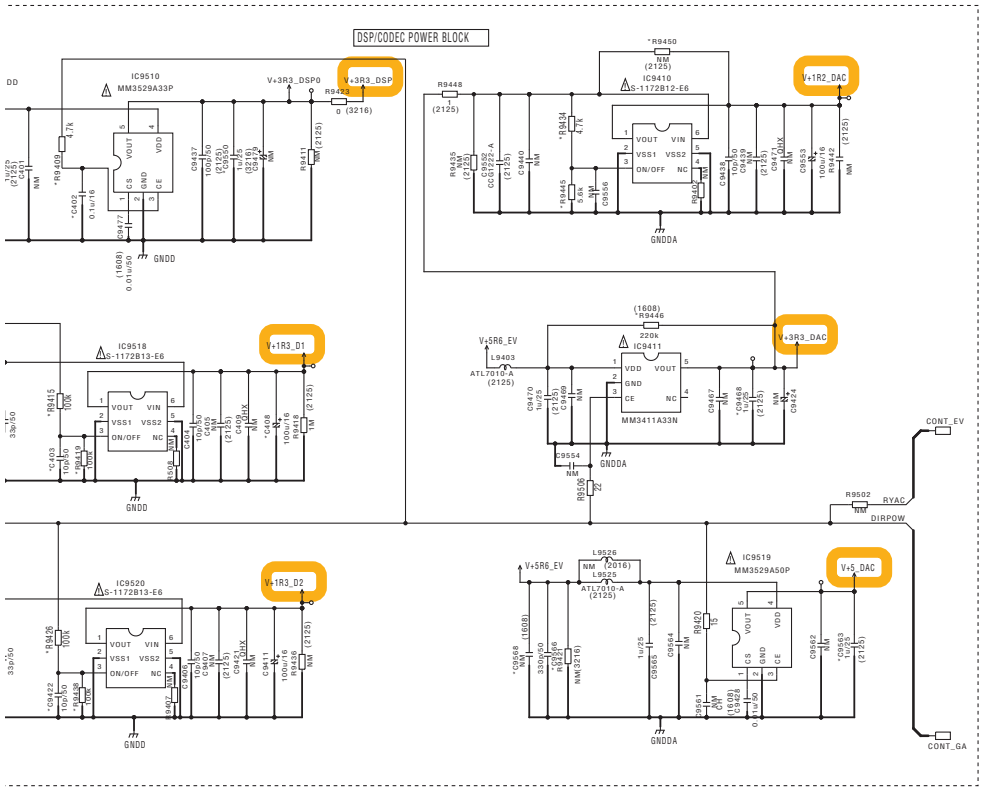

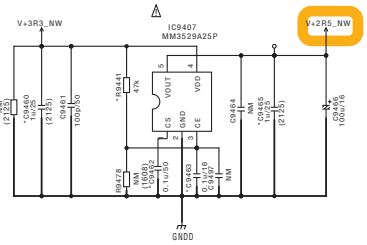

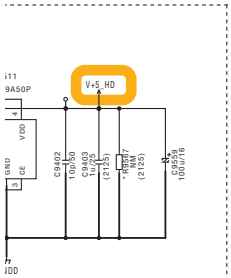

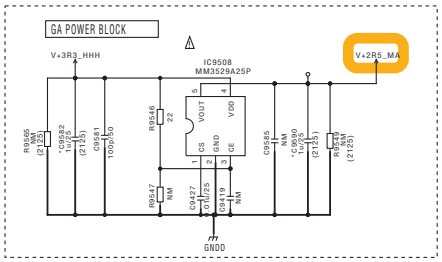

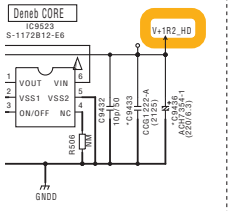

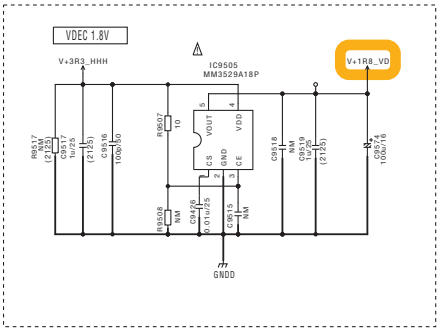

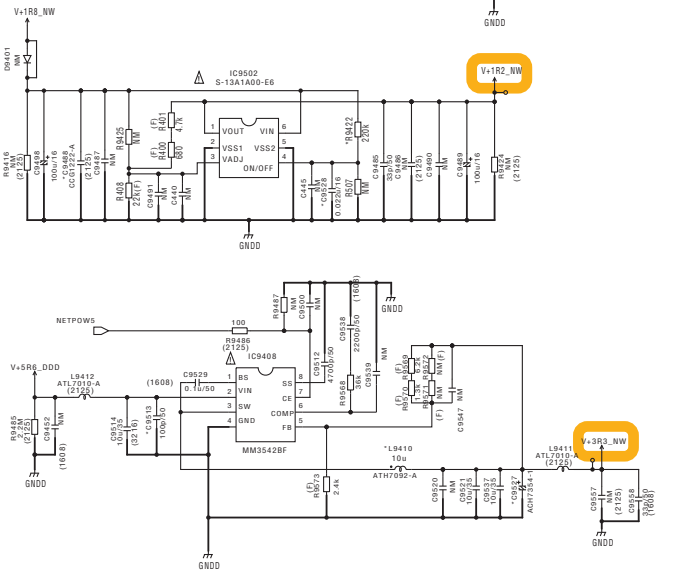

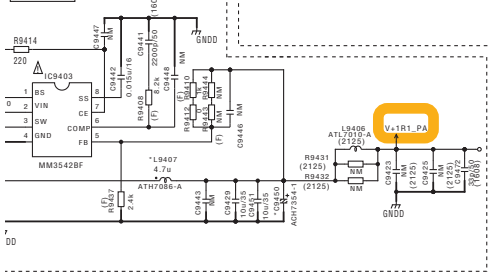

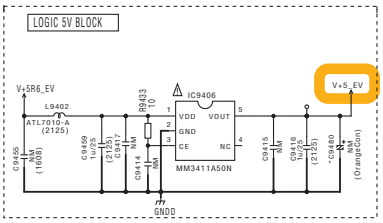

Contrast Table for DMAIN ASSY

AWX2006 (REG-H_CU_ELITE): VSX-90/CUXE
AWX2187 (REG-H_CU): VSX-1130-K/CUXESM
AWX2188 (REG-H_SY): VSX-1130-K/SYXEV8, VSX-930-K/SYXEV8, VSX-930-S/SYXEV8
AWX2189 (REG-H_JP): VSA-1130/JXEV
AWX2190 (REG-H_DL): VSX-930-K/FXE, VSX-930-K/DLXE, VSX-930-K/AXQ5

B 1/11

	AWX2006 (REG-H_CU_ELITE)	AWX2187 (REG-H_CU)	AWX2188 (REG-H_SY)	AWX2189 (REG-H_JP)	AWX2190 (REG-H_DL)
C101	NM	NM	100u/16	100u/16	NM
C105	NM	NM	10p/50	10p/50	NM
C109	NM	NM	8p/50	8p/50	NM
C129	470p/50	470p/50	27p/50	27p/50	470p/50
C132	330p/50	330p/50	12p/50	12p/50	330p/50
C148	470p/50	470p/50	8p/50	8p/50	470p/50
C153	100p/50	100p/50	0.01u/25	0.01u/25	100p/50
C201	470p/50	470p/50	220p/50	220p/50	470p/50
C206	470p/50	470p/50	10p/50	10p/50	470p/50
C213	0.1u/16	0.1u/16	0.01u/25	0.01u/25	0.1u/16
C217	NM	NM	0.01u/25	0.01u/25	NM
C220	0.1u/16	0.1u/16	NM	NM	0.1u/16
R128	27k	NM	NM	NM	NM
R140	NM	0	0	0	0
R213	NM	NM	47k	47k	NM

B 2/11

	AWX2006 (REG-H_CU_ELITE)	AWX2187 (REG-H_CU)	AWX2188 (REG-H_SY)	AWX2189 (REG-H_JP)	AWX2190 (REG-H_DL)
C613	330p/50	330p/50	150p/50	150p/50	330p/50
C614	NM	NM	CCH1814-A	CCH1814-A	NM
C627	470p/50	470p/50	100p/50	100p/50	470p/50
C636	100p/50	100p/50	0.01u/25	0.01u/25	100p/50
C680	0.1u/16	0.1u/16	0.01u/25	0.01u/25	0.1u/16
C691	100p/50	100p/50	NM	NM	100p/50
C703	NM	NM	100u/16	100u/16	NM
C706	100p/50	100p/50	NM	NM	100p/50
C707	100p/50	100p/50	NM	NM	100p/50
C717	100p/50	100p/50	47p/50	47p/50	100p/50
C718	100p/50	100p/50	47p/50	47p/50	100p/50
C739	47p/50	47p/50	8p/50	8p/50	47p/50
C741	47p/50	47p/50	8p/50	8p/50	47p/50
C733	NM	0	0	0	0
C735	100p/50	0	0	0	0
C743	NM	NM	NM	0	NM
R640	100	100	10	0	100
R648	100k	0	0	0	0
R653	100	NM	NM	NM	NM
R683	100	100	10	NM	100
R690	100	100	10	NM	100
R697	0	0	100	100	0
R706	47k	0	0	0	0
R711	0	NM	NM	NM	NM
R722	0	0	0	NM	0
R726	10	0	0	0	0
R731	10	10	100	100	10
R739	NM	100k	100k	100k	100k
R740	10	10	100	100	10
R743	22	0	0	0	0
R749	10	10	10	12	10
R811	100	100	10	NM	100
R845	NM	47k	47k	47k	47k
R847	100	NM	NM	NM	NM
R886	10	10	47	47	10

B 3/11

	AWX2006 (REG-H_CU_ELITE)	AWX2187 (REG-H_CU)	AWX2188 (REG-H_SY)	AWX2189 (REG-H_JP)	AWX2190 (REG-H_DL)
C9602	330p/50	330p/50	100p/50	100p/50	330p/50
C9604	330p/50	330p/50	NM	NM	330p/50

B 4/11

	AWX2006 (REG-H_CU_ELITE)	AWX2187 (REG-H_CU)	AWX2188 (REG-H_SY)	AWX2189 (REG-H_JP)	AWX2190 (REG-H_DL)
C904	NM	NM	22p/50	22p/50	NM
C905	22p/50	22p/50	22p/50	7p/50	22p/50
C906	0.1u/16	0.1u/16	NM	NM	0.1u/16
C907	NM	NM	0.01u/25	0.01u/25	NM
C1010	0.1u/16	0.1u/16	0.01u/25	0.01u/25	0.1u/16
C1035	330p/50	330p/50	470p/50	470p/50	330p/50
R913	68	68	100	100	68
R914	68	68	100	100	68
R918	68	68	100	100	68
R919	68	68	100	100	68
R922	22	22	68	68	22
R923	68	68	100	100	68

B 5/11

	AWX2006 (REG-H_CU_ELITE)	AWX2187 (REG-H_CU)	AWX2188 (REG-H_SY)	AWX2189 (REG-H_JP)	AWX2190 (REG-H_DL)
C1484	0.1u/16	0.1u/16	0.01u/25	0.01u/25	0.1u/16
C1605	NM	NM	CCH1814-A	CCH1814-A	NM
C1611	NM	NM	VCG1072-A	VCG1072-A	NM
C1612	1u/10	1u/10	NM	NM	1u/10
C1627	DCH1263-A	DCH1263-A	ACG7115-A	ACG7115-A	DCH1263-A
C1633	1u/25	1u/25	ACG7117-A	ACG7117-A	1u/25
C1637	33p/50	33p/50	33p/50	12p/50	33p/50
C1654	NM	NM	ACH7306-A	ACH7306-A	NM
C1656	NM	NM	1u/25	1u/25	NM
C1657	1u/10	1u/10	NM	NM	1u/10
C1666	DCH1263-A	DCH1263-A	ACG7115-A	ACG7115-A	DCH1263-A
C1670	470p/50	470p/50	220p/50	220p/50	470p/50
C1679	330p/50	330p/50	0.01u/25	0.01u/25	330p/50
C1684	0.1u/16	0.1u/16	0.01u/25	0.01u/25	0.1u/16
C1688	DCH1263-A	DCH1263-A	ACG7115-A	ACG7115-A	DCH1263-A
C1700	DCH1263-A	DCH1263-A	ACG7115-A	ACG7115-A	DCH1263-A
C1714	1u/25	1u/25	ACG7117-A	ACG7117-A	1u/25
C1718	0.1u/16	0.1u/16	0.01u/25	0.01u/25	0.1u/16
C1735	1u/10	1u/10	0.01u/25	0.01u/25	1u/10
R1638	56	56	68	68	56
R1661	1.2k	1.2k	39k	39k	1.2k
R1662	39k	39k	1.2k	1.2k	39k
R1696	10	10	12	12	10
R1703	56	56	68	68	56
R1717	47	47	56	56	47
R1718	47	47	56	56	47
R1719	47	47	56	56	47
R1743	47	47	56	56	47
R1744	47	47	56	56	47
R1746	100	100	150	150	100
R1748	100	100	150	150	100
R1750	100	100	150	150	100

B 6/11

	AWX2006 (REG-H_CU_ELITE)	AWX2187 (REG-H_CU)	AWX2188 (REG-H_SY)	AWX2189 (REG-H_JP)	AWX2190 (REG-H_DL)
C1501	0.1u/16	0.1u/16	NM	NM	0.1u/16
C1503	100p/50	100p/50	NM	NM	100p/50
C1556	0.1u/16	0.1u/16	0.01u/25	0.01u/25	0.1u/16
C1543	NM	0	0	0	0
C1919	NM	0	0	0	0
R352	100	100	110	110	100
R353	100	100	110	110	100
R354	100	100	110	110	100
R372	82	82	120	120	82
R373	82	82	120	120	82
R374	82	82	120	120	82
R1516	33	33	47	47	33
R1530	10	0	0	0	0
R1534	0	0	5.6	5.6	0
R1574	15	15	22	22	15
R1577	15	15	22	22	15
R1585	15	15	22	22	15
R1923	NM	0	0	0	0
Q1504	DTA124EUA	NM	NM	NM	NM

B 7/11

	AWX2006 (REG-H_CU_ELITE)	AWX2187 (REG-H_CU)	AWX2188 (REG-H_SY)	AWX2189 (REG-H_JP)	AWX2190 (REG-H_DL)
C9002	22p/50	22p/50	7p/50	7p/50	22p/50
C9006	DCH1201-A	DCH1201-A	NM	NM	DCH1201-A
C9027	33p/50	33p/50	27p/50	27p/50	33p/50
C9055	22p/50	22p/50	8p/50	8p/50	22p/50
C9064	330p/50	330p/50	100p/50	100p/50	330p/50
C9070	220p/50	220p/50	15p/50	15p/50	220p/50
C9096	10p/50	10p/50	0.01u/25	0.01u/25	10p/50
C9110	220p/50	220p/50	100p/50	100p/50	220p/50
C9111	NM	NM	NM	ACH7306-A	NM
R9013	2.2	2.2	68	68	2.2
R9015	33	33	2.2	2.2	33
R9059	47k	47k	NM	NM	47k
R9112	100	100	110	110	100
R9113	100	100	110	110	100

B 8/11

	AWX2006 (REG-H_CU_ELITE)	AWX2187 (REG-H_CU)	AWX2188 (REG-H_SY)	AWX2189 (REG-H_JP)	AWX2190 (REG-H_DL)
C9712	0.1u/16	0.1u/16	0.01u/25	0.01u/25	0.1u/16
C9716	NM	NM	0.01u/25	0.01u/25	NM
C9747	100u/16	100u/16	VCH1234-A	VCH1234-A	100u/16
C9770	33p/50	33p/50	27p/50	27p/50	33p/50
C9783	22p/50	22p/50	8p/50	8p/50	22p/50
C9790	220p/50	220p/50	0.1u/16	0.1u/16	220p/50
C9793	10p/50	10p/50	0.01u/25	0.01u/25	10p/50
C9819	330p/50	330p/50	100p/50	100p/50	330p/50
R9745	68	68	75	75	68
R9750	47	47	56	56	47
R9774	68	68	75	75	68
R9775	68	68	75	75	68
R9791	47	47	56	56	47
R9794	47k	47k	NM	NM	47k

B 9/11

	AWX2006 (REG-H_CU_ELITE)	AWX2187 (REG-H_CU)	AWX2188 (REG-H_SY)	AWX2189 (REG-H_JP)	AWX2190 (REG-H_DL)
C1208	22p/50	22p/50	NM	NM	22p/50
C1227	220p/50	220p/50	ACE7113-A	ACE7113-A	220p/50
C1233	330p/50	330p/50	ACE7113-A	ACE7113-A	330p/50
C1237	100p/50	100p/50	ACE7107-A	ACE7107-A	100p/50
C1238	100p/50	100p/50	ACE7107-A	ACE7107-A	100p/50
C1261	680p/50	680p/50	680p/50	560p/50	680p/50
C1262	680p/50	680p/50	680p/50	560p/50	680p/50
C1289	220p/50	220p/50	NM	NM	220p/50
C1826	470p/50	NM	NM	NM	NM
C1827	0.01u/50	NM	NM	NM	NM
C1831	0.01u/50	0.01u/50	NM	NM	0.01u/50
C1837	470p/50	NM	NM	NM	NM
C1838	470p/50	NM	NM	NM	NM
C1848	22u/6.3	NM	NM	NM	NM
C1849	0.01u/50	NM	NM	NM	NM
C1867	22u/6.3	NM	NM	NM	NM
C1870	4700p/50	NM	NM	NM	NM
C1871	4700p/50	NM	NM	NM	NM
C1904	330p/50	330p/50	NM	NM	330p/50
C1906	0.01u/50	0.01u/50	ACE7120-A	ACE7120-A	0.01u/50
R1214	0	0	1	1	0
R1330	33	33	39	39	33
R1331	33	33	39	39	33
R1332	33	33	39	39	33
R1333	33	33	39	33	33
R1334	33	33	39	39	33
R1335	33	33	39	39	33
R1336	33	33	39	39	33
R1337	33	33	39	39	33
R1527	0	NM	NM	NM	NM
R1528	0	NM	NM	NM	NM
R1529	1	NM	NM	NM	NM
R1550	100k	NM	NM	NM	NM
R1561	22	NM	NM	NM	NM
R1812	100k	NM	NM	NM	NM
R1826	100	NM	NM	NM	NM
R1827	100	NM	NM	NM	NM
R1828	100	NM	NM	NM	NM
R1829	100	NM	NM	NM	NM
R1872	10	NM	NM	NM	NM
R1882	22	NM	NM	NM	NM
R1883	22	NM	NM	NM	NM
R1884	22	NM	NM	NM	NM
R1885	22	NM	NM	NM	NM
R1889	0	NM	NM	NM	NM
R1912	0	NM	NM	NM	NM
R1913	0	NM	NM	NM	NM
R1914	0	NM	NM	NM	NM
R1916	NM	0	0	0	0
R1917	NM	0	0	0	0
R1918	NM	0	0	0	0
R1919	NM	0	0	0	0
R1929	0	NM	NM	NM	NM
R1936	NM	0	0	0	0
R1938	NM	0	0	0	0
R1939	NM	0	0	0	0
R1940	NM	0	0	0	0
R1944	NM	0	0	0	0
IC1802	AK4388ET	NM	NM	NM	NM

B 10/11

	AWX2006 (REG-H_CU_ELITE)	AWX2187 (REG-H_CU)	AWX2188 (REG-H_SY)	AWX2189 (REG-H_JP)	AWX2190 (REG-H_DL)
C9213	NM	NM	ACE7113-A	ACE7113-A	NM
C9231	22p/50	22p/50	22p/50	18p/50	22p/50
C9250	0.1u/50	0.1u/50	0.01u/50	0.01u/50	0.1u/50
C9314	ACH7354-1	ACH7354-1	VCH1234-A	VCH1234-A	ACH7354-1
C9228	NM	NM	1M	1M	NM
C9230	NM	NM	1M	1M	NM
R9300	10	10	22	22	10
R9302	10	10	100	100	10
R9303	10	10	100	100	10
R9308	0	0	47	47	0
R9311	10k	10k	47k	47k	10k

B 11/11

	AWX2006 (REG-H_CU_ELITE)	AWX2187 (REG-H_CU)	AWX2188 (REG-H_SY)	AWX2189 (REG-H_JP)	AWX2190 (REG-H_DL)
C402	0.1u/16	0.1u/16	0.01u/25	0.01u/25	0.1u/16
C403	10p/50	10p/50	NM	NM	10p/50
C408	100u/16	100u/16	VCH1234-A	VCH1234-A	100u/16
C412	10p/50	10p/50	10p/50	15p/50	10p/50
C455	10u/35	10u/35	CCG1332-A	CCG1332-A	10u/35
C458	10u/35	10u/35	CCG1332-A	CCG1332-A	10u/35
C464	0.1u/16	0.1u/16	0.022u/16	0.022u/16	0.1u/16
C465	10p/50	10p/50	4p/50	4p/50	10p/50
C476	NM	NM	ACE7100-A	ACE7100-A	NM
C496	10u/35	10u/35	CCG1332-A	CCG1332-A	10u/35
C591	33p/50	33p/50	NM	NM	33p/50
C9405	1u/25	1u/25	CCG1325-A	CCG1325-A	1u/25
C9422	10p/50	10p/50	NM	NM	10p/50
C9433	CCG1222-A	CCG1222-A	NM	NM	CCG1222-A
C9460	1u/25	1u/25	CCG1325-A	CCG1325-A	1u/25
C9462	0.1u/50	0.1u/50	0.01u/50	0.01u/50	0.1u/50
C9463	0.1u/16	0.1u/16	0.01u/25	0.01u/25	0.1u/16
C9465	1u/25	1u/25	VCG1072-A	VCG1072-A	1u/25
C9468	1u/25	1u/25	VCG1072-A	VCG1072-A	1u/25
C9480	NM	NM	NM	ACH7306-A	NM
C9488	CCG1222-A	CCG1222-A	ACG7114-A	ACG7114-A	CCG1222-A
C9513	100p/50	100p/50	7p/50	7p/50	100p/50
C9528	0.022u/16	0.022u/16	0.01u/25	0.01u/25	0.022u/16
C9543	0.01u/50	0.01u/50	NM	NM	0.01u/50
C9544	0.1u/50	0.1u/50	NM	NM	0.1u/50
C9549	10p/50	10p/50	NM	NM	10p/50
C9550	1u/25	1u/25	VCG1072-A	VCG1072-A	1u/25
C9563	1u/25	1u/25	CCG1325-A	CCG1325-A	1u/25
C9566	330p/50	330p/50	NM	NM	330p/50
C9568	NM	NM	330p/50	330p/50	NM
C9582	1u/25	1u/25	CCG1325-A	CCG1325-A	1u/25
C9590	1u/25	1u/25	CCG1325-A	CCG1325-A	1u/25
C9598	10p/50	10p/50	NM	NM	10p/50
R454	82k	82k	560k	560k	82k
R474	150k	150k	1M	1M	150k
R9409	4.7k	4.7k	47k	47k	4.7k
R9415	100k	100k	220k	220k	100k
R9419	100k	100k	220k	220k	100k
R9422	220k	220k	470k	470k	220k
R9426	100k	100k	220k	220k	100k
R9434	4.7k	4.7k	47k	47k	4.7k
R9438	100k	100k	220k	220k	100k
R9441	47k	47k	560k	560k	47k
R9445	5.6k	5.6k	56k	56k	5.6k
R9446	220k	220k	220k	240k	220k
R9450	NM	NM	180k	180k	NM
R9525	NM	NM	1M	1M	NM
R9567	NM	NM	NM	1M	NM
L451	ATH7096-A	ATH7096-A	ATH7105-A	ATH7105-A	ATH7105-A
L452	ATH7086-A	ATH7086-A	ATH7106-A	ATH7106-A	ATH7106-A
L453	ATH7092-A	ATH7092-A	ATH7107-A	ATH7107-A	ATH7107-A
L9407	ATH7086-A	ATH7086-A	ATH7106-A	ATH7106-A	ATH7106-A
L9410	ATH7092-A	ATH7092-A	ATH7107-A	ATH7107-A	ATH7107-A

10.14 OPTCO and BRIDGE ASSYS

D BRIDGE ASSY
(VSX-1130-K/CUXESM, VSA-1130/JXEV: 7028077812020)
(VSX-90/CUXE: 7028077812010)

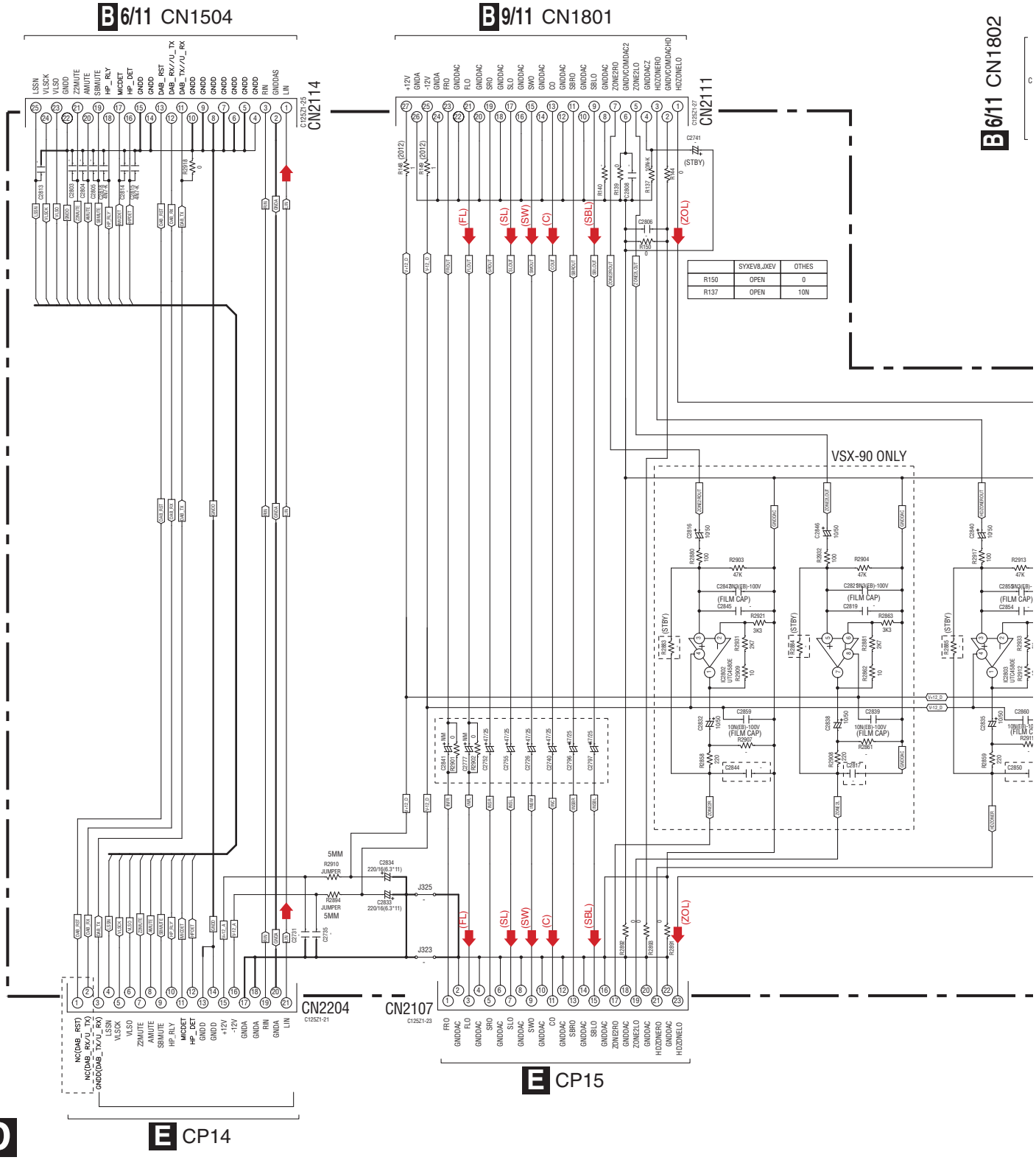

	SYXEV8,JXEV	OTHES
R150	OPEN	0
R137	OPEN	10N

C OPTCO ASSY
(VSX-1130-K/CUXESM, VSX-90/CUXE: 70280777230A0)
(VSA-1130/JXEV: 70280777230B0)

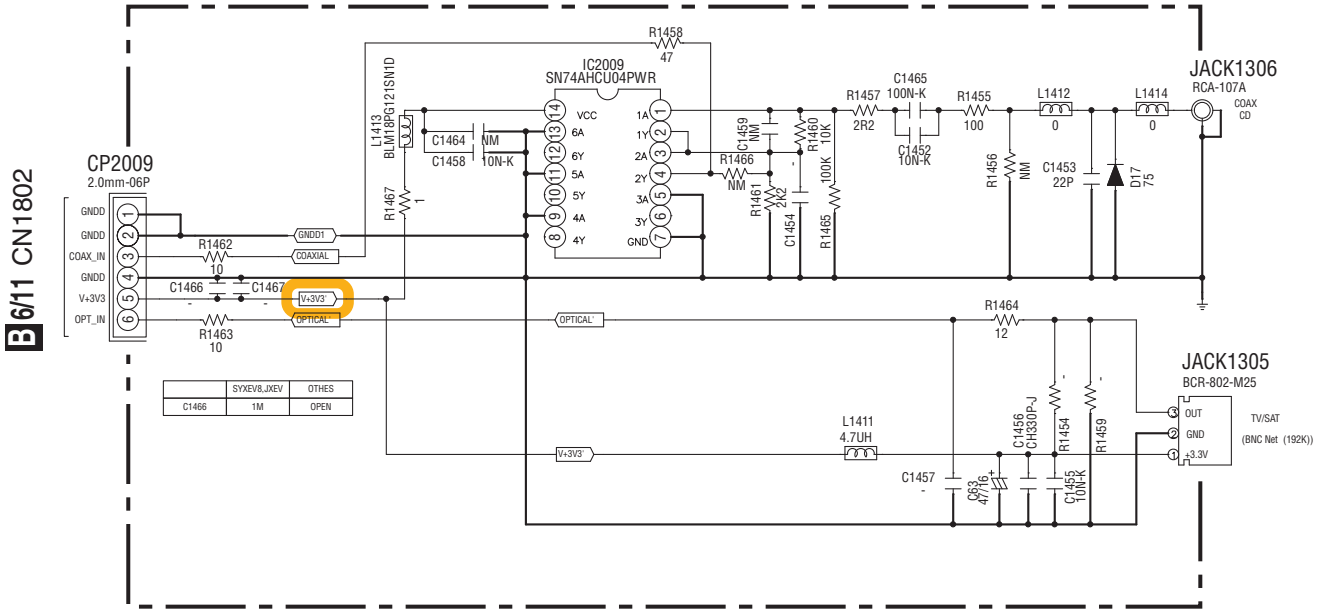

	SYXEV8,JXEV	OTHES
C1466	1M	OPEN

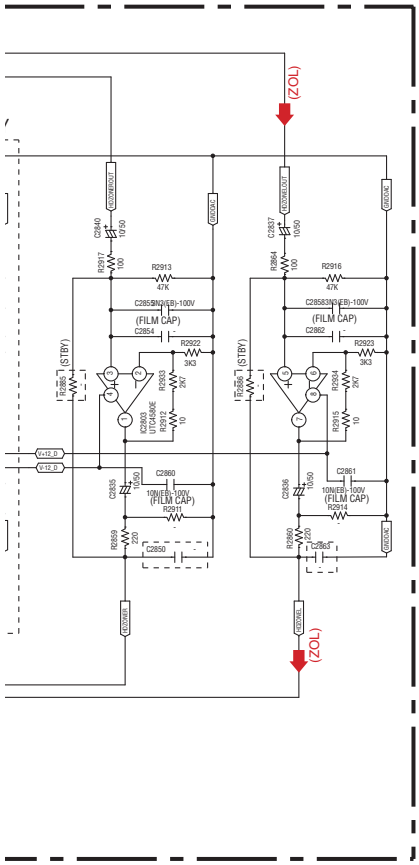

➡ : Audio Signal Route (L ch)
(FL) ➡ : Audio Signal Route (Front L ch)
(SL) ➡ : Audio Signal Route (Surround L ch)
(C) ➡ : Audio Signal Route (Center ch)
(SBL) ➡ : Audio Signal Route (Surround Back L ch)
(SW) ➡ : Audio Signal Route (Subwoofer ch)
(ZOL) ➡ : Audio Signal Route (Zone L ch)

C D

10.15 AUDIO ASSY

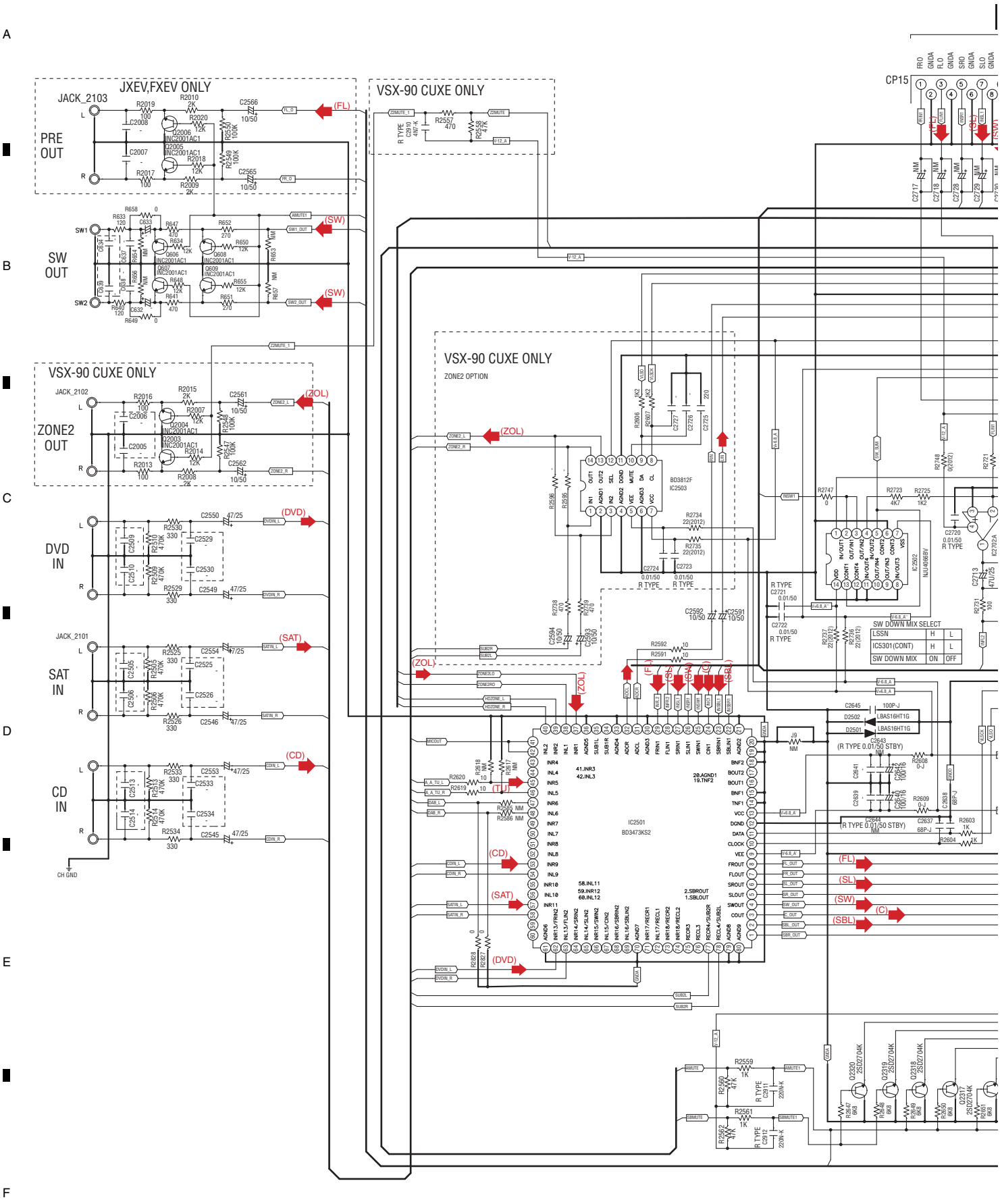

E AUDIO ASSY

(VSX-1130-K/CUXESM: 7028077841040)
(VSX-90/CUXE: 7028077841010)
(VSA-1130/JXEV: 7028077841030)

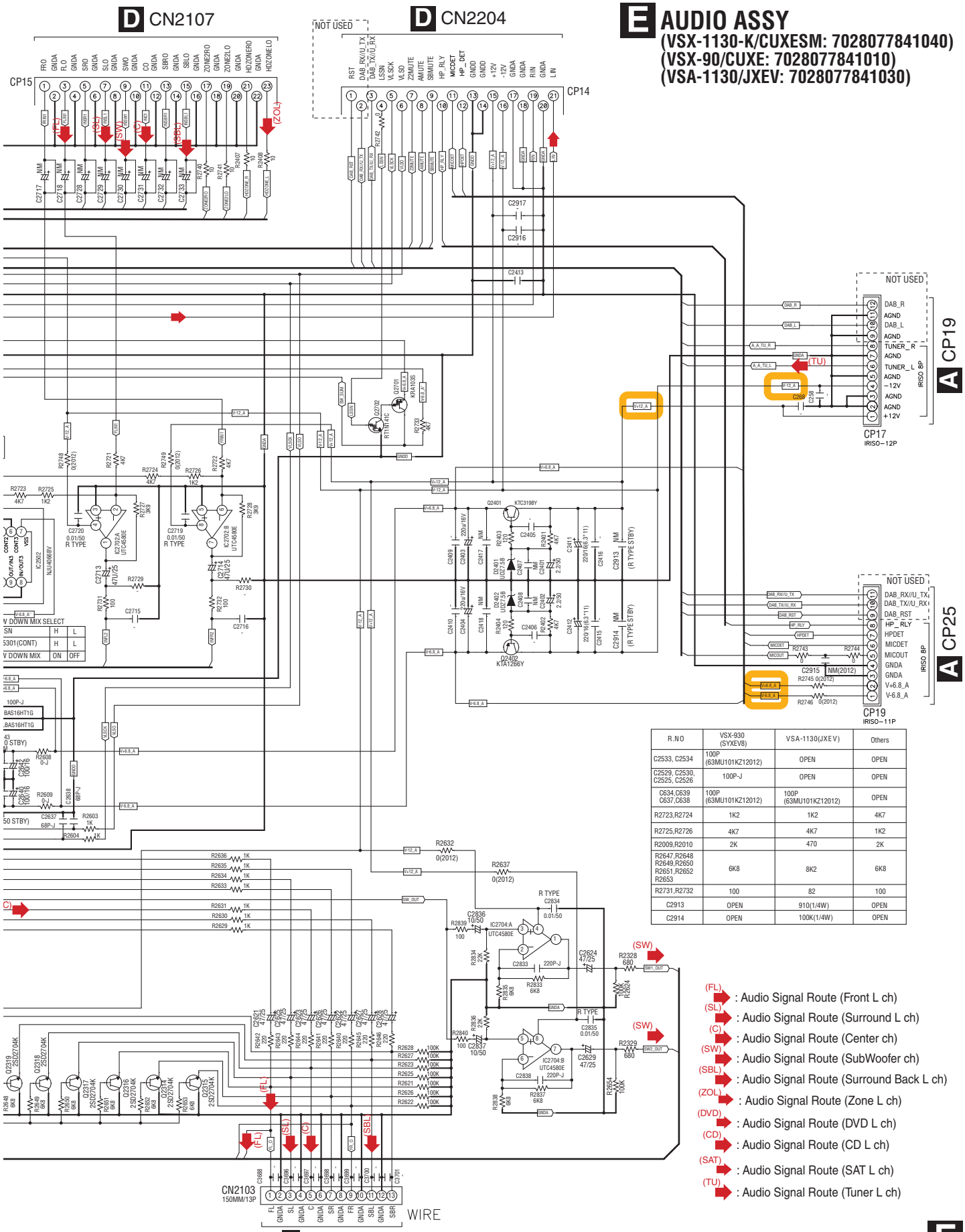

R.NO	VSX-930 (SYXEV8)	VSA-1130(JXEV)	Others
C2533, C2534	100P (63MU101KZ12012)	OPEN	OPEN
C2529, C2530, C2525, C2526	100P-J	OPEN	OPEN
C634,C639 C637,C638	100P (63MU101KZ12012)	100P (63MU101KZ12012)	OPEN
R2723,R2724	1K2	1K2	4K7
R2725,R2726	4K7	4K7	1K2
R2009,R2010	2K	470	2K
R2647,R2648 R2649,R2650 R2651,R2652 R2653	6K8	8K2	6K8
R2731,R2732	100	82	100
C2913	OPEN	910(1/4W)	OPEN
C2914	OPEN	100K(1/4W)	OPEN

(FL) : Audio Signal Route (Front L ch)
(SL) : Audio Signal Route (Surround L ch)
(C) : Audio Signal Route (Center ch)
(SW) : Audio Signal Route (SubWoofer ch)
(SBL) : Audio Signal Route (Surround Back L ch)
(ZOL) : Audio Signal Route (Zone L ch)
(DVD) : Audio Signal Route (DVD L ch)
(CD) : Audio Signal Route (CD L ch)
(SAT) : Audio Signal Route (SAT L ch)
(TU) : Audio Signal Route (Tuner L ch)

10.16 CPU ASSY

FY16 REG-AVR Model Discrimination

	NAME		PROJECT(65PIN)		AREA(71PIN)		MODEL(70PIN)	
	MODEL	AREA	R390	R394	R389	R393	R388	R392
REG -AVR	VSX-930	EU (SYXEVB)	NM	100K	47K	NM	NM	47K
	VSX-1130	EU (SYXEVB)	NM	100K	47K	NM	47K	NM
	VSA-1130	JPN (JXEV)	NM	100K	39K	10K	47K	NM
	VSX-930	GEN (FXEV)	NM	47K	22K	33K	NM	47K
	VSX-930	GEN (SLXEV)	NM	47K	10K	39K	NM	47K
	VSX-930	CH (AXEVB)	NM	47K	33K	22K	NM	47K
	VSX-1130	NA (DZXE/SM)	**NM**	**47K**	NM	47K	47K	NM
	VSX-90	NA (DZXE)	NM	47K	NM	47K	10K	39K

	OTHES	SYXEVB	JXEV
R309,R311	47K	OPEN	OPEN
R423	10	100	100
C330	330P	10P	10P
C366	OPEN	1M	1M
C368	OPEN	1M	1M
L304	0	4R7	4R7
R424	10	47	47
R425	10	10	10
R454	OPEN	OPEN	10P
R426	100	100	68
C306	OPEN	OPEN	OPEN

	VSX-90	OTHES
C311, C313	4N7-K	0 ohm
C312, C314	1N-K	0 ohm
R365	10K	47K
R422	10	NM
R447	0 ohm	NM

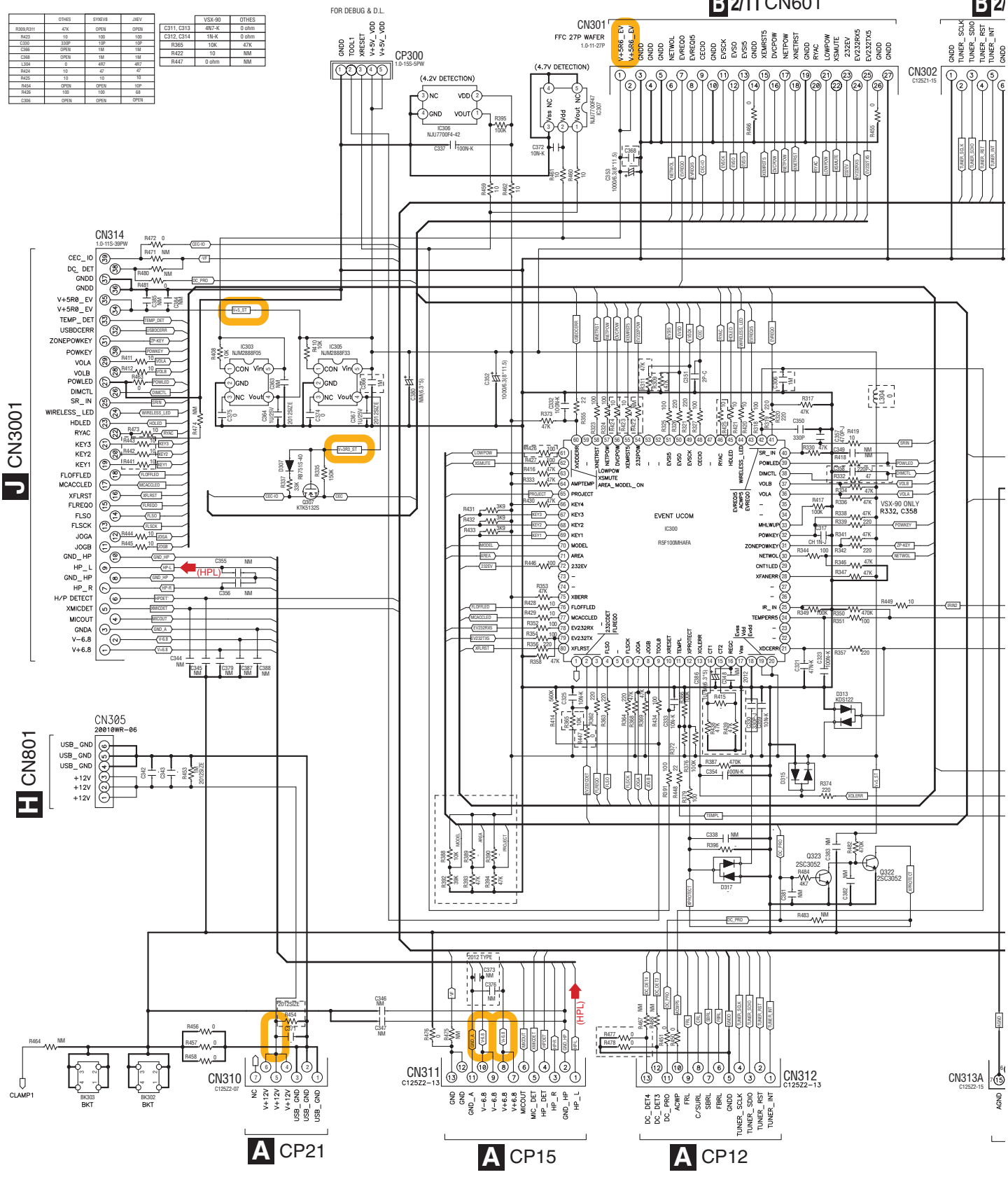

F CPU ASSY

(VSX-1130-K/CUXESM: 7028077310D0)
(VSX-90/CUXE: 7028077310A0)
(VSA-1130/JXEV: 7028077310C0)

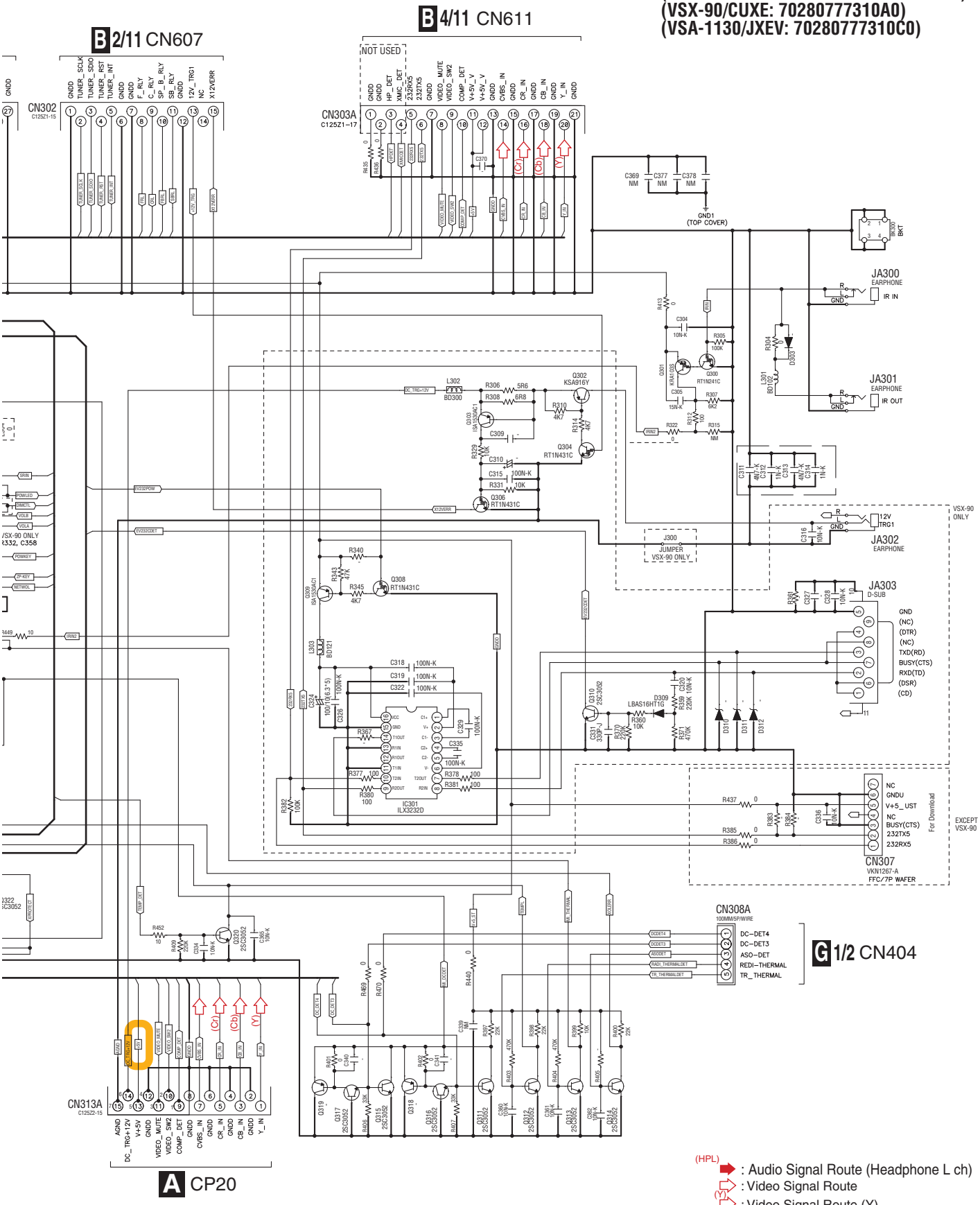

10.17 AMP7 ASSY (1/2)

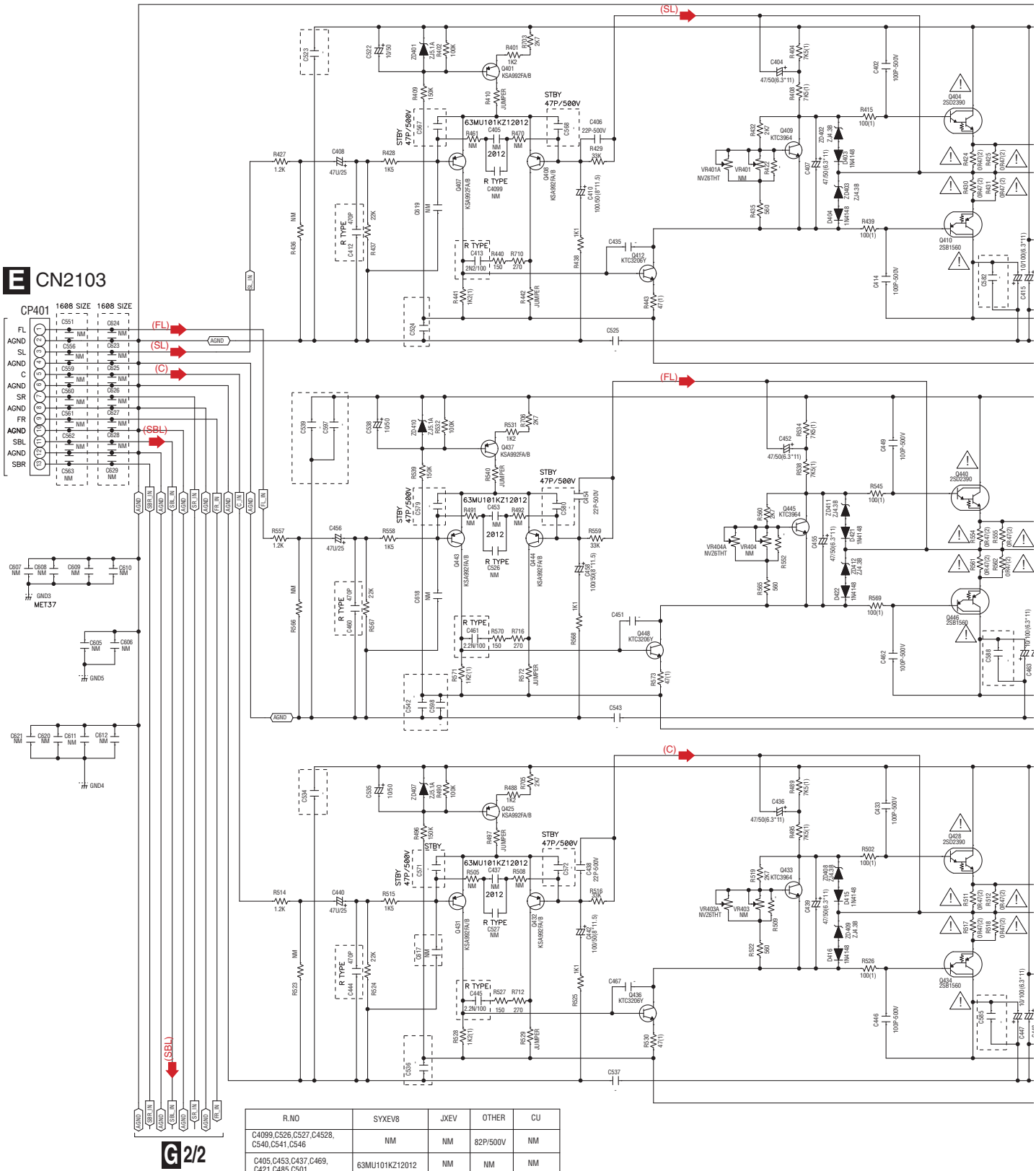

R.NO	SYXEV8	JXEV	OTHER	CU
C4099,C526,C527,C4528, C540,C541,C546	NM	NM	82P/500V	NM
C405,C453,C437,C469, C421,C485,C501	63MU101KZ12012	NM	NM	NM
R461,R470,R491,R492, R505,R508,R533,R535, R548,R576,R578,R579, R591,R594	10 ohm	NM	2.2 ohm	NM

G 1/2

G 1/2 AMP7 ASSY
(VSX-1130-K/CUXESM, VSX-90/CUXE: 7028077751010)
(VSA-1130/JXEV: 7028077751030)

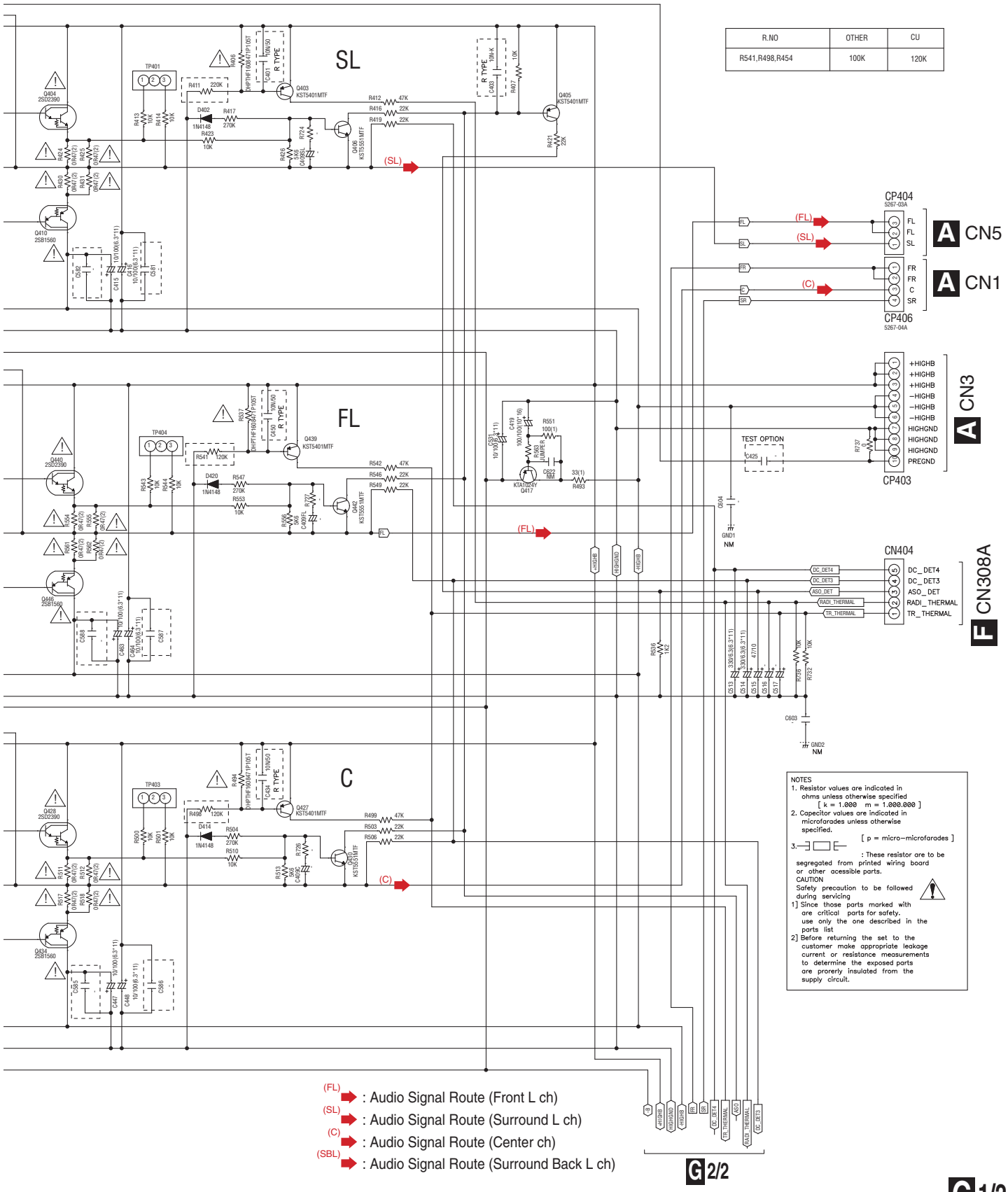

R.NO	OTHER	CU
R541,R498,R454	100K	120K

NOTES
1. Resistor values are indicated in ohms unless otherwise specified [k = 1.000 m = 1.000.000]
2. Capacitor values are indicated in microfarades unless otherwise specified. [p = micro-microfarades]
3. : These resistor are to be segregated from printed wiring board or other acessible parts.
CAUTION
Safety precaution to be followed during servicing
1] Since those parts marked with are critical parts for safety, use only the one described in the parts list
2] Before returning the set to the customer make appropriate leakage current or resistance measurements to determine the exposed parts are prorerly insulated from the supply circuit.

G 1/2

10.18 AMP7 ASSY (2/2)

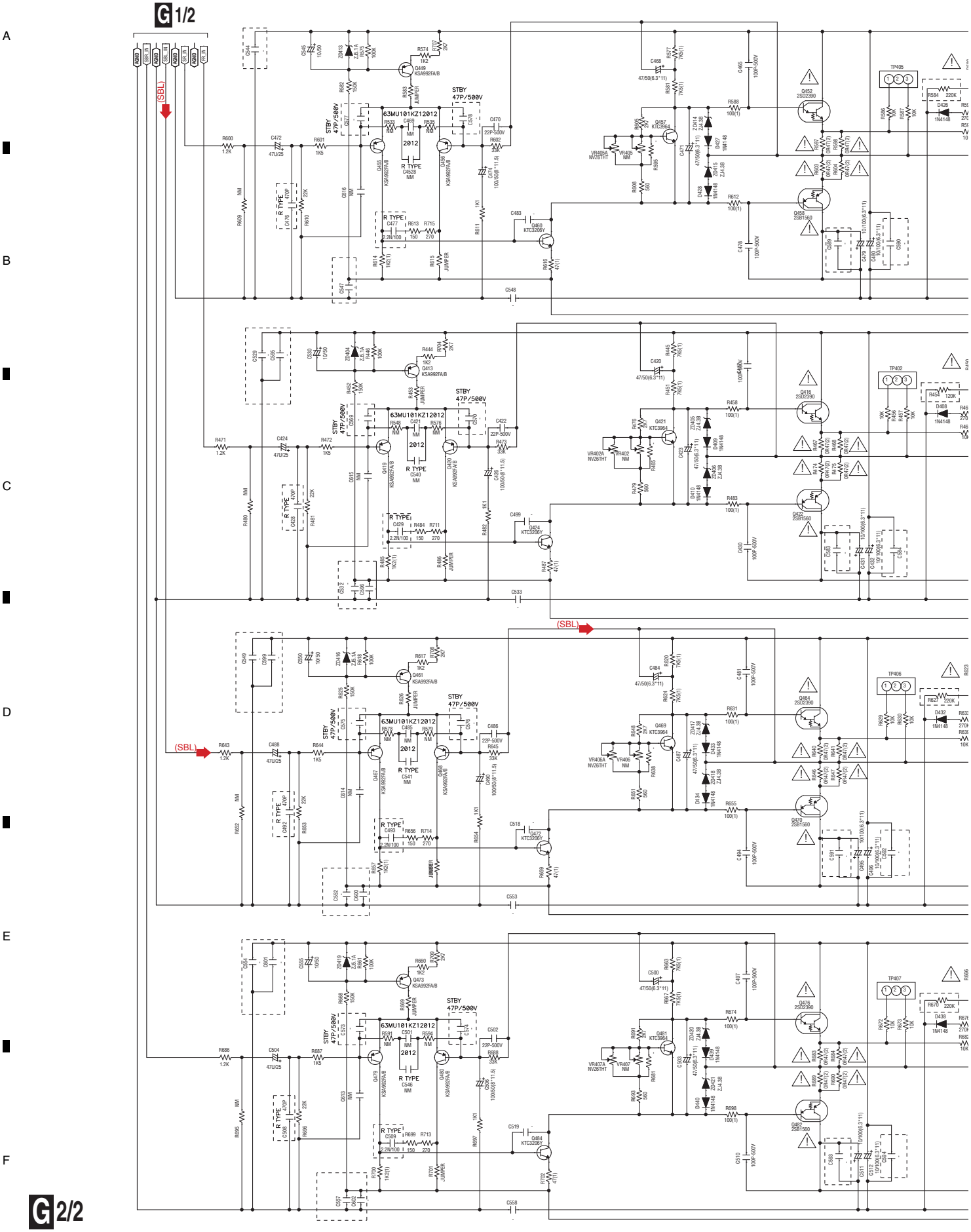

G 2/2 AMP7 ASSY

(VSX-1130-K/CUXESM, VSX-90/CUXE: 7028077751010)
(VSA-1130/JXEV: 7028077751030)

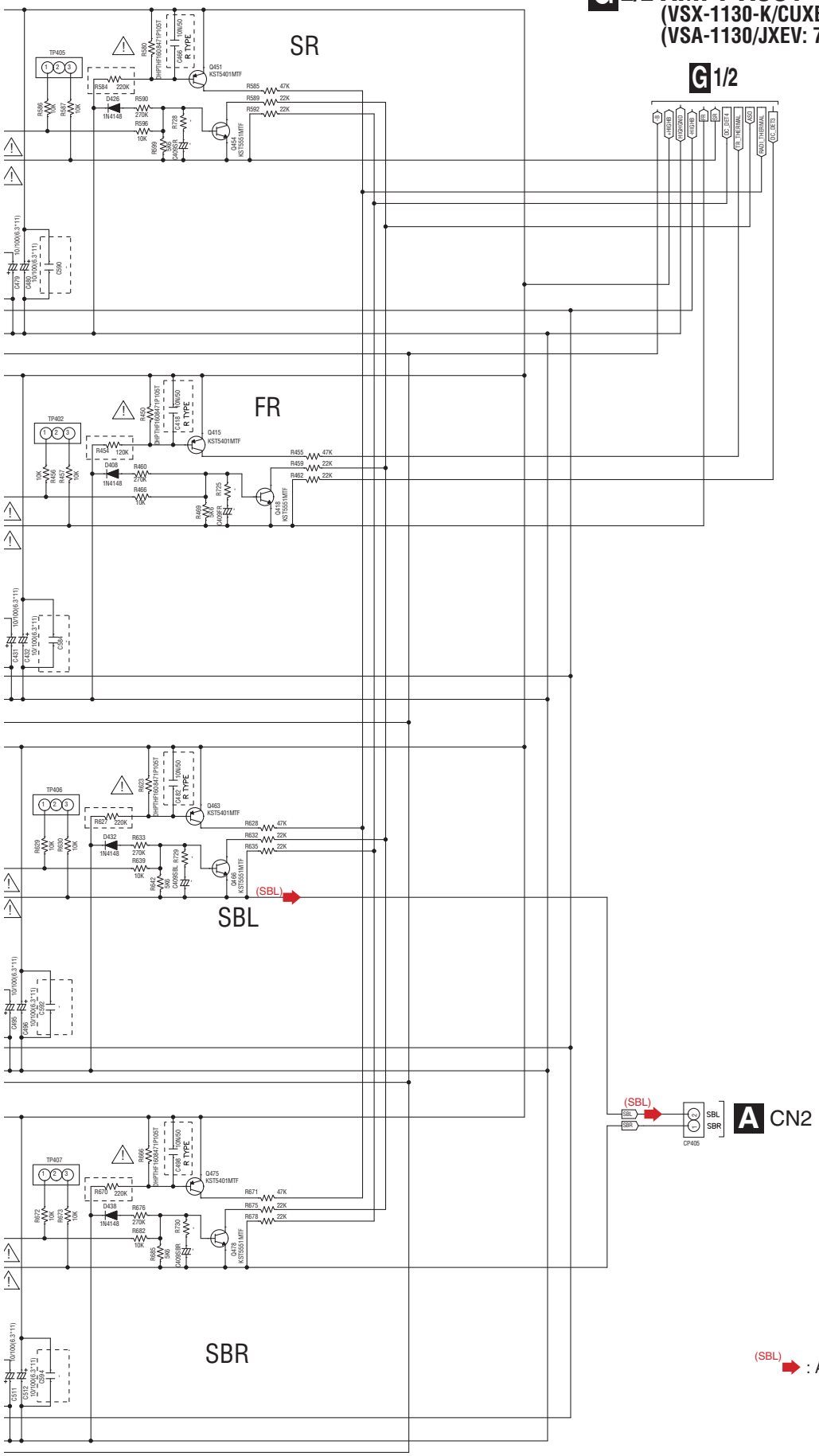

(SBL) : Audio Signal Route (Surround Back L ch)

10.19 FHDMI ASSY

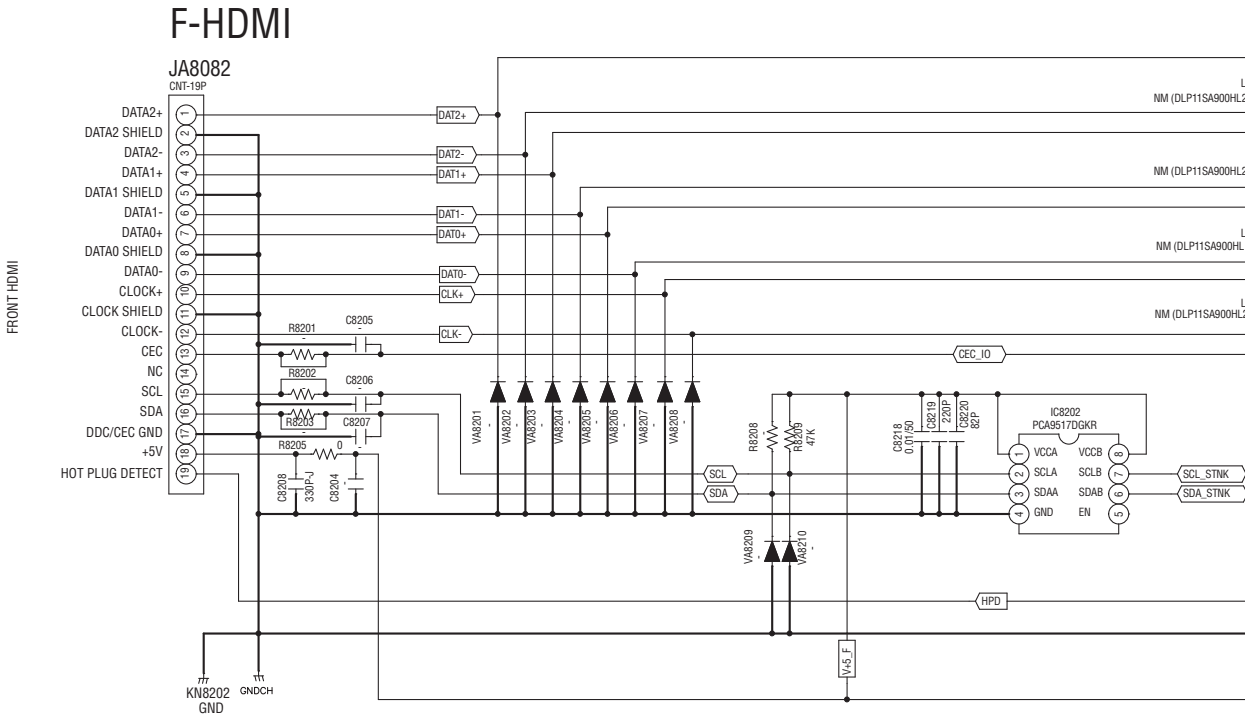

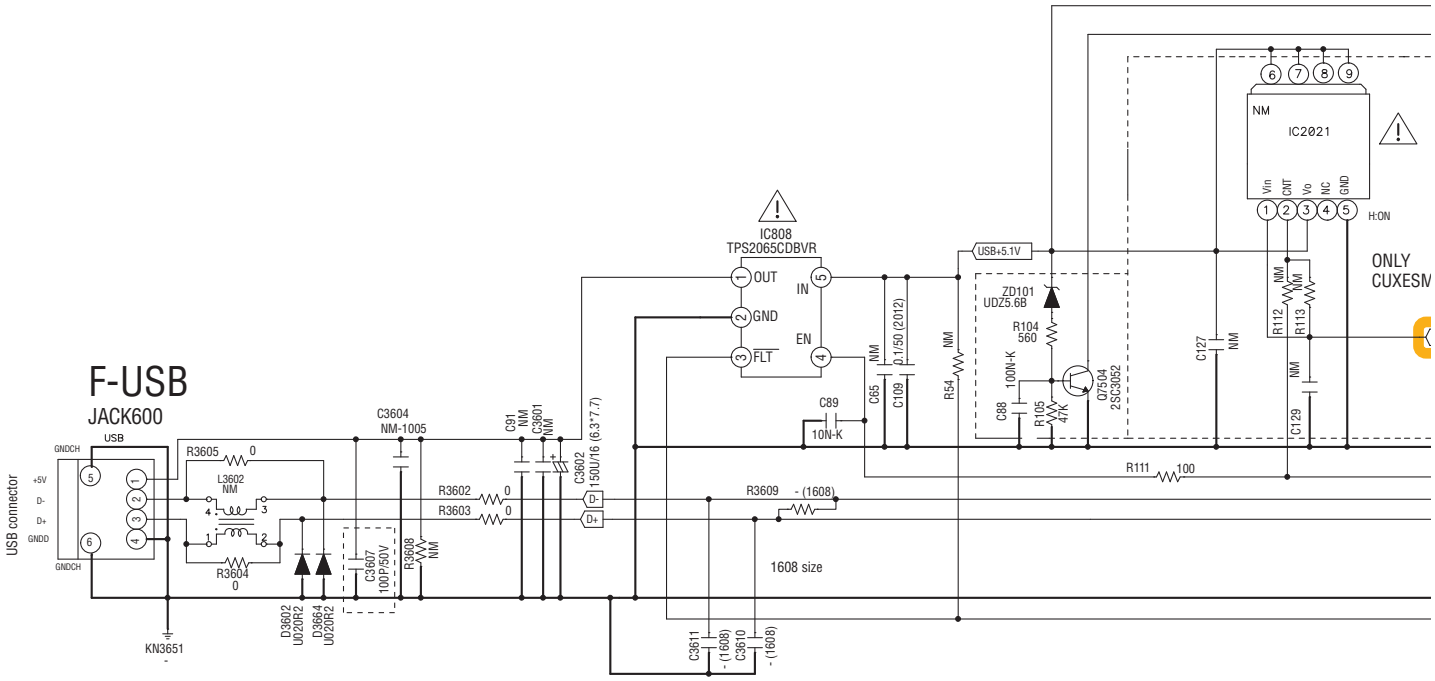

The ⚠ mark found on some component parts indicates the importance of the safety factor of the part. Therefore, when replacing, be sure to use parts of identical designation.

⚠ 印の部品は、安全上重要な部品です。
交換するときは、安全および性能維持のため
必ず指定の部品をご使用ください。

H FHDMI ASSY
(VSX-1130-K/CUXESM, VSX-90/CUXE: 7028077881010)
(VSA-1130/JXEV: 7028077881030)

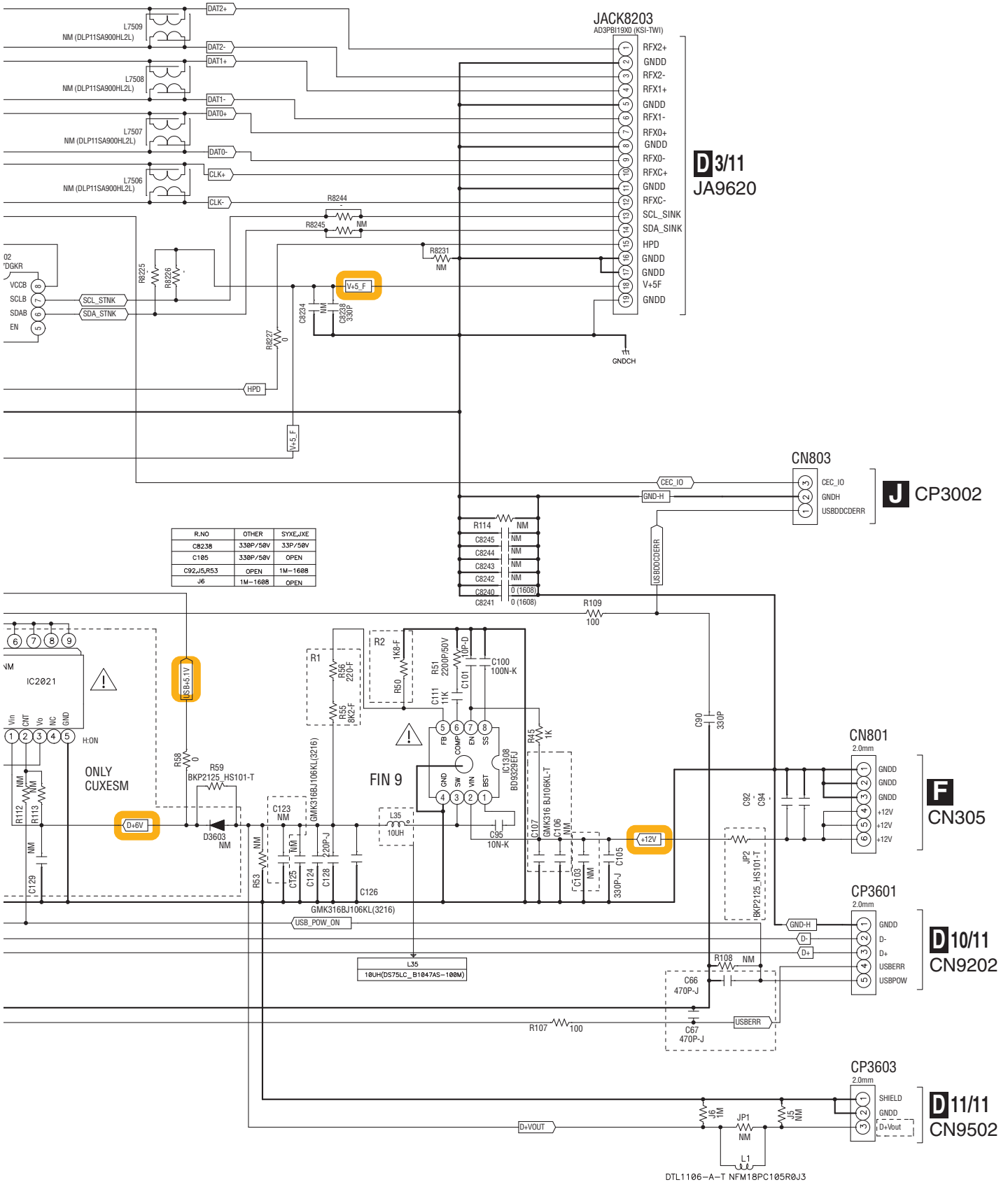

R.NO	OTHER	SYXE,JXE
C8238	330P/50V	33P/50V
C105	330P/50V	OPEN
C92,J5,R53	OPEN	1M-1608
J6	1M-1608	OPEN

10.20 TEMP, FRONT, HPMIC and INSEL ASSYS

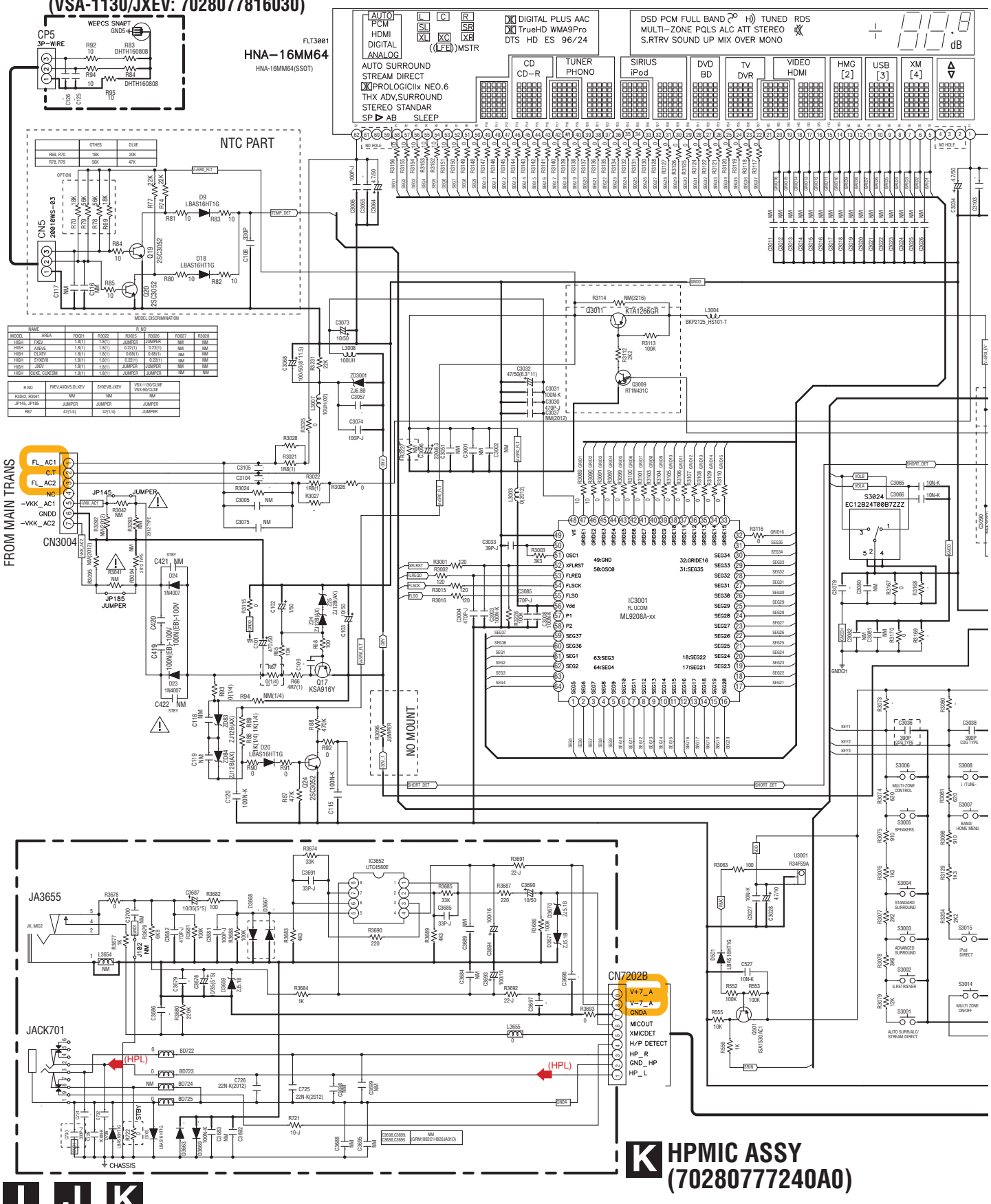

J FRONT ASSY
(VSX-1130-K/CUXESM: 70280777210D0)
(VSX-90/CUXE: 70280777210A0)
(VSA-1130/JXEV: 70280777210C0)

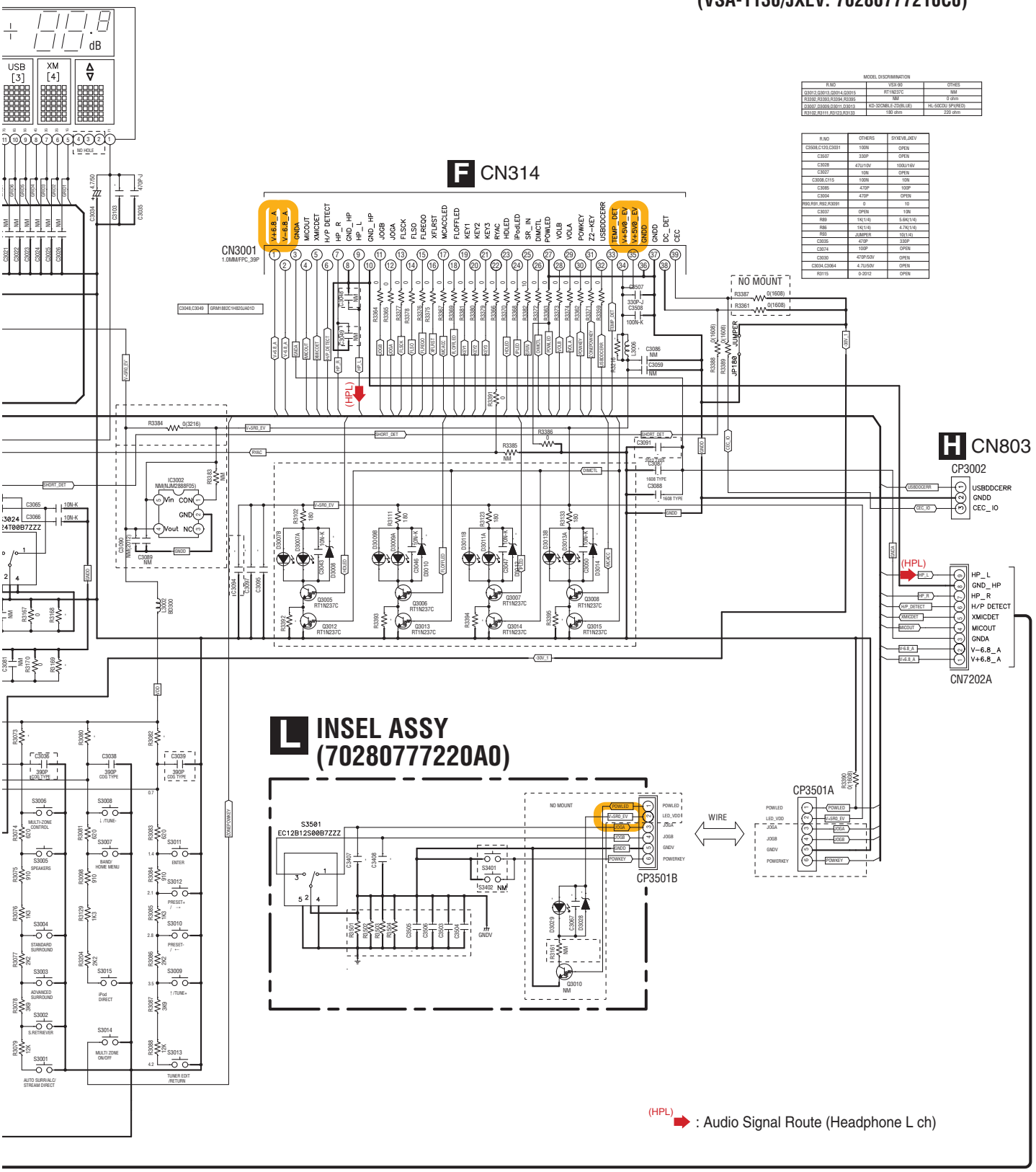

The ⚠ mark found on some component parts indicates the importance of the safety factor of the part. Therefore, when replacing, be sure to use parts of identical designation.

⚠ 印の部品は、安全上重要な部品です。
交換するときは、安全および性能維持のため
必ず指定の部品をご使用ください。

J L

10.21 SMPS ASSY

• NOTE FOR FUSE REPLACEMENT

CAUTION - FOR CONTINUED PROTECTION AGAINST RISK OF FIRE, REPLACE WITH SAME TYPE AND RATINGS OF FUSE.

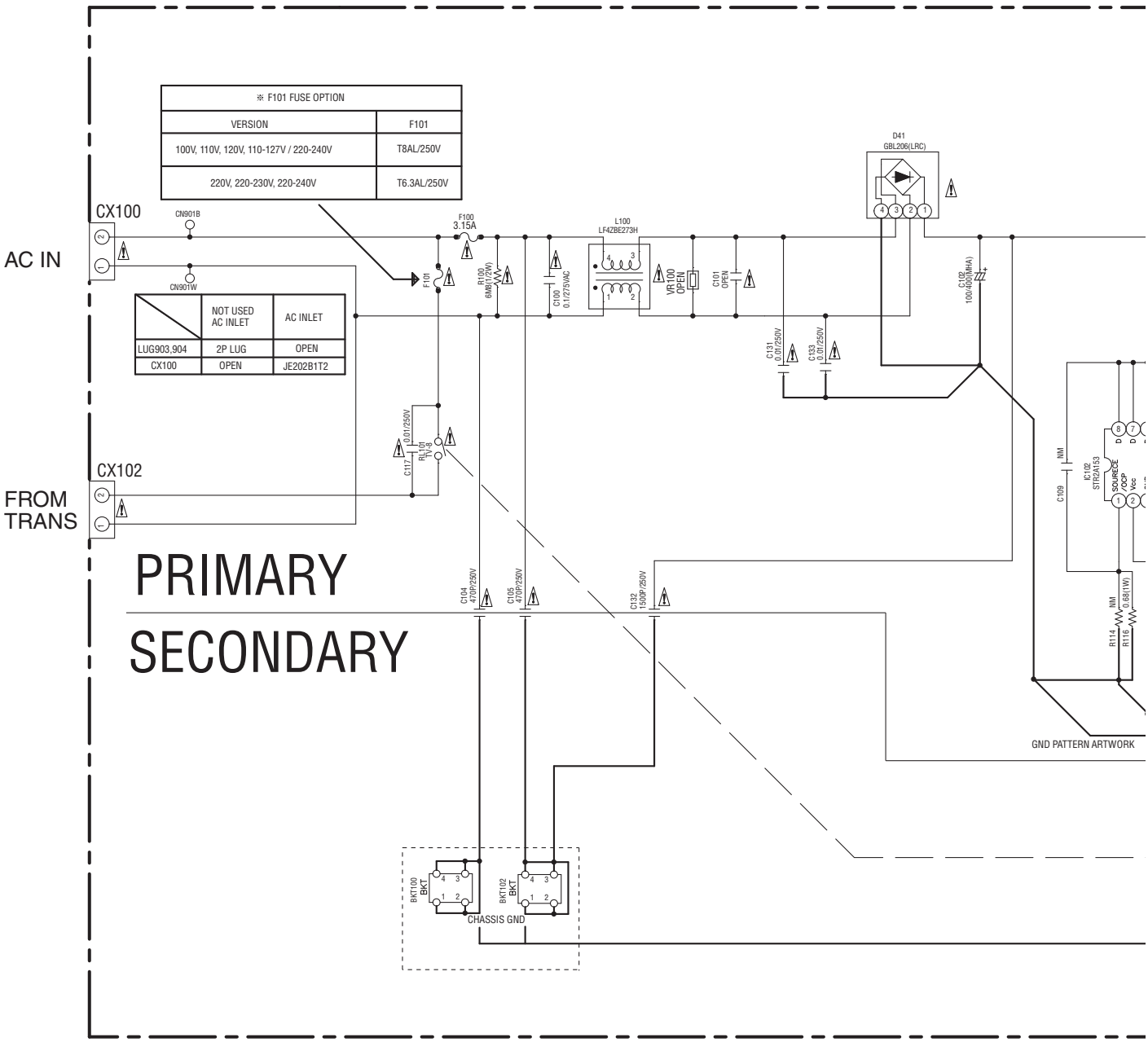

※ F101 FUSE OPTION	
VERSION	F101
100V, 110V, 120V, 110-127V / 220-240V	T8AL/250V
220V, 220-230V, 220-240V	T6.3AL/250V

	NOT USED AC INLET	AC INLET
LUG903,904	2P LUG	OPEN
CX100	OPEN	JE202B1T2

⚠ M SMPS ASSY

(VSX-1130-K/CUXESM: 702807336108B)
(VSX-90/CUXE: 702807336106B)
(VSA-1130/JXEV: 702807336109B)

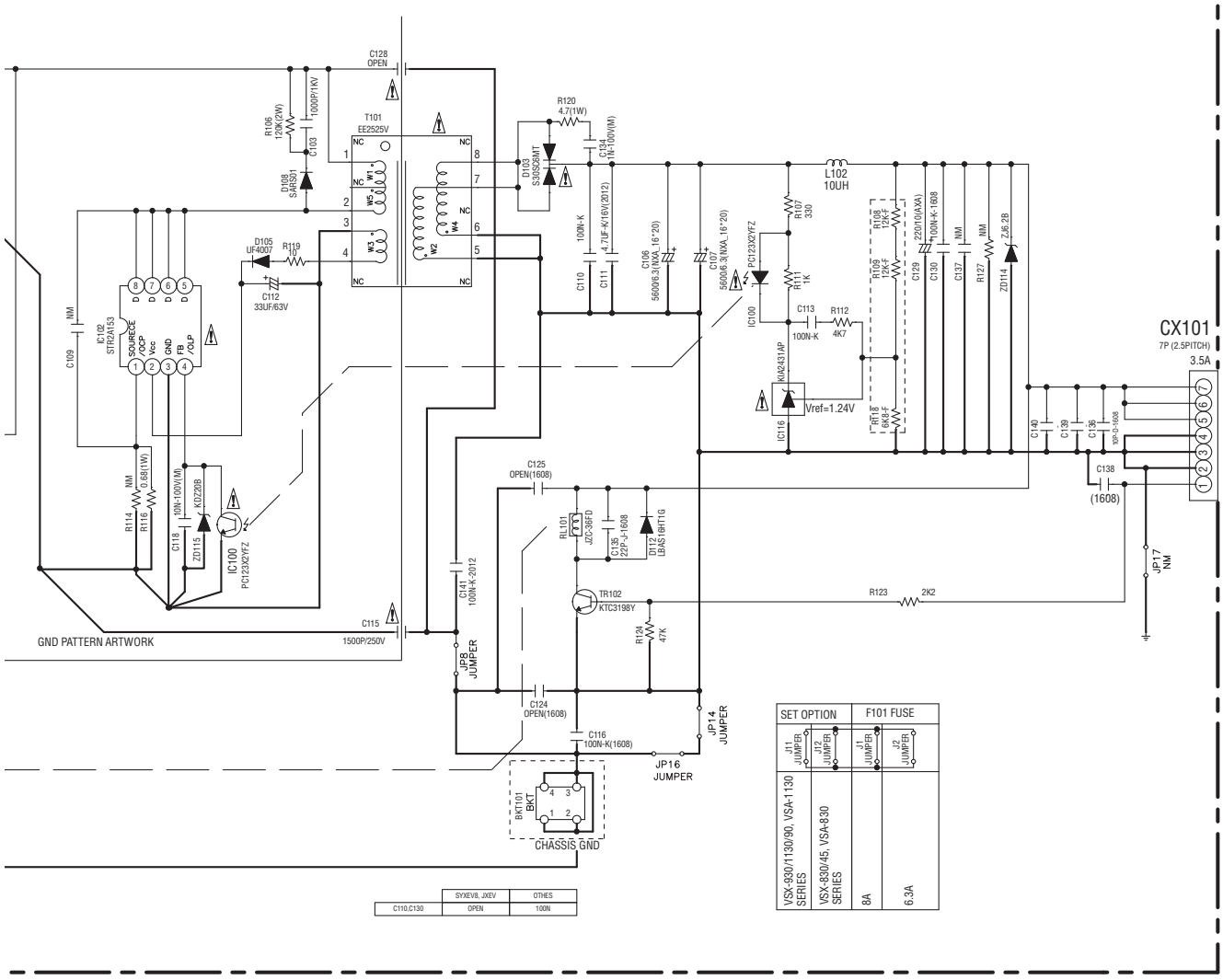

NOTES
1. Resistor values are indicated in ohms unless otherwise specified
   [k = 1.000 m = 1.000.000]
2. Capacitor values are indicated in microfarades unless otherwise specified.
   [p = micro-microfarades]
3. ⊣ ▭ ⊢ : These resistor are to be segregated from printed wiring board or other acessible parts.

CAUTION
Safety precaution to be followed during servicing
1] Since those parts marked with ⚠ are critical parts for safety. use only the one described in the parts list
2] Before returning the set to the customer make appropriate leakage current or resistance measurements to determine the exposed parts are prorerly insulated from the supply circuit.

The ⚠ mark found on some component parts indicates the importance of the safety factor of the part. Therefore, when replacing, be sure to use parts of identical designation.

⚠ 印の部品は、安全上重要な部品です。
交換するときは、安全および性能維持のため
必ず指定の部品をご使用ください。

B 11/11 CN9501

11. PCB CONNECTION DIAGRAM
11.1 MAIN ASSY

SIDE A

A MAIN ASSY

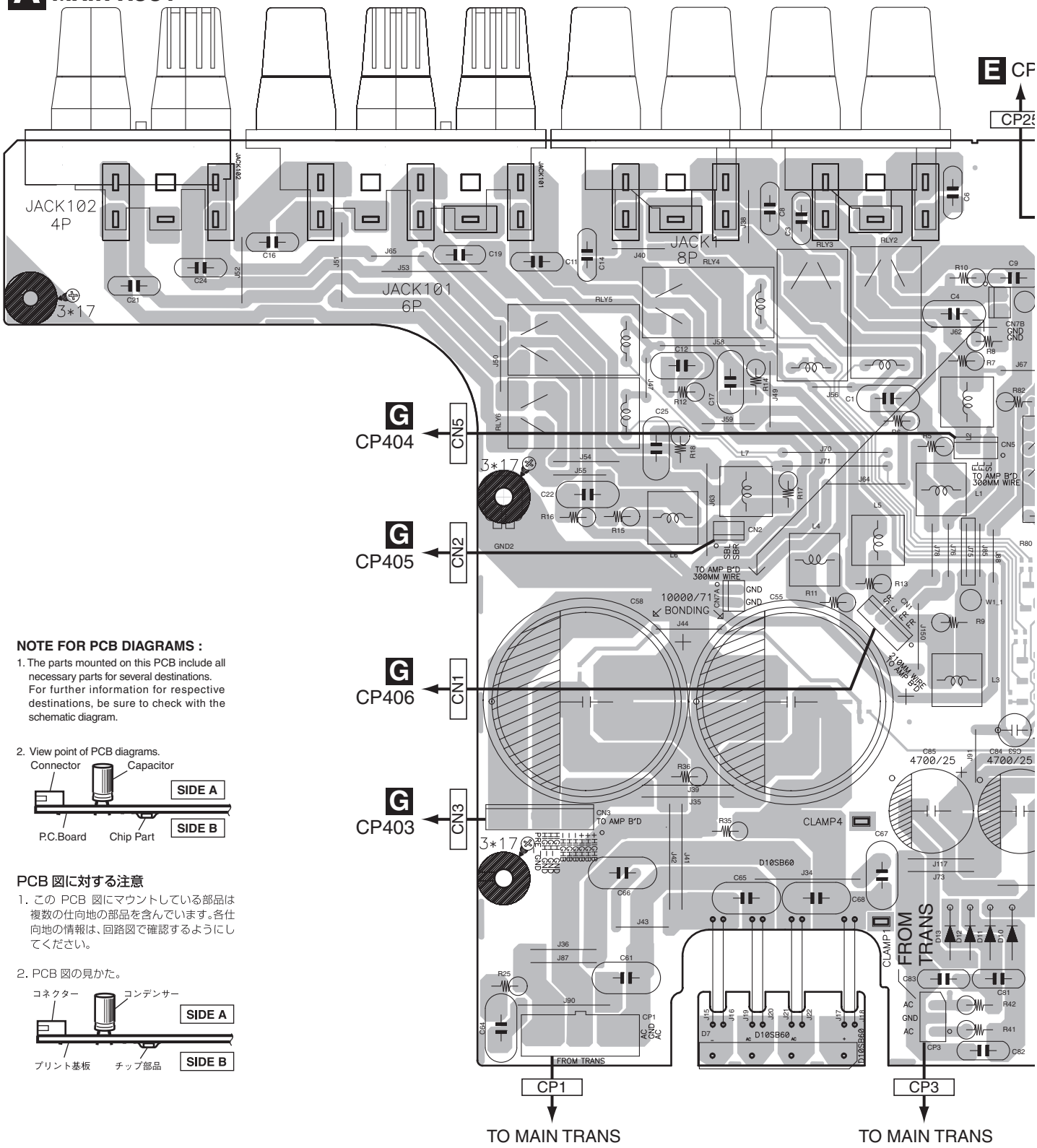

NOTE FOR PCB DIAGRAMS :

1. The parts mounted on this PCB include all necessary parts for several destinations. For further information for respective destinations, be sure to check with the schematic diagram.

2. View point of PCB diagrams.

PCB 図に対する注意

1. この PCB 図にマウントしている部品は複数の仕向地の部品を含んでいます。各仕向地の情報は、回路図で確認するようにしてください。

2. PCB 図の見かた。

SIDE A

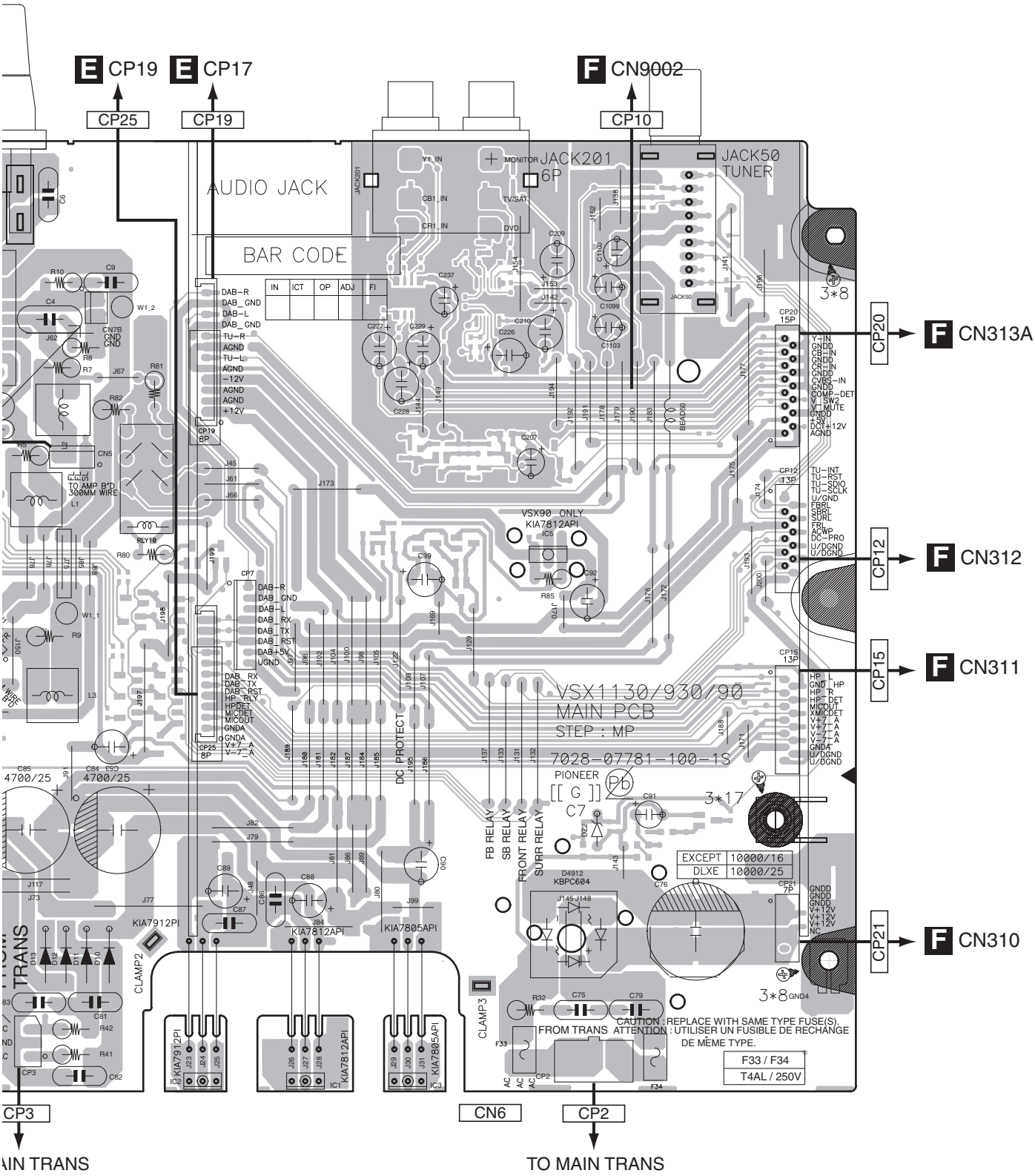

IC2 IC1 IC3 IC5

A

SIDE B

A MAIN ASSY

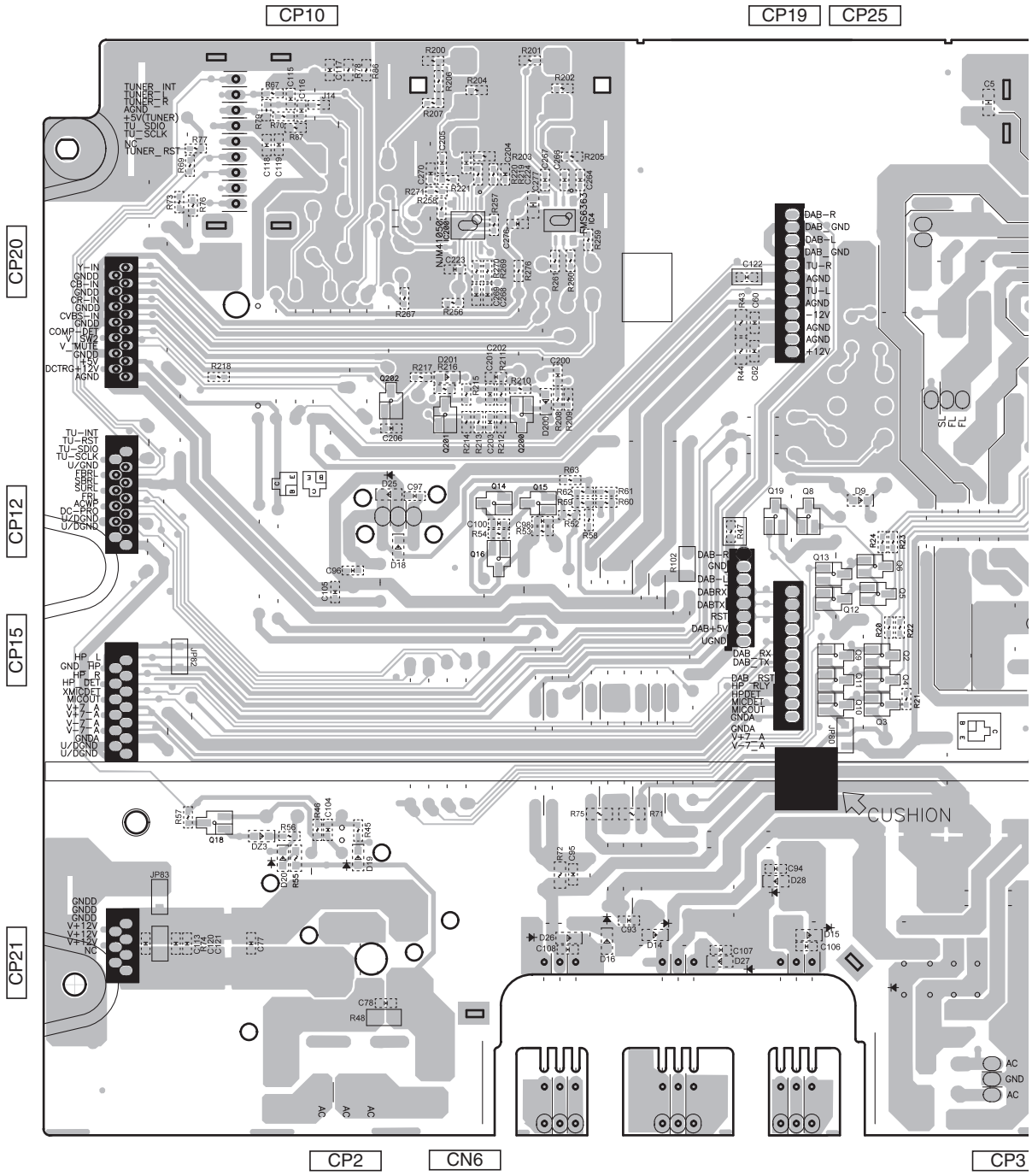

IC200 Q200
Q18 Q202 Q201 Q14-Q16 Q19 Q8
Q29-Q13 Q2-Q6

SIDE B

A

5

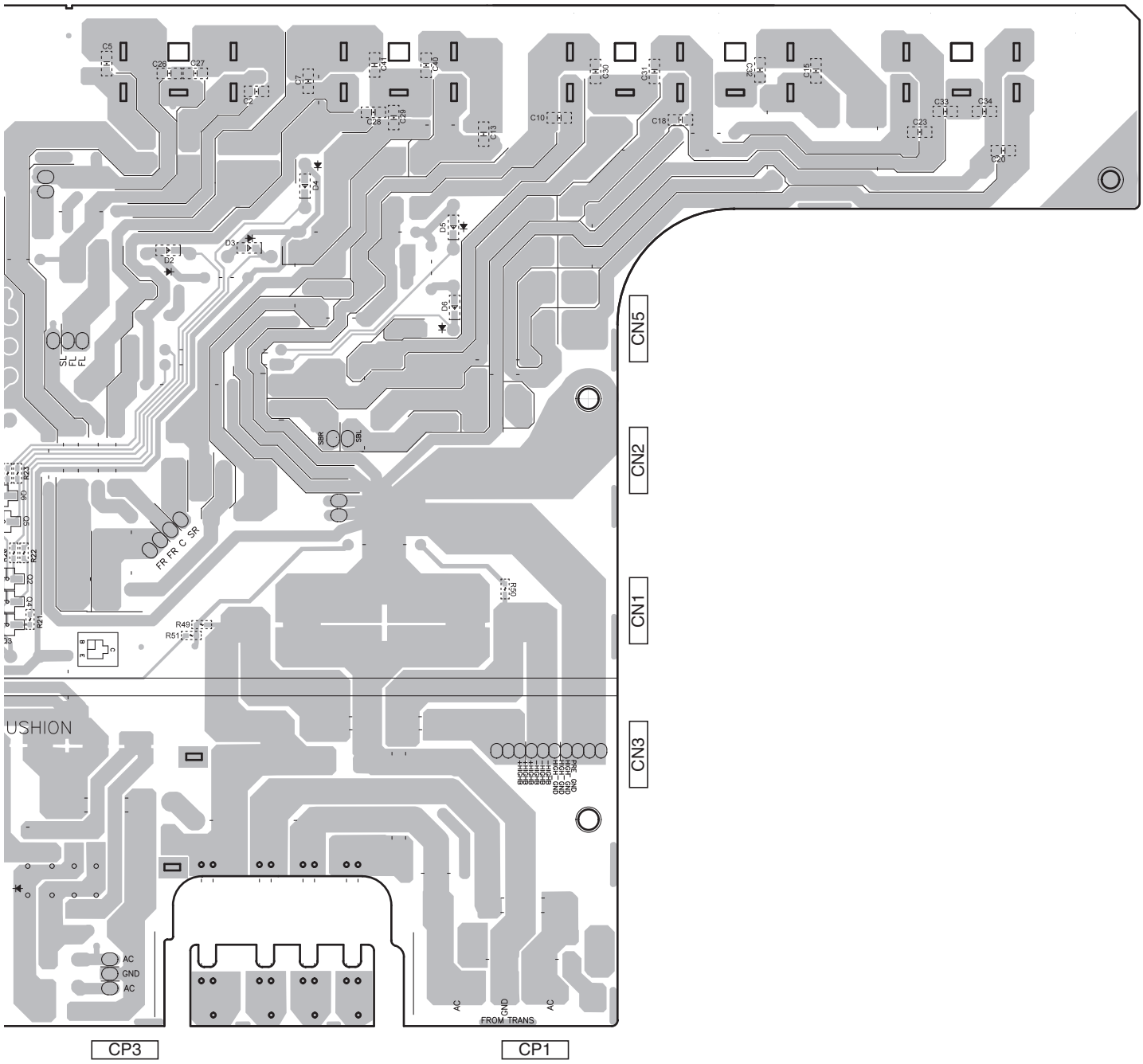

B

C

D

E

F

Q2-Q6

A

11.2 DMAIN ASSY

SIDE A

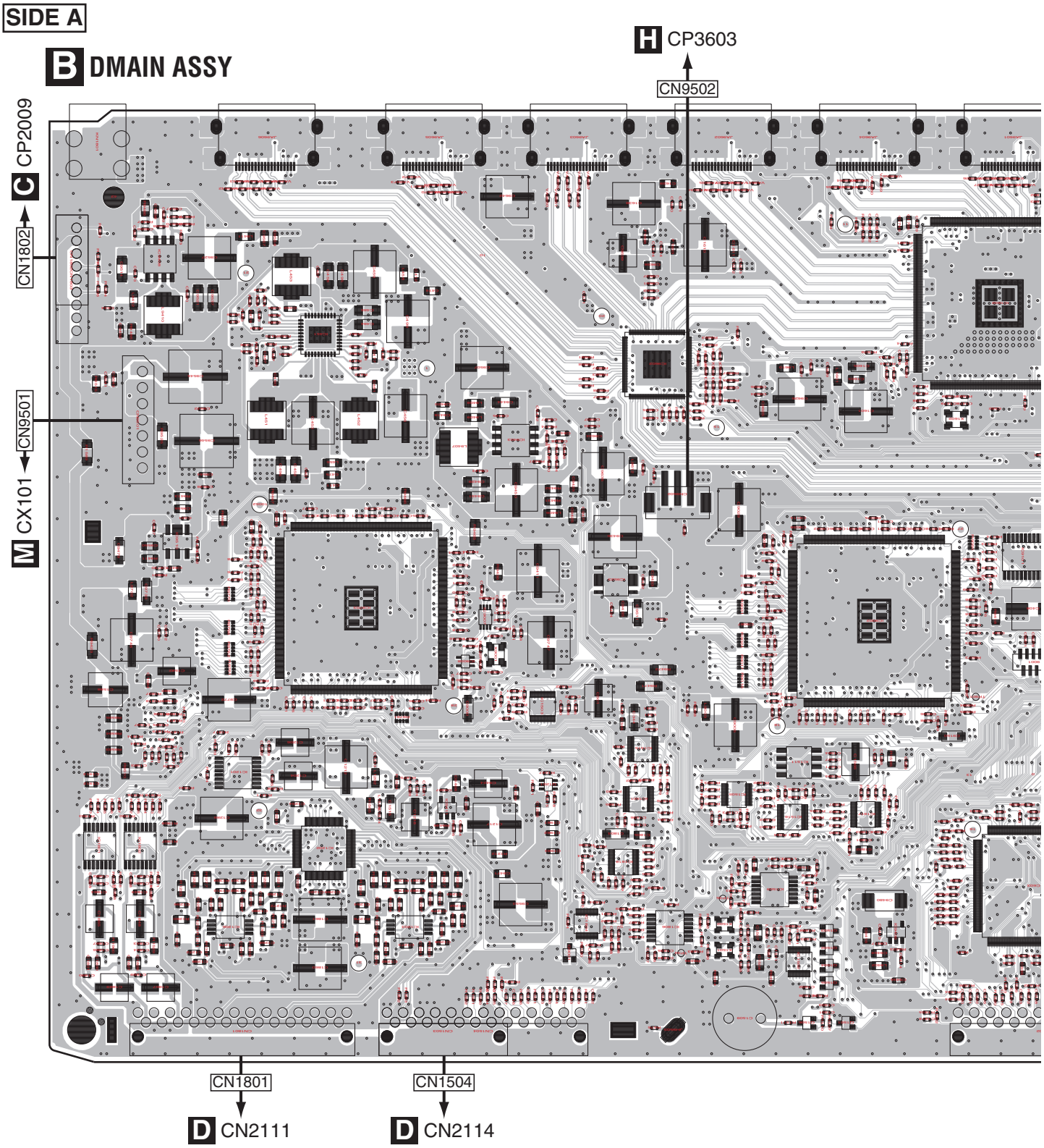

IC9408 IC451 IC9403 IC9602 IC9002 IC1602
IC9510 IC1201 IC9703 IC9007 IC9523 IC1505 IC1511 IC1817 IC9101
IC1801 IC1802 IC1206 IC1202 IC9008 IC1503 IC1515 IC1516 IC9406 IC6
IC9411 Q1201 IC1501 IC1509
IC1203 IC1518 Q1501-Q1506
IC1804 IC1506 IC1502
Q9001

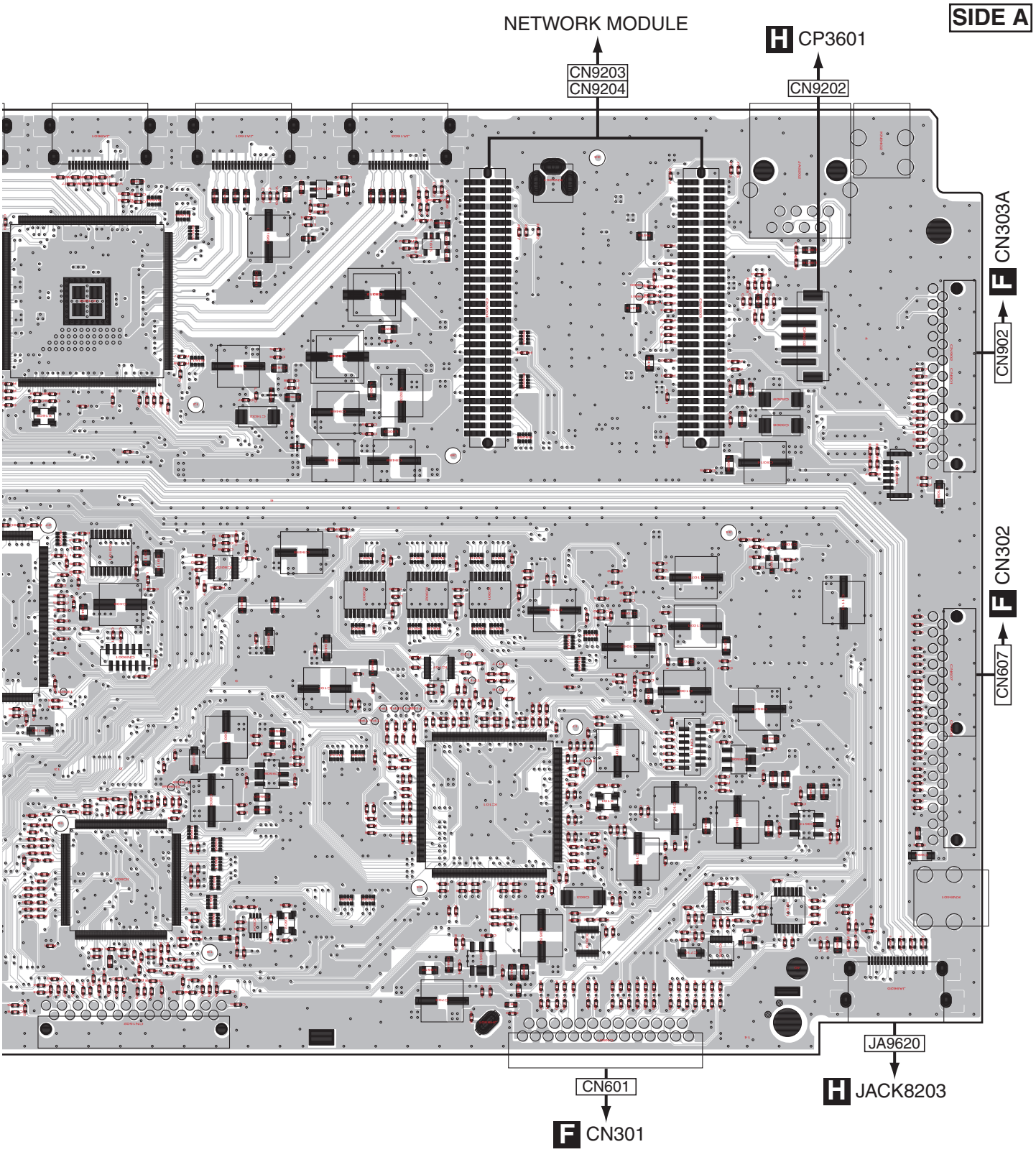

IC1602 IC9207 IC1605 IC1615 Q1001
IC9101 IC9508 IC101-IC903 IC9505 IC9515
IC603 IC604 IC107 IC609 IC612 IC611
IC101
IC9511 IC608

B

SIDE B

B DMAIN ASSY

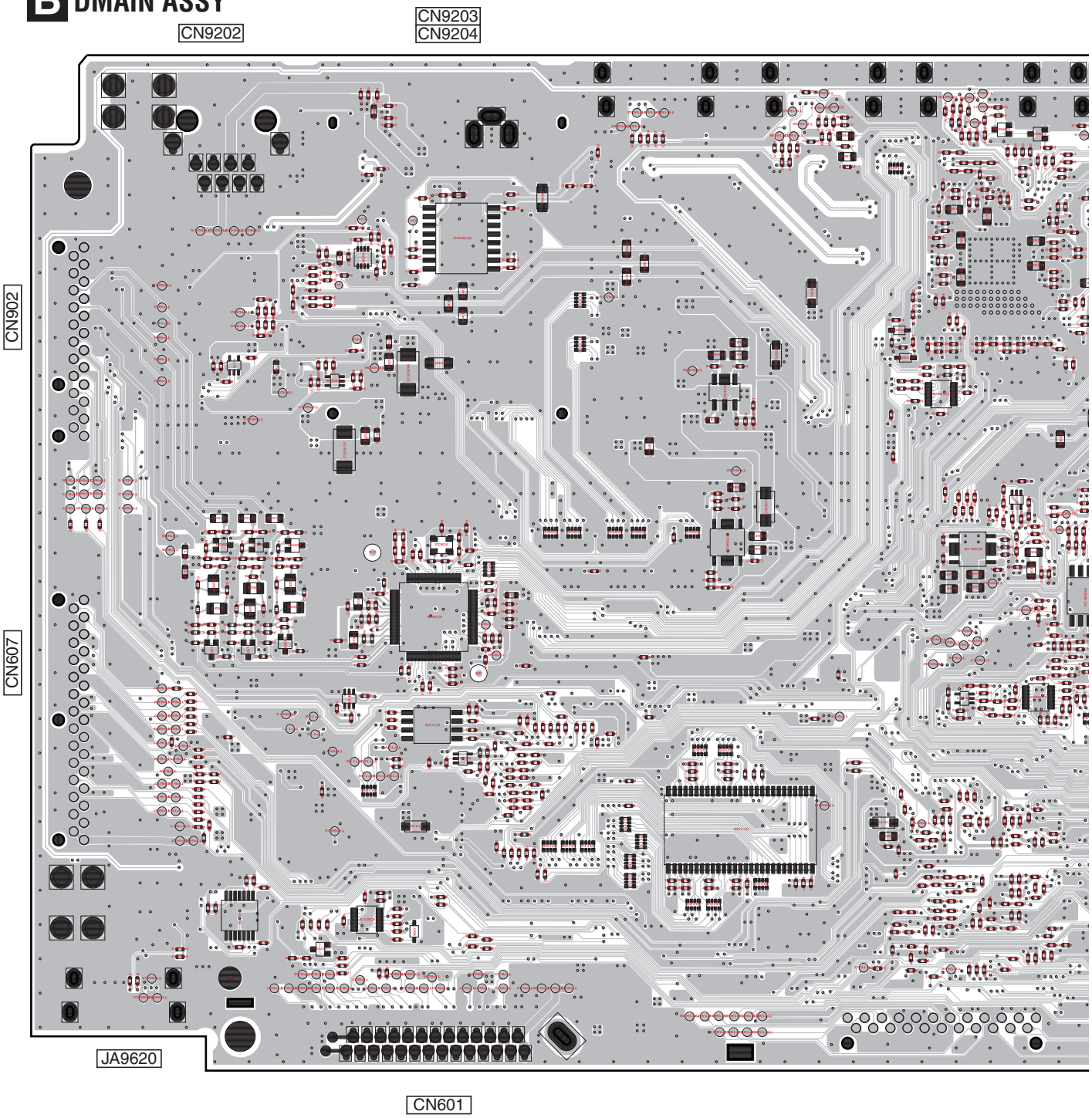

IC615 IC9206 IC9202 IC9407 IC1603 Q9606 Q9607
Q906-Q908 IC9203 IC909 IC9502 IC9009
Q909-Q911 IC103 IC102 IC9518 IC90
IC610 Q701 IC613 IC105 IC1521 IC9003

SIDE B

A

CN9502

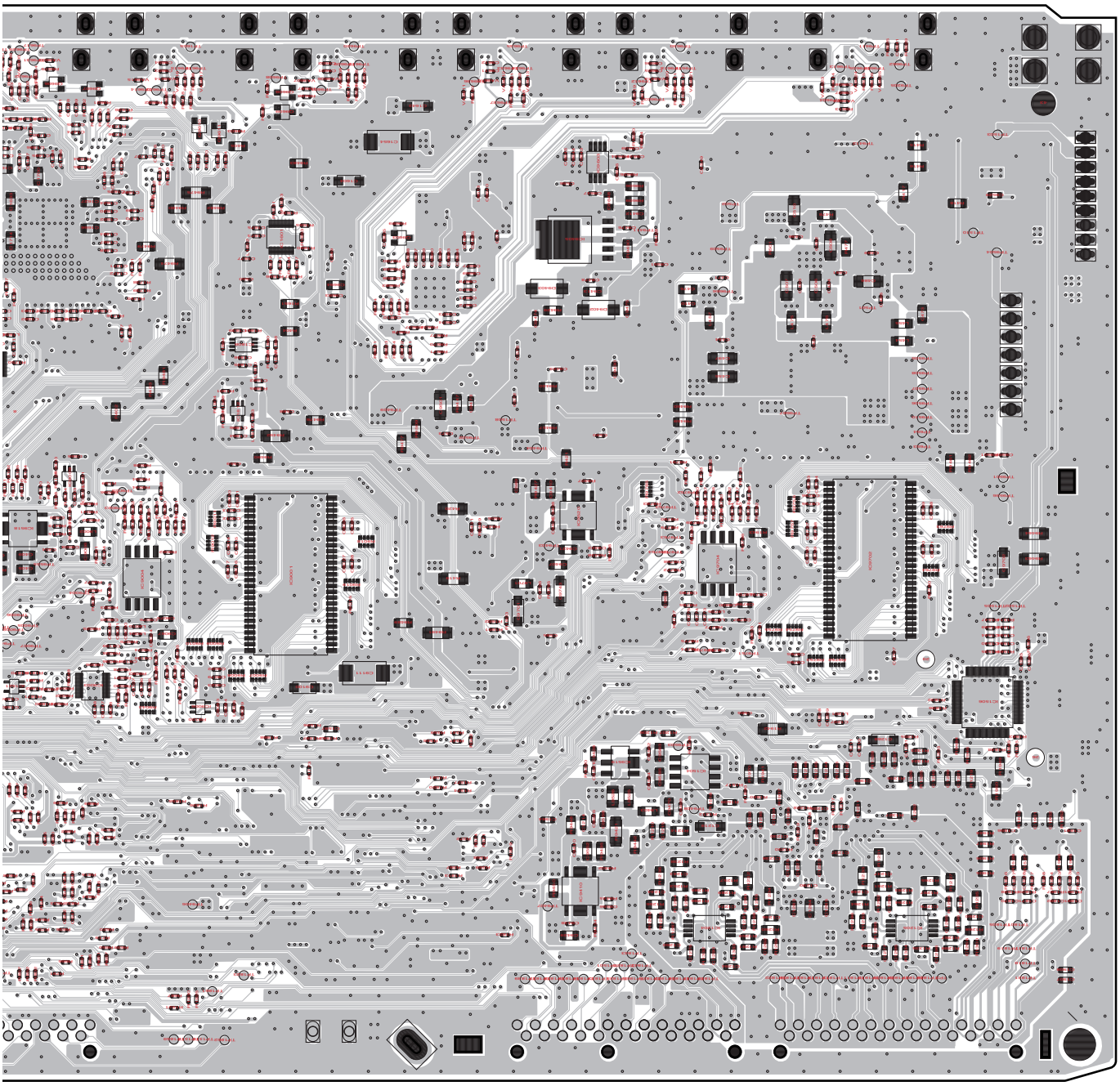

CN1802

B

CN9501

C

D

E

CN1504 CN1801

3 Q9606 Q9607 Q9610 Q9608 Q9603 IC9603 IC9704 IC9702 IC1506
IC9009 Q9611 Q9609 IC9520 IC1504 IC1205
IC9518 IC9004 IC1601 IC9519
C1521 IC9003 IC1808 IC9001 IC9410 IC1204
IC9006 IC1812

F

11.3 OPTCO ASSY

SIDE A

SIDE A

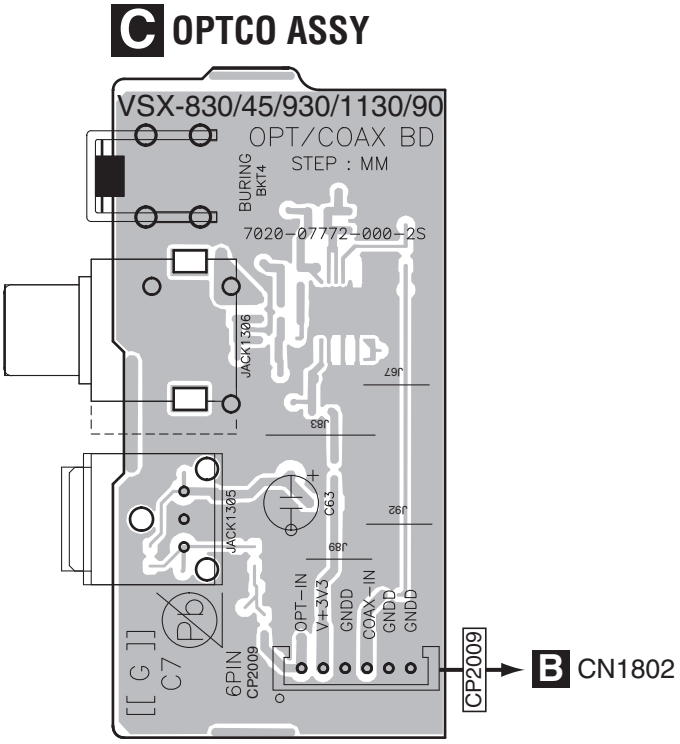

SIDE B

SIDE B

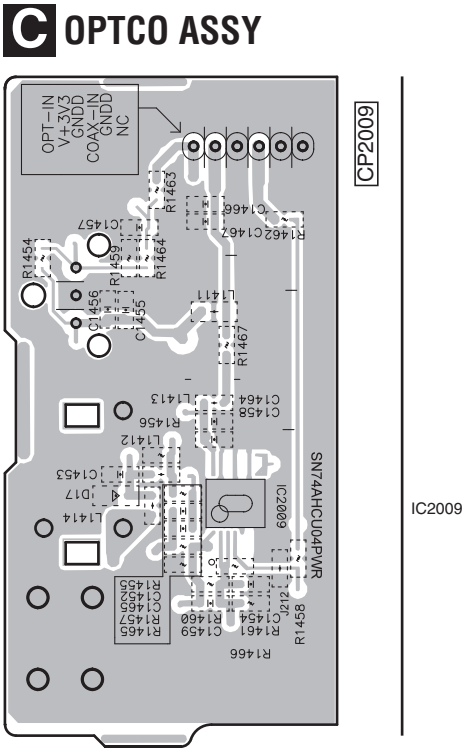

11.4 BRIDGE ASSY

SIDE A

SIDE A

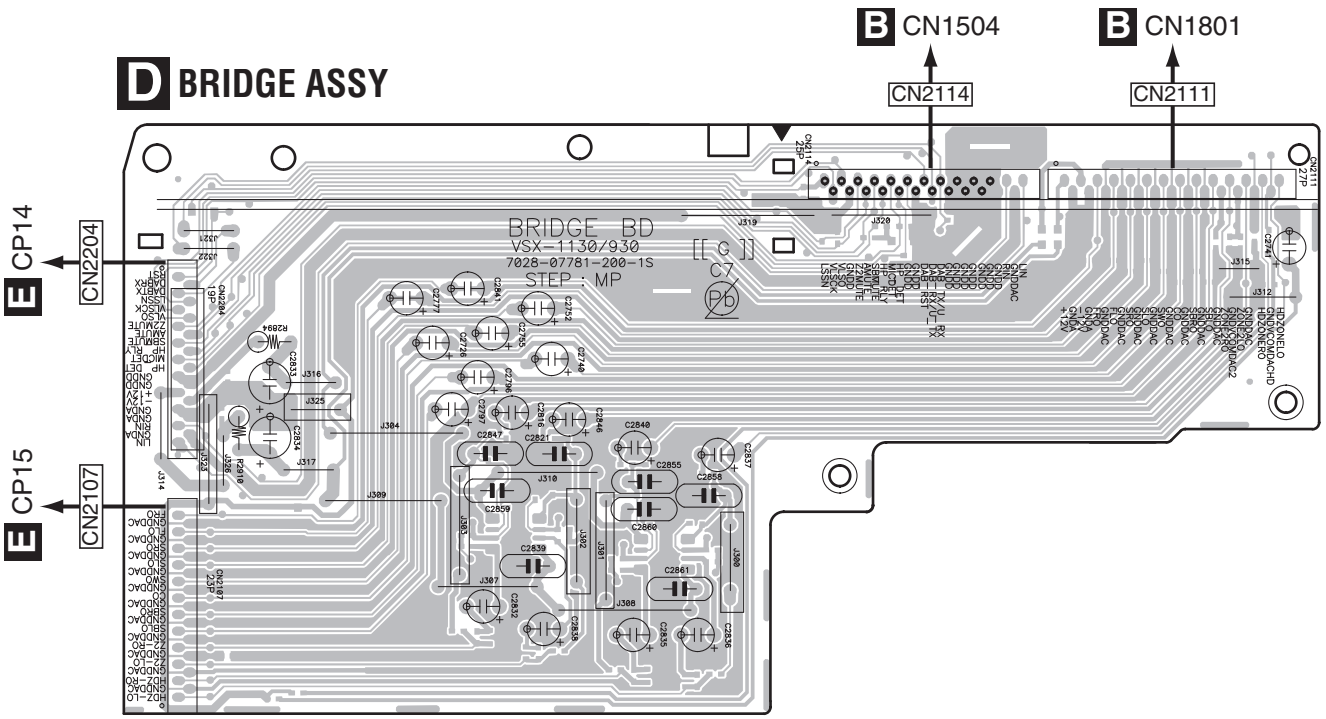

SIDE B

SIDE B

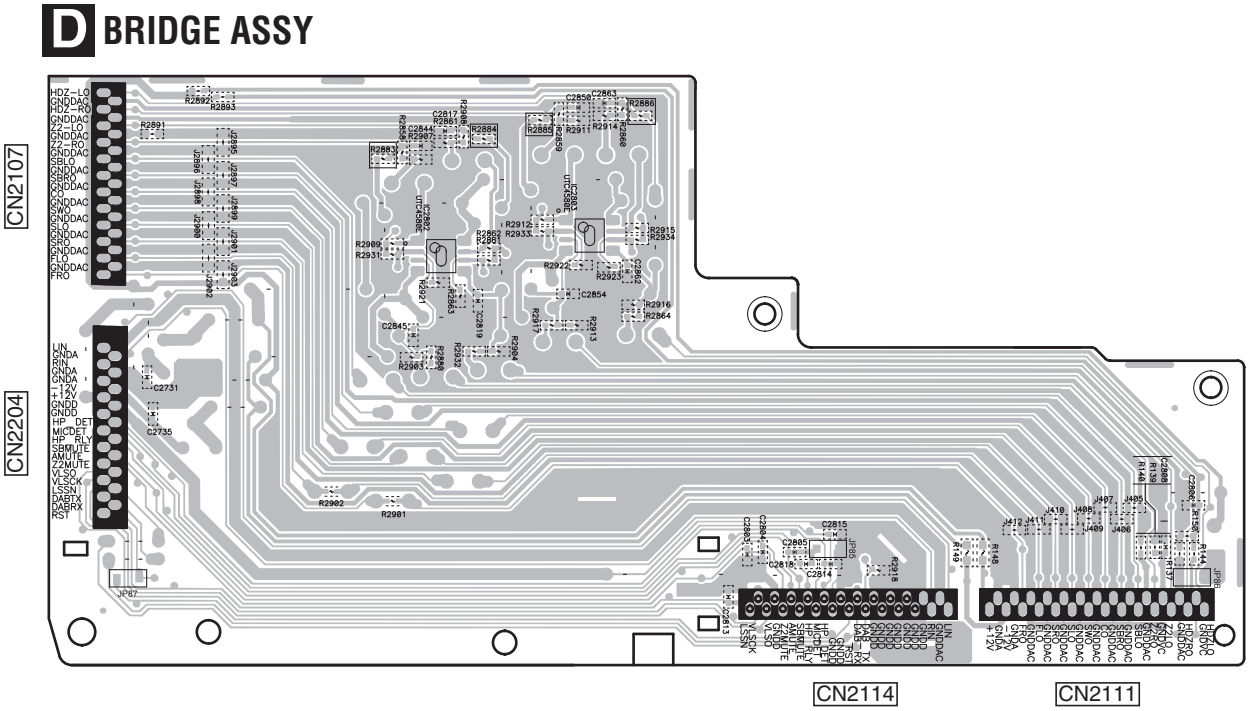

IC2802 IC2803

D

11.5 AUDIO ASSY

SIDE A

SIDE A

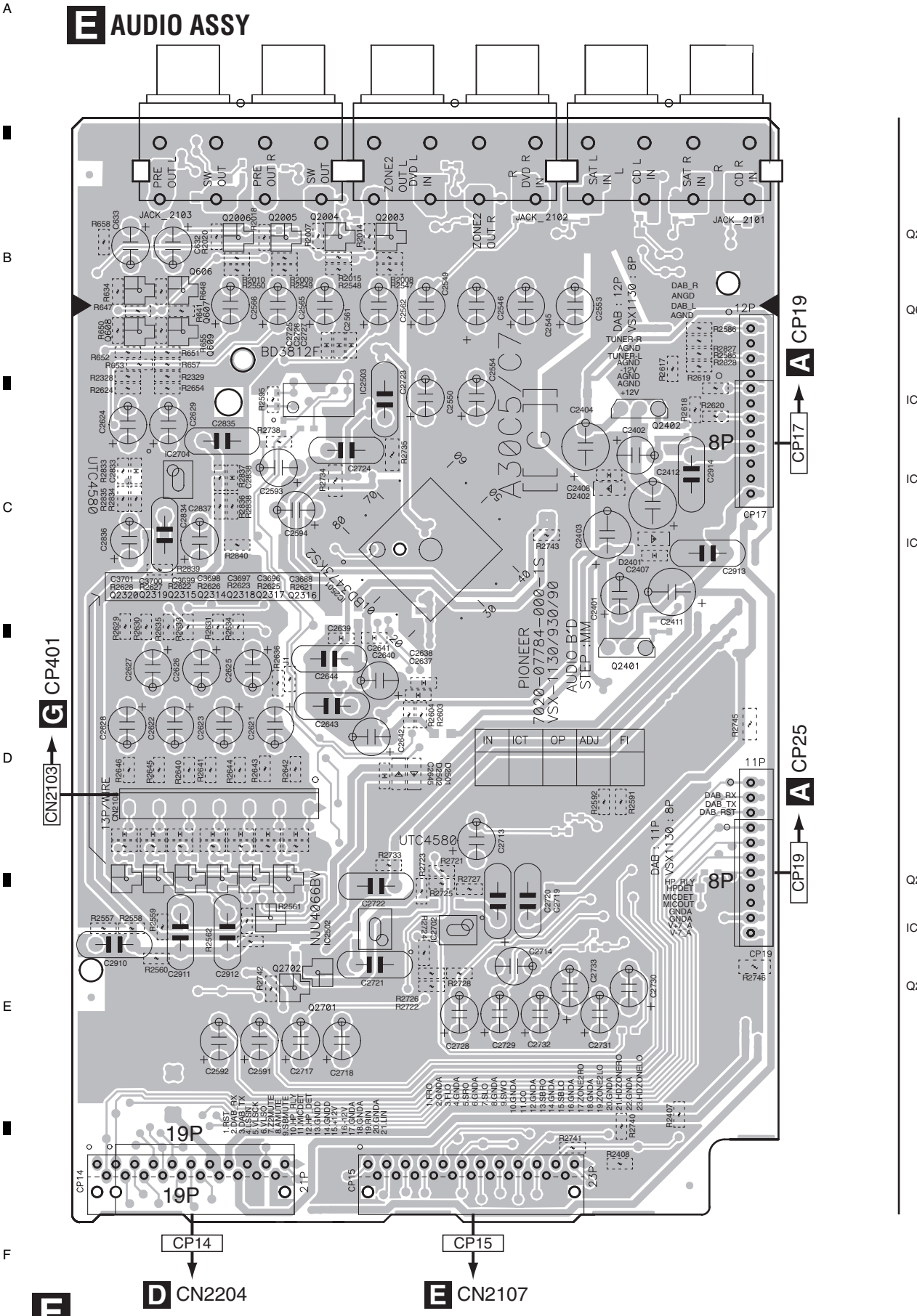

SIDE B

SIDE B

E AUDIO ASSY

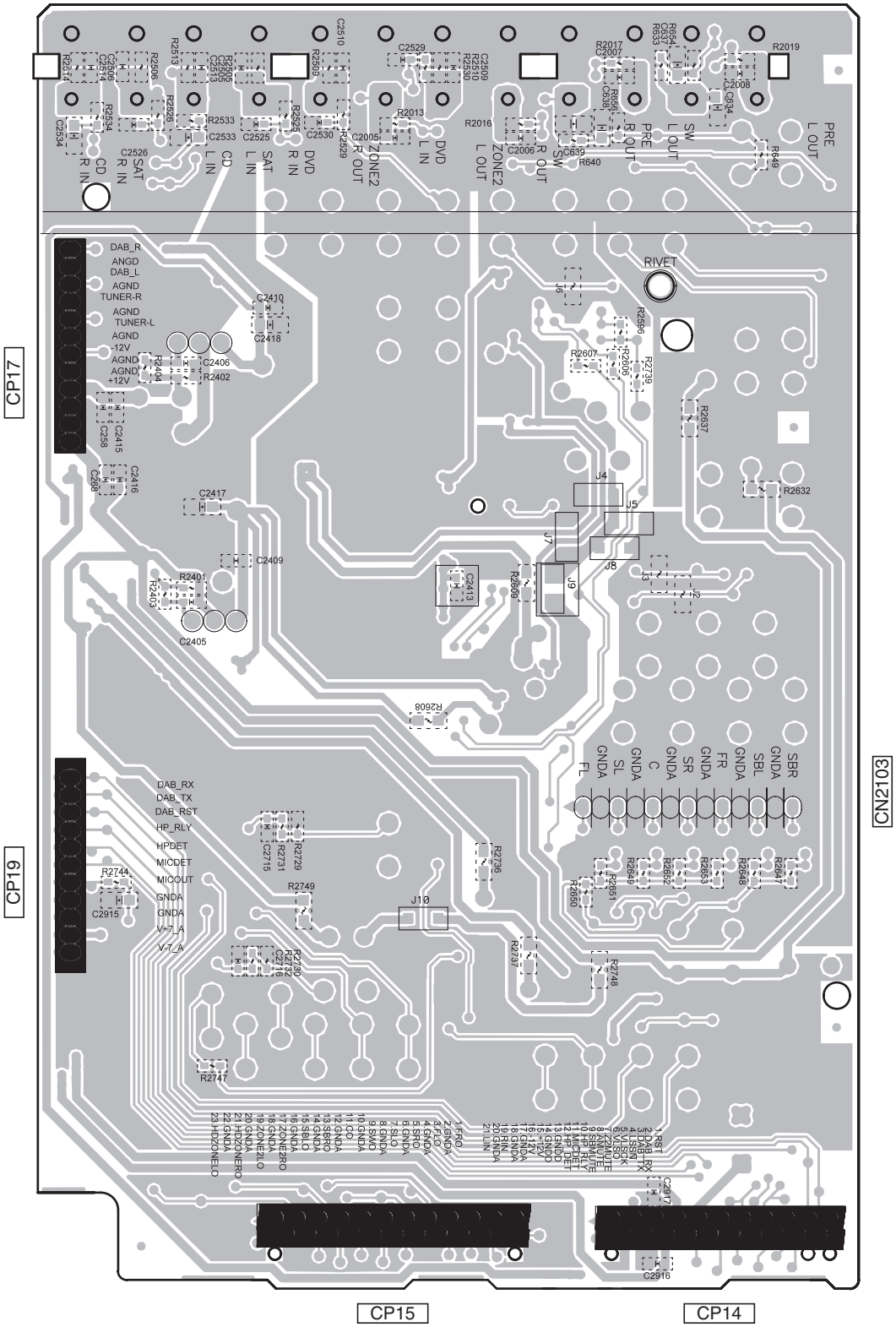

11.6 CPU ASSY

SIDE A

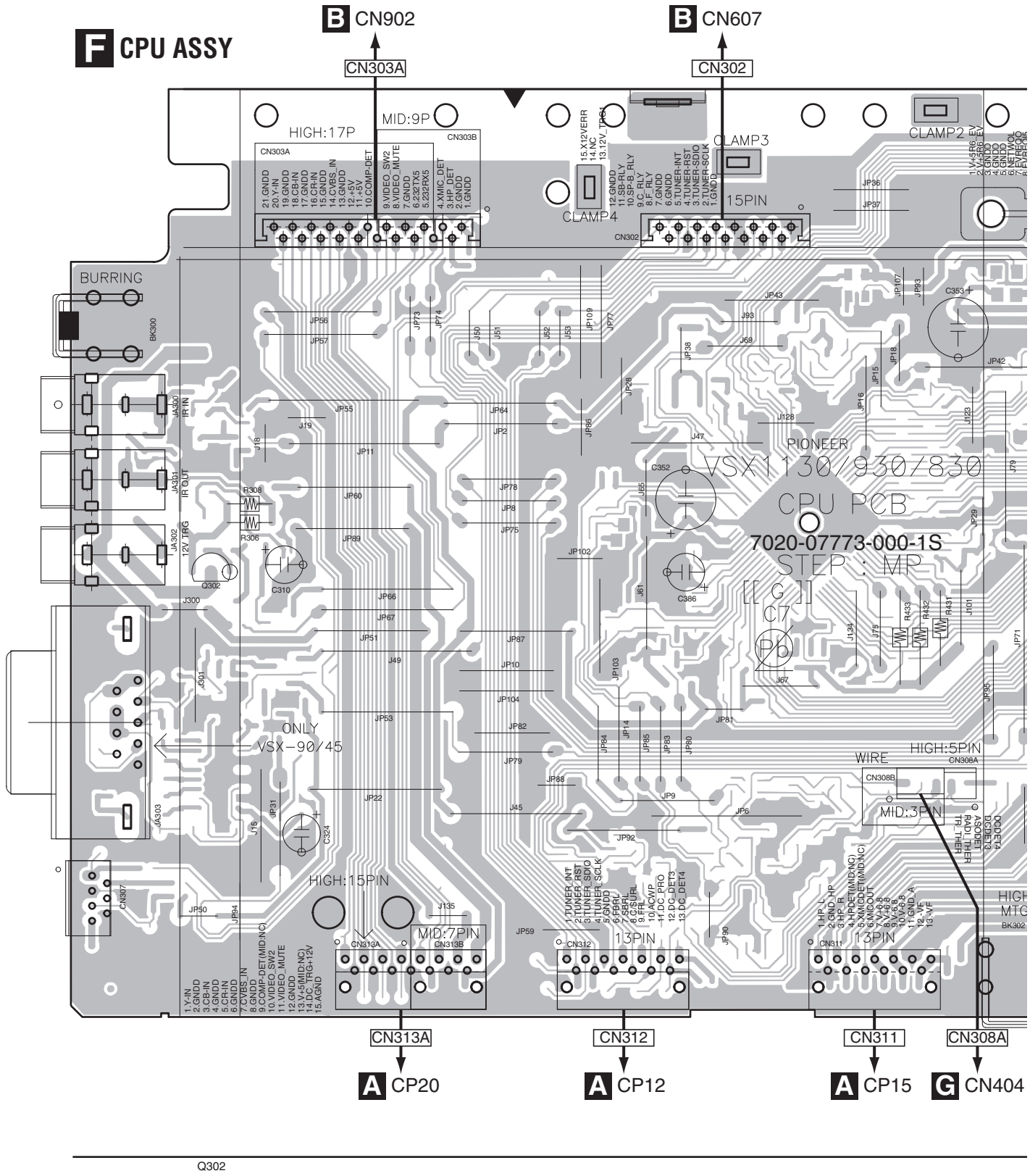

SIDE A

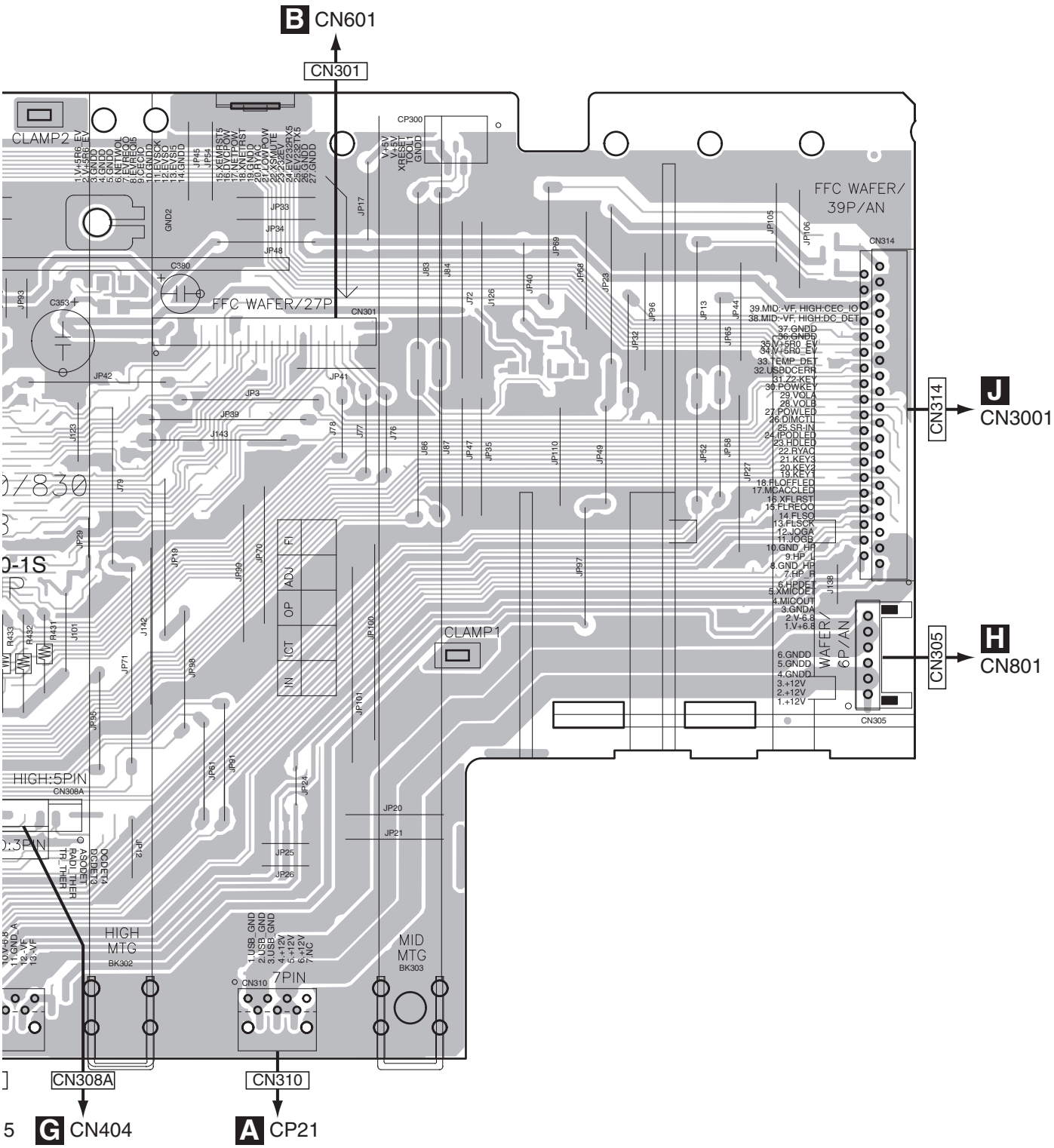
B CN601
CN301
CLAMP2
CP300
FFC WAFER/
39P/AN
CN314
FFC WAFER/27P
CN301
J
CN3001
CN314
H
CN801
CN305
CLAMP1
HIGH:5PIN
CN308A
HIGH
MTG
BK302
7PIN
CN310
MID
MTG
BK303
CN308A
CN310
G CN404
A CP21

SIDE B

F CPU ASSY

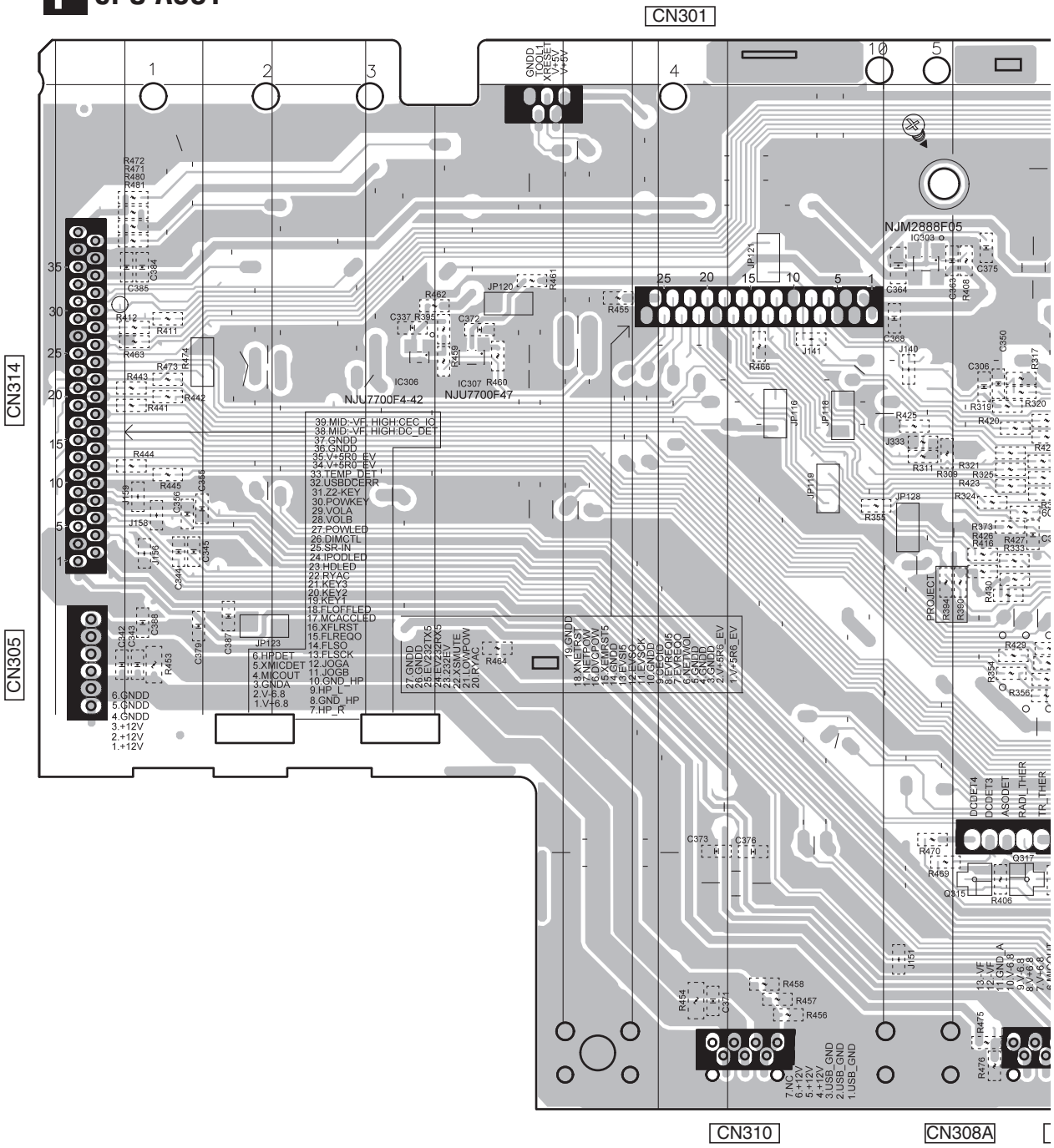

SIDE B

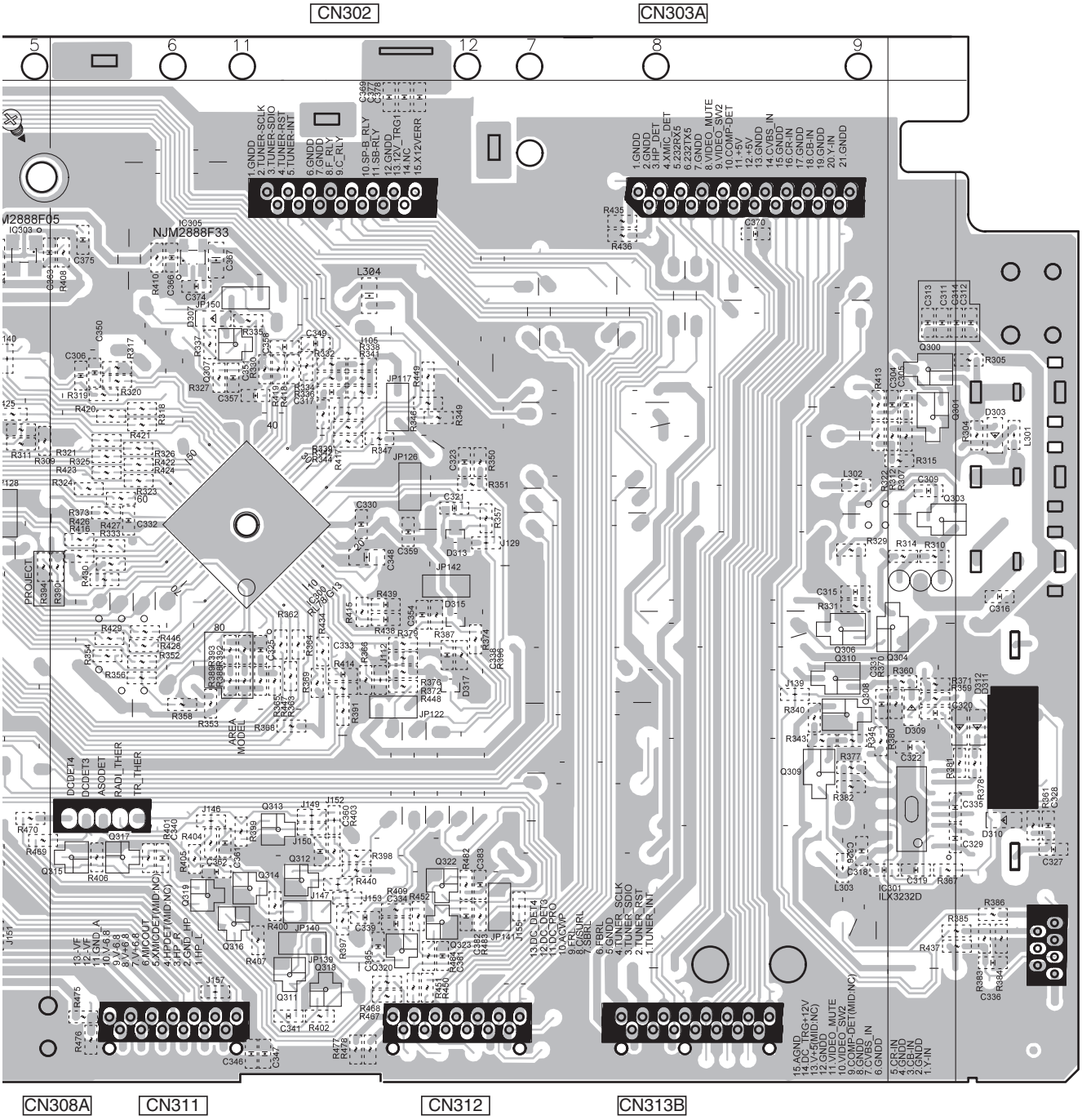

IC303 IC305 Q307 Q300
Q315 Q317 IC300 Q313 Q306 Q304 Q301
Q319 Q314 Q312 Q322 Q310 Q303
Q316 Q311 Q320 Q323 Q308
Q318 Q309 IC301

11.7 AMP7 ASSY

SIDE A

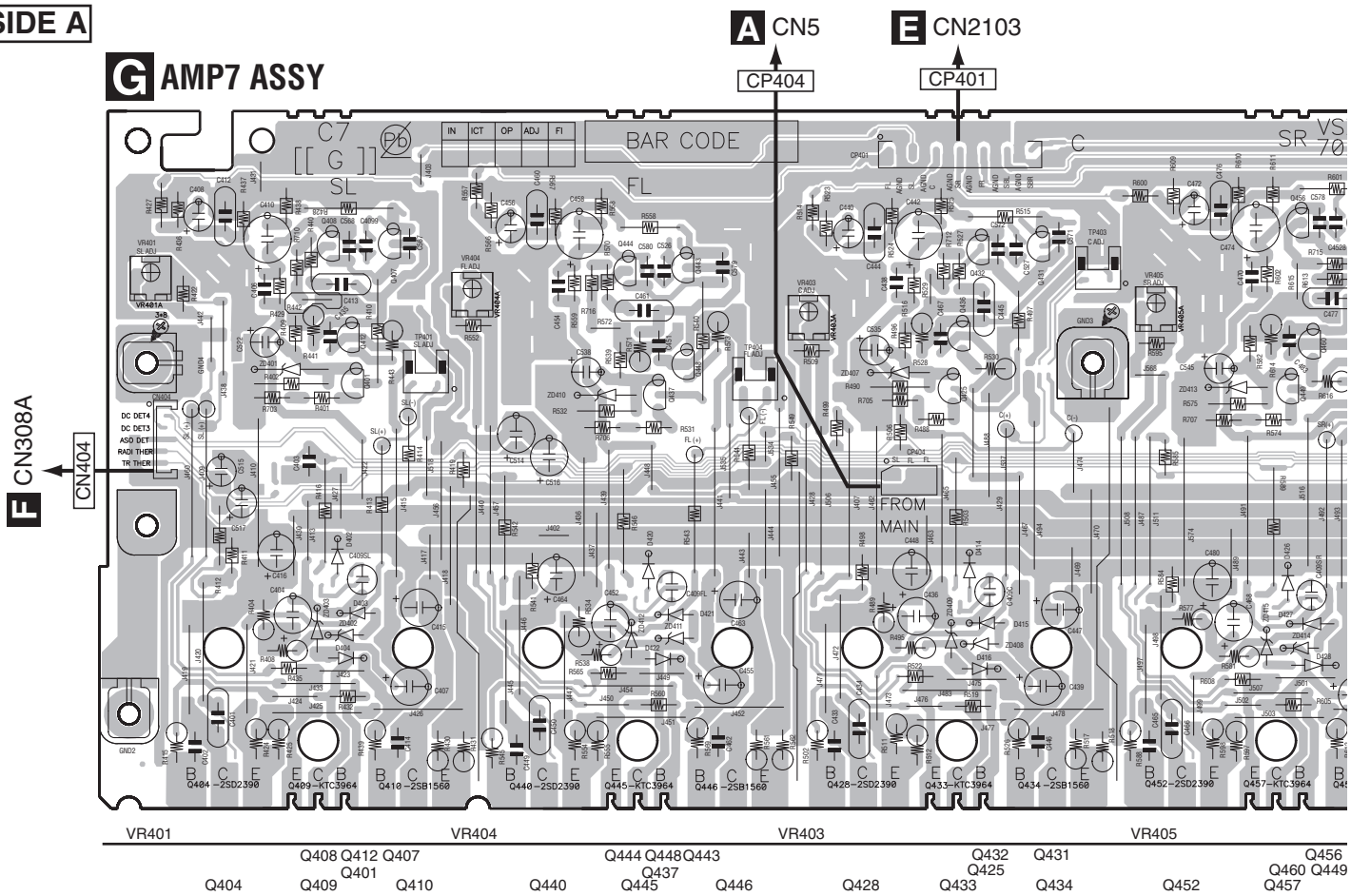

SIDE B

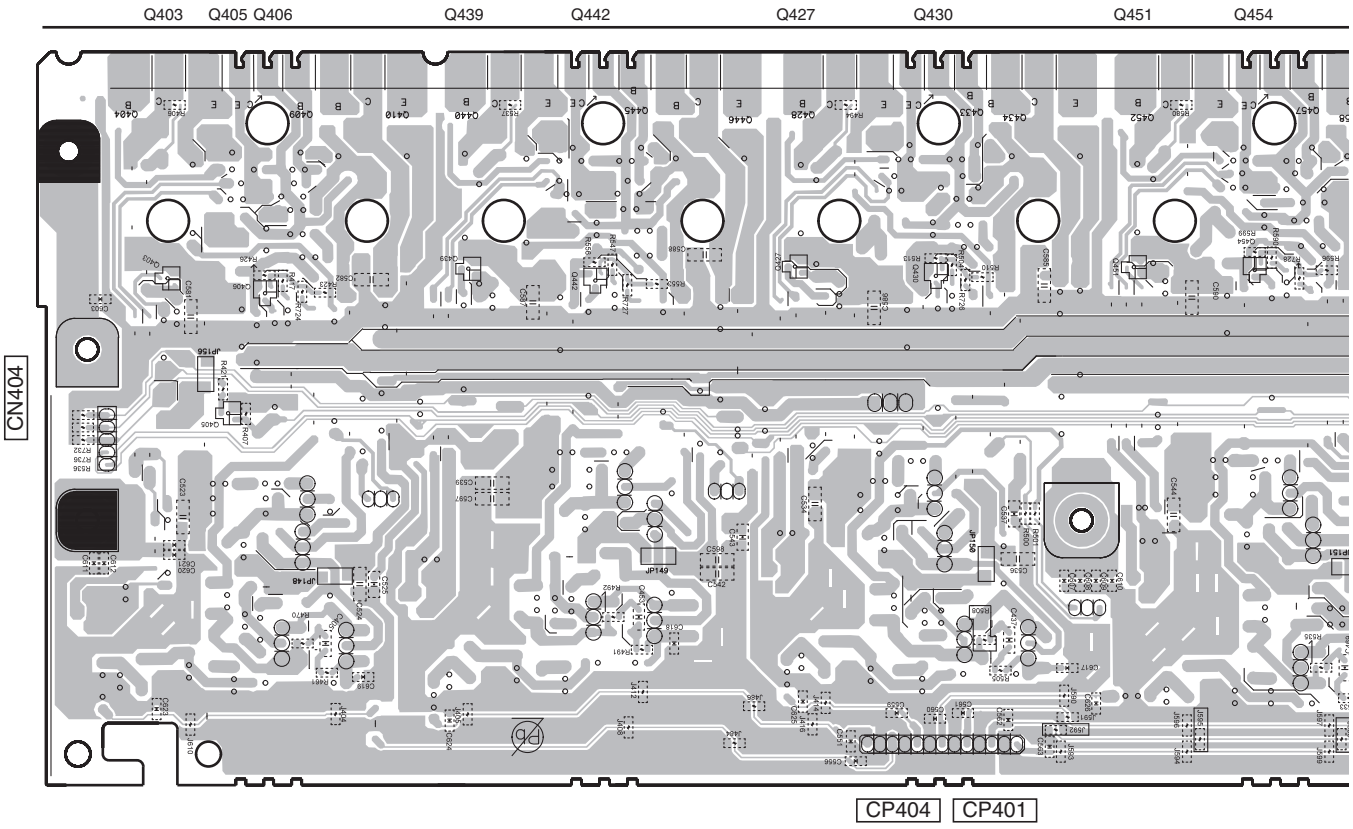

SIDE A

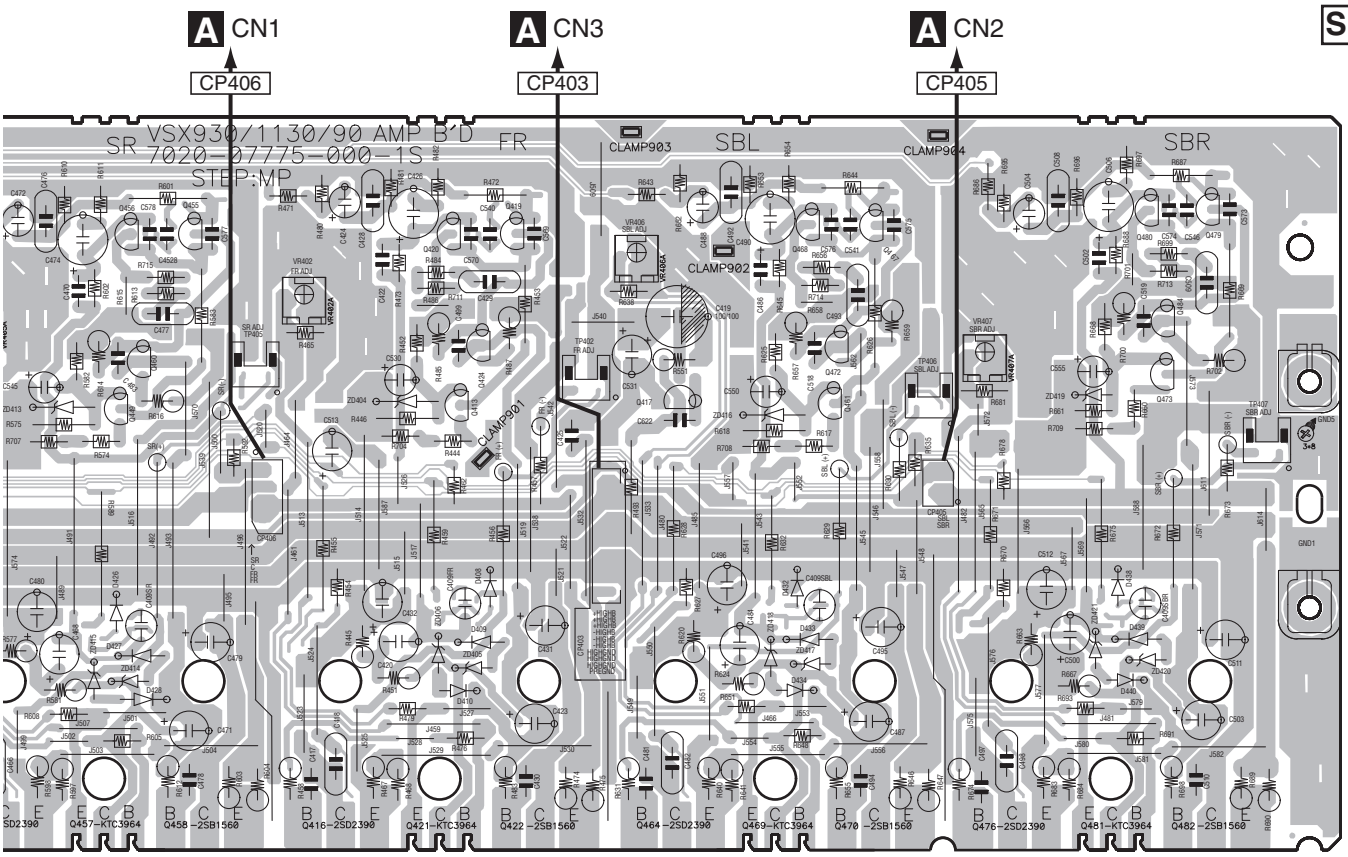
A CN1
A CN3
A CN2
CP406
CP403
CP405
VSX930/1130/90 AMP B'D
SR 7020-07775-000-1S
STEP:MP
FR
SBL
SBR
CLAMP903
CLAMP904
CLAMP902
CLAMP901
VR402
VR406
VR407
Q456 Q455
Q460 Q449
Q457 Q458
Q416
Q420 Q419
Q413 Q424
Q421 Q422
Q417
Q464
Q468 Q467
Q461 Q472
Q469 Q470
Q476
Q480
Q473 Q484
Q481 Q482

SIDE B

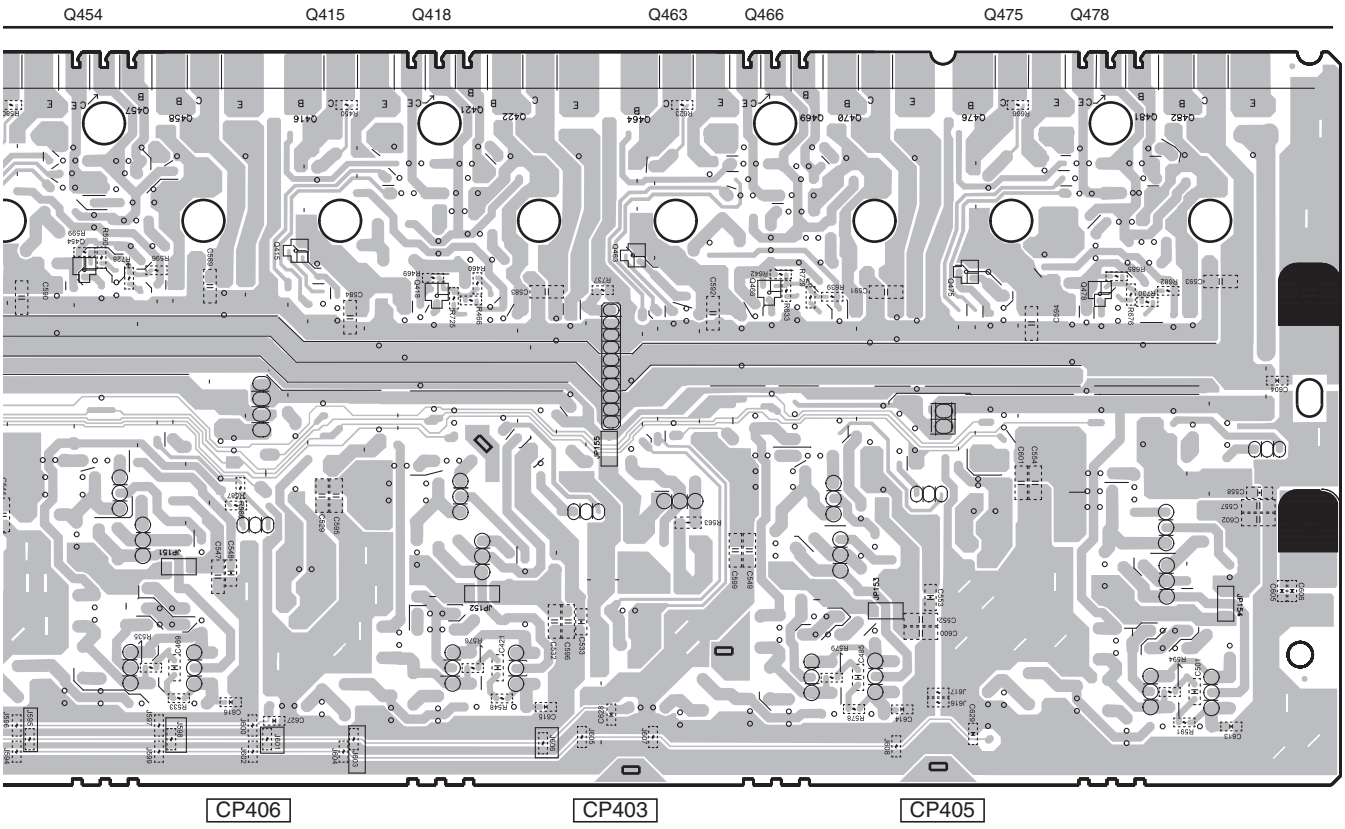
Q454
Q415
Q418
Q463
Q466
Q475
Q478
CP406
CP403
CP405

11.8 FHDMI, TEMP, FRONT, HPMIC and INSEL ASSYS

SIDE A

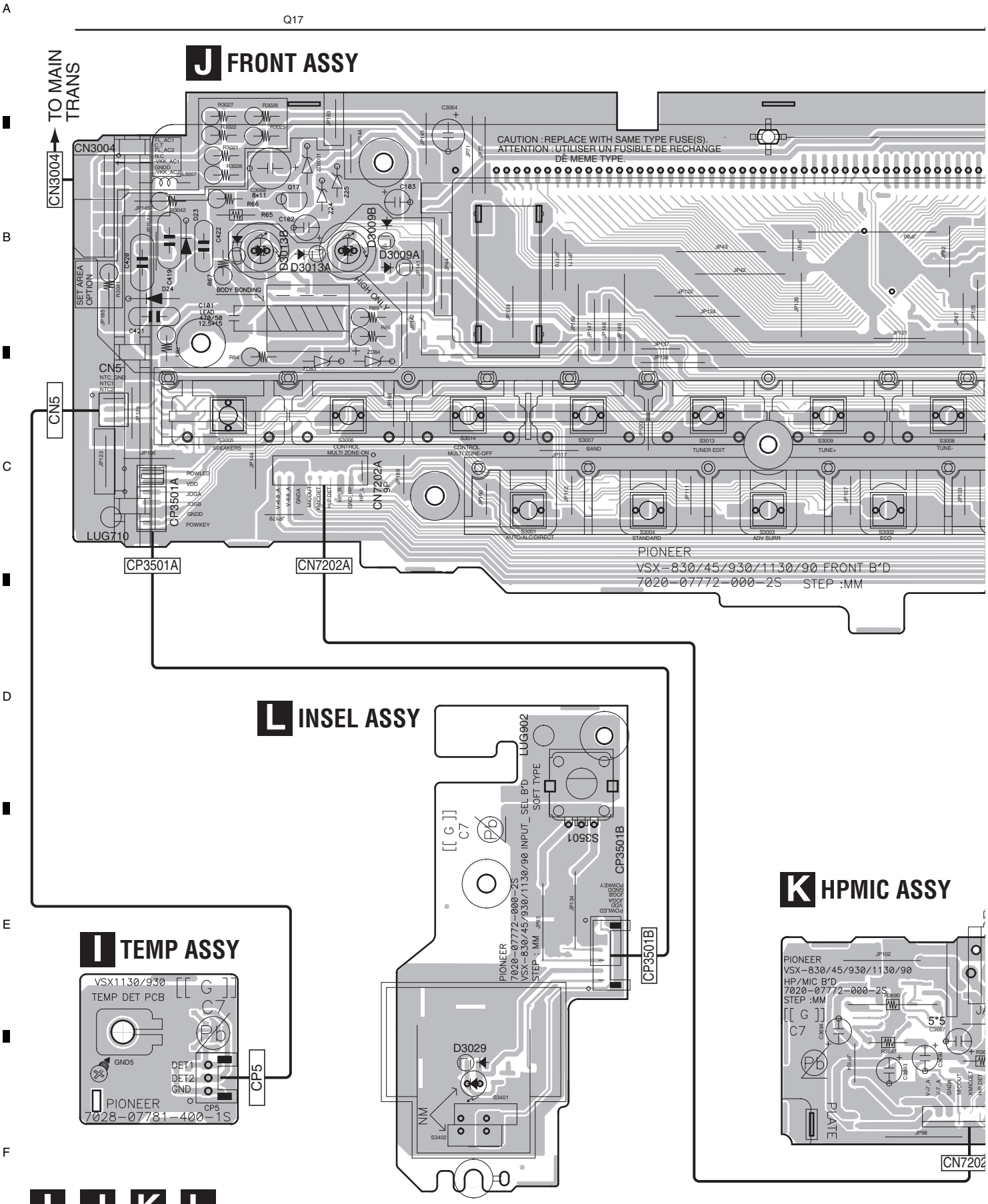

SIDE A

Q3011

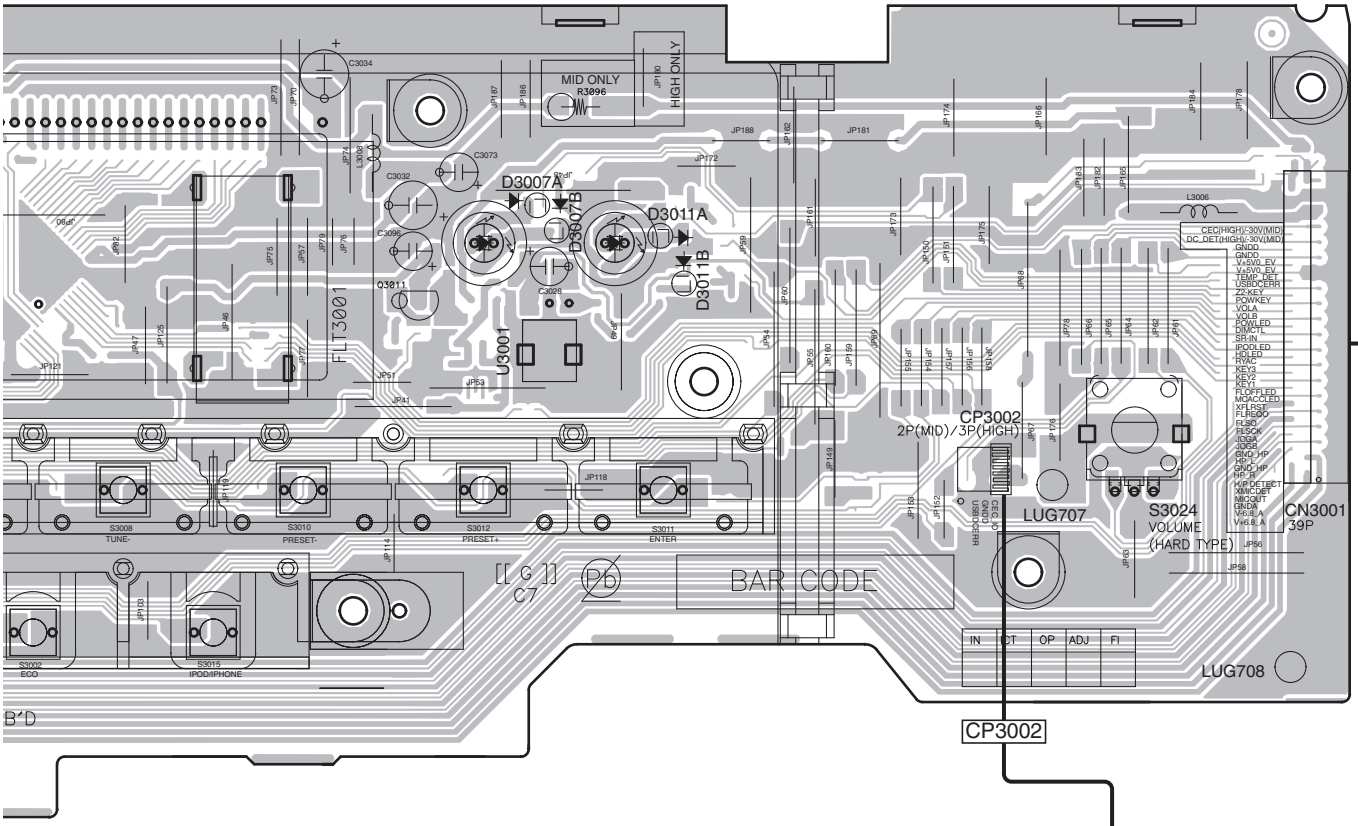

H FHDMI ASSY

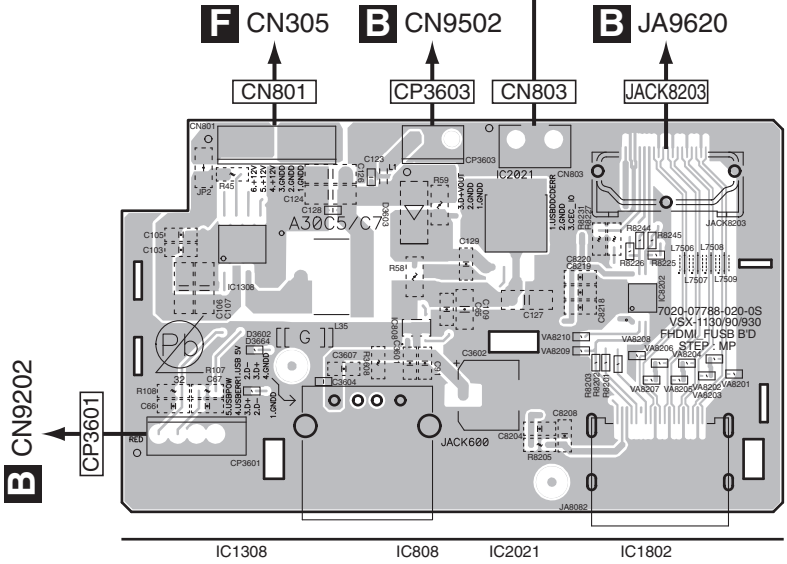

IC ASSY

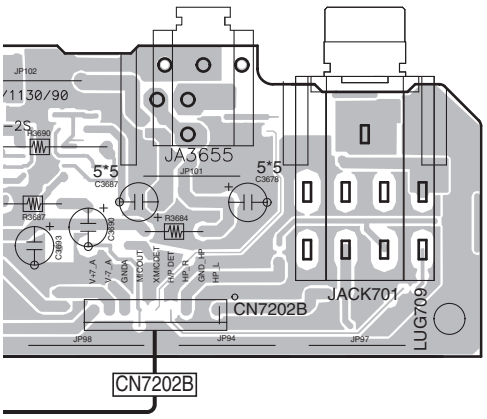

H J K

SIDE B

Q3007 Q3012
Q3014 Q3005
Q501 IC3002 IC30

J FRONT ASSY

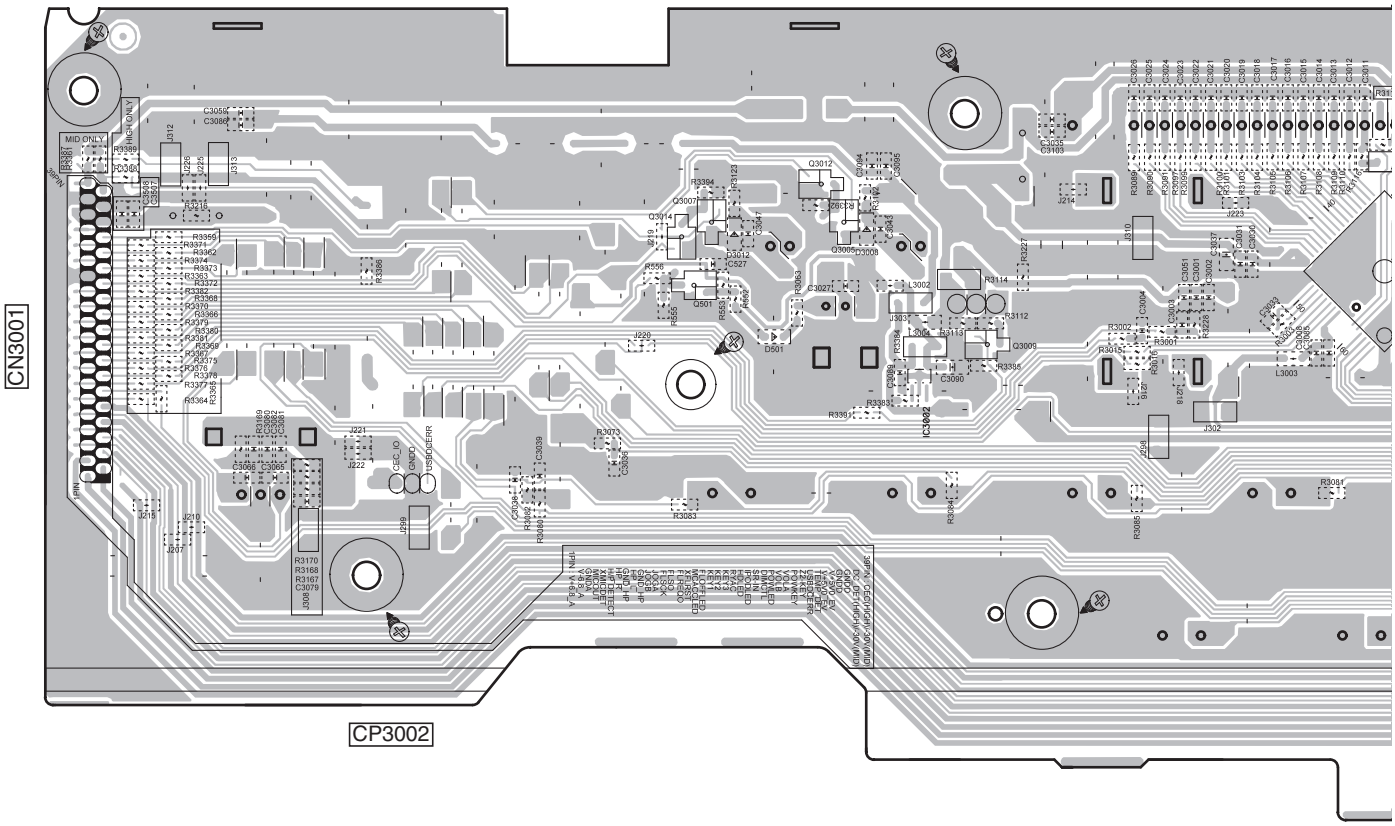

H FHDMI ASSY

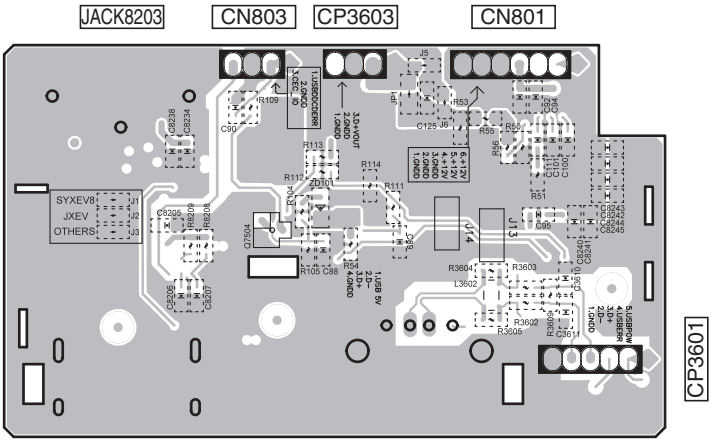

K HPMIC ASSY

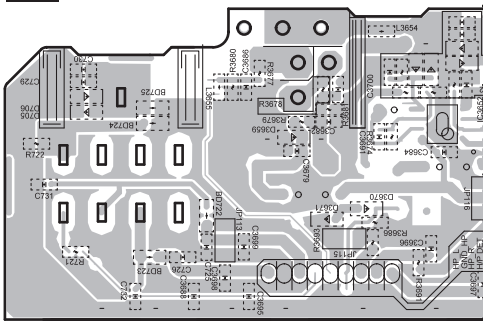

H J K

SIDE B

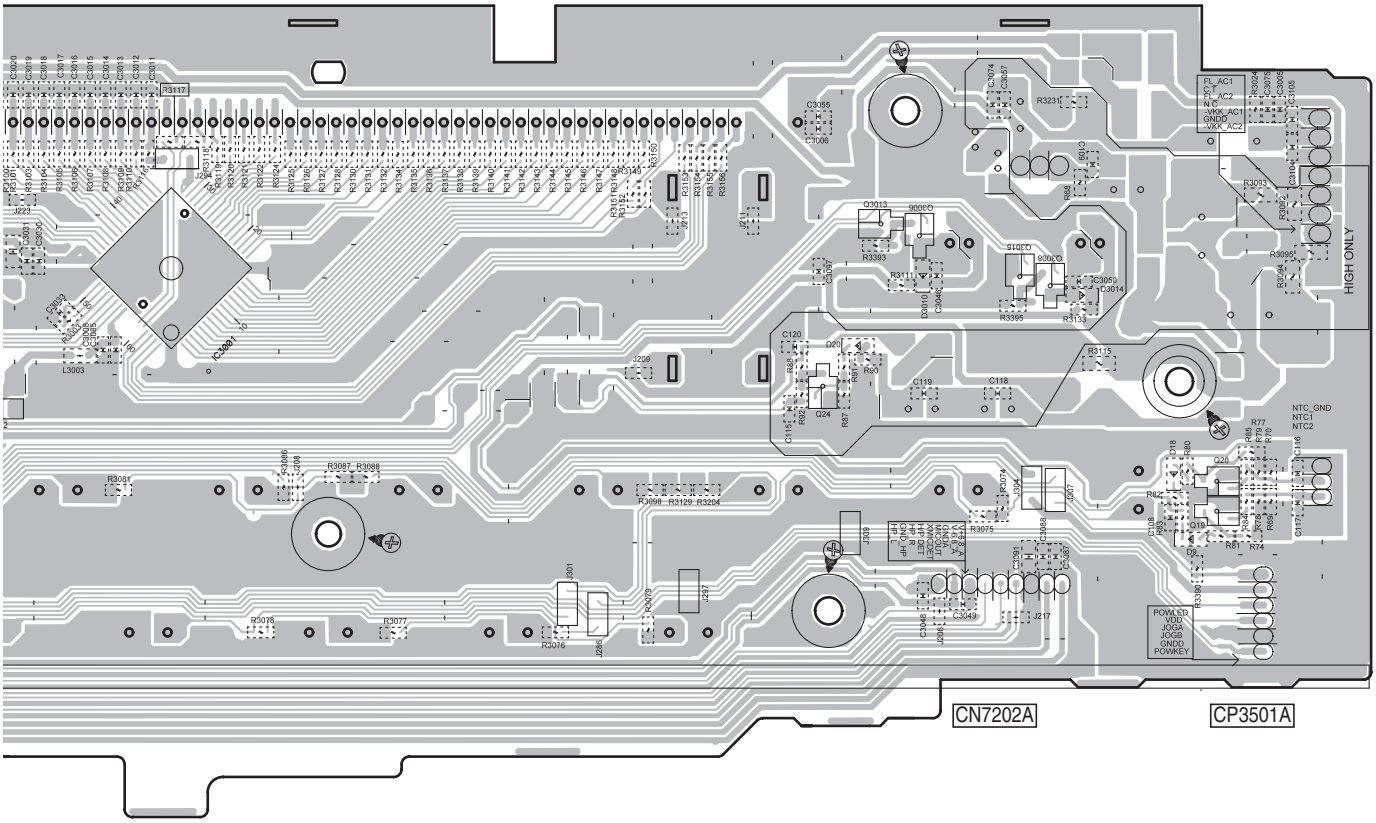
Q3013 Q3006
Q3015 Q3008
Q20
Q19
IC3001
Q24
CN3004
CN5
HIGH ONLY
CN7202A
CP3501A

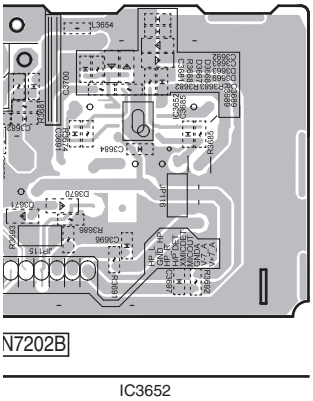
N7202B
IC3652

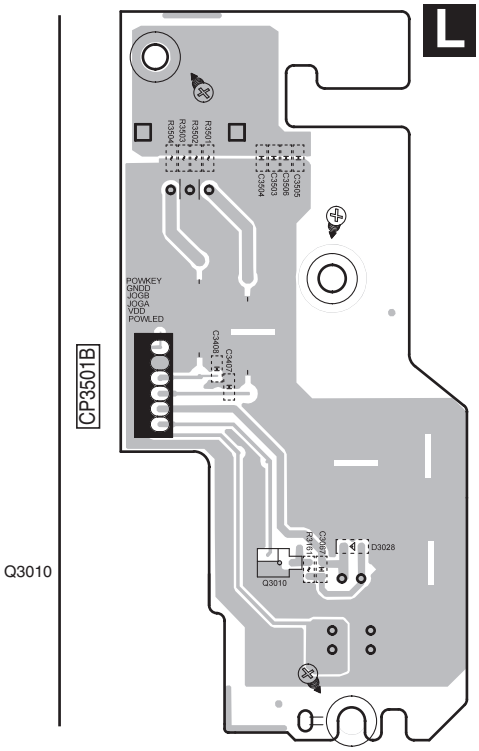
L INSEL ASSY
CP3501B
Q3010

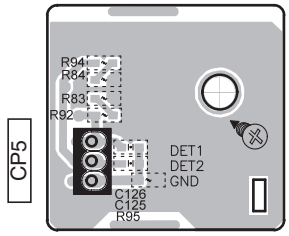
I TEMP ASSY
CP5
DET1
DET2
GND

11.9 SMPS ASSY

SIDE A

SIDE A

M SMPS ASSY

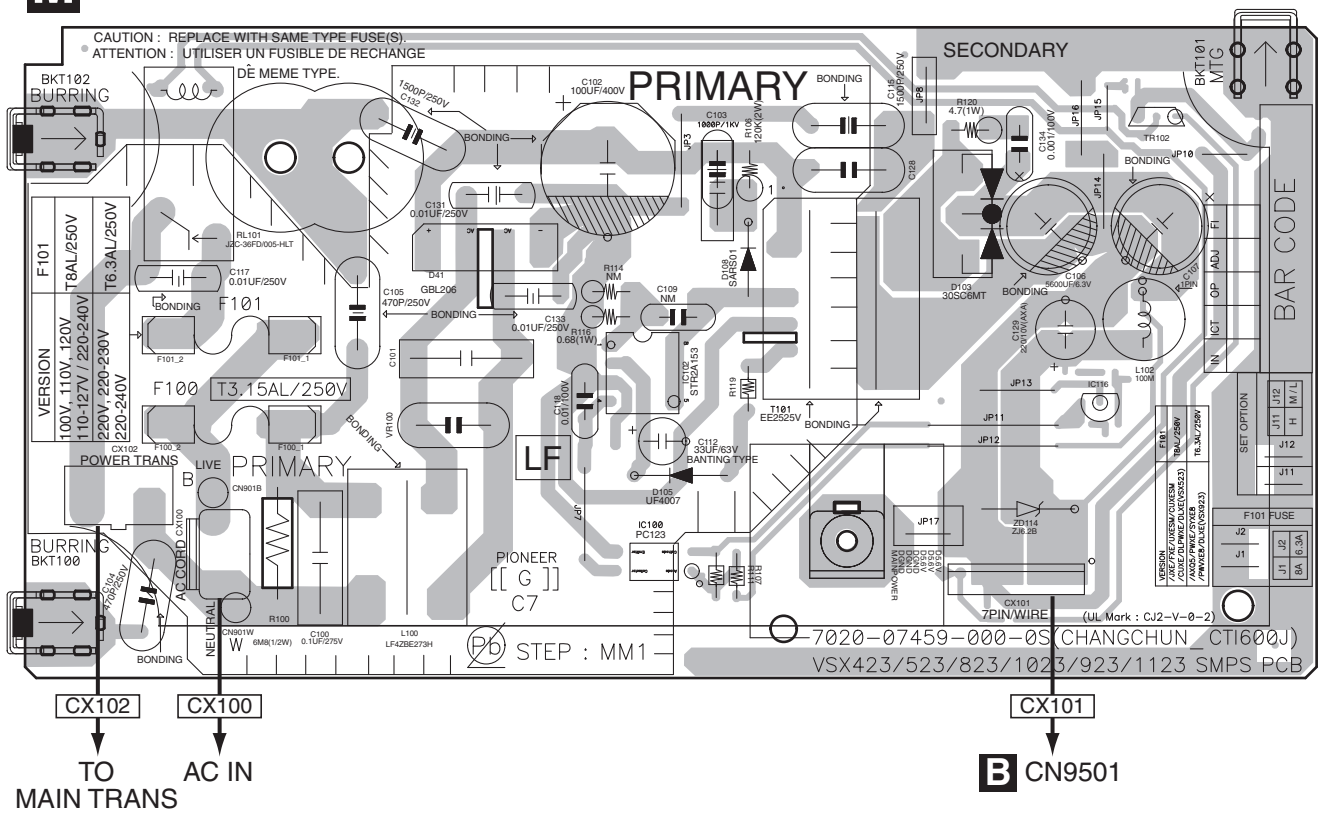

IC102
IC100
PC123

IC116 TR102

SIDE B

SIDE B

M SMPS ASSY

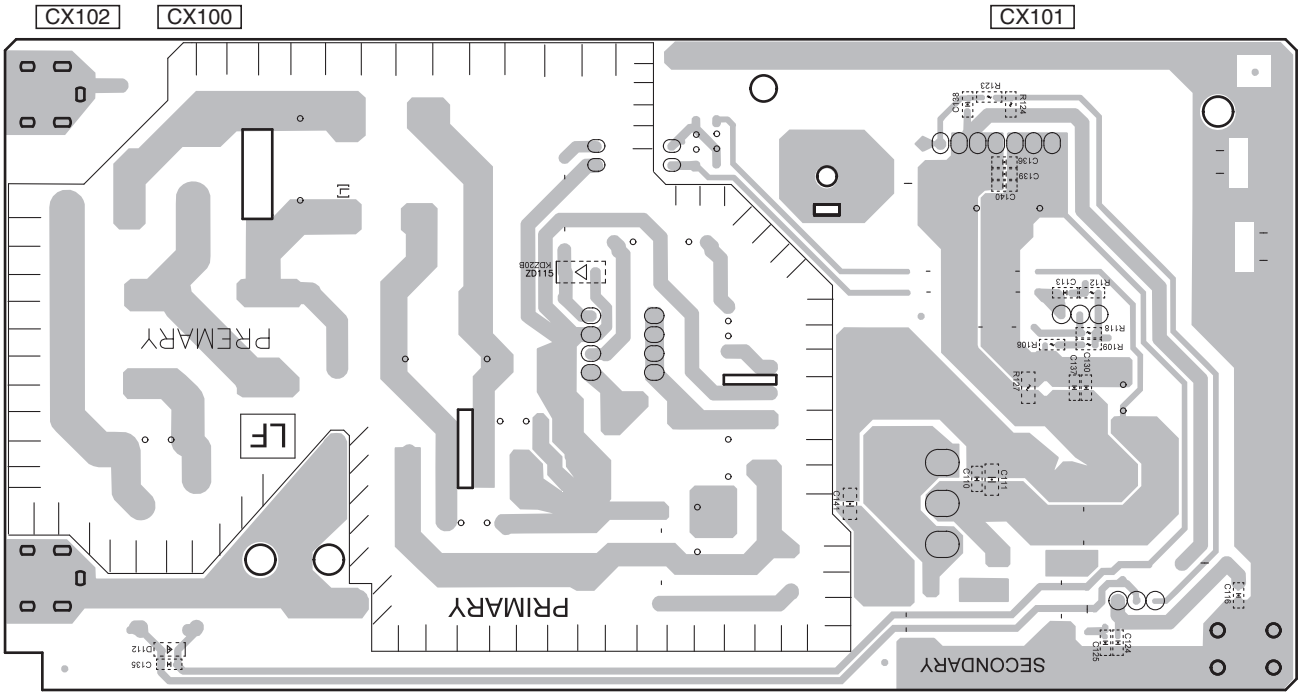

M

12. PCB PARTS LIST

NOTES:
- *Parts marked by "NSP" are generally unavailable because they are not in our Master Spare Parts List.*
- *The ⚠ mark found on some component parts indicates the importance of the safety factor of the part. Therefore, when replacing, be sure to use parts of identical designation.*
- *When ordering resistors, first convert resistance values into code form as shown in the following examples.*

Ex.1 When there are 2 effective digits (any digit apart from 0), such as 560 ohm and 47 k ohm (tolerance is shown by J = 5%, and K = 10%).

560 Ω	→	56×10^1	→	561	RD1/4PU 5 6 1 J
47 kΩ	→	47×10^3	→	473	RD1/4PU 4 7 3 J
0.5 Ω	→	R50			RN2H R 5 0 K
1 Ω	→	1R0			RS1P 1 R 0 K

Ex.2 When there are 3 effective digits (such as in high precision metal film resistors).

5.62 kΩ	→	562×10^1	→	5621	RN1/4PC 5 6 2 1 F

- *SCHEMATIC DIAGRAM and PCB CONNECTION DIAGRAM → ● PCB PARTS LIST*

BKT	→	none	BEAD	→	L	RLY	→	RY	SW	→	S
CLAMP	→	none	F	→	FU	RMC	→	U	VEC	→	S9***
W	→	none	FLT	→	V	RES	→	X	GND	→	KN
LUG	→	none	JACK	→	JA	XTAL	→	X9***			
P	→	none	JACK	→	JA9***	BD	→	L7***			
PACK	→	9***	JK	→	JA	LED	→	D8***			
CP	→	CN	PT	→	T	Z	→	D9***			
CP	→	CN9***	REG	→	IC	ZD	→	D9***			
CX	→	CN9***	REG	→	IC9***	DZ	→	D9***			
FPC	→	CN9***									

LIST OF ASSEMBLIES

Mark	Symbol and Description	VSX-1130-K /CUXESM	VSX-90 /CUXE	VSA-1130 /JXEV
NSP	1..PCB TTL ASSY MAIN	7025HK1401010	7025HK1401020	7025HK1401060
	2..MAIN ASSY (PCB SUB ASSY MAIN)	7028077811040	7028077811010	7028077811030
	2..BRIDGE ASSY (PCB SUB ASSY BRIDGE)	7028077812020	7028077812010	7028077812020
	2..GUI-A ASSY (PCB SUB ASSY GUI-A)	7028077813010	7028077813010	7028077813010
	2..G-R ASSY (PCB SUB ASSY G-R)	7028077814010	7028077814010	7028077814010
	2..G-L ASSY (PCB SUB ASSY G-L)	7028077815010	7028077815010	7028077815010
	2..TEMP ASSY (PCB SUB ASSY TEMP)	7028077816010	7028077816010	7028077816030
NSP	1..PCB TTL ASSY DMAIN	7025HK1401012	7025HK1401022	7025HK1401062
	2..DMAIN ASSY (PCB SUB ASSY DMAIN)	7028077871040	7028077871010	7028077871030
	2..NETWORK MODULE	AXX7293	AXX7293	AXX7293
NSP	1..PCB TTL ASSY FRONT	7025HK1401011	7025HK1401021	7025HK1401061
	2..FRONT ASSY (PCB SUB ASSY FRONT)	70280777210D0	70280777210A0	70280777210C0
	2..INSEL ASSY (PCB SUB ASSY INSEL)	70280777220A0	70280777220A0	70280777220A0
	2..OPTCO ASSY (PCB SUB ASSY OPTCO)	70280777230A0	70280777230A0	70280777230B0
	2..HPMIC ASSY (PCB SUB ASSY HPMIC)	70280777240A0	70280777240A0	70280777240A0
NSP	1..PCB TTL ASSY CPU	7025HK1401013	7025HK1401023	7025HK1401063
	2..CPU ASSY (PCB SUB ASSY CPU)	70280777310D0	70280777310A0	70280777310C0
NSP	1..PCB TTL ASSY AMP7	7025HK1401014	7025HK1401024	7025HK1401064
	2..AMP7 ASSY (PCB SUB ASSY AMP7)	7028077751010	7028077751010	7028077751030
NSP	1..PCB TTL ASSY AUDIO	7025HK1401015	7025HK1401025	7025HK1401065
	2..AUDIO ASSY (PCB SUB ASSY AUDIO)	7028077841040	7028077841010	7028077841030
NSP	1..PCB TTL ASSY SMPS	7025HK1401016	7025HK1401026	7025HK1401066
⚠	2..SMPS ASSY (PCB SUB ASSY SMPS)	702807336108B	702807336106B	702807336109B
NSP	1..PCB TTL ASSY FHDMI	7025HK1401017	7025HK1401027	7025HK1401067
	2..FHDMI ASSY (PCB SUB ASSY FHDMI)	7028077881010	7028077881010	7028077881030

CONTRAST OF PCB ASSEMBLIES

A MAIN ASSY

7028077811040, 7028077811010 and 7028077811030 are constructed the same with the exception of some components, including the following:

Mark	Symbol and Description	7028077811040	7028077811010	7028077811030
⚠	IC5 Liner regulator IC	Not used	J126781200040-IL	Not used
	R85	Not used	C060033166050-IL	Not used
	50 Tuner,FM/AM	E903004100781S	E903004100781S	Not used

Note: This list is not complete. Only components that are available as service part are listed!

B DMAIN ASSY

7028077871040, 7028077871010 and 7028077871030 are constructed the same with the exception of some components, including the following:

Mark	Symbol and Description	7028077871040	7028077871010	7028077871030
	IC1802	Not used	AK4388ET	Not used

Note: This list is not complete. Only components that are available as service part are listed!

C OPTCO ASSY

70280777230A0 and 70280777230B0 are different and are NOT COMPATIBLE! Some components on these Assy's are different. Since these different components are not available as service part, they are not listed.

D BRIDGE ASSY

7028077812020 and 7028077812010 are constructed the same with the exception of some components, including the following:

Mark	Symbol and Description	7028077812020	7028077812010
	IC2802	Not used	J121458001010-IL

Note: This list is not complete. Only components that are available as service part are listed!

E AUDIO ASSY

7028077841040, 7028077841010 and 7028077841030 are constructed the same with the exception of some components, including the following:

Mark	Symbol and Description	7028077841040	7028077841010	7028077841030
	IC2503	Not used	J084381200010S	Not used
	JA2102 Ter_RCA 4PIN	Not used	G602421E0002Y-IL	Not used
	JA2102 Ter_RCA 2PIN	Not used	Not used	G601206A0005Y-IL
	JA2103 Pin jack (2P)	G601206A0700Y-IL	G601206A0700Y-IL	Not used
	JA2103 Ter,RCA 4PIN	Not used	Not used	G602421E0046Y-IL

Note: This list is not complete. Only components that are available as service part are listed!

F CPU ASSY

70280777310D0, 70280777310A0 and 70280777310C0 are constructed the same with the exception of some components, including the following:

Mark	Symbol and Description	70280777310D0	70280777310A0	70280777310C0
	IC301	Not used	J046323200020-IL	Not used
	Q302	Not used	J5000916Y0050-IL	Not used
	JA302 Jack_D3.5	Not used	G401PJ3080100-IL	Not used
	JA303 CN.Wafer Interface	Not used	L103090090040-IL	Not used

Note: This list is not complete. Only components that are available as service part are listed!

G AMP7 ASSY

7028077751010 and 7028077751030 are different and are NOT COMPATIBLE! Some components on these Assy's are different. Since these different components are not available as service part, they are not listed.

H FHDMI ASSY

7028077881010 and 7028077881030 are different and are NOT COMPATIBLE! Some components on these Assy's are different. Since these different components are not available as service part, they are not listed.

I TEMP ASSY

7028077816010 and 7028077816030 are different and are NOT COMPATIBLE! Some components on these Assy's are different. Since these different components are not available as service part, they are not listed.

J FRONT ASSY

70280777210D0, 70280777210A0 and 70280777210C0 are constructed the same with the exception of some components, including the following:

Mark	Symbol and Description	70280777210D0	70280777210A0	70280777210C0
	D3007,3009,3011,3013	K500052009011-IL	K500036000160-IL	K500052009011-IL

Note: This list is not complete. Only components that are available as service part are listed!

M SMPS ASSY

702807336108B, 702807336106B and 702807336109B are constructed the same with the exception of some components, including the following:

Mark	Symbol and Description	702807336108B	702807336106B	702807336109B
	CN9100 CN.Wafer 7.92MM	L108396030010-IL	L108396030010-IL	Not used

Note: This list is not complete. Only components that are available as service part are listed!

A MAIN ASSY

Mark	No.	Description	Part No.
	SEMICONDUCTORS		
	IC 1		J126781200040-IL
	IC 2		J126791200060-IL
	IC 3		J126780500110-IL
	IC 4		J127636300010S
	IC 200		J127410500010-IL
	Q 14,15		J522305200050-IL
	Q 16		J520015301210-IL
	D 7		K047100600220-IL
	D 10-13		K000400700220-IL
	D 19		K005041480230-IL
	D 4912		K047604000030S
	D 9002		K06004R744522-IL
	MISCELLANEOUS		
	JA 1	TER_BOARD SCREW 8P	G614108V1010M-IL
	JA 101	TER_BOARD SCREW 6P	G613602A0200Y-IL
	JA 102	TER_BOARD SCREW 4P	G612405E0200Y-IL
	JA 201	TER_RCA 6PIN	G603610A0051Y-IL
	RY 2-6	RELAY	G680120502050-IL
	RY 10	RELAY	G680240202030-IL
	CN 9012,9015	CN_WAFER	L109012511340S
	CN 9019,9025	CN.WAFER 2.0MM	L101911500810S
	CN 9020	CN_WAFER	L109012511540S
	CN 9021	CN.WAFER	L109012510740S
	50	TUNER_FM/AM	E903004100781S
⚠	FU 33,34	FUSE_MICRO (4AL 250V)	G658402250050-IL
	RESISTORS		
	R 5,7,9,11		C060010065050-IL
	R 6,8,10,12		C060010066050-IL
	R 13,15,17		C060010065050-IL
	R 14,16,18		C060010066050-IL
	R 41,42		C060R22065050-IL
	R 81,82		C060033166050-IL
	CAPACITORS		
	C 55,58		D040103089230-IL
	C 76		D040103083000-IL
	C 84,85		D040472084020-IL

B DMAIN ASSY

Mark	No.	Description	Part No.
	SEMICONDUCTORS		
	IC 101		R5S726B0D216FP
	IC 102,9001,9702		J001986466020S
	IC 103		8952VS1130011
	IC 105,1521,1812,9006		TC7SH08FUS1
	IC 107,608,612,1502		TC74VHCT08AFKS1
	IC 603		PE7008A
	IC 610,1509		74VHC126FT
	IC 611		74VHCT126AFT
	IC 613,1505,1601,1603		TC74VHC08FK
	IC 901-903		74LCX541FT
	IC 909		J044718100010-IL
	IC 1201		AK5358AET
	IC 1202		ES9006S
	IC 1203-1206		J121456500090S
	IC 1501,1503,1515,1516		TC74VHC157FK
	IC 1504,1511		ICS511MLF
	IC 1506		AK4118AEQ8
⚠	IC 1605,1615		AAT4610BIGV-1
	IC 1801		AK4388ET
	IC 1804,9003,9207		TC74VHC08FK
	IC 1808,6304		TC7WHU04FK
	IC 1817,1818		TC74VHC157FK

Mark	No.	Description	Part No.
	IC 9004		8952VS1130020
	IC 9007		TC7WZU04FK
	IC 9008		TC7SZU04FUS1
	IC 9101		74VHC541FT
	IC 9202		8952VS1130041
	IC 9208		TC7SH08FUS1
⚠	IC 9403,9408		MM3542BF
⚠	IC 9406		MM3411A50N
⚠	IC 9407,9508		MM3529A25P
⚠	IC 9410,9523		S-1172B12-E6
⚠	IC 9411		MM3411A33N
⚠	IC 9502		S-13A1A00-E6
⚠	IC 9505		MM3529A18P
⚠	IC 9510		MM3529A33P
⚠	IC 9511,9519		MM3529A50P
⚠	IC 9515		S-1172B1C-U5
⚠	IC 9518,9520		S-1172B13-E6
⚠	IC 9603		J046820650010S
	IC 9704		8952VS1130030
	MISCELLANEOUS		
	JA 1601,1603,9601-9606	HDMI JACK	AKP7286
	JA 9202	JACK_MODULAR	G4060RJ450230-IL
	JA 9620	HDMI JACK	AKP7286
	CAPACITORS		
	C 1509		D040222081000-IL

C OPTCO ASSY

Mark	No.	Description	Part No.
	SEMICONDUCTORS		
	IC 2009		J040740400290-IL
	MISCELLANEOUS		
	JA 1305	MODULE	E100802000250-IL
	JA 1306	TER_RCA 1PIN	G600107A0000Y-IL
	CN 2009	CN.WAFER	L101911500610S

D BRIDGE ASSY

Mark	No.	Description	Part No.
	SEMICONDUCTORS		
	IC 2803		J121458001010-IL
	MISCELLANEOUS		
	CN 2107	CN_WAFER	L109012512340S
	CN 2111	CN_WAFER	L109012512740S
	CN 2114	CN_WAFER	L109012512540S
	CN 2204	CN_WAFER	L109012511940S

E AUDIO ASSY

Mark	No.	Description	Part No.
	SEMICONDUCTORS		
	IC 2501		BD3473KS2
	IC 2502		J040406600010-IL
	IC 2702,2704		J121458001010-IL
	Q 2401		J5023198Y0000-IL
	Q 2402		J5001266Y0050-IL
	MISCELLANEOUS		
	JA 2101	TER_RCA 4PIN	G602421E0002Y-IL
	JA 2103	PIN JACK (2P)	G601206A0700Y-IL

F CPU ASSY

Mark	No.	Description	Part No.
	SEMICONDUCTORS		
	IC 300		8952VS1130050
⚠	IC 303		NJM2888F05
⚠	IC 305		J126288833010S
	IC 306		J126077004210-IL
	IC 307		J126077004720S
	MISCELLANEOUS		
	JA 300,301	JACK_D3.5	G401PJ3080100-IL
	CN 302	CN_WAFER	L109012511540S
	CN 303	CN_WAFER	L109012511740S
	CAPACITORS		
	C 352,353		D040102081070-IL

G AMP7 ASSY

Mark	No.	Description	Part No.
	SEMICONDUCTORS		
	Q 401,407,408,413		J5000992FA050-IL
⚠	Q 404,416,428,440,452,467,476		J5032390Y0000-IL
	Q 409,421,433,445,457,469,481		J502396400010-IL
⚠	Q 410,422,434,446,458,470,482		J5011560Y0000-IL
	Q 412,424,436,448		J5023206Y0050-IL
	Q 417		J5001024Y0050-IL
	Q 419,420,425,431		J5000992FA050-IL
	Q 432,437,443,444		J5000992FA050-IL
	Q 449,455,456,461		J5000992FA050-IL
	Q 460,472,484		J5023206Y0050-IL
	Q 467,468,473,479		J5000992FA050-IL
	Q 480		J5000992FA050-IL
	D 9401,9404,9407,9410		K06005R134522-IL
	D 9402,9403,9405,9406		K06004R344522-IL
	D 9408,9409,9411,9412		K06004R344522-IL
	D 9413,9416,9419		K06005R134522-IL
	D 9414,9415,9417,9418		K06004R344522-IL
	D 9420,9421		K06004R344522-IL
	RESISTORS		
⚠	R 406,450,494,537		F320471001050-IL
	R 415,439,458,483		C060010165060-IL
⚠	R 424,425,430,431		N113136647820-IL
	R 443,487,530,573		C060047065060-IL
⚠	R 467,468,474,475		N113136647820-IL
	R 493		C060033065060-IL
	R 502,526,545,551		C060010165060-IL
⚠	R 511,512,517,518		N113136647820-IL
⚠	R 554,555,561,562		N113136647820-IL
	R 569,588,612,631		C060010165060-IL
⚠	R 580,623,666		F320471001050-IL
⚠	R 597,598,603,604		N113136647820-IL
	R 616,659,702		C060047065060-IL
⚠	R 640,641,646,647		N113136647820-IL
	R 655,674,698		C060010165060-IL
⚠	R 683,684,689,690		N113136647820-IL
	VR 401-407	VR_SEMI CARBON MOLD	C541102315020S

H FHDMI ASSY

Mark	No.	Description	Part No.
	SEMICONDUCTORS		
⚠	IC 808		J046206501010S
	IC 8202		PCA9517DGK

Mark	No.	Description	Part No.
		MISCELLANEOUS	
	JA 600	CN_PLUG CONTACT	G480040030010S
	JA 8082	CN.WAFER	L109100190250S

I TEMP ASSY

Mark	No.	Description	Part No.
		RESISTORS	
	R 83,84		F340160801030S

J FRONT ASSY

Mark	No.	Description	Part No.
		SEMICONDUCTORS	
	IC 3001		PD8198A
	Q 17		J5000916Y0050-IL
	Q 19,20,24		J522305200050-IL
	Q 3011		J5001266G0050-IL
	D 9,18,20		K005041480230-IL
⚠	D 23,24		K000400700220-IL
	D 3001		K06006R844522-IL
	D 3007,3009,3011,3013		K500052009011-IL
	D 9024,9025,9083,9084		K06012R044522-IL
		MISCELLANEOUS	
	V 3001	DISPLAY_FLT	K530166400012-IL
	S 3001-3015	SWITCH	G180501000010-IL
	S 3024	SW_ENCODER	G121122400231S
	1	HOLDER	4320211306000-IL
	U 3001	MODULE_REMOCON	E940349003810-IL
		RESISTORS	
	R 66		N113135647920-IL
	R 3021,3022		C0601R8065050S

K HPMIC ASSY

Mark	No.	Description	Part No.
		SEMICONDUCTORS	
	IC 3652		J121458001010-IL
		MISCELLANEOUS	
	JA 701	JACK_D6.5	G402PJ612AG1Y-IL
	JA 3655	JACK_D3.5	G40132340000Y-IL

L INSEL ASSY

Mark	No.	Description	Part No.
		MISCELLANEOUS	
	S 3401	SWITCH	G180501000010-IL
	S 3501	SW_ENCODER	G121121200230-IL

M SMPS ASSY

Mark	No.	Description	Part No.
		SEMICONDUCTORS	
⚠	IC 100		K614123000010-IL
⚠	IC 102		J122201530080-IL
⚠	IC 116		J126243118010-IL
	Q 102		J5023198Y0000-IL
⚠	D 41		K047200600010-IL
⚠	D 103		K120300600010-IL
	D 105		K050400700010-IL
	D 108		K050010010010-IL
	D 9114		K06006R244522-IL
		MISCELLANEOUS	
⚠	L 100	COIL_LINE FILTER	D320201405510-IL
⚠	RY 101	RELAY	G680060103030-IL
⚠	T 101	TRANS_SWITCHING	E060252505510-IL
⚠	CN 9100	CN.WAFER 7.92MM	L108396030010-IL
⚠	CN 9102	CN.WAFER 7.92MM	L108011430210-IL
	100,102	BRACKET	4010215796000-IL
	101	BRACKET	4010210196000-IL
⚠	FU 100	FUSE GLASS TUBE 20MM (3.15 A)	N751503151160-IL
⚠	FU 101	FUSE GLASS TUBE 20MM (T8AL/250V)	N751508001160-IL
	Z 9115	D_ZENER CHIP	K06620R04P410-IL
		RESISTORS	
⚠	R 100		C060068564520-IL
	R 106		C060012466050S
	R 116		C060R68065050-IL
	R 120		C0604R7065050-IL
		CAPACITORS	
⚠	C 100		D02110407H010-IL
	C 102		D04010108K000-IL
	C 103		D00810207Q010-IL
⚠	C 104,105		D00847127H010-IL
	C 106,107		D041562081001-IL
	C 112		D041330088050S
⚠	C 115,132		D00815248H010-IL
⚠	C 117,131,133		D008103589010-IL
	C 129		D041221082230-IL