Pioneer sound.vision.soul

Service Manual

http://receiverfaq.ru/

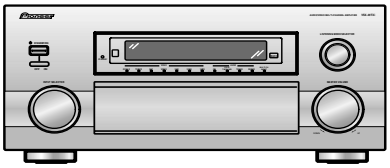

VSX-49TXi

ORDER NO.
RRV2644

AUDIO/VIDEO MULTI-CHANNEL RECEIVER

VSX-49TXi

THIS MANUAL IS APPLICABLE TO THE FOLLOWING MODEL(S) AND TYPE(S).

Model	Type	Power Requirement	Remarks
VSX-49TXI	KU/CA	AC120V	

For details, refer to "Important symbols for good services" .

PIONEER CORPORATION 4-1, Meguro 1-chome, Meguro-ku, Tokyo 153-8654, Japan
PIONEER ELECTRONICS (USA) INC. P.O. Box 1760, Long Beach, CA 90801-1760, U.S.A.
PIONEER EUROPE NV Haven 1087, Keetberglaan 1, 9120 Melsele, Belgium
PIONEER ELECTRONICS ASIACENTRE PTE. LTD. 253 Alexandra Road, #04-01, Singapore 159936
ⓒ**PIONEER CORPORATION 2002**

T-ZZR AUG. 2002 printed in Japan

3. BLOCK DIAGRAM AND SCHEMATIC DIAGRAM

3.1 BLOCK DIAGRAM

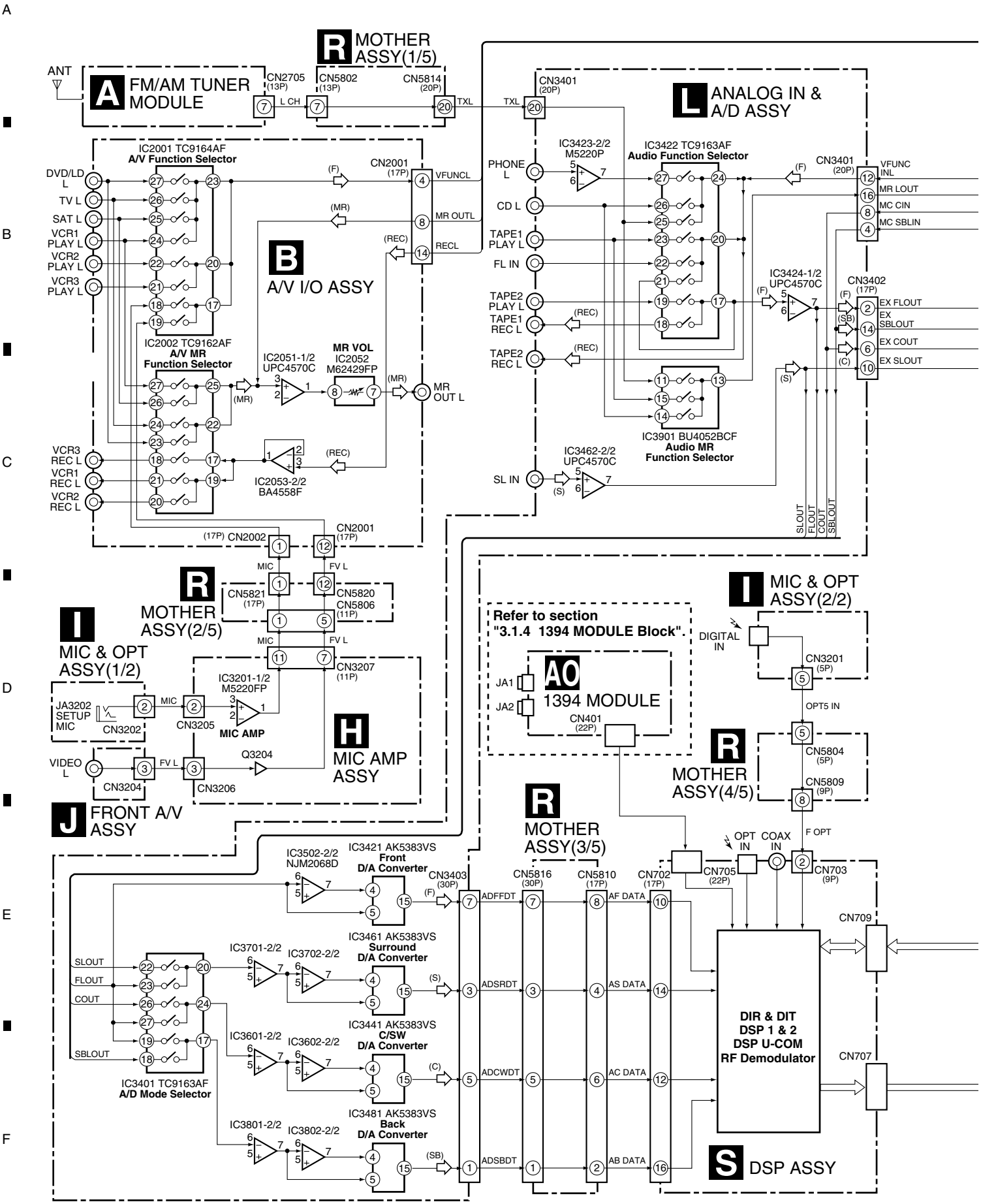

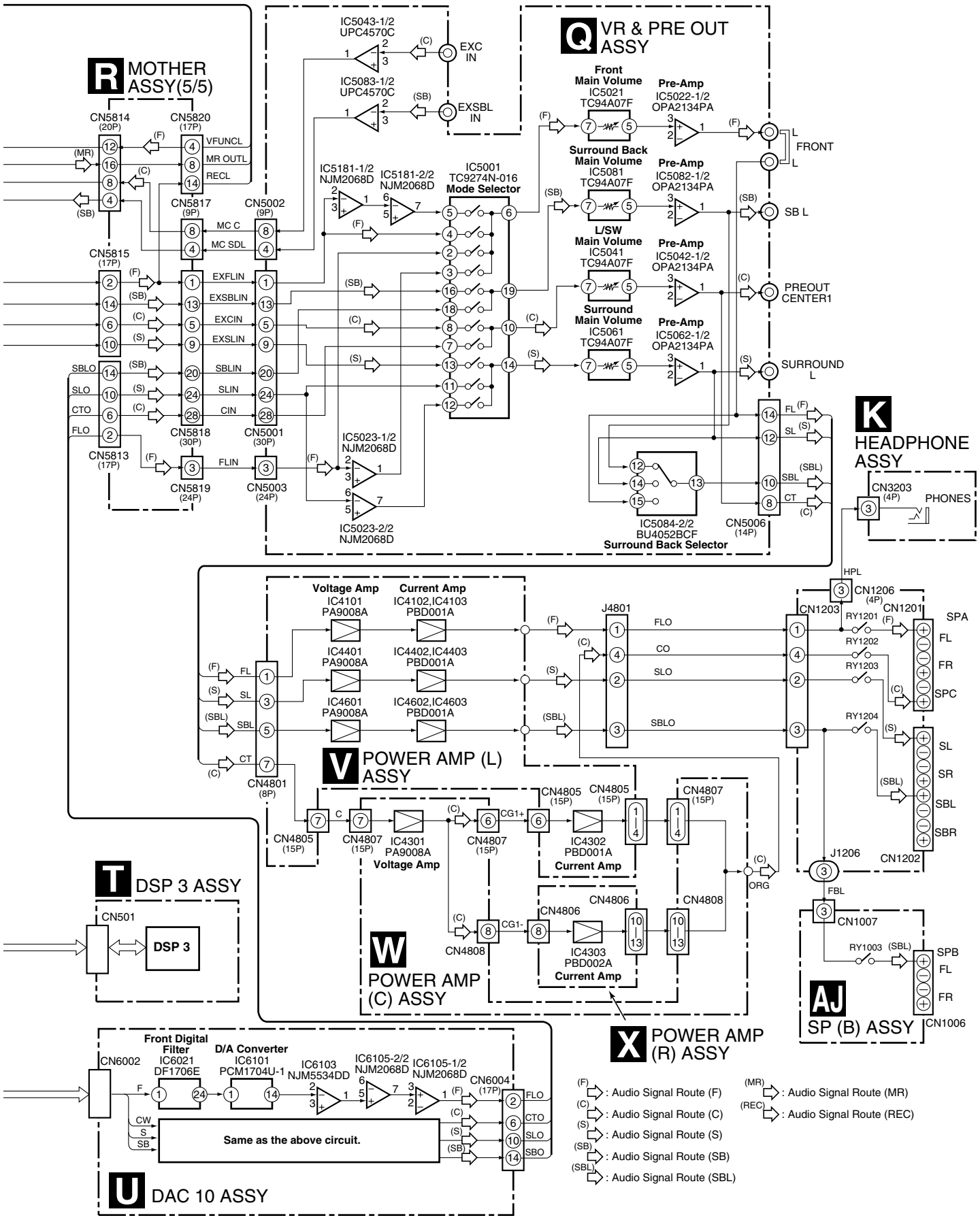
R MOTHER ASSY(5/5)
Q VR & PRE OUT ASSY
K HEADPHONE ASSY
V POWER AMP (L) ASSY
W POWER AMP (C) ASSY
X POWER AMP (R) ASSY
T DSP 3 ASSY
U DAC 10 ASSY
AJ SP (B) ASSY
CN5814 (20P)
CN5820 (17P)
CN5817 (9P)
CN5002 (9P)
CN5815 (17P)
CN5818 (30P)
CN5001 (30P)
CN5813 (17P)
CN5819 (24P)
CN5003 (24P)
IC5043-1/2 UPC4570C
IC5083-1/2 UPC4570C
EXC IN
EXSBL IN
IC5181-1/2 NJM2068D
IC5181-2/2 NJM2068D
IC5001 TC9274N-016 Mode Selector
IC5023-1/2 NJM2068D
IC5023-2/2 NJM2068D
Front Main Volume IC5021 TC94A07F
Surround Back Main Volume IC5081 TC94A07F
L/SW Main Volume IC5041 TC94A07F
Surround Main Volume IC5061 TC94A07F
Pre-Amp IC5022-1/2 OPA2134PA
Pre-Amp IC5082-1/2 OPA2134PA
Pre-Amp IC5042-1/2 OPA2134PA
Pre-Amp IC5062-1/2 OPA2134PA
FRONT
SB L
PREOUT CENTER1
SURROUND L
IC5084-2/2 BU4052BCF Surround Back Selector
CN5006 (14P)
CN3203 (4P)
PHONES
Voltage Amp IC4101 PA9008A
Current Amp IC4102,IC4103 PBD001A
IC4401 PA9008A
IC4402,IC4403 PBD001A
IC4601 PA9008A
IC4602,IC4603 PBD001A
J4801
CN4801 (8P)
CN1203
CN1206 (4P)
CN1201
CN1202
SPA
SPC
SPB
CN1006
CN1007
J1206
CN4805 (15P)
CN4807 (15P)
IC4301 PA9008A Voltage Amp
IC4302 PBD001A Current Amp
CN4806
CN4808
IC4303 PBD002A Current Amp
CN501
DSP 3
CN6002
Front Digital Filter IC6021 DF1706E
D/A Converter IC6101 PCM1704U-1
IC6103 NJM5534DD
IC6105-2/2 NJM2068D
IC6105-1/2 NJM2068D
CN6004 (17P)
Same as the above circuit.
: Audio Signal Route (F)
: Audio Signal Route (C)
: Audio Signal Route (S)
: Audio Signal Route (SB)
: Audio Signal Route (SBL)
: Audio Signal Route (MR)
: Audio Signal Route (REC)

• Video Block

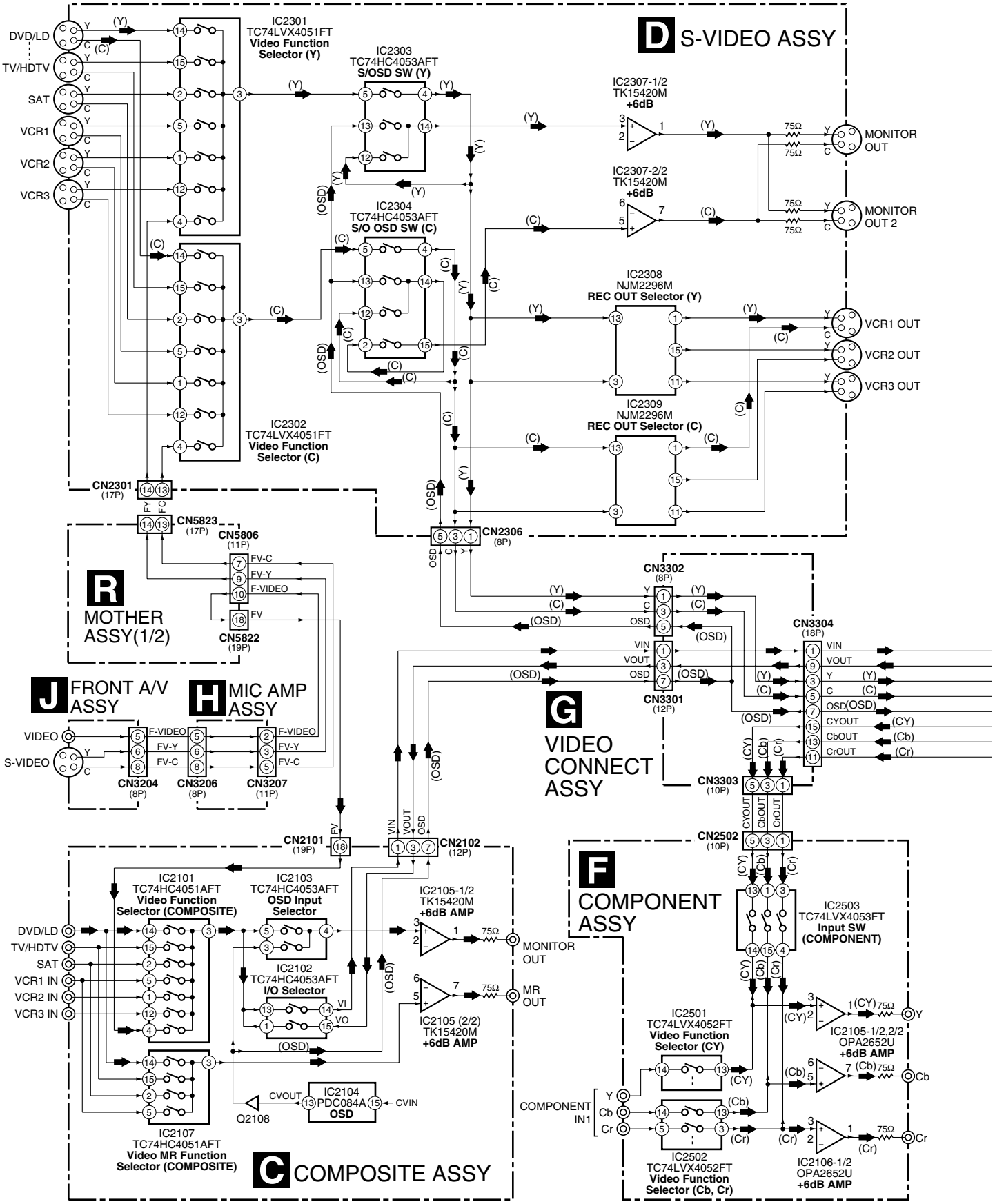
D S-VIDEO ASSY
DVD/LD
TV/HDTV
SAT
VCR1
VCR2
VCR3
IC2301
TC74LVX4051FT
Video Function
Selector (Y)
IC2303
TC74HC4053AFT
S/OSD SW (Y)
IC2304
TC74HC4053AFT
S/O OSD SW (C)
IC2302
TC74LVX4051FT
Video Function
Selector (C)
IC2307-1/2
TK15420M
+6dB
IC2307-2/2
TK15420M
+6dB
MONITOR
OUT
MONITOR
OUT 2
IC2308
NJM2296M
REC OUT Selector (Y)
IC2309
NJM2296M
REC OUT Selector (C)
VCR1 OUT
VCR2 OUT
VCR3 OUT
CN2301
(17P)
CN5823
(17P)
CN2306
(8P)
CN5806
(11P)
CN5822
(19P)
R
MOTHER
ASSY(1/2)
CN3302
(8P)
CN3301
(12P)
CN3304
(18P)
CN3303
(10P)
G
VIDEO
CONNECT
ASSY
J FRONT A/V
ASSY
H MIC AMP
ASSY
VIDEO
S-VIDEO
CN3204
(8P)
CN3206
(8P)
CN3207
(11P)
CN2101
(19P)
CN2102
(12P)
CN2502
(10P)
IC2101
TC74HC4051AFT
Video Function
Selector (COMPOSITE)
IC2103
TC74HC4053AFT
OSD Input
Selector
IC2102
TC74HC4053AFT
I/O Selector
IC2105-1/2
TK15420M
+6dB AMP
IC2105 (2/2)
TK15420M
+6dB AMP
MONITOR
OUT
MR
OUT
IC2107
TC74HC4051AFT
Video MR Function
Selector (COMPOSITE)
IC2104
PDC084A
OSD
Q2108
C COMPOSITE ASSY
F
COMPONENT
ASSY
IC2503
TC74LVX4053FT
Input SW
(COMPONENT)
IC2501
TC74LVX4052FT
Video Function
Selector (CY)
IC2502
TC74LVX4052FT
Video Function
Selector (Cb, Cr)
IC2105-1/2,2/2
OPA2652U
+6dB AMP
IC2106-1/2
OPA2652U
+6dB AMP
COMPONENT
IN1

• Display Block

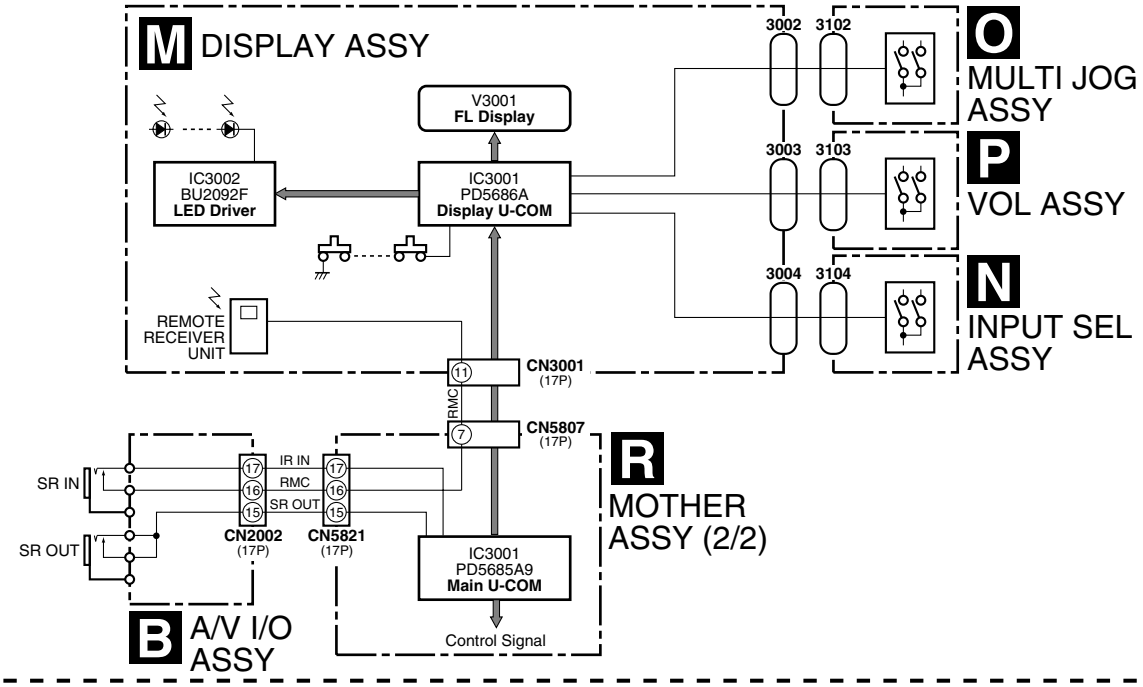

: VIDEO SIGNAL ROUTE
(Y) : VIDEO SIGNAL ROUTE (Y)
(C) : VIDEO SIGNAL ROUTE (C)
(CY) : Y SIGNAL ROUTE (COMPONENT)
(Cb) : Cb SIGNAL ROUTE (COMPONENT)
(Cr) : Cr SIGNAL ROUTE (COMPONENT)
(OSD) : VIDEO SIGNAL ROUTE (OSD)

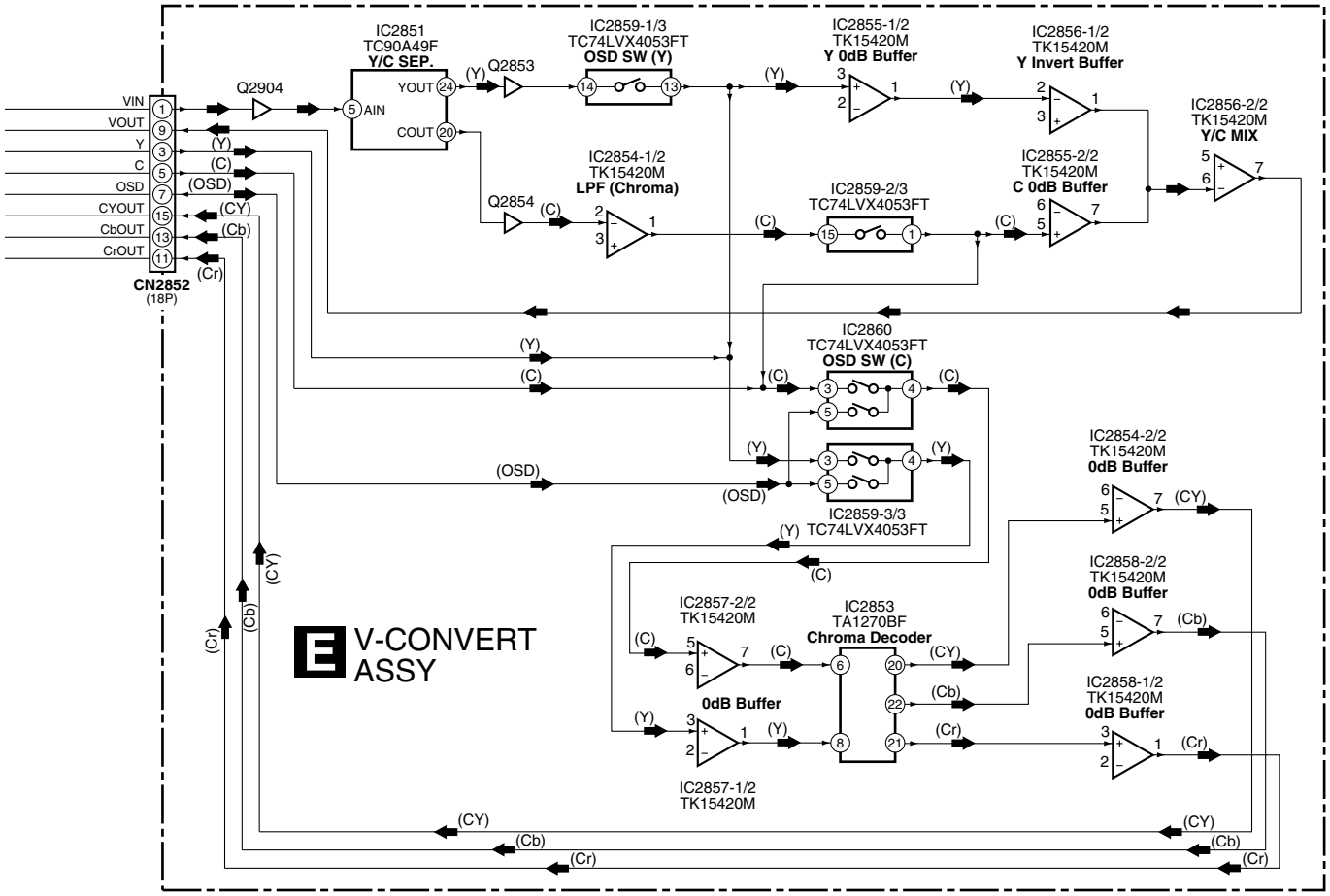

• Power Supply Block

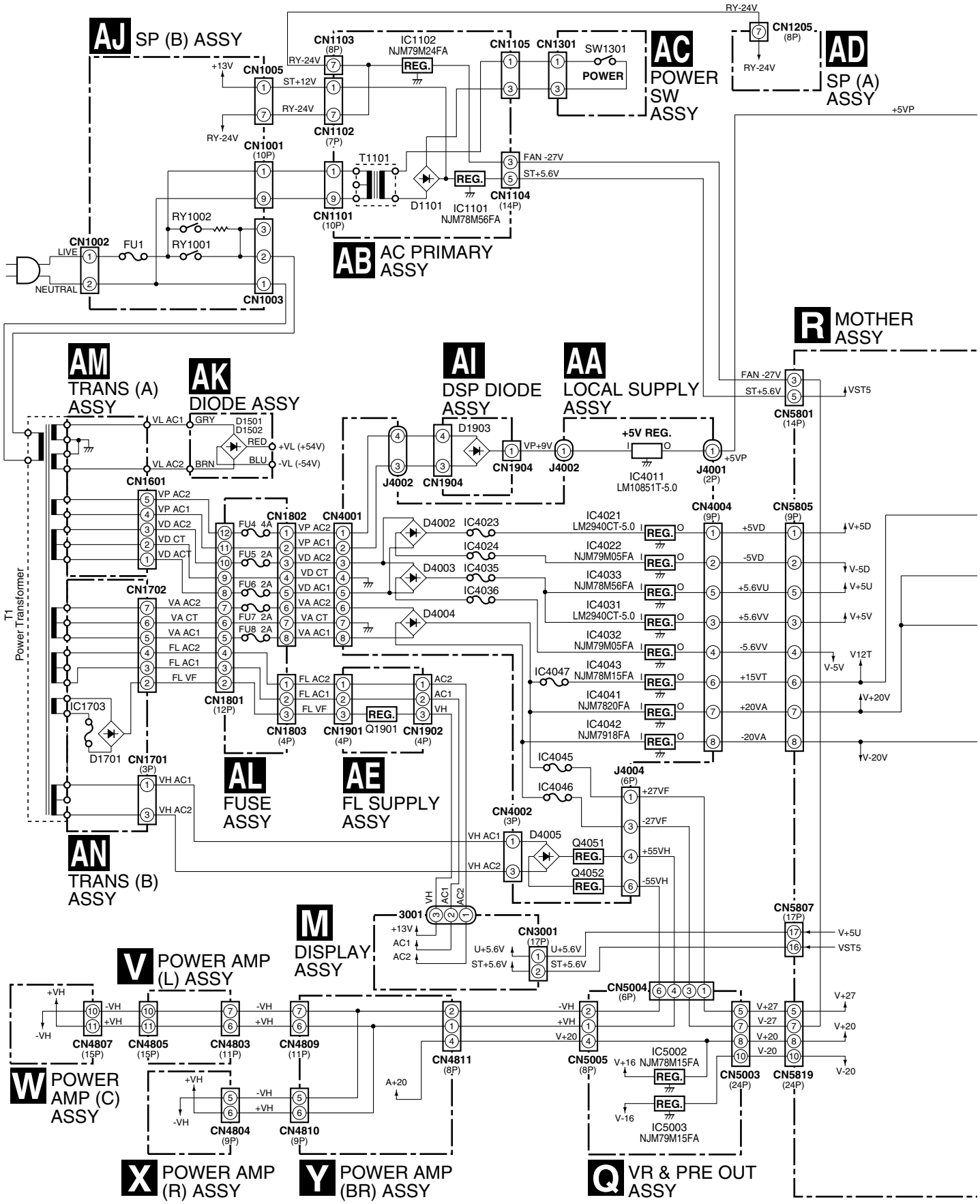

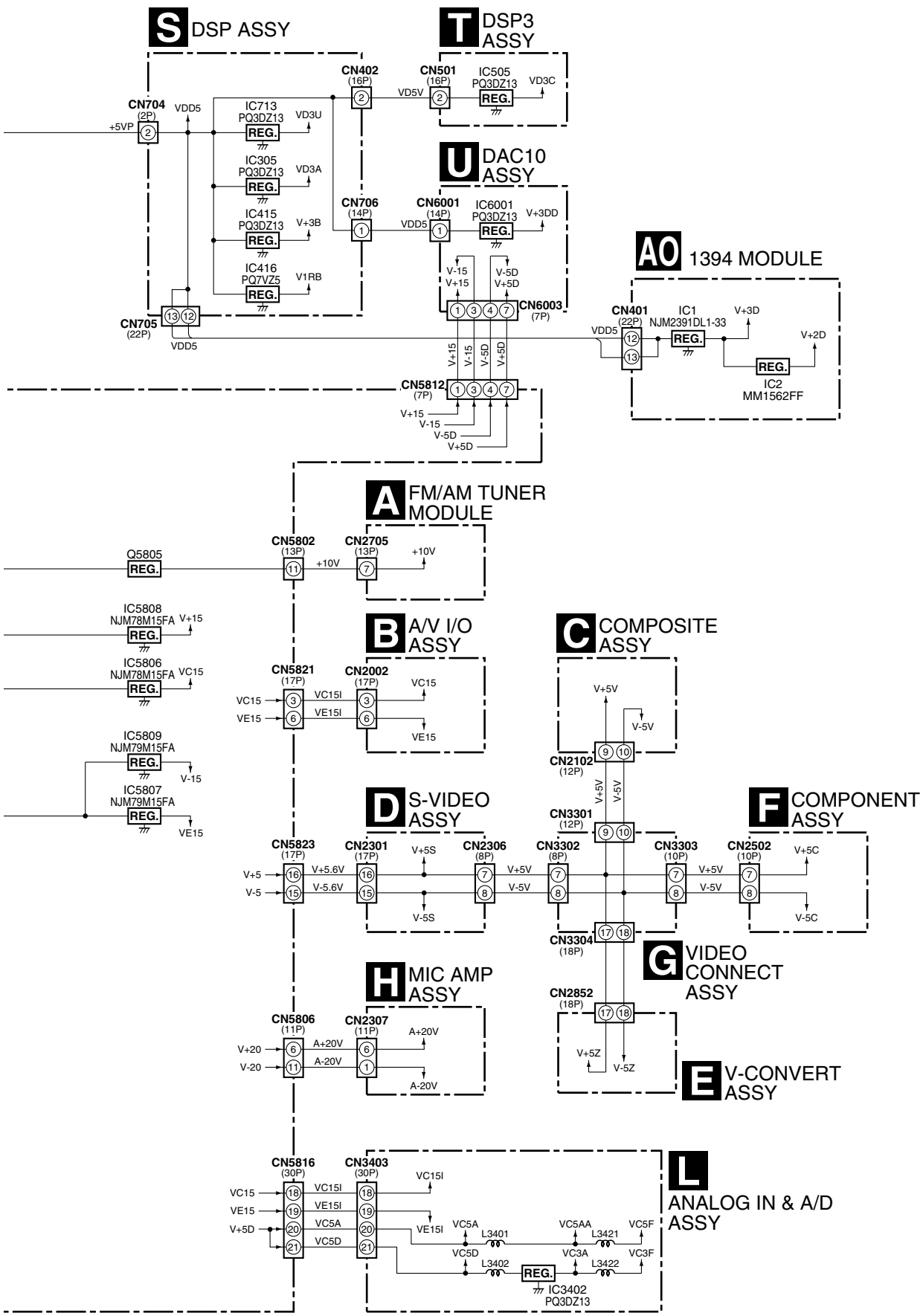
S DSP ASSY
T DSP3 ASSY
U DAC10 ASSY
AO 1394 MODULE
A FM/AM TUNER MODULE
B A/V I/O ASSY
C COMPOSITE ASSY
D S-VIDEO ASSY
F COMPONENT ASSY
G VIDEO CONNECT ASSY
H MIC AMP ASSY
E V-CONVERT ASSY
L ANALOG IN & A/D ASSY
CN704 (2P)
CN705 (22P)
CN402 (16P)
CN501 (16P)
IC505 PQ3DZ13
IC713 PQ3DZ13
IC305 PQ3DZ13
IC415 PQ3DZ13
IC416 PQ7VZ5
CN706 (14P)
CN6001 (14P)
IC6001 PQ3DZ13
CN6003 (7P)
CN401 (22P)
IC1 NJM2391DL1-33
IC2 MM1562FF
CN5812 (7P)
Q5805
CN5802 (13P)
CN2705 (13P)
IC5808 NJM78M15FA
IC5806 NJM78M15FA
IC5809 NJM79M15FA
IC5807 NJM79M15FA
CN5821 (17P)
CN2002 (17P)
CN2102 (12P)
CN3301 (12P)
CN3302 (8P)
CN3303 (10P)
CN3304 (18P)
CN2852 (18P)
CN5823 (17P)
CN2301 (17P)
CN2306 (8P)
CN2502 (10P)
CN5806 (11P)
CN2307 (11P)
CN5816 (30P)
CN3403 (30P)
IC3402 PQ3DZ13
L3401
L3421
L3402
L3422
REG.

● 1394 MODULE Block

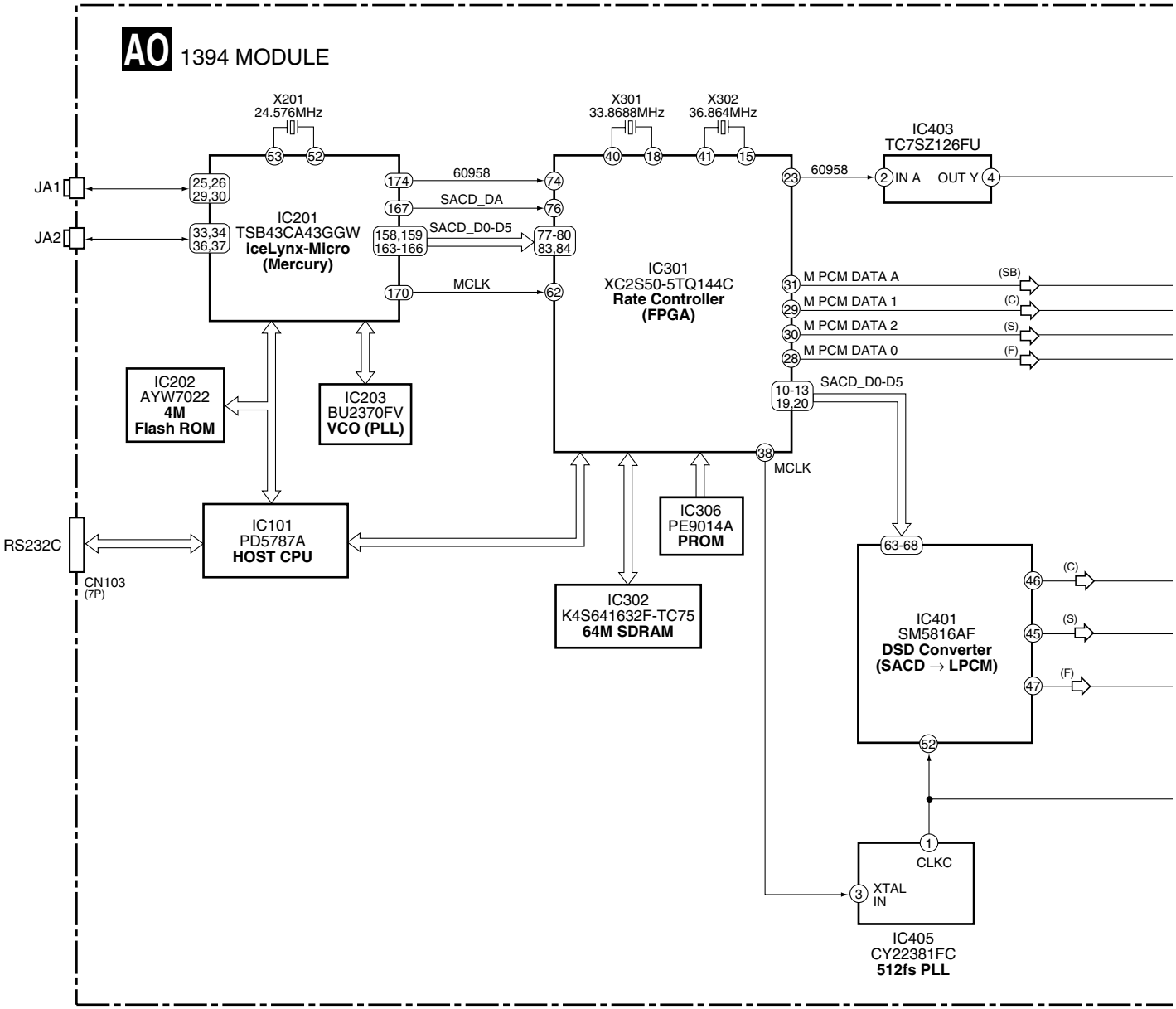

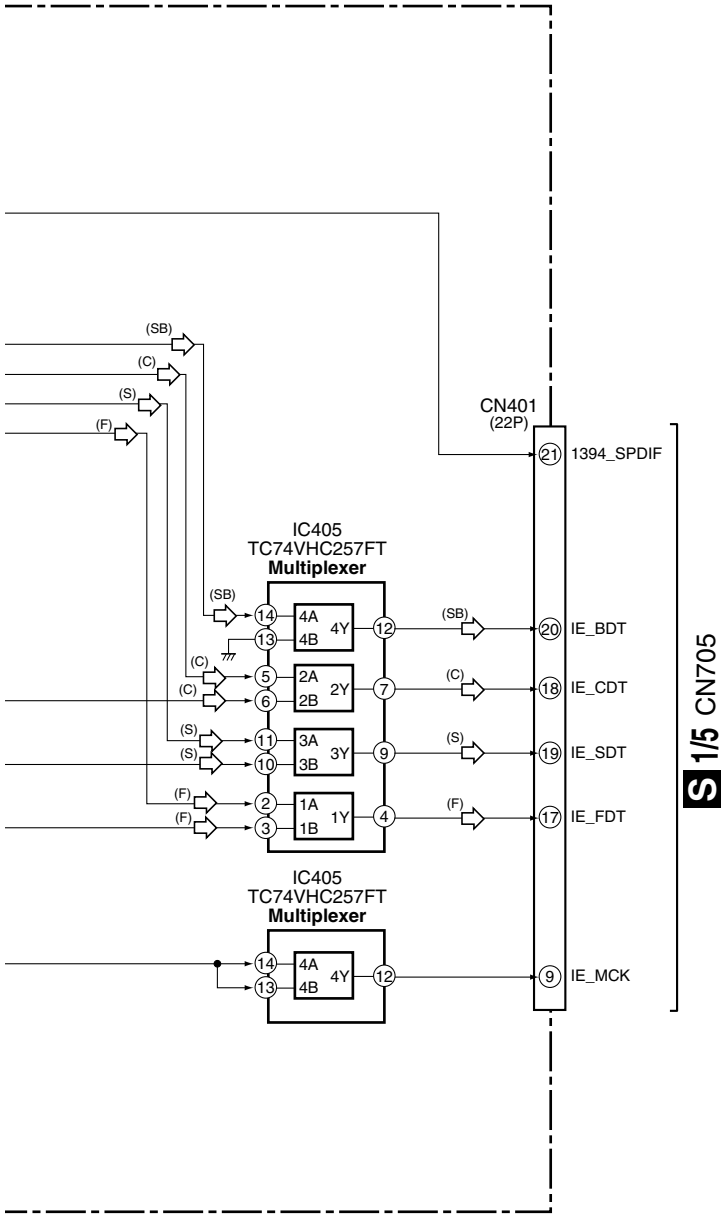

(F) ⇨ : Audio Signal Route (F)
(C) ⇨ : Audio Signal Route (C)
(S) ⇨ : Audio Signal Route (S)
(SB) ⇨ : Audio Signal Route (SB)

3.2 OVERALL WIRING DIAGRAM

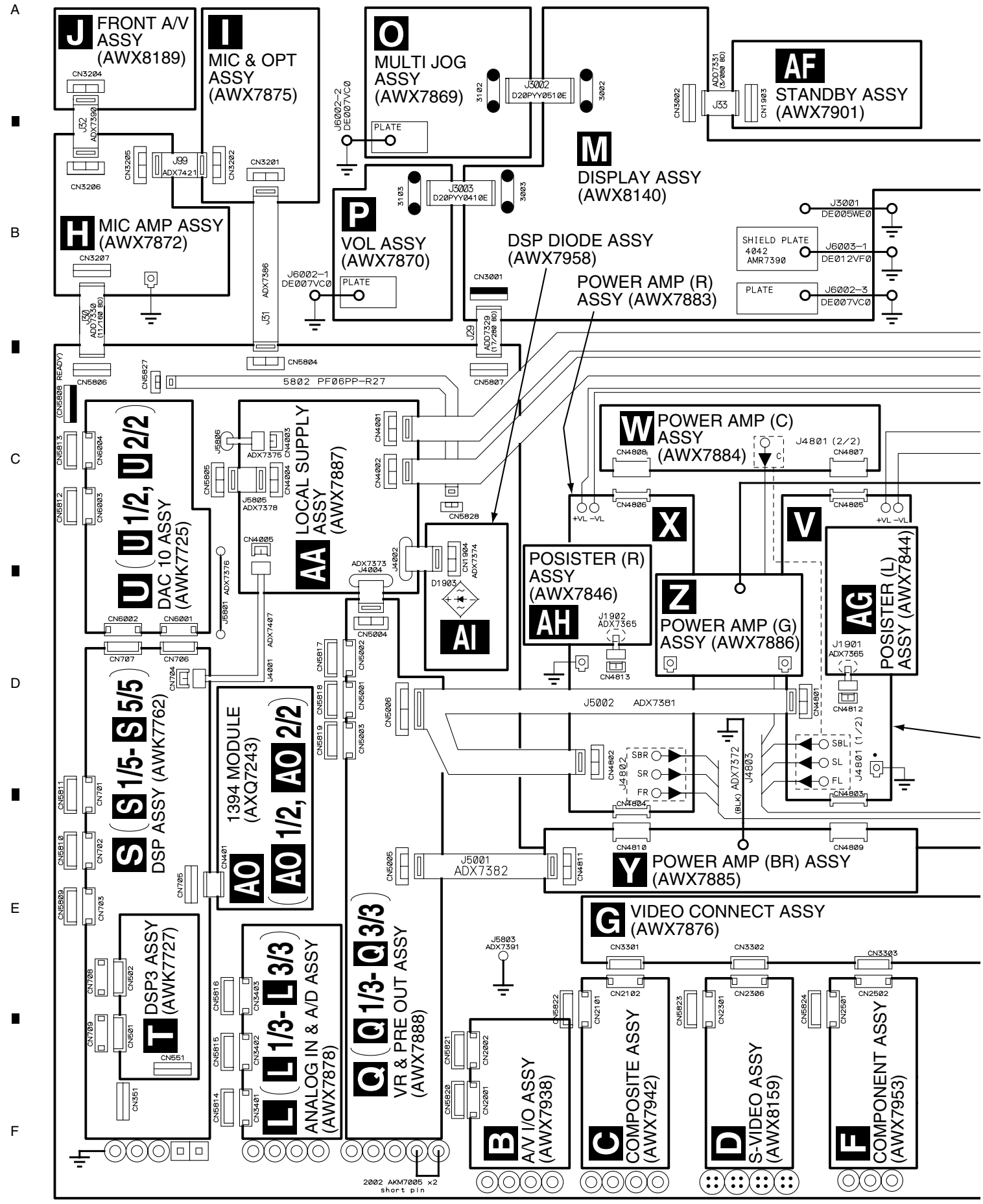

Note: When ordering service parts, be sure to "EXPLODED VIEWS and PARTS LIST" or "PCB PARTS LIST".

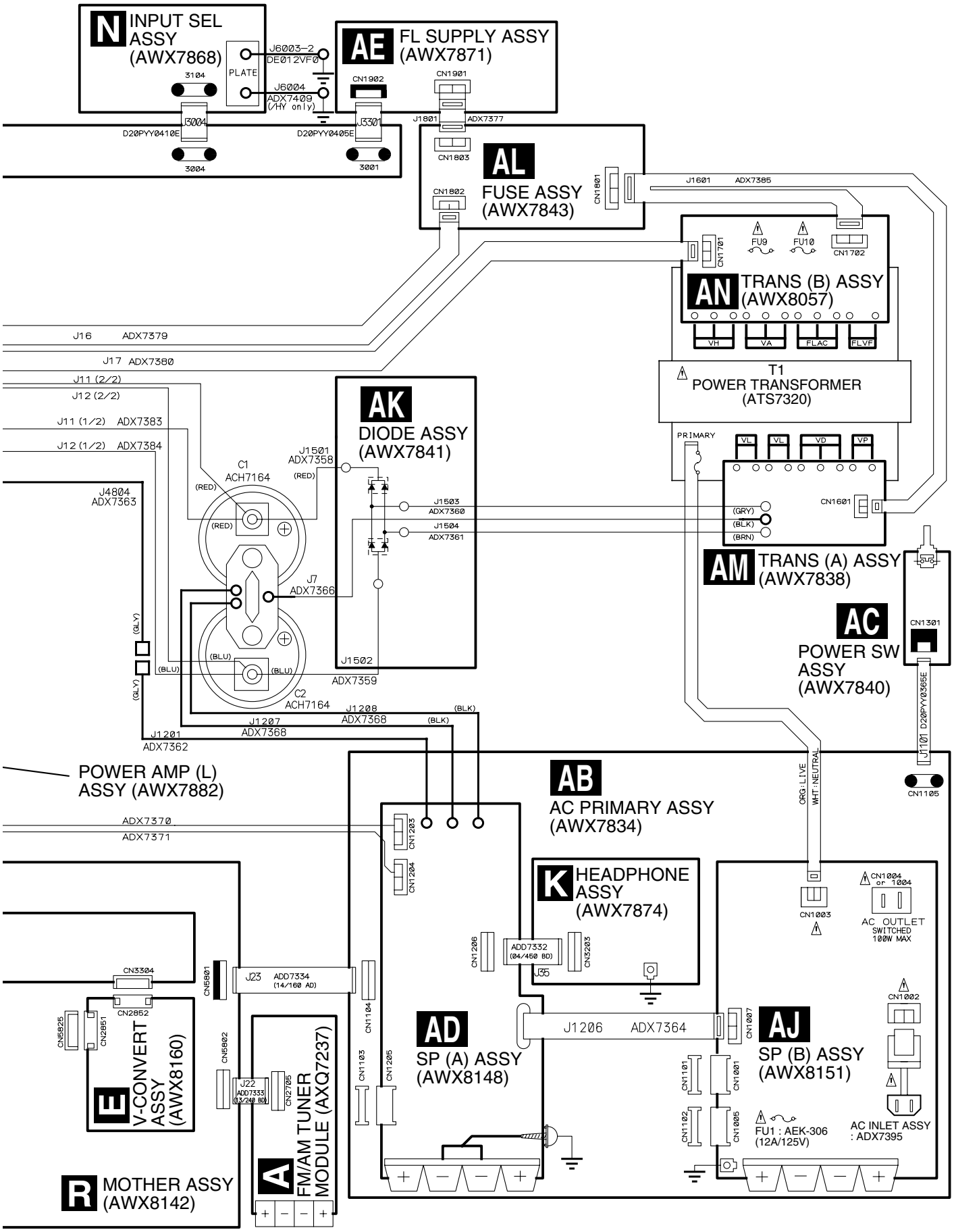

3.3 FM/AM TUNER MODULE

A

A FM/AM TUNER MODULE (AXQ7237)

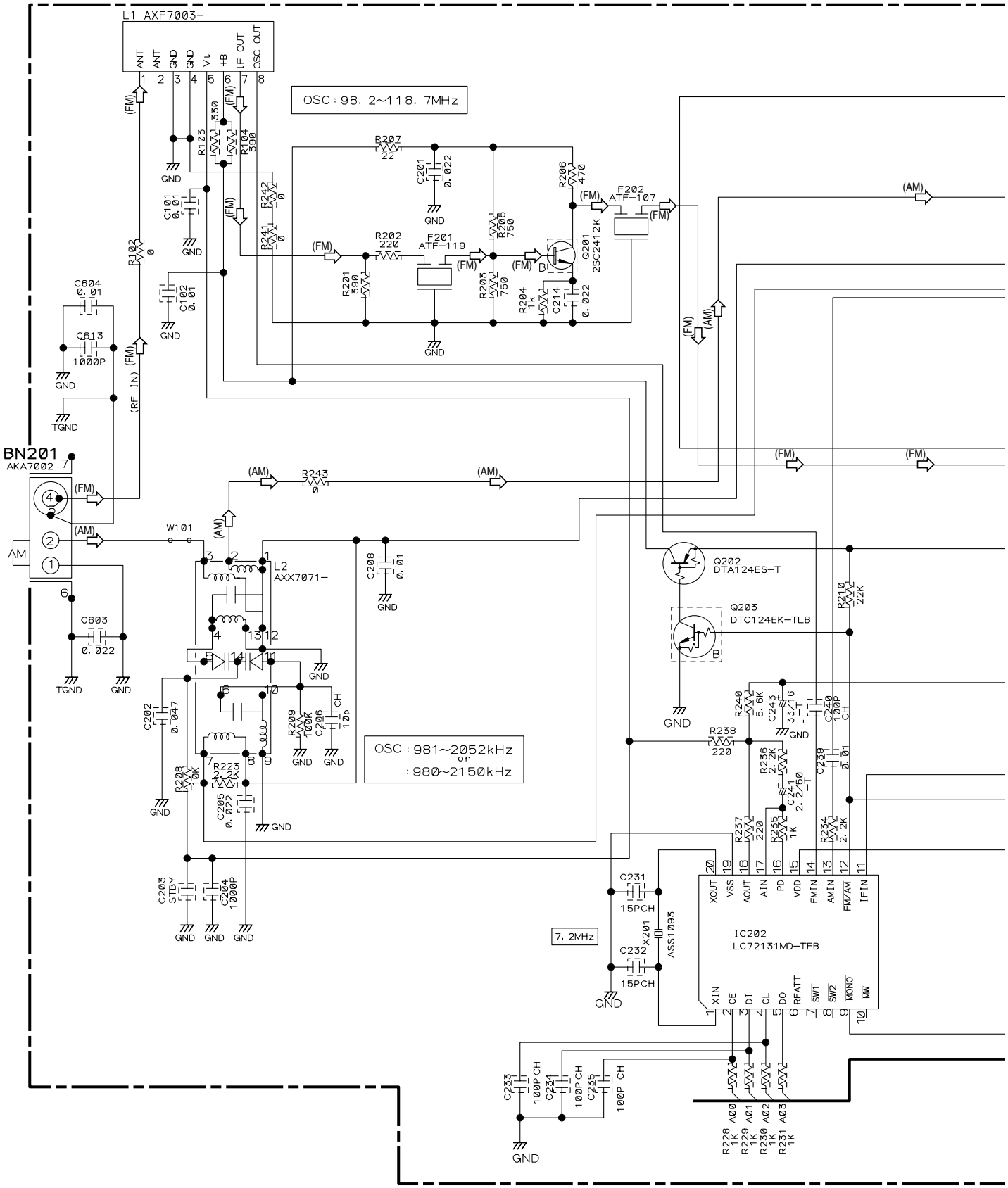

A

(TX) : AUDIO SIGNAL ROUTE (TUNER)
(AM) : AM SIGNAL ROUTE
(FM) : FM SIGNAL ROUTE

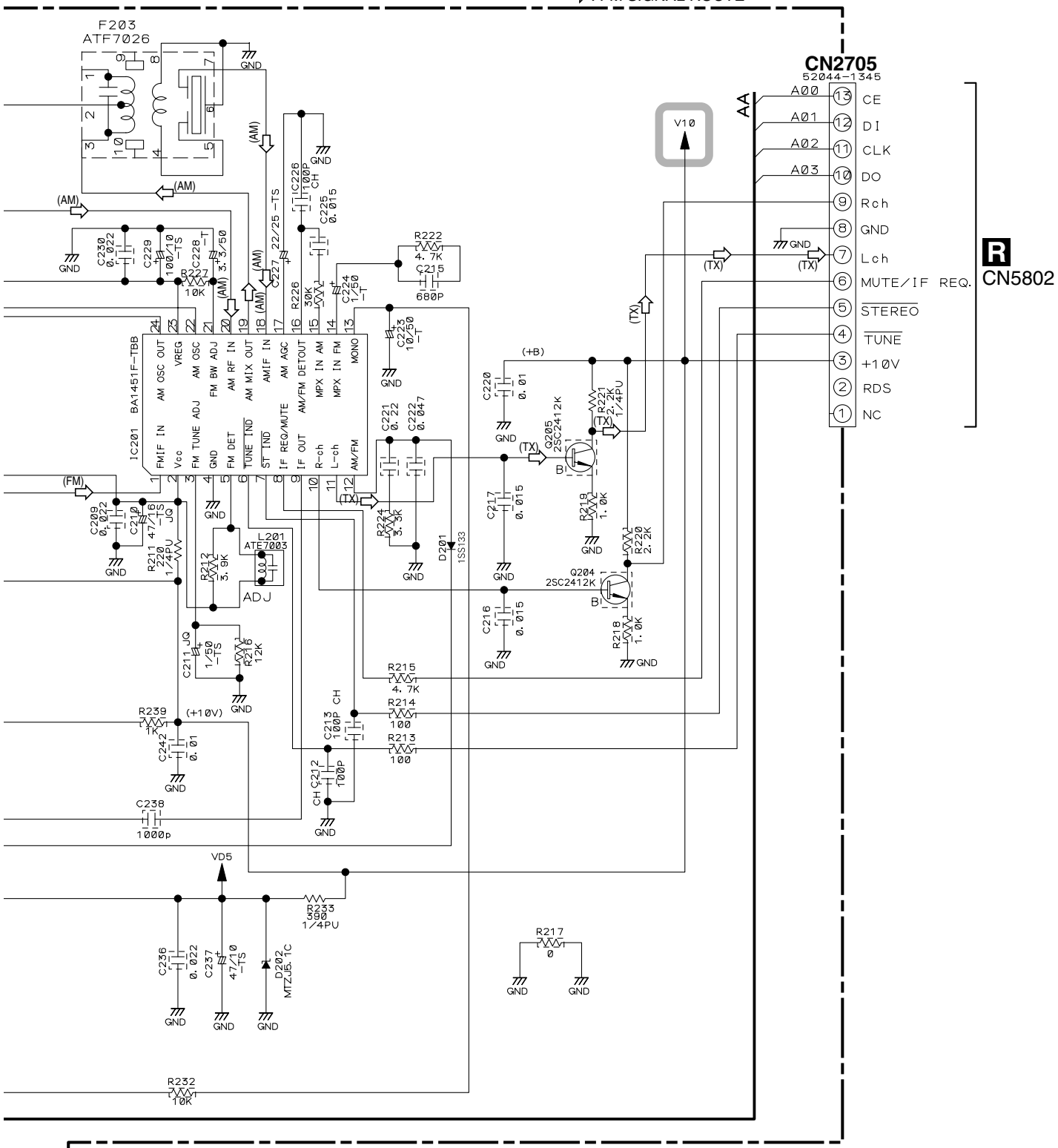

Notes

1. RESISTORS
Indicated in Ω, 1/16W±5% Tolerance unless otherwise noted K;KΩ, M;MΩ.

2. CAPACITORS
Indicated in Capacity(μF)/VOLTAGE(V) unless otherwise noted P;PF.

3. DIODES
No mark diode is 1SS133.

: The power supply is shown with the marked box.

A

3.4 A/V I/O ASSY

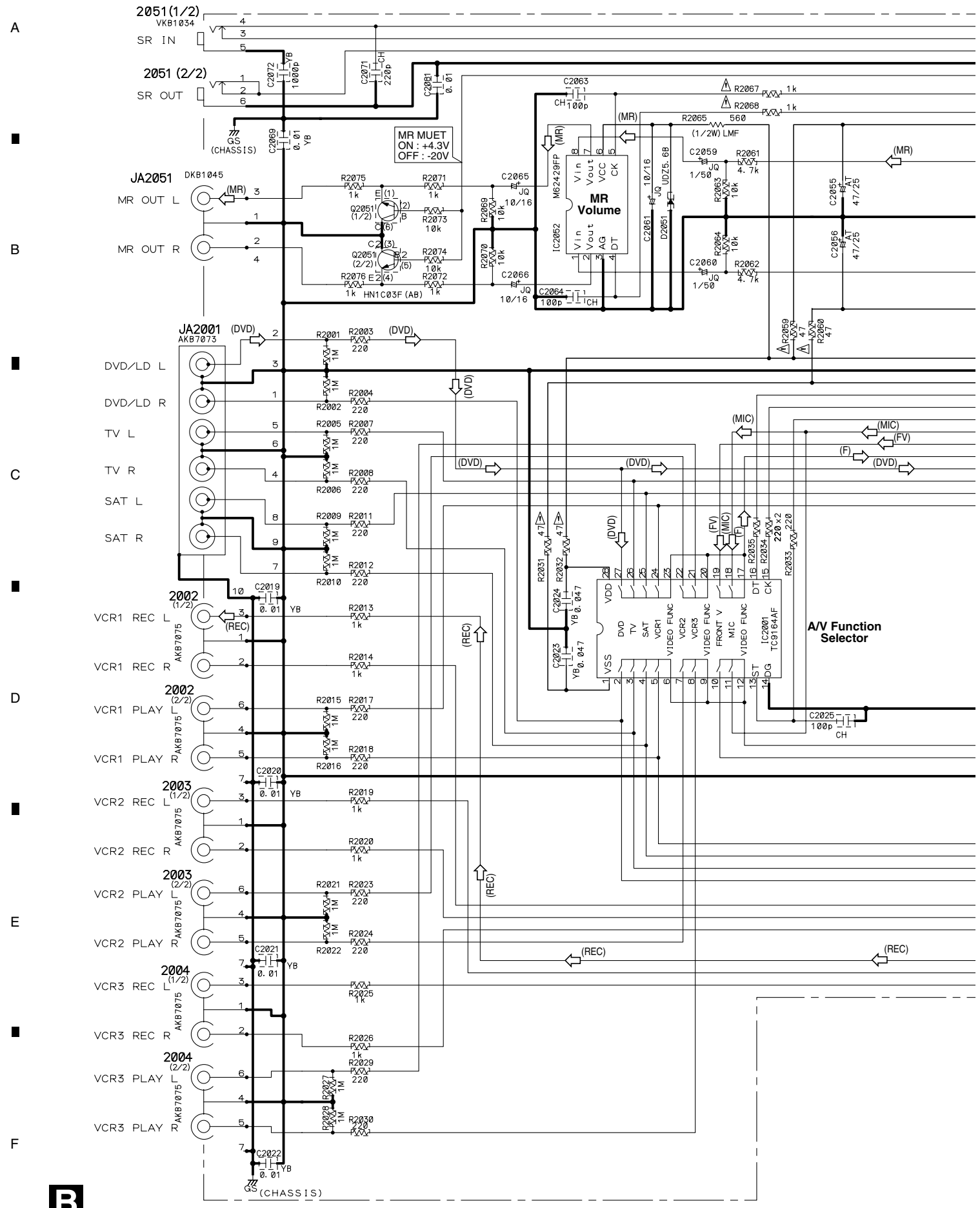
2051(1/2)
VKB1034
SR IN
2051 (2/2)
SR OUT
GS
(CHASSIS)
MR MUET
ON : +4.3V
OFF : -20V
JA2051
DKB1045
MR OUT L
MR OUT R
MR Volume
M62429FP
IC2052
HN1C03F (AB)
JA2001
AKB7073
DVD/LD L
DVD/LD R
TV L
TV R
SAT L
SAT R
2002 (1/2)
VCR1 REC L
VCR1 REC R
2002 (2/2)
VCR1 PLAY L
VCR1 PLAY R
2003 (1/2)
VCR2 REC L
VCR2 REC R
2003 (2/2)
VCR2 PLAY L
VCR2 PLAY R
2004 (1/2)
VCR3 REC L
VCR3 REC R
2004 (2/2)
VCR3 PLAY L
VCR3 PLAY R
AKB7075
A/V Function Selector
IC2001
TC9164AF
(MR)
(DVD)
(MIC)
(FV)
(F)
(REC)

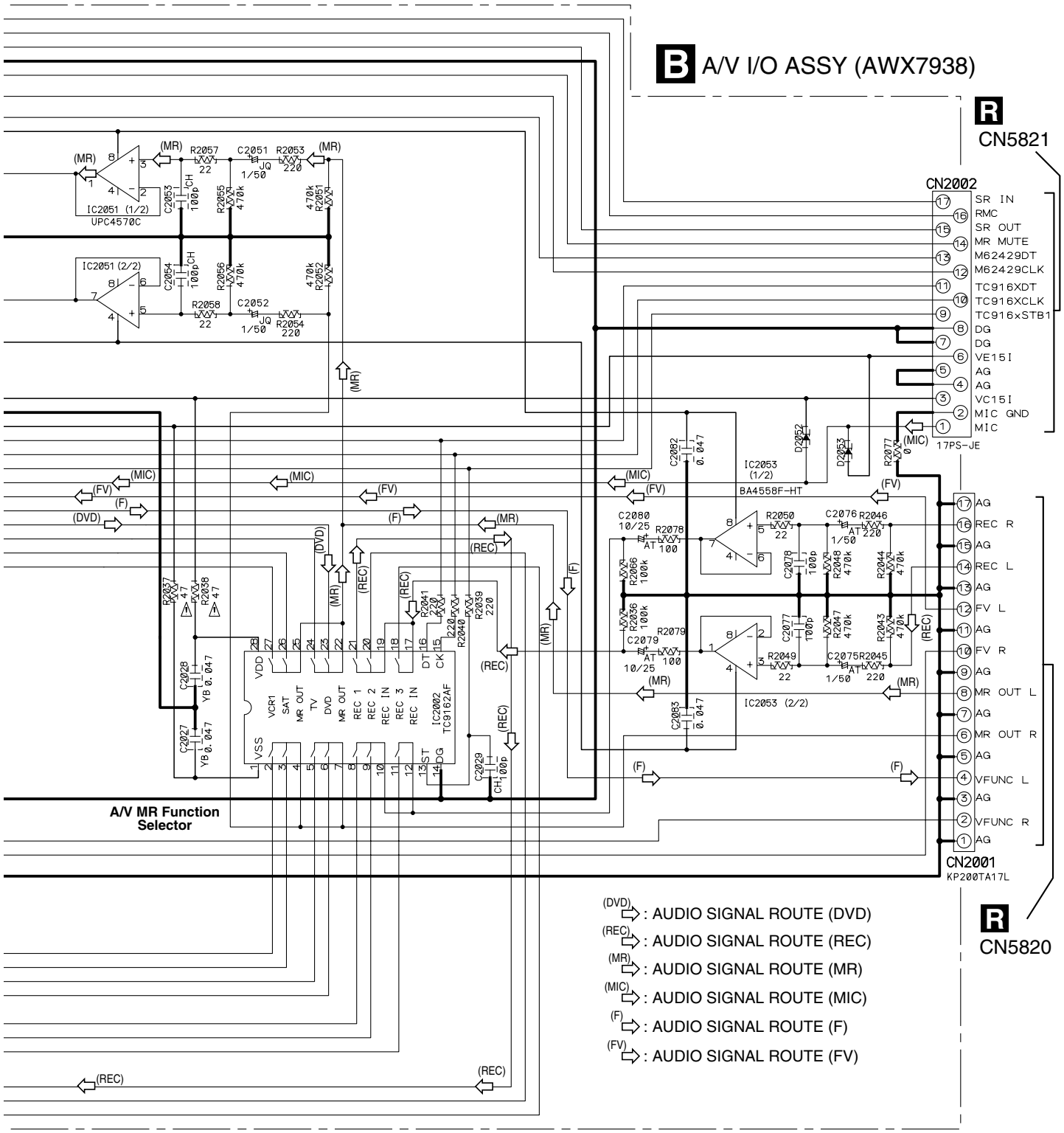

NOTES

1. RESISTORS
   Unit: k-kΩ, M-MΩ or Ω unless otherwise noted.
   Rated power: 1/16W unless otherwise noted.
   Tolerance: ±5%(J) unless otherwise noted.
2. CAPACITORS
   Unit: p-pF or μF unless otherwise noted.
   Rated Voltage: shown as "Capacity(μF)/Voltage(V)", or 50V unless otherwise noted.
3. DIODES
   No marked Diodes are 1SS355.

※Parts or parts block marked by "*" or "STBY" are standby.

The ⚠ mark found on some component parts indicates the importance of the safety factor of the part. Therefore, when replacing, be sure to use parts of identical designation.

3.5 COMPOSITE ASSY

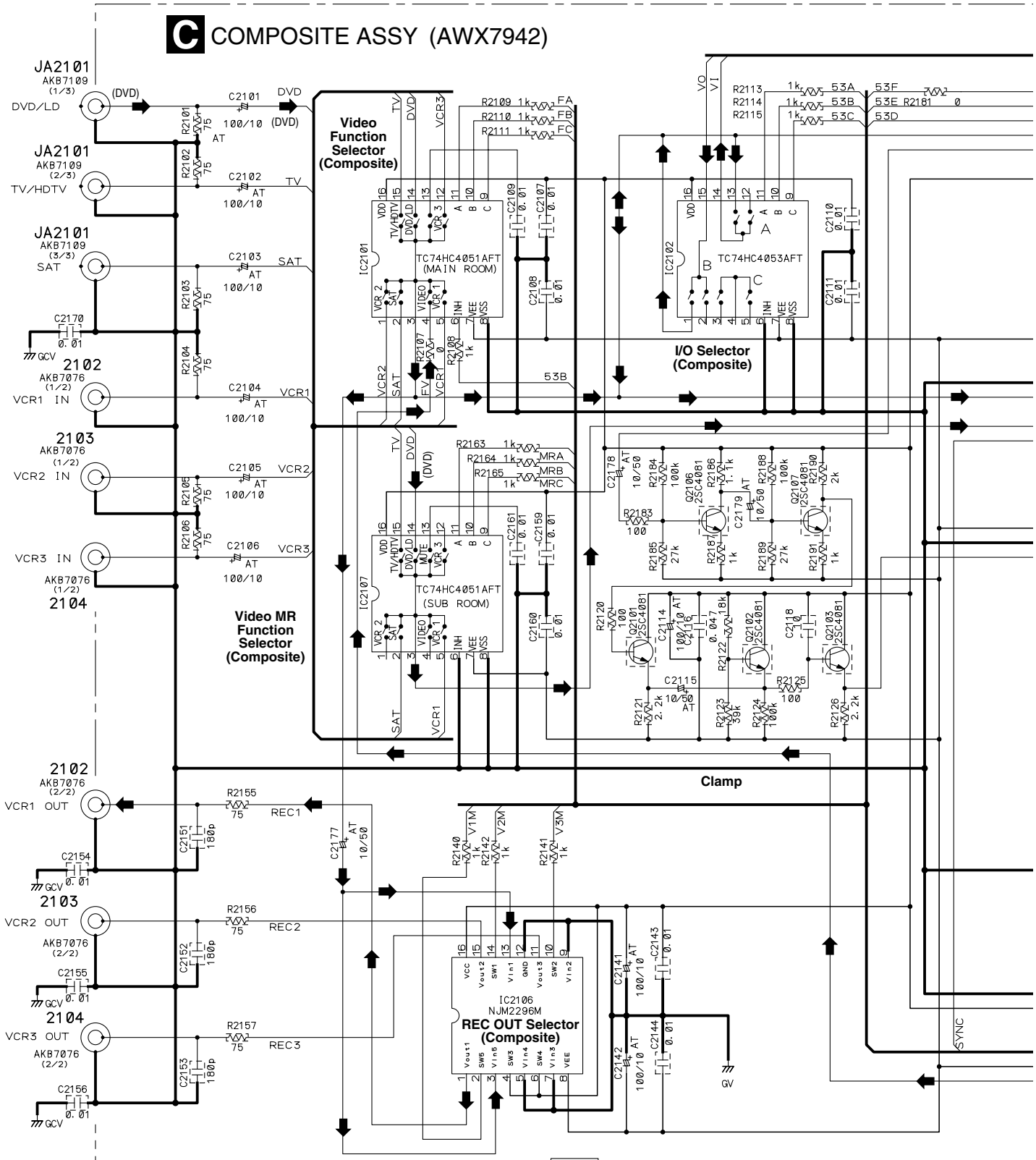

NOTES

1. RESISTORS
   Unit: k-kΩ, M-MΩ or Ω unless otherwise noted.
   Rated power: 1/16W unless otherwise noted.
   Tolerance: ±5%(J) unless otherwise noted.
2. CAPACITORS
   Unit: p-pF or μF unless otherwise noted.
   Rated Voltage: shown as "Capacity(μF)/Voltage(V)", or 50V unless otherwise noted.
   AT : CEAT
3. DIODES
   No marked Diodes are 1SS355.

※Parts or parts block marked by "*" or "STBY" are standby.

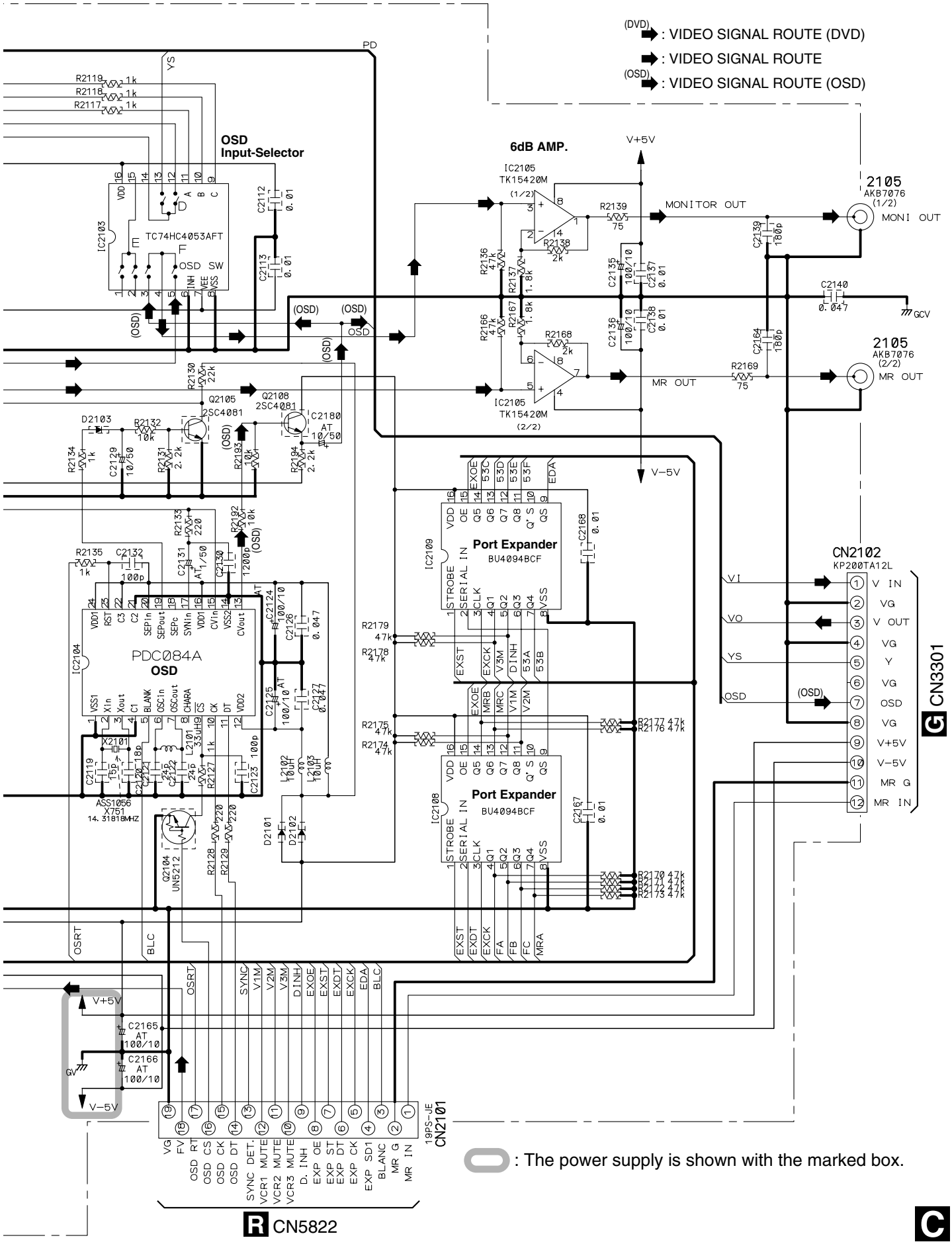
(DVD) : VIDEO SIGNAL ROUTE (DVD)
: VIDEO SIGNAL ROUTE
(OSD) : VIDEO SIGNAL ROUTE (OSD)
OSD Input-Selector
IC2103
TC74HC4053AFT
OSD SW
6dB AMP.
IC2105
TK15420M
(1/2)
(2/2)
V+5V
V−5V
MONITOR OUT
MR OUT
2105
AKB7076
(1/2)
(2/2)
MONI OUT
MR OUT
GCV
Q2105
2SC4081
Q2108
2SC4081
D2103
IC2104
PDC084A
OSD
X2101
X751
14.31818MHZ
ASS1056
Q2104
UN5212
IC2109
Port Expander
BU4094BCF
IC2108
Port Expander
BU4094BCF
CN2102
KP200TA12L
V IN
VG
V OUT
VG
Y
VG
OSD
VG
V+5V
V−5V
MR G
MR IN
CN3301
CN2101
19PS-JE
CN5822
: The power supply is shown with the marked box.

3.6 S-VIDEO ASSY

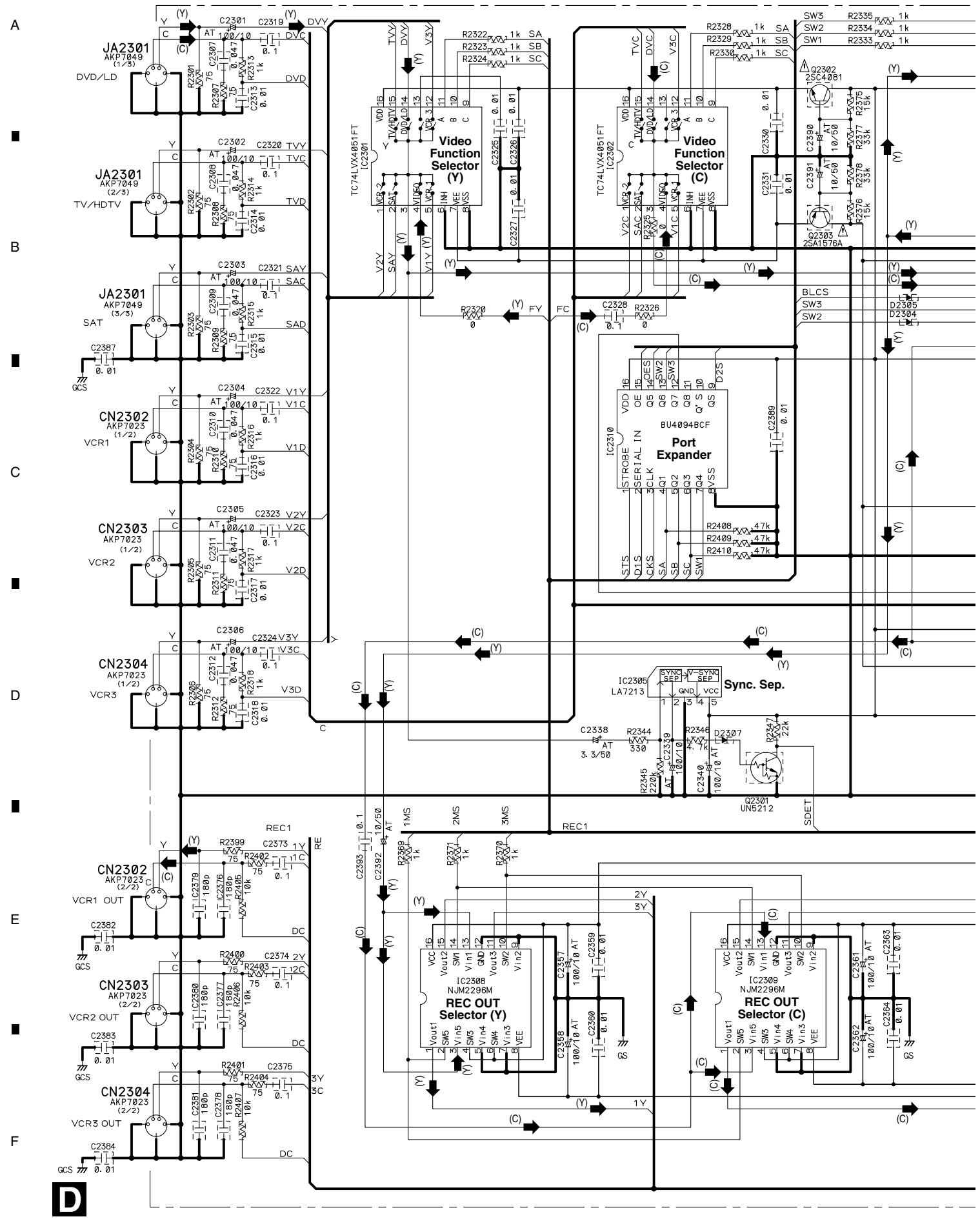

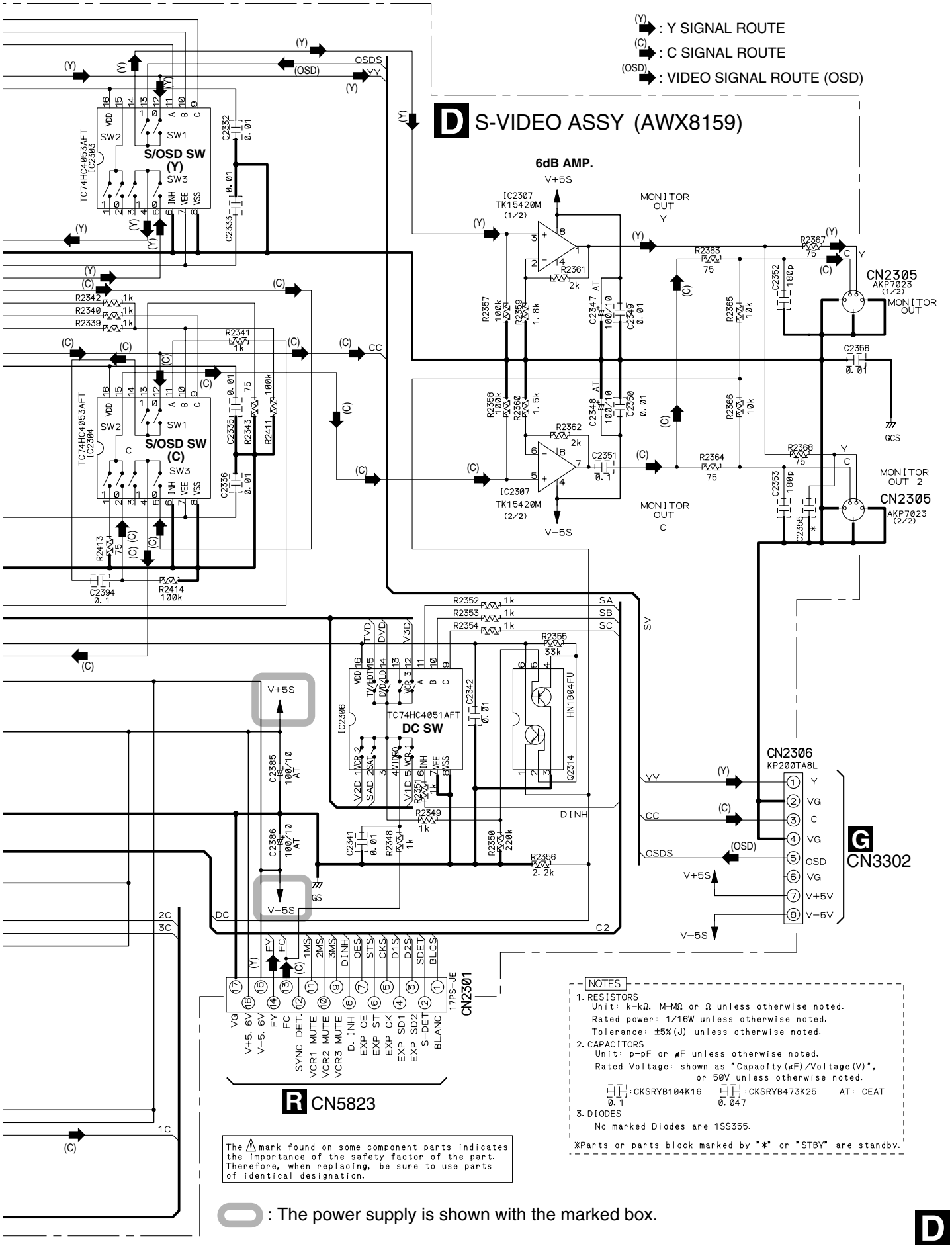
(Y) : Y SIGNAL ROUTE
(C) : C SIGNAL ROUTE
(OSD) : VIDEO SIGNAL ROUTE (OSD)
D S-VIDEO ASSY (AWX8159)
S/OSD SW (Y)
S/OSD SW (C)
TC74HC4053AFT
IC2303
IC2304
6dB AMP.
IC2307 TK15420M (1/2)
IC2307 TK15420M (2/2)
MONITOR OUT Y
MONITOR OUT C
MONITOR OUT 2
CN2305 AKP7023 (1/2)
CN2305 AKP7023 (2/2)
CN2306 KP200TA8L
G CN3302
TC74HC4051AFT
DC SW
IC2306
HN1B04FU
Q2314
CN2301 17PS-JE
R CN5823
NOTES
1. RESISTORS
Unit: k-kΩ, M-MΩ or Ω unless otherwise noted.
Rated power: 1/16W unless otherwise noted.
Tolerance: ±5%(J) unless otherwise noted.
2. CAPACITORS
Unit: p-pF or μF unless otherwise noted.
Rated Voltage: shown as "Capacity(μF)/Voltage(V)", or 50V unless otherwise noted.
CKSRYB104K16 CKSRYB473K25 AT: CEAT
3. DIODES
No marked Diodes are 1SS355.
※Parts or parts block marked by "*" or "STBY" are standby.
The ⚠ mark found on some component parts indicates the importance of the safety factor of the part. Therefore, when replacing, be sure to use parts of identical designation.
: The power supply is shown with the marked box.

3.7 V-CONVERT ASSY

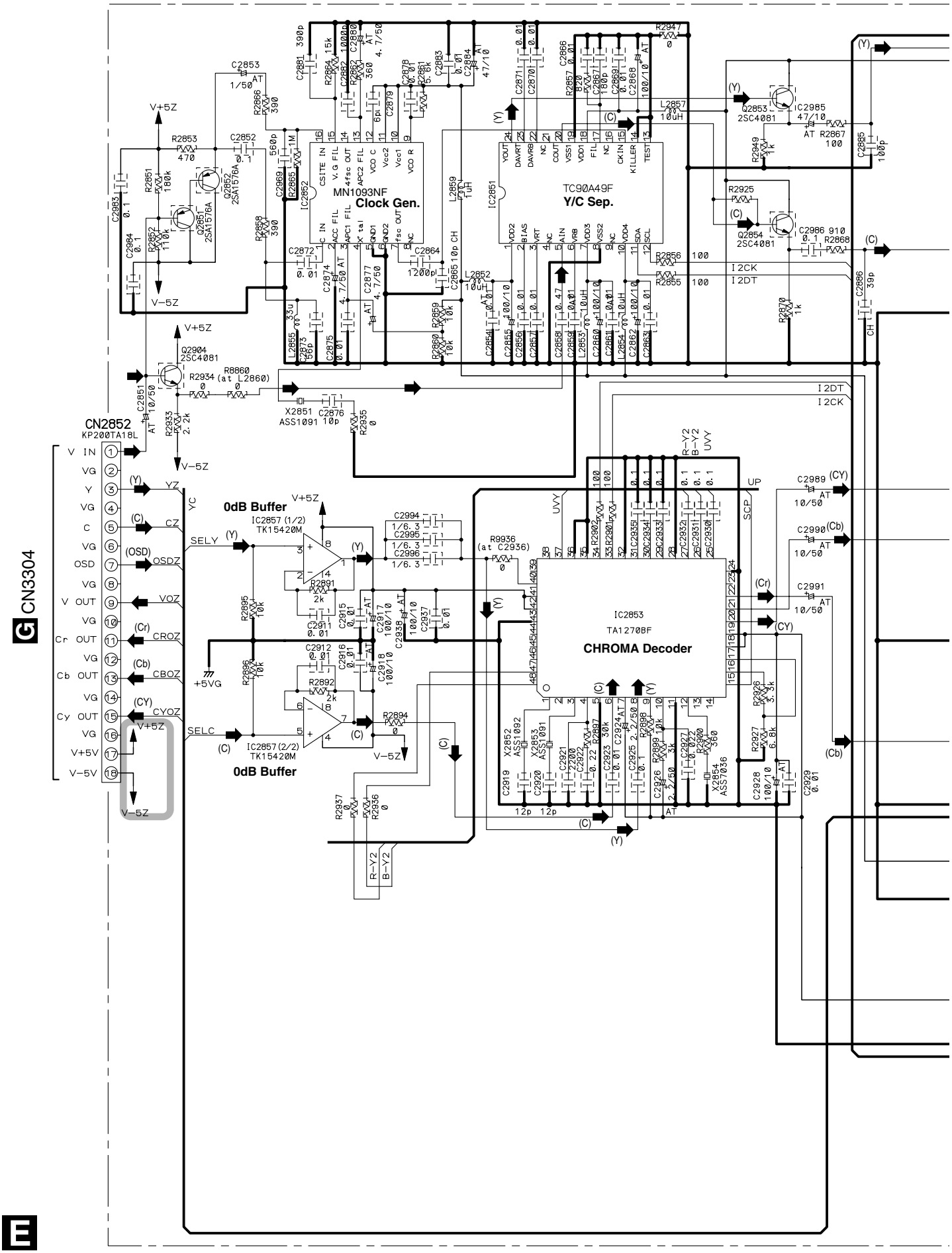

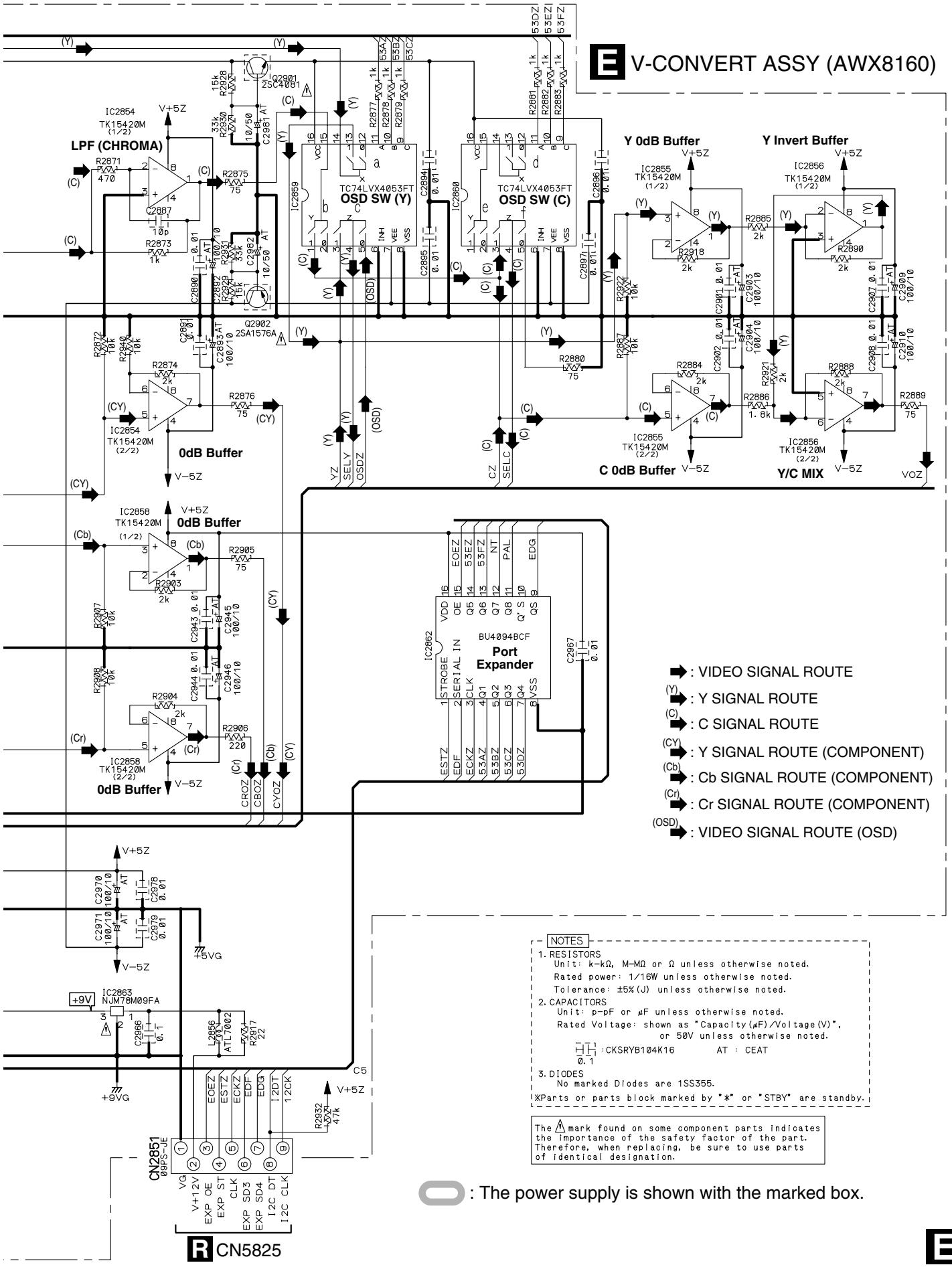
E V-CONVERT ASSY (AWX8160)
LPF (CHROMA)
OSD SW (Y)
OSD SW (C)
Y 0dB Buffer
Y Invert Buffer
0dB Buffer
C 0dB Buffer
Y/C MIX
Port Expander
: VIDEO SIGNAL ROUTE
: Y SIGNAL ROUTE
: C SIGNAL ROUTE
: Y SIGNAL ROUTE (COMPONENT)
: Cb SIGNAL ROUTE (COMPONENT)
: Cr SIGNAL ROUTE (COMPONENT)
: VIDEO SIGNAL ROUTE (OSD)
NOTES
1. RESISTORS
Unit: k-kΩ, M-MΩ or Ω unless otherwise noted.
Rated power: 1/16W unless otherwise noted.
Tolerance: ±5%(J) unless otherwise noted.
2. CAPACITORS
Unit: p-pF or μF unless otherwise noted.
Rated Voltage: shown as "Capacity(μF)/Voltage(V)", or 50V unless otherwise noted.
:CKSRYB104K16 AT : CEAT
3. DIODES
No marked Diodes are 1SS355.
※Parts or parts block marked by "*" or "STBY" are standby.
The ⚠ mark found on some component parts indicates the importance of the safety factor of the part. Therefore, when replacing, be sure to use parts of identical designation.
: The power supply is shown with the marked box.
CN2851
CN5825

3.8 COMPONENT ASSY

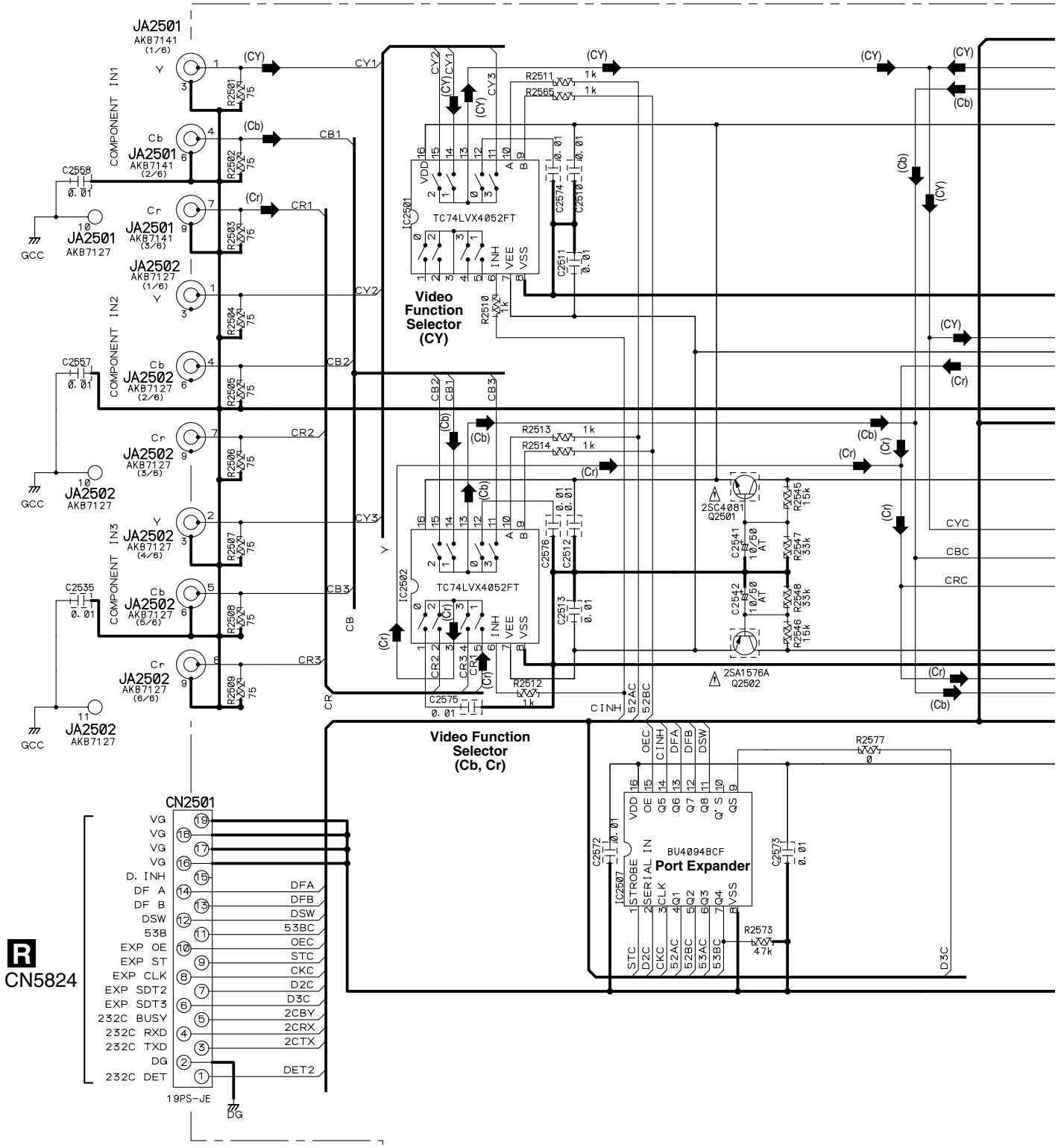

NOTES

1. RESISTORS
   Unit: k-kΩ, M-MΩ or Ω unless otherwise noted.
   Rated power: 1/16W unless otherwise noted.
   Tolerance: ±5%(J) unless otherwise noted.
2. CAPACITORS
   Unit: p-pF or μF unless otherwise noted.
   Rated Voltage: shown as "Capacity(μF)/Voltage(V)", or 50V unless otherwise noted.
   AT : CEAT
3. DIODES
   No marked Diodes are 1SS355.

※Parts or parts block marked by "*" or "STBY" are standby.

: The power supply is shown with the marked box.

The ⚠ mark found on some component parts indicates the importance of the safety factor of the part. Therefore, when replacing, be sure to use parts of identical designation.

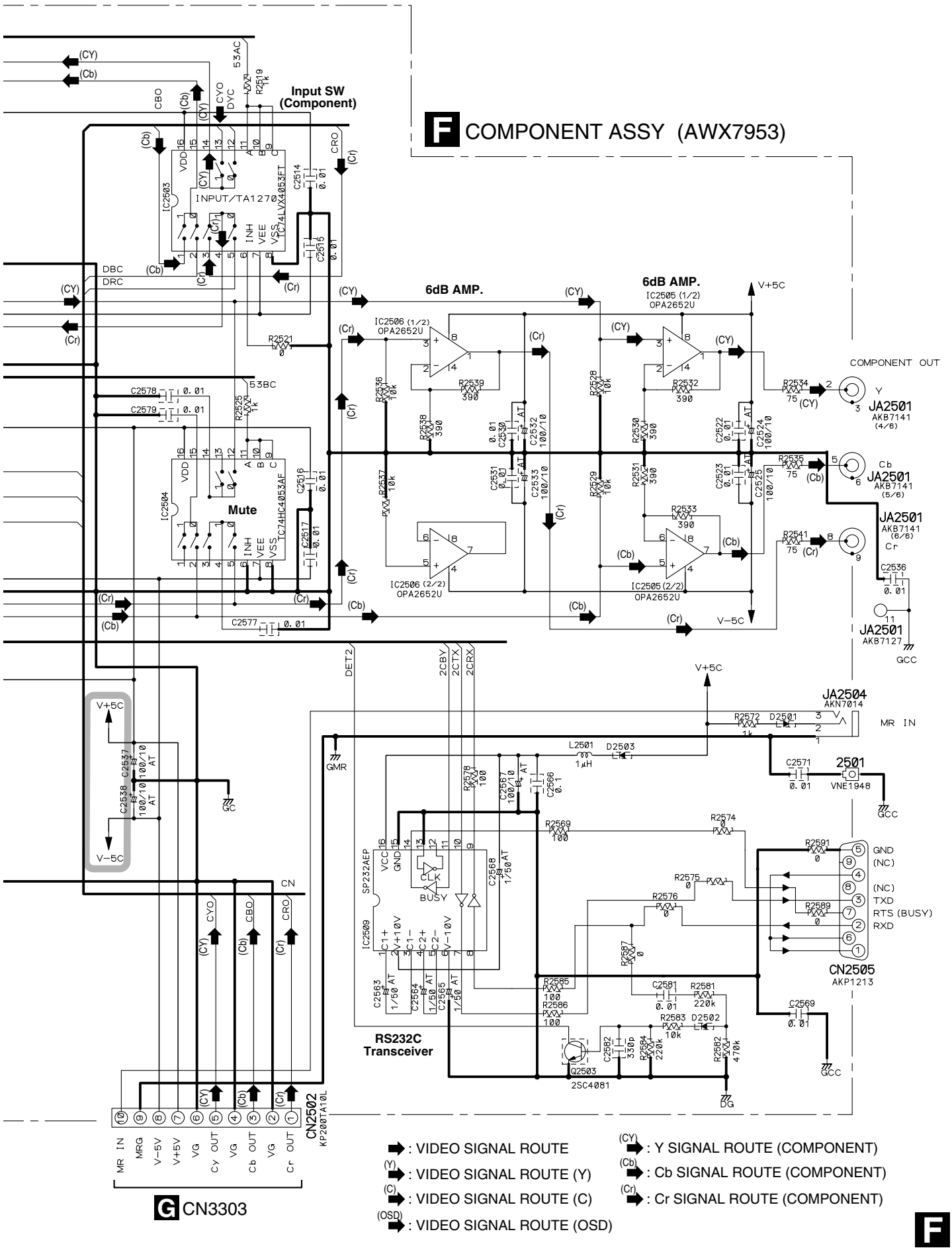
F COMPONENT ASSY (AWX7953)
Input SW (Component)
IC2503 INPUT/TA1270 TC74LVX4053FT
IC2504 Mute TC74HC4053AF
6dB AMP.
IC2506 (1/2) OPA2652U
IC2506 (2/2) OPA2652U
6dB AMP.
IC2505 (1/2) OPA2652U
IC2505 (2/2) OPA2652U
COMPONENT OUT
JA2501 AKB7141 (4/6)
JA2501 AKB7141 (5/6)
JA2501 AKB7141 (6/6)
JA2501 AKB7127
JA2504 AKN7014
MR IN
2501 VNE1948
CN2505 AKP1213
GND
(NC)
(NC)
TXD
RTS (BUSY)
RXD
IC2509 SP232AEP
RS232C Transceiver
Q2503 2SC4081
CN2502 KP200TA10L
MR IN
MRG
V-5V
V+5V
VG
Cy OUT
VG
Cb OUT
VG
Cr OUT
G CN3303
: VIDEO SIGNAL ROUTE
: VIDEO SIGNAL ROUTE (Y)
: VIDEO SIGNAL ROUTE (C)
: VIDEO SIGNAL ROUTE (OSD)
: Y SIGNAL ROUTE (COMPONENT)
: Cb SIGNAL ROUTE (COMPONENT)
: Cr SIGNAL ROUTE (COMPONENT)

3.9 VIDEO CON., MIC AMP, MIC, FRONT A/V and H.P. ASSYS

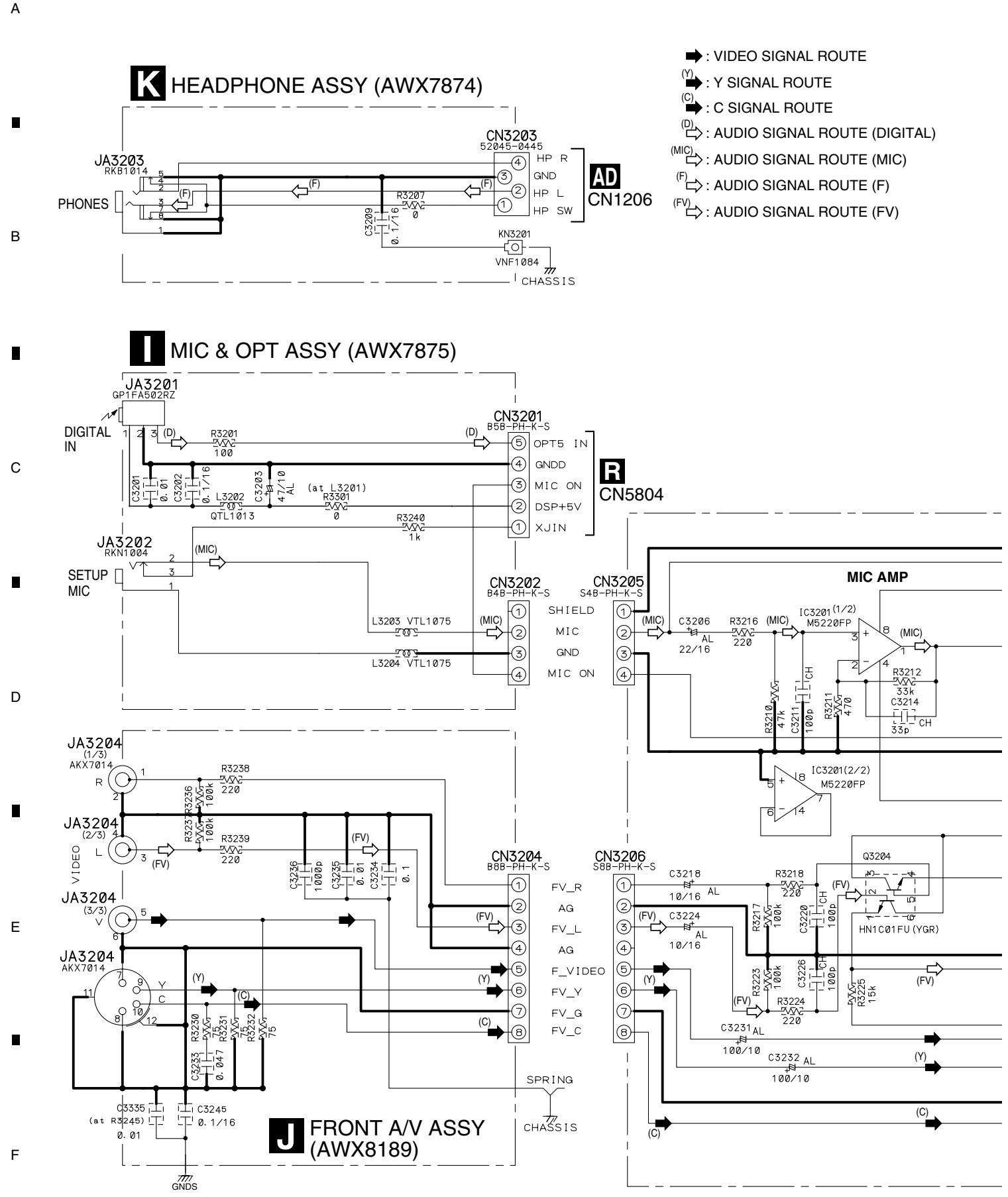

NOTES

1. RESISTORS
   Unit: k-kΩ, M-MΩ or Ω unless otherwise noted.
   Rated power: 1/16W unless otherwise noted.
   Tolerance: ±5%(J) unless otherwise noted.
2. CAPACITORS
   Unit: p-pF or μF unless otherwise noted.
   Rated Voltage: shown as "Capacity(μF)/Voltage(V)", or 50V unless otherwise noted.
   AL:CEAL, CH:CCSRCH
   :CKSRYB type unless otherwise noted.
3. DIODES
   No marked Diodes are 1SS355.

※Parts or parts block marked by "*" or "STBY" are standby.

The ⚠ mark found on some component parts indicates the importance of the safety factor of the part. Therefore, when replacing, be sure to use parts of identical designation.

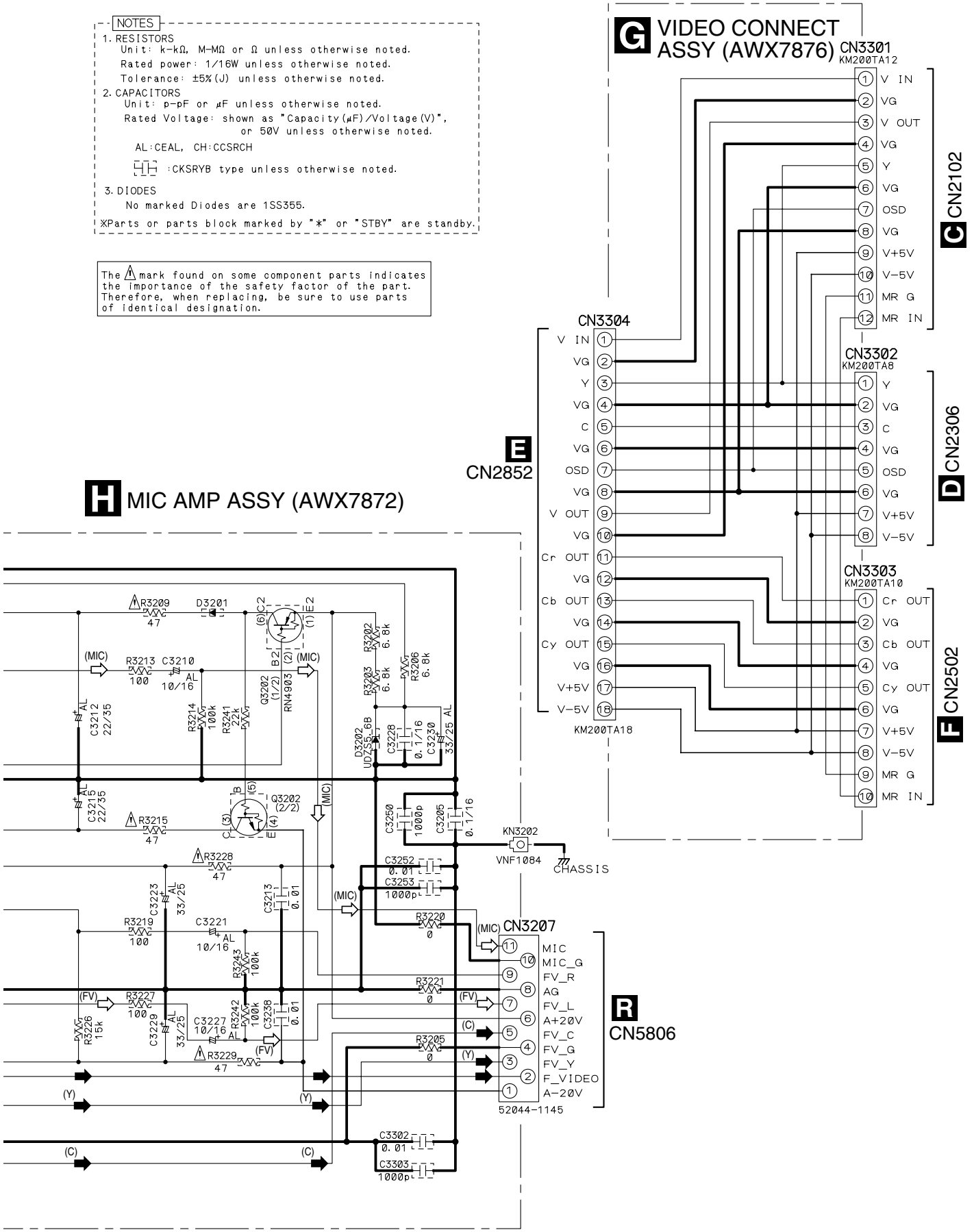

3.10 ANALOG IN & A/D ASSY(1/3)

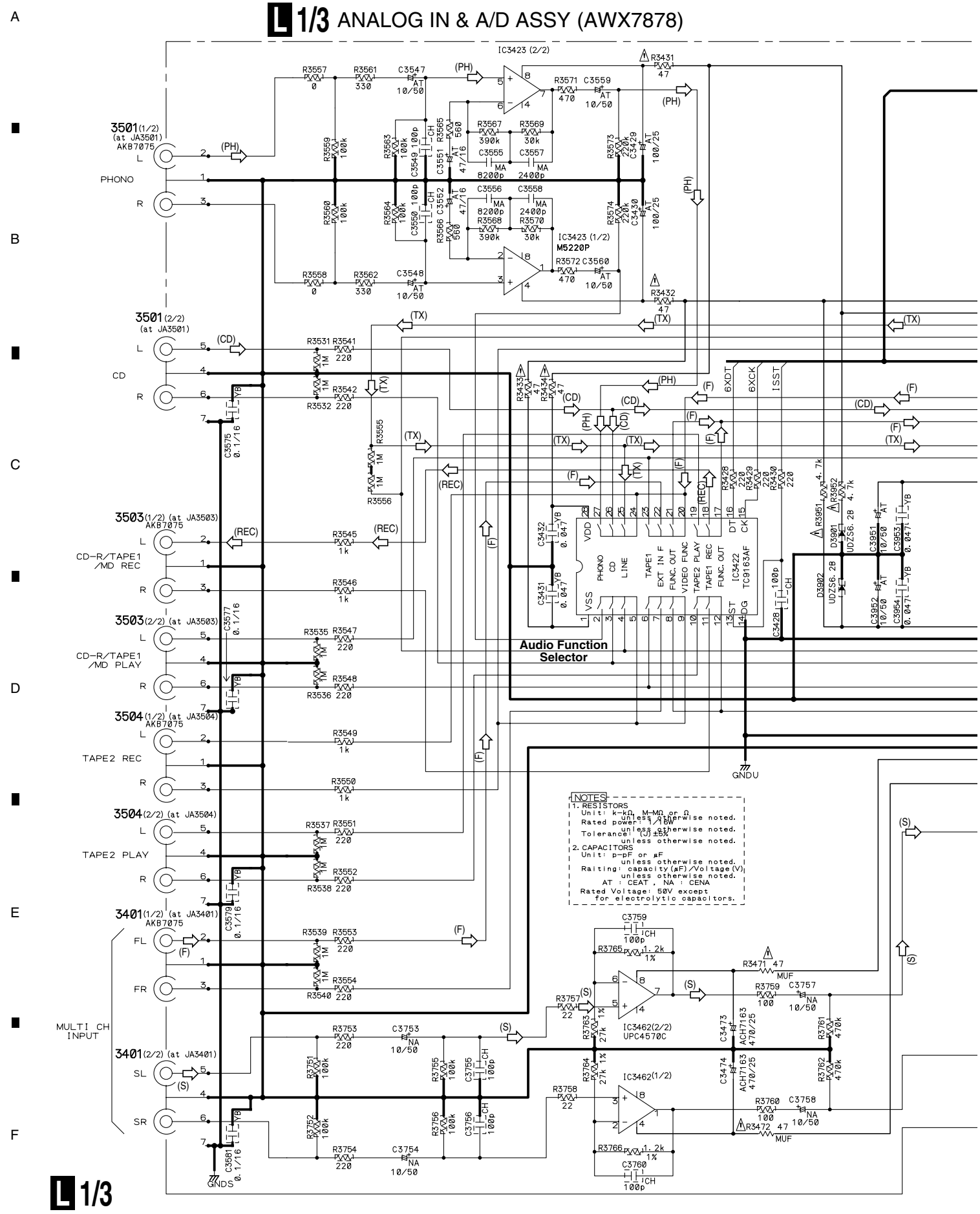

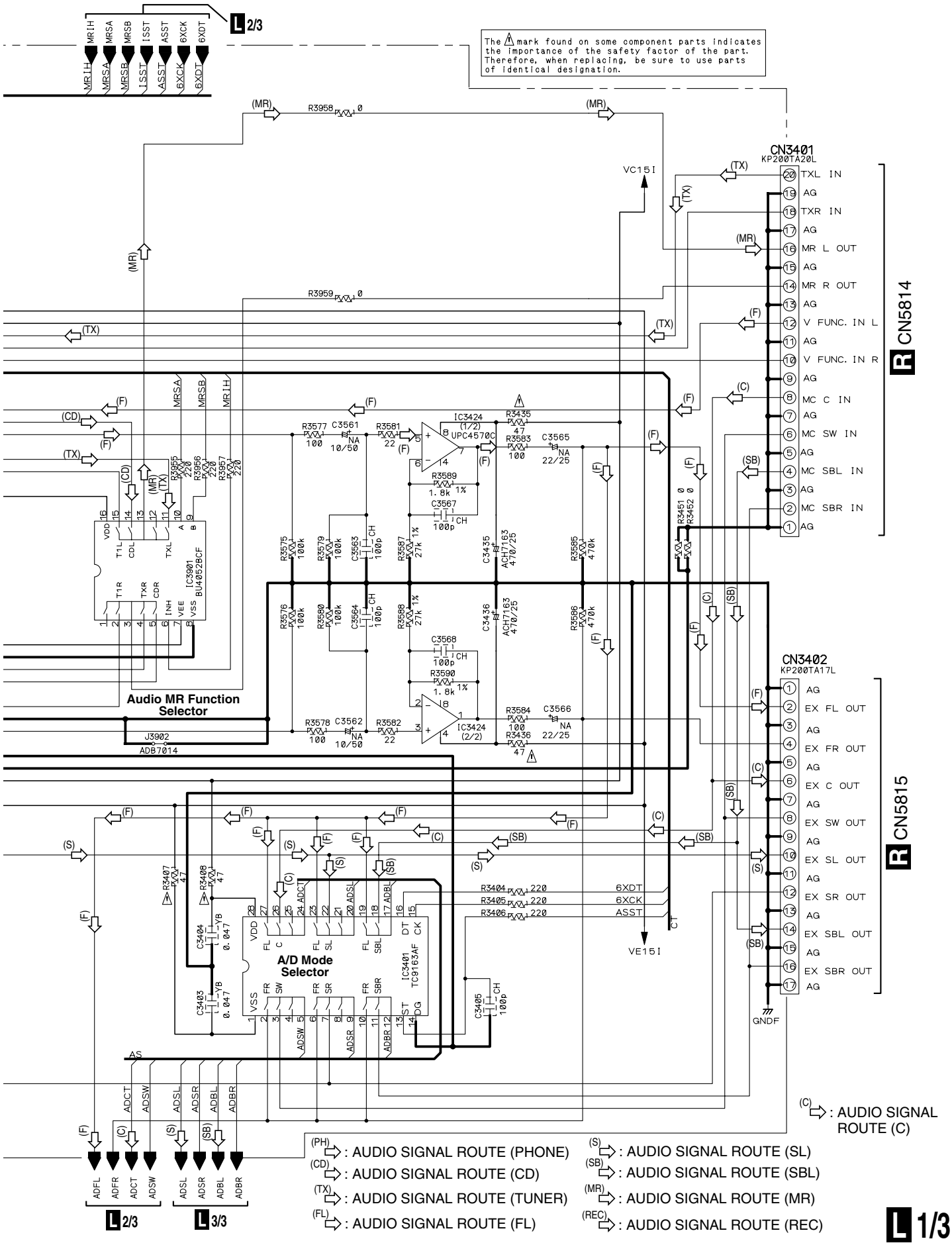
L 2/3
MRIH
MRSA
MRSB
ISST
ASST
6XCK
6XDT
The ⚠ mark found on some component parts indicates the importance of the safety factor of the part. Therefore, when replacing, be sure to use parts of identical designation.
R3958 0
R3959 0
VC15I
CN3401
KP200TA20L
TXL IN
AG
TXR IN
MR L OUT
MR R OUT
V FUNC. IN L
V FUNC. IN R
MC C IN
MC SW IN
MC SBL IN
MC SBR IN
R CN5814
IC3424 (1/2) UPC4570C
IC3424 (2/2)
R3577 100
C3561 NA 10/50
R3581 22
R3435 47
R3583 100
C3565 NA 22/25
R3589 1.8k 1%
C3567 100p CH
R3575 100k
R3579 100k
C3563 100p CH
R3587 27k 1%
C3435 ACH7163 470/25
R3585 470k
R3576 100k
R3580 100k
C3564 100p CH
R3588 27k 1%
C3436 ACH7163 470/25
R3586 470k
C3568 100p CH
R3590 1.8k 1%
R3578 100
C3562 NA 10/50
R3582 22
R3584 100
C3566 NA 22/25
R3436 47
IC3901 BU4052BCF
Audio MR Function Selector
J3902 ADB7014
CN3402
KP200TA17L
AG
EX FL OUT
EX FR OUT
EX C OUT
EX SW OUT
EX SL OUT
EX SR OUT
EX SBL OUT
EX SBR OUT
R CN5815
GNDF
R3404 220 6XDT
R3405 220 6XCK
R3406 220 ASST
VE15I
A/D Mode Selector
IC3401 TC9163AF
C3404 0.047
C3403 0.047
C3405 100p CH
R3407 47
R3408 47
ADFL
ADFR
ADCT
ADSW
ADSL
ADSR
ADBL
ADBR
L 2/3
L 3/3
(PH) : AUDIO SIGNAL ROUTE (PHONE)
(CD) : AUDIO SIGNAL ROUTE (CD)
(TX) : AUDIO SIGNAL ROUTE (TUNER)
(FL) : AUDIO SIGNAL ROUTE (FL)
(S) : AUDIO SIGNAL ROUTE (SL)
(SB) : AUDIO SIGNAL ROUTE (SBL)
(MR) : AUDIO SIGNAL ROUTE (MR)
(REC) : AUDIO SIGNAL ROUTE (REC)
(C) : AUDIO SIGNAL ROUTE (C)
L 1/3

3.11 ANAALOG IN & A/D ASSY(2/3)

L 2/3 ANALOG IN & A/D ASSY (AWX7878)

The ⚠ mark found on some component parts indicates the importance of the safety factor of the part. Therefore, when replacing, be sure to use parts of identical designation.

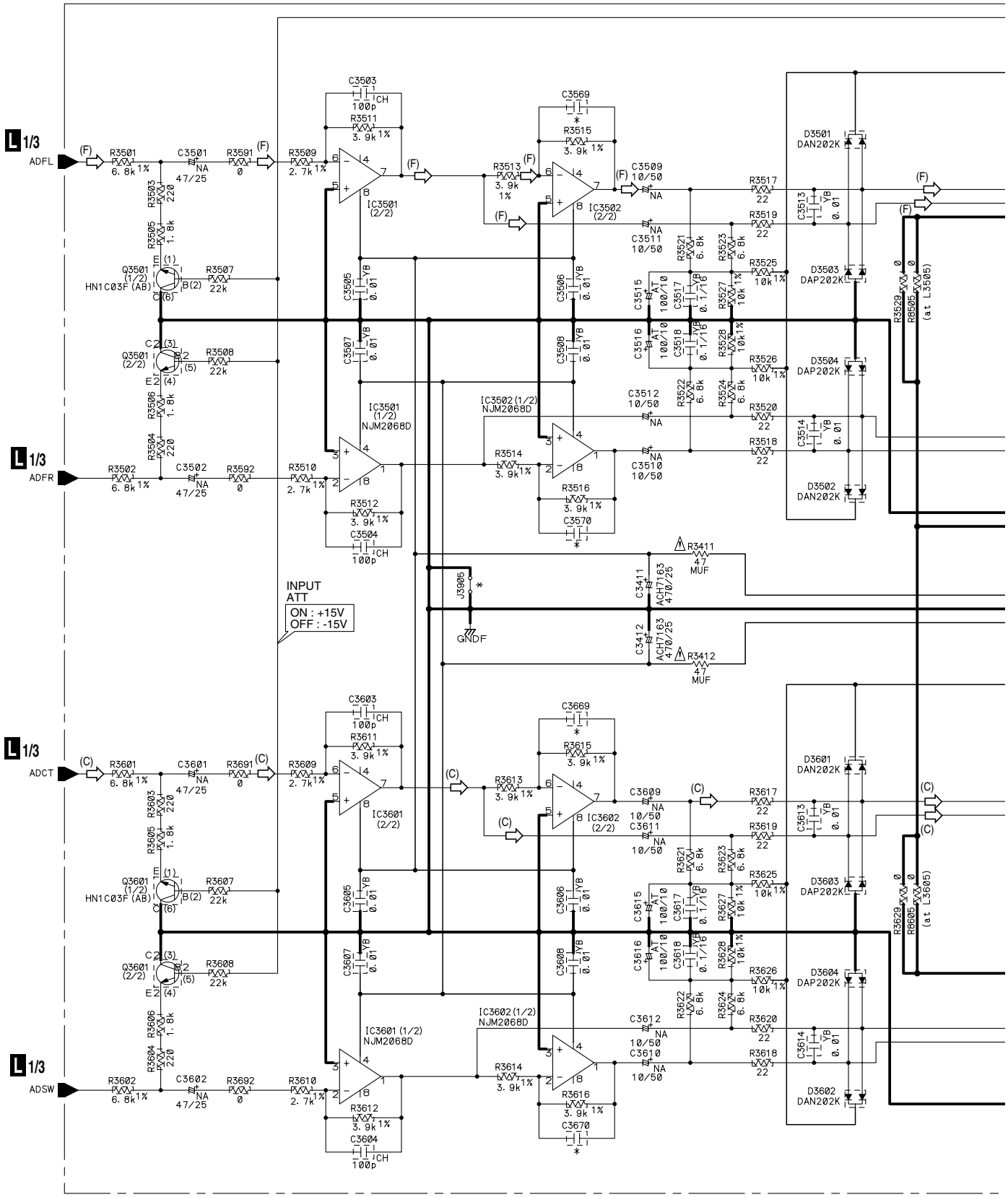

L 2/3 : The power supply is shown with the marked box.

NOTES

1. RESISTORS
   Unit: k-kΩ, M-MΩ or Ω unless otherwise noted.
   Rated power: 1/16W unless otherwise noted.
   Tolerance: ±5%(J) unless otherwise noted.

2. CAPACITORS
   Unit: p-pF or μF unless otherwise noted.
   Rated Voltage: shown as "Capacity(μF)/Voltage(V)", or 50V unless otherwise noted.
   AT : CEAT , NA : CENA

※Parts or parts block marked by "*" or "STBY" are standby.

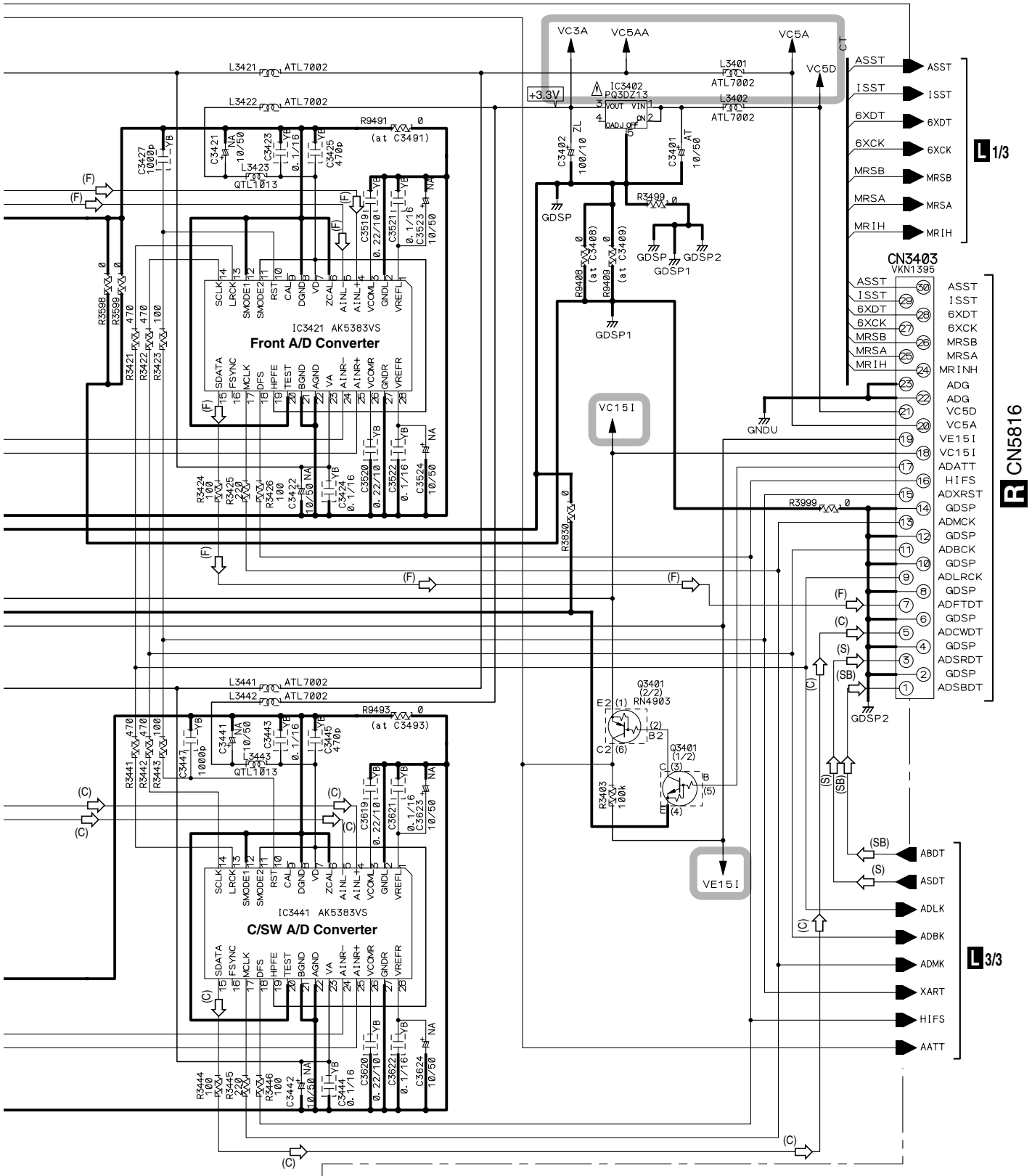

L 2/3

3.12 ANAALOG IN & A/D ASSY(3/3)

NOTES

1. RESISTORS
   Unit: k-kΩ, M-MΩ or Ω unless otherwise noted.
   Rated power: 1/16W unless otherwise noted.
   Tolerance: ±5%(J) unless otherwise noted.
2. CAPACITORS
   Unit: p-pF or μF unless otherwise noted.
   Rated Voltage: shown as "Capacity(μF)/Voltage(V)", or 50V unless otherwise noted.
   AT : CEAT , NA : CENA

※Parts or parts block marked by "*" or "STBY" are standby.

The ⚠ mark found on some component parts indicates the importance of the safety factor of the part. Therefore, when replacing, be sure to use parts of identical designation.

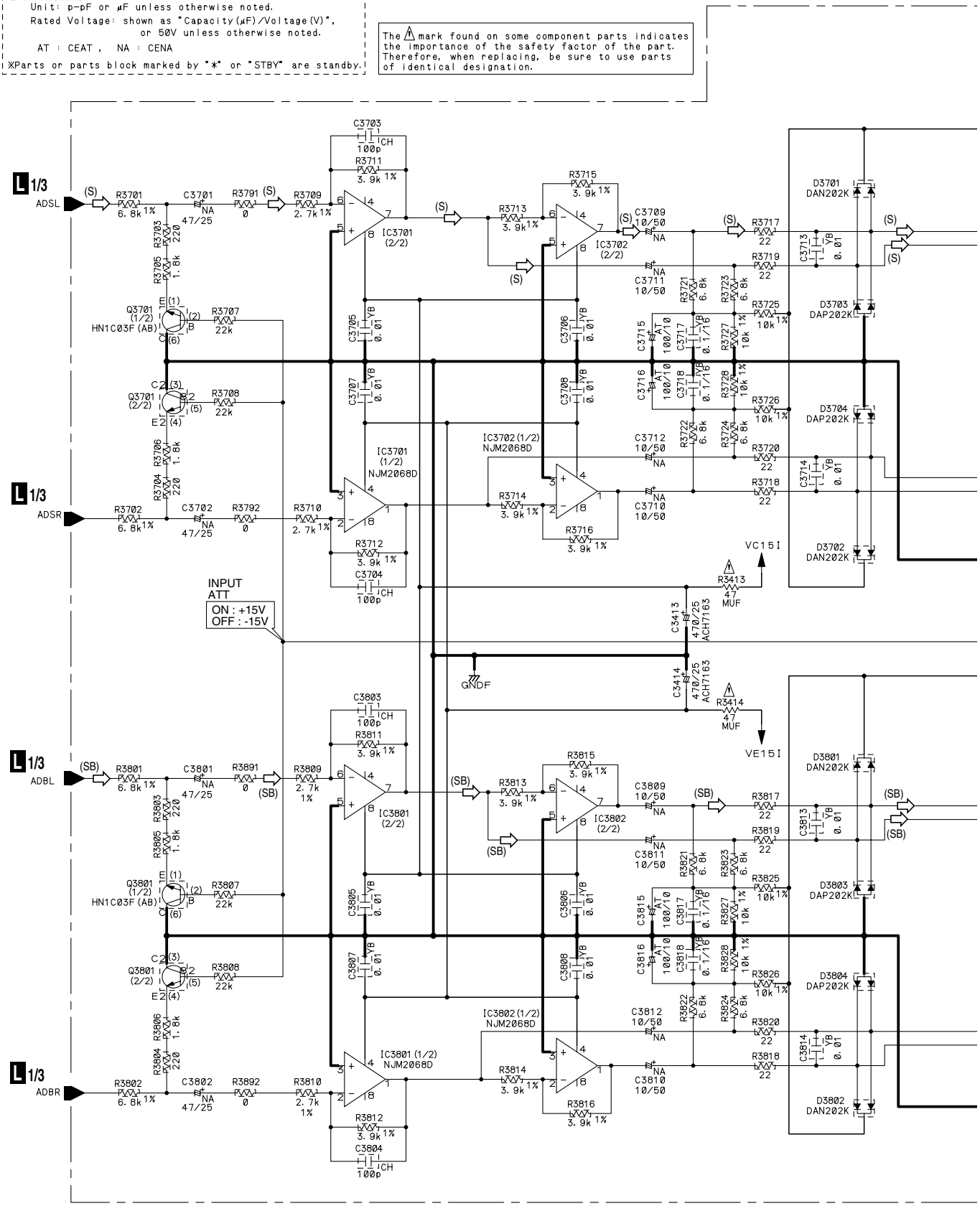

L 3/3

L 3/3 ANALOG IN & A/D ASSY (AWX7878)

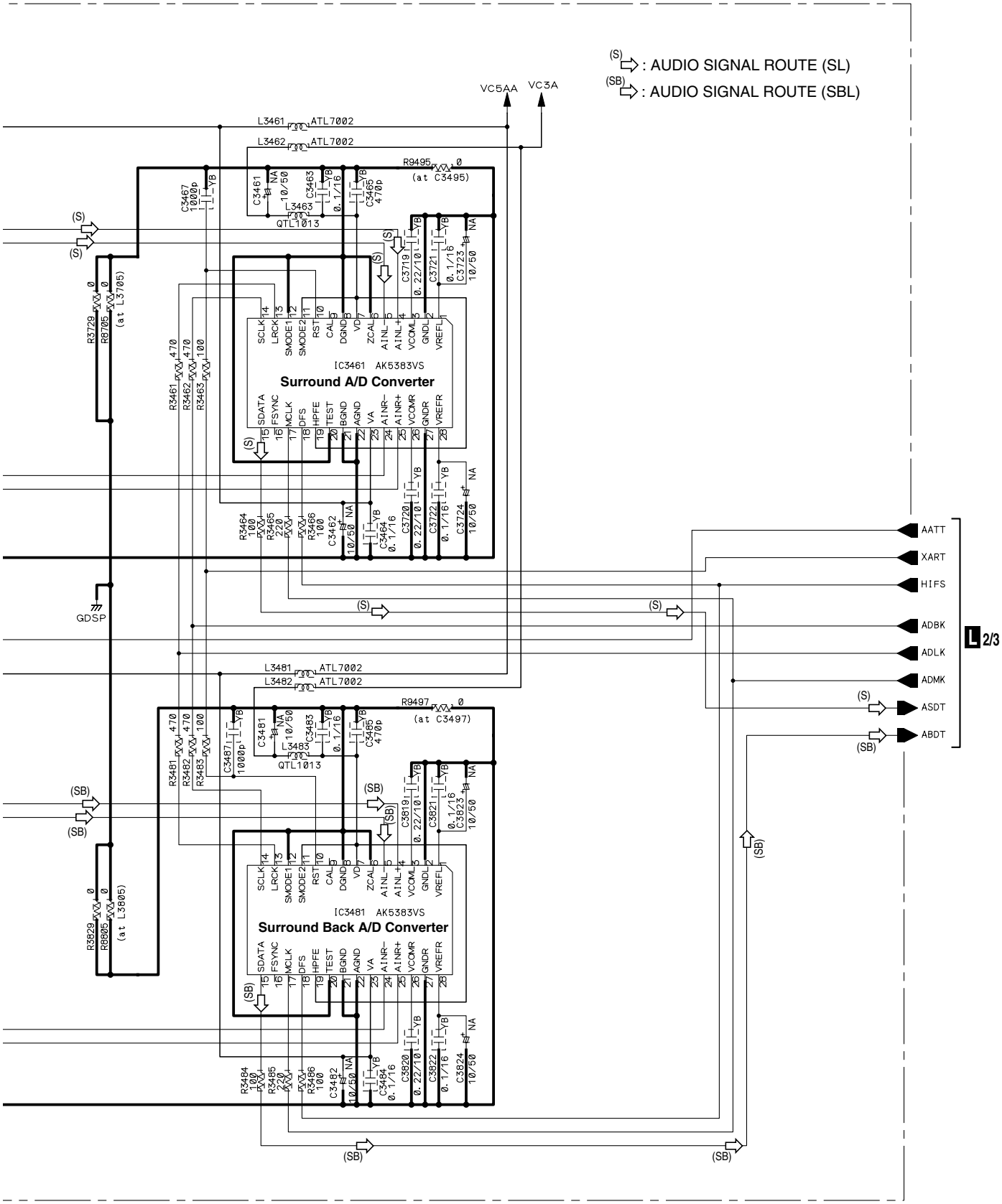

L 3/3

3.13 DISPLAY, INPUT SEL, MULTI JOG and VOL ASSYS

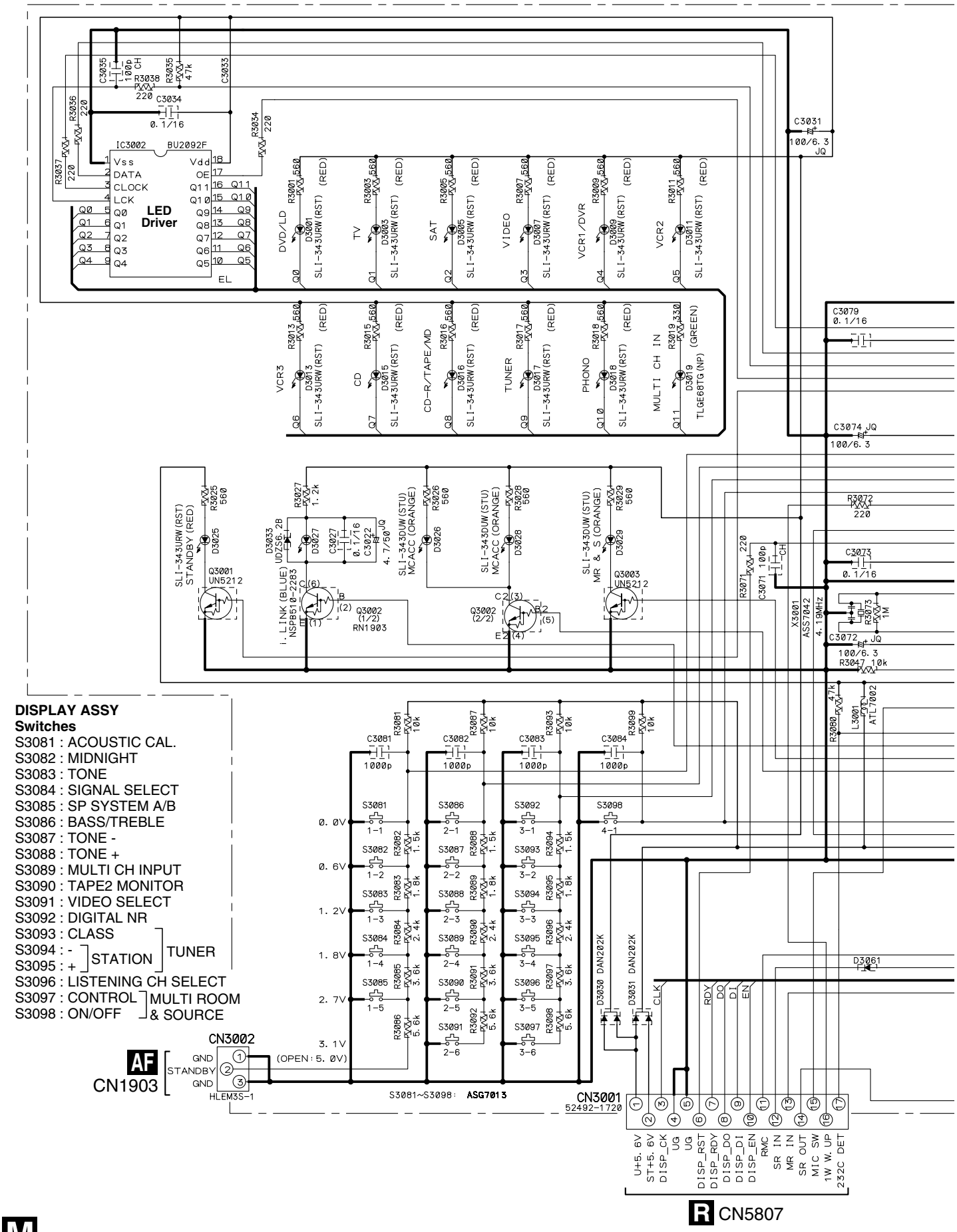

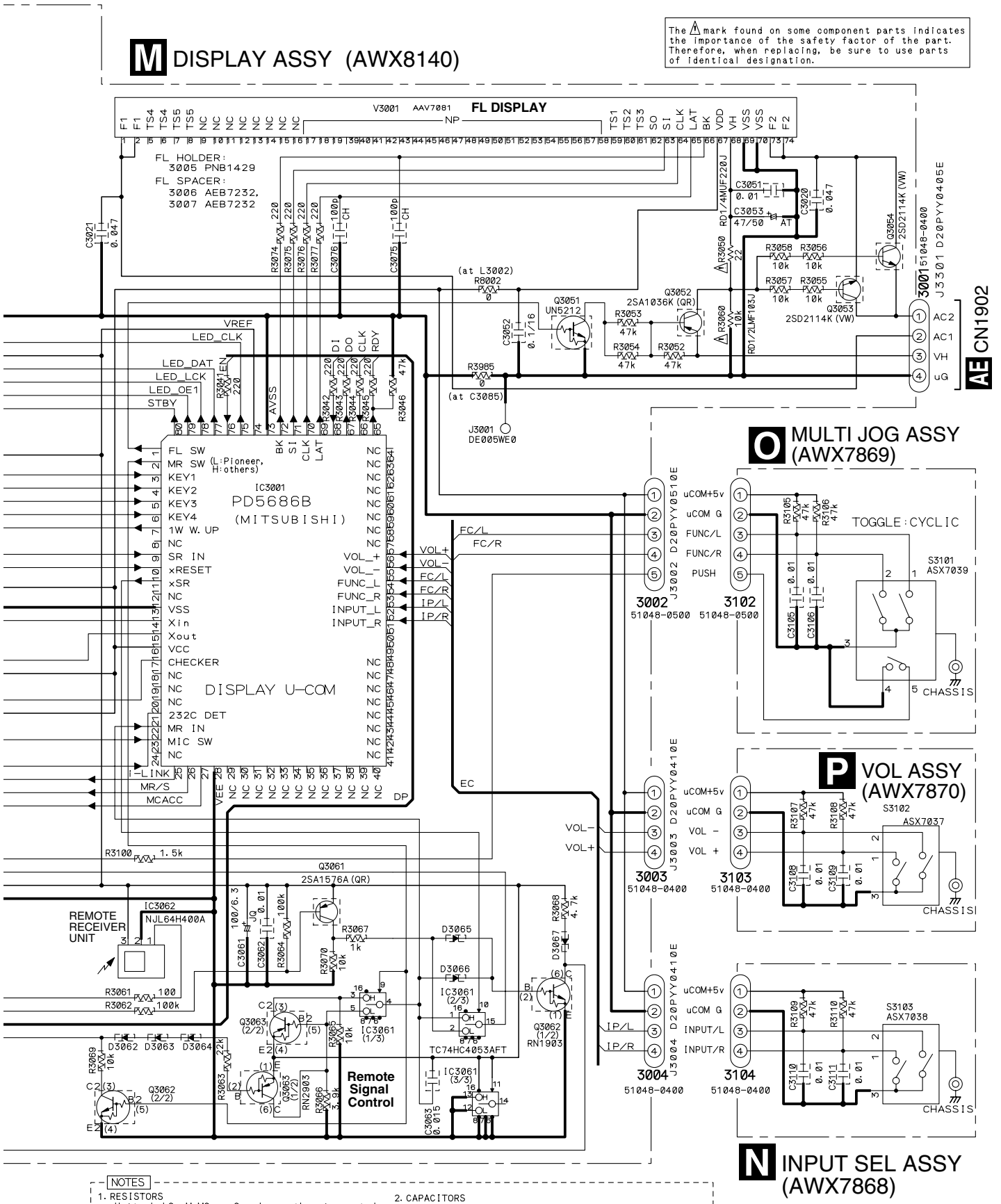
M DISPLAY ASSY (AWX8140)
The ⚠ mark found on some component parts indicates the importance of the safety factor of the part. Therefore, when replacing, be sure to use parts of identical designation.
V3001 AAV7081 FL DISPLAY
FL HOLDER: 3005 PNB1429
FL SPACER: 3006 AEB7232, 3007 AEB7232
IC3001 PD5686B (MITSUBISHI)
DISPLAY U-COM
FL SW
MR SW (L:Pioneer, H:others)
KEY1
KEY2
KEY3
KEY4
1W W. UP
SR IN
xRESET
xSR
VSS
Xin
Xout
VCC
CHECKER
232C DET
MR IN
MIC SW
i-LINK
MR/S
MCACC
VREF
LED_CLK
LED_DAT
LED_LCK
LED_OE1
STBY
AVSS
VOL+
VOL-
FC/L
FC/R
IP/L
IP/R
EC
J3001 DE005WE0
CN1902
AC2
AC1
VH
uG
O MULTI JOG ASSY (AWX7869)
TOGGLE:CYCLIC
S3101 ASX7039
uCOM+5v
uCOM G
FUNC/L
FUNC/R
PUSH
CHASSIS
P VOL ASSY (AWX7870)
S3102 ASX7037
VOL -
VOL +
N INPUT SEL ASSY (AWX7868)
S3103 ASX7038
INPUT/L
INPUT/R
REMOTE RECEIVER UNIT
IC3062 NJL64H400A
Q3061 2SA1576A(QR)
Remote Signal Control
TC74HC4053AFT
Q3051 UN5212
Q3052 2SA1036K(QR)
Q3053 2SD2114K(VW)
Q3054 2SD2114K(VW)
J3001 D20PYY0405E
J3002 D20PYY0510E
J3003 D20PYY0410E
J3004 D20PYY0410E
3002 51048-0500
3102 51048-0500
3003 51048-0400
3103 51048-0400
3004 51048-0400
3104 51048-0400
NOTES
1. RESISTORS
Unit: k-kΩ, M-MΩ or Ω unless otherwise noted.
Rated power: 1/16W unless otherwise noted.
Tolerance: ±5%(J) unless otherwise noted.
2. CAPACITORS
Unit: p-pF or μF unless otherwise noted.
Rated Voltage: shown as "Capacity(μF)/Voltage(V)", or 50V unless otherwise noted.
JQ:CEJQ, CH:CCSRCH
:CKSRYB type unless otherwise noted
3. DIODES
No marked Diodes are 1SS355.
※Parts or parts block marked by "*" or "STBY" are standby.

3.14 VR & PRE OUT ASSY(1/3)

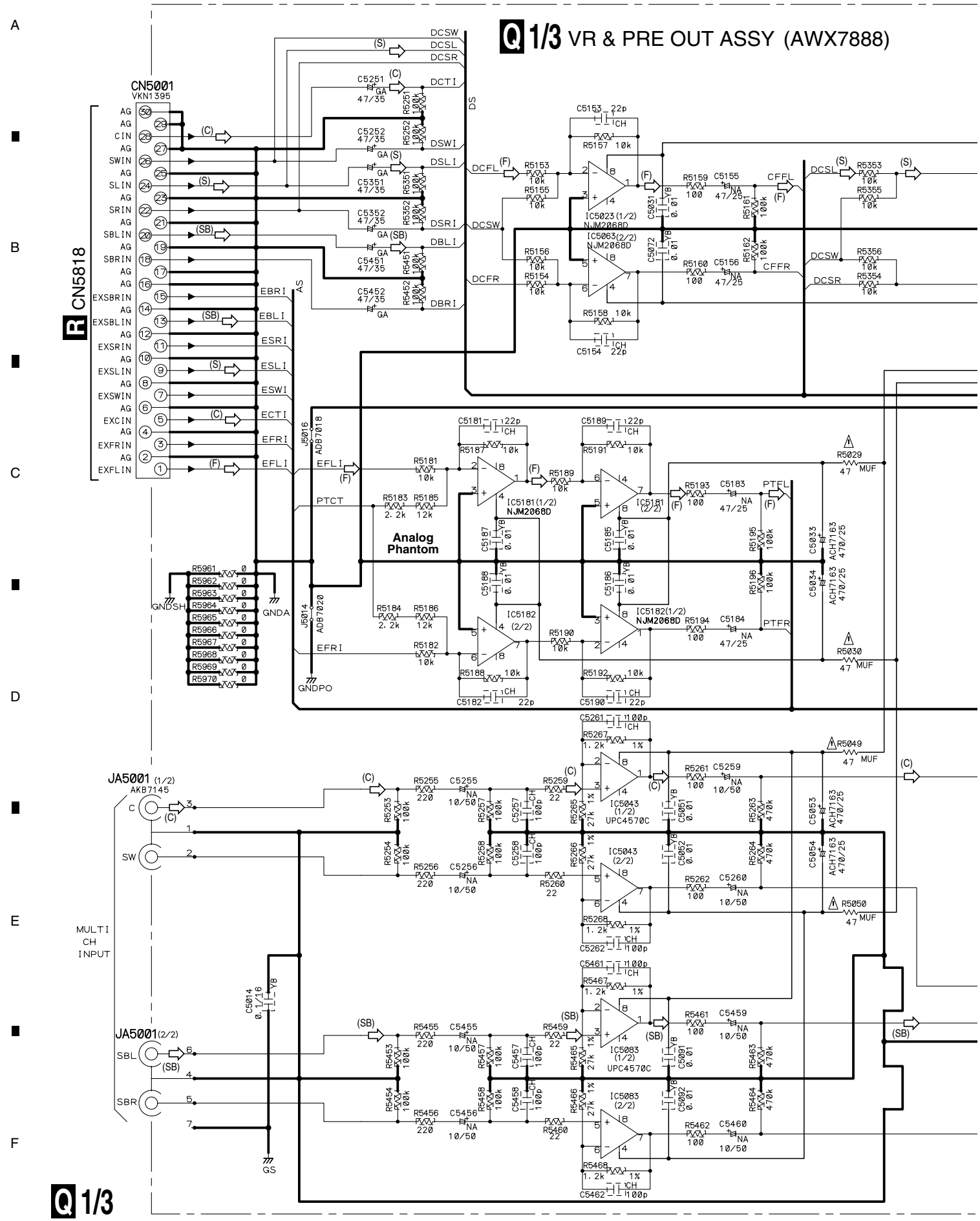

: The power supply is shown with the marked box.

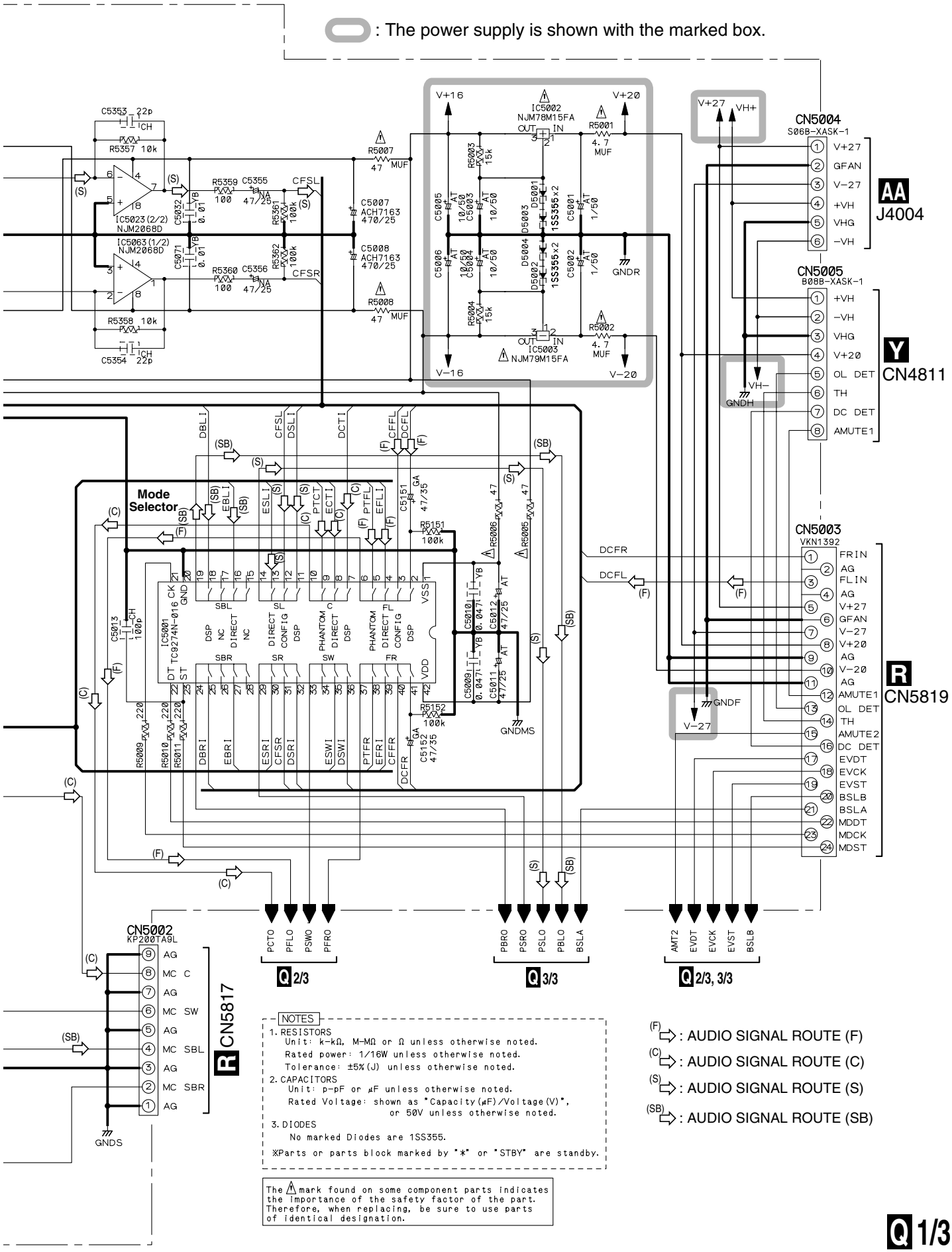

NOTES

1. RESISTORS
   Unit: k-kΩ, M-MΩ or Ω unless otherwise noted.
   Rated power: 1/16W unless otherwise noted.
   Tolerance: ±5%(J) unless otherwise noted.
2. CAPACITORS
   Unit: p-pF or μF unless otherwise noted.
   Rated Voltage: shown as "Capacity(μF)/Voltage(V)", or 50V unless otherwise noted.
3. DIODES
   No marked Diodes are 1SS355.

※Parts or parts block marked by "*" or "STBY" are standby.

The ⚠ mark found on some component parts indicates the importance of the safety factor of the part. Therefore, when replacing, be sure to use parts of identical designation.

(F) ⇨ : AUDIO SIGNAL ROUTE (F)
(C) ⇨ : AUDIO SIGNAL ROUTE (C)
(S) ⇨ : AUDIO SIGNAL ROUTE (S)
(SB) ⇨ : AUDIO SIGNAL ROUTE (SB)

Q 1/3

3.15 VR & PRE OUT ASSY(2/3)

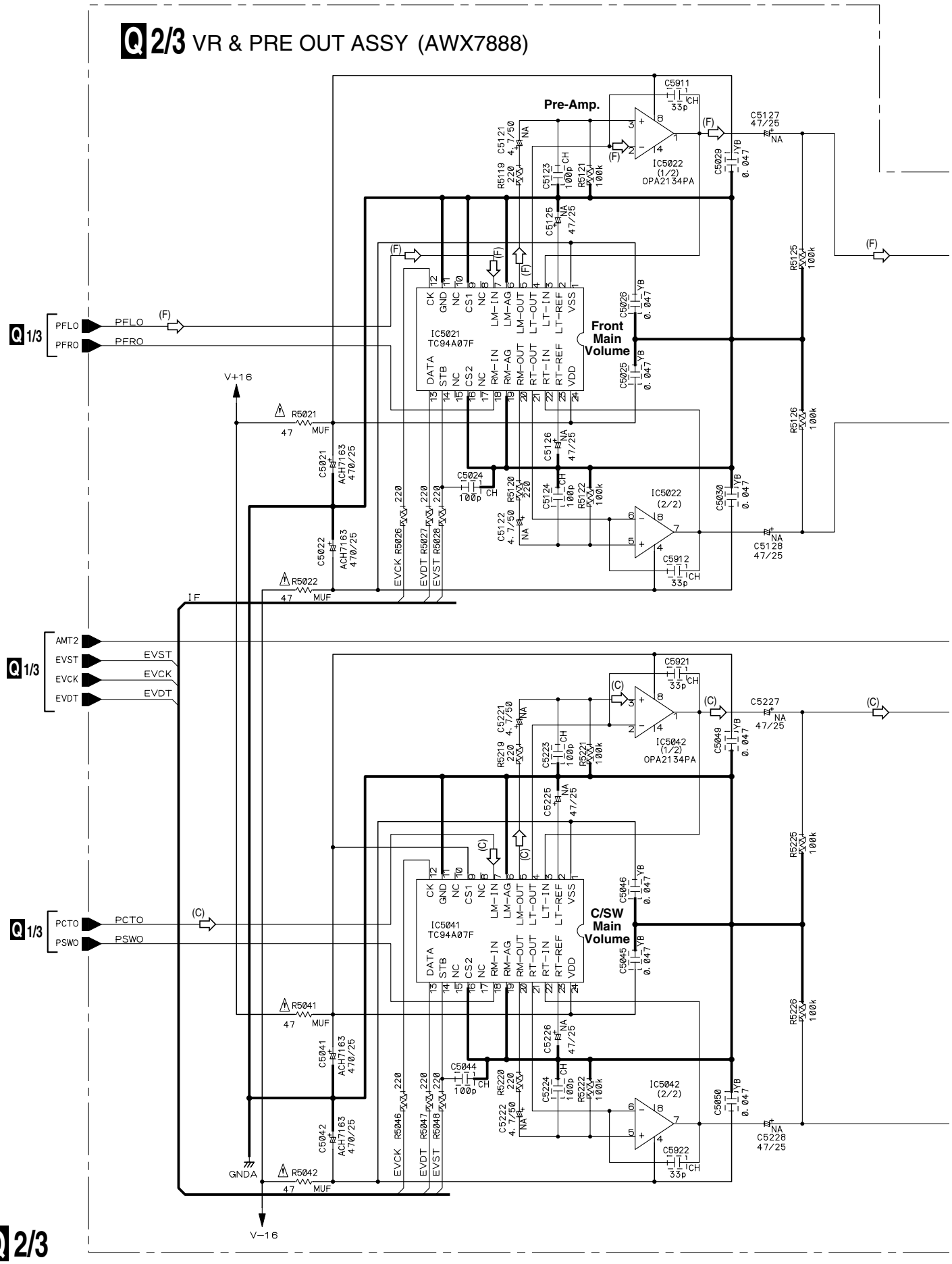

NOTES

1. RESISTORS
   Unit: k-kΩ, M-MΩ or Ω unless otherwise noted.
   Rated power: 1/16W unless otherwise noted.
   Tolerance: ±5%(J) unless otherwise noted.
2. CAPACITORS
   Unit: p-pF or μF unless otherwise noted.
   Rated Voltage: shown as "Capacity(μF)/Voltage(V)", or 50V unless otherwise noted.
   NA : CENA

※Parts or parts block marked by "*" or "STBY" are standby.

(F) ⇨ : AUDIO SIGNAL ROUTE (F)

(C) ⇨ : AUDIO SIGNAL ROUTE (C)

The ⚠ mark found on some component parts indicates the importance of the safety factor of the part. Therefore, when replacing, be sure to use parts of identical designation.

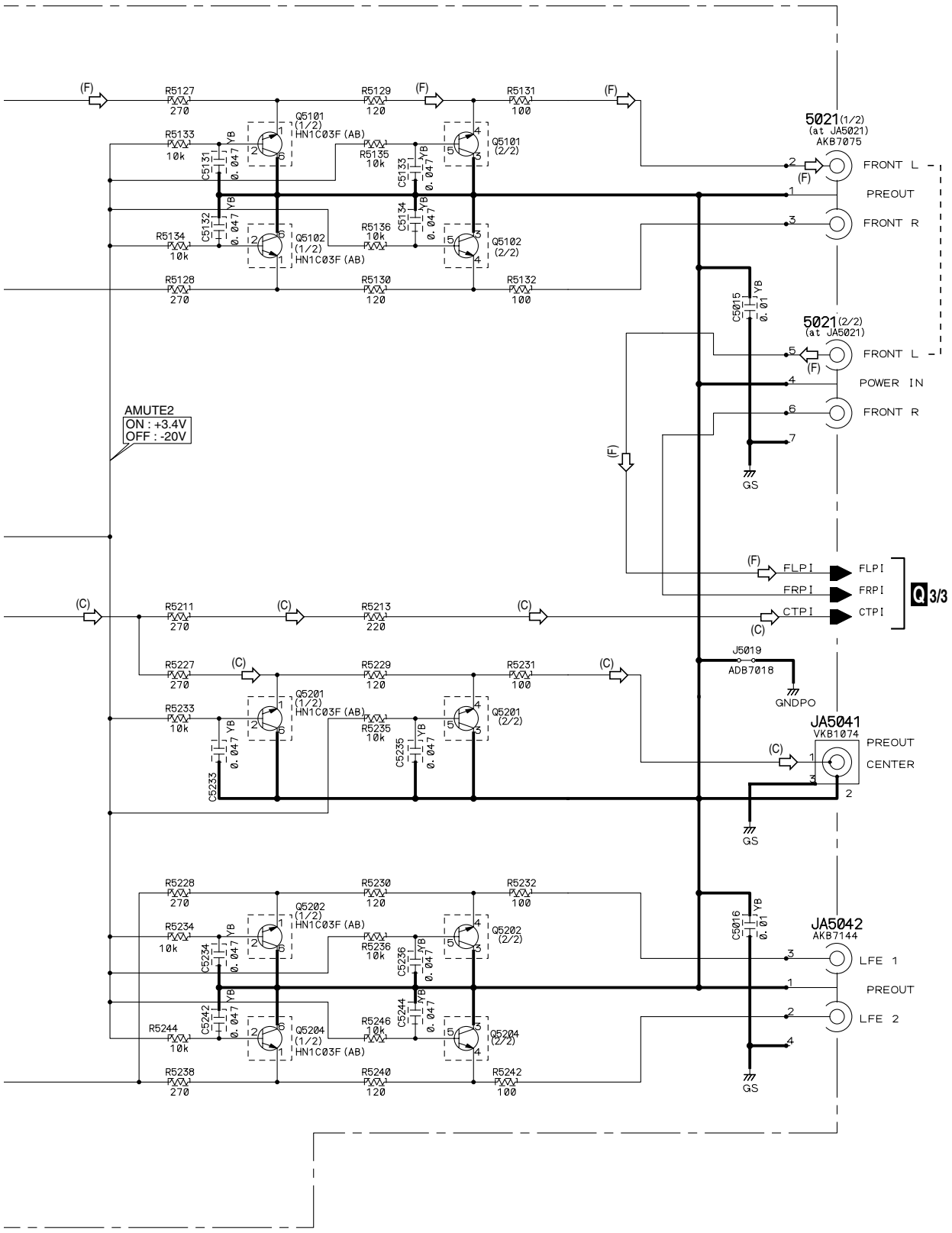

Q 2/3

3.16 VR & PRE OUT ASSY(3/3)

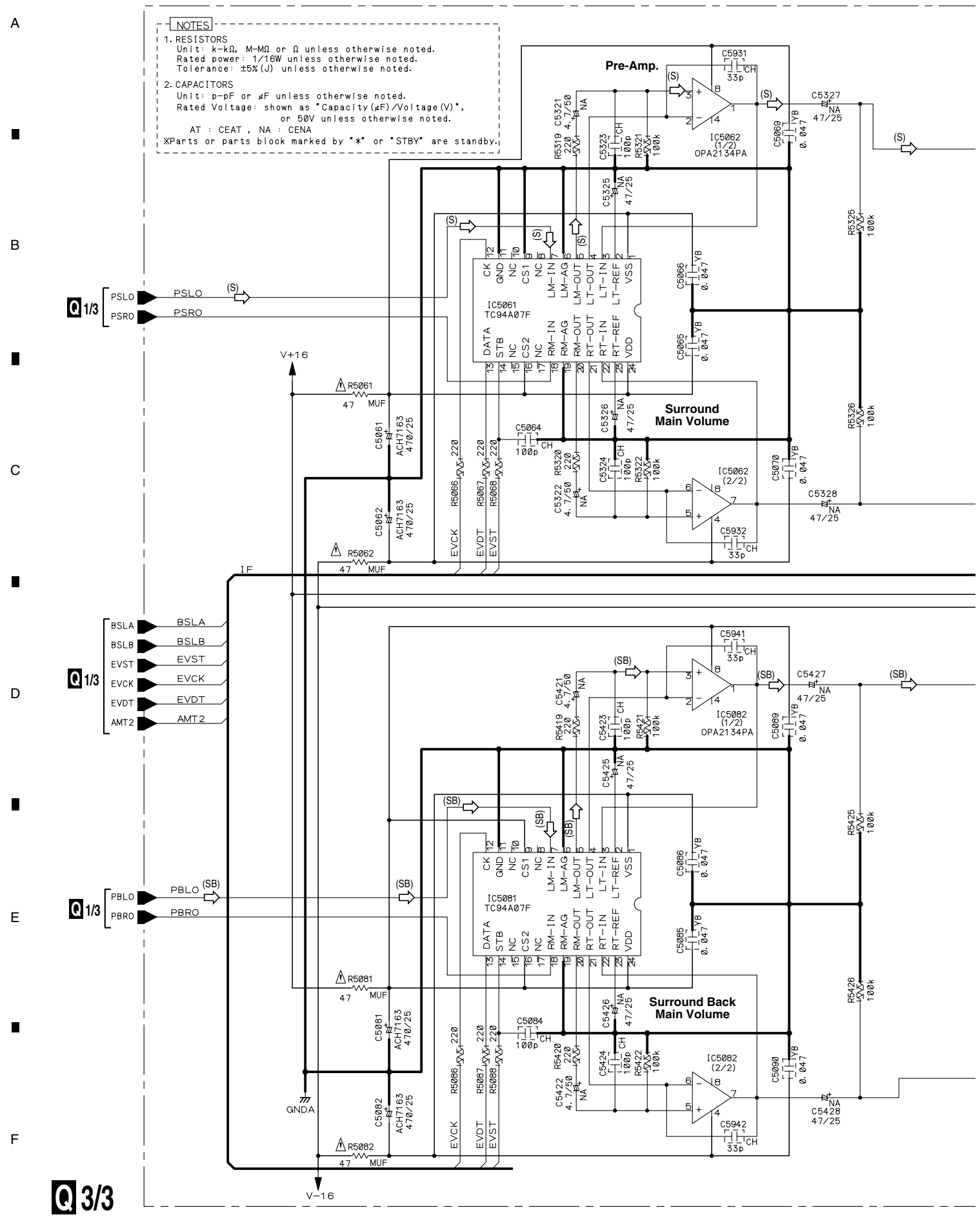

(F) ⇨ : AUDIO SIGNAL ROUTE (F)
(C) ⇨ : AUDIO SIGNAL ROUTE (C)
(S) ⇨ : AUDIO SIGNAL ROUTE (S)
(SB) ⇨ : AUDIO SIGNAL ROUTE (SB)

Q 3/3 VR & PRE OUT ASSY (AWX7888)

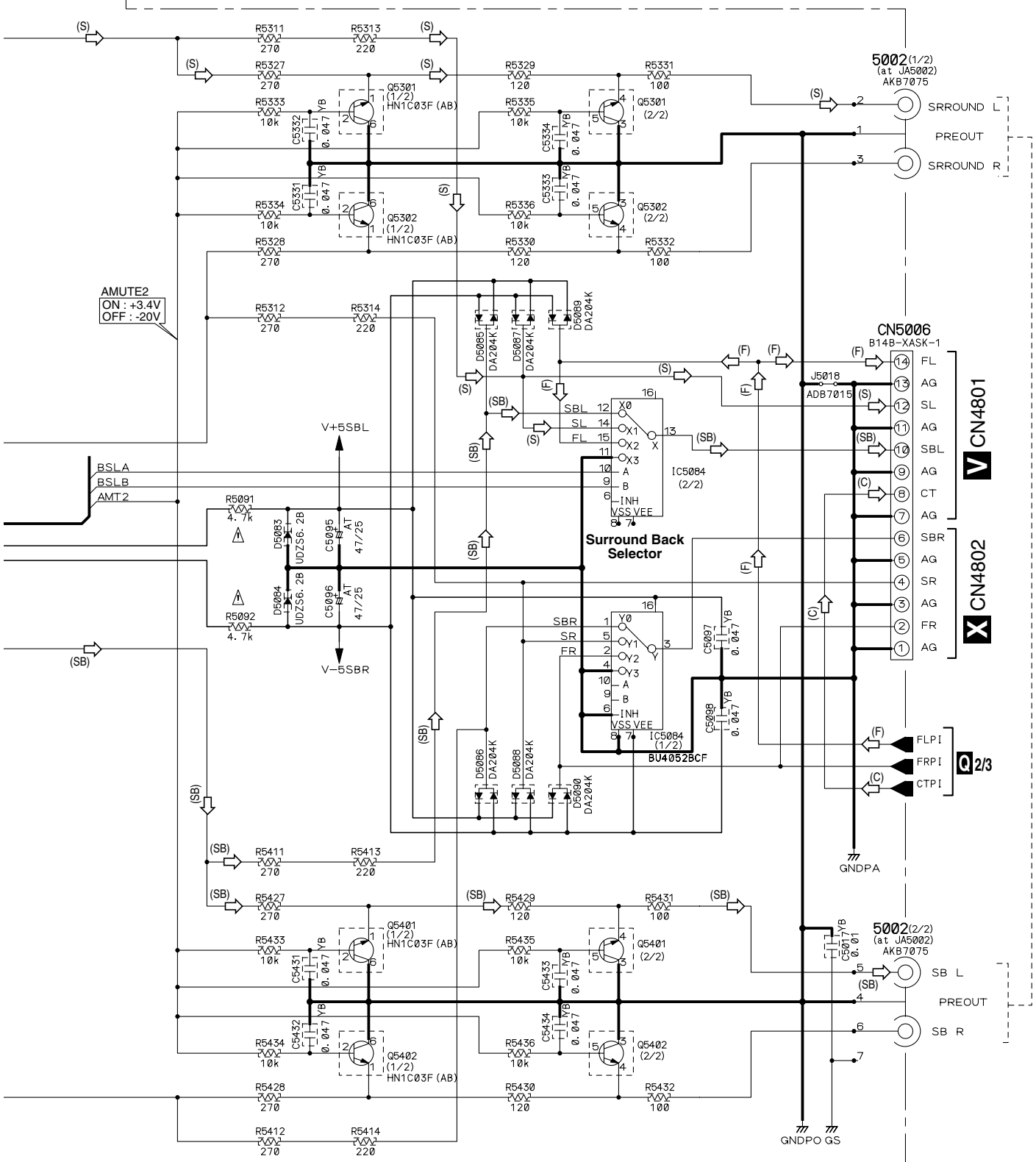

The ⚠ mark found on some component parts indicates the importance of the safety factor of the part. Therefore, when replacing, be sure to use parts of identical designation.

Q 3/3

3.17 MOTHER ASSY

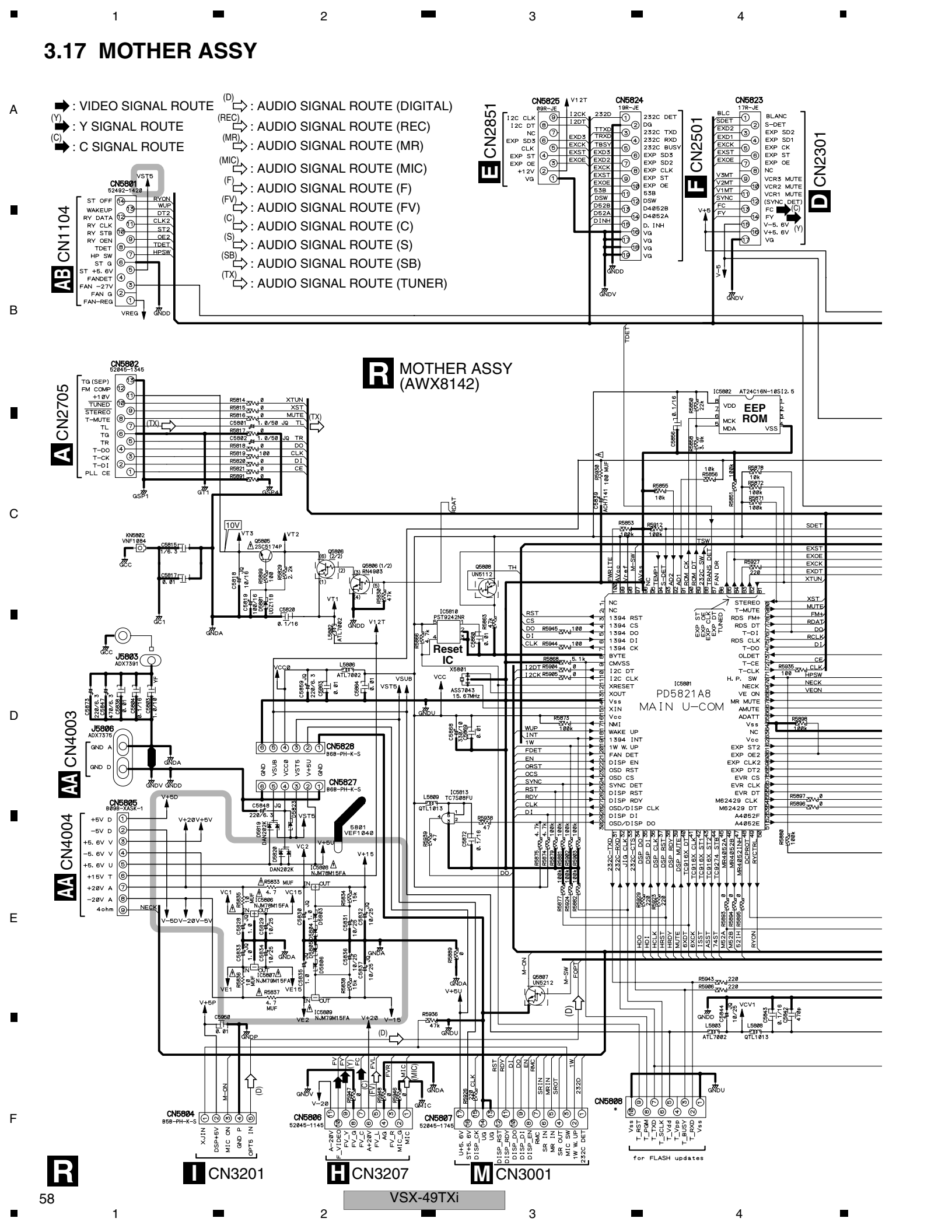

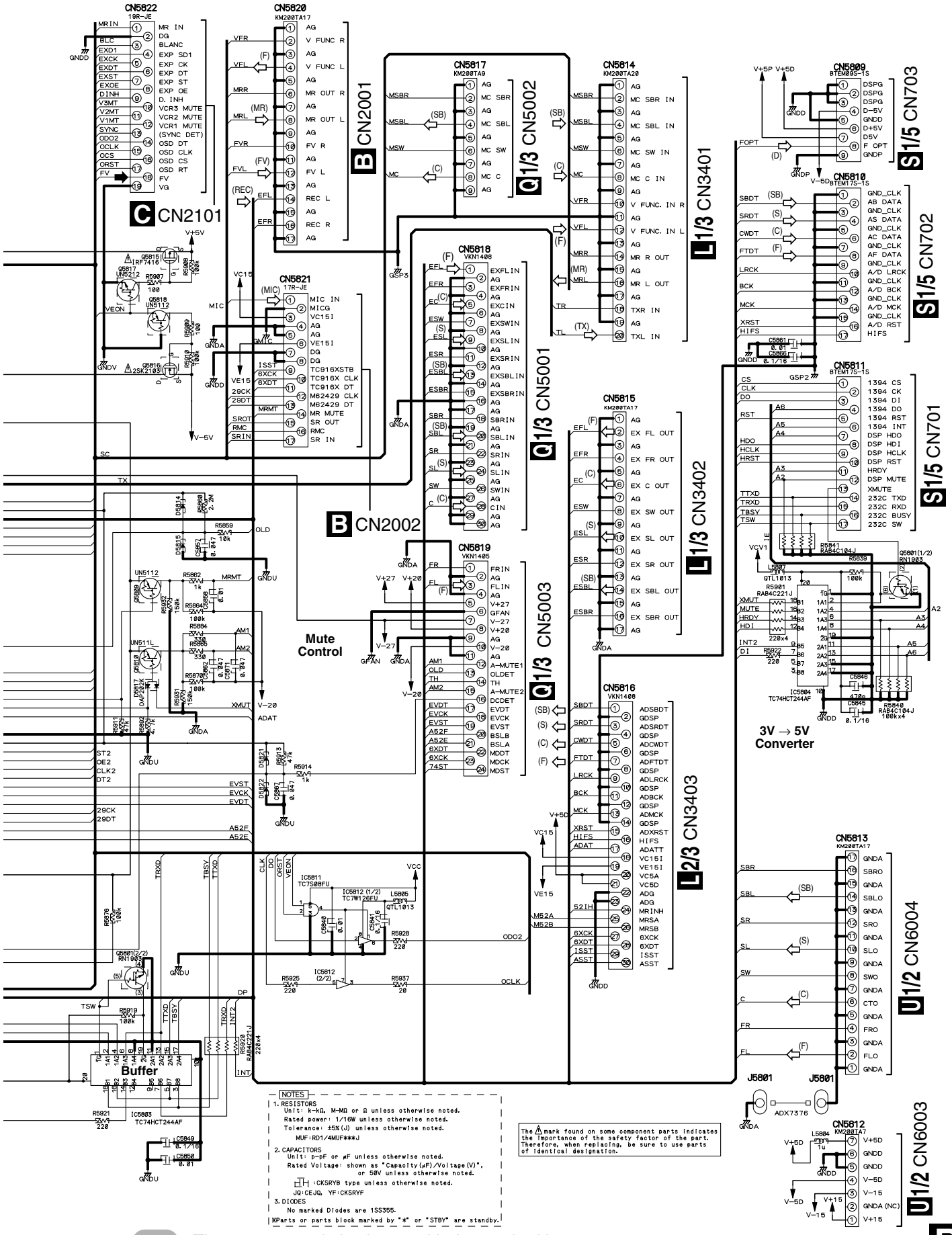

: The power supply is shown with the marked box.

3.18 DSP ASSY(1/5)

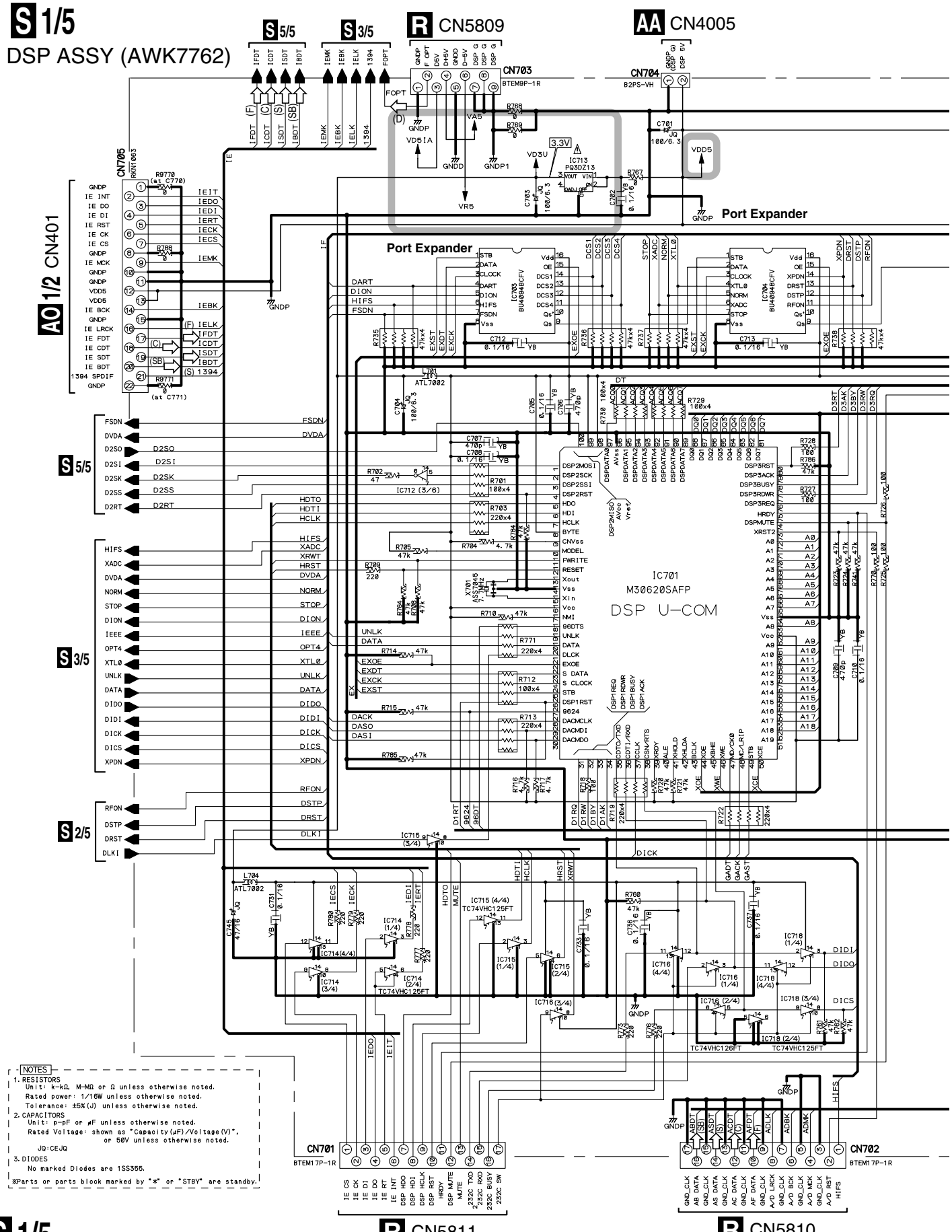

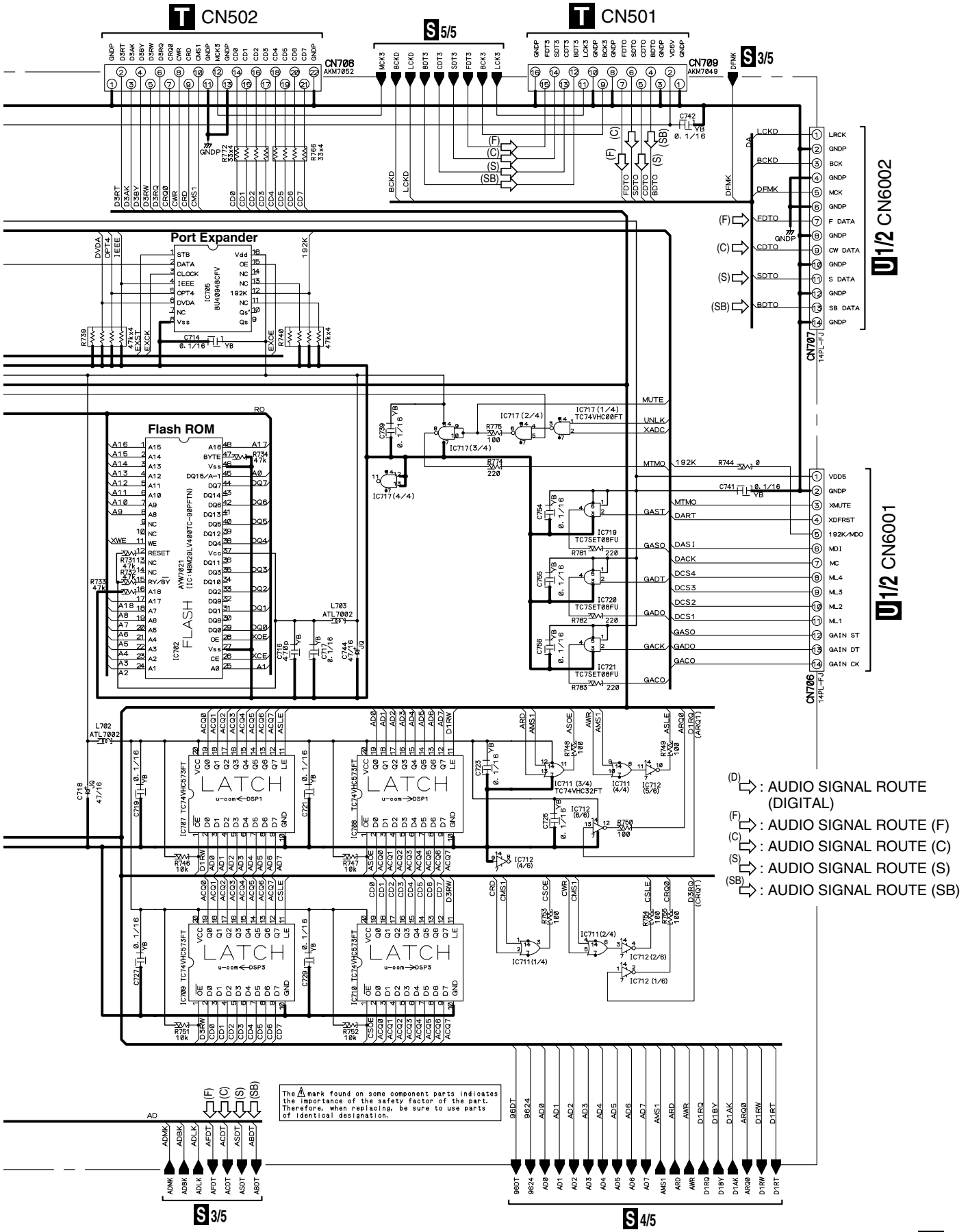

: The power supply is shown with the marked box.

S 1/5

3.19 DSP ASSY(2/5)

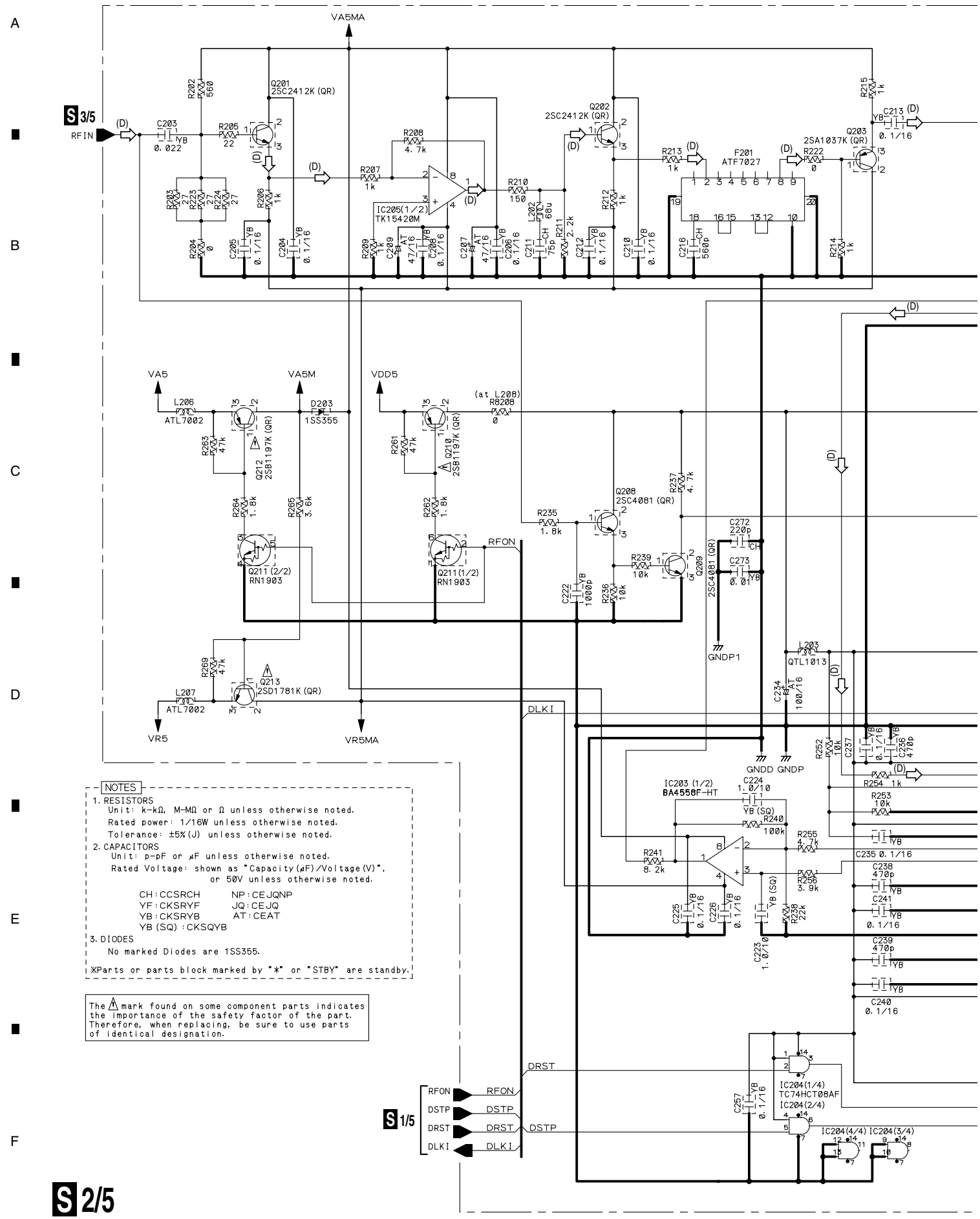

NOTES

1. RESISTORS
   Unit: k-kΩ, M-MΩ or Ω unless otherwise noted.
   Rated power: 1/16W unless otherwise noted.
   Tolerance: ±5%(J) unless otherwise noted.
2. CAPACITORS
   Unit: p-pF or μF unless otherwise noted.
   Rated Voltage: shown as "Capacity(μF)/Voltage(V)", or 50V unless otherwise noted.

CH:CCSRCH	NP:CEJQNP
YF:CKSRYF	JQ:CEJQ
YB:CKSRYB	AT:CEAT
YB (SQ) :CKSQYB	

3. DIODES
   No marked Diodes are 1SS355.

※Parts or parts block marked by "*" or "STBY" are standby.

The ⚠ mark found on some component parts indicates the importance of the safety factor of the part. Therefore, when replacing, be sure to use parts of identical designation.

S 2/5

DSP ASSY (AWK7762)

(D) ⇨ : AUDIO SIGNAL ROUTE (DIGITAL)

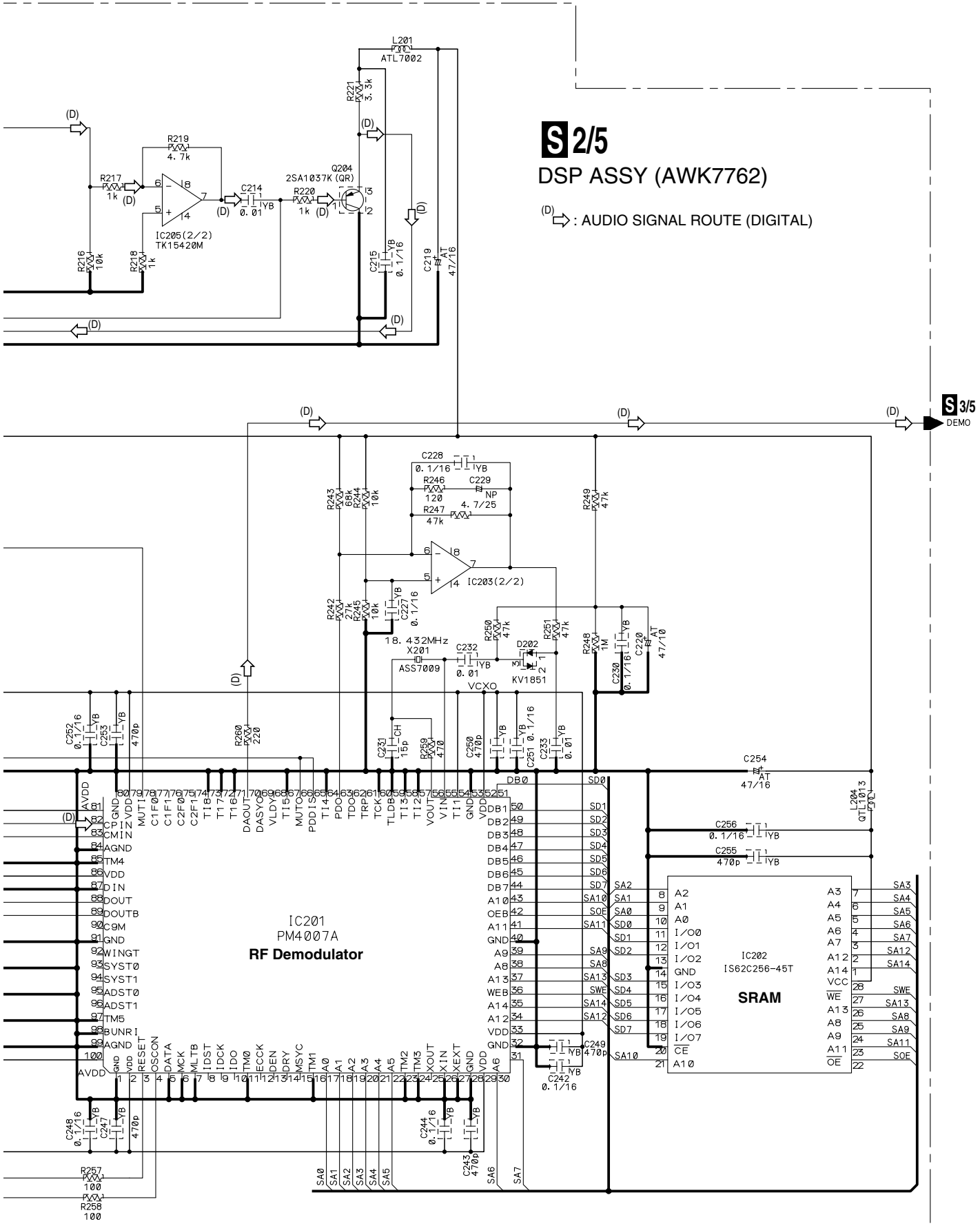

3.20 DSP ASSY(3/5)

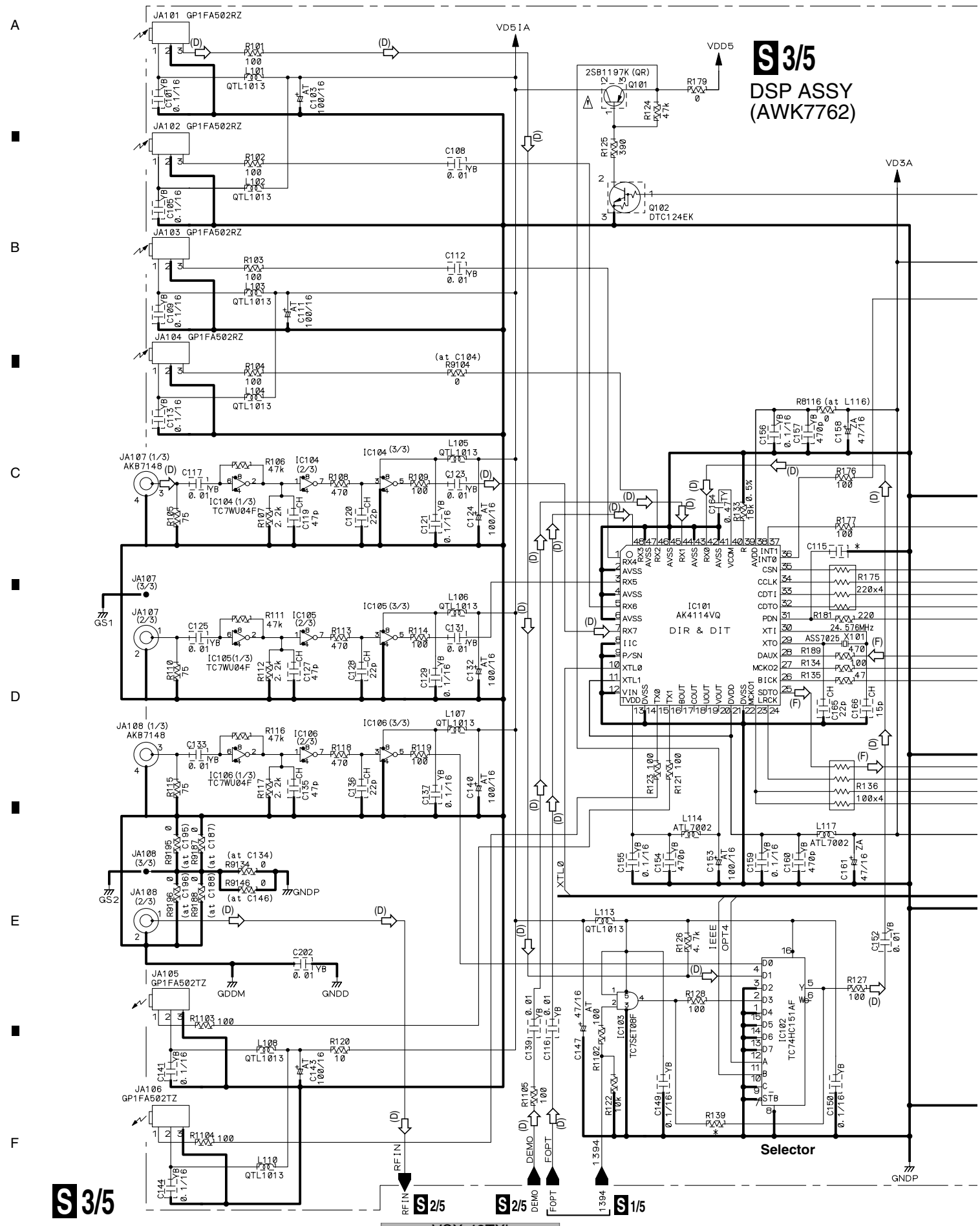

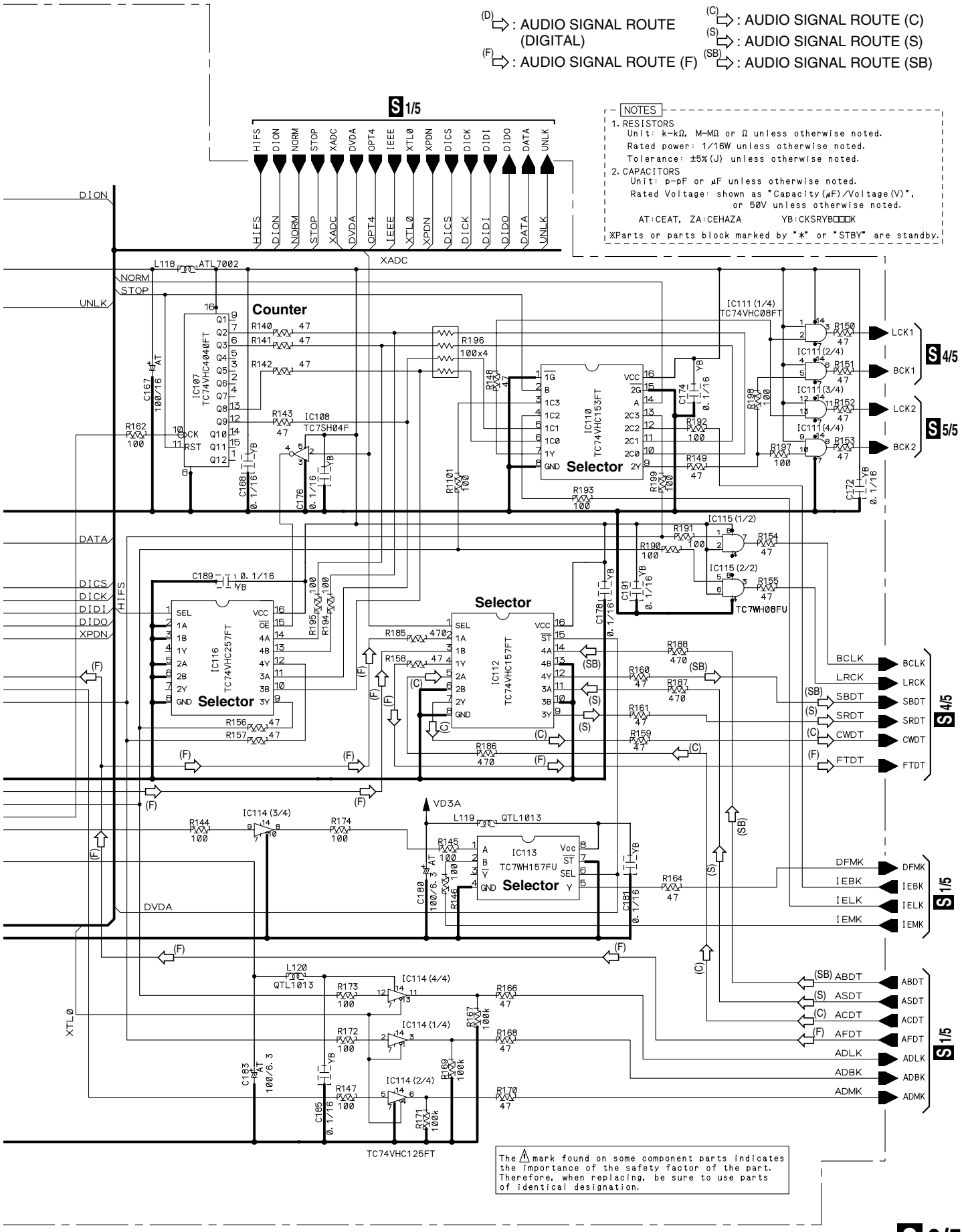
(D) : AUDIO SIGNAL ROUTE (DIGITAL)
(F) : AUDIO SIGNAL ROUTE (F)
(C) : AUDIO SIGNAL ROUTE (C)
(S) : AUDIO SIGNAL ROUTE (S)
(SB) : AUDIO SIGNAL ROUTE (SB)
S 1/5
HIFS DION NORM STOP XADC DVDA OPT4 IEEE XTL0 XPDN DICS DICK DIDI DIDO DATA UNLK
NOTES
1. RESISTORS
Unit: k-kΩ, M-MΩ or Ω unless otherwise noted.
Rated power: 1/16W unless otherwise noted.
Tolerance: ±5%(J) unless otherwise noted.
2. CAPACITORS
Unit: p-pF or μF unless otherwise noted.
Rated Voltage: shown as "Capacity(μF)/Voltage(V)", or 50V unless otherwise noted.
AT:CEAT, ZA:CEHAZA YB:CKSRYB□□□K
※Parts or parts block marked by "*" or "STBY" are standby.
Counter
IC107 TC74VHC4040FT
IC108 TC7SH04F
IC110 TC74VHC153FT
Selector
IC111 (1/4) TC74VHC08FT
IC111 (2/4)
IC111 (3/4)
IC111 (4/4)
IC115 (1/2)
IC115 (2/2)
TC7WH08FU
IC116 TC74VHC257FT
IC112 TC74VHC157FT
IC113 TC7WH157FU
IC114 (3/4)
IC114 (4/4)
IC114 (1/4)
IC114 (2/4)
TC74VHC125FT
L118 ATL7002
L119 QTL1013
L120 QTL1013
VD3A
DVDA
XADC
XTL0
LCK1 BCK1 LCK2 BCK2
BCLK LRCK SBDT SRDT CWDT FTDT
DFMK IEBK IELK IEMK
ABDT ASDT ACDT AFDT ADLK ADBK ADMK
S 4/5
S 5/5
S 1/5
The ⚠ mark found on some component parts indicates the importance of the safety factor of the part. Therefore, when replacing, be sure to use parts of identical designation.

S 3/5

3.21 DSP ASSY(4/5)

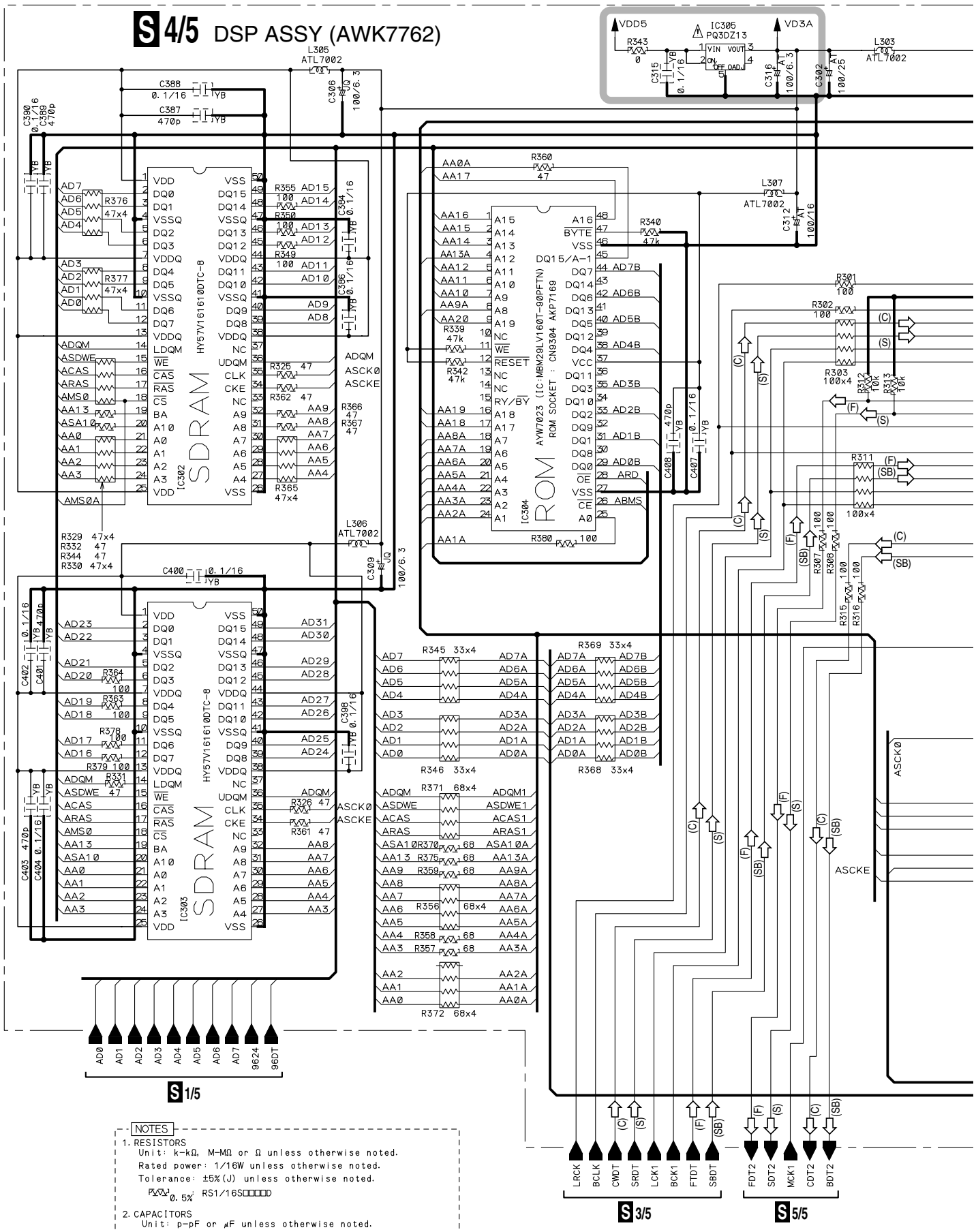

NOTES

1. RESISTORS
   Unit: k-kΩ, M-MΩ or Ω unless otherwise noted.
   Rated power: 1/16W unless otherwise noted.
   Tolerance: ±5%(J) unless otherwise noted.
   0.5%: RS1/16S□□□□D

2. CAPACITORS
   Unit: p-pF or μF unless otherwise noted.
   Rated Voltage: shown as "Capacity(μF)/Voltage(V)", or 50V unless otherwise noted.

※Parts or parts block marked by "*" or "STBY" are standby.

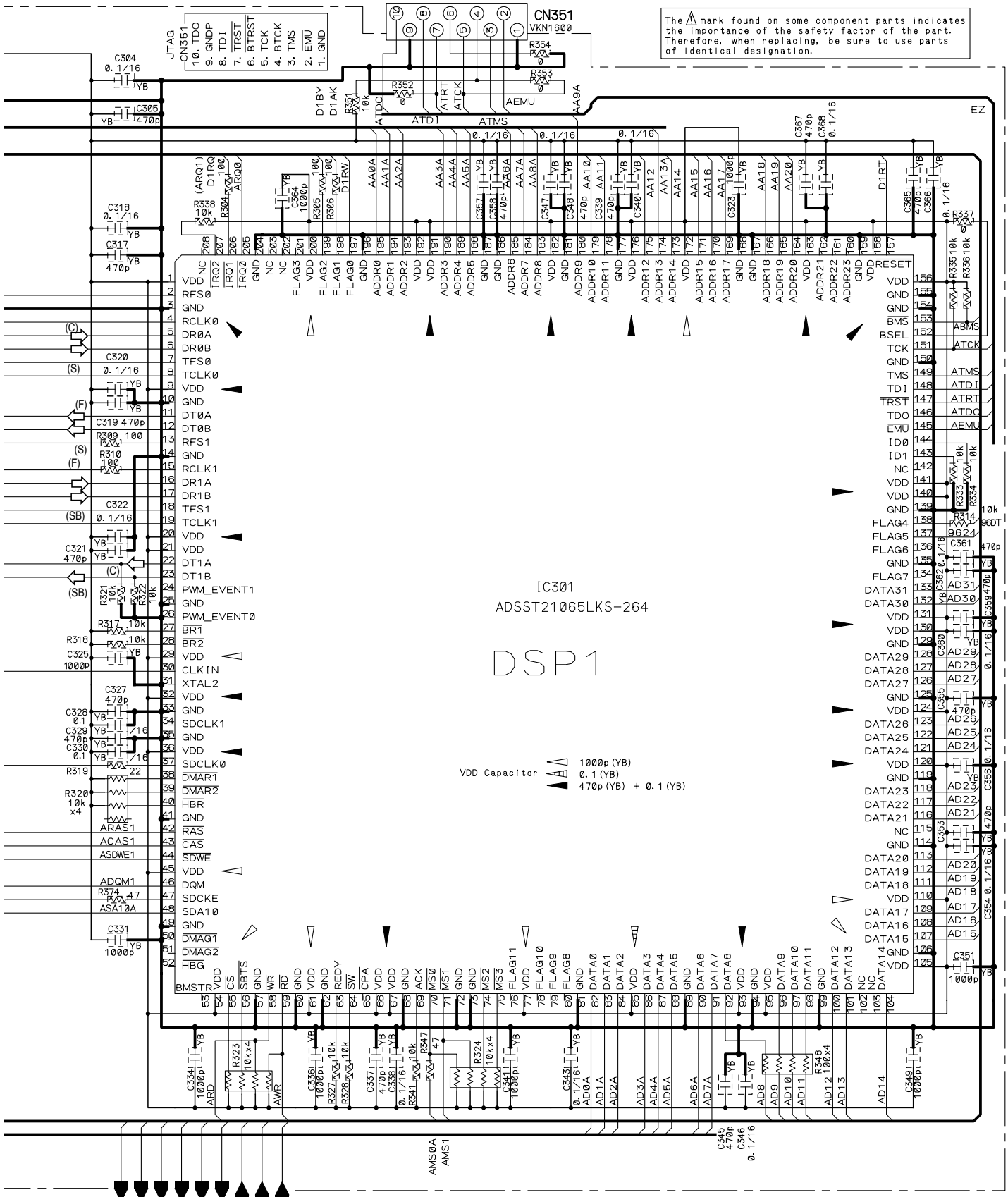

(F) ⇨ : AUDIO SIGNAL ROUTE (F)
(C) ⇨ : AUDIO SIGNAL ROUTE (C)
(S) ⇨ : AUDIO SIGNAL ROUTE (S)
(SB) ⇨ : AUDIO SIGNAL ROUTE (SB)

: The power supply is shown with the marked box.

S 4/5

3.22 DSP ASSY(5/5)

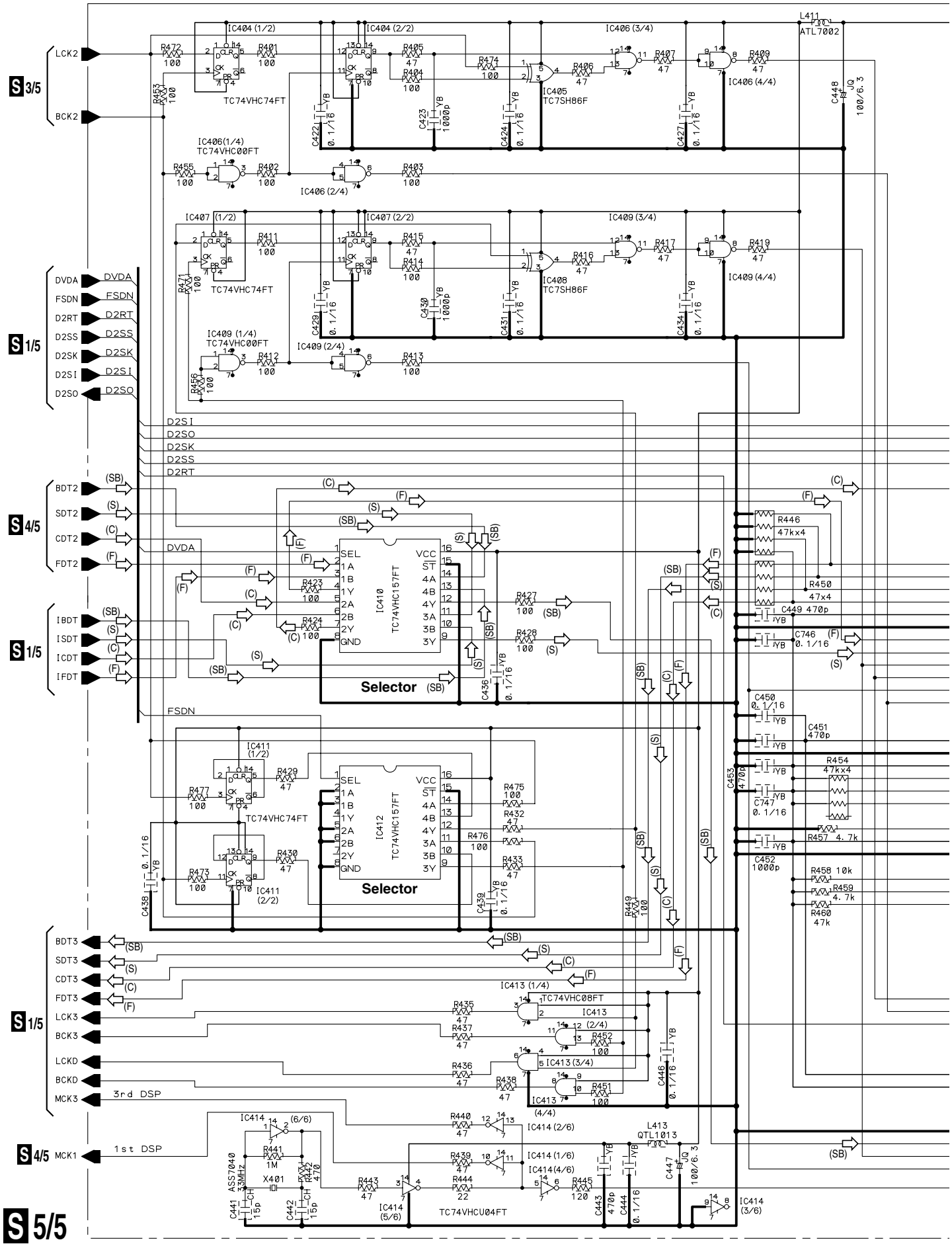

S 5/5 DSP ASSY (AWK7762)

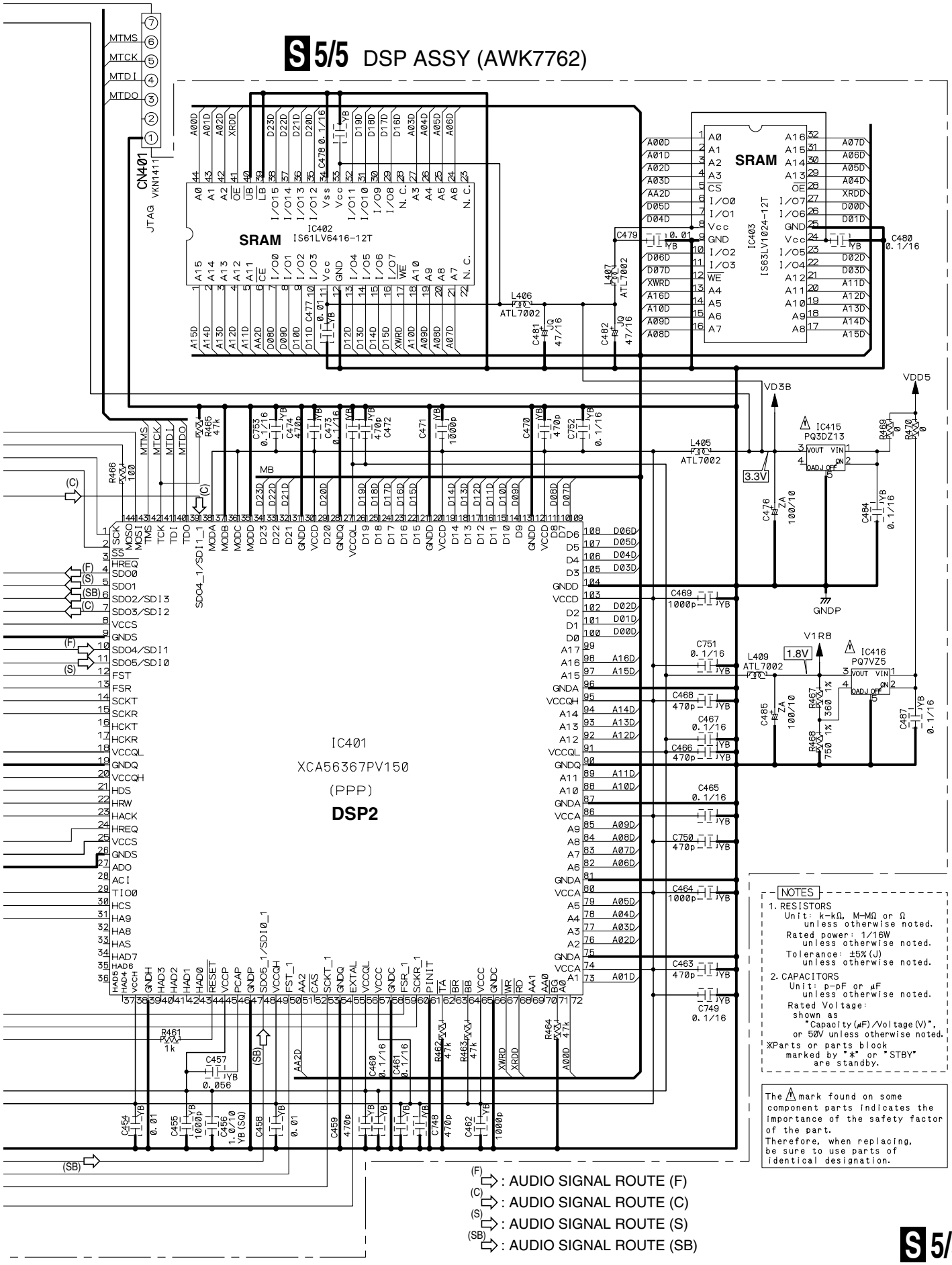

NOTES

1. RESISTORS
   Unit: k-kΩ, M-MΩ or Ω unless otherwise noted.
   Rated power: 1/16W unless otherwise noted.
   Tolerance: ±5%(J) unless otherwise noted.
2. CAPACITORS
   Unit: p-pF or μF unless otherwise noted.
   Rated Voltage: shown as "Capacity(μF)/Voltage(V)", or 50V unless otherwise noted.

※Parts or parts block marked by "*" or "STBY" are standby.

The ⚠ mark found on some component parts indicates the importance of the safety factor of the part.
Therefore, when replacing, be sure to use parts of identical designation.

3.23 DSP3 ASSY

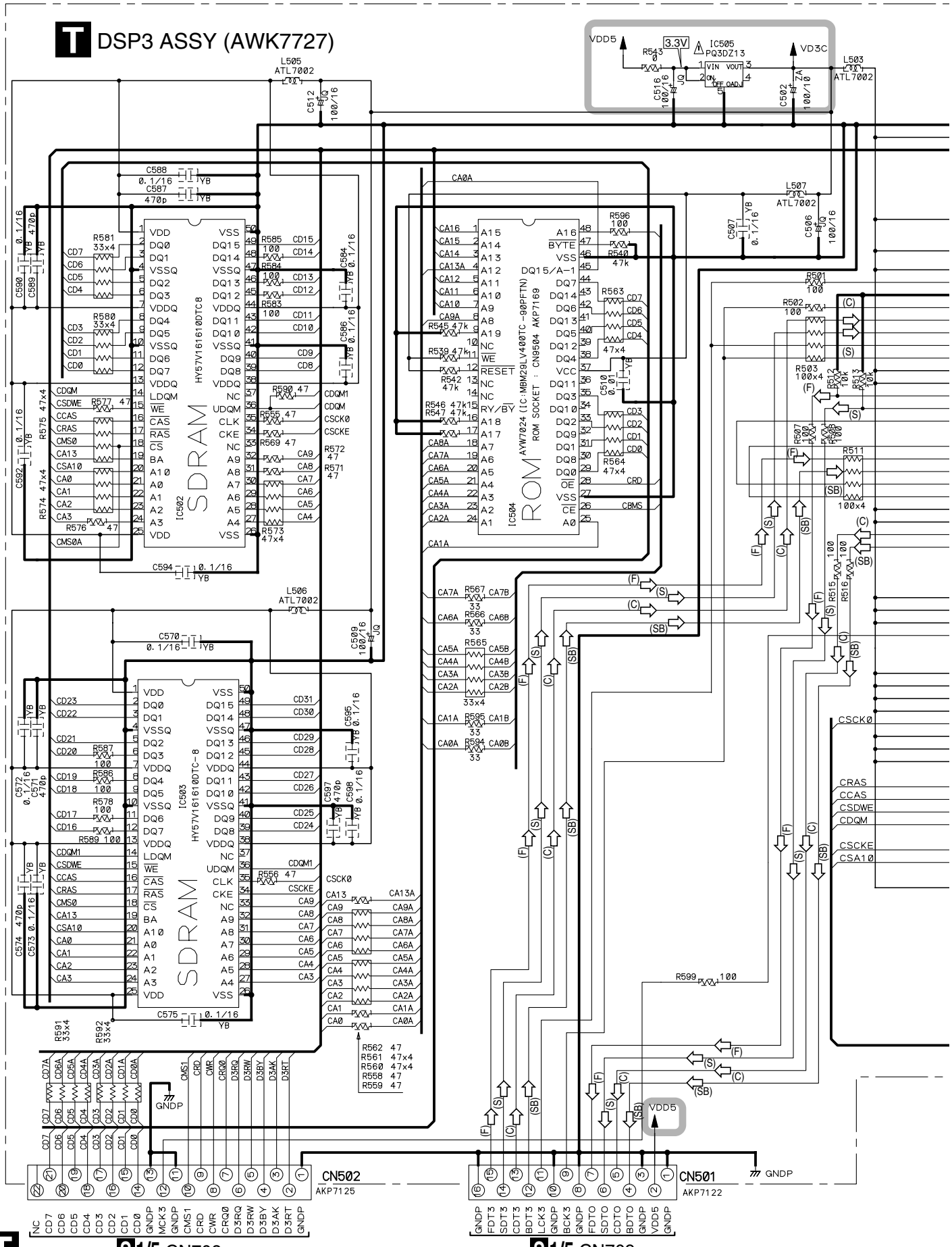

S 1/5 CN708

S 1/5 CN709

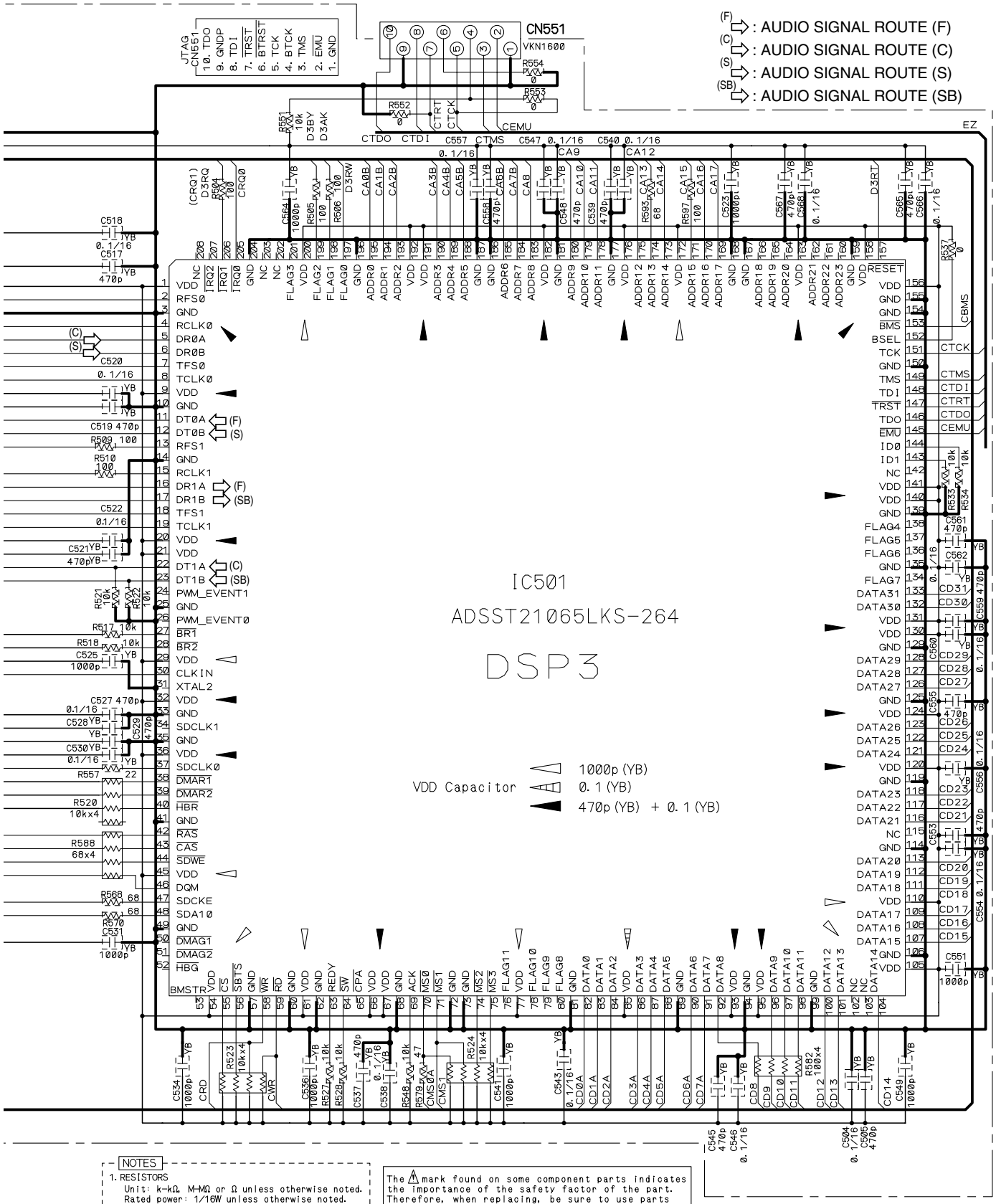

NOTES

1. RESISTORS
   Unit: k-kΩ, M-MΩ or Ω unless otherwise noted.
   Rated power: 1/16W unless otherwise noted.
   Tolerance: ±5%(J) unless otherwise noted.
   0.5% : RS1/16S□□□□D
2. CAPACITORS
   Unit: p-pF or μF unless otherwise noted.
   Rated Voltage:
   shown as "Capacity(μF)/Voltage(V)",
   or 50V unless otherwise noted.

※Parts or parts block marked by "*" or "STBY" are standby.

The ⚠ mark found on some component parts indicates the importance of the safety factor of the part. Therefore, when replacing, be sure to use parts of identical designation.

: The power supply is shown with the marked box.

3.24 DAC10 ASSY(1/2)

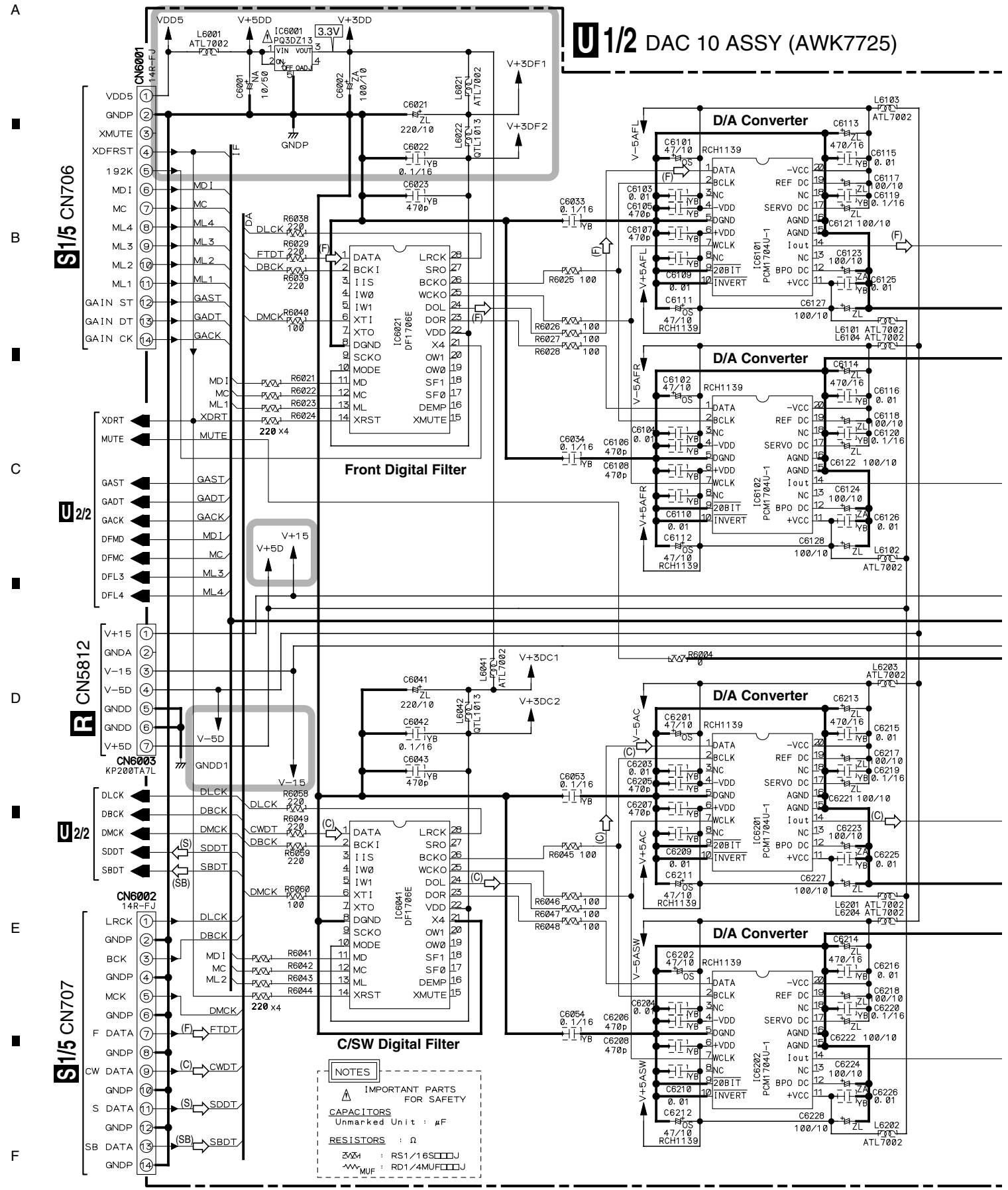

(F) : AUDIO SIGNAL ROUTE (F)
(C) : AUDIO SIGNAL ROUTE (C)
(S) : AUDIO SIGNAL ROUTE (S)
(SB) : AUDIO SIGNAL ROUTE (SB)

: The power supply is shown with the marked box.

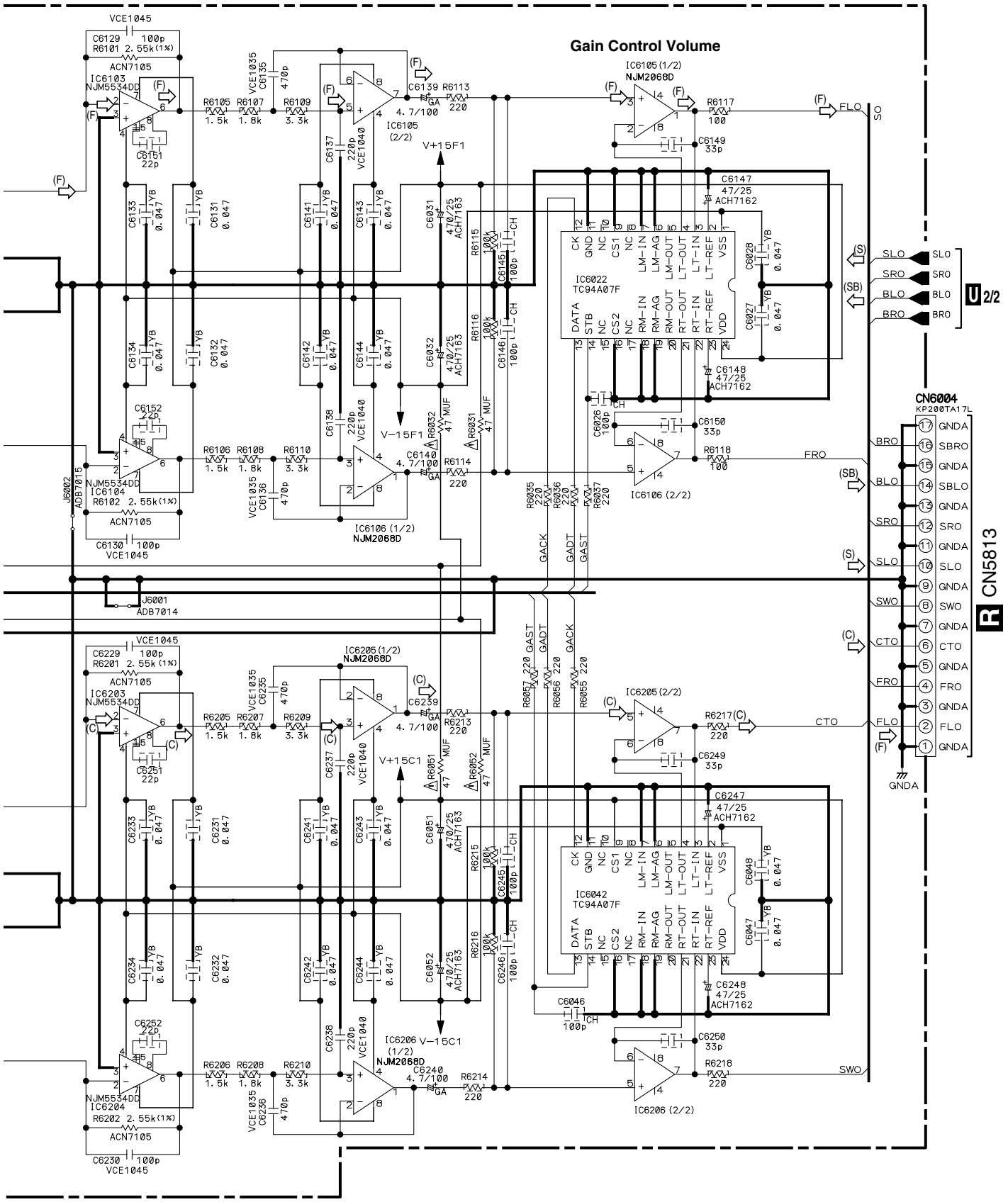

U 1/2

3.25 DAC10 ASSY(2/2)

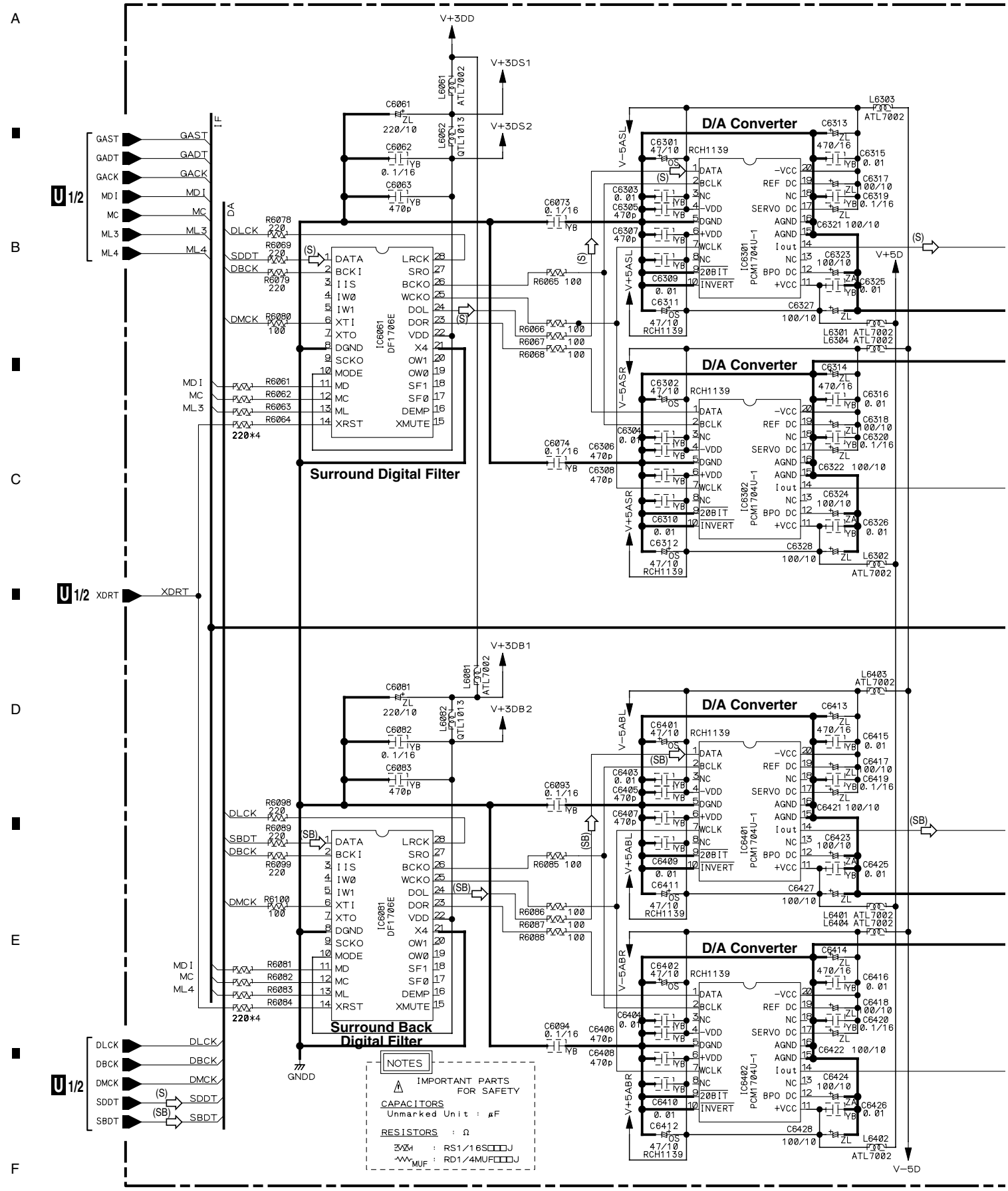

U 2/2

U 2/2 DAC 10 ASSY (AWK7725)

(S) ⇨ : AUDIO SIGNAL ROUTE (S)
(SB) ⇨ : AUDIO SIGNAL ROUTE (SB)

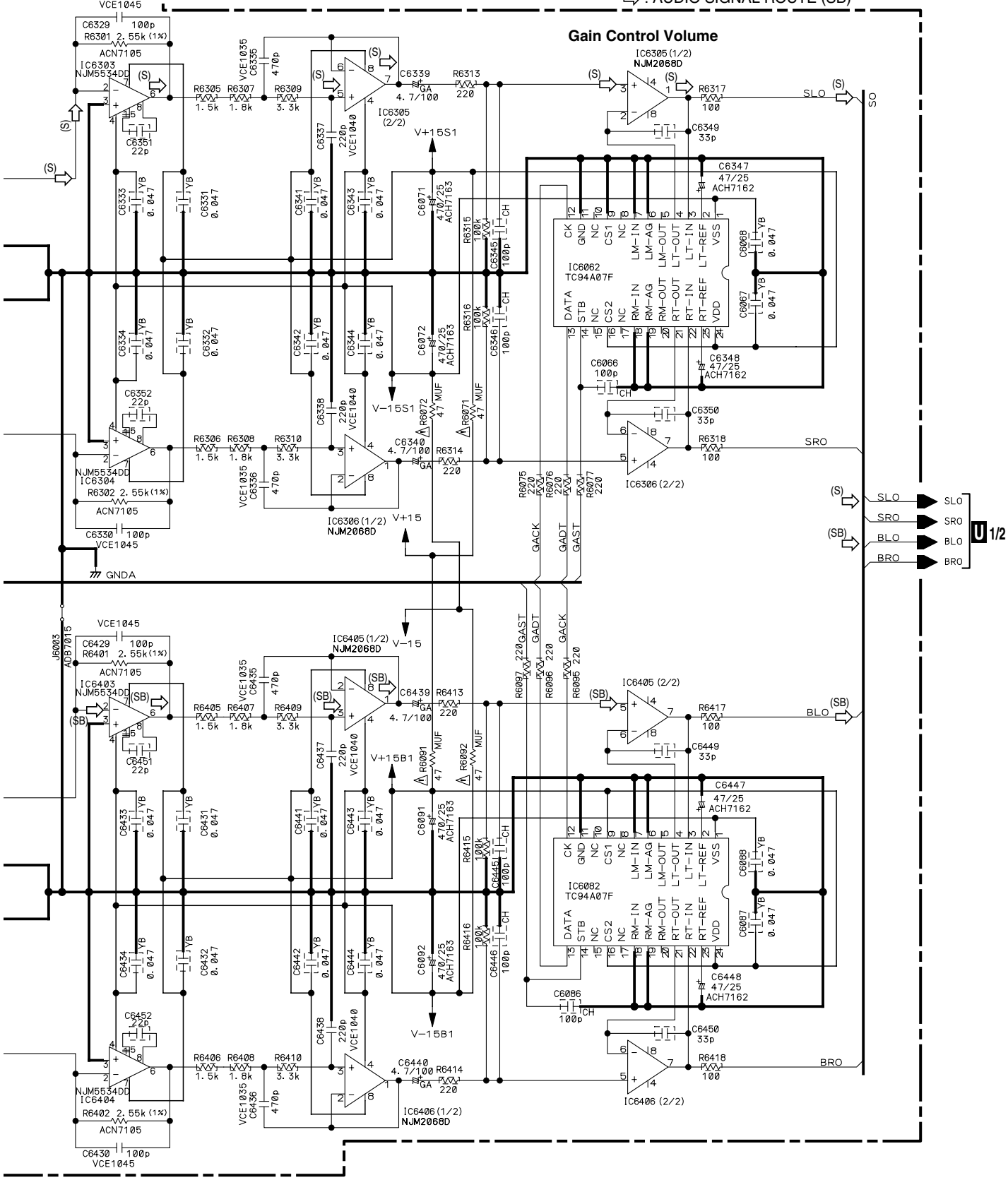

3.26 POWER AMP(L) and POWER AMP(C) ASSYS

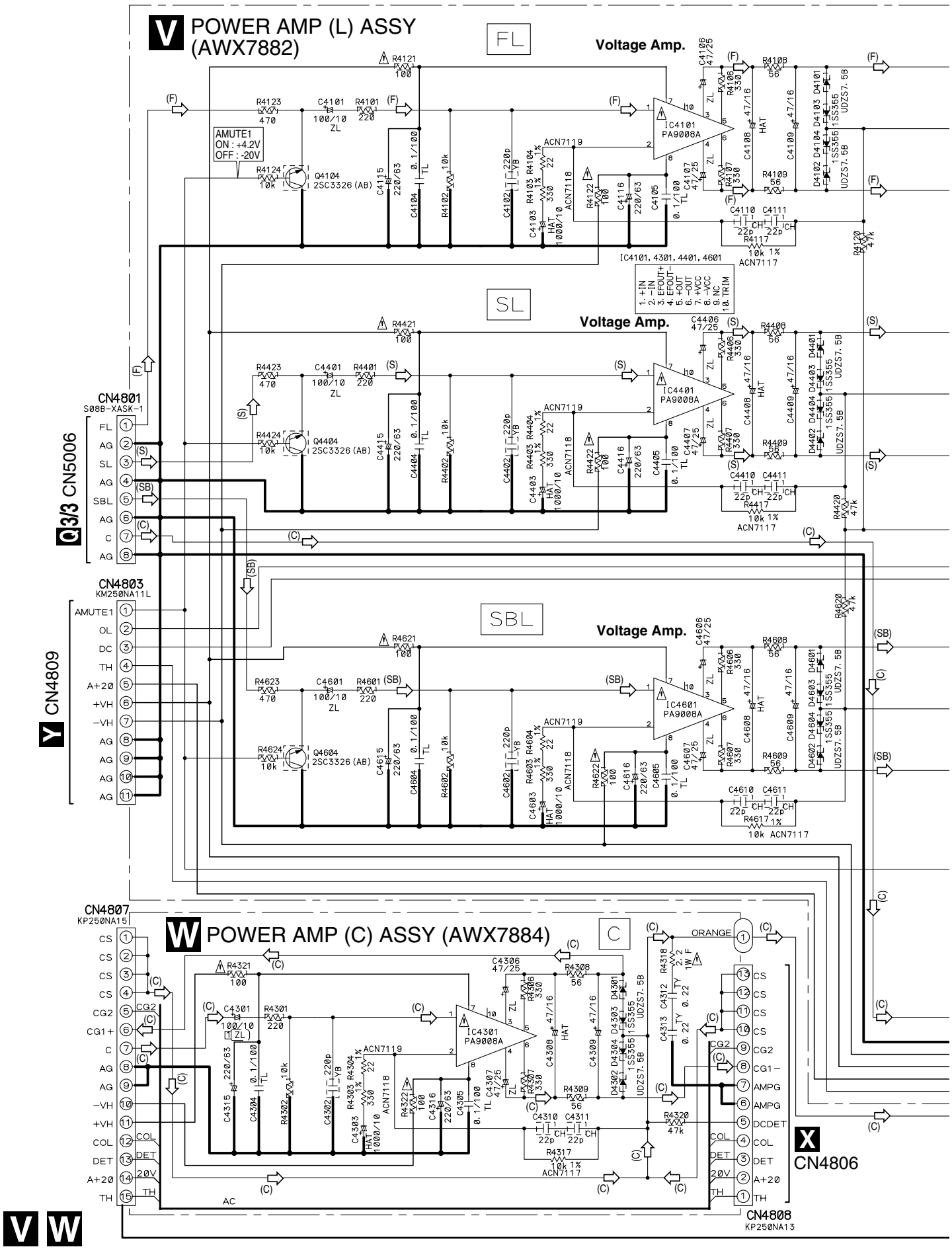

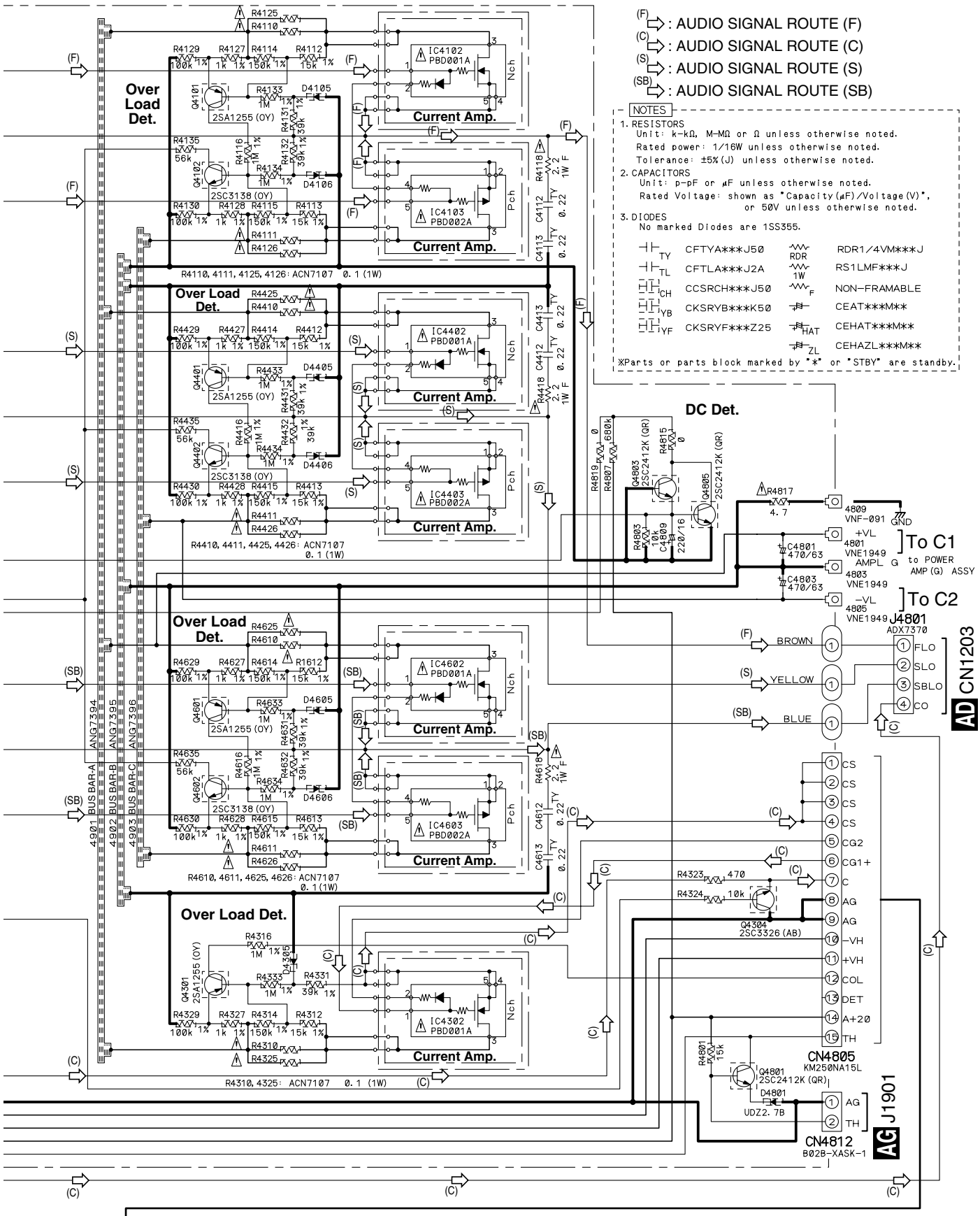
(F) : AUDIO SIGNAL ROUTE (F)
(C) : AUDIO SIGNAL ROUTE (C)
(S) : AUDIO SIGNAL ROUTE (S)
(SB) : AUDIO SIGNAL ROUTE (SB)
NOTES
1. RESISTORS
Unit: k-kΩ, M-MΩ or Ω unless otherwise noted.
Rated power: 1/16W unless otherwise noted.
Tolerance: ±5%(J) unless otherwise noted.
2. CAPACITORS
Unit: p-pF or μF unless otherwise noted.
Rated Voltage: shown as "Capacity(μF)/Voltage(V)", or 50V unless otherwise noted.
3. DIODES
No marked Diodes are 1SS355.
CFTYA***J50
CFTLA***J2A
CCSRCH***J50
CKSRYB***K50
CKSRYF***Z25
RDR1/4VM***J
RS1LMF***J
NON-FRAMABLE
CEAT***M**
CEHAT***M**
CEHAZL***M**
※Parts or parts block marked by "*" or "STBY" are standby.
Over Load Det.
Current Amp.
IC4102 PBD001A
IC4103 PBD002A
IC4402 PBD001A
IC4403 PBD002A
IC4602 PBD001A
IC4603 PBD002A
IC4302 PBD001A
Nch
Pch
R4110, 4111, 4125, 4126: ACN7107 0.1 (1W)
R4410, 4411, 4425, 4426: ACN7107 0.1 (1W)
R4610, 4611, 4625, 4626: ACN7107 0.1 (1W)
R4310, 4325: ACN7107 0.1 (1W)
DC Det.
To C1
to POWER AMP (G) ASSY
To C2
J4801
ADX7370
CN1203
AD
BROWN
YELLOW
BLUE
FLO
SLO
SBLO
CO
CN4805
KM250NA15L
CN4812
B02B-XASK-1
J1901
AG
ANG7394
ANG7395
ANG7396
BUS BAR-A
BUS BAR-B
BUS BAR-C
4901
4902
4903
The ⚠ mark found on some component parts indicates the importance of the safety factor of the part. Therefore, when replacing, be sure to use parts of identical designation.

3.27 POWER AMP(R), POWER AMP(BR) and POWER AMP(G) ASSYS

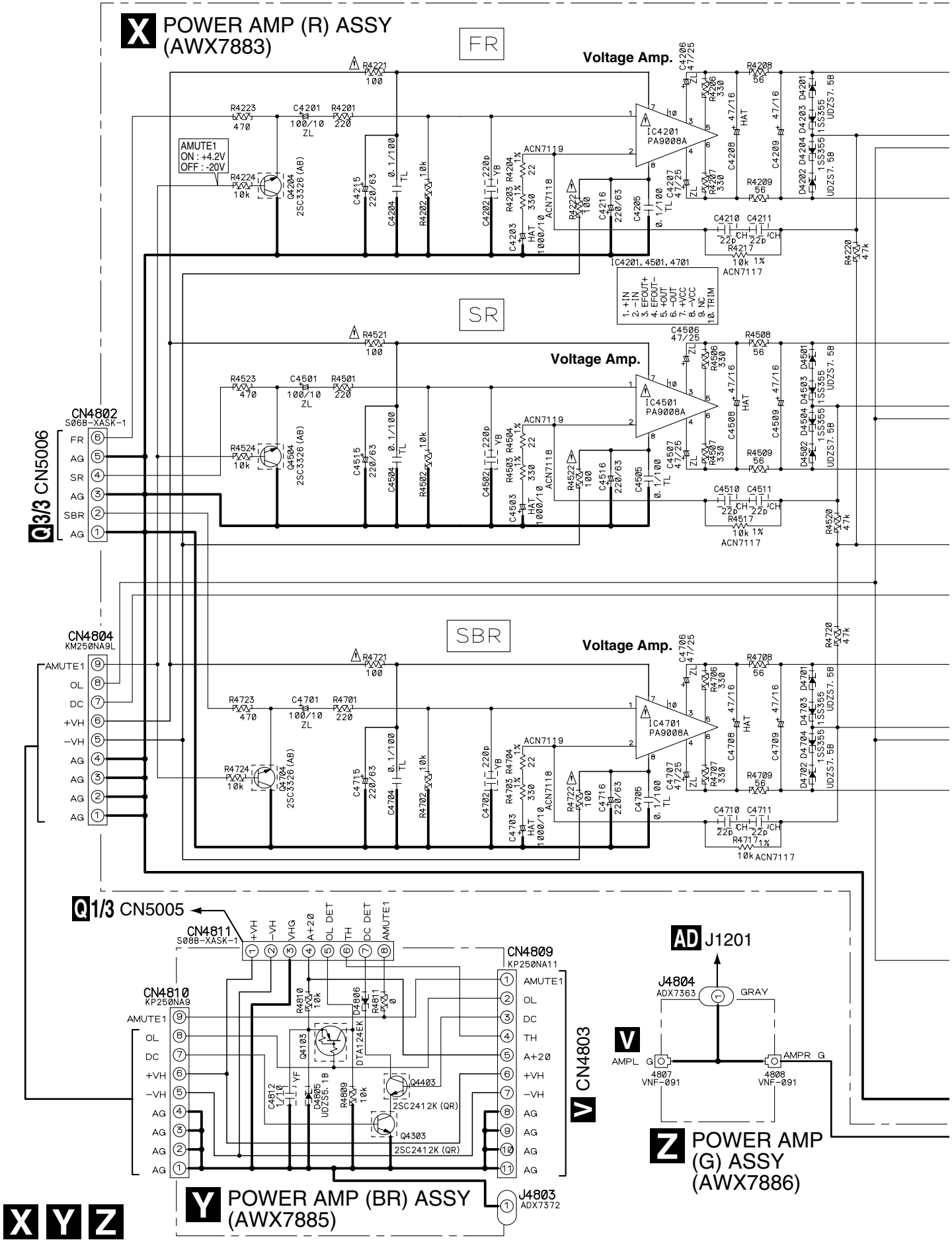

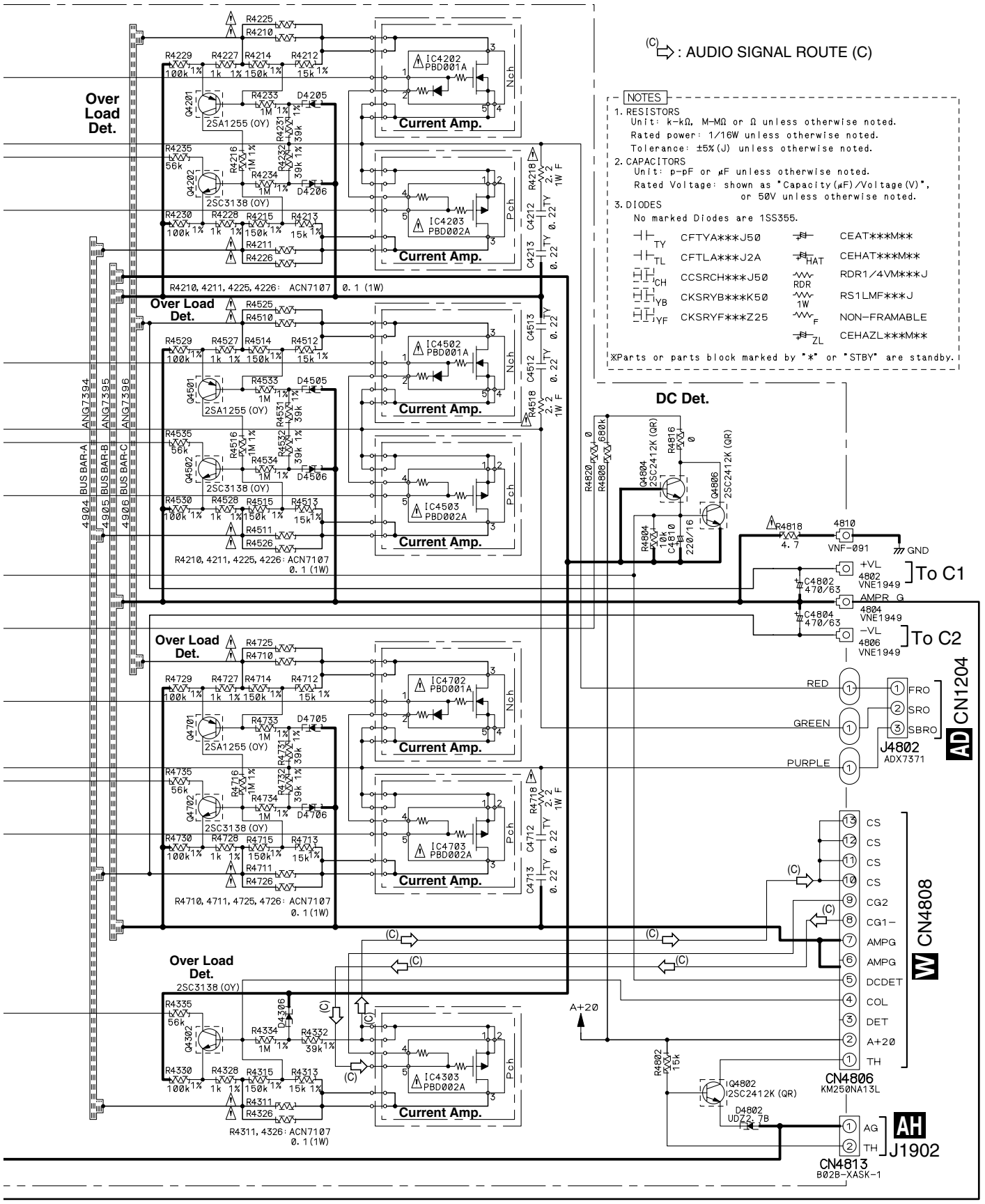

The ⚠ mark found on some component parts indicates the importance of the safety factor of the part. Therefore, when replacing, be sure to use parts of identical designation.

3.28 LOCAL SUPPLY ASSY

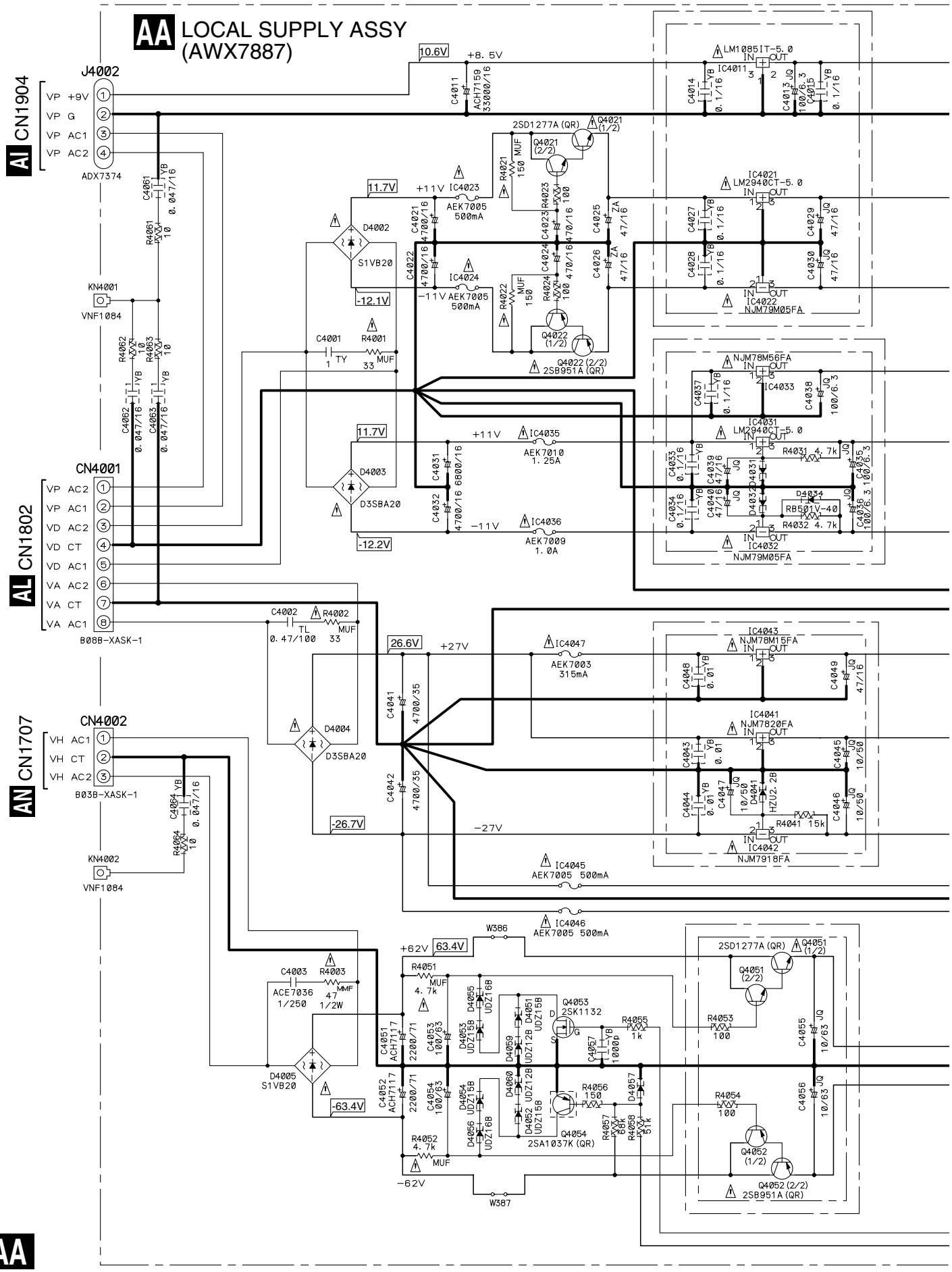

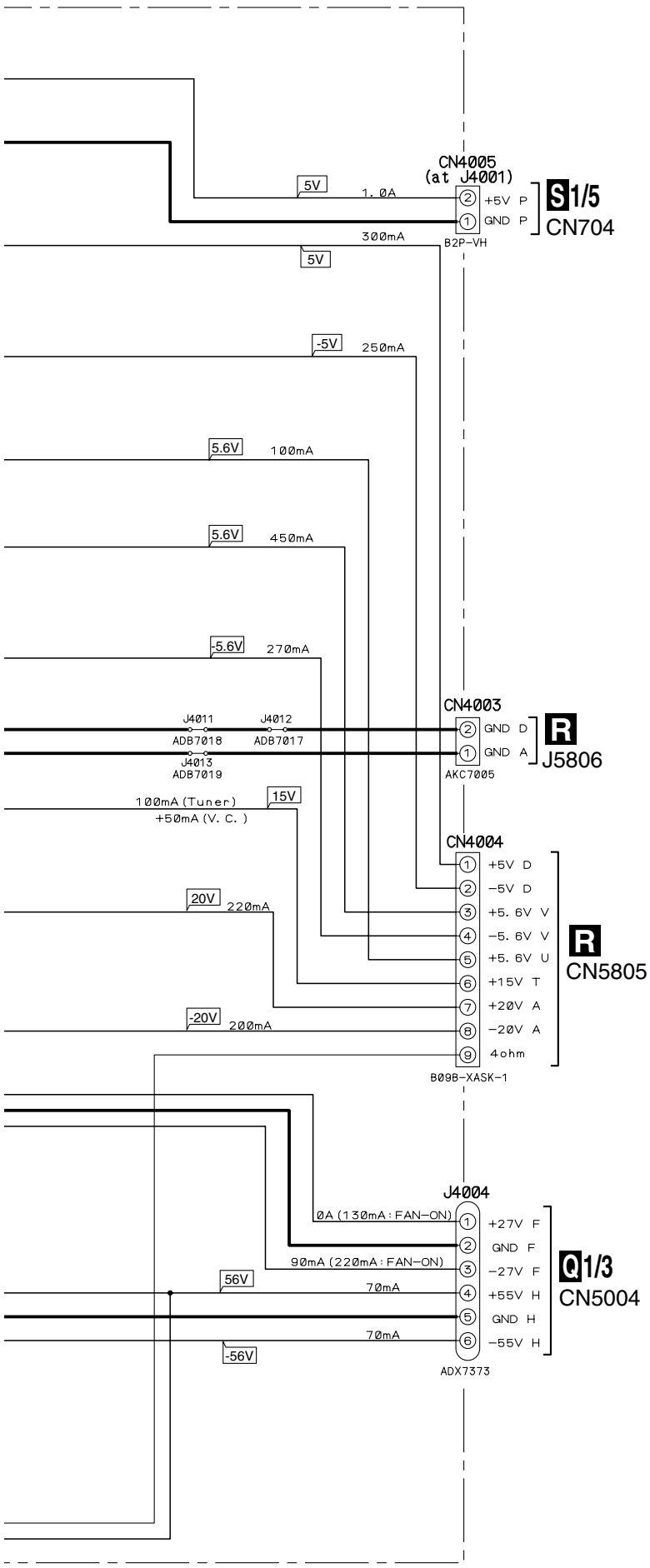

CAUTION : FOR CONTINUED PROTECTION AGAINST RISK OF FIRE. REPLACE ONLY WITH SAME TYPE NO. 491.315 FOR IC4047 MFD, BY LITTELFUSE INC.

CAUTION : FOR CONTINUED PROTECTION AGAINST RISK OF FIRE. REPLACE ONLY WITH SAME TYPE NO. 491.500 FOR IC4023 AND IC4024 MFD, BY LITTELFUSE INC.

CAUTION : FOR CONTINUED PROTECTION AGAINST RISK OF FIRE. REPLACE ONLY WITH SAME TYPE NO. 491.500 FOR IC4045 AND IC4046 MFD, BY LITTELFUSE INC.

CAUTION : FOR CONTINUED PROTECTION AGAINST RISK OF FIRE. REPLACE ONLY WITH SAME TYPE NO. 491001 FOR IC4036 MFD, BY LITTELFUSE INC.

CAUTION : FOR CONTINUED PROTECTION AGAINST RISK OF FIRE. REPLACE ONLY WITH SAME TYPE NO. 4911.25 FOR IC4035 MFD, BY LITTELFUSE INC.

NOTES

1. RESISTORS
   Unit: k-kΩ, M-MΩ or Ω unless otherwise noted.
   Rated power: 1/16W unless otherwise noted.
   Tolerance: ±5%(J) unless otherwise noted.

   MUF RD1/8MUF***J MMF RD1/2MMF***J

2. CAPACITORS
   Unit: p-pF or μF unless otherwise noted.
   Rated Voltage: shown as "Capacity(μF)/Voltage(V)", or 50V unless otherwise noted.

   TY CFTYA***J50 CEAT***M**
   TL CFTLA***J2A ZA CEHAZA***M**
   YB CKSRYB***K** JQ CEJQ***M**

3. DIODES
   No marked Diodes are 1SS355.

※Parts or parts block marked by "*" or "STBY" are standby.

The ⚠ mark found on some component parts indicates the importance of the safety factor of the part. Therefore, when replacing, be sure to use parts of identical designation.

AA

3.29 AC PRIMARY, POWER SW, SP(A), FL SUPPLY and STANDBY ASSYS

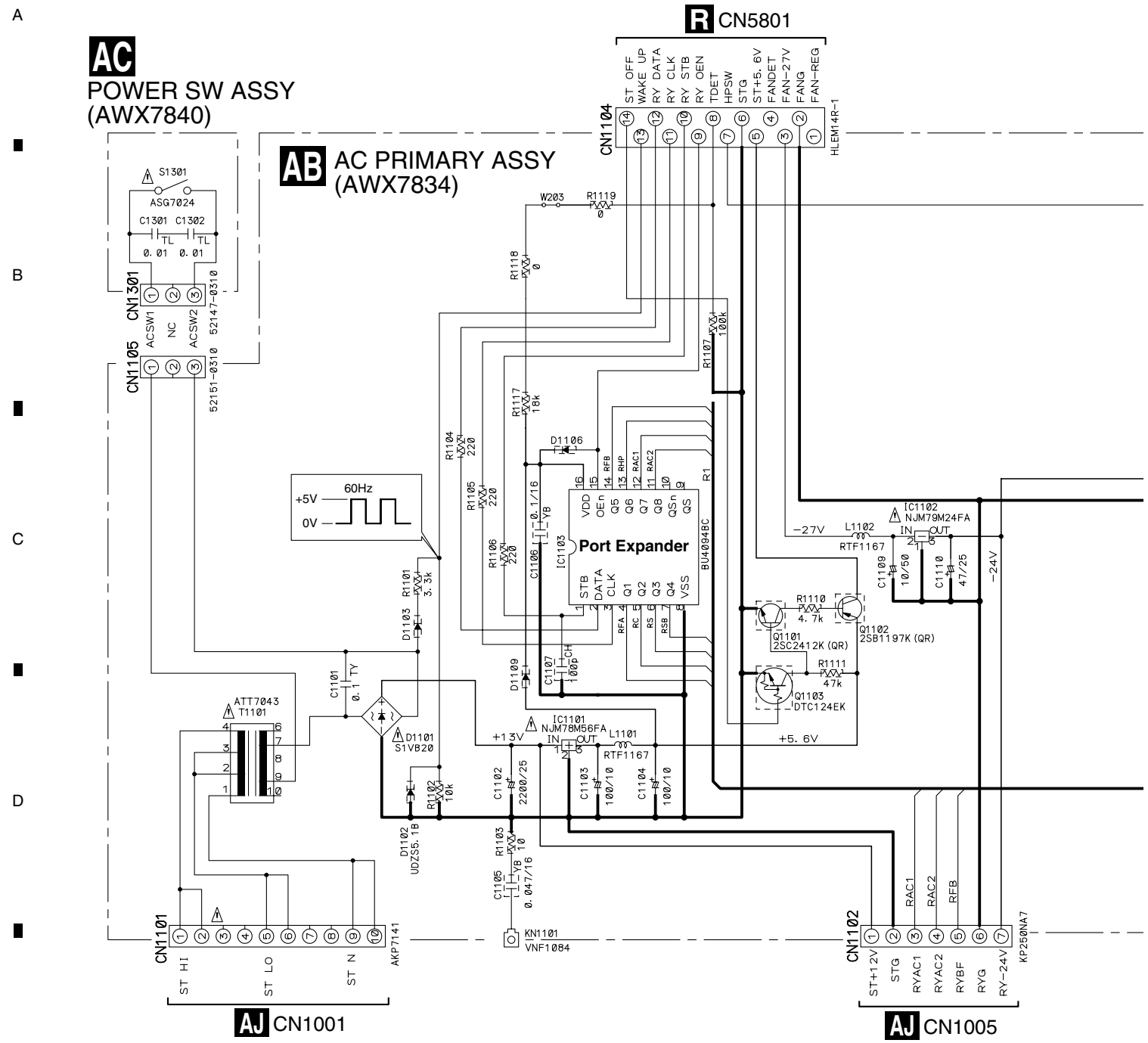

AB AC AE

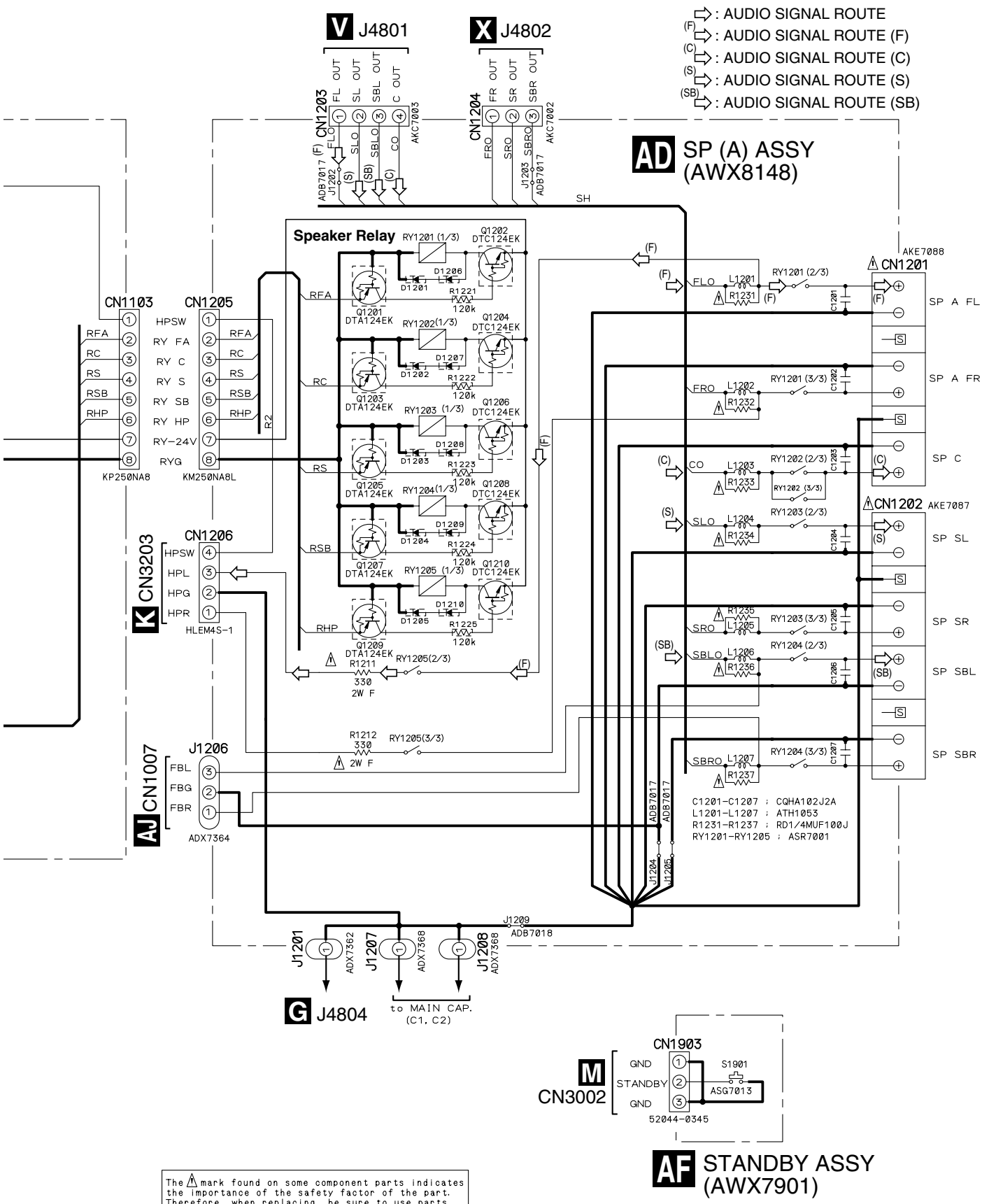

The ⚠ mark found on some component parts indicates the importance of the safety factor of the part. Therefore, when replacing, be sure to use parts of identical designation.

AB AD AF

3.30 POSISTER (L) (R), DSP DIODE, SP (B), DIODE, FUSE AND TARANS (A) (B)

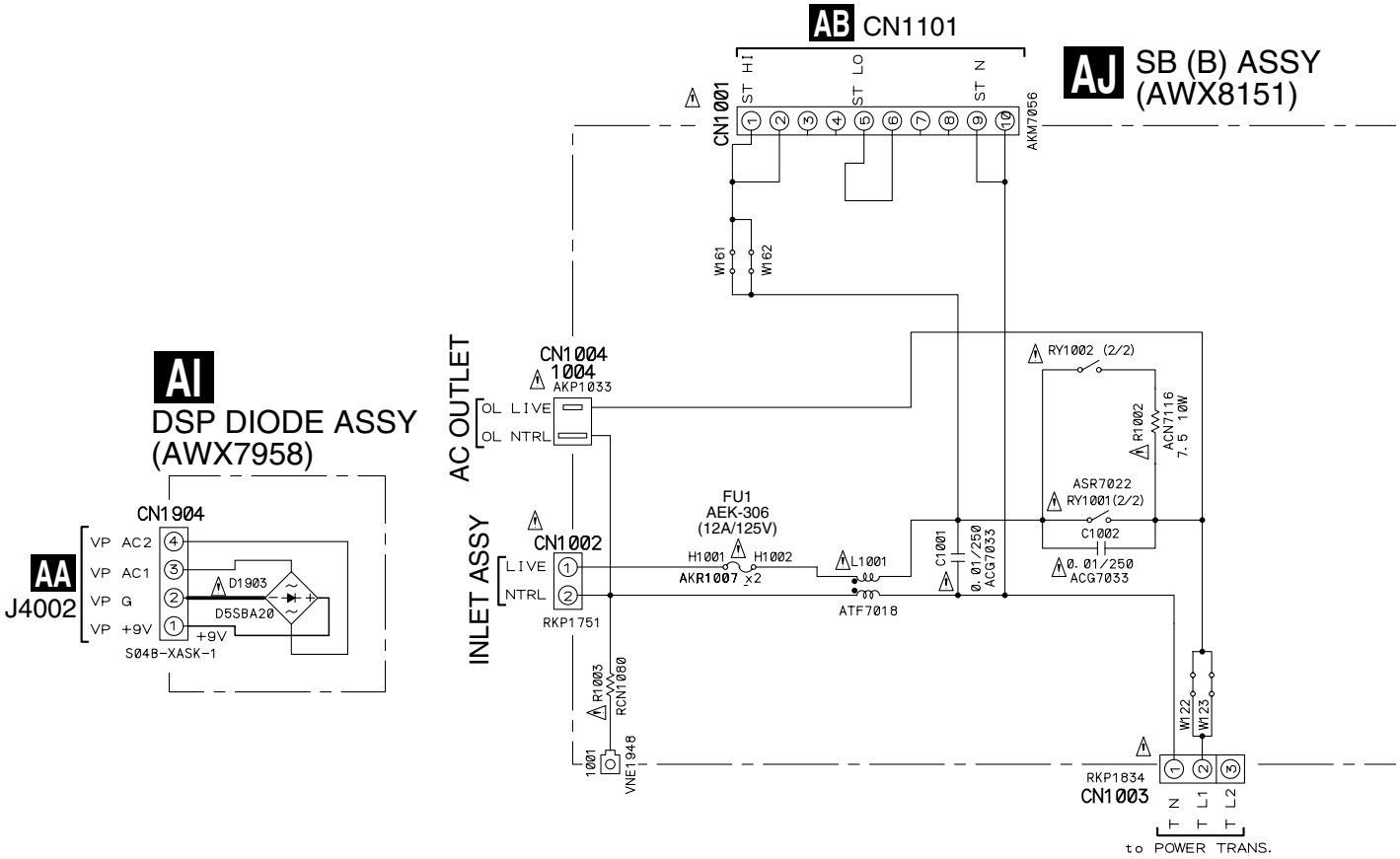

NOTES

1. RESISTORS
   Unit: k-kΩ, M-MΩ or Ω unless otherwise noted.
   Rated power: 1/16W unless otherwise noted.
   Tolerance: ±5%(J) unless otherwise noted.
2. CAPACITORS
   Unit: p-pF or μF unless otherwise noted.
   Rated Voltage: shown as "Capacity(μF)/Voltage(V)", or 50V unless otherwise noted.
3. DIODES
   No marked Diodes are 1SS355.
4. VOLTAGE
   Indicated in DC Voltage.

MUF	RD1/8MUF***J	TY	CFTYA***J50
MMF	RD1/2MMF***J	HA	CQHA***J**
			CEAT***M**
		JQ	CEJQ***M**

※Parts or parts block marked by "*" or "STBY" are standby.

The ⚠ mark found on some component parts indicates the importance of the safety factor of the part. Therefore, when replacing, be sure to use parts of identical designation.

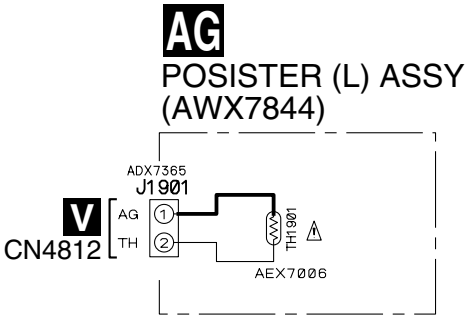

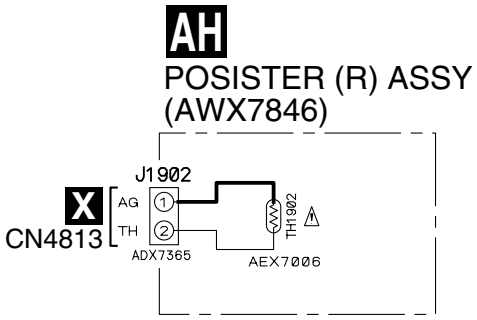

• NOTE FOR FUSE REPLACEMENT

CAUTION - FOR CONTINUED PROTECTION AGAINST RISK OF FIRE. REPLACE WITH SAME TYPE AND RATINGS ONLY.

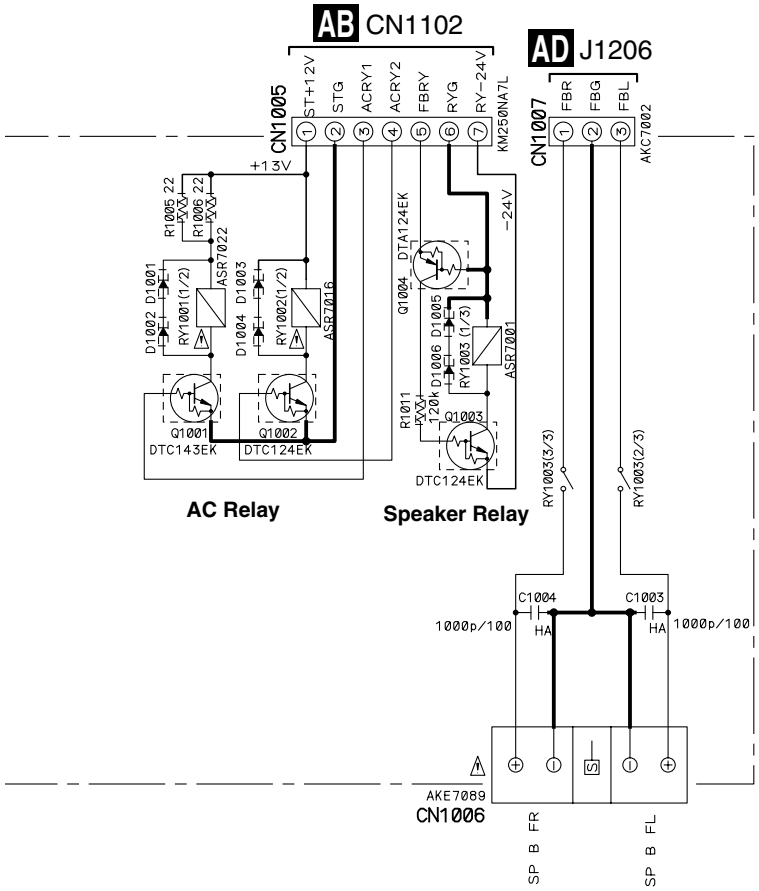
AB CN1102
AD J1206
CN1005
CN1007
ST+12V
STG
ACRY1
ACRY2
FBRY
RYG
RY-24V
KM250NA7L
FBR
FBG
FBL
AKC7002
+13V
-24V
R1005 22
R1006 22
ASR7022
D1001
D1002
D1003
D1004
RY1001(1/2)
RY1002(1/2)
ASR7016
Q1001
DTC143EK
Q1002
DTC124EK
AC Relay
DTA124EK
Q1004
D1005
D1006
RY1003 (1/3)
ASR7001
R1011
120k
Q1003
DTC124EK
Speaker Relay
RY1003(3/3)
RY1003(2/3)
C1004
C1003
1000p/100
HA
AKE7089
CN1006
SP B FR
SP B FL

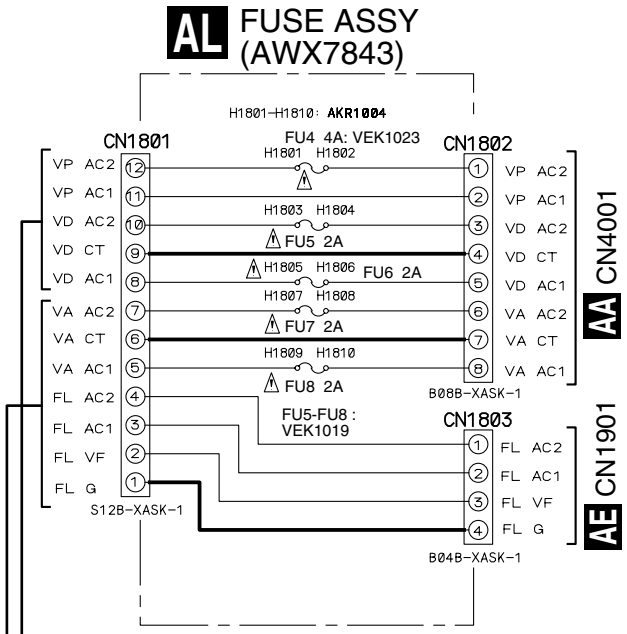
AL FUSE ASSY
(AWX7843)
H1801-H1810: AKR1004
CN1801
FU4 4A: VEK1023
CN1802
VP AC2
VP AC1
VD AC2
VD CT
VD AC1
VA AC2
VA CT
VA AC1
FL AC2
FL AC1
FL VF
FL G
H1801 H1802
H1803 H1804
FU5 2A
H1805 H1806
FU6 2A
H1807 H1808
FU7 2A
H1809 H1810
FU8 2A
FU5-FU8 :
VEK1019
S12B-XASK-1
B08B-XASK-1
CN4001
AA
CN1803
CN1901
AE
B04B-XASK-1

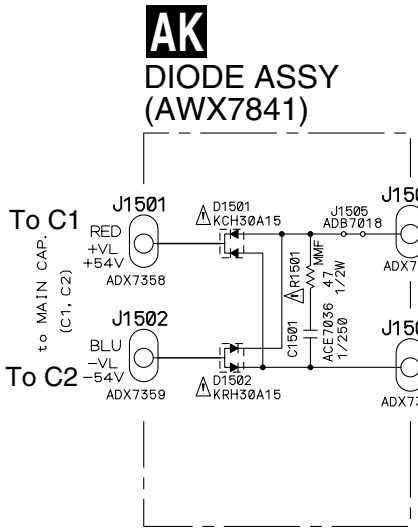
AK
DIODE ASSY
(AWX7841)
To C1
J1501
RED
+VL
+54V
ADX7358
D1501
KCH30A15
J1505
ADB7018
J1503
ADX7360
GRY
VL AC1
R1501
4.7
1/2W
C1501
ACE7036
1/250
J1502
BLU
-VL
-54V
To C2
ADX7359
D1502
KRH30A15
J1504
ADX7361
BRN
VL AC2
to MAIN CAP.
(C1, C2)

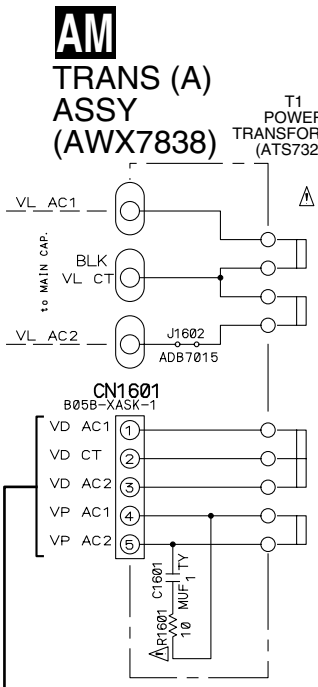
AM
TRANS (A)
ASSY
(AWX7838)
BLK
VL CT
J1602
ADB7015
CN1601
B05B-XASK-1
VD AC1
VD CT
VD AC2
VP AC1
VP AC2
C1601
MUF
10
R1601

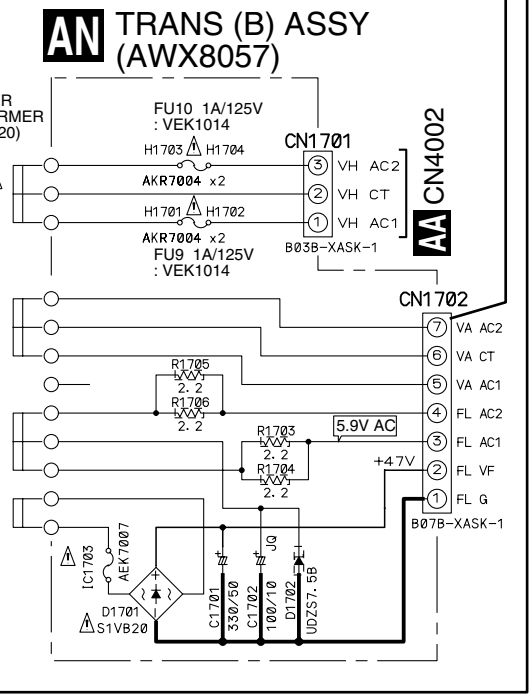
AN TRANS (B) ASSY
(AWX8057)
T1
POWER
TRANSFORMER
(ATS7320)
FU10 1A/125V
: VEK1014
CN1701
H1703 H1704
AKR7004 x2
H1701 H1702
AKR7004 x2
FU9 1A/125V
: VEK1014
VH AC2
VH CT
VH AC1
B03B-XASK-1
AA CN4002
CN1702
VA AC2
VA CT
VA AC1
FL AC2
FL AC1
FL VF
FL G
B07B-XASK-1
R1705
2.2
R1706
2.2
R1703
2.2
R1704
2.2
5.9V AC
+47V
IC1703
AEK7007
D1701
S1VB20
C1701
330/50
C1702
100/10
D1702
UDZS7.5B

AJ AK AL AM AN

3.31 1394 MODULE(1/2) ASSY

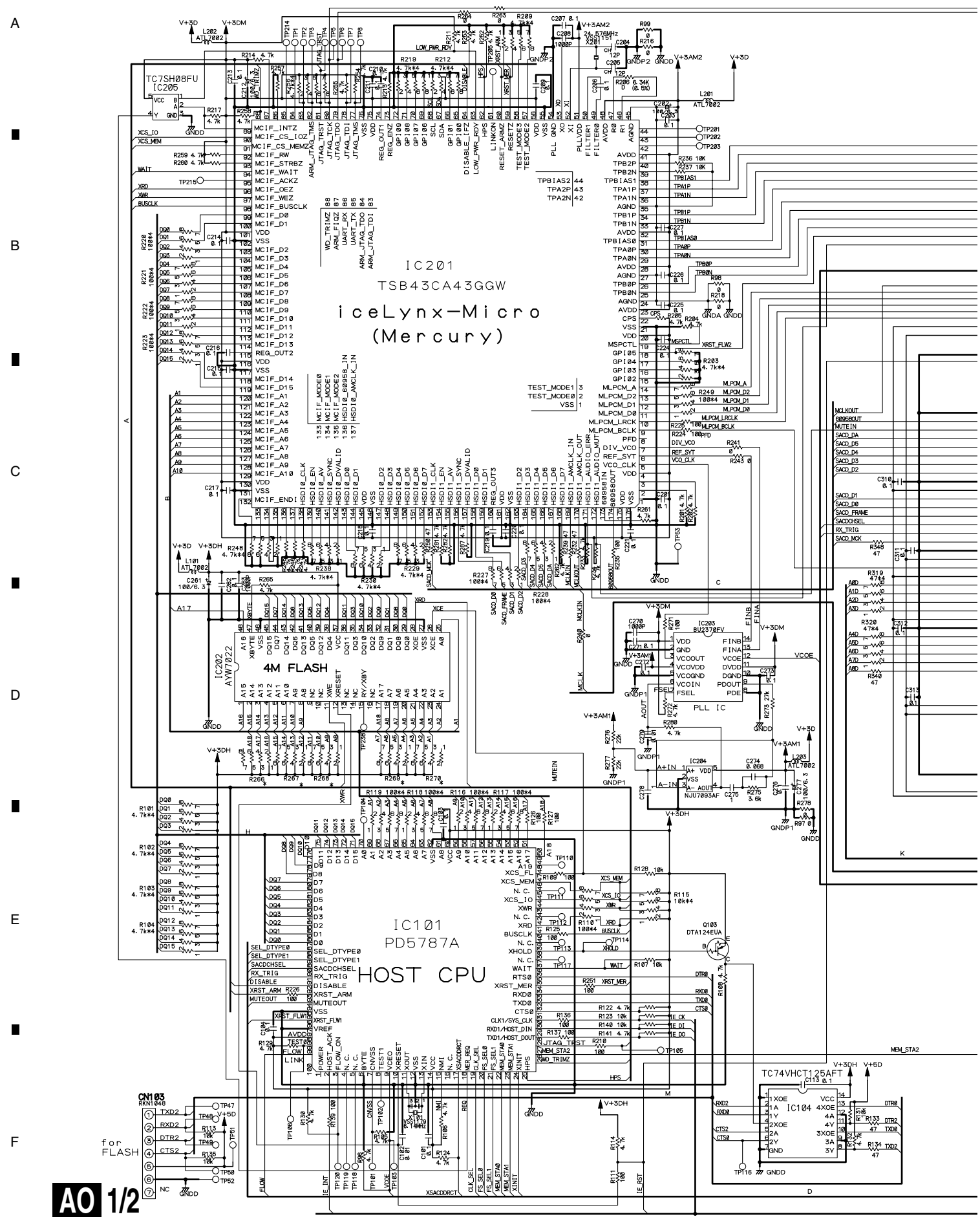

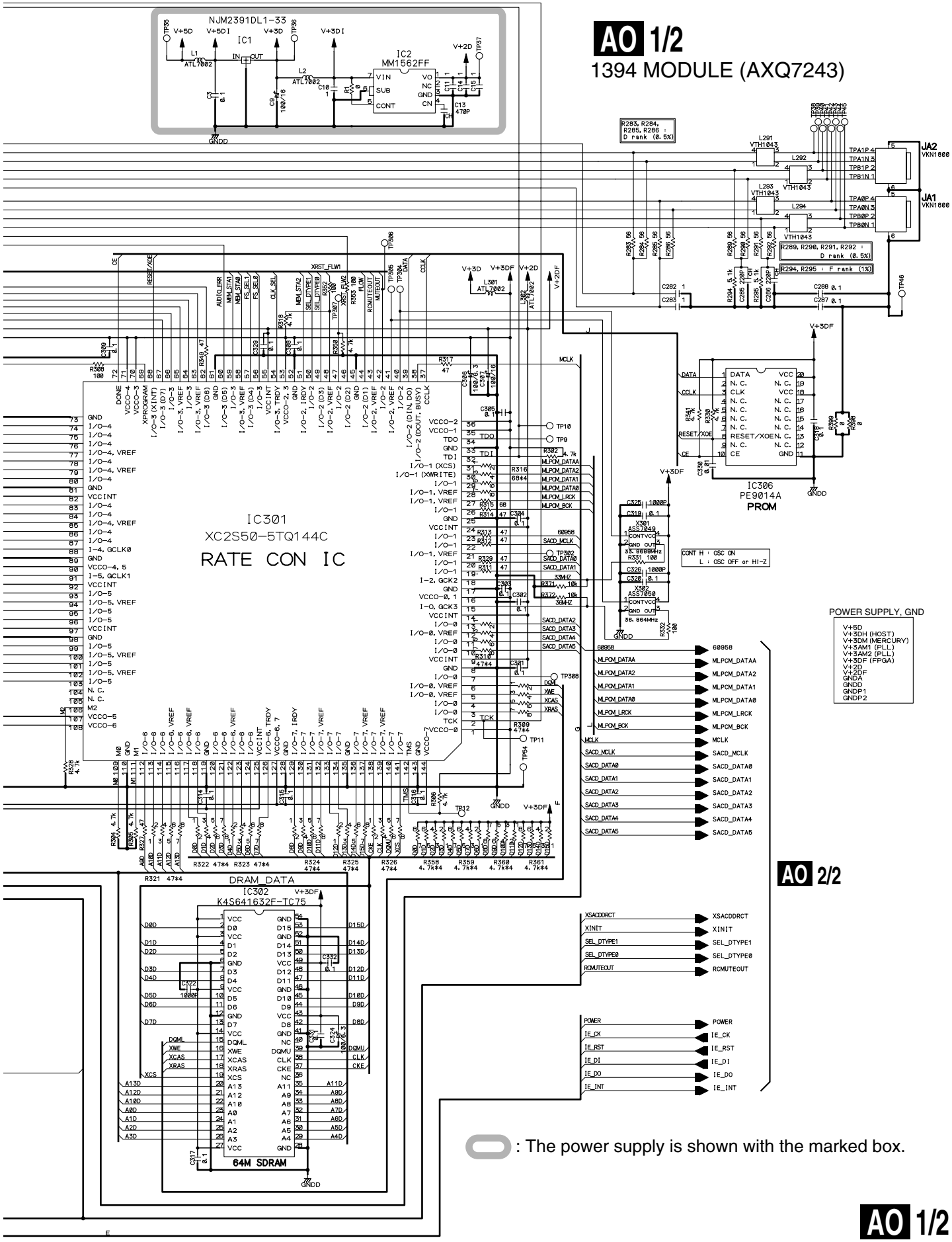
AO 1/2
1394 MODULE (AXQ7243)
NJM2391DL1-33
IC1
IC2
MM1562FF
IC301
XC2S50-5TQ144C
RATE CON IC
IC306
PE9014A
PROM
DRAM_DATA
IC302
K4S641632F-TC75
64M SDRAM
POWER SUPPLY, GND
V+5D
V+3DH (HOST)
V+3DM (MERCURY)
V+3AM1 (PLL)
V+3AM2 (PLL)
V+3DF (FPGA)
V+2D
V+2DF
GNDA
GNDD
GNDP1
GNDP2
AO 2/2
: The power supply is shown with the marked box.
AO 1/2

3.32 1394 MODULE(2/2) ASSY

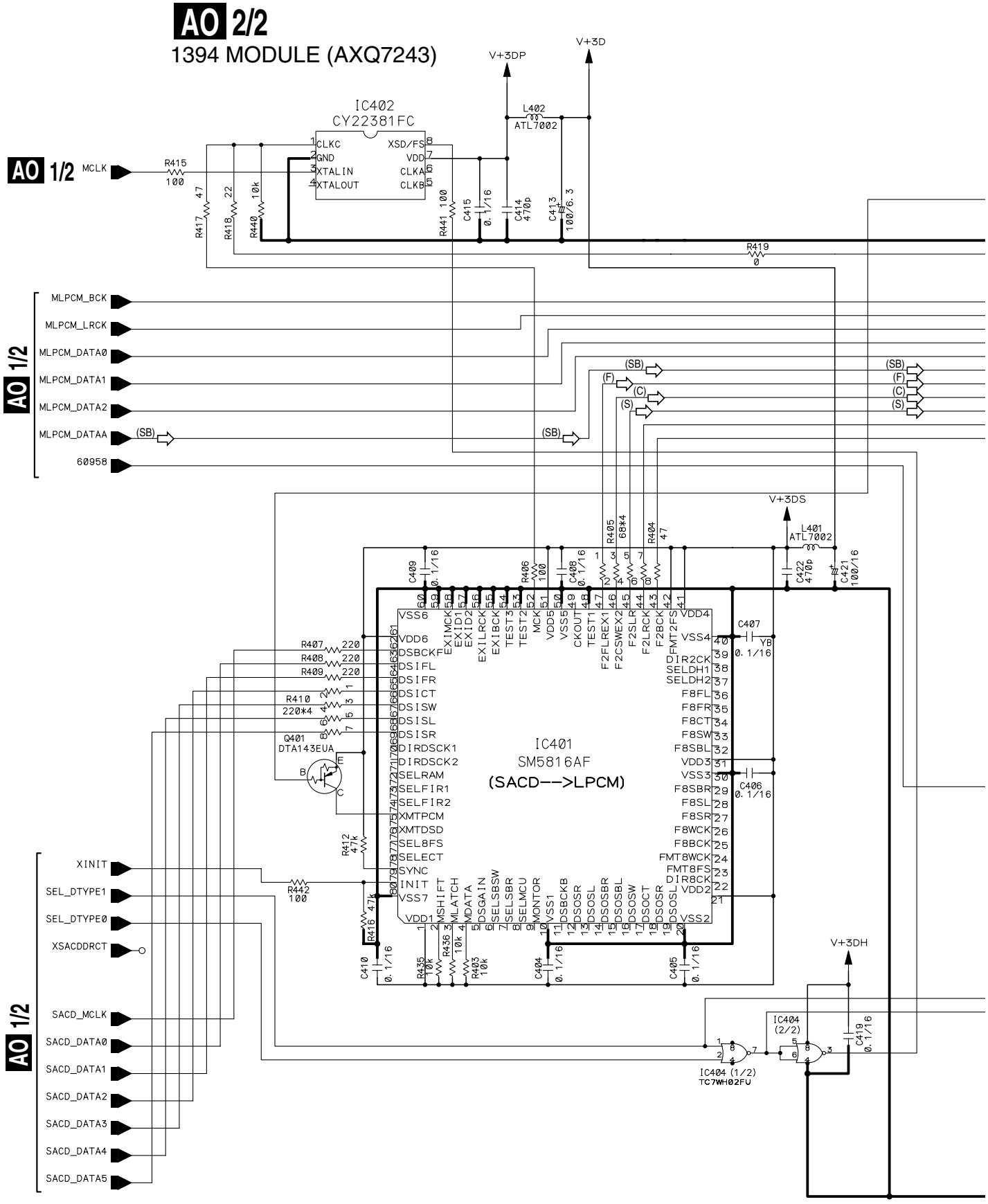

NOTES

Indicated in "STBY" parts are STANDBY.

CAPACITORS
Unit : p-pF or μF unless otherwise noted.
Ratings : Capacity(μF)/Voltage(V) unless otherwise noted.
Rated Voltage : 50V except for electrolytic capacitors.

100/16:CEV101M16 100/6.3:CEVL101M6R3
⊣⊢ :CKSRYB unless otherwise noted

RESISTORS
Unit : k-kΩ, M-MΩ or Ω unless otherwise noted.
Rated power : 1/16W unless otherwise noted.
Tolerance : (J)±5% unless otherwise noted.

: The power supply is shown with the marked box.

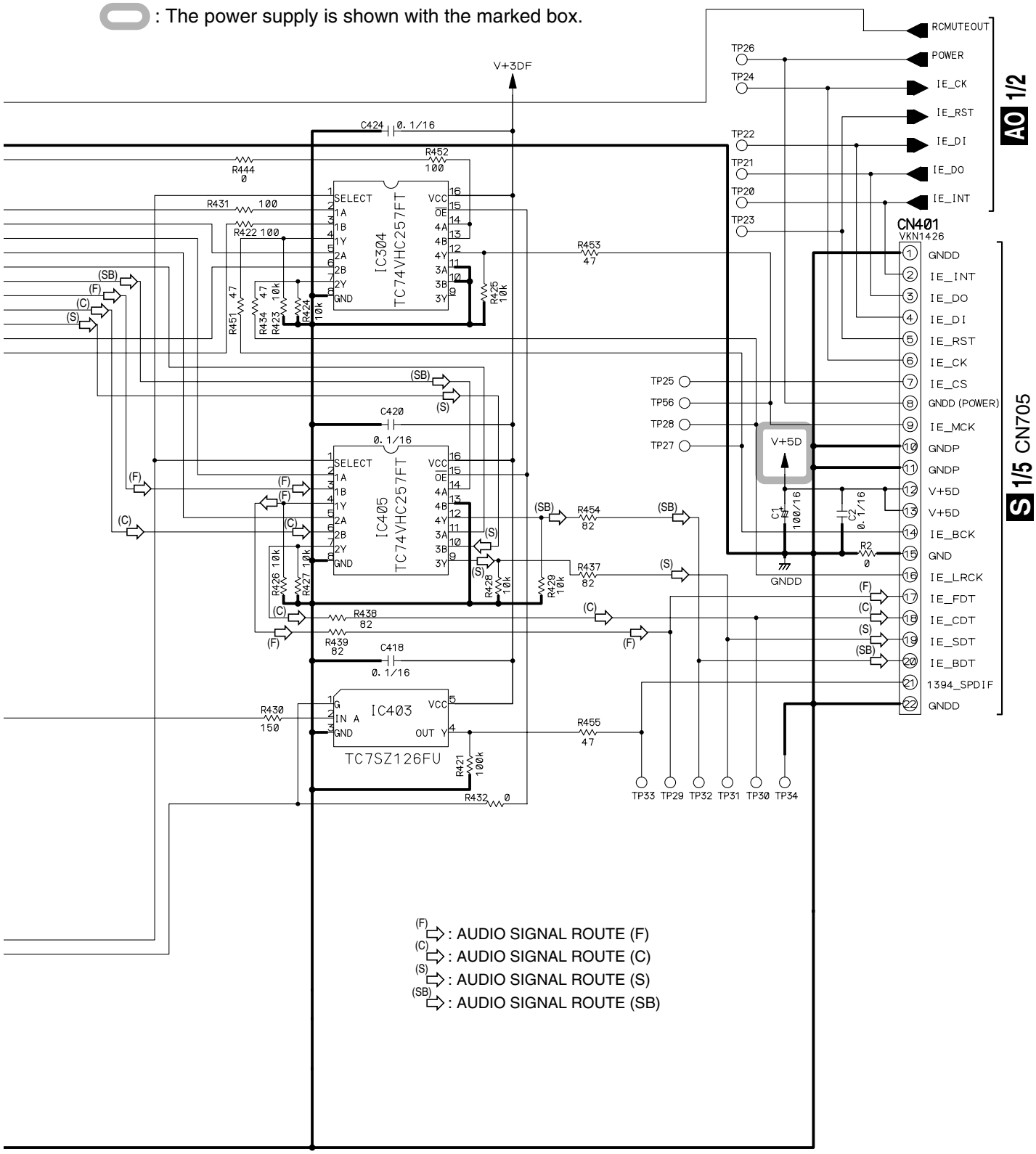

AO 2/2