Pioneer sound.vision.soul

Service Manual

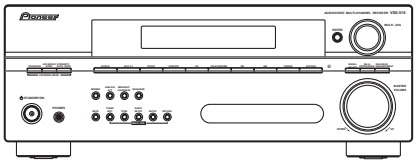

VSX-516-K

ORDER NO.
RRV3329

AUDIO/VIDEO MULTI-CHANNEL RECEIVER

VSX-516-K
VSX-516-S

THIS MANUAL IS APPLICABLE TO THE FOLLOWINGMODEL(S) AND TYPE(S).

Model	Type	Power Requirement	Remarks
VSX-516-K	KUCXJ	AC 120 V	
VSX-516-S	KUCXJ	AC 120 V	
VSX-516-K	MYXJ5	AC 220 V to 230 V	
VSX-516-S	MYXJ5	AC 220 V to 230 V	
VSX-516-S	MVXJ5	AC 230 V	

For details, refer to "Important Check Points for Good Servicing".

PIONEER CORPORATION 4-1, Meguro 1-chome, Meguro-ku, Tokyo 153-8654, Japan
PIONEER ELECTRONICS (USA) INC. P.O. Box 1760, Long Beach, CA 90801-1760, U.S.A.
PIONEER EUROPE NV Haven 1087, Keetberglaan 1, 9120 Melsele, Belgium
PIONEER ELECTRONICS ASIACENTRE PTE. LTD. 253 Alexandra Road, #04-01, Singapore 159936
ⒸPIONEER CORPORATION 2006

T-ZZK MAY 2006 printed in Japan

SAFETY INFORMATION

This service manual is intended for qualified service technicians; it is not meant for the casual do-it-yourselfer. Qualified technicians have the necessary test equipment and tools, and have been trained to properly and safely repair complex products such as those covered by this manual.

Improperly performed repairs can adversely affect the safety and reliability of the product and may void the warranty. If you are not qualified to perform the repair of this product properly and safely, you should not risk trying to do so and refer the repair to a qualified service technician.

WARNING

This product contains lead in solder and certain electrical parts contain chemicals which are known to the state of California to cause cancer, birth defects or other reproductive harm.

Health & Safety Code Section 25249.6 – Proposition 65

NOTICE

(FOR CANADIAN MODEL ONLY)

Fuse symbols (fast operating fuse) and/or (slow operating fuse) on PCB indicate that replacement parts must be of identical designation.

REMARQUE

(POUR MODÈLE CANADIEN SEULEMENT)

Les symboles de fusible (fusible de type rapide) et/ou (fusible de type lent) sur CCI indiquent que les pièces de remplacement doivent avoir la même désignation.

(FOR USA MODEL ONLY)

1. SAFETY PRECAUTIONS

The following check should be performed for the continued protection of the customer and service technician.

LEAKAGE CURRENT CHECK

Measure leakage current to a known earth ground (water pipe, conduit, etc.) by connecting a leakage current tester such as Simpson Model 229-2 or equivalent between the earth ground and all exposed metal parts of the appliance (input/output terminals, screwheads, metal overlays, control shaft, etc.). Plug the AC line cord of the appliance directly into a 120V AC 60 Hz outlet and turn the AC power switch on. Any current measured must not exceed 0.5 mA.

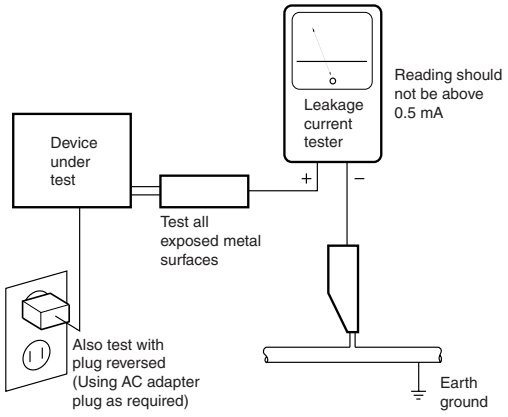

AC Leakage Test

ANY MEASUREMENTS NOT WITHIN THE LIMITS OUTLINED ABOVE ARE INDICATIVE OF A POTENTIAL SHOCK HAZARD AND MUST BE CORRECTED BEFORE RETURNING THE APPLIANCE TO THE CUSTOMER.

2. PRODUCT SAFETY NOTICE

Many electrical and mechanical parts in the appliance have special safety related characteristics. These are often not evident from visual inspection nor the protection afforded by them necessarily can be obtained by using replacement components rated for voltage, wattage, etc. Replacement parts which have these special safety characteristics are identified in this Service Manual.

Electrical components having such features are identified by marking with a ⚠ on the schematics and on the parts list in this Service Manual.

The use of a substitute replacement component which does not have the same safety characteristics as the PIONEER recommended replacement one, shown in the parts list in this Service Manual, may create shock, fire, or other hazards.

Product Safety is continuously under review and new instructions are issued from time to time. For the latest information, always consult the current PIONEER Service Manual. A subscription to, or additional copies of, PIONEER Service Manual may be obtained at a nominal charge from PIONEER.

[Important Check Points for Good Servicing]

In this manual, procedures that must be performed during repairs are marked with the below symbol.
Please be sure to confirm and follow these procedures.

1. Product safety

Please conform to product regulations (such as safety and radiation regulations), and maintain a safe servicing environment by following the safety instructions described in this manual.

① Use specified parts for repair.

Use genuine parts. Be sure to use important parts for safety.

② Do not perform modifications without proper instructions.

Please follow the specified safety methods when modification(addition/change of parts) is required due to interferences such as radio/TV interference and foreign noise.

③ Make sure the soldering of repaired locations is properly performed.

When you solder while repairing, please be sure that there are no cold solder and other debris.
Soldering should be finished with the proper quantity. (Refer to the example)

④ Make sure the screws are tightly fastened.

Please be sure that all screws are fastened, and that there are no loose screws.

⑤ Make sure each connectors are correctly inserted.

Please be sure that all connectors are inserted, and that there are no imperfect insertion.

⑥ Make sure the wiring cables are set to their original state.

Please replace the wiring and cables to the original state after repairs.
In addition, be sure that there are no pinched wires, etc.

⑦ Make sure screws and soldering scraps do not remain inside the product.

Please check that neither solder debris nor screws remain inside the product.

⑧ There should be no semi-broken wires, scratches, melting, etc. on the coating of the power cord.

Damaged power cords may lead to fire accidents, so please be sure that there are no damages.
If you find a damaged power cord, please exchange it with a suitable one.

⑨ There should be no spark traces or similar marks on the power plug.

When spark traces or similar marks are found on the power supply plug, please check the connection and advise on secure connections and suitable usage. Please exchange the power cord if necessary.

⑩ Safe environment should be secured during servicing.

When you perform repairs, please pay attention to static electricity, furniture, household articles, etc. in order to prevent injuries.
Please pay attention to your surroundings and repair safely.

2. Adjustments

To keep the original performance of the products, optimum adjustments and confirmation of characteristics within specification.
Adjustments should be performed in accordance with the procedures/instructions described in this manual.

3. Lubricants, Glues, and Replacement parts

Use grease and adhesives that are equal to the specified substance.
Make sure the proper amount is applied.

4. Cleaning

For parts that require cleaning, such as optical pickups, tape deck heads, lenses and mirrors used in projection monitors, proper cleaning should be performed to restore their performances.

5. Shipping mode and Shipping screws

To protect products from damages or failures during transit, the shipping mode should be set or the shipping screws should be installed before shipment. Please be sure to follow this method especially if it is specified in this manual.

CONTENTS

SAFETY INFORMATION 2
1. SPECIFICATIONS 5
2. EXPLODED VIEWS AND PARTS LIST 6
2.1 PACKING 6
2.2 EXTERIOR SECTION 8
2.3 FRONT PANEL SECTION 10
3. BLOCK DIAGRAM AND SCHEMATIC DIAGRAM 12
3.1 BLOCK DIAGRAM 12
3.2 OVERALL WIRING CONNECTION DIAGRAM 14
3.3 MAIN ASSY (1/3) 16
3.4 MAIN ASSY (2/3) 18
3.5 MAIN ASSY (3/3) 20
3.6 DSP ASSY (1/2) 22
3.7 DSP ASSY (2/2) 24
3.8 POWER PACK (1/2), TRANS 2 and TRANS 3 ASSYS 26
3.9 POWER PACK ASSY (2/2) 28
3.10 COMPONENT ASSY 30
3.11 HEADPHONE and 5.1CHIN ASSYS 31
3.12 FRONT DISPLAY, R. ENCODER and POWER KEY ASSYS 32
3.13 TRANS 4 and REGULATOR ASSYS 34
3.14 VIDEO, DIGITAL IN, PRIMARY and TRANS 1 ASSYS 36
3.15 USB ASSY 38
3.16 USB IN ASSY 40
4. PCB CONNECTION DIAGRAM 42
4.1 USB IN ASSY 43
4.2 MAIN ASSY 44
4.3 DSP ASSY 48
4.4 POWER PACK ASSY 52
4.5 TRANS2, TRANS3, TRANS4 and TRANS1 ASSYS 56
4.6 COMPONENT ASSY 58
4.7 HEADPHONE and 5.1 CHIN ASSYS 59
4.8 FRONT DISPLY, R. ENCODER and POWER KEY ASSYS 60
4.9 REGULATOR and DIGITAL IN ASSYS 64
4.10 VIDEO ASSY 65
4.11 PRIMARY ASSY 66
4.12 USB ASSY 68
5. PCB PARTS LIST 69
6. ADJUSTMENT 91
7. GENERAL INFORMATION 92
7.1 DIAGNOSIS 92
7.1.1 DISASSEMBLY 92
7.2 PARTS 95
7.2.1 IC 95
7.3 EXPLANATION 109
7.3.1 DETECTION CIRCUIT 109
7.3.2 AMPLIFIER SYSTEM PROTECTION OPERATION SPECIFICATION 111
7.3.3 AMPLIFIER FAILURE DIAGNOSIS FLOW CHART 113
7.3.4 USB Module 114
8. PANEL FACILITIES 120

1. SPECIFICATIONS

VSX-516/KUCXJ

Amplifier section

- **Continuous power output (stereo)**

Front . . . . 100 W (20-20,000 Hz, THD 0.7%, 8 Ω)[1]

- **Continuous power output (surround)**

Front. . . . . 100 W per channel (1kHz, 1.0%, 8 Ω)
Center . . . . . 100 W (1kHz, 1.0%, 8 Ω)
Surround. . . . . .100 W per channel (1kHz, 1.0%, 8 Ω)
Surround Back . . . . . .100 W per channel (1kHz, 1.0%, 8 Ω)

Audio section

- **Input (Sensitivity/Impedance)**

CD, DVR/VCR, CD-R/TAPE/MD,
DVD/LD, TV/SAT . . . . . 200 mV/47 kΩ

- **Frequency response**

CD, DVR/VCR, CD-R/TAPE/MD, DVD/LD,
TV/SAT. . . . . 5 Hz to 100,000 Hz $^{+0}_{-3}$dB

- **Output (Level/Impedance)**

DVR/VCR REC, CD-R/TAPE/
MD REC. . . . . 200 mV/2.2 kΩ

- **Tone control**

Bass . . . . . ± 6 dB (100 Hz)
Treble . . . . . ± 6 dB (10 kHz)
Loudness. . . . . +10 dB/+5 dB (100 Hz/10 kHz) (at volume level -50 dB)

- **Signal-to-Noise Ratio (IHF, short circuited, A network)**

CD, DVR/VCR, CD-R/TAPE/MD,
DVD/LD, TV/SAT . . . . . 96 dB

- **Signal-to Noise Ratio [EIA, at 1 W (1 kHz)]**

CD, DVR/VCR, CD-R/TAPE/MD,
DVD/LD, TV/SAT . . . . . 79 dB

Video Section

- **Input (Sensitivity/Impedance)**

DVR/VCR, DVD/LD, TV/SAT . . . . . 1 Vp-p/75 Ω

- **Output (Level/Impedance)**

DVR/VCR, MONITOR OUT . . . . . 1 Vp-p/75 Ω

- **Frequency response**

DVR/VCR, DVD/LD,
TV/SAT ⇨ MONITOR . . . . . 5 Hz to 7 MHz $^{+0}_{-3}$ dB
Signal-to-Noise Ratio . . . . . 55 dB
Crosstalk . . . . . 50 dB

Component video section

- **Input (Sensitivity)**

DVD/LD, TV/SAT . . . . . 1 Vp-p/75 Ω

- **Output (Level/Impedance)**

MONITOR OUT . . . . . 1 Vp-p/75 Ω

- **Frequency response**

DVD/LD,
TV/SAT ⇨ MONITOR . . . . . 5 Hz to 40 MHz $^{+0}_{-3}$dB
Signal-to-Noise Ratio . . . . . 60 dB

- **FM Tuner Section**

Frequency Range . . . . . .87.5 MHz to 108 MHz
Usable Sensitivity . . . . . .Mono:13.2 dBf, IHF (1.3 μV/ 75 Ω)
50 dB Quieting Sensitivity . . . . . .Mono: 20.2 dB
Stereo: 38.6 dBf
Signal-to-Noise Ratio . . .Mono: 73 dB (at 85 dBf)
Stereo: 70 dB (at 85 dBf)
Distortion. . . . . Stereo: 0.5 % (1 kHz)
Alternate Channel Selectivity. . . .60 dB (400 kHz)
Stereo Separation. . . . . .40 dB (1 kHz)
Frequency Response . . . . . .30 Hz to 15 kHz (±1 dB)
Antenna Input (DIN). . . . . 75 Ω unbalanced

AM Tuner Section

Frequency Range . . . . . .530 kHz to 1700 kHz
Sensitivity (IHF, Loop antenna) . . . . . 350 μV/m
Signal-to-Noise Ratio . . . . . 50 dB
Antenna. . . . . Loop antenna

Miscellaneous

Power requirements . . . . . AC 120V / 60 Hz
Power consumption . . . . . .360 W / 470 VA
In standby. . . . . .0.5 W
Dimensions
. . . . . .16 9/16 (W) in. x 6 1/4 (H) in. x 13 7/8 (D) in.
420 (W) mm x 158 (H) mm x 352.5 (D) mm
Weight (without package). . . . . 19.8 lb (9.0 kg)

Furnished Parts

AM loop antenna. 1
FM wire antenna 1
Dry cell batteries (AA size IEC R6) 2
Remote control 1
Operating instructions

Note

- Specifications and the design are subject to possible modifications without notice, due to improvements.

Manufactured under license from Dolby Laboratories. "Dolby", "Pro Logic", "Surround EX", and the double-D symbol are trademarks of Dolby Laboratories.

"DTS" ,"DTS-ES" ,"DTS 96/24" and "Neo:6" are trademarks of Digital Theater Systems, Inc.

Note

1 Continuous average power output of 110 watts* per channel, min., at 8ohms, from 20 Hz to 20,000 Hz with no more than 0.2%** total harmonic distortion (front).
* Measured pursuant to the Federal Trade Commissionís Trade Regulation rule on Power Output Claims for Amplifiers.
** Measured by Audio Spectrum Analyzer.

Accessories

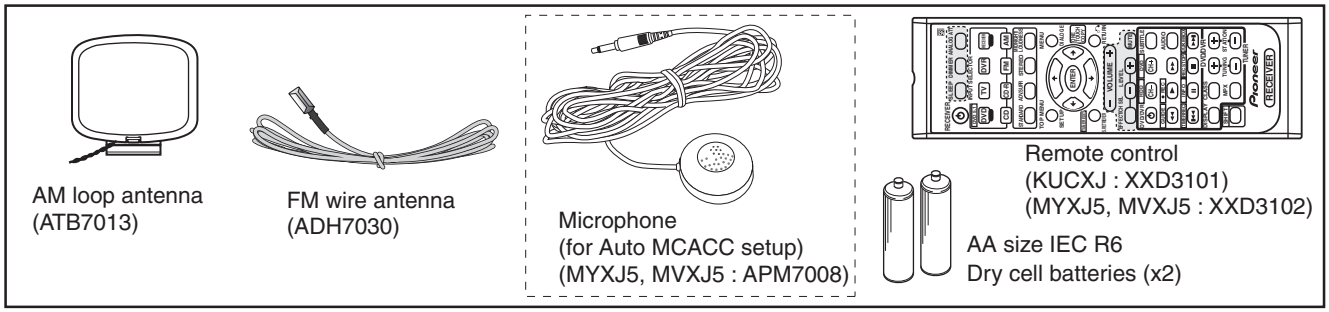

2. EXPLODED VIEWS AND PARTS LIST

NOTES:
- *Parts marked by "NSP" are generally unavailable because they are not in our Master Spare Parts List.*
- *The ⚠ mark found on some component parts indicates the importance of the safety factor of the part. Therefore, when replacing, be sure to use parts of identical designation.*
- *Screws adjacent to ▼ mark on product are used for disassembly.*
- *For the applying amount of lubricants or glue, follow the instructions in this manual. (In the case of no amount instructions, apply as you think it appropriate.)*

2.1 PACKING

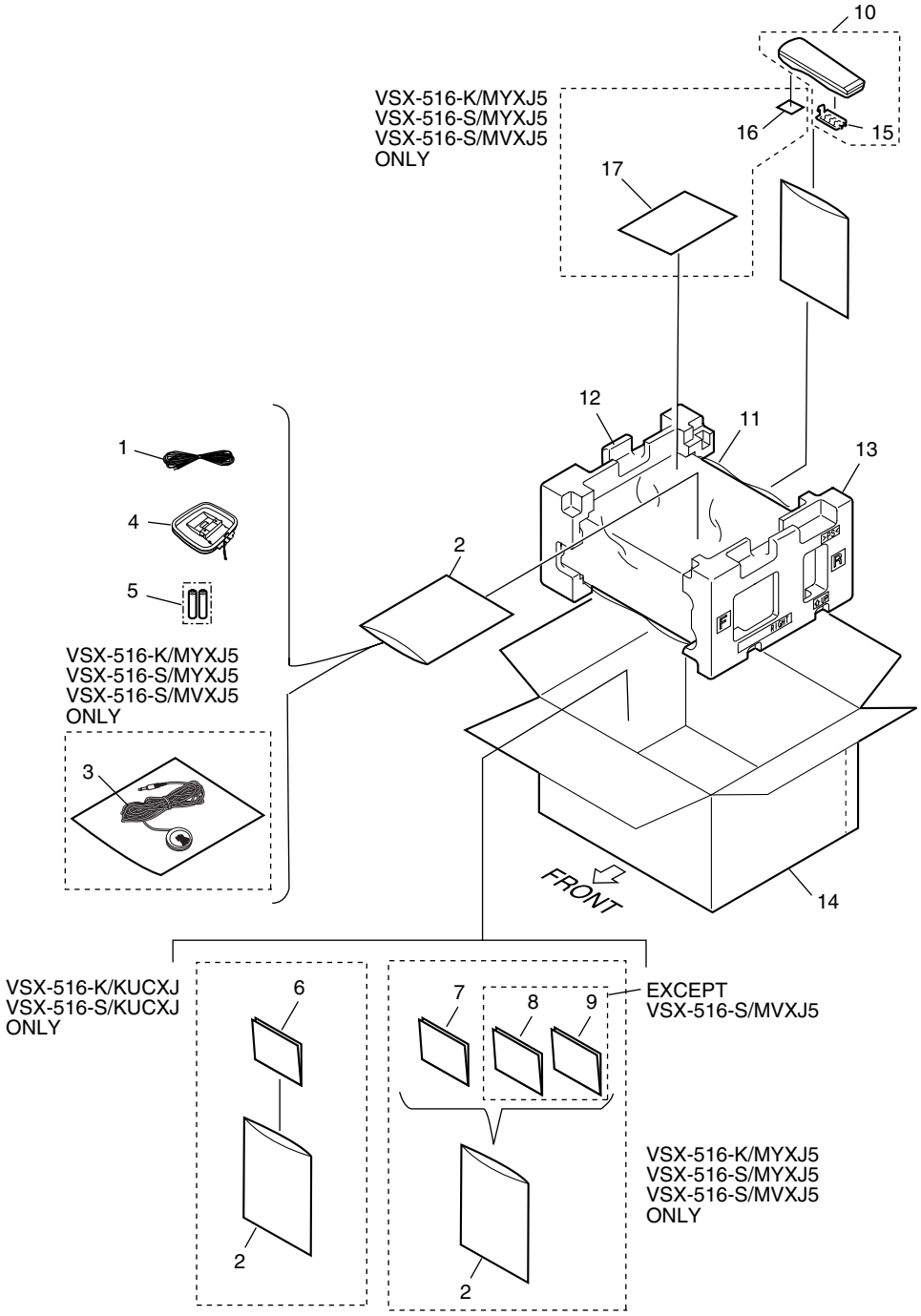

(1) PACKING SECTION PARTS LIST

Mark	No.	Description	Part No.
	1	FM Wire Antenna	ADH7030
NSP	2	Polyethylene Bag	See Contrast table(2)
	3	Microphone	See Contrast table(2)
	4	AM Loop Antenna	ATB7013
NSP	5	Dry cell batteries (AA/R6) 2P	XEX3002
	6	Operating Instructions (English/French)	See Contrast table(2)
	7	Operating Instructions (English/Italian)	See Contrast table(2)
	8	Operating Instructions (Dutch/Spanish)	See Contrast table(2)
	9	Operating Instructions (French/German)	See Contrast table(2)
	10	Remote control	See Contrast table(2)
	11	Packing Sheet	AHG7069
	12	Left Pad V3	XHA3158
	13	Right Pad V3	XHA3159
	14	Packing Case	See Contrast table(2)
	15	Battery Cover	XZN3139
	16	Label (WEEE)	See Contrast table(2)
NSP	17	Warranty Card	See Contrast table(2)

(2) CONTRAST TABLE

VSX-516-S/KUCXJ, VSX-516-K/MYXJ5, VSX-516-S/MYXJ5, VSX-516-S/MVXJ5 and VSX-516-K/KUCXJ are constracted the same except for the following:

Mark	No.	Symbol and Description	VSX-516-K /KUCXJ	VSX-516-S /KUCXJ	VSX-516-K /MYXJ5	VSX-516-S /MYXJ5	VSX-516-S /MVXJ5
NSP	2	Polyethylene Bag	AHG7117	AHG7117	Z21-038	Z21-038	Z21-038
	3	Microphone	Not used	Not used	APM7008	APM7008	APM7008
	6	Operating Instructions (English/French)	XRE3114	XRE3114	Not used	Not used	Not used
	7	Operating Instructions (English/Italian)	Not used	Not used	XRE3121	XRE3121	XRE3121
	8	Operating Instructions (Dutch/Spanish)	Not used	Not used	XRC3223	XRC3223	Not used
	9	Operating Instructions (French/German)	Not used	Not used	XRC3224	XRC3224	Not used
	10	Remote control	XXD3101	XXD3101	XXD3102	XXD3102	XXD3102
	14	Packing Case	XHD3584	XHD3585	XHD3589	XHD3590	XHD3590
	16	Label (WEEE)	Not used	Not used	ARW7322	ARW7322	ARW7322
NSP	17	Warranty Card	Not used	Not used	ARY7065	ARY7065	ARY7065

2.2 EXTERIOR SECTION

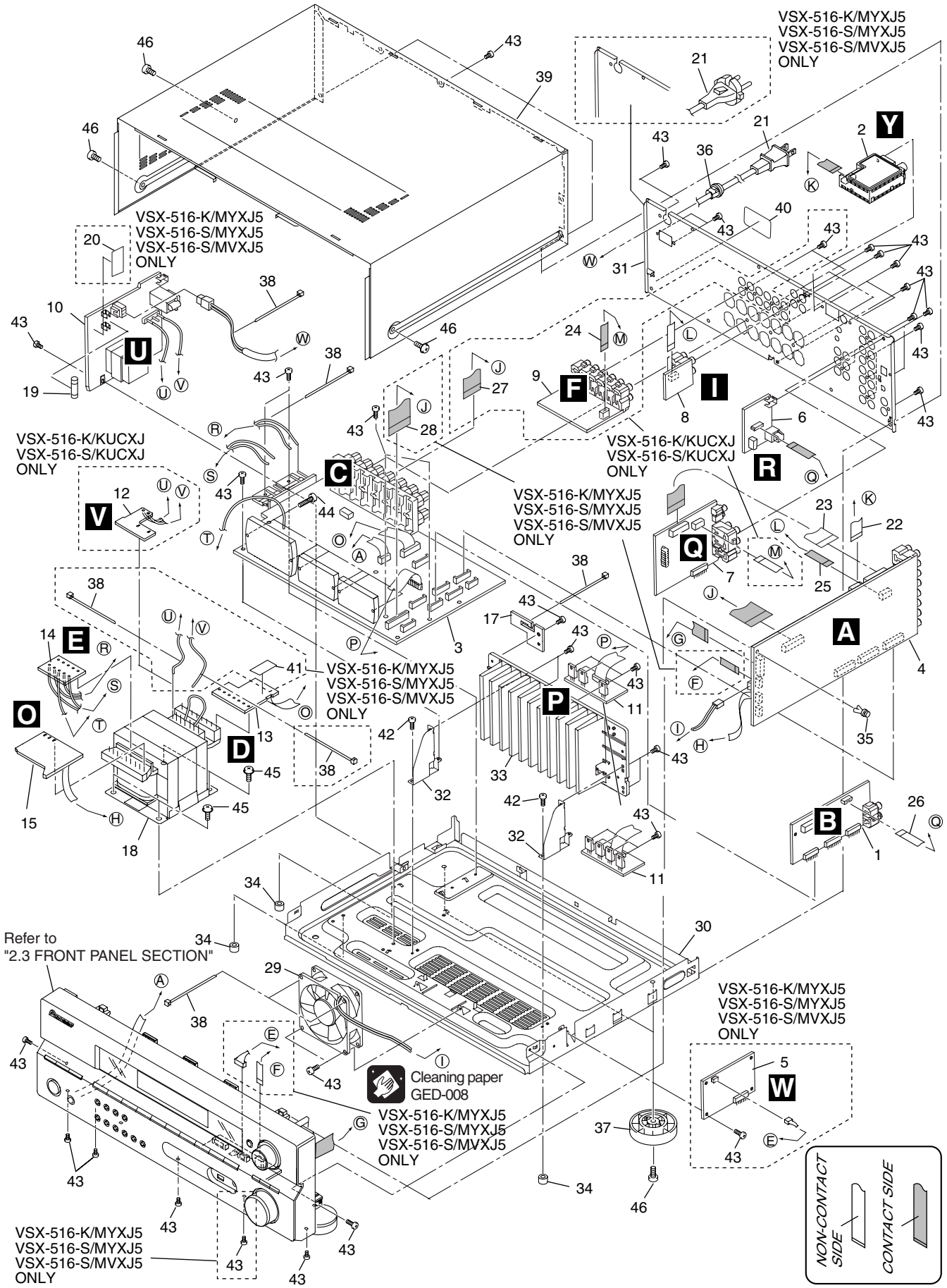

(1) EXTERIOR SECTION PARTS LIST

Mark	No.	Description	Part No.
	1	DSP ASSY	See Contrast table(2)
	2	FM/AM TUNER UNIT	See Contrast table(2)
	3	POWER PACK ASSY	See Contrast table(2)
	4	MAIN ASSY	See Contrast table(2)
	5	USB ASSY	See Contrast table(2)
	6	DIGITAL IN ASSY	XWZ4066
	7	VIDEO ASSY	See Contrast table(2)
	8	5.1 CHIN ASSY	XWZ4069
	9	COMPONENT ASSY	See Contrast table(2)
	10	PRIMARY ASSY	See Contrast table(2)
	11	REGULATOR ASSY	See Contrast table(2)
	12	TRANS 1 ASSY	See Contrast table(2)
	13	TRANS 2 ASSY	See Contrast table(2)
	14	TRANS 3 ASSY	XWZ4079
	15	TRANS 4 ASSY	XWZ4093
	16	••••••	
	17	BINDER ASSY	XWZ4199
⚠	18	Transformer	See Contrast table(2)
⚠	19	Fuse	See Contrast table(2)
	20	Fuse Card	See Contrast table(2)
⚠	21	AC Power Cord	See Contrast table(2)
	22	11P F. F. C/30V	XDD3189
	23	19P F. F. C/30V	XDD3190
	24	7P F. F. C/30V	See Contrast table(2)
	25	7P F. F. C/30V	XDD3191
	26	10P F. F. C/30V	XDD3196
	27	17P F. F. C/30V	See Contrast table(2)
	28	25P F. F. C/30V	See Contrast table(2)
	29	DC Fan Motor	XXM3012
NSP	30	Chassis	XNA3026
	31	R Panel	See Contrast table(2)
	32	H/S AngleV3	XNG3145
NSP	33	H/Sink	See Contrast table(2)
NSP	34	Spacer	AEB7092
	35	Push Rivet	AEC7205
	36	Cord Stopper	See Contrast table(2)
	37	Insulator	See Contrast table(2)
NSP	38	Binder (BK-1)	ZCA-BK1
	39	Bonnet	See Contrast table(2)
NSP	40	Label	VRM1629
	41	ICP Label	See Contrast table(2)
	42	Screw	BBZ30P060FCC
	43	Screw	BBZ30P080FNI
	44	Screw	BBZ30P140FTC
	45	Screw	BBZ40P080FNI
	46	Screw	See Contrast table(2)

(2) CONTRAST TABLE

VSX-516-S/KUCXJ, VSX-516-K/MYXJ5, VSX-516-S/MYXJ5, VSX-516-S/MVXJ5 and VSX-516-K/KUCXJ are constracted the same except for the following:

Mark	No.	Symbol and Description	VSX-516-K /KUCXJ	VSX-516-S /KUCXJ	VSX-516-K /MYXJ5	VSX-516-S /MYXJ5	VSX-516-S /MVXJ5
	1	DSP ASSY	AWX8573	AWX8573	AWX8572	AWX8572	AWX8572
	2	FM/AM TUNER UNIT	AXX7210	AXX7210	AXX7170	AXX7170	AXX7170
	3	POWER PACK ASSY	XWZ4082	XWZ4082	XWZ4083	XWZ4083	XWZ4083
	4	MAIN ASSY	XWK3229	XWK3229	XWK3230	XWK3230	XWK3230
	5	USB ASSY	Not used	Not used	AWX8704	AWX8704	AWX8704
	7	VIDEO ASSY	XWZ4059	XWZ4059	XWZ4060	XWZ4060	XWZ4060
	9	COMPONENT ASSY	XWZ4096	XWZ4096	Not used	Not used	Not used
	10	PRIMARY ASSY	XWZ4072	XWZ4072	XWZ4073	XWZ4073	XWZ4073
	11	REGULATOR ASSY	XWZ4077	XWZ4077	XWZ4116	XWZ4116	XWZ4116
	12	TRANS 1 ASSY	XWZ4078	XWZ4078	Not used	Not used	Not used
	13	TRANS 2 ASSY	XWZ4090	XWZ4090	XWZ4092	XWZ4092	XWZ4092
⚠	18	Transformer	XTS3089	XTS3089	XTS3102	XTS3102	XTS3102
⚠	19	Fuse (10 A)	REK1154	REK1154	REK1027	REK1027	REK1027
⚠	19	Fuse (T 3.15 A)	REK1154	REK1154	REK1027	REK1027	REK1027
	20	Fuse Card	Not used	Not used	AAX7493	AAX7493	AAX7493
⚠	21	AC Power Cord	ADG7024	ADG7024	VDG1080	VDG1080	VDG1076
	24	7P F. F. C/30V	XDD3192	XDD3192	Not used	Not used	Not used
	27	17P F. F. C/30V	XDD3203	XDD3203	Not used	Not used	Not used
	28	25P F. F. C/30V	Not used	Not used	XDD3201	XDD3201	XDD3201
	31	R Panel	XNC3413	XNC3427	XNC3414	XNC3430	XNC3230
NSP	33	H/Sink	XNH3043	XNH3043	XNH3044	XNH3044	XNH3044
	36	Cord Stopper	CM-22-C	CM-22-C	CM-22-B	CM-22-B	CM-22-B
	37	Insulator	AMR7198	AMR7198	PNW2766	PNW2766	PNW2766
	39	Bonnet	XZN3183	XZN3184	XZN3183	XZN3184	XZN3184
	41	ICP Label	Not used	Not used	XAX3121	XAX3121	XAX3121
	46	Screw	BBZ30P080FTB	BBZ30P080FNI	BBZ30P080FTB	BBZ30P080FNI	BBZ30P080FNI

2.3 FRONT PANEL SECTION

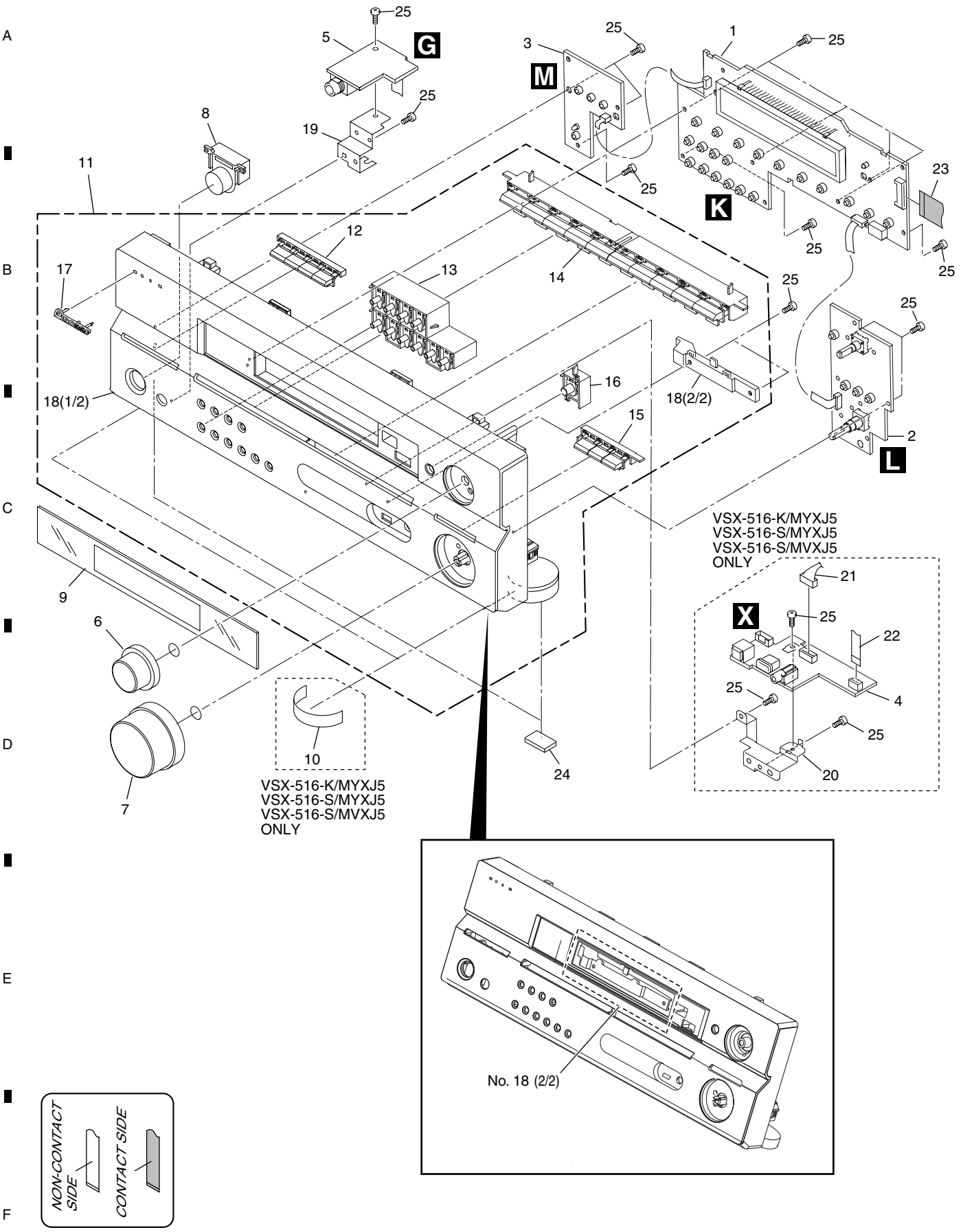

(1) FRONT PANEL SECTION PARTS LIST

Mark	No.	Description	Part No.
	1	FRONT DISPLAY ASSY	See Contrast table(2)
	2	R. ENCODER ASSY	XWZ4055
	3	POWER KEY ASSY	XWZ4056
	4	USB IN ASSY	See Contrast table(2)
	5	HEADPHONE ASSY	XWZ4095
	6	JOG Knob	See Contrast table(2)
	7	VOL Knob	See Contrast table(2)
	8	STDBY BTN	See Contrast table(2)
	9	D Panel	See Contrast table(2)
NSP	10	Gold Foil Label	See Contrast table(2)
NSP	11	F PANEL Assy	See Contrast table(2)
	12	Tuner BTN	See Contrast table(2)
	13	SUB BTN	See Contrast table(2)
	14	FUNC BTN	See Contrast table(2)
	15	LISTEN BTN	See Contrast table(2)
	16	JOG Button	See Contrast table(2)
	17	PIONEER Badge	See Contrast table(2)
	18	FRT Panel	See Contrast table(2)
	19	Earth Plate HP V2	XNG3131
	20	Earth Plate FR V3	See Contrast table(2)
	21	4P Shield Cable	See Contrast table(2)
	22	5P F.F.C/30V	See Contrast table(2)
	23	17P F.F.C/30V	XDD3200
	24	Rubber Sheet	AEB1111
	25	Screw	BPZ30P080FTC

(2) CONTRAST TABLE

VSX-516-S/KUCXJ, VSX-516-K/MYXJ5, VSX-516-S/MYXJ5, VSX-516-S/MVXJ5 and VSX-516-K/KUCXJ are constracted the same except for the following:

Mark	No.	Symbol and Description	VSX-516-K /KUCXJ	VSX-516-S /KUCXJ	VSX-516-K /MYXJ5	VSX-516-S /MYXJ5	VSX-516-S /MVXJ5
	1	FRONT DISPLAY ASSY	XWZ4051	XWZ4051	XWZ4052	XWZ4052	XWZ4052
	4	USB IN ASSY	Not used	Not used	XWK3247	XWK3247	XWK3247
	6	JOG Knob	XAB3046	XAB3048	XAB3046	XAB3048	XAB3048
	7	VOL Knob	XAB3049	XAB3051	XAB3049	XAB3051	XAB3051
	8	STDBY BTN	XAD3202	XAD3203	XAD3202	XAD3203	XAD3203
	9	D Panel	XAK3529	XAK3529	XAK3535	XAK3535	XAK3535
NSP	10	Gold Foil Label	Not used	Not used	XAX3487	XAX3487	XAX3487
NSP	11	F Panel Assy	XXG3247	XXG3248	XXG3249	XXG3250	XXG3250
	12	Tuner BTN	XAD3230	XAD3248	XAD3230	XAD3248	XAD3248
	13	SUB BTN	XAD3231	XAD3249	XAD3231	XAD3249	XAD3249
	14	FUNC BTN	XAD3232	XAD3250	XAD3232	XAD3250	XAD3250
	15	LISTEN BTN	XAD3233	XAD3251	XAD3233	XAD3251	XAD3251
	16	JOG Button	XAD3240	XAD3252	XAD3240	XAD3252	XAD3252
	17	PIONEER Badge	XAM3006	VAM1129	XAM3006	VAM1129	VAM1129
	18	FRT Panel	XMB3225	XMB3226	XMB3227	XMB3228	XMB3228
	20	Earth Plate FR V3	Not used	Not used	XNG3144	XNG3144	XNG3144
	21	4P Shield Cable	Not used	Not used	XDX3028	XDX3028	XDX3028
	22	5P F.F.C/30V	Not used	Not used	XDD3199	XDD3199	XDD3199

3. BLOCK DIAGRAM AND SCHEMATIC DIAGRAM

3.1 BLOCK DIAGRAM

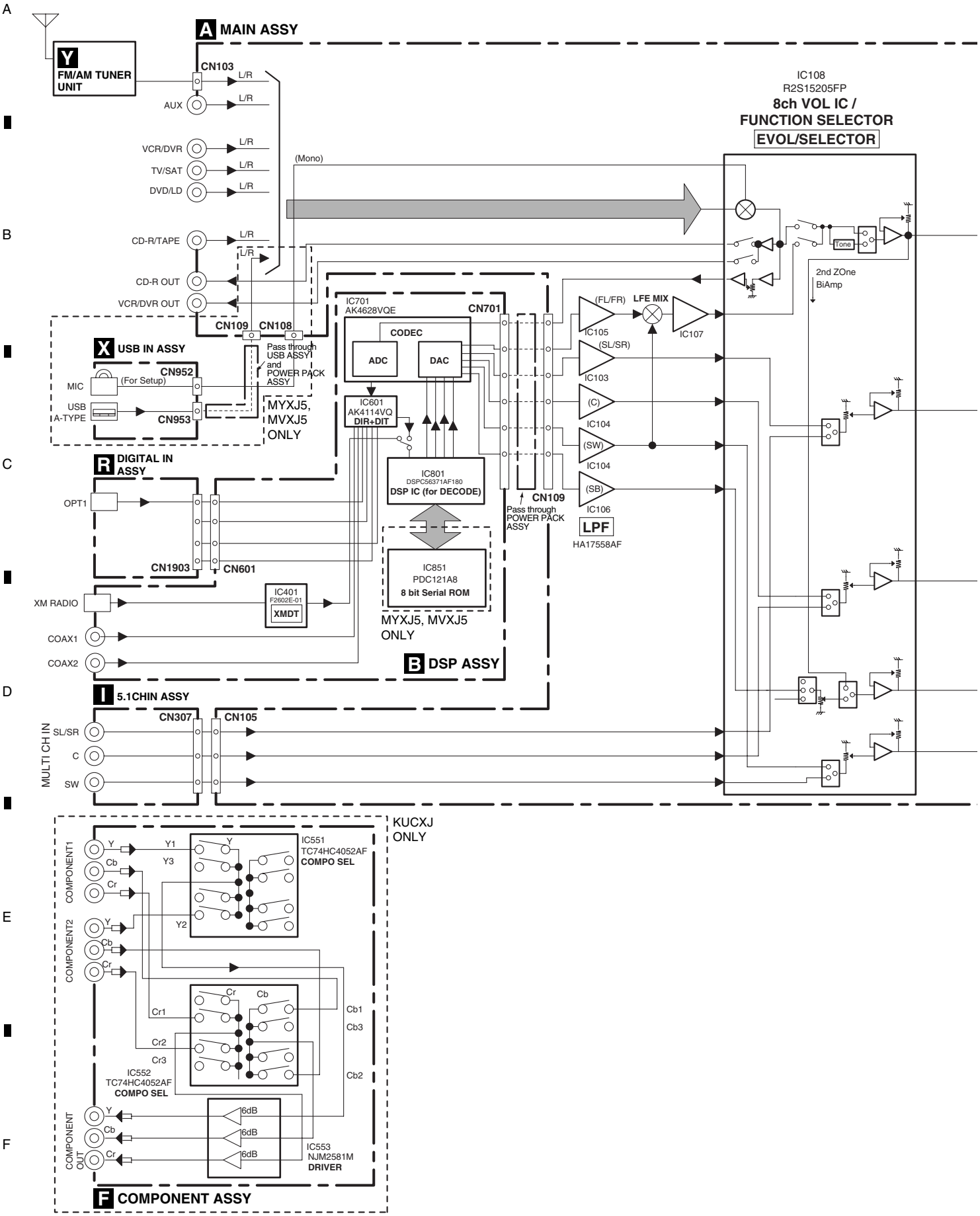

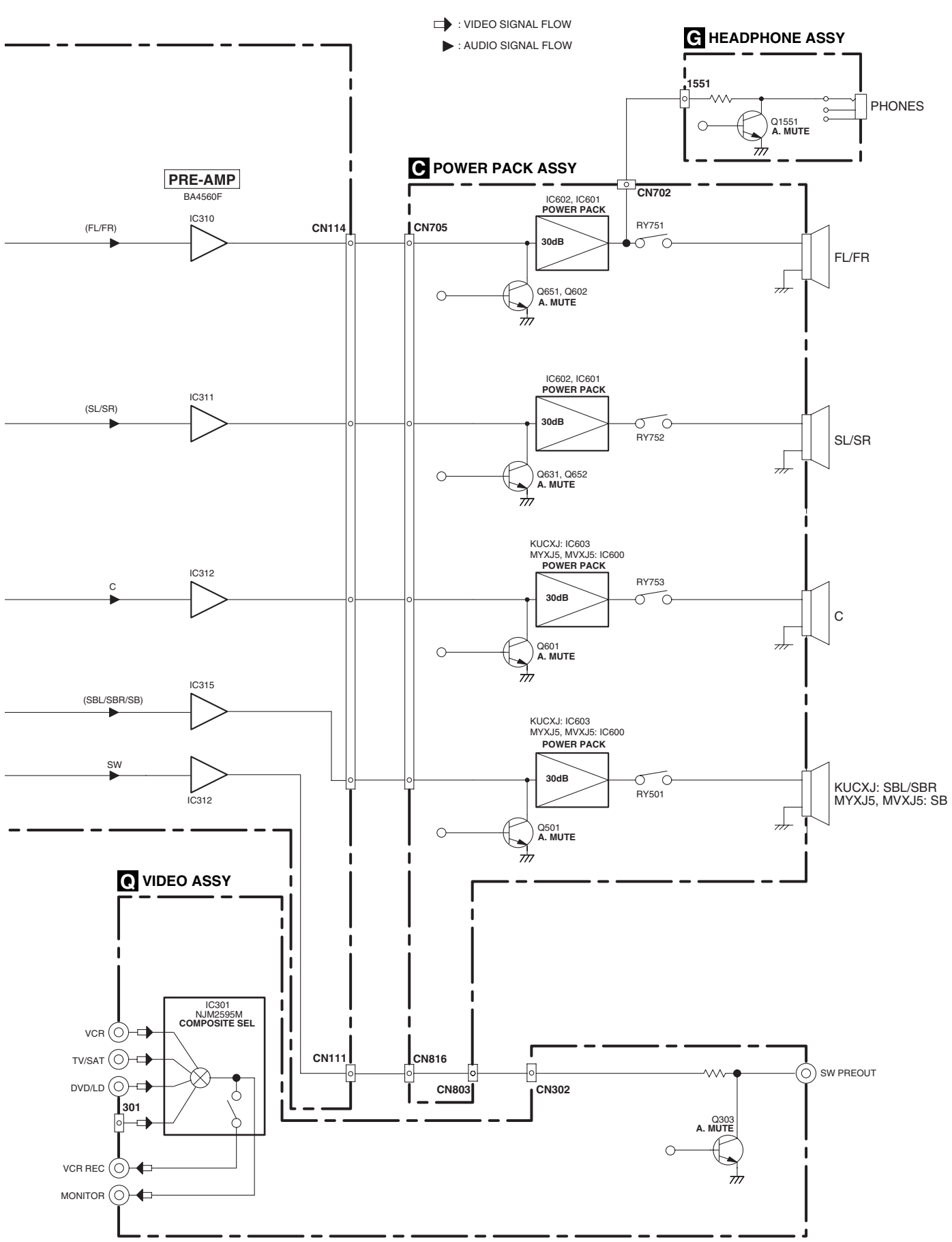
: VIDEO SIGNAL FLOW
: AUDIO SIGNAL FLOW
G HEADPHONE ASSY
1551
PHONES
Q1551
A. MUTE
C POWER PACK ASSY
CN702
PRE-AMP
BA4560F
IC310
(FL/FR)
CN114
CN705
IC602, IC601
POWER PACK
30dB
RY751
FL/FR
Q651, Q602
A. MUTE
IC311
(SL/SR)
IC602, IC601
POWER PACK
30dB
RY752
SL/SR
Q631, Q652
A. MUTE
IC312
C
KUCXJ: IC603
MYXJ5, MVXJ5: IC600
POWER PACK
30dB
RY753
C
Q601
A. MUTE
IC315
(SBL/SBR/SB)
SW
IC312
KUCXJ: IC603
MYXJ5, MVXJ5: IC600
POWER PACK
30dB
RY501
KUCXJ: SBL/SBR
MYXJ5, MVXJ5: SB
Q501
A. MUTE
Q VIDEO ASSY
IC301
NJM2595M
COMPOSITE SEL
VCR
TV/SAT
DVD/LD
301
VCR REC
MONITOR
CN111
CN816
CN803
CN302
SW PREOUT
Q303
A. MUTE

3.2 OVERALL WIRING CONNECTION DIAGRAM

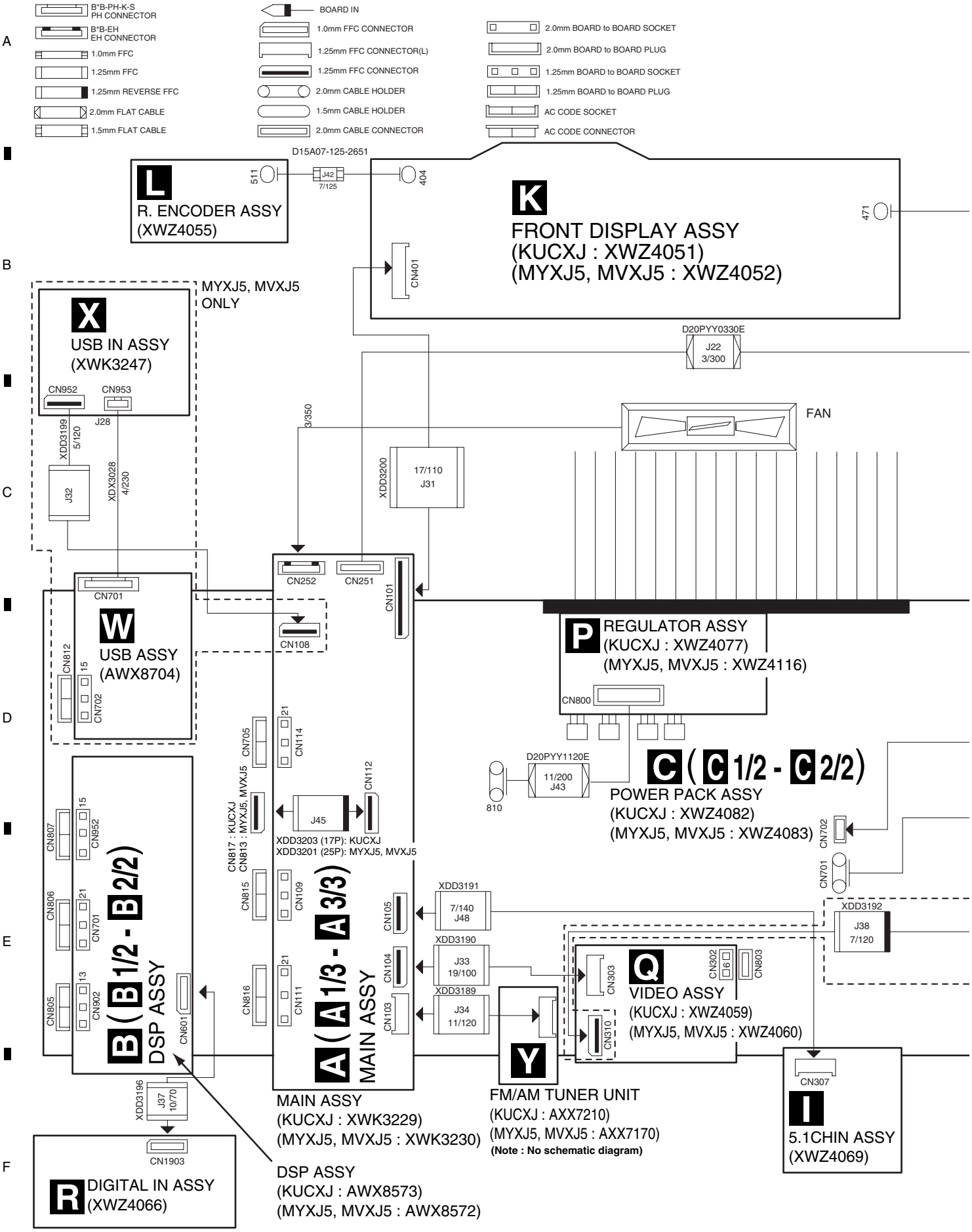

- When ordering service parts, be sure to refer to "EXPLODED VIEWS and PARTS LIST" or "PCB PARTS LIST".
- The ⚠ mark found on some component parts indicates the importance of the safety factor of the part. Therefore, when replacing, be sure to use parts of identical designation.
- : The power supply is shown with the marked box.

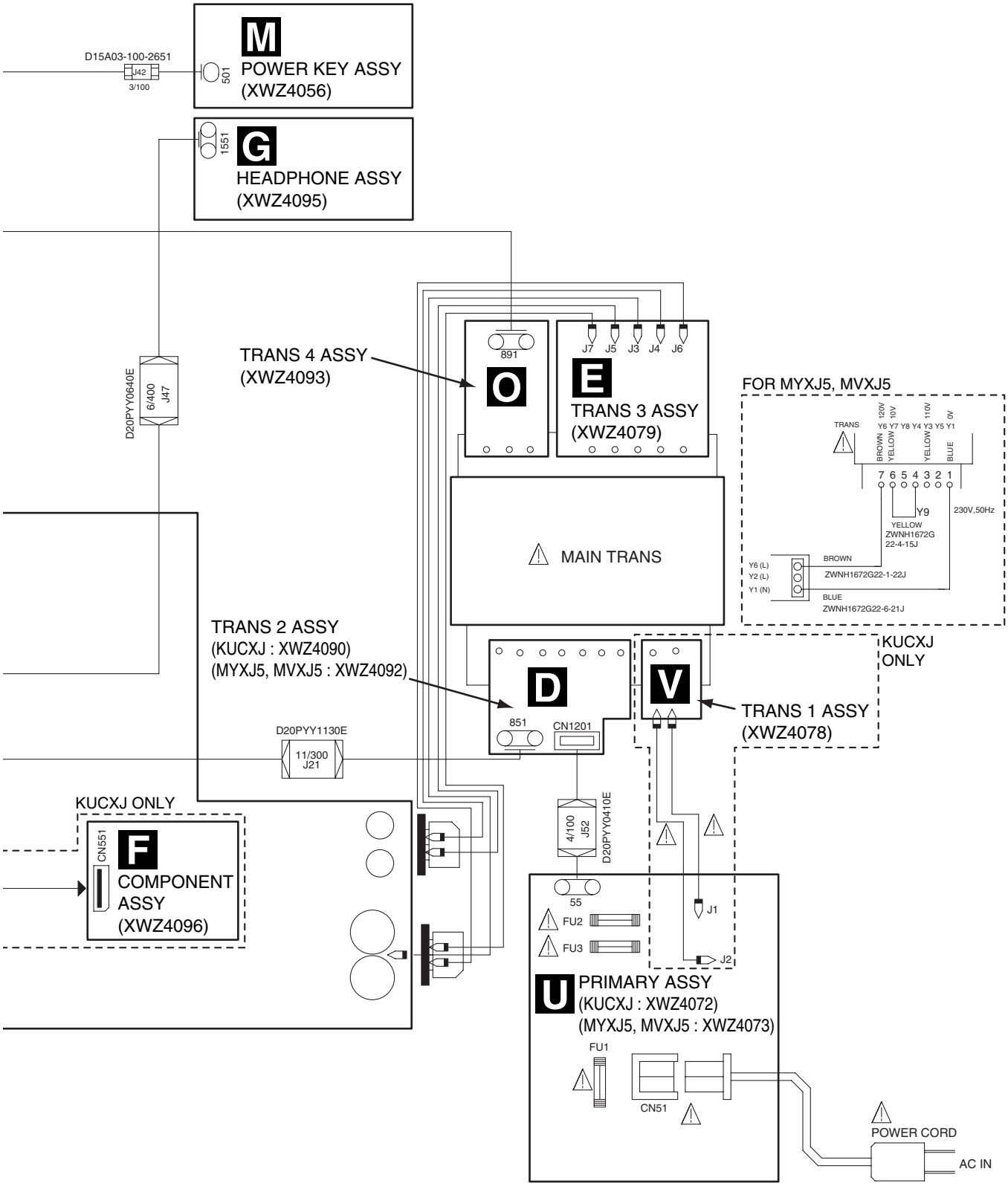

3.3 MAIN ASSY (1/3)

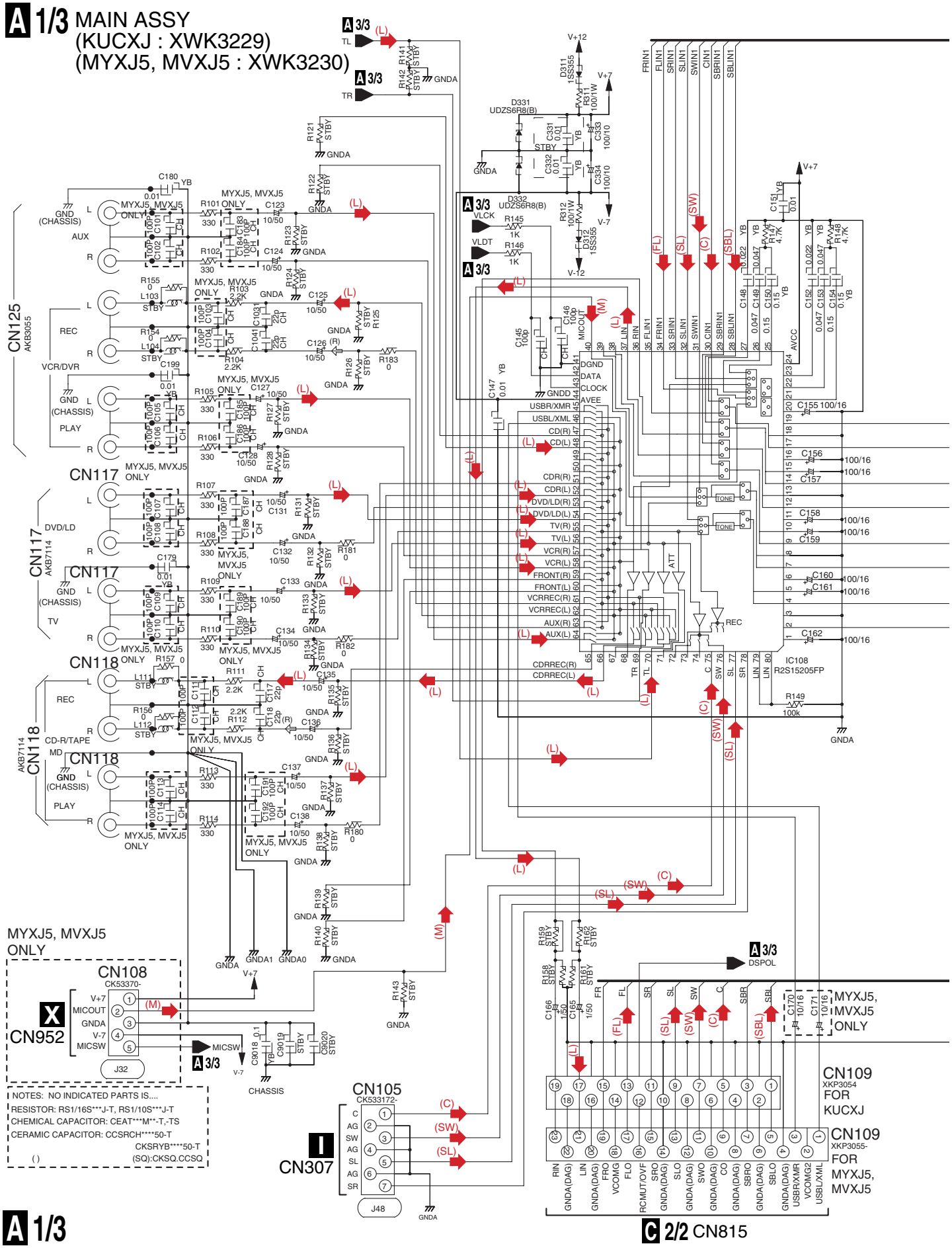

A 1/3

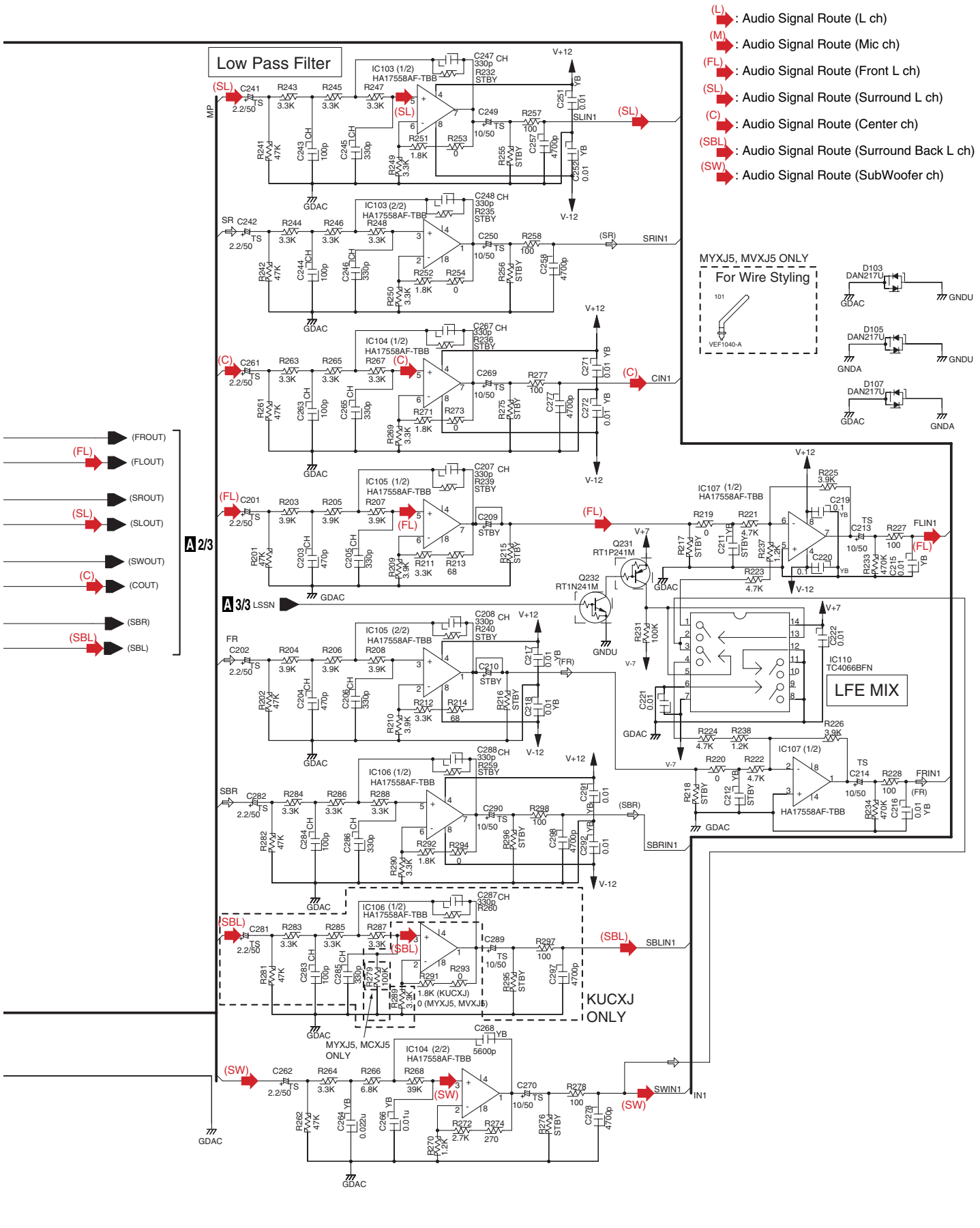
(L) : Audio Signal Route (L ch)
(M) : Audio Signal Route (Mic ch)
(FL) : Audio Signal Route (Front L ch)
(SL) : Audio Signal Route (Surround L ch)
(C) : Audio Signal Route (Center ch)
(SBL) : Audio Signal Route (Surround Back L ch)
(SW) : Audio Signal Route (SubWoofer ch)
Low Pass Filter
IC103 (1/2) HA17558AF-TBB
IC103 (2/2) HA17558AF-TBB
IC104 (1/2) HA17558AF-TBB
IC104 (2/2) HA17558AF-TBB
IC105 (1/2) HA17558AF-TBB
IC105 (2/2) HA17558AF-TBB
IC106 (1/2) HA17558AF-TBB
IC107 (1/2) HA17558AF-TBB
IC110 TC4066BFN
LFE MIX
KUCXJ ONLY
MYXJ5, MCXJ5 ONLY
MYXJ5, MVXJ5 ONLY
For Wire Styling
VEF1040-A
D103 DAN217U
D105 DAN217U
D107 DAN217U
Q231 RT1P241M
Q232 RT1N241M
A 2/3
A 3/3 LSSN
(FROUT)
(FLOUT)
(SROUT)
(SLOUT)
(SWOUT)
(COUT)
(SBR)
(SBL)
SLIN1
SRIN1
CIN1
FLIN1
FRIN1
SBRIN1
SBLIN1
SWIN1
IN1
GDAC
GNDU
GNDA
V+12
V-12
V+7
V-7

A 1/3

3.4 MAIN ASSY (2/3)

A 2/3 MAIN ASSY
(KUCXJ : XWK3229)
(MYXJ5, MVXJ5 : XWK3230)

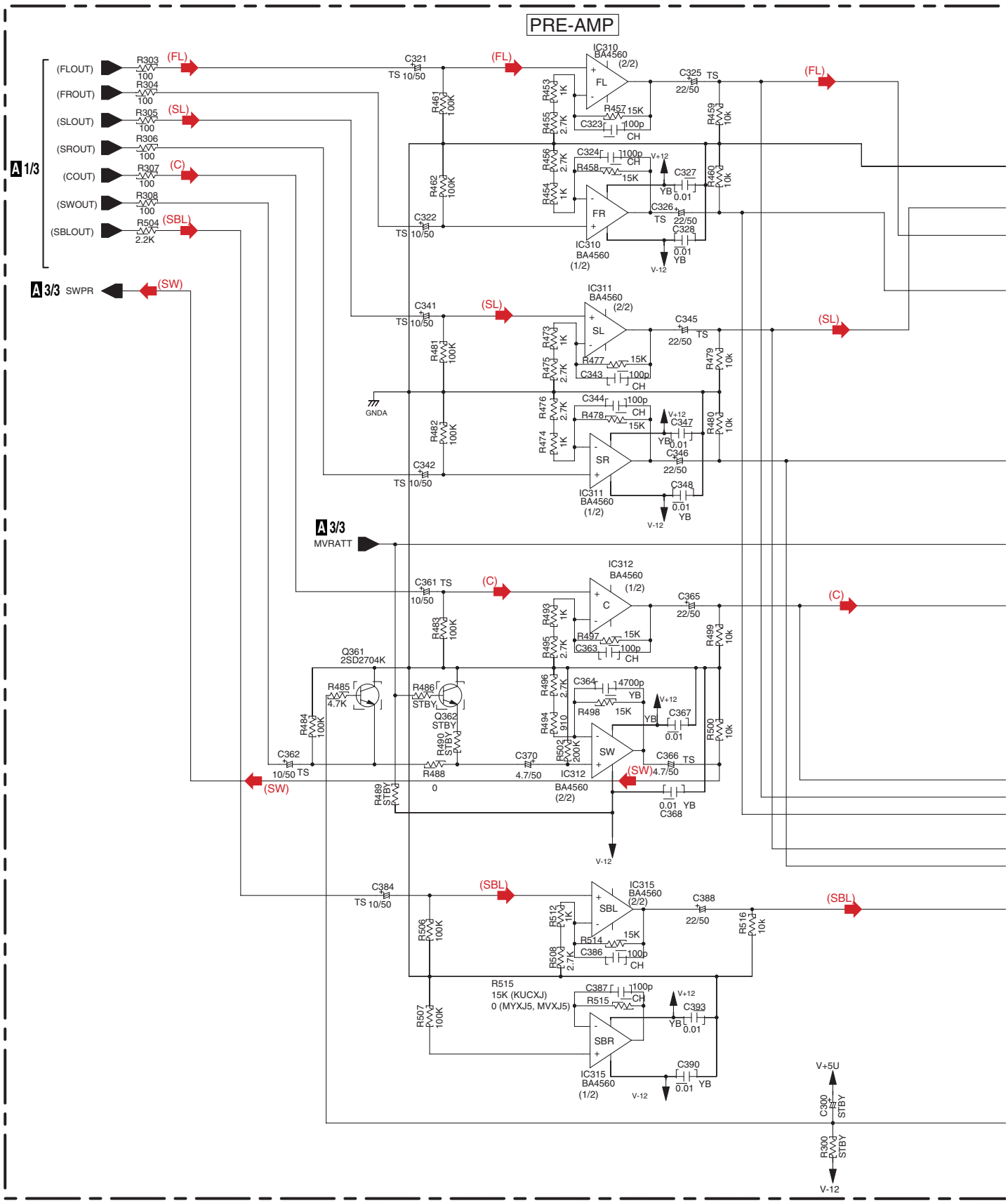

A 2/3

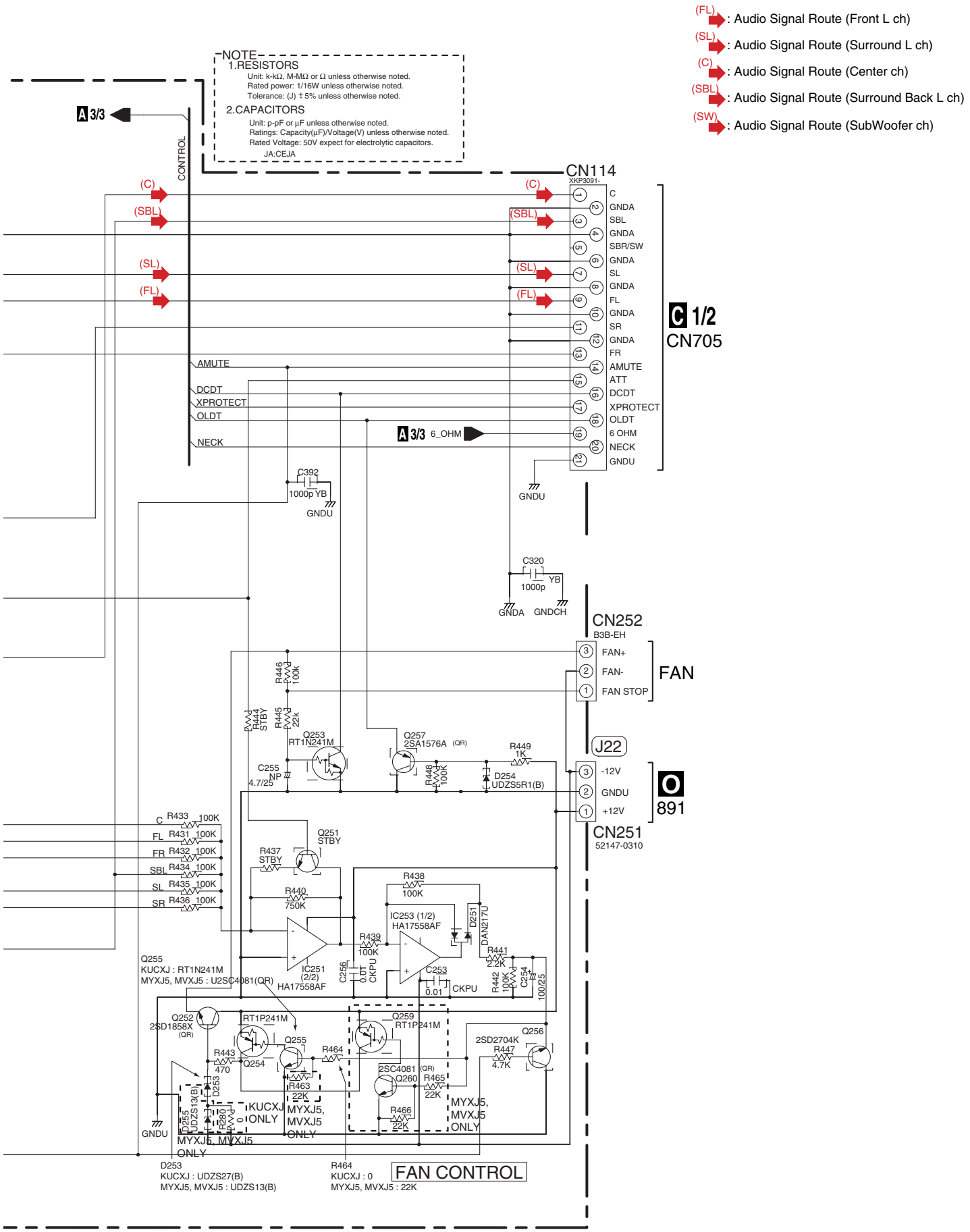
(FL) : Audio Signal Route (Front L ch)
(SL) : Audio Signal Route (Surround L ch)
(C) : Audio Signal Route (Center ch)
(SBL) : Audio Signal Route (Surround Back L ch)
(SW) : Audio Signal Route (SubWoofer ch)
NOTE
1.RESISTORS
Unit: k-kΩ, M-MΩ or Ω unless otherwise noted.
Rated power: 1/16W unless otherwise noted.
Tolerance: (J) ±5% unless otherwise noted.
2.CAPACITORS
Unit: p-pF or μF unless otherwise noted.
Ratings: Capacity(μF)/Voltage(V) unless otherwise noted.
Rated Voltage: 50V expect for electrolytic capacitors.
JA:CEJA
A 3/3
CONTROL
CN114
XKP3091-
C
GNDA
SBL
GNDA
SBR/SW
GNDA
SL
GNDA
FL
GNDA
SR
GNDA
FR
AMUTE
ATT
DCDT
XPROTECT
OLDT
6 OHM
NECK
GNDU
C 1/2
CN705
AMUTE
DCDT
XPROTECT
OLDT
NECK
A 3/3 6_OHM
C392
1000p YB
GNDU
C320
1000p YB
GNDA GNDCH
CN252
B3B-EH
FAN+
FAN-
FAN STOP
FAN
J22
-12V
GNDU
+12V
O 891
CN251
52147-0310
R446 100k
R444 STBY
R445 22k
Q253 RT1N241M
Q257 2SA1576A (QR)
R449 1K
C255 NP 4.7/25
R448 100K
D254 UDZS5R1(B)
C R433 100K
FL R431 100K
FR R432 100K
SBL R434 100K
SL R435 100K
SR R436 100K
Q251 STBY
R437 STBY
R438 100K
R440 750K
IC253 (1/2) HA17558AF
D251 DAN217U
R439 100K
R441 2.2K
Q255 KUCXJ : RT1N241M MYXJ5, MVXJ5 : U2SC4081(QR)
IC251 (2/2) HA17558AF
C256 0.01 CKPU
C253 0.01 CKPU
R442 100K
C254 100/25
Q252 2SD1858X (QR)
RT1P241M
Q255
Q259 RT1P241M
2SD2704K
Q256
R443 470
Q254
R464
R447 4.7K
2SC4081 (QR) Q260
R465 22K
R463 22K
R466 22K
D253
D255 UDZS13(B)
R280
KUCXJ ONLY
MYXJ5, MVXJ5 ONLY
MYXJ5, MVXJ5 ONLY
MYXJ5, MVXJ5 ONLY
GNDU
D253
KUCXJ : UDZS27(B)
MYXJ5, MVXJ5 : UDZS13(B)
R464
KUCXJ : 0
MYXJ5, MVXJ5 : 22K
FAN CONTROL
A 2/3

3.5 MAIN ASSY (3/3)

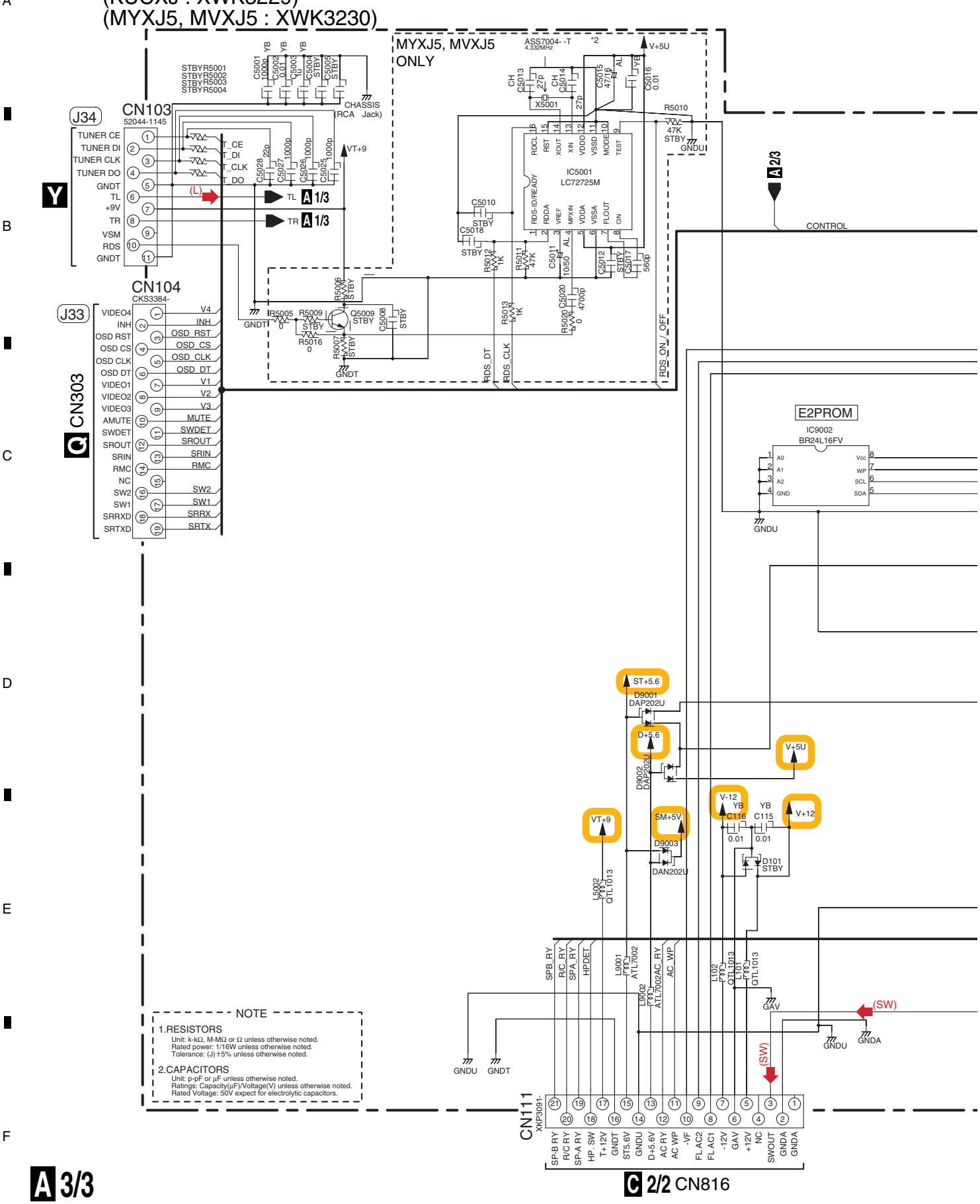

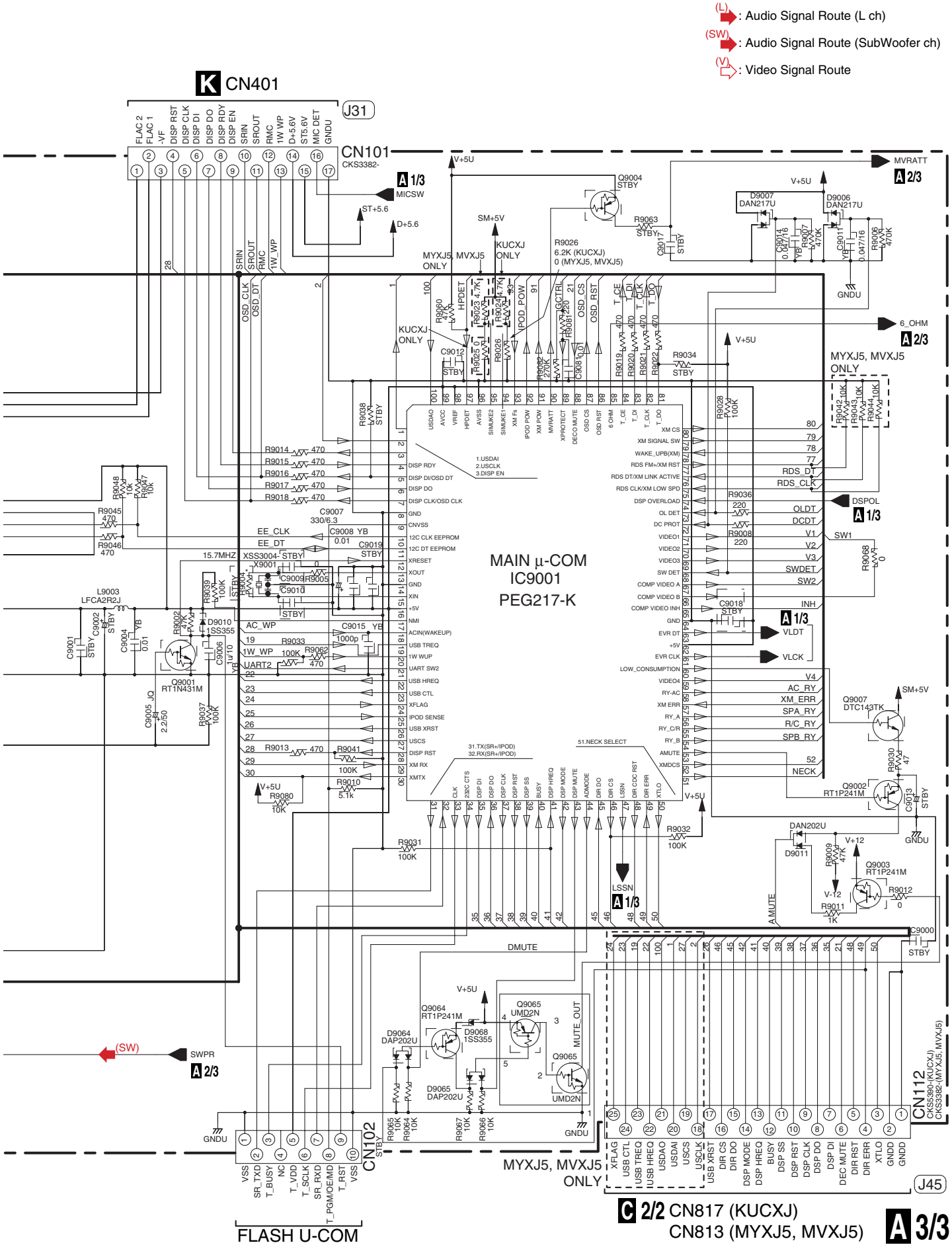
(L): Audio Signal Route (L ch)
(SW): Audio Signal Route (SubWoofer ch)
(V): Video Signal Route
K CN401
J31
CN101
CKS3382-
MAIN µ-COM
IC9001
PEG217-K
CN102
FLASH U-COM
CN112
CKS5390-(KUCXJ)
CKS3382-(MYXJ5, MVXJ5)
J45
MYXJ5, MVXJ5 ONLY
KUCXJ ONLY
C 2/2 CN817 (KUCXJ)
CN813 (MYXJ5, MVXJ5)
A 3/3

3.6 DSP ASSY (1/2)

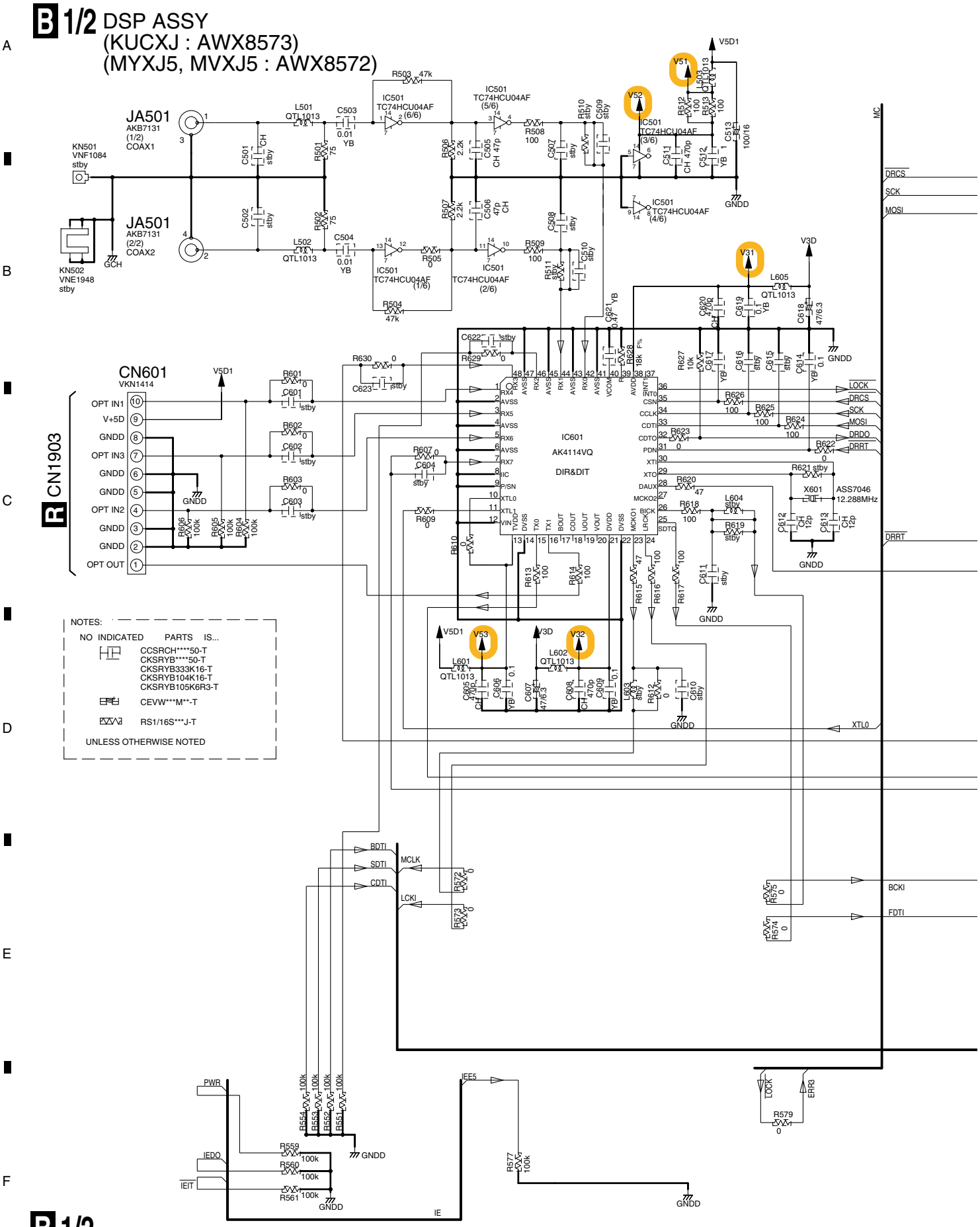

B 1/2

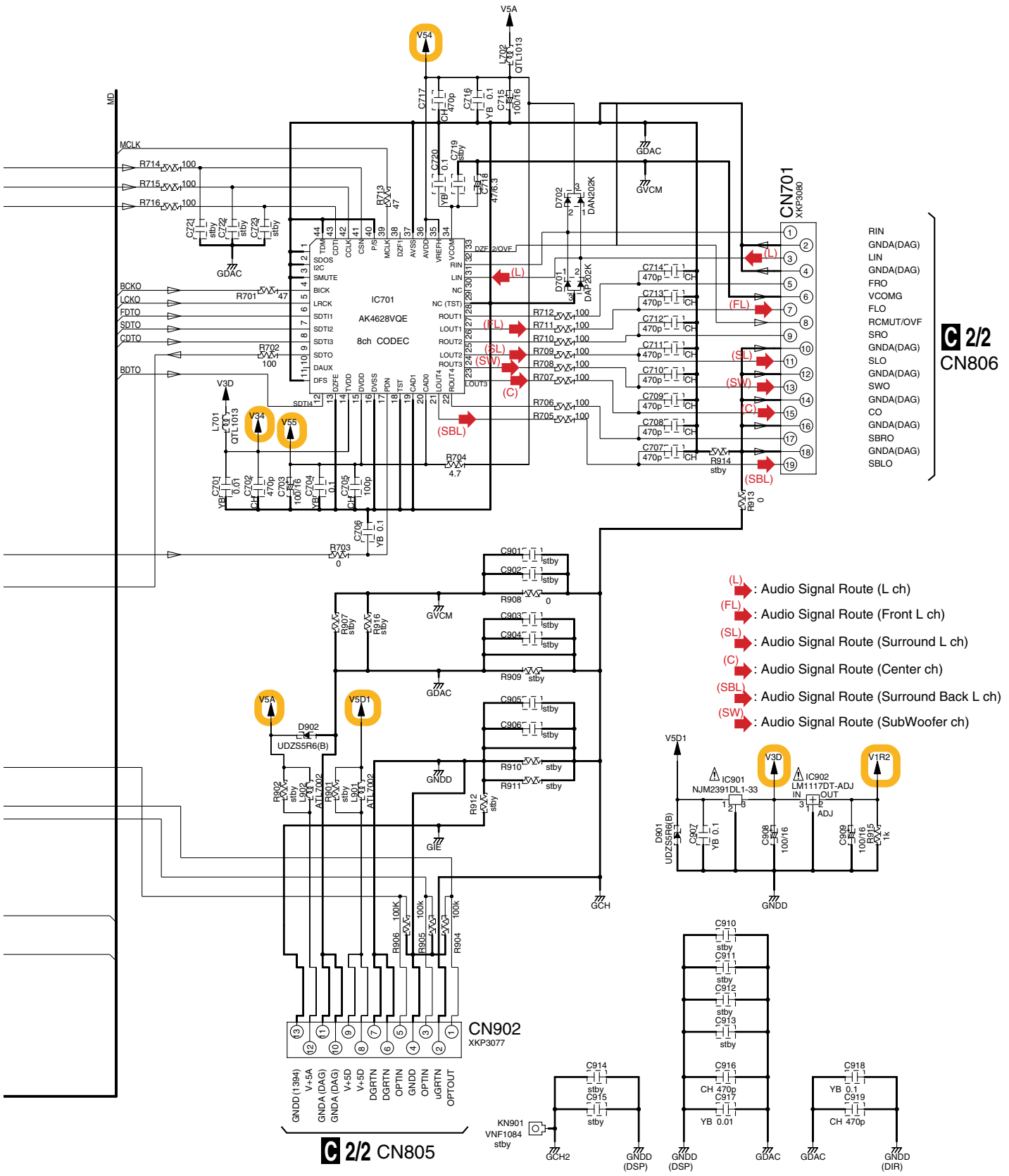
IC701
AK4628VQE
8ch CODEC
CN701
XKP3080
CN806
CN902
XKP3077
CN805
IC901
NJM2391DL1-33
IC902
LM1117DT-ADJ
(L): Audio Signal Route (L ch)
(FL): Audio Signal Route (Front L ch)
(SL): Audio Signal Route (Surround L ch)
(C): Audio Signal Route (Center ch)
(SBL): Audio Signal Route (Surround Back L ch)
(SW): Audio Signal Route (SubWoofer ch)

B 1/2

3.7 DSP ASSY (2/2)

B 2/2 DSP ASSY
(KUCXJ : AWX8573)
(MYXJ5, MVXJ5 : AWX8572)

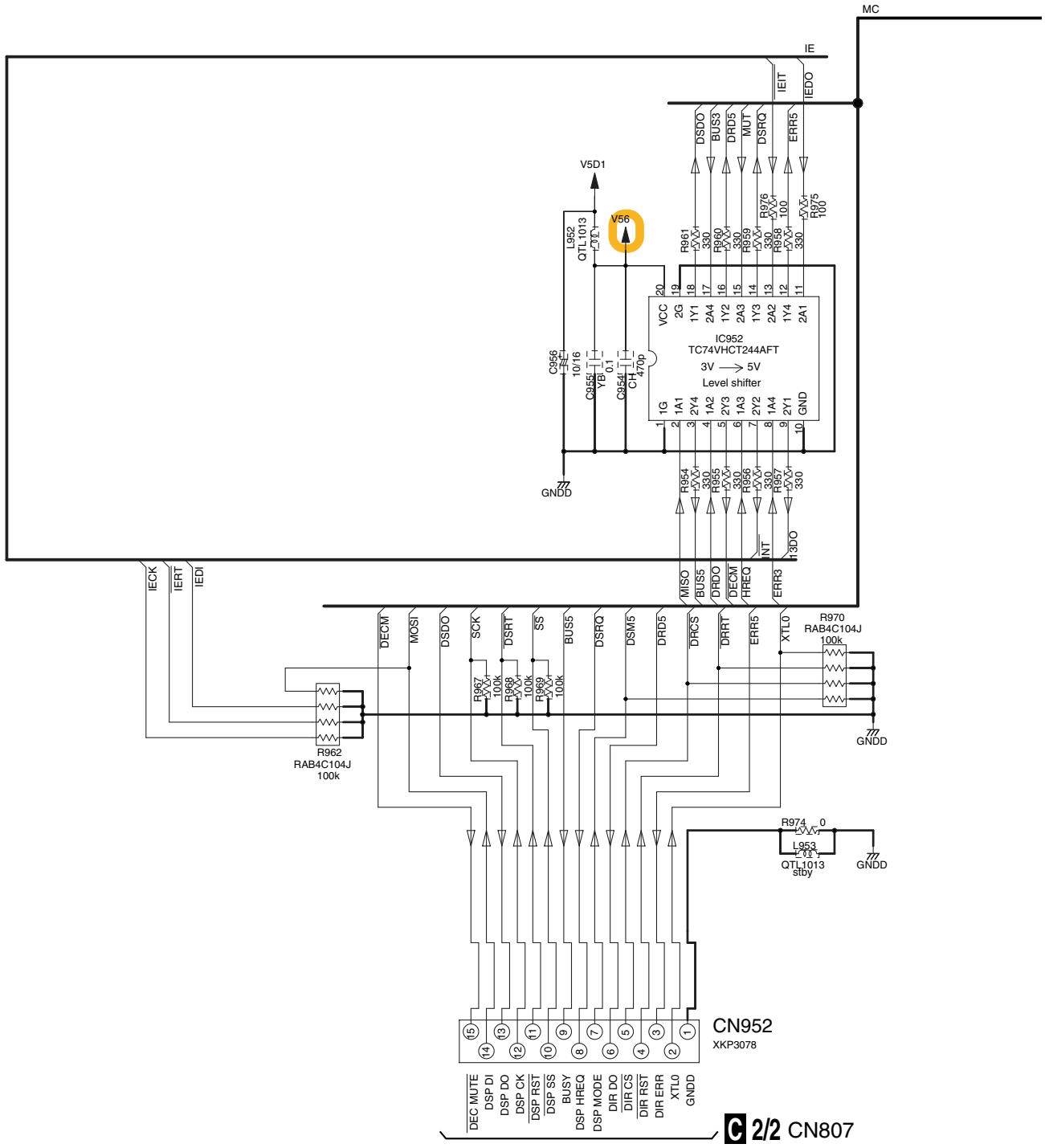

B 2/2

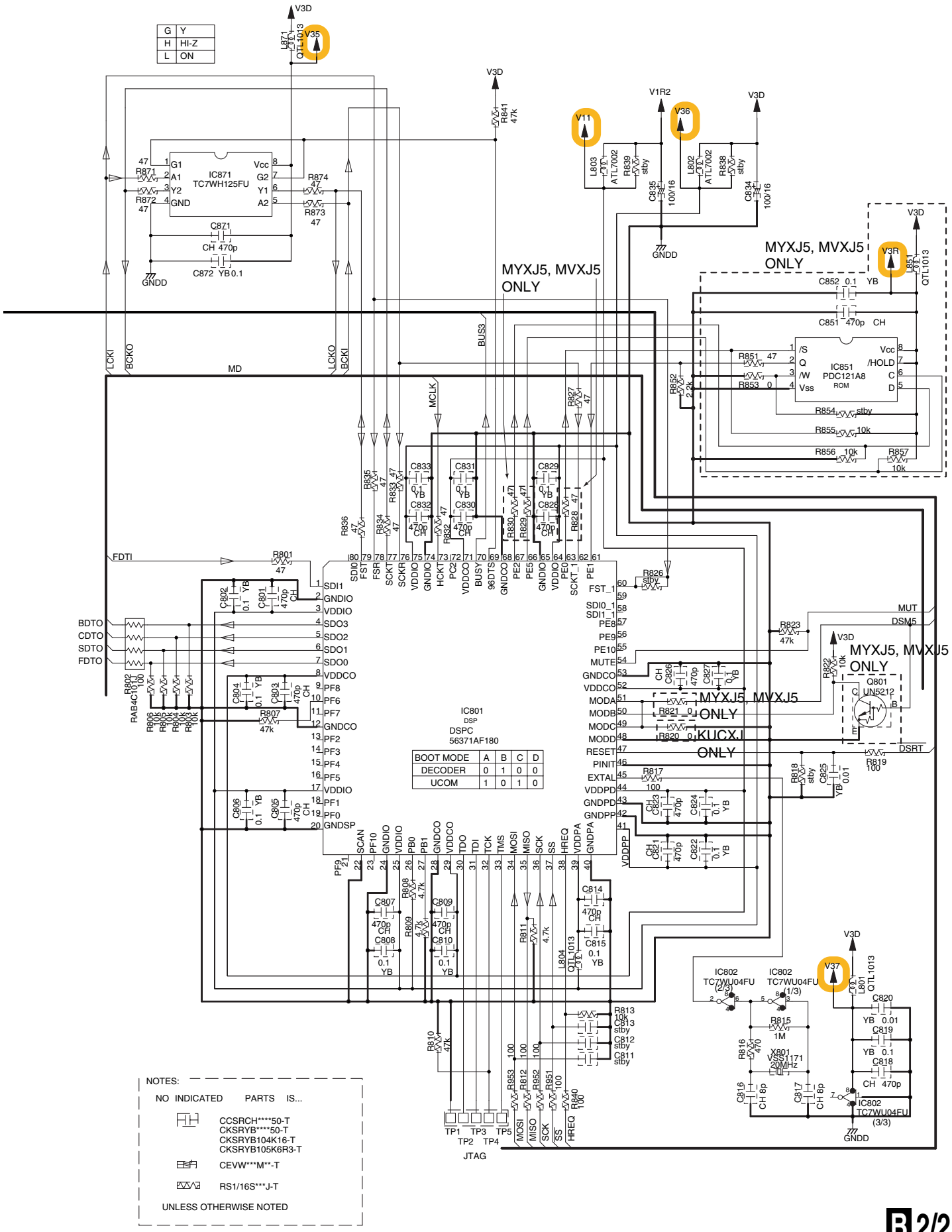
G Y
H HI-Z
L ON
IC871
TC7WH125FU
IC851
PDC121A8
ROM
MYXJ5, MVXJ5 ONLY
IC801
DSP
DSPC
56371AF180
BOOT MODE A B C D
DECODER 0 1 0 0
UCOM 1 0 1 0
KUCXJ ONLY
IC802
TC7WU04FU
X801
VSS1171
20MHz
Q801
UN5212
JTAG
NOTES:
NO INDICATED PARTS IS...
CCSRCH****50-T
CKSRYB****50-T
CKSRYB104K16-T
CKSRYB105K6R3-T
CEVW***M**-T
RS1/16S***J-T
UNLESS OTHERWISE NOTED

B 2/2

C 1/2 POWER PACK ASSY (KUCXJ : XWZ4082) (MYXJ5, MVXJ5 : XWZ4083)

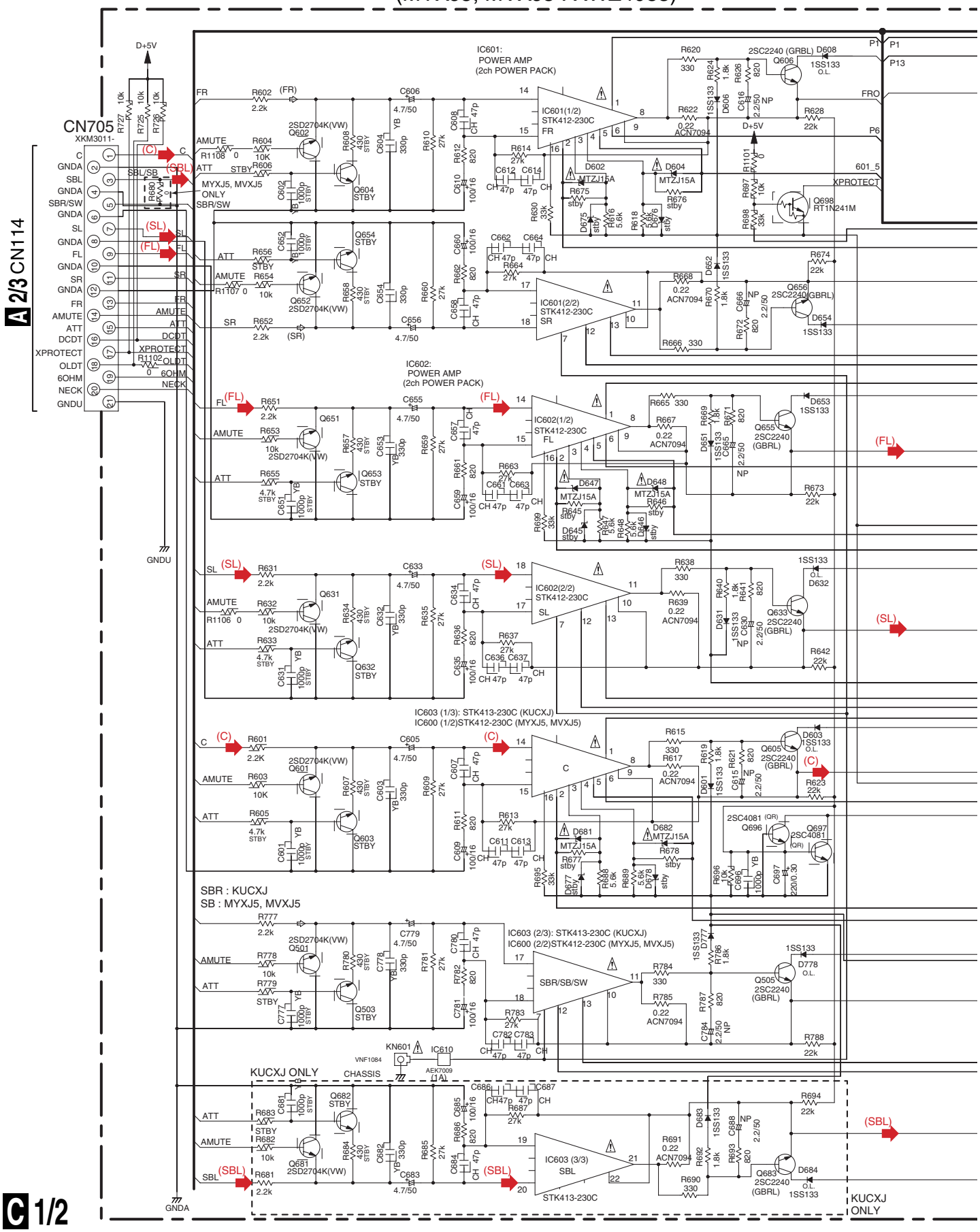

C 1/2

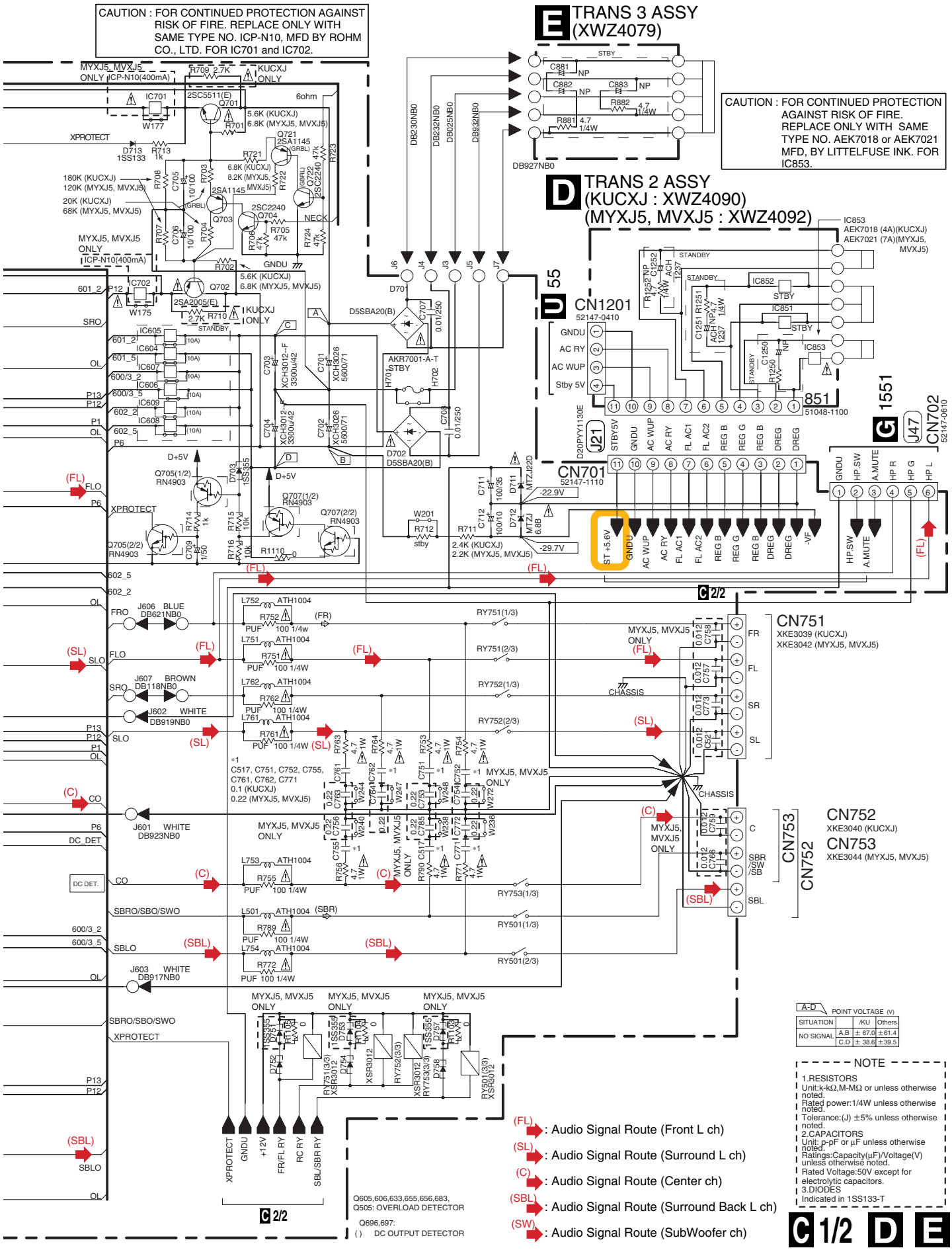
CAUTION : FOR CONTINUED PROTECTION AGAINST RISK OF FIRE. REPLACE ONLY WITH SAME TYPE NO. ICP-N10, MFD BY ROHM CO., LTD. FOR IC701 and IC702.
E TRANS 3 ASSY (XWZ4079)
CAUTION : FOR CONTINUED PROTECTION AGAINST RISK OF FIRE. REPLACE ONLY WITH SAME TYPE NO. AEK7018 or AEK7021 MFD, BY LITTELFUSE INK. FOR IC853.
D TRANS 2 ASSY (KUCXJ : XWZ4090) (MYXJ5, MVXJ5 : XWZ4092)
CN1201
CN701
CN751
CN752
CN753
CN702
(FL): Audio Signal Route (Front L ch)
(SL): Audio Signal Route (Surround L ch)
(C): Audio Signal Route (Center ch)
(SBL): Audio Signal Route (Surround Back L ch)
(SW): Audio Signal Route (SubWoofer ch)
Q605,606,633,655,656,683, Q505: OVERLOAD DETECTOR
Q696,697: ( ) DC OUTPUT DETECTOR
NOTE
1.RESISTORS
Unit:k-kΩ,M-MΩ or unless otherwise noted.
Rated power:1/4W unless otherwise noted.
Tolerance:(J) ±5% unless otherwise noted.
2.CAPACITORS
Unit: p-pF or μF unless otherwise noted.
Ratings:Capacity(μF)/Voltage(V) unless otherwise noted.
Rated Voltage:50V except for electrolytic capacitors.
3.DIODES
Indicated in 1SS133-T
C 1/2 D E

3.9 POWER PACK ASSY (2/2)

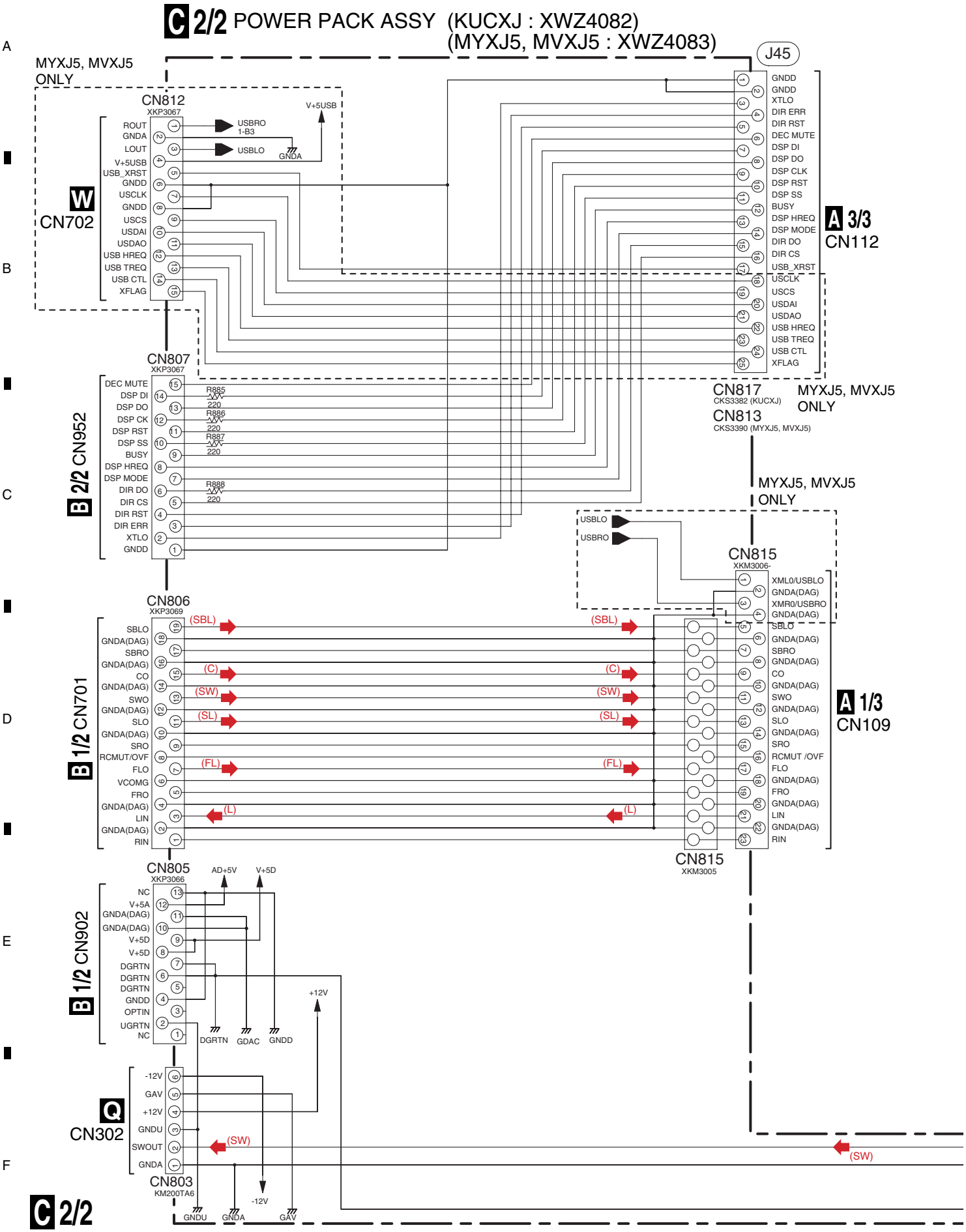

(L) : Audio Signal Route (L ch)
(FL) : Audio Signal Route (Front L ch)
(SL) : Audio Signal Route (Surround L ch)
(C) : Audio Signal Route (Center ch)
(SBL) : Audio Signal Route (Surround Back L ch)
(SW) : Audio Signal Route (SubWoofer ch)

NOTE

1.RESISTORS
Unit:k-kΩ,M-MΩ or unless otherwise noted.
Rated power:1/4W unless otherwise noted.
Tolerance:(J) ± 5% unless otherwise noted.

2.CAPACITORS
Umit: p-pF or μF unless otherwise noted.
Ratings:Capacity(μF)/Voltage(V) unless otherwise noted.
Rated Voltage:50V except for electrolytic capacitors.

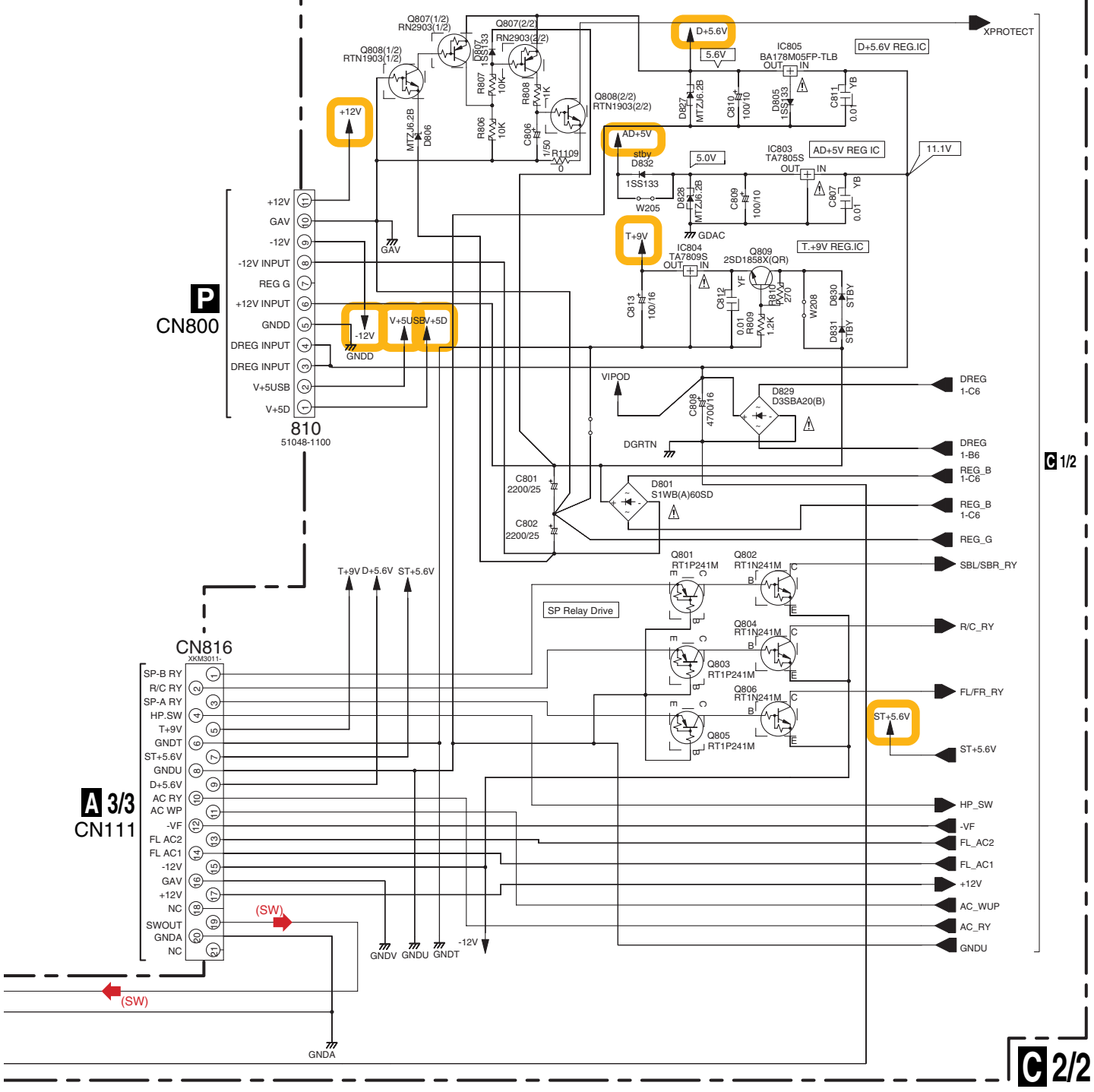

3.10 COMPONENT ASSY

F COMPONENT ASSY (XWZ4096)

(Y): Video Signal Route (Component Y ch)
(Cb): Video Signal Route (Component Cb ch)
(Cr): Video Signal Route (Component Cr ch)

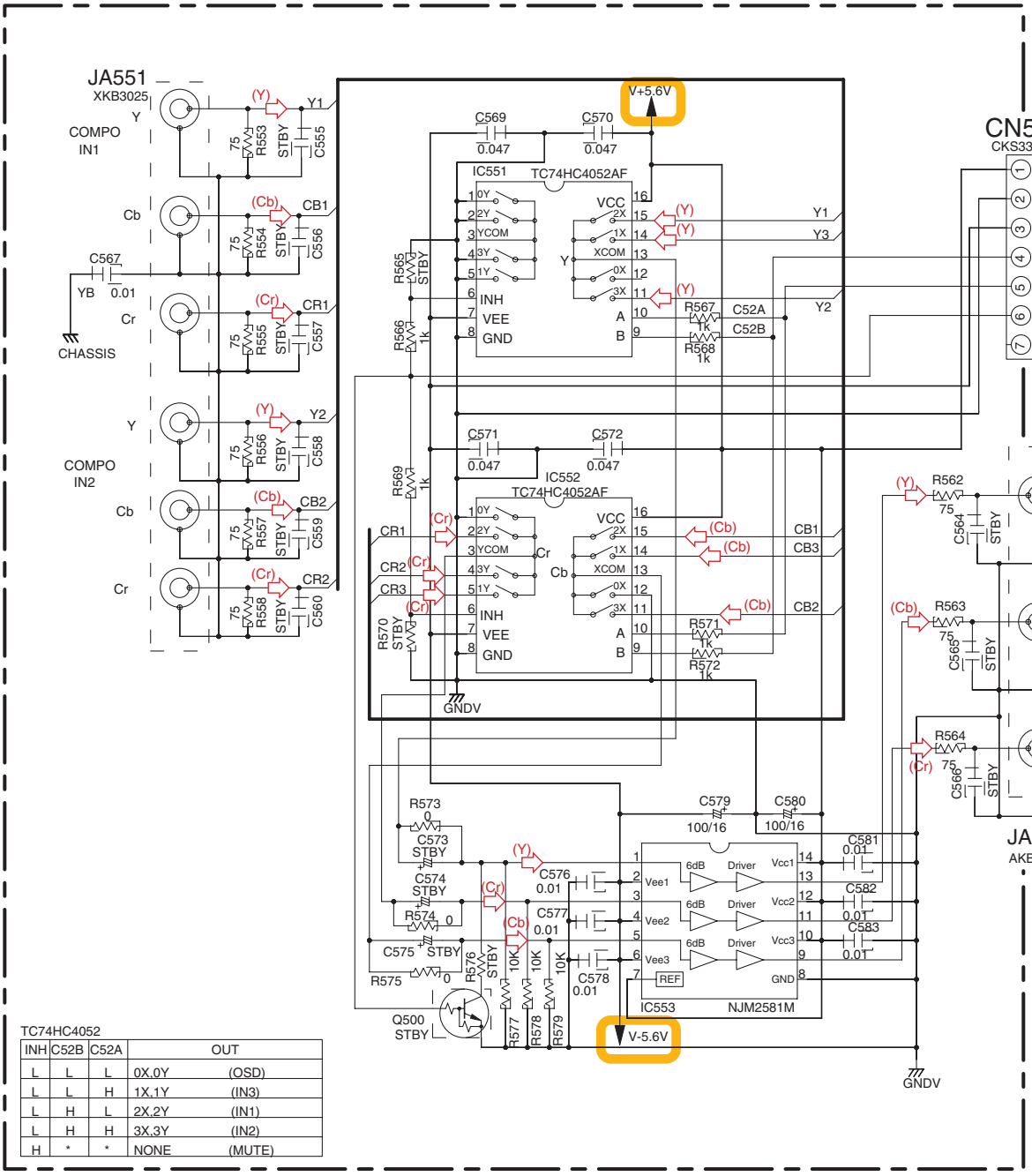

TC74HC4052

INH	C52B	C52A	OUT	
L	L	L	0X,0Y	(OSD)
L	L	H	1X,1Y	(IN3)
L	H	L	2X,2Y	(IN1)
L	H	H	3X,3Y	(IN2)
H	*	*	NONE	(MUTE)

NOTE

1.RESISTORS
Unit: k-kΩ, M-MΩ or Ω unless otherwise noted.
Rated power: 1/16W unless otherwise noted.
Tolerance: (J) ±5% unless otherwise noted.

2.CAPACITORS
Unit: p-pF or μF unless otherwise noted.
Ratings: Capacity(μF)/Voltage(V) unless otherwise noted.
Rated Voltage: 50V expect for electrolytic capacitors.

3.11 HEADPHONE and 5.1CHIN ASSYS

G HEADPHONE ASSY (XWZ4095)

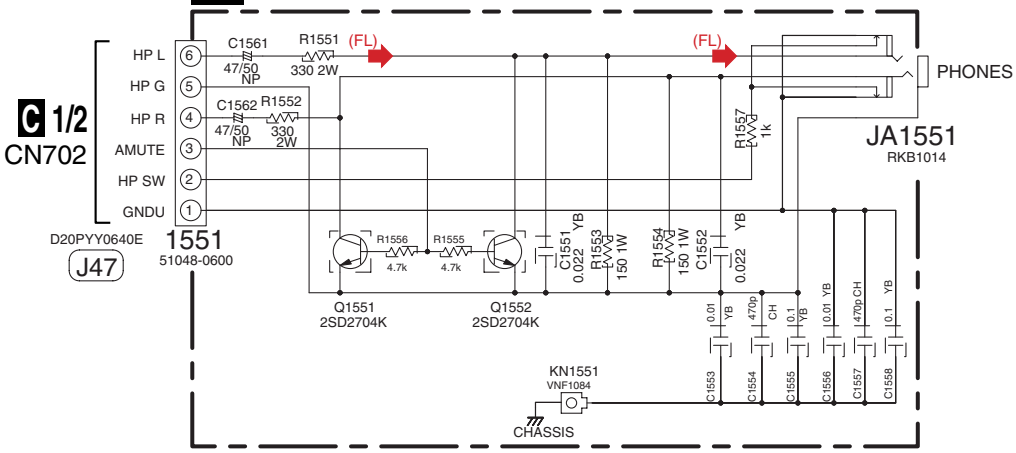

(FL) : Audio Signal Route (Front L ch)

(SL) : Audio Signal Route (Surround L ch)

(C) : Audio Signal Route (Center ch)

(SW) : Audio Signal Route (SubWoofer ch)

NOTE

1.RESISTORS
Unit: k-kΩ, M-MΩ or Ω unless otherwise noted.
Rated power: 1/16W unless otherwise noted.
Tolerance: (J)±5% unless otherwise noted.

2.CAPACITORS
Unit: p-pF or µF unless otherwise noted.
Ratings: Capacity(µF)/Voltage(V) unless otherwise noted.
Rated Voltage: 50V expect for electrolytic capacitors.

I 5.1CHIN ASSY (XWZ4069)

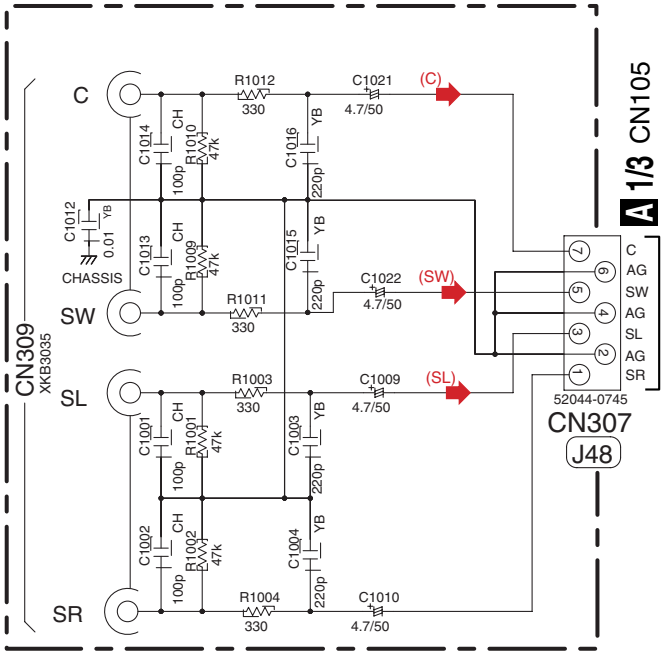

3.12 FRONT DISPLAY, R. ENCODER and POWER KEY ASSYS

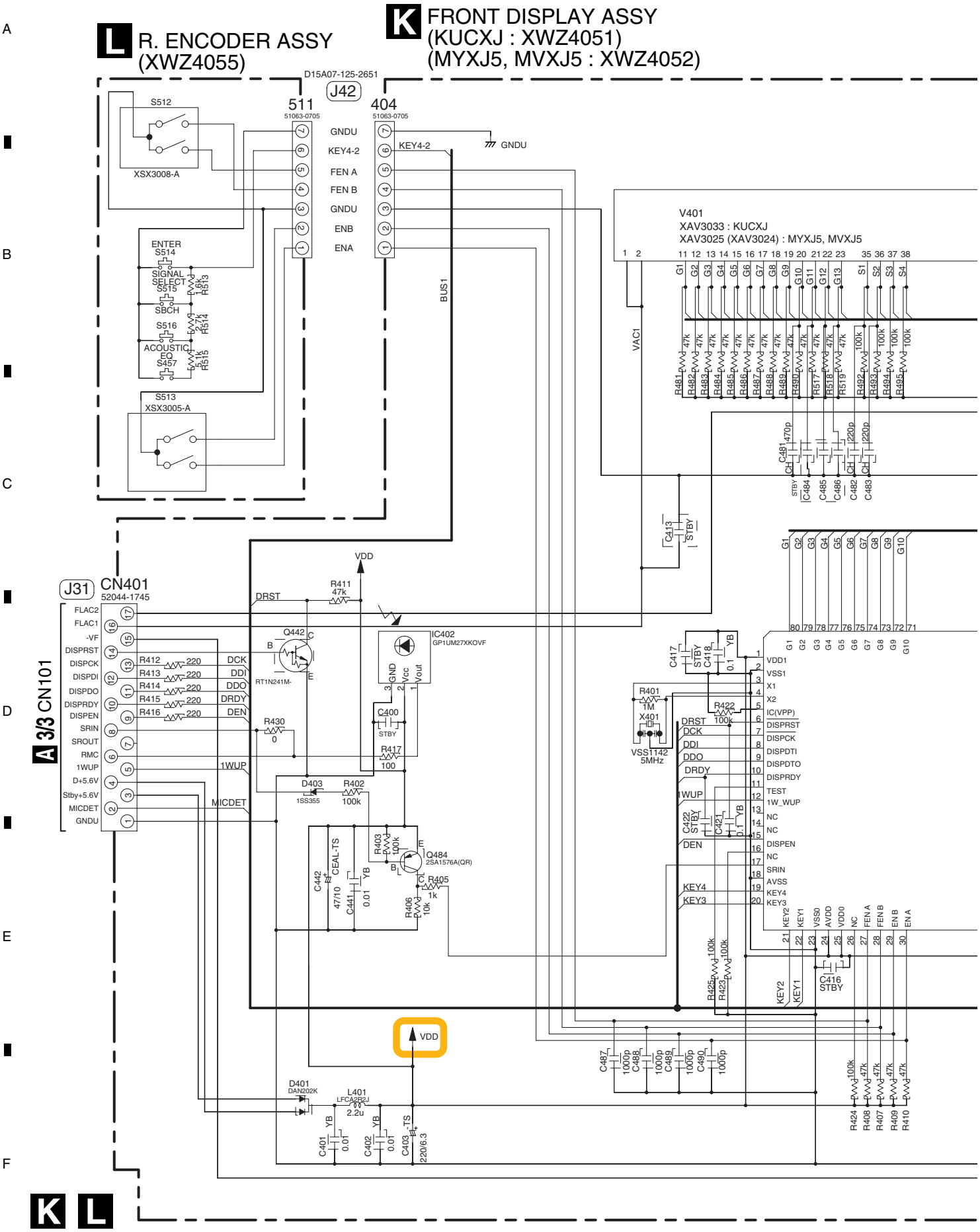

R.ENCODER ASSY
S512 : MULTI JOG DIAL
S513 : MASTER VOLUME
S514 : ENTER
S515 : SIGNAL SELECT
S516 : SBch PROCESSING
S457 : ACOUSTIC EQ

FRONT DISPLAY ASSY
S451 : AUX
S452 : XM
S453 : AM
S454 : DVD/VCR
S455 : TV/SAT
S456 : DVD/LD
S458 : FL DIMMER
S459 : CD
S460 : VIDEO
S461 : SPEAKERS
S462 : MIDNIGHAT/LOUDNESS
S463 : ATT
S464 : FM
S465 : CDR/TAPE
S466 : RETURN
S467 : SYSTEM SETUP
S468 : QUICK SETUP
S469 : TONE
S470 : TUNER EDIT
S471 : TUNING/STATION

M
POWER KEY ASSY (XWZ4056)

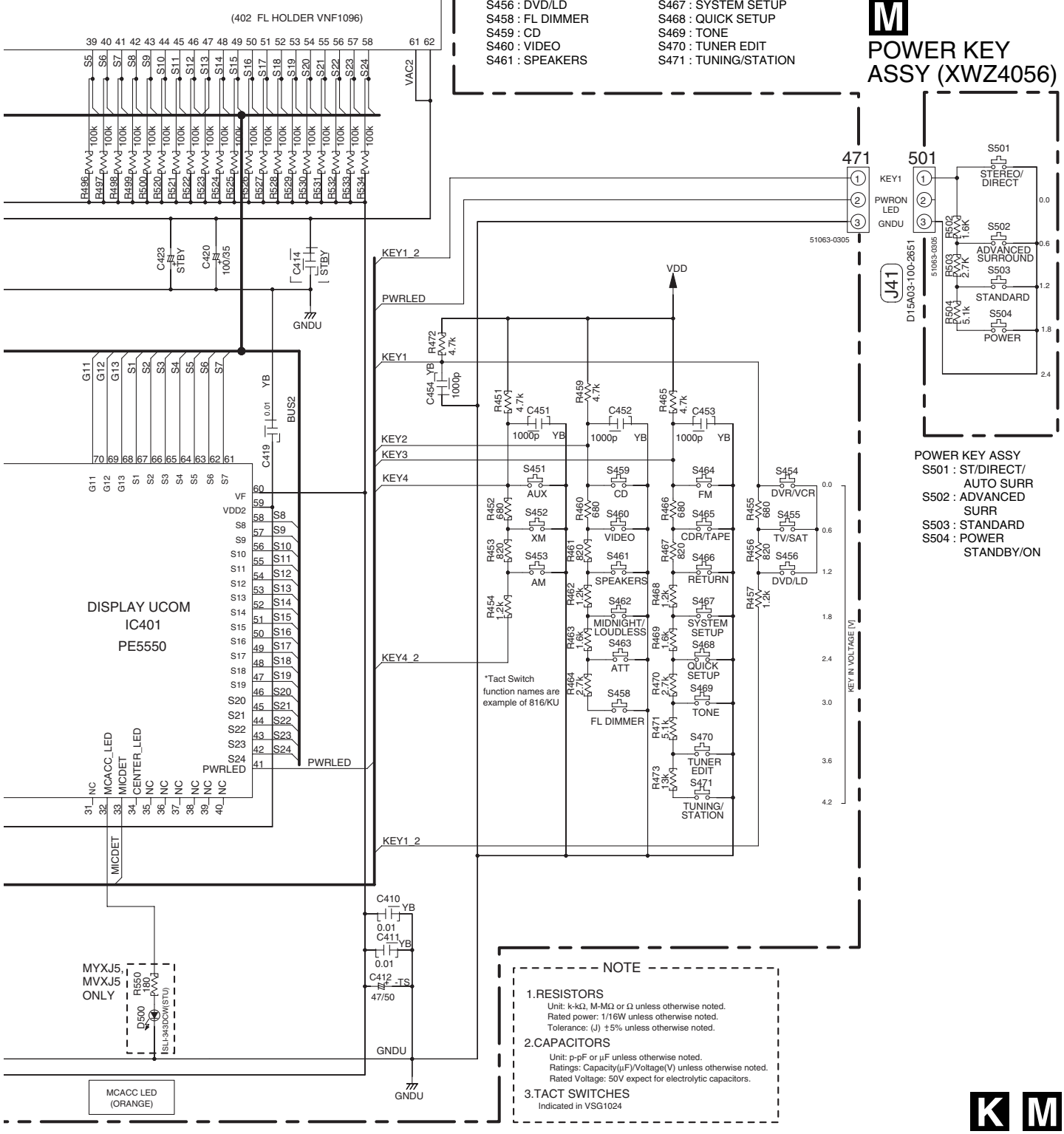

POWER KEY ASSY
S501 : ST/DIRECT/ AUTO SURR
S502 : ADVANCED SURR
S503 : STANDARD
S504 : POWER STANDBY/ON

NOTE

1.RESISTORS
Unit: k-kΩ, M-MΩ or Ω unless otherwise noted.
Rated power: 1/16W unless otherwise noted.
Tolerance: (J) ±5% unless otherwise noted.

2.CAPACITORS
Unit: p-pF or μF unless otherwise noted.
Ratings: Capacity(μF)/Voltage(V) unless otherwise noted.
Rated Voltage: 50V expect for electrolytic capacitors.

3.TACT SWITCHES
Indicated in VSG1024

K M

3.13 TRANS 4 and REGULATOR ASSYS

NOTE

1.RESISTORS
Unit: k-kΩ, M-MΩ or Ω unless otherwise noted.
Rated power: 1/16W unless otherwise noted.
Tolerance: (J) ±5% unless otherwise noted.

2.CAPACITORS
Unit: p-pF or μF unless otherwise noted.
Ratings: Capacity(μF)/Voltage(V) unless otherwise noted.
Rated Voltage: 50V expect for electrolytic capacitors.

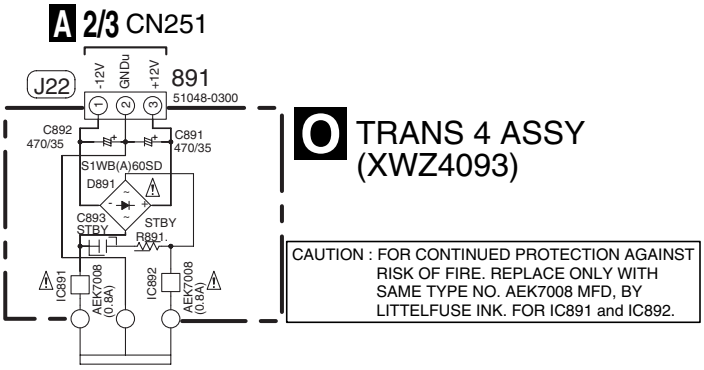

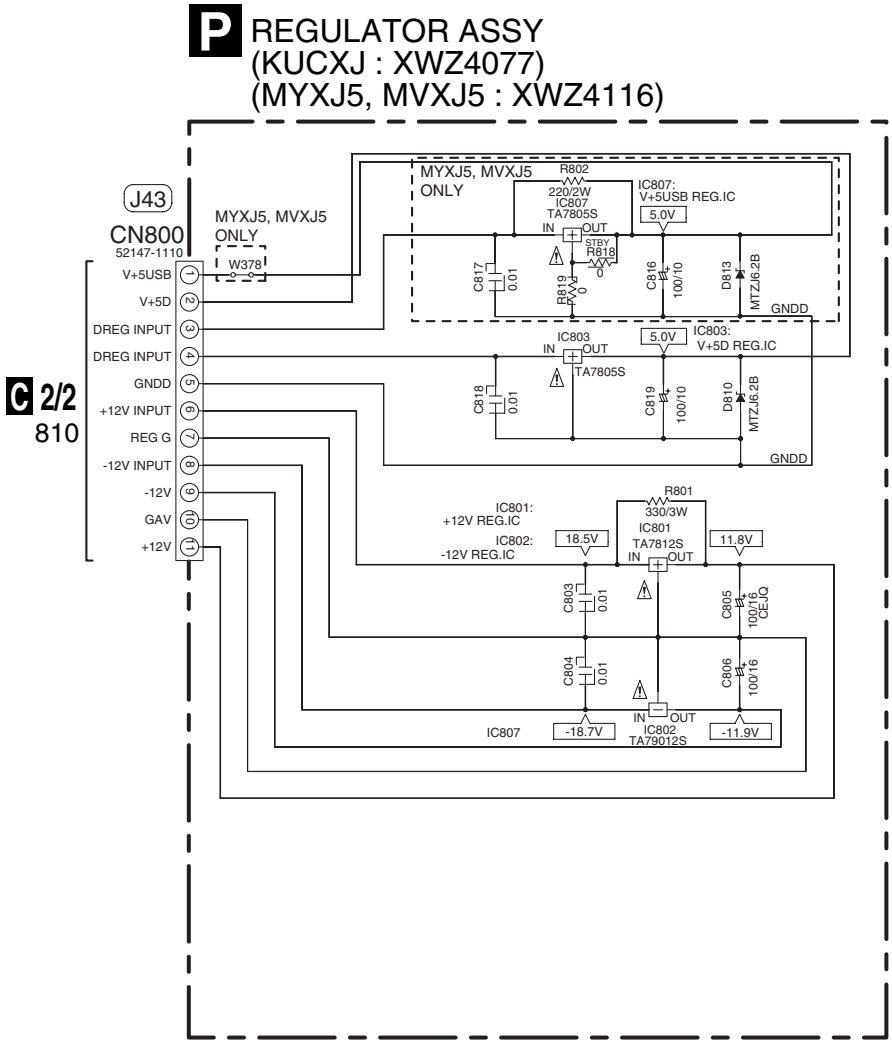

O P

A

B

C

D

E

F

3.14 VIDEO, DIGITAL IN, PRIMARY and TRANS 1 ASSYS

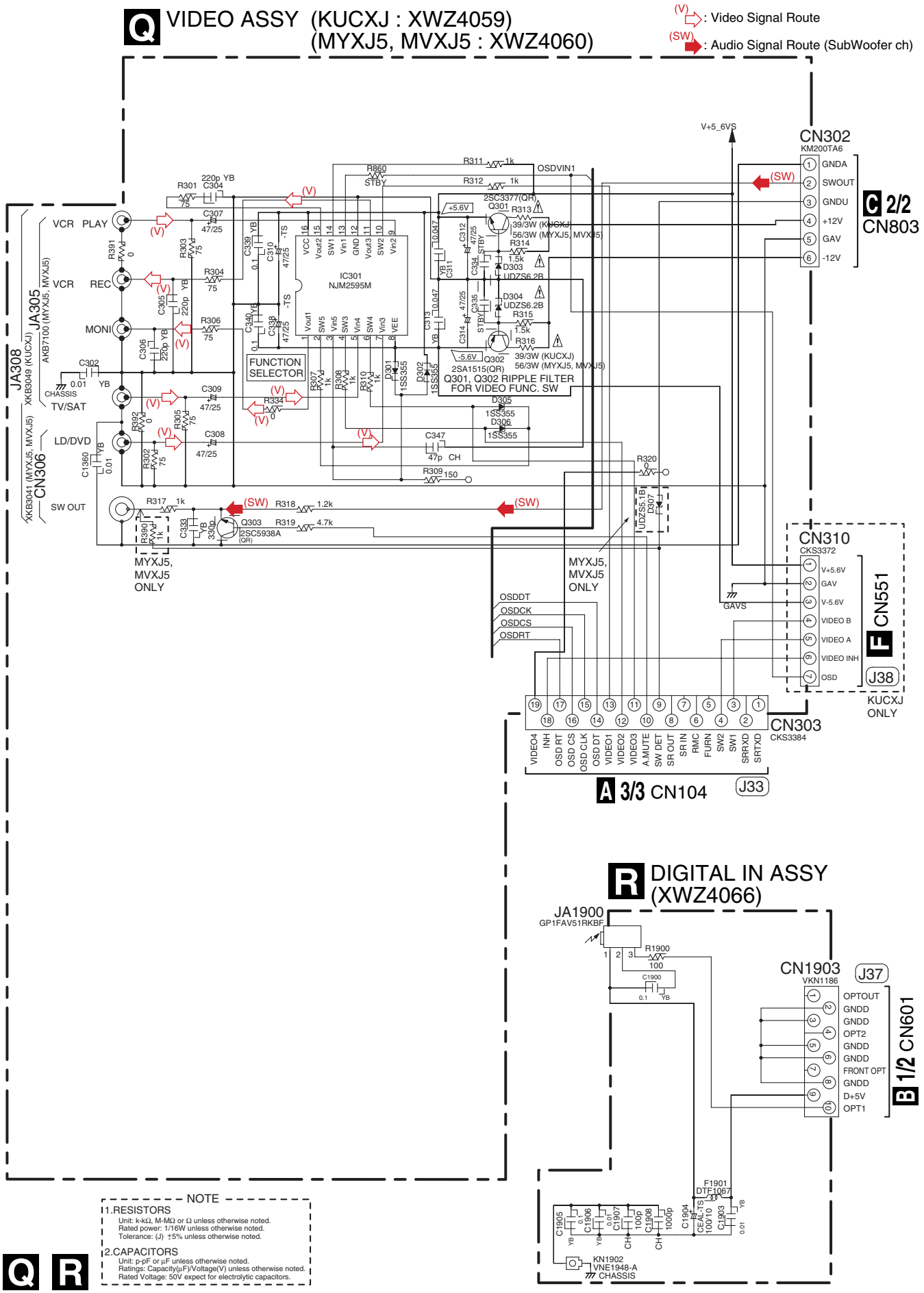

NOTE

1.RESISTORS
Unit: k-kΩ, M-MΩ or Ω unless otherwise noted.
Rated power: 1/16W unless otherwise noted.
Tolerance: (J) ±5% unless otherwise noted.

2.CAPACITORS
Unit: p-pF or µF unless otherwise noted.
Ratings: Capacity(µF)/Voltage(V) unless otherwise noted.
Rated Voltage: 50V expect for electrolytic capacitors.

Q R

• NOTE FOR FUSE REPLACEMENT

CAUTION - FOR CONTINUED PROTECTION AGAINST RISK OF FIRE. REPLACE WITH SAME TYPE AND RATINGS ONLY.

U PRIMARY ASSY (KUCXJ : XWZ4072) (MYXJ5, MVXJ5 : XWZ4073)

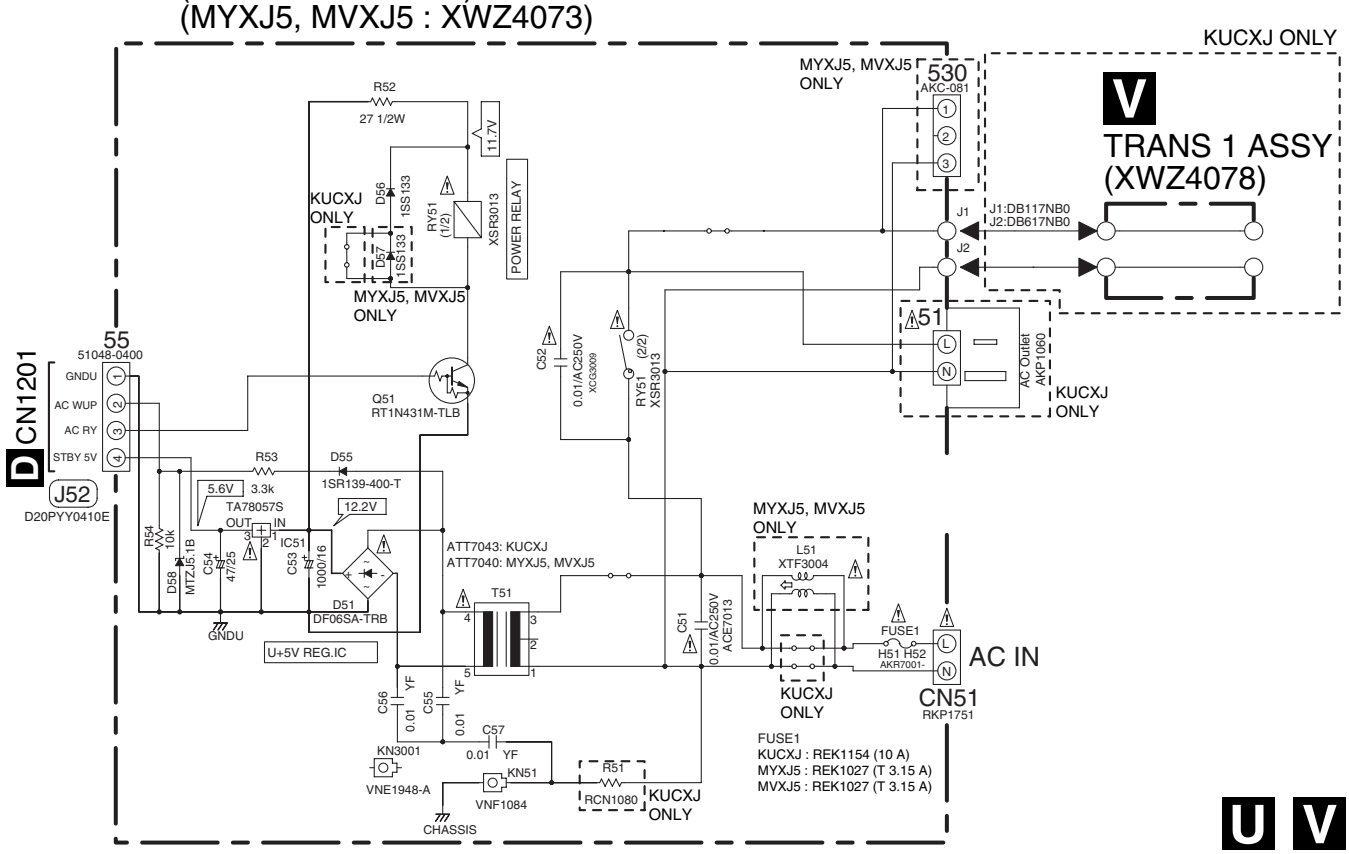

3.15 USB ASSY

W USB ASSY (AWX8704)

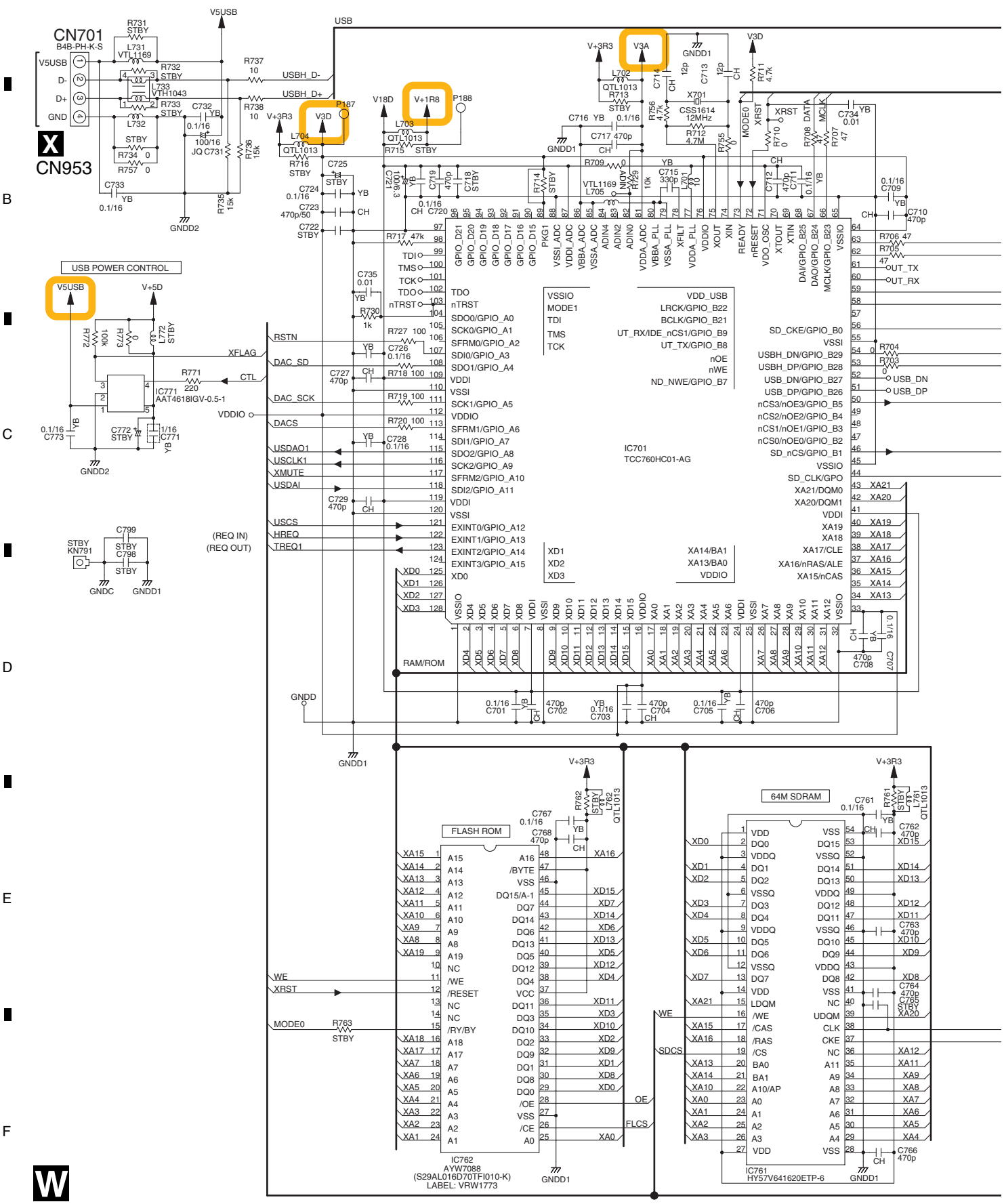

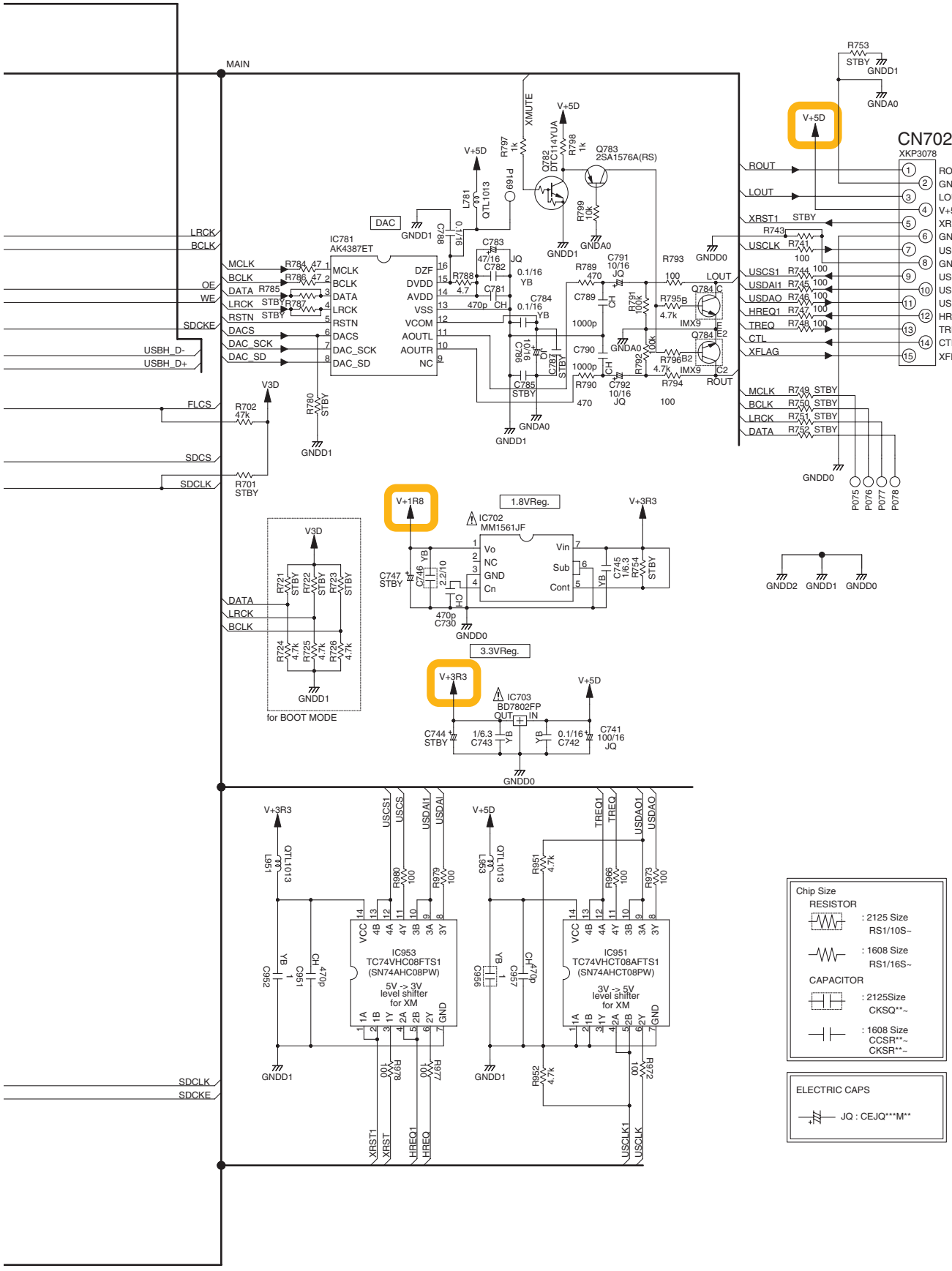
MAIN
IC781
AK4387ET
DAC
CN702
XKP3078
C 2/2
CN812
IC702
MM1561JF
1.8VReg.
IC703
BD7802FP
3.3VReg.
for BOOT MODE
IC953
TC74VHC08FTS1
(SN74AHC08PW)
5V -> 3V
level shifter
for XM
IC951
TC74VHCT08AFTS1
(SN74AHCT08PW)
3V -> 5V
level shifter
for XM
Chip Size
RESISTOR
: 2125 Size
RS1/10S~
: 1608 Size
RS1/16S~
CAPACITOR
: 2125Size
CKSQ**~
: 1608 Size
CCSR**~
CKSR**~
ELECTRIC CAPS
JQ : CEJQ***M**

3.16 USB IN ASSY

X USB IN ASSY (XWK3247)

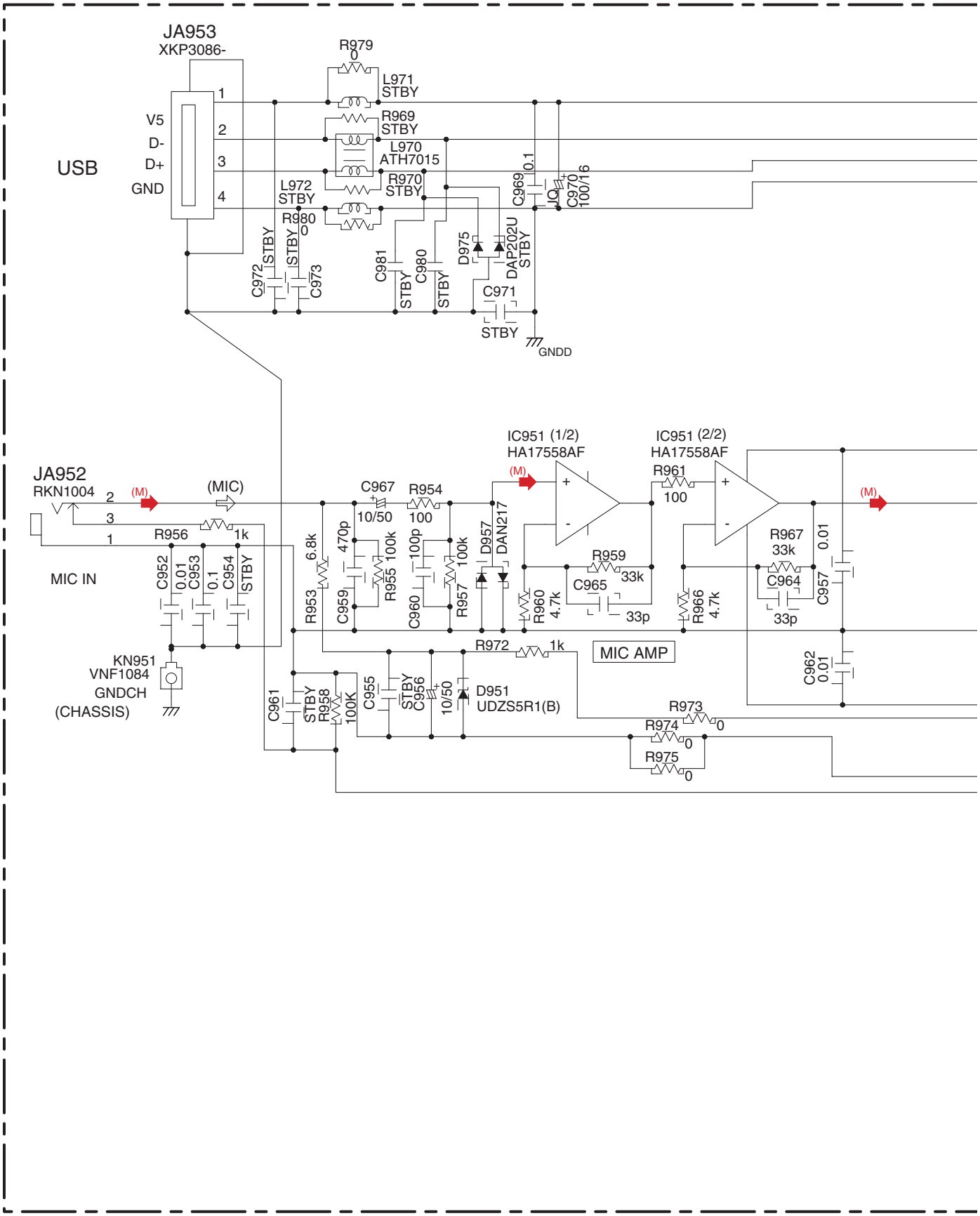

(M) : Audio Signal Route (Mic ch)

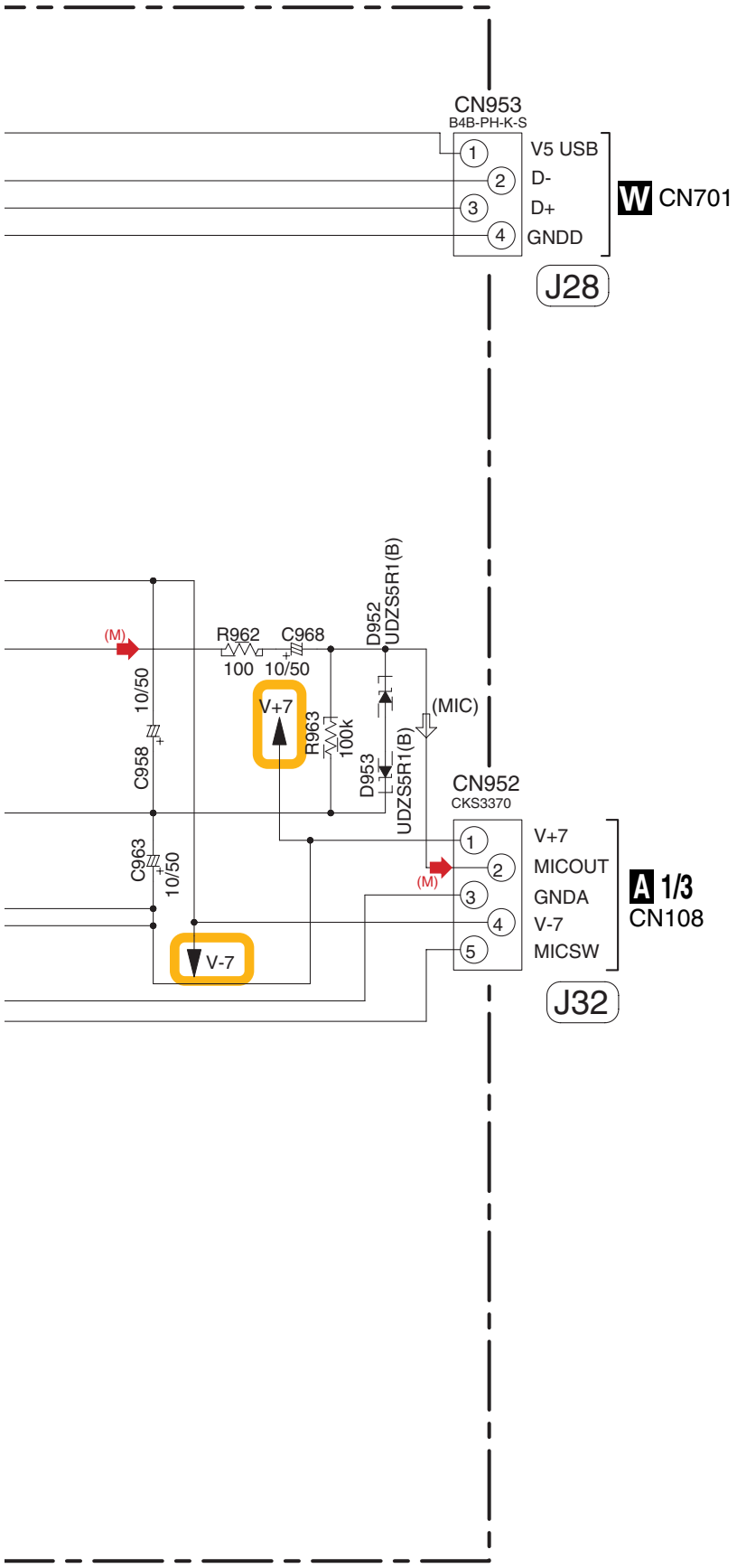

NOTE

1.RESISTORS

Unit: k-kΩ, M-MΩ or Ω unless otherwise noted.
Rated power: 1/16W unless otherwise noted.
Tolerance: (J) ±5% unless otherwise noted.

2.CAPACITORS

Unit: p-pF or µF unless otherwise noted.
Ratings: Capacity(µF)/Voltage(V) unless otherwise noted.
Rated Voltage: 50V expect for electrolytic capacitors.

X

4. PCB CONNECTION DIAGRAM

NOTE FOR PCB DIAGRAMS :

1. Part numbers in PCB diagrams match those in the schematic diagrams.
2. A comparison between the main parts of PCB and schematic diagrams is shown below.

Symbol In PCB Diagrams	Symbol In Schematic Diagrams	Part Name
B C E	B C E B C E	Transistor
B C E	B C E B C E	Transistor with resistor
D G S	D G S D G S	Field effect transistor
		Resistor array
		3-terminal regulator

3. The parts mounted on this PCB include all necessary parts for several destinations.
   For further information for respective destinations, be sure to check with the schematic diagram.
4. View point of PCB diagrams.

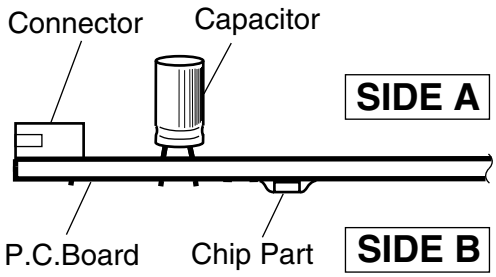

4.1 USB IN ASSY

SIDE A

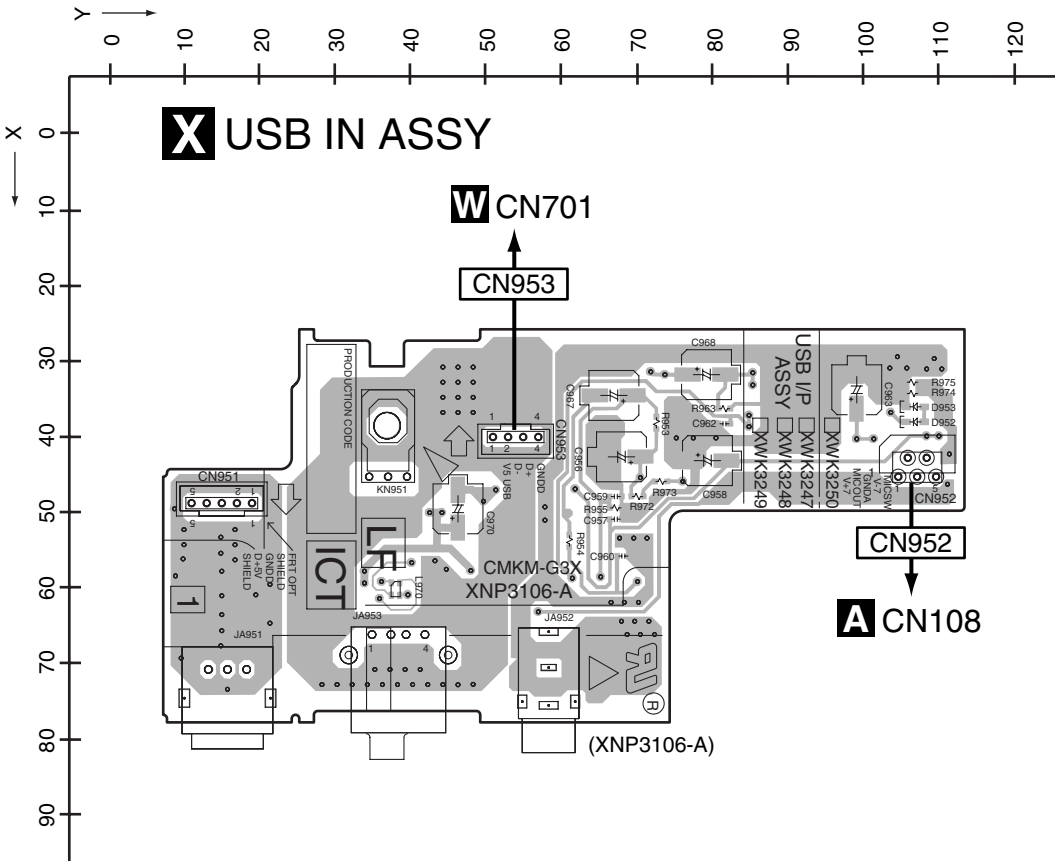

SIDE B

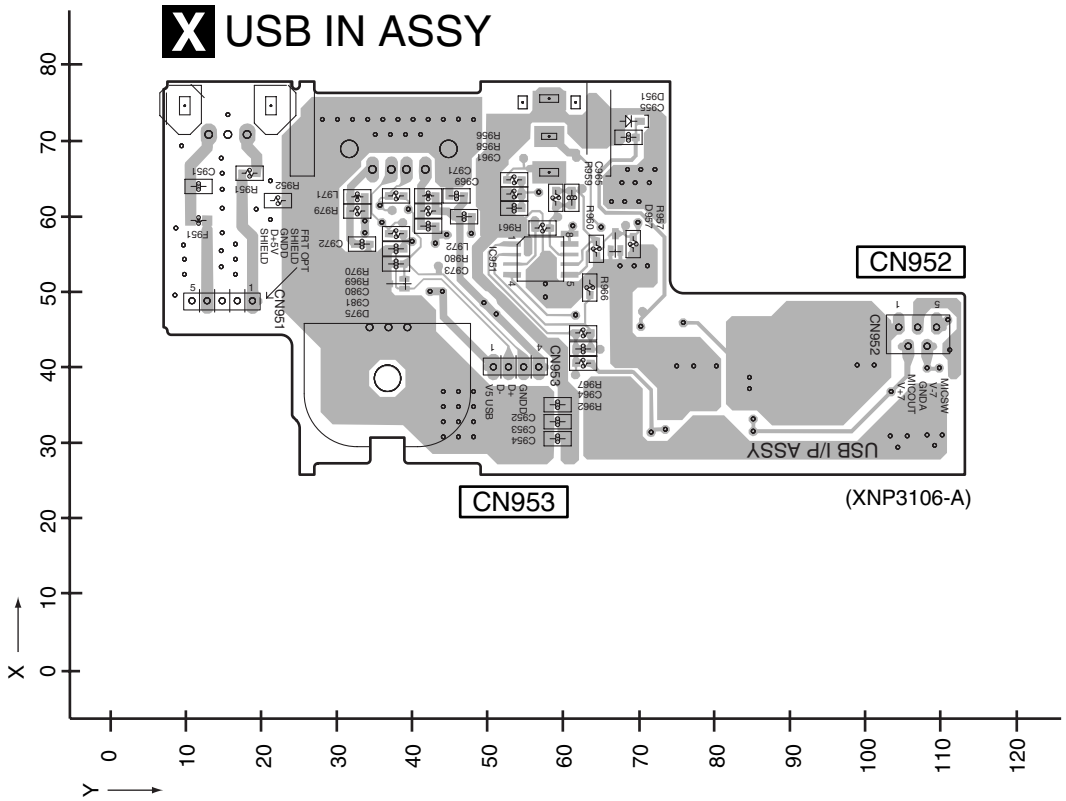

4.2 MAIN ASSY

SIDE A

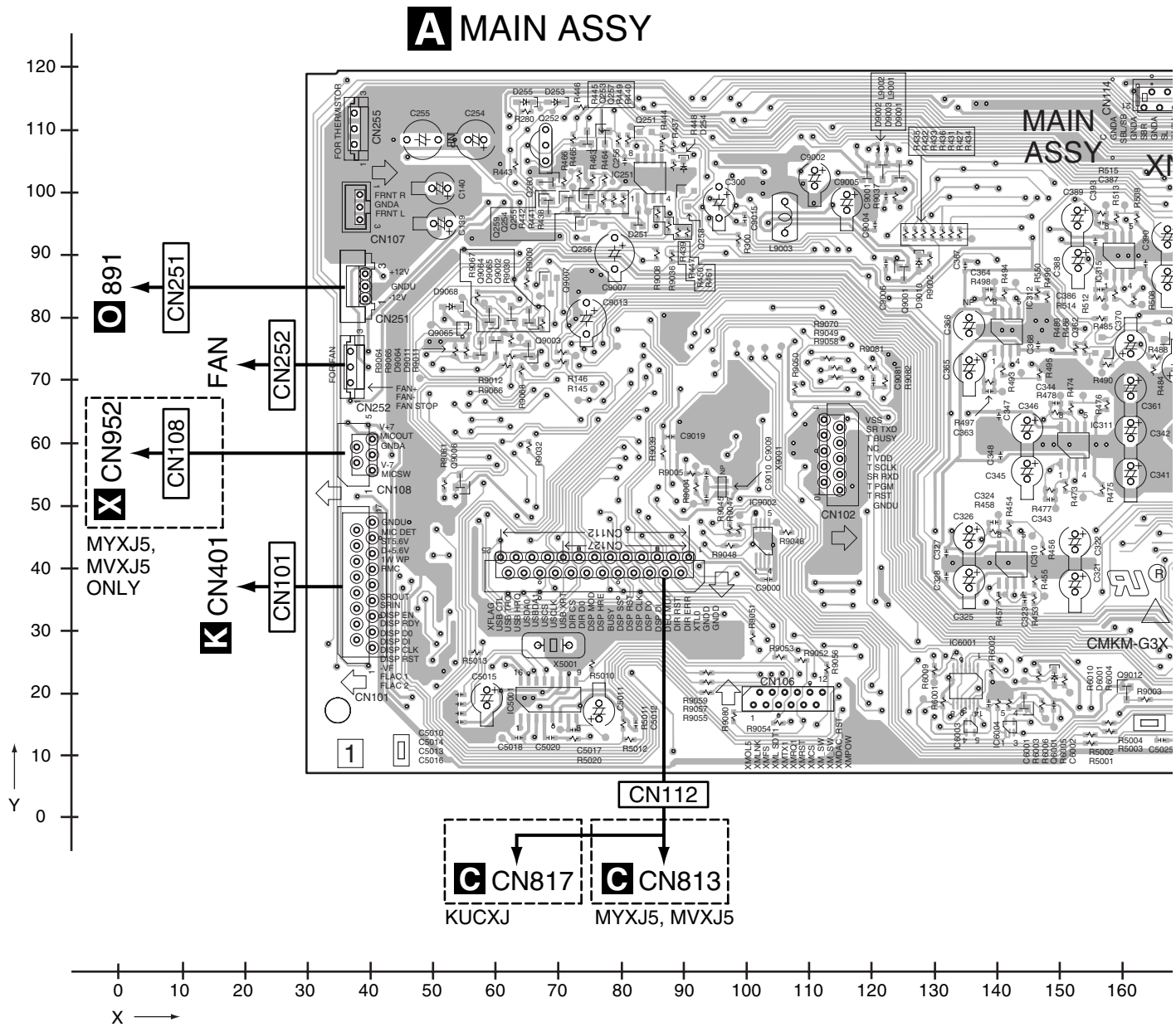

SIDE A

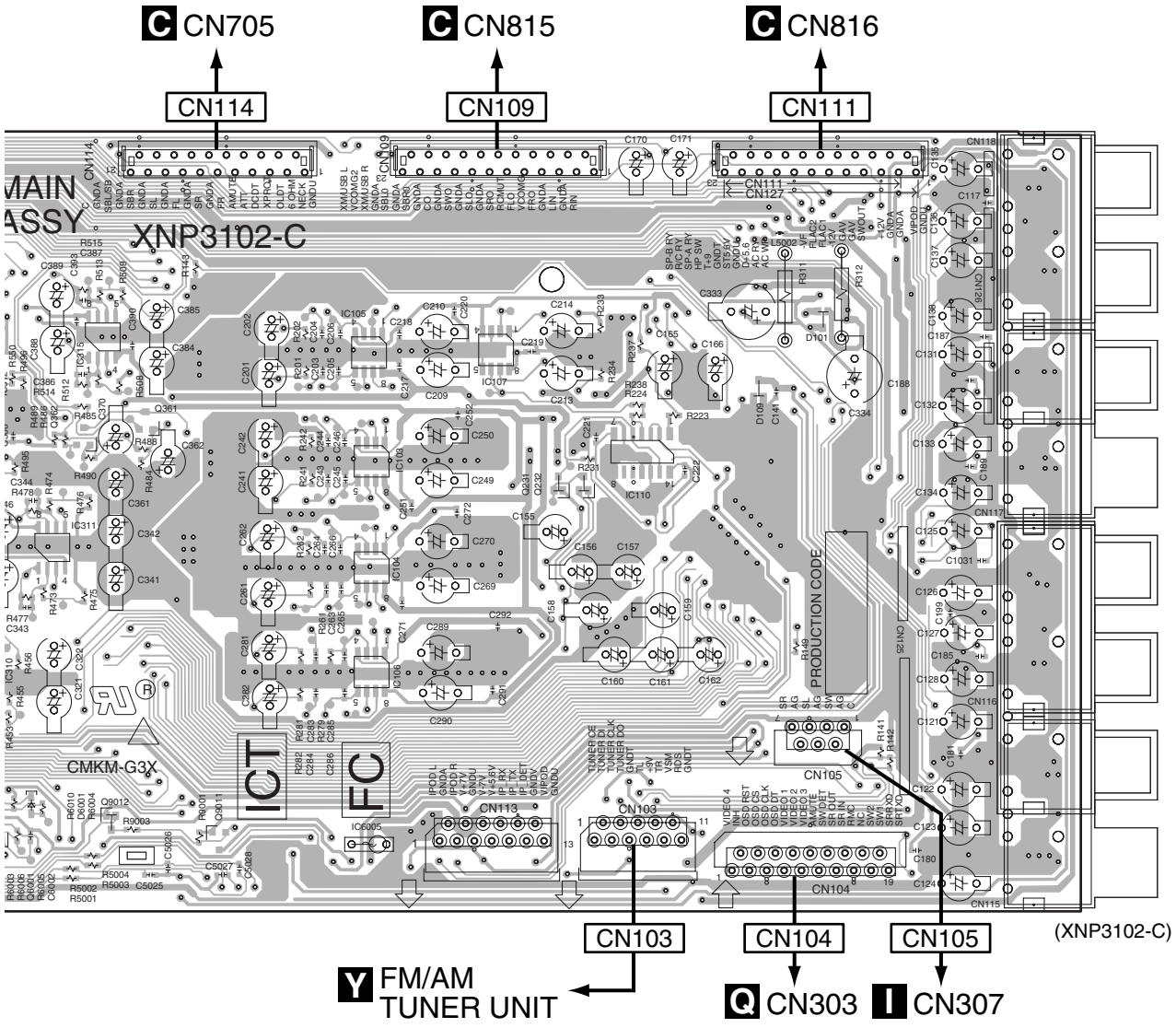

150 160 170 180 190 200 210 220 230 240 250 260 270 280 290 300 310 320

A

SIDE B

A MAIN ASSY

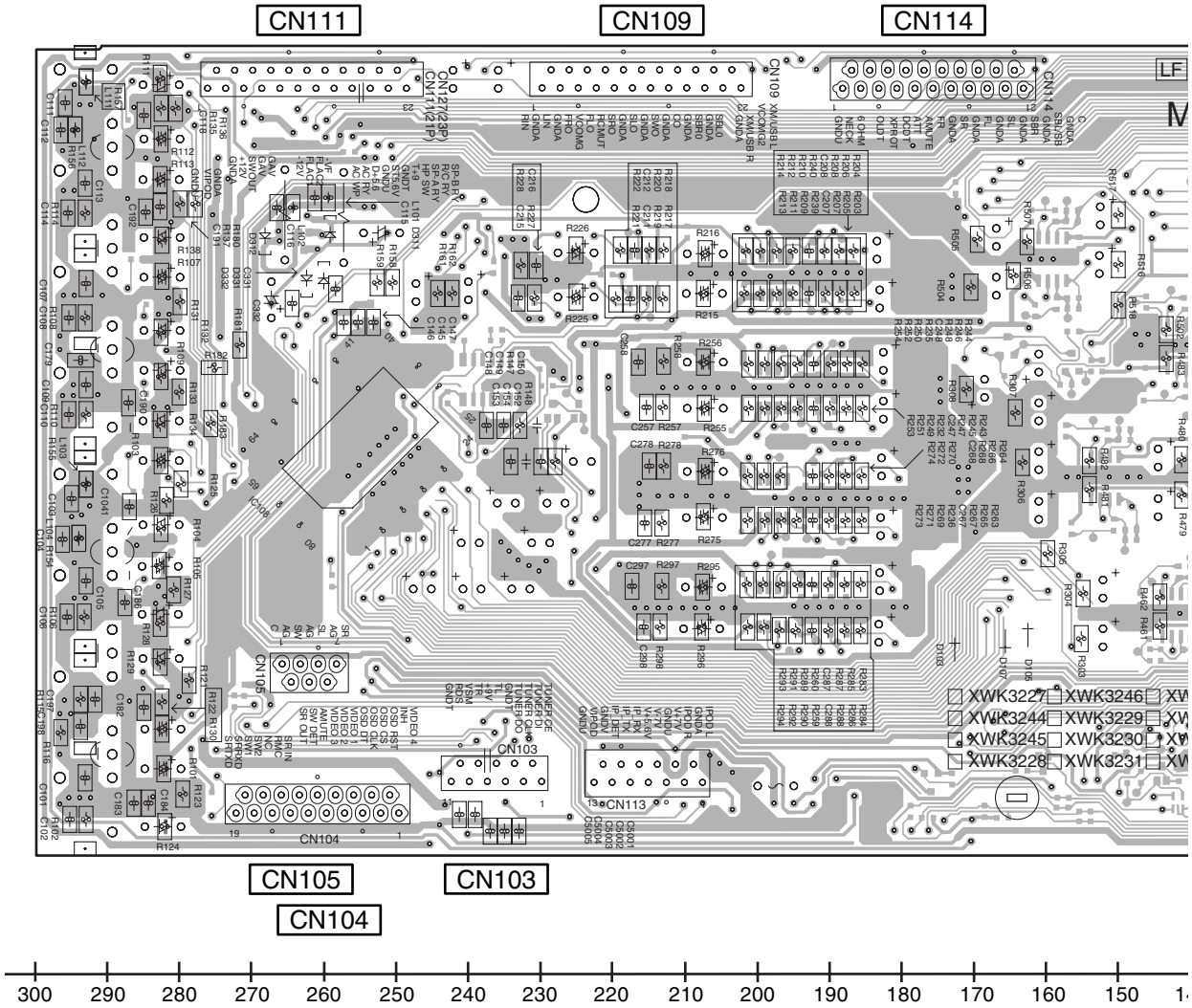

SIDE B

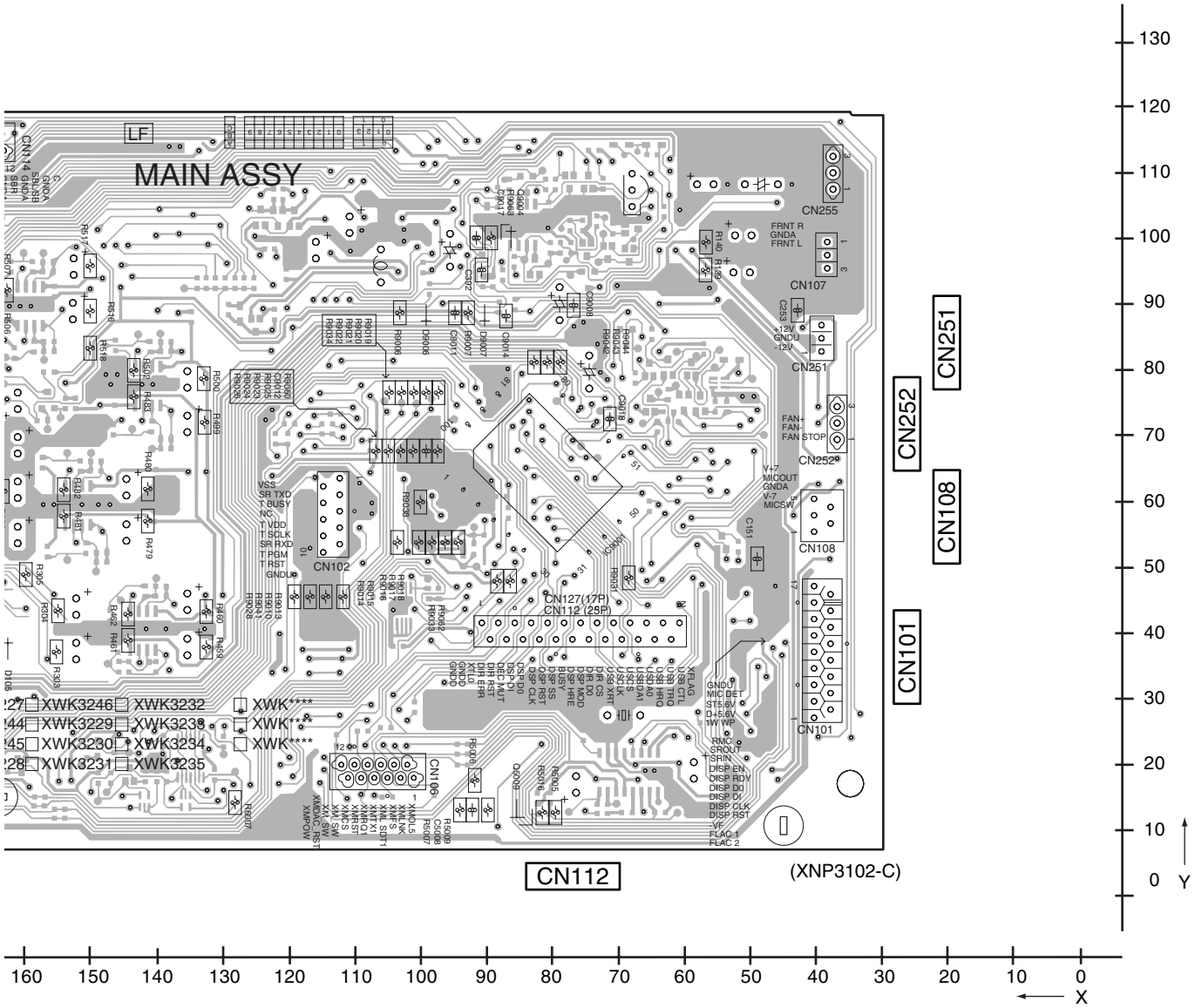
MAIN ASSY
LF
CN255
CN107
CN251
CN252
CN108
CN101
CN102
CN106
CN127(17P)
CN112 (25P)
CN112
(XNP3102-C)
XWK3246
XWK3229
XWK3230
XWK3231
XWK3232
XWK3233
XWK3234
XWK3235
XWK****
XWK****
XWK****
X
Y

4.3 DSP ASSY

SIDE A

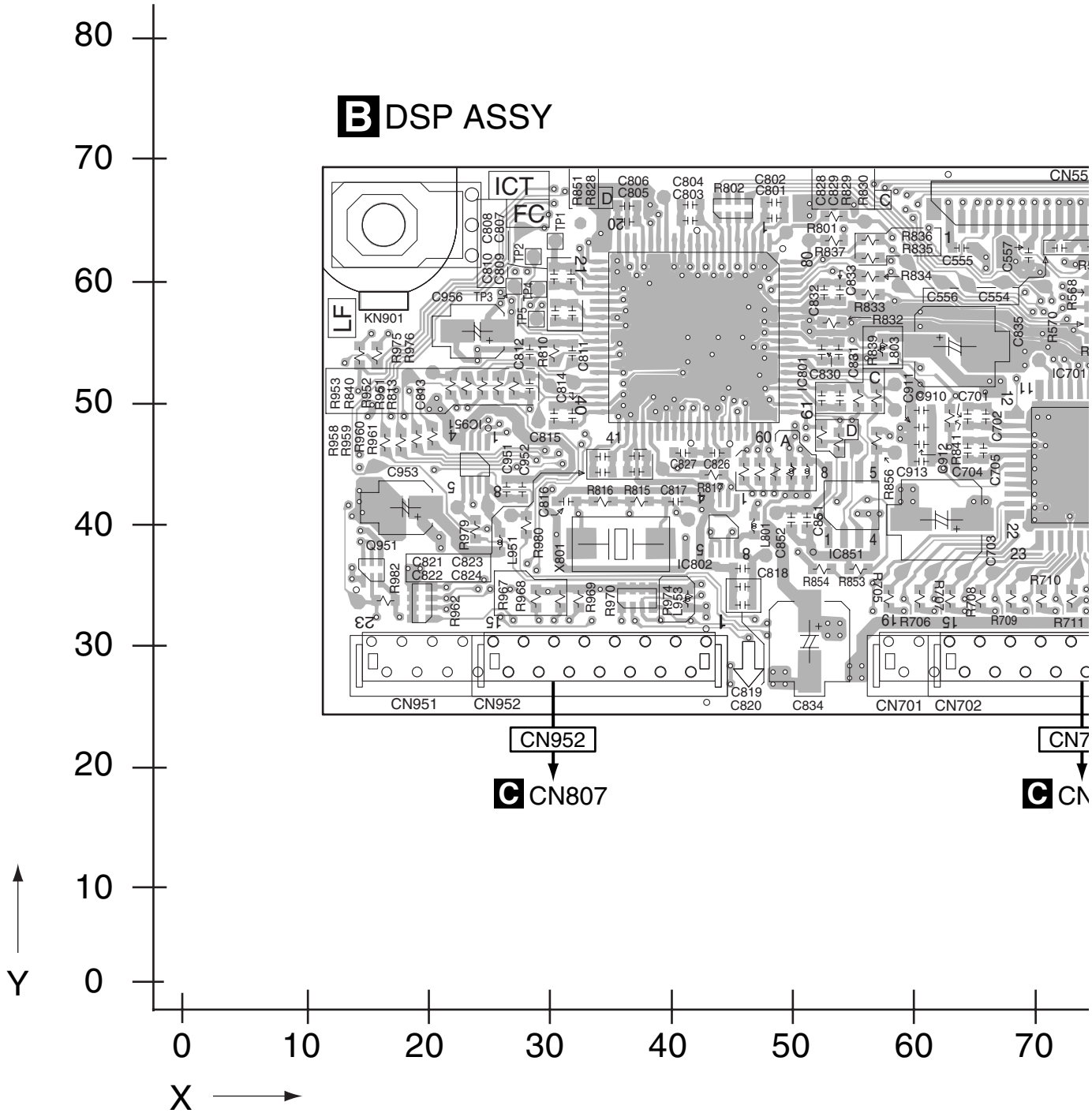

SIDE A

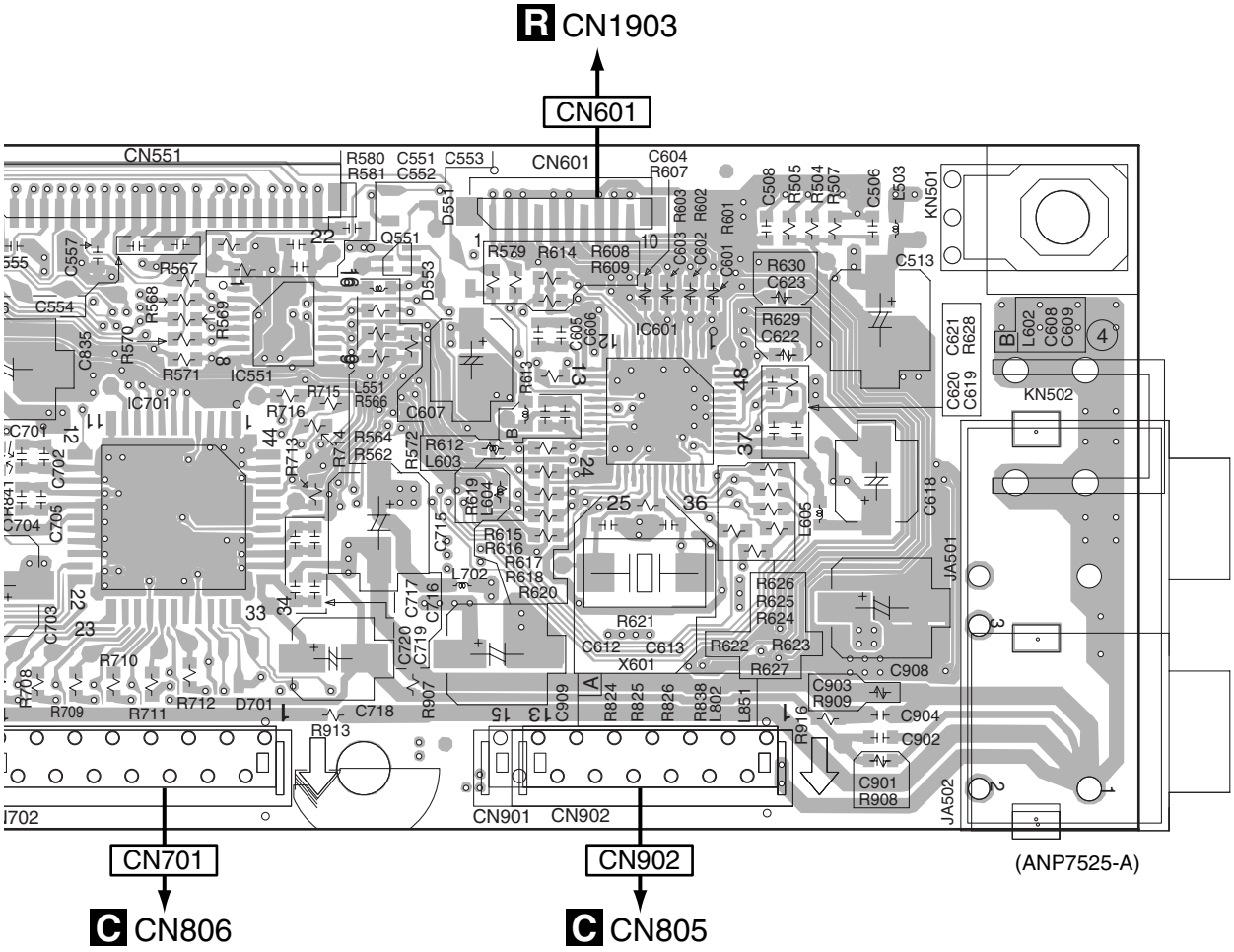

70 80 90 100 110 120 130 140

B

SIDE B

B DSP ASSY

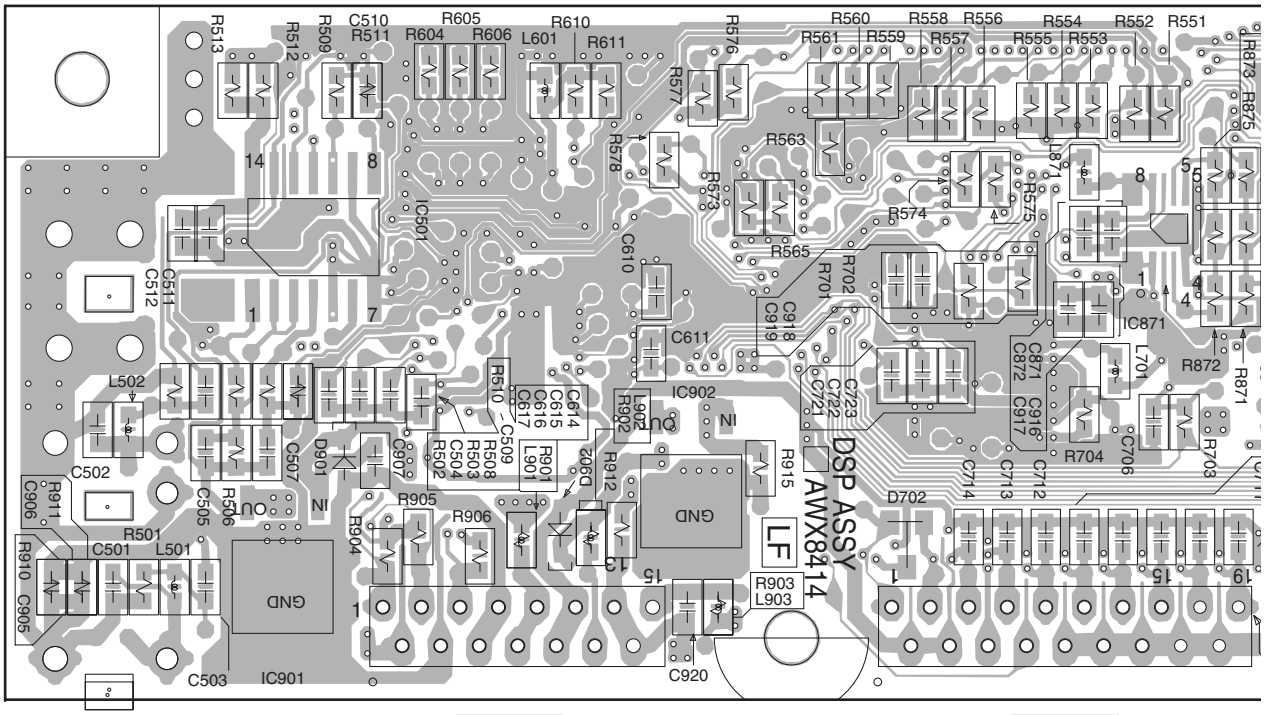

140 130 120 110 100 90 80 70 60

B

SIDE B

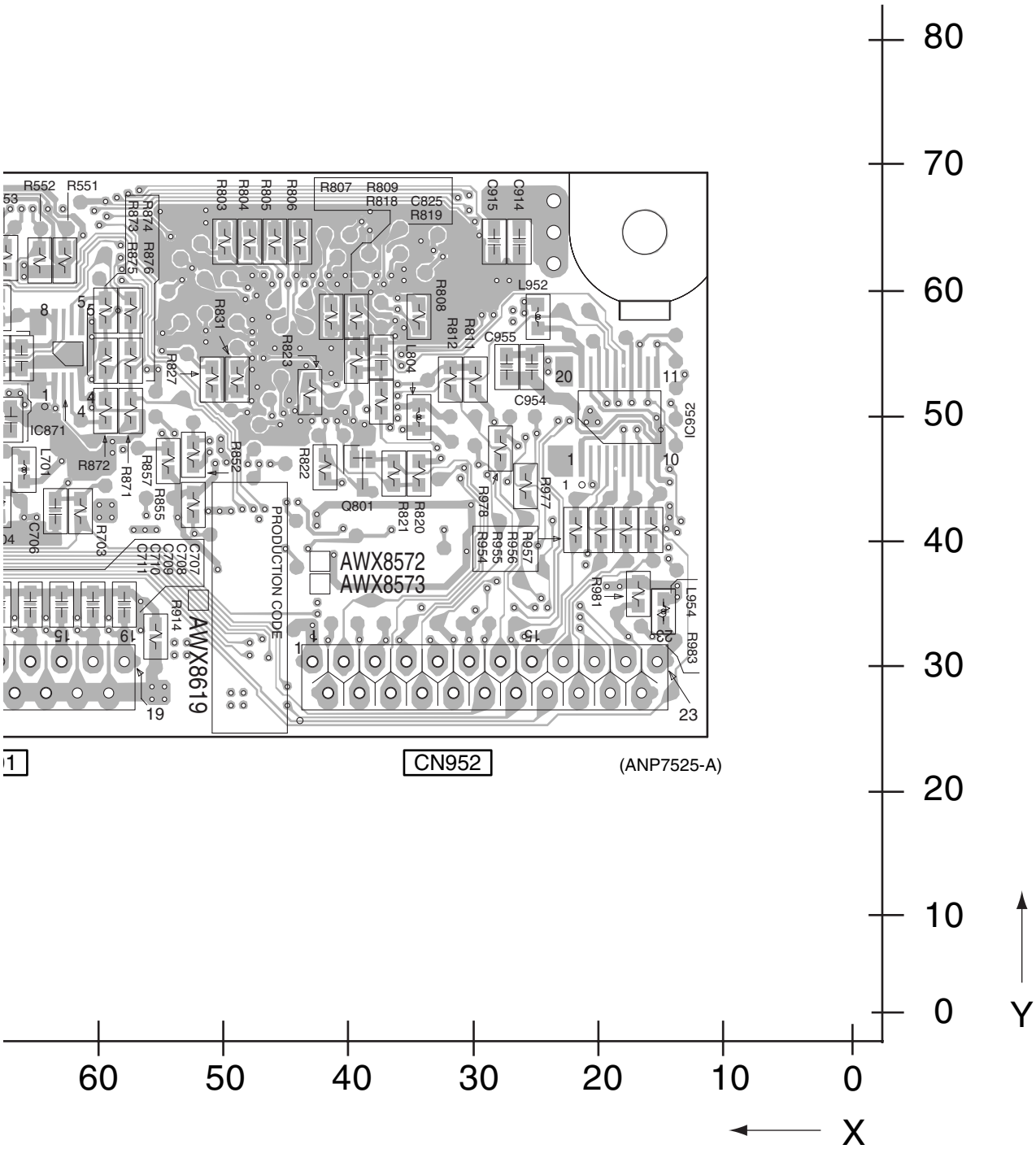
R552
R551
R874
R873
R875
R876
R803
R804
R805
R806
R807
R809
R818
C825
R819
C915
C914
R808
R812
R811
L952
C955
C954
R831
R823
R827
L804
IC871
L701
R872
R871
R857
R855
R852
R822
Q801
R821
R820
R978
R954
R955
R956
R957
R977
IC952
C706
R703
C707
C708
C709
C710
C711
R914
PRODUCTION CODE
AWX8572
AWX8573
AWX8619
R981
L954
R983
CN952
(ANP7525-A)
80
70
60
50
40
30
20
10
0
Y
60
50
40
30
20
10
0
X

4.4 POWER PACK ASSY

SIDE A

C POWER PACK ASSY

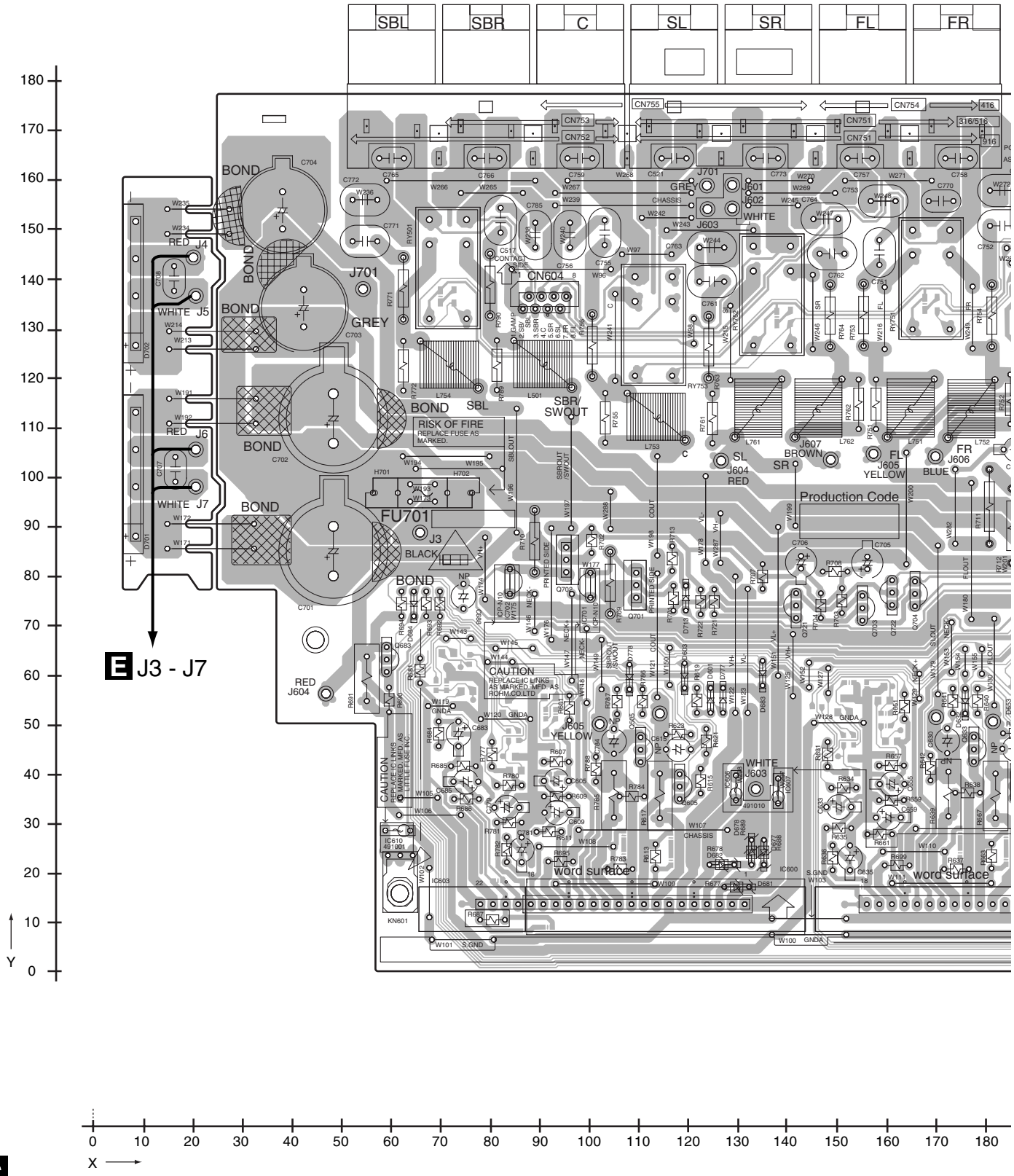

SIDE A

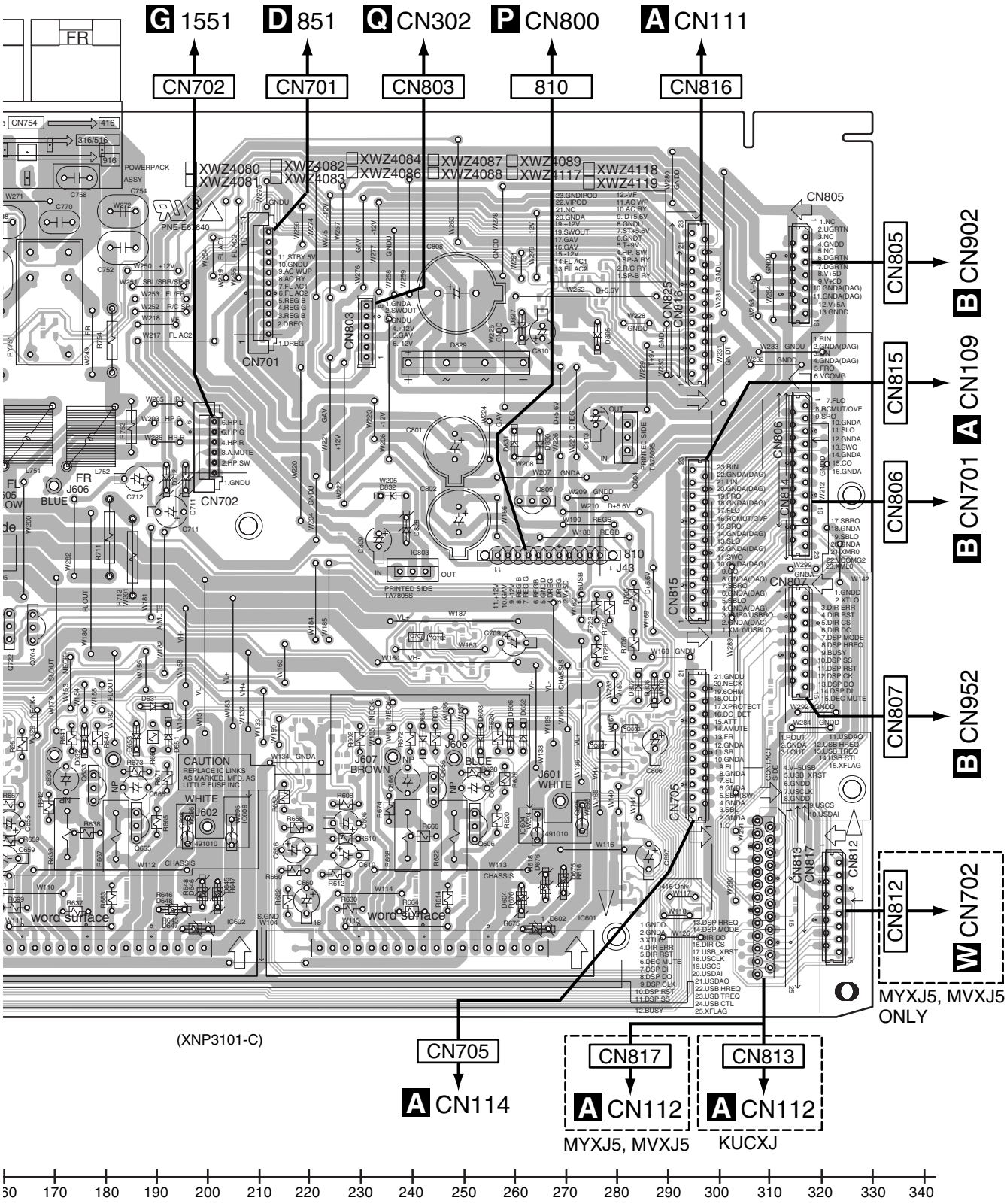
G 1551
D 851
Q CN302
P CN800
A CN111
CN702
CN701
CN803
810
CN816
CN805
CN815
CN806
CN807
CN812
CN705
CN817
CN813
B CN902
A CN109
B CN701
B CN952
W CN702
A CN114
A CN112
A CN112
MYXJ5, MVXJ5 ONLY
MYXJ5, MVXJ5
KUCXJ
(XNP3101-C)
XWZ4080
XWZ4081
XWZ4082
XWZ4083
XWZ4084
XWZ4086
XWZ4087
XWZ4088
XWZ4089
XWZ4117
XWZ4118
XWZ4119
FR
POWERPACK ASSY
PNE-E6640
CAUTION
REPLACE IC LINKS AS MARKED. MFD. AS LITTLE FUSE INC.
WHITE
J602
BLUE
J606
J607 BROWN
J601 WHITE
word surface
CHASSIS
PRINTED SIDE TA7805S
PRINTED SIDE TA7805S
J43
CONTACT SIDE
170 180 190 200 210 220 230 240 250 260 270 280 290 300 310 320 330 340

C

SIDE B

C POWER PACK ASSY

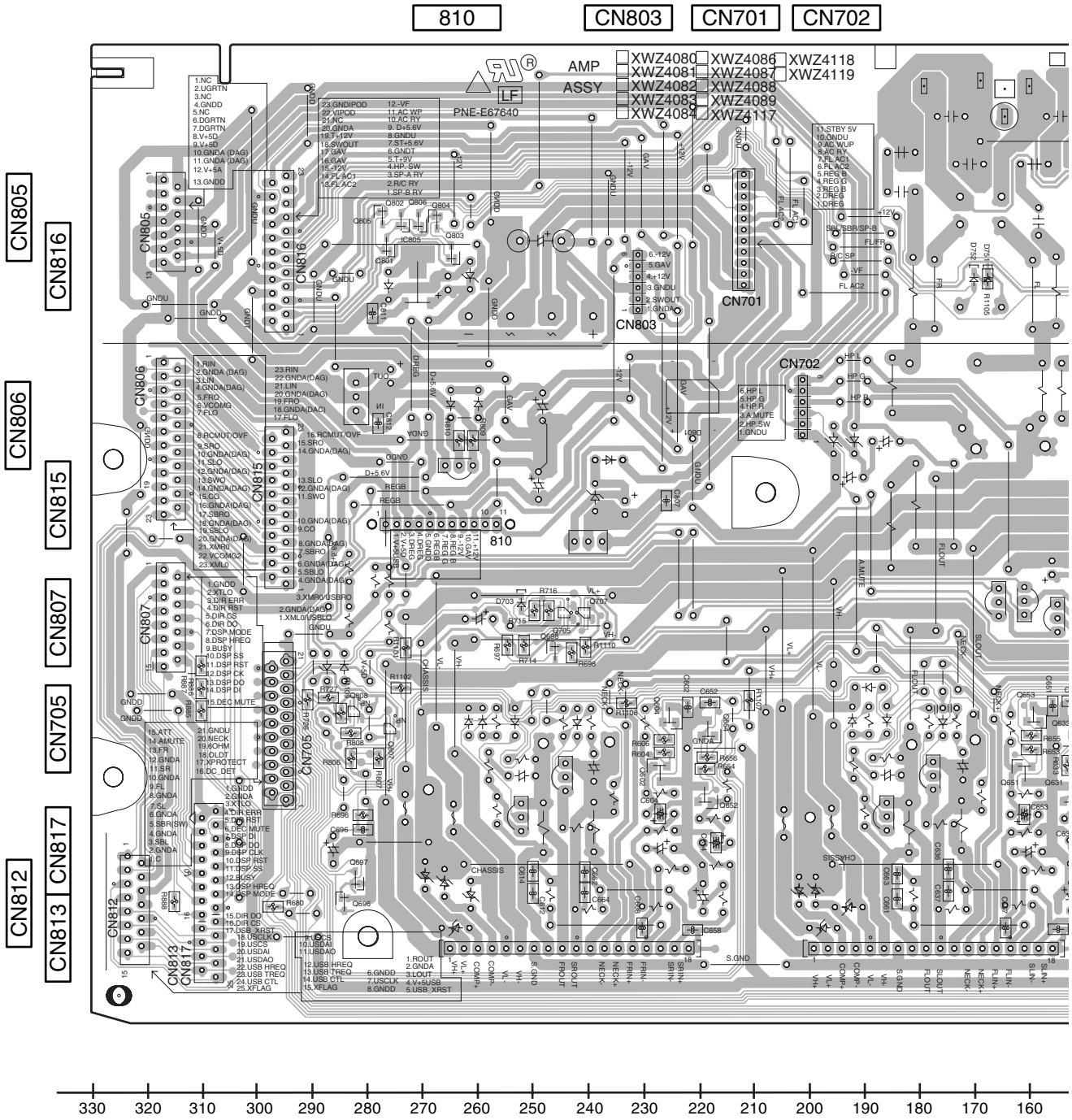

C

SIDE B

A

B

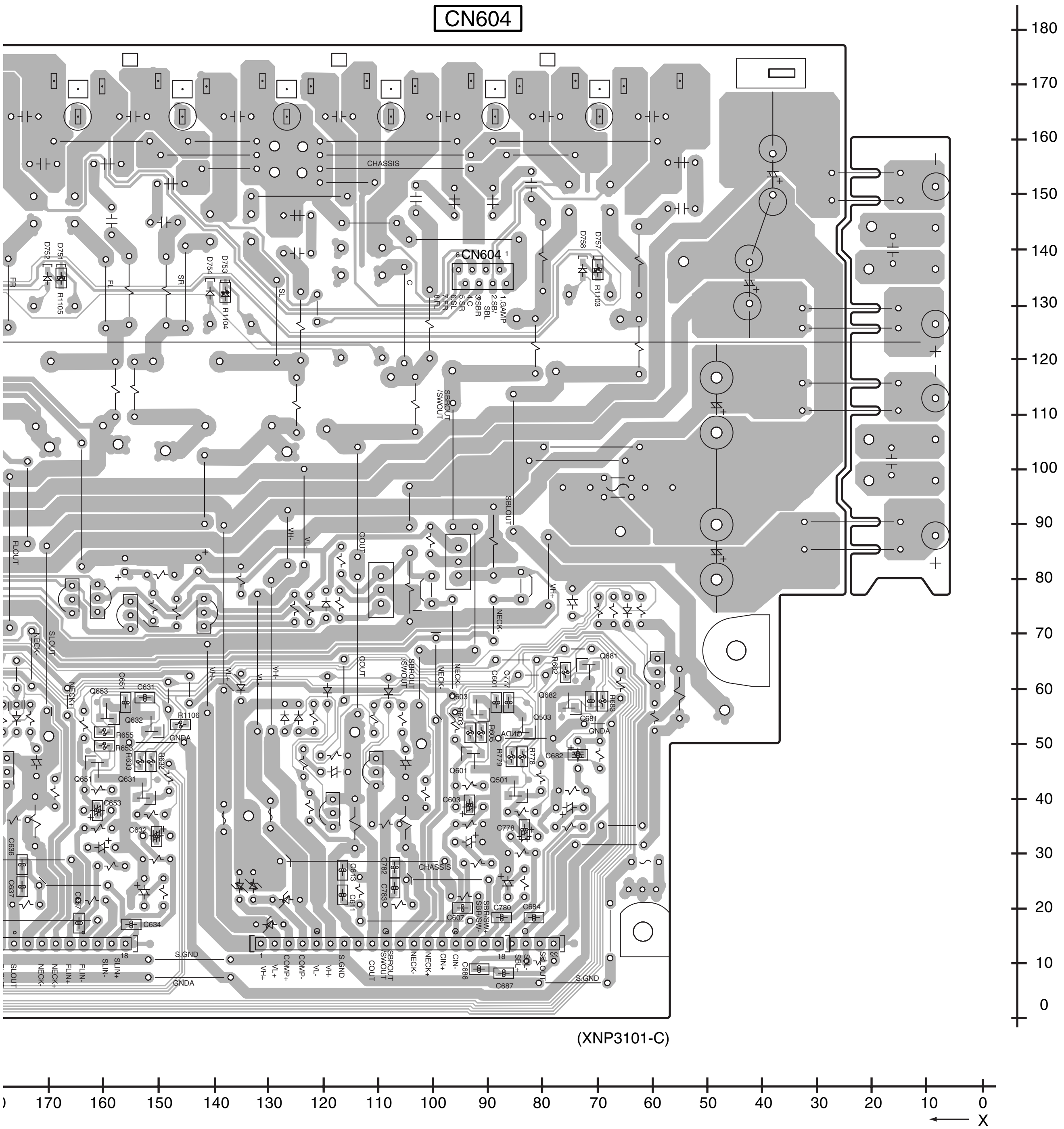

C

D

E

F

4.5 TRANS2, TRANS3, TRANS4 and TRANS1 ASSYS

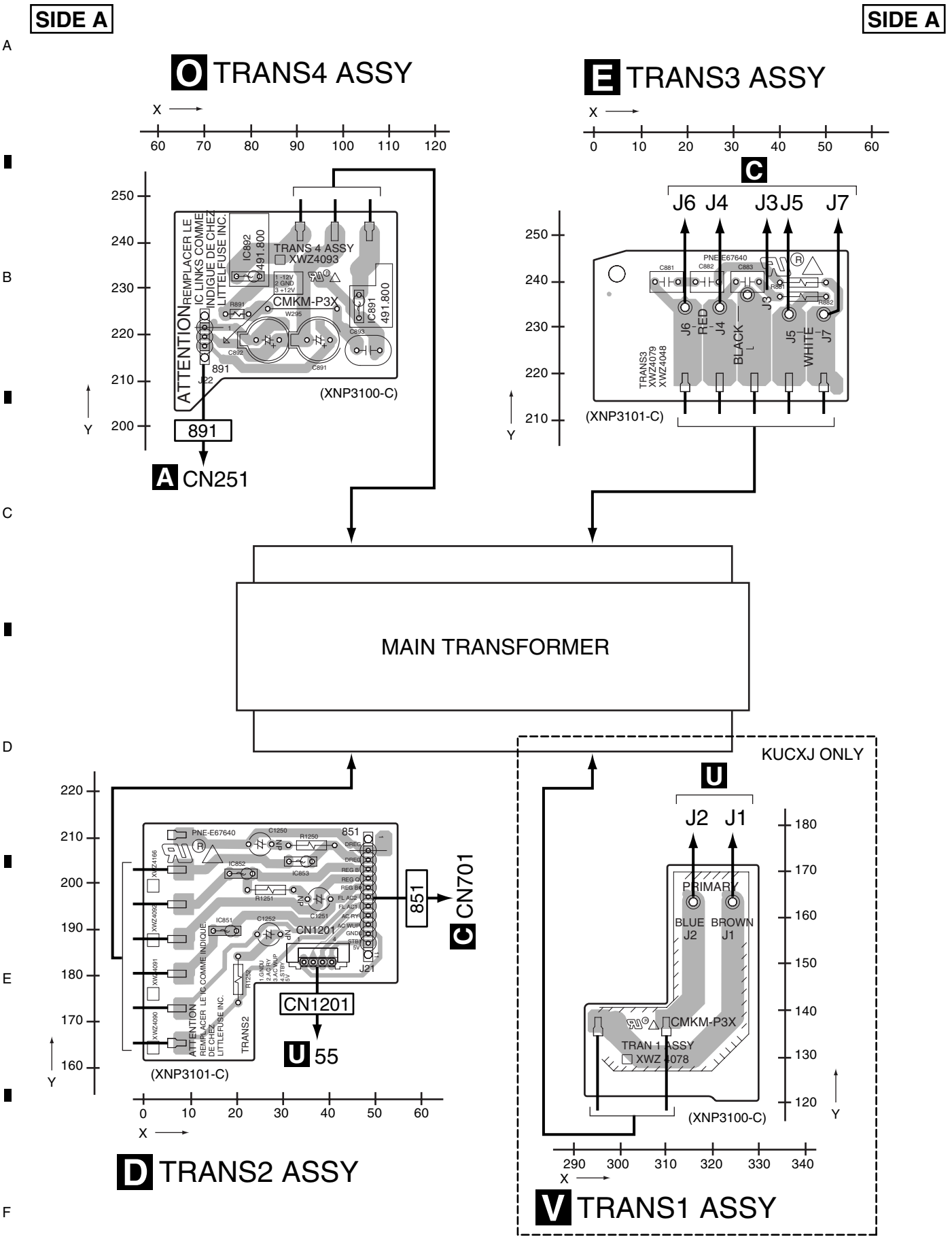

SIDE B

SIDE B

E TRANS3 ASSY

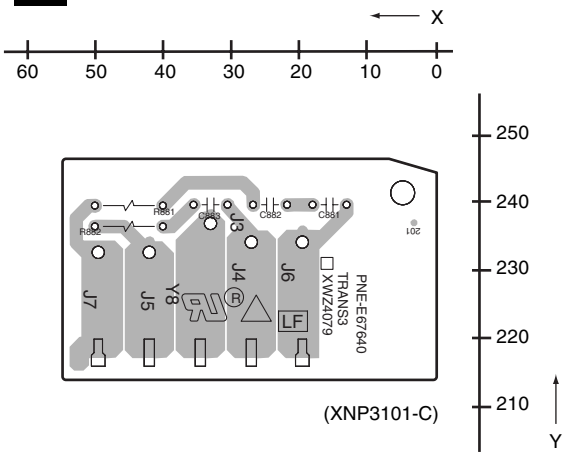

O TRANS4 ASSY

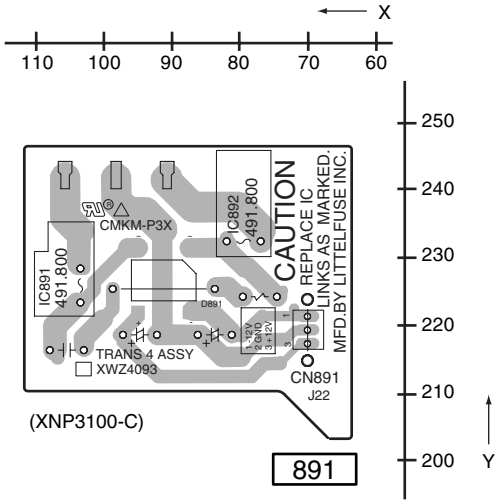

KUCXJ ONLY

V TRANS1 ASSY

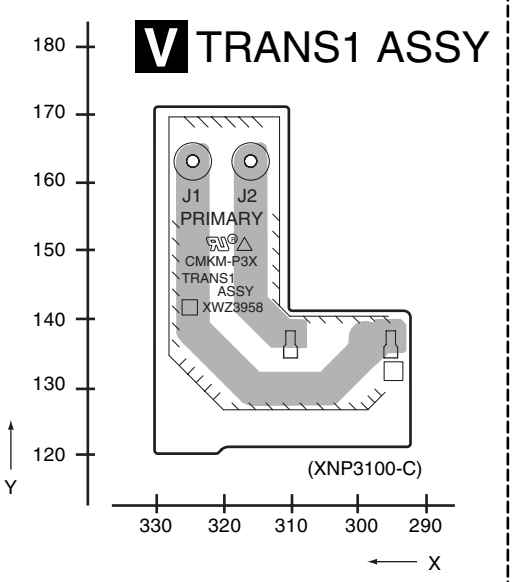

D TRANS2 ASSY

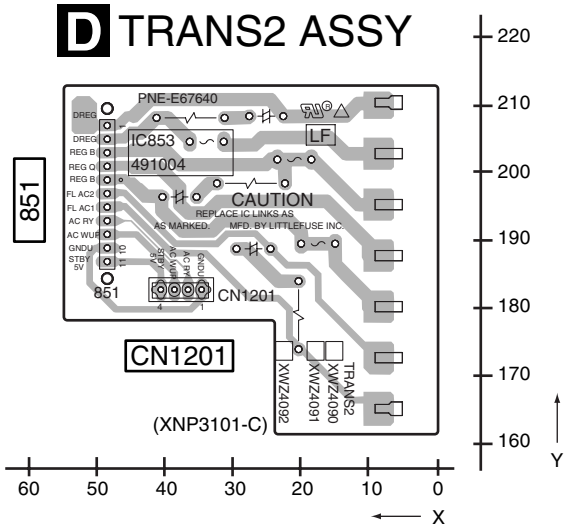

D E O V

D E O V

4.6 COMPONENT ASSY

SIDE A

SIDE A

F COMPONENT ASSY

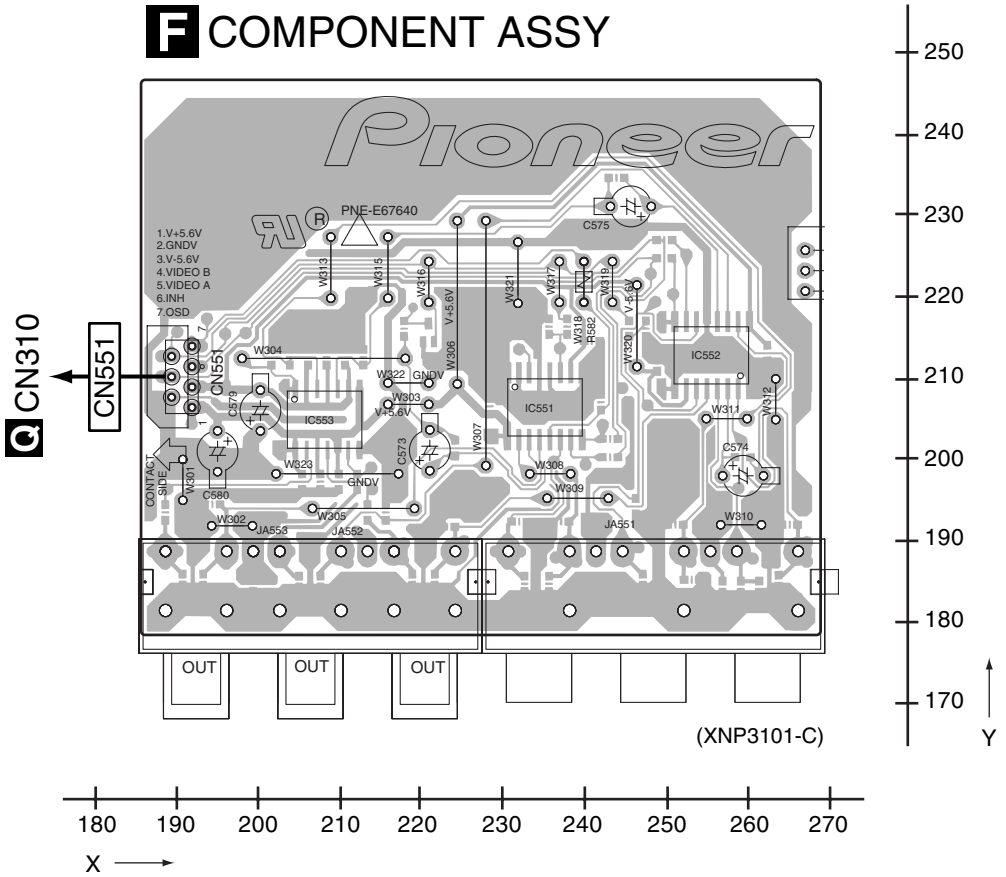

SIDE B

SIDE B

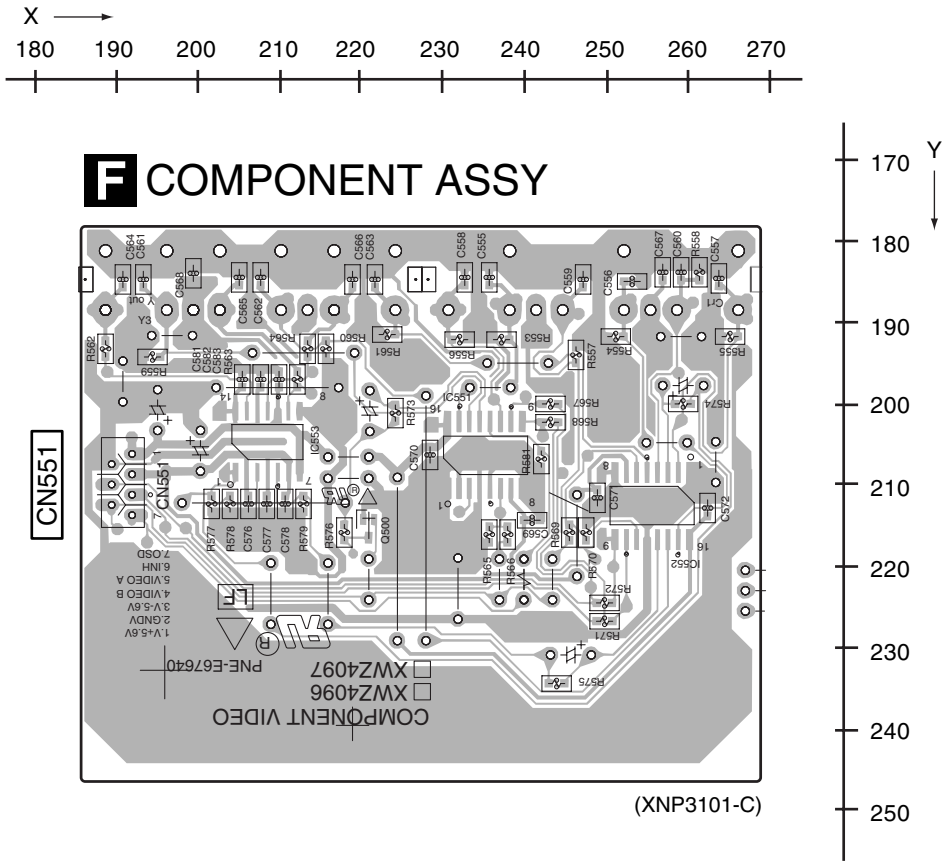

F

F

4.7 HEADPHONE and 5.1 CHIN ASSYS

SIDE A

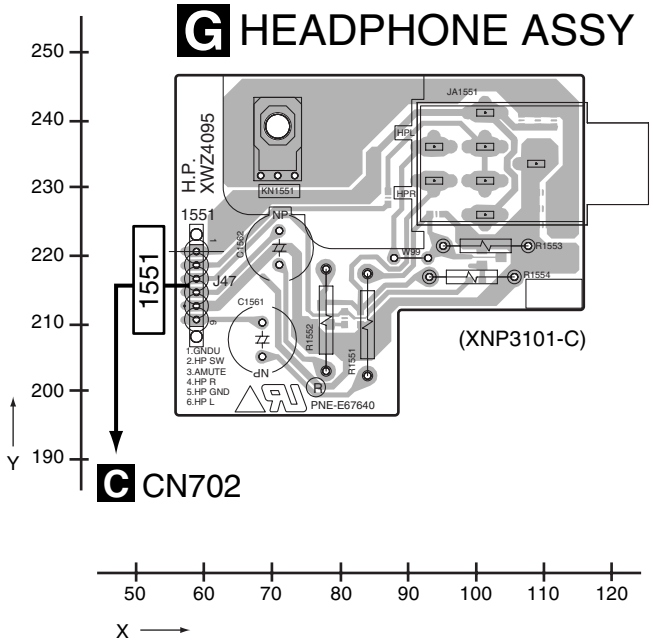

SIDE A

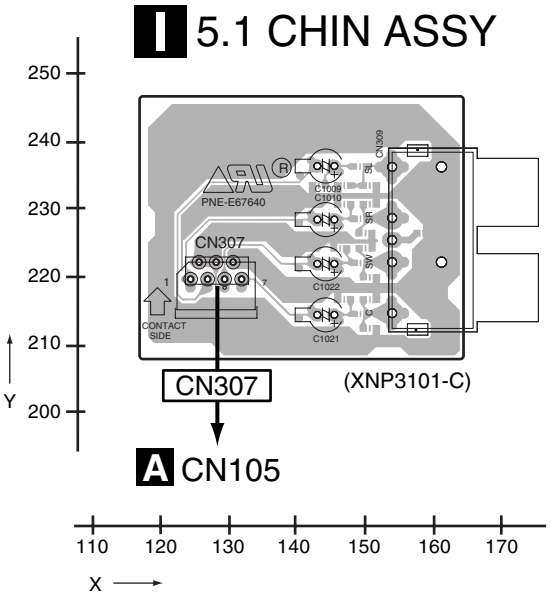

SIDE B

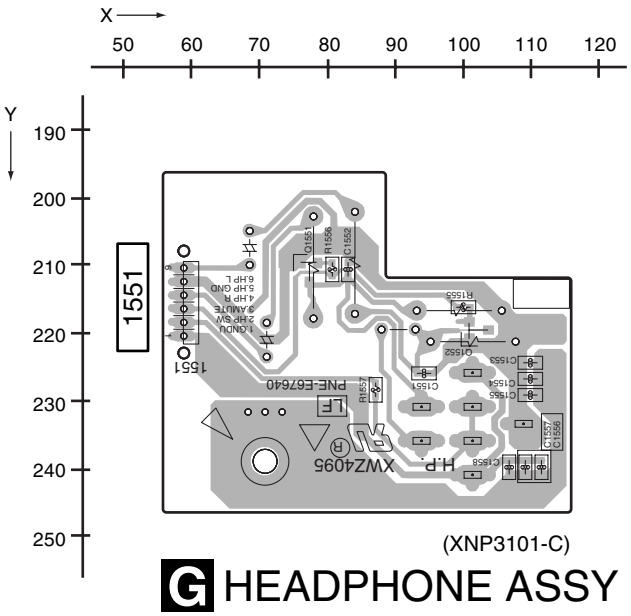

SIDE B

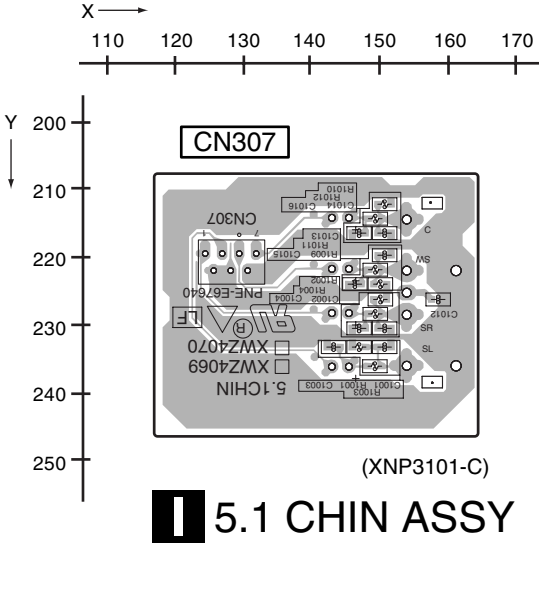

G I **G I**

4.8 FRONT DISPLY, R. ENCODER and POWER KEY ASSYS

SIDE A

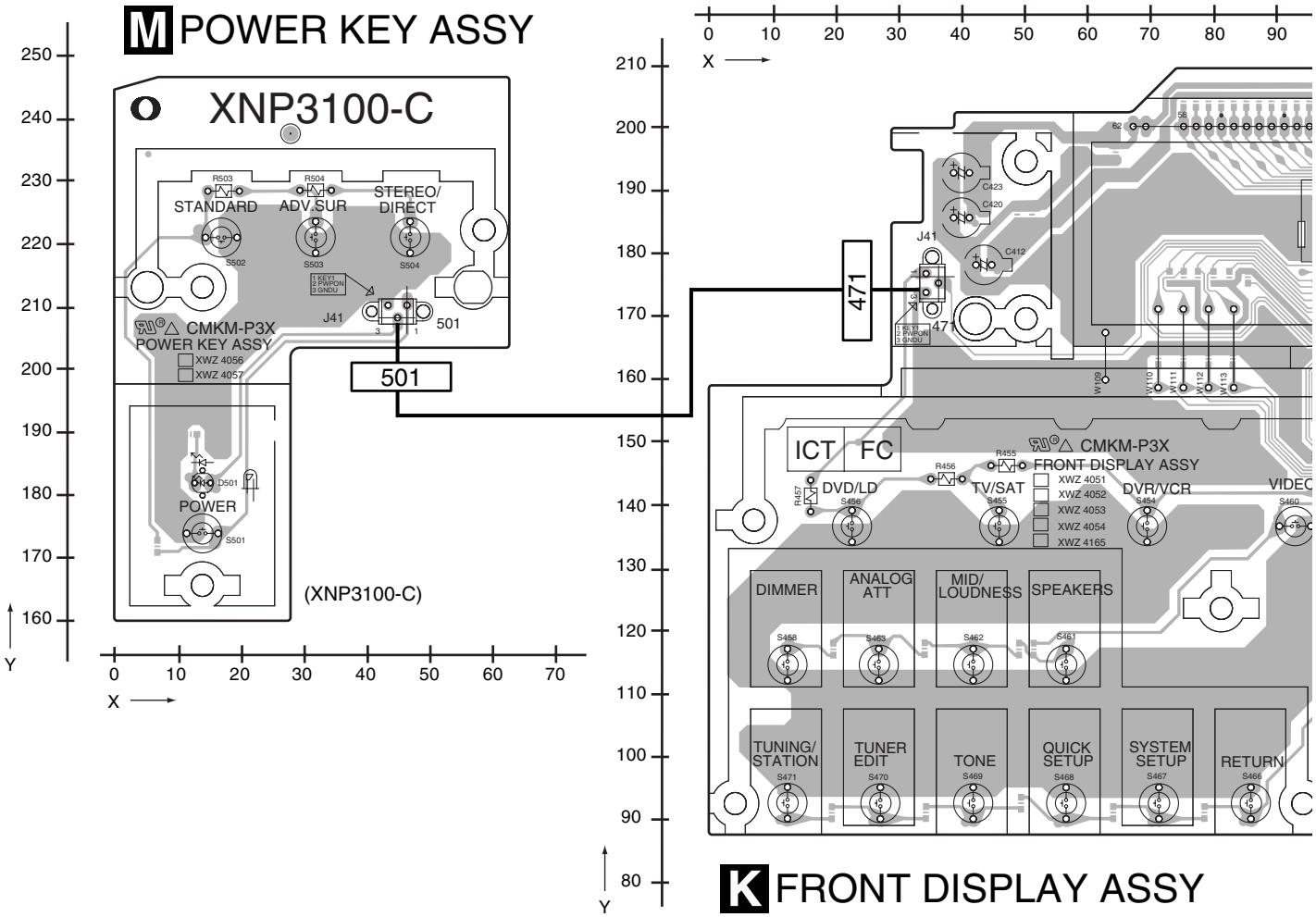

K M

SIDE A

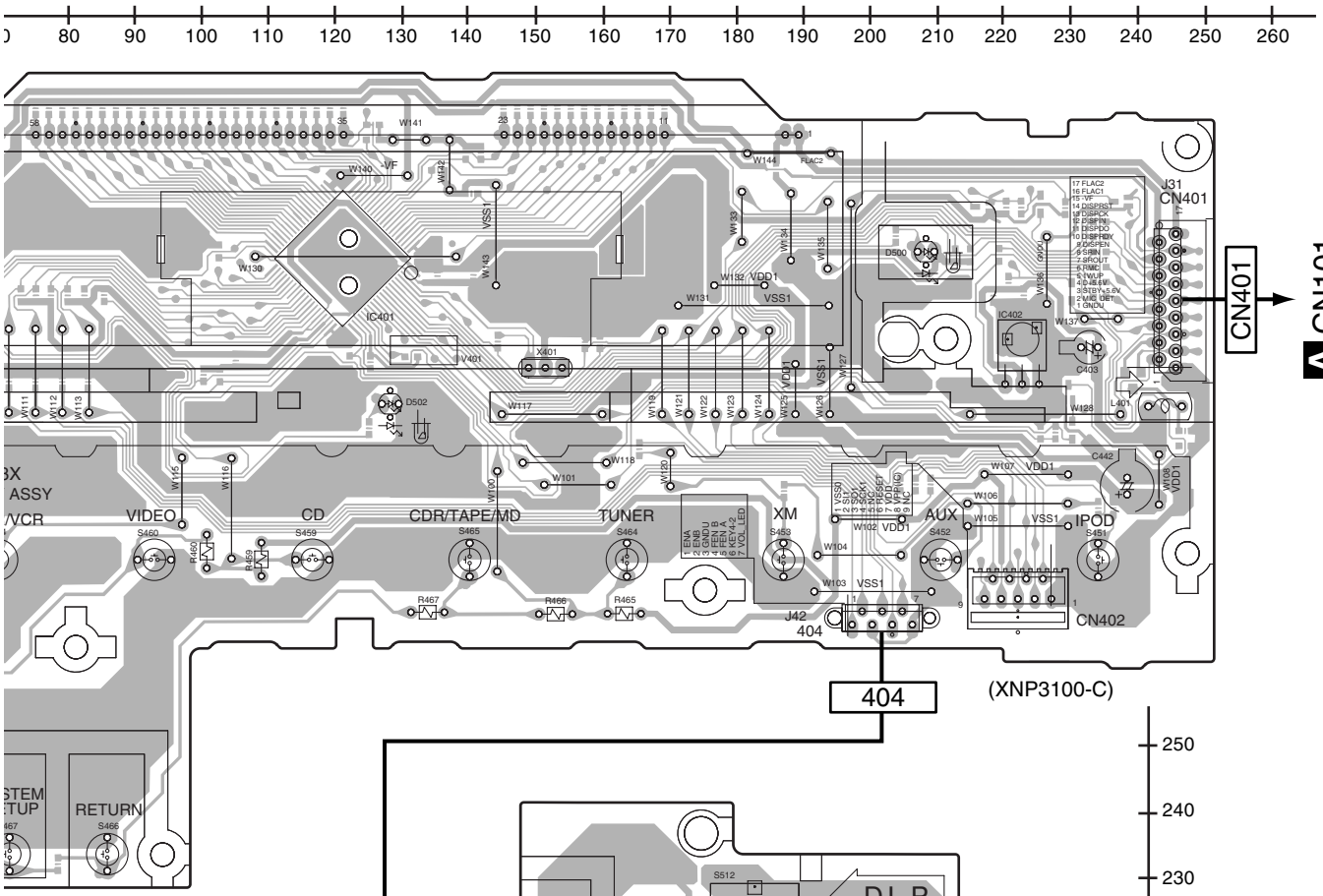

SY

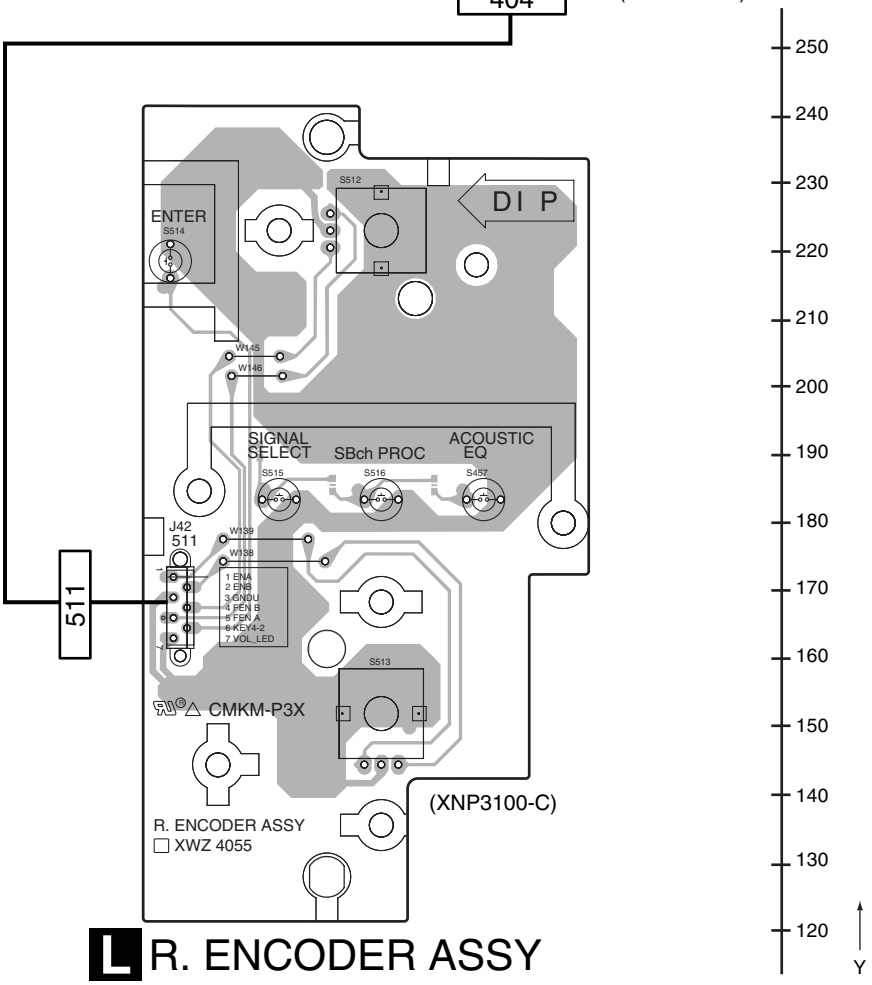

L R. ENCODER ASSY

K L

SIDE B

K FRONT DISPLAY ASSY

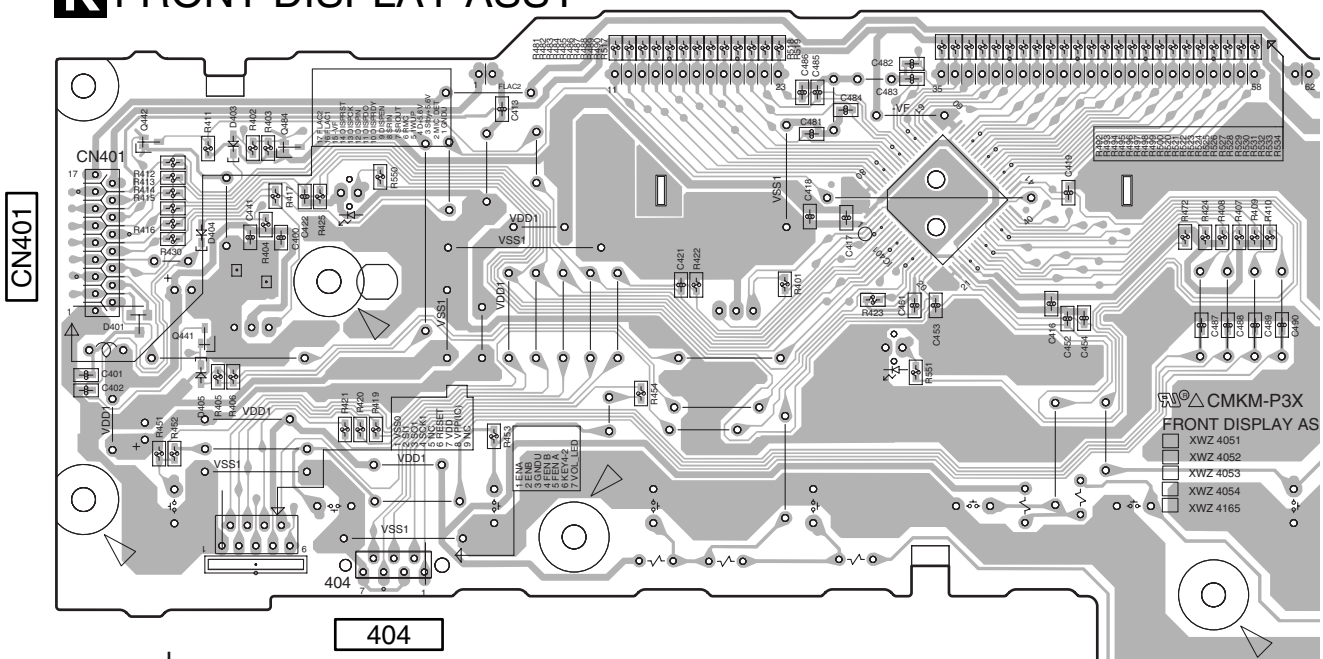

L R. ENCODER ASSY

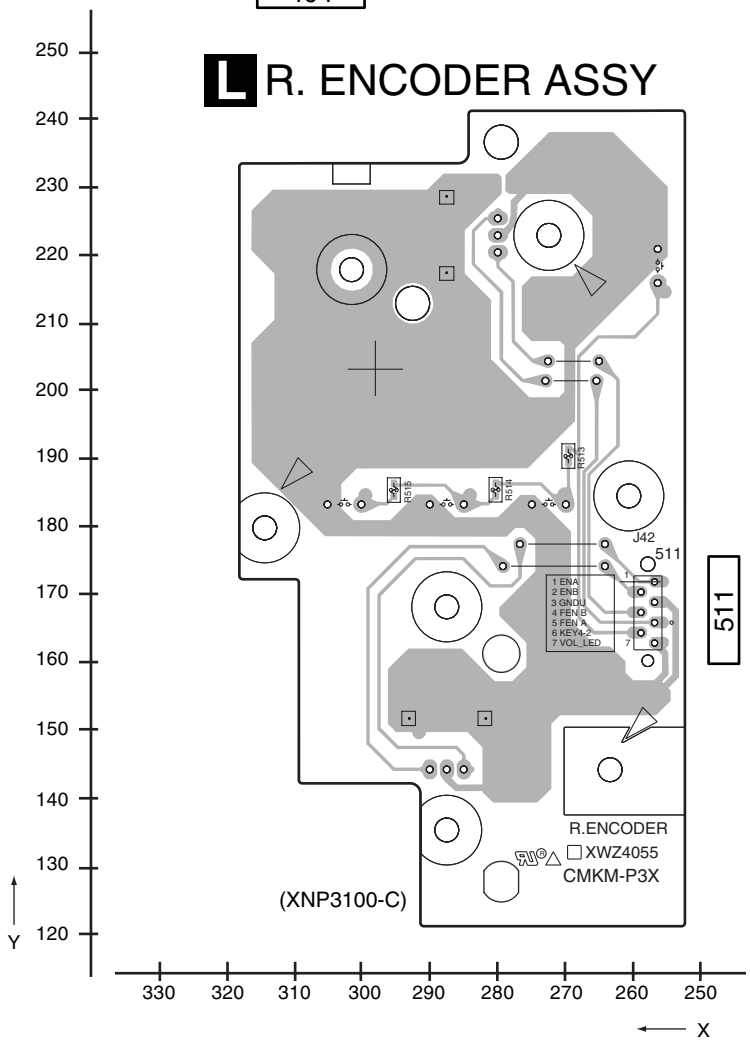

K L

SIDE B

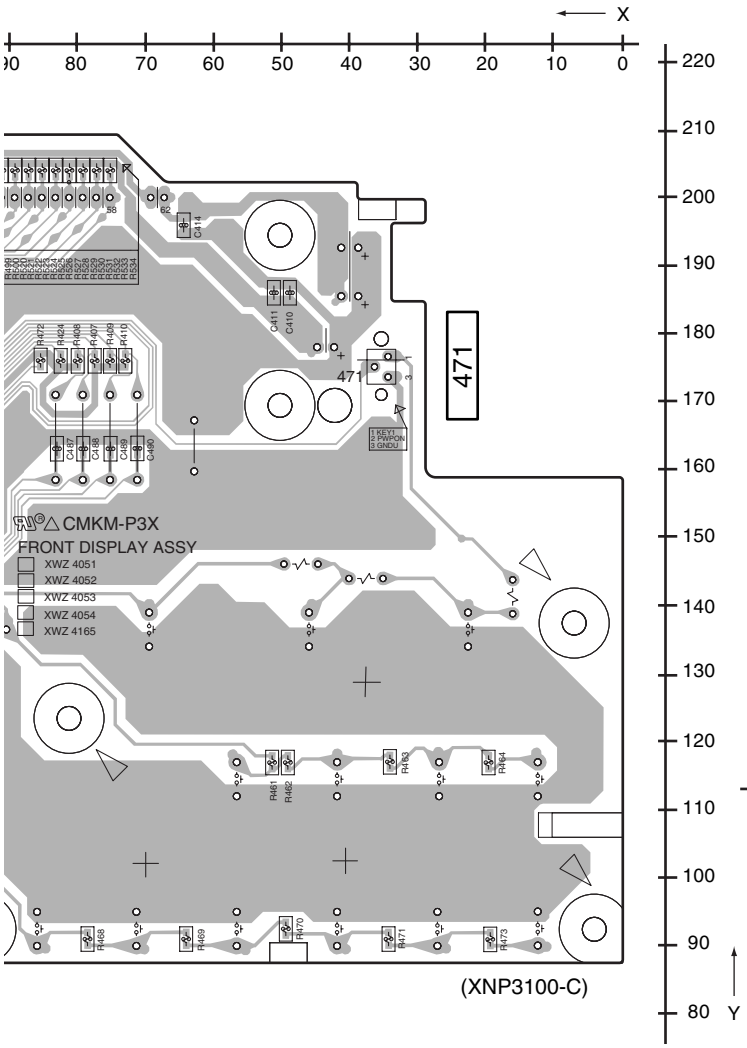

M POWER KEY ASSY

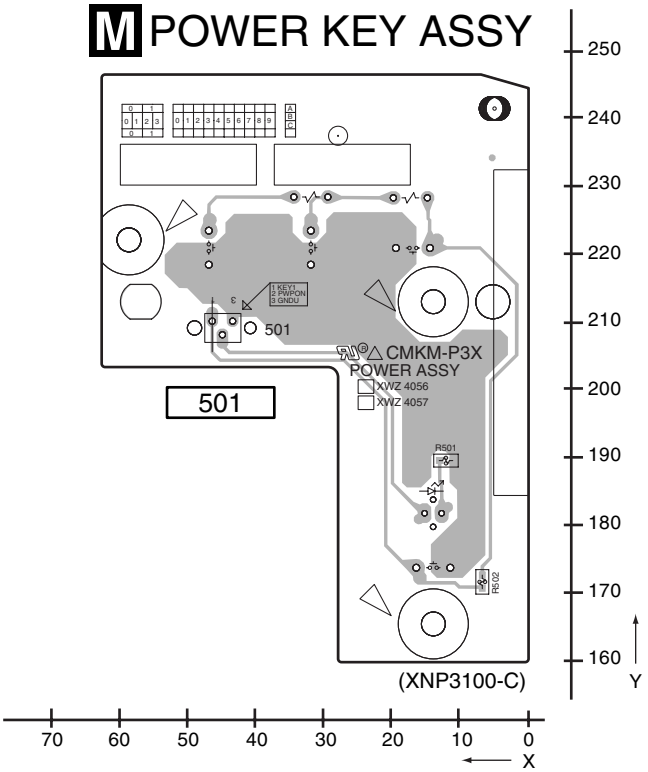

4.9 REGULATOR and DIGITAL IN ASSYS

SIDE A

P REGULATOR ASSY

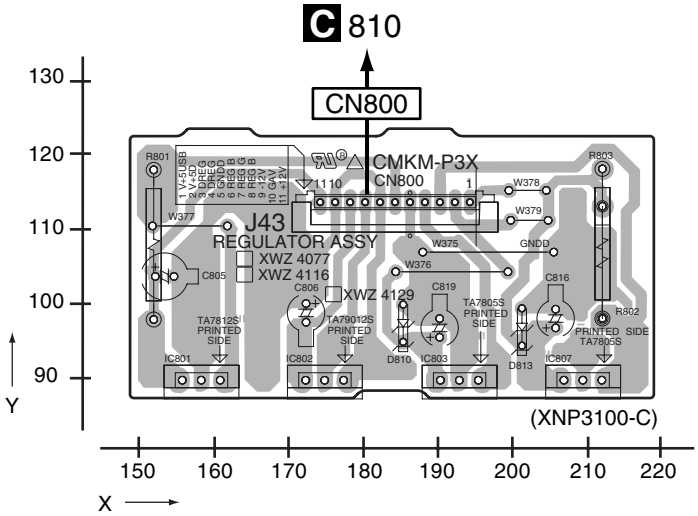

SIDE A

R DIGITAL IN ASSY

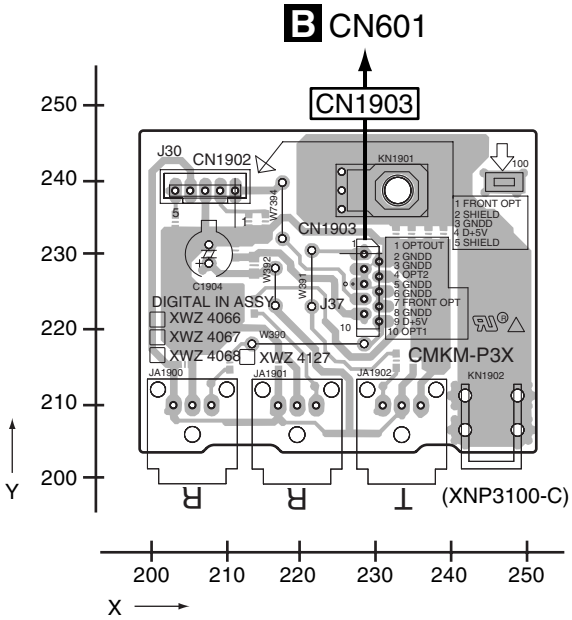

SIDE B

P REGULATOR ASSY

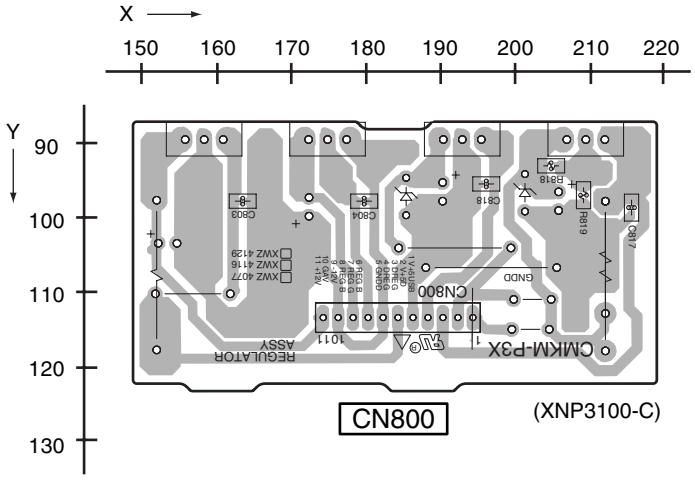

SIDE B

R DIGITAL IN ASSY

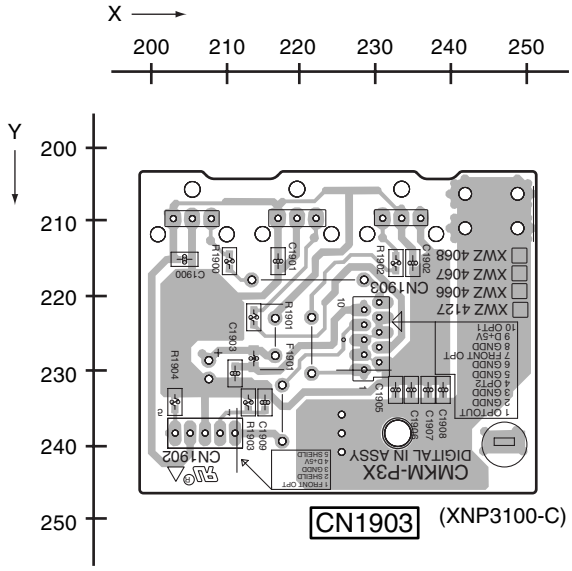

P R **P R**

4.10 VIDEO ASSY

SIDE A

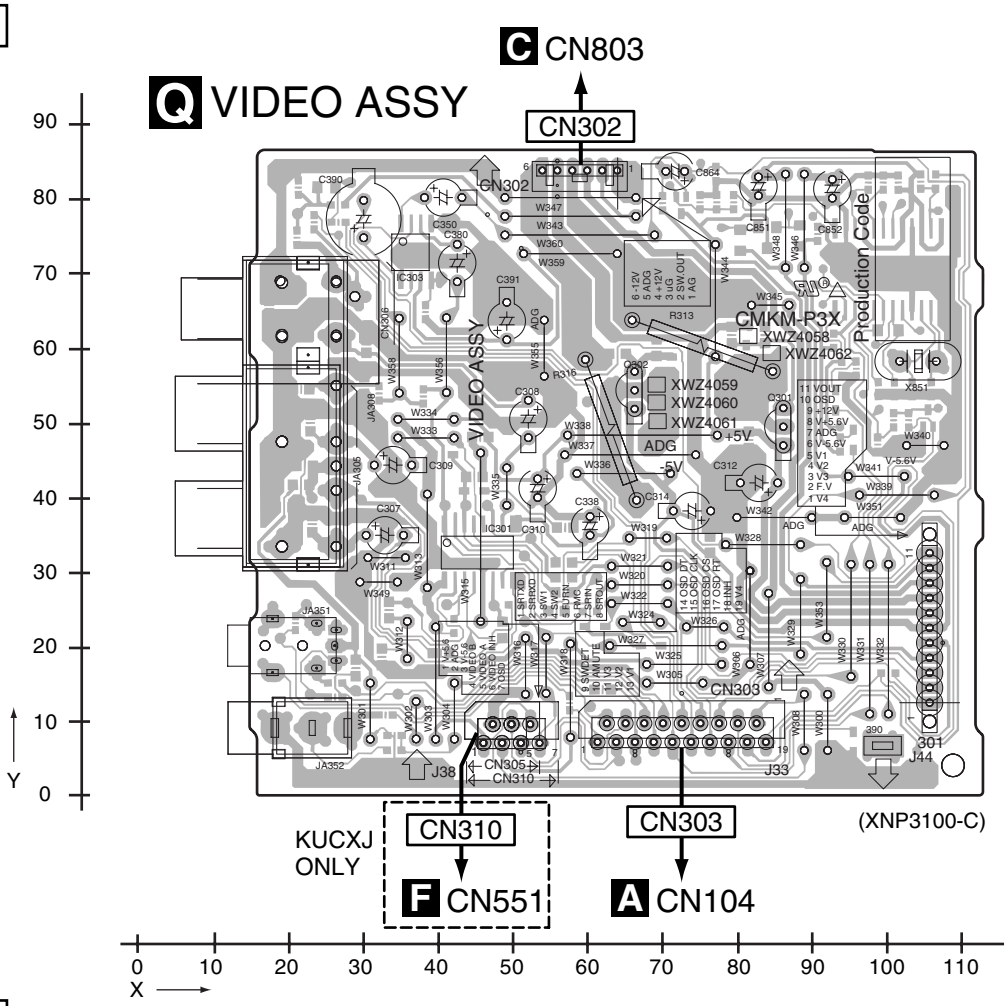

SIDE B

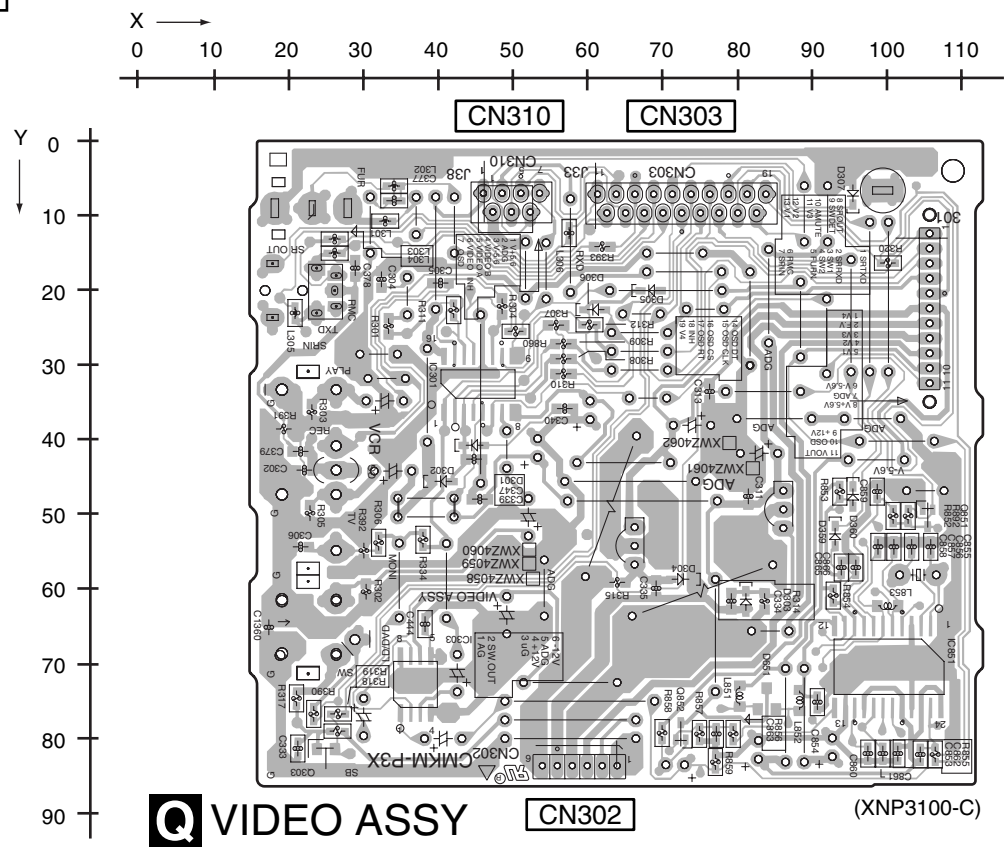

4.11 PRIMARY ASSY

SIDE A

SIDE A

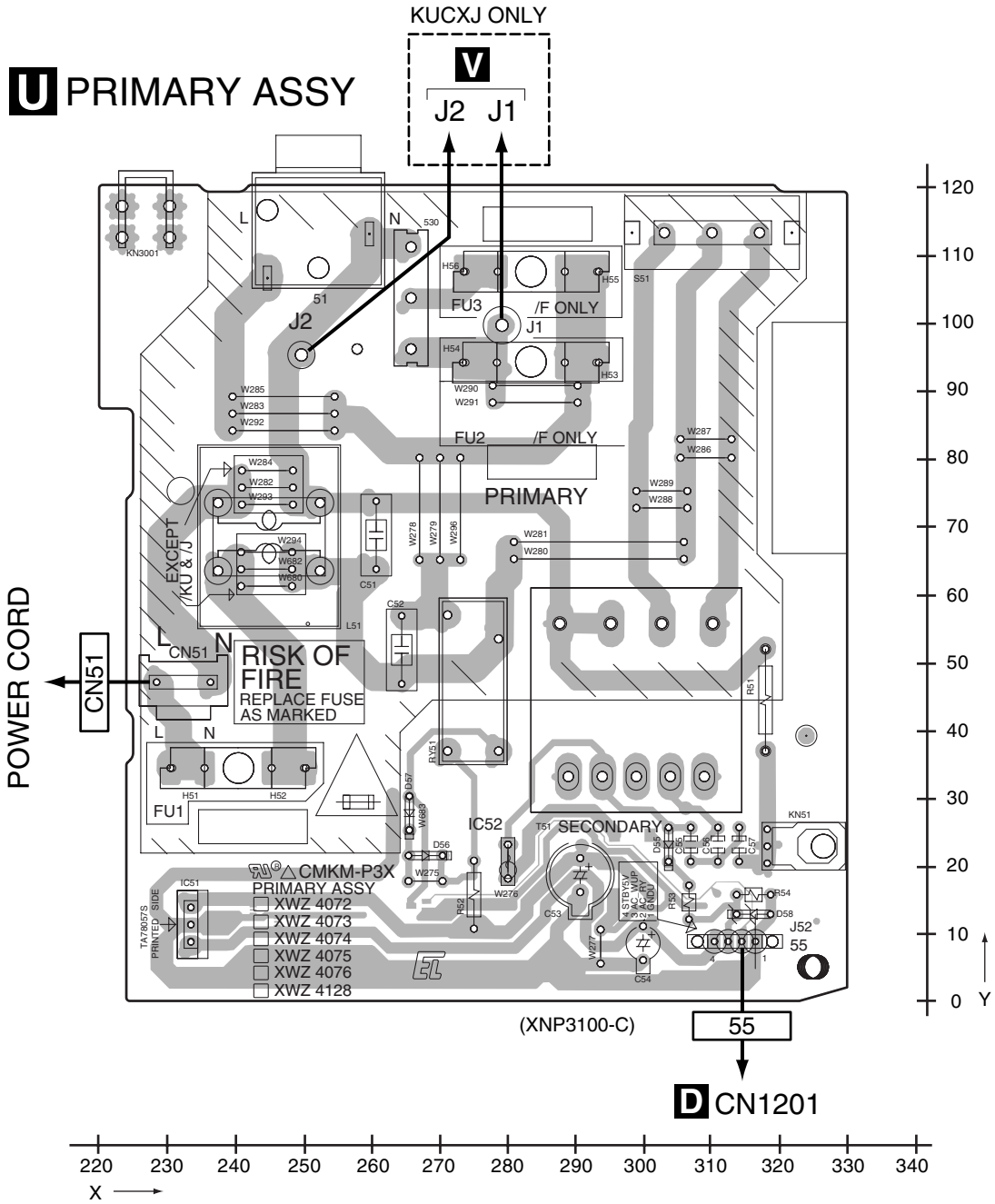

U

U

SIDE B

SIDE B

U PRIMARY ASSY

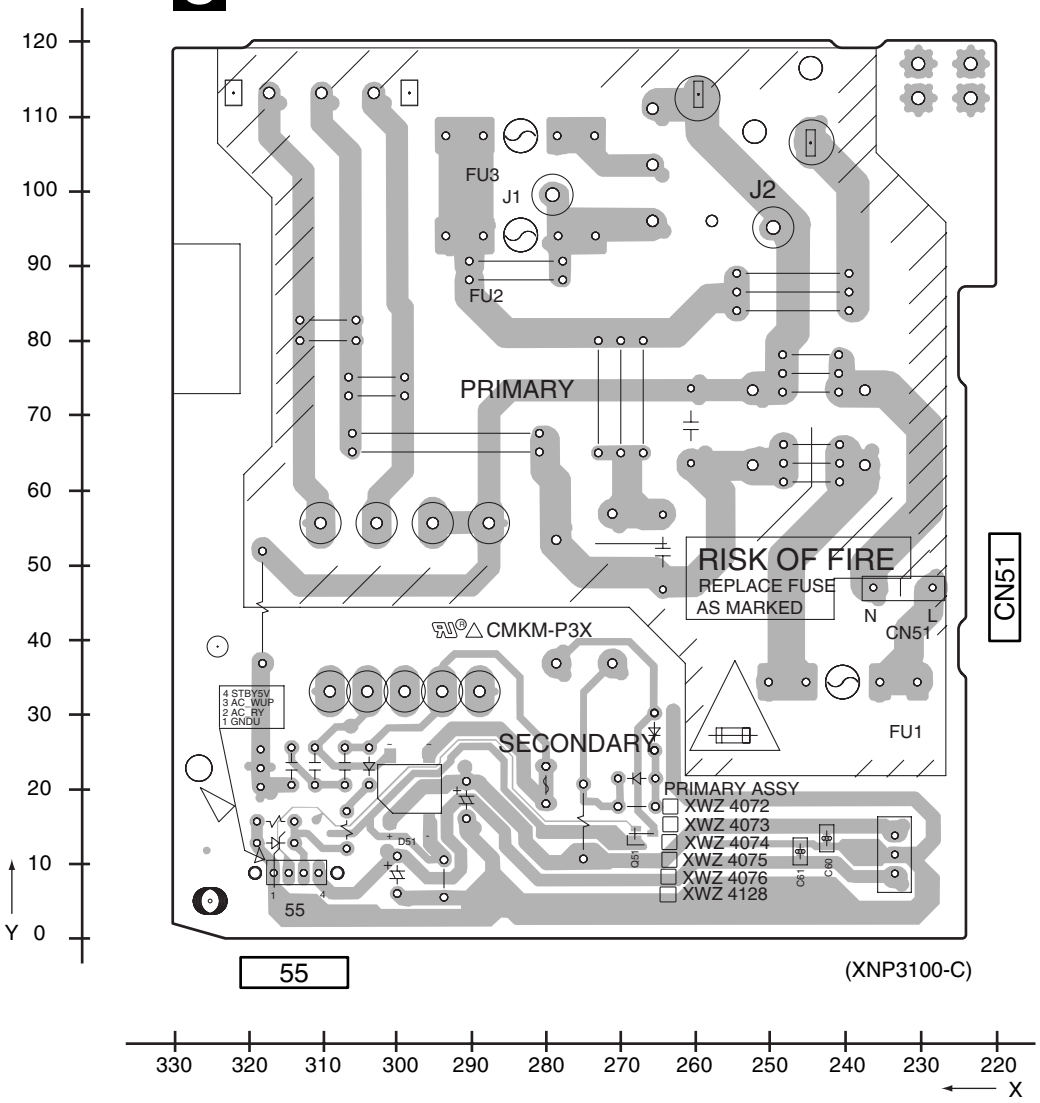

U

U

4.12 USB ASSY

SIDE A

SIDE A

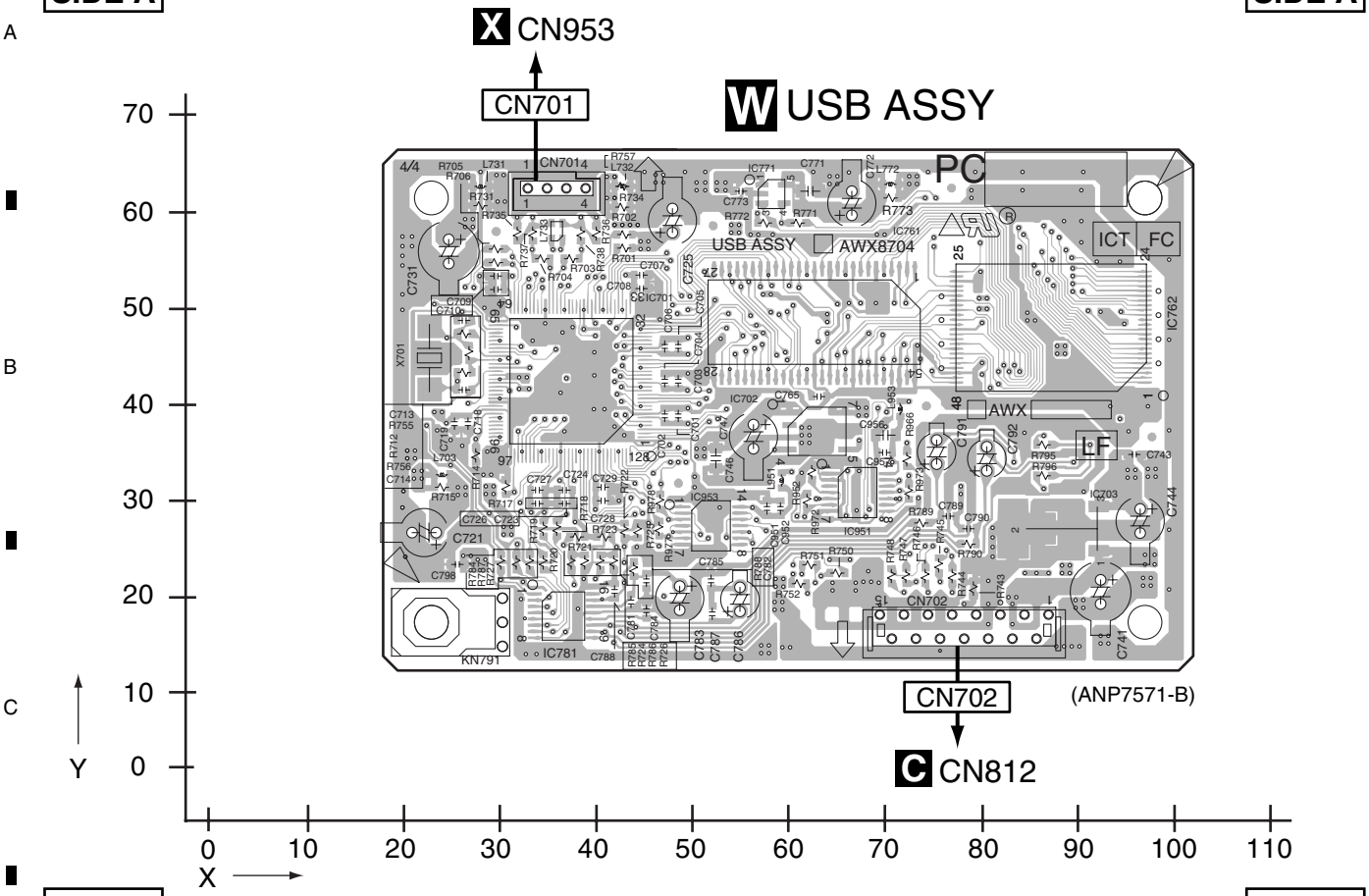

SIDE B

SIDE B

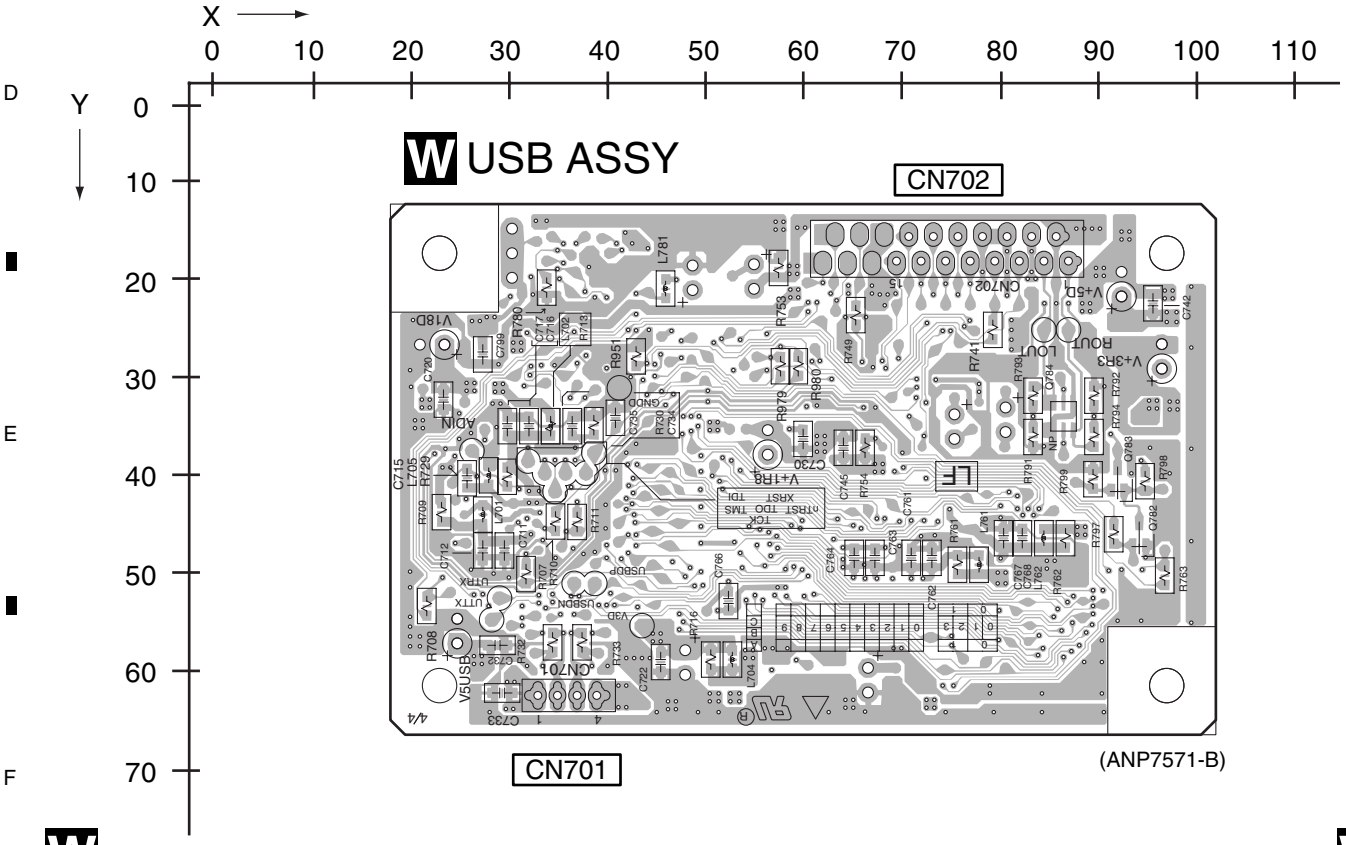

W

W

5. PCB PARTS LIST

NOTES: ● *Parts marked by "NSP" are generally unavailable because they are not in our Master Spare Parts List.*

● *The ⚠ mark found on some component parts indicates the importance of the safety factor of the part. Therefore, when replacing, be sure to use parts of identical designation.*

● *When ordering resistors, first convert resistance values into code form as shown in the following examples.*

Ex.1 When there are 2 effective digits (any digit apart from 0), such as 560 ohm and 47k ohm (tolerance is shown by J=5%, and K=10%).

560 Ω → 56 x 10^1 → 561 ..... RD1/4PU 5 6 1 J
47k Ω → 47 x 10^3 → 473 ..... RD1/4PU 4 7 3 J
0.5 Ω → R50 ..... RN2H R 5 0 K
1 Ω → 1R0 ..... RS1P 1 R 0 K

Ex.2 When there are 3 effective digits (such as in high precision metal film resistors).

5.62k Ω → 562 x 10^1 → 5621 ..... RN1/4PC 5 6 2 1 F

● *Meaning of the figures and others in the parentheses in the parts list.*

Example) IC 301 is on the point (face A, 91 of x-axis, and 111 of y-axis) of the corresponding PC board.

IC 301 (A, 91, 111) IC NJM2068V

LIST OF ASSEMBLIES

Mark	Symbol and Description	VSX-516 /KUCXJ	VSX-516 /MYXJ5, MVXJ5
	1..MAIN ASSY	XWK3229	XWK3230
	1..DSP ASSY	AWX8573	AWX8572
NSP	1..AMP ASSY	XWK3219	XWK3220
	2..POWER PACK ASSY	XWZ4082	XWZ4083
	2..TRANS2 ASSY	XWZ4090	XWZ4092
	2..TRANS3 ASSY	XWZ4079	XWZ4079
	2..HEADPHONE ASSY	XWZ4095	XWZ4095
	2..COMPONENT ASSY	XWZ4096	Not used
	2..5.1CHIN ASSY	XWZ4069	XWZ4069
	2..BINDER ASSY	XWZ4199	XWZ4199
NSP	1..COMPLEX ASSY	XWK3209	XWK3210
	2..FRONT DISPLAY ASSY	XWZ4051	XWZ4052
	2..R. ENCODER ASSY	XWZ4055	XWZ4055
	2..POWER KEY ASSY	XWZ4056	XWZ4056
	2..VIDEO ASSY	XWZ4059	XWZ4060
	2..DIGITAL IN ASSY	XWZ4066	XWZ4066
	2..PRIMARY ASSY	XWZ4072	XWZ4073
	2..REGULATOR ASSY	XWZ4077	XWZ4116
	2..TRANS1 ASSY	XWZ4078	Not used
	2..TRANS4 ASSY	XWZ4093	XWZ4093
	1..USB IN ASSY	Not used	XWK3247
	1..USB ASSY	Not used	AWX8704
	1..FM/AM TUNER UNIT	AXX7210	AXX7170

■ CONTRAST OF PCB ASSEMBLIES

B DSP ASSY

AWX8572 and AWX8573 are constructed the same except for the following:

Mark	Symbol and Description	AWX8573	AWX8572
	IC851	Not used	PDC145A8
	FLASH ROM IC	Not used	LE25FW106M
	Q801	Not used	UN5212
	L851 CHIP SOLID INDUCTOR	Not used	QTL1013
	R820	RS1/16S0R0J	Not used
	R821, R853	Not used	RS1/16S0R0J
	R828–R830, R851	Not used	RS1/16S470J
	R855–R857	Not used	RS1/16S103J
	C851	Not used	CCSRCH471J50
	C852	Not used	CKSRYB104K16

D TRANS2 ASSY

XWZ4092 and XWZ4090 are constructed the same except for the following:

Mark	Symbol and Description	XWZ4090	XWZ4092
⚠	IC853 PROTECTOR(4A)	AEK7018	Not used
⚠	IC853 PROTECTOR(7A)	Not used	AEK7021

K FRONT DISPLAY ASSY

XWZ4052 and XWZ4051 are constructed the same except for the following:

Mark	Symbol and Description	XWZ4051	XWZ4052
	D500	Not used	SLI-343DCW
	V401 FL TUBE	XAV3033	XAV3025
	R550	Not used	RS1/16S181J

P REGULATOR ASSY

XWZ4116 and XWZ4077 are constructed the same except for the following:

Mark	Symbol and Description	XWZ4077	XWZ4116
	D813	Not used	MTZJ6.2B
⚠	IC807	Not used	TA7805S
	R802 (220/2W)	Not used	RS2LMF221J
	R819	Not used	RS1/16S0R0J
	C816	Not used	CEAT101M10
	C817	Not used	CKSRYB103K25

Q VIDEO ASSY

XWZ4060 and XWZ4059 are constructed the same except for the following:

Mark	Symbol and Description	XWZ4059	XWZ4060
	D307	Not used	UDZS5R1(B)
	CN306 2P PIN JACK	Not used	XKB3041
	CN308 6P PIN JACK	AKB7123	Not used
	CN310 CONNECTOR	CKS3372	Not used
	JA305 4P PIN JACK	Not used	AKB7100
⚠	R313, R316	RS3LMF390J	RS3LMF560J
	R390	Not used	RS1/16S102J

U PRIMARY ASSY

XWZ4073 and XWZ4072 are constructed the same except for the following:

Mark	Symbol and Description	XWZ4072	XWZ4073
	D57	Not used	1SS133
⚠	L51	Not used	XTF3004
⚠	T51 STANDBY TRANSFORMER	ATT7043	ATT7040
⚠	51 AC SOCKET 1-P	AKP1060	Not used
⚠	530 3P TERMINAL	Not used	AKC-081
⚠	R51 (2.2M, 1/2W)	RCN1080	Not used

■ PCB PARTS LIST FOR VSX-516/KUCXJ UNLESS OTHER WISE NOTED

COMPLEX ASSY

MISCELLANEOUS

Mark	No.	Description	Part No.
	J 41	JUMPER WIRE	D15A03-100-2651
	J 42	JUMPER WIRE	D15A07-125-2651

A MAIN ASSY (XWK3229)

MISCELLANEOUS

Mark	No.	Description	Part No.
	IC 103	(A,198,72) OP-AMP IC	HA17558AF
	IC 104	(A,198,56) OP-AMP IC	HA17558AF
	IC 105	(A,198,87) OP-AMP IC	HA17558AF
	IC 106	(A,198,41) OP-AMP IC	HA17558AF
	IC 107	(A,216,88) OP-AMP IC	HA17558AF

Mark No.	Description	Part No.
IC 108	(B,255,64) 8CH E-VOL	R2S15205FP
IC 110	(A,237,73) IC	TC4066BFN
IC 251	(A,85,102) OP-AMP IC	HA17558AF
IC 310	(A,142,40) OP-AMP IC	BA4560RF
IC 311	(A,152,59) OP-AMP IC	BA4560RF
IC 312	(A,142,77) OP-AMP IC	BA4560RF
IC 315	(A,160,90) OP-AMP IC	BA4560RF
IC 9001	(B,82,64) CPU	PEG217A
IC 9002	(A,103,44) EEPROM	BR24L16FV-W
Q 231	(A,225,69) DIGITAL TR(SC-70)	RT1P241M
Q 232	(A,229,69) TRANSISTOR	RT1N241M
Q 252	(A,68,105) TRANSISTOR	2SD1858X
Q 253	(A,75,108) TRANSISTOR	RT1N241M
Q 254	(A,72,98) DIGITAL TR(SC-70)	RT1P241M
Q 255	(A,75,98) TRANSISTOR	RT1N241M
Q 256	(A,75,94) CHIP TRANSISTOR	2SD2704K
Q 257	(A,78,108) TRANSISTOR	2SA1576A
Q 361	(A,166,78) CHIP TRANSISTOR	2SD2704K
Q 9001	(A,125,87) DIGITAL TR(SC-70)	RT1N431M
Q 9002	(A,66,80) DIGITAL TR(SC-70)	RT1P241M
Q 9003	(A,65,75) DIGITAL TR(SC-70)	RT1P241M
Q 9007	(A,69,85) TRANSISTOR	DTC143TK
Q 9064	(A,59,80) DIGITAL TR(SC-70)	RT1P241M
Q 9065	(A,55,78) TRANSISTOR	UMD2N
D 103	(B,173,35) DIODE	DAN217U
D 105	(B,163,37) DIODE	DAN217U
D 107	(B,166,37) DIODE	DAN217U
D 251	(A,83,96) DIODE	DAN217U
D 253	(A,70,114) DIODE	UDZS27(B)
D 254	(A,90,104) DIODE	UDZS5R1(B)
D 311	(B,259,93) DIODE	1SS355
D 312	(B,268,93) DIODE	1SS355
D 331	(B,260,87) DIODE	UDZS6R8(B)
D 332	(B,263,87) DIODE	UDZS6R8(B)
D 9001	(A,125,103) DIODE	DAP202U
D 9002	(A,119,103) DIODE	DAP202U
D 9003	(A,122,103) DIODE	DAN202U
D 9006	(B,99,89) DIODE	DAN217U
D 9007	(B,91,89) DIODE	DAN217U
D 9010	(A,128,88) DIODE	1SS355
D 9011	(A,60,75) DIODE	DAN202U
D 9064	(A,58,75) DIODE	DAP202U
D 9065	(A,63,80) DIODE	DAP202U
D 9068	(A,53,81) DIODE	1SS355
L 101	(B,260,98) CHIP SOLID INDUCTOR	QTL1013
L 102	(B,265,97) CHIP SOLID INDUCTOR	QTL1013
L 5002	(A,257,104) CHIP SOLID INDUCTOR	QTL1013
L 9001	(A,123,107) CHIP SOLID INDUCTOR	ATL7002
L 9002	(A,121,107) CHIP SOLID INDUCTOR	ATL7002
L 9003	(A,106,98) RADIAL INDUCTOR	LFCA2R2J
X 9001	(A,96,53) CERAMIC RESONATOR (15.7 MHz)	XSS3004
CN101	(A,41,27) CONNECTOR	CKS3382
CN103	(A,230,17) 11P CONNECTOR	52044-1145
CN104	(A,250,13) CONNECTOR	CKS3384
CN105	(A,266,34) CONNECTOR	CKS3372
CN109	(A,230,113) 19P SOCKET	XKP3054
CN111	(A,276,113) 21P SOCKET	XKP3091
CN112	(A,91,41) CONNECTOR	CKS3382
CN114	(A,189,113) 21P SOCKET	XKP3091
CN117	(A,302,77) PIN JACK(4P)	AKB7114
CN118	(A,302,105) PIN JACK(4P)	AKB7114
CN125	(A,302,42) 6P PIN JACK	XKB3055
CN251	(A,39,83) 3P JUMPER CONNECTOR	52147-0310
CN252	(A,37,69) 3P TOP POST	B3B-EH

RESISTORS

R 103	(B,283,62)	RS1/16S222J
R 104	(B,283,52)	RS1/16S222J
R 105	(B,283,47)	RS1/16S331J
R 106	(B,293,40)	RS1/16S331J
R 107	(B,283,87)	RS1/16S331J
R 108	(B,293,81)	RS1/16S331J
R 109	(B,283,73)	RS1/16S331J
R 110	(B,293,68)	RS1/16S331J
R 111	(B,283,115)	RS1/16S222J
R 112	(B,283,106)	RS1/16S222J
R 113	(B,283,101)	RS1/16S331J
R 114	(B,293,96)	RS1/16S331J
R 129	(B,283,34)	RS1/16S331J
R 130	(B,283,25)	RS1/16S331J
R 145	(A,71,73)	RS1/16S102J
R 146	(A,71,74)	RS1/16S102J
R 147	(B,233,67)	RS1/16S472J
R 148	(B,228,62)	RS1/16S472J
R 149	(A,259,45)	RS1/16S104J
R 154	(B,294,51)	RS1/16S0R0J
R 155	(B,293,58)	RS1/16S0R0J
R 156	(B,295,107)	RS1/16S0R0J
R 157	(B,293,114)	RS1/16S0R0J
R 180	(B,278,97)	RS1/16S0R0J
R 181	(B,272,78)	RS1/16S0R0J
R 182	(B,275,75)	RS1/16S0R0J
R 183	(B,276,67)	RS1/16S0R0J
R 201	(A,189,85)	RS1/16S473J
R 202	(A,189,90)	RS1/16S473J
R 203	(B,187,85)	RS1/16S392J
R 204	(B,187,91)	RS1/16S392J
R 205	(B,189,85)	RS1/16S392J
R 206	(B,189,91)	RS1/16S392J
R 207	(B,191,85)	RS1/16S392J
R 208	(B,191,91)	RS1/16S392J
R 209	(B,198,85)	RS1/16S392J
R 210	(B,198,91)	RS1/16S392J
R 211	(B,200,85)	RS1/16S332J
R 212	(B,200,91)	RS1/16S332J
R 213	(B,202,85)	RS1/16S680J
R 214	(B,202,91)	RS1/16S680J
R 219	(B,216,84)	RS1/16S0R0J
R 220	(B,215,91)	RS1/16S0R0J
R 221	(B,220,84)	RS1/16S472J
R 222	(B,219,91)	RS1/16S472J
R 223	(A,242,78)	RS1/16S472J
R 224	(A,236,78)	RS1/16S472J
R 225	(B,225,84)	RS1/16S392J
R 226	(B,225,91)	RS1/16S392J
R 227	(B,231,84)	RS1/16S101J
R 228	(B,233,89)	RS1/16S101J
R 231	(A,229,72)	RS1/16S104J
R 233	(A,231,91)	RS1/16S474J

Mark No.	Description	Part No.
R 234	(A,231,84)	RS1/16S474J
R 237	(A,237,88)	RS1/16S122J
R 238	(A,236,80)	RS1/16S122J
R 241	(A,190,69)	RS1/16S473J
R 242	(A,190,74)	RS1/16S473J
R 243	(B,186,69)	RS1/16S332J
R 244	(B,186,75)	RS1/16S332J
R 245	(B,188,69)	RS1/16S332J
R 246	(B,188,75)	RS1/16S332J
R 247	(B,190,69)	RS1/16S332J
R 248	(B,190,75)	RS1/16S332J
R 249	(B,197,69)	RS1/16S332J
R 250	(B,197,75)	RS1/16S332J
R 251	(B,199,69)	RS1/16S182J
R 252	(B,199,75)	RS1/16S182J
R 253	(B,202,69)	RS1/16S0R0J
R 254	(B,202,75)	RS1/16S0R0J
R 257	(B,213,69)	RS1/16S101J
R 258	(B,213,75)	RS1/16S101J
R 261	(A,189,53)	RS1/16S473J
R 262	(A,189,59)	RS1/16S473J
R 263	(B,186,53)	RS1/16S332J
R 264	(B,186,60)	RS1/16S332J
R 265	(B,188,53)	RS1/16S332J
R 266	(B,188,60)	RS1/16S682J
R 267	(B,190,53)	RS1/16S332J
R 268	(B,190,60)	RS1/16S393J
R 269	(B,197,53)	RS1/16S332J
R 270	(B,197,60)	RS1/16S122J
R 271	(B,199,53)	RS1/16S182J
R 272	(B,199,60)	RS1/16S272J
R 273	(B,202,53)	RS1/16S0R0J
R 274	(B,202,60)	RS1/16S271J
R 277	(B,214,53)	RS1/16S101J
R 278	(B,213,61)	RS1/16S101J
R 280	(A,65,113)	RS1/16S0R0J
R 281	(A,188,44)	RS1/16S473J
R 282	(A,188,38)	RS1/16S473J
R 283	(B,186,45)	RS1/16S332J
R 284	(B,186,38)	RS1/16S332J
R 285	(B,188,45)	RS1/16S332J
R 286	(B,188,38)	RS1/16S332J
R 287	(B,191,45)	RS1/16S332J
R 288	(B,191,38)	RS1/16S332J
R 289	(B,197,45)	RS1/16S332J
R 290	(B,197,38)	RS1/16S332J
R 291	(B,200,45)	RS1/16S182J
R 292	(B,199,39)	RS1/16S182J
R 293	(B,202,45)	RS1/16S0R0J
R 294	(B,202,39)	RS1/16S0R0J
R 297	(B,214,44)	RS1/16S101J
R 298	(B,214,39)	RS1/16S101J
R 303	(B,156,37)	RS1/16S101J
R 304	(B,155,43)	RS1/16S101J
R 305	(B,160,49)	RS1/16S101J
R 306	(B,164,61)	RS1/16S101J
R 307	(B,165,68)	RS1/16S101J
R 308	(B,171,72)	RS1/16S101J
R 311	(A,258,102) METAL OXIDE RESISTOR	RS1LMF101J
R 312	(A,266,102) METAL OXIDE RESISTOR	RS1LMF101J

Mark No.	Description	Part No.
R 427	(A,133,93)	RS1/16S104J
R 431	(A,131,93)	RS1/16S104J
R 432	(A,127,93)	RS1/16S104J
R 433	(A,128,93)	RS1/16S104J
R 434	(A,134,93)	RS1/16S104J
R 435	(A,126,93)	RS1/16S104J
R 436	(A,130,93)	RS1/16S104J
R 438	(A,81,98)	RS1/16S104J
R 439	(A,86,96)	RS1/16S104J
R 440	(A,81,108)	RS1/16S754J
R 441	(A,79,98)	RS1/16S222J
R 442	(A,77,98)	RS1/16S104J
R 443	(A,63,104)	RS1/16S471J
R 445	(A,73,108)	RS1/16S223J
R 446	(A,74,113)	RS1/16S104J
R 447	(A,88,94)	RS1/16S472J
R 448	(A,89,104)	RS1/16S104J
R 449	(A,80,108)	RS1/16S102J
R 453	(A,146,35)	RS1/16S102J
R 454	(A,142,46)	RS1/16S102J
R 455	(A,146,38)	RS1/16S272J
R 456	(A,147,43)	RS1/16S272J
R 457	(A,140,35)	RS1/16S153J
R 458	(A,140,46)	RS1/16S153J
R 459	(B,133,38)	RS1/16S103J
R 460	(B,133,43)	RS1/16S103J
R 461	(B,145,39)	RS1/16S104J
R 462	(B,145,43)	RS1/16S104J
R 464	(A,78,102)	RS1/16S0R0J
R 473	(A,151,53)	RS1/16S102J
R 474	(A,152,65)	RS1/16S102J
R 475	(A,157,52)	RS1/16S272J
R 476	(A,158,66)	RS1/16S272J
R 477	(A,149,52)	RS1/16S153J
R 478	(A,150,65)	RS1/16S153J
R 479	(B,142,57)	RS1/16S103J
R 480	(B,142,62)	RS1/16S103J
R 481	(B,154,58)	RS1/16S104J
R 482	(B,154,62)	RS1/16S104J
R 483	(B,144,76)	RS1/16S104J
R 484	(A,165,71)	RS1/16S104J
R 485	(A,157,80)	RS1/16S472J
R 488	(A,165,73)	RS1/16S0R0J
R 493	(A,141,71)	RS1/16S102J
R 494	(A,141,83)	RS1/16S911J
R 495	(A,147,71)	RS1/16S272J
R 496	(A,148,83)	RS1/16S272J
R 497	(A,139,69)	RS1/16S153J
R 498	(A,139,83)	RS1/16S153J
R 499	(B,133,72)	RS1/16S103J
R 500	(B,133,79)	RS1/16S104J
R 502	(B,144,80)	RS1/16S204J
R 504	(B,171,86)	RS1/16S222J
R 505	(B,170,92)	RS1/16S222J
R 506	(B,165,87)	RS1/16S104J
R 507	(B,163,92)	RS1/16S104J
R 508	(A,162,82)	RS1/16S272J
R 509	(A,162,96)	RS1/16S272J
R 512	(A,159,83)	RS1/16S102J
R 513	(A,159,96)	RS1/16S102J

Mark No.	Description	Part No.
R 514	(A,157,83)	RS1/16S153J
R 515	(A,157,96)	RS1/16S153J
R 516	(B,150,89)	RS1/16S103J
R 517	(B,150,96)	RS1/16S103J
R 9002	(A,129,89)	RS1/16S473J
R 9005	(A,91,55)	RS1/16S0R0J
R 9006	(B,103,89)	RS1/16S474J
R 9007	(B,93,89)	RS1/16S474J
R 9008	(A,86,90)	RS1/16S221J
R 9009	(A,65,85)	RS1/16S473J
R 9010	(B,115,45)	RS1/16S512J
R 9011	(A,63,76)	RS1/16S102J
R 9012	(A,63,73)	RS1/16S0R0J
R 9013	(B,112,45)	RS1/16S471J
R 9014	(B,104,54)	RS1/16S471J
R 9015	(B,101,54)	RS1/16S471J
R 9016	(B,99,54)	RS1/16S471J
R 9017	(B,97,54)	RS1/16S471J
R 9018	(B,95,54)	RS1/16S471J
R 9019	(B,98,76)	RS1/16S471J
R 9020	(B,99,76)	RS1/16S471J
R 9021	(B,101,76)	RS1/16S471J
R 9022	(B,103,76)	RS1/16S471J
R 9024	(B,105,68)	RS1/16S472J
R 9025	(B,101,68)	RS1/16S0R0J
R 9026	(B,107,68)	RS1/16S622J
R 9028	(B,119,45)	RS1/16S104J
R 9030	(A,68,79)	RS1/16S470J
R 9031	(B,69,48)	RS1/16S104J
R 9032	(A,66,59)	RS1/16S104J
R 9033	(B,89,48)	RS1/16S104J
R 9036	(A,88,89)	RS1/16S221J
R 9037	(A,124,99)	RS1/16S104J
R 9039	(A,87,58)	RS1/16S104J
R 9041	(B,117,45)	RS1/16S104J
R 9045	(A,98,46)	RS1/16S471J
R 9046	(A,107,45)	RS1/16S471J
R 9047	(A,99,46)	RS1/16S103J
R 9048	(A,98,43)	RS1/16S103J
R 9060	(B,98,68)	RS1/16S473J
R 9062	(B,87,48)	RS1/16S471J
R 9064	(A,54,74)	RS1/16S103J
R 9065	(A,56,74)	RS1/16S103J
R 9066	(A,62,72)	RS1/16S103J
R 9067	(A,57,83)	RS1/16S103J
R 9068	(A,64,71)	RS1/16S0R0J
R 9081	(A,120,72)	RS1/16S221J
R 9082	(A,122,69)	RS1/16S274J

CAPACITORS

Mark No.	Description	Part No.
C 115	(B,262,98)	CKSRYB103K50
C 116	(B,267,97)	CKSRYB103K50
C 117	(A,287,109)	CCSRCH220J50
C 118	(B,285,109)	CCSRCH220J50
C 121	(A,280,34)	CEAT100M50
C 122	(A,280,25)	CEAT100M50
C 125	(A,280,62)	CEAT100M50
C 126	(A,280,53)	CEAT100M50
C 127	(A,280,47)	CEAT100M50
C 128	(A,280,40)	CEAT100M50
C 131	(A,280,87)	CEAT100M50
C 132	(A,280,80)	CEAT100M50
C 133	(A,280,74)	CEAT100M50
C 134	(A,280,67)	CEAT100M50
C 135	(A,280,114)	CEAT100M50
C 136	(A,280,106)	CEAT100M50
C 137	(A,280,101)	CEAT100M50
C 138	(A,280,93)	CEAT100M50
C 141	(A,256,82)	CKSRYB104K50
C 145	(B,256,81)	CCSRCH101J50
C 146	(B,258,81)	CCSRCH101J50
C 147	(B,253,81)	CKSRYB103K50
C 148	(B,238,67)	CKSRYB223K25
C 149	(B,235,67)	CKSRYB473K25
C 150	(B,231,67)	CKSQYB154K16
C 151	(B,49,51)	CKSRYB103K50
C 152	(B,230,62)	CKSRYB223K25
C 153	(B,234,62)	CKSRYB473K25
C 154	(B,232,62)	CKSQYB154K16
C 155	(A,226,62)	CEAT101M16
C 156	(A,229,56)	CEAT101M16
C 157	(A,236,56)	CEAT101M16
C 158	(A,232,50)	CEAT101M16
C 159	(A,241,50)	CEAT101M16
C 160	(A,234,44)	CEAT101M16
C 161	(A,241,44)	CEAT101M16
C 162	(A,248,44)	CEAT101M16
C 165	(A,240,86)	CEAT1R0M50
C 166	(A,248,86)	CEAT1R0M50
C 179	(B,294,76)	CKSRYB103K50
C 180	(A,277,16)	CKSRYB103K50
C 199	(A,281,50)	CKSRYB103K50
C 201	(A,183,85)	CEAT2R2M50
C 202	(A,184,92)	CEAT2R2M50
C 203	(A,191,85)	CCSRCH471J50
C 204	(A,191,90)	CCSRCH471J50
C 205	(A,193,85)	CCSRCH331J50
C 206	(A,194,90)	CCSRCH331J50
C 207	(B,193,85)	CCSRCH331J50
C 208	(B,193,91)	CCSRCH331J50
C 213	(A,223,84)	CEAT100M50
C 214	(A,223,90)	CEAT100M50
C 215	(B,233,84)	CKSRYB103K50
C 216	(B,231,89)	CKSRYB103K50
C 217	(A,202,85)	CKSRYB103K50
C 218	(A,202,90)	CKSRYB103K50
C 219	(A,221,87)	CKSRYB104K16
C 220	(A,210,93)	CKSRYB104K16
C 221	(A,230,75)	CKSRYB103K50
C 222	(A,243,70)	CKSRYB103K50
C 241	(A,183,70)	CEAT2R2M50
C 242	(A,183,77)	CEAT2R2M50
C 243	(A,192,69)	CCSRCH101J50
C 244	(A,192,74)	CCSRCH101J50
C 245	(A,194,69)	CCSRCH331J50
C 246	(A,194,74)	CCSRCH331J50
C 247	(B,193,69)	CCSRCH331J50
C 248	(B,193,75)	CCSRCH331J50
C 249	(A,205,69)	CEAT100M50
C 250	(A,205,75)	CEAT100M50

Mark No.	Description	Part No.
C 251 (A,204,65)		CKSRYB103K50
C 252 (A,211,78)		CKSRYB103K50
C 253 (B,43,89)		CKSRYB103K50
C 254 (A,58,108)	ELECT. CAPACITOR	CEAT101M25
C 255 (A,51,108)	ELECT. CAPACITOR	CEANP470M25
C 256 (A,81,105)		CKSRYB103K50
C 257 (B,216,69)		CKSRYB472K50
C 258 (B,217,75)		CKSRYB472K50
C 261 (A,183,54)		CEAT2R2M50
C 262 (A,183,62)		CEAT2R2M50
C 263 (A,192,53)		CCSRCH101J50
C 264 (A,191,59)		CKSRYB223K25
C 265 (A,194,53)		CCSRCH331J50
C 266 (A,194,59)		CKSRYB103K50
C 267 (B,193,53)		CCSRCH331J50
C 268 (B,193,60)		CKSRYB562K50
C 269 (A,205,54)		CEAT100M50
C 270 (A,205,60)		CEAT100M50
C 271 (A,203,51)		CKSRYB103K50
C 272 (A,210,64)		CKSRYB103K50
C 277 (B,216,53)		CKSRYB472K50
C 278 (B,215,61)		CKSRYB472K50
C 281 (A,183,46)		CEAT2R2M50
C 282 (A,184,39)		CEAT2R2M50
C 283 (A,190,44)		CCSRCH101J50
C 284 (A,190,38)		CCSRCH101J50
C 285 (A,194,44)		CCSRCH331J50
C 286 (A,194,38)		CCSRCH331J50
C 287 (B,193,45)		CCSRCH331J50
C 288 (B,193,38)		CCSRCH331J50
C 289 (A,205,44)		CEAT100M50
C 290 (A,206,38)		CEAT100M50
C 291 (A,216,39)		CKSRYB103K50
C 292 (A,216,48)		CKSRYB103K50
C 297 (B,218,44)		CKSRYB472K50
C 298 (B,216,39)		CKSRYB472K50
C 321 (A,153,38)		CEAT100M50
C 322 (A,153,45)		CEAT100M50
C 323 (A,145,35)		CCSRCH101J50
C 324 (A,140,47)		CCSRCH101J50
C 325 (A,136,39)	ELECT. CAPACITOR	CEAT220M50
C 326 (A,136,46)	ELECT. CAPACITOR	CEAT220M50
C 327 (A,132,42)		CKSRYB103K50
C 328 (A,132,38)		CKSRYB103K50
C 333 (A,255,93)		CEAT101M10
C 334 (A,268,81)		CEAT101M10
C 341 (A,161,56)		CEAT100M50
C 342 (A,161,63)		CEAT100M50
C 343 (A,149,51)		CCSRCH101J50
C 344 (A,150,66)		CCSRCH101J50
C 345 (A,145,56)	ELECT. CAPACITOR	CEAT220M50
C 346 (A,145,63)	ELECT. CAPACITOR	CEAT220M50
C 347 (A,140,64)		CKSRYB103K50
C 348 (A,141,58)		CKSRYB103K50
C 361 (A,161,70)		CEAT100M50
C 362 (A,169,70)		CEAT100M50
C 363 (A,139,68)		CCSRCH101J50
C 364 (A,139,84)		CKSRYB472K50
C 365 (A,136,73)	ELECT. CAPACITOR	CEAT220M50
C 366 (A,136,80)	ELECT. CAPACITOR	CEANP4R7M50
C 367 (A,135,88)		CKSRYB103K50
C 368 (A,147,75)		CKSRYB103K50
C 370 (A,161,74)		CEAT4R7M50
C 384 (A,167,87)		CEAT100M50
C 385 (A,167,94)		CEAT100M50
C 386 (A,157,84)		CCSRCH101J50
C 387 (A,157,95)		CCSRCH101J50
C 388 (A,153,90)	ELECT. CAPACITOR	CEAT220M50
C 389 (A,153,97)	ELECT. CAPACITOR	CEAT220M50
C 390 (A,164,88)		CKSRYB103K50
C 392 (B,91,95)		CKSRYB102K50
C 393 (A,156,92)		CKSRYB103K50
C 1031(A,286,57)		CCSRCH220J50
C 1041(B,287,55)		CCSRCH220J50
C 5001(B,233,10)		CKSRYB102K50
C 5002(B,235,10)		CKSRYB103K50
C 5003(B,237,10)		CKSRYB105K10
C 5025(A,166,12)		CKSRYB102K50
C 5026(A,169,13)		CKSRYB102K50
C 5027(A,177,12)		CKSRYB102K50
C 5028(A,179,13)		CCSRCH220J50
C 9004(A,121,94)		CKSRYB103K50
C 9005(A,116,99)		CEJQ2R2M50
C 9006(A,122,88)		CKSRYB105K10
C 9007(A,79,92)	ELECT. CAPACITOR	CEAT331M6R3
C 9008(B,77,90)		CKSRYB103K50
C 9011(B,95,89)		CKSRYB473K16
C 9014(B,87,88)		CKSRYB473K16
C 9015(A,100,95)		CKSRYB102K50
C 9018(B,72,72)		CKSRYB104K50
C 9081(A,120,69)		CKSRYB103K50

A MAIN ASSY (XWK3230)

MISCELLANEOUS

IC 103 (A,198,72)	OP-AMP IC	HA17558AF
IC 104 (A,198,56)	OP-AMP IC	HA17558AF
IC 105 (A,198,87)	OP-AMP IC	HA17558AF
IC 106 (A,198,41)	OP-AMP IC	HA17558AF
IC 107 (A,216,88)	OP-AMP IC	HA17558AF
IC 108 (B,255,64)	8CH E-VOL	R2S15205FP
IC 110 (A,237,73)	IC	TC4066BFN
IC 251 (A,85,102)	OP-AMP IC	HA17558AF
IC 310 (A,142,40)	OP-AMP IC	BA4560RF
IC 311 (A,152,59)	OP-AMP IC	BA4560RF
IC 312 (A,142,77)	OP-AMP IC	BA4560RF
IC 315 (A,160,90)	OP-AMP IC	BA4560RF
IC 5001(A,69,19)	RDS DECORDER IC	LC72725M
IC 9001(B,82,64)	CPU	PEG217A
IC 9002(A,103,44)	EEPROM	BR24L16FV-W
Q 231 (A,225,69)	DIGITAL TR(SC-70)	RT1P241M
Q 232 (A,229,69)	TRANSISTOR	RT1N241M
Q 252 (A,68,105)	TRANSISTOR	2SD1858X
Q 253 (A,75,108)	TRANSISTOR	RT1N241M
Q 254 (A,72,98)	DIGITAL TR(SC-70)	RT1P241M
Q 255 (A,75,98)	TRANSISTOR	2SC4081
Q 256 (A,75,94)	CHIP TRANSISTOR	2SD2704K
Q 257 (A,78,108)	TRANSISTOR	2SA1576A
Q 259 (A,69,97)	DIGITAL TR(SC-70)	RT1P241M

Mark No.	Description	Part No.
Q 260	(A,68,221) TRANSISTOR	2SC4081
Q 361	(A,166,78) CHIP TRANSISTOR	2SD2704K
Q 9001	(A,125,87) DIGITAL TR(SC-70)	RT1N431M
Q 9002	(A,66,80) DIGITAL TR(SC-70)	RT1P241M
Q 9003	(A,65,75) DIGITAL TR(SC-70)	RT1P241M
Q 9007	(A,69,85) TRANSISTOR	DTC143TK
Q 9064	(A,59,80) DIGITAL TR(SC-70)	RT1P241M
Q 9065	(A,55,78) TRANSISTOR	UMD2N
D 103	(B,173,35) DIODE	DAN217U
D 105	(B,163,37) DIODE	DAN217U
D 107	(B,166,37) DIODE	DAN217U
D 251	(A,83,96) DIODE	DAN217U
D 253	(A,70,114) DIODE	UDZS13(B)
D 254	(A,90,104) DIODE	UDZS5R1(B)
D 255	(A,65,114) DIODE	UDZS13(B)
D 311	(B,259,93) DIODE	1SS355
D 312	(B,268,93) DIODE	1SS355
D 331	(B,260,87) DIODE	UDZS6R8(B)
D 332	(B,263,87) DIODE	UDZS6R8(B)
D 9001	(A,125,103) DIODE	DAP202U
D 9002	(A,119,103) DIODE	DAP202U
D 9003	(A,122,103) DIODE	DAN202U
D 9006	(B,99,89) DIODE	DAN217U
D 9007	(B,91,89) DIODE	DAN217U
D 9010	(A,128,88) DIODE	1SS355
D 9011	(A,60,75) DIODE	DAN202U
D 9064	(A,58,75) DIODE	DAP202U
D 9065	(A,63,80) DIODE	DAP202U
D 9068	(A,53,81) DIODE	1SS355
L 101	(B,260,98) CHIP SOLID INDUCTOR	QTL1013
L 102	(B,265,97) CHIP SOLID INDUCTOR	QTL1013
L 5002	(A,257,104) CHIP SOLID INDUCTOR	QTL1013
L 9001	(A,123,107) CHIP SOLID INDUCTOR	ATL7002
L 9002	(A,121,107) CHIP SOLID INDUCTOR	ATL7002
L 9003	(A,106,98) RADIAL INDUCTOR	LFCA2R2J
X 5001	(A,67,27) CRYSTAL RESONATOR (4.332 MHz)	ASS7004
X 9001	(A,96,53) CERAMIC RESONATOR (15.7 MHz)	XSS3004
CN101	(A,41,27) CONNECTOR	CKS3382
CN103	(A,230,17) 11P CONNECTOR	52044-1145
CN104	(A,250,13) CONNECTOR	CKS3384
CN105	(A,266,34) CONNECTOR	CKS3372
CN108	(A,41,55) CONNECTOR	CKS3370
CN109	(A,230,113) 23P SOCKET	XKP3055
CN111	(A,276,113) 21P SOCKET	XKP3091
CN112	(A,91,41) CONNECTOR	CKS3390
CN114	(A,189,113) 21P SOCKET	XKP3091
CN117	(A,302,77) PIN JACK(4P)	AKB7114
CN118	(A,302,105) PIN JACK(4P)	AKB7114
CN125	(A,302,42) 6P PIN JACK	XKB3055
CN251	(A,39,83) 3P JUMPER CONNECTOR	52147-0310
CN252	(A,37,69) 3P TOP POST	B3B-EH

RESISTORS

Mark No.	Description	Part No.
R 103	(B,283,62)	RS1/16S222J
R 104	(B,283,52)	RS1/16S222J
R 105	(B,283,47)	RS1/16S331J
R 106	(B,293,40)	RS1/16S331J
R 107	(B,283,87)	RS1/16S331J
R 108	(B,293,81)	RS1/16S331J
R 109	(B,283,73)	RS1/16S331J
R 110	(B,293,68)	RS1/16S331J
R 111	(B,283,115)	RS1/16S222J
R 112	(B,283,106)	RS1/16S222J
R 113	(B,283,101)	RS1/16S331J
R 114	(B,293,96)	RS1/16S331J
R 129	(B,283,34)	RS1/16S331J
R 130	(B,283,25)	RS1/16S331J
R 145	(A,71,73)	RS1/16S102J
R 146	(A,71,74)	RS1/16S102J
R 147	(B,233,67)	RS1/16S472J
R 148	(B,228,62)	RS1/16S472J
R 149	(A,259,45)	RS1/16S104J
R 154	(B,294,51)	RS1/16S0R0J
R 155	(B,293,58)	RS1/16S0R0J
R 156	(B,295,107)	RS1/16S0R0J
R 157	(B,293,114)	RS1/16S0R0J
R 180	(B,278,97)	RS1/16S0R0J
R 181	(B,272,78)	RS1/16S0R0J
R 182	(B,275,75)	RS1/16S0R0J
R 183	(B,276,67)	RS1/16S0R0J
R 201	(A,189,85)	RS1/16S473J
R 202	(A,189,90)	RS1/16S473J
R 203	(B,187,85)	RS1/16S392J
R 204	(B,187,91)	RS1/16S392J
R 205	(B,189,85)	RS1/16S392J
R 206	(B,189,91)	RS1/16S392J
R 207	(B,191,85)	RS1/16S392J
R 208	(B,191,91)	RS1/16S392J
R 209	(B,198,85)	RS1/16S392J
R 210	(B,198,91)	RS1/16S392J
R 211	(B,200,85)	RS1/16S332J
R 212	(B,200,91)	RS1/16S332J
R 213	(B,202,85)	RS1/16S680J
R 214	(B,202,91)	RS1/16S680J
R 219	(B,216,84)	RS1/16S0R0J
R 220	(B,215,91)	RS1/16S0R0J
R 221	(B,220,84)	RS1/16S472J
R 222	(B,219,91)	RS1/16S472J
R 223	(A,242,78)	RS1/16S472J
R 224	(A,236,78)	RS1/16S472J
R 225	(B,225,84)	RS1/16S392J
R 226	(B,225,91)	RS1/16S392J
R 227	(B,231,84)	RS1/16S101J
R 228	(B,233,89)	RS1/16S101J
R 231	(A,229,72)	RS1/16S104J
R 233	(A,231,91)	RS1/16S474J
R 234	(A,231,84)	RS1/16S474J
R 237	(A,237,88)	RS1/16S122J
R 238	(A,236,80)	RS1/16S122J
R 241	(A,190,69)	RS1/16S473J
R 242	(A,190,74)	RS1/16S473J
R 243	(B,186,69)	RS1/16S332J
R 244	(B,186,75)	RS1/16S332J
R 245	(B,188,69)	RS1/16S332J
R 246	(B,188,75)	RS1/16S332J
R 247	(B,190,69)	RS1/16S332J
R 248	(B,190,75)	RS1/16S332J
R 249	(B,197,69)	RS1/16S332J

Mark No.	Description	Part No.
R 250	(B,197,75)	RS1/16S332J
R 251	(B,199,69)	RS1/16S182J
R 252	(B,199,75)	RS1/16S182J
R 253	(B,202,69)	RS1/16S0R0J
R 254	(B,202,75)	RS1/16S0R0J
R 257	(B,213,69)	RS1/16S101J
R 258	(B,213,75)	RS1/16S101J
R 261	(A,189,53)	RS1/16S473J
R 262	(A,189,59)	RS1/16S473J
R 263	(B,186,53)	RS1/16S332J
R 264	(B,186,60)	RS1/16S332J
R 265	(B,188,53)	RS1/16S332J
R 266	(B,188,60)	RS1/16S682J
R 267	(B,190,53)	RS1/16S332J
R 268	(B,190,60)	RS1/16S393J
R 269	(B,197,53)	RS1/16S332J
R 270	(B,197,60)	RS1/16S122J
R 271	(B,199,53)	RS1/16S182J
R 272	(B,199,60)	RS1/16S272J
R 273	(B,202,53)	RS1/16S0R0J
R 274	(B,202,60)	RS1/16S271J
R 277	(B,214,53)	RS1/16S101J
R 278	(B,213,61)	RS1/16S101J
R 279	(A,192,44)	RS1/16S104J
R 282	(A,188,38)	RS1/16S473J
R 284	(B,186,38)	RS1/16S332J
R 286	(B,188,38)	RS1/16S332J
R 288	(B,191,38)	RS1/16S332J
R 290	(B,197,38)	RS1/16S332J
R 291	(B,200,45)	RS1/16S0R0J
R 292	(B,199,39)	RS1/16S182J
R 293	(B,202,45)	RS1/16S0R0J
R 294	(B,202,39)	RS1/16S0R0J
R 298	(B,214,39)	RS1/16S101J
R 303	(B,156,37)	RS1/16S101J
R 304	(B,155,43)	RS1/16S101J
R 305	(B,160,49)	RS1/16S101J
R 306	(B,164,61)	RS1/16S101J
R 307	(B,165,68)	RS1/16S101J
R 308	(B,171,72)	RS1/16S101J
R 311	(A,258,102) METAL OXIDE RESISTOR	RS1LMF101J
R 312	(A,266,102) METAL OXIDE RESISTOR	RS1LMF101J
R 431	(A,131,93)	RS1/16S104J
R 432	(A,127,93)	RS1/16S104J
R 433	(A,128,93)	RS1/16S104J
R 434	(A,134,93)	RS1/16S104J
R 435	(A,126,93)	RS1/16S104J
R 436	(A,130,93)	RS1/16S104J
R 438	(A,81,98)	RS1/16S104J
R 439	(A,86,96)	RS1/16S104J
R 440	(A,81,108)	RS1/16S754J
R 441	(A,79,98)	RS1/16S222J
R 442	(A,77,98)	RS1/16S104J
R 443	(A,63,104)	RS1/16S471J
R 445	(A,73,108)	RS1/16S223J
R 446	(A,74,233)	RS1/16S104J
R 447	(A,88,94)	RS1/16S472J
R 448	(A,89,104)	RS1/16S104J
R 449	(A,80,108)	RS1/16S102J
R 453	(A,146,35)	RS1/16S102J

Mark No.	Description	Part No.
R 454	(A,142,46)	RS1/16S102J
R 455	(A,146,38)	RS1/16S272J
R 456	(A,147,43)	RS1/16S272J
R 457	(A,140,35)	RS1/16S153J
R 458	(A,140,46)	RS1/16S153J
R 459	(B,133,38)	RS1/16S103J
R 460	(B,133,43)	RS1/16S103J
R 461	(B,145,39)	RS1/16S104J
R 462	(B,145,43)	RS1/16S104J
R 463	(A,76,102)	RS1/16S223J
R 464	(A,78,102)	RS1/16S223J
R 465	(A,74,102)	RS1/16S223J
R 466	(A,71,101)	RS1/16S223J
R 473	(A,151,53)	RS1/16S102J
R 474	(A,152,65)	RS1/16S102J
R 475	(A,157,52)	RS1/16S272J
R 476	(A,158,66)	RS1/16S272J
R 477	(A,149,52)	RS1/16S153J
R 478	(A,150,65)	RS1/16S153J
R 479	(B,142,57)	RS1/16S103J
R 480	(B,142,62)	RS1/16S103J
R 481	(B,154,58)	RS1/16S104J
R 482	(B,154,62)	RS1/16S104J
R 483	(B,144,76)	RS1/16S104J
R 484	(A,165,71)	RS1/16S104J
R 485	(A,157,80)	RS1/16S472J
R 488	(A,165,73)	RS1/16S0R0J
R 493	(A,141,71)	RS1/16S102J
R 494	(A,141,83)	RS1/16S911J
R 495	(A,147,71)	RS1/16S272J
R 496	(A,148,83)	RS1/16S272J
R 497	(A,139,69)	RS1/16S153J
R 498	(A,139,83)	RS1/16S153J
R 499	(B,133,72)	RS1/16S103J
R 500	(B,133,79)	RS1/16S104J
R 502	(B,144,80)	RS1/16S204J
R 504	(B,171,86)	RS1/16S222J
R 506	(B,165,87)	RS1/16S104J
R 507	(B,163,92)	RS1/16S104J
R 508	(A,162,82)	RS1/16S272J
R 512	(A,159,83)	RS1/16S102J
R 514	(A,157,83)	RS1/16S153J
R 515	(A,157,96)	RS1/16S0R0J
R 516	(B,150,89)	RS1/16S103J
R 5005	(B,80,13)	RS1/16S0R0J
R 5010	(A,76,24)	RS1/16S473J
R 5011	(A,81,15)	RS1/16S473J
R 5012	(A,82,12)	RS1/16S102J
R 5013	(A,57,26)	RS1/16S102J
R 5016	(B,82,13)	RS1/16S0R0J
R 5020	(A,73,13)	RS1/16S0R0J
R 9002	(A,129,89)	RS1/16S473J
R 9005	(A,91,55)	RS1/16S0R0J
R 9006	(B,103,89)	RS1/16S474J
R 9007	(B,93,89)	RS1/16S474J
R 9008	(A,86,90)	RS1/16S221J
R 9009	(A,65,85)	RS1/16S473J
R 9010	(B,115,45)	RS1/16S512J
R 9011	(A,63,76)	RS1/16S102J
R 9012	(A,63,73)	RS1/16S0R0J

Mark No.	Description	Part No.
R 9013	(B,112,45)	RS1/16S471J
R 9014	(B,104,54)	RS1/16S471J
R 9015	(B,101,54)	RS1/16S471J
R 9016	(B,99,54)	RS1/16S471J
R 9017	(B,97,54)	RS1/16S471J
R 9018	(B,95,54)	RS1/16S471J
R 9019	(B,98,76)	RS1/16S471J
R 9020	(B,99,76)	RS1/16S471J
R 9021	(B,101,76)	RS1/16S471J
R 9022	(B,103,76)	RS1/16S471J
R 9023	(B,103,68)	RS1/16S472J
R 9026	(B,107,68)	RS1/16S0R0J
R 9028	(B,119,45)	RS1/16S104J
R 9030	(A,68,79)	RS1/16S470J
R 9031	(B,69,48)	RS1/16S104J
R 9032	(A,66,59)	RS1/16S104J
R 9033	(B,89,48)	RS1/16S104J
R 9036	(A,88,89)	RS1/16S221J
R 9037	(A,124,99)	RS1/16S104J
R 9039	(A,87,58)	RS1/16S104J
R 9041	(B,117,45)	RS1/16S104J
R 9042	(B,83,81)	RS1/16S103J
R 9043	(B,81,81)	RS1/16S103J
R 9044	(B,79,81)	RS1/16S103J
R 9045	(A,98,46)	RS1/16S471J
R 9046	(A,107,45)	RS1/16S471J
R 9047	(A,99,46)	RS1/16S103J
R 9048	(A,98,43)	RS1/16S103J
R 9060	(B,98,68)	RS1/16S473J
R 9062	(B,87,48)	RS1/16S471J
R 9064	(A,54,74)	RS1/16S103J
R 9065	(A,56,74)	RS1/16S103J
R 9066	(A,62,72)	RS1/16S103J
R 9067	(A,57,83)	RS1/16S103J
R 9081	(A,120,72)	RS1/16S221J
R 9082	(A,122,69)	RS1/16S274J

CAPACITORS

Mark No.	Description	Part No.
C 103	(B,295,56)	CCSRCH101J50
C 104	(B,296,51)	CCSRCH101J50
C 105	(B,293,45)	CCSRCH101J50
C 106	(B,296,40)	CCSRCH101J50
C 107	(B,293,86)	CCSRCH101J50
C 108	(B,296,81)	CCSRCH101J50
C 109	(B,293,72)	CCSRCH101J50
C 110	(B,296,68)	CCSRCH101J50
C 111	(B,296,111)	CCSRCH101J50
C 112	(B,297,107)	CCSRCH101J50
C 113	(B,293,100)	CCSRCH101J50
C 114	(B,296,96)	CCSRCH101J50
C 115	(B,262,98)	CKSRYB103K50
C 116	(B,267,97)	CKSRYB103K50
C 117	(A,287,109)	CCSRCH220J50
C 118	(B,285,109)	CCSRCH220J50
C 121	(A,280,34)	CEAT100M50
C 122	(A,280,25)	CEAT100M50
C 125	(A,280,62)	CEAT100M50
C 126	(A,280,53)	CEAT100M50
C 127	(A,280,47)	CEAT100M50
C 128	(A,280,40)	CEAT100M50
C 131	(A,280,87)	CEAT100M50
C 132	(A,280,80)	CEAT100M50
C 133	(A,280,74)	CEAT100M50
C 134	(A,280,67)	CEAT100M50
C 135	(A,280,114)	CEAT100M50
C 136	(A,280,106)	CEAT100M50
C 137	(A,280,101)	CEAT100M50
C 138	(A,280,93)	CEAT100M50
C 141	(A,256,82)	CKSRYB104K50
C 145	(B,256,81)	CCSRCH101J50
C 146	(B,258,81)	CCSRCH101J50
C 147	(B,253,81)	CKSRYB103K50
C 148	(B,238,67)	CKSRYB223K25
C 149	(B,235,67)	CKSRYB473K25
C 150	(B,231,67)	CKSQYB154K16
C 151	(B,49,51)	CKSRYB103K50
C 152	(B,230,62)	CKSRYB223K25
C 153	(B,234,62)	CKSRYB473K25
C 154	(B,232,62)	CKSQYB154K16
C 155	(A,226,62)	CEAT101M16
C 156	(A,229,56)	CEAT101M16
C 157	(A,236,56)	CEAT101M16
C 158	(A,232,50)	CEAT101M16
C 159	(A,241,50)	CEAT101M16
C 160	(A,234,44)	CEAT101M16
C 161	(A,241,44)	CEAT101M16
C 162	(A,248,44)	CEAT101M16
C 165	(A,240,86)	CEAT1R0M50
C 166	(A,248,86)	CEAT1R0M50
C 170	(A,236,116)	CEAT100M50
C 171	(A,242,116)	CEAT100M50
C 179	(B,294,76)	CKSRYB103K50
C 180	(A,277,16)	CKSRYB103K50
C 181	(A,283,30)	CCSRCH101J50
C 182	(B,285,28)	CCSRCH101J50
C 185	(A,286,44)	CCSRCH101J50
C 186	(B,288,42)	CCSRCH101J50
C 187	(A,286,90)	CCSRCH101J50
C 188	(A,284,83)	CCSRCH101J50
C 189	(A,284,71)	CCSRCH101J50
C 190	(B,287,70)	CCSRCH101J50
C 191	(B,283,97)	CCSRCH101J50
C 192	(B,285,96)	CCSRCH101J50
C 197	(B,292,29)	CCSRCH101J50
C 198	(B,294,25)	CCSRCH101J50
C 199	(A,281,50)	CKSRYB103K50
C 201	(A,183,85)	CEAT2R2M50
C 202	(A,184,92)	CEAT2R2M50
C 203	(A,191,85)	CCSRCH471J50
C 204	(A,191,90)	CCSRCH471J50
C 205	(A,193,85)	CCSRCH331J50
C 206	(A,194,90)	CCSRCH331J50
C 207	(B,193,85)	CCSRCH331J50
C 208	(B,193,91)	CCSRCH331J50
C 213	(A,223,84)	CEAT100M50
C 214	(A,223,90)	CEAT100M50
C 215	(B,233,84)	CKSRYB103K50
C 216	(B,231,89)	CKSRYB103K50
C 217	(A,202,85)	CKSRYB103K50
C 218	(A,202,90)	CKSRYB103K50

Mark No.	Description	Part No.
C 219 (A,221,87)		CKSRYB104K16
C 220 (A,210,93)		CKSRYB104K16
C 221 (A,230,75)		CKSRYB103K50
C 222 (A,243,70)		CKSRYB103K50
C 241 (A,183,70)		CEAT2R2M50
C 242 (A,183,77)		CEAT2R2M50
C 243 (A,192,69)		CCSRCH101J50
C 244 (A,192,74)		CCSRCH101J50
C 245 (A,194,69)		CCSRCH331J50
C 246 (A,194,74)		CCSRCH331J50
C 247 (B,193,69)		CCSRCH331J50
C 248 (B,193,75)		CCSRCH331J50
C 249 (A,205,69)		CEAT100M50
C 250 (A,205,75)		CEAT100M50
C 251 (A,204,65)		CKSRYB103K50
C 252 (A,211,78)		CKSRYB103K50
C 253 (B,43,89)		CKSRYB103K50
C 254 (A,58,108)	ELECT. CAPACITOR	CEAT101M25
C 255 (A,51,108)	ELECT. CAPACITOR	CEANP470M25
C 256 (A,81,105)		CKSRYB103K50
C 257 (B,216,69)		CKSRYB472K50
C 258 (B,217,75)		CKSRYB472K50
C 261 (A,183,54)		CEAT2R2M50
C 262 (A,183,62)		CEAT2R2M50
C 263 (A,192,53)		CCSRCH101J50
C 264 (A,191,59)		CKSRYB223K25
C 265 (A,194,53)		CCSRCH331J50
C 266 (A,194,59)		CKSRYB103K50
C 267 (B,193,53)		CCSRCH331J50
C 268 (B,193,60)		CKSRYB562K50
C 269 (A,205,54)		CEAT100M50
C 270 (A,205,60)		CEAT100M50
C 271 (A,203,51)		CKSRYB103K50
C 272 (A,210,64)		CKSRYB103K50
C 277 (B,216,53)		CKSRYB472K50
C 278 (B,215,61)		CKSRYB472K50
C 282 (A,184,39)		CEAT2R2M50
C 284 (A,190,38)		CCSRCH101J50
C 286 (A,194,38)		CCSRCH331J50
C 288 (B,193,38)		CCSRCH331J50
C 290 (A,206,38)		CEAT100M50
C 291 (A,216,39)		CKSRYB103K50
C 292 (A,216,48)		CKSRYB103K50
C 298 (B,216,39)		CKSRYB472K50
C 321 (A,153,38)		CEAT100M50
C 322 (A,153,45)		CEAT100M50
C 323 (A,145,35)		CCSRCH101J50
C 324 (A,140,47)		CCSRCH101J50
C 325 (A,136,39)	ELECT. CAPACITOR	CEAT220M50
C 326 (A,136,46)	ELECT. CAPACITOR	CEAT220M50
C 327 (A,132,42)		CKSRYB103K50
C 328 (A,132,38)		CKSRYB103K50
C 333 (A,255,93)		CEAT101M10
C 334 (A,268,81)		CEAT101M10
C 341 (A,161,56)		CEAT100M50
C 342 (A,161,63)		CEAT100M50
C 343 (A,149,51)		CCSRCH101J50
C 344 (A,150,66)		CCSRCH101J50
C 345 (A,145,56)	ELECT. CAPACITOR	CEAT220M50
C 346 (A,145,63)	ELECT. CAPACITOR	CEAT220M50
C 347 (A,140,64)		CKSRYB103K50
C 348 (A,141,58)		CKSRYB103K50
C 361 (A,161,70)		CEAT100M50
C 362 (A,169,70)		CEAT100M50
C 363 (A,139,68)		CCSRCH101J50
C 364 (A,139,84)		CKSRYB472K50
C 365 (A,136,73)	ELECT. CAPACITOR	CEAT220M50
C 366 (A,136,80)	ELECT. CAPACITOR	CEANP4R7M50
C 367 (A,135,88)		CKSRYB103K50
C 368 (A,147,75)		CKSRYB103K50
C 370 (A,161,74)		CEAT4R7M50
C 384 (A,167,87)		CEAT100M50
C 386 (A,157,84)		CCSRCH101J50
C 387 (A,157,95)		CCSRCH101J50
C 388 (A,153,90)	ELECT. CAPACITOR	CEAT220M50
C 390 (A,164,88)		CKSRYB103K50
C 392 (B,91,95)		CKSRYB102K50
C 393 (A,156,92)		CKSRYB103K50
C 1031(A,286,57)		CCSRCH220J50
C 1041(B,287,55)		CCSRCH220J50
C 5001(B,233,10)		CKSRYB102K50
C 5002(B,235,10)		CKSRYB103K50
C 5003(B,237,10)		CKSRYB105K10
C 5011(A,77,16)		CEJQ100M50
C 5013(A,54,17)		CCSRCH270J50
C 5014(A,54,18)		CCSRCH270J50
C 5015(A,59,20)		CEJQ470M16
C 5016(A,54,15)		CKSRYB103K50
C 5017(A,73,14)		CCSRCH561J50
C 5020(A,69,13)		CKSRYB472K50
C 5025(A,166,12)		CKSRYB102K50
C 5026(A,169,13)		CKSRYB102K50
C 5027(A,177,12)		CKSRYB102K50
C 5028(A,179,13)		CCSRCH220J50
C 9004(A,121,94)		CKSRYB103K50
C 9005(A,116,99)		CEJQ2R2M50
C 9006(A,122,88)		CKSRYB105K10
C 9007(A,79,92)	ELECT. CAPACITOR	CEAT331M6R3
C 9008(B,77,90)		CKSRYB103K50
C 9011(B,95,89)		CKSRYB473K16
C 9014(B,87,88)		CKSRYB473K16
C 9015(A,100,95)		CKSRYB102K50
C 9018(B,72,72)		CKSRYB104K50
C 9081(A,120,69)		CKSRYB103K50

B DSP ASSY

MISCELLANEOUS

IC 501	(B,118,52)	IC	TC74HCU04AF
IC 601	(A,107,50)	DA I/F TRANSCEIVER	AK4114VQ
IC 701	(A,75,43)	CODEC IC	AK4628AVQ
IC 801	(A,42,53)	DSP IC	DSPC56371AF180
IC 802	(A,44,38)	IC	TC7WU04FU
IC 871	(B,63,53)	IC	TC7WH125FU
⚠ IC 901	(B,120,30)	IC	NJM2391DL1-33
⚠ IC 902	(B,94,36)	REGULATOR IC	LM1117DT-ADJ
IC 952	(B,19,48)	OCTAL BUS BUFFER IC	TC74VHCT244AFTS1
D 701	(A,79,33)	DIODE	DAP202K
D 702	(B,80,32)	DIODE	DAN202K

Mark	No.		Description	Part No.
D	901	(B,116,38)	DIODE	UDZS5R6(B)
D	902	(B,102,33)	DIODE	UDZS5R6(B)
L	501	(B,127,29)	CHIP SOLID INDUCTOR	QTL1013
L	502	(B,130,40)	CHIP SOLID INDUCTOR	QTL1013
L	503	(A,122,62)	CHIP SOLID INDUCTOR	QTL1013
L	601	(B,103,62)	CHIP SOLID INDUCTOR	QTL1013
L	602	(A,98,49)	CHIP SOLID INDUCTOR	QTL1013
L	605	(A,117,43)	CHIP SOLID INDUCTOR	QTL1013
L	701	(B,66,43)	CHIP SOLID INDUCTOR	QTL1013
L	702	(A,94,38)	CHIP SOLID INDUCTOR	QTL1013
L	801	(A,47,38)	CHIP SOLID INDUCTOR	QTL1013
L	802	(A,50,42)	CHIP SOLID INDUCTOR	ATL7002
L	803	(A,58,52)	CHIP SOLID INDUCTOR	ATL7002
L	804	(B,35,48)	CHIP SOLID INDUCTOR	QTL1013
L	871	(B,68,56)	CHIP SOLID INDUCTOR	QTL1013
L	901	(B,105,32)	CHIP SOLID INDUCTOR	ATL7002
L	902	(B,100,33)	CHIP SOLID INDUCTOR	ATL7002
L	952	(B,25,56)	CHIP SOLID INDUCTOR	QTL1013
JA	501	(A,140,35)	JACK	AKB7131
X	601	(A,106,39)	CRYSTAL RESONATOR (12.288MHz)	ASS7046
X	801	(A,36,36)	CRYSTAL RESONATOR (20 MHz)	VSS1171
CN	601	(A,100,63)	10P CONNECTOR	VKN1414
CN	701	(A,81,28)	19P SOCKET	XKP3080
CN	902	(A,114,28)	13P SOCKET	XKP3077
CN	952	(A,43,28)	15P SOCKET	XKP3078

RESISTORS

Mark	No.		Description	Part No.
R	501	(B,129,29)		RS1/16S750J
R	502	(B,127,42)		RS1/16S750J
R	503	(B,123,42)		RS1/16S473J
R	504	(A,117,62)		RS1/16S473J
R	505	(A,115,62)		RS1/16S0R0J
R	506	(B,123,38)		RS1/16S222J
R	507	(A,118,62)		RS1/16S222J
R	508	(B,121,42)		RS1/16S101J
R	509	(B,117,62)		RS1/16S101J
R	512	(B,121,62)		RS1/16S101J
R	513	(B,123,62)		RS1/16S101J
R	551	(B,63,60)		RS1/16S104J
R	552	(B,65,60)		RS1/16S104J
R	553	(B,67,60)		RS1/16S104J
R	554	(B,69,60)		RS1/16S104J
R	555	(B,71,60)		RS1/16S104J
R	556	(B,75,60)		RS1/16S104J
R	557	(B,77,60)		RS1/16S104J
R	558	(B,79,60)		RS1/16S104J
R	559	(B,81,62)		RS1/16S104J
R	560	(B,83,62)		RS1/16S104J
R	561	(B,85,62)		RS1/16S104J
R	572	(A,90,54)		RS1/16S0R0J
R	573	(B,90,54)		RS1/16S0R0J
R	574	(B,76,56)		RS1/16S0R0J
R	575	(B,74,56)		RS1/16S0R0J
R	577	(B,93,61)		RS1/16S104J
R	579	(A,96,58)		RS1/16S0R0J
R	601	(A,110,57)		RS1/16S0R0J
R	602	(A,109,57)		RS1/16S0R0J
R	603	(A,107,57)		RS1/16S0R0J
R	604	(B,111,63)		RS1/16S104J
R	605	(B,109,63)		RS1/16S104J
R	606	(B,107,63)		RS1/16S104J
R	607	(A,106,57)		RS1/16S0R0J
R	609	(A,99,57)		RS1/16S0R0J
R	610	(B,101,62)		RS1/16S0R0J
R	612	(A,96,47)		RS1/16S0R0J
R	613	(A,99,52)		RS1/16S101J
R	614	(A,97,58)		RS1/16S101J
R	615	(A,99,47)		RS1/16S470J
R	616	(A,99,46)		RS1/16S101J
R	617	(A,99,44)		RS1/16S101J
R	618	(A,99,43)		RS1/16S101J
R	620	(A,99,41)		RS1/16S470J
R	622	(A,111,42)		RS1/16S0R0J
R	623	(A,114,42)		RS1/16S0R0J
R	624	(A,114,43)		RS1/16S101J
R	625	(A,114,44)		RS1/16S101J
R	626	(A,114,46)		RS1/16S101J
R	627	(A,113,40)		RS1/16S103J
R	628	(A,115,51)		RS1/16S1802F
R	629	(A,115,53)		RS1/16S0R0J
R	630	(A,115,57)		RS1/16S0R0J
R	701	(B,76,49)		RS1/16S470J
R	702	(B,72,49)		RS1/16S101J
R	703	(B,62,40)		RS1/16S0R0J
R	704	(B,68,41)		RS1/16S4R7J
R	705	(A,58,32)		RS1/16S101J
R	706	(A,61,32)		RS1/16S101J
R	707	(A,63,32)		RS1/16S101J
R	708	(A,66,32)		RS1/16S101J
R	709	(A,68,32)		RS1/16S101J
R	710	(A,71,32)		RS1/16S101J
R	711	(A,73,32)		RS1/16S101J
R	712	(A,76,32)		RS1/16S101J
R	713	(A,84,44)		RS1/16S470J
R	714	(A,84,49)		RS1/16S101J
R	715	(A,85,50)		RS1/16S101J
R	716	(A,82,51)		RS1/16S101J
R	801	(A,54,63)		RS1/16S470J
R	802	(A,45,64)		RAB4C101J
R	803	(B,50,62)		RS1/16S103J
R	804	(B,48,62)		RS1/16S103J
R	805	(B,46,62)		RS1/16S103J
R	806	(B,44,62)		RS1/16S103J
R	807	(B,42,56)		RS1/16S473J
R	808	(B,35,56)		RS1/16S472J
R	809	(B,40,56)		RS1/16S472J
R	810	(A,31,52)		RS1/16S473J
R	811	(B,30,51)		RS1/16S472J
R	812	(B,32,51)		RS1/16S101J
R	813	(A,27,49)		RS1/16S103J
R	815	(A,38,40)		RS1/16S105J
R	816	(A,35,40)		RS1/16S471J
R	817	(A,44,42)		RS1/16S101J
R	819	(B,38,49)		RS1/16S101J
R	820	(B,35,43)		RS1/16S0R0J
R	822	(B,42,44)		RS1/16S103J
R	823	(B,43,50)		RS1/16S473J
R	827	(B,51,51)		RS1/16S470J

Mark No.	Description	Part No.
R 832 (A,53,54)		RS1/16S470J
R 833 (A,57,57)		RS1/16S470J
R 834 (A,57,58)		RS1/16S470J
R 835 (A,57,60)		RS1/16S470J
R 836 (A,57,61)		RS1/16S470J
R 840 (A,23,49)		RS1/16S101J
R 841 (A,63,46)		RS1/16S473J
R 852 (B,53,45)		RS1/16S222J
R 871 (B,58,48)		RS1/16S470J
R 872 (B,60,48)		RS1/16S470J
R 873 (B,60,56)		RS1/16S470J
R 874 (B,58,56)		RS1/16S470J
R 904 (B,113,31)		RS1/16S104J
R 905 (B,111,33)		RS1/16S104J
R 906 (B,107,31)		RS1/16S104J
R 908 (A,121,27)		RS1/16S0R0J
R 913 (A,85,30)		RS1/16S0R0J
R 915 (B,89,37)		RS1/16S102J
R 951 (A,26,49)		RS1/16S101J
R 952 (A,25,49)		RS1/16S101J
R 953 (A,22,49)		RS1/16S101J
R 954 (B,22,39)		RS1/16S331J
R 955 (B,20,39)		RS1/16S331J
R 956 (B,18,39)		RS1/16S331J
R 957 (B,16,39)		RS1/16S331J
R 958 (A,17,44)		RS1/16S331J
R 959 (A,18,44)		RS1/16S331J
R 960 (A,19,45)		RS1/16S331J
R 961 (A,21,45)		RS1/16S331J
R 962 (A,20,31)	RESISTOR ARRAY	RAB4C104J
R 967 (A,29,32)		RS1/16S104J
R 968 (A,31,32)		RS1/16S104J
R 969 (A,33,32)		RS1/16S104J
R 970 (A,37,32)	RESISTOR ARRAY	RAB4C104J
R 974 (A,42,32)		RS1/16S0R0J
R 975 (A,15,52)		RS1/16S101J
R 976 (A,16,52)		RS1/16S101J
R 983 (B,15,32)		RS1/16S0R0J

CAPACITORS

Mark No.	Description	Part No.
C 503 (B,125,29)		CKSRYB103K50
C 504 (B,125,42)		CKSRYB103K50
C 505 (B,125,38)		CCSRCH470J50
C 506 (A,121,62)		CCSRCH470J50
C 511 (B,125,52)		CCSRCH471J50
C 512 (B,127,52)		CKSRYB105K6R3
C 513 (A,121,56)		CEVW101M16
C 605 (A,99,55)		CCSRCH471J50
C 606 (A,100,55)		CKSRYB104K16
C 607 (A,94,53)		CEVW470M6R3
C 608 (A,99,49)		CCSRCH471J50
C 609 (A,100,49)		CKSRYB104K16
C 612 (A,103,42)		CCSRCH120J50
C 613 (A,107,42)		CCSRCH120J50
C 614 (B,111,41)		CKSRYB104K16
C 617 (B,117,42)		CKSRYB102K50
C 618 (A,121,45)		CEVW470M6R3
C 619 (A,116,48)		CKSRYB104K16
C 620 (A,114,48)		CCSRCH471J50
C 621 (A,114,51)		CKSRYB474K10
C 701 (A,65,47)		CKSRYB103K50
C 702 (A,66,47)		CCSRCH471J50
C 703 (A,62,38)		CEVW101M16
C 704 (A,65,44)		CKSRYB104K16
C 705 (A,66,44)		CCSRCH101J50
C 706 (B,64,40)		CKSRYB104K16
C 707 (B,58,33)		CCSRCH471J50
C 708 (B,61,33)		CCSRCH471J50
C 709 (B,63,33)		CCSRCH471J50
C 710 (B,66,33)		CCSRCH471J50
C 711 (B,68,33)		CCSRCH471J50
C 712 (B,71,33)		CCSRCH471J50
C 713 (B,73,33)		CCSRCH471J50
C 714 (B,76,33)		CCSRCH471J50
C 715 (A,88,42)		CEVW101M16
C 716 (A,84,41)		CKSRYB104K16
C 717 (A,83,41)		CCSRCH471J50
C 718 (A,85,33)		CEVW470M6R3
C 720 (A,83,38)		CKSRYB104K16
C 801 (A,49,63)		CCSRCH471J50
C 802 (A,49,64)		CKSRYB104K16
C 803 (A,42,63)		CCSRCH471J50
C 804 (A,42,64)		CKSRYB104K16
C 805 (A,37,63)		CCSRCH471J50
C 806 (A,37,64)		CKSRYB104K16
C 807 (A,32,58)		CCSRCH471J50
C 808 (A,31,58)		CKSRYB104K16
C 809 (A,32,55)		CCSRCH471J50
C 810 (A,31,55)		CKSRYB104K16
C 814 (A,32,47)		CCSRCH471J50
C 815 (A,31,47)		CKSRYB104K16
C 816 (A,32,40)		CCSRCH8R0D50
C 817 (A,41,40)		CCSRCH8R0D50
C 818 (A,46,34)		CCSRCH471J50
C 819 (A,46,33)		CKSRYB104K16
C 820 (A,46,31)		CKSRYB103K50
C 821 (A,35,43)		CCSRCH471J50
C 822 (A,35,42)		CKSRYB104K16
C 823 (A,37,43)		CCSRCH471J50
C 824 (A,37,42)		CKSRYB104K16
C 825 (B,38,52)		CKSRYB103K50
C 826 (A,44,44)		CCSRCH471J50
C 827 (A,41,44)		CKSRYB104K16
C 828 (A,53,48)		CCSRCH471J50
C 829 (A,54,48)		CKSRYB104K16
C 830 (A,53,52)		CCSRCH471J50
C 831 (A,54,52)		CKSRYB104K16
C 832 (A,53,57)		CCSRCH471J50
C 833 (A,54,57)		CKSRYB104K16
C 834 (A,52,28)		CEVW101M16
C 835 (A,63,52)		CEVW101M16
C 871 (B,66,52)		CCSRCH471J50
C 872 (B,68,52)		CKSRYB104K16
C 907 (B,114,38)		CKSRYB104K16
C 908 (A,121,37)		CEVW101M16
C 909 (A,96,34)		CEVW101M16
C 916 (B,67,47)		CCSRCH471J50
C 917 (B,69,47)		CKSRYB103K50
C 918 (B,79,49)		CKSRYB104K16
C 919 (B,80,49)		CCSRCH471J50

Mark	No.	Description	Part No.
	C 954	(B,26,52)	CCSRCH471J50
	C 955	(B,28,52)	CKSRYB104K16
	C 956	(A,24,54)	CEVW100M16

C POWER PACK ASSY (XWZ4082)

MISCELLANEOUS

Mark	No.	Description	Part No.
⚠	IC 601	(A,265,14) POWER PACK 2CH	STK412-230C
⚠	IC 602	(A,199,14) POWER PACK 2CH	STK412-230C
⚠	IC 603	(A,132,14) POWER PACK 3CH	STK413-230C
⚠	IC 610	(A,59,28) PROTECTOR(1A)	AEK7009
⚠	IC 803	(A,238,87) IC	TA7805S
⚠	IC 804	(A,282,111) REGULATOR IC	TA7809S
⚠	IC 805	(B,271,135) IC	BA178M05FP
	Q 501	(B,85,42) CHIP TRANSISTOR	2SD2704K
	Q 505	(A,111,47) TRANSISTOR	2SC2240
	Q 601	(B,93,47) CHIP TRANSISTOR	2SD2704K
	Q 602	(B,227,45) CHIP TRANSISTOR	2SD2704K
	Q 605	(A,118,40) TRANSISTOR	2SC2240
	Q 606	(A,252,40) TRANSISTOR	2SC2240
	Q 631	(B,153,42) CHIP TRANSISTOR	2SD2704K
	Q 633	(A,178,47) TRANSISTOR	2SC2240
	Q 651	(B,161,45) CHIP TRANSISTOR	2SD2704K
	Q 652	(B,219,42) CHIP TRANSISTOR	2SD2704K
	Q 655	(A,186,40) TRANSISTOR	2SC2240
	Q 656	(A,244,47) TRANSISTOR	2SC2240
	Q 681	(B,72,63) CHIP TRANSISTOR	2SD2704K
	Q 683	(A,59,65) TRANSISTOR	2SC2240
	Q 696	(B,284,22) TRANSISTOR	2SC4081
	Q 697	(B,282,26) TRANSISTOR	2SC4081
	Q 698	(B,246,67) TRANSISTOR	RT1N241M
⚠	Q 701	(A,110,75) TRANSISTOR	2SC5511
⚠	Q 702	(A,96,86) TRANSISTOR	2SA2005
	Q 703	(A,155,76) TRANSISTOR	2SA1145
	Q 704	(A,166,79) TRANSISTOR	2SC2240
	Q 705	(B,245,74) CHIP TRANSISTOR	RN4903
	Q 707	(B,241,74) CHIP TRANSISTOR	RN4903
	Q 721	(A,142,71) TRANSISTOR	2SA1145
	Q 722	(A,161,74) TRANSISTOR	2SC2240
	Q 801	(B,277,141) DIGITAL TR(SC-70)	RT1P241M
	Q 802	(B,274,145) TRANSISTOR	RT1N241M
	Q 803	(B,265,140) DIGITAL TR(SC-70)	RT1P241M
	Q 804	(B,268,145) TRANSISTOR	RT1N241M
	Q 805	(B,277,146) DIGITAL TR(SC-70)	RT1P241M
	Q 806	(B,271,145) TRANSISTOR	RT1N241M
	Q 807	(B,276,53) CHIP TR(2*PNP)	RN2903
	Q 808	(B,283,56) CHIP TRANSISTOR	RN1903
	Q 809	(A,266,101) TRANSISTOR	2SD1858X
	D 601	(A,125,57) DIODE	1SS133
	D 602	(A,267,17) ZENER DIODE	MTZJ15A
	D 603	(A,119,57) DIODE	1SS133
	D 604	(A,261,21) ZENER DIODE	MTZJ15A
	D 606	(A,259,57) DIODE	1SS133
	D 608	(A,253,52) DIODE	1SS133
	D 631	(A,192,61) DIODE	1SS133
	D 632	(A,176,52) DIODE	1SS133
	D 647	(A,200,17) ZENER DIODE	MTZJ15A
	D 648	(A,196,21) ZENER DIODE	MTZJ15A
	D 651	(A,192,57) DIODE	1SS133
	D 652	(A,262,57) DIODE	1SS133
	D 653	(A,186,52) DIODE	1SS133
	D 654	(A,242,52) DIODE	1SS133
	D 681	(A,132,17) ZENER DIODE	MTZJ15A
	D 682	(A,129,22) ZENER DIODE	MTZJ15A
	D 683	(A,135,58) DIODE	1SS133
	D 684	(A,65,72) DIODE	1SS133
⚠	D 701	(A,9,88) DIODE	D5SBA20(B)
⚠	D 702	(A,9,126) DIODE	D5SBA20(B)
	D 703	(B,252,76) DIODE	1SS355
	D 711	(A,196,103) ZENER DIODE	MTZJ22D
	D 712	(A,192,103) DIODE	MTZJ6R8(B)
	D 713	(A,120,78) DIODE	1SS133
	D 752	(B,170,135) DIODE	1SS355
	D 754	(B,141,132) DIODE	1SS355
	D 758	(B,73,136) DIODE	1SS355
	D 777	(A,127,57) DIODE	1SS133
	D 778	(A,108,57) DIODE	1SS133
⚠	D 801	(B,221,113) BRIDGE DIODE	S1WB(A)60SD
	D 805	(A,276,131) DIODE	1SS133
	D 806	(A,287,62) DIODE	MTZJ6R2(B)
	D 807	(A,284,67) DIODE	1SS133
	D 827	(A,262,133) DIODE	MTZJ6R2(B)
	D 828	(A,239,98) DIODE	MTZJ6R2(B)
⚠	D 829	(A,239,128) DIODE	D3SBA20(B)
	L 501	(A,97,118) COIL	ATH1004
	L 751	(A,160,108) COIL	ATH1004
	L 752	(A,173,108) COIL	ATH1004
	L 753	(A,120,107) COIL	ATH1004
	L 754	(A,78,118) COIL	ATH1004
	L 761	(A,130,108) COIL	ATH1004
	L 762	(A,142,108) COIL	ATH1004
	J 43	JUMPER WIRE 11P	D20PYY1120E
	KN601	(A,65,23) WRAPPING TERMINAL	VNF1084
	RY501	(A,75,132) RELAY	XSR3012
	RY751	(A,173,130) RELAY	XSR3012
	RY752	(A,141,126) RELAY	XSR3012
	RY753	(A,117,120) RELAY	XSR3012
	CN701	(A,212,134) 11PJUMPER CONNECTOR	52147-1110
	CN702	(A,201,106) 6P JUMPER CONNECTOR	52147-0610
	CN705	(A,295,40) 21P PLUG	XKM3011
	CN751	SP TERMINAL 8-P(V0)	XKE3039
	CN752	SP TERMINAL 6-P(V0)	XKE3040
	CN803	(A,231,129) 6P PLUG	KM200TA6
	CN805	(A,317,153) 13P PLUG	XKP3066
	CN806	19P PLUG	XKP3069
	CN807	(A,317,82) 15P PLUG	XKP3067
	CN815	(A,295,79) 19P PLUG	XKM3005
	CN816	(A,295,126) 21P PLUG	XKM3011
	CN817	(A,308,38) CONNECTOR	CKS3382
	810	(A,277,90) 11P CABLE HOLDER	51048-1100

RESISTORS

Mark	No.	Description	Part No.
	R 601	(A,96,56)	RD1/4PU222J
	R 602	(A,230,52)	RD1/4PU222J
	R 603	(B,93,52)	RS1/16S103J
	R 604	(B,226,49)	RS1/16S103J
	R 609	(A,91,35)	RD1/4PU273J
	R 610	(A,225,35)	RD1/4PU273J
	R 611	(A,90,28)	RD1/4PU821J
	R 612	(A,223,28)	RD1/4PU821J

Mark	No.	Description	Part No.
	R 613	(A,114,21)	RD1/4PU273J
	R 614	(A,247,21)	RD1/4PU273J
	R 615	(A,123,36)	RD1/4PU331J
	R 616	(A,270,29)	RD1/4PU562J
⚠	R 617	(A,114,31) RESISTOR (0.22, 5W)	ACN7094
	R 618	(A,266,28)	RD1/4PU562J
	R 619	(A,122,52)	RD1/4PU182J
	R 620	(A,257,36)	RD1/4PU331J
	R 621	(A,124,49)	RD1/4PU821J
⚠	R 622	(A,248,31) RESISTOR (0.22, 5W)	ACN7094
	R 623	(A,116,48)	RD1/4PU223J
	R 624	(A,257,52)	RD1/4PU182J
	R 626	(A,258,49)	RD1/4PU821J
	R 628	(A,250,48)	RD1/4PU223J
	R 630	(A,230,21)	RD1/4PU333J
	R 631	(A,148,46)	RD1/4PU222J
	R 632	(B,152,47)	RS1/16S103J
	R 635	(A,153,29)	RD1/4PU273J
	R 636	(A,149,25)	RD1/4PU821J
	R 637	(A,172,21)	RD1/4PU273J
	R 638	(A,174,36)	RD1/4PU331J
⚠	R 639	(A,173,31) RESISTOR (0.22, 5W)	ACN7094
	R 640	(A,179,57)	RD1/4PU182J
	R 641	(A,174,52)	RD1/4PU821J
	R 642	(A,169,39)	RD1/4PU223J
	R 647	(A,202,27)	RD1/4PU562J
	R 648	(A,199,27)	RD1/4PU562J
	R 651	(A,164,56)	RD1/4PU222J
	R 652	(A,215,41)	RD1/4PU222J
	R 653	(B,160,50)	RS1/16S103J
	R 654	(B,219,46)	RS1/16S103J
	R 659	(A,159,35)	RD1/4PU273J
	R 660	(A,220,29)	RD1/4PU273J
	R 661	(A,156,28)	RD1/4PU821J
	R 662	(A,216,20)	RD1/4PU821J
	R 663	(A,181,21)	RD1/4PU273J
	R 664	(A,238,21)	RD1/4PU273J
	R 665	(A,190,36)	RD1/4PU331J
	R 666	(A,240,35)	RD1/4PU331J
⚠	R 667	(A,182,31) RESISTOR (0.22, 5W)	ACN7094
⚠	R 668	(A,239,31) RESISTOR (0.22, 5W)	ACN7094
	R 669	(A,189,52)	RD1/4PU182J
	R 670	(A,245,52)	RD1/4PU182J
	R 671	(A,192,49)	RD1/4PU821J
	R 672	(A,240,57)	RD1/4PU821J
	R 673	(A,184,48)	RD1/4PU223J
	R 674	(A,236,38)	RD1/4PU223J
	R 681	(A,66,63)	RD1/4PU222J
	R 682	(B,76,63)	RS1/16S103J
	R 685	(A,77,41)	RD1/4PU273J
	R 686	(A,78,35)	RD1/4PU821J
	R 687	(A,83,10)	RD1/4PU273J
	R 688	(A,135,27)	RD1/4PU562J
	R 689	(A,133,27)	RD1/4PU562J
	R 690	(A,60,52)	RD1/4PU331J
⚠	R 691	(A,55,55) RESISTOR (0.22, 5W)	ACN7094
	R 692	(A,70,72)	RD1/4PU182J
	R 693	(A,67,77)	RD1/4PU821J
	R 694	(A,62,72)	RD1/4PU223J
	R 695	(A,97,22)	RD1/4PU333J

Mark	No.	Description	Part No.
	R 696	(B,281,38)	RS1/16S103J
	R 697	(B,255,68)	RS1/16S103J
	R 698	(B,243,67)	RS1/16S333J
	R 699	(A,165,21)	RD1/4PU333J
	R 701	(A,117,78)	RD1/4PU562J
	R 702	(A,101,84)	RD1/4PU562J
	R 703	(A,151,72)	RD1/4PU203J
	R 704	(A,147,76)	RD1/4PU203J
	R 705	(A,283,85)	RD1/4PU473J
	R 706	(A,283,75)	RD1/4PU473J
	R 707	(A,135,77)	RD1/4PU184J
	R 708	(A,147,81)	RD1/4PU184J
⚠	R 709	(A,104,72) METAL OXIDE RESISTOR	RS1LMF272J
⚠	R 710	(A,89,93) METAL OXIDE RESISTOR	RS1LMF272J
⚠	R 711	(A,181,86) METAL OXIDE RESISTOR	RS2LMF242J
	R 713	(A,117,81)	RD1/4PU102J
	R 714	(B,252,68)	RS1/16S102J
	R 715	(B,250,75)	RS1/16S103J
	R 716	(B,247,75)	RS1/16S103J
	R 721	(A,125,77)	RD1/4PU682J
	R 722	(A,123,77)	RD1/4PU682J
	R 723	(A,276,78)	RD1/4PU473J
	R 724	(A,279,83)	RD1/4PU473J
	R 725	(A,276,74)	RD1/4PU103J
	R 726	(B,291,59)	RS1/16S103J
	R 727	(B,287,59)	RS1/16S103J
⚠	R 751	(A,158,119) CARBON FILM RESISTOR	RD1/4PUF101J
⚠	R 752	(A,185,120) CARBON FILM RESISTOR	RD1/4PUF101J
⚠	R 753	(A,156,126) METAL OXIDE RESISTOR	RS1LMF4R7J
⚠	R 754	(A,181,126) METAL OXIDE RESISTOR	RS1LMF4R7J
⚠	R 755	(A,103,117) CARBON FILM RESISTOR	RD1/4PUF101J
⚠	R 756	(A,101,120) METAL OXIDE RESISTOR	RS1LMF4R7J
⚠	R 761	(A,125,117) CARBON FILM RESISTOR	RD1/4PUF101J
⚠	R 762	(A,155,119) CARBON FILM RESISTOR	RD1/4PUF101J
⚠	R 763	(A,124,132) METAL OXIDE RESISTOR	RS1LMF4R7J
⚠	R 764	(A,149,139) METAL OXIDE RESISTOR	RS1LMF4R7J
⚠	R 771	(A,63,144) METAL OXIDE RESISTOR	RS1LMF4R7J
⚠	R 772	(A,63,127) CARBON FILM RESISTOR	RD1/4PUF101J
	R 777	(A,81,41)	RD1/4PU222J
	R 778	(B,84,48)	RS1/16S103J
	R 781	(A,87,30)	RD1/4PU273J
	R 782	(A,84,22)	RD1/4PU821J
	R 783	(A,104,21)	RD1/4PU273J
	R 784	(A,111,35)	RD1/4PU331J
⚠	R 785	(A,105,31) RESISTOR (0.22, 5W)	ACN7094
	R 786	(A,111,57)	RD1/4PU182J
	R 787	(A,106,57)	RD1/4PU821J
	R 788	(A,102,38)	RD1/4PU223J
	R 789	(A,82,127) CARBON FILM RESISTOR	RD1/4PUF101J
⚠	R 790	(A,80,145) METAL OXIDE RESISTOR	RS1LMF4R7J
	R 806	(B,283,48)	RS1/16S103J
	R 807	(B,278,48)	RS1/16S103J
	R 808	(B,283,52)	RS1/16S102J
	R 809	(B,261,105)	RS1/16S122J
	R 810	(B,264,105)	RS1/16S271J
	R 885	(B,310,57)	RS1/16S221J
	R 886	(B,310,61)	RS1/16S221J
	R 887	(B,310,65)	RS1/16S221J
	R 888	(B,315,22)	RS1/16S221J
	R 1101	(B,273,68)	RS1/16S0R0J

Mark	No.	Description	Part No.
R	1102(B,274,61)		RS1/16S0R0J
R	1103(B,70,136)		RS1/16S0R0J
R	1104(B,138,132)		RS1/16S0R0J
R	1105(B,168,135)		RS1/16S0R0J
R	1106(B,146,53)		RS1/16S0R0J
R	1107(B,211,58)		RS1/16S0R0J
R	1108(B,233,58)		RS1/16S0R0J
R	1109(B,285,56)		RS1/16S0R0J
R	1110(B,241,68)		RS1/16S0R0J

CAPACITORS

Mark	No.	Description	Part No.
C	517 (A,82,154)	FILM CAPACITOR	CQMBA104J50
C	603 (B,94,39)		CKSRYB331K50
C	604 (B,227,38)		CKSRYB331K50
C	605 (A,96,38)		CEAT4R7M50
C	606 (A,230,38)		CEAT4R7M50
C	607 (B,95,20)		CCSRCH470J50
C	608 (B,230,17)		CCSRCH470J50
C	609 (A,91,32)		CEAT101M16
C	610 (A,225,32)		CEAT101M16
C	611 (B,117,22)		CCSRCH470J50
C	612 (B,250,24)		CCSRCH470J50
C	613 (B,117,27)		CCSRCH470J50
C	614 (B,250,28)		CCSRCH470J50
C	615 (A,116,45)		CEANP2R2M50
C	616 (A,250,45)		CEANP2R2M50
C	630 (A,172,44)		CEANP2R2M50
C	632 (B,151,33)		CKSRYB331K50
C	633 (A,148,33)		CEAT4R7M50
C	634 (B,155,17)		CCSRCH470J50
C	635 (A,153,25)		CEAT101M16
C	636 (B,175,28)		CCSRCH470J50
C	637 (B,175,24)		CCSRCH470J50
C	653 (B,161,38)		CKSRYB331K50
C	654 (B,217,33)		CKSRYB331K50
C	655 (A,164,38)		CEAT4R7M50
C	656 (A,215,33)		CEAT4R7M50
C	657 (B,165,17)		CCSRCH470J50
C	658 (B,221,17)		CCSRCH470J50
C	659 (A,158,31)		CEAT101M16
C	660 (A,219,25)		CEAT101M16
C	661 (B,184,23)		CCSRCH470J50
C	662 (B,241,27)		CCSRCH470J50
C	663 (B,184,27)		CCSRCH470J50
C	664 (B,241,24)		CCSRCH470J50
C	665 (A,184,45)		CEANP2R2M50
C	666 (A,239,49)		CEANP2R2M50
C	682 (B,74,48)		CKSRYB331K50
C	683 (A,74,50)		CEAT4R7M50
C	684 (B,82,18)		CCSRCH470J50
C	685 (A,78,38)		CEAT101M16
C	686 (B,92,9)		CCSRCH470J50
C	687 (B,87,8)		CCSRCH470J50
C	688 (A,75,78)		CEANP2R2M50
C	696 (B,281,35)		CKSRYB102K50
C	697 (A,286,34)		CEAT221M6R3
C	701 (A,49,80)	ELECT.CAPACITOR	XCH3026
C	702 (A,49,107)	ELECT.CAPACITOR	XCH3026
C	703 (A,43,130)	ELECT.CAPACITOR	XCH3012
C	704 (A,38,150)	ELECT.CAPACITOR	XCH3012
C	705 (A,156,81)	ELECT. CAPACITOR	CEAT100M2A
C	706 (A,143,84)	ELECT. CAPACITOR	CEAT100M2A
C	707 (A,17,99)	MYLAR FILM CAPACITOR	CQMA103K2E
C	708 (A,16,137)	MYLAR FILM CAPACITOR	CQMA103K2E
C	709 (A,257,73)		CEAT1R0M50
C	711 (A,195,99)	ELECT. CAPACITOR	CEAT101M35
C	712 (A,189,105)		CEAT101M10
C	751 (A,159,143)	FILM CAPACITOR	CQMBA104J50
C	752 (A,181,150)	FILM CAPACITOR	CQMBA104J50
C	755 (A,103,147)	FILM CAPACITOR	CQMBA104J50
C	761 (A,122,139)	FILM CAPACITOR	CQMBA104J50
C	762 (A,152,145)	FILM CAPACITOR	CQMBA104J50
C	771 (A,52,147)	FILM CAPACITOR	CQMBA104J50
C	778 (B,84,34)		CKSRYB331K50
C	779 (A,81,33)		CEAT4R7M50
C	780 (B,88,18)		CCSRCH470J50
C	781 (A,87,27)		CEAT101M16
C	782 (B,107,27)		CCSRCH470J50
C	783 (B,107,24)		CCSRCH470J50
C	784 (A,105,49)		CEANP2R2M50
C	801 (A,248,114)	ELECT. CAPACITOR	CEAT222M25
C	802 (A,249,100)	ELECT. CAPACITOR	CEAT222M25
C	806 (A,288,55)		CEAT1R0M50
C	807 (B,226,95)		CKSRYB103K25
C	808 (A,245,142)	ELECT. CAPACITOR	CEAT472M16
C	809 (A,234,95)		CEAT101M10
C	810 (A,266,133)		CEAT101M10
C	811 (B,279,128)		CKSRYB103K25
C	812 (B,278,109)		CKSRYB103K25
C	813 (A,276,118)		CEAT101M16

C POWER PACK ASSY (XWZ4083)

MISCELLANEOUS

Mark	No.	Description	Part No.
⚠ IC	600 (A,132,14)	POWER PACK 2CH	STK412-230C
⚠ IC	601 (A,265,14)	POWER PACK 2CH	STK412-230C
⚠ IC	602 (A,199,14)	POWER PACK 2CH	STK412-230C
⚠ IC	610 (A,59,28)	PROTECTOR(1A)	AEK7009
⚠ IC	701 (A,100,75)	IC PROTECTOR	ICP-N10
⚠ IC	702 (A,84,81)	IC PROTECTOR	ICP-N10
⚠ IC	803 (A,238,87)	IC	TA7805S
⚠ IC	804 (A,282,111)	REGULATOR IC	TA7809S
⚠ IC	805 (B,271,135)	IC	BA178M05FP
Q	501 (B,85,42)	CHIP TRANSISTOR	2SD2704K
Q	505 (A,111,47)	TRANSISTOR	2SC2240
Q	601 (B,93,47)	CHIP TRANSISTOR	2SD2704K
Q	602 (B,227,45)	CHIP TRANSISTOR	2SD2704K
Q	605 (A,118,40)	TRANSISTOR	2SC2240
Q	606 (A,252,40)	TRANSISTOR	2SC2240
Q	631 (B,153,42)	CHIP TRANSISTOR	2SD2704K
Q	633 (A,178,47)	TRANSISTOR	2SC2240
Q	651 (B,161,45)	CHIP TRANSISTOR	2SD2704K
Q	652 (B,219,42)	CHIP TRANSISTOR	2SD2704K
Q	655 (A,186,40)	TRANSISTOR	2SC2240
Q	656 (A,244,47)	TRANSISTOR	2SC2240
Q	696 (B,284,22)	TRANSISTOR	2SC4081
Q	697 (B,282,26)	TRANSISTOR	2SC4081
Q	698 (B,246,67)	TRANSISTOR	RT1N241M
⚠ Q	701 (A,110,75)	TRANSISTOR	2SC5511

Mark	No.		Description	Part No.
⚠	Q 702	(A,96,86)	TRANSISTOR	2SA2005
	Q 703	(A,155,76)	TRANSISTOR	2SA1145
	Q 704	(A,166,79)	TRANSISTOR	2SC2240
	Q 705	(B,245,74)	CHIP TRANSISTOR	RN4903
	Q 707	(B,241,74)	CHIP TRANSISTOR	RN4903
	Q 721	(A,142,71)	TRANSISTOR	2SA1145
	Q 722	(A,161,74)	TRANSISTOR	2SC2240
	Q 801	(B,277,141)	DIGITAL TR(SC-70)	RT1P241M
	Q 802	(B,274,145)	TRANSISTOR	RT1N241M
	Q 803	(B,265,140)	DIGITAL TR(SC-70)	RT1P241M
	Q 804	(B,268,145)	TRANSISTOR	RT1N241M
	Q 805	(B,277,146)	DIGITAL TR(SC-70)	RT1P241M
	Q 806	(B,271,145)	TRANSISTOR	RT1N241M
	Q 807	(B,276,53)	CHIP TR(2*PNP)	RN2903
	Q 808	(B,283,56)	CHIP TRANSISTOR	RN1903
	Q 809	(A,266,101)	TRANSISTOR	2SD1858X
	D 601	(A,125,57)	DIODE	1SS133
	D 602	(A,267,17)	ZENER DIODE	MTZJ15A
	D 603	(A,119,57)	DIODE	1SS133
	D 604	(A,261,21)	ZENER DIODE	MTZJ15A
	D 606	(A,259,57)	DIODE	1SS133
	D 608	(A,253,52)	DIODE	1SS133
	D 631	(A,192,61)	DIODE	1SS133
	D 632	(A,176,52)	DIODE	1SS133
	D 647	(A,200,17)	ZENER DIODE	MTZJ15A
	D 648	(A,196,21)	ZENER DIODE	MTZJ15A
	D 651	(A,192,57)	DIODE	1SS133
	D 652	(A,262,57)	DIODE	1SS133
	D 653	(A,186,52)	DIODE	1SS133
	D 654	(A,242,52)	DIODE	1SS133
	D 681	(A,132,17)	ZENER DIODE	MTZJ15A
	D 682	(A,129,22)	ZENER DIODE	MTZJ15A
⚠	D 701	(A,9,88)	DIODE	D5SBA20(B)
⚠	D 702	(A,9,126)	DIODE	D5SBA20(B)
	D 703	(B,252,76)	DIODE	1SS355
	D 711	(A,196,103)	ZENER DIODE	MTZJ22D
	D 712	(A,192,103)	DIODE	MTZJ6R8(B)
	D 713	(A,120,78)	DIODE	1SS133
	D 751	(B,168,135)	DIODE	1SS355
	D 752	(B,170,135)	DIODE	1SS355
	D 753	(B,138,132)	DIODE	1SS355
	D 754	(B,141,132)	DIODE	1SS355
	D 757	(B,70,136)	DIODE	1SS355
	D 758	(B,73,136)	DIODE	1SS355
	D 777	(A,127,57)	DIODE	1SS133
	D 778	(A,108,57)	DIODE	1SS133
⚠	D 801	(B,221,113)	BRIDGE DIODE	S1WB(A)60SD
	D 805	(A,276,131)	DIODE	1SS133
	D 806	(A,287,62)	DIODE	MTZJ6R2(B)
	D 807	(A,284,67)	DIODE	1SS133
	D 827	(A,262,133)	DIODE	MTZJ6R2(B)
	D 828	(A,239,98)	DIODE	MTZJ6R2(B)
⚠	D 829	(A,239,128)	DIODE	D3SBA20(B)
	L 501	(A,97,118)	COIL	ATH1004
	L 751	(A,160,108)	COIL	ATH1004
	L 752	(A,173,108)	COIL	ATH1004
	L 753	(A,120,107)	COIL	ATH1004
	L 761	(A,130,108)	COIL	ATH1004
	L 762	(A,142,108)	COIL	ATH1004
	J 43		JUMPER WIRE 11P	D20PYY1120E

Mark	No.		Description	Part No.
	KN601	(A,65,23)	WRAPPING TERMINAL	VNF1084
	RY501	(A,75,132)	RELAY	XSR3012
	RY751	(A,173,130)	RELAY	XSR3012
	RY752	(A,141,126)	RELAY	XSR3012
	RY753	(A,117,120)	RELAY	XSR3012
	CN701	(A,212,134)	11PJUMPER CONNECTOR	52147-1110
	CN702	(A,201,106)	6P JUMPER CONNECTOR	52147-0610
	CN705	(A,295,40)	21P PLUG	XKM3011
	CN751		SP TERMINAL 8-P(V0)	XKE3042
	CN753		SP TERMINAL 4-P(V0)	XKE3044
	CN803	(A,231,129)	6P PLUG	KM200TA6
	CN805	(A,317,153)	13P PLUG	XKP3066
	CN806		19P PLUG	XKP3069
	CN807	(A,317,82)	15P PLUG	XKP3067
	CN812	(A,323,30)	15P PLUG	XKP3067
	CN813	(A,308,38)	CONNECTOR	CKS3390
	CN815	(A,295,79)	23P PLUG	XKM3006
	CN816	(A,295,126)	21P PLUG	XKM3011
	810	(A,277,90)	11P CABLE HOLDER	51048-1100

RESISTORS

	R 601	(A,96,56)		RD1/4PU222J
	R 602	(A,230,52)		RD1/4PU222J
	R 603	(B,93,52)		RS1/16S103J
	R 604	(B,226,49)		RS1/16S103J
	R 609	(A,91,35)		RD1/4PU273J
	R 610	(A,225,35)		RD1/4PU273J
	R 611	(A,90,28)		RD1/4PU821J
	R 612	(A,223,28)		RD1/4PU821J
	R 613	(A,114,21)		RD1/4PU273J
	R 614	(A,247,21)		RD1/4PU273J
	R 615	(A,123,36)		RD1/4PU331J
	R 616	(A,270,29)		RD1/4PU562J
⚠	R 617	(A,114,31)	RESISTOR (0.22, 5W)	ACN7094
	R 618	(A,266,28)		RD1/4PU562J
	R 619	(A,122,52)		RD1/4PU182J
	R 620	(A,257,36)		RD1/4PU331J
	R 621	(A,124,49)		RD1/4PU821J
⚠	R 622	(A,248,31)	RESISTOR (0.22, 5W)	ACN7094
	R 623	(A,116,48)		RD1/4PU223J
	R 624	(A,257,52)		RD1/4PU182J
	R 626	(A,258,49)		RD1/4PU821J
	R 628	(A,250,48)		RD1/4PU223J
	R 630	(A,230,21)		RD1/4PU333J
	R 631	(A,148,46)		RD1/4PU222J
	R 632	(B,152,47)		RS1/16S103J
	R 635	(A,153,29)		RD1/4PU273J
	R 636	(A,149,25)		RD1/4PU821J
	R 637	(A,172,21)		RD1/4PU273J
	R 638	(A,174,36)		RD1/4PU331J
⚠	R 639	(A,173,31)	RESISTOR (0.22, 5W)	ACN7094
	R 640	(A,179,57)		RD1/4PU182J
	R 641	(A,174,52)		RD1/4PU821J
	R 642	(A,169,39)		RD1/4PU223J
	R 647	(A,202,27)		RD1/4PU562J
	R 648	(A,199,27)		RD1/4PU562J
	R 651	(A,164,56)		RD1/4PU222J
	R 652	(A,215,41)		RD1/4PU222J
	R 653	(B,160,50)		RS1/16S103J
	R 654	(B,219,46)		RS1/16S103J
	R 659	(A,159,35)		RD1/4PU273J

Mark	No.	Description	Part No.
	R 660	(A,220,29)	RD1/4PU273J
	R 661	(A,156,28)	RD1/4PU821J
	R 662	(A,216,20)	RD1/4PU821J
	R 663	(A,181,21)	RD1/4PU273J
	R 664	(A,238,21)	RD1/4PU273J
	R 665	(A,190,36)	RD1/4PU331J
	R 666	(A,240,35)	RD1/4PU331J
⚠	R 667	(A,182,31) RESISTOR (0.22, 5W)	ACN7094
⚠	R 668	(A,239,31) RESISTOR (0.22, 5W)	ACN7094
	R 669	(A,189,52)	RD1/4PU182J
	R 670	(A,245,52)	RD1/4PU182J
	R 671	(A,192,49)	RD1/4PU821J
	R 672	(A,240,57)	RD1/4PU821J
	R 673	(A,184,48)	RD1/4PU223J
	R 674	(A,236,38)	RD1/4PU223J
	R 680	(B,297,21)	RS1/16S0R0J
	R 688	(A,135,27)	RD1/4PU562J
	R 689	(A,133,27)	RD1/4PU562J
	R 695	(A,97,22)	RD1/4PU333J
	R 696	(B,281,38)	RS1/16S103J
	R 697	(B,255,68)	RS1/16S103J
	R 698	(B,243,67)	RS1/16S333J
	R 699	(A,165,21)	RD1/4PU333J
	R 701	(A,117,78)	RD1/4PU682J
	R 702	(A,101,84)	RD1/4PU682J
	R 703	(A,151,72)	RD1/4PU683J
	R 704	(A,147,76)	RD1/4PU683J
	R 705	(A,283,85)	RD1/4PU473J
	R 706	(A,283,75)	RD1/4PU473J
	R 707	(A,135,77)	RD1/4PU124J
	R 708	(A,147,81)	RD1/4PU124J
⚠	R 711	(A,181,86) METAL OXIDE RESISTOR	RS2LMF222J
	R 713	(A,117,81)	RD1/4PU102J
	R 714	(B,252,68)	RS1/16S102J
	R 715	(B,250,75)	RS1/16S103J
	R 716	(B,247,75)	RS1/16S103J
	R 721	(A,125,77)	RD1/4PU822J
	R 722	(A,123,77)	RD1/4PU822J
	R 723	(A,276,78)	RD1/4PU473J
	R 724	(A,279,83)	RD1/4PU473J
	R 725	(A,276,74)	RD1/4PU103J
	R 726	(B,291,59)	RS1/16S103J
	R 727	(B,287,59)	RS1/16S103J
⚠	R 751	(A,158,119) CARBON FILM RESISTOR	RD1/4PUF101J
⚠	R 752	(A,185,120) CARBON FILM RESISTOR	RD1/4PUF101J
⚠	R 753	(A,156,126) METAL OXIDE RESISTOR	RS1LMF4R7J
⚠	R 754	(A,181,126) METAL OXIDE RESISTOR	RS1LMF4R7J
⚠	R 755	(A,103,117) CARBON FILM RESISTOR	RD1/4PUF101J
⚠	R 756	(A,101,120) METAL OXIDE RESISTOR	RS1LMF4R7J
⚠	R 761	(A,125,117) CARBON FILM RESISTOR	RD1/4PUF101J
⚠	R 762	(A,155,119) CARBON FILM RESISTOR	RD1/4PUF101J
⚠	R 763	(A,124,132) METAL OXIDE RESISTOR	RS1LMF4R7J
⚠	R 764	(A,149,139) METAL OXIDE RESISTOR	RS1LMF4R7J
	R 777	(A,81,41)	RD1/4PU222J
	R 778	(B,84,48)	RS1/16S103J
	R 781	(A,87,30)	RD1/4PU273J
	R 782	(A,84,22)	RD1/4PU821J
	R 783	(A,104,21)	RD1/4PU273J
	R 784	(A,111,35)	RD1/4PU331J
⚠	R 785	(A,105,31) RESISTOR (0.22, 5W)	ACN7094
	R 786	(A,111,57)	RD1/4PU182J
	R 787	(A,106,57)	RD1/4PU821J
	R 788	(A,102,38)	RD1/4PU223J
	R 789	(A,82,127) CARBON FILM RESISTOR	RD1/4PUF101J
⚠	R 790	(A,80,145) METAL OXIDE RESISTOR	RS1LMF4R7J
	R 806	(B,283,48)	RS1/16S103J
	R 807	(B,278,48)	RS1/16S103J
	R 808	(B,283,52)	RS1/16S102J
	R 809	(B,261,105)	RS1/16S122J
	R 810	(B,264,105)	RS1/16S271J
	R 885	(B,310,57)	RS1/16S221J
	R 886	(B,310,61)	RS1/16S221J
	R 887	(B,310,65)	RS1/16S221J
	R 888	(B,315,22)	RS1/16S221J
	R 1101	(B,273,68)	RS1/16S0R0J
	R 1102	(B,274,61)	RS1/16S0R0J
	R 1106	(B,146,53)	RS1/16S0R0J
	R 1107	(B,211,58)	RS1/16S0R0J
	R 1108	(B,233,58)	RS1/16S0R0J
	R 1109	(B,285,56)	RS1/16S0R0J
	R 1110	(B,241,68)	RS1/16S0R0J

CAPACITORS

	C 517	(A,82,154) FILM CAPACITOR	CQMBA224J50
	C 521	(A,120,164) FILM CAPACITOR	CQMBA123J50
	C 603	(B,94,39)	CKSRYB331K50
	C 604	(B,227,38)	CKSRYB331K50
	C 605	(A,96,38)	CEAT4R7M50
	C 606	(A,230,38)	CEAT4R7M50
	C 607	(B,95,20)	CCSRCH470J50
	C 608	(B,230,17)	CCSRCH470J50
	C 609	(A,91,32)	CEAT101M16
	C 610	(A,225,32)	CEAT101M16
	C 611	(B,117,22)	CCSRCH470J50
	C 612	(B,250,24)	CCSRCH470J50
	C 613	(B,117,27)	CCSRCH470J50
	C 614	(B,250,28)	CCSRCH470J50
	C 615	(A,116,45)	CEANP2R2M50
	C 616	(A,250,45)	CEANP2R2M50
	C 630	(A,172,44)	CEANP2R2M50
	C 632	(B,151,33)	CKSRYB331K50
	C 633	(A,148,33)	CEAT4R7M50
	C 634	(B,155,17)	CCSRCH470J50
	C 635	(A,153,25)	CEAT101M16
	C 636	(B,175,28)	CCSRCH470J50
	C 637	(B,175,24)	CCSRCH470J50
	C 653	(B,161,38)	CKSRYB331K50
	C 654	(B,217,33)	CKSRYB331K50
	C 655	(A,164,38)	CEAT4R7M50
	C 656	(A,215,33)	CEAT4R7M50
	C 657	(B,165,17)	CCSRCH470J50
	C 658	(B,221,17)	CCSRCH470J50
	C 659	(A,158,31)	CEAT101M16
	C 660	(A,219,25)	CEAT101M16
	C 661	(B,184,23)	CCSRCH470J50
	C 662	(B,241,27)	CCSRCH470J50
	C 663	(B,184,27)	CCSRCH470J50
	C 664	(B,241,24)	CCSRCH470J50
	C 665	(A,184,45)	CEANP2R2M50

Mark No.	Description	Part No.
C 666	(A,239,49)	CEANP2R2M50
C 696	(B,281,35)	CKSRYB102K50
C 697	(A,286,34)	CEAT221M6R3
C 701	(A,49,80) ELECT.CAPACITOR	XCH3026
C 702	(A,49,107) ELECT.CAPACITOR	XCH3026
C 703	(A,43,130) ELECT.CAPACITOR	XCH3012
C 704	(A,38,150) ELECT.CAPACITOR	XCH3012
C 705	(A,156,81) ELECT. CAPACITOR	CEAT100M2A
C 706	(A,143,84) ELECT. CAPACITOR	CEAT100M2A
C 707	(A,17,99) MYLAR FILM CAPACITOR	CQMA103K2E
C 708	(A,16,137) MYLAR FILM CAPACITOR	CQMA103K2E
C 709	(A,257,73)	CEAT1R0M50
C 711	(A,195,99) ELECT. CAPACITOR	CEAT101M35
C 712	(A,189,105)	CEAT101M10
C 751	(A,159,143) FILM CAPACITOR	CQMBA224J50
C 752	(A,181,150) FILM CAPACITOR	CQMBA224J50
C 753	(A,157,155) FILM CAPACITOR	CQMBA224J50
C 754	(A,181,158) FILM CAPACITOR	CQMBA224J50
C 755	(A,103,147) FILM CAPACITOR	CQMBA224J50
C 756	(A,96,151) FILM CAPACITOR	CQMBA224J50
C 757	(A,157,164) FILM CAPACITOR	CQMBA123J50
C 758	(A,177,164) FILM CAPACITOR	CQMBA123J50
C 759	(A,101,164) FILM CAPACITOR	CQMBA123J50
C 761	(A,122,139) FILM CAPACITOR	CQMBA224J50
C 762	(A,152,145) FILM CAPACITOR	CQMBA224J50
C 763	(A,122,146) FILM CAPACITOR	CQMBA224J50
C 764	(A,150,152) FILM CAPACITOR	CQMBA224J50
C 766	(A,82,164) FILM CAPACITOR	CQMBA123J50
C 773	(A,138,164) FILM CAPACITOR	CQMBA123J50
C 778	(B,84,34)	CKSRYB331K50
C 779	(A,81,33)	CEAT4R7M50
C 780	(B,88,18)	CCSRCH470J50
C 781	(A,87,27)	CEAT101M16
C 782	(B,107,27)	CCSRCH470J50
C 783	(B,107,24)	CCSRCH470J50
C 784	(A,105,49)	CEANP2R2M50
C 785	(A,89,146) FILM CAPACITOR	CQMBA224J50
C 801	(A,248,114) ELECT. CAPACITOR	CEAT222M25
C 802	(A,249,100) ELECT. CAPACITOR	CEAT222M25
C 806	(A,288,55)	CEAT1R0M50
C 807	(B,226,95)	CKSRYB103K25
C 808	(A,245,142) ELECT. CAPACITOR	CEAT472M16
C 809	(A,234,95)	CEAT101M10
C 810	(A,266,133)	CEAT101M10
C 811	(B,279,128)	CKSRYB103K25
C 812	(B,278,109)	CKSRYB103K25
C 813	(A,276,118)	CEAT101M16

D TRANS2 ASSY

MISCELLANEOUS

⚠ IC 853	(A,32,204) PROTECTOR(4A)	AEK7018
J 21	JUMPER WIRE 11P	D20PYY1130E
CN1201	(A,35,183) 4P JUMPER CONNECTOR	52147-0410
851	(A,49,207) 11P CABLE HOLDER	51048-1100

E TRANS3 ASSY

TRANS3 ASSY has no service part.

F COMPONENT ASSY

MISCELLANEOUS

IC 551	(B,235,206) LOGIC IC	TC74HC4052AF
IC 552	(B,256,212) LOGIC IC	TC74HC4052AF
IC 553	(B,209,204) VIDEO IC	NJM2581M
JA 551	(A,249,176) 6P RCA PINJACK	XKB3025
JA 553	(A,207,176) 3P RCA PINJACK	AKB7124
CN551	(A,192,206) CONNECTOR	CKS3372

RESISTORS

R 553	(B,237,192)	RS1/16S750J
R 554	(B,251,191)	RS1/16S750J
R 555	(B,265,191)	RS1/16S750J
R 556	(B,232,192)	RS1/16S750J
R 557	(B,246,194)	RS1/16S750J
R 558	(B,262,184)	RS1/16S750J
R 559	(B,195,194)	RS1/16S750J
R 560	(B,216,193)	RS1/16S750J
R 561	(B,223,191)	RS1/16S750J
R 562	(B,189,193)	RS1/16S750J
R 563	(B,212,197)	RS1/16S750J
R 564	(B,214,193)	RS1/16S750J
R 566	(B,238,216)	RS1/16S102J
R 567	(B,243,200)	RS1/16S102J
R 568	(B,243,202)	RS1/16S102J
R 569	(B,246,216)	RS1/16S102J
R 571	(B,250,226)	RS1/16S102J
R 572	(B,250,224)	RS1/16S102J
R 573	(B,224,201)	RS1/16S0R0J
R 574	(B,260,200)	RS1/16S0R0J
R 575	(B,244,234)	RS1/16S0R0J
R 577	(B,202,212)	RS1/16S103J
R 578	(B,204,212)	RS1/16S103J
R 579	(B,213,212)	RS1/16S103J

CAPACITORS

C 567	(B,257,184)	CKSRYB103K50
C 568	(B,200,184)	CKSRYB103K50
C 569	(B,241,214)	CKSRYB473K50
C 570	(B,229,206)	CKSRYB473K50
C 571	(B,249,211)	CKSRYB473K50
C 572	(B,263,212)	CKSRYB473K50
C 576	(B,206,212)	CKSRYB103K50
C 577	(B,209,212)	CKSRYB103K50
C 578	(B,211,212)	CKSRYB103K50
C 579	(A,200,203)	CEAT101M16
C 580	(A,195,203)	CEAT101M16
C 581	(B,206,197)	CKSRYB103K50
C 582	(B,208,197)	CKSRYB103K50
C 583	(B,210,197)	CKSRYB103K50

G HEAD PHONE ASSY

MISCELLANEOUS

Q 1551	(B,78,211) CHIP TRANSISTOR	2SD2704K
Q 1552	(B,102,219) CHIP TRANSISTOR	2SD2704K
J 47	JUMPER WIRE	D20PYY0640E
JA 1551	(A,117,233) HEADPHONE JACK	RKB1014
KN1551	(A,69,231) WRAPPING TERMINAL	VNF1084
1551	(A,59,220) 6P CABLE HOLDER	51048-0600

Mark	No.	Description	Part No.
		RESISTORS	
⚠	R 1551	(A,84,202) METAL OXIDE RESISTOR	RS2LMF331J
⚠	R 1552	(A,78,203) METAL OXIDE RESISTOR	RS2LMF331J
⚠	R 1553	(A,108,221) METAL OXIDE RESISTOR	RS1LMF151J
⚠	R 1554	(A,93,216) METAL OXIDE RESISTOR	RS1LMF151J
	R 1555	(B,100,216)	RS1/16S472J
	R 1556	(B,81,210)	RS1/16S472J
	R 1557	(B,87,228)	RS1/16S102J
		CAPACITORS	
	C 1551	(B,94,226)	CKSRYB223K50
	C 1552	(B,83,210)	CKSRYB223K50
	C 1553	(B,110,224)	CKSRYB103K50
	C 1554	(B,110,226)	CCSRCH471J50
	C 1555	(B,110,229)	CKSRYB104K16
	C 1556	(B,112,239)	CKSRYB103K50
	C 1557	(B,109,239)	CCSRCH471J50
	C 1558	(B,107,239)	CKSRYB104K16
	C 1561	(A,69,205) ELECT. CAPACITOR	CEANP470M50
	C 1562	(A,71,223) ELECT. CAPACITOR	CEANP470M50

I 5.1 CHIN ASSY

Mark	No.	Description	Part No.
		MISCELLANEOUS	
	CN307	(A,125,219) 7P CONNECTOR	52044-0745
	CN309	(A,167,225) PIN JACK(4P)	XKB3035
		RESISTORS	
	R 1001	(B,147,233)	RS1/16S473J
	R 1002	(B,150,226)	RS1/16S473J
	R 1003	(B,149,236)	RS1/16S331J
	R 1004	(B,150,228)	RS1/16S331J
	R 1009	(B,150,224)	RS1/16S473J
	R 1010	(B,151,212)	RS1/16S473J
	R 1011	(B,150,222)	RS1/16S331J
	R 1012	(B,150,214)	RS1/16S331J
		CAPACITORS	
	C 1001	(B,151,233)	CCSRCH101J50
	C 1002	(B,151,230)	CCSRCH101J50
	C 1003	(B,143,233)	CKSRYB221K50
	C 1004	(B,147,230)	CKSRYB221K50
	C 1009	(A,146,236)	CEAT4R7M50
	C 1010	(A,146,228)	CEAT4R7M50
	C 1012	(B,159,226)	CKSRYB103K50
	C 1013	(B,151,219)	CCSRCH101J50
	C 1014	(B,151,216)	CCSRCH101J50
	C 1015	(B,147,224)	CKSRYB221K50
	C 1016	(B,147,216)	CKSRYB221K50
	C 1021	(A,146,214)	CEAT4R7M50
	C 1022	(A,146,221)	CEAT4R7M50

K FRONT DISPLAY ASSY

Mark	No.	Description	Part No.
		MISCELLANEOUS	
	IC 401	(B,121,181) DISPLAY U-COM	PE5550A
	IC 402	(A,223,169) REMOTE RECEIVER UNIT	GP1UM27XK0VF
	Q 442	(B,238,190) TRANSISTOR	RT1N241M
	Q 484	(B,217,189) TRANSISTOR	2SA1576A
	D 401	(B,239,163) DIODE	DAN202K
	D 403	(B,226,189) DIODE	1SS355
	L 401	(A,242,159) RADIAL INDUCTOR	LFCA2R2J
	V 401	(A,189,200) FL TUBE	XAV3033
	S 451	(A,234,139) SWITCH	VSG1024
	S 452	(A,213,136) SWITCH	VSG1024
	S 453	(A,187,134) SWITCH	VSG1024
	S 454	(A,70,134) SWITCH	VSG1024
	S 455	(A,46,134) SWITCH	VSG1024
	S 456	(A,23,134) SWITCH	VSG1024
	S 458	(A,13,112) SWITCH	VSG1024
	S 459	(A,114,136) SWITCH	VSG1024
	S 460	(A,91,136) SWITCH	VSG1024
	S 461	(A,57,112) SWITCH	VSG1024
	S 462	(A,42,112) SWITCH	VSG1024
	S 463	(A,27,112) SWITCH	VSG1024
	S 464	(A,164,134) SWITCH	VSG1024
	S 465	(A,140,134) SWITCH	VSG1024
	S 466	(A,86,90) SWITCH	VSG1024
	S 467	(A,72,90) SWITCH	VSG1024
	S 468	(A,57,90) SWITCH	VSG1024
	S 469	(A,42,90) SWITCH	VSG1024
	S 470	(A,27,90) SWITCH	VSG1024
	S 471	(A,13,90) SWITCH	VSG1024
	X 401	(A,149,165) CERAMIC RESONATOR (5.00 MHz)	VSS1142
	CN401	(A,246,165) 17P CONNECTOR	52044-1745
	471	(A,35,176) CABLE HOLDER(3P)	51063-0305
	404	(A,197,127) CABLE HOLDER(7P)	51063-0705
	402	FL HOLDER(FE)	VNF1096
		RESISTORS	
	R 401	(B,144,169)	RS1/16S105J
	R 402	(B,223,189)	RS1/16S104J
	R 403	(B,220,189)	RS1/16S104J
	R 405	(B,228,155)	RS1/16S102J
	R 406	(B,226,155)	RS1/16S103J
	R 407	(B,78,176)	RS1/16S473J
	R 408	(B,80,176)	RS1/16S473J
	R 409	(B,75,176)	RS1/16S473J
	R 410	(B,73,176)	RS1/16S473J
	R 411	(B,229,189)	RS1/16S473J
	R 412	(B,234,187)	RS1/16S221J
	R 413	(B,234,184)	RS1/16S221J
	R 414	(B,234,182)	RS1/16S221J
	R 415	(B,234,180)	RS1/16S221J
	R 416	(B,234,178)	RS1/16S221J
	R 417	(B,219,182)	RS1/16S101J
	R 422	(B,157,169)	RS1/16S104J
	R 423	(B,131,167)	RS1/16S104J
	R 424	(B,83,176)	RS1/16S104J
	R 425	(B,213,182)	RS1/16S104J
	R 430	(B,234,175)	RS1/16S0R0J
	R 451	(B,236,144)	RS1/16S472J
	R 452	(B,234,144)	RS1/16S681J
	R 453	(B,187,147)	RS1/16S821J
	R 454	(B,166,153)	RS1/16S122J
	R 455	(A,45,146)	RD1/4PU681J
	R 456	(A,35,144)	RD1/4PU821J
	R 457	(A,16,139)	RD1/4PU122J
	R 459	(A,109,134)	RD1/4PU472J
	R 460	(A,101,135)	RD1/4PU681J

Mark	No.	Description	Part No.
R	461	(B,52,117)	RS1/16S821J
R	462	(B,49,117)	RS1/16S122J
R	463	(B,34,117)	RS1/16S162J
R	464	(B,20,117)	RS1/16S272J
R	465	(A,161,128)	RD1/4PU472J
R	466	(A,151,128)	RD1/4PU681J
R	467	(A,131,128)	RD1/4PU821J
R	468	(B,79,91)	RS1/16S122J
R	469	(B,64,91)	RS1/16S162J
R	470	(B,50,92)	RS1/16S272J
R	471	(B,34,91)	RS1/16S512J
R	472	(B,86,176)	RS1/16S472J
R	473	(B,19,91)	RS1/16S133J
R	481	(B,169,204)	RS1/16S473J
R	482	(B,167,204)	RS1/16S473J
R	483	(B,165,204)	RS1/16S473J
R	484	(B,163,204)	RS1/16S473J
R	485	(B,161,204)	RS1/16S473J
R	486	(B,159,204)	RS1/16S473J
R	487	(B,157,204)	RS1/16S473J
R	488	(B,155,204)	RS1/16S473J
R	489	(B,153,204)	RS1/16S473J
R	490	(B,151,204)	RS1/16S473J
R	492	(B,121,204)	RS1/16S104J
R	493	(B,119,204)	RS1/16S104J
R	494	(B,117,204)	RS1/16S104J
R	495	(B,115,204)	RS1/16S104J
R	496	(B,113,204)	RS1/16S104J
R	497	(B,111,204)	RS1/16S104J
R	498	(B,109,204)	RS1/16S104J
R	499	(B,107,204)	RS1/16S104J
R	500	(B,105,204)	RS1/16S104J
R	517	(B,149,204)	RS1/16S473J
R	518	(B,147,204)	RS1/16S473J
R	519	(B,145,204)	RS1/16S473J
R	520	(B,103,204)	RS1/16S104J
R	521	(B,101,204)	RS1/16S104J
R	522	(B,99,204)	RS1/16S104J
R	523	(B,97,204)	RS1/16S104J
R	524	(B,95,204)	RS1/16S104J
R	525	(B,93,204)	RS1/16S104J
R	526	(B,91,204)	RS1/16S104J
R	527	(B,89,204)	RS1/16S104J
R	528	(B,87,204)	RS1/16S104J
R	529	(B,85,204)	RS1/16S104J
R	530	(B,83,204)	RS1/16S104J
R	531	(B,81,204)	RS1/16S104J
R	532	(B,79,204)	RS1/16S104J
R	533	(B,77,204)	RS1/16S104J
R	534	(B,75,204)	RS1/16S104J

CAPACITORS

Mark	No.	Description	Part No.
C	401	(B,247,155)	CKSRYB103K50
C	402	(B,247,153)	CKSRYB103K50
C	403	(A,234,168)	CEAT221M6R3
C	410	(B,49,186)	CKSRYB103K50
C	411	(B,51,186)	CKSRYB103K50
C	412	(A,42,178)	CEAT470M50
C	418	(B,141,179)	CKSRYB104K16
C	419	(B,103,182)	CKSRYB103K50
C	420	(A,39,185)	ELECT. CAPACITOR CEAT101M35
C	421	(B,160,169)	CKSRYB104K16
C	441	(B,223,176)	CKSRYB103K50
C	442	(A,239,146)	CEAL470M10
C	451	(B,125,166)	CKSRYB102K50
C	452	(B,103,164)	CKSRYB102K50
C	453	(B,122,166)	CKSRYB102K50
C	454	(B,100,164)	CKSRYB102K50
C	481	(B,140,191)	CCSRCH471J50
C	482	(B,126,201)	CCSRCH221J50
C	483	(B,126,199)	CCSRCH221J50
C	487	(B,83,163)	CKSRYB102K50
C	488	(B,79,163)	CKSRYB102K50
C	489	(B,75,163)	CKSRYB102K50
C	490	(A,241,34)	CKSRYB102K50

L R.ENCODER ASSY

MISCELLANEOUS

Mark	No.	Description	Part No.
S	457	(A,300,183) SWITCH	VSG1024
S	512	(A,288,223) ROTARY ENCODER (JOG)	XSX3008
S	513	(A,288,152) ROTARY ENCODER	XSX3005
S	514	(A,257,216) SWITCH	VSG1024
S	515	(A,270,183) SWITCH	VSG1024
S	516	(A,285,183) SWITCH	VSG1024
	511	(A,257,172) CABLE HOLDER(7P)	51063-0705

RESISTORS

Mark	No.	Description	Part No.
R	513	(B,270,190)	RS1/16S162J
R	514	(B,280,185)	RS1/16S272J
R	515	(B,295,185)	RS1/16S512J

M POWER KEY ASSY

MISCELLANEOUS

Mark	No.	Description	Part No.
S	501	(A,12,174) SWITCH	VSG1024
S	502	(A,20,221) SWITCH	VSG1024
S	503	(A,32,218) SWITCH	VSG1024
S	504	(A,47,218) SWITCH	VSG1024
	501	(A,47,210) CABLE HOLDER(3P)	51063-0305

RESISTORS

Mark	No.	Description	Part No.
R	502	(B,7,171)	RS1/16S162J
R	503	(A,15,228)	RD1/4PU272J
R	504	(A,30,228)	RD1/4PU512J

O TRANS4 ASSY

MISCELLANEOUS

Mark	No.	Description	Part No.
⚠ IC	891	(A,104,223) PROTECTOR(800mA)	AEK7008
⚠ IC	892	(A,77,232) PROTECTOR(800mA)	AEK7008
⚠ D	891	(B,91,226) BRIDGE DIODE	S1WB(A)60SD
J	22	JUMPER WIRE	D20PYY0330E
	891	(A,70,221) 3P CABLE HOLDER	51048-0300

CAPACITORS

Mark	No.	Description	Part No.
C	891	(A,97,218) ELECT. CAPACITOR	CEAT471M35
C	892	(A,86,218) ELECT. CAPACITOR	CEAT471M35

P REGULATOR ASSY

MISCELLANEOUS

Mark	No.		Description	Part No.
⚠	IC 801	(A,161,89)	REGULATOR IC	TA7812S
⚠	IC 802	(A,178,89)	REGULATOR IC	TA79012S
⚠	IC 803	(A,196,89)	IC	TA7805S
	D 810	(A,186,95)	ZENER DIODE	MTZJ6.2B
	CN800	(A,194,113)	11PJUMPER CONNECTOR	52147-1110

RESISTORS

⚠	R 801	(A,152,97)	METAL OXIDE RESISTOR	RS3LMF331J

CAPACITORS

	C 803	(B,164,98)		CKSRYB103K25
	C 804	(B,180,98)		CKSRYB103K25
	C 805	(A,152,103)		CEJQ101M16
	C 806	(A,173,100)		CEAT101M16
	C 818	(B,196,95)		CKSRYB103K25
	C 819	(A,190,95)		CEAT101M10

Q VIDEO ASSY

MISCELLANEOUS

	IC 301	(B,46,32)	VIDEO SW IC	NJM2595M
⚠	Q 301	(A,86,47)	TRANSISTOR	2SC3377
⚠	Q 302	(A,66,52)	TRANSISTOR	2SA1515
	Q 303	(B,25,83)	TRANSISTOR	2SC5938A
	D 301	(B,45,41)	DIODE	1SS355
	D 302	(B,41,46)	DIODE	1SS355
	D 303	(B,81,61)	DIODE	UDZS6R2(B)
	D 304	(B,73,59)	DIODE	UDZS6R2(B)
	D 305	(B,69,20)	DIODE	1SS355
	D 306	(B,61,23)	DIODE	1SS355
	CN302	(A,64,84)	6P SOCKET	KP200TA6L
	CN303	(A,62,7)	CONNECTOR	CKS3384
	CN308		6P PIN JACK	AKB7123
	CN310	(A,46,7)	CONNECTOR	CKS3372

RESISTORS

	R 301	(B,34,25)		RS1/16S750J
	R 302	(B,31,60)		RS1/16S750J
	R 303	(B,23,36)		RS1/16S750J
	R 304	(B,49,22)		RS1/16S750J
	R 305	(B,23,50)		RS1/16S750J
	R 306	(B,32,54)		RS1/16S750J
	R 307	(B,56,25)		RS1/16S102J
	R 308	(B,57,29)		RS1/16S102J
	R 309	(B,57,27)		RS1/16S151J
	R 310	(B,57,31)		RS1/16S102J
	R 311	(B,42,23)		RS1/16S102J
	R 312	(B,60,25)		RS1/16S102J
⚠	R 313	(A,85,57)	METAL OXIDE RESISTOR	RS3LMF390J
	R 314	(B,84,61)		RS1/16S152J
	R 315	(B,64,59)		RS1/16S152J
⚠	R 316	(A,67,39)	METAL OXIDE RESISTOR	RS3LMF390J
	R 317	(B,21,75)		RS1/16S102J
	R 318	(B,27,79)		RS1/16S122J
	R 319	(B,27,77)		RS1/16S472J
	R 320	(B,100,16)		RS1/16S0R0J
	R 334	(B,38,53)		RS1/16S0R0J
	R 391	(B,20,38)		RS1/16S0R0J
	R 392	(B,30,55)		RS1/16S0R0J

CAPACITORS

	C 302	(B,22,44)		CKSRYB103K50
	C 304	(B,33,19)		CKSRYB221K50
	C 305	(B,41,19)		CKSRYB221K50
	C 306	(B,22,54)		CKSRYB221K50
	C 307	(A,31,35)		CEAT470M25
	C 308	(A,52,53)		CEAT470M25
	C 309	(A,32,44)		CEAT470M25
	C 310	(A,54,42)	ELECT. CAPACITOR	CEAT470M25
	C 311	(B,82,48)		CKSRYB473K25
	C 312	(A,86,42)		CEAT470M25
	C 313	(B,76,34)		CKSRYB473K25
	C 314	(A,77,38)		CEAT470M25
	C 333	(B,21,81)		CKSRYB331K50
	C 338	(A,61,37)	ELECT. CAPACITOR	CEAT470M25
	C 339	(B,46,48)		CKSRYB104K25
	C 340	(B,57,36)		CKSRYB104K25
	C 347	(B,45,43)		CCSRCH470J50
	C 1360	(B,18,65)		CKSRYB103K50

R DIGITAL IN ASSY

MISCELLANEOUS

	F 1901	(B,214,228)	INDUCTOR	CTF1295
	JA 1900	(A,206,201)	OPT. LINK IN	GP1FAV51RKBF
	KN1902	(A,249,206)	SCREW PLATE	VNE1948
	CN1903	(A,229,230)	CONNECTOR	VKN1186

RESISTORS

	R 1900	(B,211,215)		RS1/16S101J

CAPACITORS

	C 1900	(B,205,215)		CKSRYB104K25
	C 1903	(B,211,230)		CKSRYB103K50
	C 1904	(A,208,228)		CEAL101M10
	C 1905	(B,233,232)		CKSRYB104K25
	C 1906	(B,235,232)		CKSRYB103K50
	C 1907	(B,237,232)		CCSRCH101J50
	C 1908	(B,239,232)		CKSRYB102K50

U PRIMARY ASSY

MISCELLANEOUS

⚠	IC 51	(A,234,14)	REGULATOR IC	TA78057S
	Q 51	(B,267,14)	DIGITAL TR(SC-70)	RT1N431M
⚠	D 51	(B,298,20)	BRIDGE DIODE	DF06SA
	D 55	(A,304,21)	DIODE	1SR139-400
	D 56	(A,271,21)	DIODE	1SS133
	D 58	(A,314,13)	ZENER DIODE	MTZJ5.1B
	H 51	(A,231,34)	FUSE CLIP	AKR7001
	H 52	(A,250,34)	FUSE CLIP	AKR7001
	J 52		JUMPER WIRE	D20PYY0410E
	KN51	(A,318,25)	WRAPPING TERMINAL	VNF1084
	KN3001	(A,223,117)	SCREW PLATE	VNE1948
⚠	RY51	(A,271,57)	RELAY	XSR3013
⚠	T 51	(A,288,56)	STANDBY TRANSFORMER	ATT7043
⚠	CN51	(A,236,47)	AC CODE SOCKET	RKP1751
⚠	51	(A,252,122)	AC SOCKET 1-P	AKP1060
	55	(A,317,9)	4P CABLE HOLDER	51048-0400

RESISTORS

⚠	R 51	(A,318,37)	RESISTOR(2.2M, 1/2W)	RCN1080
	R 52	(A,275,11)		RD1/2PM270J
	R 53	(A,307,12)		RD1/4PU332J
	R 54	(A,319,16)		RD1/4PU103J

Mark	No.		Description	Part No.
			CAPACITORS	
⚠	C 51	(A,261,64)	FILM CAPACITOR	ACE7013
⚠	C 52	(A,265,57)	SAFETY CAPACITOR	XCG3009
	C 53	(A,291,21)	ELECT. CAPACITOR	CEAT102M16
	C 54	(A,300,11)		CEAT470M25
	C 55	(A,307,21)		CKPUYF103Z25
	C 56	(A,311,21)		CKPUYF103Z25
	C 57	(A,314,21)		CKPUYF103Z25

V TRANS1 ASSY

TRANS1 ASSY has no service part.

W USB ASY (VSX-516/MYXJ5, MVXJ5)

Mark	No.		Description	Part No.
			MISCELLANEOUS	
	IC 701	(A,37,40)	USB MEDIA CONTROL IC	TCC760HC01-AG
⚠	IC 702	(A,63,35)	REGULATOR IC	MM1561JF
⚠	IC 703	(A,87,25)	REGULATOR IC	BD7802FP
	IC 761	(A,63,46)	SD-RAM(64M)	HY57V641620ETP-6
	IC 762	(A,87,46)	FLASH ROM	AYW7088
		IC9762	FLASH MEMORY IC	S29AL016D70TFI010
	IC 771	(A,58,59)	LOAD SWITCHING	AAT4618IGV-0.5-1
	IC 781	(A,37,16)	AUDIO DAC	AK4387ET
	IC 951	(A,67,28)	IC	TC74VHCT08AFTS1
	IC 953	(A,52,25)	IC	TC74VHC08FTS1
	Q 782	(B,94,44)	CHIP TRANSISTOR	DTC114YUA
	Q 783	(B,92,38)	TRANSISTOR	2SA1576A
	Q 784	(B,87,32)	TRANSISTOR	IMX9
	L 701	(B,27,42)	INDUCTOR	LCTC100K1608
	L 702	(B,34,33)	CHIP SOLID INDUCTOR	QTL1013
	L 703	(A,24,30)	CHIP SOLID INDUCTOR	QTL1013
	L 704	(B,53,56)	CHIP SOLID INDUCTOR	QTL1013
	L 705	(B,28,38)	CHIP FERRITE BEADS	VTL1169
	L 731	(A,28,60)	CHIP FERRITE BEADS	VTL1169
	L 733	(A,36,56)	COIL	VTH1043
	L 761	(B,78,47)	CHIP SOLID INDUCTOR	QTL1013
	L 762	(B,85,44)	CHIP SOLID INDUCTOR	QTL1013
	L 781	(B,46,19)	CHIP SOLID INDUCTOR	QTL1013
	L 951	(A,59,30)	CHIP SOLID INDUCTOR	QTL1013
	L 953	(A,72,37)	CHIP SOLID INDUCTOR	QTL1013
	X 701	(A,23,42)	CRYSTAL OSCILLATOR	CSS1614
	CN701	(A,33,60)	CONNECTOR	B4B-PH
	CN702	(A,87,16)	15P SOCKET	XKP3078
			RESISTORS	
	R 702	(A,43,55)		RS1/16S473J
	R 703	(A,38,53)		RS1/16S0R0J
	R 704	(A,35,53)		RS1/16S0R0J
	R 705	(A,30,54)		RS1/16S470J
	R 706	(A,30,52)		RS1/16S470J
	R 707	(B,32,48)		RS1/16S470J
	R 708	(B,22,51)		RS1/16S470J
	R 709	(B,23,41)		RS1/16S0R0J
	R 710	(B,35,42)		RS1/16S0R0J
	R 711	(B,37,42)		RS1/16S472J
	R 712	(A,27,43)		RS1/16S475J
	R 717	(A,31,29)		RS1/16S473J
	R 718	(A,36,25)		RS1/16S101J
	R 719	(A,35,25)		RS1/16S101J
	R 720	(A,35,21)		RS1/16S101J
	R 724	(A,39,21)		RS1/16S472J
	R 725	(A,44,25)		RS1/16S472J
	R 726	(A,42,21)		RS1/16S472J
	R 727	(A,33,21)		RS1/16S101J
	R 729	(B,30,38)		RS1/16S103J
	R 730	(B,39,33)		RS1/16S102J
	R 734	(A,43,58)		RS1/16S0R0J
	R 735	(A,32,55)		RS1/16S153J
	R 736	(A,40,55)		RS1/16S153J
	R 737	(A,34,55)		RS1/16S100J
	R 738	(A,39,55)		RS1/16S100J
	R 741	(B,79,23)		RS1/16S101J
	R 744	(A,77,20)		RS1/16S101J
	R 745	(A,76,21)		RS1/16S101J
	R 746	(A,74,20)		RS1/16S101J
	R 747	(A,72,20)		RS1/16S101J
	R 748	(A,71,20)		RS1/16S101J
	R 755	(A,26,45)		RS1/16S0R0J
	R 756	(A,26,41)		RS1/16S472J
	R 757	(A,43,60)		RS1/16S0R0J
	R 771	(A,61,56)		RS1/16S221J
	R 772	(A,58,56)		RS1/16S104J
	R 773	(A,71,59)		RS1/16S0R0J
	R 784	(A,30,21)		RS1/16S470J
	R 786	(A,41,21)		RS1/16S470J
	R 788	(A,44,21)		RS1/16S4R7J
	R 789	(A,74,25)		RS1/16S471J
	R 790	(A,79,23)		RS1/16S471J
	R 791	(B,83,34)		RS1/16S104J
	R 792	(B,90,30)		RS1/16S104J
	R 793	(B,83,30)		RS1/16S101J
	R 794	(B,90,34)		RS1/16S101J
	R 795	(A,87,33)		RS1/16S222J
	R 796	(A,87,30)		RS1/16S222J
	R 797	(B,92,44)		RS1/16S102J
	R 798	(B,95,38)		RS1/16S102J
	R 799	(B,90,38)		RS1/16S103J
	R 951	(B,43,26)		RS1/16S472J
	R 952	(A,62,31)		RS1/16S472J
	R 966	(A,72,32)		RS1/16S101J
	R 972	(A,62,28)		RS1/16S101J
	R 973	(A,73,29)		RS1/16S101J
	R 977	(A,47,25)		RS1/16S101J
	R 978	(A,47,28)		RS1/16S101J
	R 979	(B,58,27)		RS1/16S101J
	R 980	(B,60,27)		RS1/16S101J
			CAPACITORS	
	C 701	(A,49,36)		CKSRYB104K16
	C 702	(A,47,36)		CCSRCH471J50
	C 703	(A,49,40)		CKSRYB104K16
	C 704	(A,47,40)		CCSRCH471J50
	C 705	(A,49,44)		CKSRYB104K16
	C 706	(A,47,44)		CCSRCH471J50
	C 707	(A,45,51)		CKSRYB104K16
	C 708	(A,45,50)		CCSRCH471J50
	C 709	(A,30,51)		CKSRYB104K16
	C 710	(A,30,50)		CCSRCH471J50

Mark	No.		Description	Part No.
C	711	(B,30,45)		CKSRYB104K16
C	712	(B,27,45)		CCSRCH471J50
C	713	(A,26,46)		CCSRCH120J50
C	714	(A,26,39)		CCSRCH120J50
C	715	(B,26,38)		CKSRYB331K50
C	716	(B,32,33)		CKSRYB104K16
C	717	(B,30,33)		CCSRCH471J50
C	719	(A,25,36)		CCSRCH471J50
C	720	(B,23,30)		CKSRYB104K16
C	721	(A,24,24)		CEJQ101M6R3
C	723	(A,37,27)		CCSRCH471J50
C	724	(A,37,29)		CKSRYB104K16
C	726	(A,34,27)		CKSRYB104K16
C	727	(A,34,29)		CCSRCH471J50
C	728	(A,41,28)		CKSRYB104K16
C	729	(A,41,29)		CCSRCH471J50
C	730	(B,60,34)		CCSRCH471J50
C	731	(A,25,55)		CEJQ101M16
C	732	(B,29,55)		CKSRYB104K16
C	733	(B,29,60)		CKSRYB104K16
C	734	(B,41,32)		CKSRYB103K50
C	735	(B,37,33)		CKSRYB103K50
C	741	(A,92,19)		CEJQ101M16
C	742	(B,96,20)		CKSRYB104K16
C	743	(A,96,32)		CKSRYB105K6R3
C	745	(B,64,35)		CKSRYB105K6R3
C	746	(A,53,32)		CKSQYB225K10
C	761	(B,71,46)		CKSRYB104K16
C	762	(B,73,46)		CCSRCH471J50
C	763	(B,67,46)		CCSRCH471J50
C	764	(B,65,46)		CCSRCH471J50
C	766	(B,52,50)		CCSRCH471J50
C	767	(B,80,44)		CKSRYB104K16
C	768	(B,82,44)		CCSRCH471J50
C	771	(A,62,60)		CKSQYB105K16
C	773	(A,55,60)		CKSRYB104K16
C	781	(A,44,17)		CCSRCH471J50
C	782	(A,45,19)		CKSRYB104K16
C	783	(A,49,19)		CEJQ470M16
C	784	(A,45,16)		CKSRYB104K16
C	786	(A,55,16)		CEJQ100M16
C	788	(A,42,18)		CKSRYB104K16
C	789	(A,77,26)		CKSRYB102K50
C	790	(A,79,25)		CKSRYB102K50
C	791	(A,75,31)		CEJQ100M16
C	792	(A,81,31)		CEJQ100M16
C	951	(A,58,27)		CCSRCH471J50
C	952	(A,59,27)		CKSRYB105K10
C	956	(A,70,34)		CKSQYB105K10
C	957	(A,70,33)		CCSRCH471J50

X USB IN ASSY (VSX-516/MYXJ5, MVXJ5)

MISCELLANEOUS

IC	951	(B,55,57)	OP-AMP IC	HA17558AF
D	951	(B,73,69)	DIODE	UDZS5R1(B)
D	952	(A,38,107)	DIODE	UDZS5R1(B)
D	953	(A,36,107)	DIODE	UDZS5R1(B)
D	957	(B,57,67)	DIODE	DAN217U
L	970	(A,60,38)	COIL	ATH7015
JA	952	(A,78,58)	JACK	RKN1004
JA	953	(A,79,38)	USB CONNECTOR	XKP3086
KN	951	(A,46,34)	WRAPPING TERMINAL	VNF1084
CN	952	(A,46,104)	CONNECTOR	CKS3370
CN	953	(A,40,51)	CONNECTOR	B4B-PH

RESISTORS

R	953	(A,38,72)		RS1/16S682J
R	954	(A,54,61)		RS1/16S101J
R	955	(A,50,67)		RS1/16S104J
R	956	(B,65,53)		RS1/16S102J
R	957	(B,57,69)		RS1/16S104J
R	958	(B,63,53)		RS1/16S104J
R	959	(B,63,59)		RS1/16S333J
R	960	(B,56,64)		RS1/16S472J
R	961	(B,59,57)		RS1/16S101J
R	962	(B,41,63)		RS1/16S101J
R	963	(A,37,81)		RS1/16S104J
R	966	(B,51,63)		RS1/16S472J
R	967	(B,45,63)		RS1/16S333J
R	972	(A,48,70)		RS1/16S102J
R	973	(A,46,73)		RS1/16S0R0J
R	974	(A,35,106)		RS1/16S0R0J
R	975	(A,33,106)		RS1/16S0R0J
R	979	(B,61,33)		RS1/16S0R0J
R	980	(B,61,42)		RS1/16S0R0J

CAPACITORS

C	952	(B,35,59)		CKSRYB103K50
C	953	(B,33,59)		CKSRYB104K16
C	956	(A,43,68)	CHIP ELECT.CAPACITOR	CEVW100M50
C	957	(A,51,67)		CKSRYB103K50
C	958	(A,43,79)	CHIP ELECT.CAPACITOR	CEVW100M50
C	959	(A,48,67)		CKSRYB471K50
C	960	(A,56,68)		CCSRCH101J50
C	962	(A,39,81)		CKSRYB103K50
C	963	(A,34,99)	CHIP ELECT.CAPACITOR	CEVW100M50
C	964	(B,43,63)		CCSRCH330J50
C	965	(B,63,61)		CCSRCH330J50
C	967	(A,35,67)	CHIP ELECT.CAPACITOR	CEVW100M50
C	968	(A,32,79)	CHIP ELECT.CAPACITOR	CEVW100M50
C	969	(B,60,47)		CKSRYB104K16
C	970	(A,50,46)		CEVW101M16

Y FM/AM TUNER UNIT

FM/AM TUNER UNIT has no service part.

6. ADJUSTMENT

There is no information to be shown in this chapter.

7. GENERAL INFORMATION

7.1 DIAGNOSIS

7.1.1 DISASSEMBLY

Note: Even if the unit shown in the photos and illustrations in this manual may differ from your product, the procedures described here are common.

① Remove the top cover (five screws).

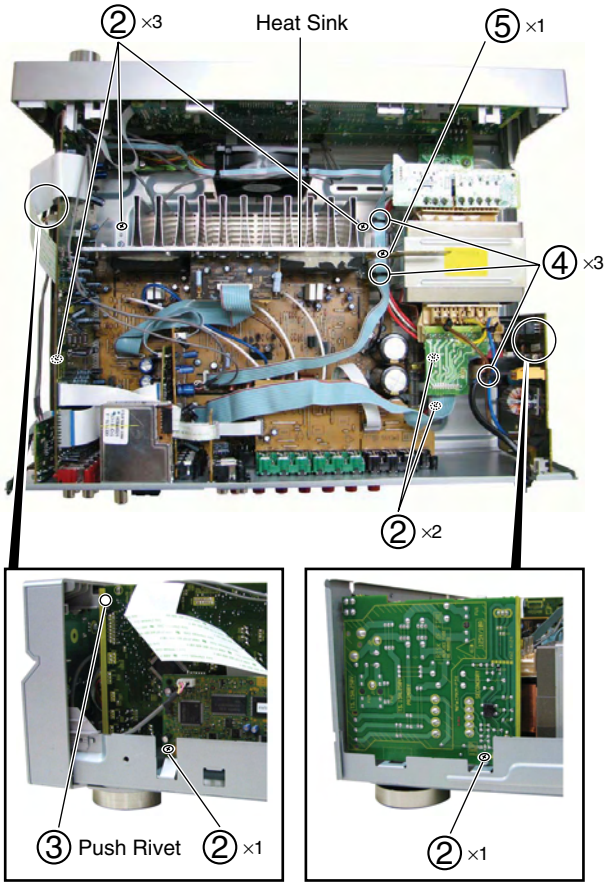

④ Cut 3 cable ties.

⑤ Remove PCB holder(one screw).

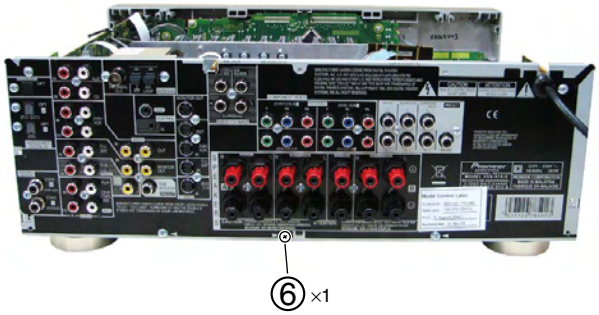

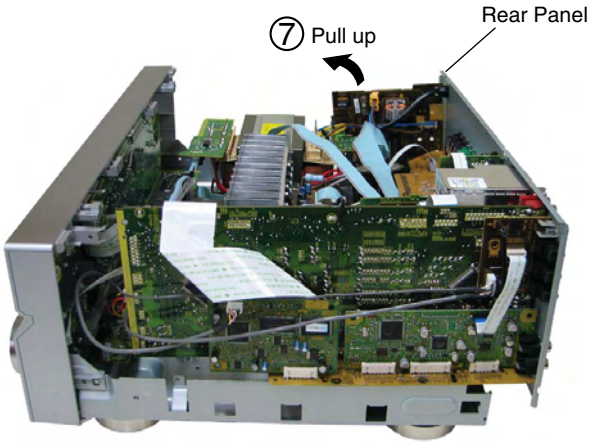

Note : The unit does not operate when the screws of Speaker Terminal are taken off from Rear Panel.

Heat-sink caution when disassembling : The Heat-sink becomes hot; please take care.

Note: Even if the unit shown in the photos and illustrations in this manual may differ from your product, the procedures described here are common.

⑧ Diagnosis

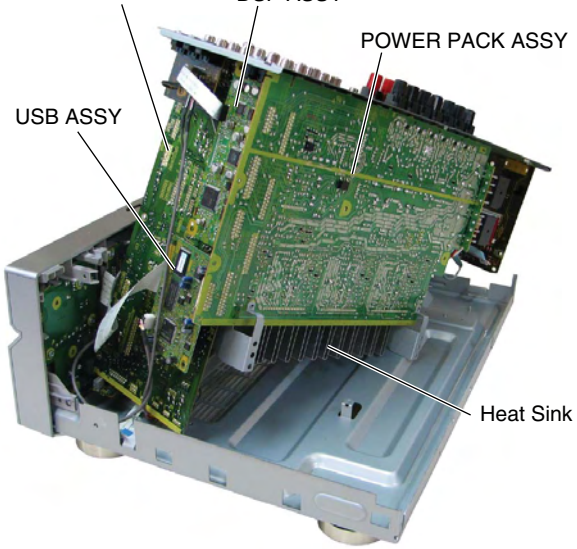

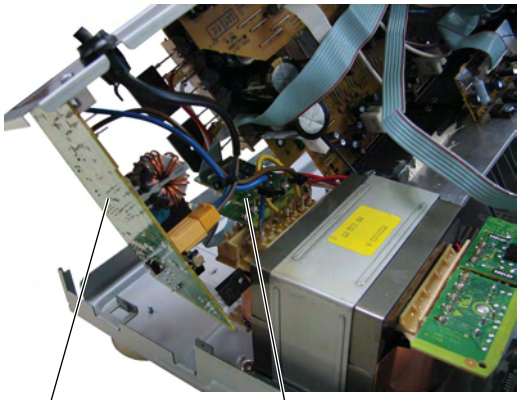

Be careful that no parts on the Primary Assy are touching the chassis.

When lifting up the Amplifier Assy, be careful not to damage this TRANS Assy.

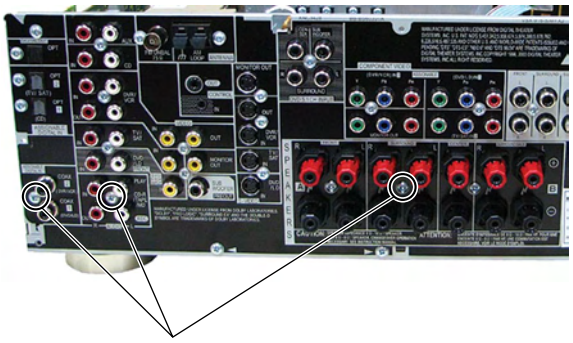

CAUTION:
These 3 screws in the rear panel should be tightened at all times.
They have to be connected to the chassis, otherwise the unit may not work properly.

Note : The unit does not operate when the screws of Speaker Terminal are taken off from Rear Panel.

Heat-sink caution when disassembling : The Heat-sink becomes hot; please take care.

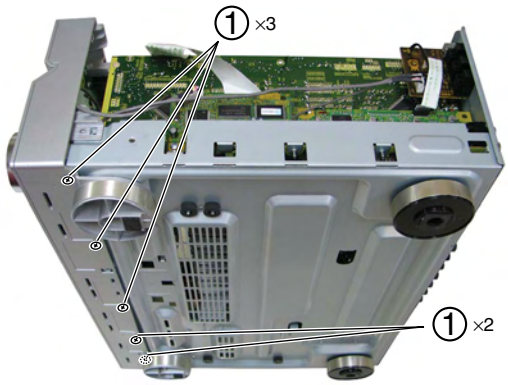

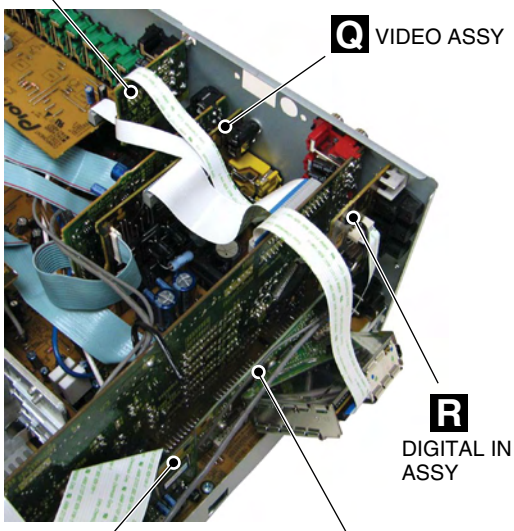

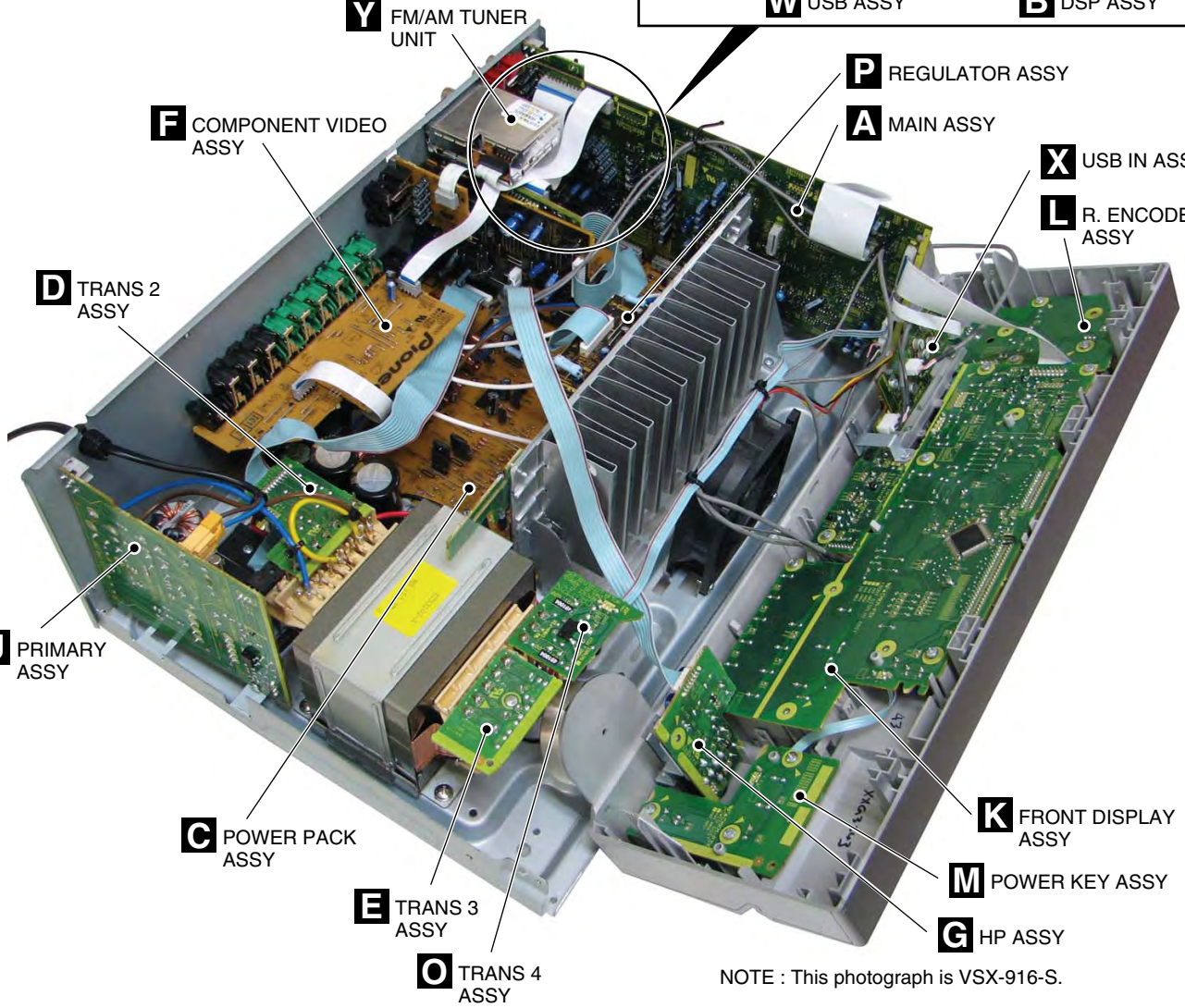

NOTE : This photograph is VSX-916-S.

7.2 PARTS

7.2.1 IC

- The information shown in the list is basic information and may not correspond exactly to that shown in the schematic diagrams.

• List of IC

PEG217A, PE5550A, NJM2595M, R2S15205FP, STK413-230C, TCC760HC01-AG, AAT4618IGV-0.5-1

■ PEG217A (MAIN ASSY : IC9001)

• System Control MCU

■ Pin Arrangement (Top View)

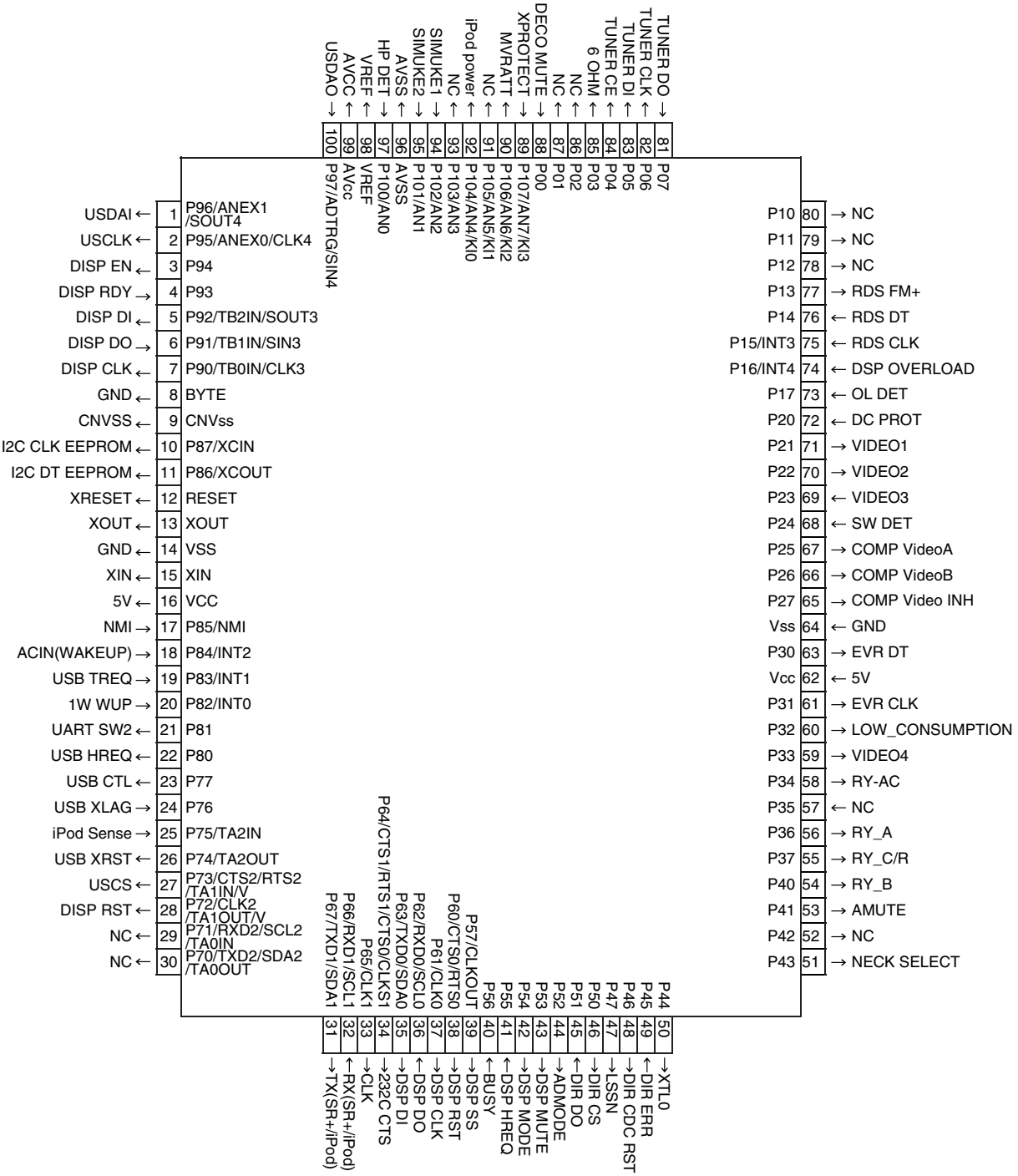

• Pin Function

No.	Port	Pin Name	I/O	Pin Function
1	P96/ANEX1/SOUT4	USDAI	I/O	Data out to USB
2	P95/ANEX0/CLK4	USCLK	I/O	Clock signal from USB
3	P94	DISP EN	I/O	Enable signal to display u-com
4	P93	DISP RDY	I/O	Ready signal from display u-com
5	P92/TB2IN/SOUT3	DISP DI	I/O	Data out to display u-com
6	P91/TB1IN/SIN3	DISP DO	I/O	Data in from display u-com
7	P90/TB0IN/CLK3	DISP CLK	I/O	Clock signal to display u-com
8	BYTE	GND		
9	CNVss	CNVSS		
10	P87/XCIN	I2C CK	I/O	Clock for I2C communication with EEPROM IC
11	P86/XCOUT	I2C DT	I/O	Data for I2C communication with EEPROM IC
12	RESET	XRESET		
13	XOUT	XOUT		
14	VSS	GND		
15	XIN	XIN		
16	VCC	5V		
17	P85/NMI	NMI	I	No use
18	P84/INT2	ACIN(WAKEUP)	I/O	AC pulse in
19	P83/INT1	USB TREQ	I/O	Request from TCC760 to main u-com
20	P82/INT0	1W WUP	I/O	wake up signal from display u-com
21	P81	UART SW2	I/O	L:SR + route and H:iPod or XM route are selected.
22	P80	USB HREQ	I/O	Request from main u-com to TCC760
23	P77	USB CTL	I/O	From main u-com to USB power switch IC
24	P76	USB XFLAG	I/O	From USB power switch IC to main u-com
25	P75/TA2IN	iPod Sense	I/O	iPod Sense
26	P74/TA2OUT	USB XRST	I/O	reset signal to USB
27	P73/CTS2/RTS2/TA1IN/V	USCS	I/O	From main u-com to TCC760
28	P72/CLK2/TA1OUT/V	DISP RST	I/O	reset signal to display u-com
29	P71/RXD2/SCL2/TA0IN	NC	I/O	
30	P70/TXD2/SDA2/TA0OUT	NC	I/O	
31	P67/TXD1/SDA1	TXD(SR+/iPod)	I/O	SR+/iPod communication
32	P66/RxD/SCL1	RXD(SR+/iPod)	I/O	SR+/iPod communication
33	P65/CLK1	CLK	I/O	It is necessary when writing for JIG
34	P64/CTS1/RTS1/CTSO0/CLKS1	232C CTS	I/O	For rewriting 232C (Admit communication)
35	P63/TXD0/SDA0	DSP DI	I/O	Data output signal for communication with DSP and DIR
36	P62/RxD0/SCL0	DSP DO	I/O	Data input signal for communication with DSP
37	P61/CLK0	DSP CLK	I/O	Clock signal for communication with DSP and DIR
38	P60/CTS0/RTS0	DSP RST	I/O	Reset signal for DSP
39	P57/CLKOUT	DSP SS	I/O	Strobe select signal to DSP
40	P56	BUSY	I/O	Use it in MCACC
41	P55	DSP HREQ	I/O	DSP error detect signal
42	P54	DSP MODE	I/O	Mode select of DSP (ROM/RAM)
43	P53	DSP MUTE	I/O	DSP ASSY mute
44	P52	ADMODE	I/O	DSP ASSY
45	P51	DIR DO	I/O	Data input signal for communication with DIR/DAC
46	P50	DIR CS	I/O	Chip select signal for communication with DIR/DAC
47	P47	LSSN	I/O	DSP ASSY
48	P46	DIR CDC RST	I/O	Reset signal for DIR CODEC
49	P45	DIR ERR	I/O	lock/unlock signal
50	P44	XTL0	I/O	DIR X'tal change

• Pin Function

No.	Port	Pin Name	I/O	Pin Function
51	P43	NECK_SEL	I/O	For 8ohm spk impedance: "H at Adv Surr,Standard,5.1Multich,speaker A+B(7ch model). For 6 ohm spk impedance: L
52	P42	NC	I/O	
53	P41	AMUTE	I/O	System mute
54	P40	RY_B	I/O	Speaker B relay-on / OFF at 916, 816 and 516. This RY_B is used for SW relay at 316.
55	P37	RY_C/R	I/O	Rear one / center relay-on / OFF
56	P36	RY_A	I/O	Speaker A relay-on / OFF
57	P35	NC	I/O	
58	P34	RY-AC	I/O	AC relay on/off
59	P33	VIDEO4	I/O	NJM2296 control (VIDEO input select) (SX316 no connect)
60	P32	LOW_CONSUMPTION	I/O	When 1 minutes passed after power off and then go into stop mode and port L, else H.
61	P31	EVR CLK	I/O	Clock signal for Function and E-volume
62	Vcc	5V		
63	P30	EVR DT	I/O	Data signal for Function and E-volume
64	Vss	GND		
65	P27	COMP VIDEO INH	I/O	Component terminal control
66	P26	COMP VideoB	I/O	Component terminal control
67	P25	COMP VideoA	I/O	Component terminal control
68	P24	SWDET	I/O	"H": SW YES, "L": SW NO(SX316 no connect)
69	P23	VIDEO3	I/O	NJM2296 control (VIDEO input select) (SX316 no connect)
70	P22	VIDEO2	I/O	NJM2296 control (VIDEO input select) (SX316 no connect)
71	P21	VIDEO1	I/O	NJM2296 control (VIDEO input select) (SX316 no connect)
72	P20	DC PROTECT	I/O	Amplifier DC detection. H:Normal, L:Abnormal
73	P17	OL DET	I/O	Amplifier overload detection. H:Normal, L:Abnormal
74	P16/INT4	DSP OL	I/O	ANALOG OVER LOAD detect (H : detect)
75	P15/INT3	RDS CLK	I/O	RDS clock in signal
76	P14	RDS DT	I/O	RDS data in signal
77	P13	RDS FM+	I/O	RDS power supply. FM: Low, AM:High
78	P12	NC	I/O	
79	P11	NC	I/O	
80	P10	NC	I/O	
81	P07	TUNER DO	I/O	Data input signal for tuner contorol
82	P06	TUNER CLK	I/O	Clock signal for tuner contorol
83	P05	TUNER DI	I/O	Data output signal for tuner contorol
84	P04	TUNER CE	I/O	Chip select signal for tuner contorol
85	P03	6 OHM	I/O	if stop mode, port L, else according to setting (J model No connect)
86	P02	NC	I/O	
87	P01	NC	I/O	
88	P00	DECO MUTE	I/O	1st DSP detect port
89	P107/AN7/KI3	XPROTECT	I/O	Power supply abnormal condition detection. H: Normal, L: Abnormal.
90	P106/AN6/KI2	MVRATT	I/O	Master volume ATT control (-15dB or less : L)
91	P105/AN5/KI1	NC	I/O	
92	P104/AN4/KI0	iPod POW	I/O	IPod power supply. H always. When abnormally detecting it, it makes it to L.
93	P103/AN3	NC	I/O	
94	P102/AN2	SIMUKE1	I/O	Input 1 to switch region
95	P101/AN1	SIMUKE2	I/O	Input 2 to switch region
96	AVSS	AVSS		connects with VCC.
97	P100/AN0	HP DET	I/O	HP detection H:detected.
98	VREF	VREF		connects with VCC.
99	AVcc	AVCC		connects with VCC.
100	P97/ADTRG/SIN4	USDAO	I/O	data input from USB

■ PE5550A (FRONT DISPLAY ASSY : IC401)

- **System Control MCU**

■ Pin Arrangement (Top View)

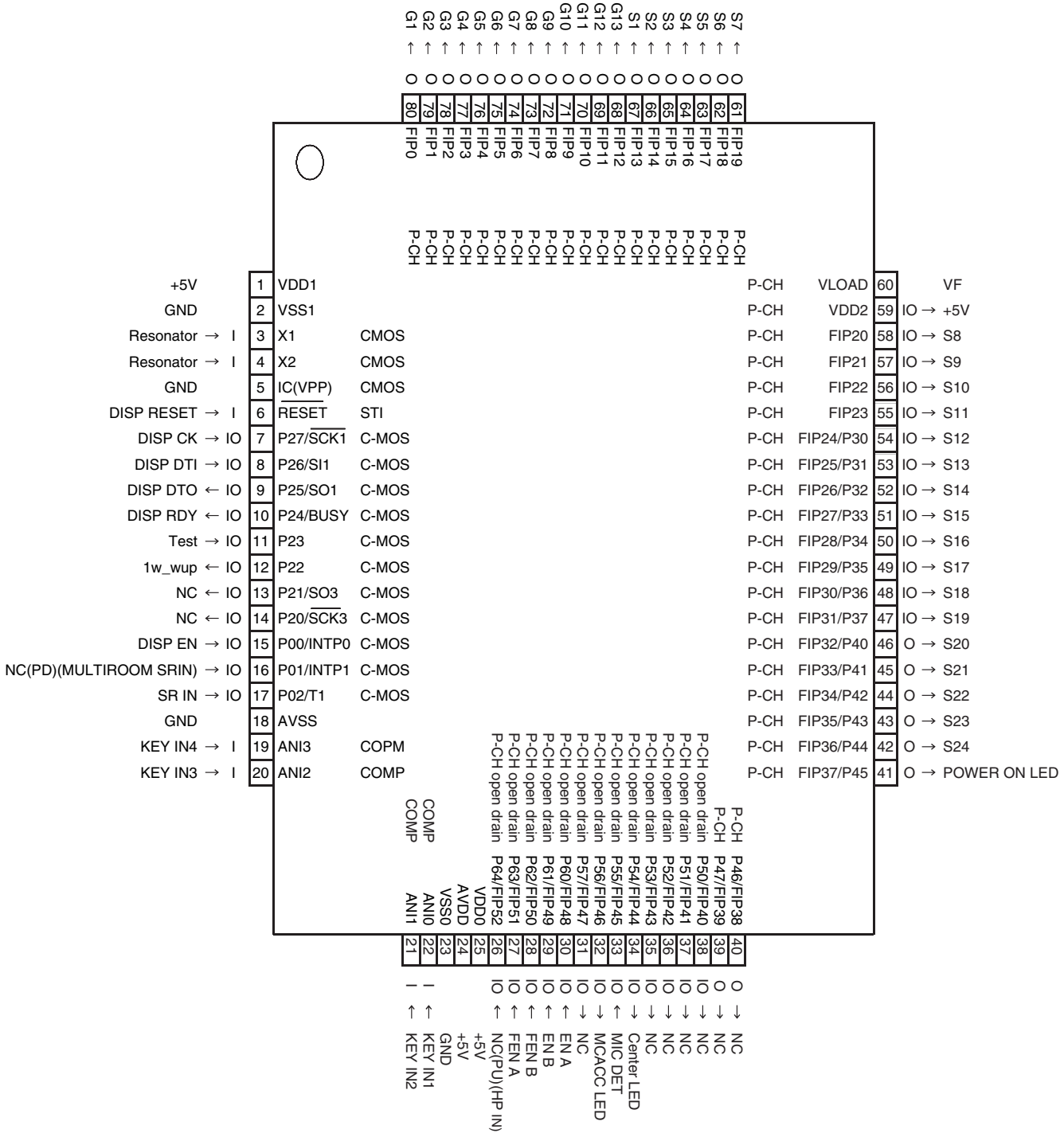

• Pin Function

No.	Port	Pin Name	I/O	Pin Function
1	VDD1	+5V	-	positive power supply
2	VSS1	GND	-	ground potential
3	X1	Resonator	I	crystal connection for system clock oscillation
4	X2	Resonator	-	crystal connection for system clock oscillation
5	IC(VPP)	GND	-	
6	RESET	DISP RESET	I	receive reset signal from main u-com
7	P27/SCK1	DISP CK	I/O	clock signal from main u-com
8	P26/SI1	DISP DTI	I/O	datain from main u-com
9	P25/SO1	DISP DTO	I/O	data out to main u-com
10	P24/BUSY	DISP RDY	I/O	ready signal from main u-com
11	P23	Test	I/O	test mode input for checker
12	P22	1w_wup	I/O	output wakeup signal to main u-com
13	P21/SO3	NC	I/O	
14	P20/SCK3	NC	I/O	
15	P00/INTP0	DISP EN	I/O	enable signal from main u-com
16	P01/INTP1	NC	I/O	
17	P02/T1	SR IN	I/O	remote control signal input from main room
18	AVSS	GND	-	ground potential for A/D converter
19	ANI3	KEY IN4	I	
20	ANI2	KEY IN3	I	
21	ANI1	KEY IN2	I	
22	ANI0	KEY IN1	I	
23	VSS0	GND	-	ground potential for ports
24	AVDD	+5V	-	analog power voltage input to A/D converter
25	VDD0	+5V	-	positive power supply to ports
26	P64/FIP52	NC	I/O	
27	P63/FIP51	FEN A	I/O	MULTI JOG(Right)
28	P62/FIP50	FEN B	I/O	MULTI JOG(Left)
29	P61/FIP49	EN B	I/O	VOLUME JOG1(-)
30	P60/FIP48	EN A	I/O	VOLUME JOG1(+)
31	P57/FIP47	NC	I/O	NC
32	P56/FIP46	MCACC LED	I/O	MCACC LED output
33	P55/FIP45	MIC DET	I/O	MIC detection. L:detected, H:No detect
34	P54/FIP44	Center LED	I/O	Digital Precision Processing LED. H:ON, L:OFF. Only for 816KU, 816SF, 916MY, 516J
35	P53/FIP43	NC	I/O	NC
36	P52/FIP42	NC	I/O	NC
37	P51/FIP41	NC	I/O	NC
38	P50/FIP40	NC	I/O	NC
39	P47/FIP39	NC	O	NC
40	P46/FIP38	NC	O	NC
41	FIP37/P45	POWER ON LED	I/O	POWER LED output
42	FIP36/P44	S24	O	Display
43	FIP35/P43	S23	O	Display
44	FIP34/P42	S22	O	Display
45	FIP33/P41	S21	O	Display
46	FIP32/P40	S20	O	Display
47	FIP31/P37	S19	O	Display
48	FIP30/P36	S18	O	Display
49	FIP29/P35	S17	O	Display
50	FIP28/P34	S16	O	Display

• Pin Function

No.	Port	Pin Name	I/O	Pin Function
51	FIP27/P33	S15	O	Display
52	FIP26/P32	S14	O	Display
53	FIP25/P31	S13	O	Display
54	FIP24/P30	S12	O	Display
55	FIP23	S11	O	Display
56	FIP22	S10	O	Display
57	FIP21	S9	O	Display
58	FIP20	S8	O	Display
59	VDD2	+5V	-	positive power supply to FIP controller.
60	VLOAD	VF	-	pull down resistor connection of FIP controller
61	FIP19	S7	O	Display
62	FIP18	S6	O	Display
63	FIP17	S5	O	Display
64	FIP16	S4	O	Display
65	FIP15	S3	O	Display
66	FIP14	S2	O	Display
67	FIP13	S1	O	Display
68	FIP12	G13	O	Display
69	FIP11	G12	O	Display
70	FIP10	G11	O	Display
71	FIP9	G10	O	Display
72	FIP8	G9	O	Display
73	FIP7	G8	O	Display
74	FIP6	G7	O	Display
75	FIP5	G6	O	Display
76	FIP4	G5	O	Display
77	FIP3	G4	O	Display
78	FIP2	G3	O	Display
79	FIP1	G2	O	Display
80	FIP0	G1	O	Display

■ NJM2595M (VIDEO ASSY : IC301) (S. VIDEO ASSY : IC351, IC352)

• 5-INPUT 3-OUTPUT VIDEO SWITCH

● Pin Configuration (Top view)

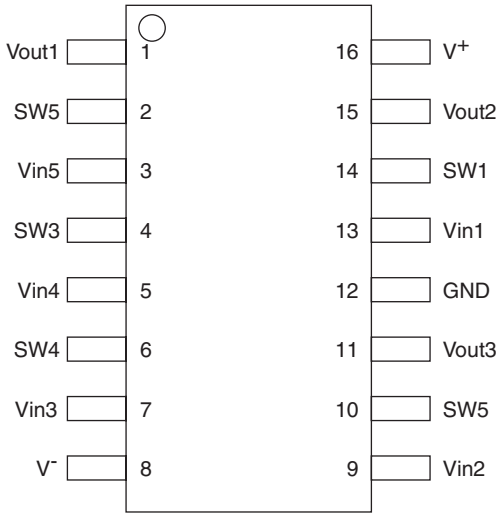

● Block Diagram

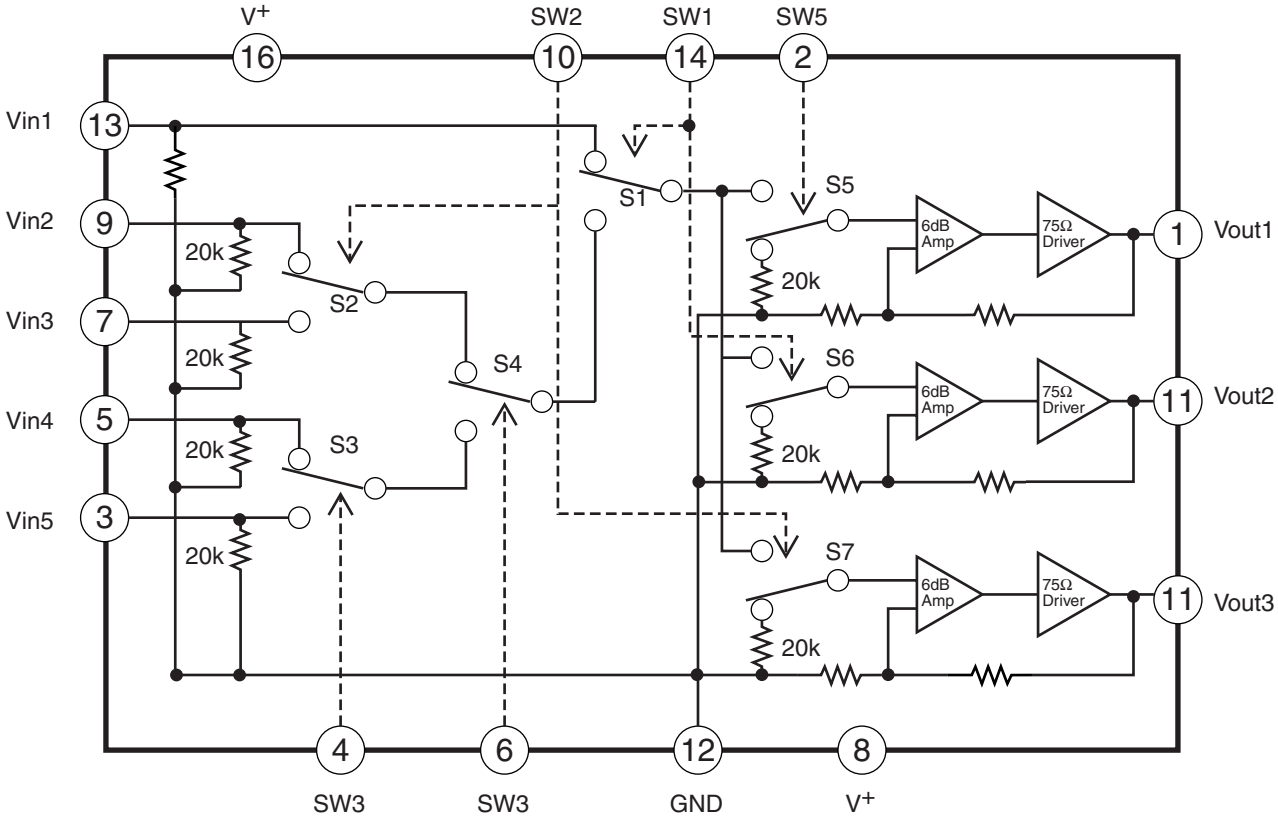

■ R2S15205FP (MAIN ASSY : IC108)

• 8ch electronic volume with 11 input selectors and tone control

● Block Diagram

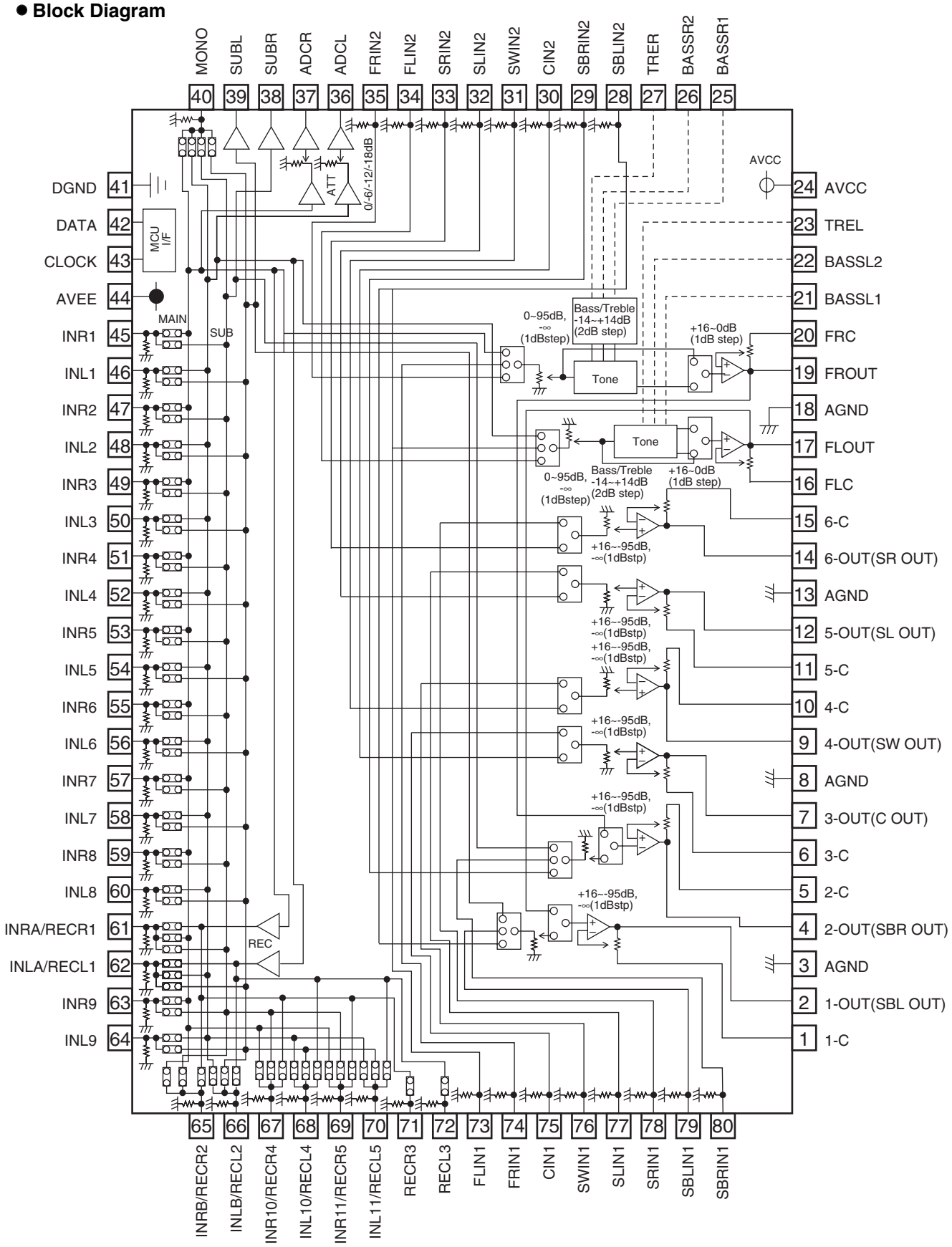

A

● Pin Function

PIN No.	Name	Function
19,17, 14,12, 9,7, 4,2	FROUT,FLOUT, 6-OUT,5-OUT, 4-OUT,3-OUT, 2-OUT,1-OUT	Output pin of FL/FR/C/SW/SL/SR/SBL/SBR channel
20,16, 15,11, 10,6, 5,1	FRC,FLC, 6-C,5-C, 4-C,3-C, 2-C,1-C	Connects capacitor for reducing click noise of L/R/C/SW/SL/SR/SBL/SBR channel volume
3,8, 13,18	AGND	Analog ground of internal circuit
23,27	TREL,TRER	Frequency characteristic setting pin of L/R channel tone control(Treble)
21,22, 25,26	BASSL1,BASSL2, BASSR1,BASSR2,	Frequency characteristic setting pin of L/R channel tone control(Bass)
24	AVCC	Positive power supply to internal circuit
35,34, 33,32, 31,30, 29,28	FRIN2,FLIN2, SRN2,SLIN2, SWN2,CIN2, SBRIN2,SBLIN2,	Input pin of L/R/C/SW/SL/SR/SBL/SBR channel(Multi IN 1/2)
73,74, 75,76, 77,78, 79,80	FLIN1,FRIN1, CIN1,SWIN1, SLIN1SRIN1, SBLIN1,SBRIN1	
41	DGND	Digital ground of internal circuit
42	DATA	Input pin of control data
43	CLOCK	Input pin of control clock
44	AVEE	Negative power supply to internal circuit
46,48,50, 52,54,56, 58,60,64	INL1,INL2,INL3, INL4,INL5,INL6, INL7,INL8,INL9	Input pin of L/R channel(Input Selector)
45,47,49, 51,53,55, 57,59,63	INR1,INR2,INR3, INR4,INR5,INR6, INR7,INR8,INR9	
40	MONO	Input pin of monaural(Input Selector)
38,39	SUBL,SUBR	Output pin for L/R channel SUB Output
36,37	ADCL,ADCR	Output pin for L/R channel ADC
72	RECL3	Output pin for L/R channel REC Output
71	RECR3	
61,62, 65,66, 67,68, 69,70	INRA/RECR1,INLA/RECL1, INRB/RECR2,INLB/RECL2, INR10/RECR4,INL10/RECL4, INR11/RECR5,INL11/RECL5,	Input pin of L/R channel(Input Selector)/ Output pin for L/R channel REC Output

B

C

D

E

F

■ STK413-230C (POWER PACK ASSY : IC603)

• 3-channel high efficiency AF power amplifier

● **Pin Configuration**

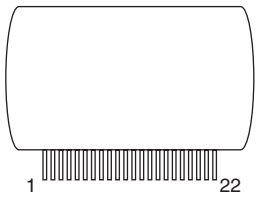

● **Block Diagram**

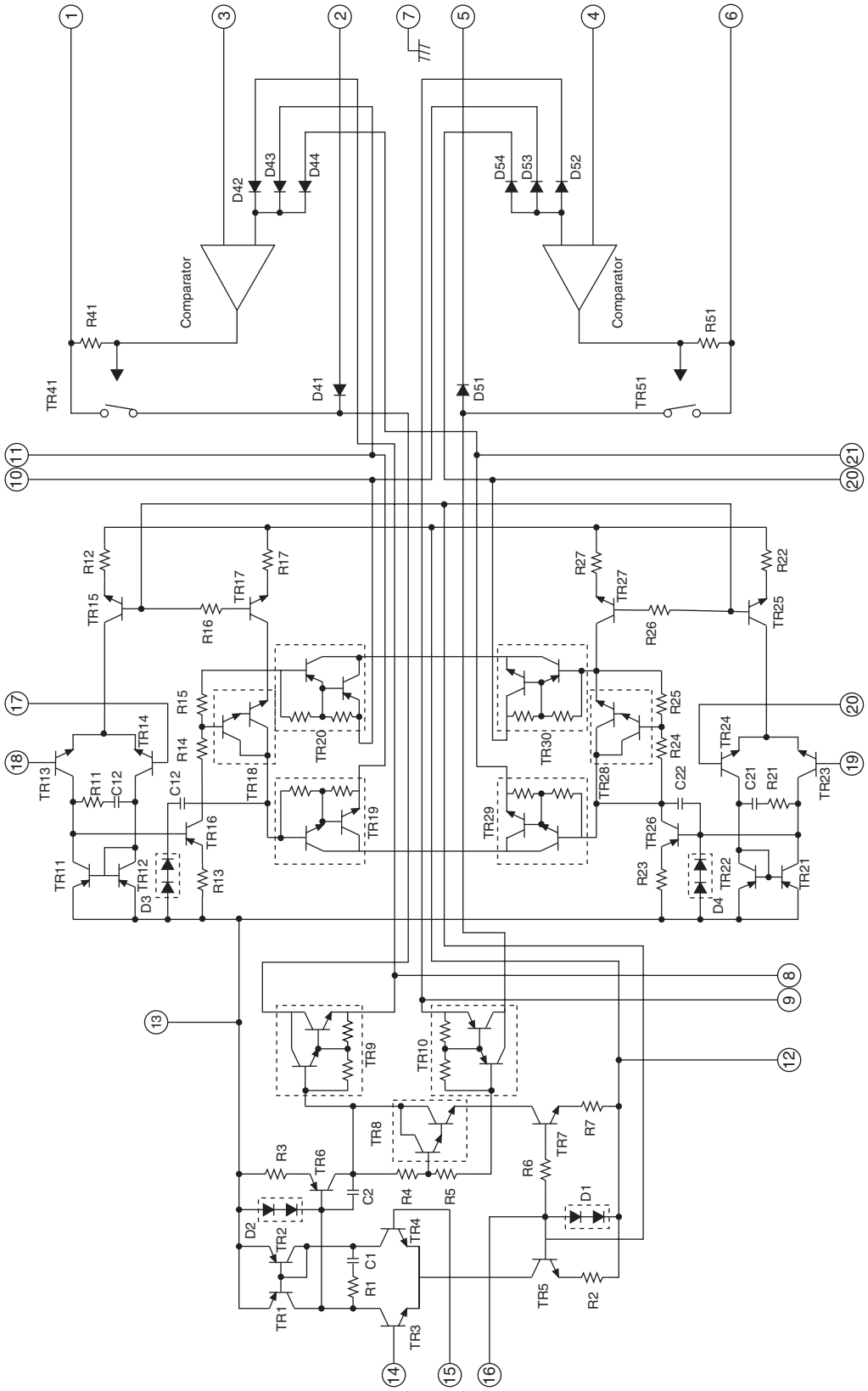

■ TCC760HC01-AG (USB ASSY : IC701)

• USB Media Control IC

● Pin Arrangement (Top view)

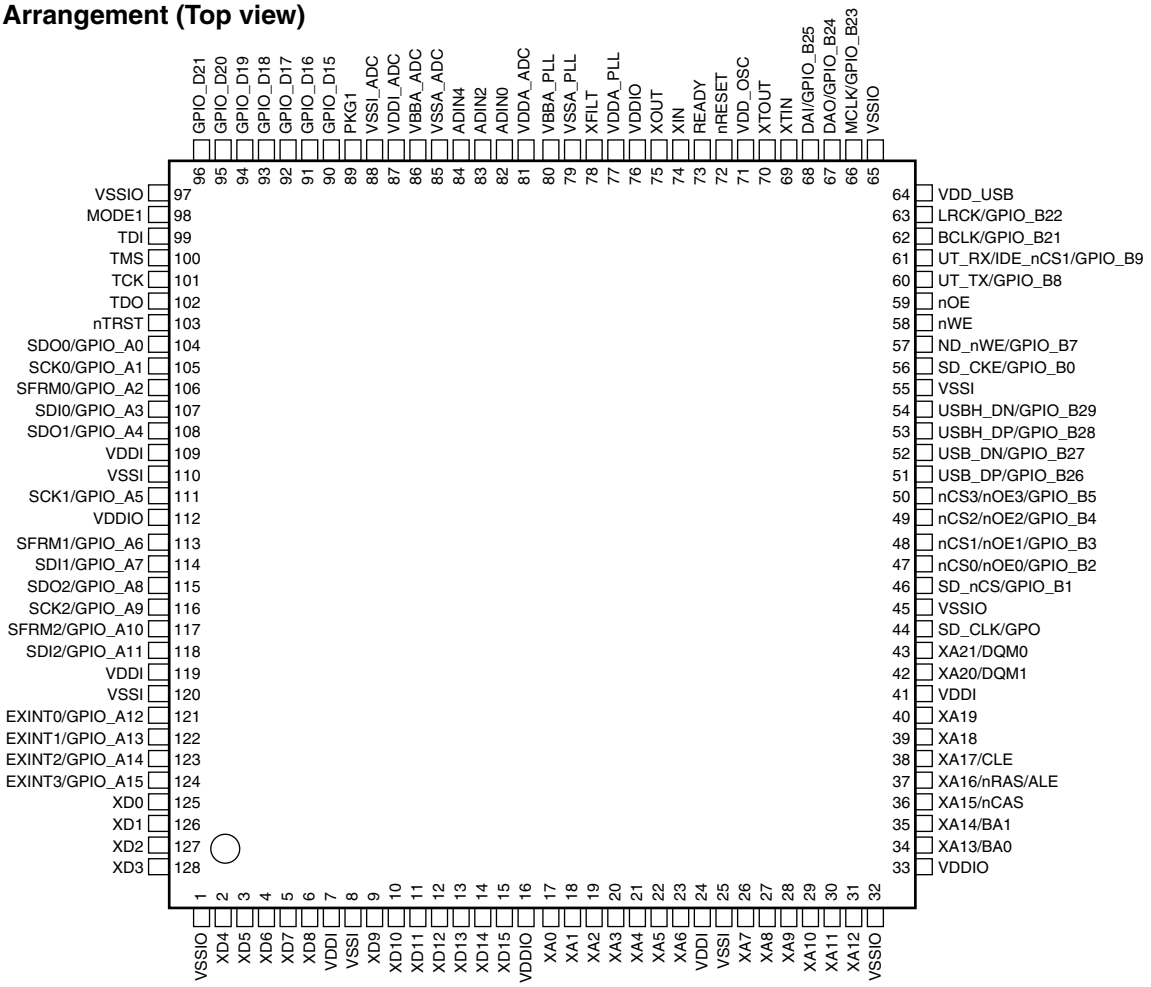

● Block Diagram

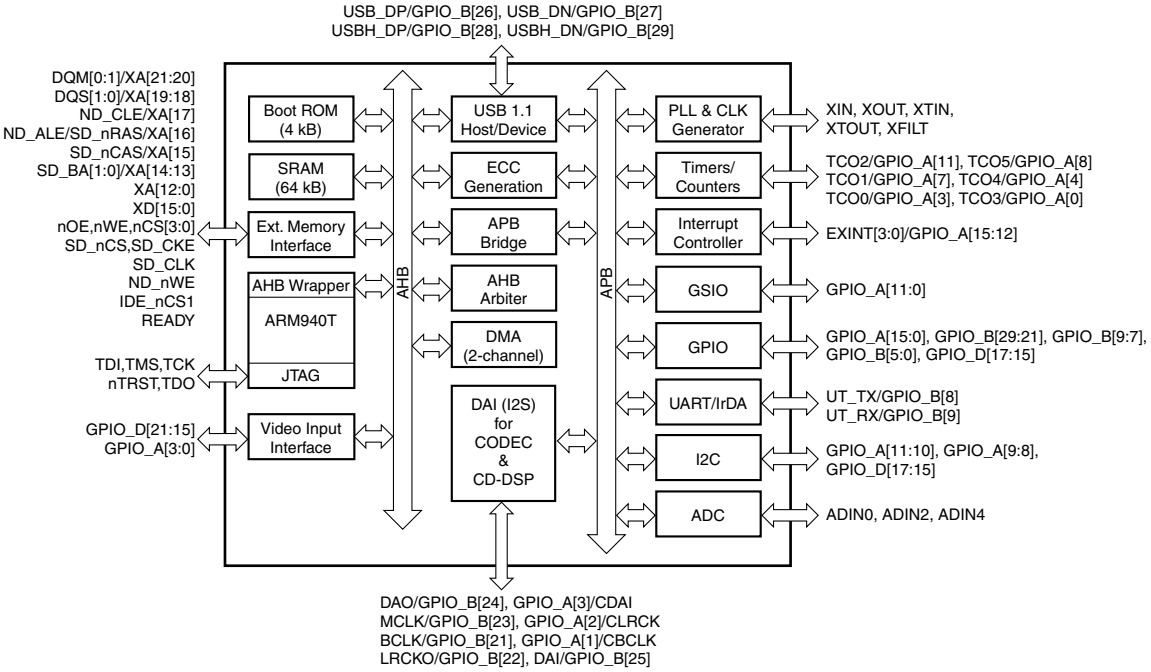

● Pin Functions

No.	Pin Name	I/O	Pin Function
1	VSSIO	–	Digital ground for I/O
2	XD4	I/O	External bus data bit [4]
3	XD5	I/O	External bus data bit [5]
4	XD6	I/O	External bus data bit [6]
5	XD7	I/O	External bus data bit [7]
6	XD8	I/O	External bus data bit [8]
7	VDDI	–	Digital power supply for internal core (1.8 V)
8	VSSI	–	Digital ground for internal
9	XD9	I/O	External bus data bit [9]
10	XD10	I/O	External bus data bit [10]
11	XD11	I/O	External bus data bit [11]
12	XD12	I/O	External bus data bit [12]
13	XD13	I/O	External bus data bit [13]
14	XD14	I/O	External bus data bit [14]
15	XD15	I/O	External bus data bit [15]
16	VDDIO	–	Digital power supply for I/O (1.8 V to 3.3 V)
17	XA0	I/O	External bus address bit [0]
18	XA1	I/O	External bus address bit [1]
19	XA2	I/O	External bus address bit [2]
20	XA3	I/O	External bus address bit [3]
21	XA4	I/O	External bus address bit [4]
22	XA5	I/O	External bus address bit [5]
23	XA6	I/O	External bus address bit [6]
24	VDDI	–	Digital power supply for internal core (1.8 V)
25	VSSI	–	Digital ground for internal
26	XA7	I/O	External bus address bit [7]
27	XA8	I/O	External bus address bit [8]
28	XA9	I/O	External bus address bit [9]
29	XA10	I/O	External bus address bit [10]
30	XA11	I/O	External bus address bit [11]
31	XA12	I/O	External bus address bit [12]
32	VSSIO	–	Digital ground for I/O
33	VDDIO	–	Digital power supply for I/O (1.8 V to 3.3 V)
34	XA13/BA0	I/O	External bus address bit [13] / SDRAM bank address 0
35	XA14/BA1	I/O	External bus address bit [14] / SDRAM bank address 1
36	XA15/nCAS	I/O	External bus address bit [15] / SDRAM CAS signal
37	XA16/nRAS/ALE	I/O	External bus address bit [16] / SDRAM RAS signal / ALE for NAND flash
38	XA17/CLE	I/O	External bus address bit [17] / CLE for NAND flash
39	XA18	I/O	External bus address bit [18]
40	XA19	I/O	External bus address bit [19]
41	VDDI	–	Digital power supply for internal core (1.8 V)
42	XA20/DQM1	I/O	External bus address bit [20] / Data I/O mask 1
43	XA21/DQM0	I/O	External bus address bit [21] / Data I/O mask 0
44	SD_CLK/GPO	I/O	SDRAM clock / GPO, SD_CLK can be used as a general purpose output.
45	VSSIO	–	Digital ground for I/O
46	SD_nCS/GPIO_B1	I/O	Chip select signal for SDRAM, active low / GPIO_B[1]
47	nCS0/nOE0/GPIO_B2	I/O	External bus chip select [0] / NAND flash output enable [0] / GPIO_B[2]
48	nCS1/nOE1/GPIO_B3	I/O	External bus chip select [1] / NAND flash output enable [1] / GPIO_B[3]
49	nCS2/nOE2/GPIO_B4	I/O	External bus chip select [2] / NAND flash output enable [2] / GPIO_B[4]
50	nCS3/nOE3/GPIO_B5	I/O	External bus chip select [3] / NAND flash output enable [3] / GPIO_B[5]

No.	Pin Name	I/O	Pin Function
51	USB_DP/GPIO_B26	I/O	USB function D+ signal / GPIO_B[26]
52	USB_DN/GPIO_B27	I/O	USB function D- signal / GPIO_B[27]
53	USBH_DP/GPIO_B28	I/O	USB host D+ signal / GPIO_B[28]
54	USBH_DN/GPIO_B29	I/O	USB host D- signal / GPIO_B[29]
55	VSSI	–	Digital ground for internal
56	SD_CKE/GPIO_B0	I/O	SDRAM clock enable signal, active high / GPIO_B[0]
57	ND_nWE/GPIO_B7	I/O	NAND flash WE, active low / GPIO_B[7]
58	nWE	I/O	Static memory write enable signal, active low
59	nOE	I/O	Static memory output enable signal, active low
60	UT_TX/GPIO_B8	I/O	UART or IrDA TX data / GPIO_B[8]
61	UT_RX/IDE_nCS1/GPIO_B9	I/O	UART or IrDA RX data / IDE chip select 1 / GPIO_B[9]
62	BCLK/GPIO_B21	I/O	I2S bit clock / GPIO_B[21]
63	LRCK/GPIO_B22	I/O	I2S word clock / GPIO_B[22]
64	VDD_USB	–	Power supply for USB I/O (3.3 V)
65	VSSIO	–	Digital ground for I/O
66	MCLK/GPIO_B23	I/O	I2S system clock / GPIO_B[23]
67	DAO/GPIO_B24	I/O	I2S digital audio data output / GPIO_B[24]
68	DAI/GPIO_B25	I/O	I2S digital audio data input / GPIO_B[25]
69	XTIN	I	Sub crystal oscillator input (32.768 kHz)
70	XTOUT	O	Sub crystal oscillator output (32.768 kHz)
71	VDD_OSC	–	Digital power supply for oscillators (1.8 V)
72	nRESET	I	System reset, active low
73	READY	I	Ready information from external device
74	XIN	I	Main crystal oscillator input for PLL (12 MHz)
75	XOUT	O	Main crystal oscillator output for PLL (12 MHz)
76	VDDIO	–	Digital power supply for I/O (1.8 V to 3.3 V)
77	VDDA_PLL	–	Analog and digital power supply for PLL (1.8 V)
78	XFILT	AO	PLL filter output
79	VSSA_PLL	–	Analog ground for PLL
80	VBBA_PLL	–	Analog ground for PLL
81	VDDA_ADC	–	Analog power supply for ADC (3.3 V)
82	ADIN0	AI	General purpose multi-channel ADC input 0
83	ADIN2	AI	General purpose multi-channel ADC input 2
84	ADIN4	AI	General purpose multi-channel ADC input 4
85	VSSA_ADC	–	Analog ground for ADC
86	VBBA_ADC	–	Analog ground for ADC
87	VDDI_ADC	–	Digital power supply for ADC (1.8 V)
88	VSSI_ADC	–	Digital ground for ADC
89	PKG1	I	Package ID 1, pull-up for normal operation
90	GPIO_D15	I/O	GPIO_D[15]
91	GPIO_D16	I/O	GPIO_D[16]
92	GPIO_D17	I/O	GPIO_D[17]
93	GPIO_D18	I/O	GPIO_D[18]
94	GPIO_D19	I/O	GPIO_D[19]
95	GPIO_D20	I/O	GPIO_D[20]
96	GPIO_D21	I/O	GPIO_D[21]
97	VSSIO	–	Digital ground for I/O
98	MODE1	I	Mode select input 1, Pull-down for normal operation.
99	TDI	I	JTAG serial data input for ARM940T
100	TMS	I	JTAG test mode select for ARM940T

No.	Pin Name	I/O	Pin Function
101	TCK	I	JTAG test clock for ARM940T
102	TDO	I/O	JTAG serial data output for ARM940T
103	nTRST	I	JTAG reset signal for ARM940T, active low
104	SDO0/GPIO_A0	I/O	Serial data output 0 / GPIO_A[0]
105	SCK0/GPIO_A1	I/O	Serial clock input 0 / GPIO_A[1]
106	SFRM0/GPIO_A2	I/O	Serial frame 0 / GPIO_A[2]
107	SDI0/GPIO_A3	I/O	Serial data input 0 / GPIO_A[3]
108	SDO1/GPIO_A4	I/O	Serial data output 1 / GPIO_A[4]
109	VDDI	–	Digital power supply for internal core (1.8 V)
110	VSSI	–	Digital ground for internal
111	SCK1/GPIO_A5	I/O	Serial clock input 1 / GPIO_A[5]
112	VDDIO	–	Digital power supply for I/O (1.8 V to 3.3 V)
113	SFRM1/GPIO_A6	I/O	Serial frame 1 / GPIO_A[6]
114	SDI1/GPIO_A7	I/O	Serial data input 1 / GPIO_A[7]
115	SDO2/GPIO_A8	I/O	Serial data output 2 / GPIO_A[8]
116	SCK2/GPIO_A9	I/O	Serial clock input 2 / GPIO_A[9]
117	SFRM2/GPIO_A10	I/O	Serial frame 2 / GPIO_A[10]
118	SDI2/GPIO_A11	I/O	Serial data input 2 / GPIO_A[11]
119	VDDI	–	Digital power supply for internal core (1.8 V)
120	VSSI	–	Digital ground for internal
121	EXINT0/GPIO_A12	I/O	External interrupt request [0] / GPIO_A[12]
122	EXINT1/GPIO_A13	I/O	External interrupt request [1] / GPIO_A[13]
123	EXINT2/GPIO_A14	I/O	External interrupt request [2] / GPIO_A[14]
124	EXINT3/GPIO_A15	I/O	External interrupt request [3] / GPIO_A[15]
125	XD0	I/O	External bus data bit [0]
126	XD1	I/O	External bus data bit [1]
127	XD2	I/O	External bus data bit [2]
128	XD3	I/O	External bus data bit [3]

■ AAT4618IGV-0.5-1 (USB ASSY : IC771)

• Load Switching IC

● Pin Arrangement (Top view)

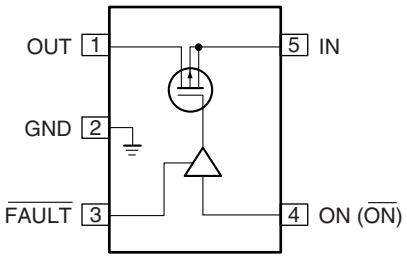

● Pin Function

No.	Pin Name	I/O	Pin Function
1	OUT	O	P-channel MOS FET drain
2	GND	–	Ground
3	$\overline{\text{FAULT}}$	O	Open-drain $\overline{\text{FAULT}}$ output
4	ON ($\overline{\text{ON}}$)	I	Enable input: 4618 active low, 4618- active high
5	IN	I	P-channel MOS FET source

7.3 EXPLANATION

7.3.1 DETECTION CIRCUIT

1. DC Derection Circuit Diagram : Example of VSX-816/KUXJ/CA

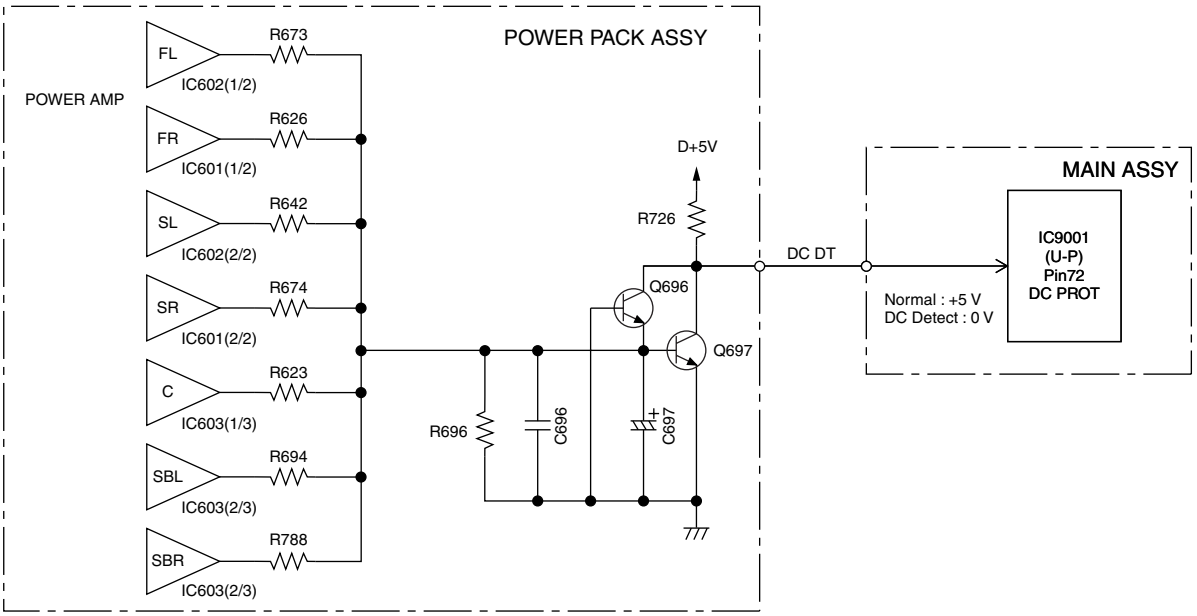

2. Overload Detection Circuit Diagram: Example of VSX-816/KUXJ/CA FRONT Channel

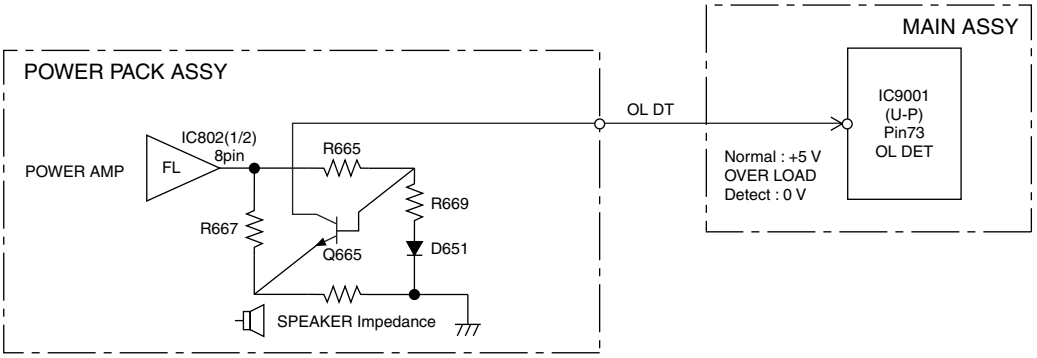

3. Fan Stop Prottection Circuit Diagram

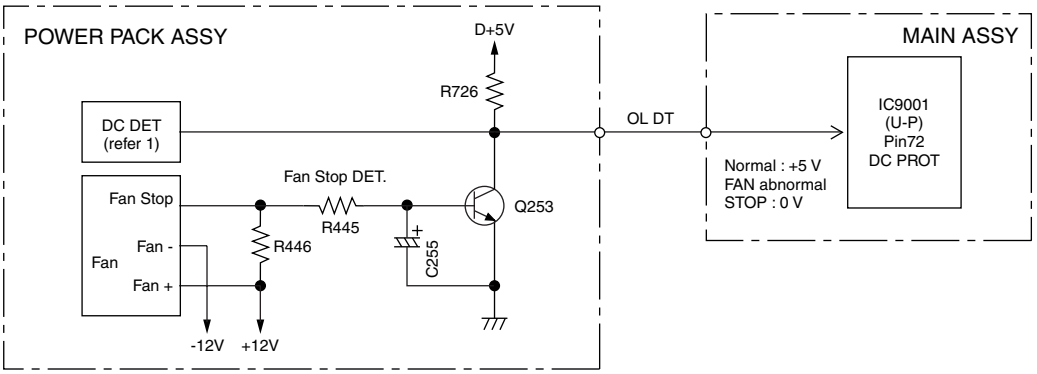

4. XPROTECT Detection Circuit Diagram

When below 6 kind of voltage supply become to be short circuit to GND, XPROTECT circuit work and U-P input port voltage change from +5 V to 0 V. The U-P detect this condition as ERROR.

- Voltage supply to POWER AMP IC (V neck+)
- Voltage supply to POWER AMP IC (V neck-)
- Voltage supply to POWER AMP IC (VH+)
- Voltage supply to POWER AMP IC (VH-)
- Voltage supply to +12 V REGULATOR IC
- Voltage supply to -12 V REGULATOR IC

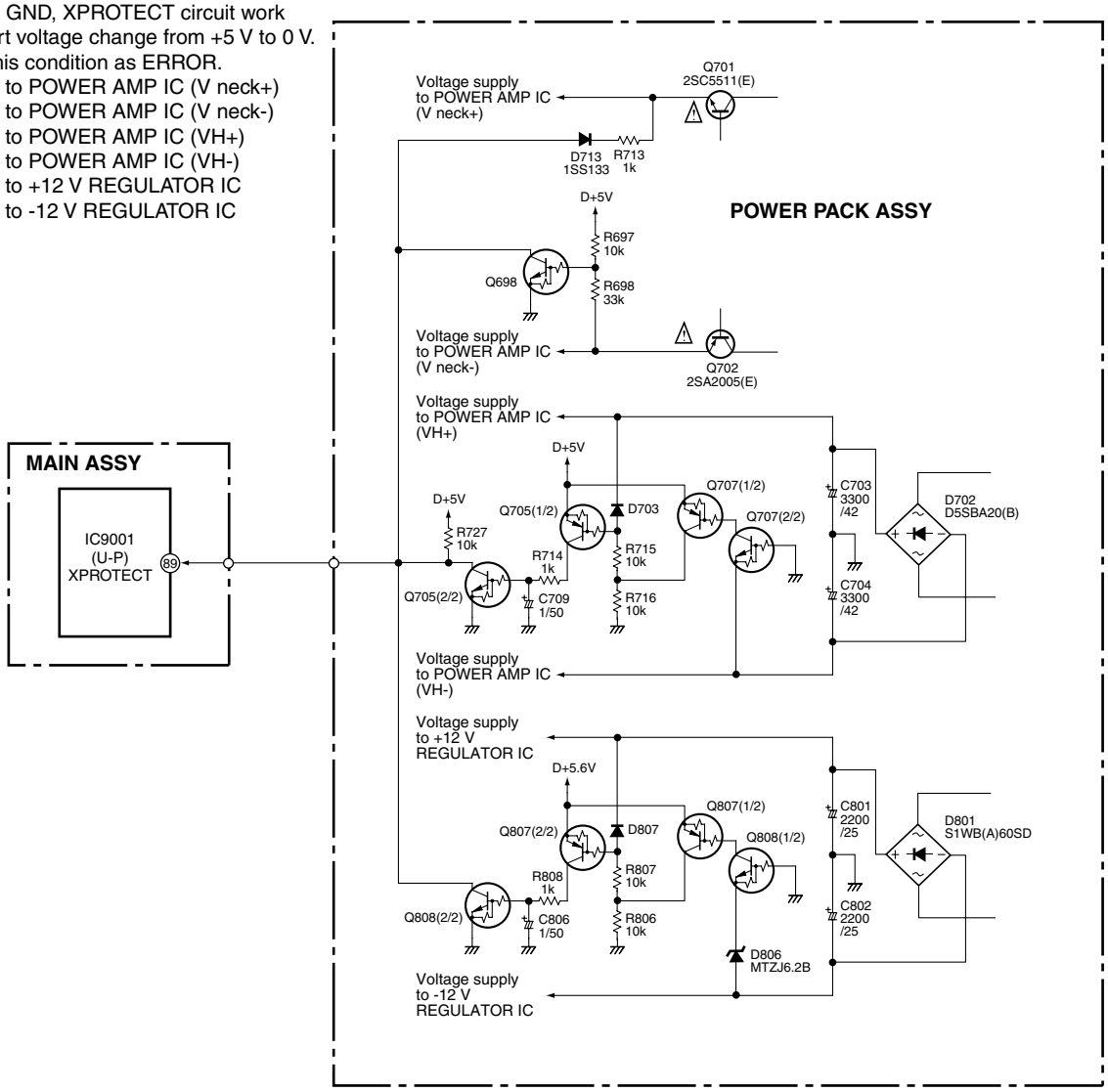

7.3.2 AMPLIFIER SYSTEM PROTECTION OPERATION SPECIFICATION

1. DC-abnormality detection

DC detection is only enabled 2 seconds after power-on.
If there is a fault in the power amplifier or a high-level signal lower than 5 Hz is input, the DC_DET port becomes “L”.
If the “L” is detected, the microprocessor will perform as following flow chart.

In the case of simultaneous detection with the overload protection circuit, DC-abnormality detection is performed preferentially to overload detection.

When a DC abnormality is detected, A.MUTE* is turned on, speaker relay is turned off, then "AMP_ERR" flashes on the display.

*A.MUTE : Audio mute command

↓

The abnormality continues for 3 seconds.

↓ Continues.

The power is shut off.

↓ Recovery

The program restarts.

↓

Power key not effective.

However, when the following keys are pushed so that the key input of a line and the service can be carried out, power can be on.
① TESTMODE ON (A55F+A55F)
② When power off, push FRONT ENTER key + ADVANCED SURROUND key continuously 2sec.
(②: When a DC abnormality is detected and the power is shut off.)
Any other key input from front panel or remote control will not be detected.

2. Overload detection

If the speaker terminals are short-circuited or low-load driving is detected, the OL_DET port becomes “L”.
If the “L” is detected, the microprocessor will perform as following flow chart.

When an overload is detected, A.MUTE* is turned on, speaker relay is turned off, then "OVERLOAD" flashes on the display.

↓

The abnormality continues for 3 seconds.

↓ Continues.

The power is shut off.

↓ Recovery

The power is shut off even if the unit recovers.

3. XPROTECT detection

XPROTECT is started to be monitored 200msec after power on.
XPROTECT port is checked every 20msec.
If Low level (ERROR) is recognized during consecutive 9 times, micon judge it as XPROTECT ERROR.

It processes more preferentially than DC abnormal detection and overload detection.

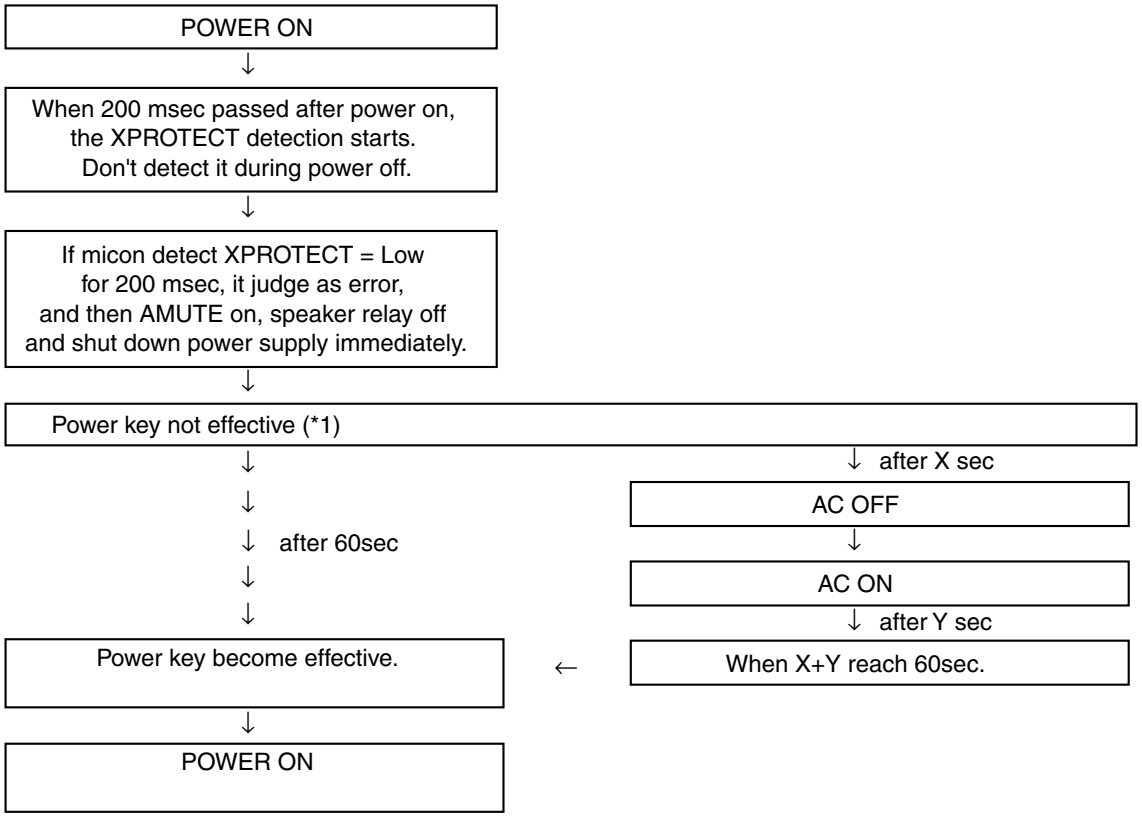

(*1) However, when the following keys are pushed so that the key input of a line and the service can be carried out, power can be on.
① TESTMODE ON (A55F+A55F)
② When power off, push FRONT ENTER key + ADVANCED SURROUND key continuously 2sec.
(Effective, only when power-off is carried out by DC detection / XPROTECT detection)
Any other key input from front panel or remote control will not be detected.

4. Fan stop detection operation flow in the DC abnormality detection

If the fan is forcibly stopped, the 'DC PROT' port becomes "L". Then an abnormality of fan is detected.

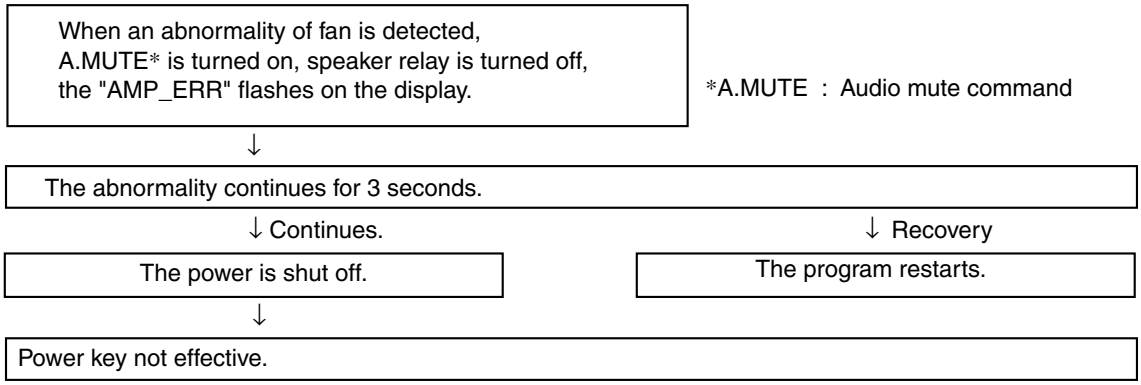

However, when the following keys are pushed so that the key input of a line and the service can be carried out, power can be on.
① TESTMODE ON (A55F+A55F)
② When power off, push FRONT ENTER key + ADVANCED SURROUND key continuously 2sec.
(Effective, only when power-off is carried out by DC detection)

7.3.3 AMPLIFIER FAILURE DIAGNOSIS FLOW CHART

■ Amplifier failure diagnosis flow chart

When DC detection is activated ("AMP_ERR" flashes on the display), failure (damage) of the power amplifier section is considered.
As DC detection and fan stop protection circuits commonly use same abnormality detection port in microprocessor, please make sure that the operation of fan motor is in normal condition before proceeding to the troubleshooting of amplifier.

Caution:
When releasing the lock state of power key before repair, please be careful because there is the possibility that more damages will occur when turning on the power once again!

• According to a symptom, perform the following confirmation beforehand.

1) Is the operation of fan motor in normal condition?
↓
2) Are there any Fuses and IC protectors open?
↓
3) After turn on the power, confirm that the supply voltage of the point that can be measured is appropriate. (Particularly the supply voltage of the power Tr and drive step)
↓
4) Whether the voltage of pin3 of IC600, IC601, IC602 or IC603 is equal to (VL-0.7V). If not (eg, equal to VH), then change the corresponding power pack IC600, IC601, IC602 or IC603.
↓
5) Furthermore, check the output DC voltage of each channel of power pack IC600, IC601, IC602 and IC603 to limit the failure channel and identify the defect power pack.

↓
• After identify the failure channel, check that each part is not damaged (resistor, diode... etc. value / open / short)

7.3.4 USB Module

7.3.4.1 Block Diagram

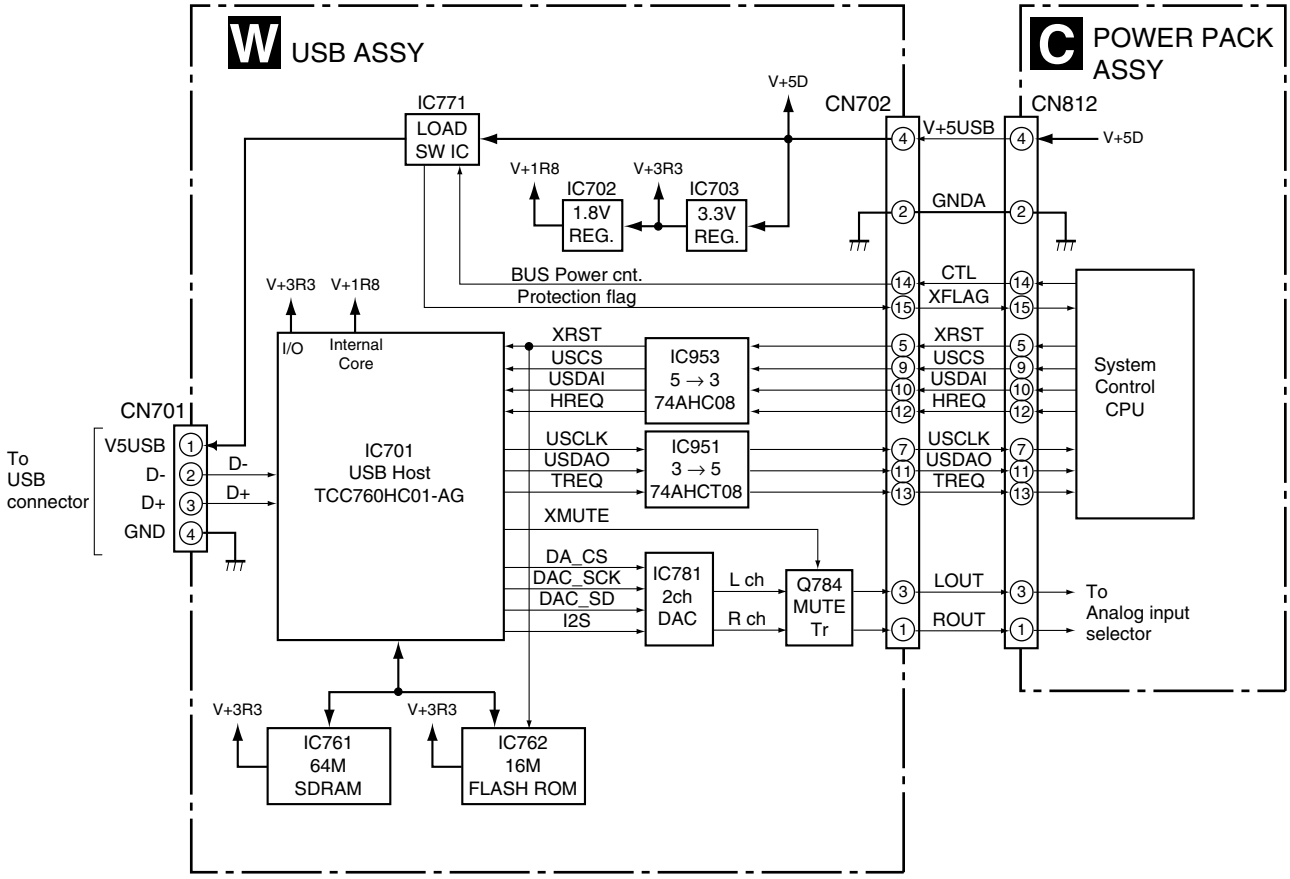

Main parts	Purpose
TCC760HC01-AG	: USB Host control decoder (MP3/WMA/MPEG-4AAC)
16M FLASH ROM	: Firmware is stored
64M SDRAM	: Temporary storage area of decoding music file
LOAD SWITCH	: Current limitation to USB device power
2ch DAC	: D/A converter for analog output

7.3.4.2 Error Display

■ Description of Error Indications

FL Display	Error Content	Possible causes and actions to be taken
USB ERROR1 USB ERR1	Detection of overcurrent to a USB device	Overcurrent (500 mA or more) is consumed at the connected USB device. • Some USB devices, such as a portable HDD, need more current than that this unit supplies. (Use the AC adaptor for the connected USB device.) • The USB power is short-circuited.
USB ERROR2 USB ERR2	Detection of a medium not supported	A USB device that this unit does not support (other than the MSC Class) is connected (such as a mouse, printer, or digital camera). • Connect a mass storage class USB device.
USB ERROR3 USB ERR3	Communication error with the system microcomputer	Communication between TCC760HC01-AG (IC701) and PDC**** (IC****) failed. • Defective connection (connectors) inside this unit • See STEP 3 of Troubleshooting.

■ Operations when overcurrent to a USB device is detected

(1) Overcurrent to a USB device is detected at the port for the microcomputer.

(2) The power supply to the USB device is stopped.

(3) Control of 5 V power is disabled at the port for the microcomputer.

(4) Change of indications on the FL display

V3 Low usage

Flashes for 2 sec.

U S B E R R 1 — In a case of an 8-digit FL display

⇩ Lights up after flashing for 2 sec.

U S B E R R 1 — In a case of an 8-digit FL display

(5) To supply power to the USB module again:

- Turn the power to the unit off then back on.
- Set the function setting to anything other than USB then back to USB.
- Press the USB play key on the remote control unit.

(6) After overcurrent is detected, if the USB play key is pressed while the error indication is displayed, power supply to the USB module is restored. If overcurrent is no longer detected, the indications shown below are displayed (normal indication):

U S B — In a case of an 8-digit FL display

In this state, flashing of "USB ERROR1" stops, but playback will not start. To start playback, press the USB play key again.

In the above case, if overcurrent is detected again, the above procedures 1 through 4 are repeated.

■ In a case where a medium not supported is connected

(1) Change of indications on the FL displays

Flashes for 2 sec.

U S B E R R 2 — In a case of an 8-digit FL display

⇩ Lights up after flashing for 2 sec.

U S B E R R 2 — In a case of an 8-digit FL display

If overcurrent is detected before detection of a non-supported medium, the error indication "USB ERROR1" remains, as the power supply to the USB module is stopped.

On supported media

The formats of supported media that can be played back on this unit are MP3, WMA, and AAC.
Some media in MPEG4 can also be played back. As AAC derives from MPEG4 codec, playback of media in AAC codec of MPEG4 is possible.

7.3.4.3 Troubleshooting

Step 1: Connectors

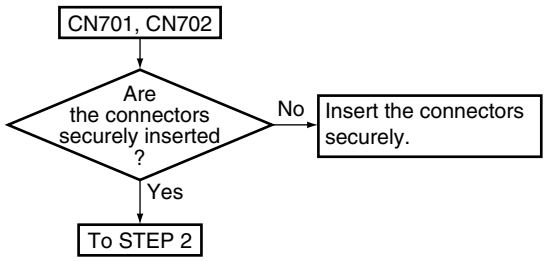

Step 2: Power supply

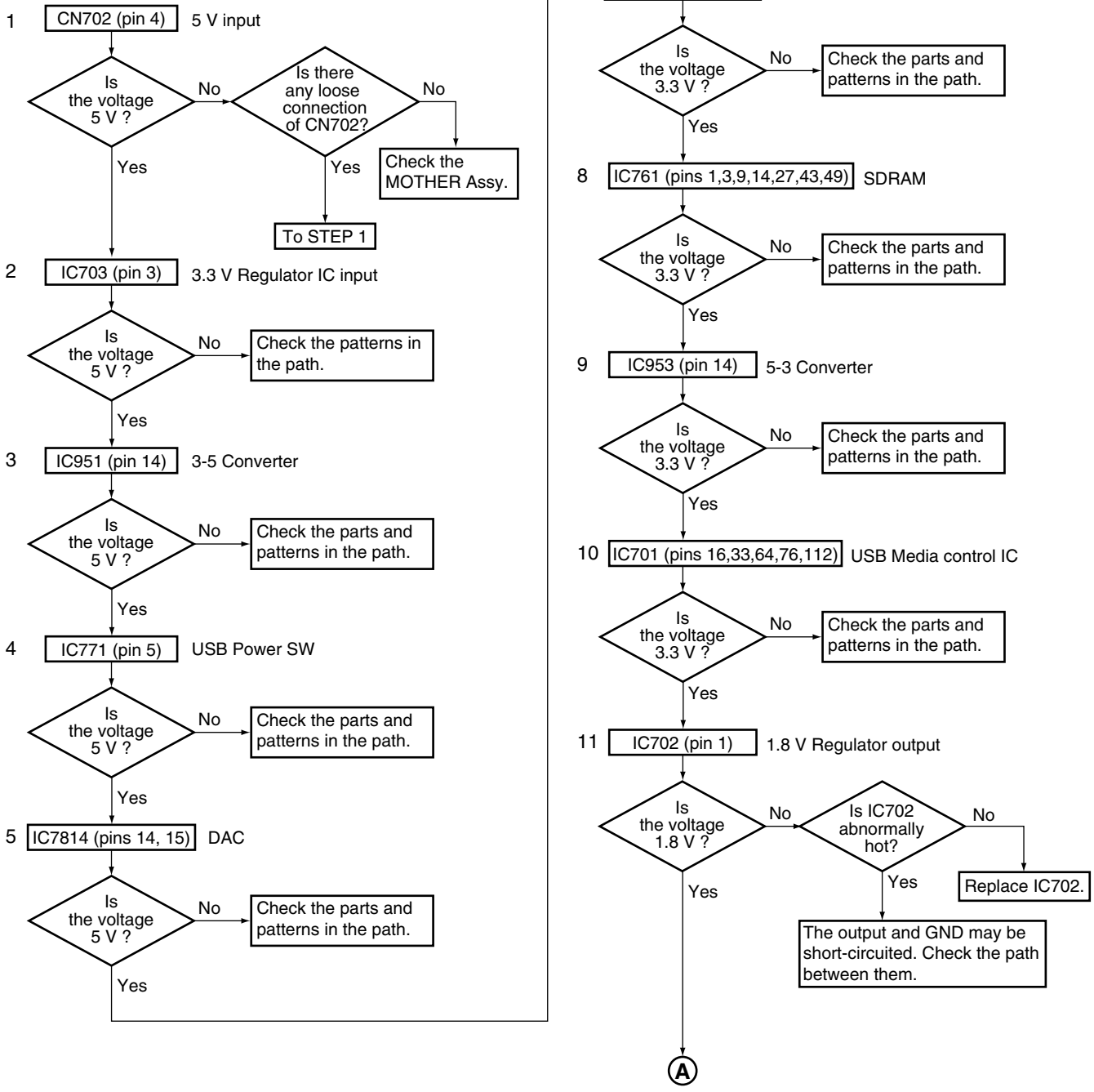

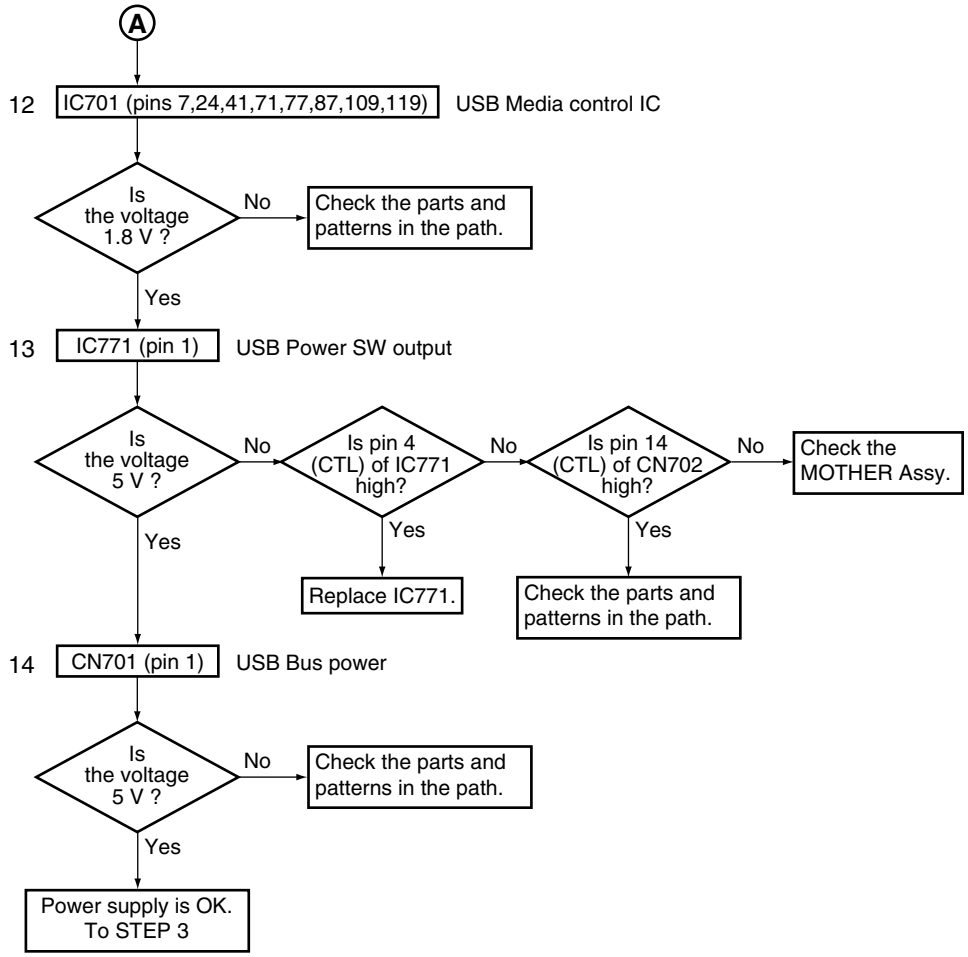

Step 3: Operation of USB Media control IC

Note: Please confirm it with the USB memory connected for the content.

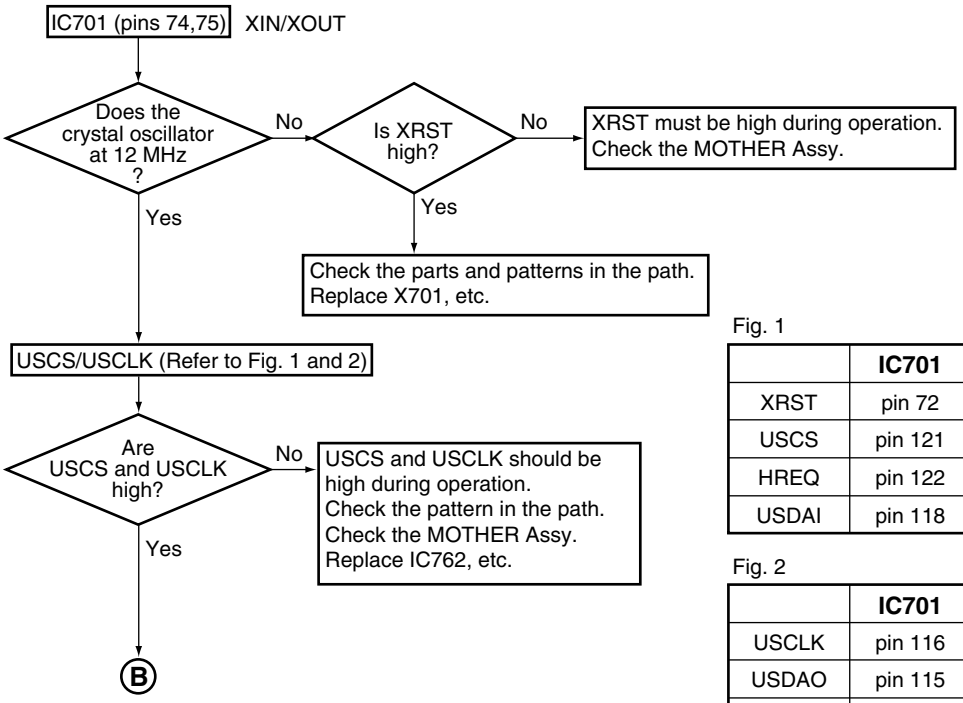

Fig. 1

	IC701	IC953 (5 V → 3 V)		CN702
XRST	pin 72	pin 3	pins 1,2	pin 5
USCS	pin 121	pin 11	pins 12,13	pin 9
HREQ	pin 122	pin 6	pins 4,5	pin 12
USDAI	pin 118	pin 8	pins 9,10	pin 10

Fig. 2

	IC701	IC951 (3 V → 5 V)		CN702
USCLK	pin 116	pins 4,5	pin 6	pin 7
USDAO	pin 115	pins 9,10	pin 8	pin 11
TREQ	pin 123	pins 12,13	pin 11	pin 13

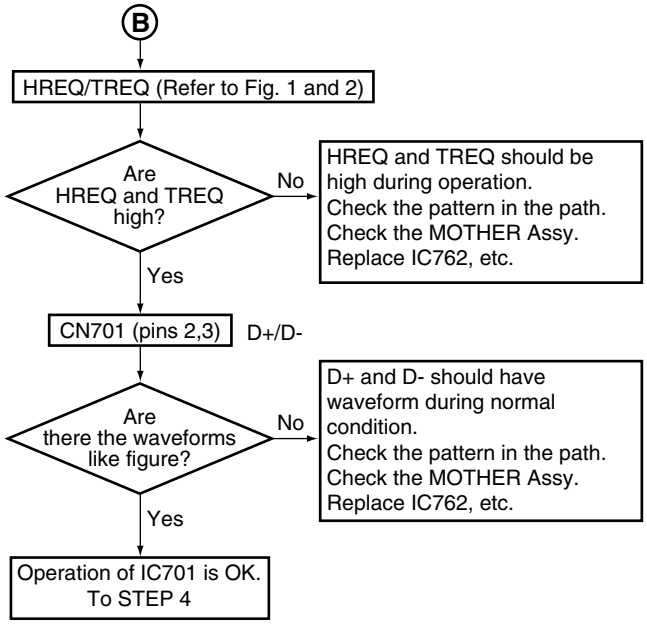

Fig. D+

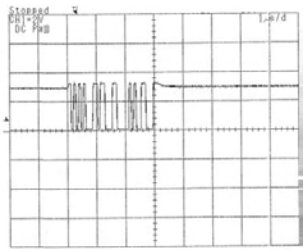

X: 1 µsec/div, Y: 2 V/div

Fig. D-

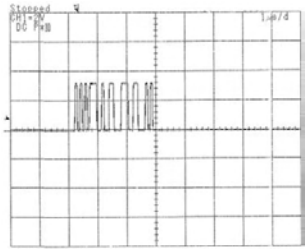

X: 1 µsec/div, Y: 2 V/div

Step 4: Audio Out check

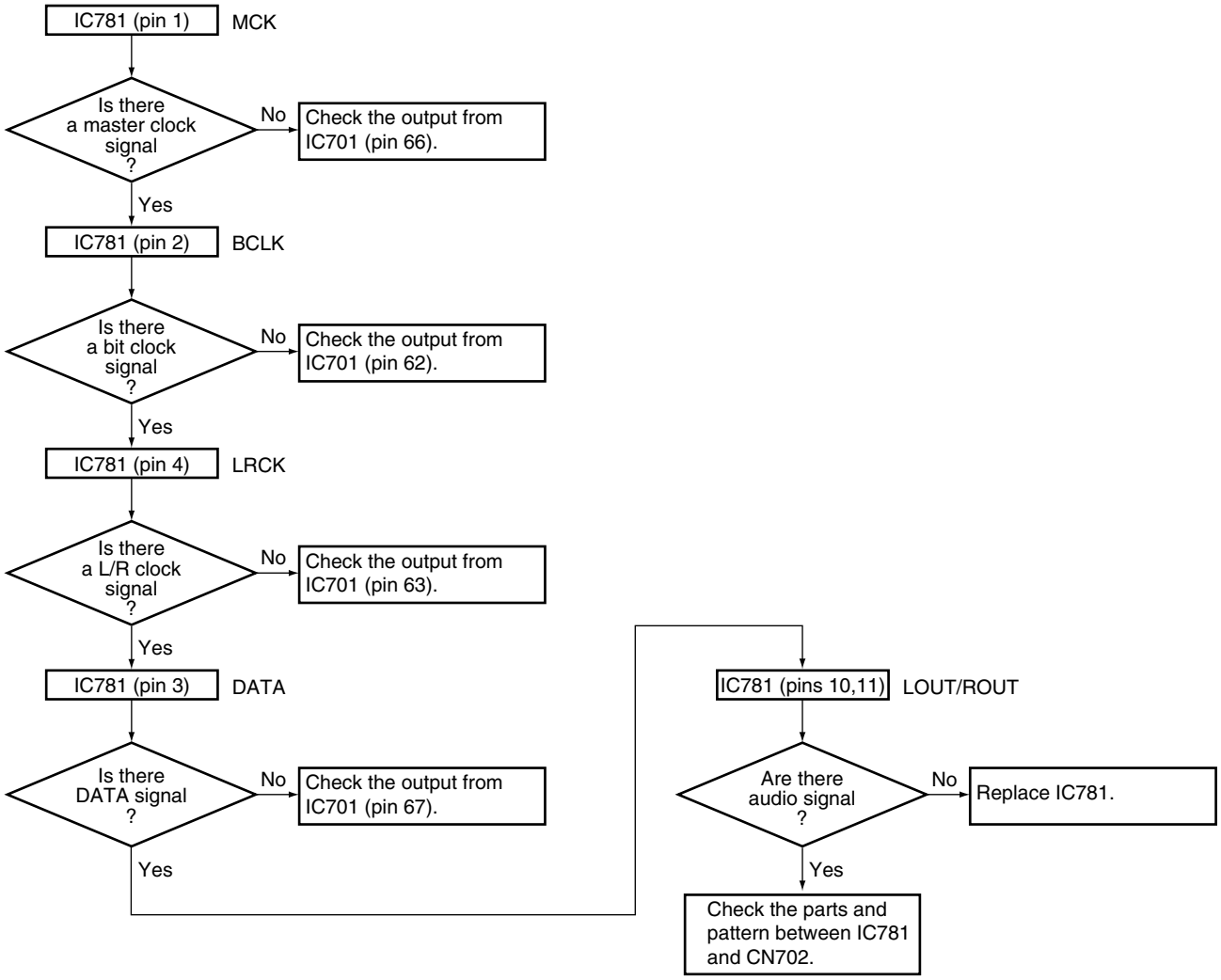

7.3.4.4 How to Update the Firmware

■ Explanation

With this unit, updating of the firmware of the USB module can be performed, using a USB memory stick. However, if the hardware of the flash memory that stores the firmware or the firmware itself has a problem, updating cannot be performed in a manner described below. In such a case, replacement of the flash memory is required.

■ Procedures

1. Turn the unit on then set the function setting to USB function.
2. Insert the USB memory stick that contains the "player.rom" file.*
3. "LOADING" is indicated on the FL display.
4. "UPDATE" is indicated on the FL display.
5. Wait until "FINISH" is indicated on the FL display.
6. Remove the USB memory stick then set the function setting to anything other than USB.
7. Return the function setting to USB function and wait for about 5 seconds in order to obtain the version data of the USB firmware.
8. Turn the unit off (Standby mode).
9. Check the version ("U_xxxxxx" is suffixed to the version indication).
   If the version is not updated, the data for the new version may not have been obtained in Step 7. Repeat Step 7 and the subsequent steps.

Notes * :

- Never reinsert the USB memory stick that contains the "player.rom" file.
- In a rare case, depending on the type of USB memory stick, the above-mentioned updating procedures are not possible. In such a case, try with other type of USB memory stick.

Importance:

- Never change the function setting or turn the power off during the process of Steps 3 through 5. If you do, loading of the firmware will fail, and updating procedures cannot be continued. In such a case, replacement of the flash memory is required.

8. PANEL FACILITIES

Front panel VSX-516/KUCXJ

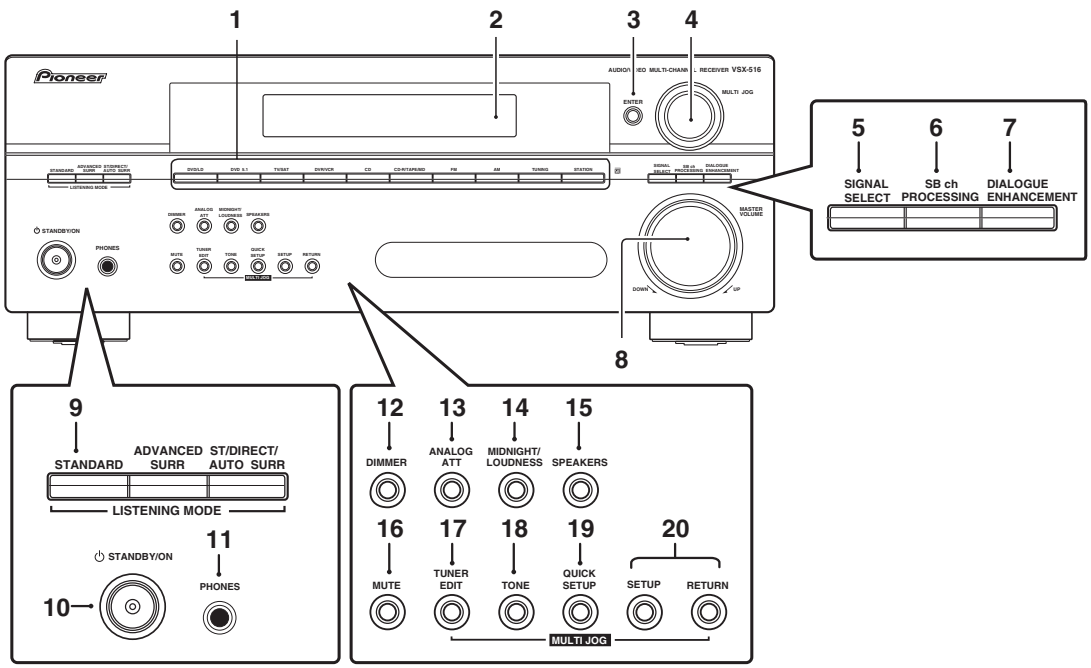

1 Input select buttons
Selects an input source.

2 Character display
See Display.

3 ENTER

4 MULTI JOG dial
The **MULTI JOG** dial performs a number of tasks. Use it to select options after pressing the designated **MULTI JOG** buttons.

5 SIGNAL SELECT
Selects an input signal.

6 SB ch PROCESSING
Selects a surround back channel option or (when the surround back speakers are not available) the Virtual Surround Back (VSB) mode.

7 DIALOGUE ENHANCEMENT
Use to make dialog stand out when watching TV or a movie.

8 MASTER VOLUME

9 LISTENING MODE buttons

STANDARD
Press for Standard decoding and to switch between the various DDPro Logic II and Neo:6 options.

ADVANCED SURR
Switches between the various surround modes.

ST/DIRECT/AUTO SURR
Switches between direct and stereo playback. Direct playback bypasses the tone controls for the most accurate reproduction of a source. Also selects the Auto Surround mode (Auto playback).

10 ⏻ STANDBY/ON

11 PHONES jack
Use to connect headphones (when connected, there is no sound output from the speakers).

12 DIMMER
Dims or brightens the display.

13 ANALOG ATT
Attenuates (lowers) the level of an analog input signal to prevent distortion.

14 MIDNIGHT/LOUDNESS
Switches to Midnight/Loudness listening .

15 SPEAKERS
Changes the speaker system and the impedance setting.

16 MUTE

17 TUNER EDIT
Memorizes/names stations for recall.

18 TONE
Press this button to access the bass and treble controls, which you can then adjust with the **MULTI JOG** dial.

19 QUICK SETUP
See Using the Quick Setup.

20 System Setup menu controls

SETUP
Use with the **MULTI JOG** dial to access the System Setup menu.

RETURN
Confirms and exits the current menu.

Display VSX-516/KUCXJ

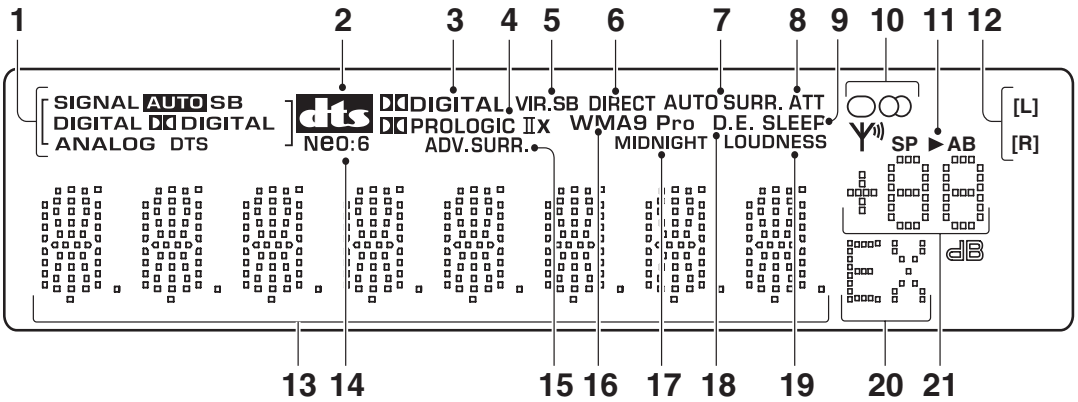

1 SIGNAL SELECT indicators
Lights to indicate the type of input signal assigned for the current component:

AUTO
Lights when **AUTO** signal select is on.

SB
Depending on the source, this lights when a signal with surround back channel encoding is detected.

DIGITAL
Lights when a digital audio signal is detected.

DTS
Lights when a source with DTS encoded audio signals is detected.
DD DIGITAL
Lights when a Dolby Digital encoded signal is detected.

ANALOG
Lights when an analog signal is detected.

2 dts
When the **STANDARD** mode of the receiver is on, this lights to indicate decoding of a DTS multichannel signal.

3 DD DIGITAL
When the **STANDARD** mode of the receiver is on, this lights to indicate decoding of a Dolby Digital multichannel signal.

4 DD PRO LOGIC II x
When the (**STANDARD**) DDPro Logic II mode is on, **DD PRO LOGIC II x** lights to indicate DDPro Logic IIx decoding (see Listening in surround sound).

5 VIR.SB
Lights during Virtual surround back processing.

6 DIRECT
Lights when source direct playback is in use. Direct playback bypasses the tone controls for the most accurate reproduction of a source.

7 AUTO SURR.
Lights when the Auto Surround feature is switched on (see Auto playback).

8 ATT
Lights when **INPUT ATT** is used to attenuate (reduce) the level of the analog input signal.

9 SLEEP
Lights when the receiver is in sleep mode.

10 Tuner indicators

○ / MONO
Lights when the mono mode is set using the **MPX** button.

∞ / STEREO
Lights when a stereo FM broadcast is being received in auto stereo mode.

Y / TUNED
Lights when a broadcast is being received.

11 Speaker indicator
Lights to indicate the current speaker system, **A** and/or **B**.

12 Sound Retriever indicators
Light when the Sound Retriever is switched on.

13 Character display

14 Neo:6
When the (**STANDARD**) Neo:6 mode of the receiver is on, this lights to indicate Neo:6 processing.

15 ADV.SURR (Advanced Surround)
Lights when one of the Advanced Surround modes has been selected.

16 WMA9 Pro
Lights to indicate decoding of a WMA9 Pro signal.

17 MIDNIGHT
Lights during Midnight listening.

18 D.E.
Lights when Dialog Enhancement (**DIALOG E**) is switched on.

19 LOUDNESS
Lights during Loudness listening.

20 EX
Lights when a Dolby Digital Surround EX encoded signal is detected.

21 Master volume level

Remote control VSX-516/KUCXJ

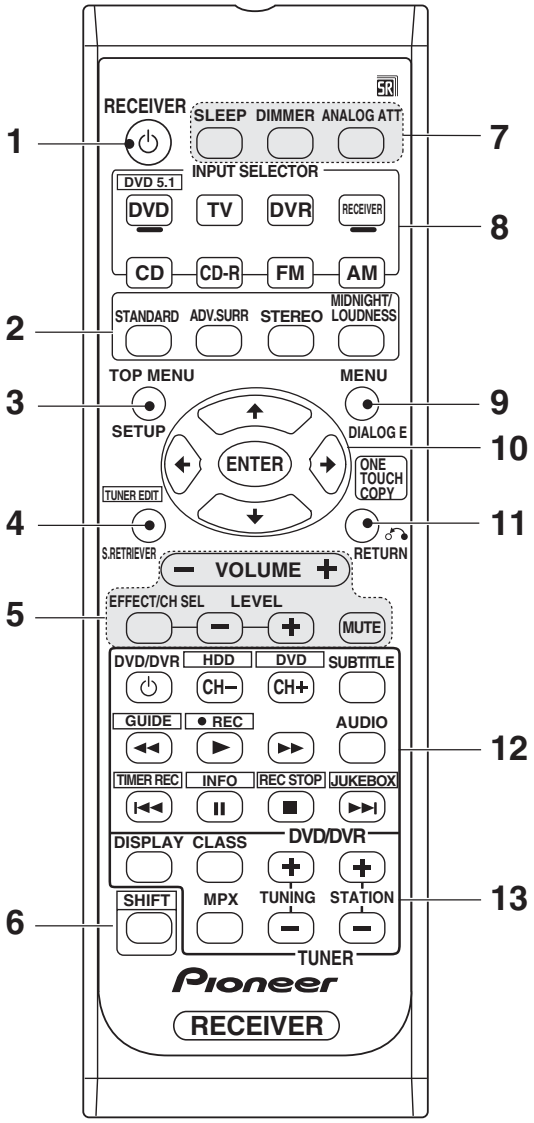

1 RECEIVER⏻
Switches the receiver between standby and on.

2 Listening mode buttons

STANDARD
Press for Standard decoding and to switch between DDPro Logic II and Neo:6 options.

ADV.SURR
Switches between the various surround modes.

STEREO
Switches between direct and stereo playback. Also selects the Auto Surround mode(Auto playback).

MIDNIGHT/LOUDNESS
Switches to Midnight or Loudness listening.

3 TOP MENU
Displays the disc 'top' menu of a DVD.

SETUP
Press to access the System Setup menu.

4 TUNER EDIT*
Memorizes/names stations for recall.
Some of the function work by pushing shift key + this key.
* should be indicated.
Please refer Instruction manual.

S. RETRIEVER
Press to restore CD quality sound to compressed audio sources.

5 RECEIVER CONTROL buttons

VOLUME +/-
Use to set the listening volume.

EFFECT/CH SEL
Press repeatedly to select a channel, then use **LEVEL +/-** to adjust the level.
Also adjusts the level of the Advanced Surround effects as well as Dolby Pro Logic IIx Music and Neo:6 Music parameters.
You can then use the **LEVEL +/-** buttons to make these adjustments.

LEVEL +/-
Use to adjust the effect and channel levels.

MUTE
Mutes/unmutes the sound.

6 SHIFT
Press to access the commands bordered by a rectangle on the remote.

7 SLEEP
Press to change the amount of time before the receiver switches into standby (**30 min - 60 min - 90 min - Off**). You can check the remaining sleep time at any time by pressing **SLEEP** once.

DIMMER
Dims or brightens the display.

ANALOG ATT
Attenuates (lowers) the level of an analog input signal to prevent distortion.

8 INPUT SELECTOR buttons
Press to select an input source.

DVD
Press to use the remote DVD controls.

RECEIVER
Use to switch to the receiver controls on the remote control. Use when setting up surround sound for the receiver.

9 MENU
Displays the disc menu of DVD-Video discs. It also displays TV menus.

DIALOG E
Use to make dialog stand out when watching TV or a movie.

10 ⬆⬇⬅➡/ ENTER
Use the arrow buttons when setting up your surround sound system. Also used for DVD menus.

11 RETURN
Confirm and exit the current menu screen.

ONE TOUCH COPY
Copies the currently playing title from DVD to HDD or vice-versa.

12 DVD/DVR control buttons
Use these buttons to control a Pioneer DVD player or recorder connected to your system (press **SHIFT** to access the commands bordered by a rectangle)

Button	What it does
DVD/ DVR⏻	Turns DVD power on/off
CH +/-	Switches channels.
SUBTITLE	Displays/changes the subtitles on multilingual DVD-Video discs.
AUDIO	Changes audio language or channel.
►	Starts/resumes normal playback.
II	Pauses/unpauses a disc.
■	Stops playback.
◄◄/►►	Press to start fast reverse/forward scanning.
I◄◄	Skips to the start of the current track or chapter, then previous tracks/chapters.
►►I	Skips to the next track or chapter.
HDD/ DVD	Switch between the hard disk and DVD controls for DVD/HDD recorders.
GUIDE	Displays the guides on a digital TV.
●REC	Starts recording.
TIMER REC	Accesses the timerrecording menu.
INFO	Displays additional EPG information
REC STOP	Stops recording.
JUKEBOX	Switches to the Jukebox feature.

13 TUNER controls
The **TUNING +/-** buttons can be used to find radio frequencies and the **STATION +/-** buttons can be used to select preset radio stations.

DISPLAY
Switch the display between station preset name and frequency.

CLASS
Switches between the three banks (classes) of station presets.

MPX
Use to switch between auto stereo and mono reception of FM broadcasts. If the signal is weak then switching to mono will improve the sound quality.

VSX-516/KUCXJ

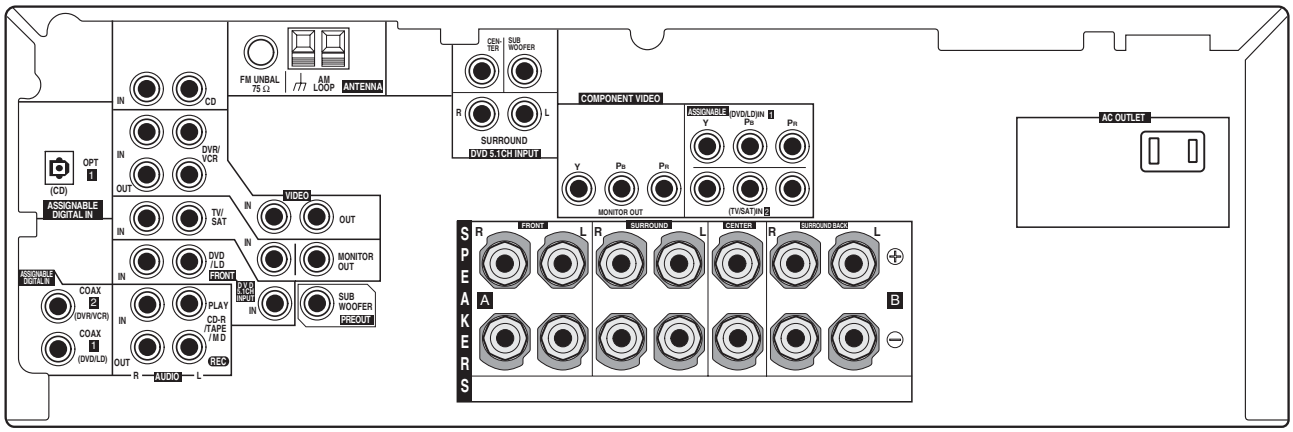

■ CLEANING

Before shipping out the product, be sure to clean the following positions by using the prescribed cleaning tools:

Position to be cleaned	Cleaning tools
Fans	Cleaning paper : GED-008

Pioneer sound.vision.soul

Service Manual

ORDER NO.
RRV3377

AUDIO/VIDEO MULTI-CHANNEL RECEIVER

VSX-416-K
VSX-416-S

THIS MANUAL IS APPLICABLE TO THE FOLLOWING MODEL(S) AND TYPE(S).

Model	Type	Power Requirement	Remarks
VSX-416-K	MYXJ5	AC 220 V to 230 V	
VSX-416-S	MYXJ5	AC 220 V to 230 V	

- **This service manual should be used together with the following manual(s):**

Model No.	Order No.	Remarks
VSX-516-K/KUCXJ	RRV3329	

- **For SPECIFICATIONS and PANEL FACILITIES, refer to the operating instructions.**

CONTENTS

1. CONTRAST OF MISCELLANEOUS PARTS ····· 2
2. SCHEMATIC DIAGRAM ····· 10

PIONEER CORPORATION 4-1, Meguro 1-chome, Meguro-ku, Tokyo 153-8654, Japan
PIONEER ELECTRONICS (USA) INC. P.O. Box 1760, Long Beach, CA 90801-1760, U.S.A.
PIONEER EUROPE NV Haven 1087, Keetberglaan 1, 9120 Melsele, Belgium
PIONEER ELECTRONICS ASIACENTRE PTE. LTD. 253 Alexandra Road, #04-01, Singapore 159936

©PIONEER CORPORATION 2006

T – ZZK MAY 2006 Printed in Japan

1. CONTRAST OF MISCELLANEOUS PARTS

NOTES:
- *Parts marked by "NSP" are generally unavailable because they are not in our Master Spare Parts List.*
- *The ⚠ mark found on some component parts indicates the importance of the safety factor of the part. Therefore, when replacing, be sure to use parts of identical designation.*
- *Screws adjacent to ▼ mark on product are used for disassembly.*
- *Reference Nos. indicate the pages and Nos. in the service manual for the base model.*
- *For the applying amount of lubricants or glue, follow the instructions in this manual. (In the case of no amount instructions, apply as you think it appropriate.)*
- *When ordering resistors, first convert resistance values into code form as shown in the following examples.*

Ex.1 When there are 2 effective digits (any digit apart from 0), such as 560 ohm and 47k ohm (tolerance is shown by J=5%, and K=10%).

560 Ω → 56 × 10¹ → 561 ..... RD1/4PU [5][6][1] J
47k Ω → 47 × 10³ → 473 ..... RD1/4PU [4][7][3] J
0.5 Ω → R50 ..... RN2H [R][5][0] K
1 Ω → 1R0 ..... RS1P [1][R][0] K

Ex.2 When there are 3 effective digits (such as in high precision metal film resistors).

5.62k Ω → 562 × 10¹ → 5621 ..... RN1/4PC [5][6][2][1] F

- *Meaning of the figures and others in the parentheses in the parts list.*

Example) IC 301 is on the point (face A, 91 of x-axis, and 111 of y-axis) of the corresponding PC board.

IC 301 (A, 91, 111) IC NJM2068V

■ CONTRAST TABLE

VSX-416-K/MYXJ5, VSX-416-S/MYXJ5 and VSX-516-K/MYXJ5 are constructed the same except for the following :

Ref. No.	Mark	Symbol and Description	Part No. VSX-516-K /MYXJ5	Part No. VSX-416-K /MYXJ5	Part No. VSX-416-S /MYXJ5	Remarks
		PCB ASSEMBLIES				
P9 - 1		DSP ASSY	AWX8572	AWX8573	AWX8573	*1
P9 - 4		MAIN ASSY	XWK3230	XWK3228	XWK3228	
	NSP	AMP ASSY	XWK3220	XWK3218	XWK3218	
P9 - 3		├ POWER PACK ASSY	XWZ4083	XWZ4081	XWZ4081	
P9 -13		└ TRANS2 ASSY	XWZ4092	XWZ4091	XWZ4091	
	NSP	COMPLEX ASSY	XWK3210	XWK3208	XWK3208	
P11- 1		├ FRONT DISPLAY ASSY	XWZ4052	XWZ4051	XWZ4051	*1
P9 - 7		├ VIDEO ASSY	XWZ4060	XWZ4058	XWZ4058	
P9 -11		└ REGULATOR ASSY	XWZ4116	XWZ4077	XWZ4077	*1
P9 - 5		USB ASSY	AWX8704	Not used	Not used	
P11- 4		USB IN ASSY	XWK3247	Not used	Not used	
		PACKING SECTION				
P7 - 3		Microphone	APM7008	Not Used	Not Used	
P7 -10		Remote control	XXD3102	XXD3101	XXD3101	
P7 -14		Packing Case	XHD3589	XHD3591	XHD3592	
		EXTERIOR SECTION				
P9 -18	⚠	Transformer	XTS3102	XTS3090	XTS3090	
P9 -27		17P F. F. C/30V	Not used	XDD3203	XDD3203	
P9 -28		25P F. F. C/30V	XDD3201	Not used	Not used	
P9 -31		R Panel	XNC3414	XNC3417	XNC3434	
P9 -33	NSP	H/Sink	XNH3044	XNH3043	XNH3043	
P9 -37		Insulator	PNW2766	AMR7198	AMR7198	
P9 -39		Bonnet	XZN3183	XZN3183	XZN3184	
P9 -41		ICP Label	XAX3121	Not used	Not used	
P9 -46		Screw	BBZ30P080FTB	BBZ30P080FTB	BBZ30P080FNI	
		FRONT PANEL SECTION				
P11- 6		JOG Knob	XAB3046	XAB3046	XAB3048	
P11- 7		VOL Knob	XAB3049	XAB3049	XAB3051	
P11- 8		STDBY BTN	XAD3202	XAD3202	XAD3203	
P11- 9		D Panel	XAK3535	XAK3529	XAK3529	
P11-10	NSP	Gold Foil Label	XAX3487	Not used	Not used	
P11-11	NSP	F Panel Assy	XXG3249	XXG3253	XXG3254	
P11-12		Tuner BTN	XAD3230	XAD3230	XAD3248	
P11-13		SUB BTN	XAD3231	XAD3231	XAD3249	
P11-14		FUNC BTN	XAD3232	XAD3232	XAD3250	
P11-15		LISTEN BTN	XAD3233	XAD3233	XAD3251	

Ref. No.	Mark	Symbol and Description	Part No. VSX-516-K /MYXJ5	Part No. VSX-416-K /MYXJ5	Part No. VSX-416-S /MYXJ5	Remarks
P11-16		JOG Button	XAD3240	XAD3240	XAD3252	
P11-17		PIONEER Badge	XAM3006	XAM3006	VAM1129	
P11-18		FRT Panel	XMB3227	XMB3232	XMB3233	
P11-20		Earth Plate FR V3	XNG3144	Not used	Not used	
P11-21		4P Shield Cable	XDX3028	Not used	Not used	
P11-22		5P F.F.C/30V	XDD3199	Not used	Not used	

Notes : *1 Refer to VSX-516/KUCXJ.
For PCB ASSEMBLIES, Refer to " ■ CONTRAST OF PCB ASSEMBLIES ", " ■ PCB PARTS LIST " and " 2. SCHEMATIC DIAGRAM ".

■ CONTRAST OF PCB ASSEMBLIES

DF TRANS2 ASSY

XWZ4091 and XWZ4092 are constructed the same except for the following :

Mark	Symbol and Description	Part No. XWZ4092	Part No. XWZ4091	Remarks
⚠	IC853 PROTECTOR(7A)	AEK7021	Not used	
⚠	IC853 PROTECTOR(4A)	Not used	AEK7018	

QF VIDEO ASSY

XWZ4058 and XWZ4060 are constructed the same except for the following :

Mark	Symbol and Description	Part No. XWZ4060	Part No. XWZ4058	Remarks
	D307	UDZS5R1(B)	Not used	
	CN306 2P PIN JACK	XKB3041	Not used	
	CN308 6P PIN JACK	Not used	AKB7123	CN306, JA305
	JA305 4P PIN JACK	AKB7100	Not used	
⚠	R313, R316	RS3LMF560J	RS3LMF390J	
	R390	RS1/16S102J	Not used	

■ PCB PARTS LIST

AF MAIN ASSY

MISCELLANEOUS

Mark	No.	Description	Part No.
IC	103	(A,198,72) OP-AMP IC	HA17558AF
IC	104	(A,198,56) OP-AMP IC	HA17558AF
IC	105	(A,198,87) OP-AMP IC	HA17558AF
IC	107	(A,216,88) OP-AMP IC	HA17558AF
IC	108	(B,255,64) 8CH E-VOL	R2S15205FP
IC	110	(A,237,73) IC	TC4066BFN
IC	251	(A,85,102) OP-AMP IC	HA17558AF
IC	310	(A,142,40) OP-AMP IC	BA4560RF
IC	311	(A,152,59) OP-AMP IC	BA4560RF
IC	312	(A,142,77) OP-AMP IC	BA4560RF
IC	5001	(A,69,19) RDS DECORDER IC	LC72725M
IC	9001	(B,82,64) CPU	PEG217A
IC	9002	(A,103,44) EEPROM	BR24L16FV-W
Q	231	(A,225,69) DIGITAL TR(SC-70)	RT1P241M
Q	232	(A,229,69) TRANSISTOR	RT1N241M
Q	251	(A,84,108) CHIP TRANSISTOR	2SD2704K
Q	252	(A,68,105) TRANSISTOR	2SD1858X
Q	253	(A,75,108) TRANSISTOR	RT1N241M
Q	254	(A,72,98) DIGITAL TR(SC-70)	RT1P241M
Q	255	(A,75,98) TRANSISTOR	RT1N241M
Q	256	(A,75,94) CHIP TRANSISTOR	2SD2704K
Q	257	(A,78,108) TRANSISTOR	2SA1576A
Q	361	(A,166,78) CHIP TRANSISTOR	2SD2704K
Q	9001	(A,125,87) DIGITAL TR(SC-70)	RT1N431M
Q	9002	(A,66,80) DIGITAL TR(SC-70)	RT1P241M
Q	9003	(A,65,75) DIGITAL TR(SC-70)	RT1P241M
Q	9007	(A,69,85) TRANSISTOR	DTC143TK
Q	9064	(A,59,80) DIGITAL TR(SC-70)	RT1P241M
Q	9065	(A,55,78) TRANSISTOR	UMD2N
D	103	(B,173,35) DIODE	DAN217U
D	105	(B,163,37) DIODE	DAN217U
D	107	(B,166,37) DIODE	DAN217U
D	251	(A,83,96) DIODE	DAN217U
D	253	(A,70,114) DIODE	UDZS27(B)
D	254	(A,90,104) DIODE	UDZS5R1(B)

Mark	No.	Description	Part No.
D	311	(B,259,93) DIODE	1SS355
D	312	(B,268,93) DIODE	1SS355
D	331	(B,260,87) DIODE	UDZS6R8(B)
D	332	(B,263,87) DIODE	UDZS6R8(B)
D	9001	(A,125,103) DIODE	DAP202U
D	9002	(A,119,103) DIODE	DAP202U
D	9003	(A,122,103) DIODE	DAN202U
D	9006	(B,99,89) DIODE	DAN217U
D	9007	(B,91,89) DIODE	DAN217U
D	9010	(A,128,88) DIODE	1SS355
D	9011	(A,60,75) DIODE	DAN202U
D	9064	(A,58,75) DIODE	DAP202U
D	9065	(A,63,80) DIODE	DAP202U
D	9068	(A,53,81) DIODE	1SS355
L	101	(B,260,98) CHIP SOLID INDUCTOR	QTL1013
L	102	(B,265,97) CHIP SOLID INDUCTOR	QTL1013
L	5002	(A,257,104) CHIP SOLID INDUCTOR	QTL1013
L	9001	(A,123,107) CHIP SOLID INDUCTOR	ATL7002
L	9002	(A,121,107) CHIP SOLID INDUCTOR	ATL7002
L	9003	(A,106,98) RADIAL INDUCTOR	LFCA2R2J
X	5001	(A,67,27) CRYSTAL RESONATOR (4.332 MHz)	ASS7004
X	9001	(A,96,53) CERAMIC RESONATOR (15.7 MHz)	XSS3004
CN	101	(A,41,27) CONNECTOR	CKS3382
CN	103	(A,230,17) 11P CONNECTOR	52044-1145
CN	104	(A,250,13) CONNECTOR	CKS3384
CN	105	(A,266,34) CONNECTOR	CKS3372
CN	109	(A,230,113) 19P SOCKET	XKP3054
CN	111	(A,276,113) 21P SOCKET	XKP3091
CN	112	(A,91,41) CONNECTOR	CKS3382
CN	114	(A,189,113) 21P SOCKET	XKP3091
CN	117	(A,302,77) PIN JACK(4P)	AKB7114
CN	118	(A,302,105) PIN JACK(4P)	AKB7114
CN	125	(A,302,42) 6P PIN JACK	XKB3055
CN	251	(A,39,83) 3P JUMPER CONNECTOR	52147-0310
CN	252	(A,37,69) 3P TOP POST	B3B-EH

RESISTORS

Mark	No.	Description	Part No.
R	103	(B,283,62)	RS1/16S222J
R	104	(B,283,52)	RS1/16S222J
R	105	(B,283,47)	RS1/16S331J
R	106	(B,293,40)	RS1/16S331J
R	107	(B,283,87)	RS1/16S331J
R	108	(B,293,81)	RS1/16S331J
R	109	(B,283,73)	RS1/16S331J
R	110	(B,293,68)	RS1/16S331J
R	111	(B,283,115)	RS1/16S222J
R	112	(B,283,106)	RS1/16S222J
R	113	(B,283,101)	RS1/16S331J
R	114	(B,293,96)	RS1/16S331J
R	129	(B,283,34)	RS1/16S331J
R	130	(B,283,25)	RS1/16S331J
R	145	(A,71,73)	RS1/16S102J
R	146	(A,71,74)	RS1/16S102J
R	147	(B,233,67)	RS1/16S472J
R	148	(B,228,62)	RS1/16S472J
R	149	(A,259,45)	RS1/16S104J
R	154	(B,294,51)	RS1/16S0R0J
R	155	(B,293,58)	RS1/16S0R0J
R	156	(B,295,107)	RS1/16S0R0J
R	157	(B,293,114)	RS1/16S0R0J
R	180	(B,278,97)	RS1/16S0R0J
R	181	(B,272,78)	RS1/16S0R0J
R	182	(B,275,75)	RS1/16S0R0J
R	183	(B,276,67)	RS1/16S0R0J
R	201	(A,189,85)	RS1/16S473J
R	202	(A,189,90)	RS1/16S473J
R	203	(B,187,85)	RS1/16S392J
R	204	(B,187,91)	RS1/16S392J
R	205	(B,189,85)	RS1/16S392J
R	206	(B,189,91)	RS1/16S392J
R	207	(B,191,85)	RS1/16S392J
R	208	(B,191,91)	RS1/16S392J
R	209	(B,198,85)	RS1/16S392J
R	210	(B,198,91)	RS1/16S392J
R	211	(B,200,85)	RS1/16S332J
R	212	(B,200,91)	RS1/16S332J
R	213	(B,202,85)	RS1/16S680J
R	214	(B,202,91)	RS1/16S680J
R	219	(B,216,84)	RS1/16S0R0J
R	220	(B,215,91)	RS1/16S0R0J
R	221	(B,220,84)	RS1/16S472J
R	222	(B,219,91)	RS1/16S472J
R	223	(A,242,78)	RS1/16S472J
R	224	(A,236,78)	RS1/16S472J
R	225	(B,225,84)	RS1/16S392J
R	226	(B,225,91)	RS1/16S392J
R	227	(B,231,84)	RS1/16S101J
R	228	(B,233,89)	RS1/16S101J
R	231	(A,229,72)	RS1/16S104J
R	233	(A,231,91)	RS1/16S474J
R	234	(A,231,84)	RS1/16S474J
R	237	(A,237,88)	RS1/16S122J
R	238	(A,236,80)	RS1/16S122J
R	241	(A,190,69)	RS1/16S473J
R	242	(A,190,74)	RS1/16S473J
R	243	(B,186,69)	RS1/16S332J
R	244	(B,186,75)	RS1/16S332J
R	245	(B,188,69)	RS1/16S332J
R	246	(B,188,75)	RS1/16S332J
R	247	(B,190,69)	RS1/16S332J
R	248	(B,190,75)	RS1/16S332J
R	249	(B,197,69)	RS1/16S332J
R	250	(B,197,75)	RS1/16S332J
R	251	(B,199,69)	RS1/16S182J
R	252	(B,199,75)	RS1/16S182J
R	253	(B,202,69)	RS1/16S0R0J
R	254	(B,202,75)	RS1/16S0R0J
R	257	(B,213,69)	RS1/16S101J
R	258	(B,213,75)	RS1/16S101J
R	261	(A,189,53)	RS1/16S473J
R	262	(A,189,59)	RS1/16S473J
R	263	(B,186,53)	RS1/16S332J
R	264	(B,186,60)	RS1/16S332J
R	265	(B,188,53)	RS1/16S332J
R	266	(B,188,60)	RS1/16S682J
R	267	(B,190,53)	RS1/16S332J
R	268	(B,190,60)	RS1/16S393J
R	269	(B,197,53)	RS1/16S332J

Mark	No.	Description	Part No.
R	270	(B,197,60)	RS1/16S122J
R	271	(B,199,53)	RS1/16S182J
R	272	(B,199,60)	RS1/16S272J
R	273	(B,202,53)	RS1/16S0R0J
R	274	(B,202,60)	RS1/16S271J
R	277	(B,214,53)	RS1/16S101J
R	278	(B,213,61)	RS1/16S101J
R	280	(A,65,113)	RS1/16S0R0J
R	303	(B,156,37)	RS1/16S101J
R	304	(B,155,43)	RS1/16S101J
R	305	(B,160,49)	RS1/16S101J
R	306	(B,164,61)	RS1/16S101J
R	307	(B,165,68)	RS1/16S101J
R	308	(B,171,72)	RS1/16S101J
R	311	(A,258,102) METAL OXIDE RESISTOR	RS1LMF101J
R	312	(A,266,102) METAL OXIDE RESISTOR	RS1LMF101J
R	431	(A,131,93)	RS1/16S104J
R	432	(A,127,93)	RS1/16S104J
R	433	(A,128,93)	RS1/16S104J
R	435	(A,126,93)	RS1/16S104J
R	436	(A,130,93)	RS1/16S104J
R	437	(A,89,107)	RS1/16S164J
R	438	(A,81,98)	RS1/16S104J
R	439	(A,86,96)	RS1/16S104J
R	440	(A,81,108)	RS1/16S754J
R	441	(A,79,98)	RS1/16S222J
R	442	(A,77,98)	RS1/16S104J
R	443	(A,63,104)	RS1/16S471J
R	445	(A,73,108)	RS1/16S223J
R	446	(A,74,233)	RS1/16S104J
R	447	(A,88,94)	RS1/16S472J
R	448	(A,89,104)	RS1/16S104J
R	449	(A,80,108)	RS1/16S102J
R	453	(A,146,35)	RS1/16S102J
R	454	(A,142,46)	RS1/16S102J
R	455	(A,146,38)	RS1/16S272J
R	456	(A,147,43)	RS1/16S272J
R	457	(A,140,35)	RS1/16S153J
R	458	(A,140,46)	RS1/16S153J
R	459	(B,133,38)	RS1/16S103J
R	460	(B,133,43)	RS1/16S103J
R	461	(B,145,39)	RS1/16S104J
R	462	(B,145,43)	RS1/16S104J
R	464	(A,78,102)	RS1/16S0R0J
R	473	(A,151,53)	RS1/16S102J
R	474	(A,152,65)	RS1/16S102J
R	475	(A,157,52)	RS1/16S272J
R	476	(A,158,66)	RS1/16S272J
R	477	(A,149,52)	RS1/16S153J
R	478	(A,150,65)	RS1/16S153J
R	479	(B,142,57)	RS1/16S103J
R	480	(B,142,62)	RS1/16S103J
R	481	(B,154,58)	RS1/16S104J
R	482	(B,154,62)	RS1/16S104J
R	483	(B,144,76)	RS1/16S104J
R	484	(A,165,71)	RS1/16S104J
R	485	(A,157,80)	RS1/16S472J
R	488	(A,165,73)	RS1/16S0R0J
R	493	(A,141,71)	RS1/16S102J

Mark	No.	Description	Part No.
R	494	(A,141,83)	RS1/16S911J
R	495	(A,147,71)	RS1/16S272J
R	496	(A,148,83)	RS1/16S272J
R	497	(A,139,69)	RS1/16S153J
R	498	(A,139,83)	RS1/16S153J
R	499	(B,133,72)	RS1/16S103J
R	500	(B,133,79)	RS1/16S104J
R	502	(B,144,80)	RS1/16S204J
R	5005	(B,80,13)	RS1/16S0R0J
R	5011	(A,81,15)	RS1/16S473J
R	5012	(A,82,12)	RS1/16S102J
R	5013	(A,57,26)	RS1/16S102J
R	5016	(B,82,13)	RS1/16S0R0J
R	5020	(A,73,13)	RS1/16S0R0J
R	9002	(A,129,89)	RS1/16S473J
R	9005	(A,91,55)	RS1/16S0R0J
R	9006	(B,103,89)	RS1/16S474J
R	9007	(B,93,89)	RS1/16S474J
R	9008	(A,86,90)	RS1/16S221J
R	9009	(A,65,85)	RS1/16S473J
R	9010	(B,115,45)	RS1/16S512J
R	9011	(A,63,76)	RS1/16S102J
R	9012	(A,63,73)	RS1/16S0R0J
R	9013	(B,112,45)	RS1/16S471J
R	9014	(B,104,54)	RS1/16S471J
R	9015	(B,101,54)	RS1/16S471J
R	9016	(B,99,54)	RS1/16S471J
R	9017	(B,97,54)	RS1/16S471J
R	9018	(B,95,54)	RS1/16S471J
R	9019	(B,98,76)	RS1/16S471J
R	9020	(B,99,76)	RS1/16S471J
R	9021	(B,101,76)	RS1/16S471J
R	9022	(B,103,76)	RS1/16S471J
R	9024	(B,105,68)	RS1/16S472J
R	9025	(B,101,68)	RS1/16S0R0J
R	9026	(B,107,68)	RS1/16S332J
R	9028	(B,119,45)	RS1/16S104J
R	9030	(A,68,79)	RS1/16S470J
R	9031	(B,69,48)	RS1/16S104J
R	9032	(A,66,59)	RS1/16S104J
R	9033	(B,89,48)	RS1/16S104J
R	9036	(A,88,89)	RS1/16S221J
R	9037	(A,124,99)	RS1/16S104J
R	9039	(A,87,58)	RS1/16S104J
R	9041	(B,117,45)	RS1/16S104J
R	9042	(B,83,81)	RS1/16S103J
R	9043	(B,81,81)	RS1/16S103J
R	9044	(B,79,81)	RS1/16S103J
R	9045	(A,98,46)	RS1/16S471J
R	9046	(A,107,45)	RS1/16S471J
R	9047	(A,99,46)	RS1/16S103J
R	9048	(A,98,43)	RS1/16S103J
R	9060	(B,98,68)	RS1/16S473J
R	9062	(B,87,48)	RS1/16S471J
R	9064	(A,54,74)	RS1/16S103J
R	9065	(A,56,74)	RS1/16S103J
R	9066	(A,62,72)	RS1/16S103J
R	9067	(A,57,83)	RS1/16S103J
R	9081	(A,120,72)	RS1/16S221J
R	9082	(A,122,69)	RS1/16S274J

CAPACITORS

Mark	No.	Description	Part No.
C	103	(B,295,56)	CCSRCH101J50
C	104	(B,296,51)	CCSRCH101J50
C	105	(B,293,45)	CCSRCH101J50
C	106	(B,296,40)	CCSRCH101J50
C	107	(B,293,86)	CCSRCH101J50
C	108	(B,296,81)	CCSRCH101J50
C	109	(B,293,72)	CCSRCH101J50
C	110	(B,296,68)	CCSRCH101J50
C	111	(B,296,111)	CCSRCH101J50
C	112	(B,297,107)	CCSRCH101J50
C	113	(B,293,100)	CCSRCH101J50
C	114	(B,296,96)	CCSRCH101J50
C	115	(B,262,98)	CKSRYB103K50
C	116	(B,267,97)	CKSRYB103K50
C	117	(A,287,109)	CCSRCH220J50
C	118	(B,285,109)	CCSRCH220J50
C	121	(A,280,34)	CEAT100M50
C	122	(A,280,25)	CEAT100M50
C	125	(A,280,62)	CEAT100M50
C	126	(A,280,53)	CEAT100M50
C	127	(A,280,47)	CEAT100M50
C	128	(A,280,40)	CEAT100M50
C	131	(A,280,87)	CEAT100M50
C	132	(A,280,80)	CEAT100M50
C	133	(A,280,74)	CEAT100M50
C	134	(A,280,67)	CEAT100M50
C	135	(A,280,114)	CEAT100M50
C	136	(A,280,106)	CEAT100M50
C	137	(A,280,101)	CEAT100M50
C	138	(A,280,93)	CEAT100M50
C	141	(A,256,82)	CKSRYB104K50
C	145	(B,256,81)	CCSRCH101J50
C	146	(B,258,81)	CCSRCH101J50
C	147	(B,253,81)	CKSRYB103K50
C	148	(B,238,67)	CKSRYB223K50
C	149	(B,235,67)	CKSRYB473K25
C	150	(B,231,67)	CKSQYB154K16
C	151	(B,49,51)	CKSRYB103K50
C	152	(B,230,62)	CKSRYB223K50
C	153	(B,234,62)	CKSRYB473K25
C	154	(B,232,62)	CKSQYB154K16
C	155	(A,226,62)	CEAT101M16
C	156	(A,229,56)	CEAT101M16
C	157	(A,236,56)	CEAT101M16
C	158	(A,232,50)	CEAT101M16
C	159	(A,241,50)	CEAT101M16
C	160	(A,234,44)	CEAT101M16
C	161	(A,241,44)	CEAT101M16
C	162	(A,248,44)	CEAT101M16
C	165	(A,240,86)	CEAT1R0M50
C	166	(A,248,86)	CEAT1R0M50
C	179	(B,294,76)	CKSRYB103K50
C	180	(A,277,16)	CKSRYB103K50
C	181	(A,283,30)	CCSRCH101J50
C	182	(B,285,28)	CCSRCH101J50
C	185	(A,286,44)	CCSRCH101J50
C	186	(B,288,42)	CCSRCH101J50
C	187	(A,286,90)	CCSRCH101J50
C	188	(A,284,83)	CCSRCH101J50
C	189	(A,284,71)	CCSRCH101J50
C	190	(B,287,70)	CCSRCH101J50
C	191	(B,283,97)	CCSRCH101J50
C	192	(B,285,96)	CCSRCH101J50
C	197	(B,292,29)	CCSRCH101J50
C	198	(B,294,25)	CCSRCH101J50
C	199	(A,281,50)	CKSRYB103K50
C	201	(A,183,85)	CEAT2R2M50
C	202	(A,184,92)	CEAT2R2M50
C	203	(A,191,85)	CCSRCH471J50
C	204	(A,191,90)	CCSRCH471J50
C	205	(A,193,85)	CCSRCH331J50
C	206	(A,194,90)	CCSRCH331J50
C	207	(B,193,85)	CCSRCH331J50
C	208	(B,193,91)	CCSRCH331J50
C	213	(A,223,84)	CEAT100M50
C	214	(A,223,90)	CEAT100M50
C	215	(B,233,84)	CKSRYB103K50
C	216	(B,231,89)	CKSRYB103K50
C	217	(A,202,85)	CKSRYB103K50
C	218	(A,202,90)	CKSRYB103K50
C	219	(A,221,87)	CKSRYB104K16
C	220	(A,210,93)	CKSRYB104K16
C	221	(A,230,75)	CKSRYB103K50
C	222	(A,243,70)	CKSRYB103K50
C	241	(A,183,70)	CEAT2R2M50
C	242	(A,183,77)	CEAT2R2M50
C	243	(A,192,69)	CCSRCH101J50
C	244	(A,192,74)	CCSRCH101J50
C	245	(A,194,69)	CCSRCH331J50
C	246	(A,194,74)	CCSRCH331J50
C	247	(B,193,69)	CCSRCH331J50
C	248	(B,193,75)	CCSRCH331J50
C	249	(A,205,69)	CEAT100M50
C	250	(A,205,75)	CEAT100M50
C	251	(A,204,65)	CKSRYB103K50
C	252	(A,211,78)	CKSRYB103K50
C	253	(B,43,89)	CKSRYB103K50
C	254	(A,58,108) ELECT. CAPACITOR	CEAT101M25
C	255	(A,51,108) ELECT. CAPACITOR	CEANP470M25
C	256	(A,81,105)	CKSRYB103K50
C	257	(B,216,69)	CKSRYB472K50
C	258	(B,217,75)	CKSRYB472K50
C	261	(A,183,54)	CEAT2R2M50
C	262	(A,183,62)	CEAT2R2M50
C	263	(A,192,53)	CCSRCH101J50
C	264	(A,191,59)	CKSRYB223K50
C	265	(A,194,53)	CCSRCH331J50
C	266	(A,194,59)	CKSRYB103K50
C	267	(B,193,53)	CCSRCH331J50
C	268	(B,193,60)	CKSRYB562K50
C	269	(A,205,54)	CEAT100M50
C	270	(A,205,60)	CEAT100M50
C	271	(A,203,51)	CKSRYB103K50
C	272	(A,210,64)	CKSRYB103K50
C	277	(B,216,53)	CKSRYB472K50
C	278	(B,215,61)	CKSRYB472K50
C	321	(A,153,38)	CEAT100M50

Mark	No.	Description	Part No.
C	322	(A,153,45)	CEAT100M50
C	323	(A,145,35)	CCSRCH101J50
C	324	(A,140,47)	CCSRCH101J50
C	325	(A,136,39) ELECT. CAPACITOR	CEAT220M50
C	326	(A,136,46) ELECT. CAPACITOR	CEAT220M50
C	327	(A,132,42)	CKSRYB103K50
C	328	(A,132,38)	CKSRYB103K50
C	333	(A,255,93)	CEAT101M10
C	334	(A,268,81)	CEAT101M10
C	341	(A,161,56)	CEAT100M50
C	342	(A,161,63)	CEAT100M50
C	343	(A,149,51)	CCSRCH101J50
C	344	(A,150,66)	CCSRCH101J50
C	345	(A,145,56) ELECT. CAPACITOR	CEAT220M50
C	346	(A,145,63) ELECT. CAPACITOR	CEAT220M50
C	347	(A,140,64)	CKSRYB103K50
C	348	(A,141,58)	CKSRYB103K50
C	361	(A,161,70)	CEAT100M50
C	362	(A,169,70)	CEAT100M50
C	363	(A,139,68)	CCSRCH101J50
C	364	(A,139,84)	CKSRYB472K50
C	365	(A,136,73) ELECT. CAPACITOR	CEAT220M50
C	366	(A,136,80) ELECT. CAPACITOR	CEANP4R7M50
C	367	(A,135,88)	CKSRYB103K50
C	368	(A,147,75)	CKSRYB103K50
C	370	(A,161,74)	CEAT4R7M50
C	392	(B,91,95)	CKSRYB102K50
C	1031	(A,286,57)	CCSRCH220J50
C	1041	(B,287,55)	CCSRCH220J50
C	5001	(B,233,10)	CKSRYB102K50
C	5002	(B,235,10)	CKSRYB103K50
C	5003	(B,237,10)	CKSRYB105K10
C	5011	(A,77,16)	CEJQ100M50
C	5013	(A,54,17)	CCSRCH270J50
C	5014	(A,54,18)	CCSRCH270J50
C	5015	(A,59,20)	CEJQ470M16
C	5016	(A,54,15)	CKSRYB103K50
C	5017	(A,73,14)	CCSRCH561J50
C	5020	(A,69,13)	CKSRYB472K50
C	5025	(A,166,12)	CKSRYB102K50
C	5026	(A,169,13)	CKSRYB102K50
C	5027	(A,177,12)	CKSRYB102K50
C	5028	(A,179,13)	CCSRCH220J50
C	9004	(A,121,94)	CKSRYB103K50
C	9005	(A,116,99)	CEJQ2R2M50
C	9006	(A,122,88)	CKSRYB105K10
C	9007	(A,79,92) ELECT. CAPACITOR	CEAT331M6R3
C	9008	(B,77,90)	CKSRYB103K50
C	9011	(B,95,89)	CKSRYB473K25
C	9014	(B,87,88)	CKSRYB473K25
C	9015	(A,100,95)	CKSRYB102K50
C	9018	(B,72,72)	CKSRYB104K50
C	9081	(A,120,69)	CKSRYB103K50

CF POWER PACK ASSY

MISCELLANEOUS

Mark	No.	Description	Part No.
⚠IC	601	(A,265,14) POWER PACK 2CH	STK412-230C
⚠IC	603	(A,132,14) POWER PACK 3CH	STK413-230C
⚠IC	610	(A,59,28) PROTECTOR(1A)	AEK7009
⚠IC	701	(A,100,75) IC PROTECTOR	ICP-N10
⚠IC	702	(A,84,81) IC PROTECTOR	ICP-N10
⚠IC	803	(A,238,87) IC	TA7805S
⚠IC	804	(A,282,111) REGULATOR IC	TA7809S
⚠IC	805	(B,271,135) IC	BA178M05FP
Q	501	(B,85,42) CHIP TRANSISTOR	2SD2704K
Q	505	(A,111,47) TRANSISTOR	2SC2240
Q	601	(B,93,47) CHIP TRANSISTOR	2SD2704K
Q	602	(B,227,45) CHIP TRANSISTOR	2SD2704K
Q	605	(A,118,40) TRANSISTOR	2SC2240
Q	606	(A,252,40) TRANSISTOR	2SC2240
Q	652	(B,219,42) CHIP TRANSISTOR	2SD2704K
Q	656	(A,244,47) TRANSISTOR	2SC2240
Q	681	(B,72,63) CHIP TRANSISTOR	2SD2704K
Q	683	(A,59,65) TRANSISTOR	2SC2240
Q	696	(B,284,22) TRANSISTOR	2SC4081
Q	697	(B,282,26) TRANSISTOR	2SC4081
Q	698	(B,246,67) TRANSISTOR	RT1N241M
⚠Q	701	(A,110,75) TRANSISTOR	2SC5511
⚠Q	702	(A,96,86) TRANSISTOR	2SA2005
Q	703	(A,155,76) TRANSISTOR	2SA1145
Q	704	(A,166,79) TRANSISTOR	2SC2240
Q	705	(B,245,74) CHIP TRANSISTOR	RN4903
Q	707	(B,241,74) CHIP TRANSISTOR	RN4903
Q	721	(A,142,71) TRANSISTOR	2SA1145
Q	722	(A,161,74) TRANSISTOR	2SC2240
Q	801	(B,277,141) DIGITAL TR(SC-70)	RT1P241M
Q	802	(B,274,145) TRANSISTOR	RT1N241M
Q	803	(B,265,140) DIGITAL TR(SC-70)	RT1P241M
Q	804	(B,268,145) TRANSISTOR	RT1N241M
Q	805	(B,277,146) DIGITAL TR(SC-70)	RT1P241M
Q	806	(B,271,145) TRANSISTOR	RT1N241M
Q	807	(B,276,53) CHIP TR(2*PNP)	RN2903
Q	808	(B,283,56) CHIP TRANSISTOR	RN1903
Q	809	(A,266,101) TRANSISTOR	2SD1858X
D	601	(A,125,57) DIODE	1SS133
D	602	(A,267,17) ZENER DIODE	MTZJ15A
D	603	(A,119,57) DIODE	1SS133
D	604	(A,261,21) ZENER DIODE	MTZJ15A
D	606	(A,259,57) DIODE	1SS133
D	608	(A,253,52) DIODE	1SS133
D	652	(A,262,57) DIODE	1SS133
D	654	(A,242,52) DIODE	1SS133
D	681	(A,132,17) ZENER DIODE	MTZJ15A
D	682	(A,129,22) ZENER DIODE	MTZJ15A
D	683	(A,135,58) DIODE	1SS133
D	684	(A,65,72) DIODE	1SS133
⚠D	701	(A,9,88) DIODE	D5SBA20(B)
⚠D	702	(A,9,126) DIODE	D5SBA20(B)
D	703	(B,252,76) DIODE	1SS355
D	711	(A,196,103) ZENER DIODE	MTZJ22D
D	712	(A,192,103) DIODE	MTZJ6R8(B)

Mark	No.	Description	Part No.
D	713	(A,120,78) DIODE	1SS133
D	751	(B,168,135) DIODE	1SS355
D	752	(B,170,135) DIODE	1SS355
D	753	(B,138,132) DIODE	1SS355
D	754	(B,141,132) DIODE	1SS355
D	777	(A,127,57) DIODE	1SS133
D	778	(A,108,57) DIODE	1SS133
⚠D	801	(B,221,113) BRIDGE DIODE	S1WB(A)60SD
D	805	(A,276,131) DIODE	1SS133
D	806	(A,287,62) DIODE	MTZJ6R2(B)
D	807	(A,284,67) DIODE	1SS133
D	827	(A,262,133) DIODE	MTZJ6R2(B)
D	828	(A,239,98) DIODE	MTZJ6R2(B)
⚠D	829	(A,239,128) DIODE	D3SBA20(B)
L	751	(A,160,108) COIL	ATH1004
L	752	(A,173,108) COIL	ATH1004
L	753	(A,120,107) COIL	ATH1004
L	761	(A,130,108) COIL	ATH1004
L	762	(A,142,108) COIL	ATH1004
J	43	JUMPER WIRE 11P	D20PYY1120E
KN	601	(A,65,23) WRAPPING TERMINAL	VNF1084
RY	751	(A,173,130) RELAY	XSR3012
RY	752	(A,141,126) RELAY	XSR3012
RY	753	(A,117,120) RELAY	XSR3012
CN	701	(A,212,134) 11PJUMPER CONNECTOR	52147-1110
CN	702	(A,201,106) 6P JUMPER CONNECTOR	52147-0610
CN	705	(A,295,40) 21P PLUG	XKM3011
CN	754	SP TERMINAL 4-P(V0)	XKE3050
CN	755	SP TERMINAL 6-P(V0)	XKE3049
CN	803	(A,231,129) 6P PLUG	KM200TA6
CN	805	(A,317,153) 13P PLUG	XKP3066
CN	806	19P PLUG	XKP3069
CN	807	(A,317,82) 15P PLUG	XKP3067
CN	815	(A,295,79) 19P PLUG	XKM3005
CN	816	(A,295,126) 21P PLUG	XKM3011
CN	817	(A,308,38) CONNECTOR	CKS3382
	810	(A,277,90) 11P CABLE HOLDER	51048-1100

RESISTORS

Mark	No.	Description	Part No.
R	601	(A,96,56)	RD1/4PU222J
R	602	(A,230,52)	RD1/4PU222J
R	603	(B,93,52)	RS1/16S103J
R	604	(B,226,49)	RS1/16S103J
R	609	(A,91,35)	RD1/4PU273J
R	610	(A,225,35)	RD1/4PU273J
R	611	(A,90,28)	RD1/4PU821J
R	612	(A,223,28)	RD1/4PU821J
R	613	(A,114,21)	RD1/4PU273J
R	614	(A,247,21)	RD1/4PU273J
R	615	(A,123,36)	RD1/4PU331J
R	616	(A,270,29)	RD1/4PU562J
⚠R	617	(A,114,31) RESISTOR (0.22, 5W)	ACN7094
R	618	(A,266,28)	RD1/4PU562J
R	619	(A,122,52)	RD1/4PU182J
R	620	(A,257,36)	RD1/4PU331J
R	621	(A,124,49)	RD1/4PU821J
⚠R	622	(A,248,31) RESISTOR (0.22, 5W)	ACN7094
R	623	(A,116,48)	RD1/4PU223J
R	624	(A,257,52)	RD1/4PU182J
R	626	(A,258,49)	RD1/4PU821J
R	628	(A,250,48)	RD1/4PU223J
R	630	(A,230,21)	RD1/4PU333J
R	652	(A,215,41)	RD1/4PU222J
R	654	(B,219,46)	RS1/16S103J
R	660	(A,220,29)	RD1/4PU273J
R	662	(A,216,20)	RD1/4PU821J
R	664	(A,238,21)	RD1/4PU273J
R	666	(A,240,35)	RD1/4PU331J
⚠R	668	(A,239,31) RESISTOR (0.22, 5W)	ACN7094
R	670	(A,245,52)	RD1/4PU182J
R	672	(A,240,57)	RD1/4PU821J
R	674	(A,236,38)	RD1/4PU223J
R	681	(A,66,63)	RD1/4PU222J
R	682	(B,76,63)	RS1/16S103J
R	685	(A,77,41)	RD1/4PU273J
R	686	(A,78,35)	RD1/4PU821J
R	687	(A,83,10)	RD1/4PU273J
R	688	(A,135,27)	RD1/4PU562J
R	689	(A,133,27)	RD1/4PU562J
R	690	(A,60,52)	RD1/4PU331J
⚠R	691	(A,55,55) RESISTOR (0.22, 5W)	ACN7094
R	692	(A,70,72)	RD1/4PU182J
R	693	(A,67,77)	RD1/4PU821J
R	694	(A,62,72)	RD1/4PU223J
R	695	(A,97,22)	RD1/4PU333J
R	696	(B,281,38)	RS1/16S103J
R	697	(B,255,68)	RS1/16S103J
R	698	(B,243,67)	RS1/16S333J
R	701	(A,117,78)	RD1/4PU682J
R	702	(A,101,84)	RD1/4PU682J
R	703	(A,151,72)	RD1/4PU683J
R	704	(A,147,76)	RD1/4PU683J
R	705	(A,283,85)	RD1/4PU473J
R	706	(A,283,75)	RD1/4PU473J
R	707	(A,135,77)	RD1/4PU124J
R	708	(A,147,81)	RD1/4PU124J
⚠R	711	(A,181,86) METAL OXIDE RESISTOR	RS2LMF222J
R	713	(A,117,81)	RD1/4PU102J
R	714	(B,252,68)	RS1/16S102J
R	715	(B,250,75)	RS1/16S103J
R	716	(B,247,75)	RS1/16S103J
R	721	(A,125,77)	RD1/4PU822J
R	722	(A,123,77)	RD1/4PU822J
R	723	(A,276,78)	RD1/4PU473J
R	724	(A,279,83)	RD1/4PU473J
R	725	(A,276,74)	RD1/4PU103J
R	726	(B,291,59)	RS1/16S103J
R	727	(B,287,59)	RS1/16S103J
⚠R	751	(A,158,119) CARBON FILM RESISTOR	RD1/4PUF101J
⚠R	752	(A,185,120) CARBON FILM RESISTOR	RD1/4PUF101J
⚠R	753	(A,156,126) METAL OXIDE RESISTOR	RS1LMF4R7J
⚠R	754	(A,181,126) METAL OXIDE RESISTOR	RS1LMF4R7J
⚠R	755	(A,103,117) CARBON FILM RESISTOR	RD1/4PUF101J
⚠R	756	(A,101,120) METAL OXIDE RESISTOR	RS1LMF4R7J
⚠R	761	(A,125,117) CARBON FILM RESISTOR	RD1/4PUF101J
⚠R	762	(A,155,119) CARBON FILM RESISTOR	RD1/4PUF101J
⚠R	763	(A,124,132) METAL OXIDE RESISTOR	RS1LMF4R7J
⚠R	764	(A,149,139) METAL OXIDE RESISTOR	RS1LMF4R7J
R	777	(A,81,41)	RD1/4PU222J

Mark	No.	Description	Part No.
R	778	(B,84,48)	RS1/16S103J
R	781	(A,87,30)	RD1/4PU273J
R	782	(A,84,22)	RD1/4PU821J
R	783	(A,104,21)	RD1/4PU273J
R	784	(A,111,35)	RD1/4PU331J
⚠R	785	(A,105,31) RESISTOR (0.22, 5W)	ACN7094
R	786	(A,111,57)	RD1/4PU182J
R	787	(A,106,57)	RD1/4PU821J
R	788	(A,102,38)	RD1/4PU223J
R	806	(B,283,48)	RS1/16S103J
R	807	(B,278,48)	RS1/16S103J
R	808	(B,283,52)	RS1/16S102J
R	809	(B,261,105)	RS1/16S122J
R	810	(B,264,105)	RS1/16S271J
R	885	(B,310,57)	RS1/16S221J
R	886	(B,310,61)	RS1/16S221J
R	887	(B,310,65)	RS1/16S221J
R	888	(B,315,22)	RS1/16S221J
R	1101	(B,273,68)	RS1/16S0R0J
R	1102	(B,274,61)	RS1/16S0R0J
R	1106	(B,146,53)	RS1/16S0R0J
R	1107	(B,211,58)	RS1/16S0R0J
R	1108	(B,233,58)	RS1/16S0R0J
R	1109	(B,285,56)	RS1/16S0R0J
R	1110	(B,241,68)	RS1/16S0R0J

CAPACITORS

Mark	No.	Description	Part No.
C	521	(A,120,164) FILM CAPACITOR	CQMBA123J50
C	603	(B,94,39)	CKSRYB331K50
C	604	(B,227,38)	CKSRYB331K50
C	605	(A,96,38)	CEAT4R7M50
C	606	(A,230,38)	CEAT4R7M50
C	607	(B,95,20)	CCSRCH470J50
C	608	(B,230,17)	CCSRCH470J50
C	609	(A,91,32)	CEAT101M16
C	610	(A,225,32)	CEAT101M16
C	611	(B,117,22)	CCSRCH470J50
C	612	(B,250,24)	CCSRCH470J50
C	613	(B,117,27)	CCSRCH470J50
C	614	(B,250,28)	CCSRCH470J50
C	615	(A,116,45)	CEANP2R2M50
C	616	(A,250,45)	CEANP2R2M50
C	654	(B,217,33)	CKSRYB331K50
C	656	(A,215,33)	CEAT4R7M50
C	658	(B,221,17)	CCSRCH470J50
C	660	(A,219,25)	CEAT101M16
C	662	(B,241,27)	CCSRCH470J50
C	664	(B,241,24)	CCSRCH470J50
C	666	(A,239,49)	CEANP2R2M50
C	682	(B,74,48)	CKSRYB331K50
C	683	(A,74,50)	CEAT4R7M50
C	684	(B,82,18)	CCSRCH470J50
C	685	(A,78,38)	CEAT101M16
C	686	(B,92,9)	CCSRCH470J50
C	687	(B,87,8)	CCSRCH470J50
C	688	(A,75,78)	CEANP2R2M50
C	696	(B,281,35)	CKSRYB102K50
C	697	(A,286,34)	CEAT221M6R3
C	701	(A,49,80) ELECT.CAPACITOR	XCH3026
C	702	(A,49,107) ELECT.CAPACITOR	XCH3026
C	703	(A,43,130) ELECT.CAPACITOR	XCH3012
C	704	(A,38,150) ELECT.CAPACITOR	XCH3012
C	705	(A,156,81) ELECT. CAPACITOR	CEAT100M2A
C	706	(A,143,84) ELECT. CAPACITOR	CEAT100M2A
C	707	(A,17,99) MYLAR FILM CAPACITOR	CQMA103K2E
C	708	(A,16,137) MYLAR FILM CAPACITOR	CQMA103K2E
C	709	(A,257,73)	CEAT1R0M50
C	711	(A,195,99) ELECT. CAPACITOR	CEAT101M35
C	712	(A,189,105)	CEAT101M10
C	751	(A,159,143) FILM CAPACITOR	CQMBA224J50
C	752	(A,181,150) FILM CAPACITOR	CQMBA224J50
C	753	(A,157,155) FILM CAPACITOR	CQMBA224J50
C	754	(A,181,158) FILM CAPACITOR	CQMBA224J50
C	755	(A,103,147) FILM CAPACITOR	CQMBA224J50
C	756	(A,96,151) FILM CAPACITOR	CQMBA224J50
C	757	(A,157,164) FILM CAPACITOR	CQMBA123J50
C	758	(A,177,164) FILM CAPACITOR	CQMBA123J50
C	759	(A,101,164) FILM CAPACITOR	CQMBA123J50
C	761	(A,122,139) FILM CAPACITOR	CQMBA224J50
C	762	(A,152,145) FILM CAPACITOR	CQMBA224J50
C	763	(A,122,146) FILM CAPACITOR	CQMBA224J50
C	764	(A,150,152) FILM CAPACITOR	CQMBA224J50
C	773	(A,138,164) FILM CAPACITOR	CQMBA123J50
C	778	(B,84,34)	CKSRYB331K50
C	779	(A,81,33)	CEAT4R7M50
C	780	(B,88,18)	CCSRCH470J50
C	781	(A,87,27)	CEAT101M16
C	782	(B,107,27)	CCSRCH470J50
C	783	(B,107,24)	CCSRCH470J50
C	784	(A,105,49)	CEANP2R2M50
C	801	(A,248,114) ELECT. CAPACITOR	CEAT222M25
C	802	(A,249,100) ELECT. CAPACITOR	CEAT222M25
C	806	(A,288,55)	CEAT1R0M50
C	807	(B,226,95)	CKSRYB103K25
C	808	(A,245,142) ELECT. CAPACITOR	CEAT472M16
C	809	(A,234,95)	CEAT101M10
C	810	(A,266,133)	CEAT101M10
C	811	(B,279,128)	CKSRYB103K25
C	812	(B,278,109)	CKSRYB103K25
C	813	(A,276,118)	CEAT101M16

2. SCHEMATIC DIAGRAM

2.1 MAIN ASSY (1/3)

A 1/3F MAIN ASSY (XWK3228)

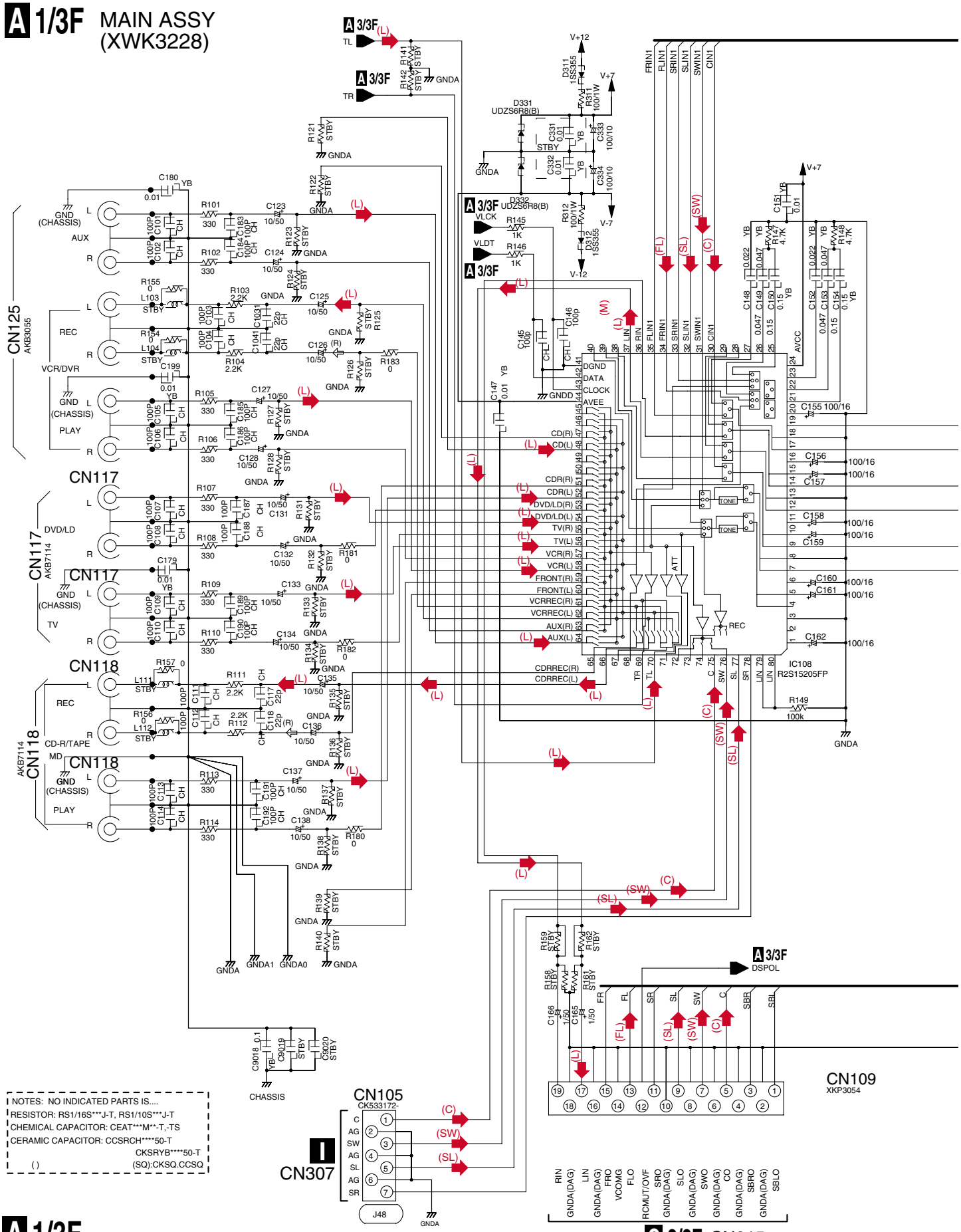

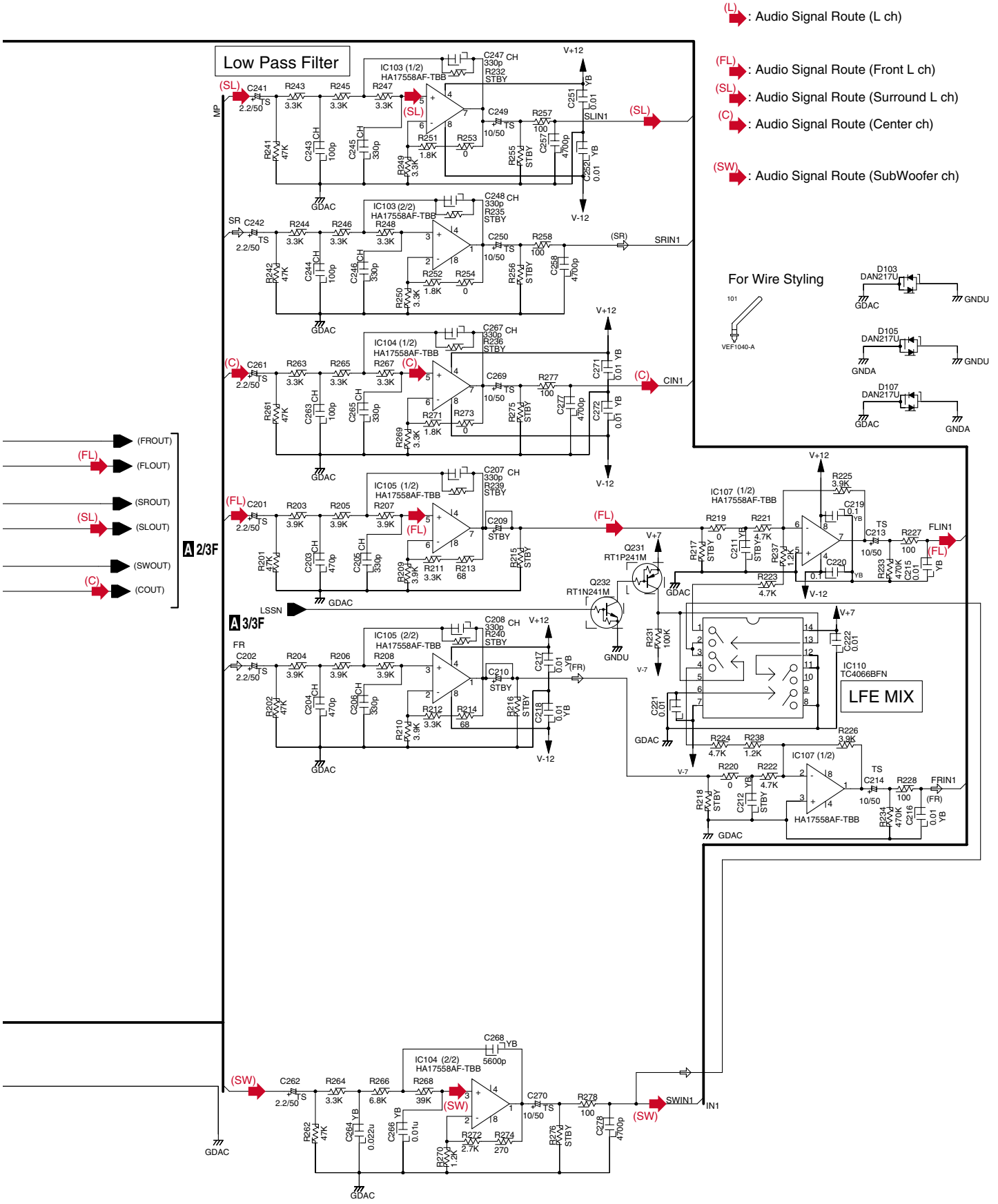
(L): Audio Signal Route (L ch)
(FL): Audio Signal Route (Front L ch)
(SL): Audio Signal Route (Surround L ch)
(C): Audio Signal Route (Center ch)
(SW): Audio Signal Route (SubWoofer ch)
Low Pass Filter
IC103 (1/2) HA17558AF-TBB
IC103 (2/2) HA17558AF-TBB
IC104 (1/2) HA17558AF-TBB
IC105 (1/2) HA17558AF-TBB
IC105 (2/2) HA17558AF-TBB
IC104 (2/2) HA17558AF-TBB
IC107 (1/2) HA17558AF-TBB
IC107 (1/2) HA17558AF-TBB
IC110 TC4066BFN
LFE MIX
For Wire Styling
VEF1040-A
D103 DAN217U
D105 DAN217U
D107 DAN217U
Q231 RT1P241M
Q232 RT1N241M
(FROUT)
(FLOUT)
(SROUT)
(SLOUT)
(SWOUT)
(COUT)
A 2/3F
A 3/3F
A 1/3F
SLIN1
SRIN1
CIN1
FLIN1
FRIN1
SWIN1
IN1
LSSN
GDAC
GNDU
GNDA
V+12
V-12
V+7
V-7

2.2 MAIN ASSY (2/3)

A 2/3F MAIN ASSY (XWK3228)

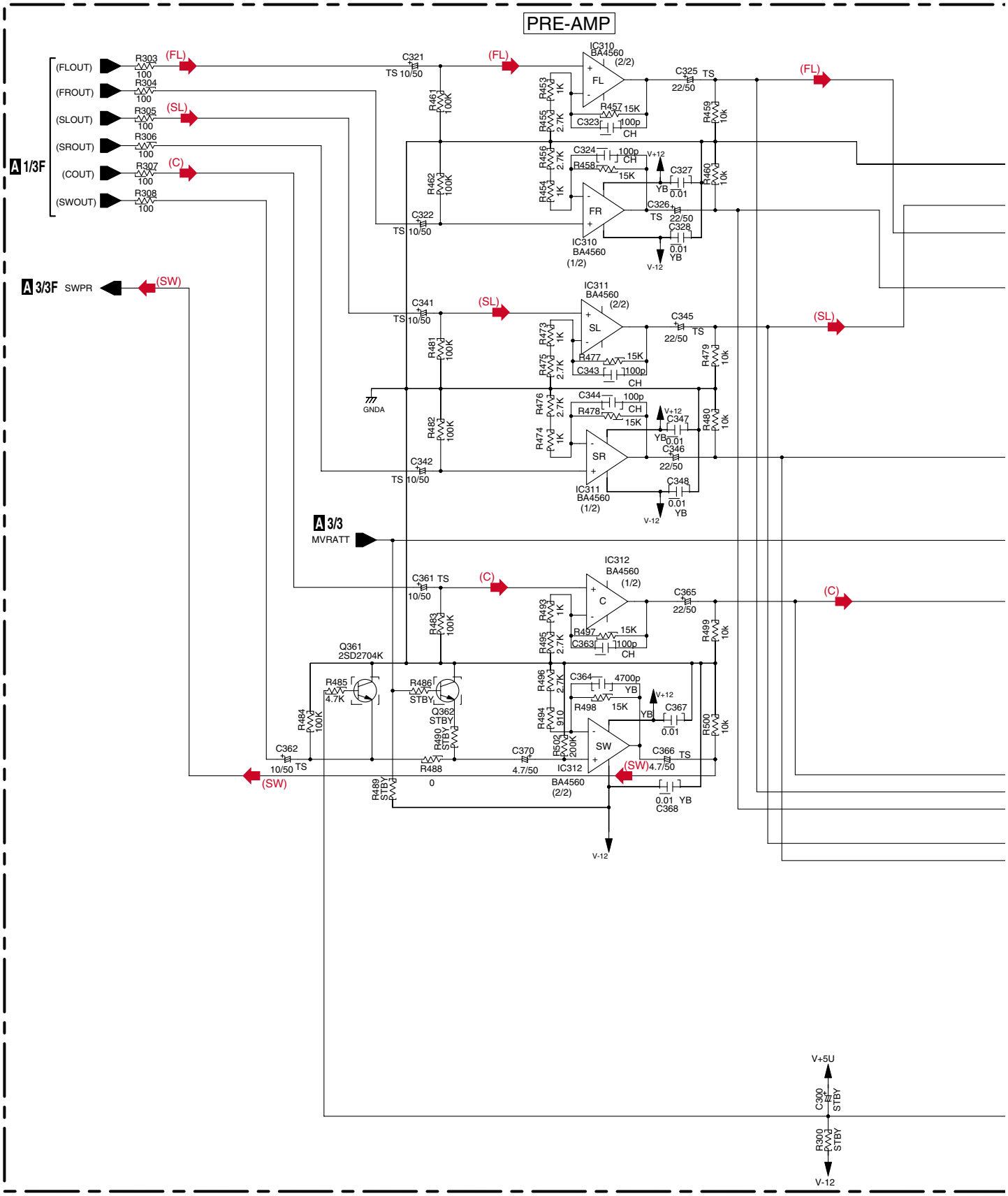

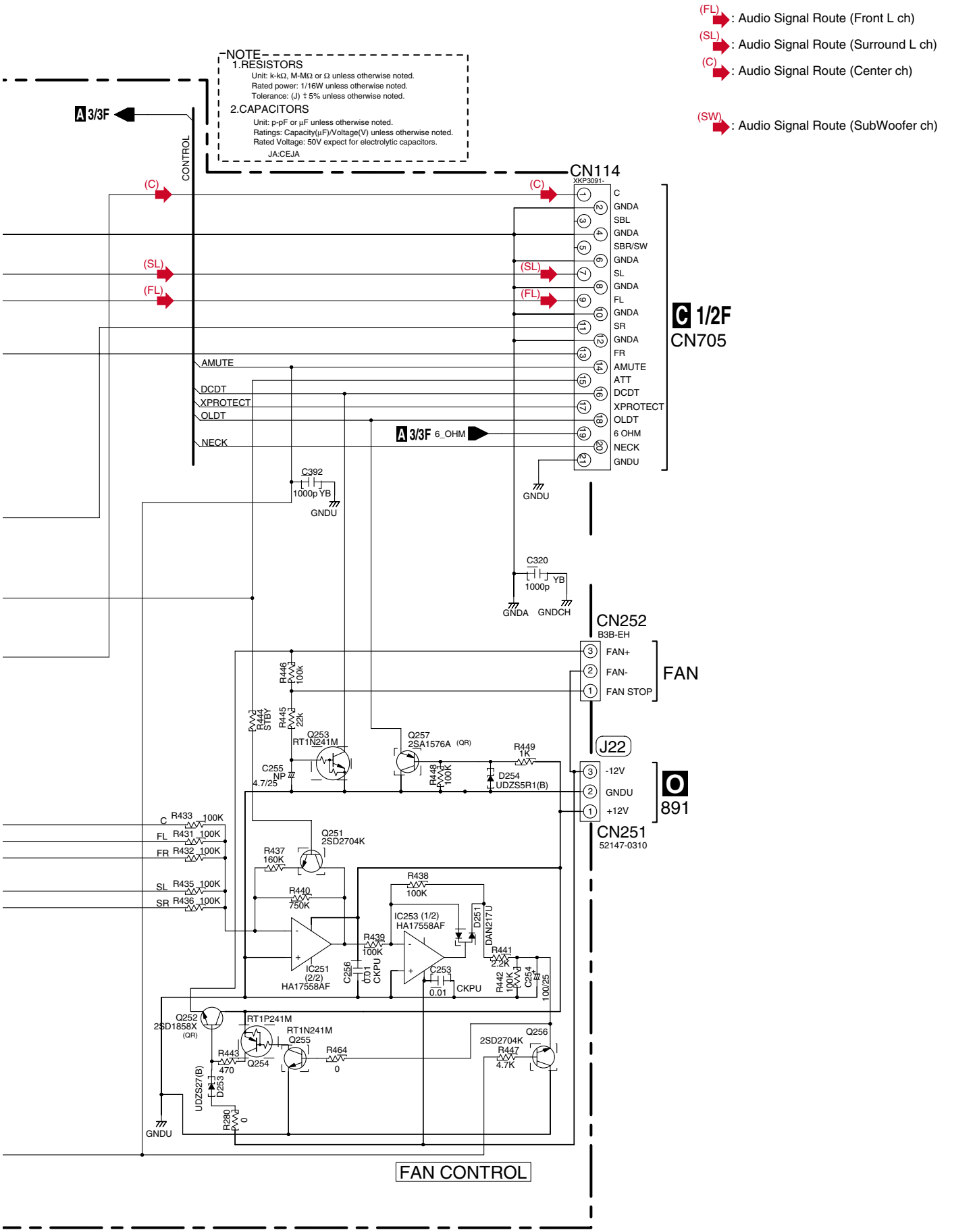
(FL): Audio Signal Route (Front L ch)
(SL): Audio Signal Route (Surround L ch)
(C): Audio Signal Route (Center ch)
(SW): Audio Signal Route (SubWoofer ch)
NOTE
1.RESISTORS
Unit: k-kΩ, M-MΩ or Ω unless otherwise noted.
Rated power: 1/16W unless otherwise noted.
Tolerance: (J) ± 5% unless otherwise noted.
2.CAPACITORS
Unit: p-pF or µF unless otherwise noted.
Ratings: Capacity(µF)/Voltage(V) unless otherwise noted.
Rated Voltage: 50V expect for electrolytic capacitors.
JA:CEJA
A 3/3F
CONTROL
CN114
XKP3091-
C 1/2F
CN705
C
GNDA
SBL
GNDA
SBR/SW
GNDA
SL
GNDA
FL
GNDA
SR
GNDA
FR
AMUTE
ATT
DCDT
XPROTECT
OLDT
6 OHM
NECK
GNDU
AMUTE
DCDT
XPROTECT
OLDT
NECK
A 3/3F 6_OHM
C392
1000p YB
GNDU
C320
1000p
YB
GNDA
GNDCH
CN252
B3B-EH
FAN+
FAN-
FAN STOP
FAN
R446 100k
R444 4.4V STBY
R445 22k
Q253 RT1N241M
Q257 2SA1576A (QR)
R449 1K
C255 NP 4.7/25
R448 100K
D254 UDZS5R1(B)
J22
-12V
GNDU
+12V
O 891
CN251
52147-0310
R433 100K
R431 100K
R432 100K
R435 100K
R436 100K
Q251 2SD2704K
R437 160K
R440 750K
R438 100K
IC253 (1/2) HA17558AF
D251 DAN217U
R439 100K
IC251 (2/2) HA17558AF
C256 0.01
CKPU
C253 0.01
CKPU
R441 2.2K
R442 100K
C254 100/25
Q252 2SD1858X (QR)
RT1P241M
RT1N241M
Q255
Q254
R443 470
R464 0
2SD2704K
Q256
R447 4.7K
D253 UDZS27(B)
R280 0
GNDU
FAN CONTROL

A 2/3F

2.3 MAIN ASSY (3/3)

A 3/3F MAIN ASSY (XWK3228)

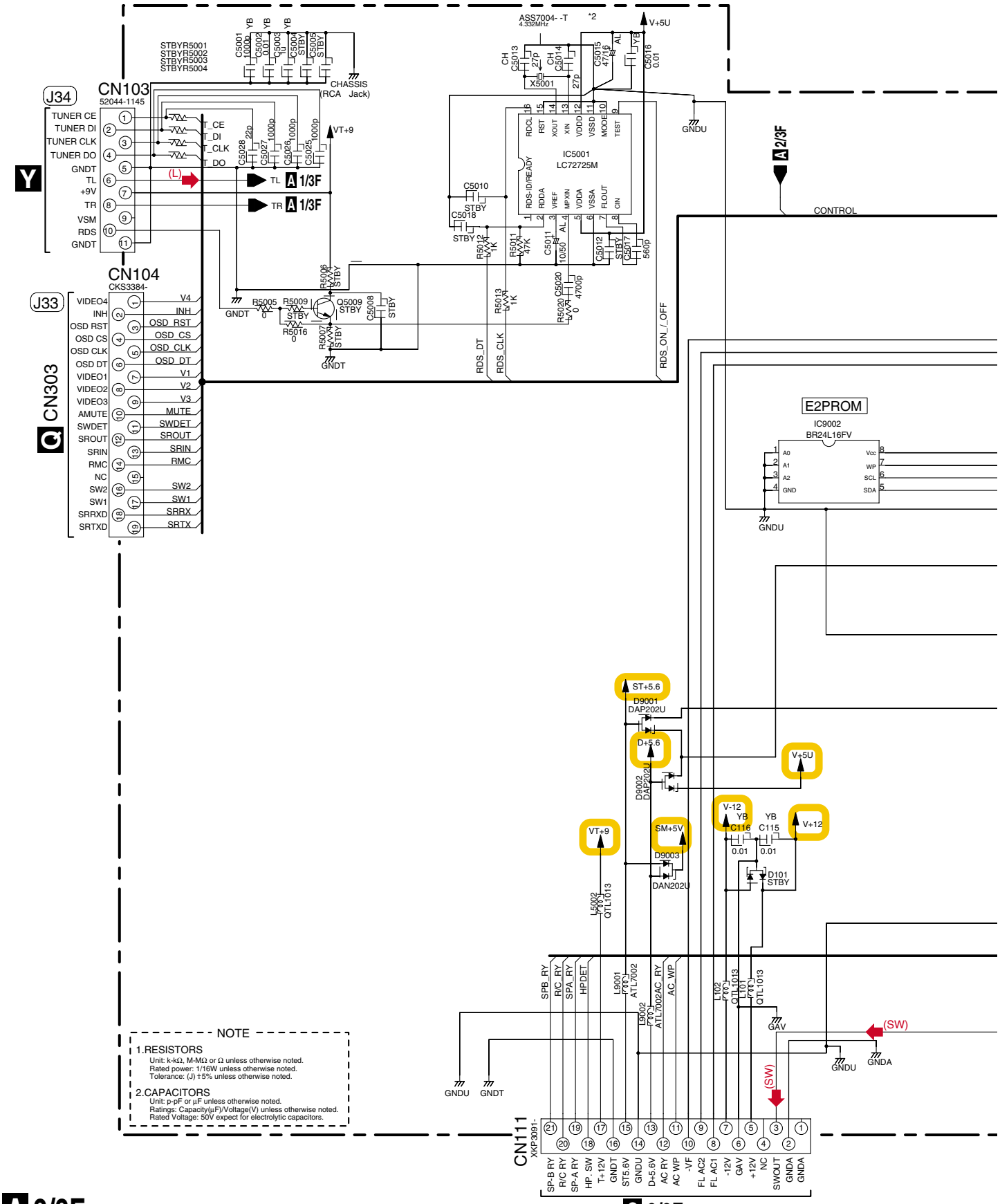

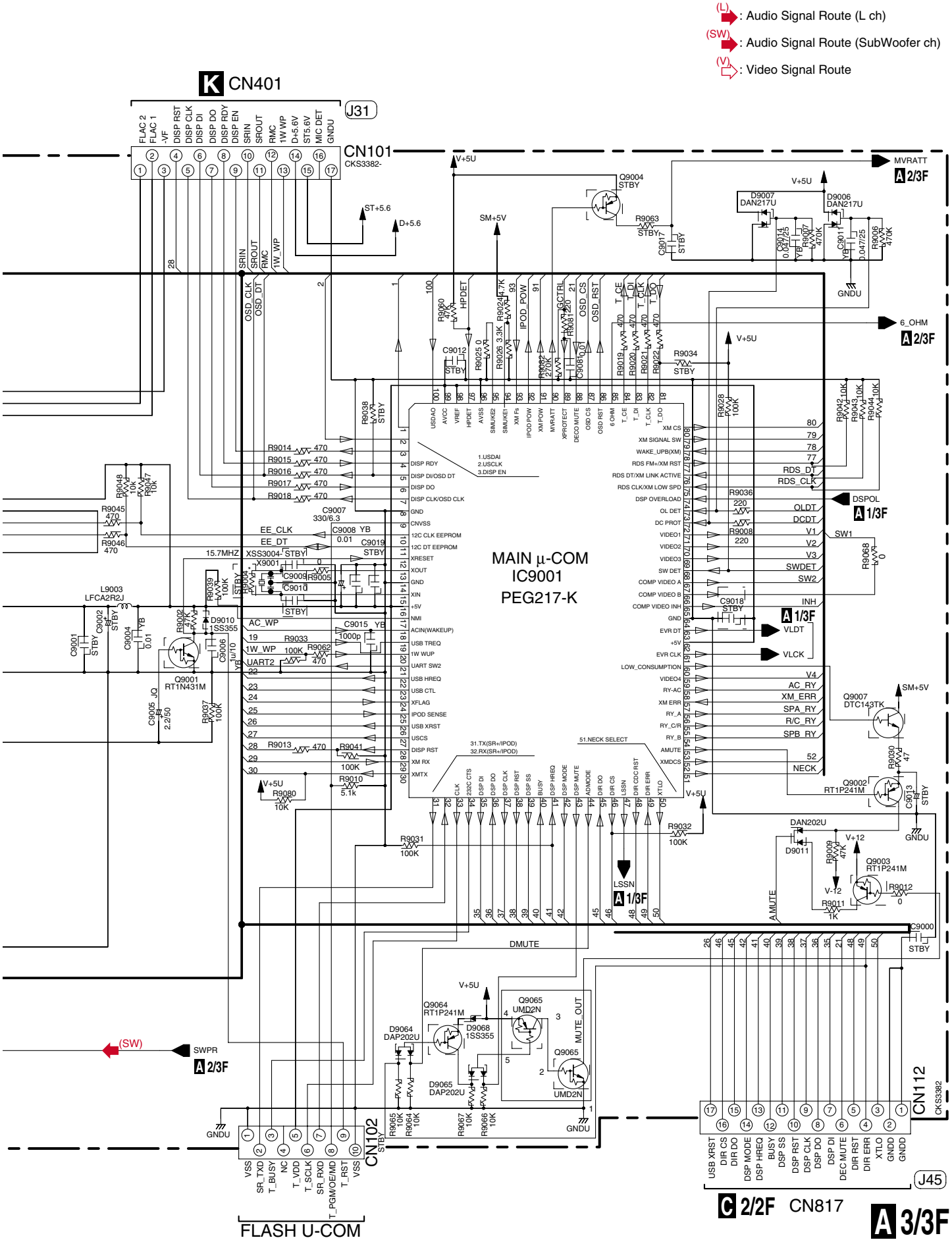
(L): Audio Signal Route (L ch)
(SW): Audio Signal Route (SubWoofer ch)
(V): Video Signal Route
K CN401
J31
CN101
CKS3382-
MAIN µ-COM
IC9001
PEG217-K
MVRATT
A 2/3F
6_OHM
A 2/3F
DSPOL
A 1/3F
A 1/3F
VLDT
VLCK
LSSN
A 1/3F
SWPR
A 2/3F
(SW)
CN102
FLASH U-COM
CN112
CKS3382
J45
C 2/2F CN817
A 3/3F

2.4 POWER PACK (1/2), TRANS2 and TRANS3 ASSYS

C 1/2F POWER PACK ASSY (XWZ4081)

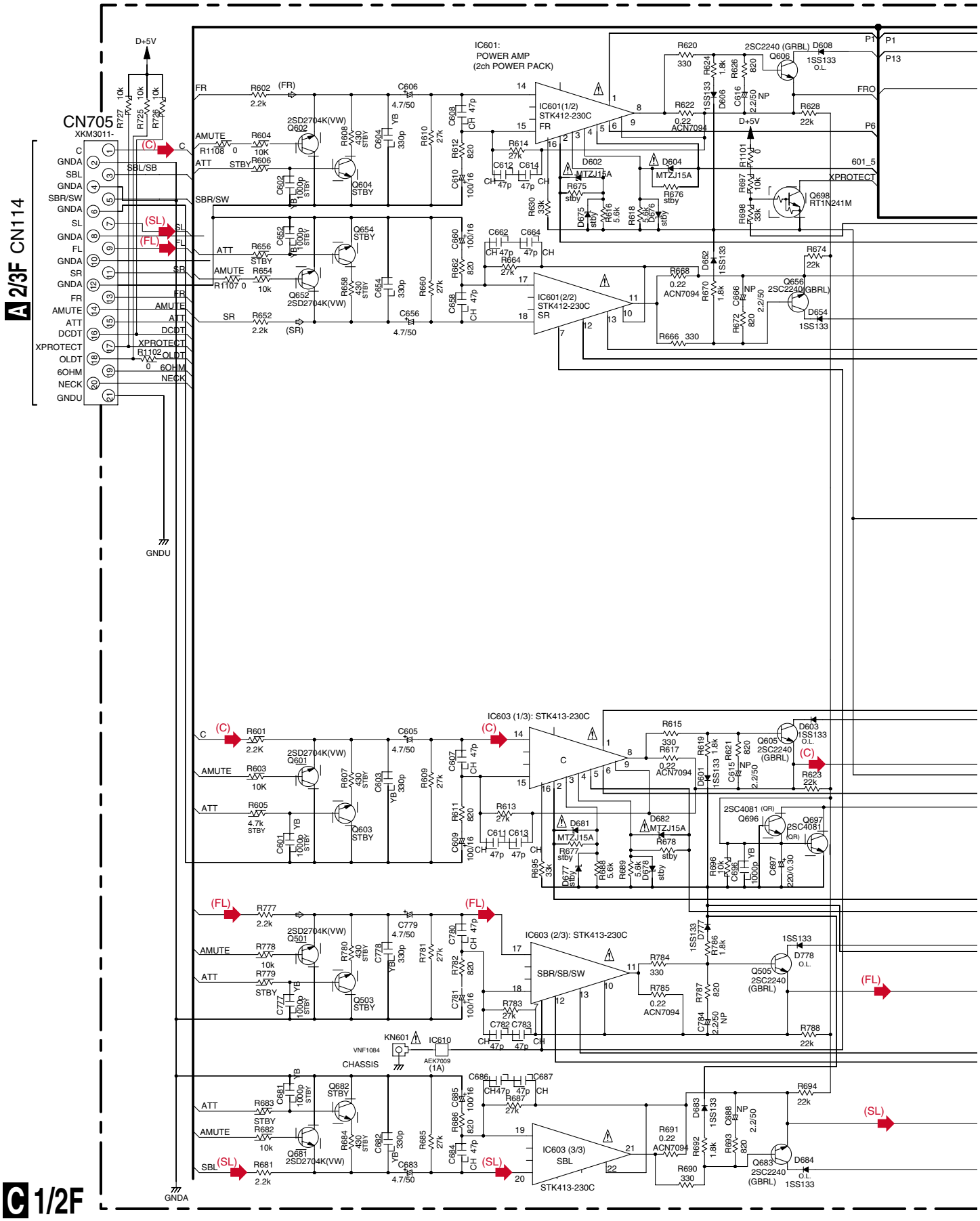

C 1/2F

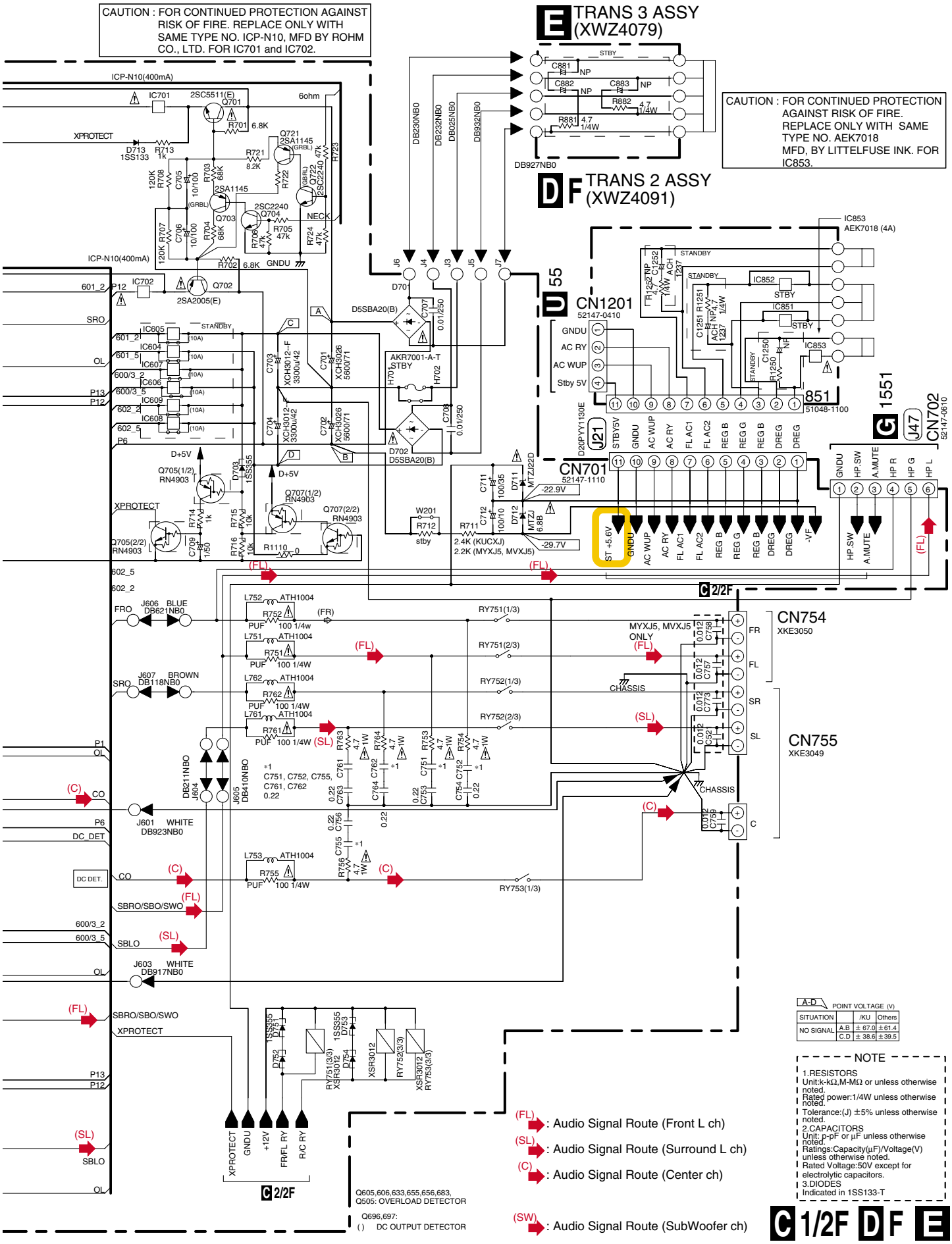
CAUTION : FOR CONTINUED PROTECTION AGAINST RISK OF FIRE. REPLACE ONLY WITH SAME TYPE NO. ICP-N10, MFD BY ROHM CO., LTD. FOR IC701 and IC702.
E TRANS 3 ASSY (XWZ4079)
CAUTION : FOR CONTINUED PROTECTION AGAINST RISK OF FIRE. REPLACE ONLY WITH SAME TYPE NO. AEK7018 MFD, BY LITTELFUSE INK. FOR IC853.
D F TRANS 2 ASSY (XWZ4091)
ICP-N10(400mA)
IC701
2SC5511(E)
Q701
6ohm
XPROTECT
D713 1SS133
R713 1k
R701 6.8K
Q721 2SA1145 (GRBL)
R721 8.2K
R723 47K
R722 47K
Q722 2SC2240 (GRBL)
R703 68K
R704 68K
R708 120K
R707 120K
C705 10/100
C706 10/100
2SA1145 (GRBL)
Q703
2SC2240
Q704
R706 47K
R705 47k
R724 47K
NECK
R702 6.8K
GNDU
IC702
Q702
2SA2005(E)
601_2
P12
SRO
OL
P13
P12
P6
IC605
IC604
IC607
IC606
IC609
IC608
STANDBY
10A
C703 XCH3012-F 3300u/42
C704 XCH3012 3300u/42
C701 XCH3026 5600/71
C702 XCH3026 5600/71
D+5V
D703 1SS355
Q705(1/2) RN4903
Q705(2/2) RN4903
Q707(1/2) RN4903
Q707(2/2) RN4903
R714 1k
R715 10k
R716 10k
C709 1/50
R1110 0
602_5
602_2
FRO
J606 BLUE DB621NB0
SRO
J607 BROWN DB118NB0
P1
OL
CO
P6
DC_DET
J601 WHITE DB923NB0
DC DET.
SBRO/SBO/SWO
600/3_2
600/3_5
SBLO
J603 WHITE DB917NB0
XPROTECT
P13
P12
SBLO
OL
DB211NBO J604
DB410NBO J605
L752 ATH1004
R752 PUF 100 1/4w
L751 ATH1004
R751 PUF 100 1/4W
L762 ATH1004
R762 PUF 100 1/4W
L761 ATH1004
R761 PUF 100 1/4W
L753 ATH1004
R755 PUF 100 1/4W
*1 C751, C752, C755, C761, C762 0.22
RY751(1/3)
RY751(2/3)
RY752(1/3)
RY752(2/3)
RY753(1/3)
CHASSIS
MYXJ5, MVXJ5 ONLY
CN754 XKE3050
CN755 XKE3049
FR
FL
SR
SL
C
DB230NB0
DB232NB0
DB025NB0
DB932NB0
DB927NB0
J6
J4
J3
J5
J7
D701
D5SBA20(B)
C707 0.01/250
AKR7001-A-T STBY
H701
H702
C708 0.01/250
D702 D5SBA20(B)
W201
R712 stby
R711 2.4K (KUCXJ) 2.2K (MYXJ5, MVXJ5)
C711 100/35
C712 100/10
D711 MTZJ22D
D712 MTZJ 6.8B
-22.9V
-29.7V
IC853 AEK7018 (4A)
IC852
IC851
IC853
CN1201 52147-0410
GNDU
AC RY
AC WUP
Stby 5V
851 51048-1100
D20PYY1130E
J21
CN701 52147-1110
ST +5.6V
GNDU
AC WUP
AC RY
FL AC1
FL AC2
REG B
REG G
REG B
DREG
DREG
-VF
HP SW
A.MUTE
G 1551
J47
CN702 52147-0610
HP R
HP G
HP L
XPROTECT
GNDU
+12V
FR/FL RY
R/C RY
RY751(3/3) XSR3012
RY752(3/3) XSR3012
RY753(3/3) XSR3012
D751 1SS355
D752
D753 1SS355
D754
C 2/2F
Q605,606,633,655,656,683, Q505: OVERLOAD DETECTOR
Q696,697: ( ) DC OUTPUT DETECTOR
(FL): Audio Signal Route (Front L ch)
(SL): Audio Signal Route (Surround L ch)
(C): Audio Signal Route (Center ch)
(SW): Audio Signal Route (SubWoofer ch)
A-D POINT VOLTAGE (V)
SITUATION | /KU | Others
NO SIGNAL | A,B ± 67.0 | ± 61.4
C,D ± 38.6 | ± 39.5
NOTE
1.RESISTORS
Unit:k-kΩ,M-MΩ or unless otherwise noted.
Rated power:1/4W unless otherwise noted.
Tolerance:(J) ±5% unless otherwise noted.
2.CAPACITORS
Unit: p-pF or µF unless otherwise noted.
Ratings:Capacity(µF)/Voltage(V) unless otherwise noted.
Rated Voltage:50V except for electrolytic capacitors.
3.DIODES
Indicated in 1SS133-T
C 1/2F D F E

2.5 POWER PACK ASSY (1/2)

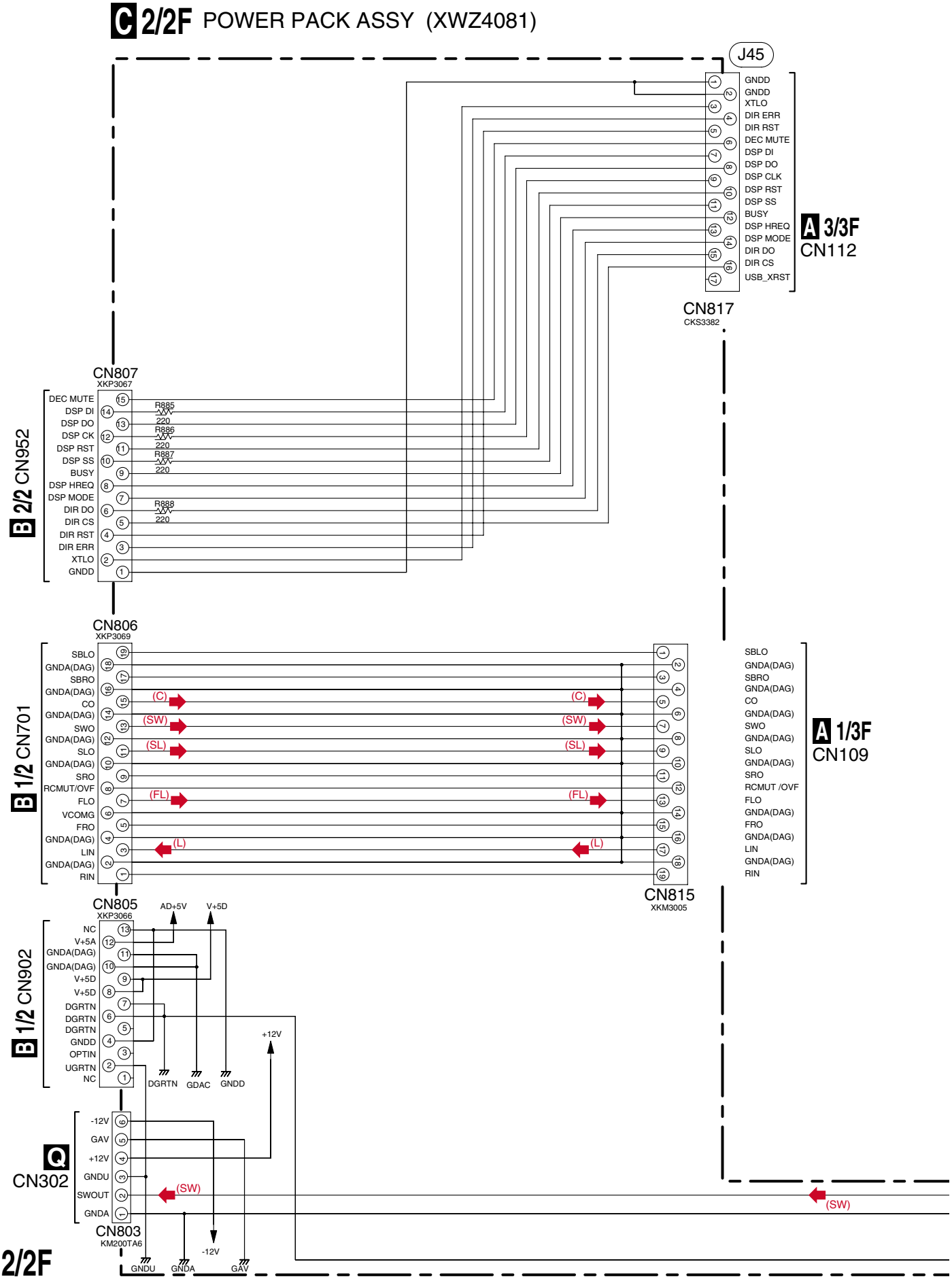

(L) : Audio Signal Route (L ch)
(FL) : Audio Signal Route (Front L ch)
(SL) : Audio Signal Route (Surround L ch)
(C) : Audio Signal Route (Center ch)
(SW) : Audio Signal Route (SubWoofer ch)

NOTE

1.RESISTORS
Unit:k-kΩ,M-MΩ or unless otherwise noted.
Rated power:1/4W unless otherwise noted.
Tolerance:(J)±5% unless otherwise noted.
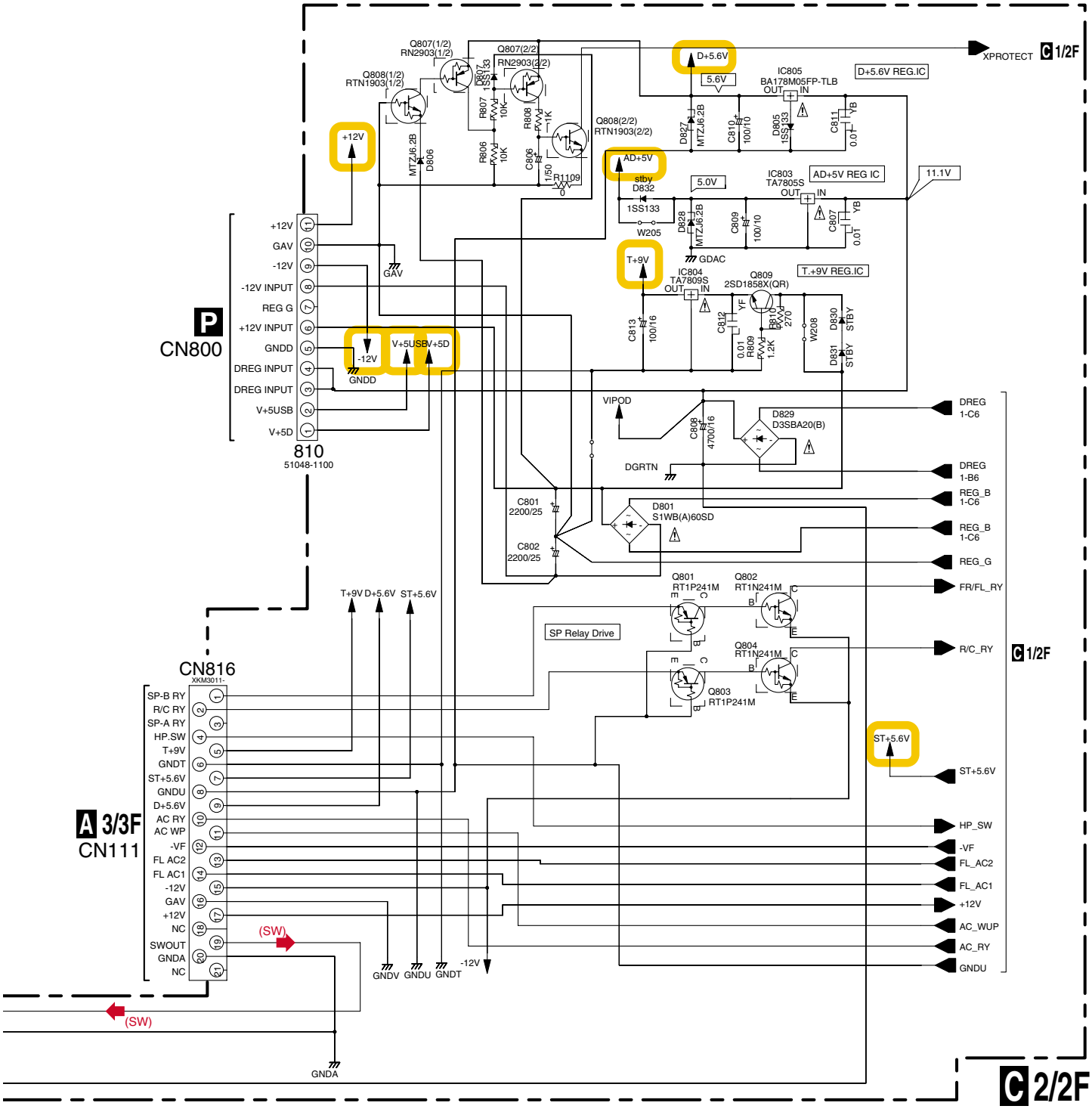
2.CAPACITORS
Umit: p-pF or μF unless otherwise noted.
Ratings:Capacity(μF)/Voltage(V) unless otherwise noted.
Rated Voltage:50V except for electrolytic capacitors.