Pioneer

Service Manual

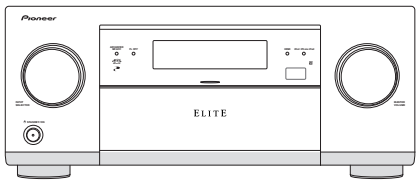

VSX-53

ORDER NO.
RRV4194

AUDIO/VIDEO MULTI-CHANNEL RECEIVER

VSX-53
VSX-1326-K
VSX-52
VSX-1126-K
VSX-1121-K

THIS MANUAL IS APPLICABLE TO THE FOLLOWING MODEL(S) AND TYPE(S).

Model	Type	Power Requirement	Remarks
VSX-53	UXJCB	AC 120 V	
VSX-1326-K	CUXJ	AC 120 V	
VSX-52	UXJCB	AC 120 V	
VSX-1126-K	CUXJ	AC 120 V	
VSX-1121-K	UXJCB	AC 120 V	

PIONEER CORPORATION 1-1, Shin-ogura, Saiwai-ku, Kawasaki-shi, Kanagawa 212-0031, Japan
PIONEER ELECTRONICS (USA) INC. P.O. Box 1760, Long Beach, CA 90801-1760, U.S.A.
PIONEER EUROPE NV Haven 1087, Keetberglaan 1, 9120 Melsele, Belgium
PIONEER ELECTRONICS ASIACENTRE PTE. LTD. 253 Alexandra Road, #04-01, Singapore 159936
ⓒPIONEER CORPORATION 2011

K-FZV JUNE 2011 Printed in Japan

SAFETY INFORMATION

This service manual is intended for qualified service technicians ; it is not meant for the casual do-it-yourselfer. Qualified technicians have the necessary test equipment and tools, and have been trained to properly and safely repair complex products such as those covered by this manual.
Improperly performed repairs can adversely affect the safety and reliability of the product and may void the warranty. If you are not qualified to perform the repair of this product properly and safely, you should not risk trying to do so and refer the repair to a qualified service technician.

WARNING
This product contains lead in solder and certain electrical parts contain chemicals which are known to the state of California to cause cancer, birth defects or other reproductive harm.

Health & Safety Code Section 25249.6 - Proposition 65

NOTICE
(FOR CANADIAN MODEL ONLY)
Fuse symbols (fast operating fuse) and/or (slow operating fuse) on PCB indicate that replacement parts must be of identical designation.

REMARQUE
(POUR MODÈLE CANADIEN SEULEMENT)
Les symboles de fusible (fusible de type rapide) et/ou (fusible de type lent) sur CCI indiquent que les pièces de remplacement doivent avoir la même désignation.

(FOR USA MODEL ONLY)

1. SAFETY PRECAUTIONS

The following check should be performed for the continued protection of the customer and service technician.

LEAKAGE CURRENT CHECK

Measure leakage current to a known earth ground (water pipe, conduit, etc.) by connecting a leakage current tester such as Simpson Model 229-2 or equivalent between the earth ground and all exposed metal parts of the appliance (input/output terminals, screwheads, metal overlays, control shaft, etc.). Plug the AC line cord of the appliance directly into a 120V AC 60 Hz outlet and turn the AC power switch on. Any current measured must not exceed 0.5 mA.

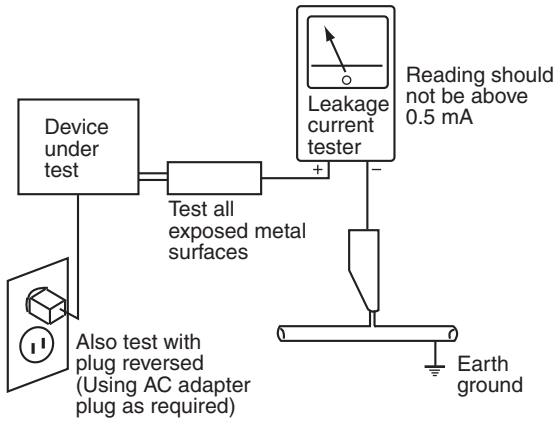

AC Leakage Test

ANY MEASUREMENTS NOT WITHIN THE LIMITS OUTLINED ABOVE ARE INDICATIVE OF A POTENTIAL SHOCK HAZARD AND MUST BE CORRECTED BEFORE RETURNING THE APPLIANCE TO THE CUSTOMER.

2. PRODUCT SAFETY NOTICE

Many electrical and mechanical parts in the appliance have special safety related characteristics. These are often not evident from visual inspection nor the protection afforded by them necessarily can be obtained by using replacement components rated for voltage, wattage, etc. Replacement parts which have these special safety characteristics are identified in this Service Manual.

Electrical components having such features are identified by marking with a ⚠ on the schematics and on the parts list in this Service Manual.
The use of a substitute replacement component which does not have the same safety characteristics as the PIONEER recommended replacement one, shown in the parts list in this Service Manual, may create shock, fire, or other hazards.

Product Safety is continuously under review and new instructions are issued from time to time. For the latest information, always consult the current PIONEER Service Manual. A subscription to, or additional copies of, PIONEER Service Manual may be obtained at a nominal charge from PIONEER.

CONTENTS

SAFETY INFORMATION 2
1. SERVICE PRECAUTIONS 5
1.1 NOTES ON SOLDERING 5
1.2 NOTES ON REPLACING 5
1.3 CAUTION 5
2. SPECIFICATIONS 6
3. BASIC ITEMS FOR SERVICE 9
3.1 CHECK POINTS AFTER SERVICING 9
3.2 PCB LOCATIONS 10
3.3 JIGS LIST 12
4. BLOCK DIAGRAM 14
4.1 OVERALL WIRING DIAGRAM 14
4.2 BLOCK DIAGRAM FOR AUDIO BLOCK 16
4.3 BLOCK DIAGRAM FOR DIGITAL MAIN VIDEO BLOCK 18
4.4 BLOCK DIAGRAM FOR DIGITAL MAIN AUDIO BLOCK 20
4.5 BLOCK DIAGRAM FOR COMPOSITE VIDEO BLOCK 22
4.6 BLOCK DIAGRAM FOR COMPONENT VIDEO BLOCK 23
4.7 BLOCK DIAGRAM FOR POWER BLOCK(1) 24
4.8 BLOCK DIAGRAM FOR POWER BLOCK(2) 26
5. DIAGNOSIS 28
5.1 DIAGNOSIS FLOWCHART 28
5.2 CIRCUIT DESCRIPTION 35
6. SERVICE MODE 41
6.1 TEST MODE 41
7. DISASSEMBLY 43
7.1 DISASSEMBLY 43
8. EACH SETTING AND ADJUSTMENT 62
8.1 ADJUSTMENT REQUIRED WHEN THE UNIT IS REPAIRED OR REPLACED 62
8.2 HOW TO SAVE AND LOAD THE SETTING USING BACKUP FUNCTION WITH USB MEMORY 63
8.3 REGION WRITING 64
8.4 HOW TO UPDATE FIRMWARE 65
9. EXPLODED VIEWS AND PARTS LIST 68
9.1 PACKING SECTION 68
9.2 EXTERIOR SECTION 70
9.3 REAR SECTION 72
9.4 FRONT SECTION 74
10. SCHEMATIC DIAGRAM 76
10.1 AUDIO ASSY(1/3)(GUIDE PAGE) 76
10.2 AUDIO ASSY(2/3) 82
10.3 AUDIO ASSY(3/3) 84
10.4 COMPOSITE ASSY 86
10.5 DAC LOW ASSY(1/2) 88
10.6 DAC LOW ASSY(2/2) 90
10.7 COMPONENT ASSY 92
10.8 DIGITAL MAIN ASSY(1/10)(GUIDE PAGE) 94
10.9 DIGITAL MAIN ASSY(2/10) 100
10.10 DIGITAL MAIN ASSY(3/10) 102
10.11 DIGITAL MAIN ASSY(4/10) 104
10.12 DIGITAL MAIN ASSY(5/10) 106
10.13 DIGITAL MAIN ASSY(6/10) 108
10.14 DIGITAL MAIN ASSY(7/10) 110
10.15 DIGITAL MAIN ASSY(8/10) 112
10.16 DIGITAL MAIN ASSY(9/10) 114
10.17 DIGITAL MAIN ASSY(10/10) and VOL ASSY 116
10.18 FRONT HDMI USB ASSY 118
10.19 POWER AMP ASSY(1/2) 120
10.20 POWER AMP ASSY(2/2) 122
10.21 PRESTAGE ASSY 124
10.22 DISPLAY ASSY 126
10.23 PRIMARY ASSY 128
10.24 USB RECT ASSY 130
10.25 REGULATOR ASSY 132
10.26 POWER SW, ENCODER and MIC HP ASSYS 134
10.27 CONNECT and A-DAC BRIDGE ASSYS 136

10.28 D-AUDIO BRIDGE and D-DAC BRIDGE ASSYS 137
10.29 MIC CONNECT and POSI 1-3 ASSYS 138
10.30 BIND L FRONT/BACK, BIND R FRONT, BIND DISP FFC, FFC GUARD/GUARD 2 and BIND R BACK ASSYS 139
11. PCB CONNECTION DIAGRAM 140
11.1 AUDIO ASSY 140
11.2 COMPOSITE ASSY 144
11.3 DAC LOW ASSY 146
11.4 COMPONENT ASSY 148
11.5 DIGITAL MAIN ASSY 152
11.6 VOL and FRONT HDMI USB ASSYS 156
11.7 POWER AMP ASSY 158
11.8 PRESTAGE ASSY 162
11.9 DISPLAY ASSY 166
11.10 PRIMARY and USB RECT ASSYS 170
11.11 REGULATOR ASSY 174
11.12 POWER SW, ENCODER and MIC HP ASSYS 178
11.13 CONNECT and A-DAC BRIDGE ASSYS 180
11.14 D-AUDIO BRIDGE, D-DAC BRIDGE and MIC CONNECT ASSYS 182
11.15 POSI 1-3, BIND L FRONT and BIND L BACK ASSYS 186
11.16 BIND R FRONT, BIND DISP FFC, FFC GUARD / GUARD 2 and BIND R BACK ASSYS 188
12. PCB PARTS LIST 190

1. SERVICE PRECAUTIONS

1.1 NOTES ON SOLDERING

- For environmental protection, lead-free solder is used on the printed circuit boards mounted in this unit.
  Be sure to use lead-free solder and a soldering iron that can meet specifications for use with lead-free solders for repairs accompanied by reworking of soldering.

- Compared with conventional eutectic solders, lead-free solders have higher melting points, by approximately 40 °C.
  Therefore, for lead-free soldering, the tip temperature of a soldering iron must be set to around 373 °C in general, although the temperature depends on the heat capacity of the PC board on which reworking is required and the weight of the tip of the soldering iron.

Do NOT use a soldering iron whose tip temperature cannot be controlled.

Compared with eutectic solders, lead-free solders have higher bond strengths but slower wetting times and higher melting temperatures (hard to melt/easy to harden).

The following lead-free solders are available as service parts:
- Parts numbers of lead-free solder:
  GYP1006 1.0 in dia.
  GYP1007 0.6 in dia.
  GYP1008 0.3 in dia.

1.2 NOTES ON REPLACING

The part listed below is difficult to replace as a discrete component part.
When the part listed in the table is defective, replace whole Assy.

ASSY NAME	PCB ASSY Part No.	Parts that is Difficult to Replace			
		Ref No.	FUNCTION	Part No.	Remarks
DIGITAL MAIN ASSY	AWX9825 (VSX-53) (VSX-1326-K) AWX9826 (VSX-52) (VSX-1126-K) (VSX-1121-K)	IC101	MAIN CPU	UPD61283F1-407LU2A	BGA
		IC903	HDMI RECEIVER	SII9233ACTU	IC with heat-pad
		IC905	HDMI SWITCH	SII9387CTU	IC with heat-pad
		IC1204	DIGITAL VIDEO FORMAT CONVERTER	88DE2750	BGA
		IC1212 (MAIN)	DDR2-SDRAM	H5PS5162GFR-S5C-K	BGA
		IC1212 (SUB)	DDR2-SDRAM	K4T51163QI-HCE7	BGA
		JA1501	CONNECTOR (for BLUE TOOTH)	CKS5712-A	Land is under parts
		IC1602	HDMI TRANSMITTER	SII9136CTU	IC with heat-pad
		IC1603	HDMI TRANSMITTER	SII9136CTU	IC with heat-pad
		IC9002	DSP	D810K013BZKB400-K	BGA
		IC9204	MEDIA PROCESSOR	DM860	BGA
		IC9203	LAN PHY	LAN8700C-AEZG	IC with heat-pad
		IC9205	FLASH ROM	AYW7346-A	MAC Address closed-door
		IC9510	REGULATOR	NJM2846DL3-33	IC with heat-pad
		IC9509	REGULATOR	MM1701WH	IC with heat-pad

1.3 CAUTION

- Discharging
  Please refer to page 43, “Preparations Before Perfoming Diagnosis of the POWER AMP Assy”.

- Ground Points
  Please refer to page 44, “Ground Points”.

2. SPECIFICATIONS

● VSX-53 / VSX-52

Amplifier section

Continuous average power output of 110 watts* per channel, min., at 8 ohms, from 20 Hz to 20 000 Hz with no more than 0.08 % total harmonic distortion.**

Continuous Power Output
(20 Hz to 20 kHz, 8 Ω, 0.08 %)
- Front ..... 110 W + 110 W
- Center ..... 110 W
- Surround ..... 110 W + 110 W
- Surround back (Front height/wide) ..... 110 W + 110 W

Continuous Power Output (1 kHz, 6 Ω, 1.0 %)
- Front ..... 150 W + 150 W
- Center ..... 150 W
- Surround ..... 150 W + 150 W
- Surround back (Front height/wide) ..... 150 W + 150 W

Total harmonic distortion ..... 0.06 %
(20 Hz to 20 kHz, 100 W + 100 W, 8 Ω)
Guaranteed speaker impedance ..... 16 Ω to 8 Ω, less than 8 Ω to 6 Ω (setting required)

** Measured pursuant to the Federal Trade Commission's Trade Regulation rule on Power Output Claims for Amplifiers*
*** Measured by Audio Spectrum Analyzer*

Audio Section

Input (Sensitivity/Impedance)
- LINE ..... 350 mV/47 kΩ

Output (Level/Impedance)
- REC ..... 335 mV/2.2 kΩ

Signal-to-Noise Ratio
(IHF, short circuited, A network)
- LINE ..... 103 dB

Frequency Response ....5 Hz to 100 000 Hz $^{+0}_{-3}$ dB (Pure Direct Mode)

Tuner Section

Frequency Range (FM).....87.5 MHz to 108 MHz
Antenna Input (FM)..... 75 Ω unbalanced
Frequency Range (AM).....531 kHz to 1602 kHz
Antenna (AM) ..... Loop antenna (balanced)

Video Section

Signal level
- Composite Video .....1 Vp-p (75 Ω)
- Component Video .....Y: 1.0 Vp-p (75 Ω), PB/PR: 0.7 Vp-p (75 Ω)

Corresponding maximum resolution
- Component Video .....1080p (1125p) (Video convert off)

Digital In/Out Section

HDMI terminal .....19-pin (Not DVI)
HDMI output type.....5 V, 55 mA
USB terminal .....USB2.0 Full Speed (Type A)
iPod terminal ..... USB, and Video (Composite)
SIRIUS antenna cable.....8-pin mini DIN cable
ADAPTER PORT terminal.....5 V, 100 mA
WIRELESS LAN ADAPTER terminal
.....5 V, 600 mA

Integrated Control Section

Control (SR) terminal.....ø 3.5 Mini-jack (MONO)
Control (IR) terminal .....ø 3.5 Mini-jack (MONO)
IR signal.....High Active (High Level: 2.0 V)
12 V Trigger terminal .....ø 3.5 Mini-jack (MONO)
12 V Trigger output type.....12 V, Total 150 mA
RS-232C cable type.....9-pin, cross type, female-female
EXTENSION terminal .....5 V, 150 mA

Network Section

LAN terminal .....10 BASE-T/100 BASE-TX

Miscellaneous

Power requirements .....AC 120 V, 60 Hz
Power consumption .....570 W
In standby
- .....0.1 W (HDMI Setup – Control : OFF)
- ..... 0.3 W (HDMI Setup – Control : ON)

Dimensions
..... 435 mm (W) x 185.6 mm (H) x 440.3 mm (D)
(17 3/16 in. (W) x 7 5/16 in. (H) x 17 3/8 in. (D))
Weight (without package)
- VSX-53..... 13.9 kg (30.6 lb)
- VSX-52..... 13.7 kg (30.2 lb)

Number of Furnished Parts

MCACC Setup microphone 1
Remote control unit 1
AAA size IEC R03 dry cell batteries.....2
iPod cable.....1
AM loop antenna 1
FM wire antenna.....1
Warranty card 1
Power cord
CD-ROM (AVNavigator)
These operating instructions

Note

- Specifications and the design are subject to possible modifications without notice, due to improvements.
- *This product includes FontAvenue® fonts licensed by NEC Corporation. FontAvenue is a registered trademark of NEC Corporation.*

● VSX-1326-K / VSX-1126-K

Amplifier section

Continuous average power output of 110 watts* per channel, min., at 8 ohms, from 20 Hz to 20 000 Hz with no more than 0.08 % total harmonic distortion.**

Continuous Power Output
(20 Hz to 20 kHz, 8 Ω, 0.08 %)
- Front ..... 110 W + 110 W
- Center ..... 110 W
- Surround ..... 110 W + 110 W
- Surround back (Front height/wide) ..... 110 W + 110 W

Continuous Power Output (1 kHz, 6 Ω, 1.0 %)
- Front ..... 150 W + 150 W
- Center ..... 150 W
- Surround ..... 150 W + 150 W
- Surround back (Front height/wide) ..... 150 W + 150 W

Total harmonic distortion ..... 0.06 %
(20 Hz to 20 kHz, 100 W + 100 W, 8 Ω)
Guaranteed speaker impedance ..... 16 Ω to 8 Ω, less than 8 Ω to 6 Ω (setting required)

** Measured pursuant to the Federal Trade Commission's Trade Regulation rule on Power Output Claims for Amplifiers*
*** Measured by Audio Spectrum Analyzer*

Audio Section

Input (Sensitivity/Impedance)
- LINE ..... 350 mV/47 kΩ

Output (Level/Impedance)
- REC ..... 335 mV/2.2 kΩ

Signal-to-Noise Ratio
(IHF, short circuited, A network)
- LINE ..... 103 dB

Frequency Response ....5 Hz to 100 000 Hz $^{+0}_{-3}$ dB (Pure Direct Mode)

Tuner Section

Frequency Range (FM).....87.5 MHz to 108 MHz
Antenna Input (FM)..... 75 Ω unbalanced
Frequency Range (AM).....531 kHz to 1602 kHz
Antenna (AM) ..... Loop antenna (balanced)

Video Section

Signal level
- Composite Video .....1 Vp-p (75 Ω)
- Component Video .....Y: 1.0 Vp-p (75 Ω), PB/PR: 0.7 Vp-p (75 Ω)

Corresponding maximum resolution
- Component Video .....1080p (1125p) (Video convert off)

Digital In/Out Section

HDMI terminal .....19-pin (Not DVI)
HDMI output type.....5 V, 55 mA
USB terminal .....USB2.0 Full Speed (Type A)
iPod terminal ..... USB, and Video (Composite)
SIRIUS antenna cable.....8-pin mini DIN cable
ADAPTER PORT terminal.....5 V, 100 mA
WIRELESS LAN ADAPTER terminal .....5 V, 600 mA

Integrated Control Section

Control (SR) terminal .....ø 3.5 Mini-jack (MONO)
Control (IR) terminal .....ø 3.5 Mini-jack (MONO)
IR signal .....High Active (High Level: 2.0 V)
RS-232C cable type .....9-pin, cross type, female-female
EXTENSION terminal .....5 V, 150 mA

VSX-1326 only :
12 V Trigger terminal ..... ø 3.5 Mini-jack (MONO)
12 V Trigger output type.....12 V, Total 150 mA

Network Section

LAN terminal .....10 BASE-T/100 BASE-TX

Miscellaneous

Power requirements .....AC 120 V, 60 Hz
Power consumption .....570 W
In standby
- .....0.1 W (HDMI Setup – Control : OFF)
- .....0.3 W (HDMI Setup – Control : ON)

Dimensions
..... 435 mm (W) x 185.6 mm (H) x 440.3 mm (D)
(17 3/16 in. (W) x 7 5/16 in. (H) x 17 3/8 in. (D))

Weight (without package)
- VSX-1326..... 13.9 kg (30.6 lb)
- VSX-1126..... 13.7 kg (30.2 lb)

Number of Furnished Parts

MCACC Setup microphone 1
Remote control unit 1
AAA size IEC R03 dry cell batteries 2
iPod cable 1
AM loop antenna 1
FM wire antenna 1
Power cord
CD-ROM (AVNavigator)
These operating instructions

Note

- Specifications and the design are subject to possible modifications without notice, due to improvements.
- *This product includes FontAvenue® fonts licensed by NEC Corporation. FontAvenue is a registered trademark of NEC Corporation.*

● VSX-1121-K

Amplifier section

Continuous average power output of 110 watts* per channel, min., at 8 ohms, from 20 Hz to 20 000 Hz with no more than 0.08 % total harmonic distortion.**

Continuous Power Output
(20 Hz to 20 kHz, 8 Ω, 0.08 %)
- Front ..... 110 W + 110 W
- Center ..... 110 W
- Surround ..... 110 W + 110 W
- Surround back (Front height/wide) ..... 110 W + 110 W

Continuous Power Output (1 kHz, 6 Ω, 1.0 %)
- Front ..... 150 W + 150 W
- Center ..... 150 W
- Surround ..... 150 W + 150 W
- Surround back (Front height/wide) ..... 150 W + 150 W

Total harmonic distortion ..... 0.06 %
(20 Hz to 20 kHz, 100 W + 100 W, 8 Ω)
Guaranteed speaker impedance ..... 16 Ω to 8 Ω, less than 8 Ω to 6 Ω (setting required)

** Measured pursuant to the Federal Trade Commission's Trade Regulation rule on Power Output Claims for Amplifiers*
*** Measured by Audio Spectrum Analyzer*

Audio Section

Input (Sensitivity/Impedance)
- LINE ..... 350 mV/47 kΩ

Output (Level/Impedance)
- REC ..... 335 mV/2.2 kΩ

Signal-to-Noise Ratio
(IHF, short circuited, A network)
- LINE ..... 103 dB

Frequency Response ....5 Hz to 100 000 Hz $^{+0}_{-3}$ dB (Pure Direct Mode)

Tuner Section

Frequency Range (FM).....87.5 MHz to 108 MHz
Antenna Input (FM)..... 75 Ω unbalanced
Frequency Range (AM).....531 kHz to 1602 kHz
Antenna (AM) ..... Loop antenna (balanced)

Video Section

Signal level
- Composite Video ..... 1 Vp-p (75 Ω)
- Component Video ..... Y: 1.0 Vp-p (75 Ω), PB/PR: 0.7 Vp-p (75 Ω)

Corresponding maximum resolution
- Component Video ..... 1080p (1125p) (Video convert off)

Digital In/Out Section

HDMI terminal ..... 19-pin (Not DVI)
HDMI output type..... 5 V, 55 mA
USB terminal ..... USB2.0 Full Speed (Type A)
iPod terminal ..... USB, and Video (Composite)
SIRIUS antenna cable..... 8-pin mini DIN cable
ADAPTER PORT terminal..... 5 V, 100 mA
WIRELESS LAN ADAPTER terminal
..... 5 V, 600 mA

Integrated Control Section

Control (SR) terminal ..... ø 3.5 Mini-jack (MONO)
Control (IR) terminal ..... ø 3.5 Mini-jack (MONO)
IR signal..... High Active (High Level: 2.0 V)
RS-232C cable type..... 9-pin, cross type, female-female
EXTENSION terminal ..... 5 V, 150 mA

Network Section

LAN terminal ..... 10 BASE-T/100 BASE-TX

Miscellaneous

Power requirements ..... AC 120 V, 60 Hz
Power consumption ..... 570 W
In standby
- ..... 0.1 W (HDMI Setup – Control : OFF)
- ..... 0.3 W (HDMI Setup – Control : ON)

Dimensions
..... 435 mm (W) x 185.6 mm (H) x 440.3 mm (D)
(17 3/16 in. (W) x 7 5/16 in. (H) x 17 3/8 in. (D))
Weight (without package)..... 13.7 kg (30.2 lb)

Number of Furnished Parts

MCACC Setup microphone 1
Remote control unit 1
AAA size IEC R03 dry cell batteries..... 2
iPod cable..... 1
AM loop antenna 1
FM wire antenna 1
Power cord
CD-ROM (AVNavigator)
These operating instructions

Note

- Specifications and the design are subject to possible modifications without notice, due to improvements.
- *This product includes FontAvenue® fonts licensed by NEC Corporation. FontAvenue is a registered trademark of NEC Corporation.*

3. BASIC ITEMS FOR SERVICE
3.1 CHECK POINTS AFTER SERVICING
Items to be checked after servicing

To keep the product quality after servicing, confirm recommended check points shown below.

No.	Procedures	Check points
1	Confirm whether the customer complain has been solved. If the customer complain occurs with the particular source, such as Dolby Digital, DTS, AAC, DVD-A and HDMI, input it for the operation check.	The customer complain must not be reappeared. Video, Audio and operations must be normal.
2	Check the analog audio playback. (Make the analog connections with a DVD player.)	Each channel audio and operations must be normal.
3	Check the digital audio playback. (Make the digital connections with a DVD player.)	Each channel audio and operations must be normal.
4	Check surround playback. (Select Surround mode and check the multichannel operations via the DSP circuit.)	Each channel audio and operations must be normal.
5	Check the video outputs. (Connect with a DVD player.)	Video and operations must be normal.
6	Check the tuner (AM and FM) operations.	Audio and operations must be normal.
7	Check the sound from headphone output.	Sound must be normal, without noise.
8	Check the appearance of the product.	No scratches or dirt on its appearance after receiving it for service.

See the table below for the items to be checked regarding video and audio.

Item to be checked regarding video	Item to be checked regarding audio
Block noise	Distortion
Horizontal noise	Noise
Flicker	Volume too low
Disturbed image (video jumpiness)	Volume too high
Too dark	Volume fluctuating
Too bright	Sound interrupted
Mottled color	

3.2 PCB LOCATIONS

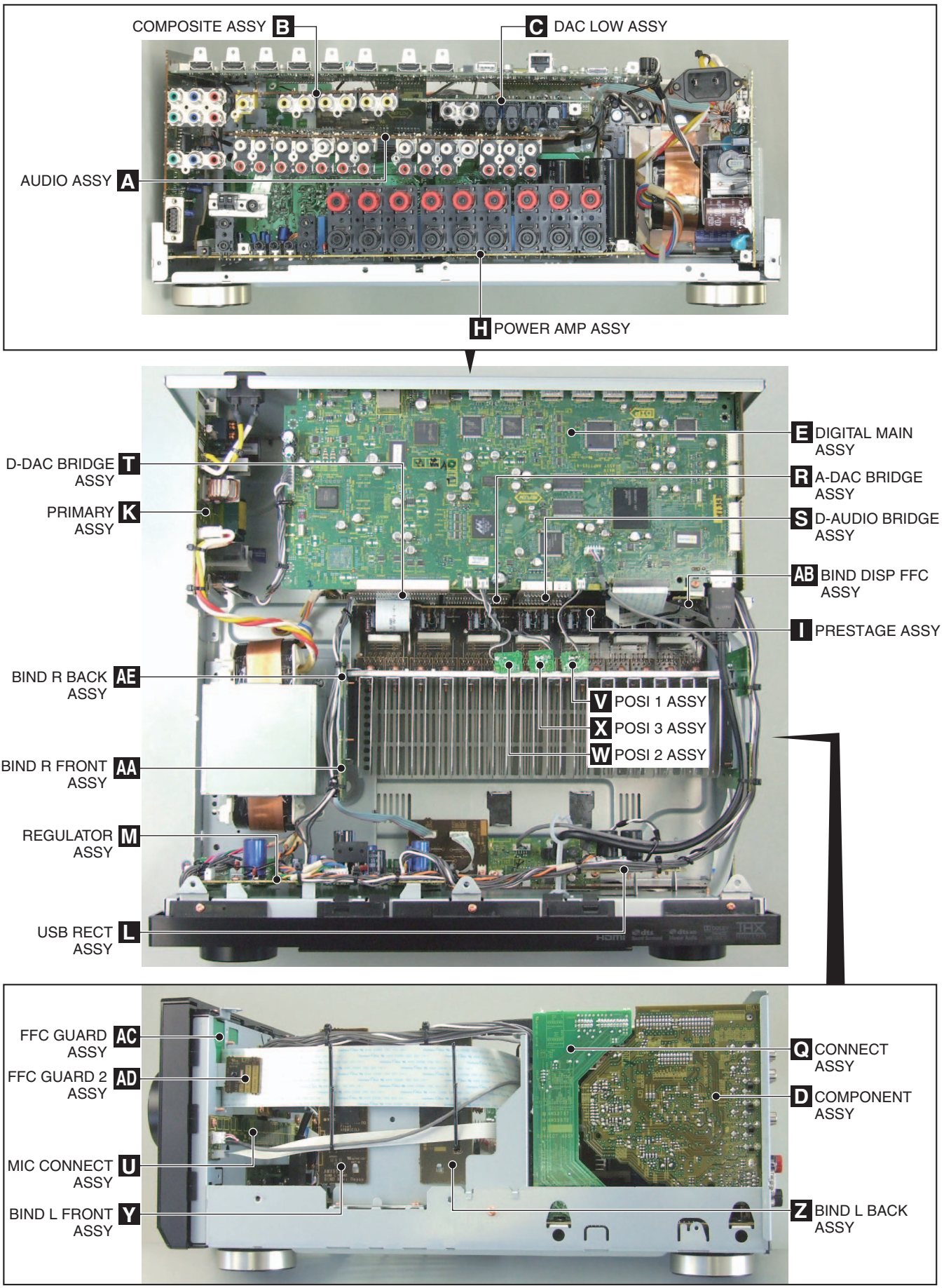

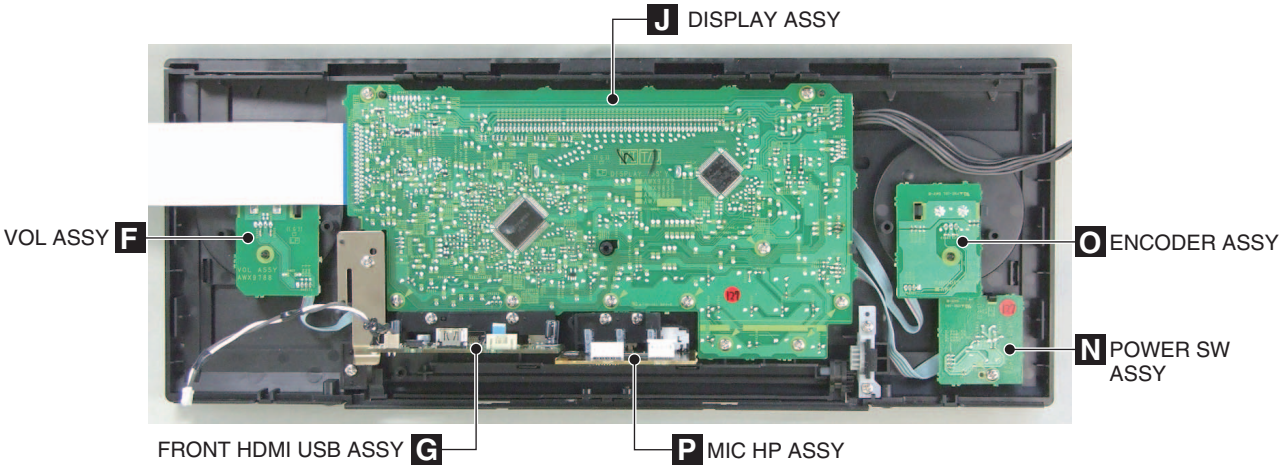

NOTES: ● *Parts marked by "NSP" are generally unavailable because they are not in our Master Spare Parts List.*
● *The ⚠ mark found on some component parts indicates the importance of the safety factor of the part. Therefore, when replacing, be sure to use parts of identical designation.*

LIST OF ASSEMBLIES

Mark	No.	Description	Part No.
NSP	1	..LOCAL POWER ASSY	AWM8247
	2	..REGULATOR ASSY	AWX9774
	2	..PRESTAGE ASSY	AWX9775
	2	..USB RECT ASSY	AWX9776
	2	..BIND R FRONT ASSY	AWX9778
	2	..BIND L BACK ASSY	AWX9779
	2	..BIND DISP FFC ASSY	AWX9780
NSP	2	..FFC GUARD ASSY	AWX9777
NSP	2	..FFC GUARD 2 ASSY	AWX9892
NSP	1	..COMPLEX ASSY(VSX-53/52)	AWM8248
	2	..DISPLAY ASSY	AWX9782
	2	..POWER SW ASSY	AWX9783
	2	..ENCODER ASSY	AWX9784
	2	..MIC HP ASSY	AWX9785
	2	..PRIMARY ASSY	AWX9786
	2	..VOL ASSY	AWX9788
	2	..CONNECT ASSY	AWX9878
NSP	1	..COMPLEX ASSY(VSX-1326-K/1126-K/1121-K)	AWM8254
	2	..DISPLAY ASSY	AWX9839
	2	..POWER SW ASSY	AWX9900
	2	..ENCODER ASSY	AWX9784
	2	..MIC HP ASSY	AWX9785
	2	..PRIMARY ASSY	AWX9786
	2	..VOL ASSY	AWX9788
	2	..CONNECT ASSY	AWX9878
NSP	1	..AMP ASSY(VSX-53/1326-K)	AWM8270
	2	..POSI 1 ASSY	AWX9879
	2	..POSI 2 ASSY	AWX9882
	2	..POSI 3 ASSY	AWX9884
	2	..POWER AMP ASSY	AWX9886
	2	..BIND L FRONT ASSY	AWX9891
NSP	2	..BIND R BACK ASSY	AWX9586
NSP	1	..AMP ASSY(VSX-52)	AWM8274
	2	..POSI 1 ASSY	AWX9879
	2	..POSI 2 ASSY	AWX9882
	2	..POSI 3 ASSY	AWX9884
	2	..POWER AMP ASSY	AWX9889
	2	..BIND L FRONT ASSY	AWX9891
NSP	2	..BIND R BACK ASSY	AWX9586

Mark	No.	Description	Part No.
NSP	1	..AMP ASSY(VSX-1126-K/1121-K)	AWM8275
	2	..POSI 1 ASSY	AWX9879
	2	..POSI 2 ASSY	AWX9882
	2	..POSI 3 ASSY	AWX9884
	2	..POWER AMP ASSY	AWX9890
	2	..BIND L FRONT ASSY	AWX9891
NSP	2	..BIND R BACK ASSY	AWX9586
NSP	1	..AUDIO COMPOSITE ASSY(VSX-53/1326-K)	AWR7102
	2	..AUDIO ASSY	AWX9767
	2	..COMPOSITE ASSY	AWX9768
	2	..D-AUDIO BRIDGE ASSY	AWX9769
	2	..D-DAC BRIDGE ASSY	AWX9770
	2	..A-DAC BRIDGE ASSY	AWX9771
	2	..MIC CONNECT ASSY	AWX9772
NSP	1	..AUDIO COMPOSITE ASSY(VSX-52/1126-K/1121-K)	AWR7105
	2	..AUDIO ASSY	AWX9830
	2	..COMPOSITE ASSY	AWX9768
	2	..D-AUDIO BRIDGE ASSY	AWX9769
	2	..D-DAC BRIDGE ASSY	AWX9770
	2	..A-DAC BRIDGE ASSY	AWX9771
	2	..MIC CONNECT ASSY	AWX9772
	1	..DAC LOW ASSY	AWX9773
	1	..DIGITAL MAIN ASSY(VSX-53/1326-K)	AWX9825
	1	..DIGITAL MAIN ASSY(VSX-52/1126-K/1121-K)	AWX9826
	1	..COMPONENT ASSY	AWX9864
	1	..FRONT HDMI USB ASSY	AWX9897
	1	..FM/AM TUNER UNIT	AXX7282

3.3 JIGS LIST

[1] Jigs list

Name	Jig No.	Remarks
19P FFC	GGD1678	Diagnosis for POWER AMP ASSY, AUDIO ASSY
20P + 14P board to board extension jig cable	GGD1759	Diagnosis for POWER AMP ASSY, AUDIO ASSY, DIGITAL MAIN ASSY
20P + 20P board to board extension jig cable	GGD1677	Diagnosis for DIGITAL MAIN ASSY
7P + 15P board to board extension jig cable	GGD1762	Diagnosis for DIGITAL MAIN ASSY
30P board to board extension jig cable x 2	GGD1682	Diagnosis for DIGITAL MAIN ASSY, DAC LOW ASSY
28P + 14P board to board extension jig cable	GGD1763	Diagnosis for DAC LOW ASSY

[2] Lubricants and Glues List

Name	Lubricants and Glues No.	Remarks
Silicone Grease	GEM1057	Refer to “9.2 EXTERIOR SECTION”

A

B

C

D

E

F

4. BLOCK DIAGRAM

4.1 OVERALL WIRING DIAGRAM

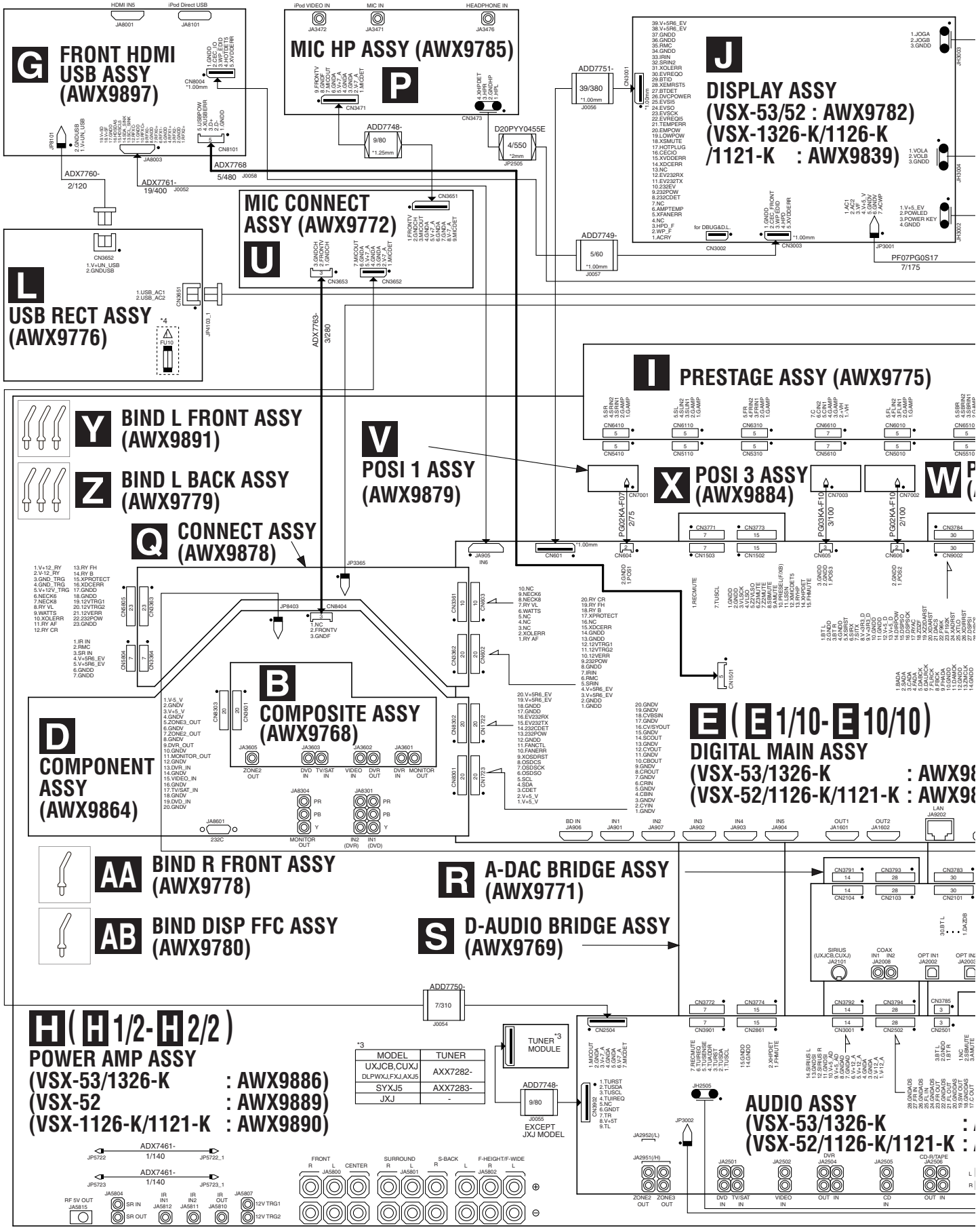

- When ordering service parts, be sure to refer to "EXPLODED VIEWS and PARTS LIST" or "PCB PARTS LIST".
- The ⚠ mark found on some component parts indicates the importance of the safety factor of the part. Therefore, when replacing, be sure to use parts of identical designation.
- ⬭ : The power supply is shown with the marked box.

CAUTION - FOR CONTINUED PROTECTION AGAINST RISK OF FIRE, REPLACE WITH SAME TYPE AND RATINGS OF FUSE.

The ⚠ mark found on some component parts should be replaced with same parts(safety regulation authorized) of identical designation.

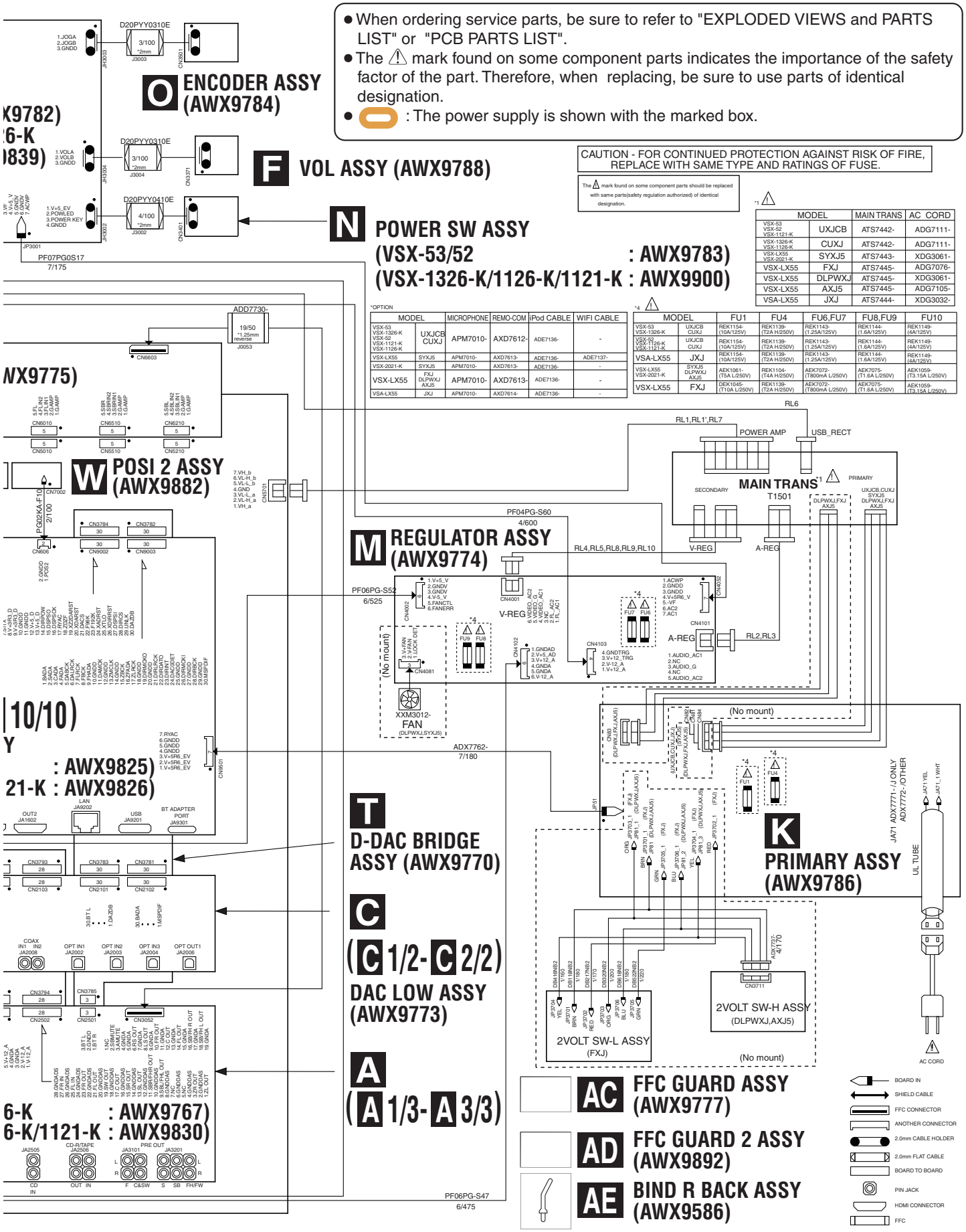

*1 ⚠

MODEL		MAIN TRANS	AC CORD
VSX-53 VSX-52 VSX-1121-K	UXJCB	ATS7442-	ADG7111-
VSX-1326-K VSX-1126-K	CUXJ	ATS7442-	ADG7111-
VSX-LX55 VSX-2021-K	SYXJ5	ATS7443-	XDG3061-
VSX-LX55	FXJ	ATS7445-	ADG7076-
VSX-LX55	DLPWXJ	ATS7445-	XDG3061-
VSX-LX55	AXJ5	ATS7445-	ADG7105-
VSA-LX55	JXJ	ATS7444-	XDG3032-

*OPTION

MODEL		MICROPHONE	REMO-COM	iPod CABLE	WIFI CABLE
VSX-53 VSX-1326-K VSX-52 VSX-1121-K VSX-1126-K	UXJCB CUXJ	APM7010-	AXD7612-	ADE7136-	-
VSX-LX55	SYXJ5	APM7010-	AXD7613-	ADE7136-	ADE7137-
VSX-2021-K	SYXJ5	APM7010-	AXD7613-	ADE7136-	-
VSX-LX55	FXJ DLPWXJ AXJ5	APM7010-	AXD7613-	ADE7136-	-
VSA-LX55	JXJ	APM7010-	AXD7614-	ADE7136-	-

*4 ⚠

MODEL		FU1	FU4	FU6,FU7	FU8,FU9	FU10
VSX-53 VSX-1326-K	UXJCB CUXJ	REK1154- (10A/125V)	REK1139- (T2A H/250V)	REK1143- (1.25A/125V)	REK1144- (1.6A/125V)	REK1149- (4A/125V)
VSX-52 VSX-1126-K VSX-1121-K	UXJCB CUXJ	REK1154- (10A/125V)	REK1139- (T2A H/250V)	REK1143- (1.25A/125V)	REK1144- (1.6A/125V)	REK1149- (4A/125V)
VSA-LX55	JXJ	REK1154- (10A/125V)	REK1139- (T2A H/250V)	REK1143- (1.25A/125V)	REK1144- (1.6A/125V)	REK1149- (4A/125V)
VSX-LX55 VSX-2021-K	SYXJ5 DLPWXJ AXJ5	AEK1061- (T5A L/250V)	REK1104- (T4A H/250V)	AEK7072- (T800mA L/250V)	AEK7075- (T1.6A L/250V)	AEK1059- (T3.15A L/250V)
VSX-LX55	FXJ	DEK1045- (T10A L/250V)	REK1139- (T2A H/250V)	AEK7072- (T800mA L/250V)	AEK7075- (T1.6A L/250V)	AEK1059- (T3.15A L/250V)

4.2 BLOCK DIAGRAM FOR AUDIO BLOCK

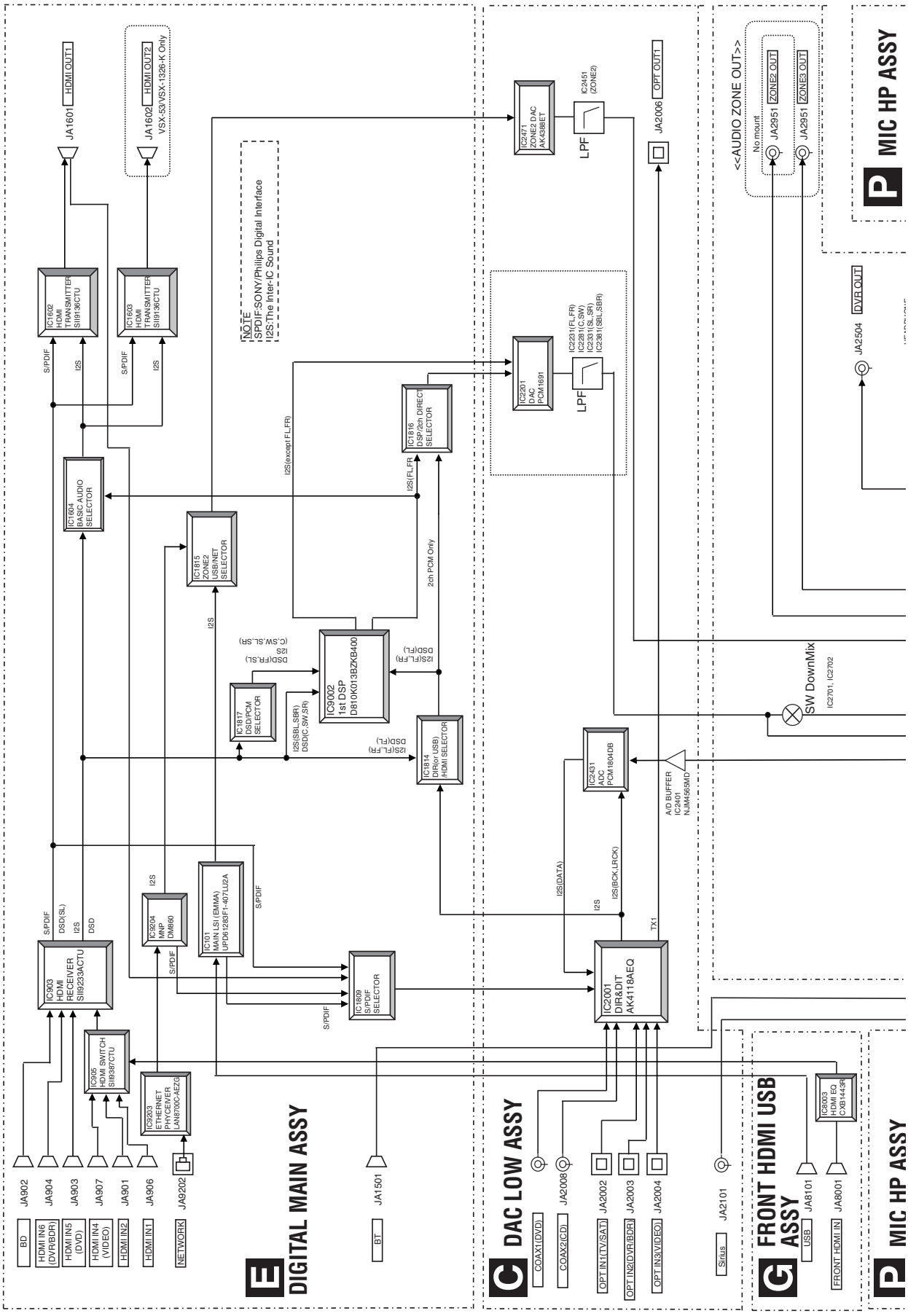

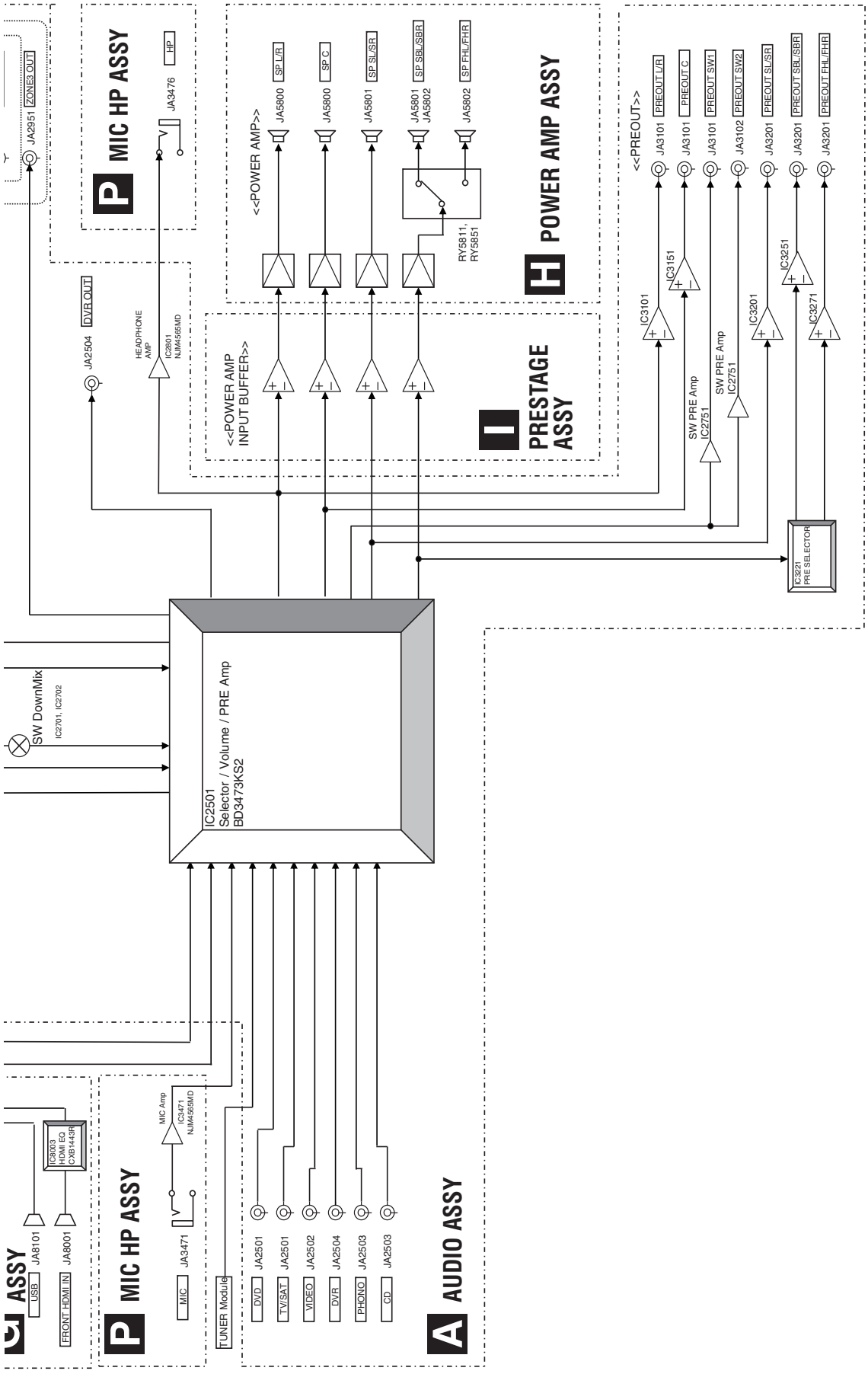
P MIC HP ASSY
HP
JA3476
JA2951
ZONE2 OUT
<<POWER AMP>>
JA5800
SP L/R
JA5800
SP C
JA5801
SP SL/SR
JA5801
JA5802
SP SBL/SBR
JA5802
SP FHL/FHR
RY5811,
RY5851
H POWER AMP ASSY
<<PREOUT>>
JA3101
PREOUT L/R
JA3101
PREOUT C
JA3101
PREOUT SW1
JA3102
PREOUT SW2
JA3201
PREOUT SL/SR
JA3201
PREOUT SBL/SBR
JA3201
PREOUT FHL/FHR
IC3101
IC3151
SW PRE Amp
IC2751
SW PRE Amp
IC2751
IC3201
IC3251
IC3271
IC3221
PRE SELECTOR
JA2504
DVR OUT
HEADPHONE
AMP
IC2801
NJM4565MD
<<POWER AMP
INPUT BUFFER>>
I PRESTAGE
ASSY
SW DownMix
IC2701, IC2702
IC2501
Selector / Volume / PRE Amp
BD3473KS2
C ASSY
USB
JA8101
FRONT HDMI IN
JA8001
IC8003
HDMI E2
CXB1443R
P MIC HP ASSY
MIC
JA3471
MIC Amp
IC3471
NJM4565MD
TUNER Module
A AUDIO ASSY
DVD
JA2501
TV/SAT
JA2501
VIDEO
JA2502
DVR
JA2504
PHONO
JA2503
CD
JA2503

4.3 BLOCK DIAGRAM FOR DIGITAL MAIN VIDEO BLOCK

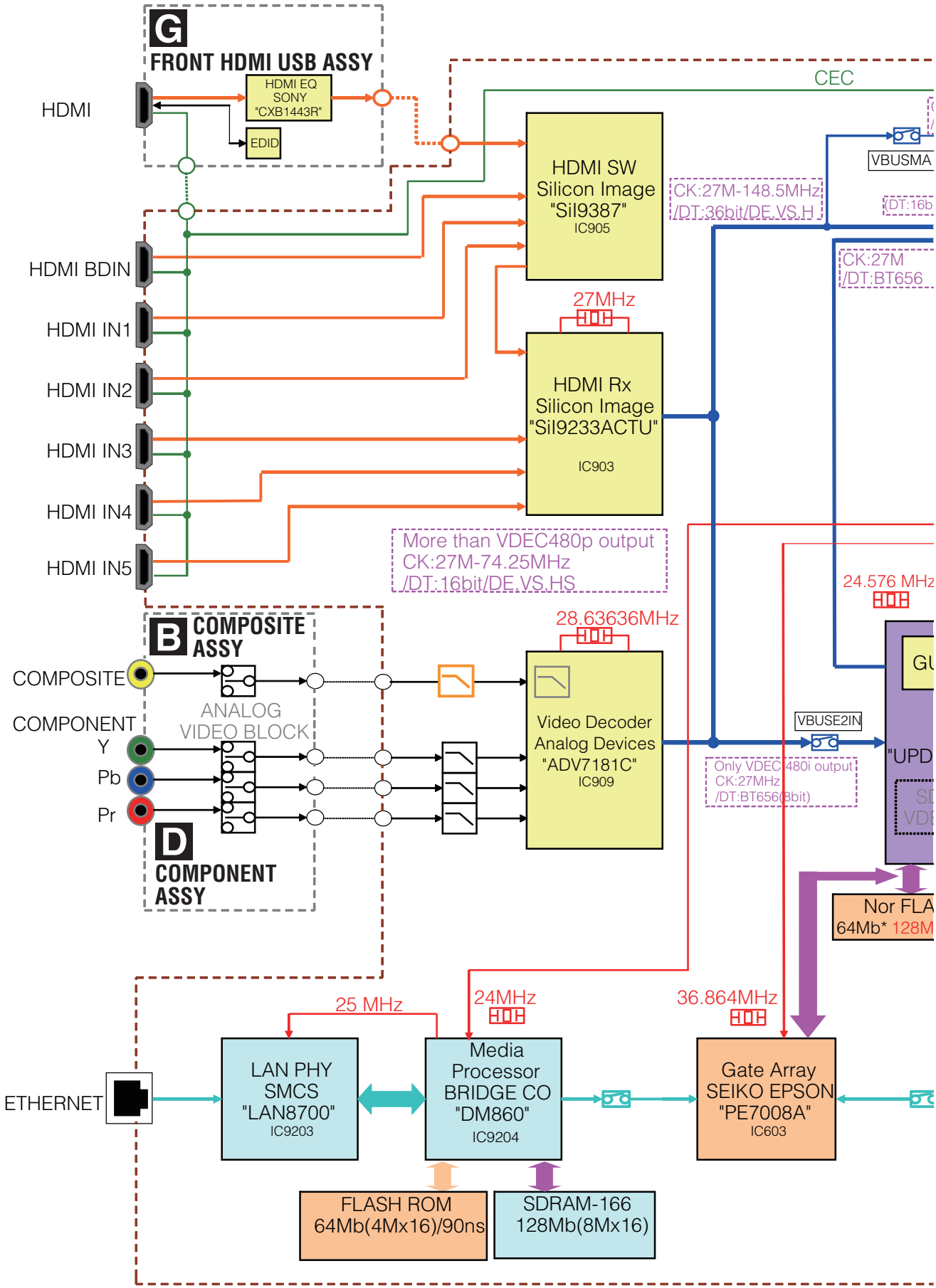

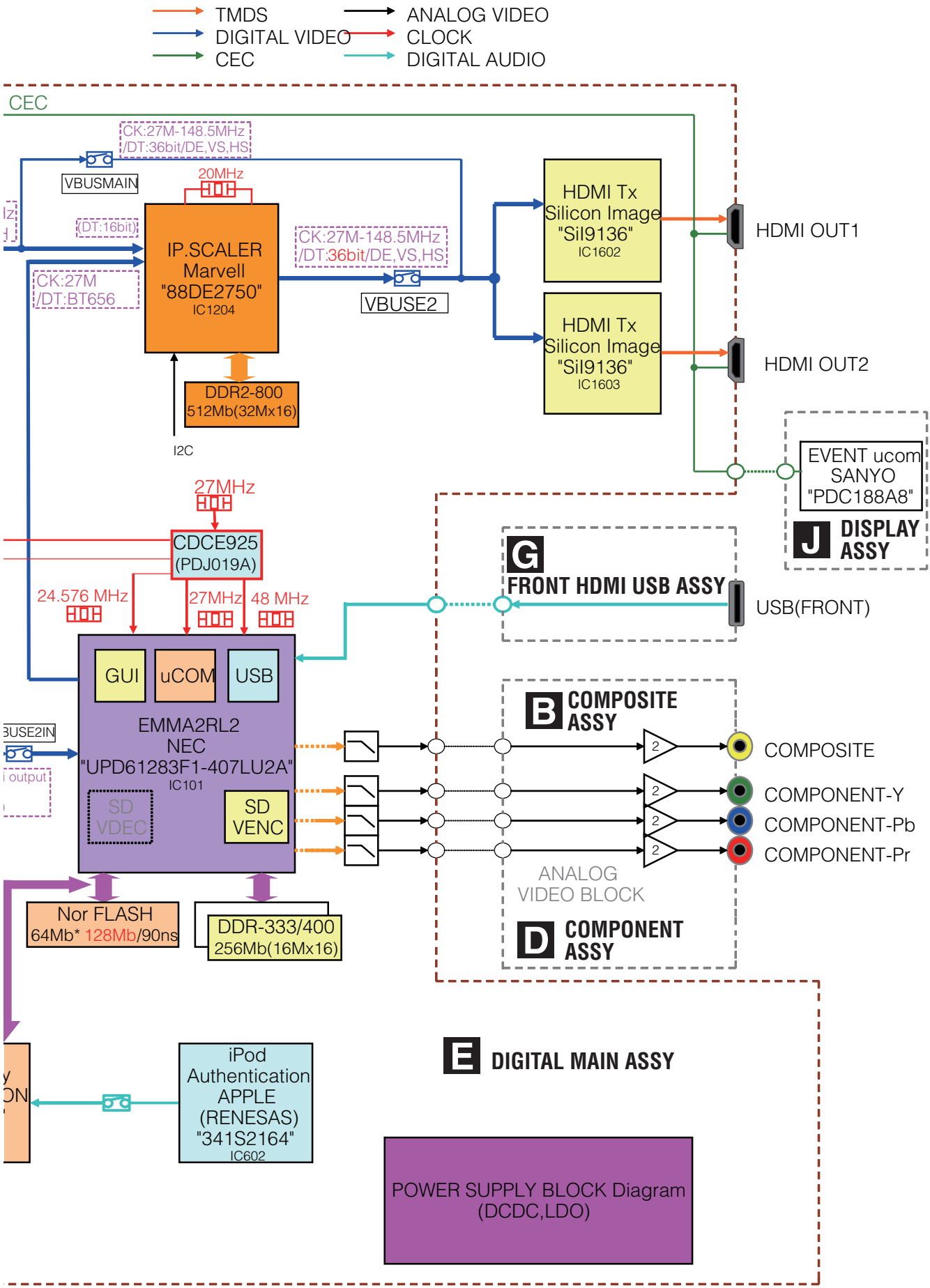
TMDS
DIGITAL VIDEO
CEC
ANALOG VIDEO
CLOCK
DIGITAL AUDIO
CEC
CK:27M-148.5MHz
/DT:36bit/DE,VS,HS
VBUSMAIN
20MHz
(DT:16bit)
IP.SCALER
Marvell
"88DE2750"
IC1204
CK:27M
/DT:BT656
CK:27M-148.5MHz
/DT:36bit/DE,VS,HS
VBUSE2
HDMI Tx
Silicon Image
"SiI9136"
IC1602
HDMI Tx
Silicon Image
"SiI9136"
IC1603
HDMI OUT1
HDMI OUT2
DDR2-800
512Mb(32Mx16)
I2C
EVENT ucom
SANYO
"PDC188A8"
J DISPLAY ASSY
27MHz
CDCE925
(PDJ019A)
24.576 MHz
27MHz
48 MHz
G FRONT HDMI USB ASSY
USB(FRONT)
GUI
uCOM
USB
EMMA2RL2
NEC
"UPD61283F1-407LU2A"
IC101
SD VDEC
SD VENC
B COMPOSITE ASSY
COMPOSITE
COMPONENT-Y
COMPONENT-Pb
COMPONENT-Pr
ANALOG
VIDEO BLOCK
D COMPONENT ASSY
Nor FLASH
64Mb* 128Mb/90ns
DDR-333/400
256Mb(16Mx16)
iPod
Authentication
APPLE
(RENESAS)
"341S2164"
IC602
E DIGITAL MAIN ASSY
POWER SUPPLY BLOCK Diagram
(DCDC,LDO)

4.4 BLOCK DIAGRAM FOR DIGITAL MAIN AUDIO BLOCK

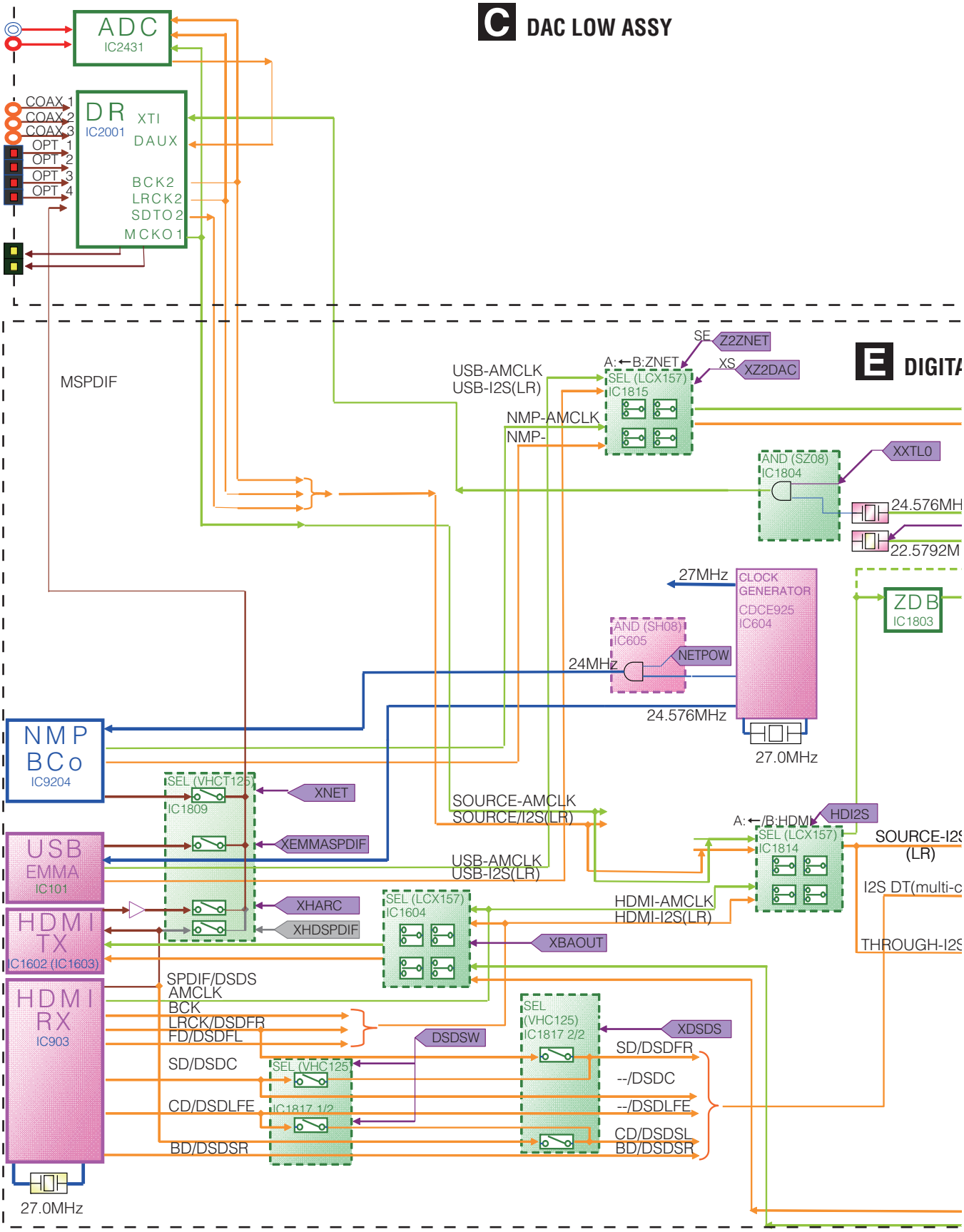

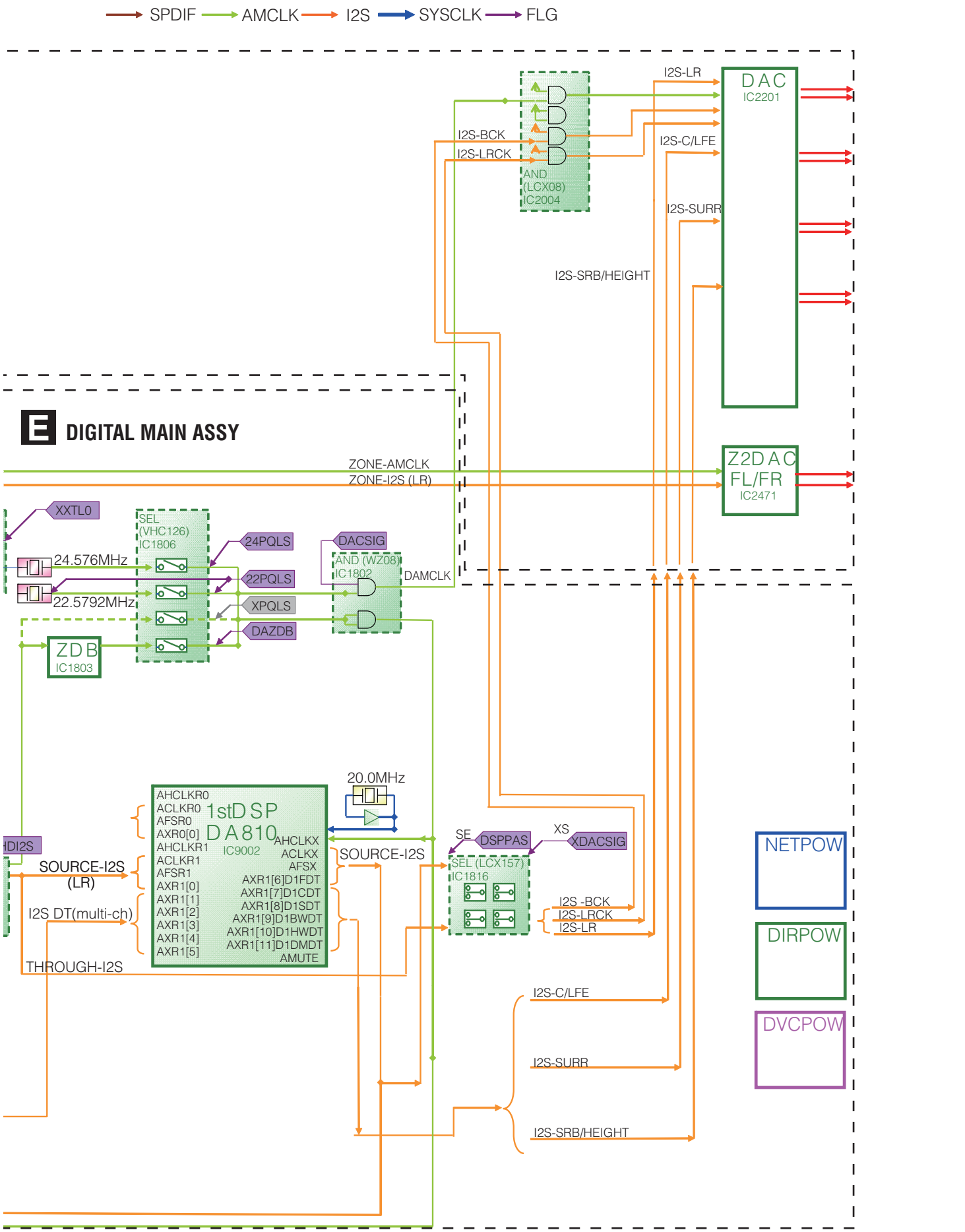
SPDIF
AMCLK
I2S
SYSCLK
FLG
DIGITAL MAIN ASSY
I2S-LR
DAC
IC2201
I2S-BCK
I2S-LRCK
AND
(LCX08)
IC2004
I2S-C/LFE
I2S-SURR
I2S-SRB/HEIGHT
ZONE-AMCLK
ZONE-I2S (LR)
Z2DAC
FL/FR
IC2471
XXTL0
24.576MHz
22.5792MHz
SEL
(VHC126)
IC1806
24PQLS
22PQLS
XPQLS
DAZDB
ZDB
IC1803
DACSIG
AND (WZ08)
IC1802
DAMCLK
20.0MHz
AHCLKR0
ACLKR0
AFSR0
AXR0[0]
AHCLKR1
ACLKR1
AFSR1
AXR1[0]
AXR1[1]
AXR1[2]
AXR1[3]
AXR1[4]
AXR1[5]
1stDSP
DA810
IC9002
AHCLKX
ACLKX
AFSX
AXR1[6]D1FDT
AXR1[7]D1CDT
AXR1[8]D1SDT
AXR1[9]D1BWDT
AXR1[10]D1HWDT
AXR1[11]D1DMDT
AMUTE
SOURCE-I2S
(LR)
I2S DT(multi-ch)
THROUGH-I2S
SOURCE-I2S
SE
DSPPAS
XS
XDACSIG
SEL (LCX157)
IC1816
I2S -BCK
I2S-LRCK
I2S-LR
NETPOW
DIRPOW
DVCPOW
I2S-C/LFE
I2S-SURR
I2S-SRB/HEIGHT

4.5 BLOCK DIAGRAM FOR COMPOSITE VIDEO BLOCK

COMPOSITE VIDEO BLOCK DIAGRAM

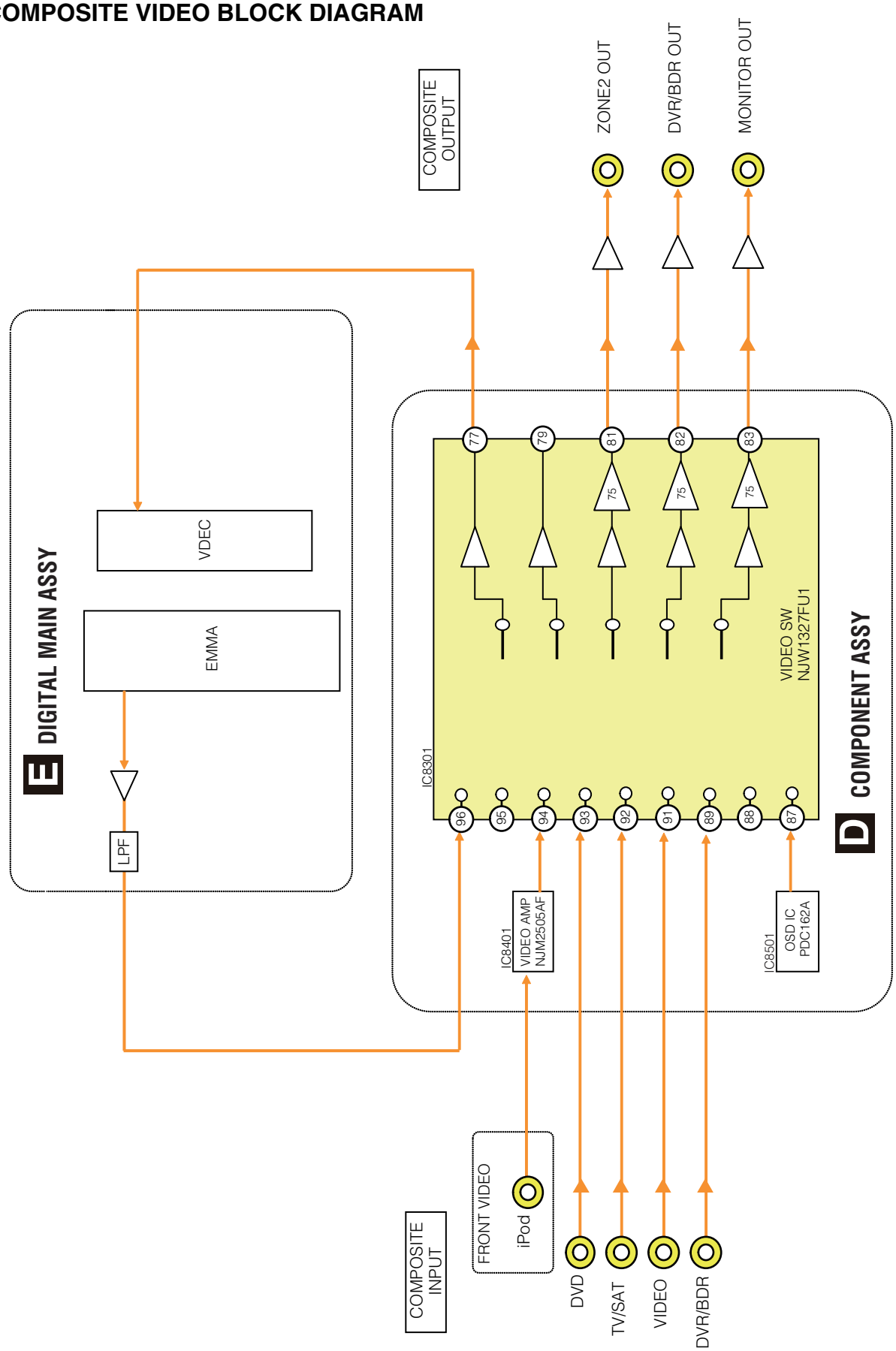

4.6 BLOCK DIAGRAM FOR COMPONENT VIDEO BLOCK

COMPONENT VIDEO BLOCK DIAGRAM

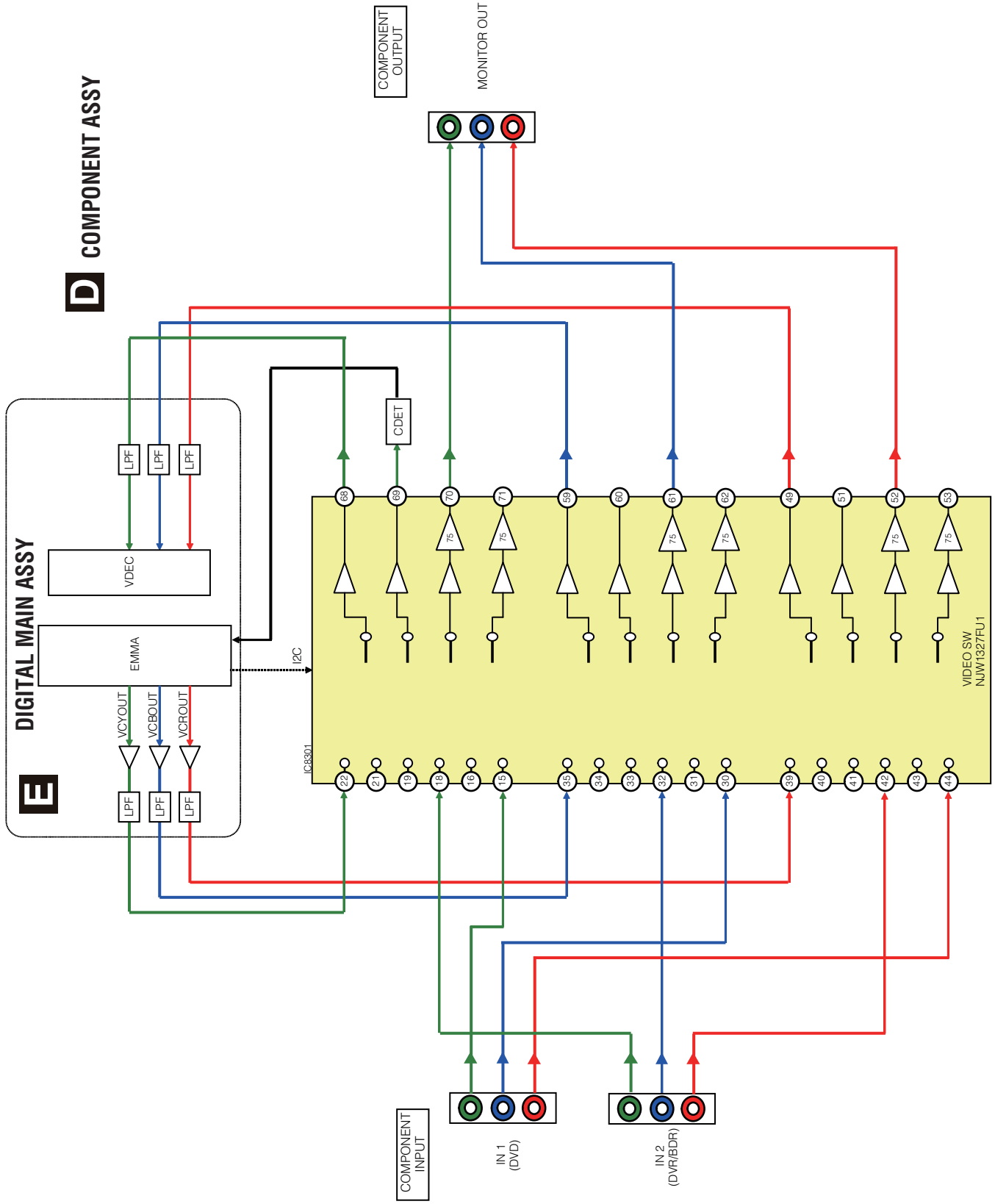

4.7 BLOCK DIAGRAM FOR POWER BLOCK(1)

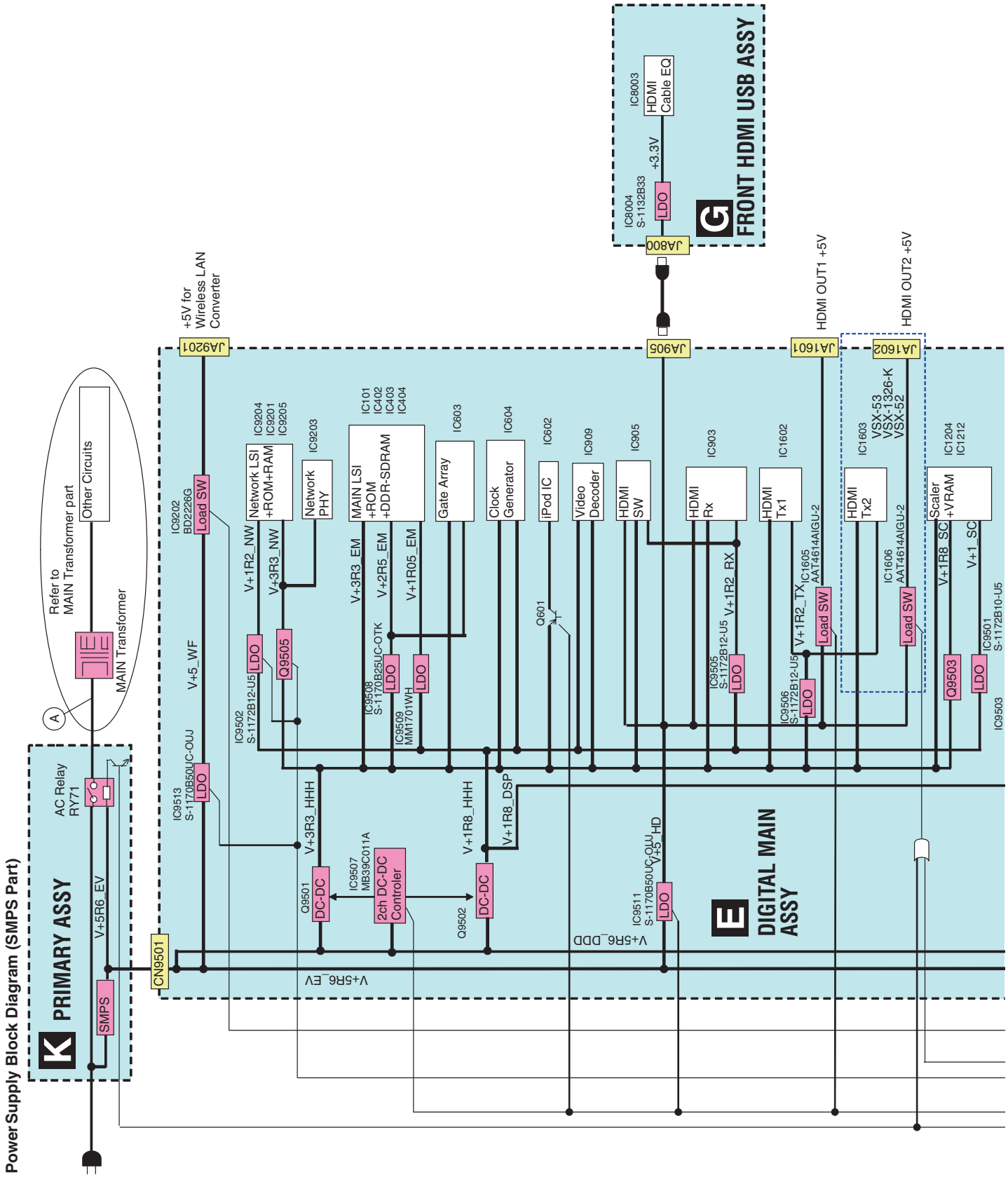

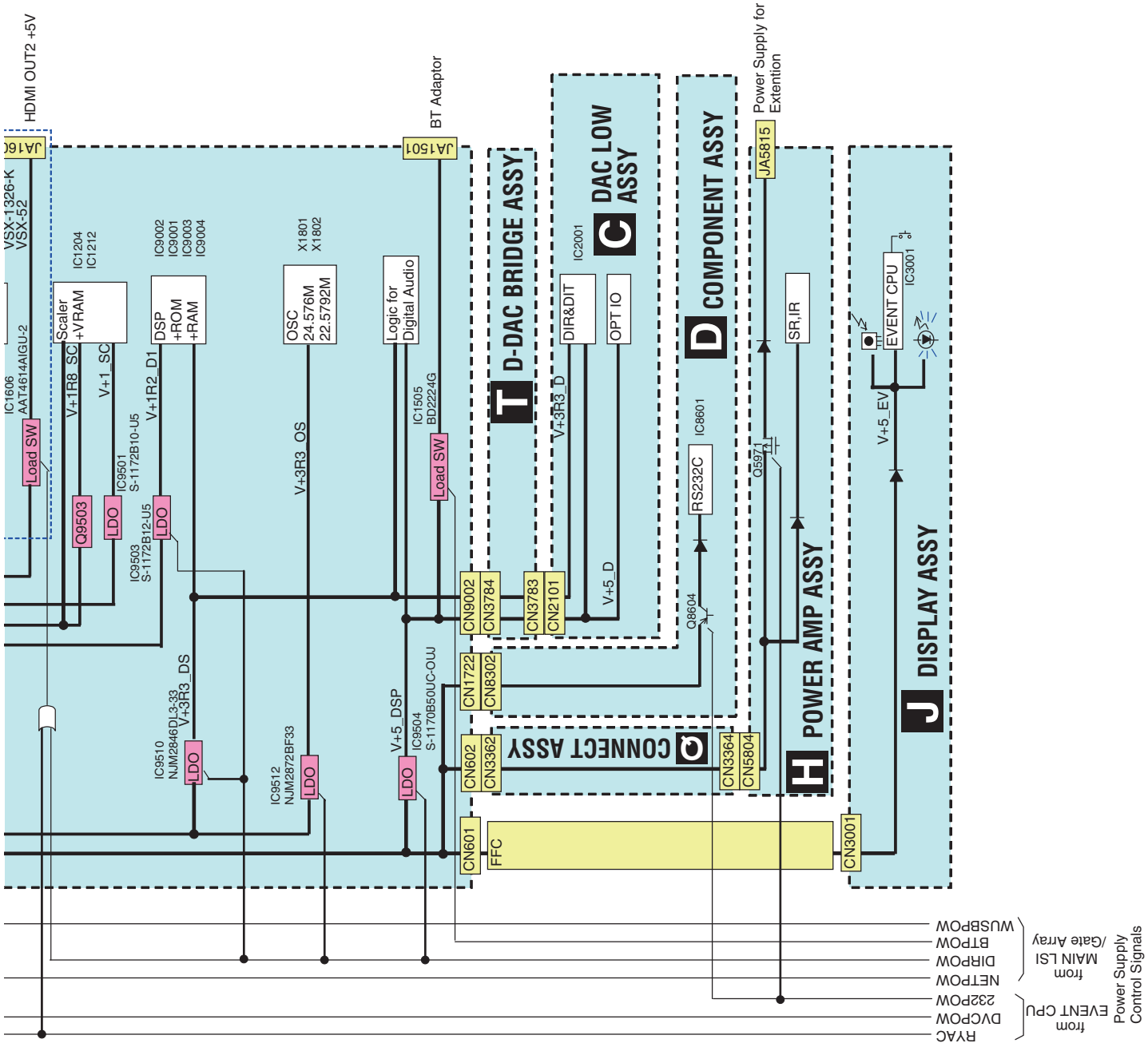
HDMI OUT2 +5V
BT Adaptor
Power Supply for Extention
D-DAC BRIDGE ASSY
DAC LOW ASSY
COMPONENT ASSY
CONNECT ASSY
POWER AMP ASSY
DISPLAY ASSY
JA1501
JA5815
IC1606
AAT4614AIGU-2
Load SW
Scaler
+VRAM
IC1204
IC1212
V+1R8_SC
V+1_SC
Q9503
LDO
IC9501
S-1172B10-U5
DSP
+ROM
+RAM
IC9002
IC9001
IC9003
IC9004
V+1R2_D1
IC9503
S-1172B12-U5
OSC
24.576M
22.5792M
X1801
X1802
V+3R3_OS
Logic for
Digital Audio
IC1505
BD2224G
Load SW
V+3R3_D
DIR&DIT
IC2001
OPT IO
V+5_D
RS232C
IC8601
Q8604
Q597
SR,IR
EVENT CPU
IC3001
V+5_EV
CN9002
CN3784
CN3783
CN2101
CN1722
CN8302
CN602
CN3362
CN601
FFC
CN3364
CN5804
CN3001
V+3R3_DS
IC9510
NJM2846DL3-33
LDO
IC9512
NJM2872BF33
V+5_DSP
IC9504
S-1170B50UC-OUJ
WUSBPOW
BTPOW
DIRPOW
NETPOW
from MAIN LSI /Gate Array
RYAC
DVCPOW
232POW
from EVENT CPU
Power Supply Control Signals

4.8 BLOCK DIAGRAM FOR POWER BLOCK(2)

Power Supply Block Diagram (MAIN Transformer Part)

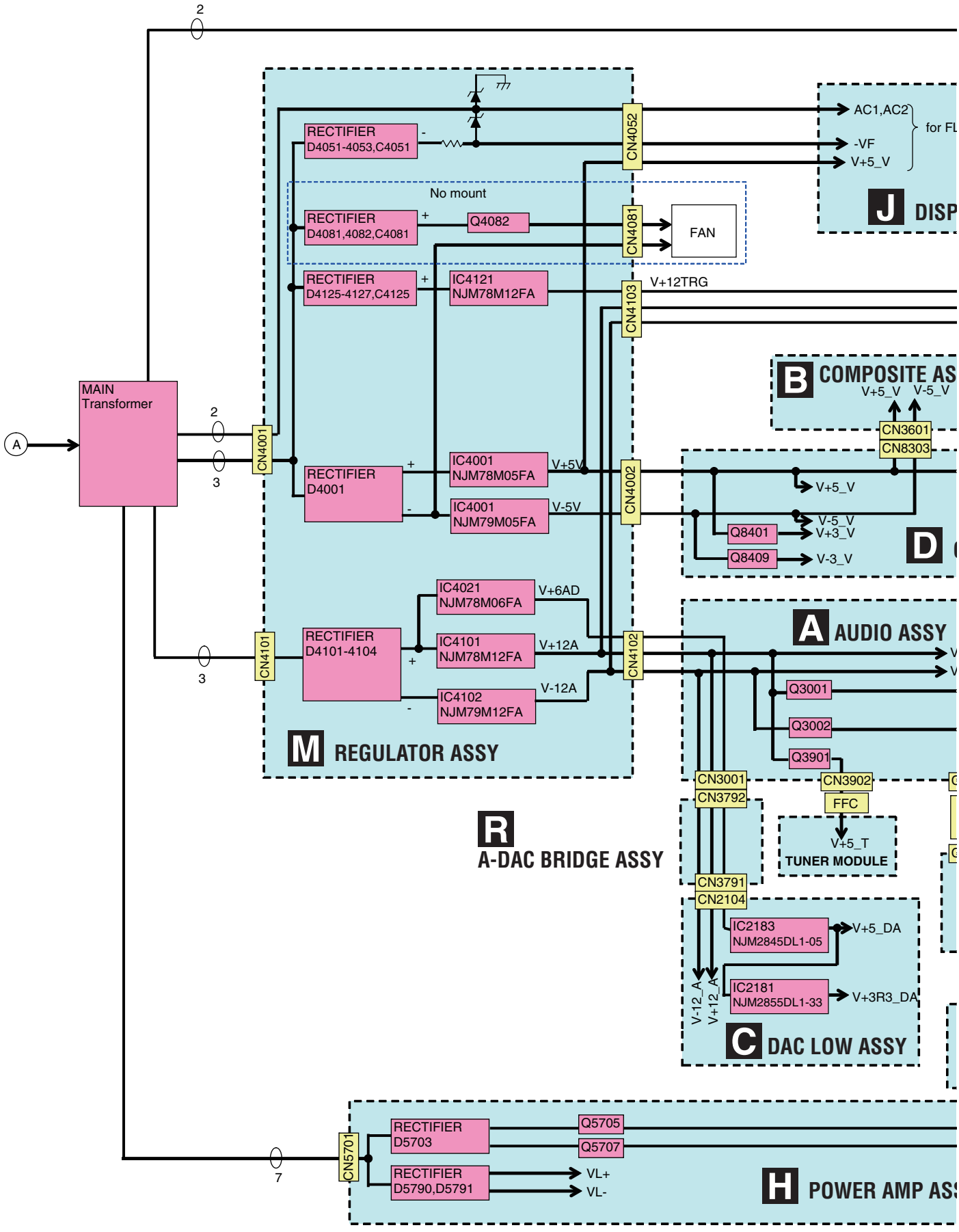

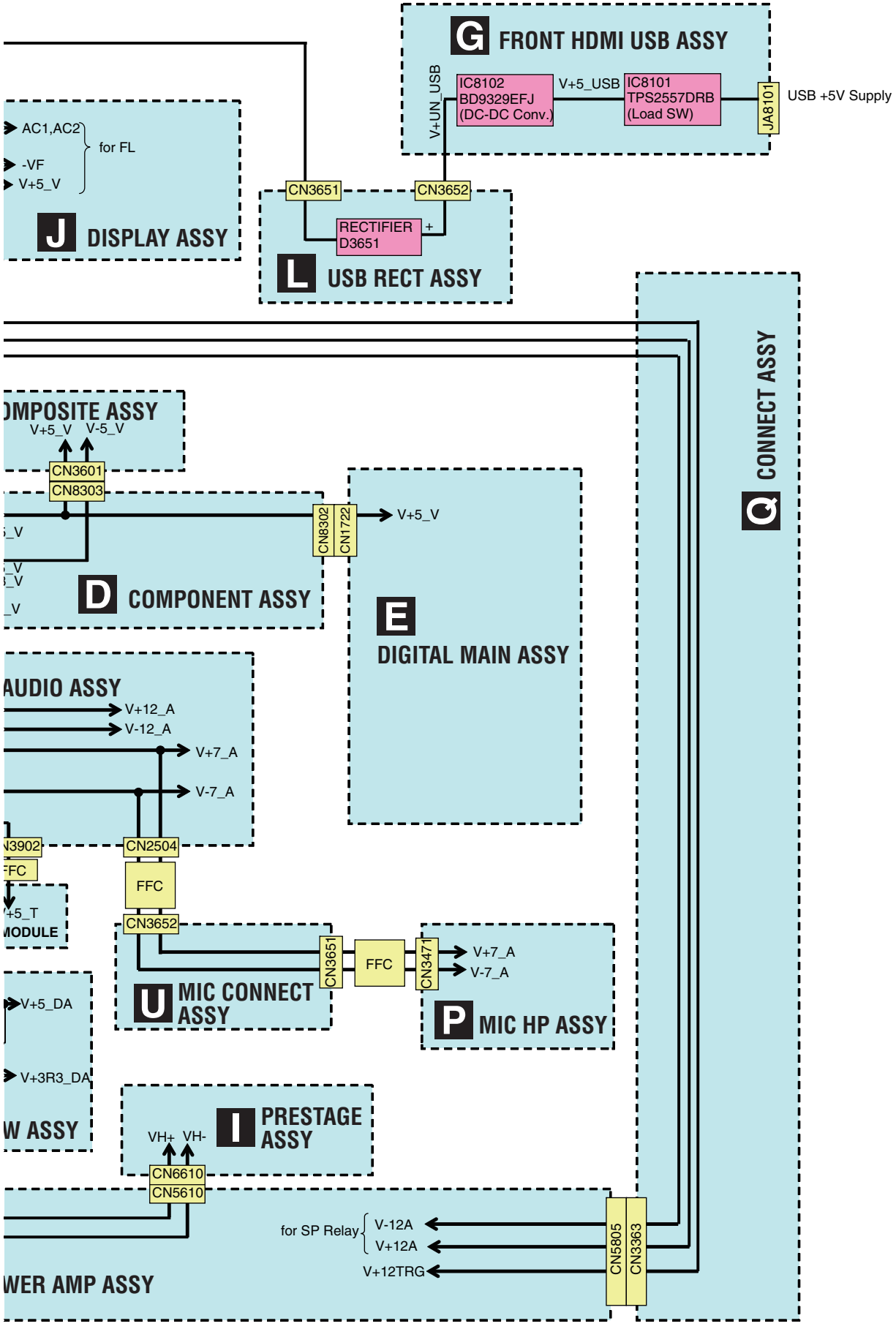
G FRONT HDMI USB ASSY
V+UN_USB
IC8102
BD9329EFJ
(DC-DC Conv.)
V+5_USB
IC8101
TPS2557DRB
(Load SW)
JA8101
USB +5V Supply
AC1,AC2
for FL
-VF
V+5_V
J DISPLAY ASSY
CN3651
CN3652
RECTIFIER
D3651
+
L USB RECT ASSY
Q CONNECT ASSY
OMPOSITE ASSY
V+5_V V-5_V
CN3601
CN8303
CN8302
CN1722
V+5_V
D COMPONENT ASSY
E DIGITAL MAIN ASSY
AUDIO ASSY
V+12_A
V-12_A
V+7_A
V-7_A
CN2504
FFC
CN3652
MODULE
CN3651
FFC
CN3471
V+7_A
V-7_A
U MIC CONNECT ASSY
P MIC HP ASSY
V+5_DA
V+3R3_DA
W ASSY
VH+ VH-
I PRESTAGE ASSY
CN6610
CN5610
for SP Relay
V-12A
V+12A
V+12TRG
CN5805
CN3363
WER AMP ASSY

5. DIAGNOSIS

5.1 DIAGNOSIS FLOWCHART

■ No Power

This is just for general reference and does not including every single case.

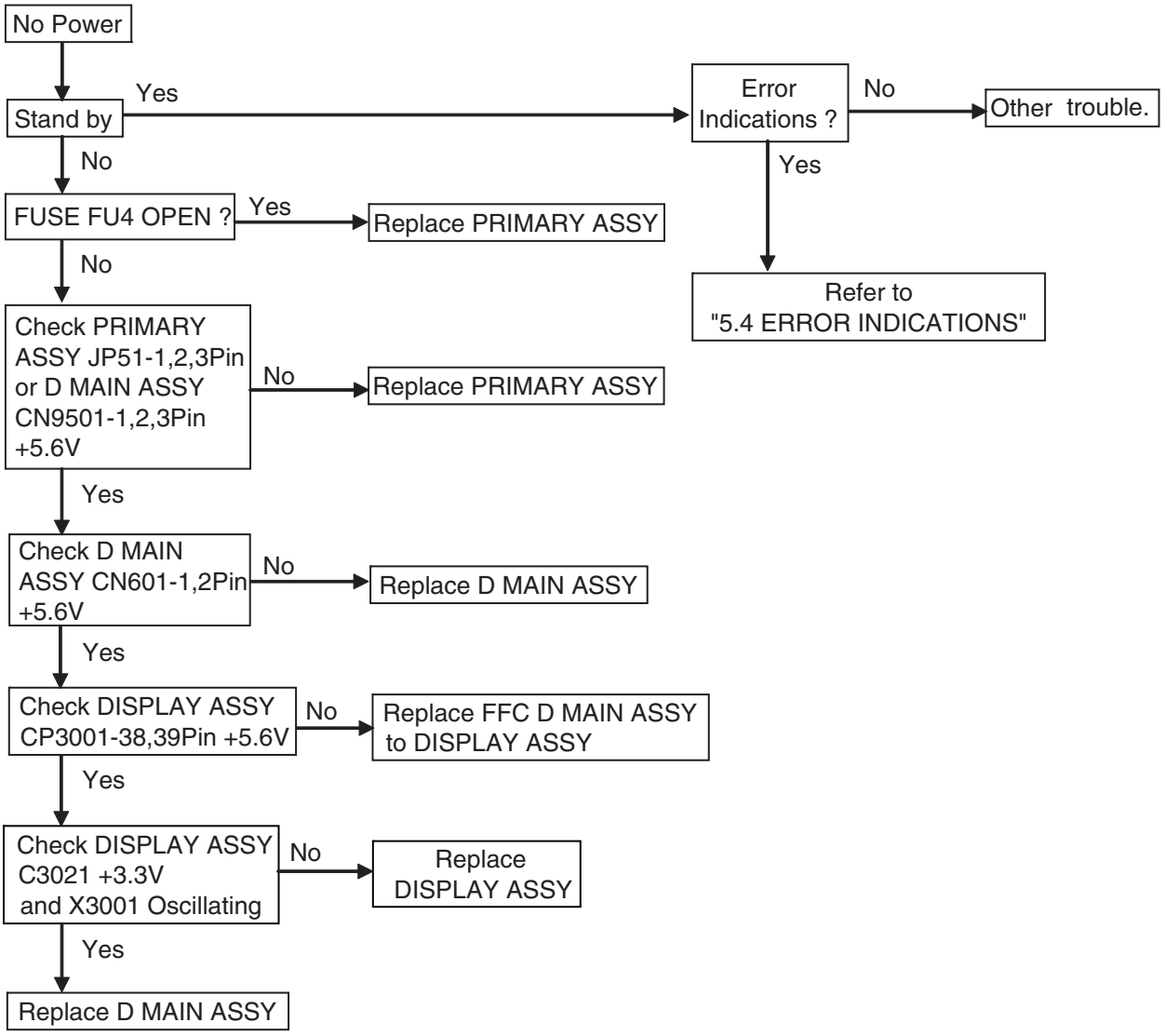

■ No DISPLAY

This is just for general reference and does not including every single case.

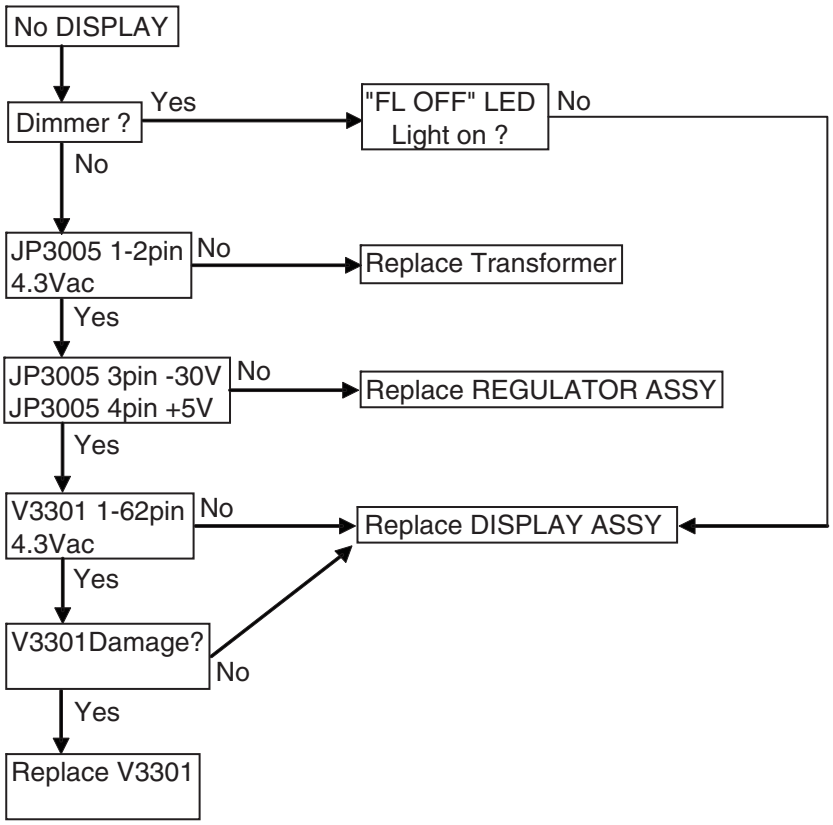

■ No Sound

This is just for general reference and does not including every single case.

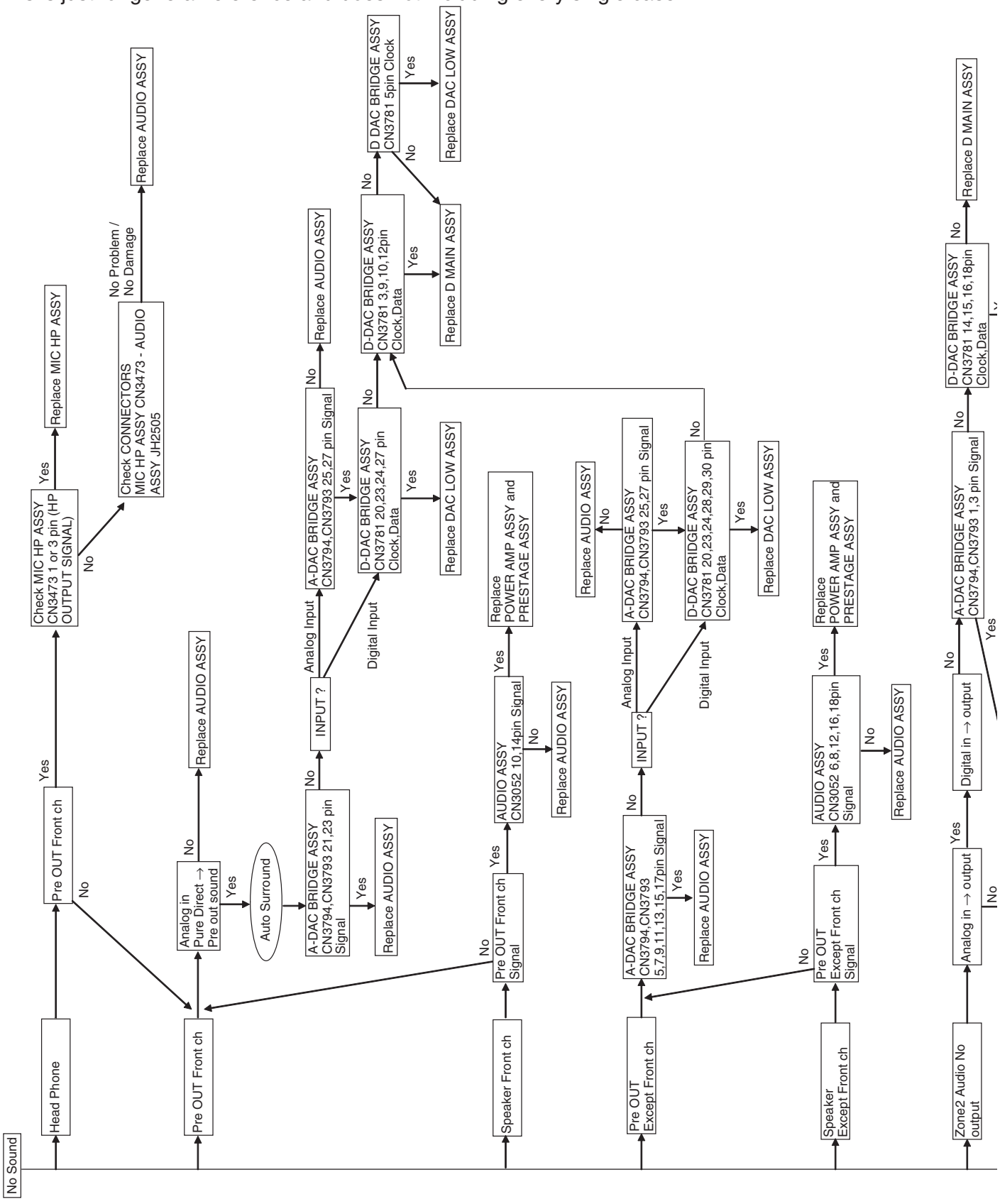

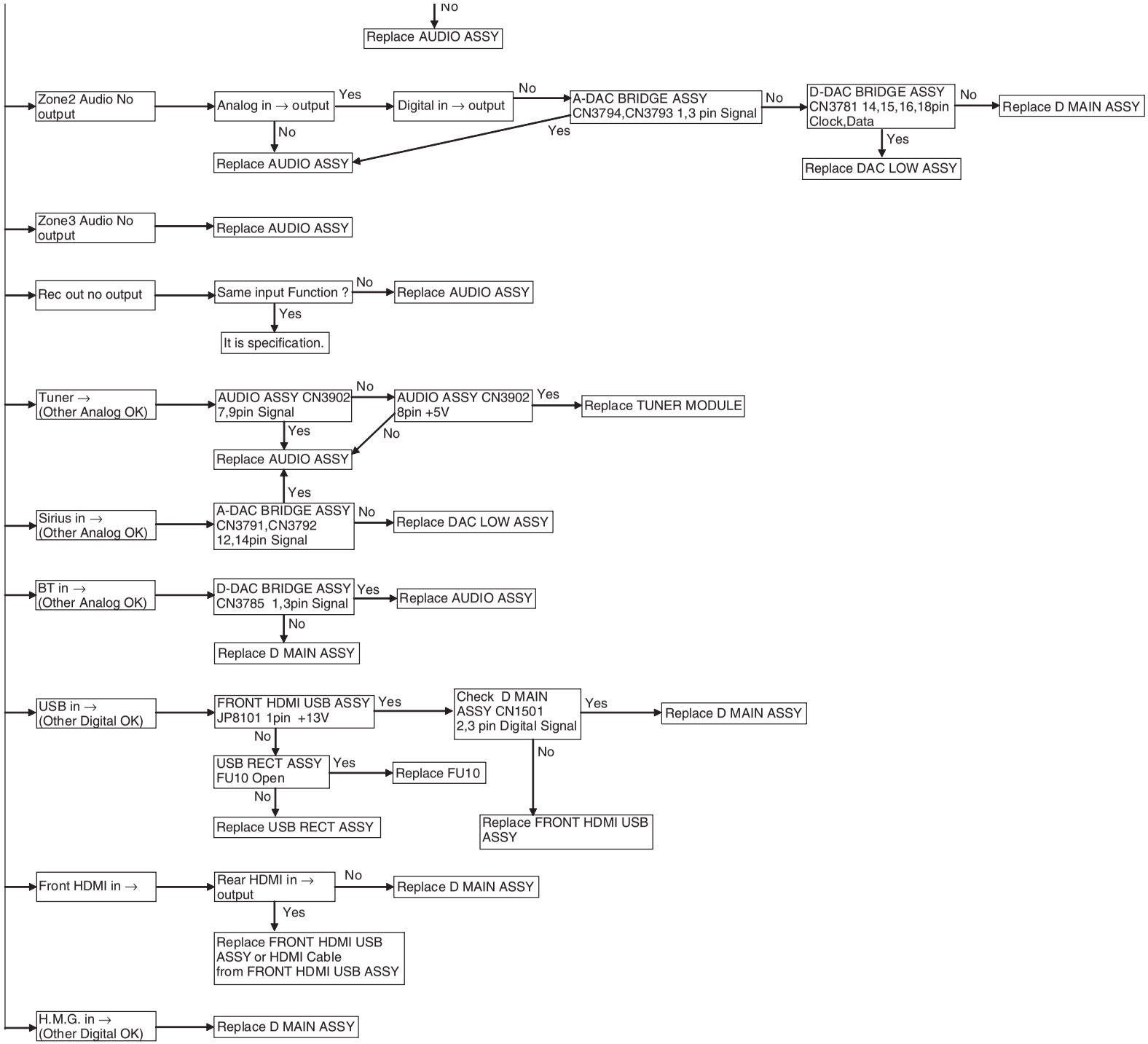
No
Replace AUDIO ASSY
Zone2 Audio No output
Analog in → output
Yes
Digital in → output
No
A-DAC BRIDGE ASSY CN3794,CN3793 1,3 pin Signal
No
D-DAC BRIDGE ASSY CN3781 14,15,16,18pin Clock,Data
No
Replace D MAIN ASSY
No
Yes
Yes
Replace AUDIO ASSY
Yes
Replace DAC LOW ASSY
Zone3 Audio No output
Replace AUDIO ASSY
Rec out no output
Same input Function ?
No
Replace AUDIO ASSY
Yes
It is specification.
Tuner → (Other Analog OK)
AUDIO ASSY CN3902 7,9pin Signal
No
AUDIO ASSY CN3902 8pin +5V
Yes
Replace TUNER MODULE
Yes
No
Replace AUDIO ASSY
Yes
Sirius in → (Other Analog OK)
A-DAC BRIDGE ASSY CN3791,CN3792 12,14pin Signal
No
Replace DAC LOW ASSY
BT in → (Other Analog OK)
D-DAC BRIDGE ASSY CN3785 1,3pin Signal
Yes
Replace AUDIO ASSY
No
Replace D MAIN ASSY
USB in → (Other Digital OK)
FRONT HDMI USB ASSY JP8101 1pin +13V
Yes
Check D MAIN ASSY CN1501 2,3 pin Digital Signal
Yes
Replace D MAIN ASSY
No
No
USB RECT ASSY FU10 Open
Yes
Replace FU10
No
Replace USB RECT ASSY
Replace FRONT HDMI USB ASSY
Front HDMI in →
Rear HDMI in → output
No
Replace D MAIN ASSY
Yes
Replace FRONT HDMI USB ASSY or HDMI Cable from FRONT HDMI USB ASSY
H.M.G. in → (Other Digital OK)
Replace D MAIN ASSY

■ No Picture

This is just for general reference and does not including every single case.

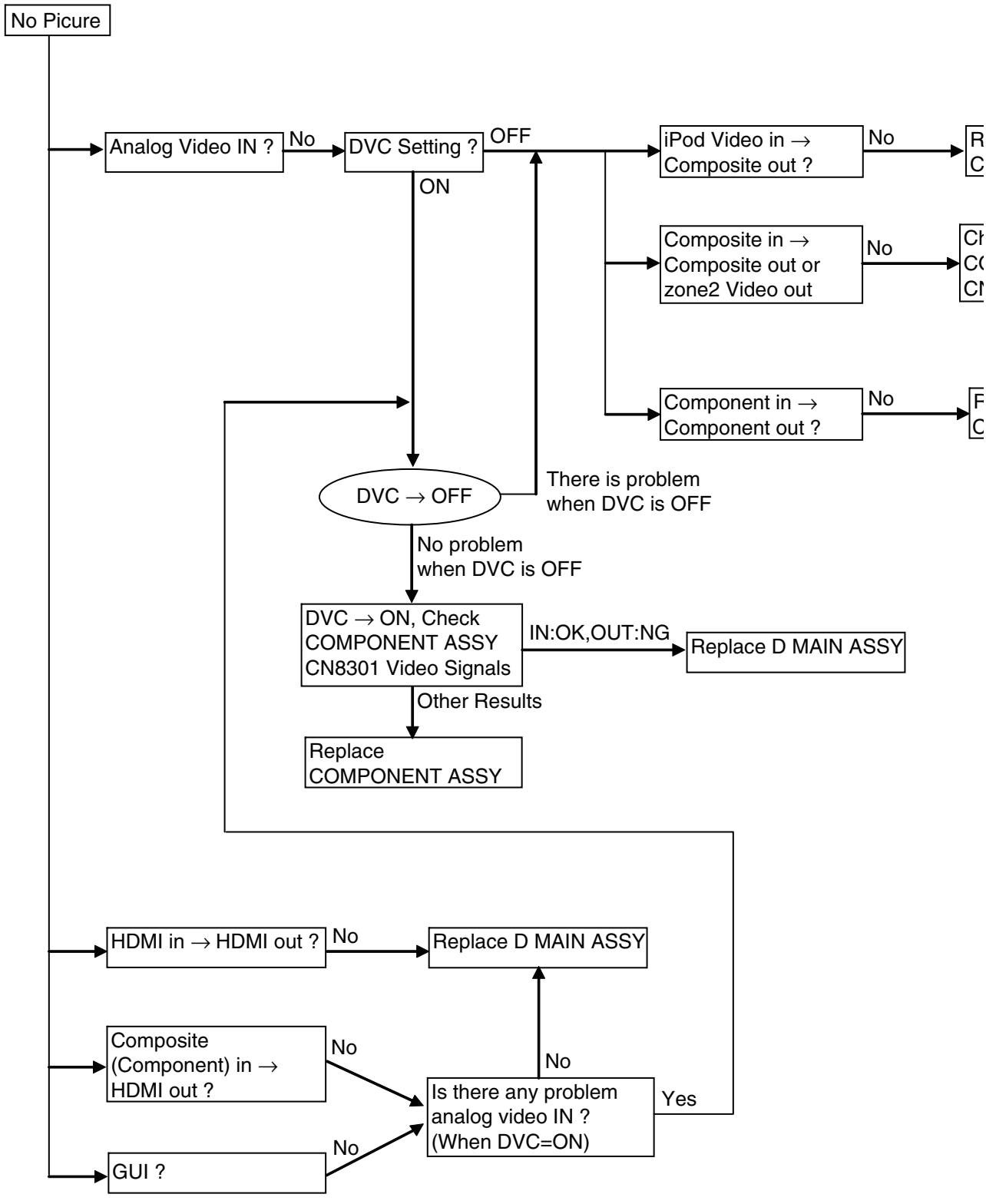

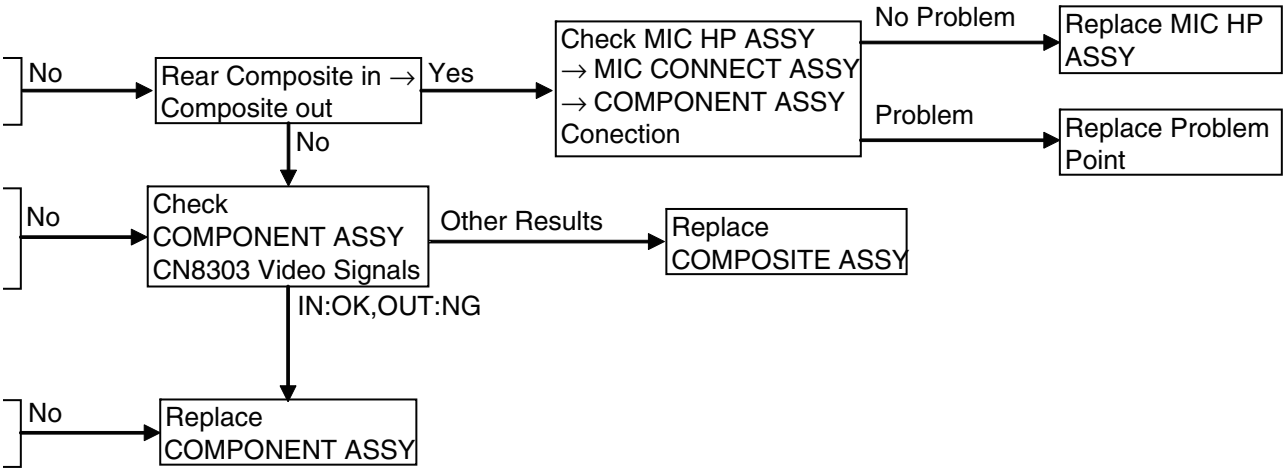
No
Rear Composite in → Composite out
Yes
Check MIC HP ASSY → MIC CONNECT ASSY → COMPONENT ASSY Conection
No Problem
Replace MIC HP ASSY
Problem
Replace Problem Point
No
No
Check COMPONENT ASSY CN8303 Video Signals
Other Results
Replace COMPOSITE ASSY
IN:OK,OUT:NG
No
Replace COMPONENT ASSY

ASSY

This is just for general reference and does not including every single case.

Network

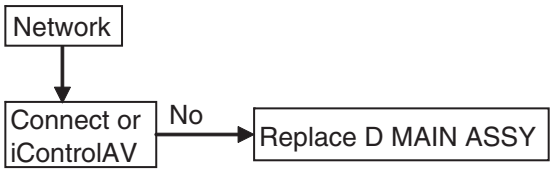

12V Trig

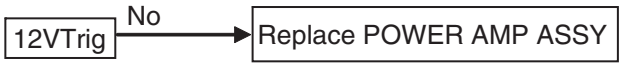

RS-232C

RF Remote

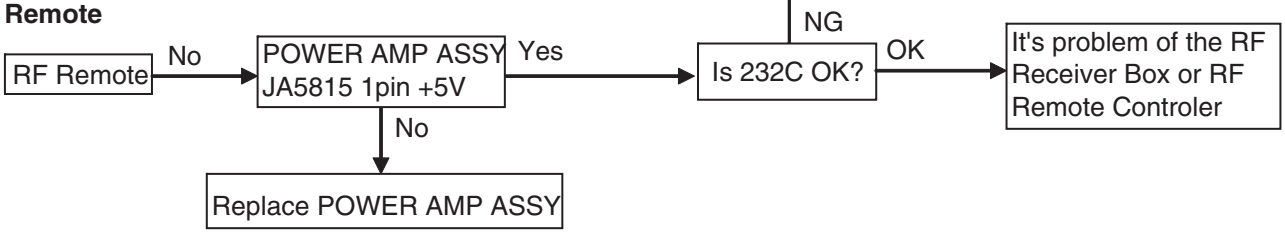

IR/SR

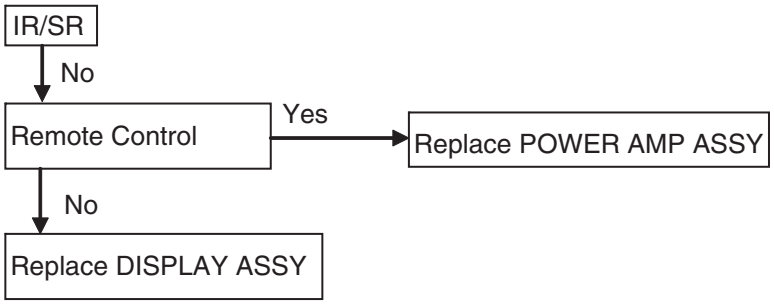

5.2 CIRCUIT DESCRIPTION

[1] Protection Circuit Process List

Item	Purpose	Detection Method	Process	Warning Indication	Remarks
DC detection	To detect amplifier damage (defect status) A process to protect speakers (for protection of connected external devices)	Detects when the XDCERR port becomes "L". (Pin 80 of IC3001)	Turns muting on and speaker relay off, then turns off the power after 3 seconds. Then flashes MCACC indicator.	Flashing "AMP ERR" for 3 seconds.	Once detected and turned the power off, the power cannot be turned on again (*). If the XDCERR port becomes "L" within 3 seconds, the unit returns to normal condition automatically.
AMP overload	To detect overloading (abnormal status) With low-load driving or a short circuit of the speaker terminals (for protection of the amplifier)	Detects when the XOLERR port becomes "L" (checks by interrupt). (Pin 71 of IC3001)	Turns muting on and speaker relay off, and immediately turns off the power. Then flashes iPod/iPhone indicator.	None	

(*) To restore the previous staus, follow the procedure described in “How to Enter Release Mode” (P.40) then turn the unit back on.

■ DC Detection Circuit

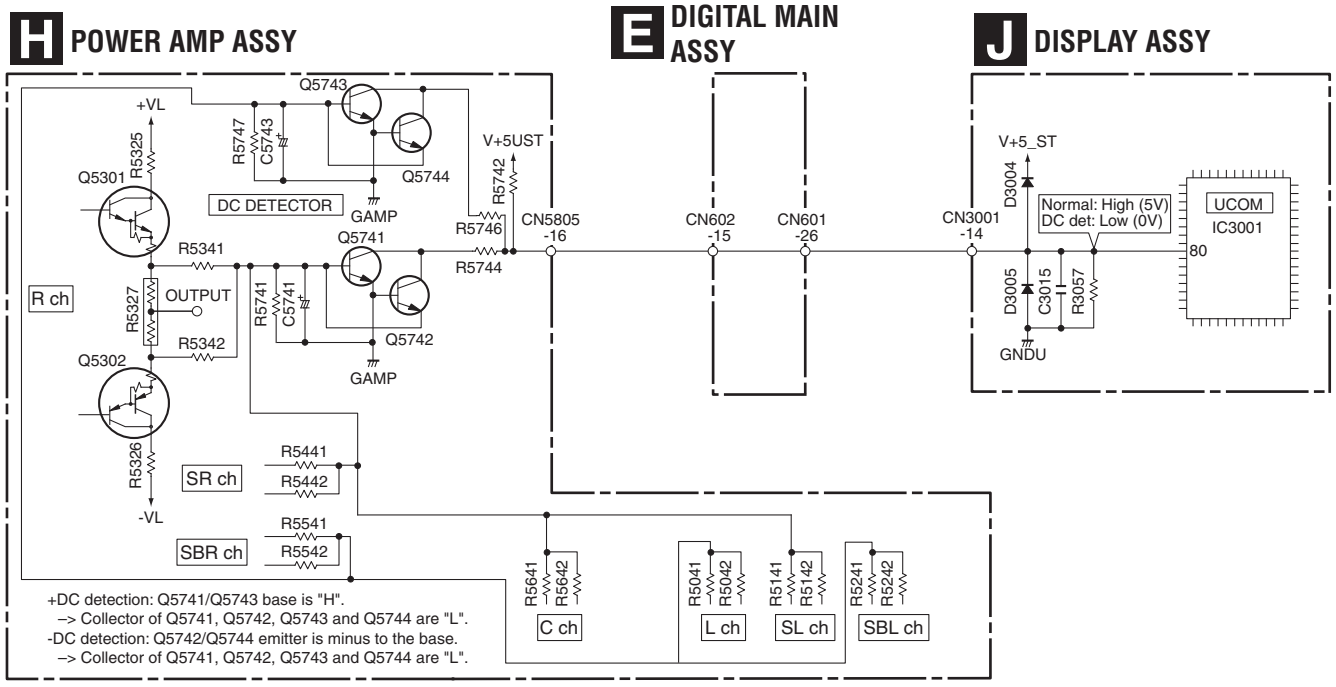

■ OL (Over Load) Detection Circuit

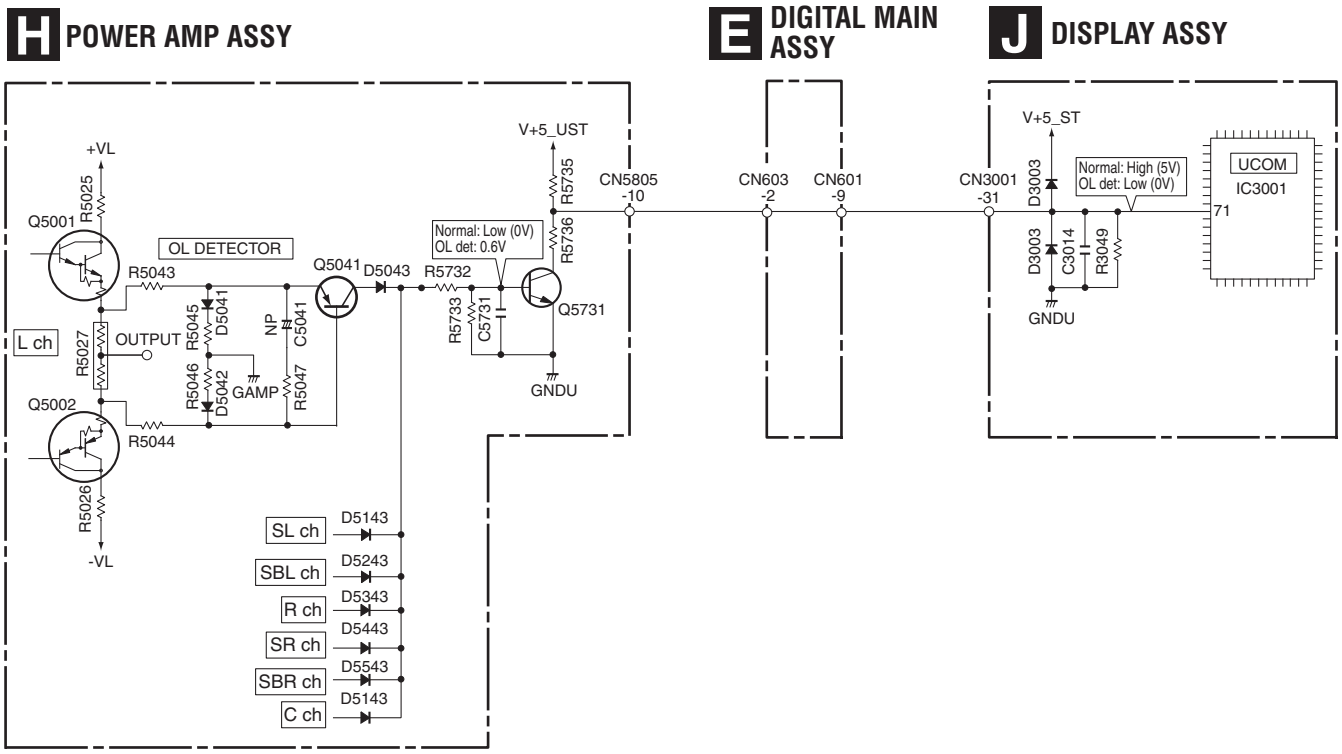

[2] Protection Circuit Process List (XPROTECT)

Item	Purpose	Detection Method	Process	Warning Indication	Remarks
XPROTECT	AMP power supply circuit and Transformer short circuit detect. (defect status) Observe CN5701 pin3 or pin5 voltage, VL+ and VL-.	Detects when the XPROTECT port becomes "L". (Pin 83 of IC3001)	Turns muting on and speaker relay off, and immediately turns off the power. Then flashes MCACC indicator.	None	Once detected and turned the power off, the power cannot be turned on again. (*)

(*) To restore the previous status, follow the procedure described in “How to Enter Release Mode” (P.40) then turn the unit back on.

■ XPROTECT Circuit

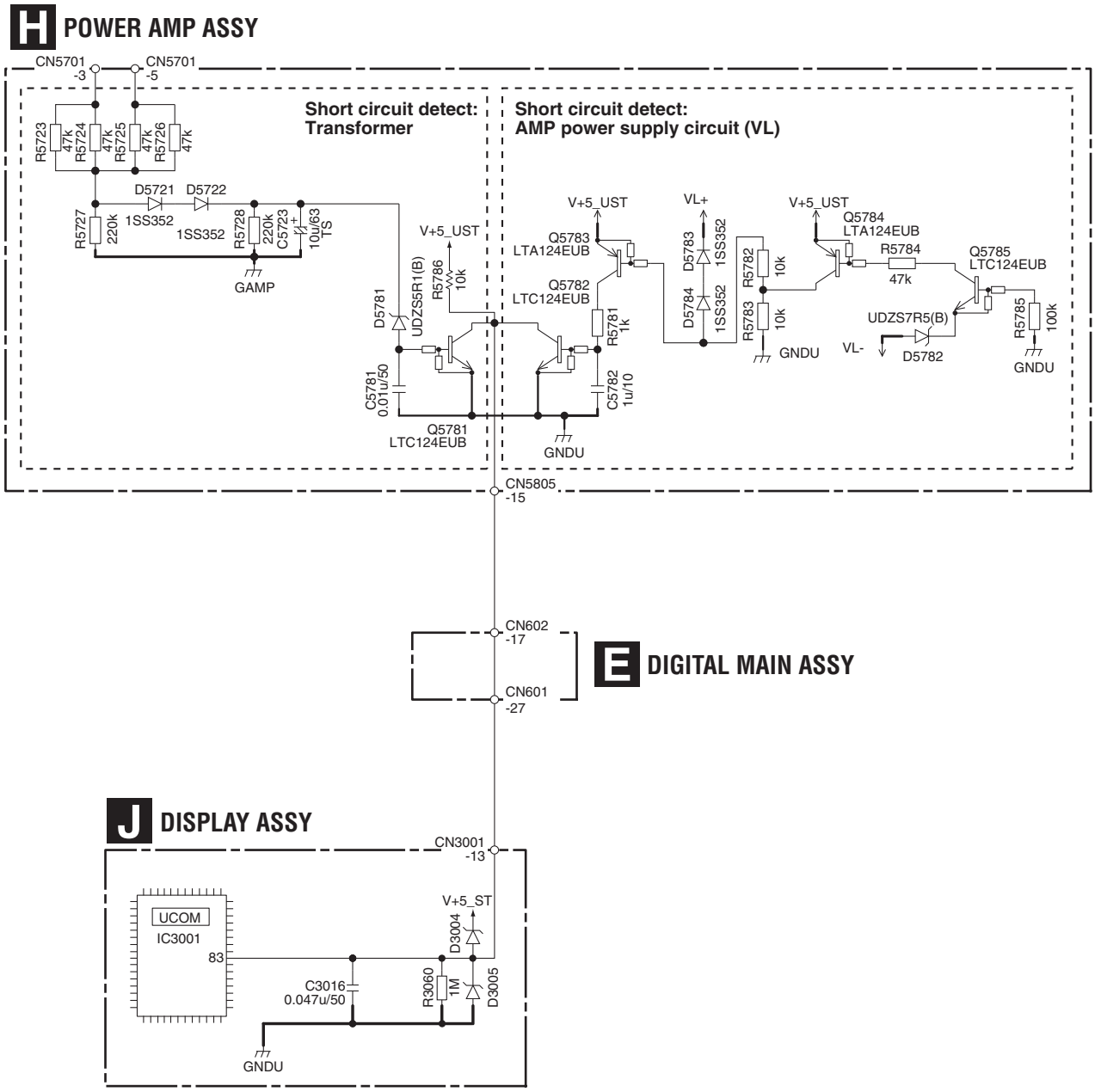

[3] Protection Circuit Process List (XVDDERR)

Item	Purpose	Detection Method	Status of Equipment	Warning Indication	Remarks
USB power failure detection	Detection of failure in regulator circuit for external supply	Detected when USB voltage reaches 7V or higher, or 4.1V or lower and XVDDERR port is set to "L"	Shuts down	Blinks iPod	Restoration possible with Power ON

■ XVDDERR Circuit

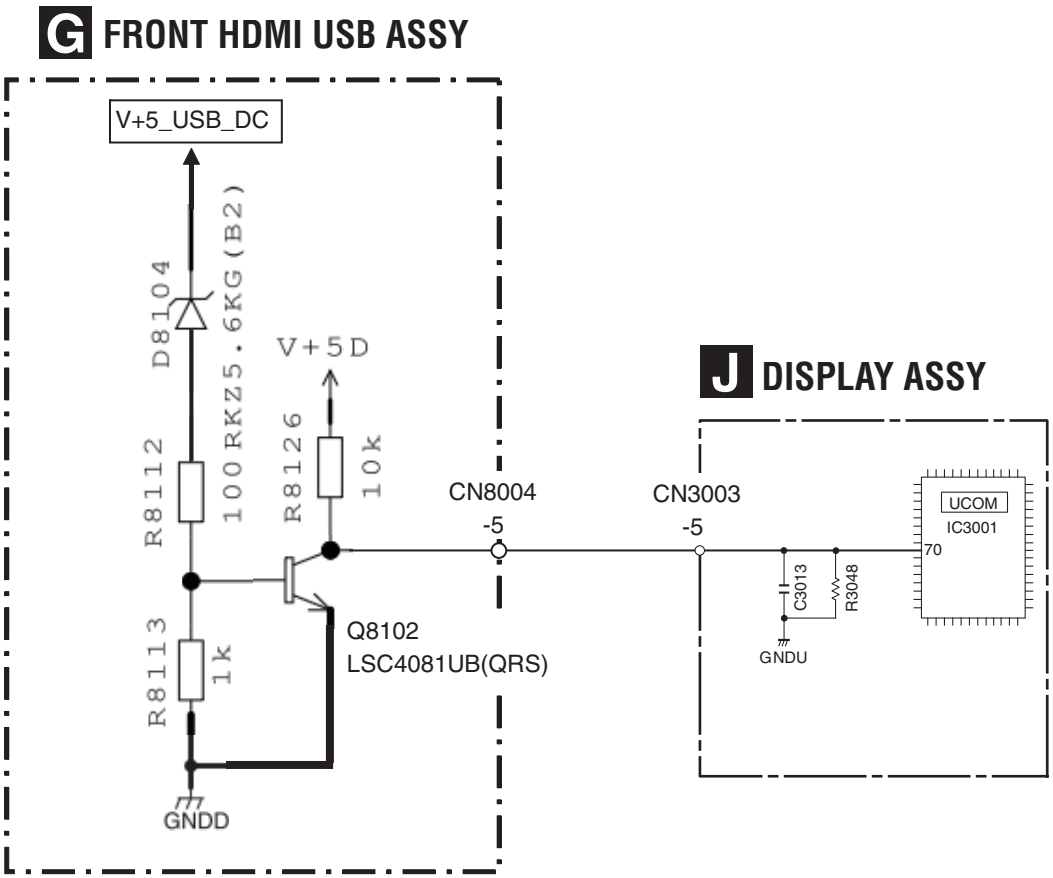

[4] Error Indications When an Abnormality in The Amplifier System Is Detected

[Purpose]

Errors upon detection of abnormalities in the amp system are indicated.

[Error Indications]

	FL Display	LED flashes	Status	Timing (sec.)	Description	Remarks
(1)	AMP ERR	ADVANCED MCACC LED	When the AMP DC is detected.	FL flashes 3 times. LED flashes after the power off.	When the unit recovers the normal state within 3 seconds, FL stops flashing and all zone off, and then the unit restarts automatically. When the DC detect continues for more than 3 seconds, after a failure in the amplifier block or high DC output is detected, the shutdown process starts, then the power will be shut off. Then the ADVANCED MCACC LED will flash. The power cannot be turned on again. If you wish to turn on the unit after a shutdown activated by DC detection, enter DC detection cancellation mode, by proceeding with the steps described in "How to enter release mode" next page.	
(2)	NA	iPod iPhone iPad LED	"AMP overload" detection.	LED flashes after the power off.	Upon detection of overcurrent at the amp output stage, the unit power off immediately, and the iPod iPhone iPad LED starts flashing. The previous stage will be restored when the unit is turned back on.	
(3)	NA	ADVANCED MCACC LED	When an abnormality is detected in the output voltage of the power supply circuit.	LED flashes after the power off.	If abnormality voltage is detected in the power supply VL circuit, the unit power off immediately, and the ADVANCED MCACC LED starts flashing. The power cannot be turned on again. If you wish to turn on the unit after the shutdown activated by XPROTECT, enter DC detection cancellation mode by proceeding with the steps described in "How to enter release mode" next page.	Abnormality detection in the power supply VL circuit.
(4)	NA	iPod iPhone iPad LED	When an abnormality is detected in the output voltage of the Digital power supply circuit.	LED flashes after the power off.	If abnormality voltage is detected in the Digital power supply circuit, the unit power off immediately, and the iPod iPhone iPad LED starts flashing. To restore the previous status, turn the unit back on.	
(5)	AMP OVERHEAT	FL OFF LED	When an abnormality of temperature is detected at the Amp output stage.	FL flashes 3 seconds. LED flashes after the power off.	When the unit recovers the normal state within 3 seconds, FL stops flashing. When the overheat state continues for more than 3 seconds, the power is shut off and FL OFF starts flashing. To restore the previous status 1 minuite or more after a shutdown, just turn the unit back on.	Overheat detection over 120 °C
(6)	Over Current	NA	When the overload USB device (over 500 mA) is connected.		The connected USB device is overload.	
(7)	HDCP ERROR	NA	When an HDCP ERROR is detected.	Flashes 5 seconds		Warning indication for HDMI Simplay

	FL Display	LED flashes	Status	Timing (sec.)	Description	Remarks
(8)	12V TRG ERR	NA	When the 12V trigger circuit is short-circuited.	Flashes	The 12V trigger circuit is short-circuited, and a overcurrent is generated.	
(9)	NA	NA	When the ANALOG INPUT OVER is detected.	Icon lights 1 second	While the Icon lights 1 second, when the ANALOG INPUT OVER is detected again, the Icon continues to light 1 second more from that time. While the Icon lights 1 second, when there is no ANALOG INPUT OVER detection , the Icon stops lighting and returns to normal display.	The Icon “OVER” lights
(10)	NO ADAPTER	NA	When BT Adapter is not connected.	Lights	While the ADAPTER PORT function is selected, the BT Adapter is not connected.	
(11)	NOT AVAILABLE	NA	Non-BT Adapter is connected.	Lights	While the ADAPTER PORT function is selected, the non-BT Adapter is connected.	
(12)	WAITING DEVICE	NA	No wireless connection between BT source and AVR	Lights	While the ADAPTER PORT function is selected, there is no wireless connection between BT source equipment and AVR.	
(13)	ADP OVERLOAD	NA	When overcurrent is detected in the Adapter port.	Lights	While the ADAPTER PORT function is selected, overcurrent is detected in the Adapter port, and Bluetooth function is not available.	
(14)	WLAN POW ERR	NA	When power abnormality of wireless LAN converter is detected.	Flashes	Over-current status is generated at the power terminal of wireless LAN converter.	

[How to Enter Release Mode]

During Standby mode, simultaneously press and hold the "TUNE [↓]" and "MULTI-ZONE ON/OFF" keys for 5 seconds.

6. SERVICE MODE
6.1 TEST MODE

[1] Detected protection history

[Purpose]

The numbers of detections for various protection processes are displayed.

[How to enter/exit]

Turn off the power to this unit by setting the main volume level to "---dB" and Multi-zone to "OFF".
During Standby mode, simultaneously press and hold "MULTI-ZONE ON/OFF" and "ENTER" keys for 5 seconds to enter this mode.
Turning off the power or pressing the Return key returns to the normal mode.

[Basic operations]

Key operation	FL display
Display number of times DC is detected.	DC : ＊＊＊
[↓] [↑]	
Display number of times OVERLOAD is detected.	OL : ＊＊＊
[↓] [↑]	
Display number of times COMBINATION is detected. (Detects DC and OVERLOAD simultaneously)	COM : ＊＊＊
[↓] [↑]	
Display number of times Power abnormality is detected.	XPRT : ＊＊＊
[↓] [↑]	
Display number of times FAN STOP is detected.	FAN : ＊＊＊
[↓] [↑]	
Display number of times AMP overheat is detected.	STMP : ＊＊＊
[↓] [↑]	
Display number of times Digital Power abnormality is detected.	DERR : ＊＊＊
[↓] [↑]	
Resetting the number of times error is detected.	RESET ◀HOLD▶
[↓] [↑]	

This function does not work on this model.

Front Panel Key

[↓] : TUNE key
[↑] : TUNE key
[←] : PRESET key
[→] : PRESET key

Resetting the number of times error is detected

Key operation	FL display
[←][→]	RESET ◀CLEAR?▶
[ENTER]	RESET ◀ RESET ▶
↓ Continued	

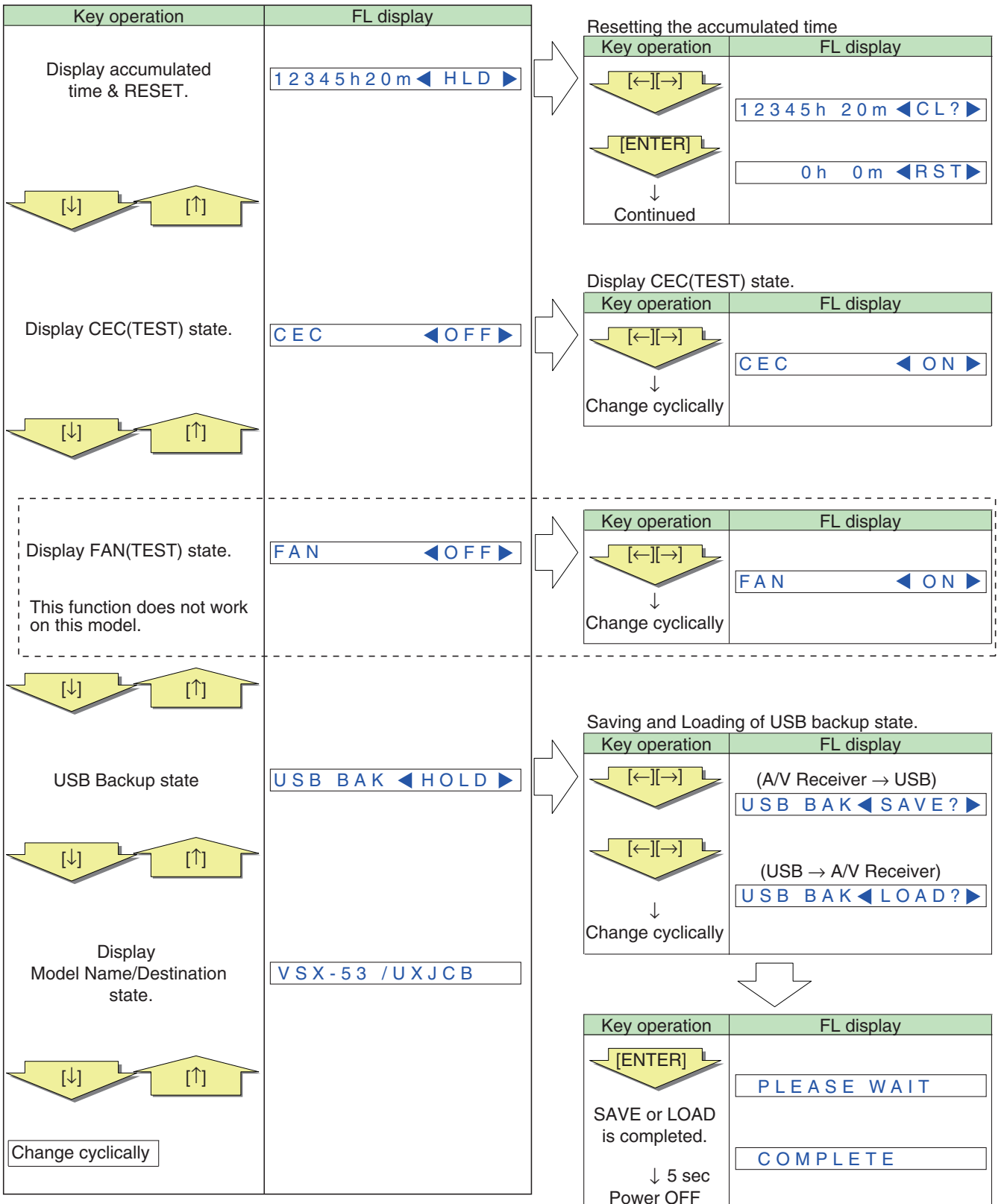

[Description]

CEC TEST : The function for making the HDMI output terminal to output 1 kHz square wave. If the square wave is output, the CEC line is considered to be normal.

FAN TEST : The function for making the FAN to be forced to rotate.

7. DISASSEMBLY
7.1 DISASSEMBLY

Preparations Before Performing Diagnosis of the POWER AMP ASSY

Before performing diagnosis of the POWER AMP ASSY, it is necessary to discharge C5721 and C5722 on the board. (See the photo below.)
If you don't, the protectors (P5001 and P5002) on the board may be open, and DC voltage may be generated at the power amplifier output, which will result in "AMP ERR."

[Procedures]

(1) Unplug the power cord.

(2) Discharge C5721 and C5722 by connecting either J496 or J552 to pin 1 and 4 of D5790.

Note: For discharging, use a load of 100 Ω , 3 W or more, to protect the IC protectors. Do NOT discharge instantly by short-circuiting.

(3) Check that the voltage between the electrodes of each C5721 and C5722 is 1 V or less.

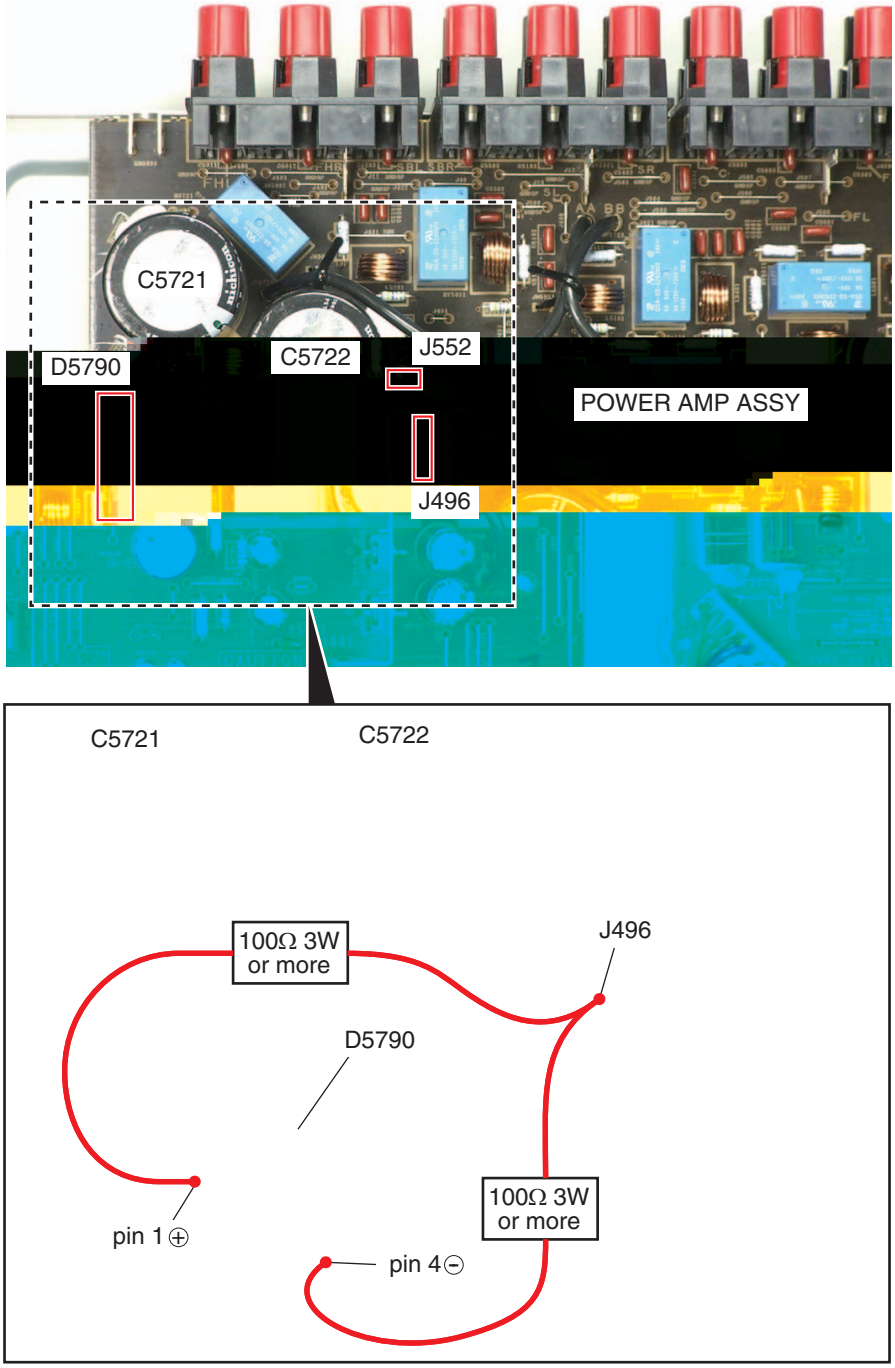

A3/3 AUDIO ASSY (3/3)
(VSX-53/VSX-1326-K : AWX9767)
(VSX-52/VSX-1126-K/VSX-1121-K: AWX9830)

SELMID(P1)

	AWX9790- /J	AWX9831- /J	AWX9832- /J	AWX9833- /J	AWX9834- /J	AWX9835- /J	AWX9767- /J	AWX9828- /J	AWX9829- /J	AWX9934- /J	AWX9830- /J
R2687	1M	1M	1M	1M	1M	1M	NM	1M	1M	NM	NM
R2688	1.5k	1.5k	1.5k	1.5k	1.5k	1.5k	NM	1.6k	1.6k	NM	NM
R2740	NM	NM	NM	NM	NM	NM	0	0	0	0	0
R2741	NM	NM	NM	NM	NM	NM	0	0	0	0	0
R2831	10	10	10	10	10	10	0	0	0	0	0
R2832	10	10	10	10	10	10	0	0	0	0	0
R2833	10	10	10	10	10	10	0	0	0	0	0
R2834	10	10	10	10	10	10	0	0	0	0	0
R2835	10	10	10	10	10	10	0	0	0	0	0
R2836	10	10	10	10	10	10	0	0	0	0	0
R2861	0	0	0	0	0	0	470	470	470	470	470
R2862	47k	47k	47k	47k	47k	47k	NM	NM	NM	NM	NM
R2863	0	0	0	0	0	0	470	470	470	470	470
R2864	47k	47k	47k	47k	47k	47k	NM	NM	NM	NM	NM
R3005	NM	NM	NM	NM	NM	NM	0	0	0	0	0
R3013	0	0	0	0	0	0	NM	NM	NM	NM	NM
R3014	0	0	0	0	0	0	NM	NM	NM	NM	NM
R3018	NM	NM	NM	NM	NM	NM	0	0	0	0	0
R3019	NM	NM	NM	NM	NM	NM	0	0	0	0	0
R3020	0	0	0	0	0	0	NM	NM	NM	NM	NM
R3021	NM	NM	NM	NM	NM	NM	0	0	0	0	0
R3022	NM	NM	NM	NM	NM	NM	0	0	0	0	0
R3031	4.7M	4.7M	470k	4.7M	4.7M	470k	NM	4.7M	3.9k	NM	NM
R3032	5.6k	5.6k	470k	5.6k	5.6k	820k	8.2k	7.5k	7.5k	8.2k	8.2k
R3033	NM	NM	NM	NM	NM	NM	NM	NM	NM	NM	NM
R6737	0	0	0	0	0	0	10	10	10	10	10
R6738	47k	47k	47k	47k	47k	47k	47k	47k	47k	47k	47k
R6750	NM	NM	NM	NM	NM	NM	47k	47k	47k	47k	47k
R6751	NM	NM	NM	NM	NM	NM	47k	47k	47k	47k	47k
C2691	NM	NM	NM	NM	NM	NM	330p/50	330p/50	330p/50	330p/50	330p/50
C2692	NM	NM	NM	NM	NM	NM	330p/50	330p/50	330p/50	330p/50	330p/50
C2701	NM	NM	NM	NM	NM	NM	0.01u/50	0.01u/50	0.01u/50	0.01u/50	0.01u/50
C2702	NM	NM	NM	NM	NM	NM	0.01u/50	0.01u/50	0.01u/50	0.01u/50	0.01u/50
C2705	NM	NM	NM	NM	NM	NM	0.01u/50	0.01u/50	0.01u/50	0.01u/50	0.01u/50
C2706	NM	NM	NM	NM	NM	NM	0.01u/50	0.01u/50	0.01u/50	0.01u/50	0.01u/50
C2709	0.01u/16	0.01u/16	0.01u/16	0.01u/16	0.01u/16	0.01u/16	NM	NM	NM	NM	NM
C2710	0.01u/16	0.01u/16	0.01u/16	0.01u/16	0.01u/16	0.01u/16	NM	NM	NM	NM	NM
C2711	0.01u/16	0.01u/16	0.01u/16	0.01u/16	0.01u/16	0.01u/16	NM	NM	NM	NM	NM
C2712	0.01u/16	0.01u/16	0.01u/16	0.01u/16	0.01u/16	0.01u/16	NM	NM	NM	NM	NM
C2861	NM	NM	NM	NM	NM	NM	NM	NM	NM	NM	NM
C2862	NM	NM	NM	NM	NM	NM	NM	NM	NM	NM	NM
C3009	NM	NM	NM	NM	NM	NM	100p/50	100p/50	100p/50	100p/50	100p/50
C3010	NM	NM	NM	NM	NM	NM	100p/50	100p/50	100p/50	100p/50	100p/50
C3021	0.01u/50	0.01u/50	0.01u/50	0.01u/50	0.01u/50	0.01u/50	NM	0.01u/50	0.01u/50	0.01u/50	NM
C3949	NM	NM	NM	NM	NM	NM	10p/50	10p/50	10p/50	10p/50	10p/50
C3959	NM	NM	NM	NM	NM	NM	0.22u/25	0.22u/25	0.22u/25	0.22u/25	0.22u/25
C3960	NM	NM	NM	NM	NM	NM	0.22u/25	0.22u/25	0.22u/25	0.22u/25	0.22u/25

VOL2 (P1 B-13)

	AWX9790- /J AWX9831- /J AWX9832- /J AWX9833- /J AWX9834- /J AWX9835- /J	AWX9767- /J AWX9828- /J AWX9829- /J AWX9934- /J AWX9830- /J
C2826	10u/50	NM
C2827	10u/50	NM
C2828	ACH1479-A	NM
C2829	100p/50	NM
C2830	100p/50	NM
C2831	NM	NM
C2832	100p/50	NM
C2833	NM	NM
C2834	0.01u/16	NM
C2835	0.01u/16	NM
C2836	ACH1479-A	NM
C3953	10u/50	NM
C3954	10u/50	NM
R2609	NM	NM
R2610	NM	NM
R2611	1k	NM
R2612	1k	NM
R6747	47k	NM
R6748	47k	NM
IC3273	BD3473KS2	NM
D2692	1SS302	NM

EMC (P2 B-11)

	EXCEPT AWX9828- /J AWX9934- /J AWX9831- /J AWX9834- /J	ONLY AWX9828- /J AWX9831- /J AWX9834- /J	ONLY AWX9934- /J
C3111	NM	330p/50	330p/50
C3112	NM	330p/50	330p/50
C3113	NM	100p/50	100p/50
C3114	NM	100p/50	100p/50
C3161	NM	330p/50	330p/50
C3162	NM	330p/50	330p/50
C3163	NM	100p/50	100p/50
C3164	NM	100p/50	100p/50
C3211	NM	330p/50	330p/50
C3212	NM	330p/50	330p/50
C3213	NM	100p/50	100p/50
C3214	NM	100p/50	100p/50
C3261	NM	330p/50	330p/50
C3262	NM	330p/50	330p/50
C3263	NM	100p/50	100p/50
C3264	NM	100p/50	100p/50
C3281	NM	330p/50	330p/50
C3282	NM	330p/50	330p/50
C3283	NM	100p/50	100p/50
C3284	NM	100p/50	100p/50
C3922	NM	100p/50	NM
C3923	NM	100p/50	NM
C3924	NM	330p/50	NM
C3925	NM	330p/50	NM
C3944	NM	330p/50	330p/50
C3945	NM	100p/50	100p/50

NOTE
1. RESISTORS
Unit: k-kΩ , M-MΩ or Ω unless otherwise noted.
Rated Power: 1/10w unless otherwise noted.
Tolerance: (J)5% unless otherwise noted.
2125 : RS1/8SQ
NO MARKED : RS1/10SR
2. CAPACITORS
No marked Ceramic Capacitors are CKSRYB.
No marked Electrolytic Capacitors are CEAT(VSX and VSA series)
No marked Electrolytic Capacitors are CEAK(SC series)
CH:CCSRCH CFHX:CFHXSQ unless otherwise noted.
Unit: p-pF or u-uF unless otherwise noted.
Ratings: Capacity(F)/Voltage(V) unless otherwise noted.
1000p or less : CCSRCH, Over 1000p : CKSRYB
3. NM: No Mount

10.4 COMPOSITE ASSY

	AWX9768- /J	AWX9791- /J	AWX9836- /J
JA3601	AKB7229-A	AKB7230-A	AKB7229-A
JA3602	AKB7229-A	AKB7230-A	AKB7229-A
JA3603	AKB7229-A	AKB7230-A	AKB7229-A

	AWX9768- /J	AWX9791- /J	AWX9836- /J
C3608	NM	0.1u/16	0.1u/50
C3610	NM	0.1u/16	0.1u/50
C3618	NM	180p/50	180p/50
R3615	NM	0	0
R3616	NM	68	68
R3617	NM	1k	1k
R3618	NM	100	100
R3619	NM	100	100
R3620	NM	2.2k	2.2k
R3621	NM	220	220
R3635	NM	NM	NM
R3644	NM	220	220
JA3604	NM	AKB7232-A	AKB7231-A
Q3605	NM	LSA1576UB(QR)	LSA1576UB(QRS)
Q3606	NM	HN1C01FU(YGR)	HN1C01FU(YGR)

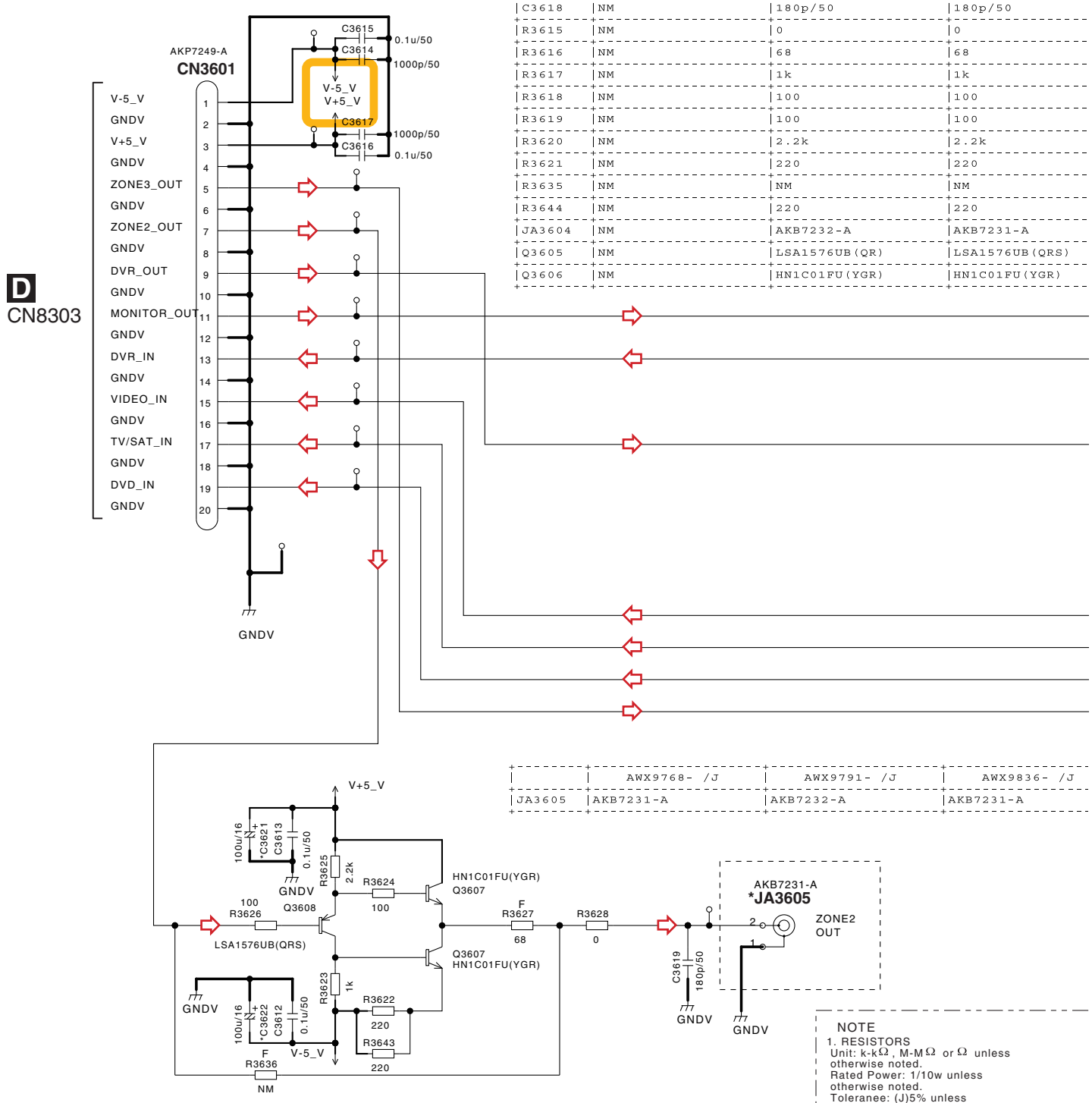

	AWX9768- /J	AWX9791- /J	AWX9836- /J
JA3605	AKB7231-A	AKB7232-A	AKB7231-A

NOTE

1. RESISTORS
   Unit: k-kΩ, M-MΩ or Ω unless otherwise noted.
   Rated Power: 1/10w unless otherwise noted.
   Toleranee: (J)5% unless otherwise noted.

2. CAPACITORS
   Unit: p-pF or u-uF unless otherwise noted.
   Ratings: Capacity(F)/Voltage(V) unless otherwise noted.
   CH : CCSRCH
   NO MARKED : CKSRYB
3. NM: No Mount

: Video Signal Route

B

B COMPOSITE ASSY (AWX9768)

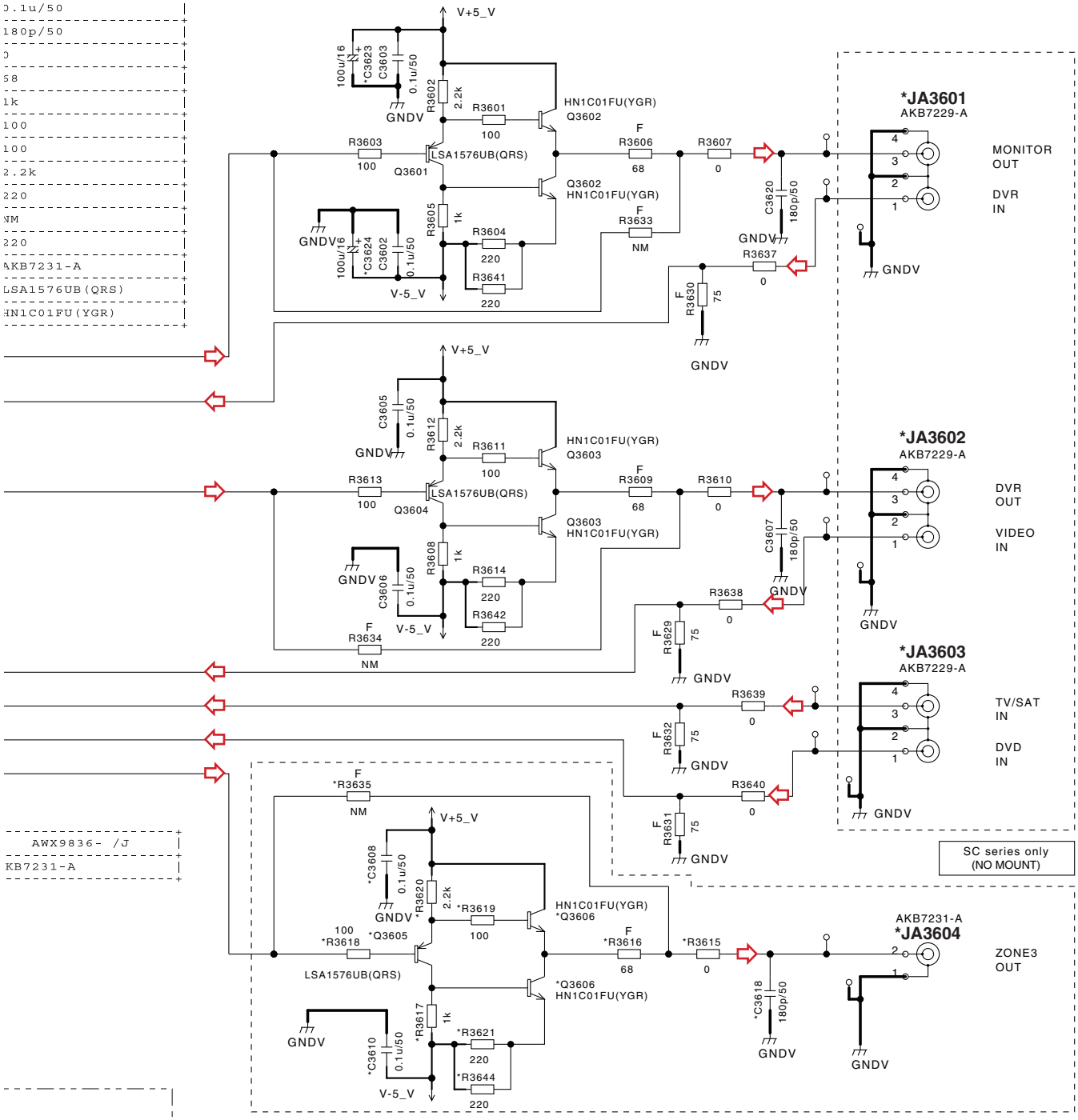

AWX9836- /J
AKB7229-A
AKB7229-A
AKB7229-A

AWX9836- /J
0.1u/50
0.1u/50
180p/50
0
68
1k
100
100
2.2k
220
NM
220
AKB7231-A
LSA1576UB(QRS)
HN1C01FU(YGR)

AWX9836- /J
KB7231-A

Ω unless
nless
ss
ess
Voltage(V)
d.
B

10.5 DAC LOW ASSY(1/2)

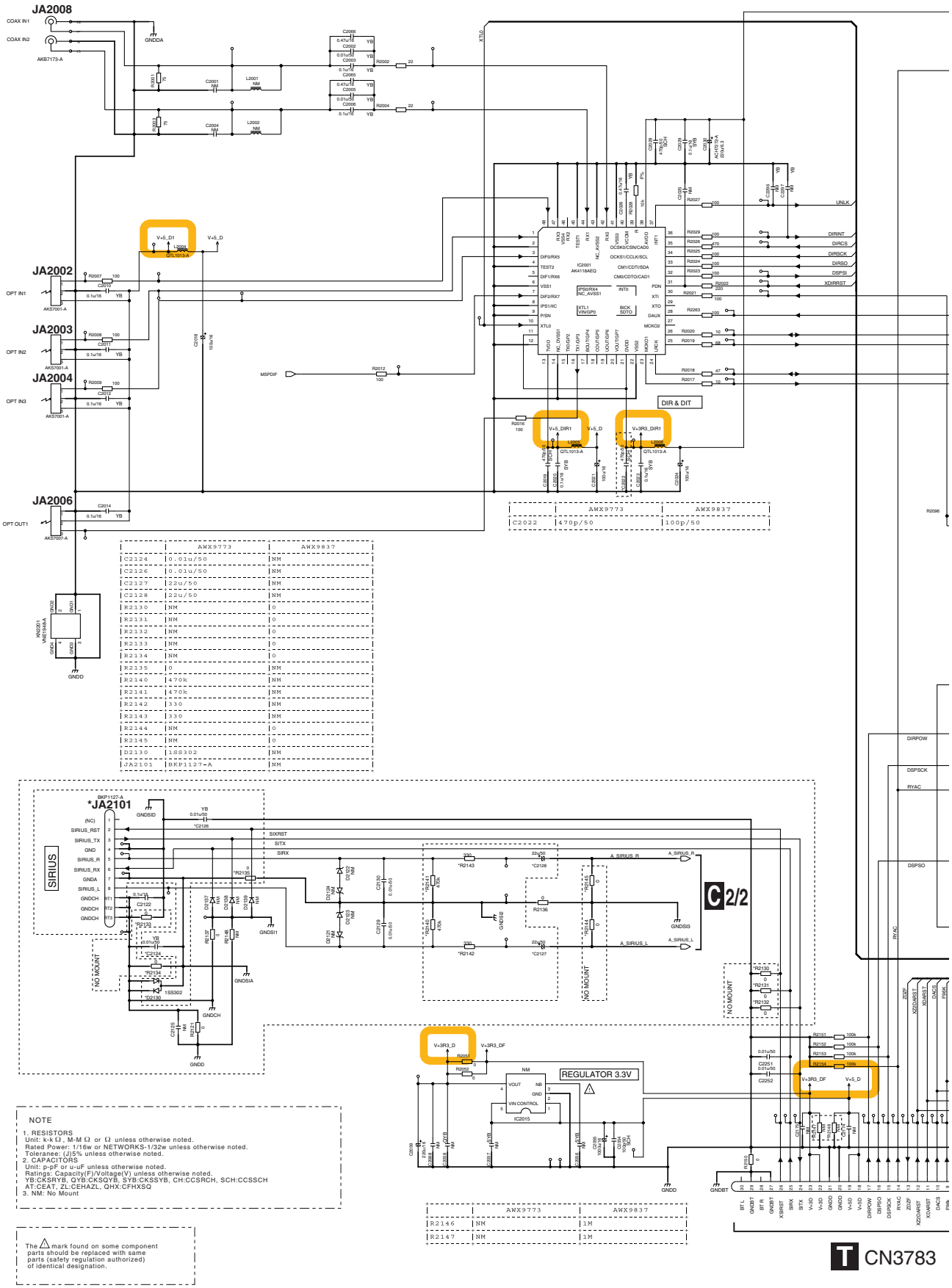

	AWX9773	AWX9837
C2022	470p/50	100p/50

	AWX9773	AWX9837
C2124	0.01u/50	NM
C2126	0.01u/50	NM
C2127	22u/50	NM
C2128	22u/50	NM
R2130	NM	0
R2131	NM	0
R2132	NM	0
R2133	NM	0
R2134	NM	0
R2135	0	NM
R2140	470k	NM
R2141	470k	NM
R2142	330	NM
R2143	330	NM
R2144	NM	0
R2145	NM	0
D2130	1SS302	NM
JA2101	BKP1127-A	NM

	AWX9773	AWX9837
R2146	NM	1M
R2147	NM	1M

NOTE

1. RESISTORS
Unit: k-k Ω , M-M Ω or Ω unless otherwise noted.
Rated Power: 1/16w or NETWORKS-1/32w unless otherwise noted.
Tolerance: (J)5% unless otherwise noted.
2. CAPACITORS
Unit: p-pF or u-uF unless otherwise noted.
Ratings: Capacity(F)/Voltage(V) unless otherwise noted.
YB:CKSRYB, QYB:CKSQYB, SYB:CKSSYB, CH:CCSRCH, SCH:CCSSCH
AT:CEAT, ZL:CEHAZL, QHX:CFHXSQ
3. NM: No Mount

The △ mark found on some component parts should be replaced with same parts (safety regulation authorized) of identical designation.

C1/2 DAC LOW ASSY (1/2) (AWX9773)

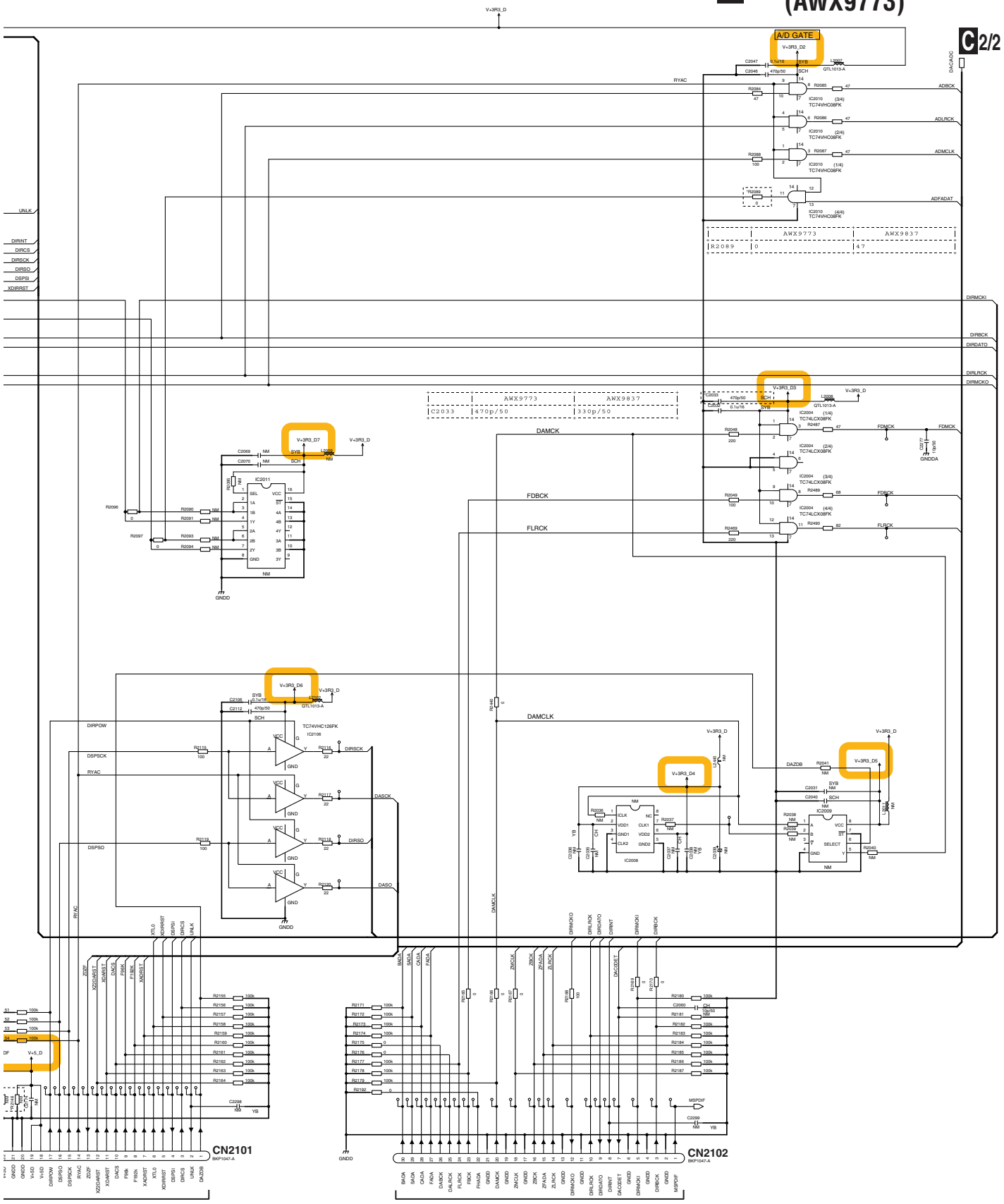

10.6 DAC LOW ASSY(2/2)

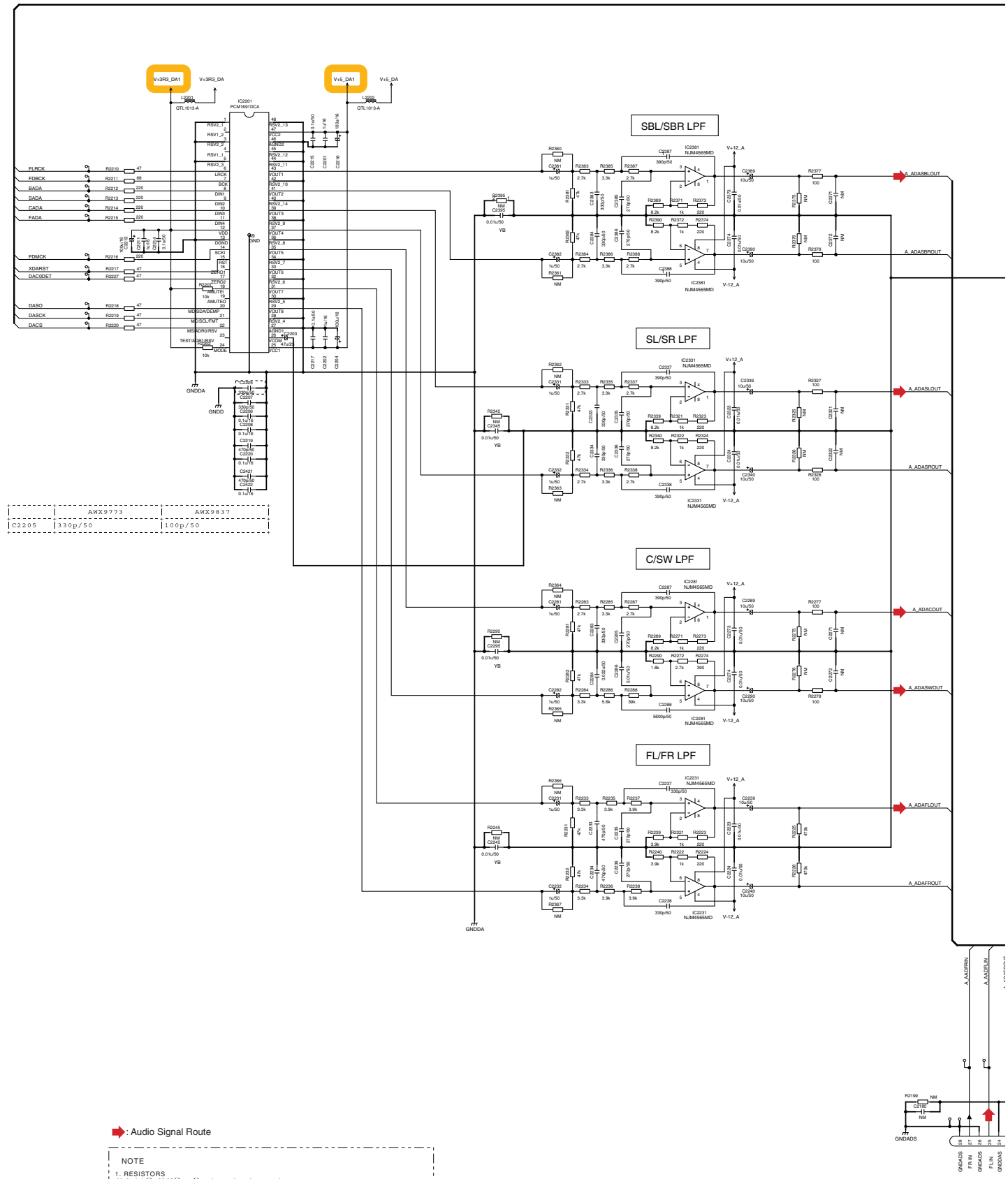

NOTE

1. RESISTORS
Unit: k-kΩ , M-MΩ or Ω unless otherwise noted.
Rated Power: 1/16w or NETWORKS-1/32w unless otherwise noted.
Tolerance: (J)5% unless otherwise noted.
2. CAPACITORS
Unit: p-pF or u-uF unless otherwise noted.
Ratings: Capacity(F)/Voltage(V) unless otherwise noted.
YB:CKSRYB, QYB:CKSQYB, SYB:CKSSYB, CH:CCSRCH, SCH:CCSSCH
AT:CEAT, ZL:CEHAZL, QHX:CFHXSQ
3. NM: No Mount

The ⚠ mark found on some component parts should be replaced with same parts(safety regulation authorized) of identical designation.

C 2/2

C2/2 DAC LOW ASSY (2/2) (AWX9773)

DAC/ADC

C1/2

	AWX9773	AWX9837
R2431	10	47

	AWX9773	AWX9837
C2405	ACH7196-A	10u/50(CEAK)
C2406	ACH7196-A	10u/50(CEAK)
C2407	ACH7196-A	10u/50(CEAK)
C2408	ACH7196-A	10u/50(CEAK)

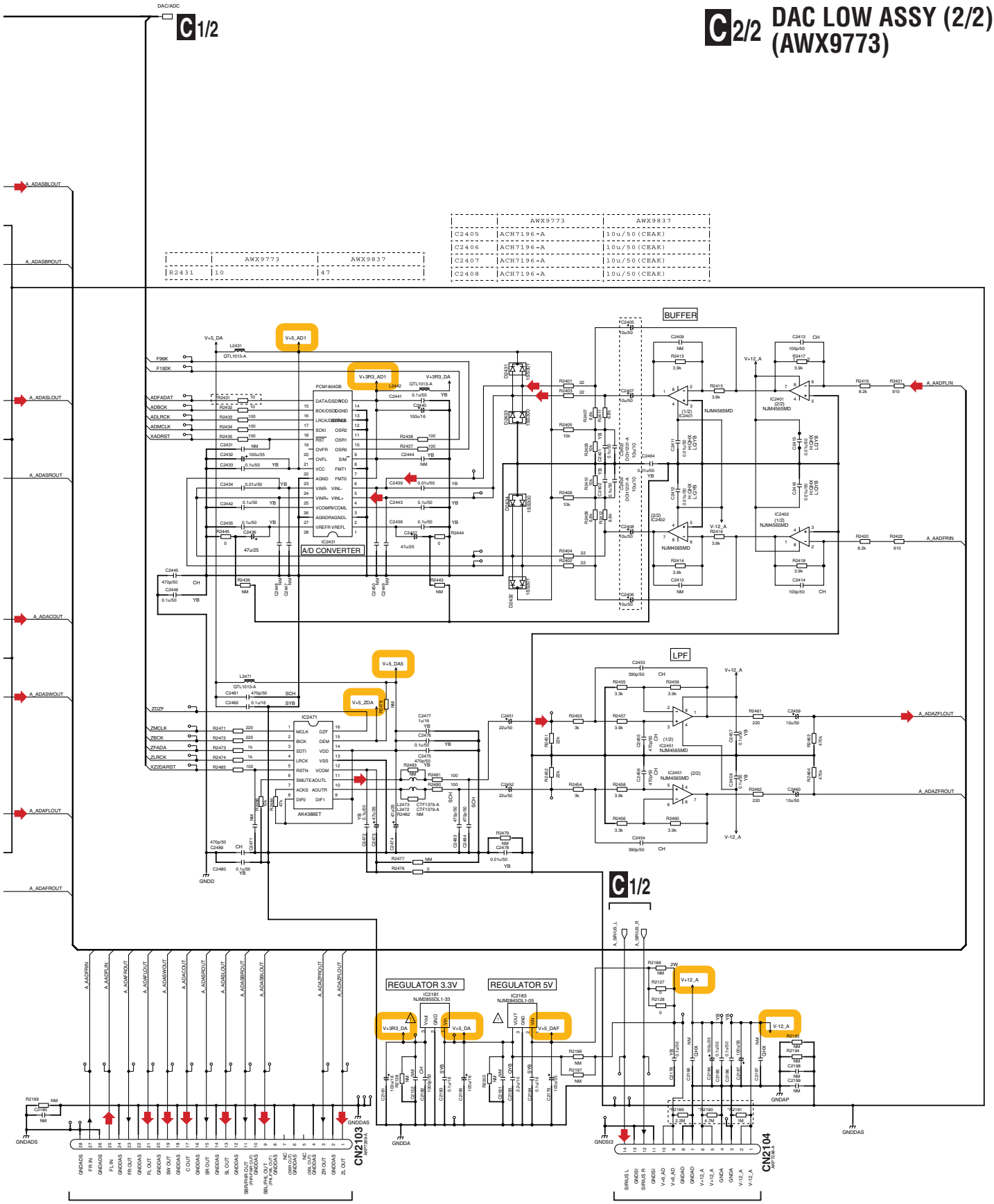

C1/2

R CN3793

R CN3791

	AWX9773	AWX9837
R2189	2.2M	4.7M
R2190	4.7M	4.7M
R2191	1M	1M

C2/2

10.7 COMPONENT ASSY

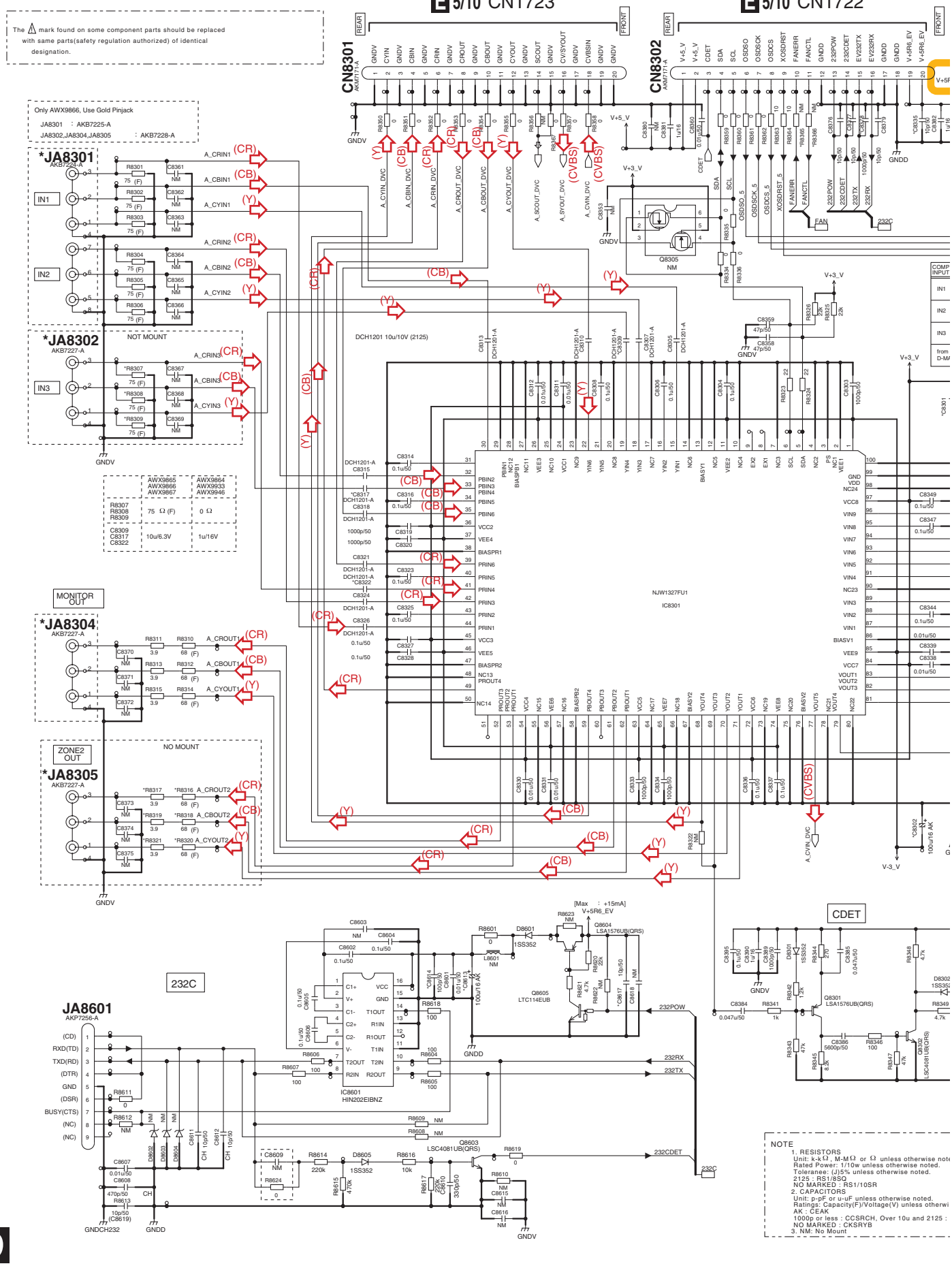

D COMPONENT ASSY (AWX9864)

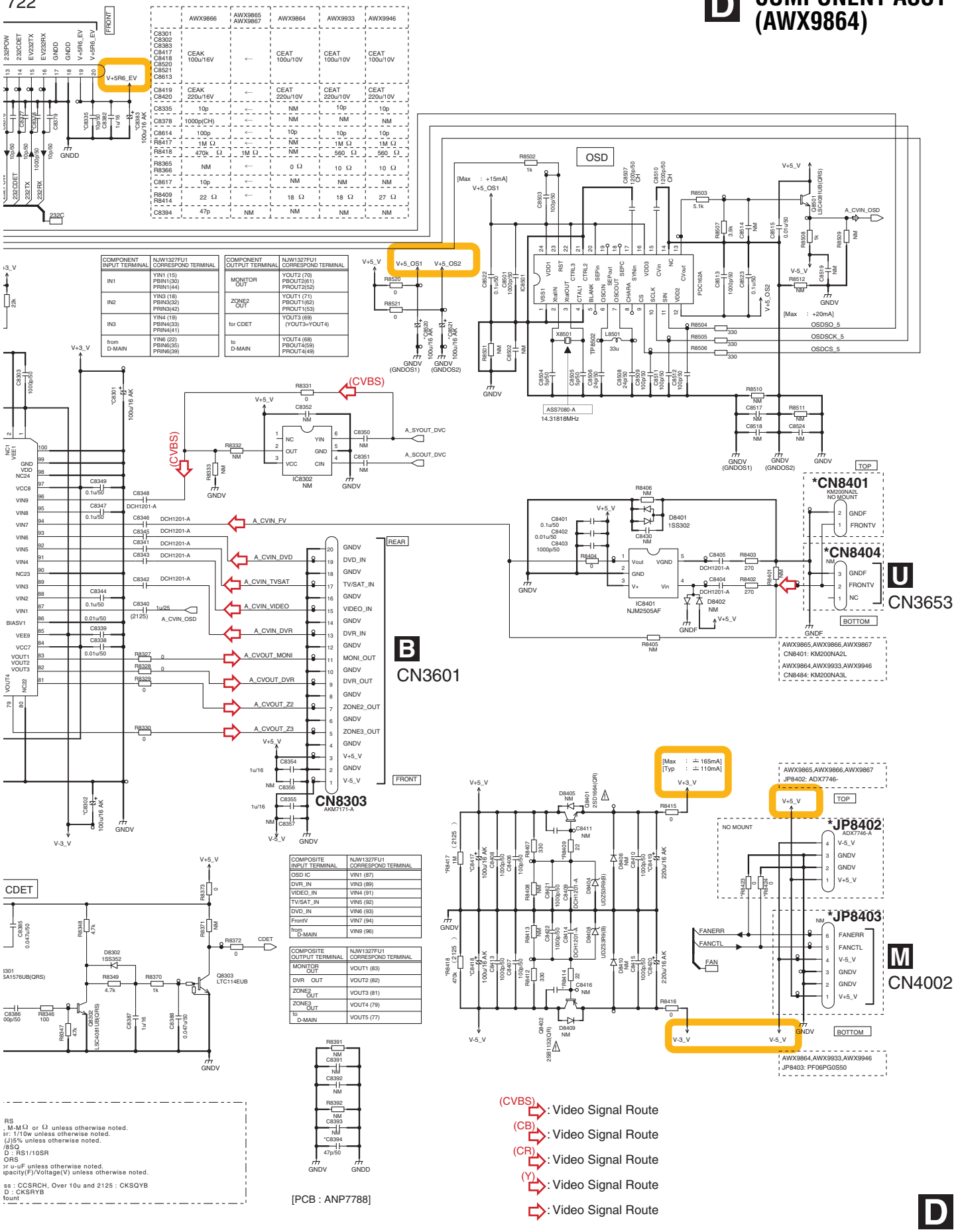

10.8 DIGITAL MAIN ASSY(1/10)(GUIDE PAGE)

Note: When ordering service parts, be sure to refer to " EXPLODED VIEWS AND PARTS LIST" or "ELECTRICAL PARTS LIST".

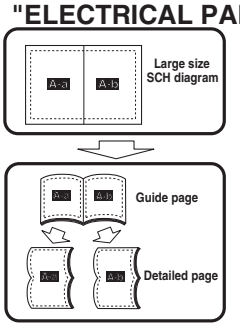

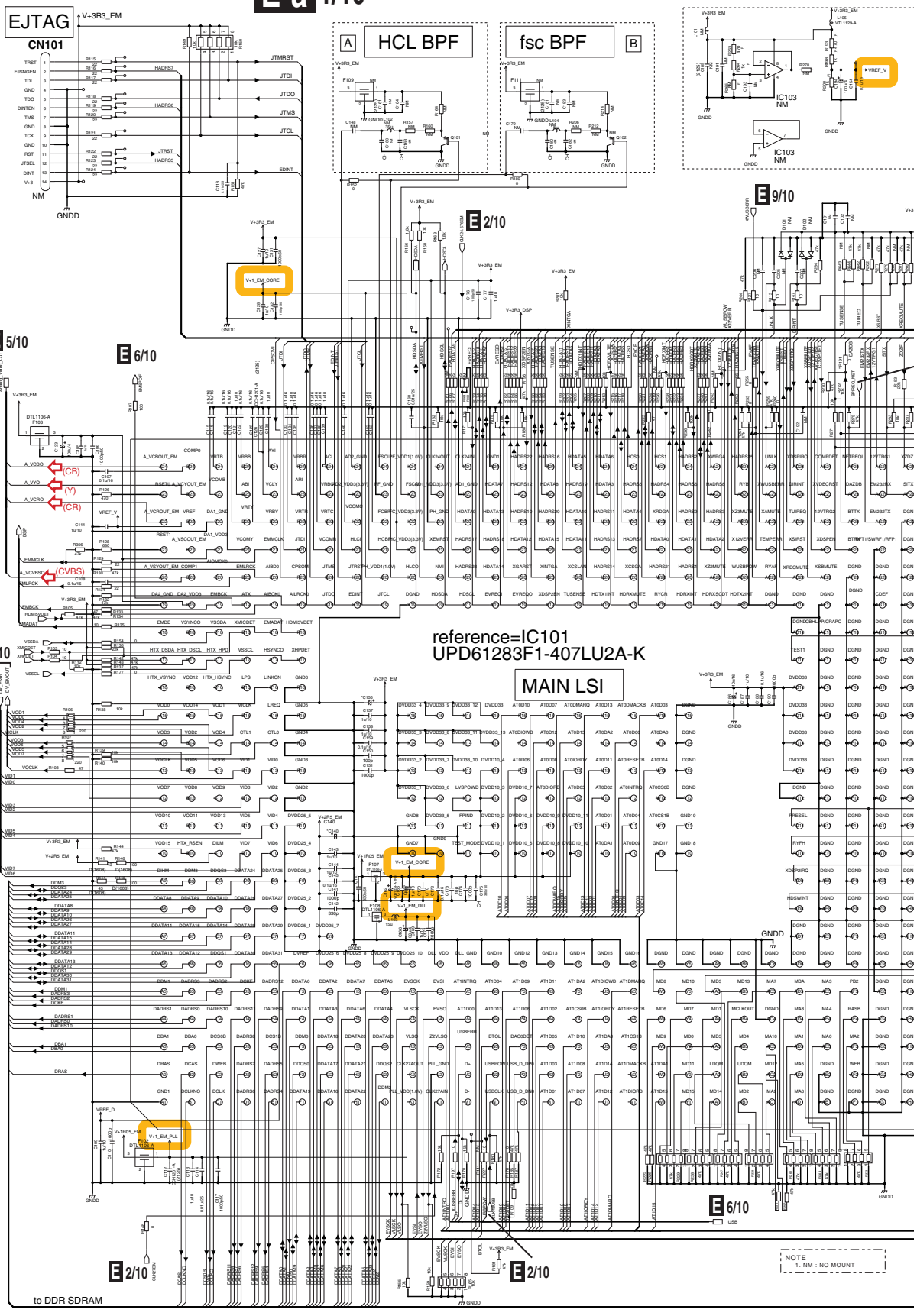

E 1/10 DIGITAL MAIN ASSY (1/10)

(VSX-53/VSX-1326-K : AWX9825)
(VSX-52/VSX-1126-K/VSX-1121-K : AWX9826)

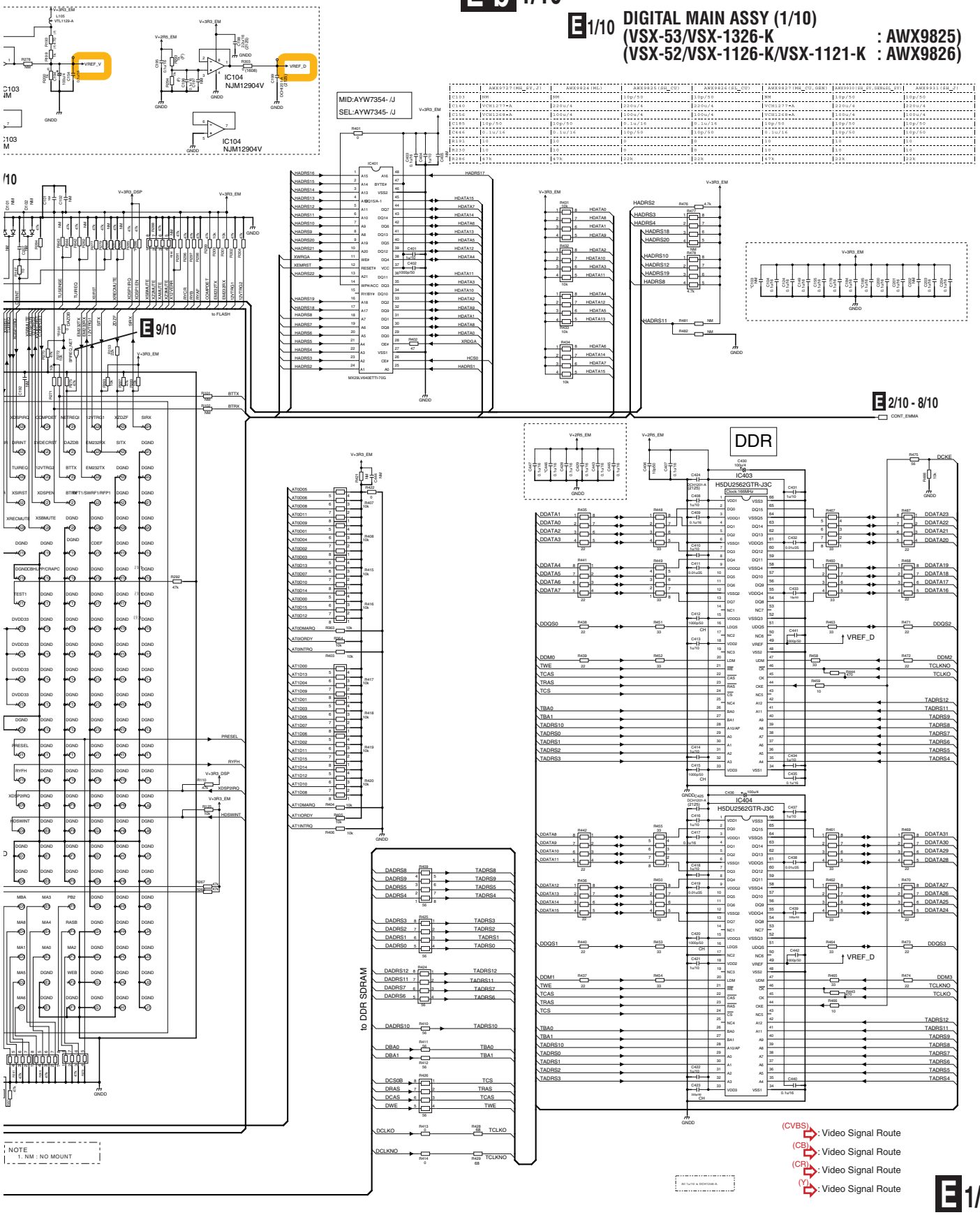

E 1/10 DIGITAL MAIN ASSY (1/10)
(VSX-53/VSX-1326-K : AWX9825)
(VSX-52/VSX-1126-K/VSX-1121-K: AWX9826)

VSX-53

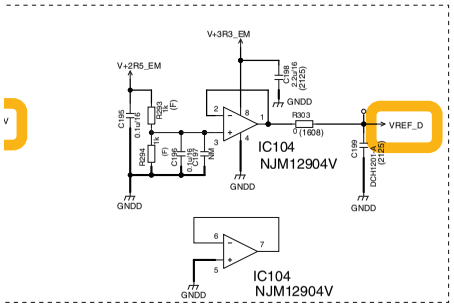

MID:AYW7354- /J
SEL:AYW7345- /J

	AWX9727(MH_SY,J)	AWX9824(ML)	AWX9825(SH_CU)	AWX9826(SL_CU)	AWX9827(MH_CU,GEN)	AWX9930(SH_SY,GEN&SL_SY)	AWX9931(SH_J)
C103	NM	NM	10p/50	10p/50	NM	10p/50	10p/50
C140	VCH1277-A	220u/4	220u/4	220u/4	VCH1277-A	220u/4	220u/4
C156	VCH1268-A	100u/4	100u/4	100u/4	VCH1268-A	100u/4	100u/4
C185	10p/50	10p/50	0.1u/16	0.1u/16	10p/50	10p/50	10p/50
C446	0.1u/16	0.1u/16	10p/50	10p/50	0.1u/16	10p/50	10p/50
R191	10	10	0	0	10	10	10
R230	10	10	0	0	10	10	10
R286	47k	47k	22k	22k	47k	22k	22k

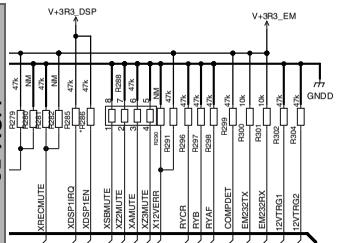

E 9/10

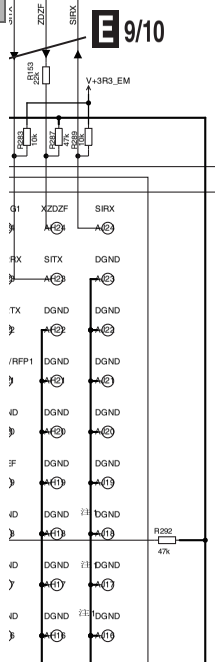

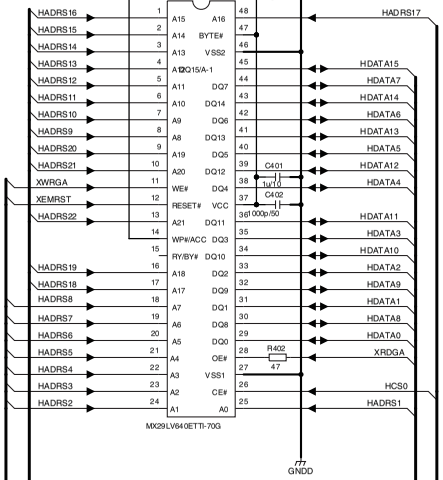

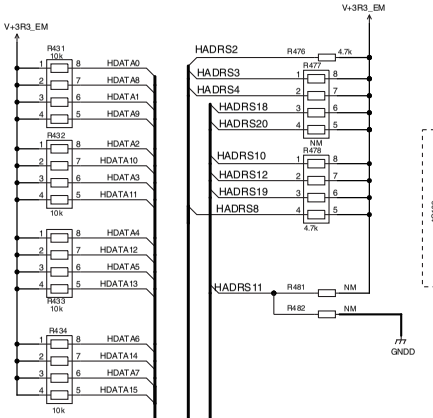

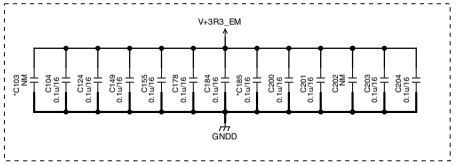

E 2/10 - 8/10
CONT_EMMA

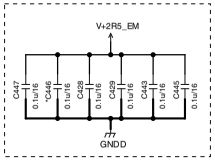

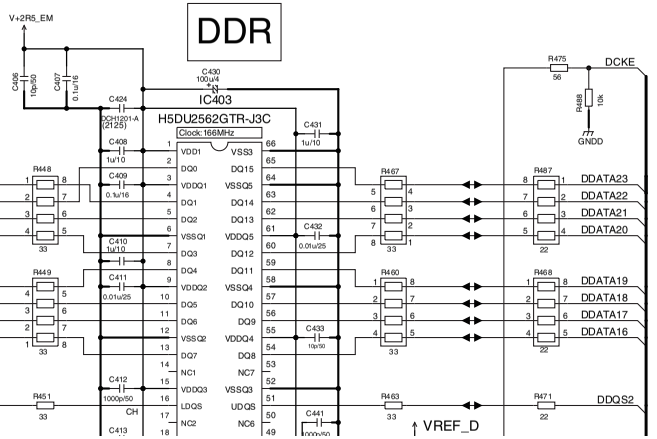

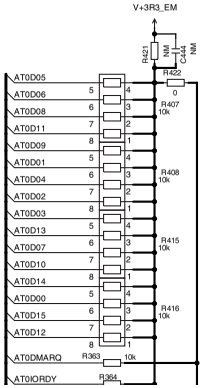

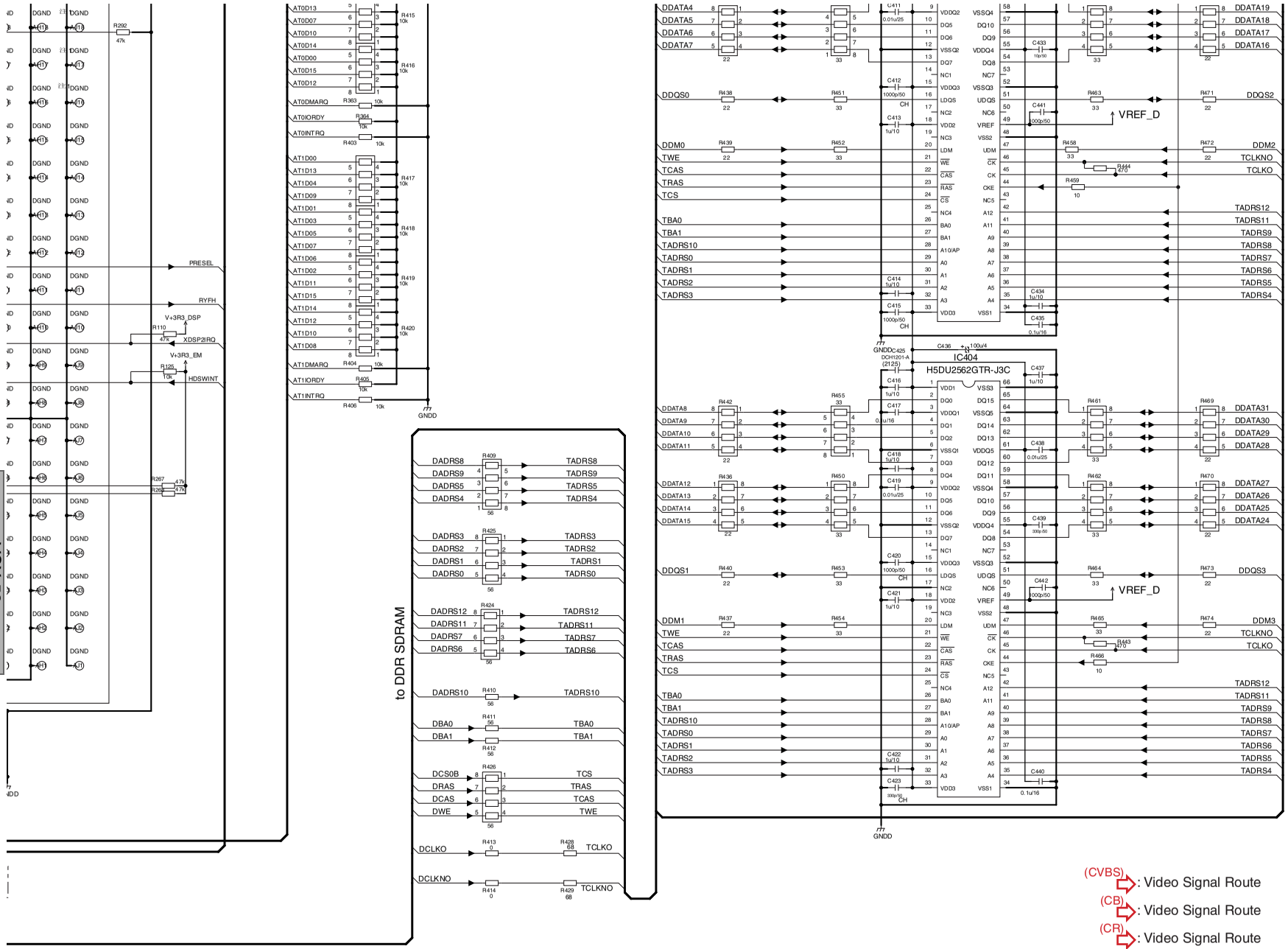
IC404
H5DU2562GTR-J3C
to DDR SDRAM
PRESEL
RYFH
XDSP2IRQ
HDSWINT
V+3R3_DSP
V+3R3_EM
VREF_D
GNDD
All 1u/10 is DCH1246-A.
(CVBS): Video Signal Route
(CB): Video Signal Route
(CR): Video Signal Route
(Y): Video Signal Route

A-a A-b

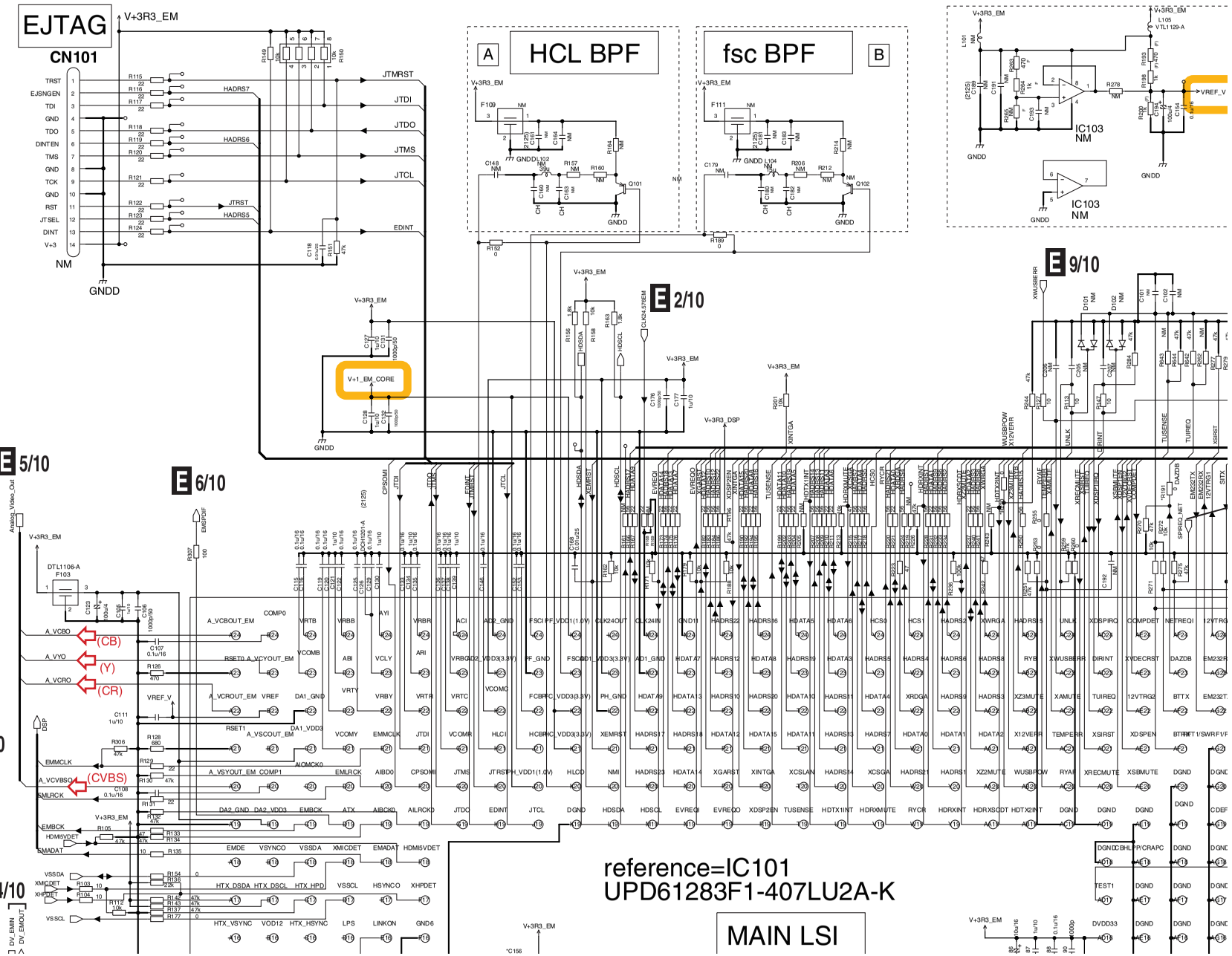
EJTAG
CN101
V+3R3_EM
TRST
EJSNGEN
TDI
GND
TDO
DINTEN
TMS
GND
TCK
GND
RST
JTSEL
DINT
V+3
NM
GNDD
HADRS7
HADRS6
HADRS5
JTMRST
JTDI
JTDO
JTMS
JTCL
JTRST
EDINT
A
HCL BPF
B
fsc BPF
IC103
NM
VREF_V
E 2/10
E 9/10
E 5/10
E 6/10
E 3/10,5/10,
6/10 - 8/10
E 4/10
(CB)
(Y)
(CR)
(CVBS)
reference=IC101
UPD61283F1-407LU2A-K
MAIN LSI

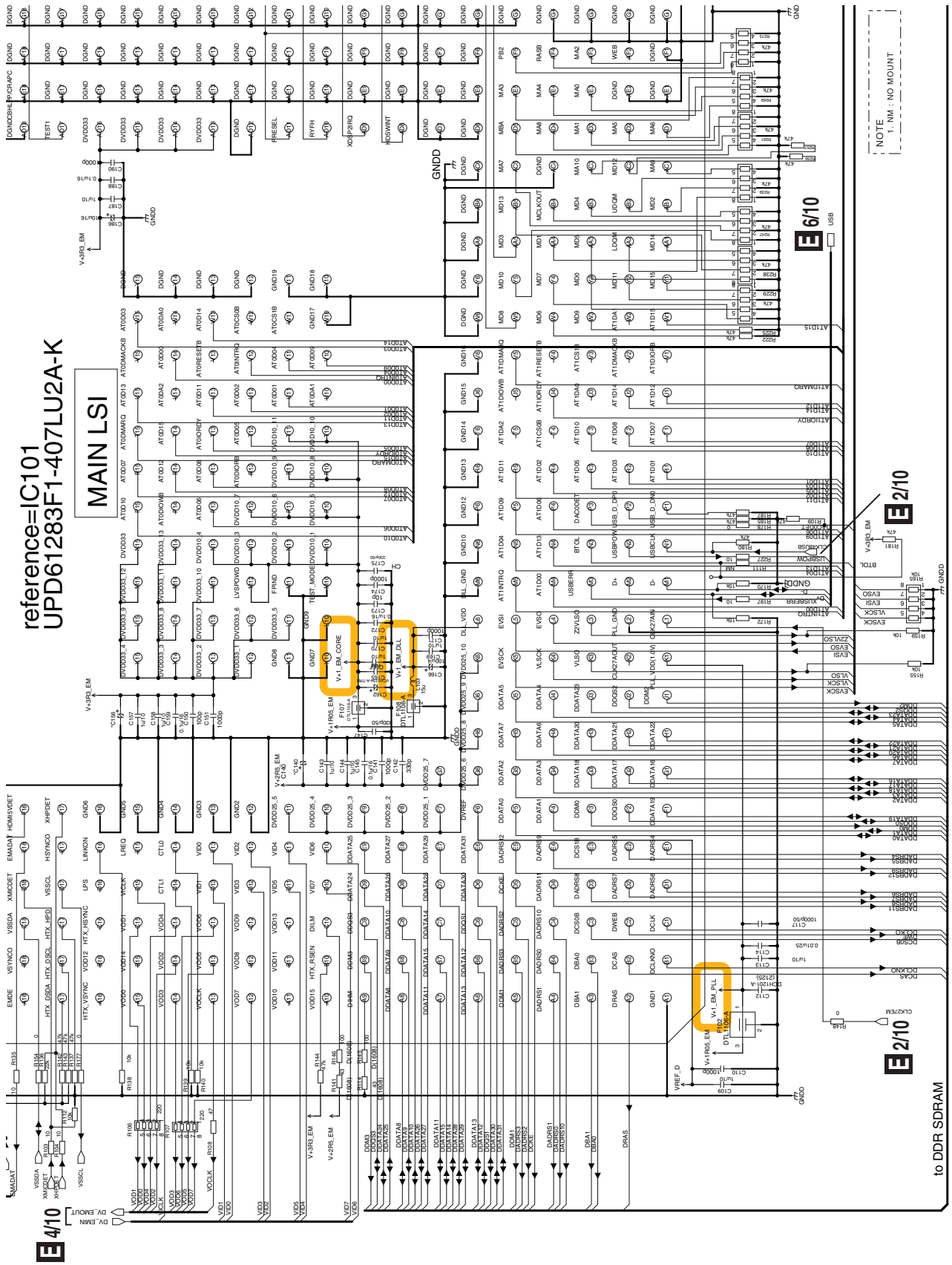
reference=IC101
UPD61283F1-407LU2A-K
MAIN LSI
NOTE
1. NM : NO MOUNT
E 6/10
E 2/10
E 2/10
E 4/10
to DDR SDRAM
A-b
A-a

10.9 DIGITAL MAIN ASSY(2/10)

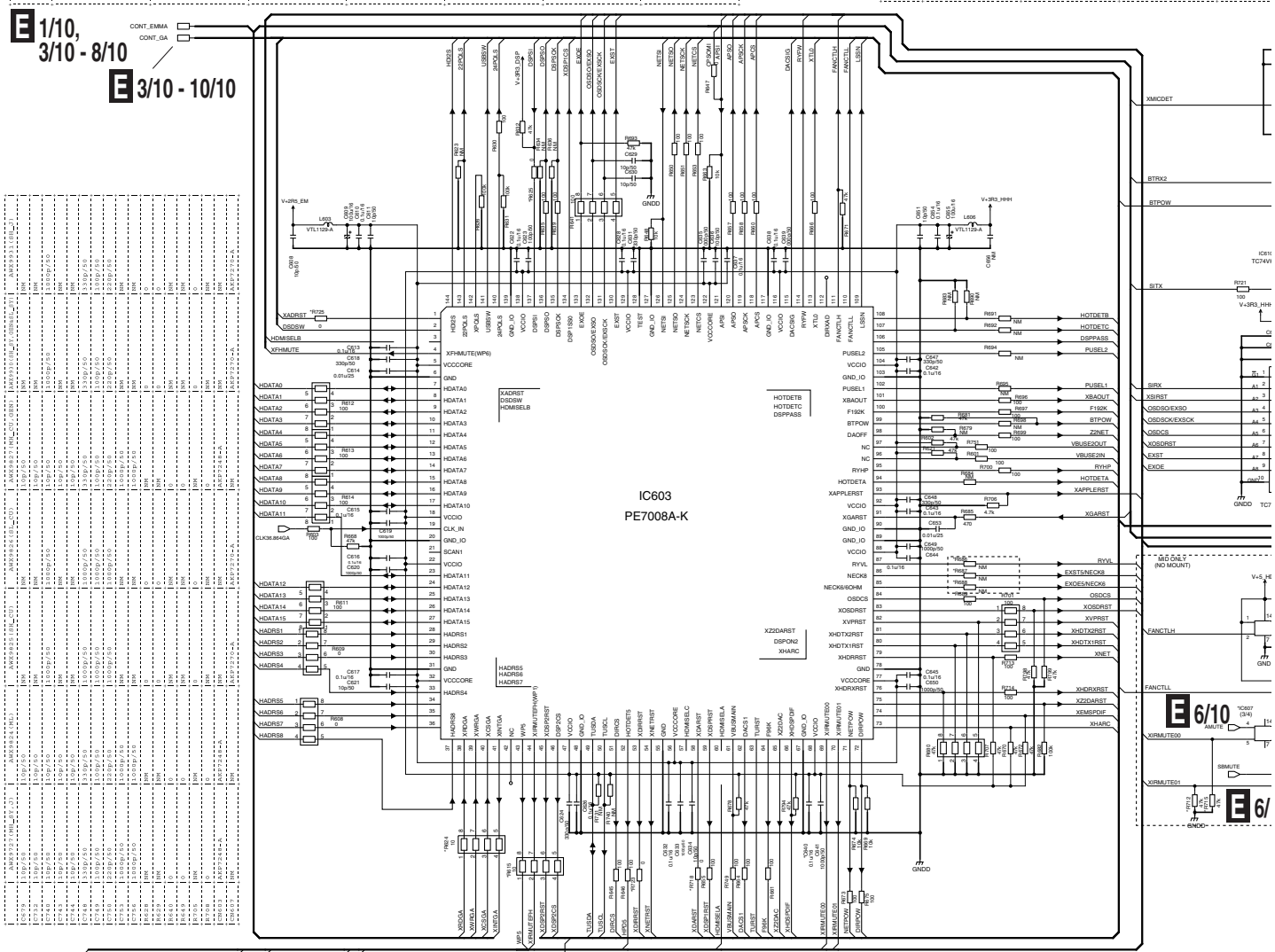

E 2/10 DIGITAL MAIN ASSY (2/10)
(VSX-53/VSX-1326-K : AWX9825)
(VSX-52/VSX-1126-K/VSX-1121-K: AWX9826)

AWX9825(SH_CU)	AWX9826(SI_CU)	AWX9827(MH_CU.GBN)	AWX9930(SH_SY.GBRAS1_SY)	AWX9931(SH_J)
NM	NM	0.1u/16	NM	NM
NM	NM	100p/50	NM	NM
NM	NM	0.1u/16	NM	NM
NM	NM	100	NM	NM
NM	NM	100	NM	NM
NM	NM	100	NM	NM
NM	NM	100	NM	NM
NM	NM	100	NM	NM
NM	NM	100	NM	NM
NM	NM	47k	NM	NM
NM	NM	47k	NM	NM
NM	NM	47k	NM	NM
NM	NM	47k	NM	NM
NM	NM	47k	NM	NM
NM	NM	100	NM	NM
NM	NM	100	NM	NM
NM	NM	100	NM	NM
NM	NM	100	NM	NM
10	10	0	10	10
NM	NM	TC74VHCT08AFKG1	NM	NM
NM	NM	TC74VHCT08AFKG1	NM	NM
NM	NM	VNE1948-A	NM	NM

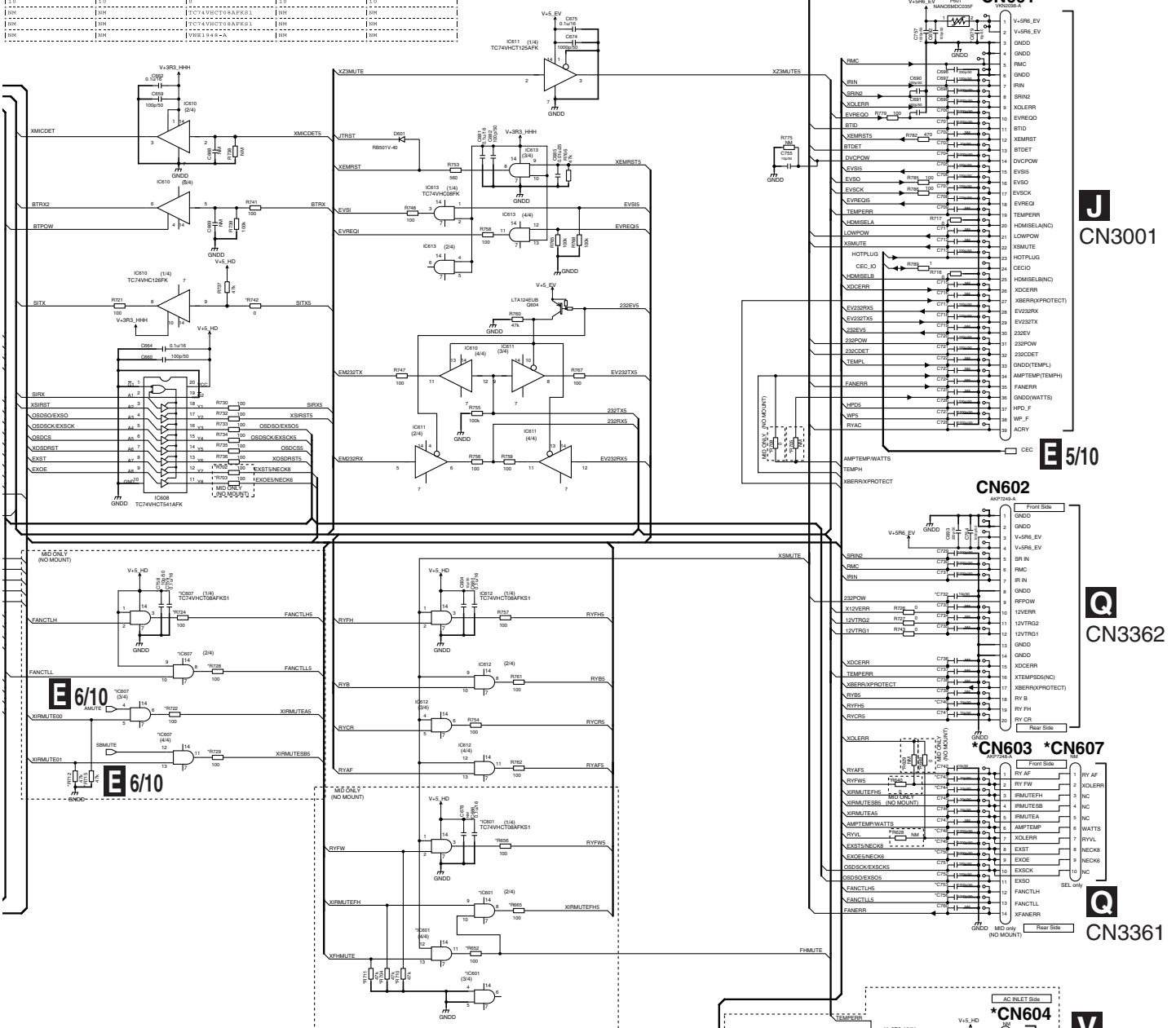

AWX9824(ML)	AWX9825(SH_CU)	AWX9826(SI_CU)	AWX9827(MH_CU.GBN)	AWX9930(SH_SY.GBRAS1_SY)	AWX9931(SH_J)
NM	0.1u/16	0.1u/16	NM	0.1u/16	0.1u/16
NM	0.1u/16	0.1u/16	NM	0.1u/16	0.1u/16
NM	0.1u/16	0.1u/16	NM	0.1u/16	0.1u/16
NM	47k	47k	NM	47k	47k
NM	5.6k	5.6k	NM	5.6k	5.6k
NM	47k	47k	NM	47k	47k
NM	47k	47k	NM	47k	47k
NM	5.6k	5.6k	NM	5.6k	5.6k
NM	2.7k	2.7k	NM	2.7k	2.7k
NM	RN2008A2E	RN2008A2E	NM	RN2008A2E	RN2008A2E
NM	RN2008A2E	RN2008A2E	NM	RN2008A2E	RN2008A2E
NM	RN2008A2E	RN2008A2E	NM	RN2008A2E	RN2008A2E
NM	RN4983	RN4983	NM	RN4983	RN4983
NM	RN4983	RN4983	NM	RN4983	RN4983
NM	RN4983	RN4983	NM	RN4983	RN4983
NM	TESTPOINT	TESTPOINT	NM	TESTPOINT	TESTPOINT
NM	TESTPOINT	TESTPOINT	NM	TESTPOINT	TESTPOINT
NM	TESTPOINT	TESTPOINT	NM	TESTPOINT	TESTPOINT
NM	TESTPOINT	TESTPOINT	NM	TESTPOINT	TESTPOINT

10.10 DIGITAL MAIN ASSY(3/10)

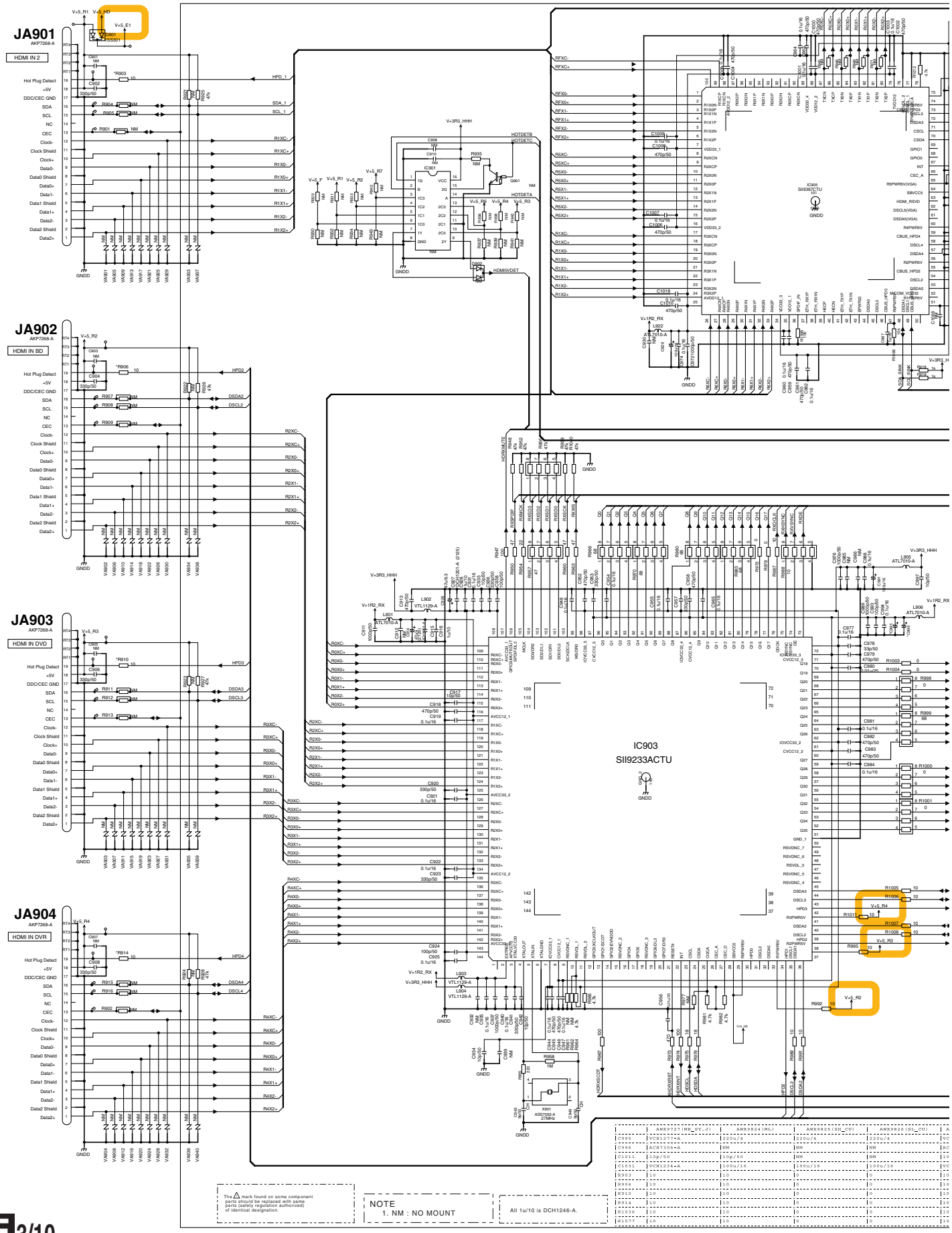

E 3/10 DIGITAL MAIN ASSY (3/10)
(VSX-53/VSX-1326-K : AWX9825)
(VSX-52/VSX-1126-K/VSX-1121-K: AWX9826)

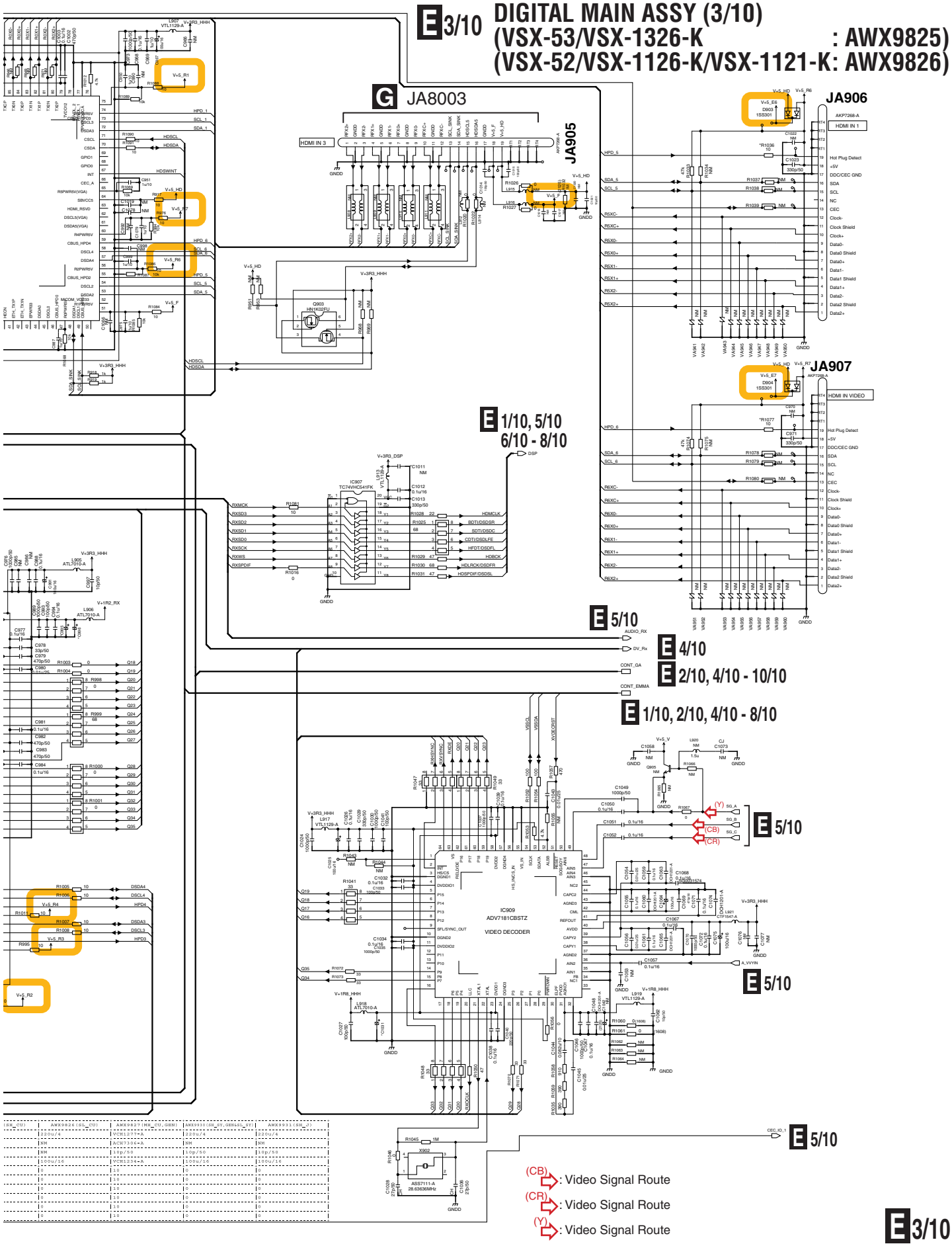

10.11 DIGITAL MAIN ASSY(4/10)

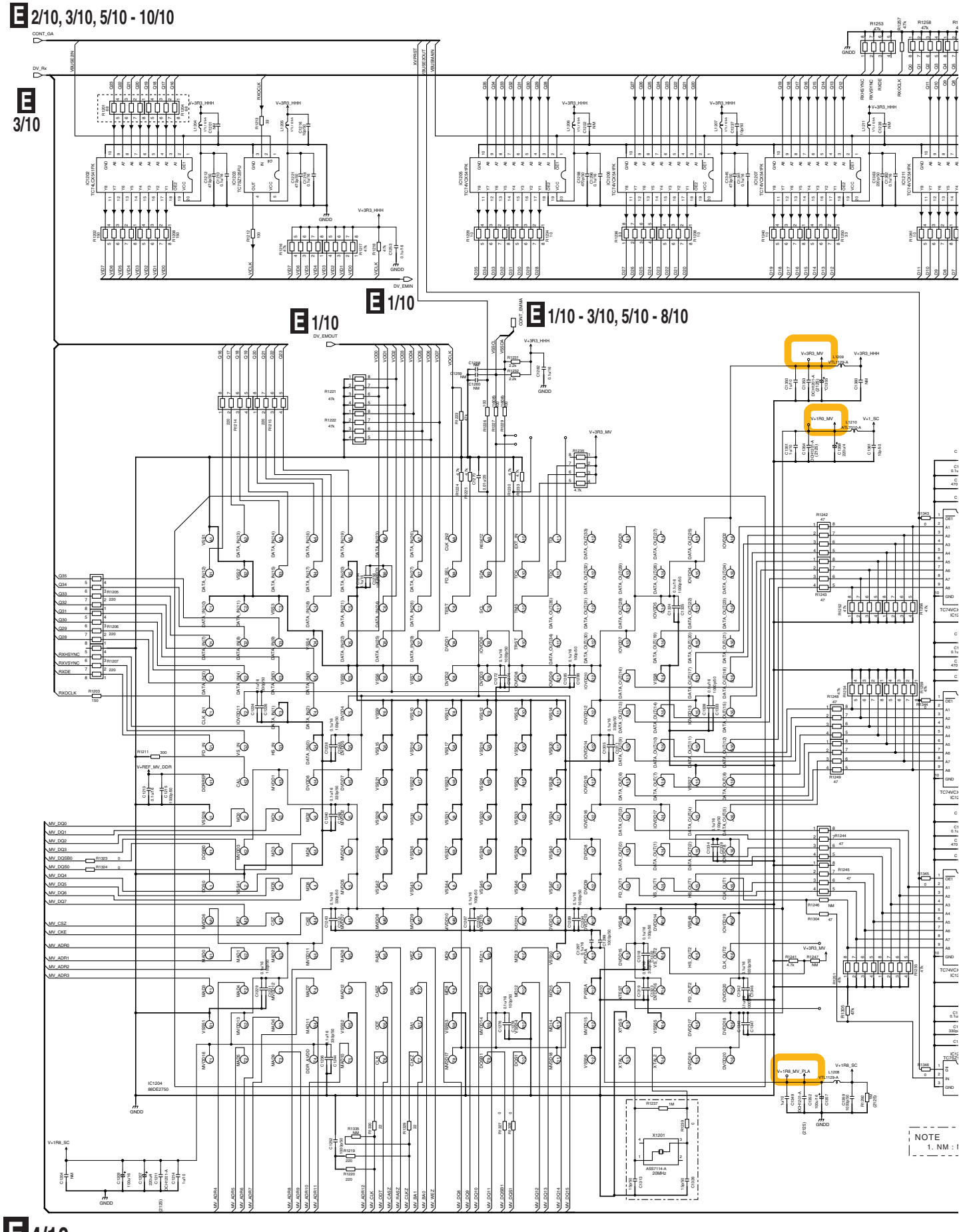

E 4/10 DIGITAL MAIN ASSY (4/10)
(VSX-53/VSX-1326-K : AWX9825)
(VSX-52/VSX-1126-K/VSX-1121-K: AWX9826)

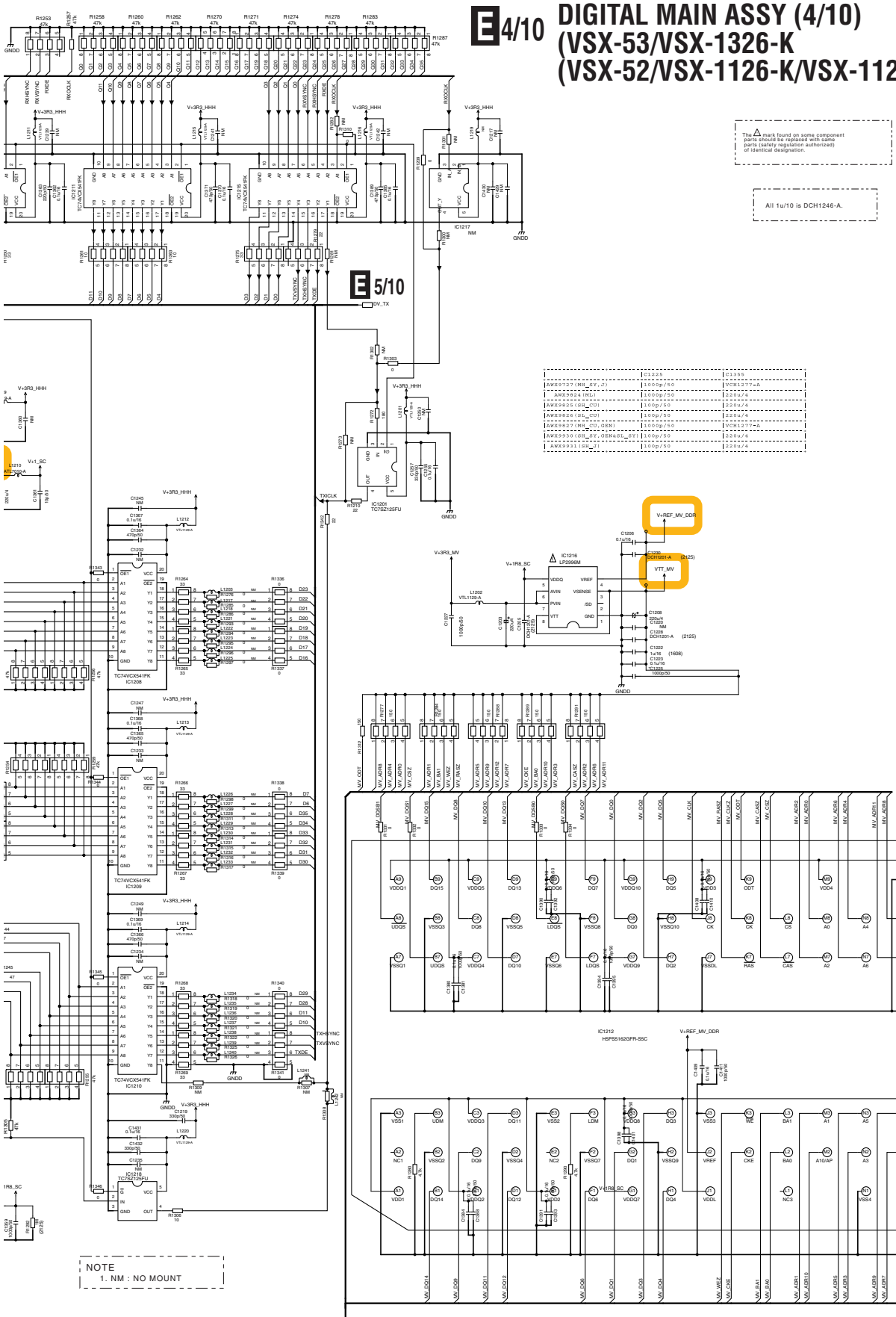

	C1205	C1355
AWX9727(MM_BY.U)	1000p/50	VCH1277-A
AWX9824(ML)	100p/50	220u/4
AWX9826(BN_CU)	100p/50	220u/4
AWX9826(SL_CU)	100p/50	220u/4
AWX9827(MM_CU.GEN)	1000p/50	VCH1277-A
AWX9930(BN_BY.GEN&SL_BY)	100p/50	220u/4
AWX9931(GR_CU)	100p/50	220u/4

10.12 DIGITAL MAIN ASSY(5/10)

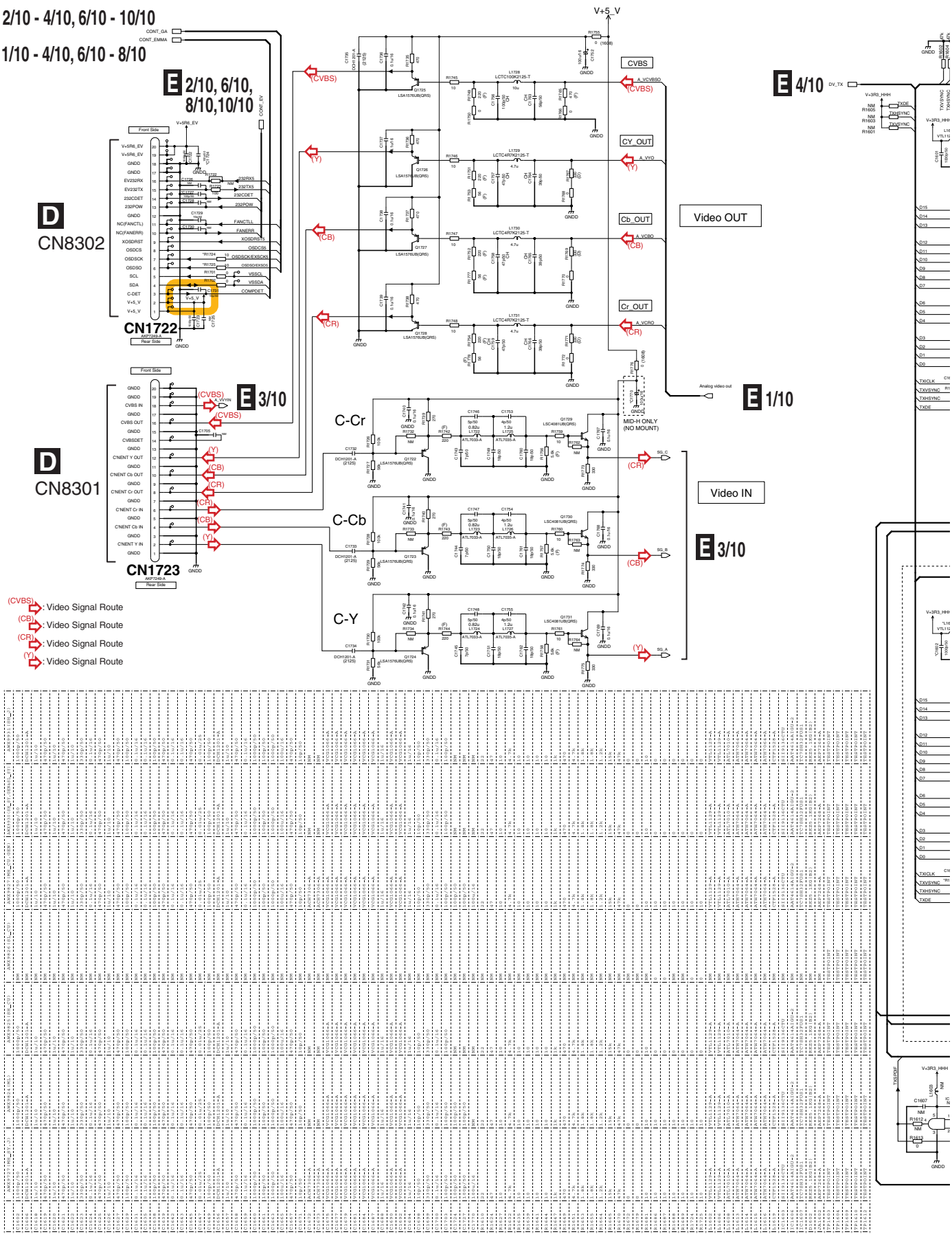

E 5/10 DIGITAL MAIN ASSY (5/10)
(VSX-53/VSX-1326-K : AWX9825)
(VSX-52/VSX-1126-K/VSX-1121-K: AWX9826)

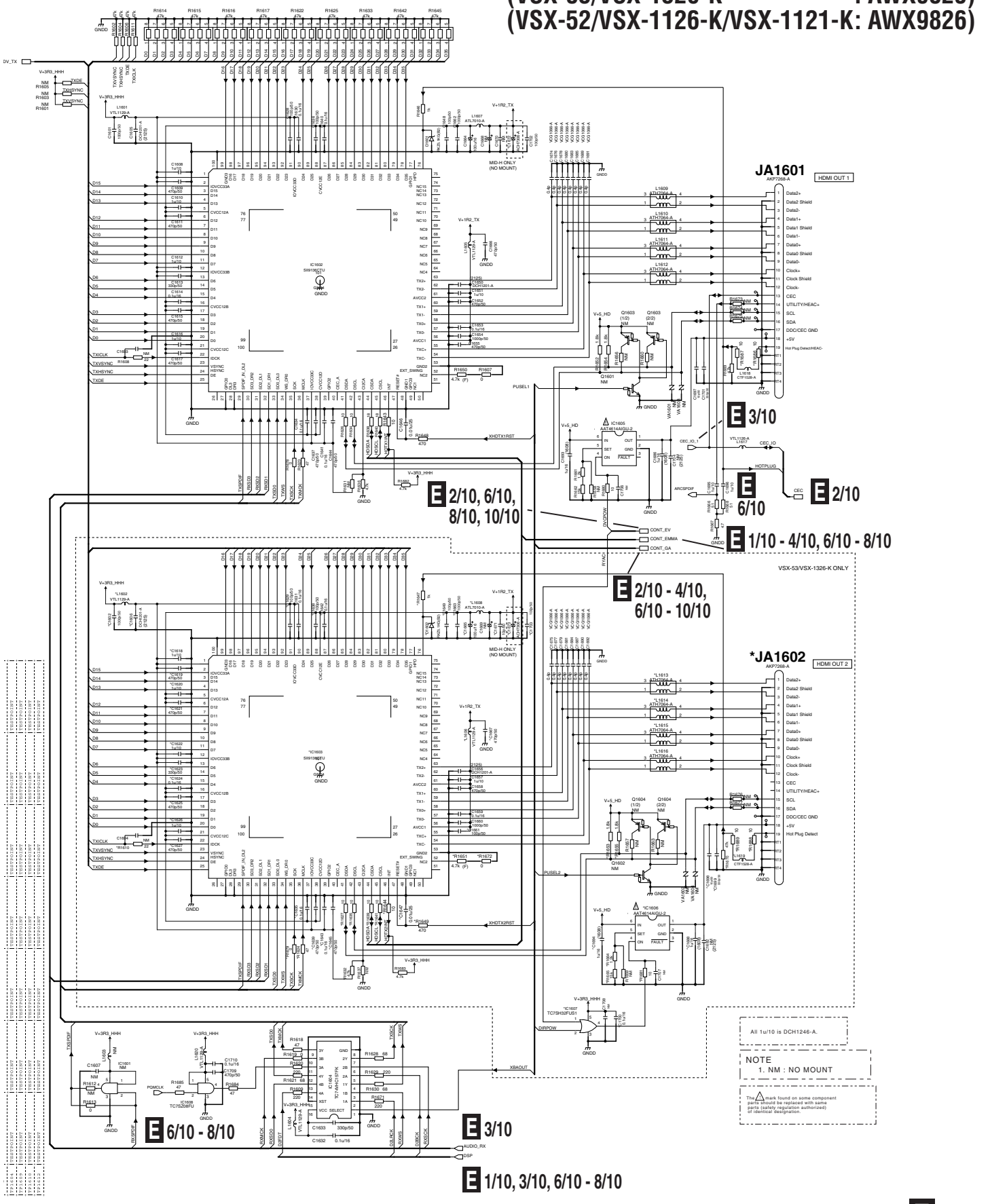

10.13 DIGITAL MAIN ASSY(6/10)

	AWX9727(MH_SY,J)	AWX9824(ML)	AWX9825(SH_CU)	AWX9826(SL_CU)	AWX9827(MH_CU,GEN)	AWX9930(SH_SY,GEN&SL_SY)	AWX9931(SH_J)
C1509	1000u/16	1000u/16	1000u/10	1000u/10	1000u/16	1000u/10	1000u/10
C1518	10p/50	10p/50	NM	NM	10p/50	NM	NM
C1533	100p/50	100p/50	NM	NM	100p/50	100p/50	100p/50
C1545	NM	NM	NM	NM	NM	NM	220p/50
C1546	NM	NM	NM	NM	NM	NM	220p/50
R1506	NM	NM	NM	NM	NM	NM	0
R1512	10	10	0	0	10	10	10
R1513	10	10	0	0	10	10	10
R1514	NM	NM	NM	NM	NM	NM	0
R1518	NM	NM	NM	NM	NM	NM	0
R1523	10	10	0	0	10	10	NM
R1545	10	10	0	0	10	10	NM
R1546	10	10	0	0	10	10	NM
Q1509	LTA124EUB	LTA124EUB	NM	NM	LTA124EUB	NM	NM

	AWX9727(MH_SY,J)	AWX9824(ML)	AWX9825(SH_CU)	AWX9826(SL_CU)	AWX9827(MH_CU,GEN)	AWX9930(SH_SY,GEN&SL_SY)	AWX9931(SH_J)
C1852	0.1u/16	0.1u/16	NM	NM	0.1u/16	NM	NM
C1853	330p/50	330p/50	NM	NM	330p/50	NM	NM
C1855	270p/50	270p/50	330p/50	330p/50	270p/50	270p/50	270p/50
R1880	NM	NM	0	0	NM	0	0
R1881	NM	NM	0	0	NM	0	0
R1897	100	100	NM	NM	100	NM	NM
R1898	100	100	NM	NM	100	NM	NM
R1899	150	150	NM	NM	150	NM	NM
R1900	0	0	NM	NM	0	NM	NM
R1901	100	100	NM	NM	100	NM	NM
R1902	150	150	NM	NM	150	NM	NM
R1905	8.2	10	10	10	10	8.2	10
R1912	470	470	NM	NM	470	NM	NM
R1913	150	150	NM	NM	150	NM	NM
R1914	1k	1k	NM	NM	1k	NM	NM
R1915	150	150	NM	NM	150	NM	NM
R1924	NM	NM	0	0	NM	0	0
R1925	NM	NM	0	0	NM	10	10
R1940	100	100	47	47	100	47	47
R1971	100k	100k	NM	NM	100k	NM	NM
L1814	VTL1129-A	VTL1129-A	NM	NM	VTL1129-A	NM	NM
IC1813	TC74VHC157FK	TC74VHC157FK	NM	NM	TC74VHC157FK	NM	NM

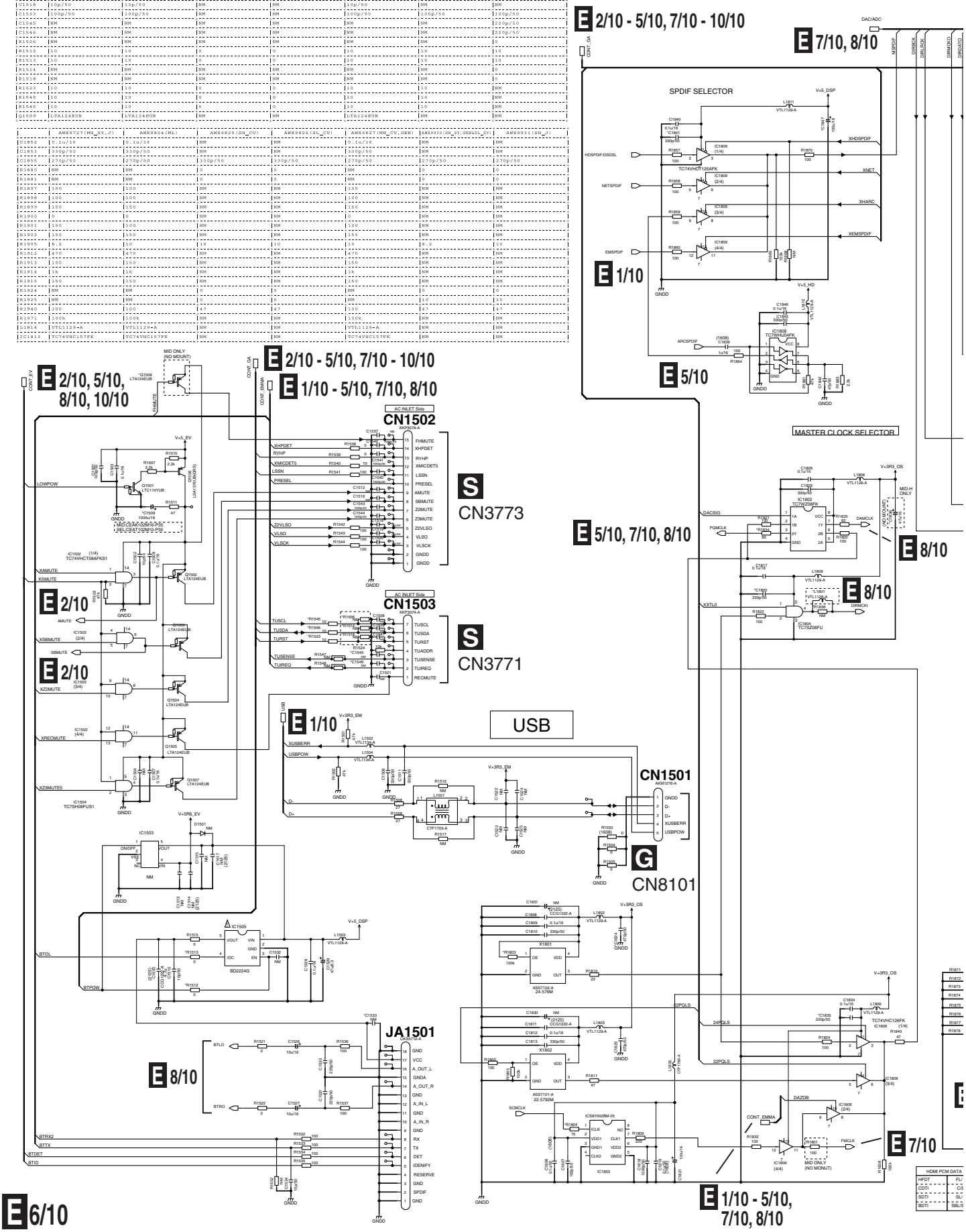

E 6/10 DIGITAL MAIN ASSY (6/10)
(VSX-53/VSX-1326-K : AWX9825)
(VSX-52/VSX-1126-K/VSX-1121-K: AWX9826)

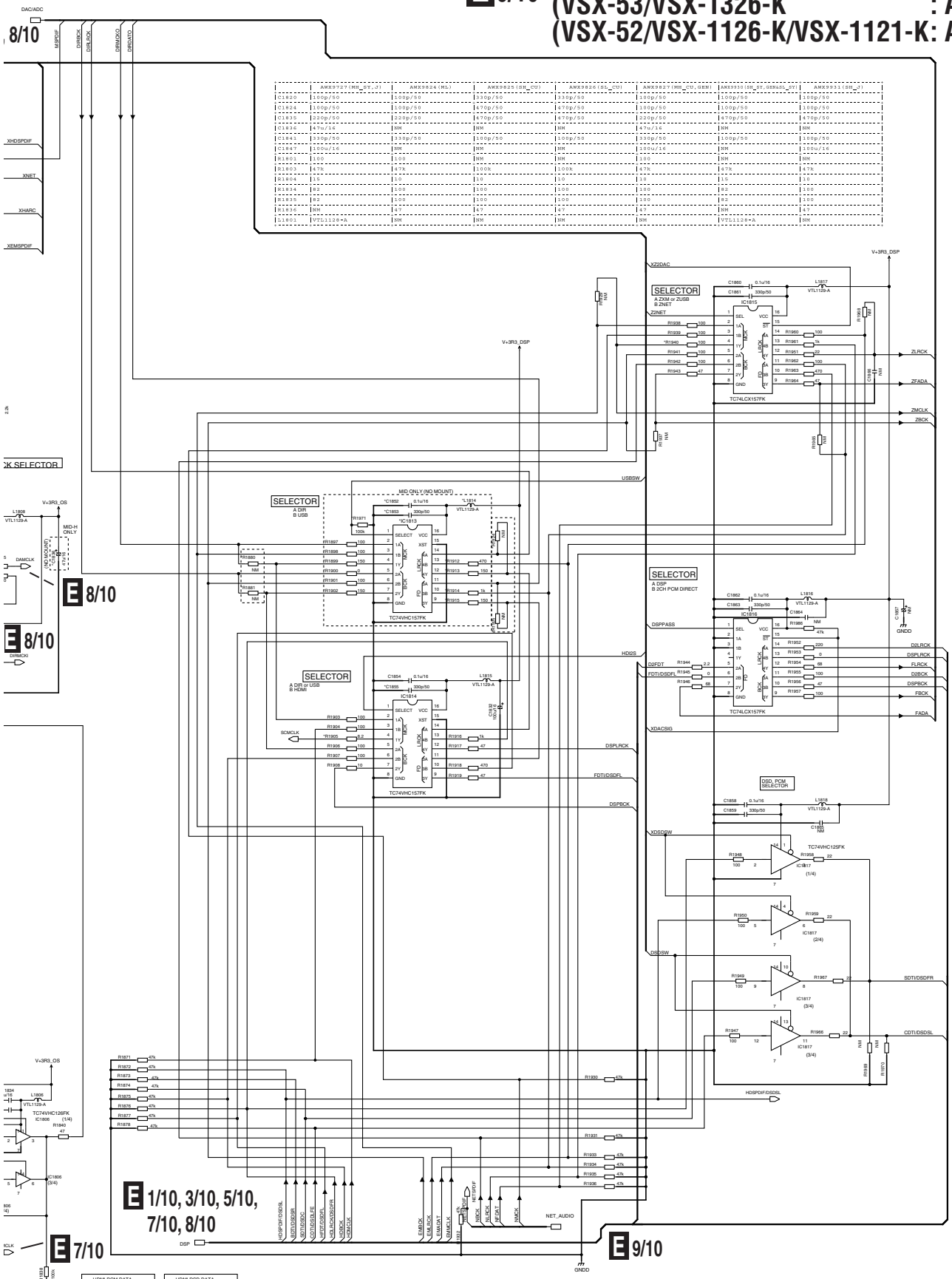

	AWX9727(NR_ST_J)	AWX9824(NR)	AWX9825(NR_CU)	AWX9826(NR)_CU	AWX9827(NR_CU_GEN)	AWX9930(NR_ST_GENAUS_CU)	AWX9931(NR_J)
C1820	100p/50	100p/50	330p/50	330p/50	100p/50	100p/50	100p/50
C1824	100p/50	100p/50	470p/50	470p/50	100p/50	100p/50	100p/50
C1835	220p/50	220p/50	470p/50	470p/50	220p/50	470p/50	470p/50
C1836	47u/16	NM	NM	NM	47u/16	NM	NM
C1841	330p/50	330p/50	100p/50	100p/50	330p/50	100p/50	100p/50
C1847	100u/16	NM	NM	NM	100u/16	NM	100u/16
R1801	100	100	NM	NM	100	NM	NM
R1803	47k	47k	100k	100k	47k	47k	47k
R1804	15	10	10	10	10	15	10
R1834	82	100	100	100	100	82	100
R1835	82	100	100	100	100	82	100
R1836	NM	47	47	47	47	NM	47
L1801	VTL1128-A	NM	NM	NM	NM	VTL1128-A	NM

NOTE
1. NM : NO MOUNT

The △ mark found on some component parts should be replaced with same parts (safety regulation authorized) of identical designation.

All 1u/10 is DCH1246-A.

10.14 DIGITAL MAIN ASSY(7/10)

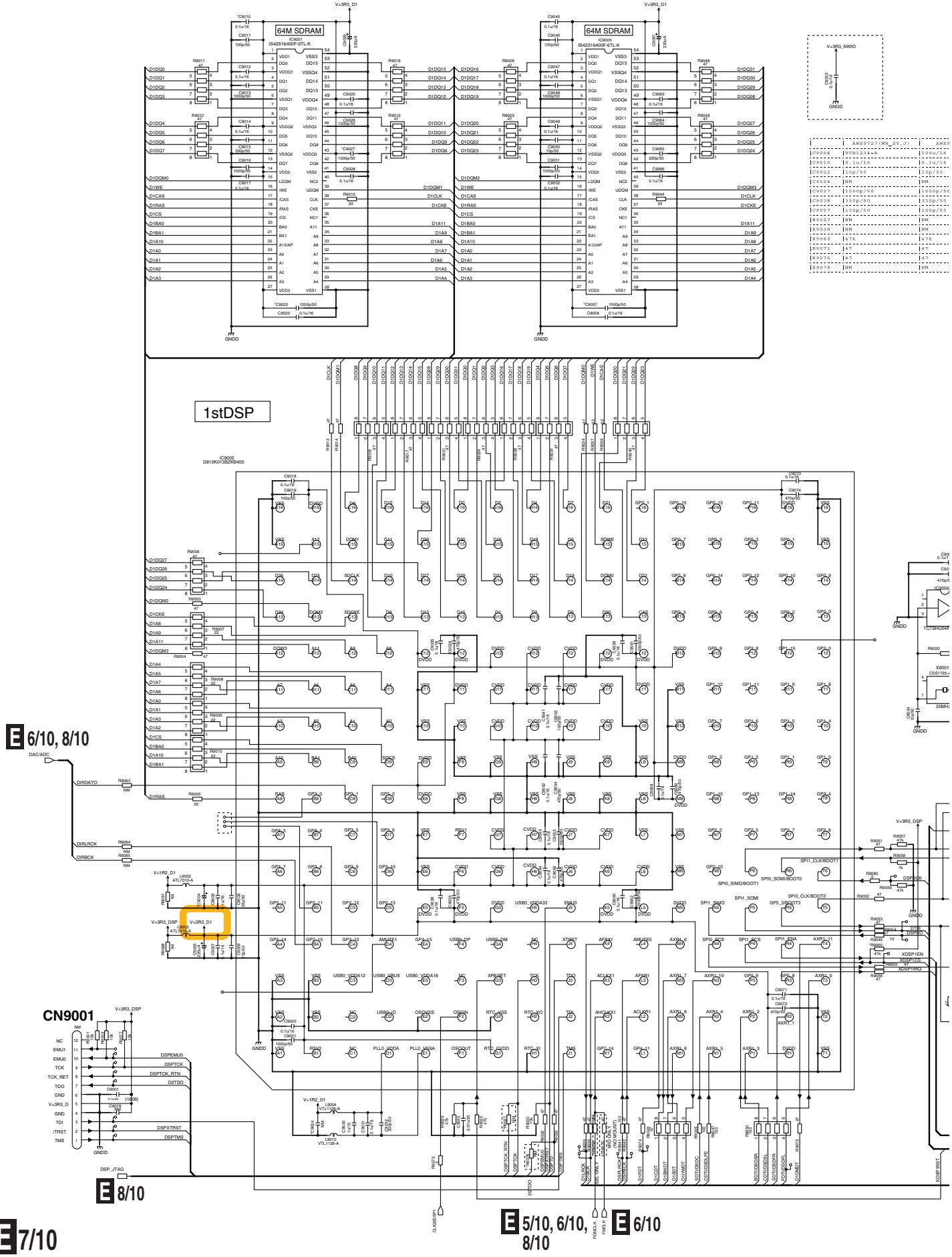

E 7/10 DIGITAL MAIN ASSY (7/10)
(VSX-53/VSX-1326-K : AWX9825)
(VSX-52/VSX-1126-K/VSX-1121-K: AWX9826)

	AWX9727(MH_SY,J)	AWX9824(NL)	AWX9825(SH_CU)	AWX9826(SL_CU)	AWX9827(MH_CU,GEN)	AWX9930(SH_SY,GENSL_SY)	AWX9931(SH_J)
C9702	VCN1234-A	100u/16	NM	NM	VCN1234-A	NM	NM
C9703	220u/4	220u/4	NM	NM	220u/4	NM	NM
C9704	0.1u/25	0.1u/16	NM	NM	0.1u/25	NM	NM
C9705	0.1u/25	0.1u/16	NM	NM	0.1u/25	NM	NM
C9706	1000p/50	1000p/50	NM	NM	1000p/50	NM	NM
C9707	10p/50	10p/50	NM	NM	10p/50	NM	NM
C9716	0.1u/25	0.1u/16	NM	NM	0.1u/25	NM	NM
C9717	100p/50	100p/50	NM	NM	100p/50	NM	NM
C9718	0.1u/25	0.1u/16	NM	NM	0.1u/25	NM	NM
C9719	1000p/50	1000p/50	NM	NM	1000p/50	NM	NM
C9728	1u/16	1u/16	NM	NM	1u/16	NM	NM
C9729	0.1u/25	0.1u/16	NM	NM	0.1u/25	NM	NM
C9730	330p/50	330p/50	NM	NM	330p/50	NM	NM
C9731	0.1u/25	0.1u/16	NM	NM	0.1u/25	NM	NM
C9732	0.1u/25	0.1u/16	NM	NM	0.1u/25	NM	NM
C9733	470p/50	470p/50	NM	NM	470p/50	NM	NM
C9734	470p/50	470p/50	NM	NM	470p/50	NM	NM
C9735	0.01u/25	0.01u/25	NM	NM	0.01u/25	NM	NM
C9736	0.1u/25	0.1u/16	NM	NM	0.1u/25	NM	NM
C9737	0.1u/25	0.1u/16	NM	NM	0.1u/25	NM	NM
C9738	0.1u/25	0.1u/16	NM	NM	0.1u/25	NM	NM
C9739	0.1u/25	0.1u/16	NM	NM	0.1u/25	NM	NM
C9740	100p/50	100p/50	NM	NM	100p/50	NM	NM
C9741	470p/50	470p/50	NM	NM	470p/50	NM	NM
C9742	220p/50	220p/50	NM	NM	220p/50	NM	NM
C9743	470p/50	470p/50	NM	NM	470p/50	NM	NM
C9744	0.1u/25	0.1u/16	NM	NM	0.1u/25	NM	NM
C9745	0.1u/25	0.1u/16	NM	NM	0.1u/25	NM	NM
C9746	100p/50	100p/50	NM	NM	100p/50	NM	NM
C9747	1000p/50	1000p/50	NM	NM	1000p/50	NM	NM
C9748	0.1u/25	0.1u/16	NM	NM	0.1u/25	NM	NM
C9749	470p/50	470p/50	NM	NM	470p/50	NM	NM
C9750	0.1u/25	0.1u/16	NM	NM	0.1u/25	NM	NM
C9751	470p/50	470p/50	NM	NM	470p/50	NM	NM
C9752	0.1u/25	0.1u/16	NM	NM	0.1u/25	NM	NM
C9753	470p/50	470p/50	NM	NM	470p/50	NM	NM
C9759	0.1u/16	0.1u/16	NM	NM	0.1u/16	NM	NM
C9760	470p/50	470p/50	NM	NM	470p/50	NM	NM
R9701	47	47	NM	NM	47	NM	NM
R9702	0	0	NM	NM	0	NM	NM
R9703	NM	NM	0	0	NM	0	0
R9704	NM	NM	0	0	NM	0	0
R9705	NM	NM	0	0	NM	0	0
R9706	NM	NM	0	0	NM	0	0
R9707	NM	NM	0	0	NM	0	0
R9708	NM	NM	0	0	NM	0	0
R9709	NM	NM	0	0	NM	0	0
R9714	22	22	NM	NM	22	NM	NM
R9715	22	22	NM	NM	22	NM	NM
R9716	22	22	NM	NM	22	NM	NM
R9717	22	22	NM	NM	22	NM	NM
R9718	22	22	NM	NM	22	NM	NM
R9721	0	0	NM	NM	0	NM	NM
R9722	47	47	NM	NM	47	NM	NM
R9724	47	47	NM	NM	47	NM	NM
R9725	47	47	NM	NM	47	NM	NM
R9728	47k	47k	NM	NM	47k	NM	NM
R9729	47	47	NM	NM	47	NM	NM
R9730	470	470	NM	NM	470	NM	NM
R9731	10	10	NM	NM	10	NM	NM
R9733	47	47	NM	NM	47	NM	NM
R9734	47	47	NM	NM	47	NM	NM
R9735	47	47	NM	NM	47	NM	NM
R9736	47	47	NM	NM	47	NM	NM
R9737	47	47	NM	NM	47	NM	NM
R9738	47	47	NM	NM	47	NM	NM
R9739	22	22	NM	NM	22	NM	NM
R9740	22	22	NM	NM	22	NM	NM
R9741	22	22	NM	NM	22	NM	NM
R9742	100	100	NM	NM	100	NM	NM
R9743	47	47	NM	NM	47	NM	NM
R9744	47	47	NM	NM	47	NM	NM
R9746	100	100	NM	NM	100	NM	NM
R9747	100	100	NM	NM	100	NM	NM
R9748	100	100	NM	NM	100	NM	NM
R9764	1M	1M	NM	NM	1M	NM	NM
R9766	NM	NM	NM	NM	NM	0	0
R9767	NM	NM	NM	NM	NM	0	0
R9768	NM	NM	NM	NM	NM	0	0
R9770	NM	NM	NM	NM	NM	0	0
L9701	ATL7010-A	ATL7010-A	NM	NM	ATL7010-A	NM	NM
L9702	ATL7010-A	ATL7010-A	NM	NM	ATL7010-A	NM	NM
L9703	VTL1128-A	VTL1128-A	NM	NM	VTL1128-A	NM	NM
L9705	VTL1128-A	VTL1128-A	NM	NM	VTL1128-A	NM	NM
IC9702	D610K013BZKB400	D610K013BZKB400	NM	NM	D610K013BZKB400	NM	NM

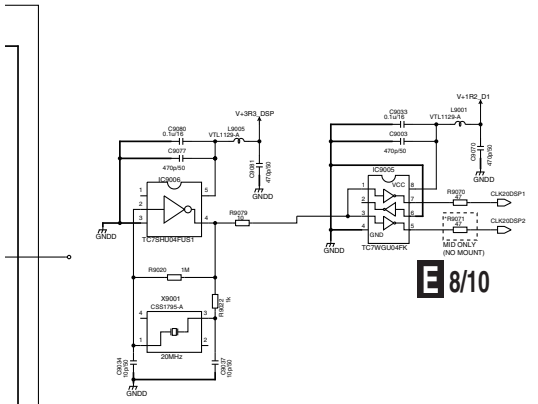

E 8/10

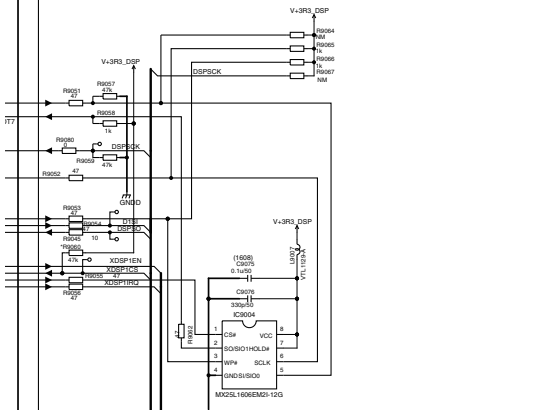

E 1/10 - 6/10, 8/10

CONT_EMMA

CONT_GA

E 2/10 - 6/10, 8/10 - 10/10

XDSP RST

DSP

E 1/10, 3/10, 5/10, 6/10, 8/10

NOTE
1. NM : NO MOUNT

E 7/10

10.15 DIGITAL MAIN ASSY(8/10)

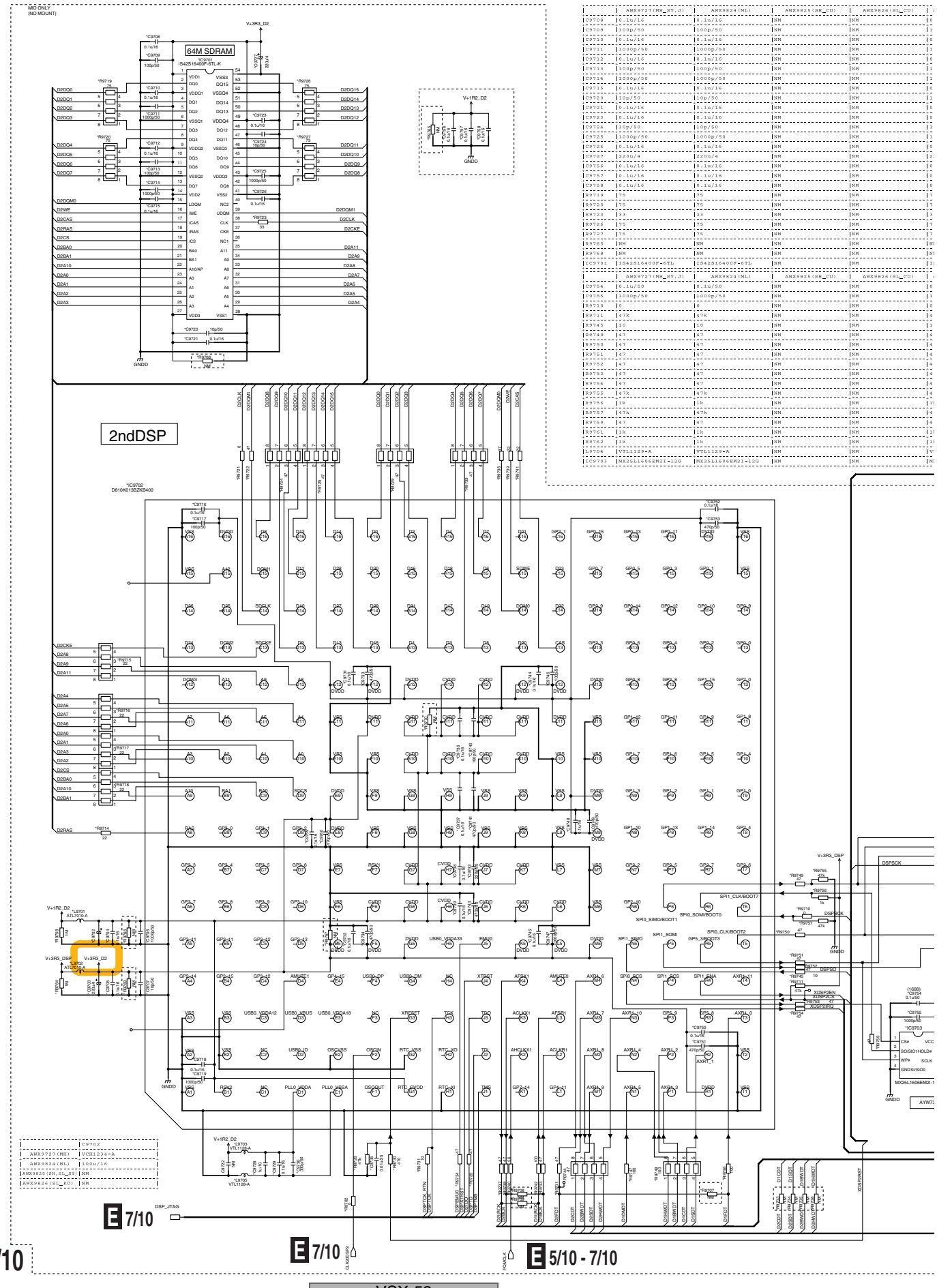

	AMX9727(MH_GY_J)	AMX9824(ML)	AMX9825(SN_CU)	AMX9826(ST_CU)
C9708	0.1u/16	0.1u/16	NM	
C9709	100p/50	100p/50	NM	
C9710	0.1u/16	0.1u/16	NM	
C9711	1000p/50	1000p/50	NM	
C9712	0.1u/16	0.1u/16	NM	
C9713	100p/50	100p/50	NM	
C9714	1000p/50	1000p/50	NM	
C9715	0.1u/16	0.1u/16	NM	
C9720	10p/50	10p/50	NM	
C9721	0.1u/16	0.1u/16	NM	
C9723	0.1u/16	0.1u/16	NM	
C9724	10p/50	10p/50	NM	
C9725	1000p/50	1000p/50	NM	
C9726	0.1u/16	0.1u/16	NM	
C9727	220u/4	220u/4	NM	
C9756	0.1u/16	0.1u/16	NM	
C9757	0.1u/16	0.1u/16	NM	
C9758	0.1u/16	0.1u/16	NM	
R9719	75	75	NM	
R9720	75	75	NM	
R9723	33	33	NM	
R9726	75	75	NM	
R9727	75	75	NM	
R9765	NM	NM	NM	
R9768	NM	NM	NM	
IC9701	IS42S16400F-6TL	IS42S16400F-6TL	NM	

	AMX9727(MH_GY_J)	AMX9824(ML)	AMX9825(SN_CU)	AMX9826(ST_CU)
C9754	0.1u/50	0.1u/50	NM	
C9755	1000p/50	1000p/50	NM	
R9710	0	0	NM	
R9711	47k	47k	NM	
R9745	10	10	NM	
R9749	47	47	NM	
R9750	47	47	NM	
R9751	47	47	NM	
R9752	47	47	NM	
R9753	47	47	NM	
R9754	47	47	NM	
R9755	47k	47k	NM	
R9756	1k	1k	NM	
R9757	47k	47k	NM	
R9758	47	47	NM	
R9761	1k	1k	NM	
R9762	1k	1k	NM	
L9704	VTL1128-A	VTL1128-A	NM	
IC9703	MX25L1606EM2I-12G	MX25L1606EM2I-12G	NM	

	C9702
AMX9727(MH)	VCH1234-A
AMX9824(ML)	100u/16
AMX9825(SN_CU, ST_KU)	NM
AMX9826(ST_KU)	NM

E 8/10 DIGITAL MAIN ASSY (8/10)
(VSX-53/VSX-1326-K : AWX9825)
(VSX-52/VSX-1126-K/VSX-1121-K: AWX9826)

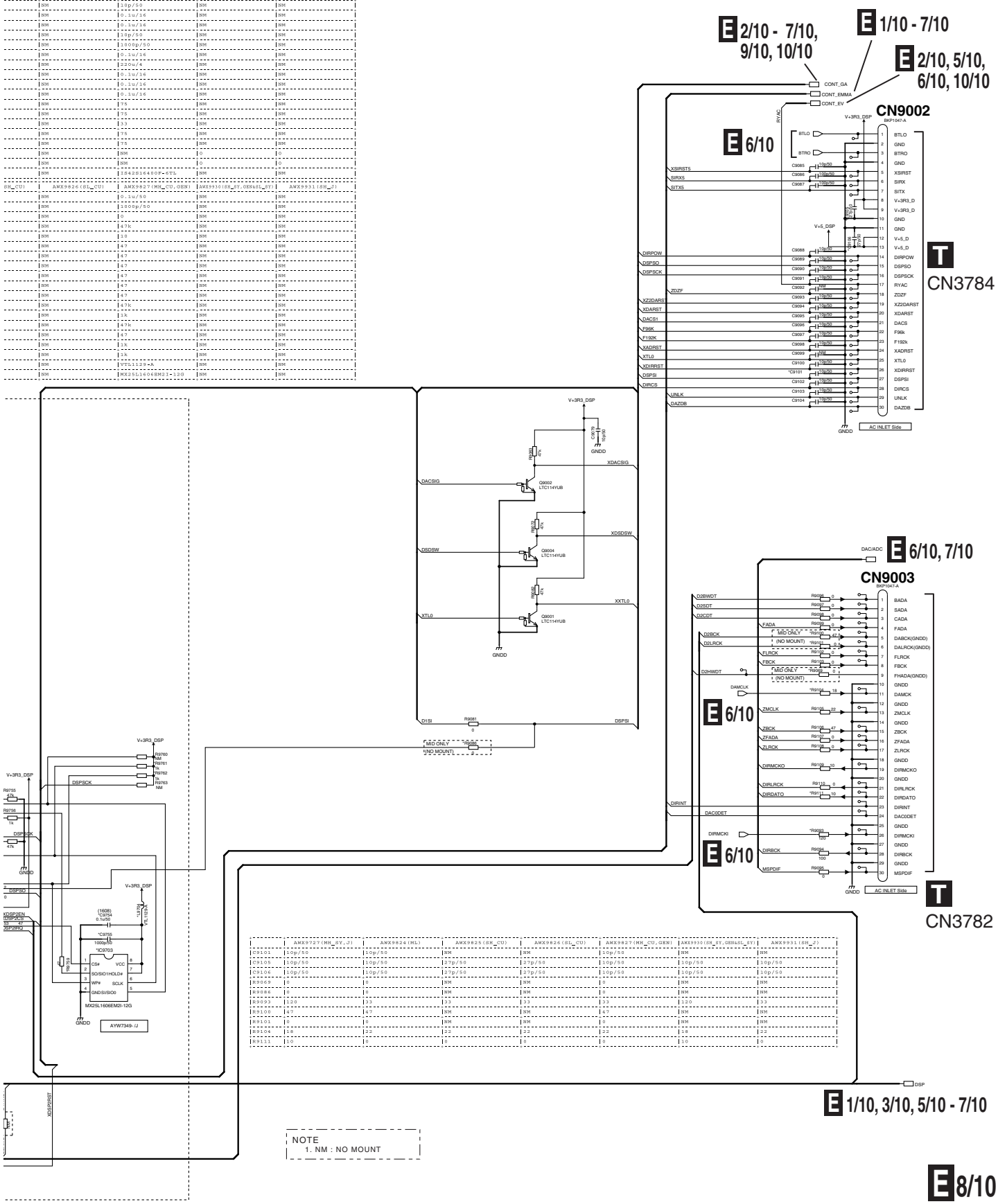

SH_CU)	AWX9826(SL_CU)	AWX9827(MH_CU,GEN)	AWX9930(SH_SY,GEN&SL_SY)	AWX9931(SH_J)
	NM	0.1u/16	NM	NM
	NM	100p/50	NM	NM
	NM	0.1u/16	NM	NM
	NM	1000p/50	NM	NM
	NM	0.1u/16	NM	NM
	NM	100p/50	NM	NM
	NM	1000p/50	NM	NM
	NM	0.1u/16	NM	NM
	NM	10p/50	NM	NM
	NM	0.1u/16	NM	NM
	NM	0.1u/16	NM	NM
	NM	10p/50	NM	NM
	NM	1000p/50	NM	NM
	NM	0.1u/16	NM	NM
	NM	220u/4	NM	NM
	NM	0.1u/16	NM	NM
	NM	0.1u/16	NM	NM
	NM	0.1u/16	NM	NM
	NM	75	NM	NM
	NM	75	NM	NM
	NM	33	NM	NM
	NM	75	NM	NM
	NM	75	NM	NM
	NM	NM	0	0
	NM	NM	0	0
	NM	1S42S16480F-6TL	NM	NM

SH_CU)	AWX9826(SL_CU)	AWX9827(MH_CU,GEN)	AWX9930(SH_SY,GEN&SL_SY)	AWX9931(SH_J)
	NM	0.1u/50	NM	NM
	NM	1000p/50	NM	NM
	NM	0	NM	NM
	NM	47k	NM	NM
	NM	10	NM	NM
	NM	47	NM	NM
	NM	47	NM	NM
	NM	47	NM	NM
	NM	47	NM	NM
	NM	47	NM	NM
	NM	47	NM	NM
	NM	47k	NM	NM
	NM	1k	NM	NM
	NM	47k	NM	NM
	NM	47	NM	NM
	NM	1k	NM	NM
	NM	1k	NM	NM
	NM	VTL1129-A	NM	NM
	NM	MX25L1606EM2I-12G	NM	NM

	AWX9727(MH_SY,J)	AWX9824(ML)	AWX9825(SH_CU)	AWX9826(SL_CU)	AWX9827(MH_CU,GEN)	AWX9930(SH_SY,GEN&SL_SY)	AWX9931(SH_J)
C9101	10p/50	10p/50	NM	NM	10p/50	NM	NM
C9105	10p/50	10p/50	27p/50	27p/50	10p/50	10p/50	10p/50
C9106	10p/50	10p/50	27p/50	27p/50	10p/50	10p/50	10p/50
R9069	0	0	NM	NM	0	NM	NM
R9086	0	0	NM	NM	0	NM	NM
R9093	120	33	33	33	33	120	33
R9100	47	47	NM	NM	47	NM	NM
R9101	0	0	NM	NM	0	NM	NM
R9104	18	22	22	22	22	18	22
R9111	10	0	0	0	0	10	0

NOTE
1. NM : NO MOUNT

10.16 DIGITAL MAIN ASSY(9/10)

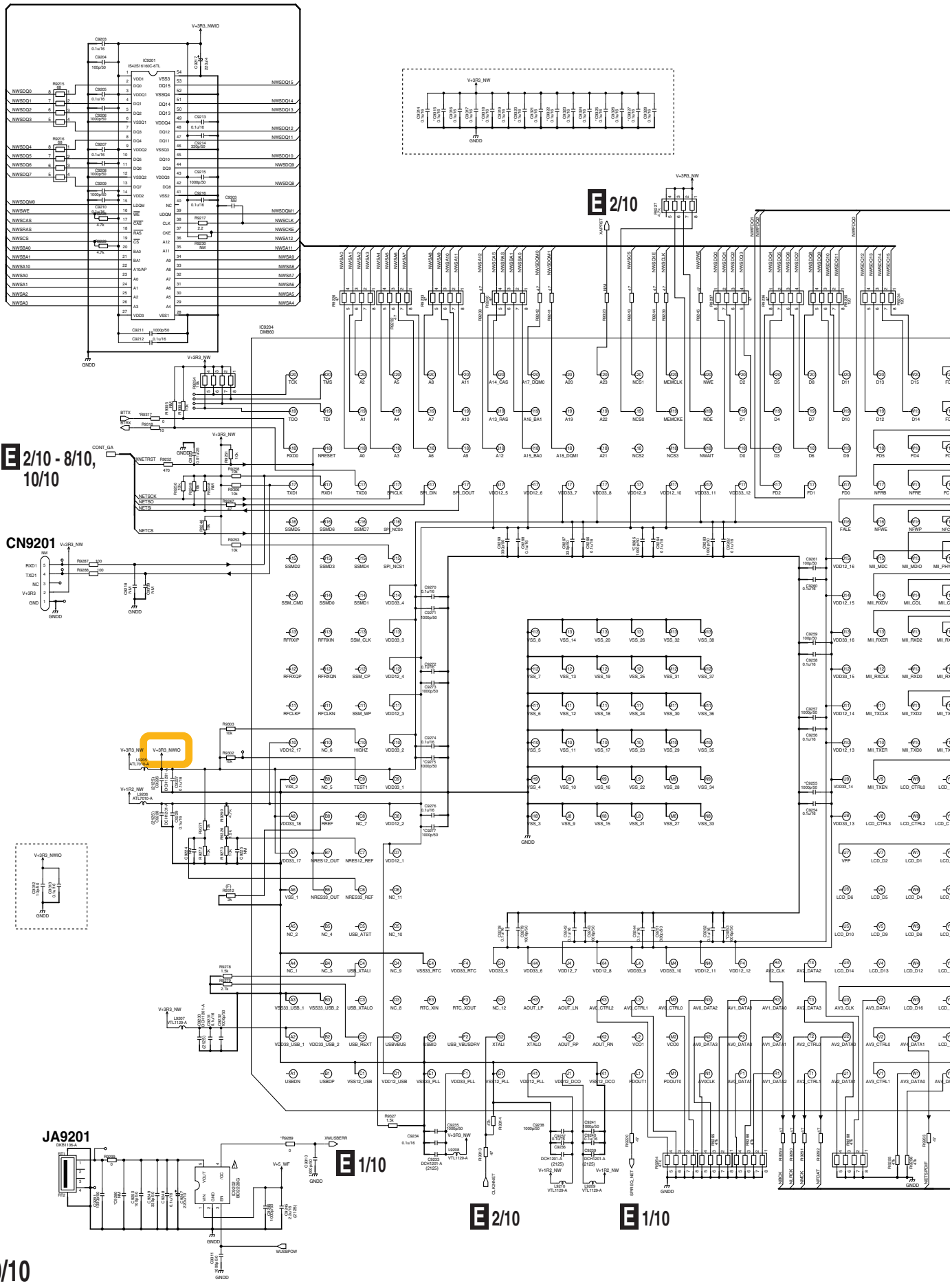

E 9/10 DIGITAL MAIN ASSY (9/10)
(VSX-53/VSX-1326-K : AWX9825)
(VSX-52/VSX-1126-K/VSX-1121-K: AWX9826)

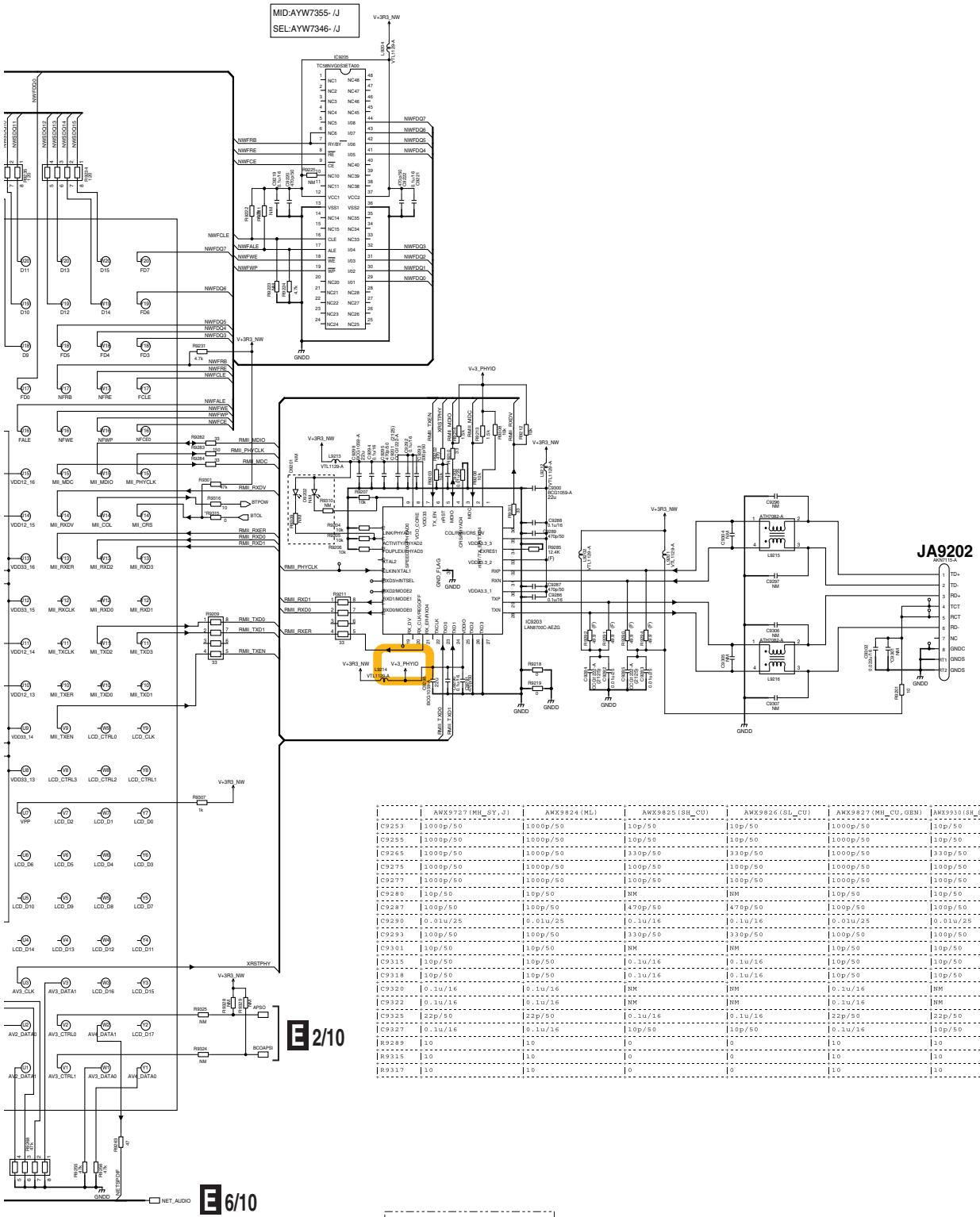

	AWX9727(MM_GY_J)	AWX9824(ML)	AWX9825(SM_CU)	AWX9826(SL_CU)	AWX9827(MM_CU_GEN)	AWX9910(SM_GY_GENASL_J)	AWX9911(SM_J)
C9253	1000p/50	1000p/50	10p/50	10p/50	1000p/50	10p/50	10p/50
C9255	1000p/50	1000p/50	10p/50	10p/50	1000p/50	10p/50	10p/50
C9265	1000p/50	1000p/50	330p/50	330p/50	1000p/50	330p/50	330p/50
C9275	1000p/50	1000p/50	100p/50	100p/50	1000p/50	100p/50	100p/50
C9277	1000p/50	1000p/50	100p/50	100p/50	1000p/50	100p/50	100p/50
C9280	10p/50	10p/50	NM	NM	10p/50	10p/50	10p/50
C9287	100p/50	100p/50	470p/50	470p/50	100p/50	100p/50	100p/50
C9290	0.01u/25	0.01u/25	0.1u/16	0.1u/16	0.01u/25	0.01u/25	0.01u/25
C9293	100p/50	100p/50	330p/50	330p/50	100p/50	100p/50	100p/50
C9301	10p/50	10p/50	NM	NM	10p/50	10p/50	10p/50
C9315	10p/50	10p/50	0.1u/16	0.1u/16	10p/50	10p/50	10p/50
C9318	10p/50	10p/50	0.1u/16	0.1u/16	10p/50	10p/50	10p/50
C9320	0.1u/16	0.1u/16	NM	NM	0.1u/16	NM	NM
C9322	0.1u/16	0.1u/16	NM	NM	0.1u/16	NM	NM
C9325	22p/50	22p/50	0.1u/16	0.1u/16	22p/50	22p/50	22p/50
C9327	0.1u/16	0.1u/16	10p/50	10p/50	0.1u/16	10p/50	10p/50
R9289	10	10	0	0	10	10	10
R9315	10	10	0	0	10	10	10
R9317	10	10	0	0	10	10	10

The ⚠ mark found on some component parts should be replaced with same parts (safety regulation authorized) of identical designation.

NOTE
1. NM : NO MOUNT

All 1u/10 is DCH1246-A.

E 9/10

10.17 DIGITAL MAIN ASSY(10/10) and VOL ASSY

E 10/10 DIGITAL MAIN ASSY (10/10)
(VSX-53/VSX-1326-K : AWX9825)
(VSX-52/VSX-1126-K/VSX-1121-K: AWX9826)

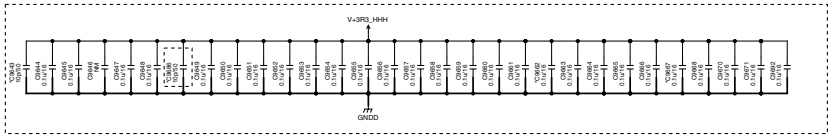

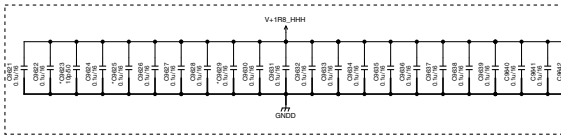

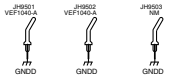

	AWX9727(MH_SY,J)	AWX9824(ML)	AWX9825(SH_CU)	AWX9826(SL_CU)	AWX9827(MH_CU,GEN)	AWX9930(SH_SY,GE
C9516	10p/50	10p/50	NM	NM	10p/50	10p/50
C9518	NM	NM	NM	NM	NM	NM
C9588	0.01u/16	NM	NM	NM	0.01u/16	NM
C9593	ACH7306-A	NM	NM	NM	ACH7306-A	NM
C9608	0.01u/16	NM	NM	NM	0.01u/16	10p/50
C9677	NM	NM	NM	NM	NM	NM
C9679	CCG1222-A	CCG1222-A	NM	NM	CCG1222-A	NM
C9681	CCG1222-A	CCG1222-A	NM	NM	CCG1222-A	NM
C9682	220u/4	220u/4	NM	NM	220u/4	NM
R9505	10	10	10	10	10	10
R9517	10	10	0	0	10	10
R9541	4.7k	4.7k	NM	NM	4.7k	NM
R9591	NM	NM	NM	NM	NM	0
R9596	4.7k	4.7k	NM	NM	4.7k	NM
IC9514	S-1172B12-U5	S-1172B12-U5	NM	NM	S-1172B12-U5	NM

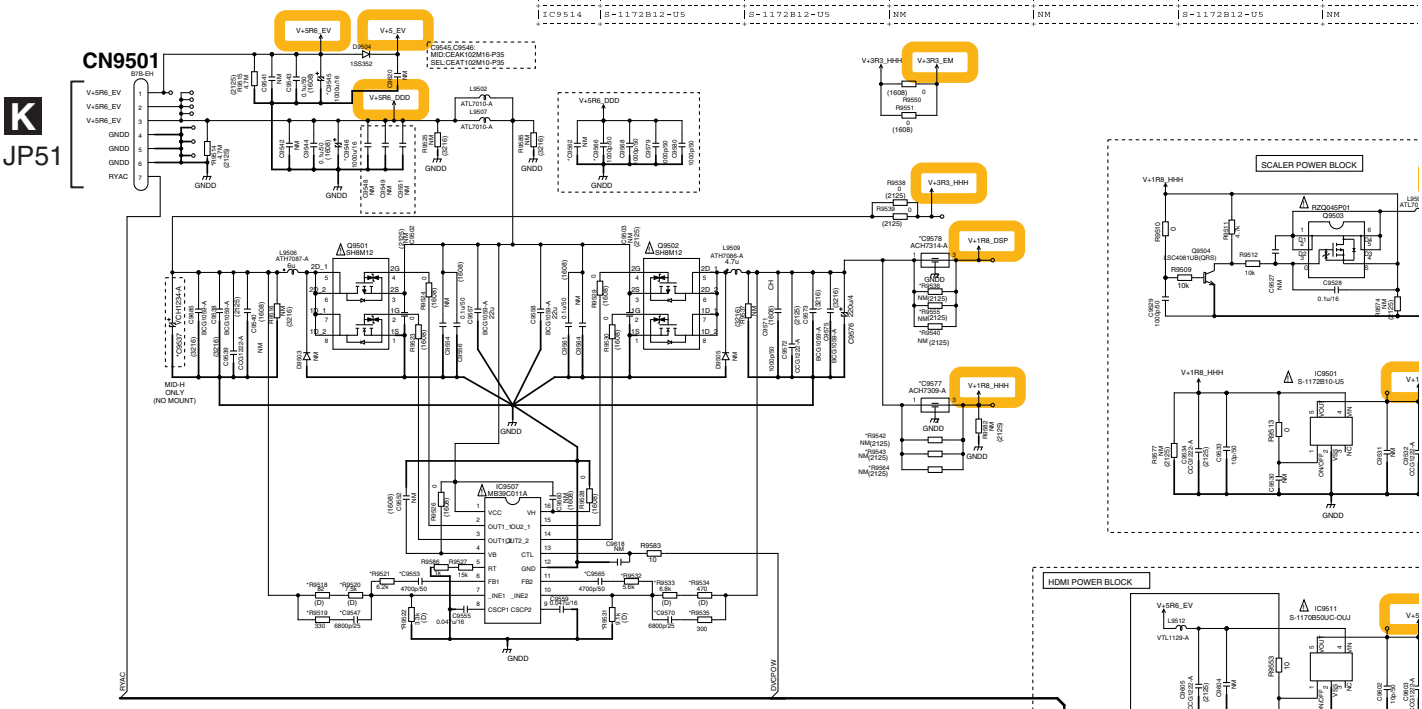

F VOL ASSY (AWX9788)

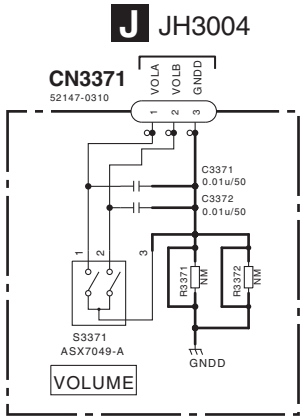

All 1u/10 is DCH1246-A.
CCG1222-A is 4.7u/25.

The △ mark found on some component parts should be replaced with same parts (safety regulation authorized) of identical designation.

NOTE
1. RESISTORS
Unit: k-kΩ, M-MΩ or Ω unless otherwise noted.
Rated Power: 1/16w unless otherwise noted.
Tolerance: (J)5% unless otherwise noted.
2. CAPACITORS
Unit: p-pF or u-uF unless otherwise noted.
Ratings: Capacity(F)/Voltage(V) unless otherwise noted.
3. NM: No Mount

E 10/10 F

	AWX9727(MH_SY_J)	AWX9824(ML)	AWX9825(SH_CU)	AWX9826(SL_CU)	AWX9827(MH_CU_GEN)	AWX9930(SH_SY_GEN&SL_SY)	AWX9931(SH_J)
C9537	VCH1234-A	NM	NM	NM	VCH1234-A	NM	NM
C9545	1000u/16	1000u/16	1000u/10	1000u/10	1000u/16	1000u/10	1000u/10
C9546	1000u/16	1000u/16	1000u/10	1000u/10	1000u/16	1000u/10	1000u/10
C9547	6800p/25	1000p/50	1000p/50	1000p/50	6800p/25	1000p/50	1000p/50
C9553	4700p/50	1000p/50	1000p/50	1000p/50	4700p/50	1000p/50	1000p/50
C9562	NM	NM	1000p/50	1000p/50	NM	NM	100p/50
C9565	4700p/50	1500p/50	1500p/50	1500p/50	1500p/50	1500p/50	1500p/50
C9566	10p/50	10p/50	1000p/50	1000p/50	10p/50	10p/50	10p/50
C9570	6800p/25	1000p/50	1000p/50	1000p/50	1000p/50	1000p/50	1000p/50
C9577	ACH7309-A	NM	NM	NM	NM	NM	NM
C9578	ACH7314-A	NM	NM	NM	NM	NM	NM
C9623	10p/50	10p/50	0.1u/16	0.1u/16	10p/50	10p/50	10p/50
C9625	10p/50	10p/50	0.1u/16	0.1u/16	10p/50	10p/50	10p/50
C9629	10p/50	10p/50	0.1u/16	0.1u/16	10p/50	10p/50	10p/50
C9643	10p/50	10p/50	0.1u/16	0.1u/16	10p/50	10p/50	10p/50
C9662	100p/50	100p/50	0.1u/16	0.1u/16	100p/50	100p/50	100p/50
C9667	10p/50	10p/50	0.1u/16	0.1u/16	10p/50	10p/50	10p/50
C9686	10p/50	10p/50	NM	NM	10p/50	NM	NM
C9696	22p/50	22p/50	0.1u/16	0.1u/16	22p/50	22p/50	22p/50
C9697	100p/50	100p/50	0.1u/16	0.1u/16	100p/50	100p/50	100p/50
R9514	3.6M	3.6M	4.7M	4.7M	3.6M	3.6M	3.6M
R9518	82	1.5k	1.5k	1.5k	82	1.5k	1.5k
R9519	330	1.5k	1.5k	1.5k	330	1.5k	1.5k
R9520	7.5k	33k	33k	33k	7.5k	33k	33k
R9521	6.2k	16k	16k	16k	6.2k	16k	16k
R9522	3.3k	15k	15k	15k	3.3k	15k	15k
R9531	9.1k	33k	33k	33k	33k	33k	33k
R9532	5.6k	12k	12k	12k	12k	12k	12k
R9533	6.8k	24k	24k	24k	24k	24k	24k
R9534	470	2.4k	2.4k	2.4k	2.4k	2.4k	2.4k
R9535	300	1.1k	1.1k	1.1k	1.1k	1.1k	1.1k
R9536	NM	0	0	0	0	0	0
R9540	NM	0	0	0	0	0	0
R9542	NM	0	0	0	0	0	0
R9543	NM	0	0	0	0	0	0
R9555	NM	0	0	0	0	0	0
R9564	NM	0	0	0	0	0	0

MH_CU_GEN)	AWX9930(SH_SY_GEN&SL_SY)	AWX9931(SH_J)
	10p/50	10p/50
	NM	33p/50
	NM	NM
	NM	NM
	10p/50	10p/50
	NM	NM
	NM	NM
	NM	NM
	NM	NM
	10	22
	10	10
	NM	NM
	0	0
	NM	NM
-US	NM	NM

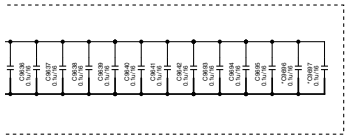

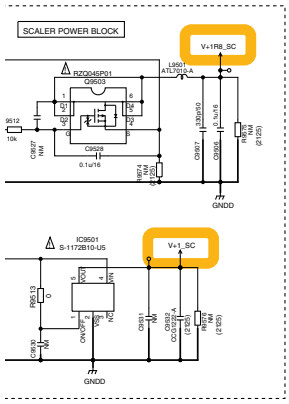

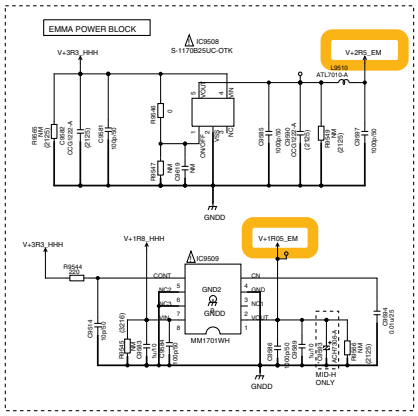

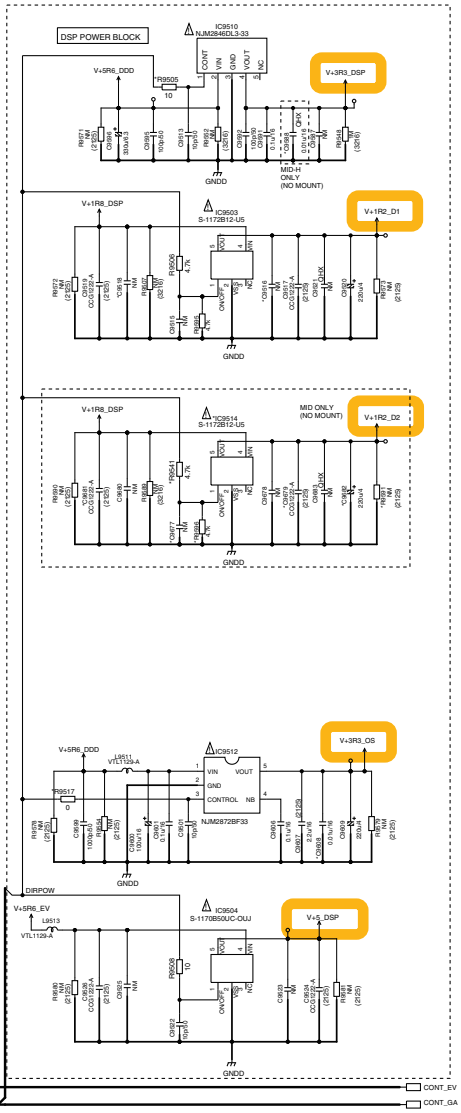

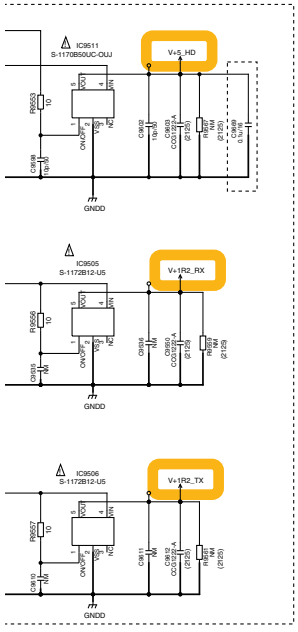

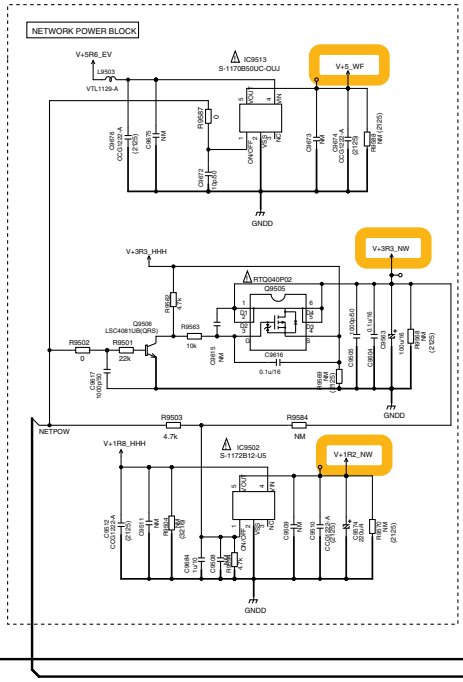

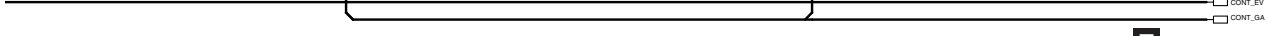

E 2/10, 5/10, 6/10, 8/10

E 2/10 - 9/10

E 10/10

10.18 FRONT HDMI USB ASSY

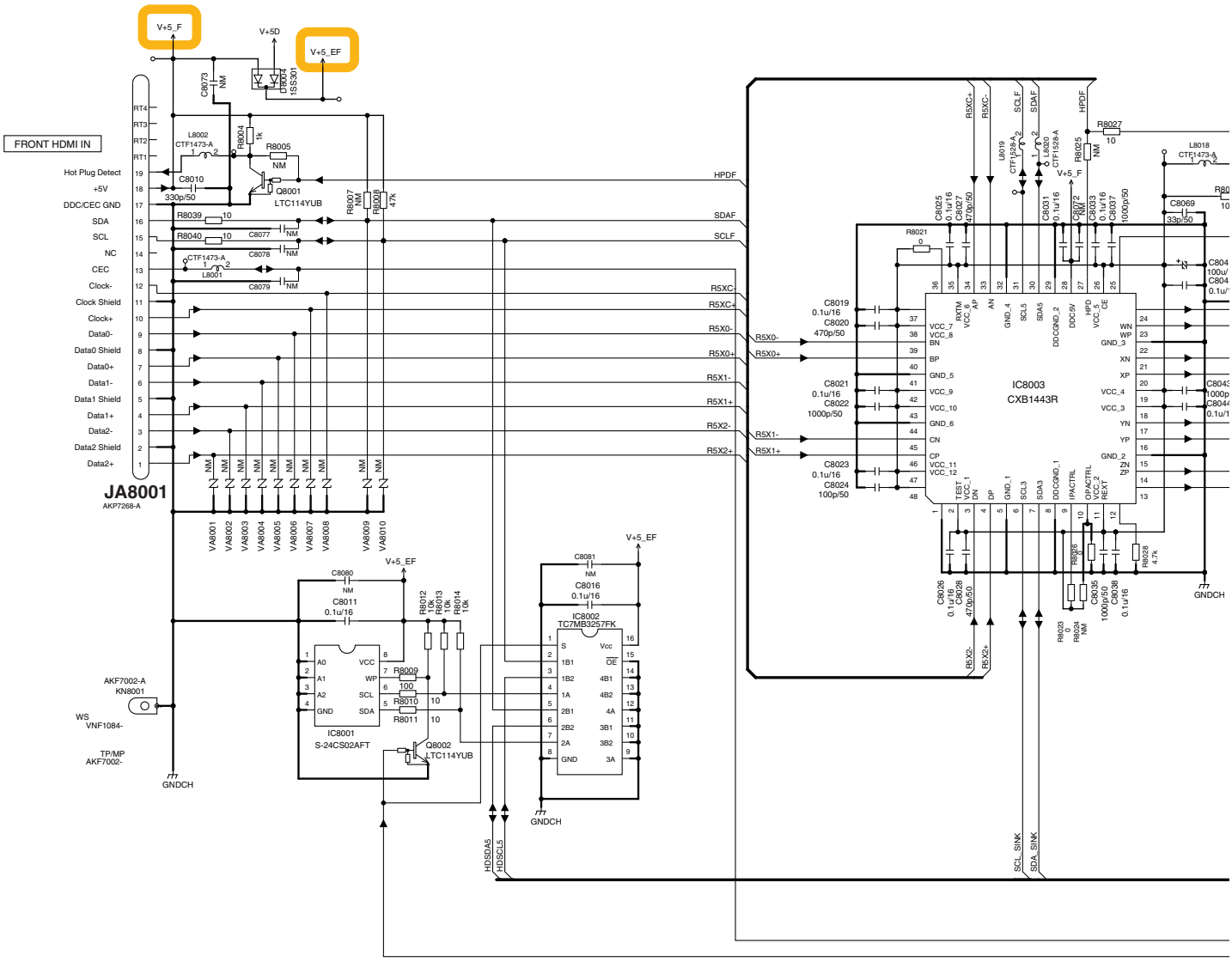

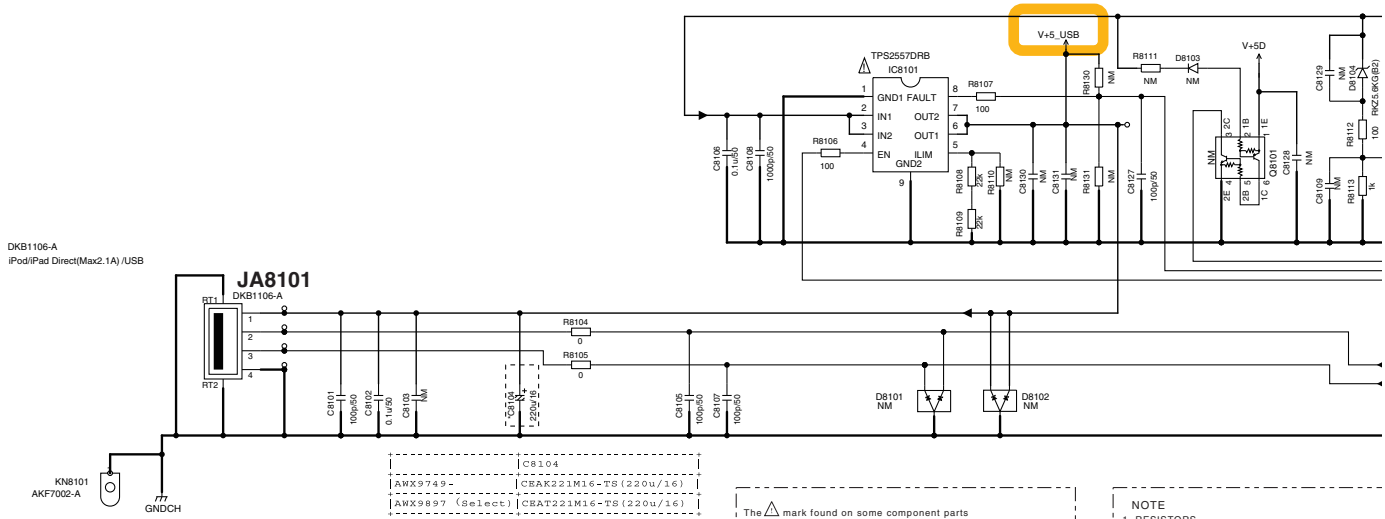

The △ mark found on some component parts should be replaced with same parts (safety regulation authorized) of identical designation.

NOTE
1. RESISTORS
Unit: k-kΩ, M-MΩ or Ω unless otherwise noted.
Rated Power: 1/16w unless otherwise noted.
Tolerance: (J)5% unless otherwise noted.
2. CAPACITORS
No marked Capacitors are CEAT or CKSRYB or CKS
CH: CCSRCH or CCSSCH
Unit: p-pF or u-uF unless otherwise noted.
Ratings: Capacity(F)/Voltage(V) unless otherwise no
3. NM: No Mount

G FRONT HDMI USB ASSY (AWX9897)

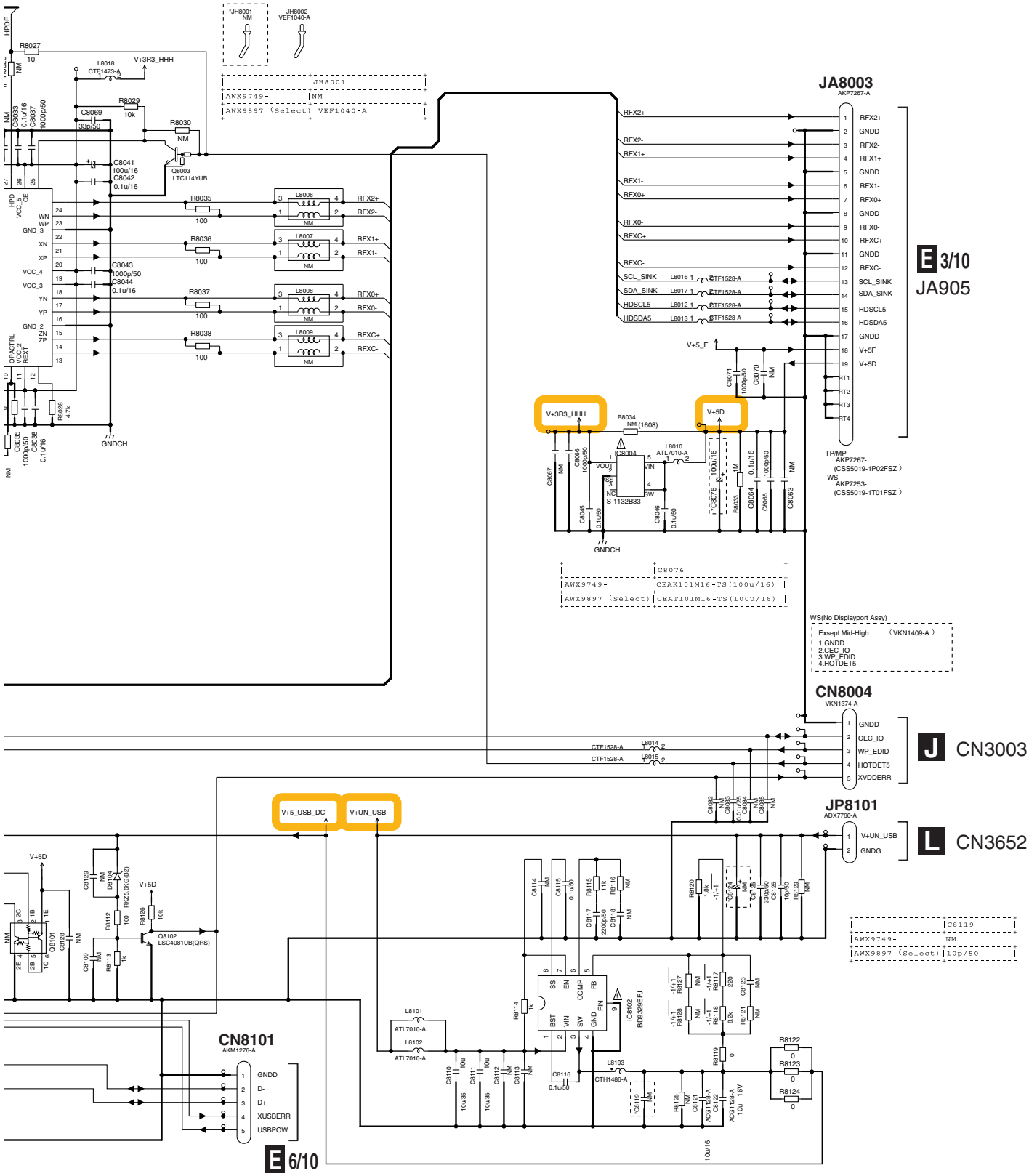

10.19 POWER AMP ASSY(1/2)

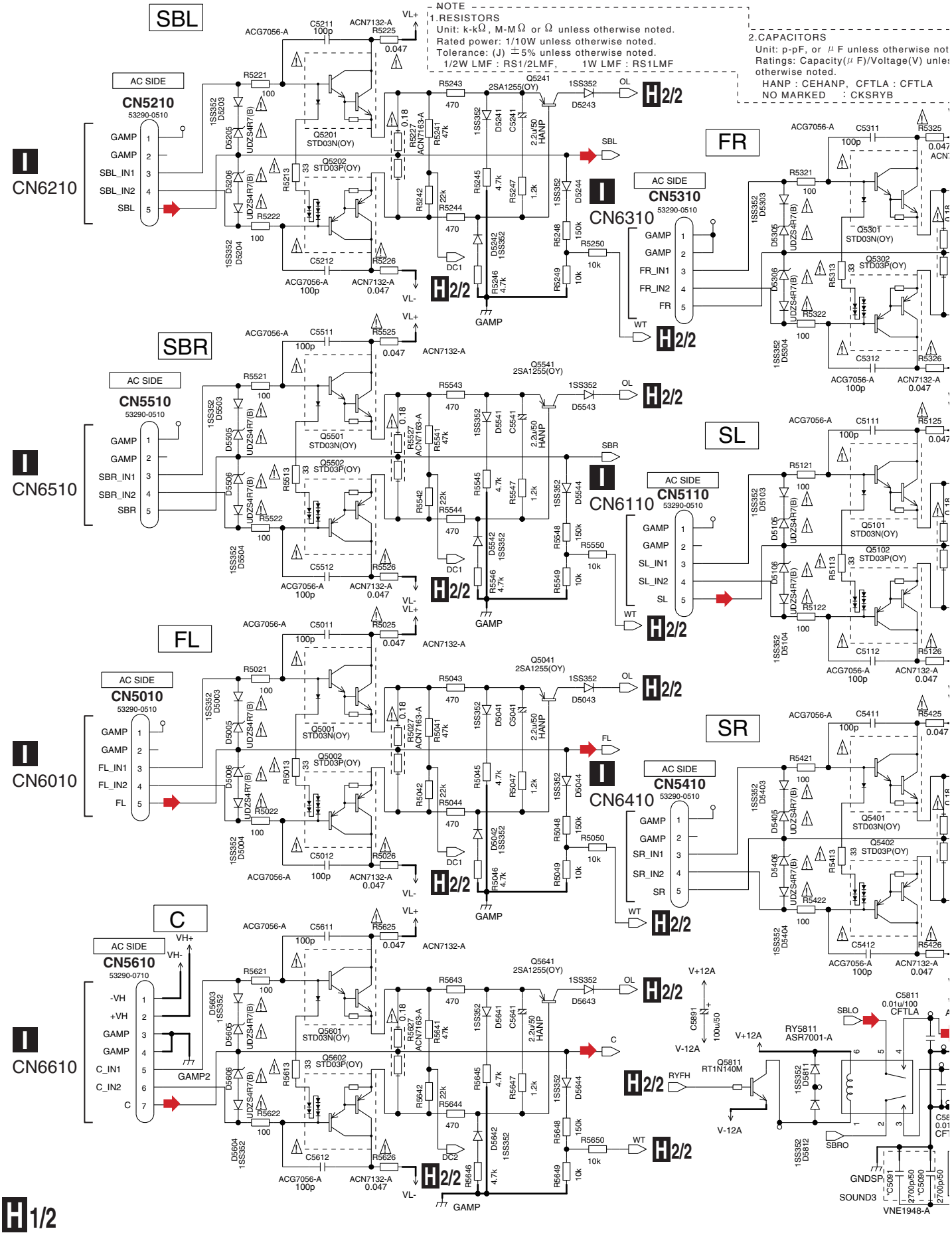

H1/2 POWER AMP ASSY (1/2)
(VSX-53/VSX-1326-K : AWX9886)
(VSX-52 : AWX9889)
(VSX-1126-K/VSX-1121-K: AWX9890)

F unless otherwise noted.
y(μ F)/Voltage(V) unless

P, CFTLA : CFTLA
: CKSRYB

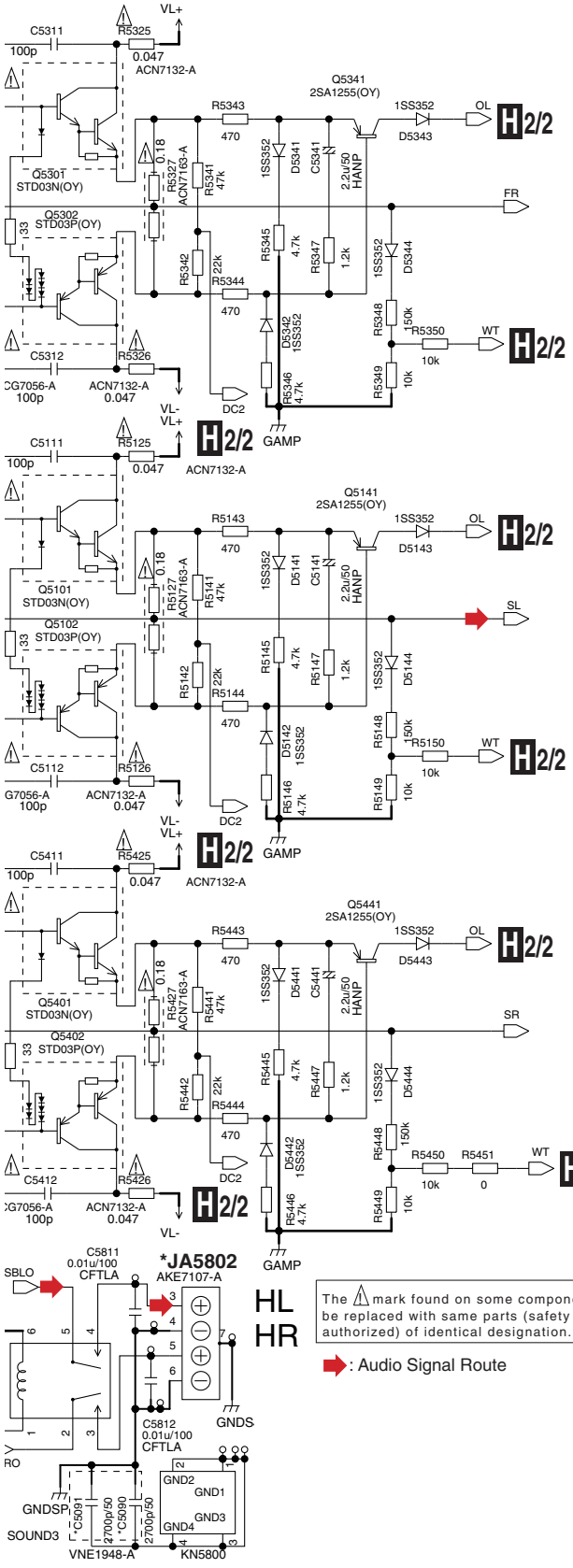

	AWX9738- AWX9740- AWX9741- AWX9742-	AWX9886- AWX9888- AWX9889- AWX9890-	AWX9739- AWX9887-
JA5800-5802	AKE7107-		AKE7108-

SOUND 1-3	AWX9738- AWX9739- AWX9740- AWX9741- AWX9742-	AWX9886- AWX9887- AWX9888- AWX9889- AWX9890-
C5084	2700p/50 YB	2700p/50 CH
C5085	2700p/50 YB	2700p/50 CH
C5089	2700p/50 YB	2700p/50 CH
C5090	2700p/50 YB	2700p/50 CH
C5091	2700p/50 YB	2700p/50 CH

The ⚠ mark found on some component parts should be replaced with same parts (safety regulation authorized) of identical designation.

: Audio Signal Route

10.20 POWER AMP ASSY(2/2)

IR_IN2

	AWX9538, AWX9739, AWX9740 AWX9886, AWX9887, AWX9888	AWX9741, AWX9742 AWX9889, AWX9890
C5932	0.01u/50	NM
C5934	0.015u/50	NM
R5931	NM	0
R5933	6.2k	NM
R5939	100k	NM
R5947	0	NM
L5933	QTL1013-A	NM
D5935	MC2848-11	NM
JA5811	4.7k	NM
Q5865	RT3T22M	NM

12V_TRG

	AWX9738- AWX9739- AWX9740- AWX9741-	AWX9742-	AWX9886- AWX9888- AWX9887- AWX9889-	AWX9890-
C5951	0.1u/16	NM	0.1u/16	NM
C5953, C5954	0.01u/50	NM	0.01u/50	NM
C5955	1000p/50	NM	1000p/50	NM
C5957	4700p/50	NM	4700p/50	NM
R5951, R5952	10k	NM	10k	NM
R5953, R5954, R5955, R5963	12	NM	12	NM
R5956, R5957, R5958, R5959	4.7k	NM	4.7k	NM
R5960, R5961, R5962, R5964, R5965, R5966	0	NM	0	NM
L5951	ATL7002-A	NM	ATL7002-A	NM
JA5807	AKN-209-A	NM	AKN-209-A	NM
Q5951, Q5953, Q5955	LTC124EUB	NM	LTC124EUB	NM
Q5952, Q5954, Q5956	LSA1576UB(QR)	NM	LSA1576UB(QR)	NM
Q5957, Q5958	NM	NM	LSA1576UB(QR)	LSA1576UB(QR)

RF_5V_OUT

	AWX9738- AWX9741- AWX9742-	AWX9739- AWX9740-	AWX9886- AWX9889- AWX9890-	AWX9888- AWX9887-
C5975	NM	330p/50	330p/50	330p/50
C5976	NM	10p/50	NM	10p/50
C5979	NM	NM	1000p/50	1000p/50

DIODE

	AWX9738, AWX9739, AWX9740, AWX9741, AWX9742	AWX9886, AWX9887, AWX9888, AWX9889, AWX9890
D5790	D5SBA20(B)	D5SBA60(B)
D5791	D5SBA20(B)	D5SBA60(B)

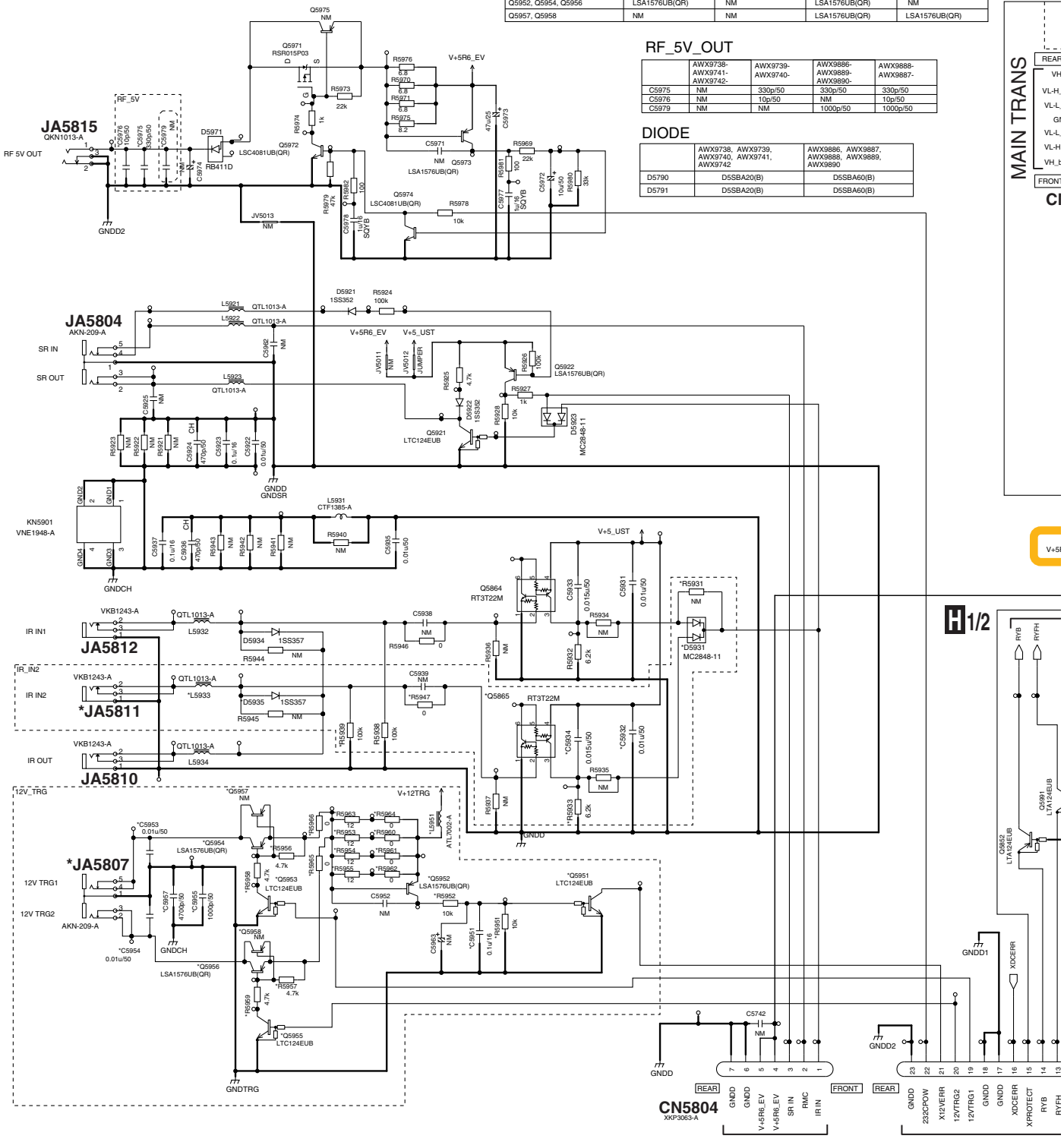

H 2/2 POWER AMP ASSY (2/2)
(VSX-53/VSX-1326-K : AWX9886)
(VSX-52 : AWX9889)
(VSX-1126-K/VSX-1121-K : AWX9890)

VL_H*VL_L

	AWX9738, AWX9739, AWX9741, AWX9742	AWX9740
D5701, D5702	1SS352	NM
Q5700	RT1N140M	NM
RY5701	ASR7032-A	NM
JV5008	NM	JAMPER_JV
JV5009	NM	JAMPER_JV

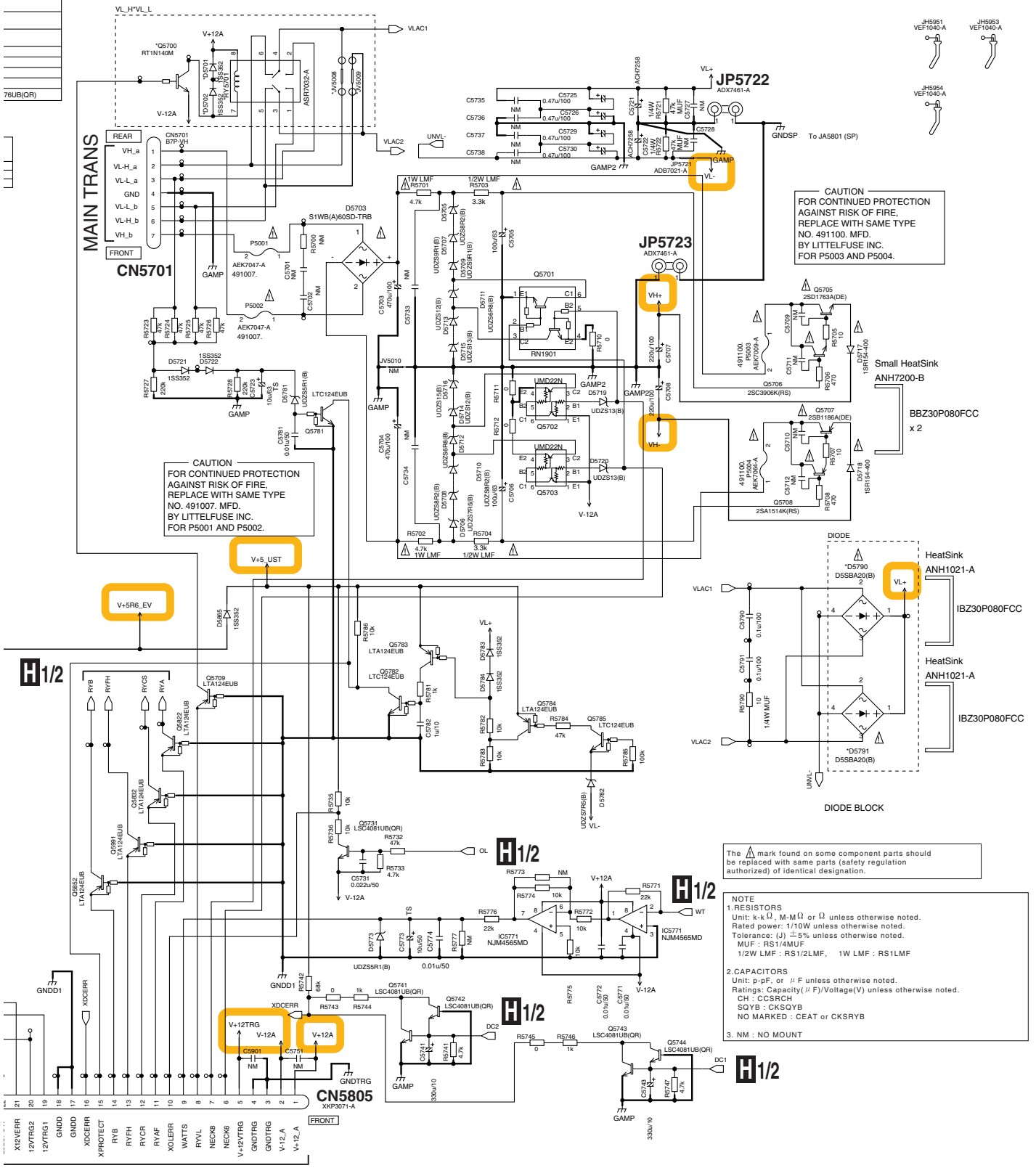

The ⚠ mark found on some component parts should be replaced with same parts (safety regulation authorized) of identical designation.

NOTE
1.RESISTORS
Unit: k-kΩ, M-MΩ or Ω unless otherwise noted.
Rated power: 1/10W unless otherwise noted.
Tolerance: (J) ±5% unless otherwise noted.
MUF : RS1/4MUF
1/2W LMF : RS1/2LMF, 1W LMF : RS1LMF

2.CAPACITORS
Unit: p-pF, or μF unless otherwise noted.
Ratings: Capacity(μF)/Voltage(V) unless otherwise noted.
CH : CCSRCH
SQYB : CKSQYB
NO MARKED : CEAT or CKSRYB

3. NM : NO MOUNT

Q CN3363

10.21 PRESTAGE ASSY

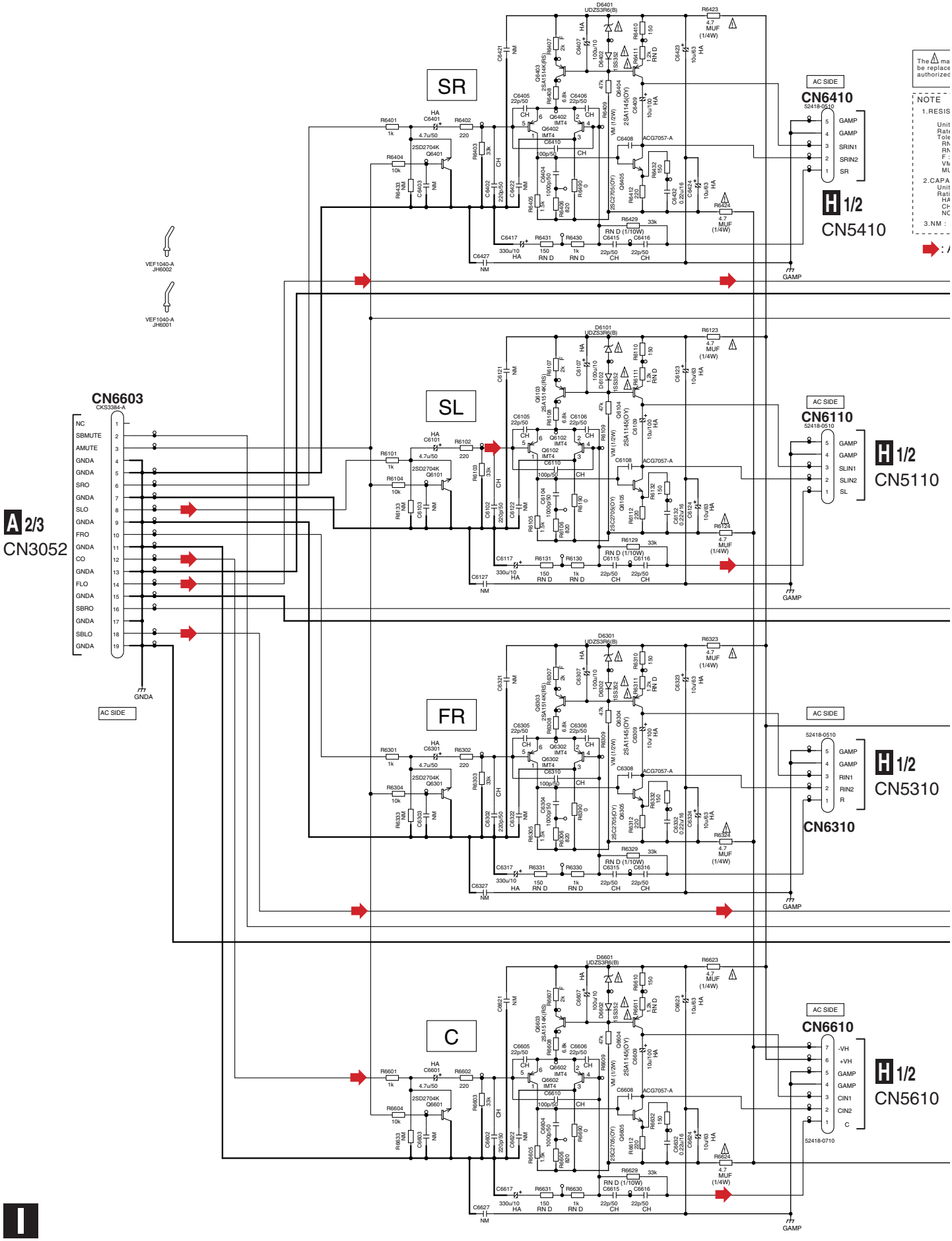

I PRESTAGE ASSY (AWX9775)

The ⚠ mark found on some component parts should be replaced with same parts (safety regulation authorized) of identical designation.

NOTE

1.RESISTORS

Unit: k-kΩ , M-MΩ or Ω unless otherwise noted.
Rated power: 1/10W unless otherwise noted.
Tolerance: (J) ±5% unless otherwise noted.
RN D (1/10W) : RN1/10SE****D
RN D : RN1/16SE****D
F : RS1/10SR****F
VM : RD1/2VM
MUF : RD1/4MUF

2.CAPACITORS

Unit: p-pF, or μ F unless otherwise noted.
Ratings: Capacity(μ F)/Voltage(V) unless otherwise noted.
HA : CEHAT
CH : CCSRCH
NO MARKED : CKSRYB

3.NM : NO MOUNT

: Audio Signal Route

FL

SBR/FRH

SBL/FLH

H 1/2 N5410

H 1/2 CN5110

H 1/2 CN5310

H 1/2 CN5610

H 1/2 CN5010

H 1/2 CN5510

H 1/2 CN5210

CN6010 52418-0510 (GAMP, GAMP, LIN1, LIN2, L)

CN6510 52418-0510 (GAMP, GAMP, SBRIN1, SBRIN2, SBR)

CN6210 52418-0510 (GAMP, GAMP, SBLIN1, SBLIN2, SBL)

10.22 DISPLAY ASSY

LED1-2	C3218	C3338	R3079	R3095	R3114	R3211	R3212	R3213	R3214	R3241	R3242	R3243	R3244	R3245	R3356	D3204	D3206	D3208	D3210	D3212	Q3207	Q3210	Q3211	Q
AWX9782-	47p/50	10p/50	NM	100	NM	NM	NM	NM	NM	150	150	150	150	150	100	SLR343BC4T(JKLM)	SLR343BC4T(JKLM)	SLR343BC4T(JKLM)	SLR343BC4T(JKLM)	SLR343BC4T(JKLM)	LTC124EUB	LTC124EUB	LTC124EUB	L
AWX9869-	47p/50	10p/50	NM	100	NM	NM	NM	NM	NM	150	150	150	150	150	100	SLR343BC4T(JKLM)	SLR343BC4T(JKLM)	SLR343BC4T(JKLM)	SLR343BC4T(JKLM)	SLR343BC4T(JKLM)	LTC124EUB	LTC124EUB	LTC124EUB	L
AWX9839-	NM	NM	0	NM	0	0	0	0	0	680	680	680	680	NM	NM	SLR-343VC(NPQ)	SLR-343VC(NPQ)	SLR-343VC(NPQ)	SLR-343VC(NPQ)	NM	NM	NM	NM	N
AWX9932-	47p/50	10p/50	NM	100	NM	NM	NM	NM	NM	150	150	150	150	150	100	SLR343BC4T(JKLM)	SLR343BC4T(JKLM)	SLR343BC4T(JKLM)	SLR343BC4T(JKLM)	SLR343BC4T(JKLM)	LTC124EUB	LTC124EUB	LTC124EUB	L
AWX9937-	NM	NM	0	NM	0	0	0	0	0	680	680	680	680	NM	NM	SLR-343VC(NPQ)	SLR-343VC(NPQ)	SLR-343VC(NPQ)	SLR-343VC(NPQ)	NM	NM	NM	NM	N

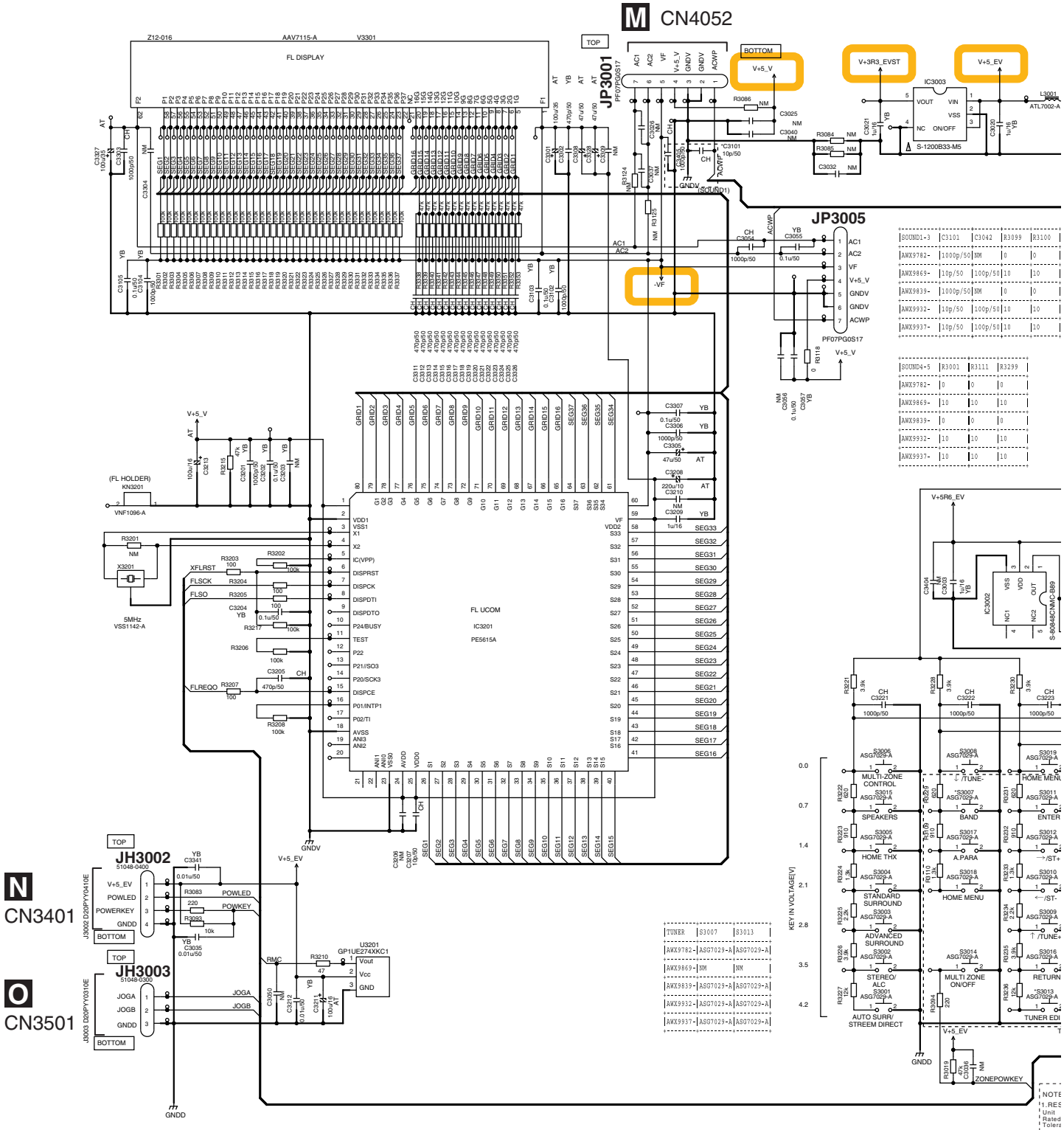

SOUND1-3	C3101	C3042	R3099	R3100
AWX9782-	1000p/50	NM	0	0
AWX9869-	10p/50	100p/50	10	10
AWX9839-	1000p/50	NM	0	0
AWX9932-	10p/50	100p/50	10	10
AWX9937-	10p/50	100p/50	10	10

SOUND4-5	R3001	R3111	R3299
AWX9782-	0	0	0
AWX9869-	10	10	10
AWX9839-	0	0	0
AWX9932-	10	10	10
AWX9937-	10	10	10

TUNER	S3007	S3013
AWX9782-	ASG7029-A	ASG7029-A
AWX9869-	NM	NM
AWX9839-	ASG7029-A	ASG7029-A
AWX9932-	ASG7029-A	ASG7029-A
AWX9937-	ASG7029-A	ASG7029-A

KEY IN VOLTAGE[V]: 0.0, 0.7, 1.4, 2.1, 2.8, 3.5, 4.2

J DISPLAY ASSY
(VSX-53/VSX-52 : AWX9782)
(VSX-1326-K/VSX-1126-K/VSX-1121-K: AWX9839)

E 2/10 CN601

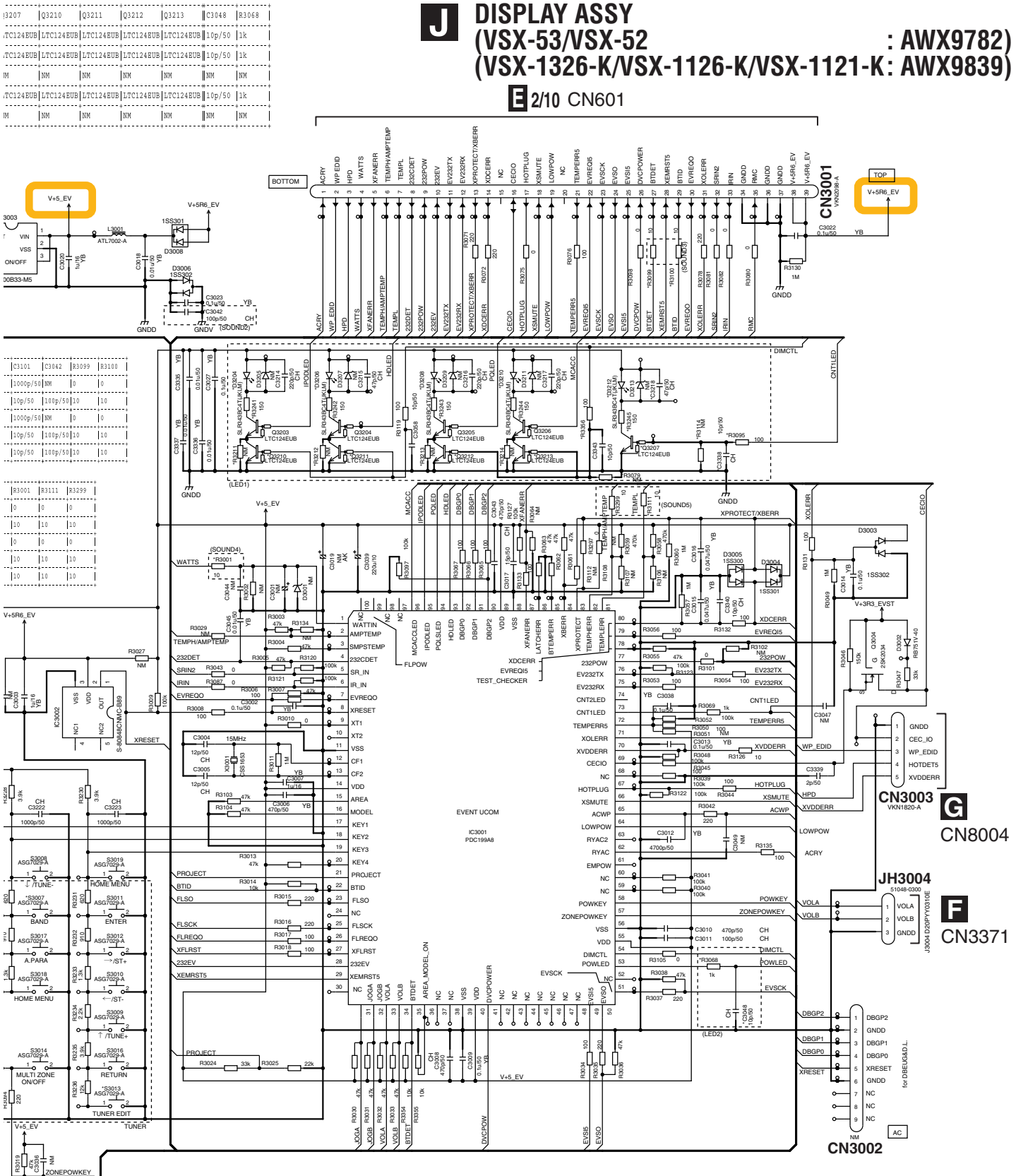

10.23 PRIMARY ASSY

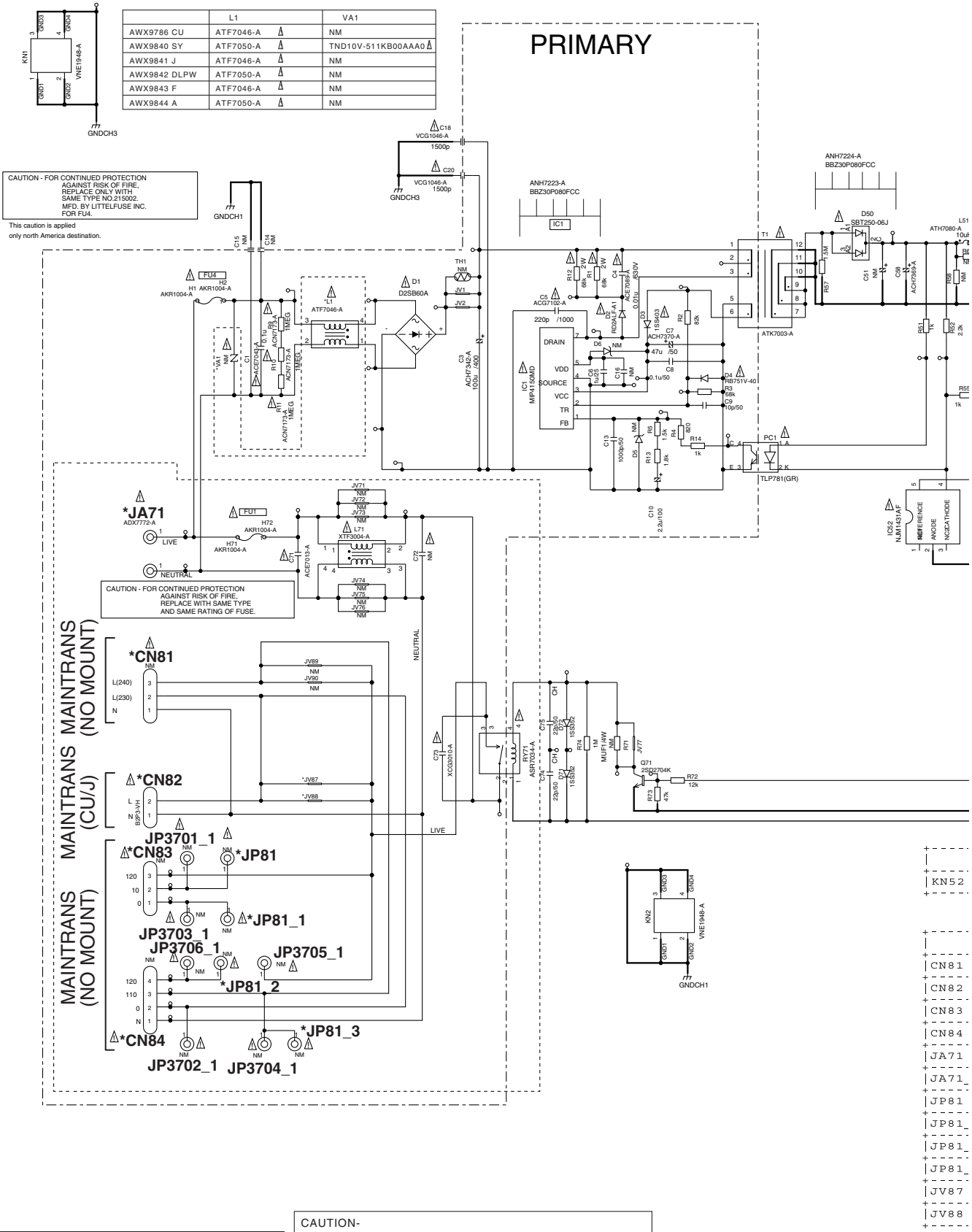

The Δ mark found on some component parts should be replaced with same parts (safety regulation authorized) of identical designation.

CAUTION-
FOR CONTINUED PROTECTION AGAINST RISK OF FIRE, REPLACE WITH SAME TYPE AND RATINGS OF FUSE.

K PRIMARY ASSY (AWX9786)

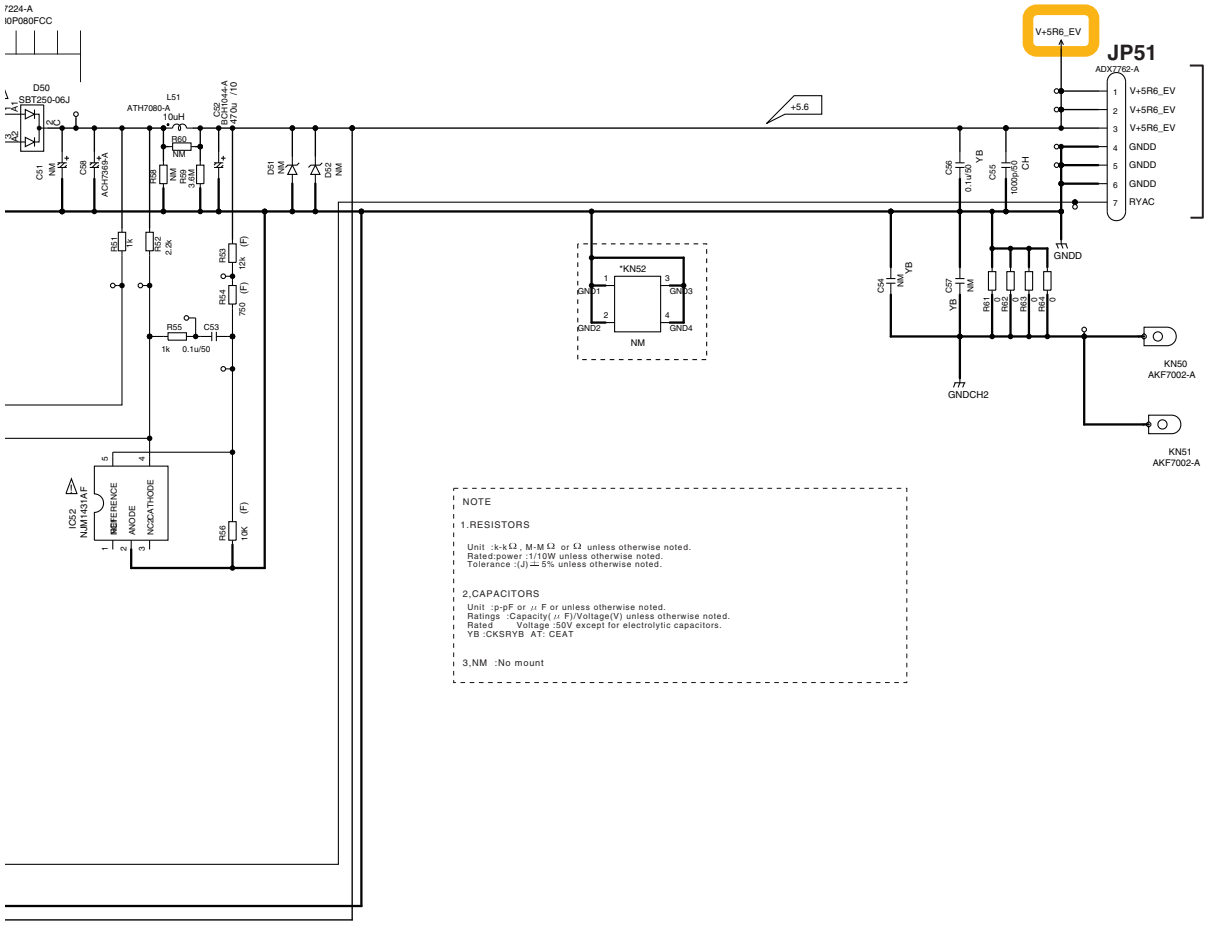

	AWX9786 CU	AWX9840 SY	AWX9841 J	AWX9842 DLPW	AWX9843 F	AWX9844 A
KN52	NM	ANG7591-A	NM	ANG7591-A	NM	ANG7591-A

	AWX9786 CU	AWX9840 SY	AWX9841 J	AWX9842 DLPW	AWX9843 F	AWX9844 A
CN81	NM	B3P5-VH ⚠	NM	NM	NM	NM
CN82	B2P3-VH ⚠	NM	B2P3-VH ⚠	NM	NM	NM
CN83	NM	NM	NM	B3P5-VH ⚠	B3P5-VH ⚠	B3P5-VH ⚠
CN84	NM	NM	NM	B4P7-VH-BK ⚠	B4P7-VH-BK ⚠	B4P7-VH-BK ⚠
JA71	ADX7772-A ⚠	ADX7772-A ⚠	ADX7771-A ⚠	ADX7772-A ⚠	ADX7772-A ⚠	ADX7772-A ⚠
JA71_1	ADX7772-A_1 ⚠	ADX7772-A_1 ⚠	ADX7771-A_1 ⚠	ADX7772-A_1 ⚠	ADX7772-A_1 ⚠	ADX7772-A_1 ⚠
JP81	NM	NM	NM	ADX7770-A ⚠	NM	ADX7770-A ⚠
JP81_1	NM	NM	NM	ADX7770-A_1 ⚠	NM	ADX7770-A_1 ⚠
JP81_2	NM	NM	NM	ADX7770-A_2 ⚠	NM	ADX7770-A_2 ⚠
JP81_3	NM	NM	NM	ADX7770-A_3 ⚠	NM	ADX7770-A_3 ⚠
JV87	JUMPER	JUMPER	JUMPER	NM	NM	NM
JV88	JUMPER	JUMPER	JUMPER	NM	NM	NM

10.24 USB RECT ASSY

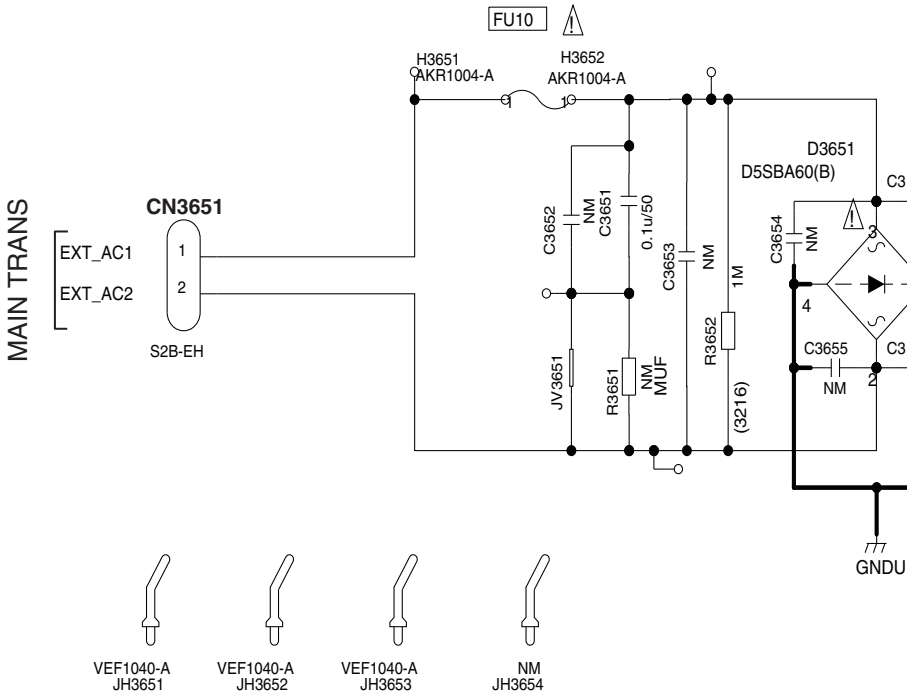

NOTE

1. RESISTORS
 Unit: k-kΩ, M-MΩ or Ω unless otherwise noted.
 Rated Power: 1/10W unless otherwise noted.
 Toleranee: (J)5% unless otherwise noted.
  MUF : RD1/4MUF
  2125 : RS1/8SQ

2. CAPACITORS
 Unit: p-pF or u-uF unless otherwise noted.
 Ratings: Capacity(F)/Voltage(V) unless otherwise noted.
  CH : CCSRCH
  NO MARKED : CEAT or CKSRYB

3. NM : NO MOUNT

CAUTION - FOR CONTINUED PROTECTION AGAINST RISK OF FIRE, REPLACE WITH SAME TYPE AND RATINGS OF FUSE.

The ⚠ mark found on some component parts should be replaced with same parts(safety regulation authorized) of identical designation.

L USB RECT ASSY (AWX9776)

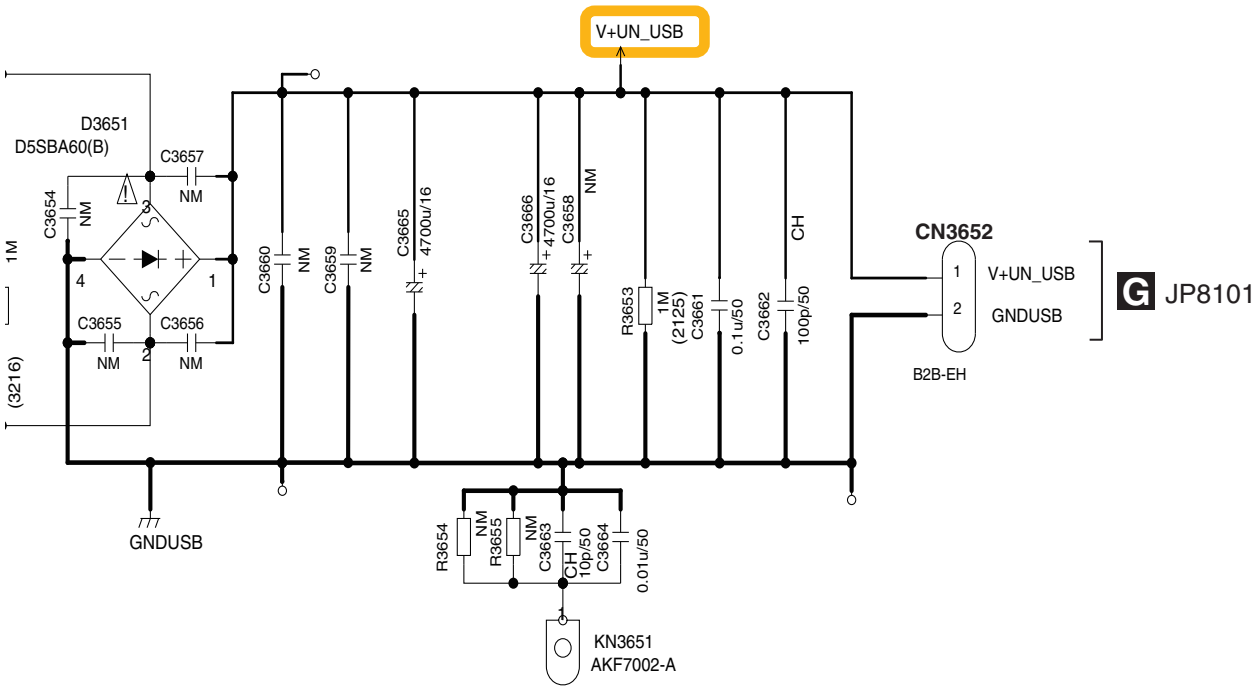

10.25 REGULATOR ASSY

	AWX9774	AWX9838
C4081	NM	1000u/16
C4082	NM	1000u/35
C4083	NM	1000p/50
C4084	NM	10u/50
C4085	NM	10u/50
C4086	NM	47u/25
C4087	NM	0.01u/50
R4081	NM	4.7k
R4082	NM	100
R4083	NM	2.2k
R4084	NM	NM
R4085	NM	100k
R4086	NM	0
R4087	NM	1M
CN4081	NM	B3B-EH
D4081	NM	1SR154-400
D4082	NM	1SR154-400
D4083	NM	RKZ27KG(B)
D4084	NM	NM
P4081	NM	AEK7012-A
P4082	NM	ICP-N10
Q4081	NM	RN4983
Q4082	NM	2SD1763A(DE)
Q4083	NM	LTC124EUB

The ⚠ mark found on some component parts should be replaced with same parts (safety regulation authorized) of identical designation.

CAUTION-
FOR CONTINUED PROTECTION AGAINST RISK OF FIRE, REPLACE WITH SAME TYPE NO. 49101.6 MFD. BY LITTELFUSE INC. FOR P4081

NO MOUNT JUMPER

	AWX9774-	AWX9838
JV4081 JV4082 JV4022	NO MOUNT	NO MOUN
J4081 J4082 J4083 J4084 J4086 J4087 J4088 J4089	NO MOUNT	MOUNT

NOTE
1.RESISTORS
Unit: k-k Ω , M-M Ω or Ω
unless otherwise noted.
Rated power: 1/10W unless otherwise noted.
Tolerance: (J) ±5% unless otherwise noted.
2125 : RS1/8SQ
MUF : RS1/4MUF
2.CAPACITORS
Unit: p-pF, or μ F unless otherwise noted.
Ratings: Capacity(μ F)/Voltage(V) unless otherwise noted.
NP : CEANP
CFTLA ; CFTLA
AK : CEAK
NO MARKED : CEAT or CKSRYB
3. NM : NO MOUNT

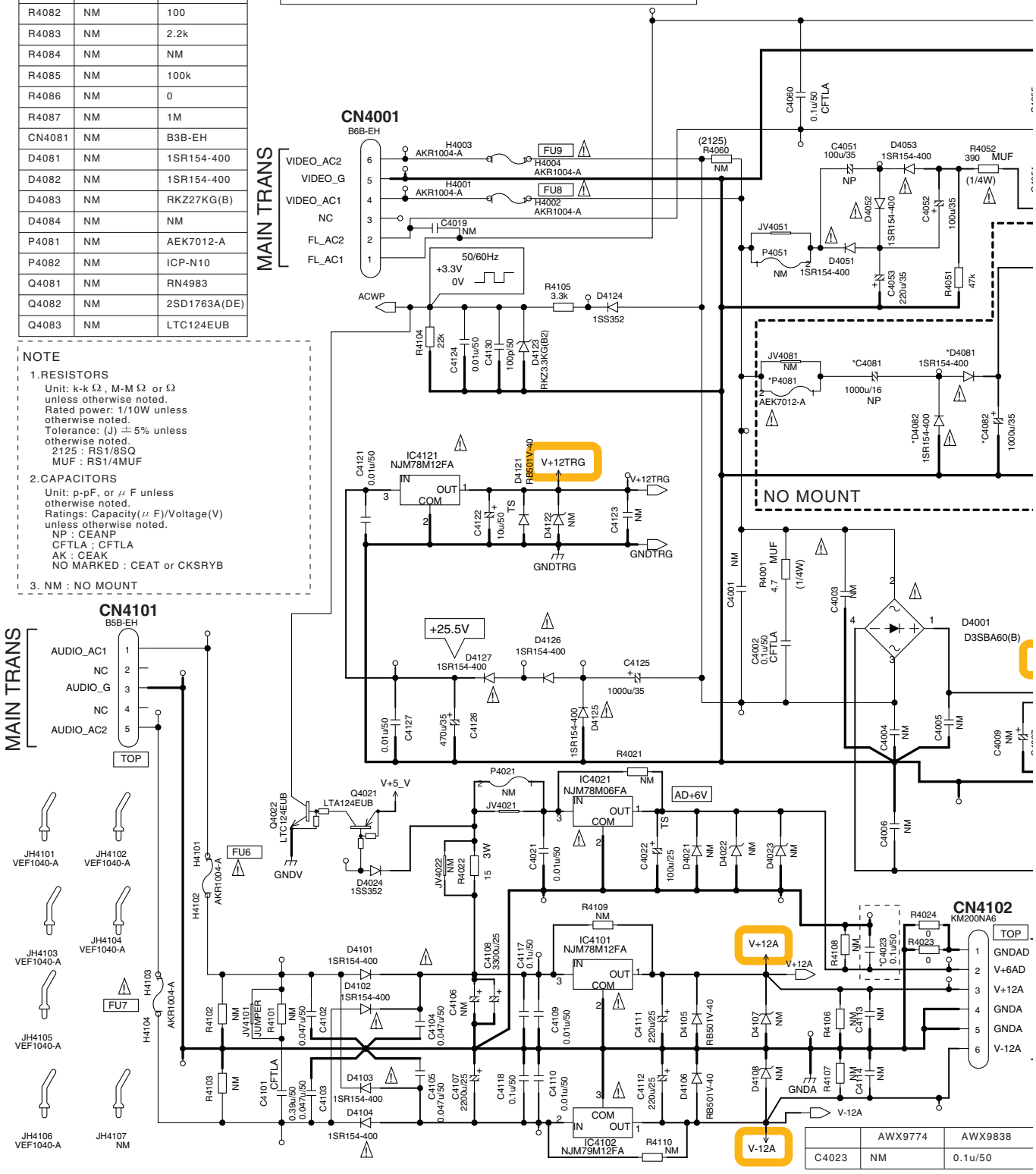

	AWX9774	AWX9838
C4023	NM	0.1u/50

M REGULATOR ASSY (AWX9774)

ER	
AWX9774-	AWX9838-
NO MOUNT	NO MOUNT
NO MOUNT	MOUNT

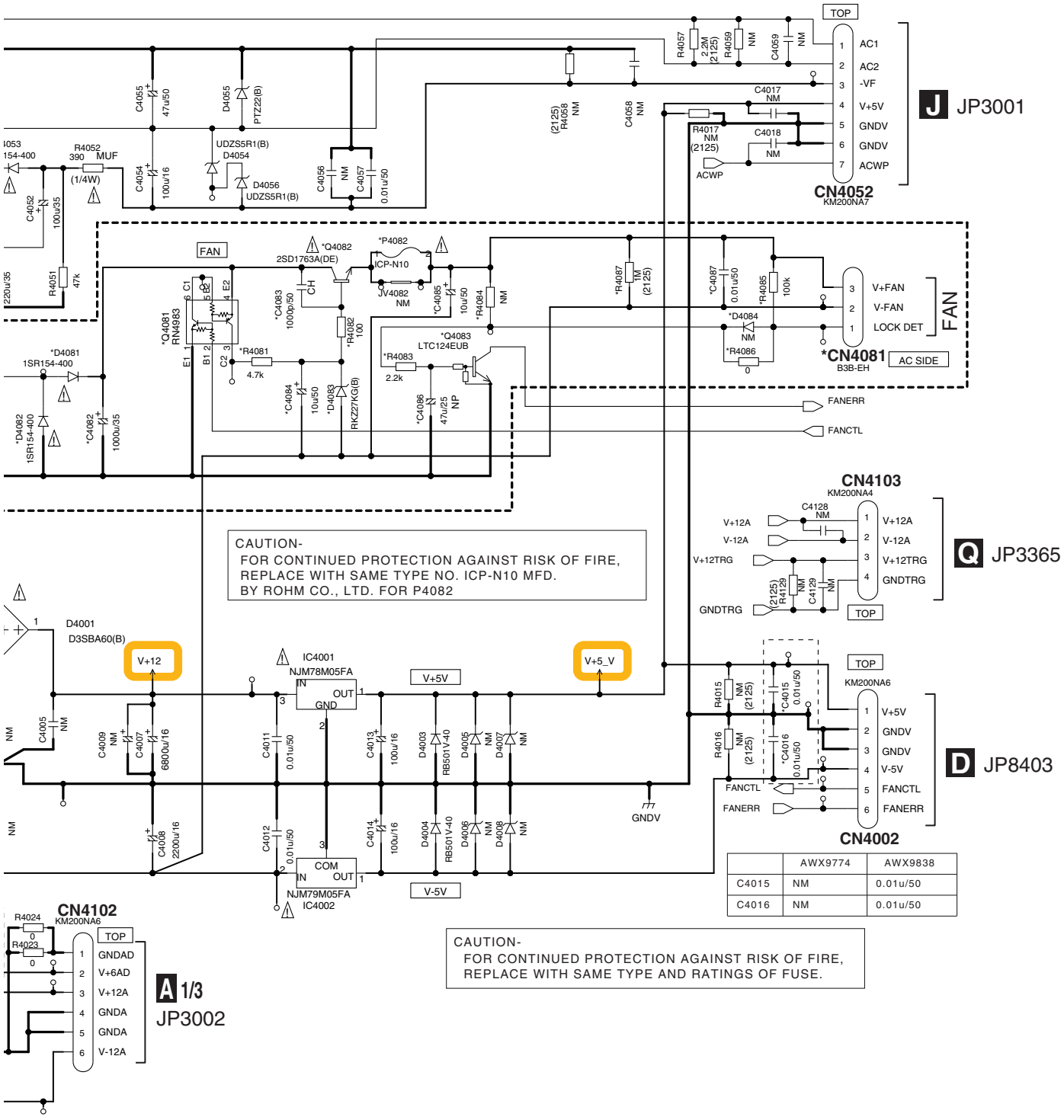

	AWX9774	AWX9838
C4015	NM	0.01u/50
C4016	NM	0.01u/50

9774	AWX9838
	0.1u/50

10.26 POWER SW, ENCODER and MIC HP ASSYS

N POWER SW ASSY
(VSX-53/VSX-52 : AWX9783)
(VSX-1326-K/VSX-1121-K: AWX9900)

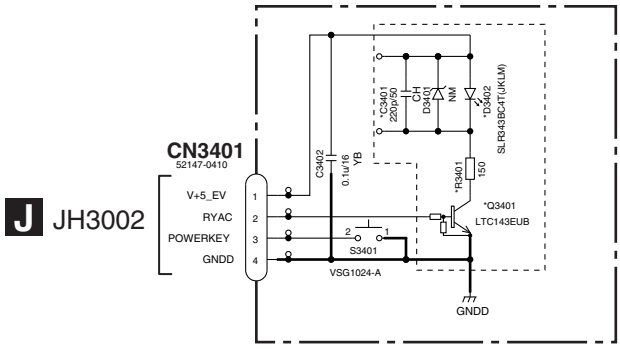

	AWX9783	AWX9900
C3401	220p/50	NM
R3401	150	NM
D3402	SLR343BC4T(JKLM)	NM
Q3401	LTC143EUB	NM

P MIC HP ASSY
(AWX9785)

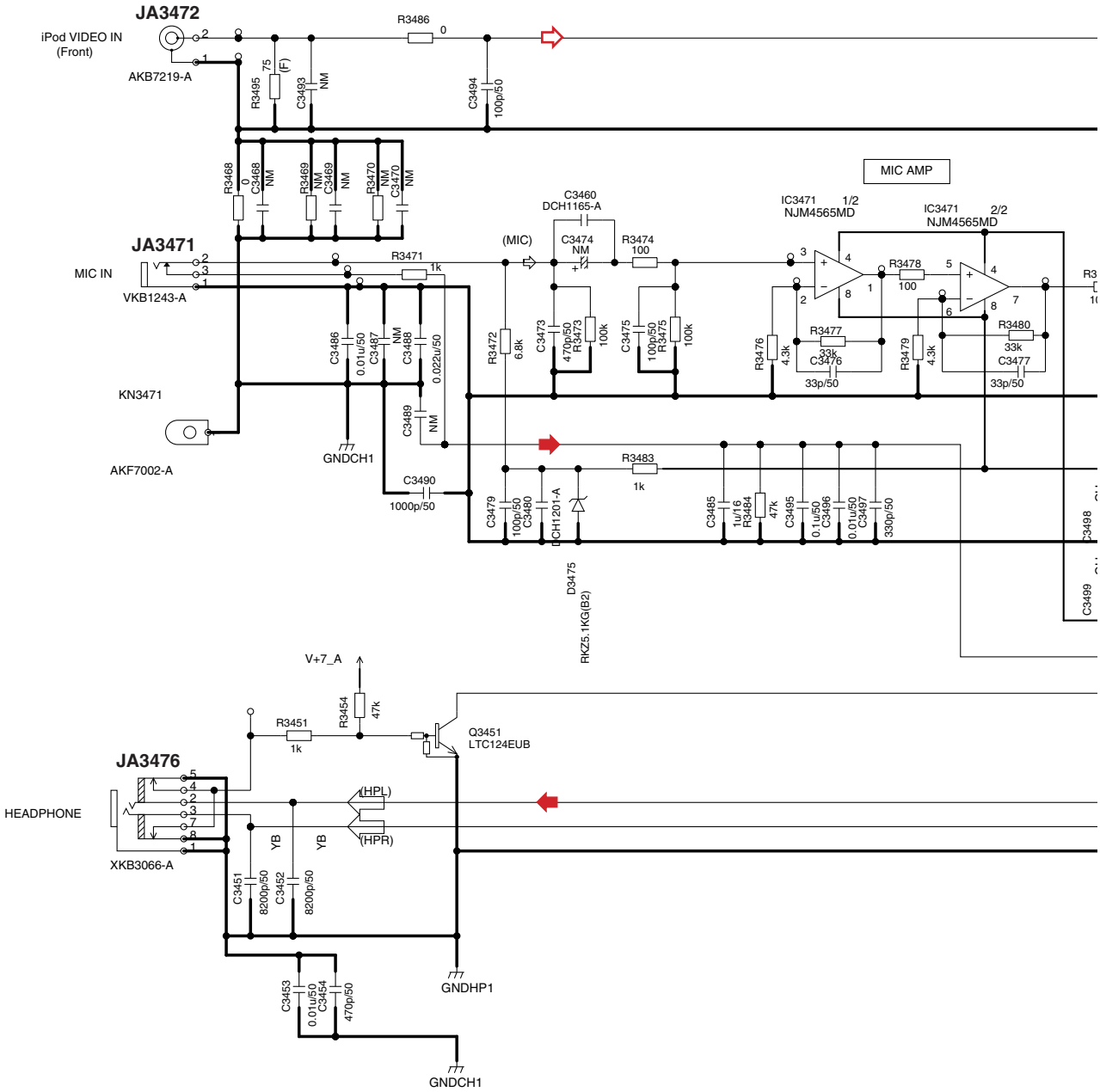

O ENCODER ASSY (AWX9784)

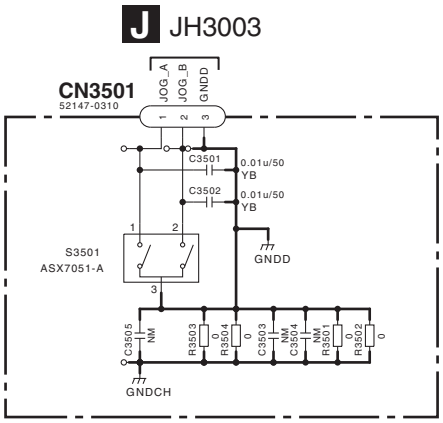

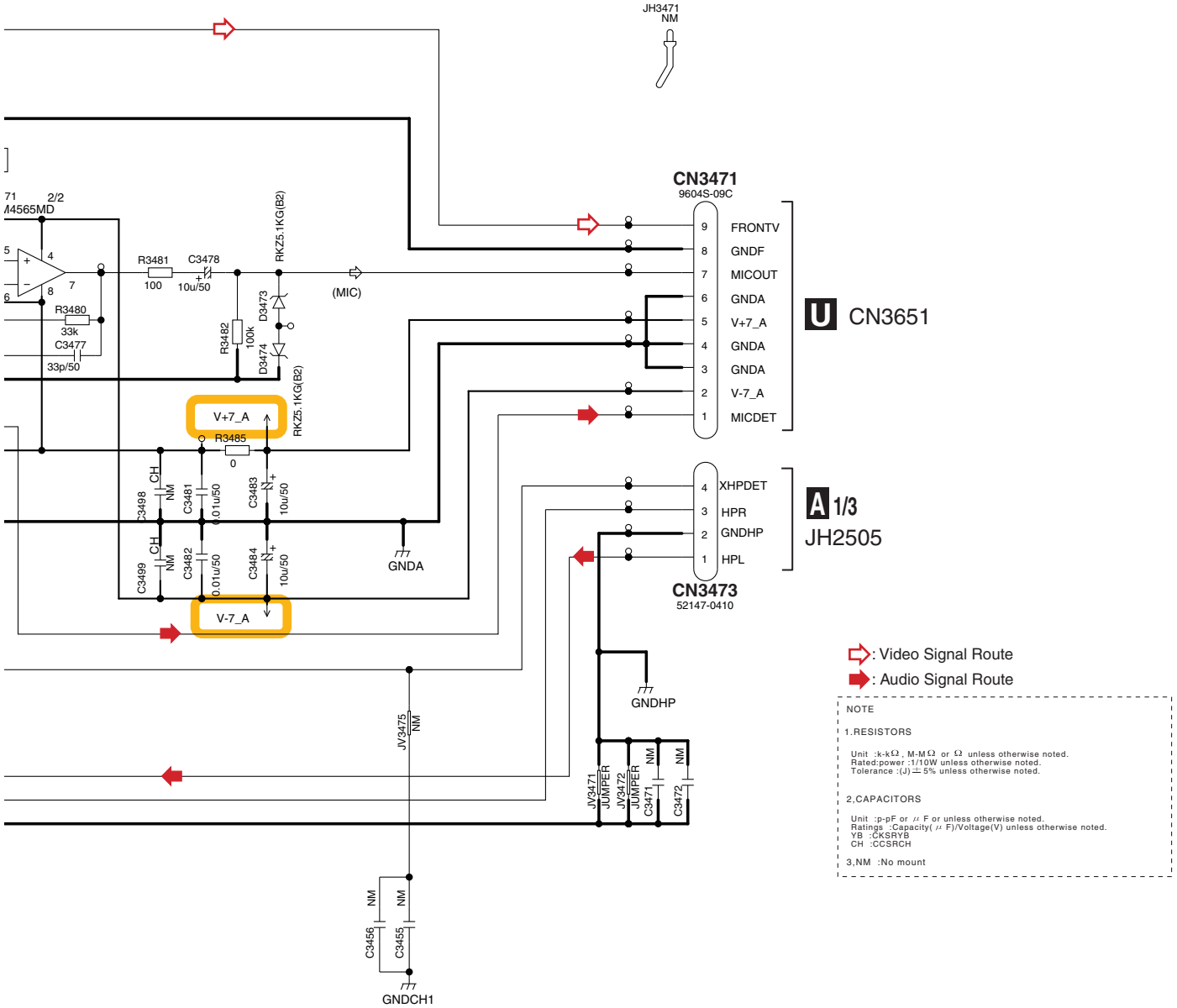

: Video Signal Route
: Audio Signal Route

NOTE

1.RESISTORS

Unit :k-kΩ, M-MΩ or Ω unless otherwise noted.
Rated:power :1/10W unless otherwise noted.
Tolerance :(J)±5% unless otherwise noted.

2,CAPACITORS

Unit :p-pF or μ F or unless otherwise noted.
Ratings :Capacity(μ F)/Voltage(V) unless otherwise noted.
YB :CKSRYB
CH :CCSRCH

3,NM :No mount

O P

10.27 CONNECT and A-DAC BRIDGE ASSYS

Q CONNECT ASSY (AWX9878)

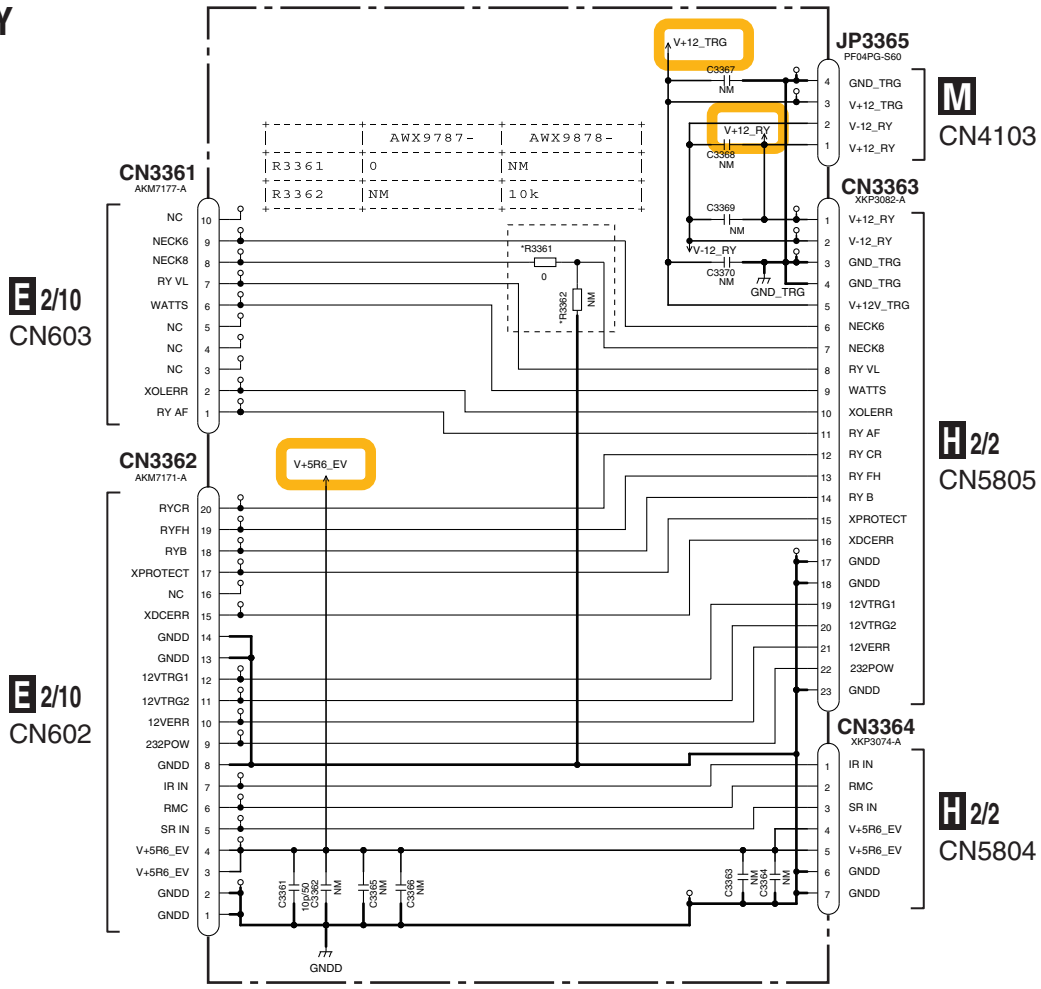

NOTE
1. RESISTORS
Unit: k-kΩ, M-MΩ or Ω unless otherwise noted.
Rated Power: 1/16w unless otherwise noted.
Tolerance: (J)5% unless otherwise noted.
2. CAPACITORS
Unit: p-pF or u-uF unless otherwise noted.
Ratings: Capacity(F)/Voltage(V) unless otherwise noted.
3. NM: No Mount

R A-DAC BRIDGE ASSY (AWX9771)

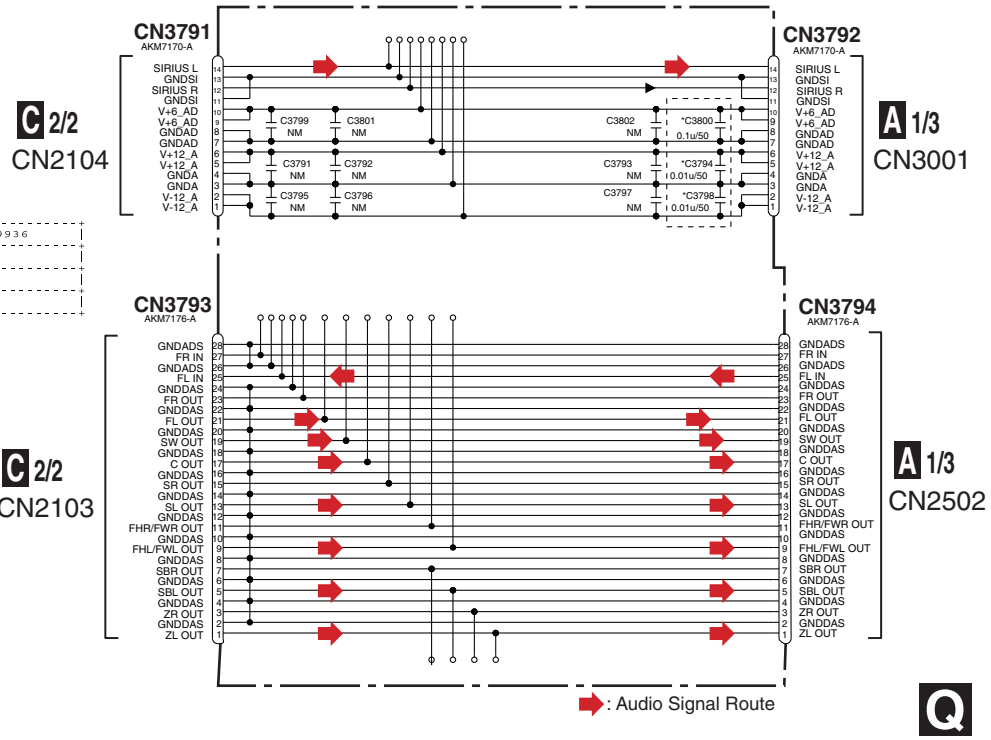

	AWX9771	AWX9936
C3794	NM	0.01u/50
C3798	NM	0.01u/50
C3800	NM	0.1u/50

10.28 D-AUDIO BRIDGE and D-DAC BRIDGE ASSYS

S D-AUDIO BRIDGE ASSY (AWX9769)

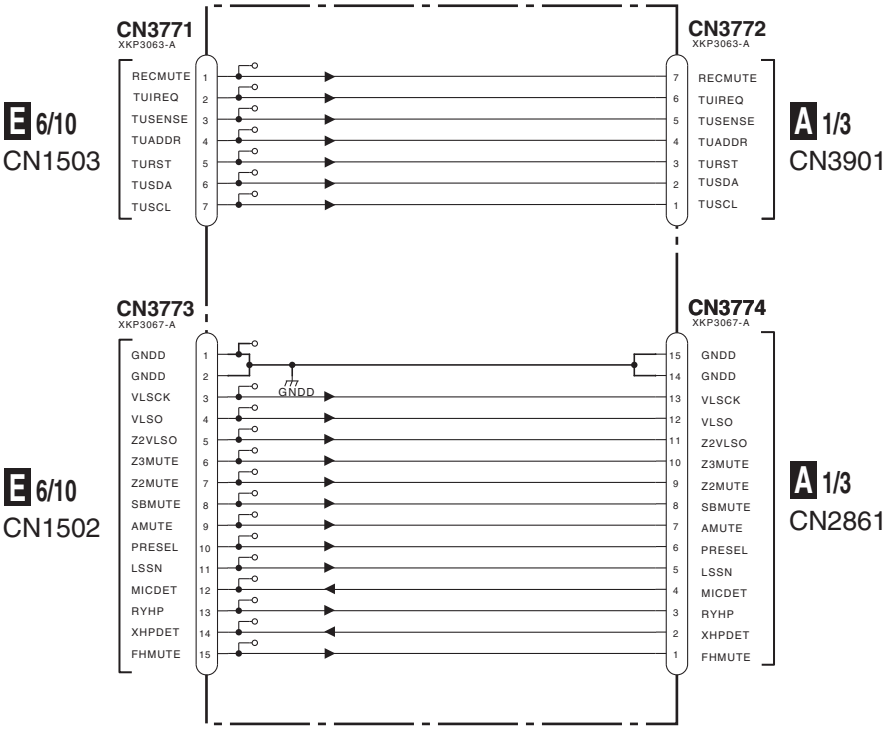

E 6/10 CN1503

A 1/3 CN3901

E 6/10 CN1502

A 1/3 CN2861

NOTE
1. RESISTORS
Unit: k-kΩ, M-MΩ or Ω unless otherwise noted.
Rated Power: 1/10w unless otherwise noted.
Toleranee: (J)5% unless otherwise noted.

2. CAPACITORS
Unit: p-pF or u-uF unless otherwise noted.
Ratings: Capacity(F)/Voltage(V) unless otherwise noted.
CH : CCSRCH
NO MARKED : CKSRYB
3. NM: No Mount

T D-DAC BRIDGE ASSY (AWX9770)

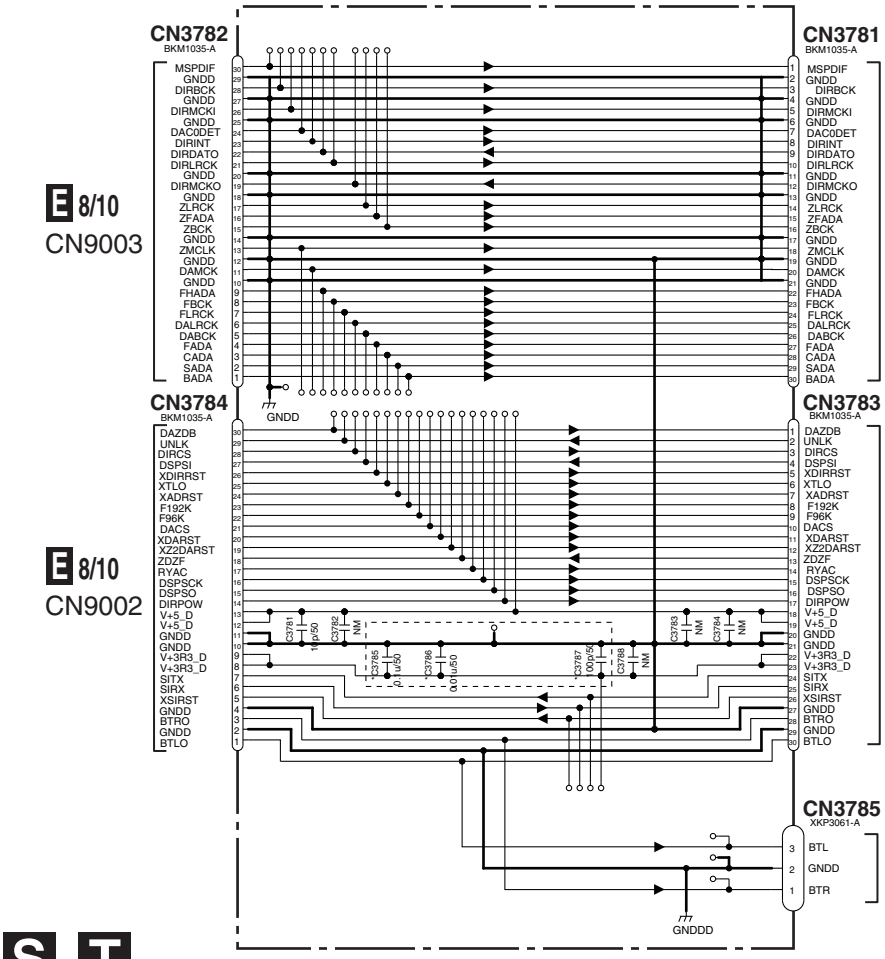

E 8/10 CN9003

C 1/2 CN2102

E 8/10 CN9002

C 1/2 CN2101

	AWX9770	AWX9935
C3785	NM	0.1u/50
C3786	NM	0.01u/50
C3787	NM	100p/50

A 1/3 CN2501

S T

S T

10.29 MIC CONNECT and POSI 1-3 ASSYS

U MIC CONNECT ASSY (AWX9772)

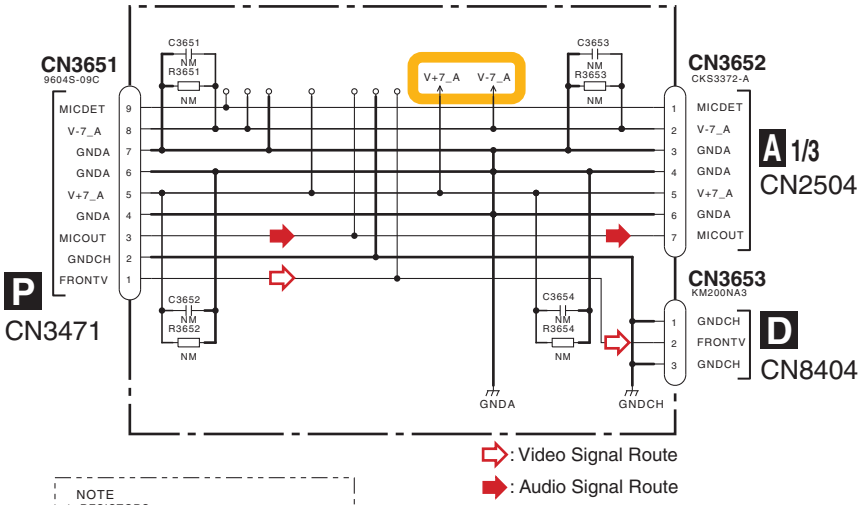

NOTE
1. RESISTORS
Unit: k-kΩ, M-MΩ or Ω unless otherwise noted.
Rated Power: 1/10w unless otherwise noted.
Toleranee: (J)5% unless otherwise noted.

2. CAPACITORS
Unit: p-pF or u-uF unless otherwise noted.
Ratings: Capacity(F)/Voltage(V) unless otherwise noted.
CH : CCSRCH
NO MARKED : CKSRYB
3. NM: No Mount

V POSI 1 ASSY (AWX9879)

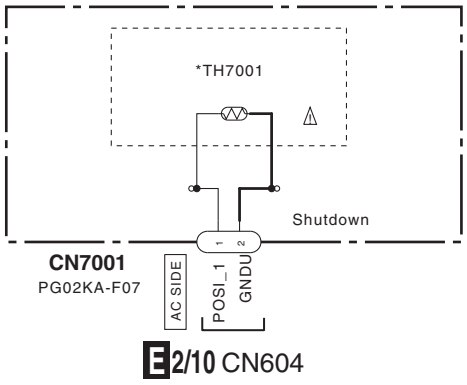

	TH7001
AWX9576	PTFM04BB222Q2N34BS
AWX9663	PTFM04BC222Q2N34BS
AWX9662	PTFM04BB222Q2N34BS
AWX9879	PTFM04BB222Q2N34BS
AWX9881	PTFM04BC222Q2N34BS
AWX9880	PTFM04BB222Q2N34BS

W POSI 2 ASSY (AWX9882)

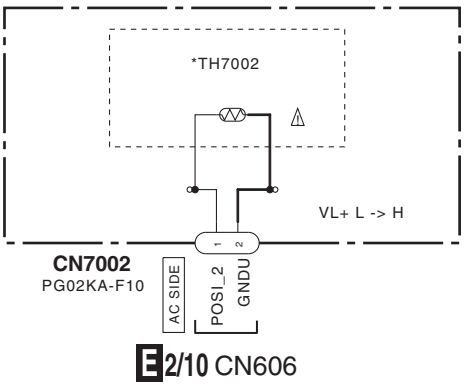

	TH7002
AWX9577	PTFM04BE222Q2N34BS
AWX9664	PTFM04BF222Q2N34BS
AWX9882	PTFM04BE222Q2N34BS
AWX9883	PTFM04BF222Q2N34BS

X POSI 3 ASSY (AWX9884)

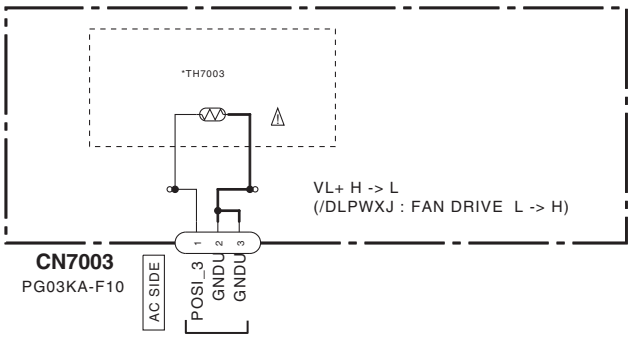

	TH7003
AWX9578-	PTFM04BG222Q2N34BS
AWX9665-	PTFM04BH222Q2N34BS
AWX9884-	PTFM04BG222Q2N34BS
AWX9885-	PTFM04BH222Q2N34BS

The ⚠ mark found on some component parts should be replaced with same parts (safety regulation authorized) of identical designation.

U V W X

U V W X

10.30 BIND L FRONT/BACK, BIND R FRONT, BIND DISP FFC, FFC GUARD/GUARD 2 and BIND R BACK ASSYS

Y BIND L FRONT ASSY (AWX9891)

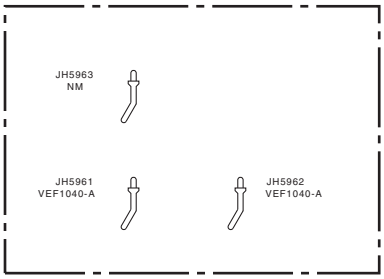

Z BIND L BACK ASSY (AWX9779)

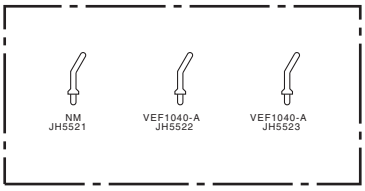

AA BIND R FRONT ASSY (AWX9778)

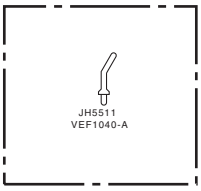

AB BIND DISP FFC ASSY (AWX9780)

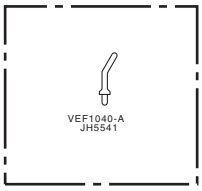

AC FFC GUARD ASSY (AWX9777)

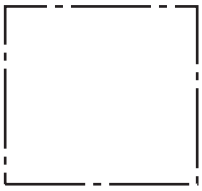

AD FFC GUARD 2 ASSY (AWX9892)

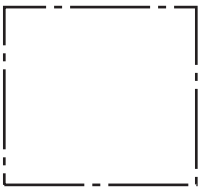

AE BIND R BACK ASSY (AWX9586)

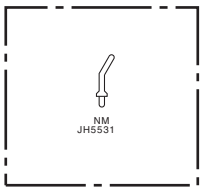

NOTE
1. NM : NO MOUNT

11. PCB CONNECTION DIAGRAM
11.1 AUDIO ASSY

SIDE A

A AUDIO ASSY

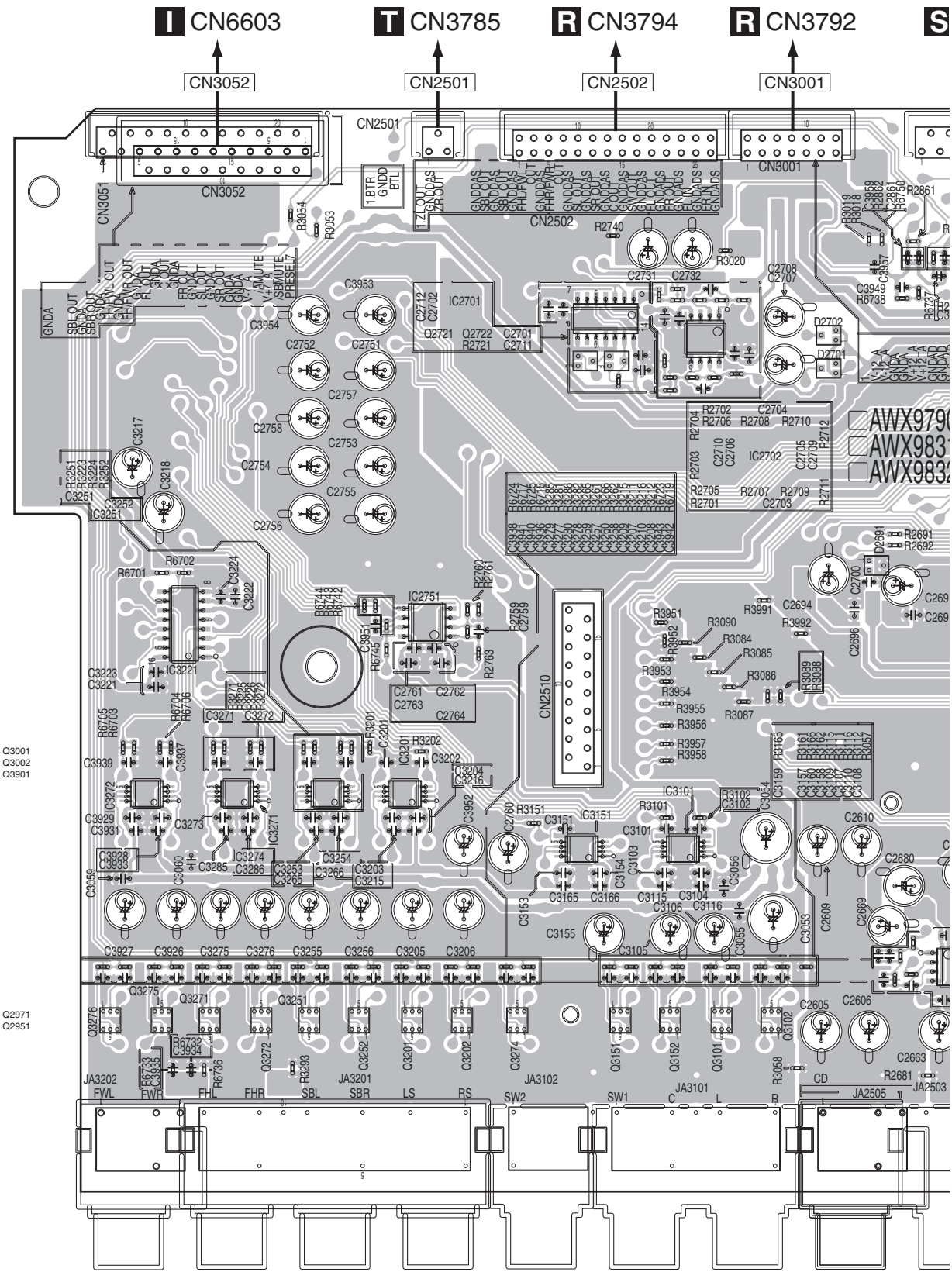

NOTE FOR PCB DIAGRAMS :

1. The parts mounted on this PCB include all necessary parts for several destinations. For further information for respective destinations, be sure to check with the schematic diagram.
2. View point of PCB diagrams.

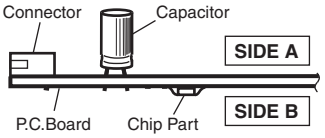

SIDE A

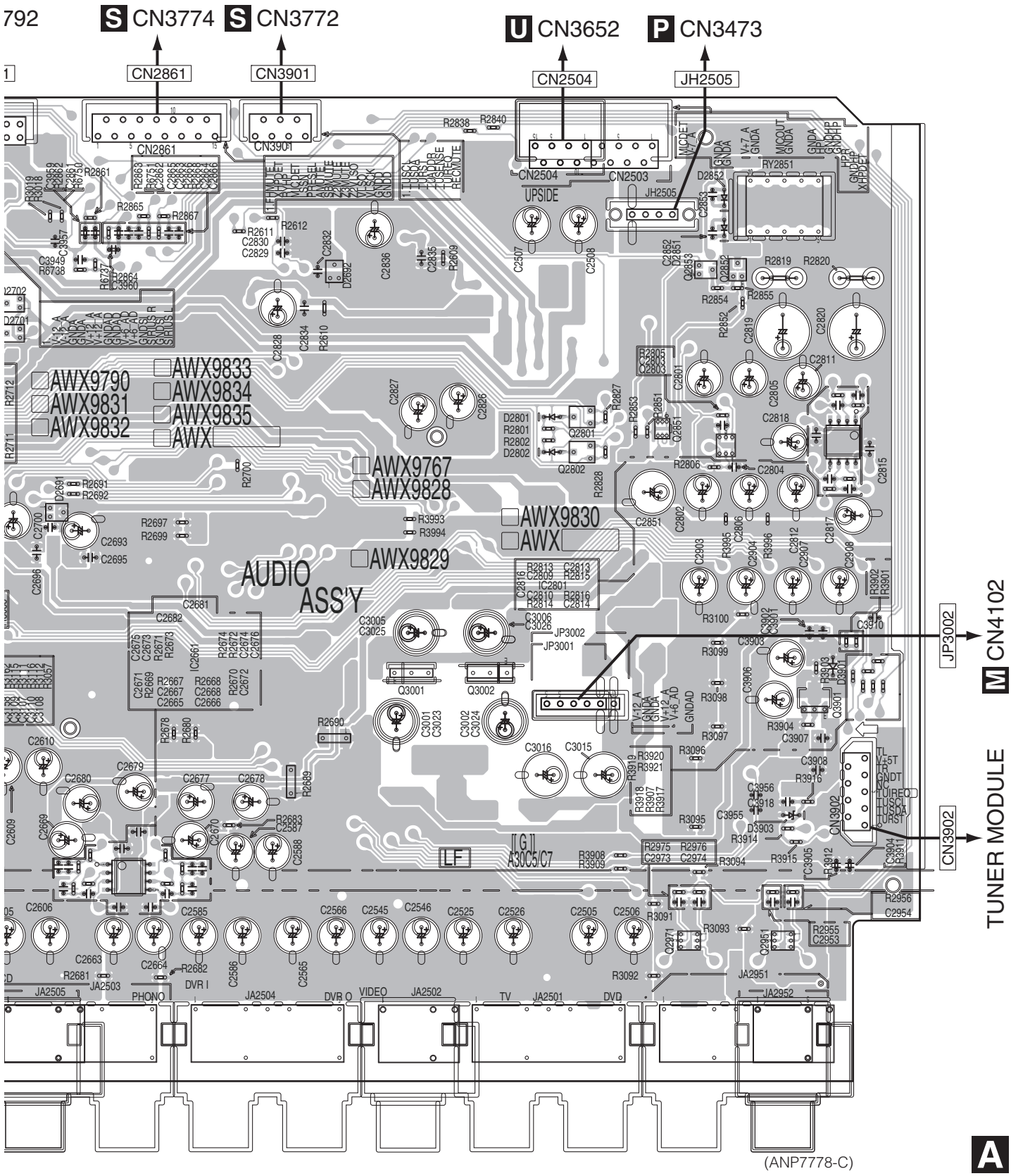

A

SIDE B

A AUDIO ASSY

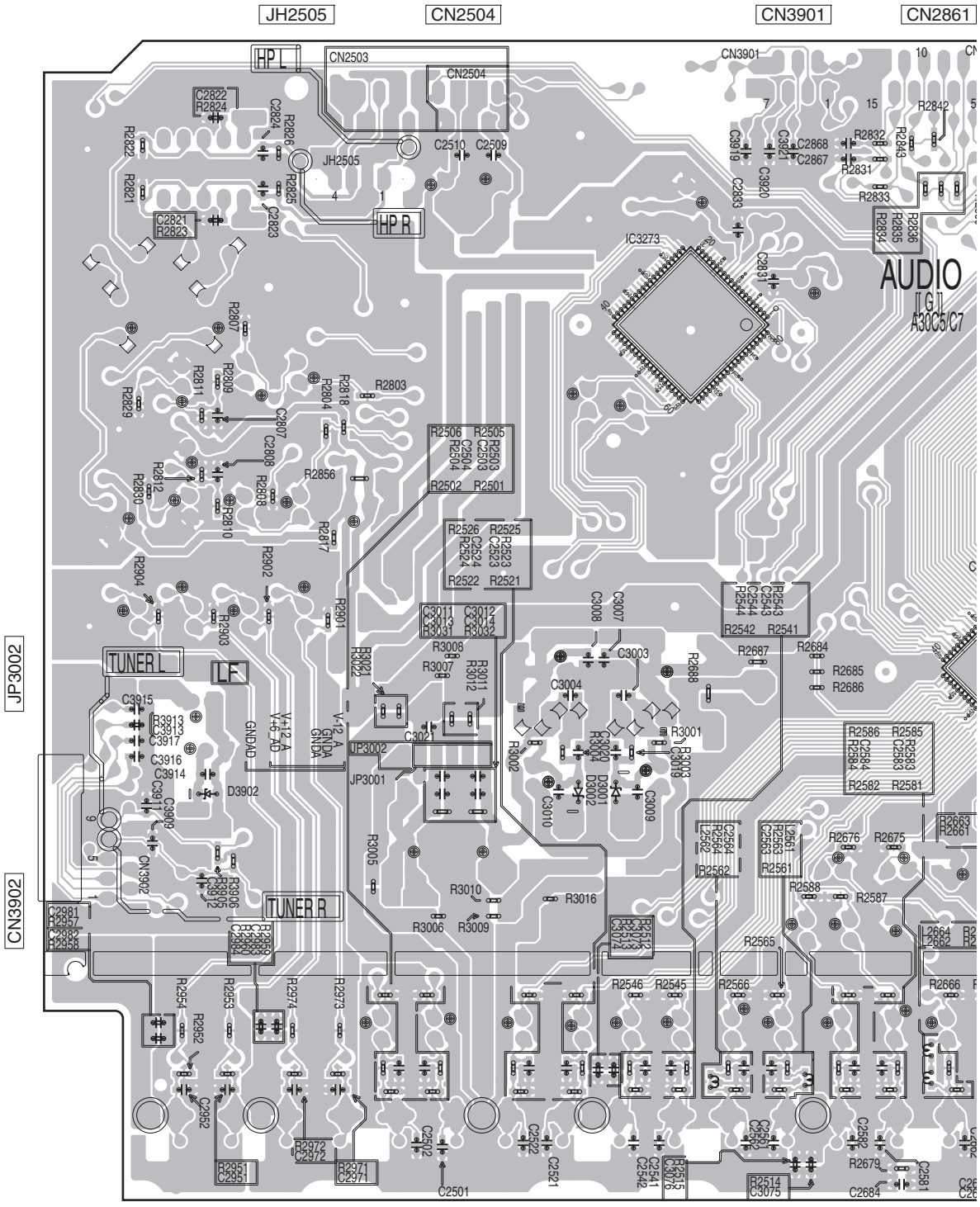

CN2861 CN3001 CN2502 CN2501 CN3052

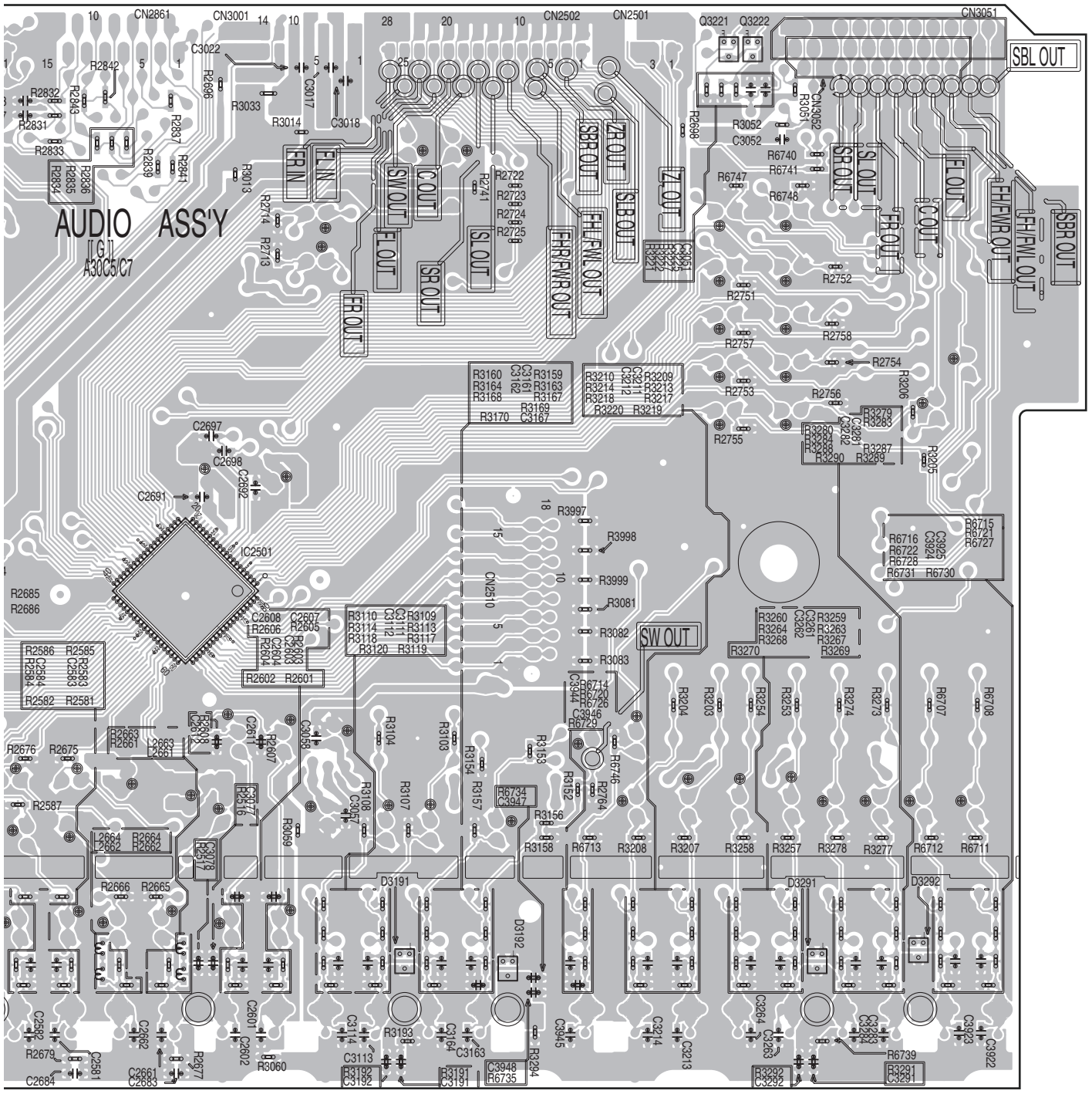

(ANP7778-C)

11.2 COMPOSITE ASSY

SIDE A

SIDE A

B COMPOSITE ASSY

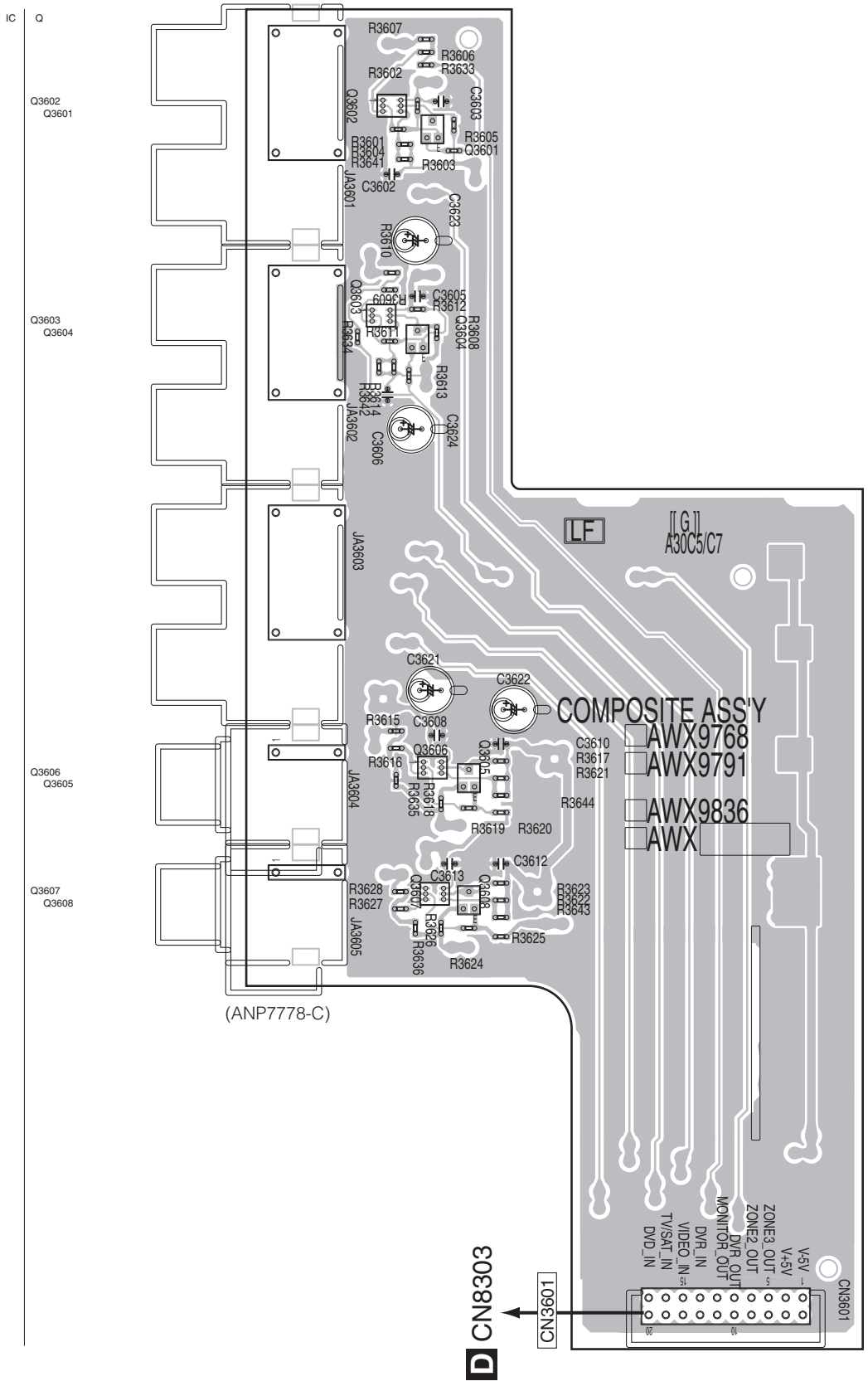

B

B

SIDE B

SIDE B

B COMPOSITE ASSY

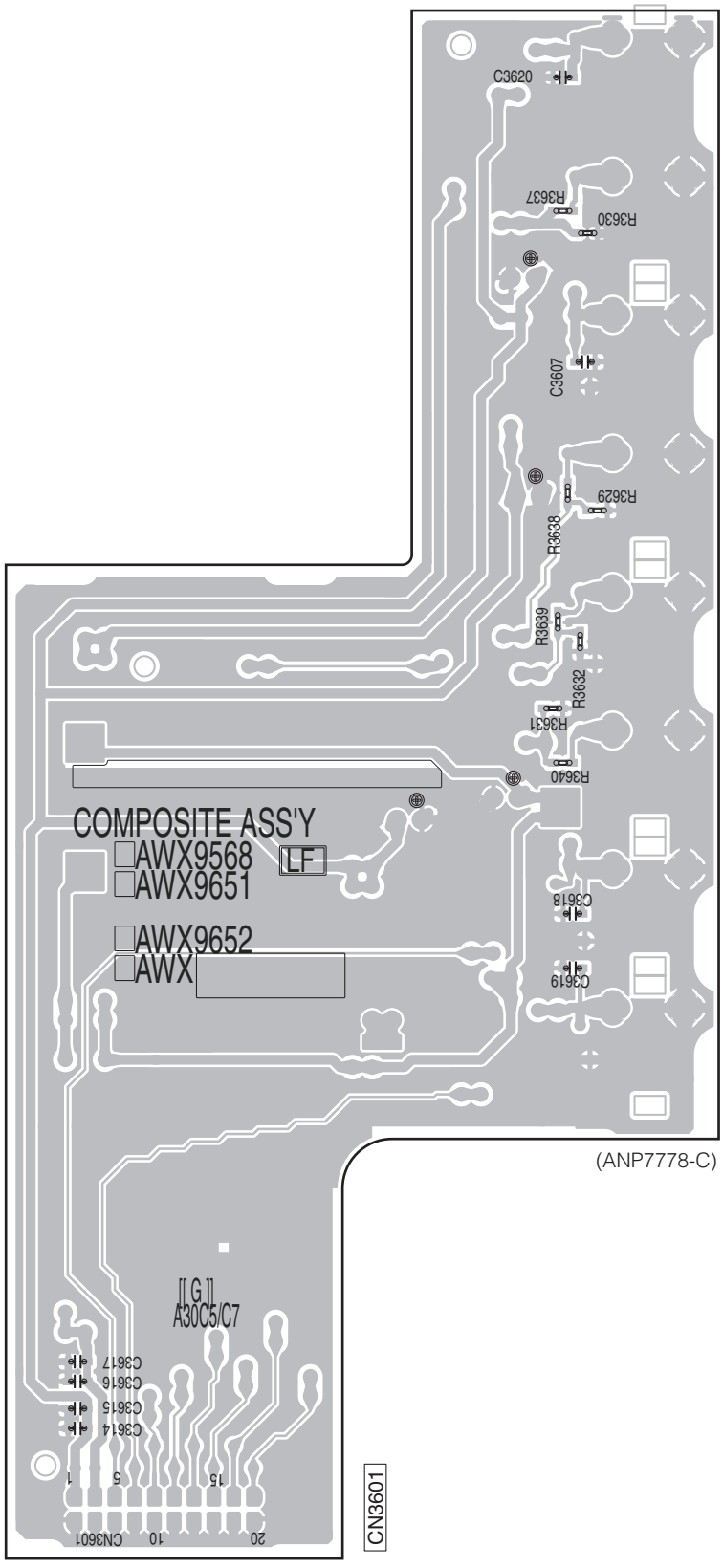

(ANP7778-C)

11.3 DAC LOW ASSY

SIDE A

SIDE A

C DAC LOW ASSY

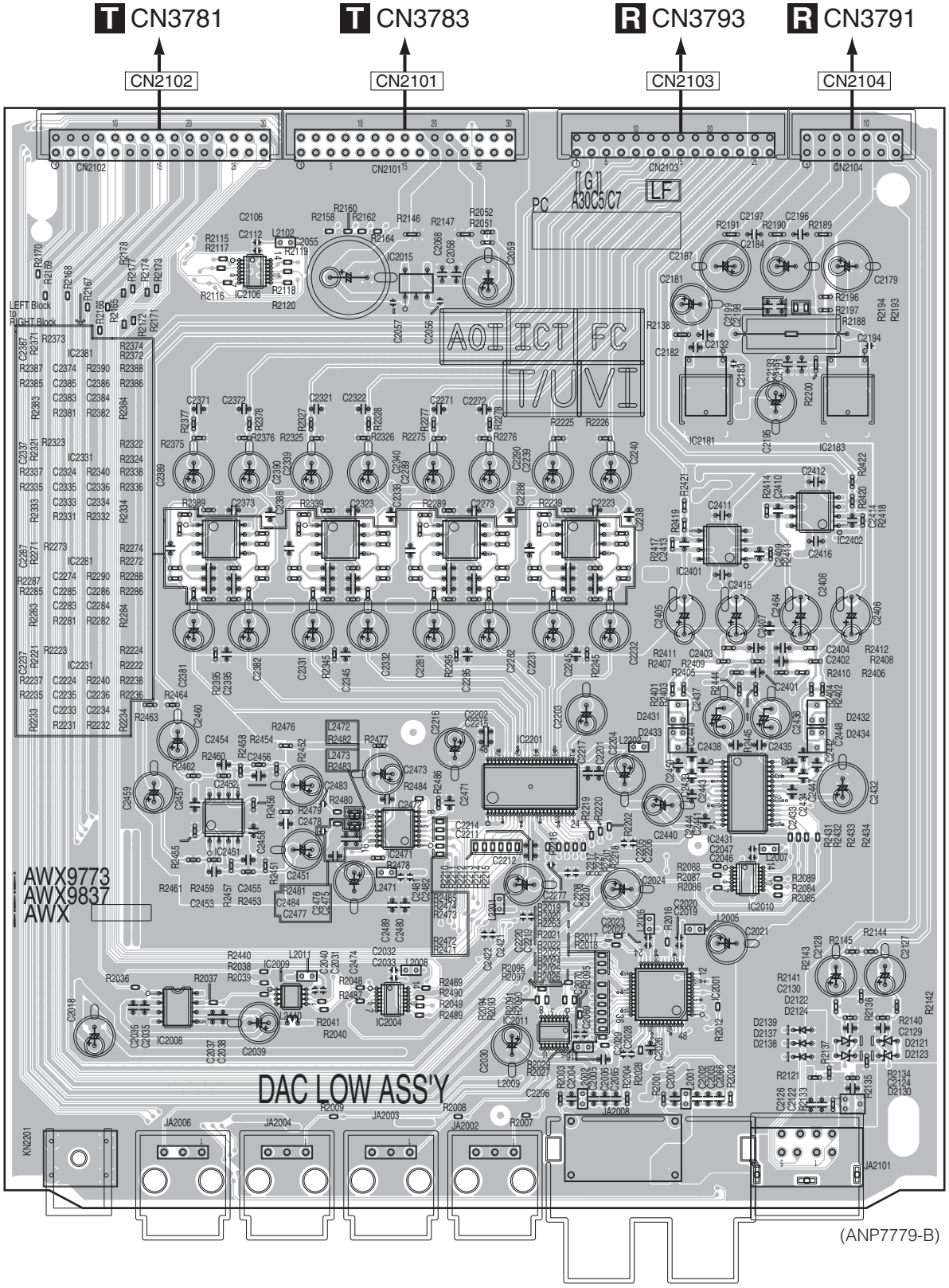

SIDE B

C DAC LOW ASSY

CN2104 CN2103 CN2101 CN2102

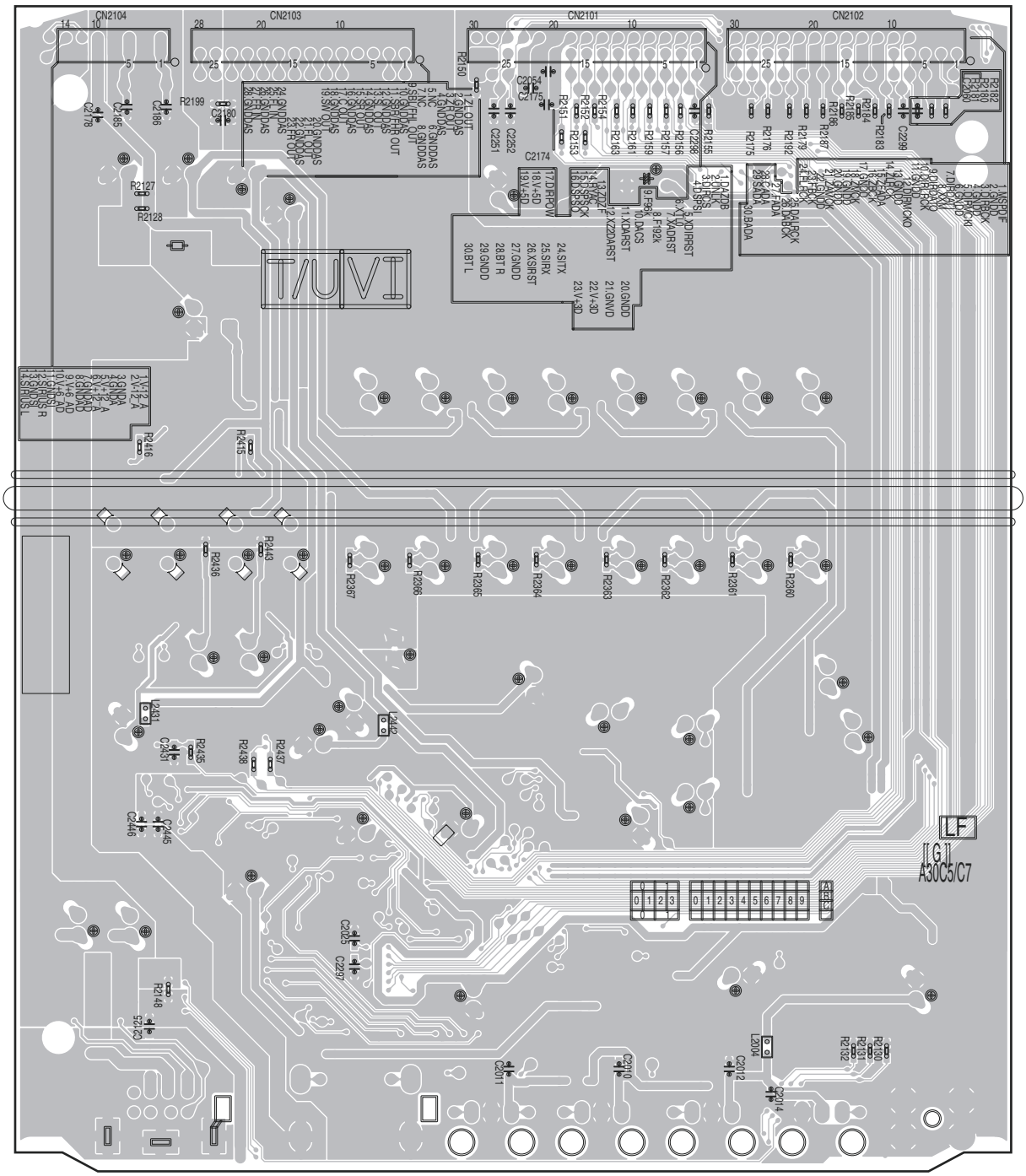

(ANP7779-B)

11.4 COMPONENT ASSY

SIDE A

D COMPONENT ASSY

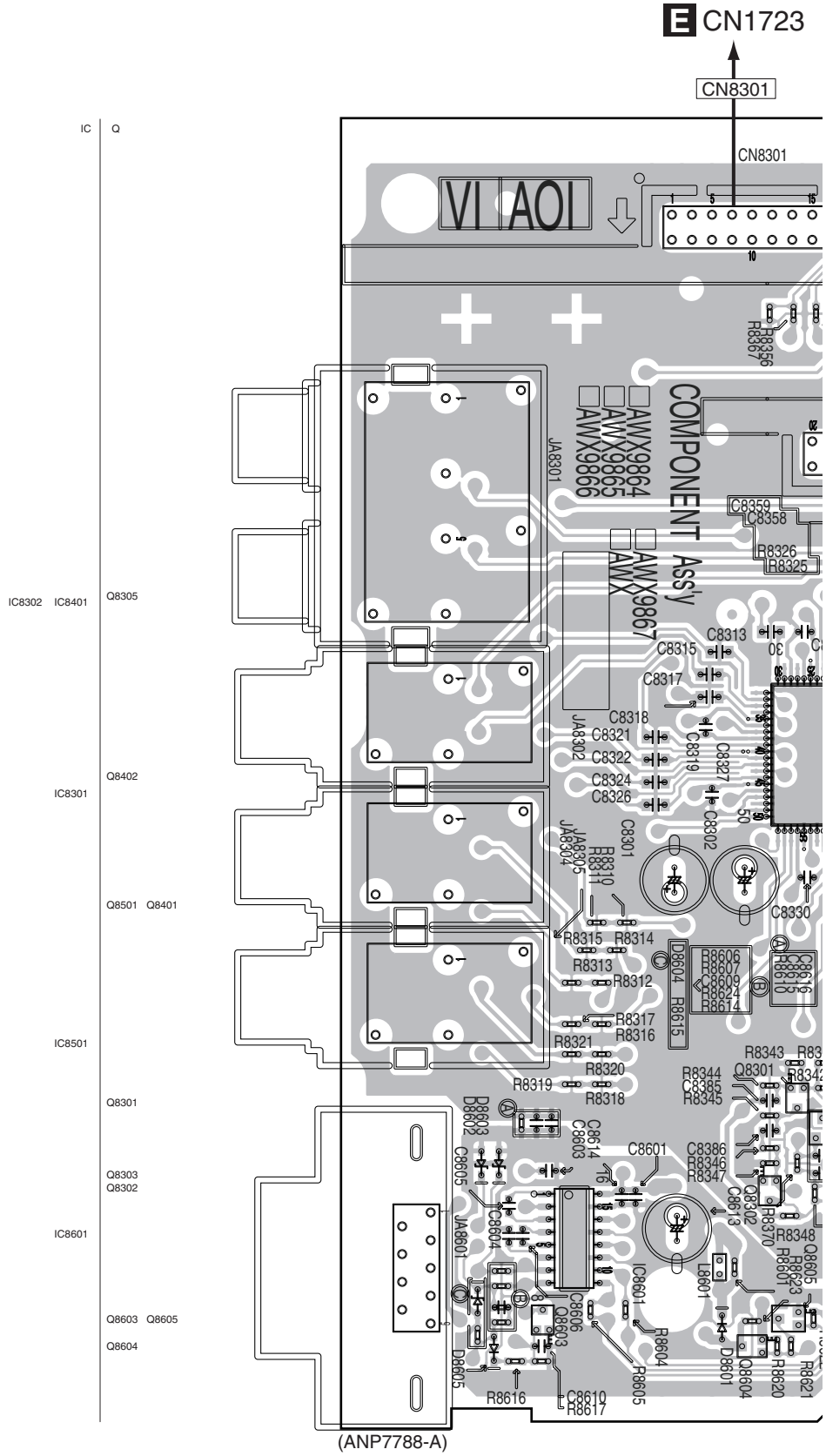

(ANP7788-A)

SIDE A

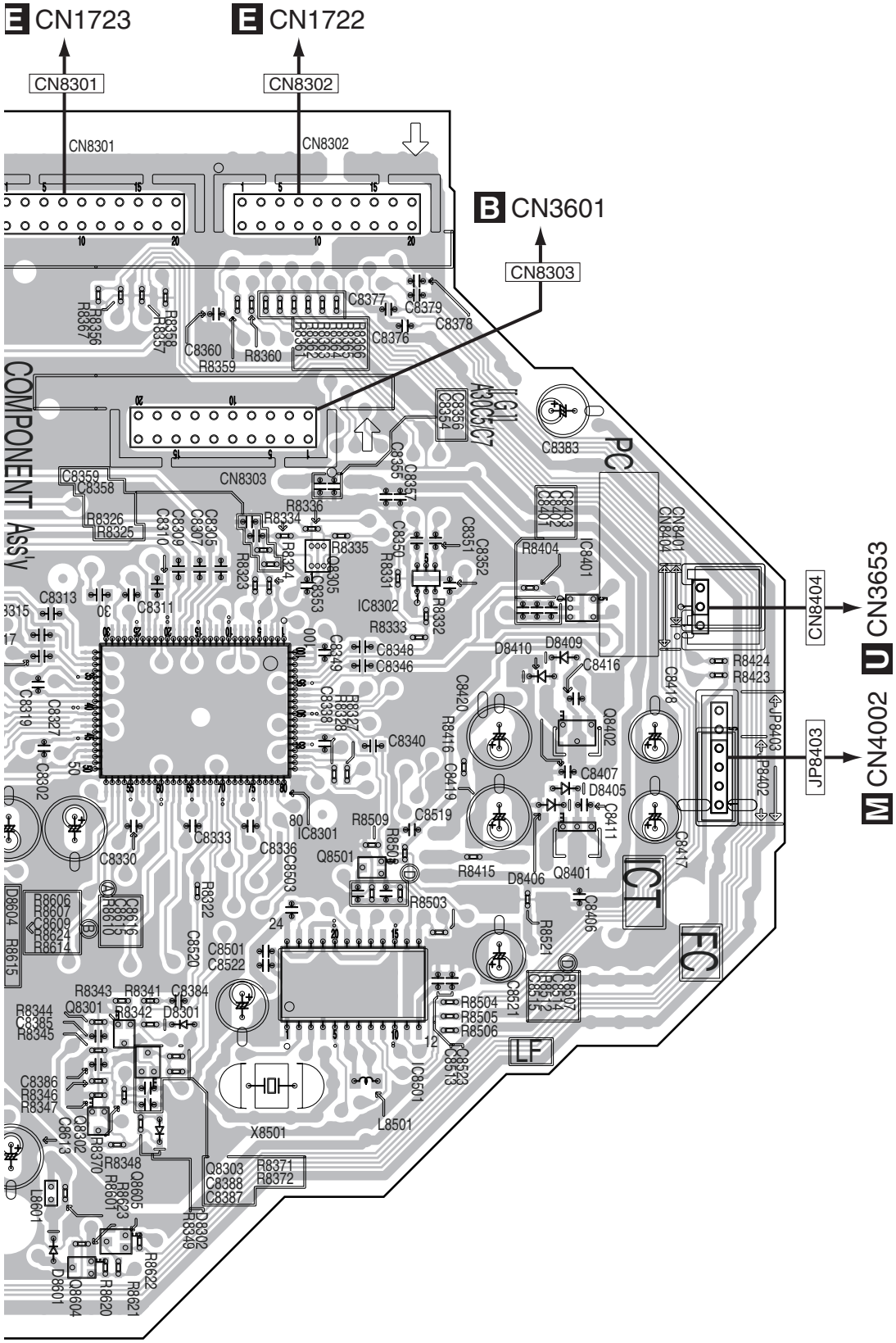
E CN1723
E CN1722
CN8301
CN8302
B CN3601
CN8303
CN8404
U CN3653
JP8403
M CN4002
COMPONENT Ass'y
PC
ICT
FC
LF
IC8302
IC8301
X8501
L8501
Q8501
Q8401
Q8402
Q8303
Q8301
Q8302
Q8605
Q8604
D8409
D8410
D8406
D8405
D8301
D8601
D8604
D8302
C8416
C8407
C8411
C8383
C8378
C8379
C8377
C8376
C8360
R8359
R8360
R8404
R8424
R8423
R8415
R8509
R8503
R8504
R8505
R8506
R8521
R8348
R8371
R8372
R8349
R8622
R8620
R8621
R8623
R8601
R8606
R8607
R8609
R8624
R8614
R8615
R8616
R8610
R8343
R8341
R8342
R8344
R8345
R8346
R8347
R8370
R8322
R8326
R8325
R8323
R8324
R8334
R8336
R8335
R8331
R8332
R8333
R8327
R8328
R8338
R8358
R8357
R8356
R8367
C8384
C8385
C8386
C8387
C8388
C8613
C8520
C8522
C8501
C8503
C8336
C8333
C8330
C8302
C8319
C8327
C8313
C8311
C8315
C8309
C8310
C8307
C8305
C8359
C8358
C8353
C8355
C8357
C8356
C8354
C8350
C8351
C8352
C8348
C8346
C8349
C8340
C8419
C8420
C8418
C8417
C8406
C8521
C8523
C8513
C8519
C8401
C8403
C8402
C8404
CN8401
CN8404
JP8403
P8402

SIDE B

D COMPONENT ASSY

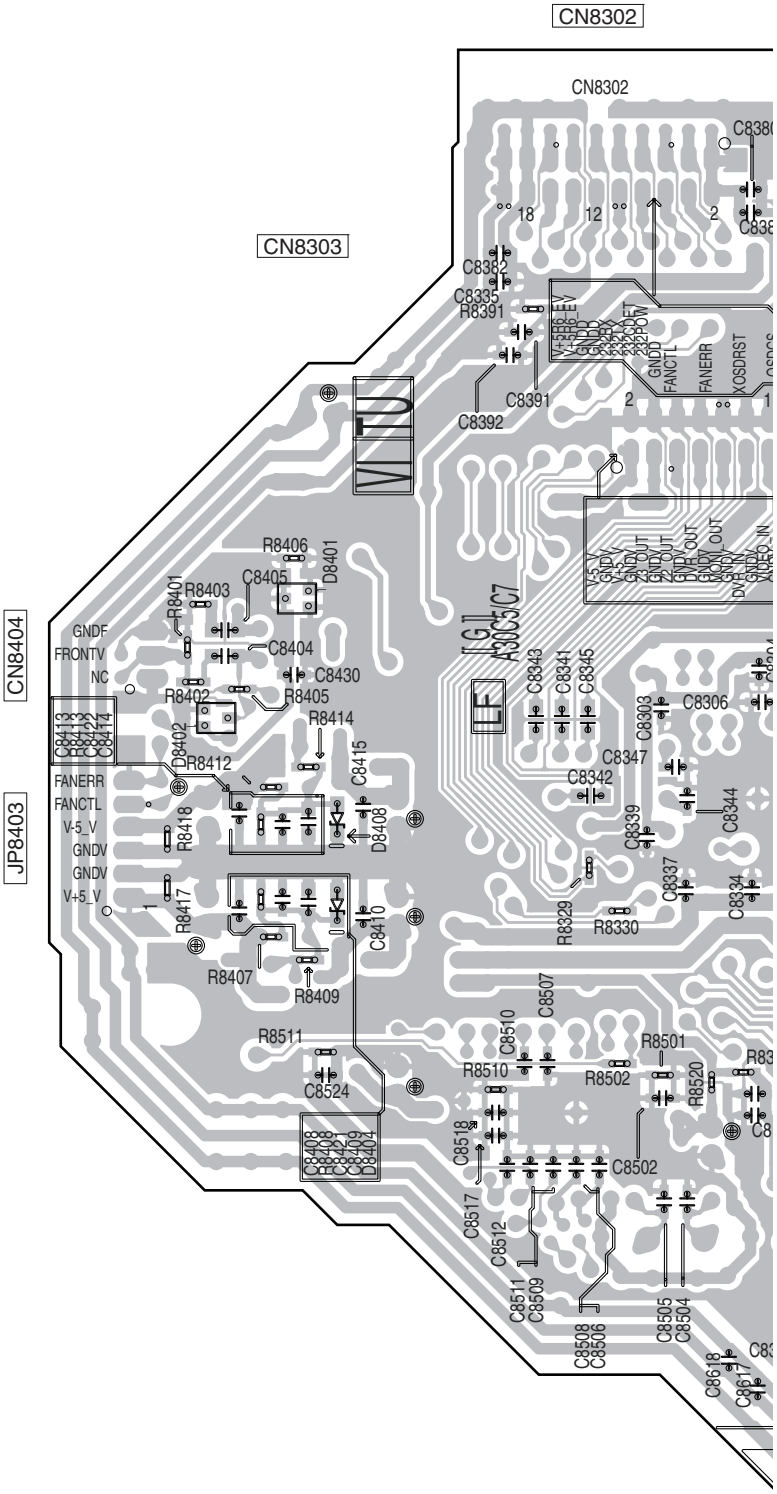

SIDE B

A

B

C

D

E

F

8302 CN8301

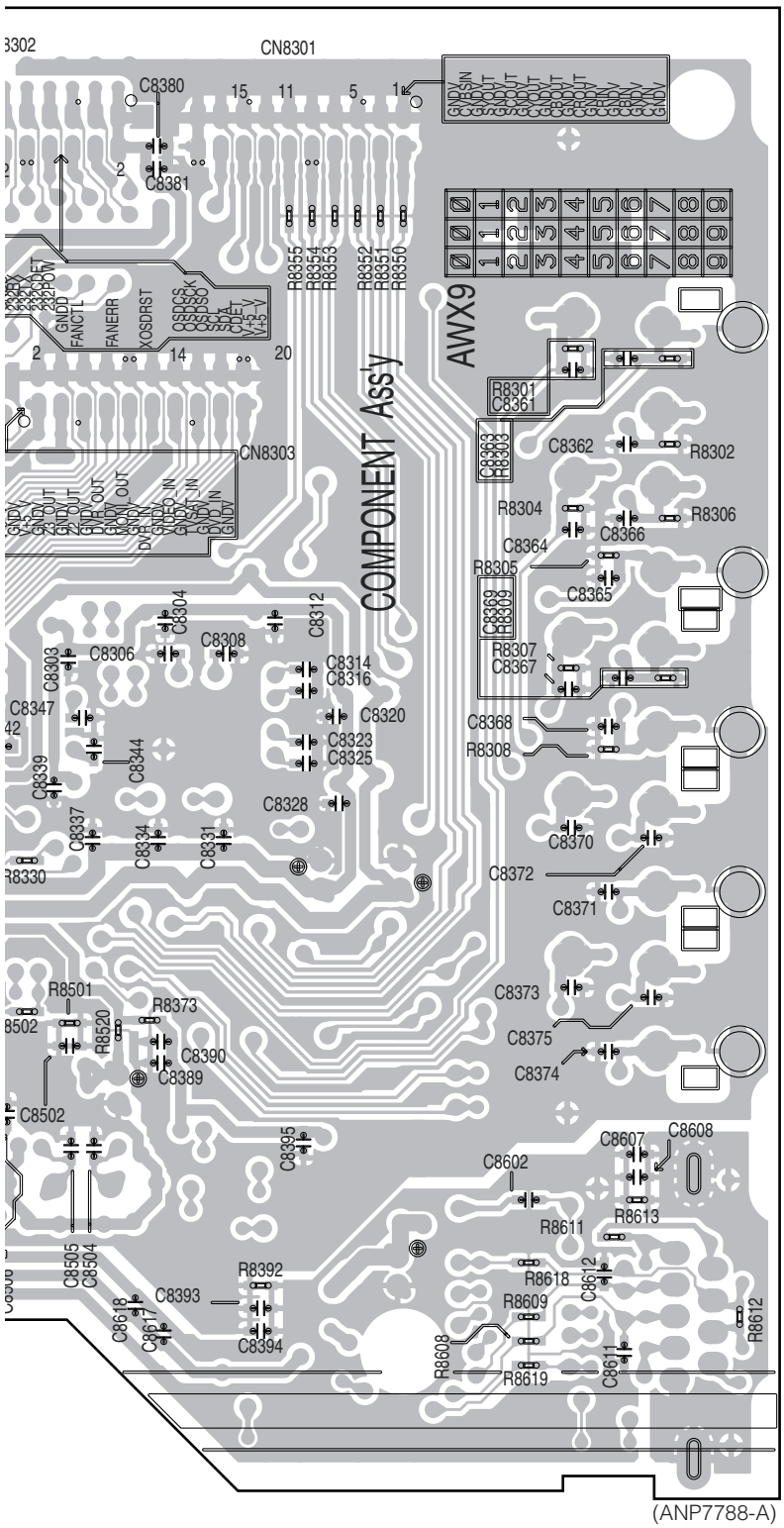

(ANP7788-A)

11.5 DIGITAL MAIN ASSY

SIDE A

E DIGITAL MAIN ASSY

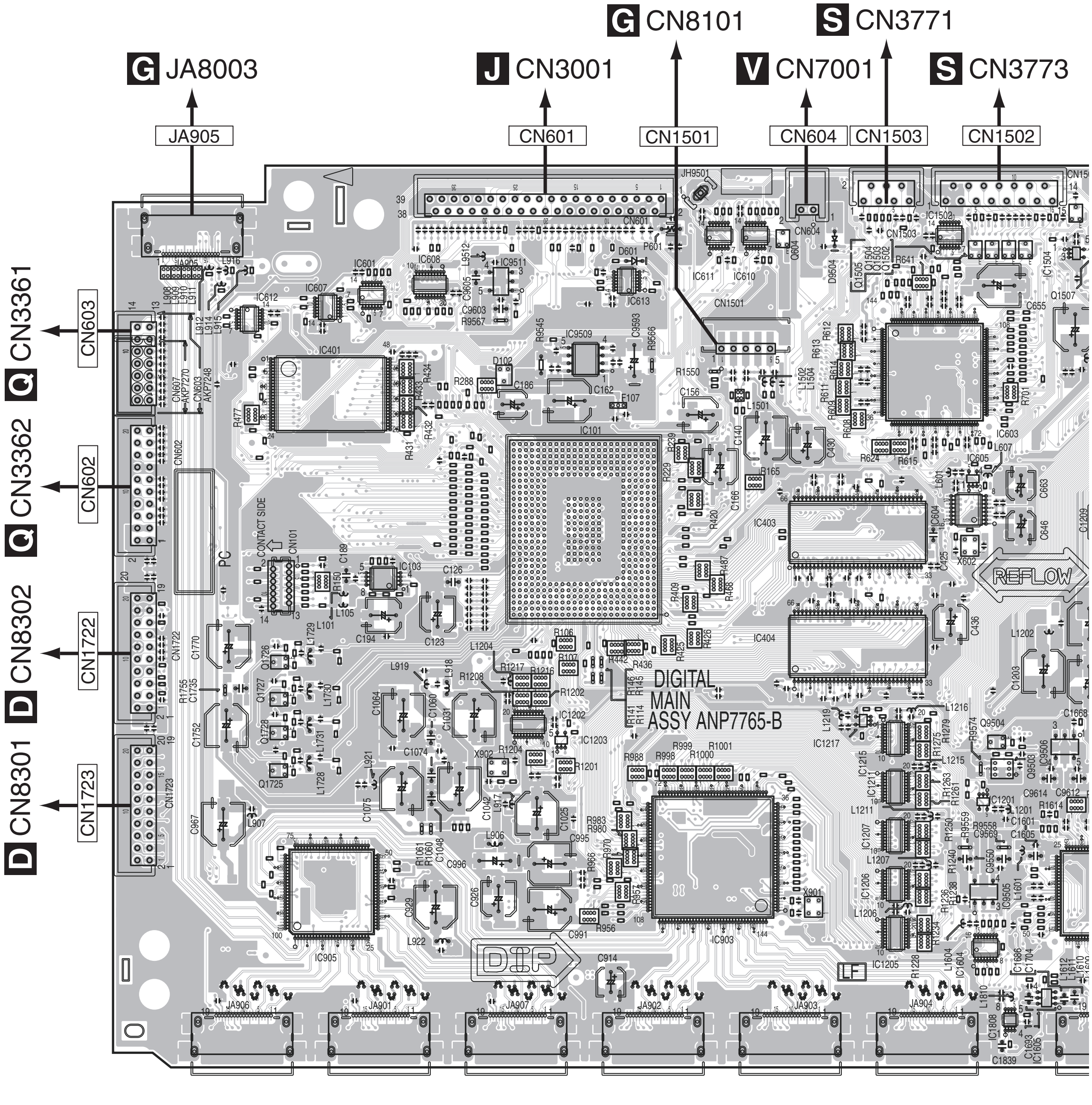

Q: Q1726 Q1727 Q1728 Q1725 / Q604 / Q1505 Q1503 / Q1504 Q1502 Q9504 Q9503 / Q15…

IC: IC612 / IC607 IC401 IC905 / IC601 IC103 / IC608 / IC9511 / IC613 IC9509 IC101 IC1202 IC1203 / IC611 IC903 / IC610 / IC403 IC404 IC1217 / IC1215 IC1211 IC1207 IC1206 IC1205 / IC1201 IC9505 IC1604 / IC604 IC9506 / IC1502 IC603 IC605 IC1808 / IC1605 / IC15…

SIDE A

A

B

C

D

E

F

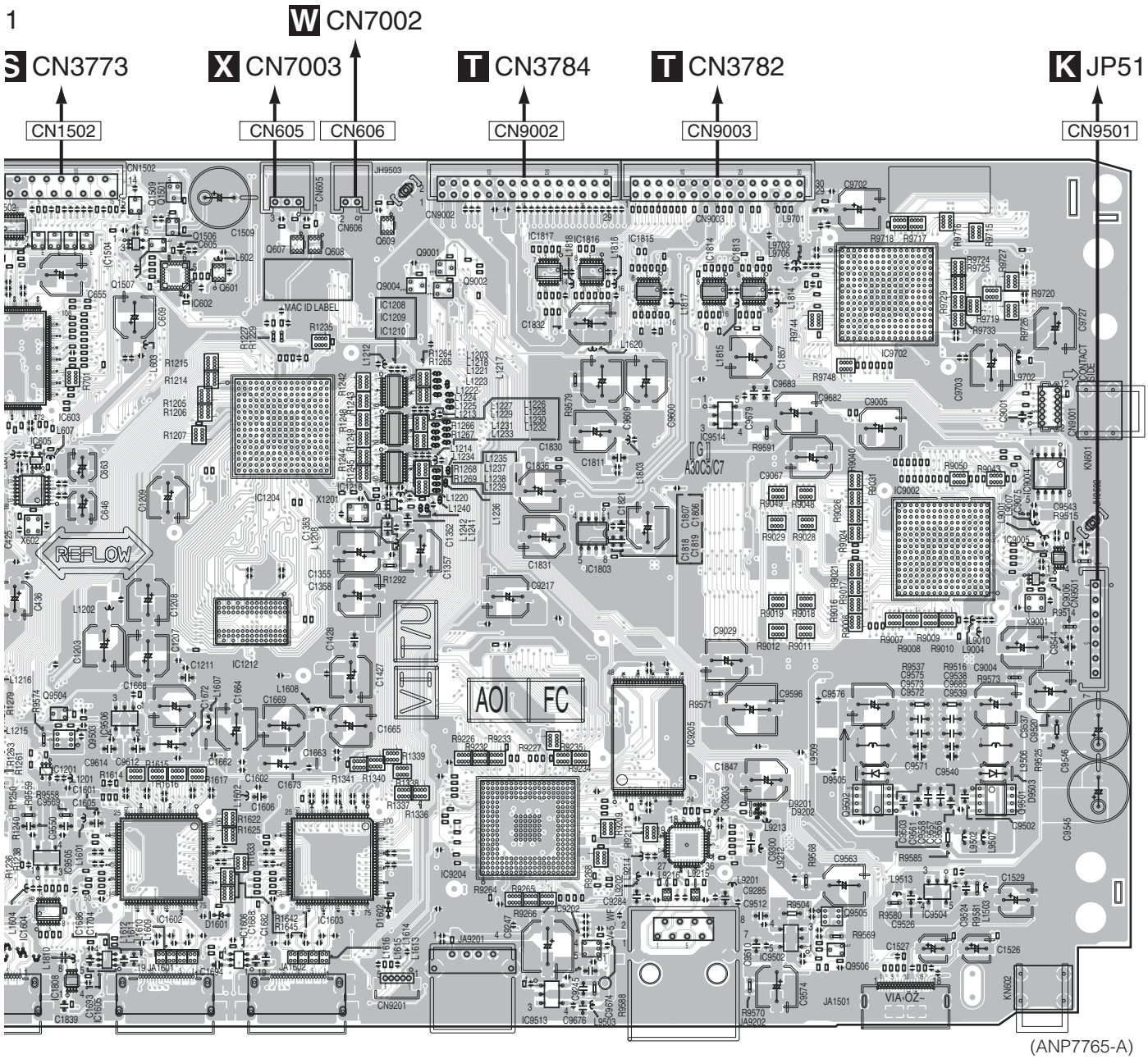

(ANP7765-A)

Q1505 Q1504 Q1503 Q1502 Q9504 Q9503 | Q1509 Q1501 Q601 Q1507 Q1506 | Q607 Q608 Q609 | Q9001 Q9004 Q9002 | Q9502 Q9505 Q9506 | Q9501

IC1502 IC603 IC1504 IC602 IC1208 IC1209 IC1210 IC1817 IC1816 IC1815 IC1814 IC9514 IC1813 IC9702 IC9004 IC9005
1201 IC604 IC605 IC1204 IC1218 IC1212 IC9204 IC1803 IC9205 IC9002 IC9006
9505 IC9506 IC1602 IC1603 IC9203
1604 IC1808 IC1605 IC1606 IC9513 IC9202 IC9502 IC9504

SIDE B

E DIGITAL MAIN ASSY

CN9501 CN9003 CN9002 CN606 CN605

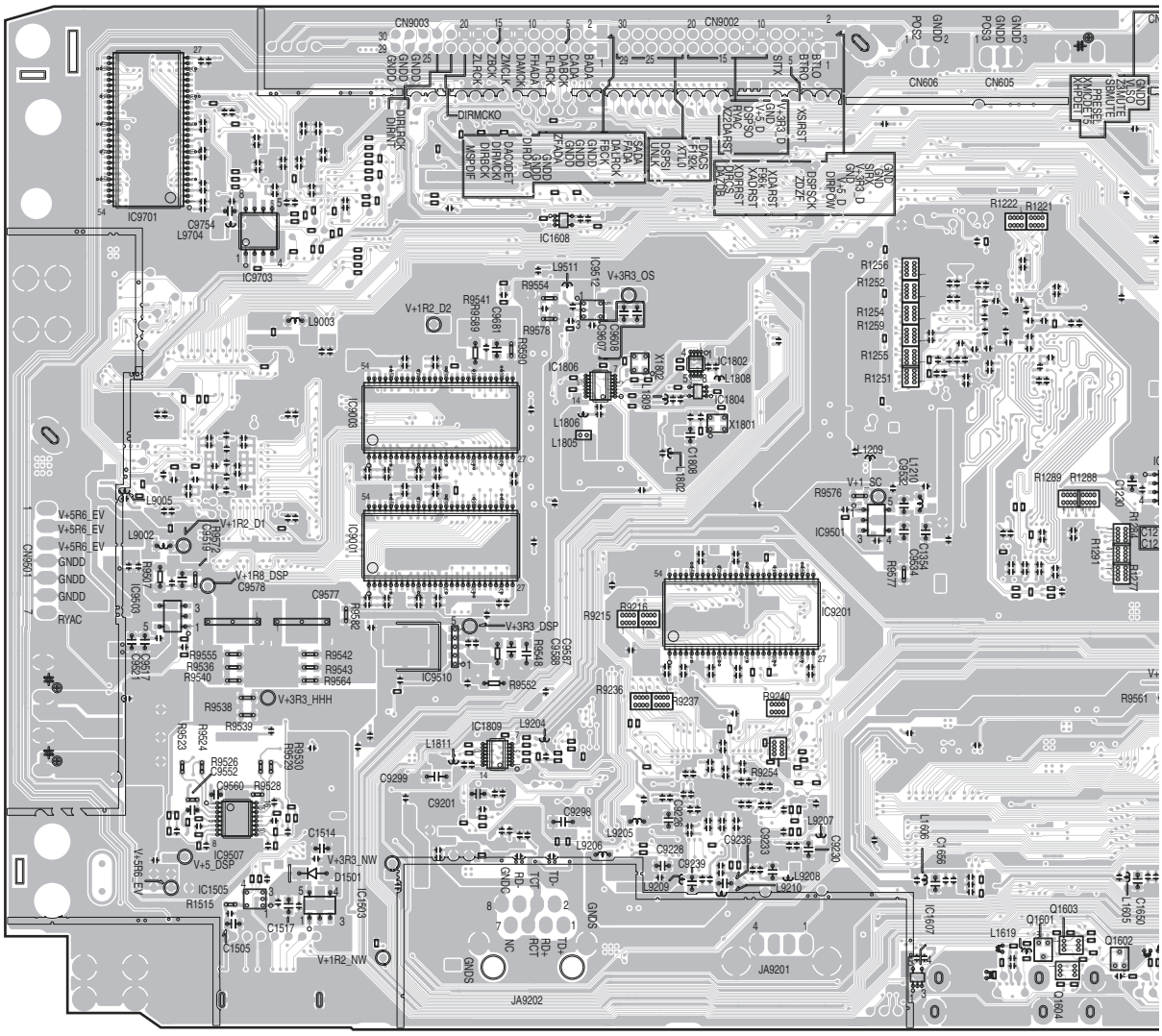

SIDE B

CN605 CN1502 CN1503 CN604 CN1501 CN601 JA905

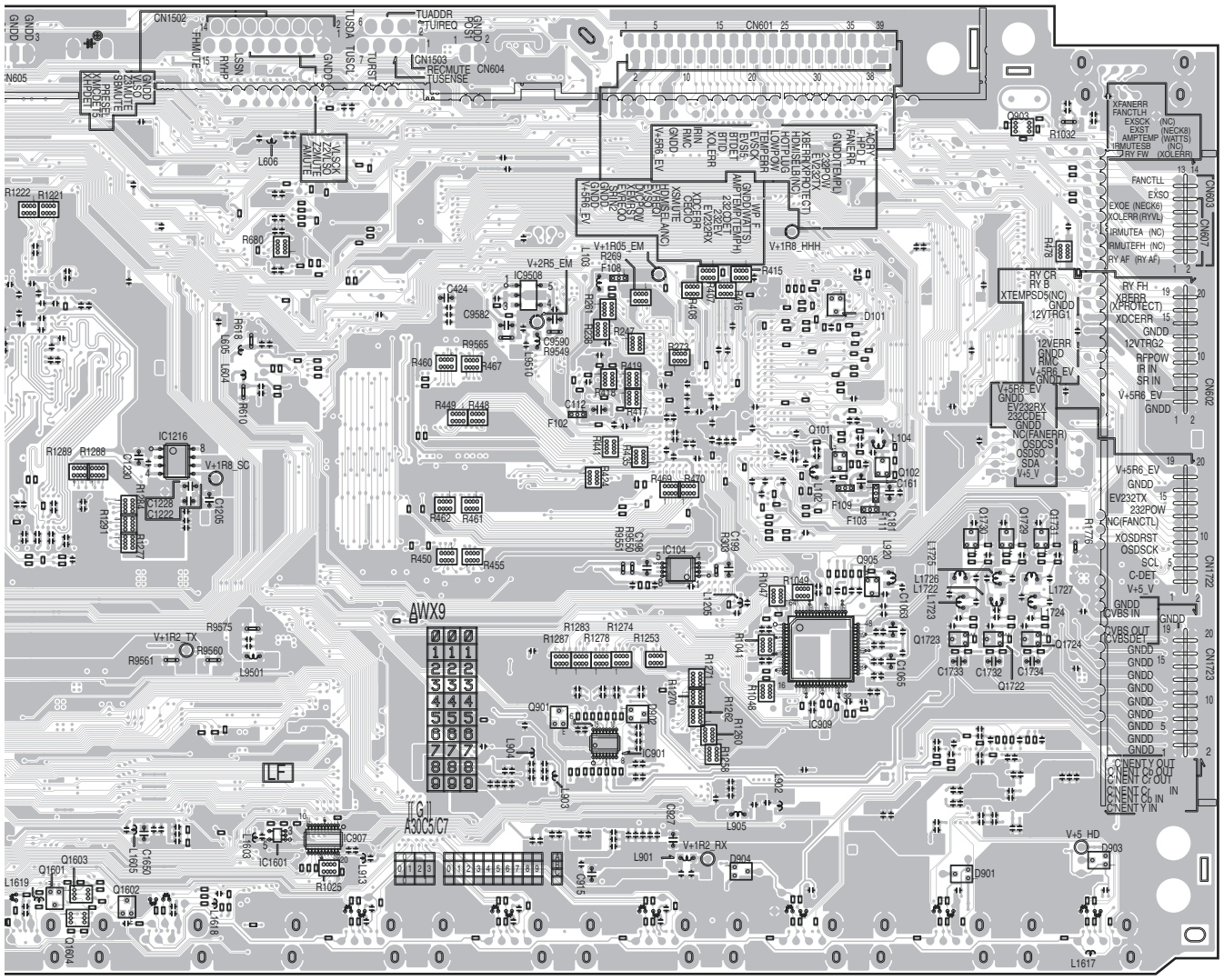

(ANP7765-A)

Q1603 Q1601 Q1602 Q1604 Q901 Q101 Q102 Q905 Q903 Q1730 Q1729 Q1731 Q1723 Q1722 Q1724

IC1216 IC9508 IC104 IC909 IC1601 IC907 IC901

11.6 VOL and FRONT HDMI USB ASSYS

SIDE A

SIDE A

F VOL ASSY

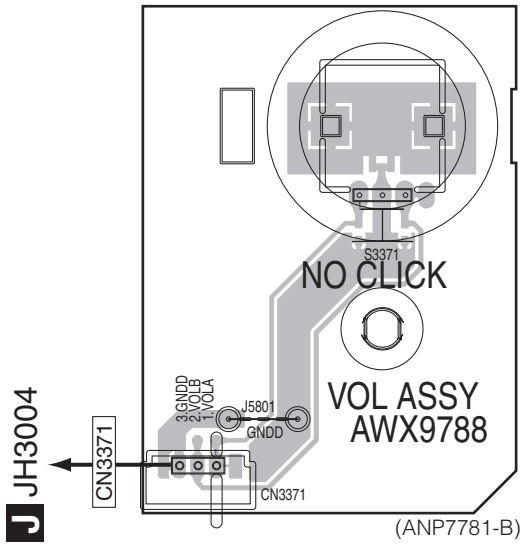

(ANP7781-B)

G FRONT HDMI USB ASSY

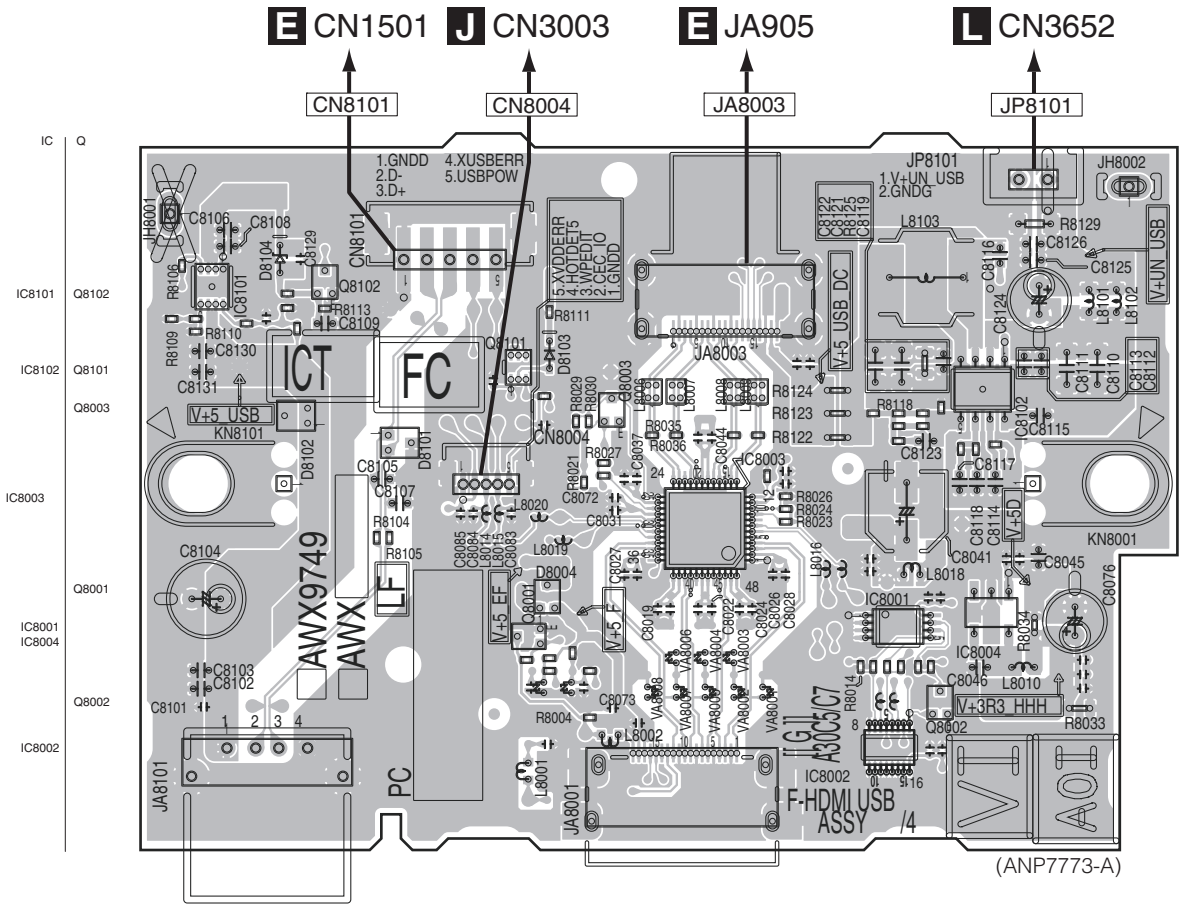

F G

F G

SIDE B

SIDE B

F VOL ASSY

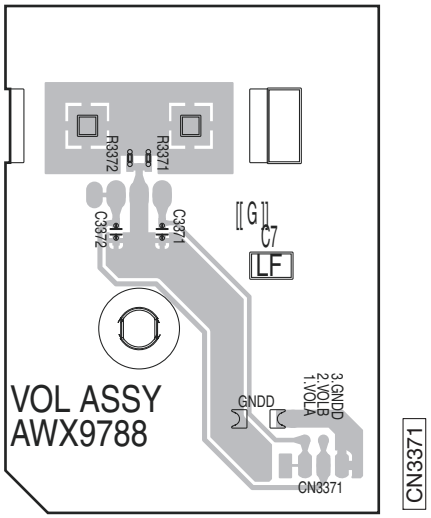

(ANP7781-B)

G FRONT HDMI USB ASSY

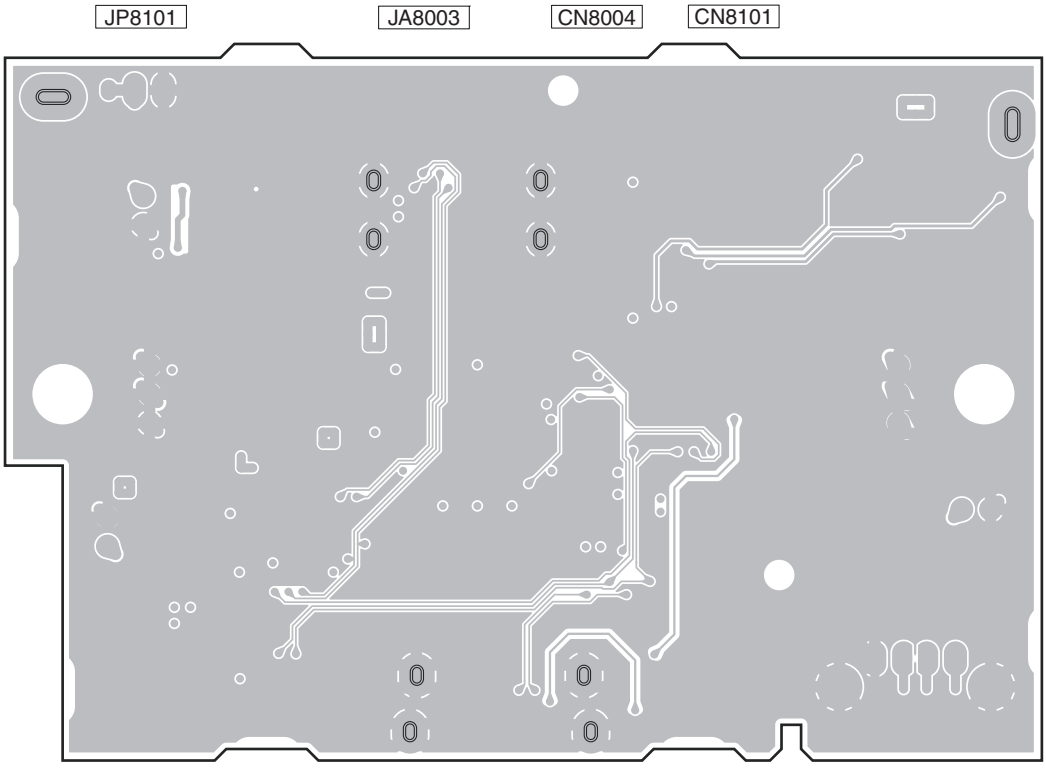

(ANP7773-A)

F G

F G

5 6 7 8

11.7 POWER AMP ASSY

SIDE A

H POWER AMP ASSY

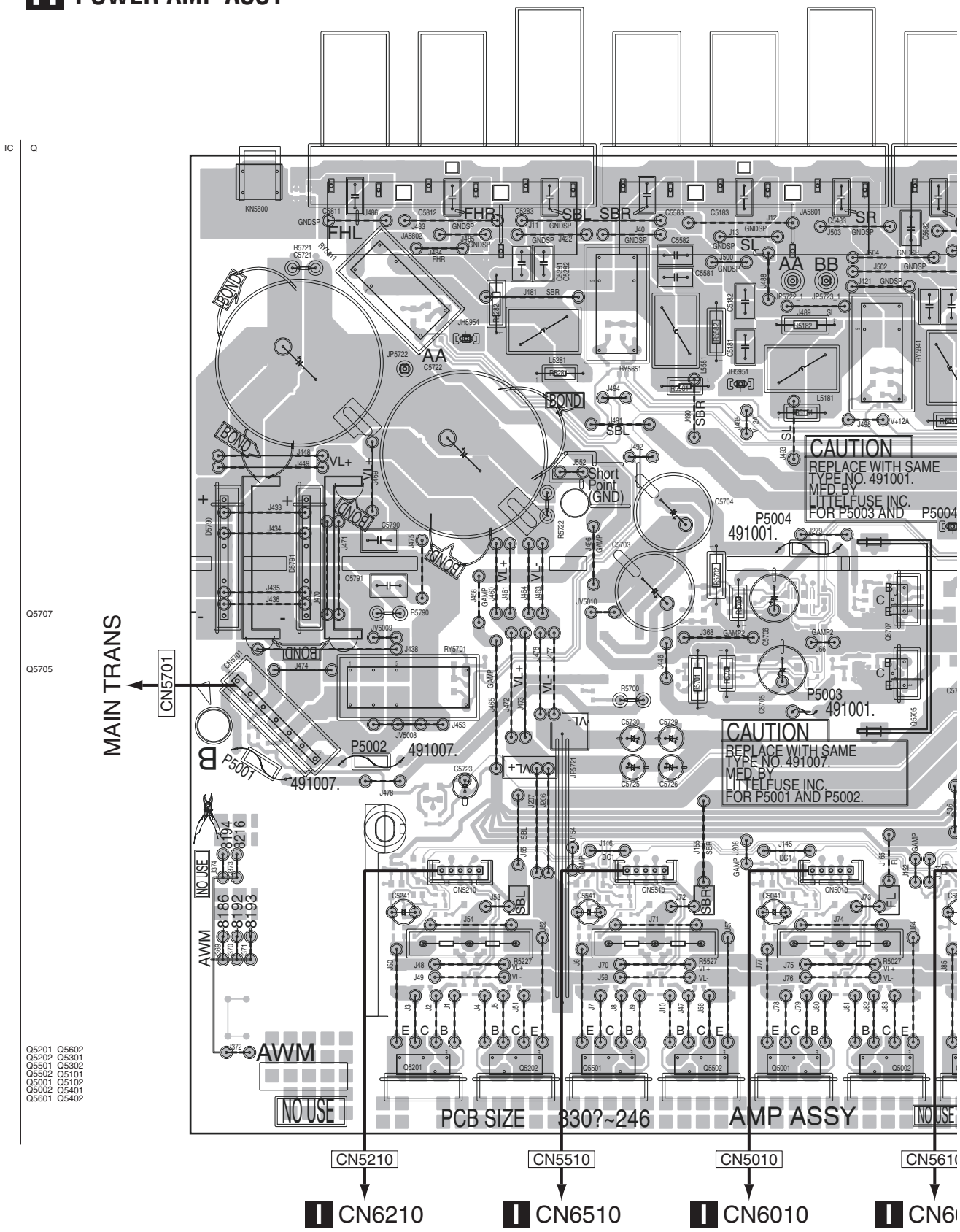

SIDE A

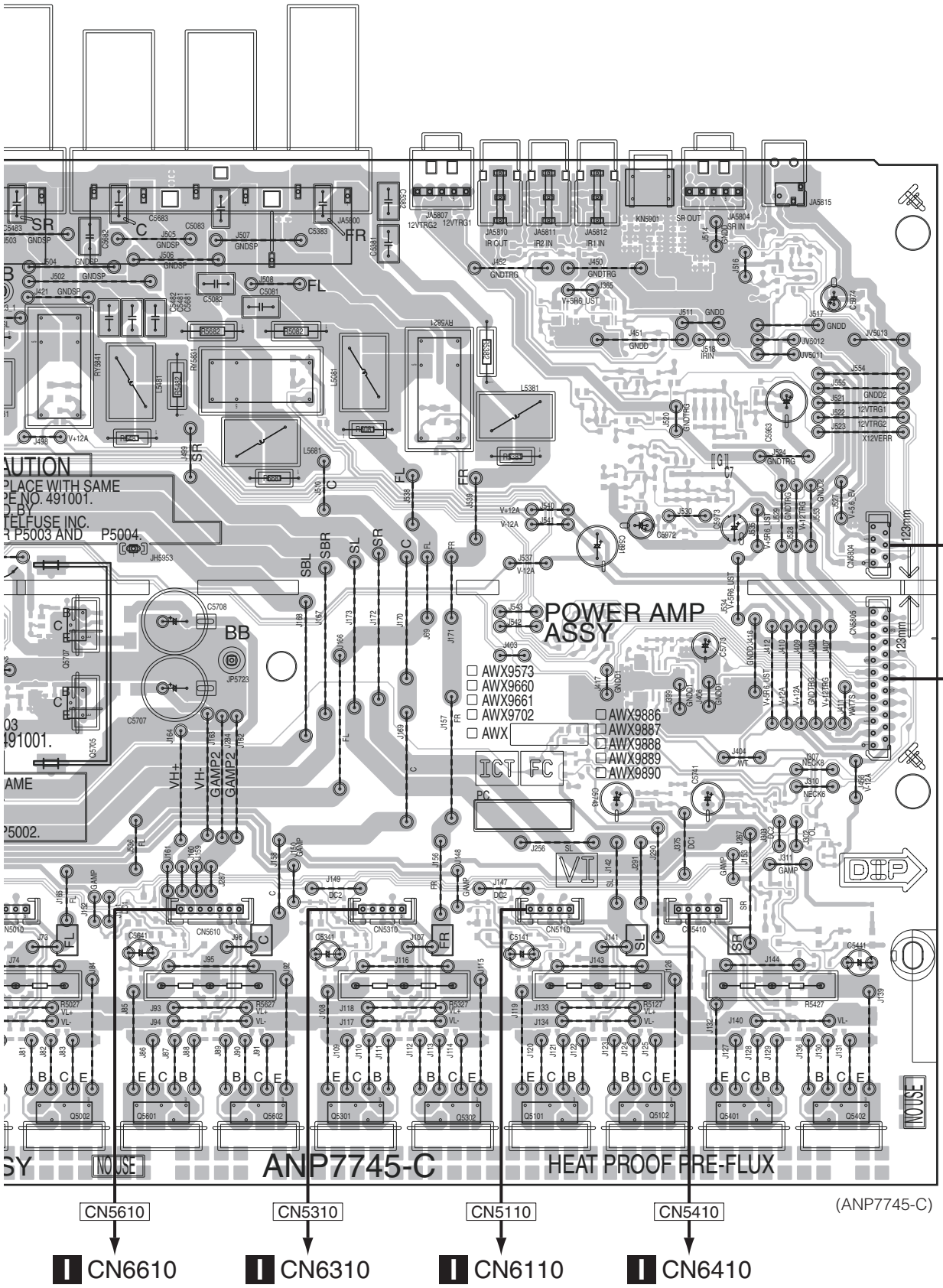
POWER AMP ASSY
ANP7745-C
HEAT PROOF PRE-FLUX
(ANP7745-C)
AWX9573
AWX9660
AWX9661
AWX9702
AWX
AWX9886
AWX9887
AWX9888
AWX9889
AWX9890
ICT
FC
PC
CN5804
CN3364
CN5805
CN3363
CN5610
CN6610
CN5310
CN6310
CN5110
CN6110
CN5410
CN6410
NO USE
DIP

SIDE B

H POWER AMP ASSY

IC	Q
	Q5922
	Q5921
	Q5865
	Q5864
	Q5811
	Q5953
	Q5954
	Q5957
	Q5951
	Q5851
	Q5958
	Q5831
	Q5955
	Q5956 Q5841
	Q5952
	Q5821
	Q5971
	Q5975
	Q5972
	Q5973
	Q5974
	Q5822
	Q5991
	Q5708
	Q5703
IC5771	Q5852 Q5702
	Q5832
	Q5709 Q5706
	Q5782
	Q5781 Q5701
	Q5700
	Q5783
	Q5784
	Q5785
	Q5741
	Q5744
	Q5742
	Q5743
	Q5731
	Q5441
	Q5141 Q5041
	Q5341 Q5541
	Q5641 Q5241

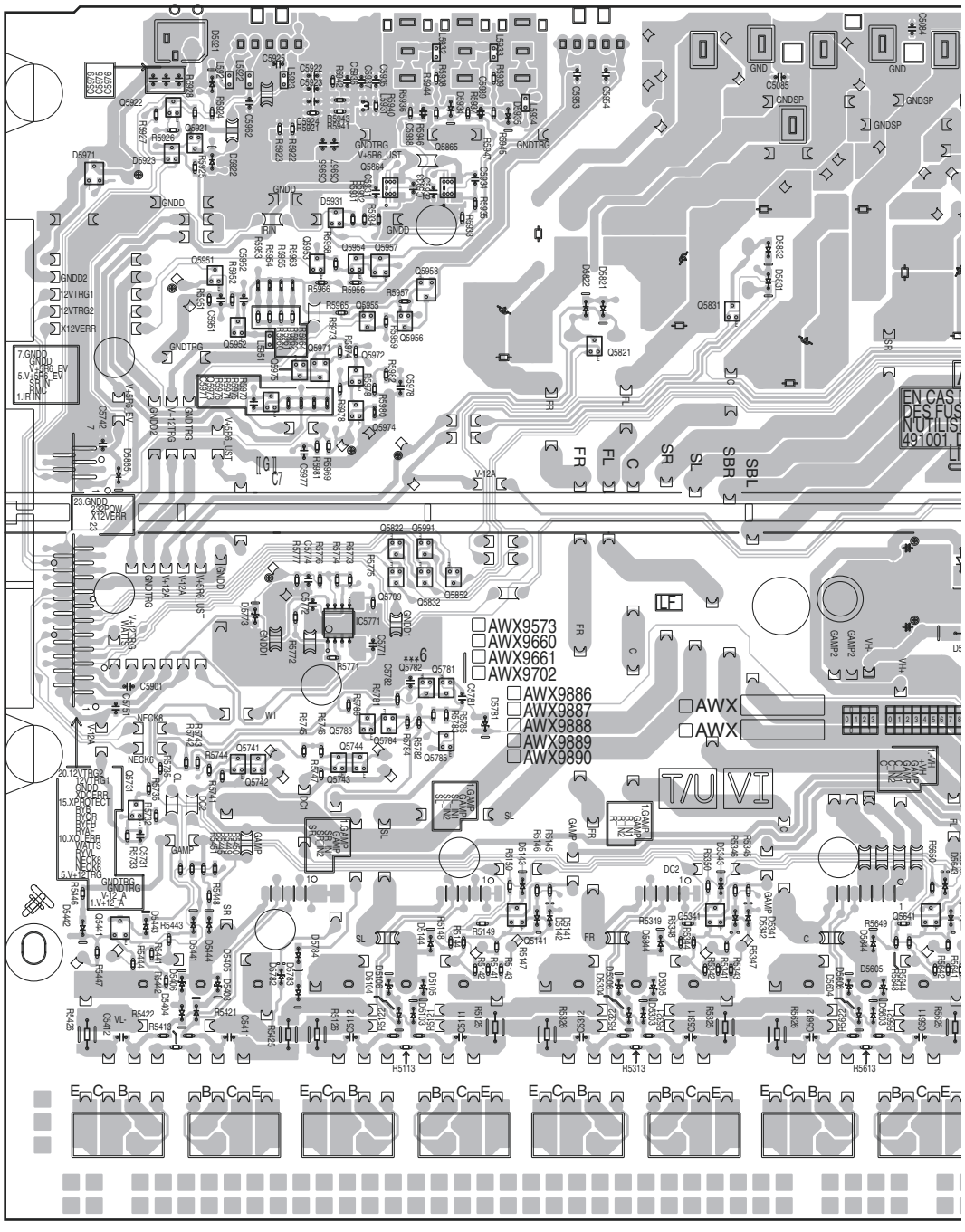

SIDE B

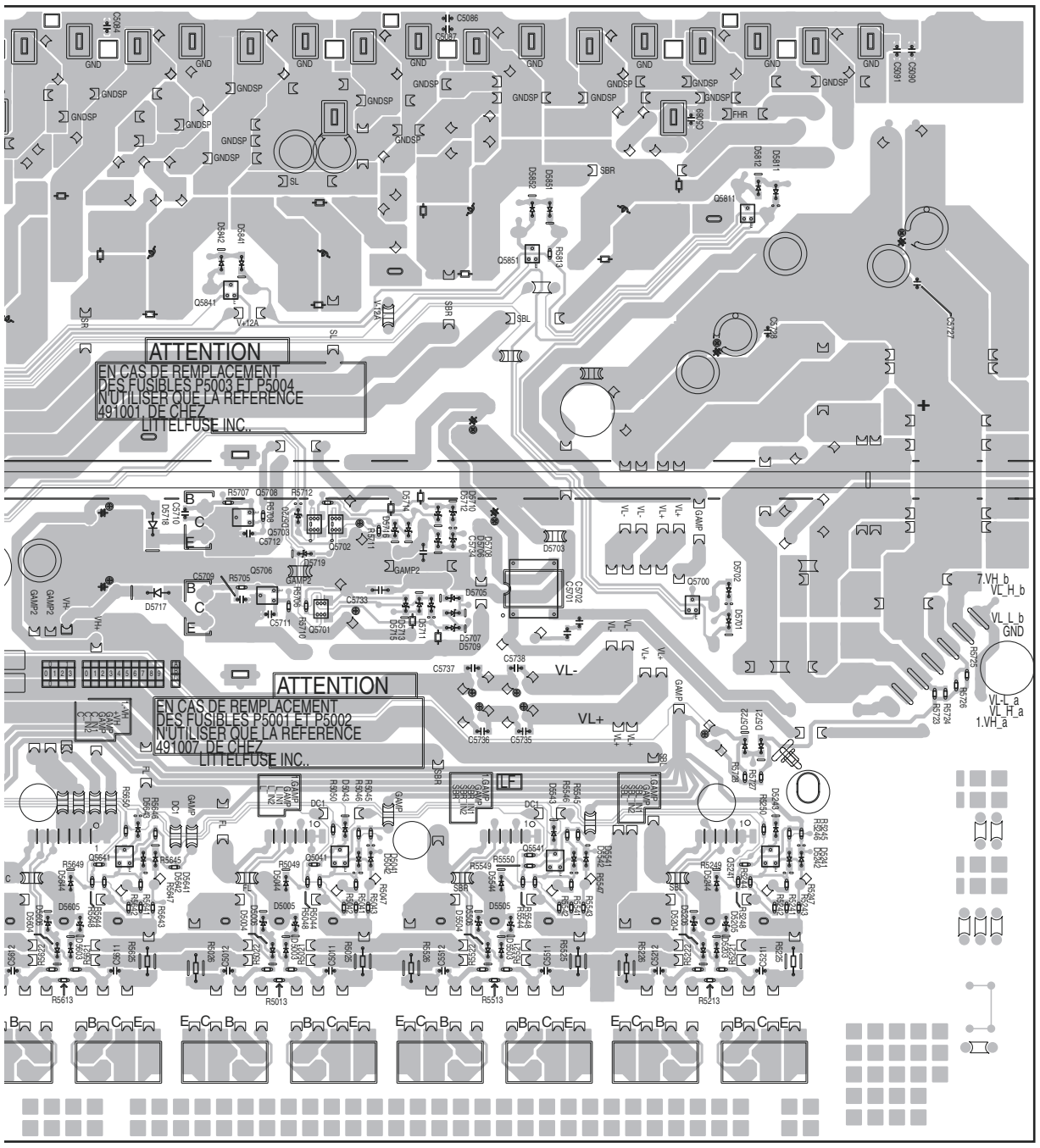

(ANP7745-C)

11.8 PRESTAGE ASSY

SIDE A

I PRESTAGE ASSY

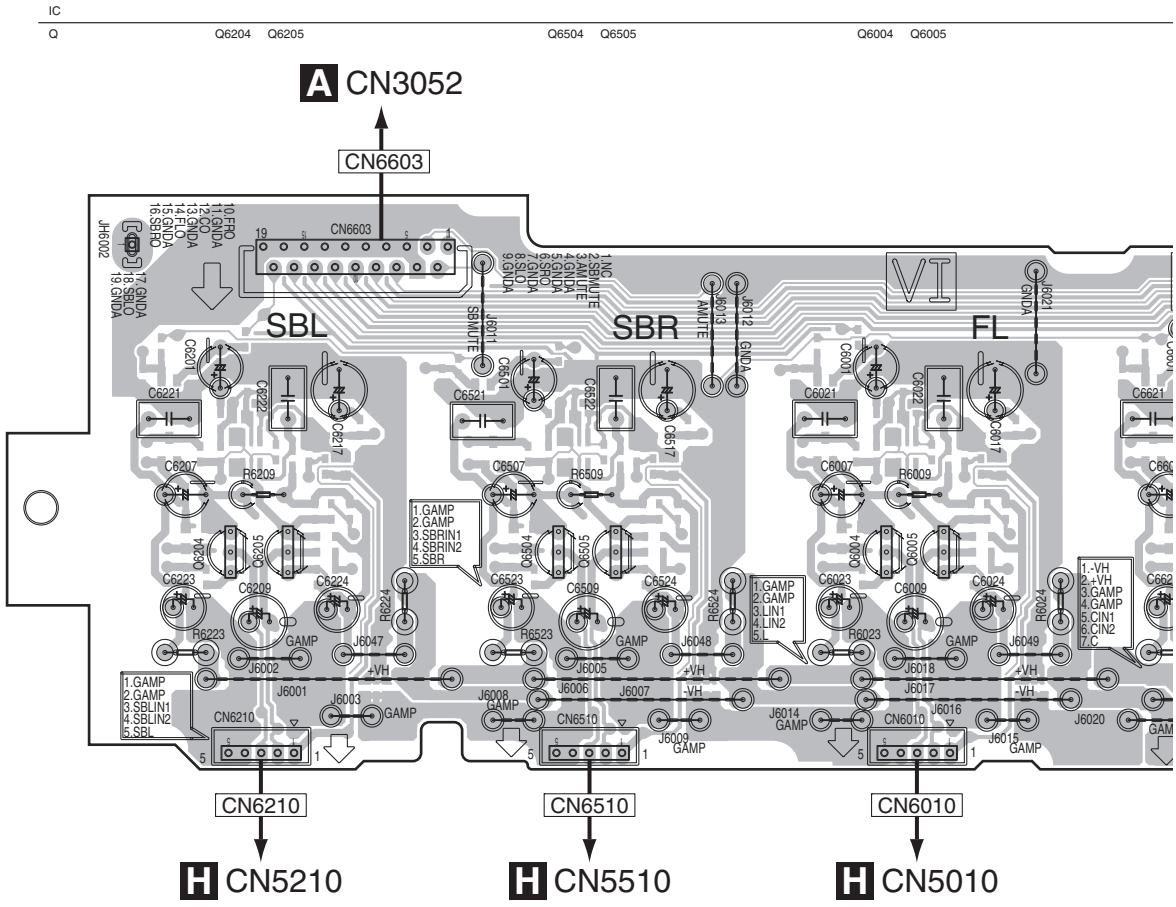

SIDE A

Q6604 Q6605 Q6304 Q6305 Q6104 Q6105 Q6404 Q6405

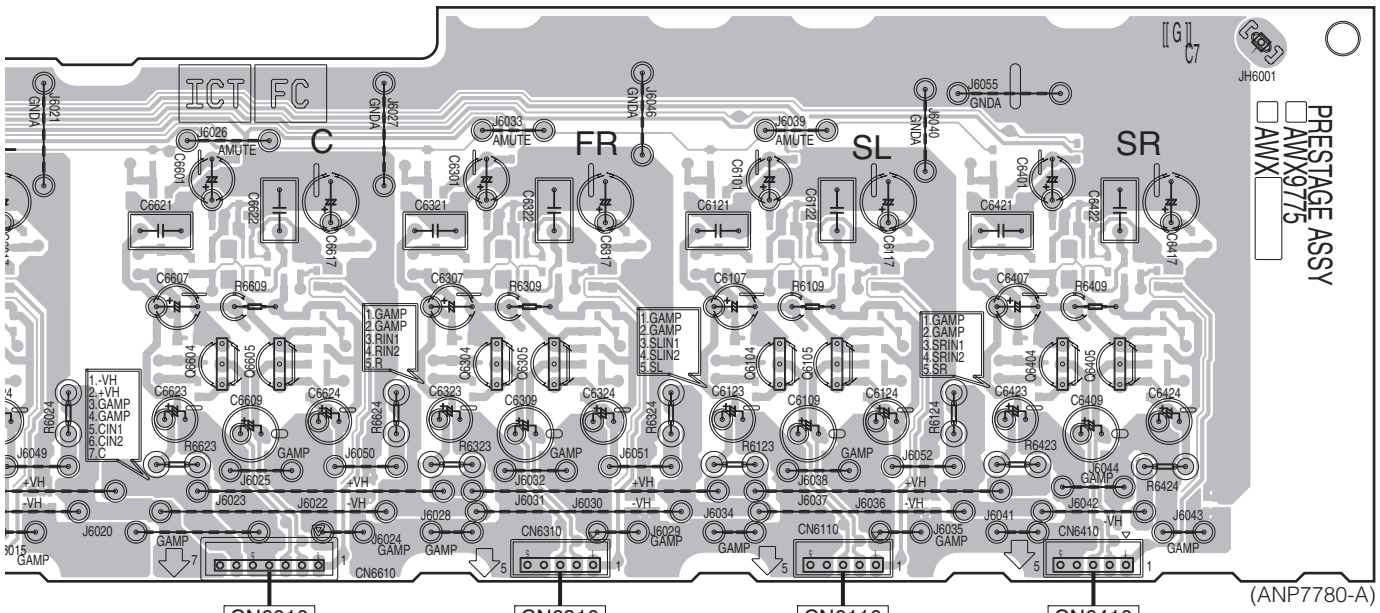

H CN5610 H CN5310 H CN5110 H CN5410

PRESTAGE ASSY

IC

Q

Q6402 Q6401 Q6403 Q6102 Q6101 Q6103 Q6302 Q6301 Q6303 Q6602

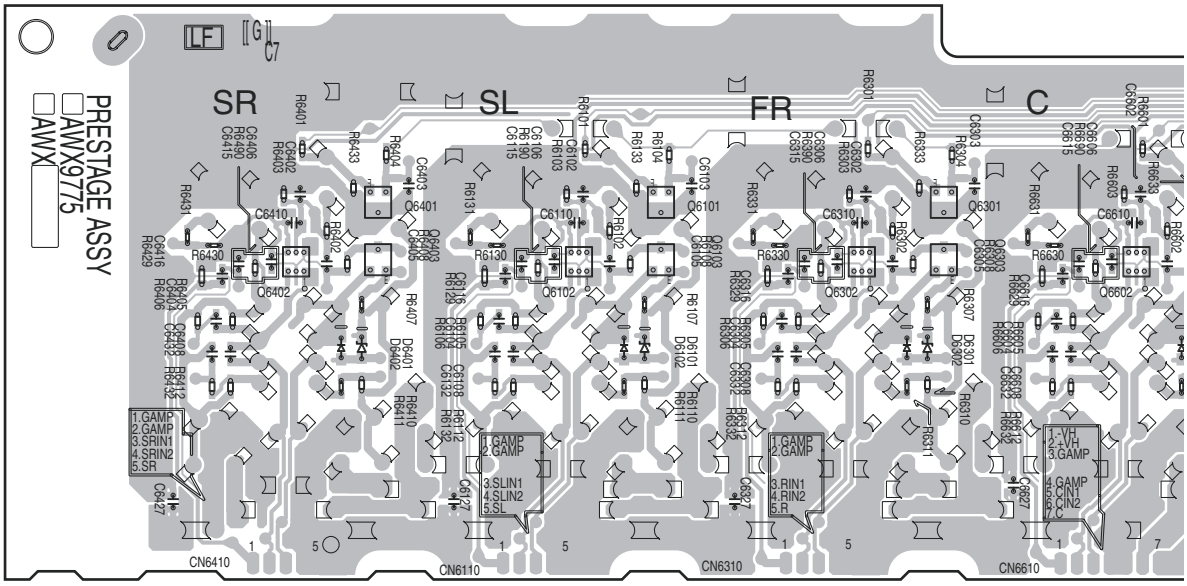

CN6410 CN6110 CN6310 CN6610

SIDE B

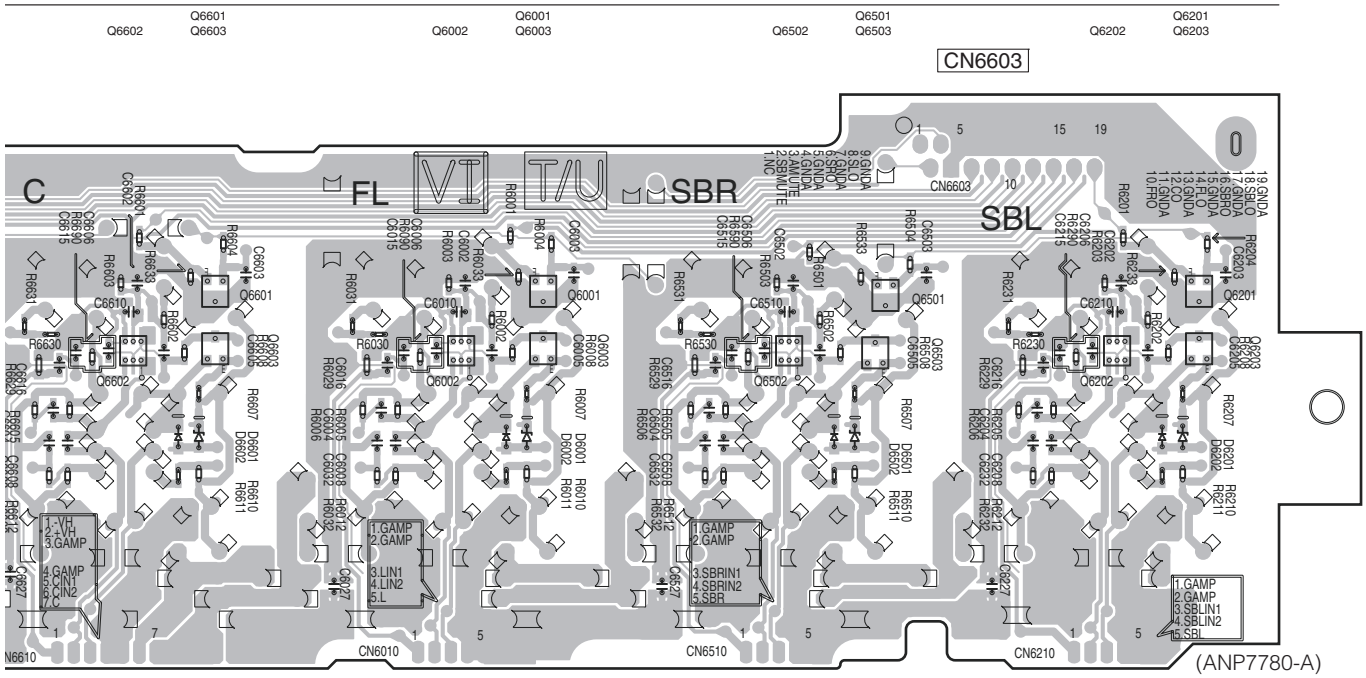
Q6601
Q6602
Q6603
Q6001
Q6002
Q6003
Q6501
Q6502
Q6503
Q6201
Q6202
Q6203
CN6603
C
FL
VI
T/U
SBR
SBL
CN6610
CN6010
CN6510
CN6210
(ANP7780-A)

11.9 DISPLAY ASSY

SIDE A

J DISPLAY ASSY

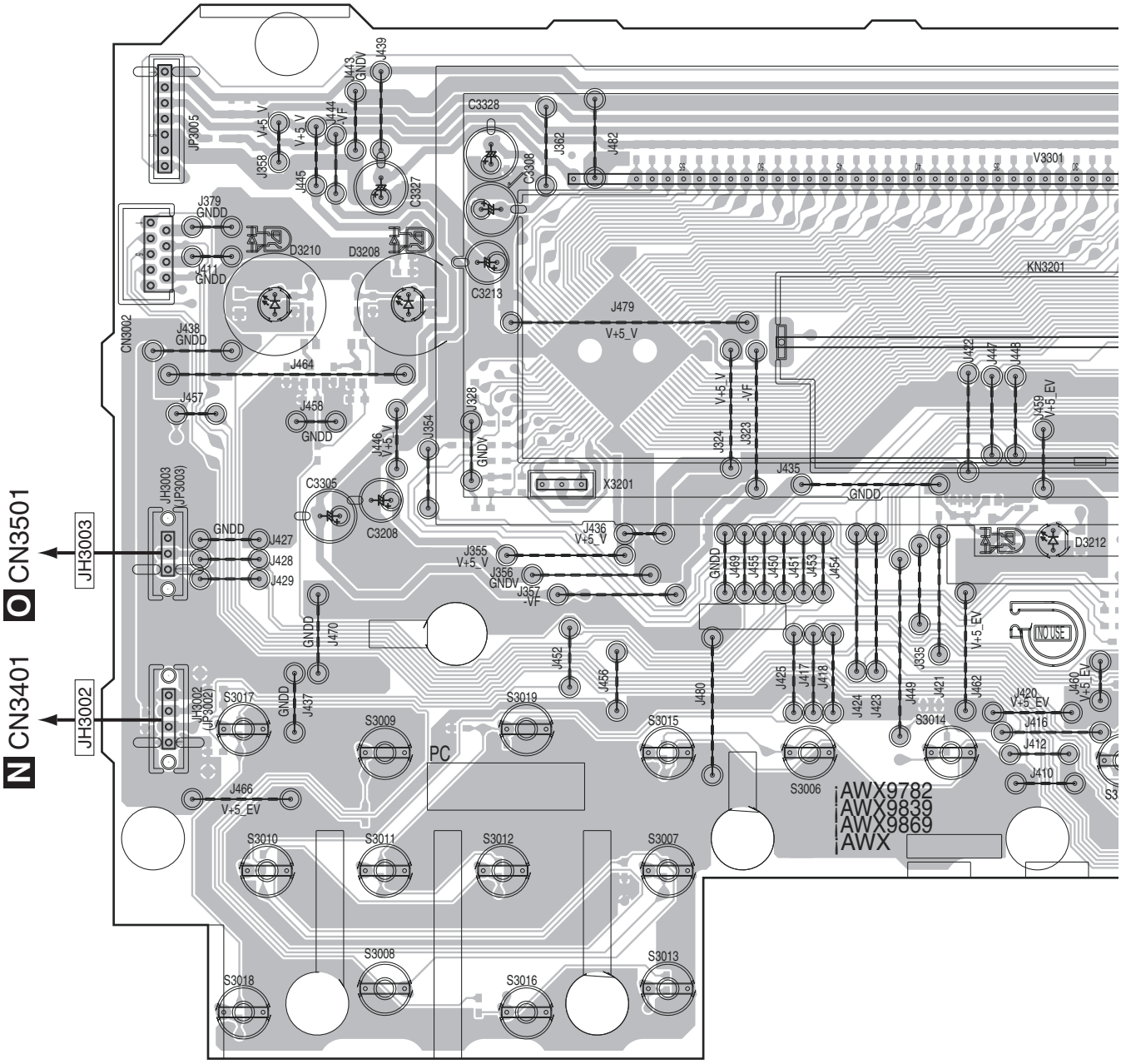

SIDE A

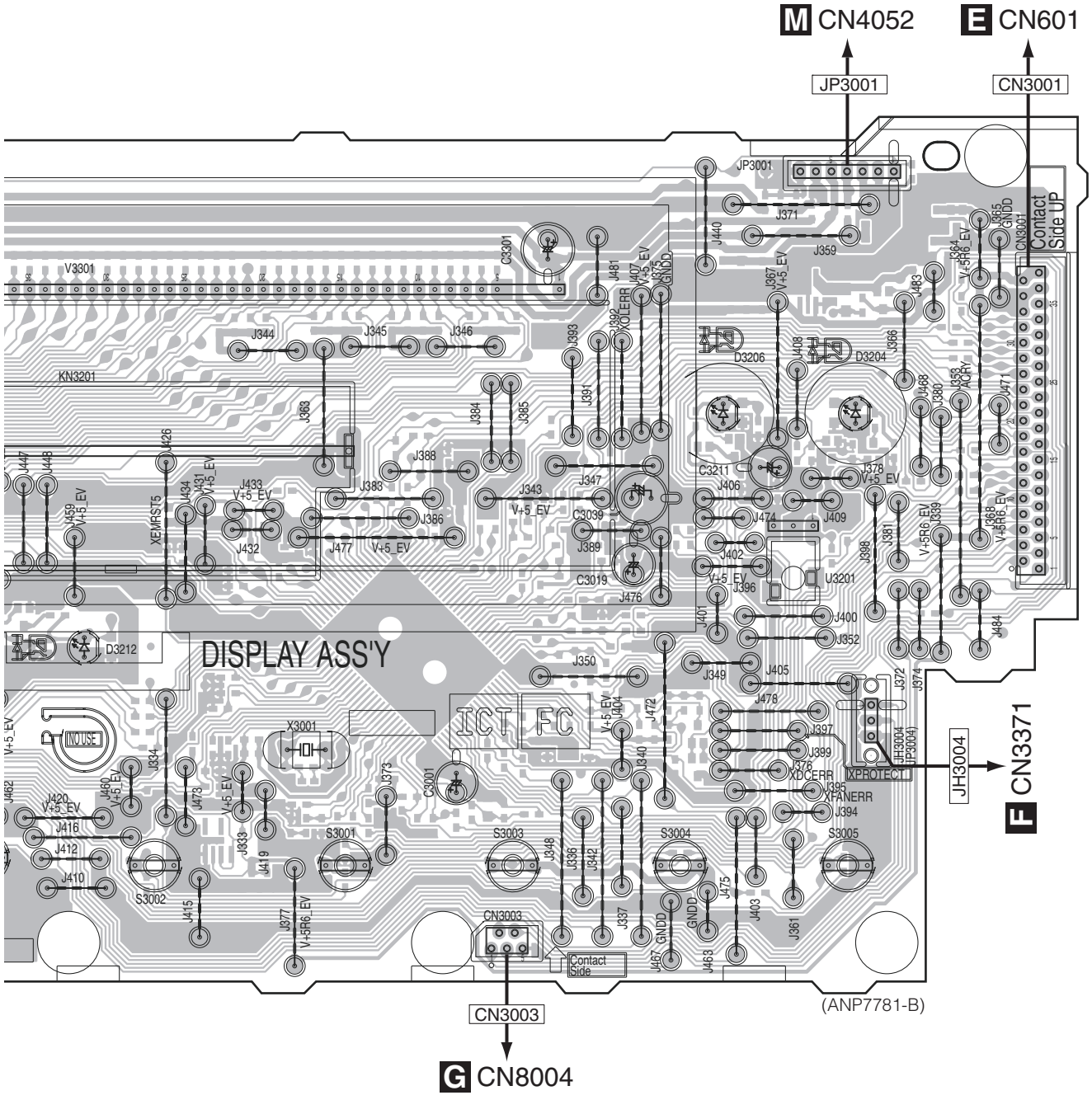
M CN4052
E CN601
JP3001
CN3001
Contact Side UP
DISPLAY ASS'Y
ICT FC
NO USE
X3001
S3001
S3002
S3003
S3004
S3005
CN3003
Contact Side
JH3004
F CN3371
(ANP7781-B)
CN3003
G CN8004

SIDE B

J DISPLAY ASSY

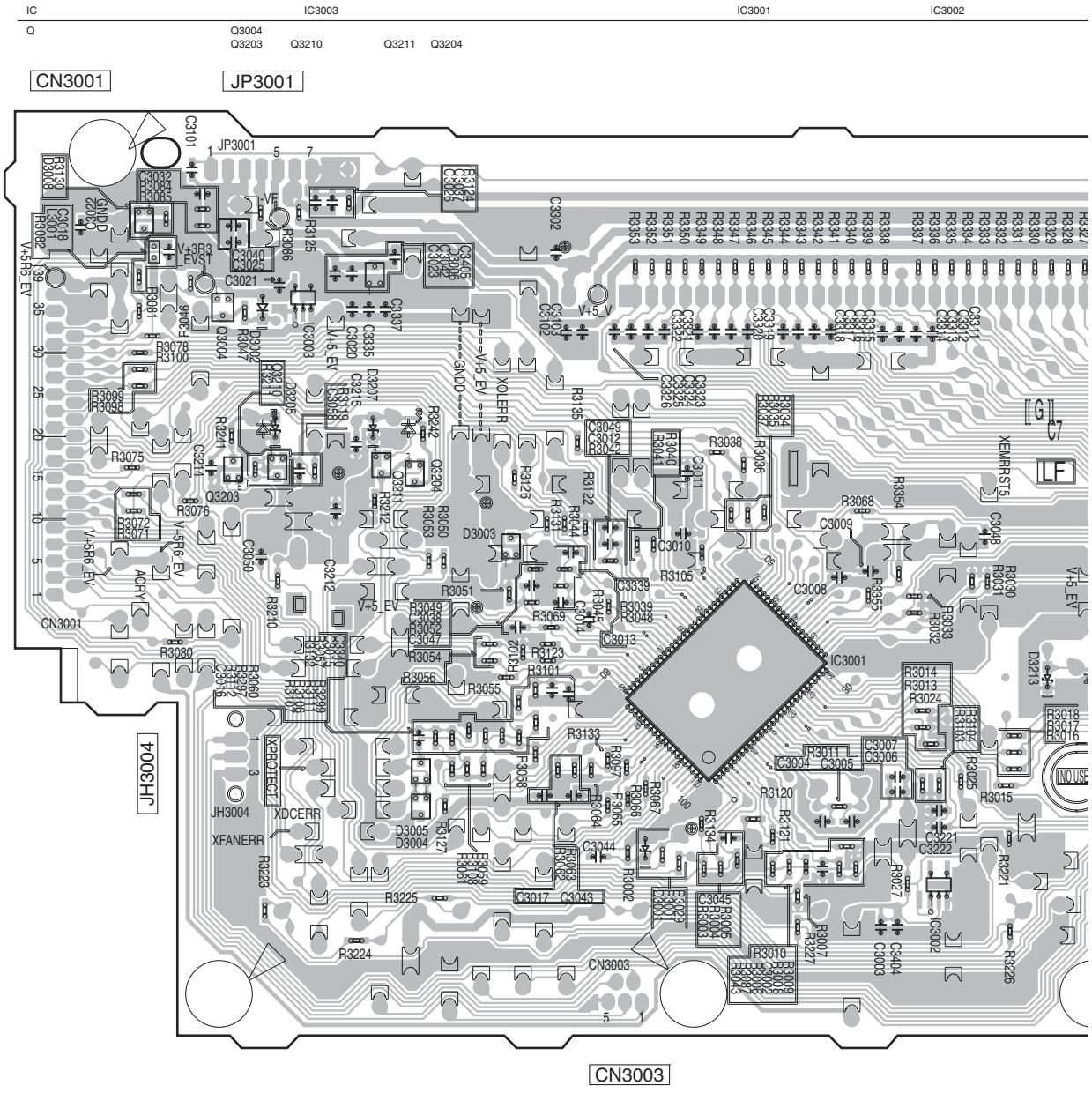

SIDE B

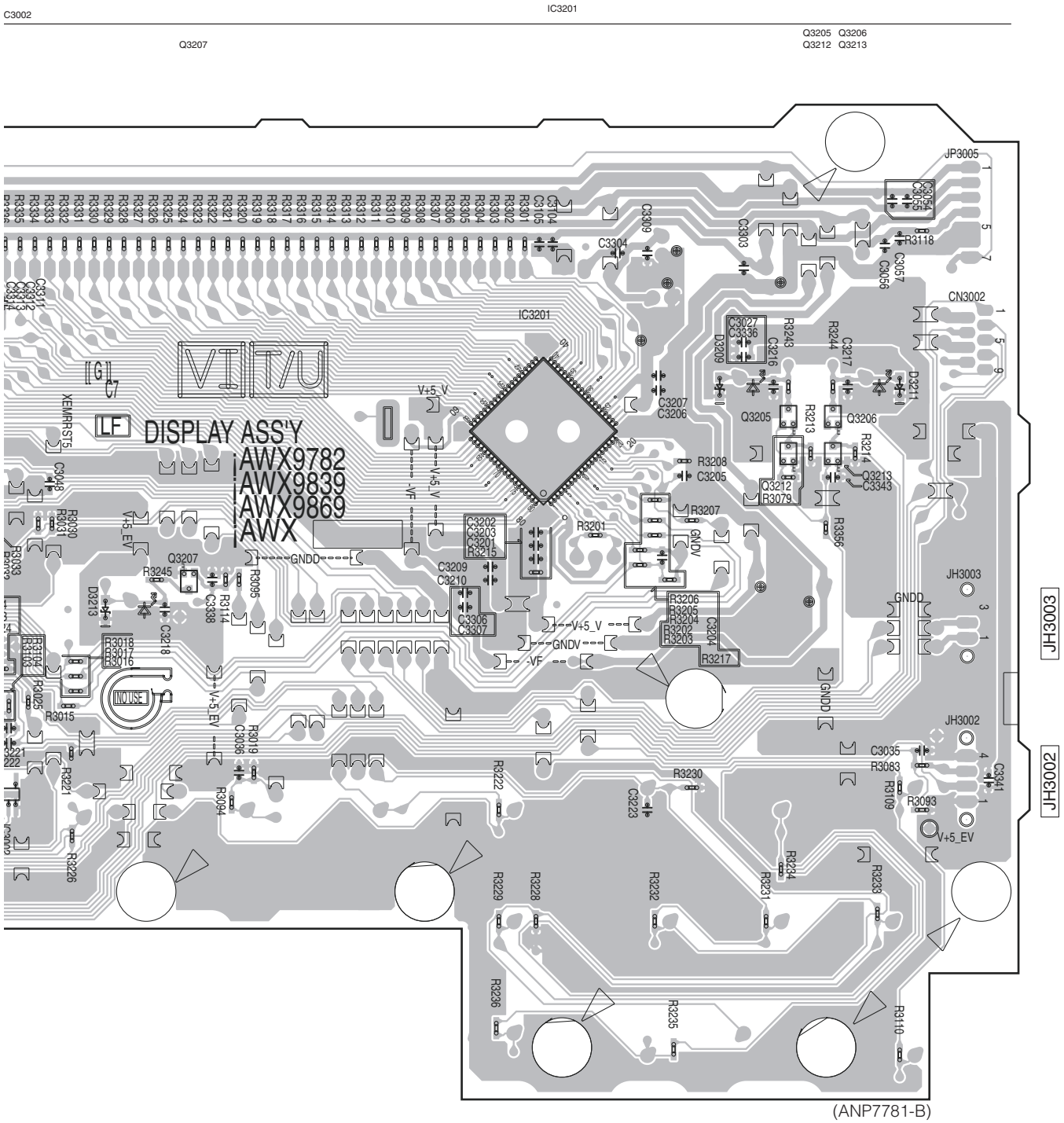

(ANP7781-B)

11.10 PRIMARY and USB RECT ASSYS

SIDE A

K PRIMARY ASSY

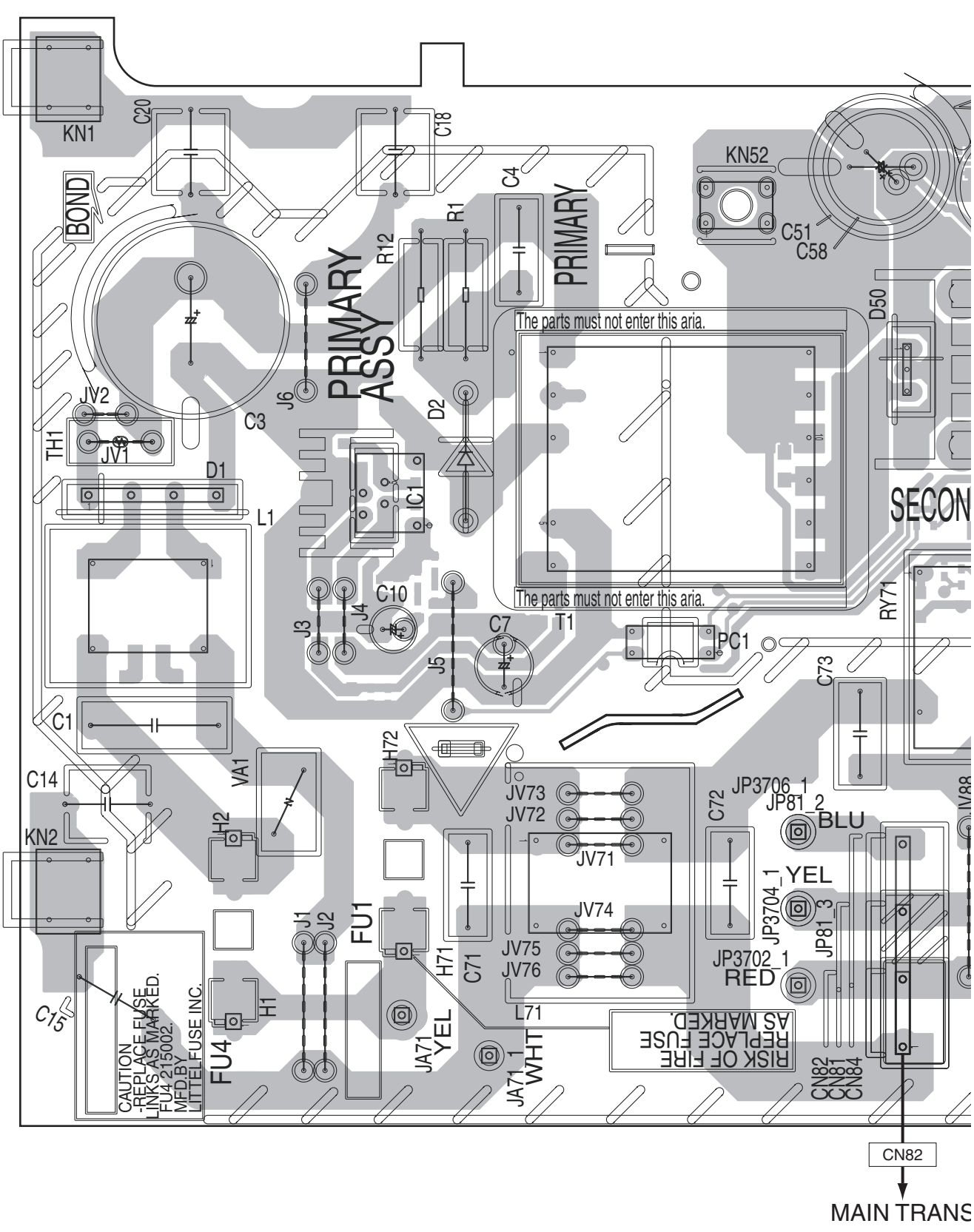

SIDE A

A

B

C

D

E

F

L USB RECT ASSY

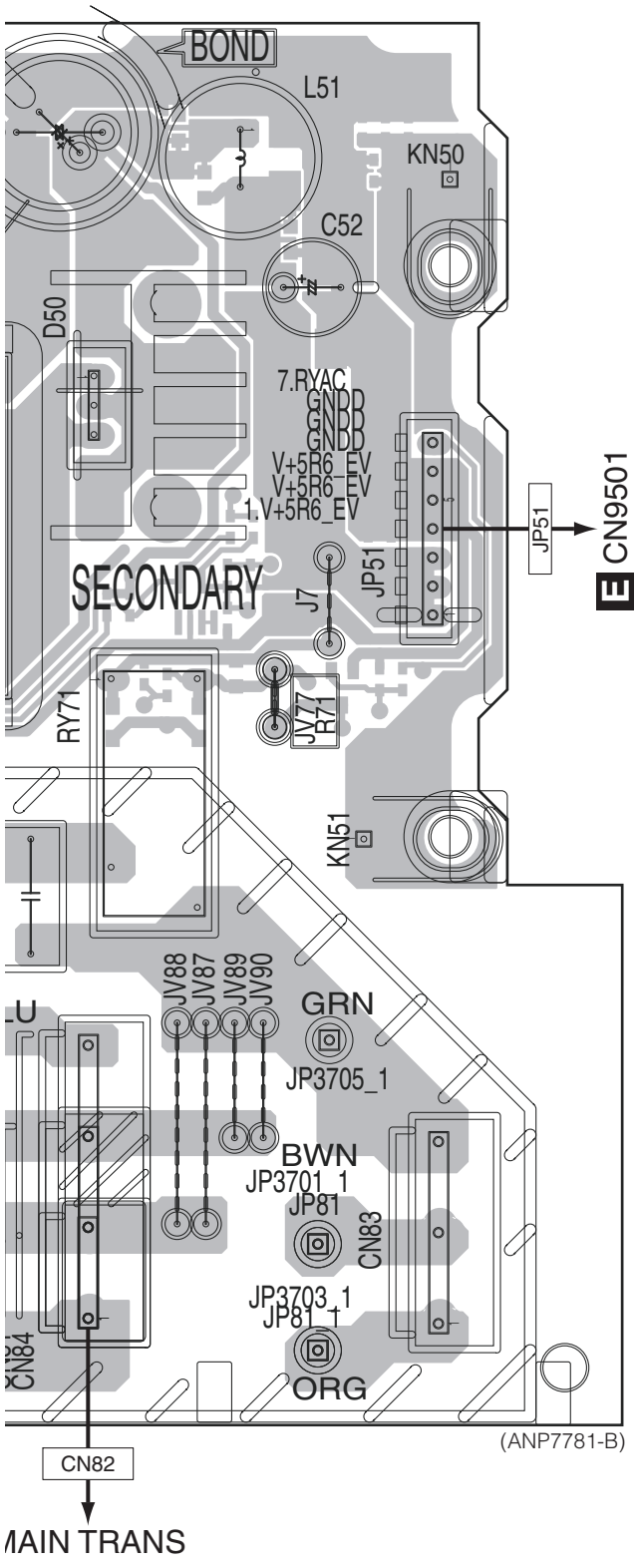

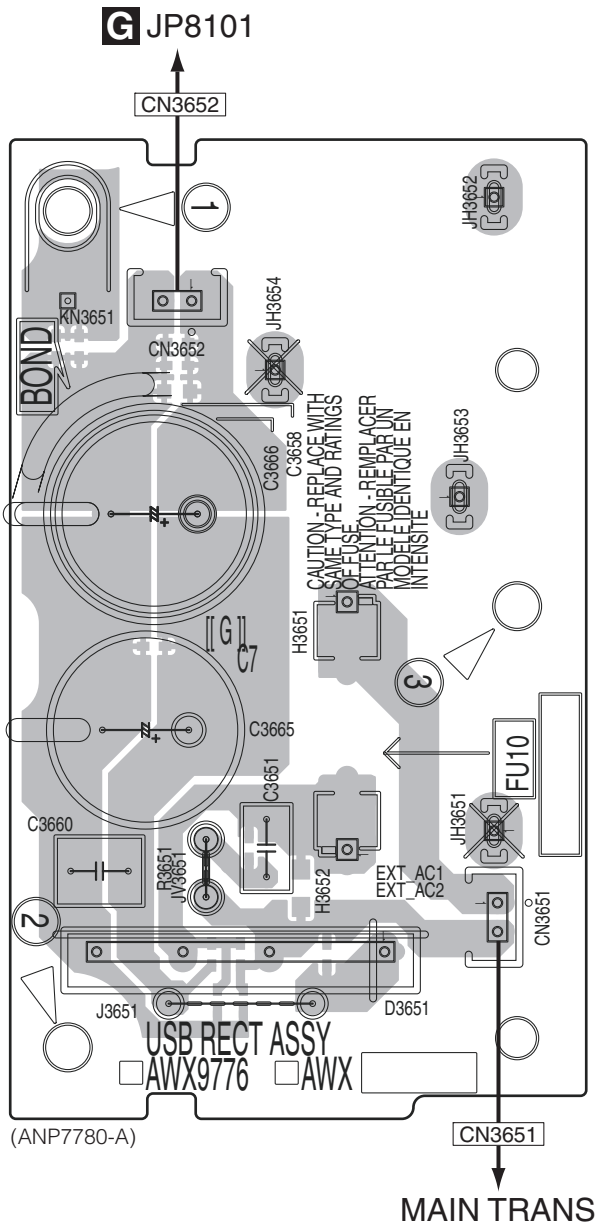

SIDE B

L USB RECT ASSY

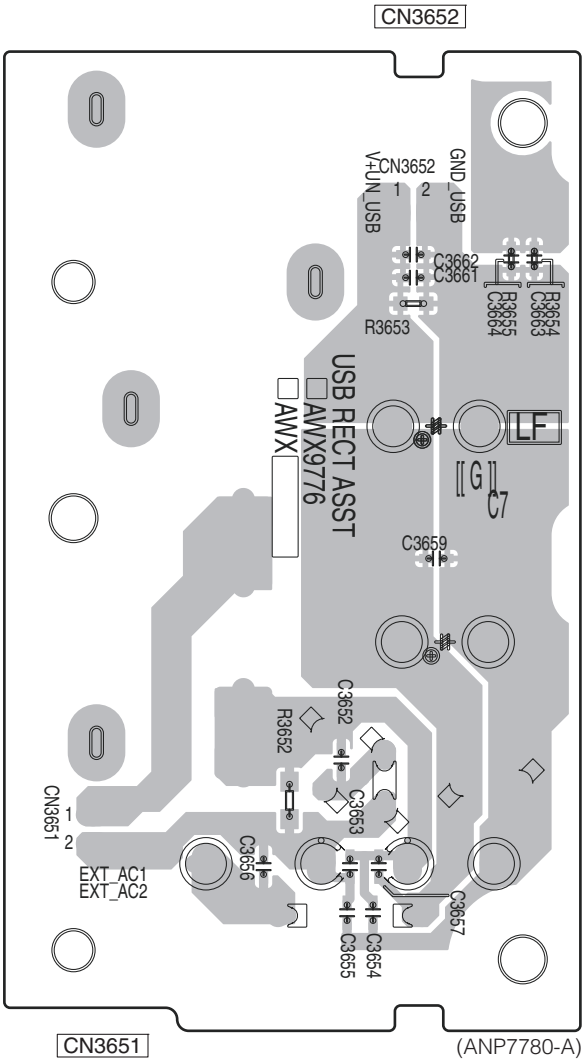

(ANP7780-A)

K PRIMARY ASSY

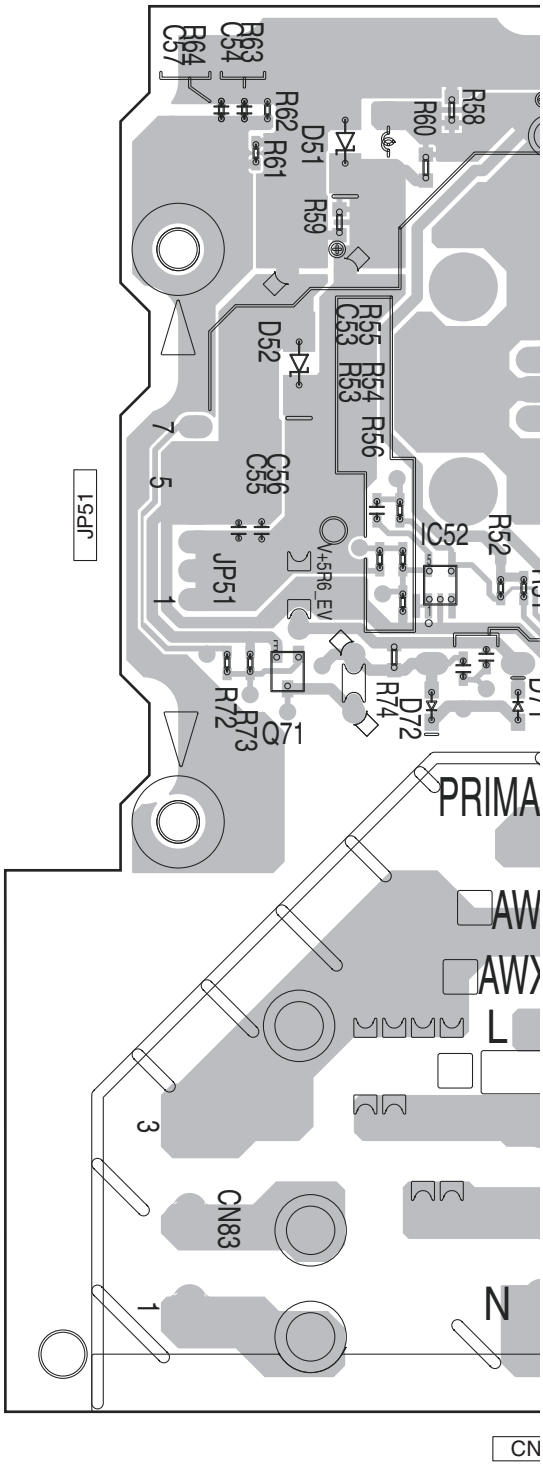

SIDE B

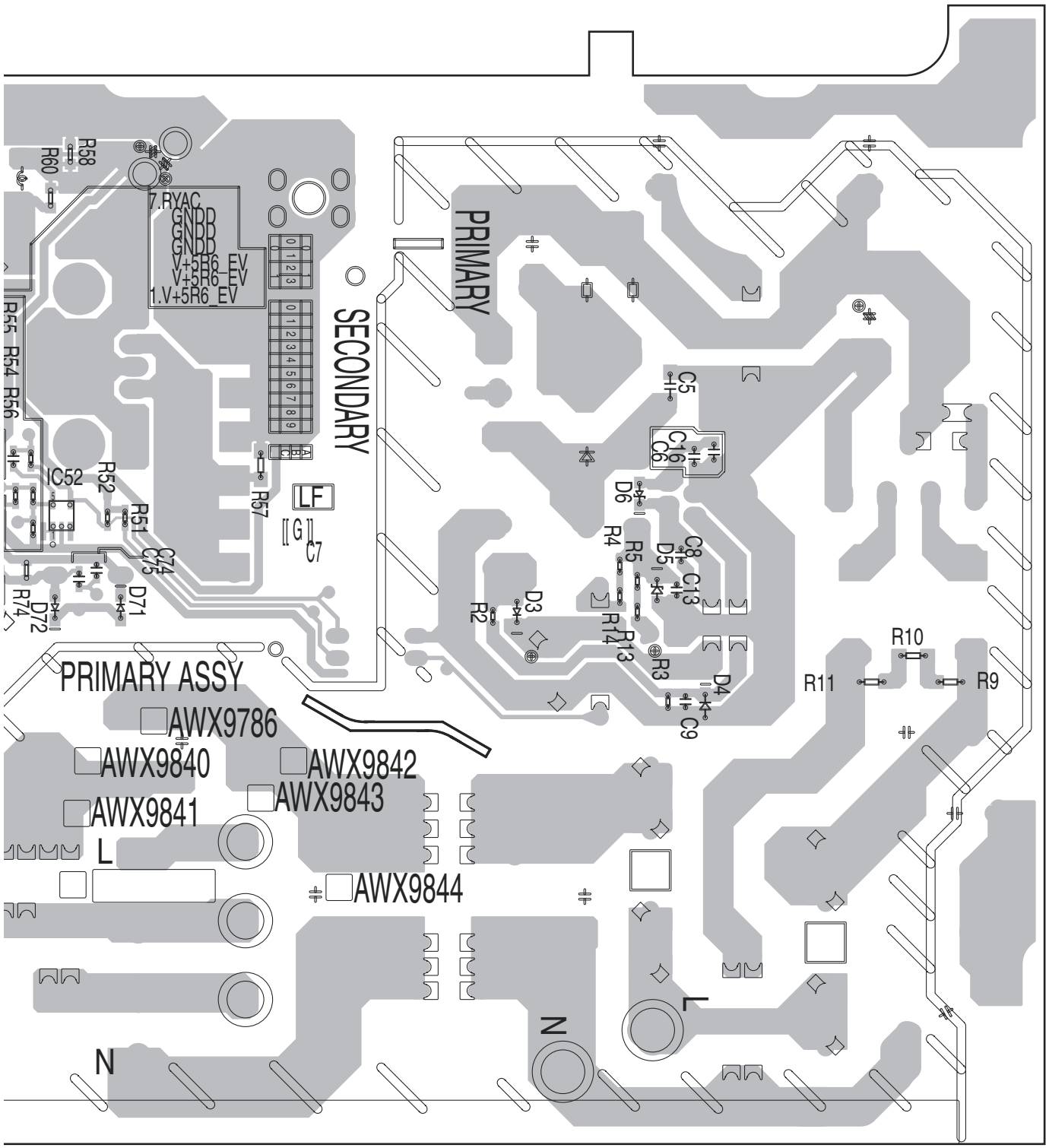

(ANP7781-B)

11.11 REGULATOR ASSY

SIDE A

M REGULATOR ASSY

IC		IC4002	IC4001	IC4021
Q	Q4082			

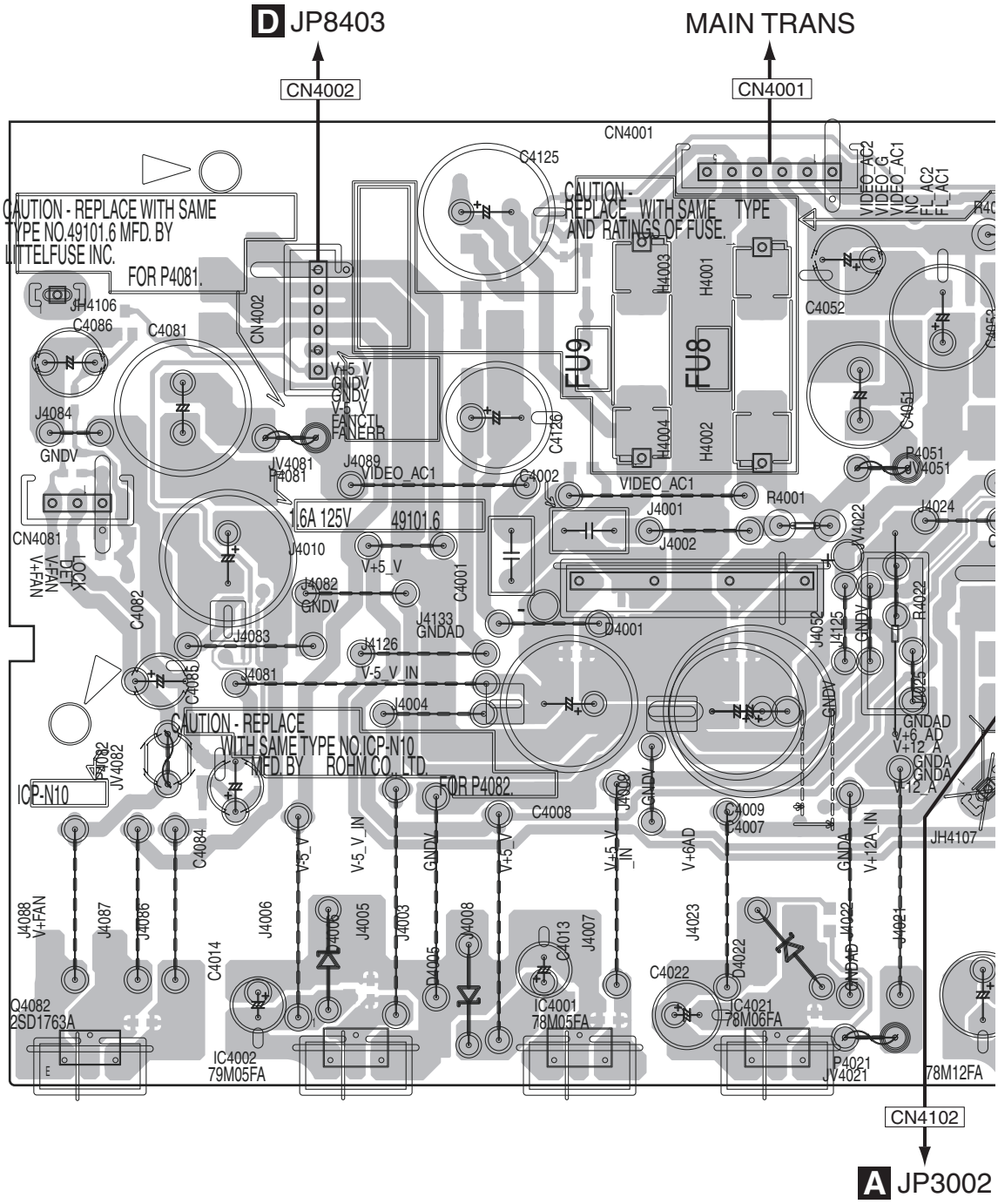

SIDE A

IC4101 IC4102 IC4121

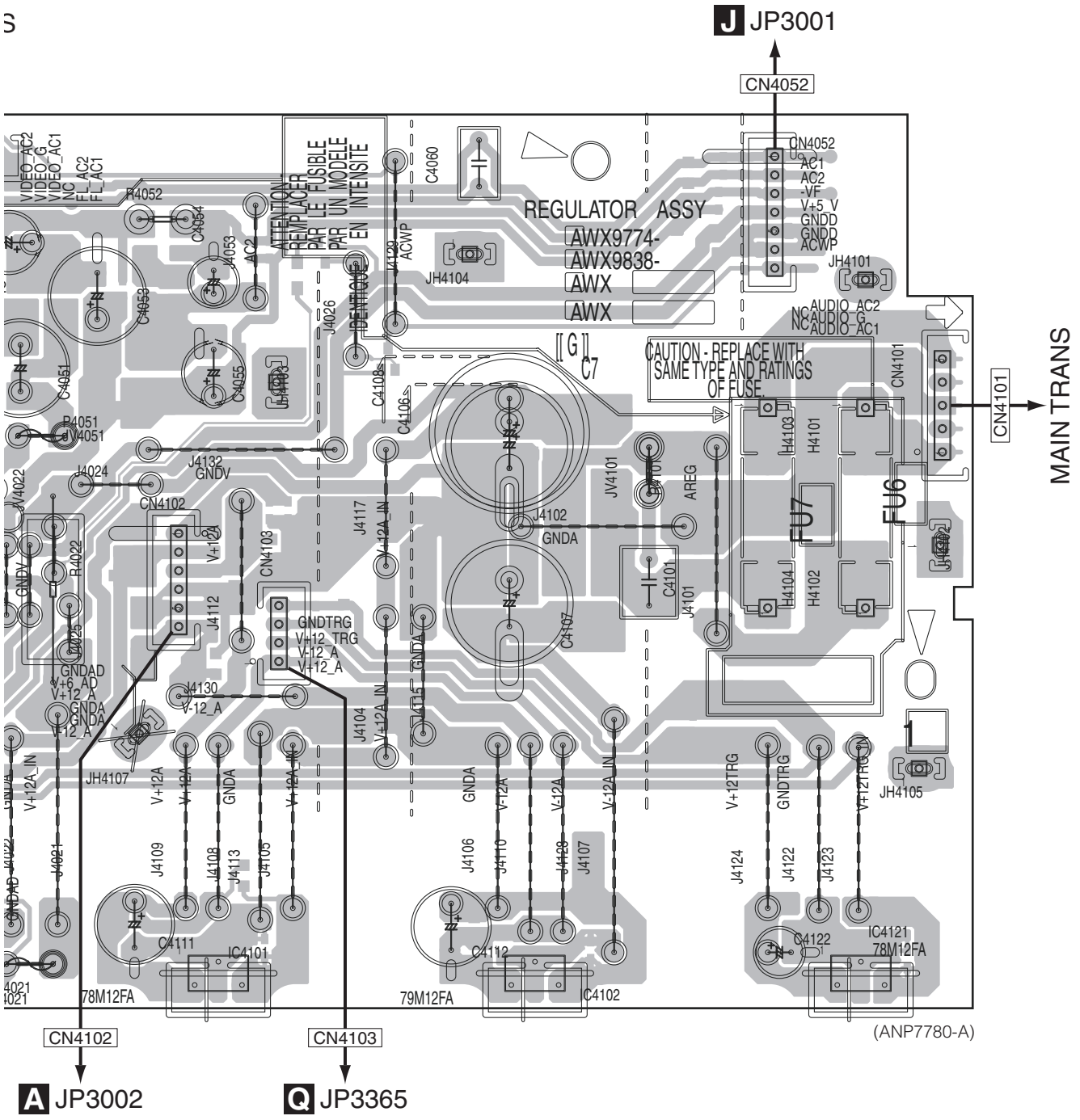

M REGULATOR ASSY

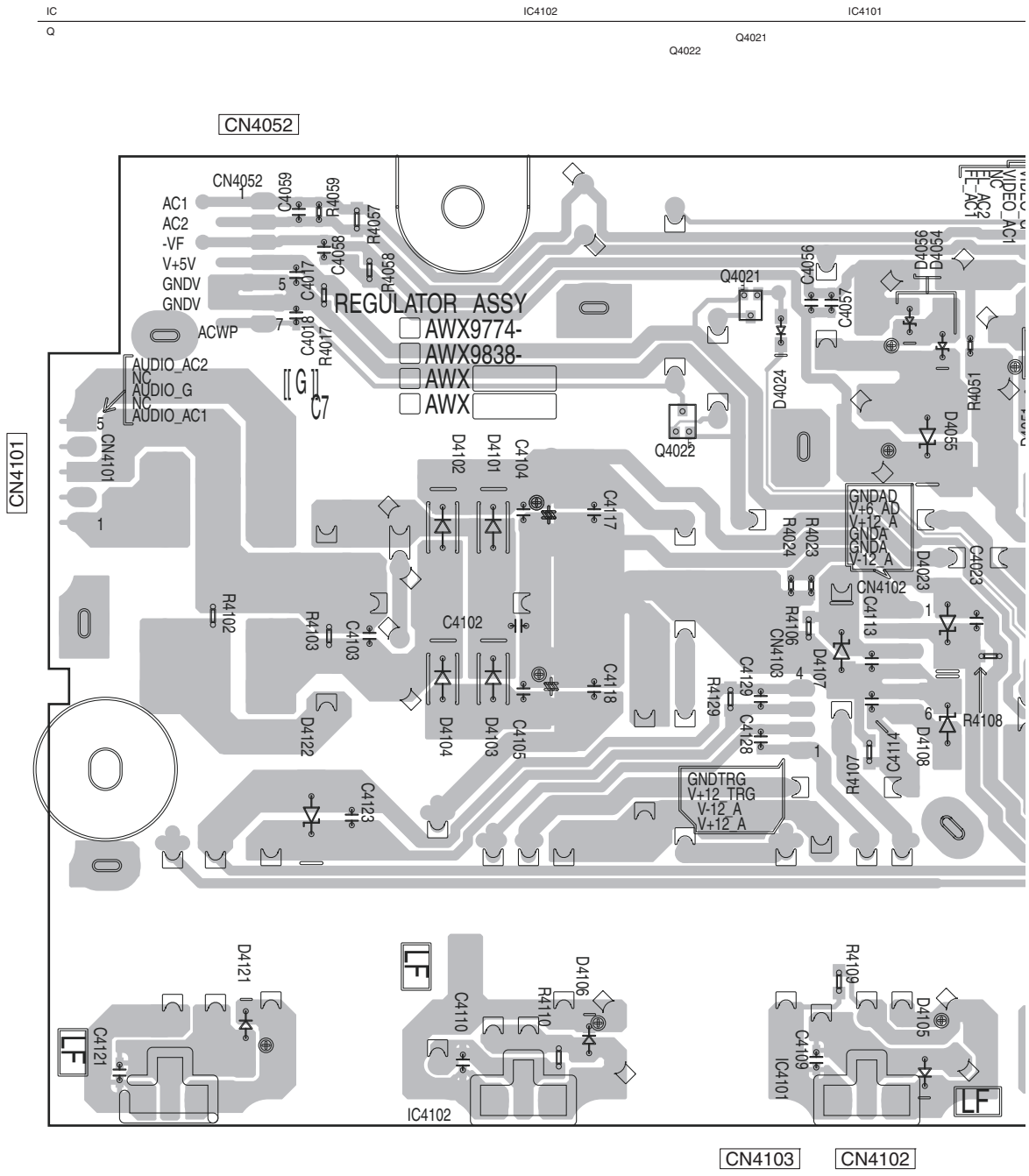

SIDE B

A

01 IC4021 IC4001 IC4002

Q4083

Q4081 Q4082

B

CN4001 CN4002

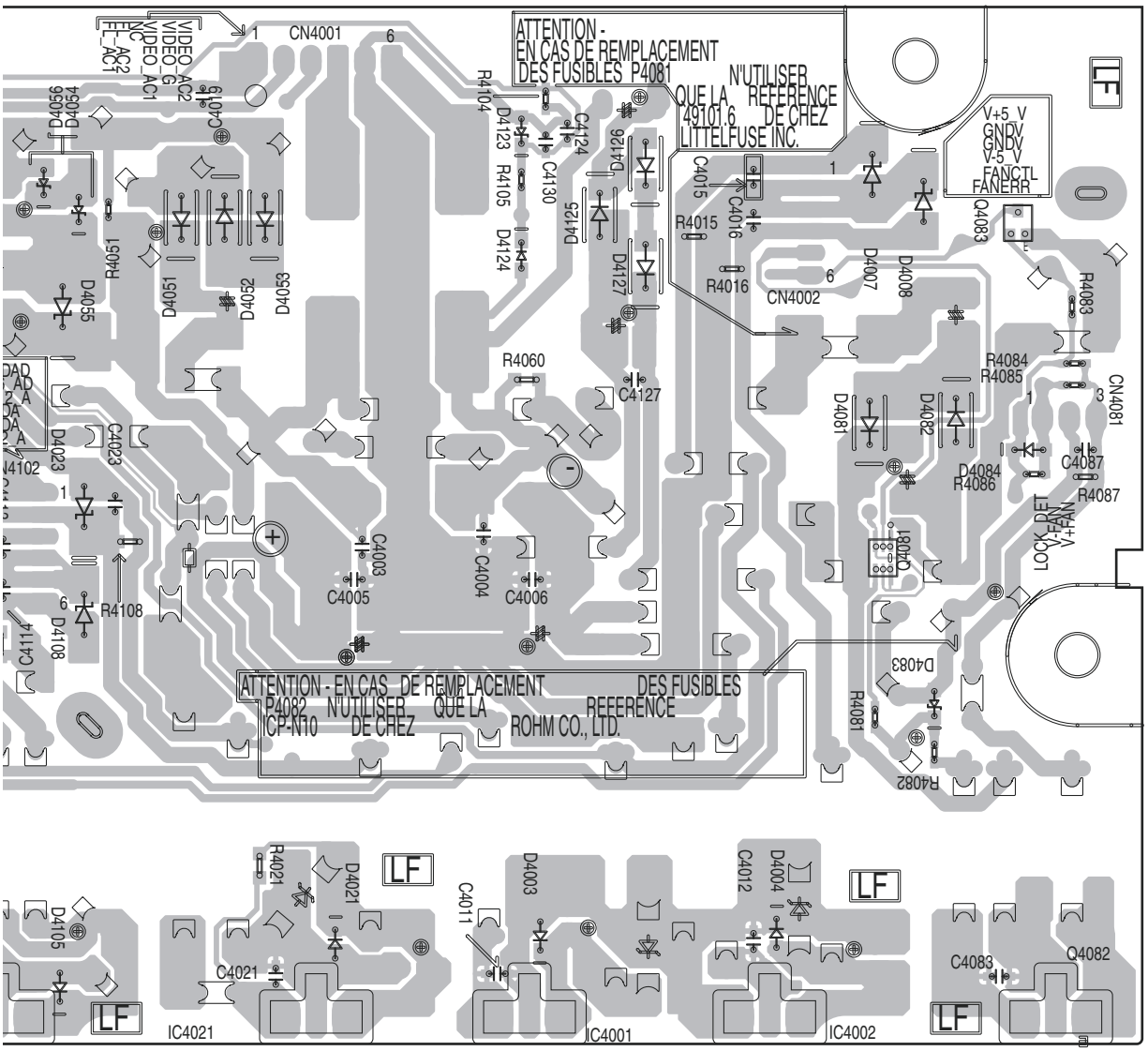

(ANP7780-A)

C

D

E

F

11.12 POWER SW, ENCODER and MIC HP ASSYS

SIDE A

SIDE A

N POWER SW ASSY

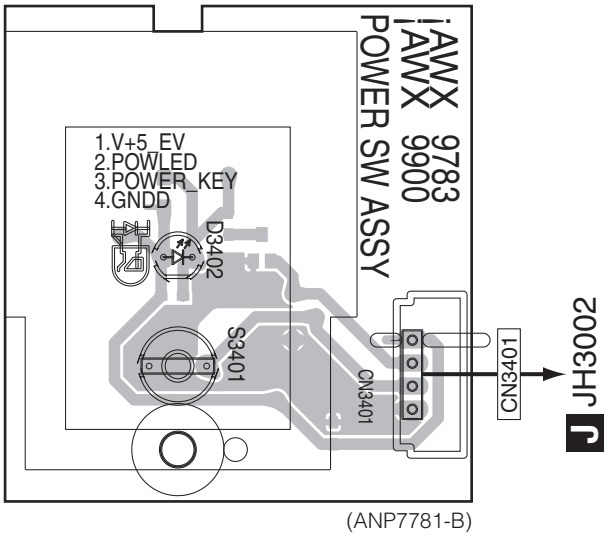

(ANP7781-B)

O ENCODER ASSY

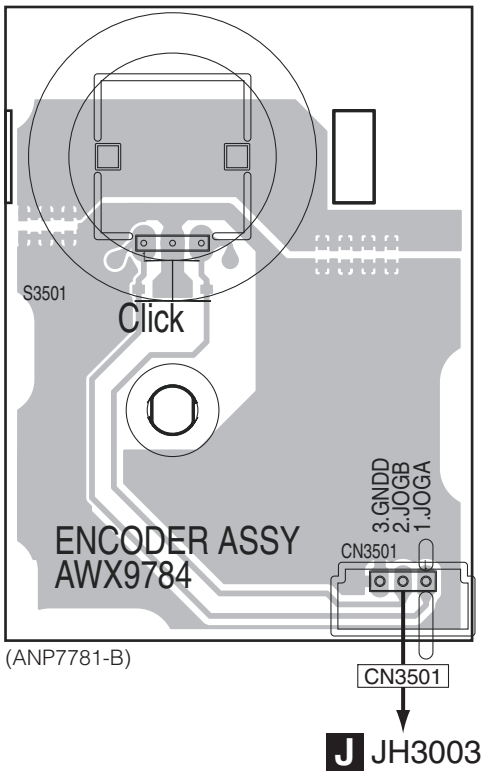

(ANP7781-B)

P MIC HP ASSY

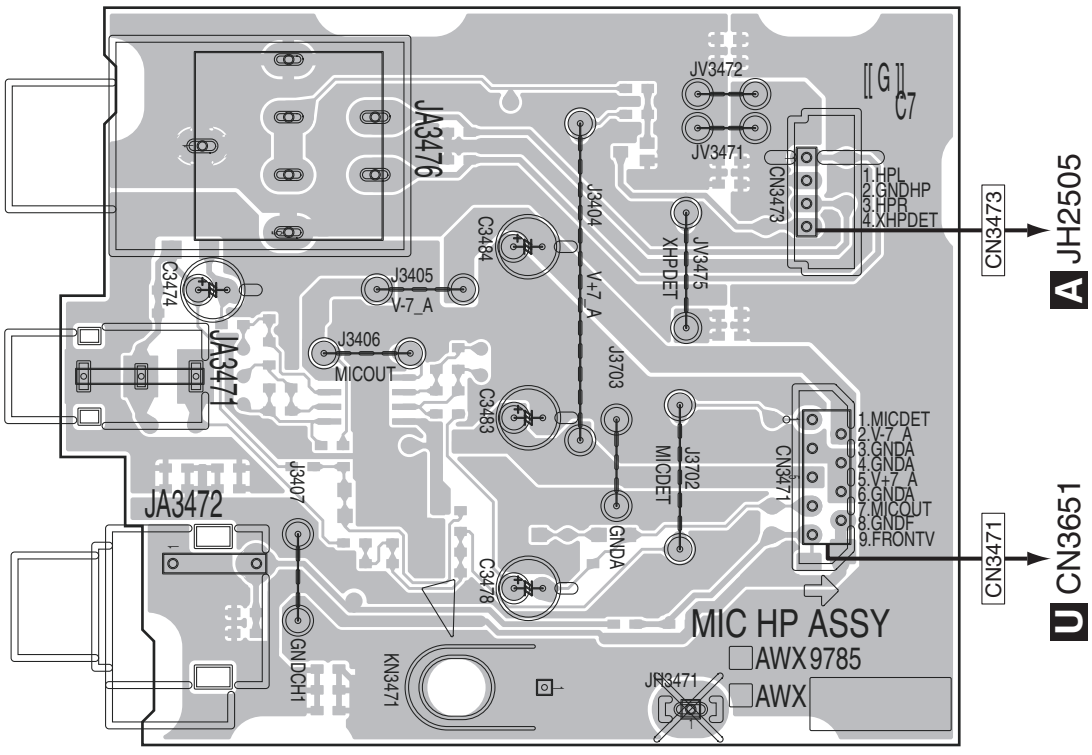

(ANP7781-B)

N O P

N O P

SIDE B

SIDE B

O ENCODER ASSY

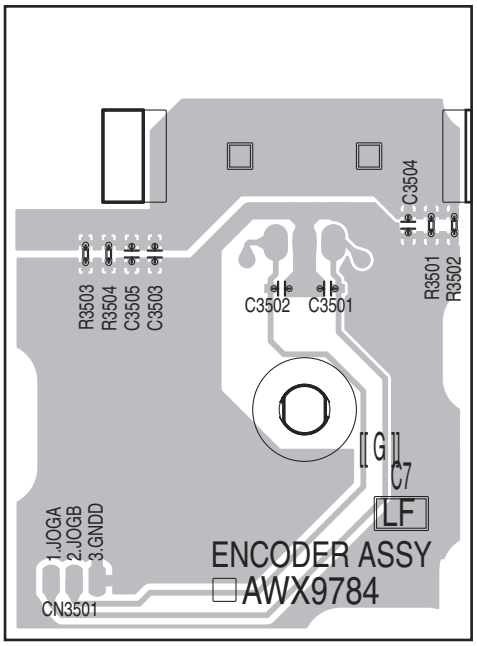

(ANP7781-B)

CN3501

N POWER SW ASSY

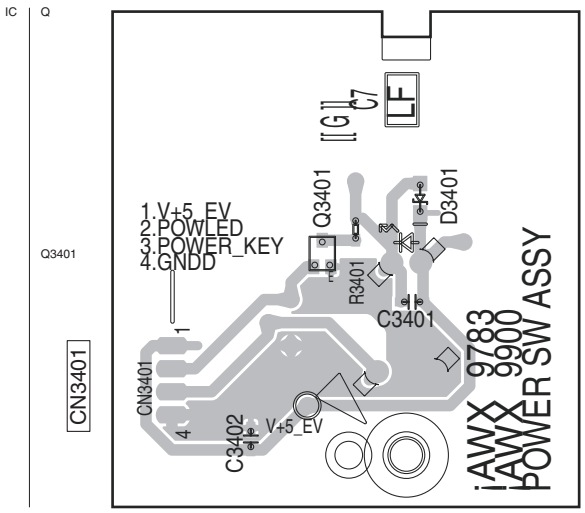

(ANP7781-B)

P MIC HP ASSY

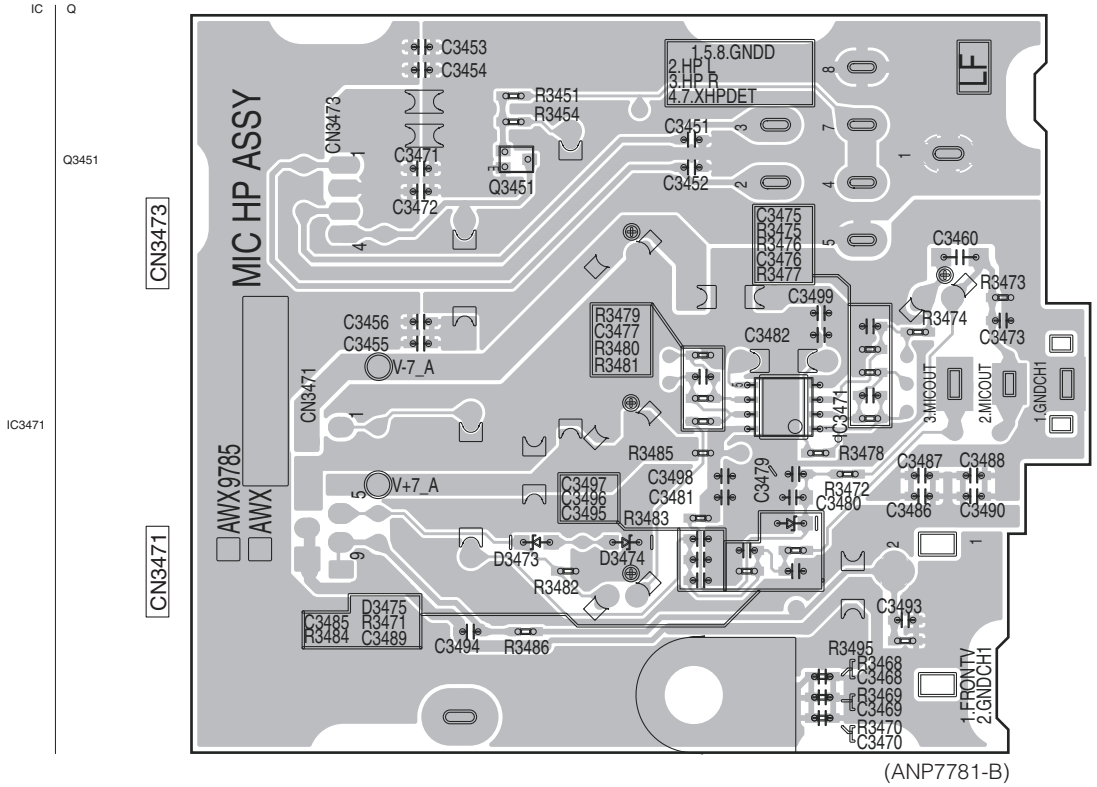

(ANP7781-B)

11.13 CONNECT and A-DAC BRIDGE ASSYS

SIDE A

SIDE A

Q CONNECT ASSY

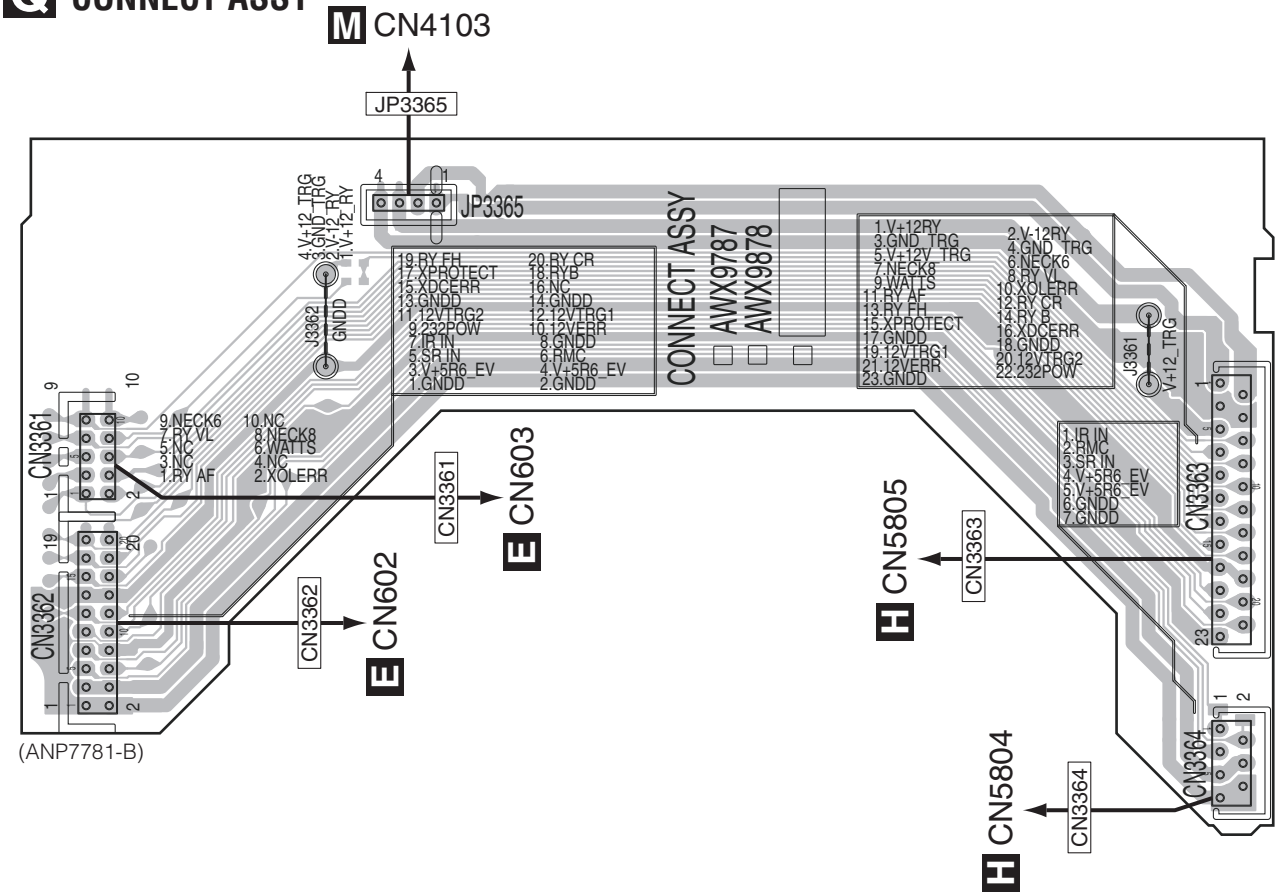

(ANP7781-B)

R A-DAC BRIDGE ASSY

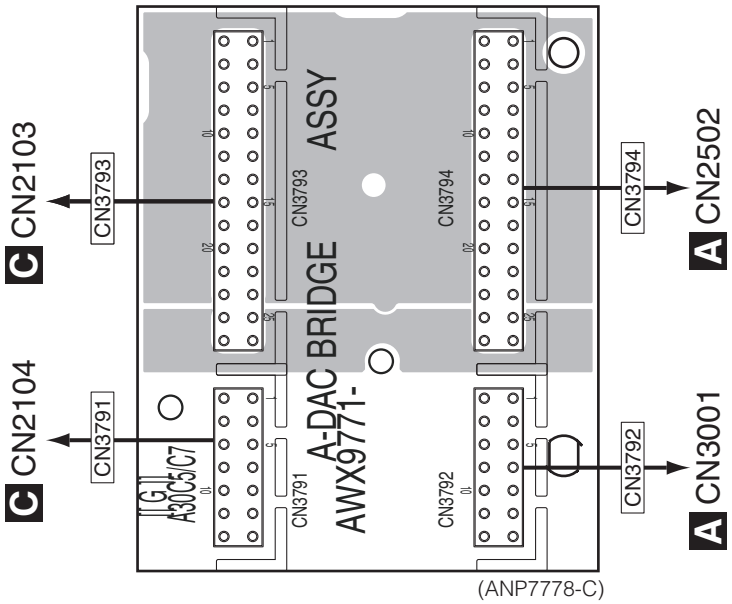

(ANP7778-C)

Q R

Q R

SIDE B

Q CONNECT ASSY

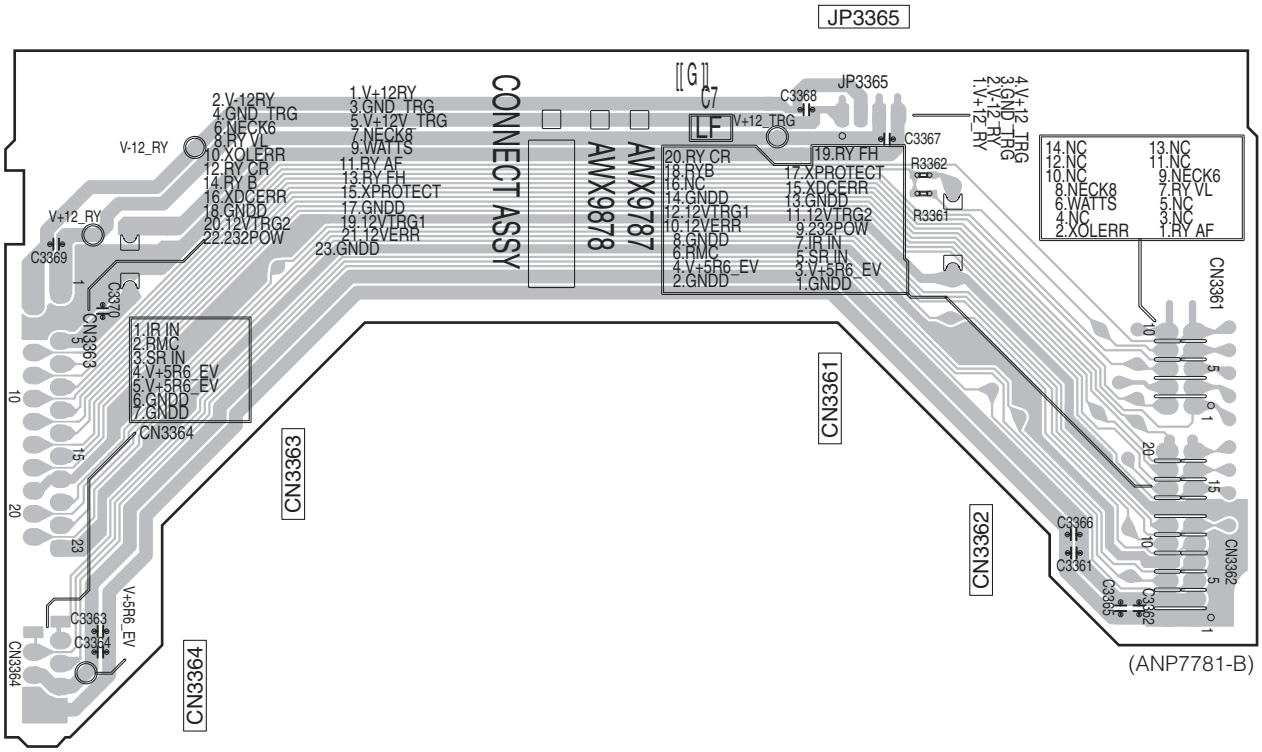

R A-DAC BRIDGE ASSY

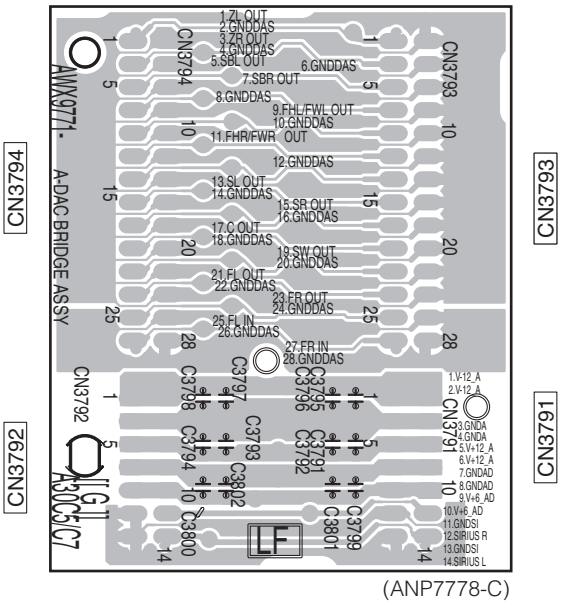

11.14 D-AUDIO BRIDGE, D-DAC BRIDGE and MIC CONNECT ASSYS

SIDE A

S D-AUDIO BRIDGE ASSY

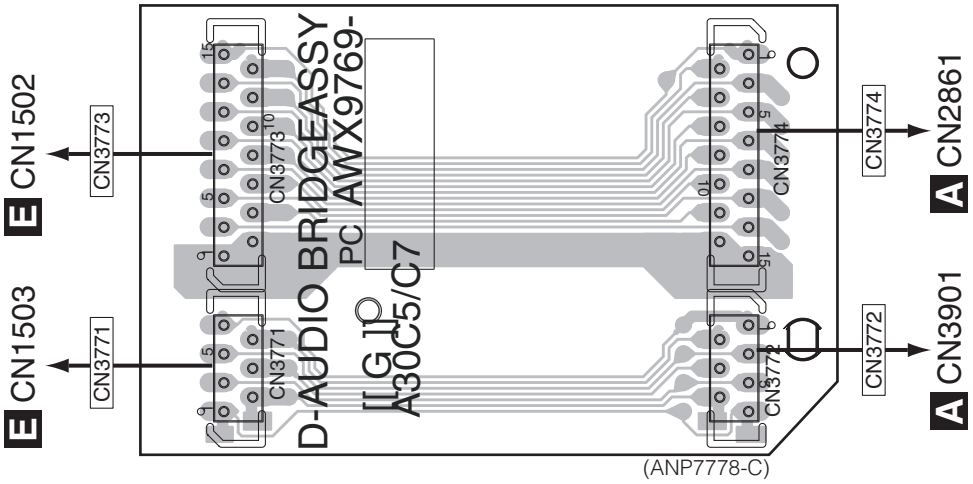

U MIC CONNECT ASSY

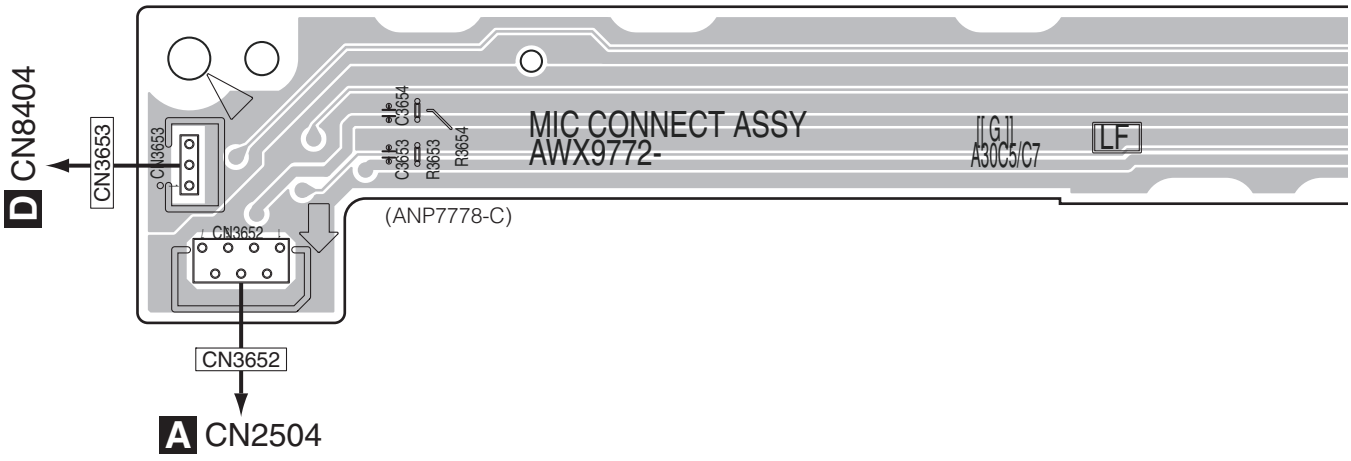

S U

SIDE A

T D-DAC BRIDGE ASSY

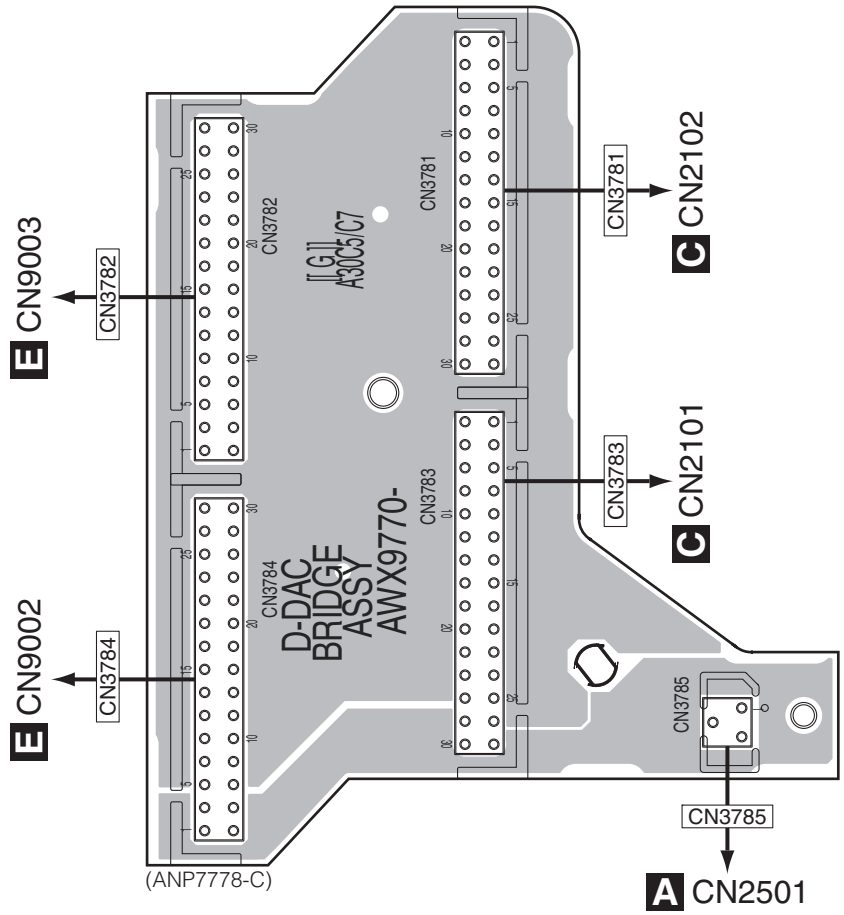

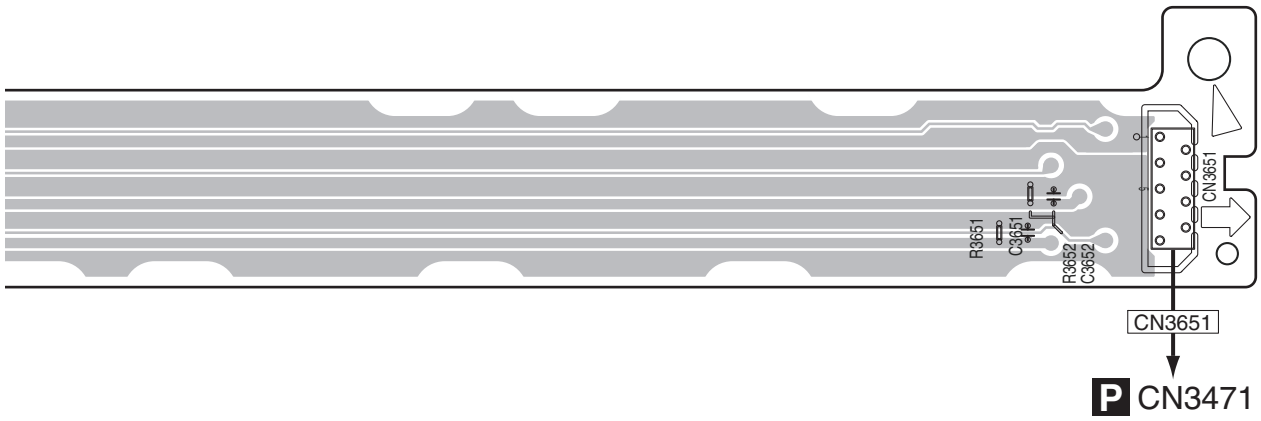

T D-DAC BRIDGE ASSY

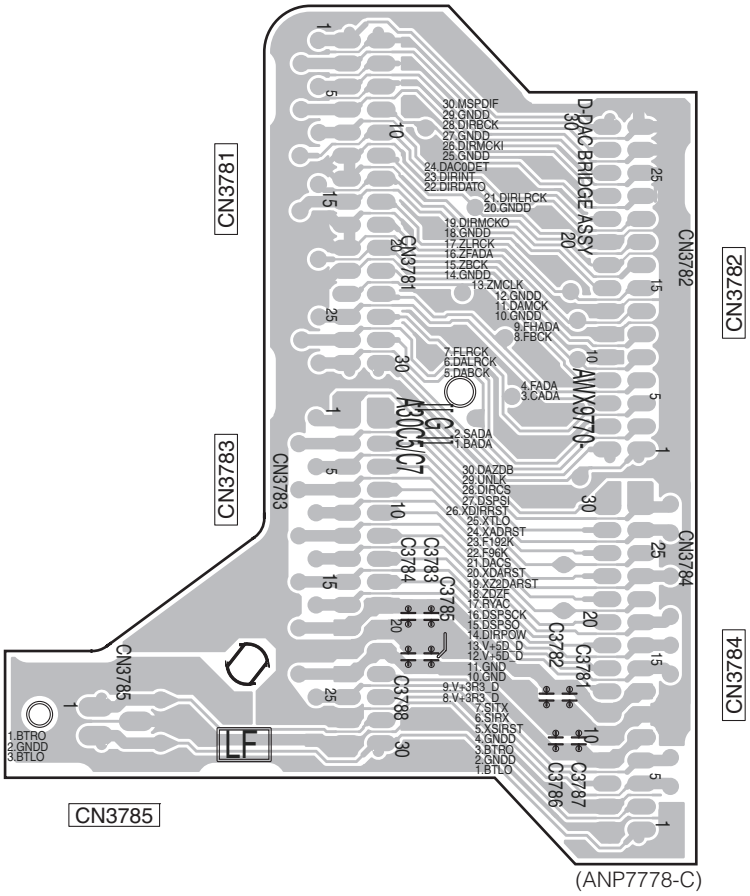

(ANP7778-C)

U MIC CONNECT ASSY

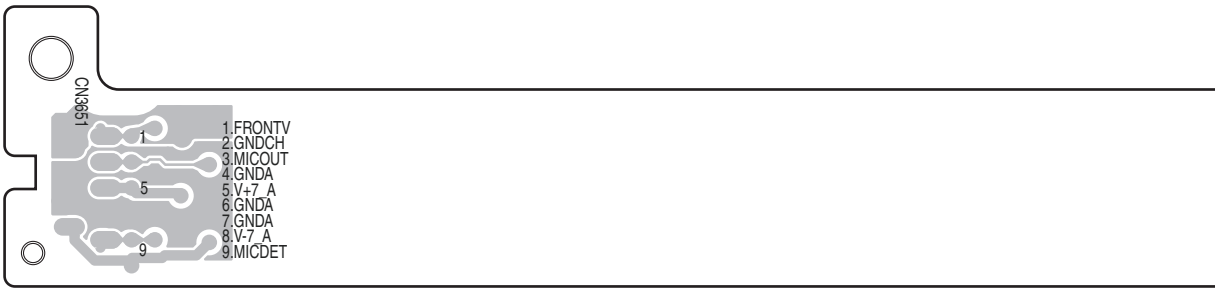

S D-AUDIO BRIDGE ASSY

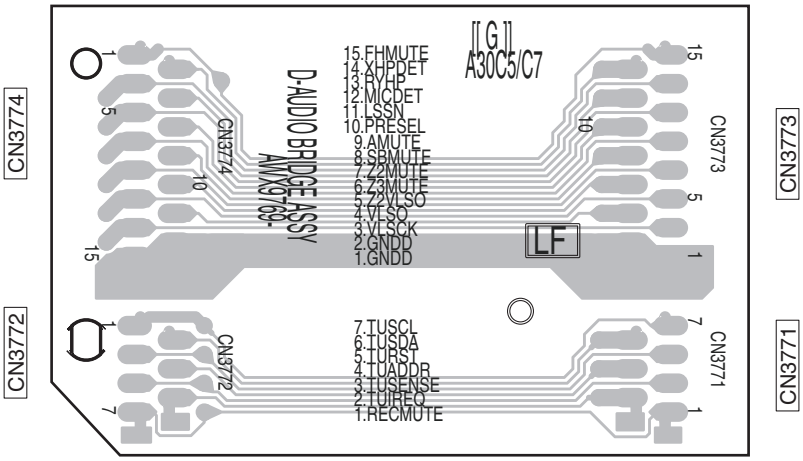

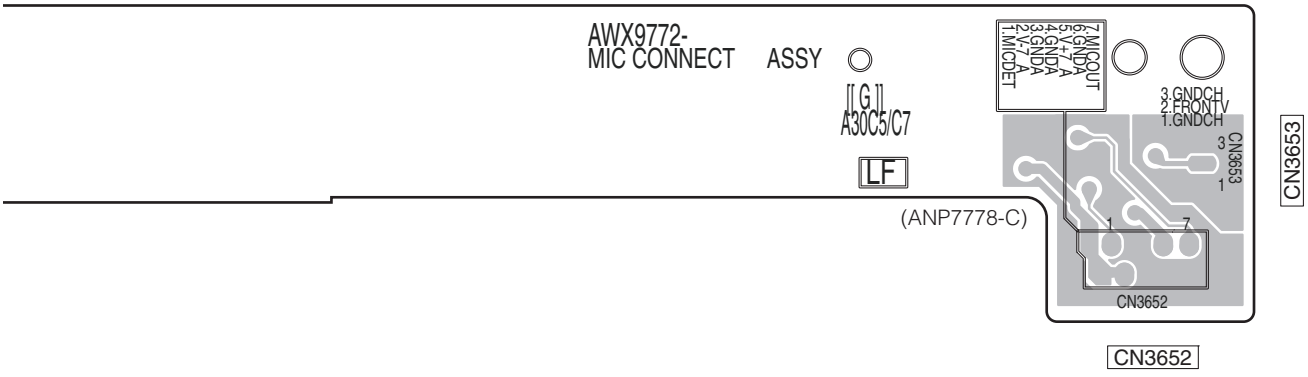

11.15 POSI 1-3, BIND L FRONT and BIND L BACK ASSYS

SIDE A

SIDE A

V POSI 1 ASSY

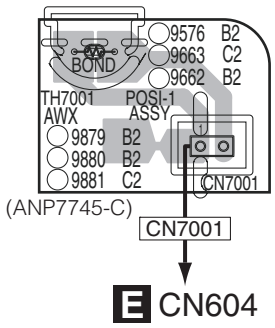

E CN604

W POSI 2 ASSY

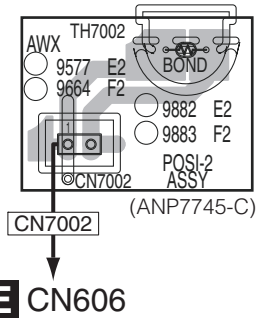

E CN606

X POSI 3 ASSY

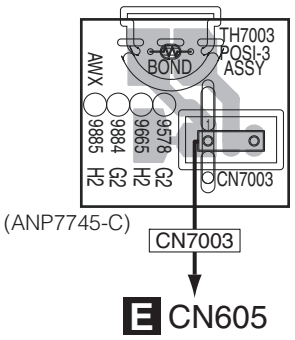

E CN605

Y BIND L FRONT ASSY

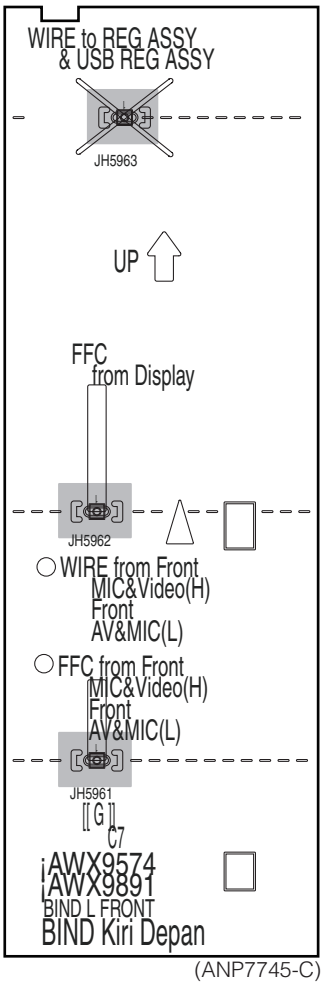

Z BIND L BACK ASSY

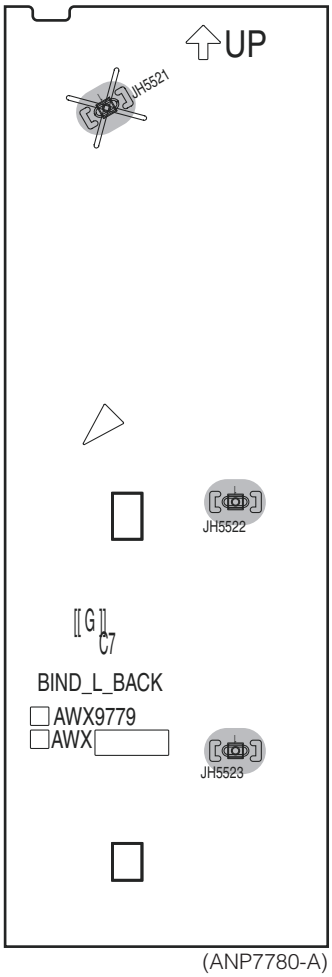

V W X Y Z

V W X Y Z

SIDE B

SIDE B

A

X POSI 3 ASSY

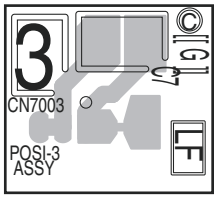

(ANP7745-C)

CN7003

W POSI 2 ASSY

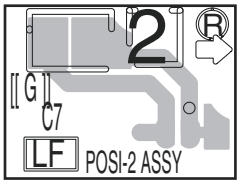

(ANP7745-C)

CN7002

V POSI 1 ASSY

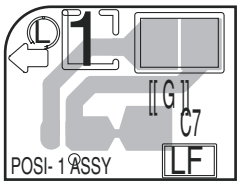

(ANP7745-C)

CN7001

B

Z BIND L BACK ASSY

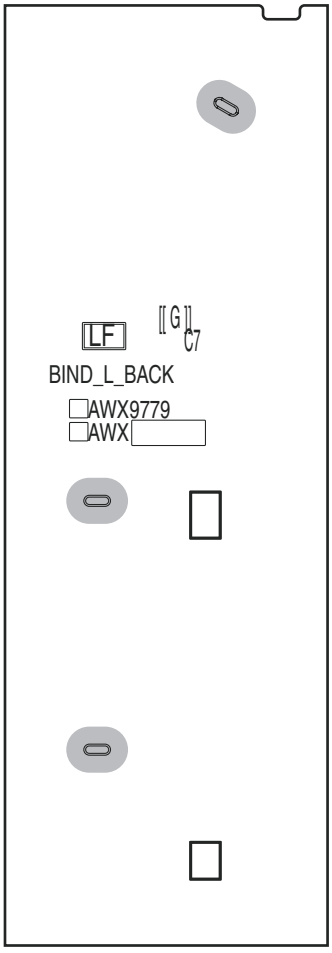

(ANP7780-A)

C

Y BIND L FRONT ASSY

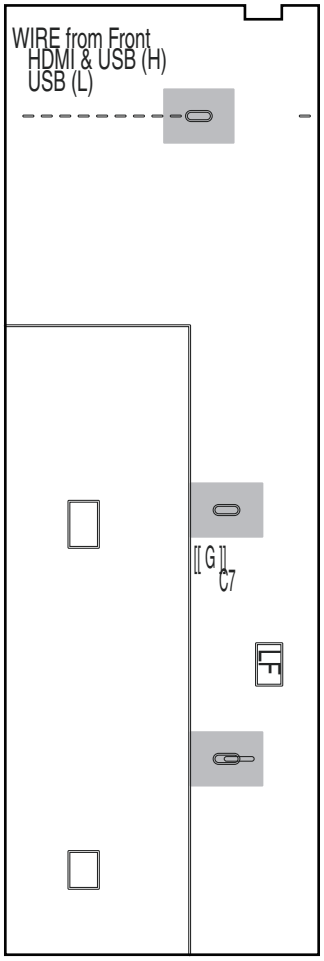

(ANP7745-C)

D E F

11.16 BIND R FRONT, BIND DISP FFC, FFC GUARD / GUARD 2 and BIND R BACK ASSYS

SIDE A

SIDE A

AA BIND R FRONT ASSY

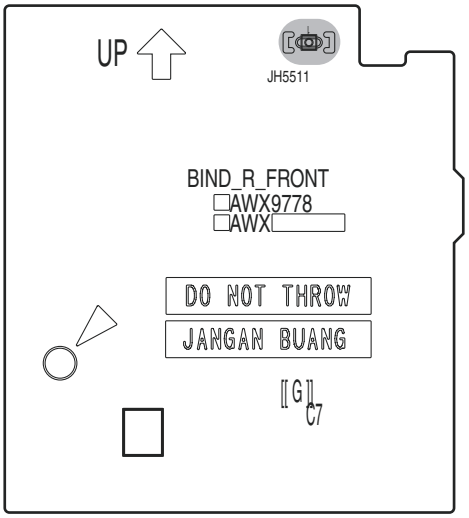

(ANP7780-A)

AB BIND DISP FFC ASSY

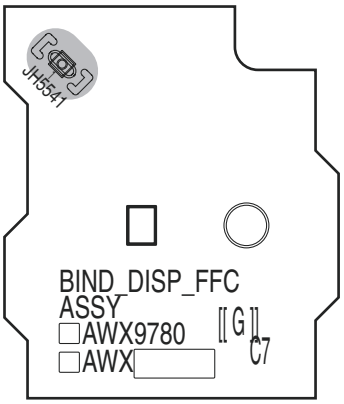

(ANP7780-A)

AC FFC GUARD ASSY

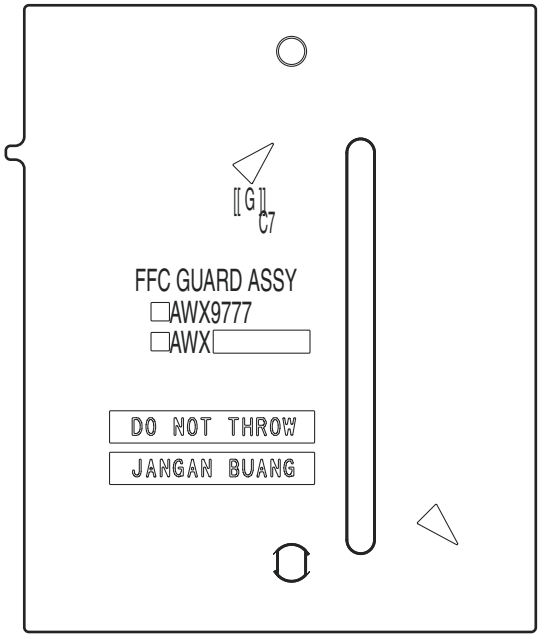

(ANP7780-A)

AD FFC GUARD 2 ASSY

(ANP7780-A)

AE BIND R BACK ASSY

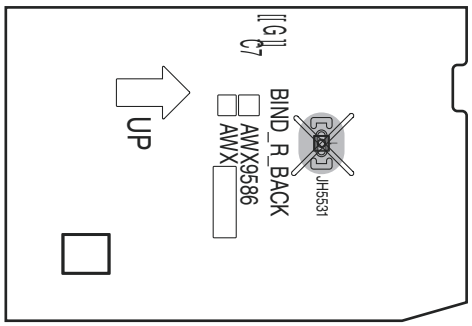

(ANP7745-C)

SIDE B

SIDE B

AB BIND DISP FFC ASSY

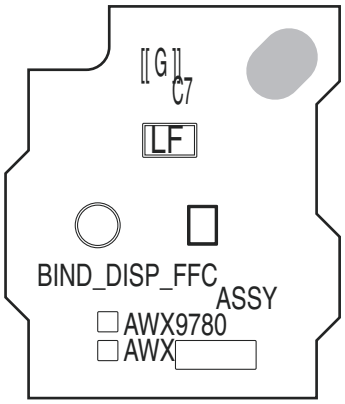

(ANP7780-A)

AA BIND R FRONT ASSY

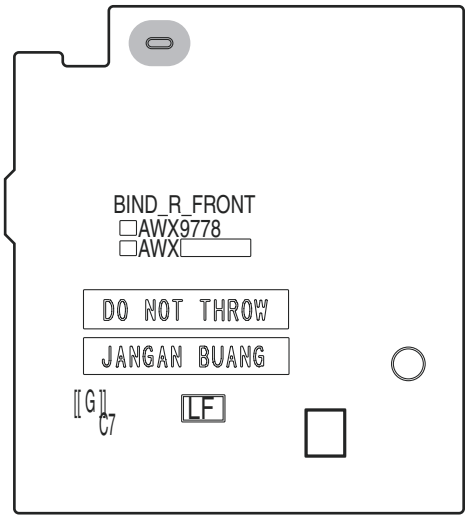

(ANP7780-A)

AD FFC GUARD 2 ASSY

(ANP7780-A)

AC FFC GUARD ASSY

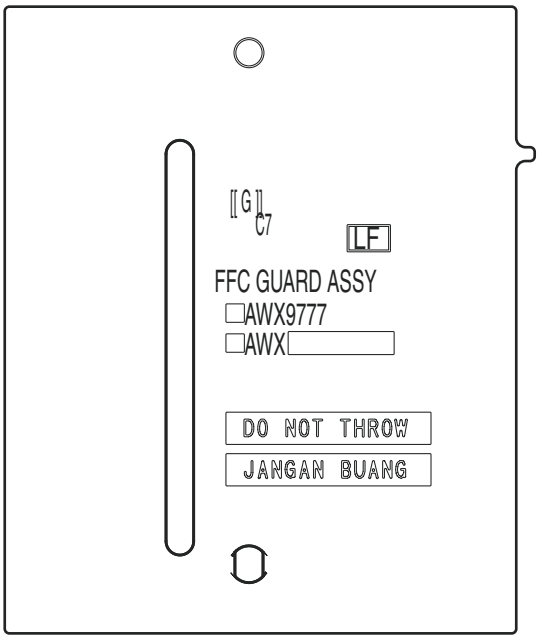

(ANP7780-A)

AE BIND R BACK ASSY

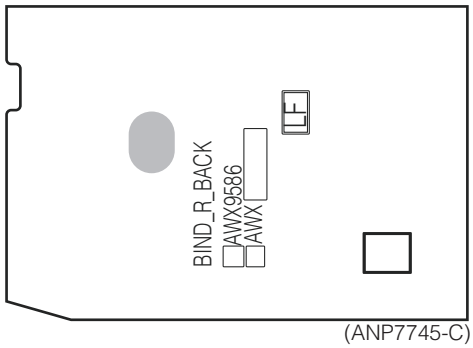

(ANP7745-C)

AA AB AC AD AE

AA AB AC AD AE

5 6 7 8

12. PCB PARTS LIST

NOTES: ● *Parts marked by "NSP" are generally unavailable because they are not in our Master Spare Parts List.*

● *The ⚠ mark found on some component parts indicates the importance of the safety factor of the part. Therefore, when replacing, be sure to use parts of identical designation.*

● *When ordering resistors, first convert resistance values into code form as shown in the following examples.*

Ex.1 When there are 2 effective digits (any digit apart from 0), such as 560 ohm and 47 k ohm (tolerance is shown by J = 5%, and K = 10%).

560 Ω → 56 × 10^1 → 561 ..... RD1/4PU [5][6][1] J
47 kΩ → 47 × 10^3 → 473 ..... RD1/4PU [4][7][3] J
0.5 Ω → R50 ..... RN2H [R][5][0] K
1 Ω → 1R0 ..... RS1P [1][R][0] K

Ex.2 When there are 3 effective digits (such as in high precision metal film resistors).

5.62 kΩ → 562 × 10^1 → 5621 ..... RN1/4PC [5][6][2][1] F

LIST OF ASSEMBLIES

Mark	No. Description	Part No.
NSP	1..LOCAL POWER ASSY	AWM8247
	2..REGULATOR ASSY	AWX9774
	2..PRESTAGE ASSY	AWX9775
	2..USB RECT ASSY	AWX9776
	2..BIND R FRONT ASSY	AWX9778
	2..BIND L BACK ASSY	AWX9779
	2..BIND DISP FFC ASSY	AWX9780
NSP	2..FFC GUARD ASSY	AWX9777
NSP	2..FFC GUARD 2 ASSY	AWX9892
NSP	1..COMPLEX ASSY(VSX-53/52)	AWM8248
	2..DISPLAY ASSY	AWX9782
	2..POWER SW ASSY	AWX9783
	2..ENCODER ASSY	AWX9784
	2..MIC HP ASSY	AWX9785
	2..PRIMARY ASSY	AWX9786
	2..VOL ASSY	AWX9788
	2..CONNECT ASSY	AWX9878
NSP	1..COMPLEX ASSY(VSX-1326-K/1126-K/1121-K)	AWM8254
	2..DISPLAY ASSY	AWX9839
	2..POWER SW ASSY	AWX9900
	2..ENCODER ASSY	AWX9784
	2..MIC HP ASSY	AWX9785
	2..PRIMARY ASSY	AWX9786
	2..VOL ASSY	AWX9788
	2..CONNECT ASSY	AWX9878
NSP	1..AMP ASSY(VSX-53/1326-K)	AWM8270
	2..POSI 1 ASSY	AWX9879
	2..POSI 2 ASSY	AWX9882
	2..POSI 3 ASSY	AWX9884
	2..POWER AMP ASSY	AWX9886
	2..BIND L FRONT ASSY	AWX9891
NSP	2..BIND R BACK ASSY	AWX9586
NSP	1..AMP ASSY(VSX-52)	AWM8274
	2..POSI 1 ASSY	AWX9879
	2..POSI 2 ASSY	AWX9882
	2..POSI 3 ASSY	AWX9884
	2..POWER AMP ASSY	AWX9889
	2..BIND L FRONT ASSY	AWX9891
NSP	2..BIND R BACK ASSY	AWX9586

Mark	No. Description	Part No.
NSP	1..AMP ASSY(VSX-1126-K/1121-K)	AWM8275
	2..POSI 1 ASSY	AWX9879
	2..POSI 2 ASSY	AWX9882
	2..POSI 3 ASSY	AWX9884
	2..POWER AMP ASSY	AWX9890
	2..BIND L FRONT ASSY	AWX9891
NSP	2..BIND R BACK ASSY	AWX9586
NSP	1..AUDIO COMPOSITE ASSY(VSX-53/1326-K)	AWR7102
	2..AUDIO ASSY	AWX9767
	2..COMPOSITE ASSY	AWX9768
	2..D-AUDIO BRIDGE ASSY	AWX9769
	2..D-DAC BRIDGE ASSY	AWX9770
	2..A-DAC BRIDGE ASSY	AWX9771
	2..MIC CONNECT ASSY	AWX9772
NSP	1..AUDIO COMPOSITE ASSY(VSX-52/1126-K/1121-K)	AWR7105
	2..AUDIO ASSY	AWX9830
	2..COMPOSITE ASSY	AWX9768
	2..D-AUDIO BRIDGE ASSY	AWX9769
	2..D-DAC BRIDGE ASSY	AWX9770
	2..A-DAC BRIDGE ASSY	AWX9771
	2..MIC CONNECT ASSY	AWX9772
	1..DAC LOW ASSY	AWX9773
	1..DIGITAL MAIN ASSY(VSX-53/1326-K)	AWX9825
	1..DIGITAL MAIN ASSY(VSX-52/1126-K/1121-K)	AWX9826
	1..COMPONENT ASSY	AWX9864
	1..FRONT HDMI USB ASSY	AWX9897
	1..FM/AM TUNER UNIT	AXX7282

A AUDIO ASSY

AWX9767 and AWX9830 are constructed the same except for the following:

Mark	Symbol and Description	AWX9767	AWX9830
	Q2971	IMX25	Not used
	JA2951 Pin Jack(4p)	XKB3017	Not used
	JA2952 2p Pin Jack	Not used	AKB7233
	R2867	RS1/10SR562J	Not used
	R2868	RS1/10SR222J	Not used
	R2901	RS1/10SR104J	Not used
	R2902	RS1/10SR104J	Not used
	R2971	RS1/10SR102J	Not used
	R2972	RS1/10SR102J	Not used
	R2973	RS1/10SR102J	Not used
	R2974	RS1/10SR102J	Not used
	R2975	RS1/10SR102J	Not used
	R2976	RS1/10SR102J	Not used
	C2864	CKSRYB104K50	Not used
	C2866	CKSRYB104K50	Not used
	C2903	CEAT100M50	Not used
	C2904	CEAT100M50	Not used
	C2983	CKSRYB103K50	Not used

H POWER AMP ASSY

AWX9886, AWX9889 and AWX9890 are constructed the same except for the following:

Mark	Symbol and Description	AWX9886	AWX9889	AWX9890
	Q5865	RT3T22M	Not used	Not used
	Q5951	LTC124EUB	LTC124EUB	Not used
	Q5952	LSA1576UB(QR)	LSA1576UB(QR)	Not used
	Q5953	LTC124EUB	LTC124EUB	Not used
	Q5954	LSA1576UB(QR)	LSA1576UB(QR)	Not used
	Q5955	LTC124EUB	LTC124EUB	Not used
	Q5956	LSA1576UB(QR)	LSA1576UB(QR)	Not used
	Q5957	LSA1576UB(QR)	LSA1576UB(QR)	Not used
	Q5958	LSA1576UB(QR)	LSA1576UB(QR)	Not used
	D5931	MC2848-11	Not used	Not used
	D5935	1SS357	Not used	Not used
	L5933 Chip Solid Inductor	QTL1013	Not used	Not used
	L5951 Chip Solid Inductor	ATL7002	ATL7002	Not used
	JA5807 JACK	AKN-209	AKN-209	Not used
	JA5811 JACK	VKB1243	Not used	Not used
	R5931	Not used	RS1/10SR0R0J	RS1/10SR0R0J
	R5933	RS1/10SR622J	Not used	Not used
	R5939	RS1/10SR104J	Not used	Not used
	R5947	RS1/10SR0R0J	Not used	Not used
	R5951	RS1/10SR103J	RS1/10SR103J	Not used
	R5952	RS1/10SR103J	RS1/10SR103J	Not used
	R5953	RS1/10SR120J	RS1/10SR120J	Not used
	R5954	RS1/10SR120J	RS1/10SR120J	Not used
	R5955	RS1/10SR120J	RS1/10SR120J	Not used
	R5956	RS1/10SR472J	RS1/10SR472J	Not used
	R5957	RS1/10SR472J	RS1/10SR472J	Not used
	R5958	RS1/10SR472J	RS1/10SR472J	Not used
	R5959	RS1/10SR472J	RS1/10SR472J	Not used
	R5960	RS1/10SR0R0J	RS1/10SR0R0J	Not used
	R5961	RS1/10SR0R0J	RS1/10SR0R0J	Not used

Mark	Symbol and Description	AWX9886	AWX9889	AWX9890
	R5962	RS1/10SR0R0J	RS1/10SR0R0J	Not used
	R5963	RS1/10SR120J	RS1/10SR120J	Not used
	R5964	RS1/10SR0R0J	RS1/10SR0R0J	Not used
	R5965	RS1/10SR0R0J	RS1/10SR0R0J	Not used
	R5966	RS1/10SR0R0J	RS1/10SR0R0J	Not used
	C5932	CKSRYB103K50	Not used	Not used
	C5934	CKSRYB153K50	Not used	Not used
	C5951	CKSRYB104K16	CKSRYB104K16	Not used
	C5953	CKSRYB103K50	CKSRYB103K50	Not used
	C5954	CKSRYB103K50	CKSRYB103K50	Not used
	C5955	CKSRYB102K50	CKSRYB102K50	Not used
	C5957	CKSRYB472K50	CKSRYB472K50	Not used

J DISPLAY ASSY

AWX9782 and AWX9839 are constructed the same except for the following:

Mark	Symbol and Description	AWX9782	AWX9839
	Q3207	LTC124EUB	Not used
	Q3210	LTC124EUB	Not used
	Q3211	LTC124EUB	Not used
	Q3212	LTC124EUB	Not used
	Q3213	LTC124EUB	Not used
	D3204	SLR343BC4T(JKLM)	SLR-343VC(NPQ)
	D3206	SLR343BC4T(JKLM)	SLR-343VC(NPQ)
	D3208	SLR343BC4T(JKLM)	SLR-343VC(NPQ)
	D3210	SLR343BC4T(JKLM)	SLR-343VC(NPQ)
	D3212	SLR343BC4T(JKLM)	Not used
	R3068	RS1/10SR102J	Not used
	R3079	Not used	RS1/10SR0R0J
	R3095	RS1/10SR101J	Not used
	R3114	Not used	RS1/10SR0R0J
	R3211	Not used	RS1/10SR0R0J
	R3212	Not used	RS1/10SR0R0J
	R3213	Not used	RS1/10SR0R0J
	R3214	Not used	RS1/10SR0R0J
	R3241	RS1/10SR151J	RS1/10SR681J
	R3242	RS1/10SR151J	RS1/10SR681J
	R3243	RS1/10SR151J	RS1/10SR681J
	R3244	RS1/10SR151J	RS1/10SR681J
	R3245	RS1/10SR151J	Not used
	R3356	RS1/10SR101J	Not used
	C3048	CCSRCH100D50	Not used
	C3218	CCSRCH470J50	Not used
	C3338	CCSRCH100D50	Not used

N POWER SW ASSY

AWX9783 and AWX9900 are constructed the same except for the following:

Mark	Symbol and Description	AWX9783	AWX9900
	Q3401	LTC143EUB	Not used
	D3402	SLR343BC4T(JKLM)	Not used
	R3401	RS1/10SR151J	Not used
	C3401	CCSRCH221J50	Not used

Mark	No.	Description	Part No.

A AUDIO ASSY

SEMICONDUCTORS

	IC	2501	BD3473KS2
	IC	2701	TC4066BFN
	IC	2702,2751,2801	NJM4565MD
	IC	3221	TC4052BFN
	IC	3251,3271	NJM4565V
	Q	2721,2853,3221,3222	LTC124EUB
	Q	2722	LTA124EUB
	Q	2803,2951,2971,3101	IMX25
	Q	2852	LSA1576UB
⚠	Q	3001	2SD1858X
⚠	Q	3002	2SB1237X
	Q	3102,3151,3152,3201	IMX25
	Q	3202,3251,3252,3271	IMX25
	Q	3272,3274	IMX25
⚠	Q	3901	2SD1664
	D	2691,2701,2702	1SS302
	D	2851,2852	1SS352
	D	3001,3002	HZU7R5(B2)
	D	3902	UDZS5R6(B)
	D	3903	UDZS3R3(B)

MISCELLANEOUS

	JA	2501,2504,2951 PIN JACK(4P)	XKB3017
	JA	2502,2505 2P PIN JACK	AKB7233
	JA	3101 PIN JACK(4P)	XKB3017
	JA	3102 RCA JACK	AKB7236
	JA	3201 PIN JACK(6P)	XKB3037
	RY	2851 RELAY	CSR1031
	CN	2501 3P SOCKET	XKP3072
	CN	2502 B TO B CONNECTOR	AKP7269
	CN	2504 7P CONNECTOR	52044-0745
	CN	2861 15P SOCKET	XKP3078
	CN	3001 14P SOCKET	AKP7248
	CN	3052 CONNECTOR	9607S-19F
	CN	3901 7P SOCKET	XKP3074
	CN	3902 CONNECTOR	9604S-09C
	JH	2505 4P CABLE HOLDER	51048-0400
	JP	2505 JUMPER WIRE	D20PYY0455E
	JP	3002 CONNECTOR ASS'Y	PF06PG-S47

RESISTORS

	R	2819,2820	RD1/4MUF330J
	R	3032	RS1/8SQ822J
	Other Resistors		RS1/10SR###J

CAPACITORS

	C	2505,2506,2525,2526	CEAT220M50
	C	2545,2546,2587,2588	CEAT220M50
	C	2565,2566,2707,2708	CEAT100M50
	C	2609,2610,2731,2732	CEAT220M50
	C	2691,2692,3011,3012	CCSRCH331J50
	C	2693,2694	ACH1479
	C	2695,2696	CFHXSQ103J16
	C	2697,2698,2700,2703	CCSRCH101J50
	C	2701,2702,2705,2706	CKSRYB103K50
	C	2704,2759,2852,2853	CCSRCH101J50
	C	2751-2758,2760,2903	CEAT100M50
	C	2761,2762,2803,2804	CKSRYB103K50
	C	2801,2802,2805,2806	CEAT1R0M50
	C	2807,2808	CCSRCH221J50
	C	2815,2816	CKSQYB103K50
	C	2817,2818	CEAT470M25
	C	2819,2820	CEAT471M16
	C	2821,2822,3911-3913	CCSRCH100D50
	C	2851	CEAT101M35
	C	2863-2866,3905,3918	CKSRYB104K50
	C	2904,2907,2908,3025	CEAT100M50
	C	2981,2983,3007,3008	CKSRYB103K50
	C	3001,3002	CEAT2R2M50
	C	3009,3010,3951	CCSRCH101J50
	C	3026,3952	CEAT100M50
	C	3105,3106,3155,3205	CEAT220M50
	C	3206,3217,3218,3255	CEAT220M50
	C	3223,3224,3265,3266	CKSRYB103K50
	C	3256,3275,3276	CEAT220M50
	C	3285,3286,3904,3907	CKSRYB103K50
	C	3903,3906	CEAT101M16
	C	3909	CCSRCH331J50
	C	3915-3917,3919-3921	CCSRCH100D50
	C	3949	CCSRCH100D50
	C	3959,3960	CKSRYB224K25

B COMPOSITE ASSY

SEMICONDUCTORS

	Q	3601,3604,3608	LSA1576UB
	Q	3602,3603,3607	HN1C01FU

MISCELLANEOUS

	JA	3601-3603 2P PIN JACK	AKB7229
	JA	3605 1P PIN JACK	AKB7231
	CN	3601 20P SOCKET	AKP7249

RESISTORS

	R	3606,3609,3627	RS1/10SR68R0F
	R	3629-3632	RS1/10SR75R0F
	Other Resistors		RS1/10SR###J

CAPACITORS

	C	3602,3603,3605,3606	CKSRYB104K50
	C	3607,3619,3620	CCSRCH181J50
	C	3612,3613,3615,3616	CKSRYB104K50
	C	3614,3617	CCSRCH102J50
	C	3621-3624	CEAT101M16

C DAC LOW ASSY

SEMICONDUCTORS

	IC	2001	AK4118AEQ
	IC	2004	TC74LCX08FK
	IC	2010	TC74VHC08FK
	IC	2106	TC74VHC126FK
⚠	IC	2181	NJM2855DL1-33
⚠	IC	2183	NJM2845DL1-05
	IC	2201	PCM1691DCA
	IC	2231,2281,2331,2381	NJM4565MD
	IC	2401,2402,2451	NJM4565MD
	IC	2431	PCM1804DB

Mark	No.	Description	Part No.
	IC	2471	AK4388ET
	D	2130	1SS302
	D	2431,2432	1SS301
	D	2433,2434	1SS300
MISCELLANEOUS			
	L	2004-2008 CHIP SOLID INDUCTOR	QTL1013
	L	2102,2201 CHIP SOLID INDUCTOR	QTL1013
	L	2202,2431 CHIP SOLID INDUCTOR	QTL1013
	L	2442,2471 CHIP SOLID INDUCTOR	QTL1013
	L	2472,2473 INDUCTOR	CTF1379
	JA	2002-2004 OPT. LINK IN	AKS7001
	JA	2006 OPT OUT MODULE	AKS7007
	JA	2008 PIN JACK(2P)	AKB7173
	JA	2101 SOCKET	BKP1127
	KN	2201 SCREW PLATE	VNE1948
	CN	2101,2102 SOCKET(30PL)	BKP1047
	CN	2103 B TO B CONNECTOR	AKP7269
	CN	2104 14P SOCKET	AKP7248
RESISTORS			
	R	2007-2009,2012,2016	RS1/16SS101J
	R	2017,2020,2431,2432	RS1/16SS100J
	R	2018,2084-2087,2210	RS1/16SS470J
	R	2019,2211,2489	RS1/16SS680J
	R	2021,2023-2025,2027	RS1/16SS101J
	R	2022,2048,2212-2216	RS1/16SS221J
	R	2026	RS1/16SS471J
	R	2028	RS1/16SS1002F
	R	2029,2049,2088,2115	RS1/16SS101J
	R	2089,2096,2097	RS1/16SS0R0J
	R	2116-2118,2120	RS1/16SS220J
	R	2119,2168,2263,2433	RS1/16SS101J
	R	2158,2160,2162,2164	RS1/16SS104J
	R	2165-2167,2169,2170	RS1/16SS0R0J
	R	2171-2174,2177,2178	RS1/16SS104J
	R	2189	RS1/8SQ225J
	R	2190	RS1/8SQ475J
	R	2191	RS1/8SQ105J
	R	2201,2202	RS1/16SS103J
	R	2217-2220,2227,2487	RS1/16SS470J
	R	2434,2480,2481,2485	RS1/16SS101J
	R	2440	RS1/16SS0R0J
	R	2469,2471,2472	RS1/16SS221J
	R	2473,2474	RS1/16SS102J
	R	2484	RS1/16SS473J
	R	2490	RS1/16SS820J
	Other Resistors		RS1/10SR###J
CAPACITORS			
	C	2002,2005,2124,2126	CKSRYB103K50
	C	2003,2006,2010-2012	CKSRYB104K16
	C	2014,2122	CKSRYB104K16
	C	2018,2021,2024,2181	CEAK101M16
	C	2019,2022,2028,2033	CCSSCH471J50
	C	2020,2023,2029,2032	CKSSYB104K16
	C	2026,2065,2066	CKSRYB474K16
	C	2030	ACH7272
	C	2046,2112,2219,2421	CCSSCH471J50
	C	2047,2106,2183,2194	CKSSYB104K16
	C	2054,2413,2414	CCSRCH101J50
	C	2055	CEAK102M16
	C	2059	CEAK221M16
	C	2060	CCSRCH100D50
	C	2127,2128,2451,2452	CEAT220M50
	C	2129,2130,2223,2224	CKSRYB103K50
	C	2178,2185,2186,2214	CKSRYB104K50
	C	2179,2184,2187,2432	CEAK101M35
	C	2182	CCSRCH102J50
	C	2193	CKSQYB225K10
	C	2195,2440	CEAK101M16
	C	2201,2202,2211,2477	CKSRYB105K16
	C	2203,2473,2474	CEAT470M25
	C	2204,2212,2216	CEAT101M16
	C	2205,2207	CCSSCH331J50
	C	2206,2208,2220,2422	CKSSYB104K16
	C	2215,2217,2401,2402	CKSRYB104K50
	C	2231,2232,2281,2282	CEAT1R0M50
	C	2233,2234,2445,2455	CCSRCH471J50
	C	2235,2236,2285,2335	CCSRCH271J50
	C	2237,2238,2283,2333	CCSRCH331J50
	C	2239,2240,2289,2290	CEAT100M50
	C	2245,2251,2252,2273	CKSRYB103K50
	C	2274,2286,2295,2323	CKSRYB103K50
	C	2277	CCSSCH100D50
	C	2284	CKSRYB223K50
	C	2287,2337,2338,2387	CCSRCH391J50
	C	2288	CKSRYB562K50
	C	2324,2345,2373,2374	CKSRYB103K50
	C	2331,2332,2381,2382	CEAT1R0M50
	C	2334,2383,2384	CCSRCH331J50
	C	2336,2385,2386	CCSRCH271J50
	C	2339,2340,2389,2390	CEAT100M50
	C	2388,2453,2454	CCSRCH391J50
	C	2395,2434,2439,2464	CKSRYB103K50
	C	2403,2404	DCH1201
	C	2405-2408,2459,2460	CEAT100M50
	C	2411,2412,2415,2416	CKSQYB103K50
	C	2433,2435,2438	CKSRYB104K50
	C	2436,2437	ACH7211
	C	2441-2443,2446,2457	CKSRYB104K50
	C	2456,2475,2489	CCSRCH471J50
	C	2458,2472,2476,2480	CKSRYB104K50
	C	2478	CKSRYB103K50
	C	2481,2483,2484	CCSSCH471J50
	C	2482	CKSSYB104K16

D COMPONENT ASSY

SEMICONDUCTORS			
	IC	8301	NJW1327FU1
	IC	8401	NJM2505AF
	IC	8501	PDC162A
	IC	8601	HIN202EIBNZ
	Q	8301,8604	LSA1576UB

Mark	No.	Description	Part No.
	Q	8302,8501,8603	LSC4081UB
	Q	8303,8605	LTC114EUB
⚠	Q	8401	2SD1664
⚠	Q	8402	2SB1132
	D	8301,8302,8601,8605	1SS352
	D	8401	1SS302
	D	8404,8408	UDZS3R9(B)

MISCELLANEOUS

	L	8501 CHIP COIL	LCYA330J2520
	JA	8301 6P PIN JACK NI	AKB7224
	JA	8304 3P PIN JACK NI	AKB7227
	JA	8601 9P D-SUB SOCKET	AKP7256
	X	8501 CRYSTAL RESONATOR	ASS7080
	CN	8301-8303 20P PLUG	AKM7171
	CN	8404 L-PLUG(3P)	KM200NA3L
	JP	8403 CONNECTOR ASS'Y	PF06PG-S52

RESISTORS

	R	8301-8306	RS1/10SR75R0F
	R	8310,8312,8314	RS1/10SR68R0F
	Other Resistors		RS1/10SR###J

CAPACITORS

	C	8301,8302,8383,8417	CEAT101M10
	C	8303,8319,8320,8333	CCSRCH102J50
	C	8304,8306,8308,8314	CKSRYB104K50
	C	8305,8307,8310,8313	DCH1201
	C	8309,8317,8322,8340	CKSQYB105K25
	C	8311,8312,8330,8331	CKSRYB103K50
	C	8315,8318,8321,8324	DCH1201
	C	8316,8323,8325,8327	CKSRYB104K50
	C	8326,8341-8343,8345	DCH1201
	C	8328,8336,8337,8344	CKSRYB104K50
	C	8334,8389,8403,8408	CCSRCH102J50
	C	8338,8339,8360,8402	CKSRYB103K50
	C	8346,8348,8404,8405	DCH1201
	C	8347,8349,8395,8401	CKSRYB104K50
	C	8354,8355,8381,8382	CKSRYB105K16
	C	8358,8359	CCSRCH470J50
	C	8376,8377,8379,8611	CCSRCH100D50
	C	8384,8385,8388	CKSRYB473K50
	C	8386	CKSRYB562K50
	C	8387,8390	CKSRYB105K16
	C	8406,8407,8503,8509	CCSRCH101J50
	C	8409,8414	DCH1201
	C	8410,8413,8415,8421	CCSRCH102J50
	C	8418,8520,8521,8613	CEAT101M10
	C	8419,8420	CEAT221M10
	C	8422,8501,8513	CCSRCH102J50
	C	8504,8505	CCSRCH5R0C50
	C	8506,8508	CCSRCH240J50
	C	8507,8510	CCSRCH122J50
	C	8511,8512	CCSRCH101J50
	C	8515,8601,8607	CKSRYB103K50
	C	8522,8523,8602	CKSRYB104K50
	C	8604-8606	CKSRYB104K50
	C	8608	CCSRCH471J50
	C	8610	CCSRCH331J50
	C	8612,8614,8619	CCSRCH100D50

Mark	No.	Description	Part No.

E DIGITAL MAIN ASSY (VSX-53/VSX-1326-K)

SEMICONDUCTORS

	IC	101	UPD61283F1-407LU2A
	IC	104	NJM12904V
	IC	401	AYW7345
	IC	403,404	H5DU2562GTR-J3C
	IC	602	341S2164
	IC	603	PE7008A
	IC	604	PDJ019A
	IC	605,1504	TC7SH08FUS1
	IC	608	TC74VHCT541AFK
	IC	610,1806	TC74VHC126FK
	IC	611,1809	TC74VHCT125AFK
	IC	612,1502	TC74VHCT08AFKS1
	IC	613	TC74VHC08FK
	IC	903	SII9233ACTU
	IC	905	SII9387CTU
	IC	907	TC74VHC541FK
	IC	909	ADV7181CBSTZ
	IC	1201,1203,1218	TC7SZ125FU
	IC	1202	TC74LCX541FK
	IC	1204	88DE2750
	IC	1205-1211,1215	TC74VCX541FK
	IC	1212	H5PS5162GFR-S5C
⚠	IC	1216	LP2996M
⚠	IC	1505	BD2224G
	IC	1602,1603	SII9136CTU
	IC	1604,1814	TC74VHC157FK
⚠	IC	1605,1606	AAT4614AIGU-2
	IC	1607	TC7SH32FUS1
	IC	1608,1804	TC7SZ08FU
	IC	1802	TC7WZ08FK
	IC	1803	ICS87002BM-05
	IC	1808	TC7WHU04FK
	IC	1815,1816	TC74LCX157FK
	IC	1817	TC74VHC125FK
	IC	9001,9003	IS42S16400F-6TL
	IC	9002	D810K013BZKB400
	IC	9004	AYW7347
	IC	9005	TC7WGU04FK
	IC	9006	TC7SHU04FUS1
	IC	9201	IS42S16160C-6TL
⚠	IC	9202	BD2226G
	IC	9203	LAN8700C-AEZG
	IC	9204	DM860
NSP	IC	9205	AYW7346
⚠	IC	9501	S-1172B10-U5
⚠	IC	9502,9503,9505,9506	S-1172B12-U5
⚠	IC	9504,9511,9513	S-1170B50UC-OUJ
⚠	IC	9507	MB39C011A
⚠	IC	9508	S-1170B25UC-OTK
⚠	IC	9509	MM1701WH
⚠	IC	9510	NJM2846DL3-33
⚠	IC	9512	NJM2872BF33
	Q	601,607-609	RN4983
	Q	604,1502-1505,1507	LTA124EUB
	Q	903	HN1K02FU

Mark	No.	Description	Part No.
	Q	1501,9001,9002,9004	LTC114YUB
	Q	1506,1722-1728	LSA1576UB
	Q	1729-1731,9504,9506	LSC4081UB
⚠	Q	9501,9502	SH8M12
⚠	Q	9503	RZQ045P01
⚠	Q	9505	RTQ040P02
	D	601	RB501V-40
	D	901,903,904	1SS301
	D	1601,1602	RKZ5.1KG(B2)
	D	9504	1SS352

MISCELLANEOUS

	L	103 INDUCTOR	LCTC150K2125
	L	105,601-606 CHIP BEADS	VTL1129
	L	607 CHIP BEADS	VTL1132
	L	901,905,906,918 CHIP BEADS	ATL7010
	L	902-904,907,913 CHIP BEADS	VTL1129
	L	917,919,1201,1202 CHIP BEADS	VTL1129
	L	921 INDUCTOR	CTF1547
	L	922,1210,1607,1608 CHIP BEADS	ATL7010
	L	1204-1209,1211-1216 CHIP BEADS	VTL1129
	L	1220,1503,1601,1602 CHIP BEADS	VTL1129
	L	1501 FILTER	CTF1703
	L	1502,1504 CHIP BEADS	VTL1134
	L	1604-1606,1620,1802 CHIP BEADS	VTL1129
	L	1609-1616 COIL	ATH7064
	L	1617 CHIP BEADS	VTL1126
	L	1618,1619 FERRITE BEAD	CTF1528
	L	1722-1724 INDUCTOR	ATL7033
	L	1725-1727 INDUCTOR	ATL7035
	L	1728 INDUCTOR	LCTC100K2125
	L	1729-1731 INDUCTOR	LCTC4R7K2125
	L	1803,1806,1808-1811 CHIP BEADS	VTL1129
	L	1805 INDUCTOR	CTF1786
	L	1815-1818,9001,9005 CHIP BEADS	VTL1129
	L	9002,9003,9205,9206 CHIP BEADS	ATL7010
	L	9004,9010 CHIP BEADS	VTL1128
	L	9007,9201,9202,9204 CHIP BEADS	VTL1129
	L	9207-9210,9212-9214 CHIP BEADS	VTL1129
	L	9215,9216 COIL	ATH7082
	L	9501,9502,9507,9510 CHIP BEADS	ATL7010
	L	9503,9511-9513 CHIP BEADS	VTL1129
	L	9506 INDUCTOR	ATH7087
	L	9509 INDUCTOR	ATH7086
	F	102,103,107,108 EMI FILTER	DTL1106
	JA	901-907,1601,1602 HDMI JACK	AKP7268
	JA	1501 CONNECTOR	CKS5712
	JA	9201 USB CONNECTOR	DKB1106
	JA	9202 RJ45 CONNECTOR	AKN7115
	KN	602 SCREW PLATE	VNE1948
	X	602,901 CRYSTAL	ASS7092
	X	902 CRYSTAL	ASS7111
	X	1201 CRYSTAL	ASS7114
	X	1801 CRYSTAL OSCILLATOR	ASS7102
	X	1802 CRYSTAL OSCILLATOR	ASS7101
	X	9001 RESONATOR	CSS1795
	CN	601 39P CONNECTOR	VKN2098
	CN	602,1722,1723 20P SOCKET	AKP7249
	CN	604,606 PLUG(2P)	KM200NA2L
	CN	605 L-PLUG(3P)	KM200NA3L
	CN	607 B TO B CONNECTOR	AKP7270
	CN	1501 CONNECTOR	AKM1276
	CN	1502 15P SOCKET	XKP3078
	CN	1503 7P SOCKET	XKP3074
	CN	9002,9003 SOCKET(30PL)	BKP1047
	CN	9501 CONNECTOR	B7B-EH
	JH	9501,9502 PCB BINDER	VEF1040
	P	601 POLYSWITCH	NANOSMDC035F

RESISTORS

	R	106,107,1205-1207	RAB4CQ221J
	R	114,141	RS1/10SR43R0D
	R	145,146	RS1/10SR1000D
	R	150,165,407,408	RAB4CQ103J
	R	193,1765	RS1/16SS4700F
	R	198,200,293,294	RS1/16SS1001F
	R	229,238,239,247	RAB4CQ473J
	R	261,269,273,288	RAB4CQ473J
	R	303,1060,1061,1515	RS1/10SR0R0J
	R	409,424-426	RAB4CQ560J
	R	415-420,431-434	RAB4CQ103J
	R	435,436,441,442	RAB4CQ220J
	R	448-450,455	RAB4CQ330J
	R	460-462,467,1041	RAB4CQ330J
	R	468-470,487,1279	RAB4CQ220J
	R	478,1235,9227	RAB4CQ472J
	R	608,609,615,624	RAB4CQ0R0J
	R	611-614,641,701	RAB4CQ101J
	R	680,956,1216,1217	RAB4CQ473J
	R	957,1242-1245,1248	RAB4CQ470J
	R	966,970,980,983	RAB4CQ680J
	R	988,1228,1234,1238	RAB4CQ100J
	R	998,1000,1001	RAB4CQ0R0J
	R	999,1025,1201,1204	RAB4CQ680J
	R	1032,1292	RS1/8SQ105J
	R	1047-1049,1236,1250	RAB4CQ330J
	R	1202,1208,1277,1284	RAB4CQ151J
	R	1214,1215	RAB4CQ221J
	R	1221,1222,1251-1256	RAB4CQ473J
	R	1227,1229	RS1/10SR101J
	R	1240,1261,1263	RAB4CQ100J
	R	1249,9006,9011,9012	RAB4CQ470J
	R	1258-1260,1262,1270	RAB4CQ473J
	R	1264-1269,1275,9209	RAB4CQ330J
	R	1271,1274,1278,1283	RAB4CQ473J
	R	1287,1614-1617,1622	RAB4CQ473J
	R	1288,1289,1291	RAB4CQ151J
	R	1336-1341	RAB4CQ0R0J
	R	1550,1755,1776,9523	RS1/10SR0R0J
	R	1625,1633,1642,1645	RAB4CQ473J
	R	1650,1651	RS1/16SS4701F
	R	1742-1744,1749,1751	RS1/16SS2200F
	R	1752,1754	RS1/16SS2200F
	R	1753,1777,1778	RS1/16SS56R0F
	R	1756-1758	RS1/16SS5601F
	R	1767,1769,1771	RS1/16SS3300D
	R	9007-9010	RAB4CQ220J
	R	9016-9019,9021,9024	RAB4CQ470J
	R	9026,9028,9029,9031	RAB4CQ470J
	R	9040,9043,9048,9049	RAB4CQ470J

Mark	No.	Description	Part No.
	R	9050	RAB4CQ101J
	R	9211	RAB4CQ330J
	R	9215,9216	RAB4CQ680J
	R	9226,9232,9233,9236	RAB4CQ470J
	R	9234,9235	RAB4CQ121J
	R	9237,9240	RAB4CQ470J
	R	9254	RAB4CQ103J
	R	9264-9266,9268	RAB4CQ473J
	R	9285	RS1/16SS1242F
	R	9290-9292,9294	RS1/16SS49R9F
	R	9312	RS1/16SS3001F
	R	9514,9515	RS1/8SQ475J
	R	9518	RS1/16SS1501D
	R	9520,9531	RS1/16SS3302D
	R	9522	RS1/16SS1502D
	R	9524,9526,9528-9530	RS1/10SR0R0J
	R	9533	RS1/16SS2402D
	R	9534	RS1/16SS2401D
	R	9536,9538-9540,9542	RS1/8SQ0R0J
	R	9543,9555,9564	RS1/8SQ0R0J
	R	9548	RS1/4SA105J
	R	9550,9551	RS1/10SR0R0J
	Other Resistors		RS1/16SS###J

CAPACITORS

	C	103,173,406,433	CCSSCH100D50
	C	104,107,108,115	CKSSYB104K16
	C	105,109,111,113	DCH1246
	C	106,110,117,131	CCSSCH102J50
	C	112,126,199,424	DCH1201
	C	114,118,168,411	CKSSYB103K25
	C	116,119,120,122	CKSSYB104K16
	C	121,127,128,130	DCH1246
	C	123,156,166,194	CEVW101M4
	C	124,125,129,133	CKSSYB104K16
	C	132,141,151,171	CCSSCH102J50
	C	134,139,143,144	DCH1246
	C	135-138,145,146	CKSSYB104K16
	C	140,995,1203,1207	CEVW221M4
	C	142,147,175,423	CCSSCH331J50
	C	149,152-155,159	CKSSYB104K16
	C	150,623,636,659	CCSSCH101J50
	C	157,158,167,169	DCH1246
	C	162	ACH7299
	C	170,177,187,401	DCH1246
	C	172,178,184,185	CKSSYB104K16
	C	174,176,190,402	CCSSCH102J50
	C	186,1526,1527	CEVW100M16
	C	188,195,196,200	CKSSYB104K16
	C	198,9245,9607	CKSQYB225K16
	C	201,203,204,403	CKSSYB104K16
	C	404,408,410,413	DCH1246
	C	407,409,417,428	CKSSYB104K16
	C	412,415,420,441	CCSSCH102J50
	C	414,416,418,421	DCH1246
	C	419,432,438,606	CKSSYB103K25
	C	422,431,434,437	DCH1246
	C	425,915,927,1048	DCH1201
	C	429,435,440,443	CKSSYB104K16
	C	430,436	CEVW101M4
	C	439,618,624,631	CCSSCH331J50
	C	442,619,620,627	CCSSCH102J50
	C	445,447,607,610	CKSSYB104K16
	C	446,604,608,611	CCSSCH100D50
	C	609,655,929,967	CEVW101M16
	C	613,615-617,622	CKSSYB104K16
	C	614,625,653,667	CKSSYB103K25
	C	621,629,630,634	CCSSCH100D50
	C	626,628,632,637	CKSSYB104K16
	C	633,635,639,641	CCSSCH102J50
	C	638,642-645,652	CKSSYB104K16
	C	640,651,703,741	CCSSCH100D50
	C	646,663,914	CEVW470M4
	C	647,648,696,713	CCSSCH331J50
	C	649,650,657,658	CCSSCH102J50
	C	654,661,662,664	CKSSYB104K16
	C	660,682,690-692	CCSSCH101J50
	C	665,949	CCSSCH8R0D50
	C	666,943	CCSSCH9R0D50
	C	670,672,674,677	CCSSCH102J50
	C	671,675,676,680	CKSSYB104K16
	C	681,687-689,919	CKSSYB104K16
	C	685,956,980,1043	CKSSYB103K25
	C	693,1040,1363,1530	CCSSCH221J50
	C	697,705-708,717	CCSSCH101J50
	C	698-701,704	CCSSCH102J50
	C	718,720,721,751	CCSSCH101J50
	C	726,902,904,906	CCSSCH331J50
	C	727-731,740	CCSSCH102J50
	C	742,745,746,755	CCSSCH100D50
	C	748-750,754,757	CCSSCH102J50
	C	752,924,938,993	CCSSCH101J50
	C	908,920,923,936	CCSSCH331J50
	C	911,937,972,973	CCSSCH102J50
	C	913,918,945,946	CCSSCH471J50
	C	916,928,950,951	DCH1246
	C	917,933,934,942	CCSSCH100D50
	C	921,922,925,931	CKSSYB104K16
	C	926,1529	CEVW470M6R3
	C	935,940,944,947	CKSSYB104K16
	C	941,953,957,971	CCSSCH331J50
	C	948,954,955,960	CKSSYB104K16
	C	952,958,959,961	CCSSCH471J50
	C	962,964,965,968	CKSSYB104K16
	C	963,979,982,983	CCSSCH471J50
	C	969,975,987,999	DCH1246
	C	974,977,981,984	CKSSYB104K16
	C	976,989,1024,1030	CCSSCH102J50
	C	978,9008	CCSSCH330J50
	C	988,994,1001,1003	CKSSYB104K16
	C	991,1025,1031,1064	CEVW101M16
	C	997,1021,1062,1216	CCSSCH100D50
	C	1000,1002,1004,1006	CCSSCH471J50
	C	1005,1007,1009,1012	CKSSYB104K16
	C	1008,1010,1069,1212	CCSSCH471J50
	C	1013,1023,1029,1219	CCSSCH331J50
	C	1014,1015,1027,1033	CCSSCH101J50
	C	1018,1026,1032,1034	CKSSYB104K16
	C	1028,1036,9105,9106	CCSSCH270J50
	C	1035,1037,1046,1049	CCSSCH102J50

Mark	No.	Description	Part No.
	C	1038,1039,1047	CKSSYB104K16
	C	1041,1225,1231,1246	CCSSCH101J50
	C	1044	CKSSYB823K10
A	C	1045,1054,1056,1270	CKSSYB103K25
	C	1050-1052,1055,1057	CKSSYB104K16
	C	1059,1061,1067,1068	CKSSYB104K16
	C	1060,1063,1065,1074	DCH1201
	C	1070,1215,1227,1252	CCSSCH102J50
	C	1071,1072,1206,1210	CKSSYB104K16
	C	1075,1209,1357,1664	CEVW101M16
	C	1079,1214,1349-1351	DCH1246
	C	1205,1211,1228,1230	DCH1201
	C	1208,1355,1358,1427	CEVW221M4
	C	1213,1218,1223,1224	CKSSYB104K16
B	C	1221,1298,1345	CCSSCH471J50
	C	1222,1686,1688,1693	CKSRYB105K16
	C	1226,1244,1248,1251	CCSSCH331J50
	C	1229,1236,1238,1240	CKSSYB104K16
	C	1237,1361,1410,1502	CCSSCH100D50
	C	1243,1253-1255,1267	CKSSYB104K16
	C	1256,1268,1278,1286	CCSSCH101J50
	C	1257,1311,1323,1388	CCSSCH331J50
	C	1272,1276,1282,1285	CKSSYB104K16
	C	1274,1294,1299,1325	CCSSCH102J50
	C	1289,1296,1297,1305	CKSSYB104K16
C	C	1313,1326	CCSSCH150J50
	C	1318,1319,1324,1328	CKSSYB104K16
	C	1322,1339,1392,1393	CCSSCH101J50
	C	1333,1346,1347,1359	CCSSCH102J50
	C	1334,1341-1343,1362	CKSSYB104K16
	C	1352-1354,1428,1605	DCH1201
	C	1364-1366,1371,1389	CCSSCH471J50
	C	1367-1370,1380,1384	CKSSYB104K16
	C	1381,1395,1401,1411	CCSSCH102J50
	C	1385,1390,1391,1394	CKSSYB104K16
D	C	1398,1408,1409,1425	CKSSYB104K16
	C	1424,1540-1544,1654	CCSSCH102J50
	C	1426,1501,1628,1629	CCSSCH101J50
	C	1431,1503,1507,1508	CKSSYB104K16
	C	1432,1506,1511,1613	CCSSCH331J50
	C	1505,1808,1811,9201	CCG1222
	C	1509,9545,9546	CEAT102M10-P35
	C	1510,1519,1520,1534	CCSSCH100D50
	C	1528,1614,1624	CKSSYB104K16
	C	1531,9065	CCSSCH221J50
E	C	1601,1602,1662,1663	CKSSYB102K50
	C	1606,1650,1656	DCH1201
	C	1608,1610,1612,1616	DCH1246
	C	1609,1611,1615,1617	CCSSCH471J50
	C	1618,1620,1622,1626	DCH1246
	C	1619,1621,1625,1627	CCSSCH471J50
	C	1623,1633,1699,1701	CCSSCH331J50
	C	1630-1632,1634,1635	CKSSYB104K16
	C	1636,1638,1648,1649	CCSSCH101J50
	C	1637,1639,1644,1645	CCSSCH471J50
	C	1640-1643,1653,1659	CKSSYB104K16
F	C	1646,1647,9040,9202	CKSSYB103K25
	C	1651,1657,1695,1696	DCH1246
	C	1652,1655,1658,1666	CCSSCH471J50
	C	1660,1722,1723,9013	CCSSCH102J50

Mark	No.	Description	Part No.
	C	1661,1702,1703,1756	CCSSCH101J50
	C	1665,1752,1821,1832	CEVW101M16
	C	1667,1709,1824,1825	CCSSCH471J50
	C	1671,1697,1698,1729	CCSSCH100D50
	C	1674-1681,1683-1685	VCG1066
	C	1687,1689-1692	VCG1066
	C	1694,1839	CKSRYB105K16
	C	1700,1710,1736-1742	CKSSYB104K16
	C	1731,9009,9034,9037	CCSSCH100D50
	C	1732-1735,9226,9228	DCH1201
	C	1743-1745	CCSSCH7R0D50
	C	1746-1748	CCSSCH5R0C50
	C	1749-1751,1760-1762	CCSSCH180J50
	C	1753-1755	CCSSCH4R0C50
	C	1757-1759,1842	CCSSCH470J50
	C	1763	CCSSCH560J50
	C	1764-1766	CCSSCH390J50
	C	1767-1769,1809,1812	CKSSYB104K16
	C	1806,1819,9001,9075	CKSRYB104K50
	C	1807,1841,9011,9019	CCSSCH101J50
	C	1810,1813,1820,1829	CCSSCH331J50
	C	1817,1828,1834,1840	CKSSYB104K16
	C	1818,9571	CCSRCH102J50
	C	1835,9003,9038,9039	CCSSCH471J50
	C	1845,1855,1859,1861	CCSSCH331J50
	C	1846,1854,1858,1860	CKSSYB104K16
	C	1862,9002,9006,9007	CKSSYB104K16
	C	1863,9015,9032,9076	CCSSCH331J50
	C	9004,9563,9600	CEVW101M16
	C	9005,9029,9067,9217	CEVW221M4
	C	9010,9012,9014,9017	CKSSYB104K16
	C	9016,9021,9022,9026	CCSSCH102J50
	C	9018,9020,9023,9025	CKSSYB104K16
	C	9024,9027,9046,9053	CCSSCH101J50
	C	9028,9031,9033,9035	CKSSYB104K16
	C	9030,9583,9589,9684	DCH1246
	C	9036,9041-9045,9047	CKSSYB104K16
	C	9048,9051,9055,9057	CCSSCH102J50
	C	9049,9052,9058-9060	CKSSYB104K16
	C	9050,9079,9085	CCSSCH100D50
	C	9054,9056,9069,9070	CCSSCH471J50
	C	9061,9062,9064,9206	CCSSCH102J50
	C	9063,9066,9068,9071	CKSSYB104K16
	C	9072,9074,9077,9081	CCSSCH471J50
	C	9073,9080,9203,9205	CKSSYB104K16
	C	9086,9087,9204,9250	CCSSCH101J50
	C	9088-9091,9093-9098	CCSSCH100D50
	C	9100,9102-9104,9253	CCSSCH100D50
	C	9207,9210,9212,9213	CKSSYB104K16
	C	9208,9209,9211,9215	CCSSCH102J50
	C	9214,9249,9251,9265	CCSSCH331J50
	C	9216,9219,9221,9227	CKSSYB104K16
	C	9220,9222,9287,9289	CCSSCH471J50
	C	9223,9282,9283,9594	CKSSYB103K25
	C	9229,9231,9234,9237	CKSSYB104K16
	C	9230,9233,9236,9239	DCH1201
	C	9232,9235,9238,9241	CCSSCH102J50
	C	9240,9242,9244,9248	CKSSYB104K16
	C	9243,9246,9257,9263	CCSSCH102J50
	C	9247	CEVW221M10

Mark	No.	Description	Part No.
	C	9252,9254,9256,9258	CKSSYB104K16
	C	9255,9312,9327,9501	CCSSCH100D50
	C	9259,9261,9275,9277	CCSSCH101J50
	C	9260,9262,9264,9266	CKSSYB104K16
	C	9267,9293,9507	CCSSCH331J50
	C	9268,9270,9272,9274	CKSSYB104K16
	C	9269,9271,9273,9279	CCSSCH102J50
	C	9276,9278,9286,9288	CKSSYB104K16
	C	9281,9310,9311,9505	CCSSCH102J50
	C	9284,9285,9510,9512	CCG1222
	C	9290,9292,9294	CKSSYB104K16
	C	9291,9295	CCSSCH471J50
	C	9298-9300,9538,9557	BCG1059
	C	9302	CKSSYB223K16
	C	9313-9319,9321	CKSSYB104K16
	C	9323-9326,9328,9504	CKSSYB104K16
	C	9506,9528,9591,9601	CKSSYB104K16
	C	9513,9514,9522,9533	CCSSCH100D50
	C	9517,9519,9524,9526	CCG1222
	C	9520,9574,9576,9609	CEVW221M4
	C	9529,9547,9553,9562	CCSSCH102J50
	C	9532,9534,9539,9550	CCG1222
	C	9543,9544,9556,9561	CKSRYB104K50
	C	9555,9559	CKSSYB473K16
	C	9558,9573,9575,9685	BCG1059
	C	9565	CKSSYB152K50
	C	9566,9568,9570,9579	CCSSCH102J50
	C	9569,9572,9582,9590	CCG1222
	C	9580,9585,9586,9597	CCSSCH102J50
	C	9581,9584,9592,9595	CCSSCH101J50
	C	9596	CEVW331M6R3
	C	9598,9602,9672	CCSSCH100D50
	C	9599,9617	CCSSCH102J50
	C	9603,9605,9612,9614	CCG1222
	C	9606,9616,9621-9645	CKSSYB104K16
	C	9647-9671,9692-9697	CKSSYB104K16
	C	9674,9676	CCG1222

E DIGITAL MAIN ASSY (VSX-52/VSX-1126-K/VSX-1121-K)

SEMICONDUCTORS

	IC	101	UPD61283F1-407LU2A
	IC	104	NJM12904V
	IC	401	AYW7345
	IC	403,404	H5DU2562GTR-J3C
	IC	602	341S2164
	IC	603	PE7008A
	IC	604	PDJ019A
	IC	605,1504	TC7SH08FUS1
	IC	608	TC74VHCT541AFK
	IC	610,1806	TC74VHC126FK
	IC	611,1809	TC74VHCT125AFK
	IC	612,1502	TC74VHCT08AFKS1
	IC	613	TC74VHC08FK
	IC	903	SII9233ACTU
	IC	905	SII9387CTU
	IC	907	TC74VHC541FK
	IC	909	ADV7181CBSTZ
	IC	1201,1203,1218	TC7SZ125FU
	IC	1202	TC74LCX541FK
	IC	1204	88DE2750
	IC	1205-1211,1215	TC74VCX541FK
	IC	1212	H5PS5162GFR-S5C
⚠	IC	1216	LP2996M
⚠	IC	1505	BD2224G
	IC	1602	SII9136CTU
	IC	1604,1814	TC74VHC157FK
⚠	IC	1605	AAT4614AIGU-2
	IC	1608,1804	TC7SZ08FU
	IC	1802	TC7WZ08FK
	IC	1803	ICS87002BM-05
	IC	1808	TC7WHU04FK
	IC	1815,1816	TC74LCX157FK
	IC	1817	TC74VHC125FK
	IC	9001,9003	IS42S16400F-6TL
	IC	9002	D810K013BZKB400
	IC	9004	AYW7347
	IC	9005	TC7WGU04FK
	IC	9006	TC7SHU04FUS1
	IC	9201	IS42S16160C-6TL
⚠	IC	9202	BD2226G
	IC	9203	LAN8700C-AEZG
	IC	9204	DM860
NSP	IC	9205	AYW7346
⚠	IC	9501	S-1172B10-U5
⚠	IC	9502,9503,9505,9506	S-1172B12-U5
⚠	IC	9504,9511,9513	S-1170B50UC-OUJ
⚠	IC	9507	MB39C011A
⚠	IC	9508	S-1170B25UC-OTK
⚠	IC	9509	MM1701WH
⚠	IC	9510	NJM2846DL3-33
⚠	IC	9512	NJM2872BF33
	Q	601,607-609	RN4983
	Q	604,1502-1505,1507	LTA124EUB
	Q	903	HN1K02FU
	Q	1501,9001,9002,9004	LTC114YUB
	Q	1506,1722-1728	LSA1576UB
	Q	1729-1731,9504,9506	LSC4081UB
⚠	Q	9501,9502	SH8M12
⚠	Q	9503	RZQ045P01
⚠	Q	9505	RTQ040P02
	D	601	RB501V-40
	D	901,903,904	1SS301
	D	1601	RKZ5.1KG(B2)
	D	9504	1SS352

MISCELLANEOUS

	L	103 INDUCTOR	LCTC150K2125
	L	105,601-606 CHIP BEADS	VTL1129
	L	607 CHIP BEADS	VTL1132
	L	901,905,906,918 CHIP BEADS	ATL7010
	L	902-904,907,913 CHIP BEADS	VTL1129
	L	917,919,1201,1202 CHIP BEADS	VTL1129
	L	921 INDUCTOR	CTF1547
	L	922,1210,1607,9002 CHIP BEADS	ATL7010
	L	1204-1209,1211-1216 CHIP BEADS	VTL1129
	L	1220,1503,1601,1604 CHIP BEADS	VTL1129

Mark	No.	Description	Part No.
	L	1501 FILTER	CTF1703
	L	1502,1504 CHIP BEADS	VTL1134
	L	1605,1620,1802,1803 CHIP BEADS	VTL1129
	L	1609-1612 COIL	ATH7064
	L	1617 CHIP BEADS	VTL1126
	L	1618 FERRITE BEAD	CTF1528
	L	1722-1724 INDUCTOR	ATL7033
	L	1725-1727 INDUCTOR	ATL7035
	L	1728 INDUCTOR	LCTC100K2125
	L	1729-1731 INDUCTOR	LCTC4R7K2125
	L	1805 INDUCTOR	CTF1786
	L	1806,1808-1811 CHIP BEADS	VTL1129
	L	1815-1818,9001,9005 CHIP BEADS	VTL1129
	L	9003,9205,9206,9501 CHIP BEADS	ATL7010
	L	9004,9010 CHIP BEADS	VTL1128
	L	9007,9201,9202,9204 CHIP BEADS	VTL1129
	L	9207-9210,9212-9214 CHIP BEADS	VTL1129
	L	9215,9216 COIL	ATH7082
	L	9502,9507,9510 CHIP BEADS	ATL7010
	L	9503,9511-9513 CHIP BEADS	VTL1129
	L	9506 INDUCTOR	ATH7087
	L	9509 INDUCTOR	ATH7086
	F	102,103,107,108 EMI FILTER	DTL1106
	JA	901-907,1601 HDMI JACK	AKP7268
	JA	1501 CONNECTOR	CKS5712
	JA	9201 USB CONNECTOR	DKB1106
	JA	9202 RJ45 CONNECTOR	AKN7115
	KN	602 SCREW PLATE	VNE1948
	X	602,901 CRYSTAL	ASS7092
	X	902 CRYSTAL	ASS7111
	X	1201 CRYSTAL	ASS7114
	X	1801 CRYSTAL OSCILLATOR	ASS7102
	X	1802 CRYSTAL OSCILLATOR	ASS7101
	X	9001 RESONATOR	CSS1795
	CN	601 39P CONNECTOR	VKN2098
	CN	602,1722,1723 20P SOCKET	AKP7249
	CN	604,606 PLUG(2P)	KM200NA2L
	CN	605 L-PLUG(3P)	KM200NA3L
	CN	607 B TO B CONNECTOR	AKP7270
	CN	1501 CONNECTOR	AKM1276
	CN	1502 15P SOCKET	XKP3078
	CN	1503 7P SOCKET	XKP3074
	CN	9002,9003 SOCKET(30PL)	BKP1047
	CN	9501 CONNECTOR	B7B-EH
	JH	9501,9502 PCB BINDER	VEF1040
	P	601 POLYSWITCH	NANOSMDC035F

RESISTORS

	R	106,107,1205-1207	RAB4CQ221J
	R	114,141	RS1/10SR43R0D
	R	145,146	RS1/10SR1000D
	R	150,165,407,408	RAB4CQ103J
	R	193,1765	RS1/16SS4700F
	R	198,200,293,294	RS1/16SS1001F
	R	229,238,239,247	RAB4CQ473J
	R	261,269,273,288	RAB4CQ473J
	R	303,1060,1061,1515	RS1/10SR0R0J
	R	409,424-426	RAB4CQ560J
	R	415-420,431-434	RAB4CQ103J
	R	435,436,441,442	RAB4CQ220J
	R	448-450,455	RAB4CQ330J
	R	460-462,467,1041	RAB4CQ330J
	R	468-470,487,1279	RAB4CQ220J
	R	478,1235,9227	RAB4CQ472J
	R	608,609,615,624	RAB4CQ0R0J
	R	611-614,641,701	RAB4CQ101J
	R	680,956,1216,1217	RAB4CQ473J
	R	957,1242-1245,1248	RAB4CQ470J
	R	966,970,980,983	RAB4CQ680J
	R	988,1228,1234,1238	RAB4CQ100J
	R	998,1000,1001	RAB4CQ0R0J
	R	999,1025,1201,1204	RAB4CQ680J
	R	1032,1292	RS1/8SQ105J
	R	1047-1049,1236,1250	RAB4CQ330J
	R	1202,1208,1277,1284	RAB4CQ151J
	R	1214,1215	RAB4CQ221J
	R	1221,1222,1251-1256	RAB4CQ473J
	R	1227,1229	RS1/10SR101J
	R	1240,1261,1263	RAB4CQ100J
	R	1249,9006,9011,9012	RAB4CQ470J
	R	1258-1260,1262,1270	RAB4CQ473J
	R	1264-1269,1275,9209	RAB4CQ330J
	R	1271,1274,1278,1283	RAB4CQ473J
	R	1287,1614-1617,1622	RAB4CQ473J
	R	1288,1289,1291	RAB4CQ151J
	R	1336-1341	RAB4CQ0R0J
	R	1550,1755,1776,9523	RS1/10SR0R0J
	R	1625,1633,1642,1645	RAB4CQ473J
	R	1650	RS1/16SS4701F
	R	1742-1744,1749,1751	RS1/16SS2200F
	R	1752,1754	RS1/16SS2200F
	R	1753,1777,1778	RS1/16SS56R0F
	R	1756-1758	RS1/16SS5601F
	R	1767,1769,1771	RS1/16SS3300D
	R	9007-9010	RAB4CQ220J
	R	9016-9019,9021,9024	RAB4CQ470J
	R	9026,9028,9029,9031	RAB4CQ470J
	R	9040,9043,9048,9049	RAB4CQ470J
	R	9050	RAB4CQ101J
	R	9211	RAB4CQ330J
	R	9215,9216	RAB4CQ680J
	R	9226,9232,9233,9236	RAB4CQ470J
	R	9234,9235	RAB4CQ121J
	R	9237,9240	RAB4CQ470J
	R	9254	RAB4CQ103J
	R	9264-9266,9268	RAB4CQ473J
	R	9285	RS1/16SS1242F
	R	9290-9292,9294	RS1/16SS49R9F
	R	9312	RS1/16SS3001F
	R	9514,9515	RS1/8SQ475J
	R	9518	RS1/16SS1501D
	R	9520,9531	RS1/16SS3302D
	R	9522	RS1/16SS1502D
	R	9524,9526,9528-9530	RS1/10SR0R0J
	R	9533	RS1/16SS2402D
	R	9534	RS1/16SS2401D
	R	9536,9538-9540,9542	RS1/8SQ0R0J
	R	9543,9555,9564	RS1/8SQ0R0J

Mark	No.	Description	Part No.
	R	9548	RS1/4SA105J
	R	9550,9551	RS1/10SR0R0J
		Other Resistors	RS1/16SS###J

CAPACITORS

	C	103,173,406,433	CCSSCH100D50
	C	104,107,108,115	CKSSYB104K16
	C	105,109,111,113	DCH1246
	C	106,110,117,131	CCSSCH102J50
	C	112,126,199,424	DCH1201
	C	114,118,168,411	CKSSYB103K25
	C	116,119,120,122	CKSSYB104K16
	C	121,127,128,130	DCH1246
	C	123,156,166,194	CEVW101M4
	C	124,125,129,133	CKSSYB104K16
	C	132,141,151,171	CCSSCH102J50
	C	134,139,143,144	DCH1246
	C	135-138,145,146	CKSSYB104K16
	C	140,995,1203,1207	CEVW221M4
	C	142,147,175,423	CCSSCH331J50
	C	149,152-155,159	CKSSYB104K16
	C	150,623,636,659	CCSSCH101J50
	C	157,158,167,169	DCH1246
	C	162	ACH7299
	C	170,177,187,401	DCH1246
	C	172,178,184,185	CKSSYB104K16
	C	174,176,190,402	CCSSCH102J50
	C	186,1526,1527	CEVW100M16
	C	188,195,196,200	CKSSYB104K16
	C	198,9245,9607	CKSQYB225K16
	C	201,203,204,403	CKSSYB104K16
	C	404,408,410,413	DCH1246
	C	407,409,417,428	CKSSYB104K16
	C	412,415,420,441	CCSSCH102J50
	C	414,416,418,421	DCH1246
	C	419,432,438,606	CKSSYB103K25
	C	422,431,434,437	DCH1246
	C	425,915,927,1048	DCH1201
	C	429,435,440,443	CKSSYB104K16
	C	430,436	CEVW101M4
	C	439,618,624,631	CCSSCH331J50
	C	442,619,620,627	CCSSCH102J50
	C	445,447,607,610	CKSSYB104K16
	C	446,604,608,611	CCSSCH100D50
	C	609,655,929,967	CEVW101M16
	C	613,615-617,622	CKSSYB104K16
	C	614,625,653,667	CKSSYB103K25
	C	621,629,630,634	CCSSCH100D50
	C	626,628,632,637	CKSSYB104K16
	C	633,635,639,641	CCSSCH102J50
	C	638,642-645,652	CKSSYB104K16
	C	640,651,703,741	CCSSCH100D50
	C	646,663,914	CEVW470M4
	C	647,648,696,713	CCSSCH331J50
	C	649,650,657,658	CCSSCH102J50
	C	654,661,662,664	CKSSYB104K16
	C	660,682,690-692	CCSSCH101J50
	C	665,949	CCSSCH8R0D50
	C	666,943	CCSSCH9R0D50
	C	670,672,674,677	CCSSCH102J50
	C	671,675,676,680	CKSSYB104K16
	C	681,687-689,919	CKSSYB104K16
	C	685,956,980,1043	CKSSYB103K25
	C	693,1040,1363,1530	CCSSCH221J50
	C	697,705-708,717	CCSSCH101J50
	C	698-701,704	CCSSCH102J50
	C	718,720,721,751	CCSSCH101J50
	C	726,902,904,906	CCSSCH331J50
	C	727-731,740	CCSSCH102J50
	C	742,745,746,755	CCSSCH100D50
	C	748-750,754,757	CCSSCH102J50
	C	752,924,938,993	CCSSCH101J50
	C	908,920,923,936	CCSSCH331J50
	C	911,937,972,973	CCSSCH102J50
	C	913,918,945,946	CCSSCH471J50
	C	916,928,950,951	DCH1246
	C	917,933,934,942	CCSSCH100D50
	C	921,922,925,931	CKSSYB104K16
	C	926,1529	CEVW470M6R3
	C	935,940,944,947	CKSSYB104K16
	C	941,953,957,971	CCSSCH331J50
	C	948,954,955,960	CKSSYB104K16
	C	952,958,959,961	CCSSCH471J50
	C	962,964,965,968	CKSSYB104K16
	C	963,979,982,983	CCSSCH471J50
	C	969,975,987,999	DCH1246
	C	974,977,981,984	CKSSYB104K16
	C	976,989,1024,1030	CCSSCH102J50
	C	978,9008	CCSSCH330J50
	C	988,994,1001,1003	CKSSYB104K16
	C	991,1025,1031,1064	CEVW101M16
	C	997,1021,1062,1216	CCSSCH100D50
	C	1000,1002,1004,1006	CCSSCH471J50
	C	1005,1007,1009,1012	CKSSYB104K16
	C	1008,1010,1069,1212	CCSSCH471J50
	C	1013,1023,1029,1219	CCSSCH331J50
	C	1014,1015,1027,1033	CCSSCH101J50
	C	1018,1026,1032,1034	CKSSYB104K16
	C	1028,1036,9105,9106	CCSSCH270J50
	C	1035,1037,1046,1049	CCSSCH102J50
	C	1038,1039,1047	CKSSYB104K16
	C	1041,1225,1231,1246	CCSSCH101J50
	C	1044	CKSSYB823K10
	C	1045,1054,1056,1270	CKSSYB103K25
	C	1050-1052,1055,1057	CKSSYB104K16
	C	1059,1061,1067,1068	CKSSYB104K16
	C	1060,1063,1065,1074	DCH1201
	C	1070,1215,1227,1252	CCSSCH102J50
	C	1071,1072,1206,1210	CKSSYB104K16
	C	1075,1209,1357,1664	CEVW101M16
	C	1079,1214,1349-1351	DCH1246
	C	1205,1211,1228,1230	DCH1201
	C	1208,1355,1358,1427	CEVW221M4
	C	1213,1218,1223,1224	CKSSYB104K16
	C	1221,1298,1345	CCSSCH471J50
	C	1222,1686,1693,1839	CKSRYB105K16
	C	1226,1244,1248,1251	CCSSCH331J50
	C	1229,1236,1238,1240	CKSSYB104K16
	C	1237,1361,1410,1502	CCSSCH100D50
	C	1243,1253-1255,1267	CKSSYB104K16

Mark	No.	Description	Part No.	Mark	No.	Description	Part No.
	C	1256,1268,1278,1286	CCSSCH101J50		C	9010,9012,9014,9017	CKSSYB104K16
	C	1257,1311,1323,1388	CCSSCH331J50		C	9018,9020,9023,9025	CKSSYB104K16
	C	1272,1276,1282,1285	CKSSYB104K16		C	9021,9022,9026,9048	CCSSCH102J50
A	C	1274,1294,1299,1325	CCSSCH102J50		C	9027,9046,9053,9086	CCSSCH101J50
	C	1289,1296,1297,1305	CKSSYB104K16		C	9028,9031,9033,9035	CKSSYB104K16
	C	1313,1326	CCSSCH150J50		C	9032,9076,9214,9249	CCSSCH331J50
	C	1318,1319,1324,1328	CKSSYB104K16		C	9034,9037,9050,9079	CCSSCH100D50
	C	1322,1339,1392,1393	CCSSCH101J50		C	9036,9041-9045,9047	CKSSYB104K16
	C	1333,1346,1347,1359	CCSSCH102J50		C	9049,9052,9058-9060	CKSSYB104K16
	C	1334,1341-1343,1362	CKSSYB104K16		C	9051,9055,9057,9061	CCSSCH102J50
	C	1352-1354,1428,1605	DCH1201		C	9054,9056,9069,9070	CCSSCH471J50
	C	1364-1366,1371,1389	CCSSCH471J50		C	9062,9064,9206,9208	CCSSCH102J50
	C	1367-1370,1380,1384	CKSSYB104K16		C	9063,9066,9068,9071	CKSSYB104K16
B	C	1381,1395,1401,1411	CCSSCH102J50		C	9072,9074,9077,9081	CCSSCH471J50
	C	1385,1390,1391,1394	CKSSYB104K16		C	9073,9080,9203,9205	CKSSYB104K16
	C	1398,1408,1409,1425	CKSSYB104K16		C	9085,9088-9091	CCSSCH100D50
	C	1424,1540-1544,1654	CCSSCH102J50		C	9087,9204,9250,9259	CCSSCH101J50
	C	1426,1501,1628,1636	CCSSCH101J50		C	9093-9098,9100	CCSSCH100D50
	C	1431,1503,1507,1508	CKSSYB104K16		C	9102-9104,9253,9255	CCSSCH100D50
	C	1432,1506,1511,1613	CCSSCH331J50		C	9207,9210,9212,9213	CKSSYB104K16
	C	1505,1808,1811,9201	CCG1222		C	9209,9211,9215,9232	CCSSCH102J50
	C	1509,9545,9546	CEAT102M10-P35		C	9216,9219,9221,9227	CKSSYB104K16
	C	1510,1519,1520,1534	CCSSCH100D50		C	9220,9222,9287,9289	CCSSCH471J50
	C	1528,1614,1630,1632	CKSSYB104K16		C	9228,9230,9233,9236	DCH1201
C	C	1531,9065	CCSSCH221J50		C	9229,9231,9234,9237	CKSSYB104K16
	C	1601,1662	CKSSYB102K50		C	9235,9238,9241,9243	CCSSCH102J50
	C	1608,1610,1612,1616	DCH1246		C	9239	DCH1201
	C	1609,1611,1615,1617	CCSSCH471J50		C	9240,9242,9244,9248	CKSSYB104K16
	C	1633,1701,1810,1813	CCSSCH331J50		C	9246,9257,9263,9269	CCSSCH102J50
	C	1634,1640,1641,1653	CKSSYB104K16		C	9247	CEVW221M10
	C	1637,1644,1652,1655	CCSSCH471J50		C	9251,9265,9267,9293	CCSSCH331J50
	C	1646,9040,9202,9223	CKSSYB103K25		C	9252,9254,9256,9258	CKSSYB104K16
	C	1648,1702,1756,1807	CCSSCH101J50		C	9260,9262,9264,9266	CKSSYB104K16
	C	1650,1732-1735,9226	DCH1201		C	9261,9275,9277,9581	CCSSCH101J50
	C	1651,1695,1696,9030	DCH1246		C	9268,9270,9272,9274	CKSSYB104K16
D	C	1666,1709,1824,1825	CCSSCH471J50		C	9271,9273,9279,9281	CCSSCH102J50
	C	1674,1676,1678,1680	VCG1066		C	9276,9278,9286,9288	CKSSYB104K16
	C	1683,1685,1689,1691	VCG1066		C	9282,9283,9594	CKSSYB103K25
	C	1697,1729,1731,9009	CCSSCH100D50		C	9284,9285,9510,9512	CCG1222
	C	1710,1736-1742	CKSSYB104K16		C	9290,9292,9294	CKSSYB104K16
	C	1722,1723,9013,9016	CCSSCH102J50		C	9291,9295	CCSSCH471J50
	C	1743-1745	CCSSCH7R0D50		C	9298-9300,9538,9557	BCG1059
	C	1746-1748	CCSSCH5R0C50		C	9302	CKSSYB223K16
	C	1749-1751,1760-1762	CCSSCH180J50		C	9310,9311,9505,9529	CCSSCH102J50
	C	1752,1821,1832,9004	CEVW101M16		C	9312,9327,9501,9513	CCSSCH100D50
E	C	1753-1755	CCSSCH4R0C50		C	9313-9319,9321	CKSSYB104K16
	C	1757-1759,1842	CCSSCH470J50		C	9323-9326,9328,9504	CKSSYB104K16
	C	1763	CCSSCH560J50		C	9506,9528,9591,9601	CKSSYB104K16
	C	1764-1766	CCSSCH390J50		C	9507	CCSSCH331J50
	C	1767-1769,1809,1812	CKSSYB104K16		C	9514,9522,9533,9598	CCSSCH100D50
	C	1806,1819,9001,9075	CKSRYB104K50		C	9517,9519,9524,9526	CCG1222
	C	1817,1828,1834,1840	CKSSYB104K16		C	9520,9574,9576,9609	CEVW221M4
	C	1818,9571	CCSRCH102J50		C	9532,9534,9539,9550	CCG1222
	C	1820,1829,1845,1855	CCSSCH331J50		C	9543,9544,9556,9561	CKSRYB104K50
	C	1835,9003,9038,9039	CCSSCH471J50		C	9547,9553,9562,9566	CCSSCH102J50
	C	1841,9011,9019,9024	CCSSCH101J50		C	9555,9559	CKSSYB473K16
F	C	1846,1854,1858,1860	CKSSYB104K16		C	9558,9573,9575,9685	BCG1059
	C	1859,1861,1863,9015	CCSSCH331J50		C	9563,9600	CEVW101M16
	C	1862,9002,9006,9007	CKSSYB104K16		C	9565	CKSSYB152K50
	C	9005,9029,9067,9217	CEVW221M4		C	9568,9570,9579,9580	CCSSCH102J50

Mark	No.	Description	Part No.
	C	9569,9572,9582,9590	CCG1222
	C	9583,9589,9684	DCH1246
	C	9584,9592,9595	CCSSCH101J50
	C	9585,9586,9597,9599	CCSSCH102J50
	C	9596	CEVW331M6R3
	C	9602,9672	CCSSCH100D50
	C	9603,9605,9612,9614	CCG1222
	C	9606,9616,9621-9645	CKSSYB104K16
	C	9617	CCSSCH102J50
	C	9647-9671,9692-9697	CKSSYB104K16
	C	9674,9676	CCG1222

F VOL ASSY

MISCELLANEOUS

	S	3371 ROTARY ENCODER	ASX7049
	CN	3371 3P JUMPER CONNECTOR	52147-0310

CAPACITORS

	C	3371,3372	CKSRYB103K50

G FRONT HDMI USB ASSY

SEMICONDUCTORS

	IC	8001	S-24CS02AFT
	IC	8002	TC7MB3257FK
	IC	8003	CXB1443R
⚠	IC	8004	S-1132B33-U5
⚠	IC	8101	TPS2557DRB
⚠	IC	8102	BD9329EFJ
	Q	8001-8003	LTC114YUB
	Q	8102	LSC4081UB
	D	8004	1SS301
	D	8104	RKZ5.6KG(B2)

MISCELLANEOUS

	L	8001,8002,8018 INDUCTOR	CTF1473
	L	8010,8101,8102 CHIP BEADS	ATL7010
	L	8012-8017,8019 FERRITE BEAD	CTF1528
	L	8020 FERRITE BEAD	CTF1528
	L	8103 CHOKE COIL	CTH1486
	JA	8001 HDMI JACK	AKP7268
	JA	8003 HDMI JACK	AKP7267
	JA	8101 USB CONNECTOR	DKB1106
	KN	8001,8101 EARTH TERMINAL	AKF7002
	CN	8004 5P CONNECTOR	VKN1374
	CN	8101 CONNECTOR	AKM1276
	JH	8001,8002 PCB BINDER	VEF1040
	JP	8101 HOUSING	ADX7760

RESISTORS

	R	8028	RS1/16SS4701F
	R	8033	RS1/8SQ105J
	R	8035-8038	RS1/16SS1000F
	R	8108,8109	RS1/16SS2202F
	R	8117	RS1/16SS2200F
	R	8118	RS1/16SS8201F
	R	8120	RS1/16SS1801F
	R	8122-8124	RS1/8SQ0R0J
		Other Resistors	RS1/16SS###J

Mark	No.	Description	Part No.

CAPACITORS

	C	8010	CCSSCH331J50
	C	8011,8016,8019,8021	CKSSYB104K16
	C	8020,8027,8028	CCSSCH471J50
	C	8022,8035,8037,8065	CCSSCH102J50
	C	8023,8025,8026,8031	CKSSYB104K16
	C	8024,8101,8127	CCSSCH101J50
	C	8033,8038,8042,8044	CKSSYB104K16
	C	8041	CEVW101M16
	C	8043	CKSSYB102K50
	C	8045,8046,8102,8106	CKSRYB104K50
	C	8064	CKSSYB104K16
	C	8066,8071	CCSSCH102J50
	C	8069	CCSSCH330J50
	C	8076	CEAT101M16
	C	8083	CKSSYB103K25
	C	8104	CEAT221M16
	C	8105,8107	CCSRCH101J50
	C	8108	CKSRYB102K50
	C	8110,8111	CCG1236
	C	8115,8116	CKSRYB104K50
	C	8117	CCSRCH222J50
	C	8121,8122	ACG1128
	C	8125	CCSRCH331J50
	C	8126	CCSRCH100D50

H POWER AMP ASSY

SEMICONDUCTORS

	IC	5771	NJM4565MD
⚠	Q	5001,5101,5201,5301	STD03N
⚠	Q	5002,5102,5202,5302	STD03P
	Q	5041,5141,5241,5341	2SA1255
⚠	Q	5401,5501,5601	STD03N
⚠	Q	5402,5502,5602	STD03P
	Q	5441,5541,5641	2SA1255
	Q	5700,5811,5821,5831	RT1N140M
	Q	5701	RN1901
	Q	5702,5703	UMD22N
⚠	Q	5705	2SD1763A
⚠	Q	5706	2SC3906K
⚠	Q	5707	2SB1186A
⚠	Q	5708	2SA1514K
	Q	5709,5783,5784,5822	LTA124EUB
	Q	5731,5741-5744,5972	LSC4081UB
	Q	5781,5782,5785,5921	LTC124EUB
	Q	5832,5852,5991	LTA124EUB
	Q	5841,5851	RT1N140M
	Q	5864,5865	RT3T22M
	Q	5922,5952,5954	LSA1576UB
	Q	5951,5953,5955	LTC124EUB
	Q	5956-5958,5973	LSA1576UB
	Q	5971	RSR015P03
	Q	5974	LSC4081UB
⚠	D	5003,5004,5103,5104	1SS352
⚠	D	5005,5006,5105,5106	UDZS4R7(B)
	D	5041-5044,5141-5144	1SS352
⚠	D	5203,5204,5303,5304	1SS352
⚠	D	5205,5206,5305,5306	UDZS4R7(B)

Mark	No.	Description	Part No.
	D	5241-5244,5341-5344	1SS352
⚠	D	5403,5404,5503,5504	1SS352
⚠	D	5405,5406,5505,5506	UDZS4R7(B)
	D	5441-5444,5541-5544	1SS352
⚠	D	5603,5604	1SS352
⚠	D	5605,5606	UDZS4R7(B)
	D	5641-5644,5701,5702	1SS352
⚠	D	5703	S1WB(A)60SD
	D	5705,5708,5710	UDZS8R2(B)
	D	5706,5782	UDZS7R5(B)
	D	5707,5709	UDZS9R1(B)
	D	5711,5712	UDZS6R8(B)
	D	5713,5714	UDZS12(B)
	D	5715,5719,5720	UDZS13(B)
	D	5716	UDZS15(B)
⚠	D	5717,5718	1SR154-400
	D	5721,5722,5783,5784	1SS352
	D	5773,5781	UDZS5R1(B)
⚠	D	5790,5791	D5SBA60(B)
	D	5811,5812,5821,5822	1SS352
	D	5831,5832,5841,5842	1SS352
	D	5851,5852,5865,5921	1SS352
	D	5922	1SS352
	D	5923,5931	MC2848-11
	D	5934,5935	1SS357
	D	5971	RB411D

MISCELLANEOUS

NSP	L	5081,5181,5281 COIL(IN HOUSE)	AWX9630
NSP	L	5381,5481,5581 COIL(IN HOUSE)	AWX9630
NSP	L	5681 COIL(IN HOUSE)	AWX9630
	L	5921-5923 CHIP SOLID INDUCTOR	QTL1013
	L	5931 INDUCTOR	CTF1385
	L	5932-5934 CHIP SOLID INDUCTOR	QTL1013
	L	5951 CHIP SOLID INDUCTOR	ATL7002
	JA	5800-5802 SPEAKER TERMINAL 6-P	AKE7107
	JA	5804,5807 JACK	AKN-209
	JA	5810-5812 JACK	VKB1243
	JA	5815 MINI JACK	QKN1013
	KN	5800,5901 SCREW PLATE	VNE1948
	RY	5701 RELAY	ASR7032
	RY	5811,5821,5831,5841 RELAY	ASR7001
	RY	5851 RELAY	ASR7001
	CN	5010,5110,5210,5310 5P PLUG	53290-0510
	CN	5410,5510 5P PLUG	53290-0510
	CN	5610 7P PLUG	53290-0710
	CN	5701 CONNECTOR	B7P-VH
	CN	5804 7P PLUG	XKP3063
	CN	5805 23P PLUG	XKP3071
	5000	SMALL HEATSINK V5S(M)	ANH7200
	5001,5002	SCREW	BBZ30P080FCC
	5010,5012	HEAT SINK B	ANH1021
	5011,5013	SCREW	IBZ30P080FCC
	JH	5951,5953,5954 PCB BINDER	VEF1040
	JP	5722,5723 AWG14 BOARD IN	ADX7461
⚠	P	5001,5002 PROTECTOR(7A)	AEK7047
⚠	P	5003 PROTECTOR(1A)	AEK7009
⚠	P	5004 PROTECTOR(1A)	AEK7064

Mark	No.	Description	Part No.
RESISTORS			
⚠	R	5025,5026,5125,5126	ACN7132
⚠	R	5027,5127,5227,5327	ACN7163
⚠	R	5081,5181,5281,5381	RS1/2LMF4R7J
⚠	R	5082,5182,5282,5382	RS1LMF100J
⚠	R	5225,5226,5325,5326	ACN7132
⚠	R	5425,5426,5525,5526	ACN7132
⚠	R	5427,5527,5627	ACN7163
⚠	R	5481,5581,5681	RS1/2LMF4R7J
⚠	R	5482,5582,5682	RS1LMF100J
⚠	R	5625,5626	ACN7132
⚠	R	5701,5702	RS1LMF472J
⚠	R	5703,5704	RS1/2LMF332J
	R	5721,5722	RD1/4MUF473J
⚠	R	5790	RD1/4MUF100J
		Other Resistors	RS1/10SR###J
CAPACITORS			
	C	5011,5012,5111,5112	ACG7056
	C	5041,5141,5241,5341	CEHANP2R2M50
	C	5081,5082,5181,5182	CFTLA104J50
	C	5083,5183,5283,5383	CFTLA103J2A
	C	5084,5085,5089-5091	CCSRCH272J50
	C	5211,5212,5311,5312	ACG7056
	C	5281,5282,5381,5382	CFTLA104J50
	C	5411,5412,5511,5512	ACG7056
	C	5441,5541,5641	CEHANP2R2M50
	C	5481,5482,5581,5582	CFTLA104J50
	C	5483,5583,5683,5811	CFTLA103J2A
	C	5611,5612	ACG7056
	C	5681,5682	CFTLA104J50
	C	5703,5704	CEAT471M2A
	C	5705,5706	CEAT101M63
	C	5707,5708	CEAT221M2A
	C	5721,5722	ACH7258
	C	5723	CEAT100M63
	C	5725,5726,5729,5730	CEATR47M2A
	C	5731	CKSRYB223K50
	C	5741,5743	CEAT331M10
	C	5771,5772,5774,5781	CKSRYB103K50
	C	5773,5972	CEAT100M50
	C	5782	CKSRYB105K10
	C	5790,5791	CFTLA104J2A
	C	5812	CFTLA103J2A
	C	5891	CEAT101M50
	C	5922,5931,5932,5935	CKSRYB103K50
	C	5923,5937,5951	CKSRYB104K16
	C	5924,5936	CCSRCH471J50
	C	5933,5934	CKSRYB153K50
	C	5953,5954	CKSRYB103K50
	C	5955	CKSRYB102K50
	C	5957	CKSRYB472K50
	C	5973	CEAT470M25
	C	5975	CCSRCH331J50
	C	5977,5978	CKSQYB105K16
	C	5979	CCSRCH102J50

Mark	No.	Description	Part No.

I PRESTAGE ASSY

SEMICONDUCTORS

	Q	6001,6101,6201,6301	2SD2704K
	Q	6002,6102,6202,6302	IMT4
	Q	6003,6103,6203,6303	2SA1514K
⚠	Q	6004,6104,6204,6304	2SA1145
	Q	6005,6105,6205,6305	2SC2705
	Q	6401,6501,6601	2SD2704K
	Q	6402,6502,6602	IMT4
	Q	6403,6503,6603	2SA1514K
⚠	Q	6404,6504,6604	2SA1145
	Q	6405,6505,6605	2SC2705
⚠	D	6001,6101,6201,6301	UDZS3R6(B)
⚠	D	6002,6102,6202,6302	1SS352
⚠	D	6401,6501,6601	UDZS3R6(B)
⚠	D	6402,6502,6602	1SS352

MISCELLANEOUS

	CN	6010,6110,6210,6310 5P SOCKET	52418-0510
	CN	6410,6510 5P SOCKET	52418-0510
	CN	6603 CONNECTOR	CKS3384
	CN	6610 7P SOCKET	52418-0710
	JH	6001,6002 PCB BINDER	VEF1040

RESISTORS

	R	6007,6107,6207,6307	RS1/10SR2001F
	R	6009,6109,6209,6309	RD1/2VM473J
	R	6011,6111,6211,6311	RN1/16SE1201D
⚠	R	6023,6024,6123,6124	RD1/4MUF4R7J
	R	6029,6129,6229,6329	RN1/10SE3302D
	R	6030,6130,6230,6330	RN1/16SE1001D
	R	6031,6131,6231,6331	RN1/16SE1500D
⚠	R	6223,6224,6323,6324	RD1/4MUF4R7J
	R	6407,6507,6607	RS1/10SR2001F
	R	6409,6509,6609	RD1/2VM473J
	R	6411,6511,6611	RN1/16SE1201D
⚠	R	6423,6424,6523,6524	RD1/4MUF4R7J
	R	6429,6529,6629	RN1/10SE3302D
	R	6430,6530,6630	RN1/16SE1001D
	R	6431,6531,6631	RN1/16SE1500D
⚠	R	6623,6624	RD1/4MUF4R7J
		Other Resistors	RS1/10SR###J

CAPACITORS

	C	6001,6101,6201,6301	CEHAT4R7M50
	C	6002,6102,6202,6302	CCSRCH221J50
	C	6004,6104,6204,6304	CKSRYB102K50
	C	6005,6006,6015,6016	CCSRCH220J50
	C	6007,6107,6207,6307	CEHAT101M10
	C	6008,6108,6208,6308	ACG7057
	C	6009,6109,6209,6309	CEHAT100M2A
	C	6010,6110,6210,6310	CCSRCH101J50
	C	6017,6117,6217,6317	CEHAT331M10
	C	6023,6024,6123,6124	CEHAT100M63
	C	6032,6132,6232,6332	CKSRYB224K16
	C	6105,6106,6115,6116	CCSRCH220J50
	C	6205,6206,6215,6216	CCSRCH220J50
	C	6223,6224,6323,6324	CEHAT100M63
	C	6305,6306,6315,6316	CCSRCH220J50
	C	6401,6501,6601	CEHAT4R7M50
	C	6402,6502,6602	CCSRCH221J50
	C	6404,6504,6604	CKSRYB102K50
	C	6405,6406,6415,6416	CCSRCH220J50
	C	6407,6507,6607	CEHAT101M10
	C	6408,6508,6608	ACG7057
	C	6409,6509,6609	CEHAT100M2A
	C	6410,6510,6527,6610	CCSRCH101J50
	C	6417,6517,6617	CEHAT331M10
	C	6423,6424,6523,6524	CEHAT100M63
	C	6432,6532,6632	CKSRYB224K16
	C	6505,6506,6515,6516	CCSRCH220J50
	C	6605,6606,6615,6616	CCSRCH220J50
	C	6623,6624	CEHAT100M63

J DISPLAY ASSY

SEMICONDUCTORS

	IC	3001	PDC199A8
	IC	3002	S-80848CNMC-B89
⚠	IC	3003	S-1200B33-M5
	IC	3201	PE5615A
	Q	3004	2SK2034
	Q	3203-3207,3210-3213	LTC124EUB
	D	3002	RB751V-40
	D	3003,3006	1SS302
	D	3004,3008	1SS301
	D	3005	1SS300
	D	3204,3206,3208,3210	SLR343BC4T(JKLM)
	D	3212	SLR343BC4T(JKLM)

MISCELLANEOUS

	L	3001 CHIP SOLID INDUCTOR	ATL7002
	KN	3201 FL HOLDER(FE)	VNF1096
	V	3301 FL TUBE DISPLAY	AAV7115
	S	3001-3019 SWITCH	ASG7029
	X	3001 CRYSTAL OSCILLATOR	CSS1653
	X	3201 CERAMIC RESONATOR	VSS1142
	CN	3001 39P CONNECTOR	VKN2098
	CN	3003 5P CONNECTOR	VKN1820

RESISTORS

		All Resistors	RS1/10SR###J

MISCELLANEOUS

	JH	3002 4P CABLE HOLDER	51048-0400
	JH	3003,3004 3P CABLE HOLDER	51048-0300
	JP	3002 JUMPER WIRE	D20PYY0410E
	JP	3003,3004 JUMPER WIRE	D20PYY0310E
	JP	3005 CONNECTOR ASSY	PF07PG0S17
	U	3201 REMOTE RECEIVER UNIT	GP1UE274XKC1

CAPACITORS

	C	3002,3009,3013,3014	CKSRYB104K50
	C	3003,3007,3020,3021	CKSRYB105K16
	C	3004,3005	CCSRCH120J50
	C	3006,3302	CKSRYB471K50
	C	3008,3010,3043,3205	CCSRCH471J50

Mark	No.	Description	Part No.
	C	3011	CCSRCH101J50
	C	3012	CKSRYB472K50
	C	3015,3016	CKSRYB473K50
	C	3017	CCSRCH150J50
	C	3018,3035,3045,3212	CKSRYB103K50
	C	3022,3023,3027,3038	CKSRYB104K50
	C	3039,3208	CEAT221M10
	C	3048,3058,3207,3338	CCSRCH100D50
	C	3054,3101,3221-3223	CCSRCH102J50
	C	3055,3057,3103,3105	CKSRYB104K50
	C	3102,3104,3201,3306	CKSRYB102K50
	C	3202,3204,3307	CKSRYB104K50
	C	3209	CKSRYB105K16
	C	3211,3213	CEAT101M16
	C	3214,3216,3217	CCSRCH221J50
	C	3215,3218	CCSRCH470J50
	C	3301,3327	CEAT101M35
	C	3303,3405	CCSRCH102J50
	C	3305,3308,3328	CEAT470M50
	C	3311-3326	CCSRCH471J50
	C	3335-3337,3341	CKSRYB103K50
	C	3339	CCSRCK2R0C50
	C	3340,3343	CCSRCH100D50

K PRIMARY ASSY

SEMICONDUCTORS

Mark	No.	Description	Part No.
⚠	IC	1	MIP4150MD
⚠	IC	52	NJM1431AF
	Q	71	2SD2704K
⚠	D	1	D2SB60A
⚠	D	2	RD2ALF-A1
⚠	D	3	1SS403
⚠	D	4	RB751V-40
⚠	D	50	SBT250-06J
	D	71,72	1SS352

MISCELLANEOUS

Mark	No.	Description	Part No.
⚠	L	1 LINE FILTER	ATF7046
	L	51 COIL	ATH7080
⚠	L	71 LINE FILTER	XTF3004
	H	1,2,71,72 FUSE CLIP	AKR1004
⚠	JA	71 AC INLET	ADX7772
	KN	1,2 SCREW PLATE	VNE1948
	KN	50,51 EARTH TERMINAL	AKF7002
⚠	RY	71 POWER RELAY	ASR7034
⚠	T	1 POWER TRANSFORMER	ATK7003
⚠	CN	82 CONNECTOR	B2P3-VH
	0	HEAT SINK(AL)	ANH7223
	0	HEAT SINK(AL)	ANH7224
	0	SCREW	BBZ30P080FCC
	JP	51 HOUSING	ADX7762
⚠	PC	1 PHOTO COUPLER	TLP781(GR)

RESISTORS

Mark	No.	Description	Part No.
⚠	R	1,12	RS2LMF683J
⚠	R	9-11	ACN7173
	R	14	RS1/10SR1001F
	R	53	RS1/10SR1202F
	R	54	RS1/10SR7500F
	R	56	RS1/10SR1002F
	R	57	RS1/4SA155J
	R	59	RS1/8SQ365J
	R	74	RS1/8SQ105J
	Other Resistors		RS1/10SR###J

CAPACITORS

Mark	No.	Description	Part No.
⚠	C	1	ACE7043
	C	3	ACH7342
⚠	C	4	ACE7089
⚠	C	5	ACG7102
	C	6	CKSQYB105K25
	C	7	ACH7370
	C	8,53,56	CKSRYB104K50
	C	9	CCSRCH100D50
	C	10	CEAT2R2M2A
	C	13,55	CCSRCH102J50
⚠	C	18,20	VCG1046
	C	52	BCH1044
	C	58	ACH7369
⚠	C	71	ACE7013
⚠	C	73	XCG3010
	C	74,75	CCSRCH220J50

L USB RECT ASSY

SEMICONDUCTORS

Mark	No.	Description	Part No.
⚠	D	3651	D5SBA60(B)

MISCELLANEOUS

Mark	No.	Description	Part No.
	H	3651,3652 FUSE CLIP	AKR1004
	KN	3651 EARTH TERMINAL	AKF7002
	CN	3652 2P TOP POST	B2B-EH
		3651 PCB BINDER	VEF1040
	JH	3652,3653 PCB BINDER	VEF1040

RESISTORS

Mark	No.	Description	Part No.
	R	3652	RS1/4SA105J
	Other Resistors		RS1/8SQ###J

CAPACITORS

Mark	No.	Description	Part No.
	C	3651	CFTLA104J50
	C	3661	CKSRYB104K50
	C	3662	CCSRCH101J50
	C	3663	CCSRCH100D50
	C	3664	CKSRYB103K50
	C	3665,3666	CEAT472M16

M REGULATOR ASSY

SEMICONDUCTORS

Mark	No.	Description	Part No.
⚠	IC	4001	NJM78M05FA
⚠	IC	4002	NJM79M05FA
⚠	IC	4021	NJM78M06FA
⚠	IC	4101,4121	NJM78M12FA
⚠	IC	4102	NJM79M12FA
	Q	4021	LTA124EUB
	Q	4022	LTC124EUB
⚠	D	4001	D3SBA60(B)
	D	4003,4004,4105,4106	RB501V-40
	D	4024,4124	1SS352

Mark	No.	Description	Part No.
⚠	D	4051-4053,4101-4104	1SR154-400
	D	4054,4056	UDZS5R1(B)
	D	4055	PTZ22(B)
	D	4121	RB501V-40
	D	4123	RKZ3.3KG(B2)
⚠	D	4125-4127	1SR154-400

MISCELLANEOUS

	H	4001-4004,4101-4104	FUSE CLIP AKR1004
	CN	4001	CONNECTOR B6B-EH
	CN	4002,4102	PLUG(6P) KM200NA6
	CN	4052	PLUG(7P) KM200NA7
	CN	4101	5P TOP POST B5B-EH
	CN	4103	PLUG(4P) KM200NA4
	JH	4101-4106	PCB BINDER VEF1040

RESISTORS

⚠	R	4001	RD1/4MUF4R7J
	R	4022	RS3LMF150J
	R	4052	RD1/4MUF391J
	R	4057	RS1/8SQ225J
		Other Resistors	RS1/10SR###J

CAPACITORS

	C	4002,4060	CFTLA104J50
	C	4007	CEAT682M16
	C	4008	CEAT222M16
	C	4011,4012,4021,4057	CKSRYB103K50
	C	4013,4014,4054	CEAT101M16
	C	4022	CEAT101M25
	C	4051	CEANP101M35
	C	4052	CEAT101M35
	C	4053	CEAT221M35
	C	4055	CEAT470M50
	C	4101	CFTLA394J50
	C	4102-4105	CKSRYB473K50
	C	4107	CEAT222M25
	C	4108	CEAT332M25
	C	4109,4110,4121,4124	CKSRYB103K50
	C	4111,4112	CEAT221M25
	C	4117,4118	CKSRYB104K50
	C	4122	CEAT100M50
	C	4125	CEAT102M35
	C	4126	CEAT471M35
	C	4127	CKSRYB103K50
	C	4130	CCSRCH101J50

N POWER SW ASSY

SEMICONDUCTORS

	Q	3401	LTC143EUB
	D	3402	SLR343BC4T(JKLM)

MISCELLANEOUS

	S	3401	SWITCH VSG1024
	CN	3401	4P JUMPER CONNECTOR 52147-0410

RESISTORS

		All Resistors	RS1/10SR###J

CAPACITORS

	C	3401	CCSRCH221J50
	C	3402	CKSRYB104K16

O ENCODER ASSY

MISCELLANEOUS

	S	3501	ROTARY ENCODER ASX7051
	CN	3501	3P JUMPER CONNECTOR 52147-0310

RESISTORS

		All Resistors	RS1/10SR###J

CAPACITORS

	C	3501,3502	CKSRYB103K50

P MIC HP ASSY

SEMICONDUCTORS

	IC	3471	NJM4565MD
	Q	3451	LTC124EUB
	D	3473-3475	RKZ5.1KG(B2)

MISCELLANEOUS

	JA	3471	JACK VKB1243
	JA	3472	JACK AKB7219
	JA	3476	HEADPHONE JACK XKB3066
	KN	3471	EARTH TERMINAL AKF7002
	CN	3471	CONNECTOR 9604S-09C
	CN	3473	4P JUMPER CONNECTOR 52147-0410

RESISTORS

	R	3495	RS1/10SR75R0F
		Other Resistors	RS1/10SR###J

CAPACITORS

	C	3451,3452	CKSRYB822K50
	C	3453,3481,3482,3486	CKSRYB103K50
	C	3454,3473	CKSRYB471K50
	C	3460	DCH1165
	C	3475,3479,3494	CCSRCH101J50
	C	3476,3477	CCSRCH330J50
	C	3478,3483,3484	CEAT100M50
	C	3480	DCH1201
	C	3485	CKSRYB105K16
	C	3488	CKSRYB223K50
	C	3490	CKSRYB102K50
	C	3495	CKSRYB104K50
	C	3496	CKSRYB103K50
	C	3497	CCSRCH331J50

Q CONNECT ASSY

MISCELLANEOUS

	CN	3361	B TO B CONNECTOR AKM7177
	CN	3362	20P PLUG AKM7171
	CN	3363	23P SOCKET XKP3082
	CN	3364	7P SOCKET XKP3074

RESISTORS

		All Resistors	RS1/10SR###J

Mark	No.	Description	Part No.
		MISCELLANEOUS	
	JP 3365	CONNECTOR ASSY	PF04PG-S60
		CAPACITORS	
	C 3361		CCSRCH100D50

R A-DAC BRIDGE ASSY

Mark	No.	Description	Part No.
		MISCELLANEOUS	
	CN 3791,3792	14P PLUG	AKM7170
	CN 3793,3794	B TO B CONNECTOR	AKM7176

S D-AUDIO BRIDGE ASSY

Mark	No.	Description	Part No.
		MISCELLANEOUS	
	CN 3771,3772	7P PLUG	XKP3063
	CN 3773,3774	15P PLUG	XKP3067

T D-DAC BRIDGE ASSY

Mark	No.	Description	Part No.
		MISCELLANEOUS	
	CN 3781-3784	PLUG (30P)	BKM1035
	CN 3785	3P PLUG	XKP3061
		CAPACITORS	
	C 3781		CCSRCH100D50

U MIC CONNECT ASSY

Mark	No.	Description	Part No.
		MISCELLANEOUS	
	CN 3651	CONNECTOR	9604S-09C
	CN 3652	CONNECTOR	CKS3372
	CN 3653	PLUG(3P)	KM200NA3

V POSI 1 ASSY

Mark	No.	Description	Part No.
		SEMICONDUCTORS	
⚠	TH 7001		PTFM04BB222Q2N34BS
		MISCELLANEOUS	
	CN 7001	CONNECTOR ASS'Y	PG02KA-F07

W POSI 2 ASSY

Mark	No.	Description	Part No.
		SEMICONDUCTORS	
⚠	TH 7002		PTFM04BE222Q2N34BS
		MISCELLANEOUS	
	CN 7002	CONNECTOR ASS'Y	PG02KA-F10

X POSI 3 ASSY

Mark	No.	Description	Part No.
		SEMICONDUCTORS	
⚠	TH 7003		PTFM04BG222Q2N34BS
		MISCELLANEOUS	
	CN 7003	CONNECTOR ASS'Y	PG03KA-F10

Y BIND L FRONT ASSY

Mark	No.	Description	Part No.
		MISCELLANEOUS	
	JH 5961,5962	PCB BINDER	VEF1040

Z BIND L BACK ASSY

Mark	No.	Description	Part No.
		MISCELLANEOUS	
	JH 5522,5523	PCB BINDER	VEF1040

AA BIND R FRONT ASSY

Mark	No.	Description	Part No.
		MISCELLANEOUS	
	JH 5511	PCB BINDER	VEF1040

AB BIND DISP FFC ASSY

Mark	No.	Description	Part No.
		MISCELLANEOUS	
	JH 5541	PCB BINDER	VEF1040

AC FFC GUARD ASSY

FFC GUARD ASSY has no service parts

AD FFC GUARD 2 ASSY

FFC GUARD 2 ASSY has no service parts

AE BIND R BACK ASSY

BIND R BACK ASSY has no service parts

FM/AM TUNER UNIT

FM/AM TUNER UNIT has no service parts