Pioneer sound.vision.soul

# Service Manual

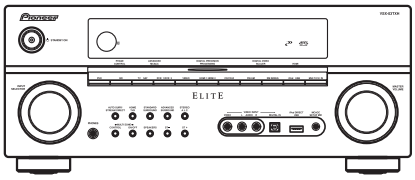

VSX-03TXH

ORDER NO.
**RRV3766**

## AUDIO/VIDEO MULTI-CHANNEL RECEIVER

# VSX-03TXH
# VSX-9130TXH-K
# VSX-01TXH
# VSX-1018AH-K

### THIS MANUAL IS APPLICABLE TO THE FOLLOWING MODEL(S) AND TYPE(S).

| Model | Type | Power Requirement | Remarks |
|---|---|---|---|
| VSX-03TXH | KUXJ/CA | AC 120 V | |
| VSX-9130TXH-K | KUXJ | AC 120 V | |
| VSX-01TXH | KUXJ/CA | AC 120 V | |
| VSX-1018AH-K | KUXJ | AC 120 V | |

For details, refer to "Important Check Points for good servicing".

**PIONEER CORPORATION** 4-1, Meguro 1-chome, Meguro-ku, Tokyo 153-8654, Japan
**PIONEER ELECTRONICS (USA) INC.** P.O. Box 1760, Long Beach, CA 90801-1760, U.S.A.
**PIONEER EUROPE NV** Haven 1087, Keetberglaan 1, 9120 Melsele, Belgium
**PIONEER ELECTRONICS ASIACENTRE PTE. LTD.** 253 Alexandra Road, #04-01, Singapore 159936
ⒸPIONEER CORPORATION 2008

T-ZZV MAY 2008 Printed in Japan

# SAFETY INFORMATION

**This service manual is intended for qualified service technicians ; it is not meant for the casual do-it-yourselfer. Qualified technicians have the necessary test equipment and tools, and have been trained to properly and safely repair complex products such as those covered by this manual.**
**Improperly performed repairs can adversely affect the safety and reliability of the product and may void the warranty. If you are not qualified to perform the repair of this product properly and safely, you should not risk trying to do so and refer the repair to a qualified service technician.**

**WARNING**
**This product contains lead in solder and certain electrical parts contain chemicals which are known to the state of California to cause cancer, birth defects or other reproductive harm.**

**Health & Safety Code Section 25249.6 - Proposition 65**

NOTICE
(FOR CANADIAN MODEL ONLY)
Fuse symbols (fast operating fuse) and/or (slow operating fuse) on PCB indicate that replacement parts must be of identical designation.

REMARQUE
(POUR MODÈLE CANADIEN SEULEMENT)
Les symboles de fusible (fusible de type rapide) et/ou (fusible de type lent) sur CCI indiquent que les pièces de remplacement doivent avoir la même désignation.

**(FOR USA MODEL ONLY)**

## 1. SAFETY PRECAUTIONS

The following check should be performed for the continued protection of the customer and service technician.

### LEAKAGE CURRENT CHECK

Measure leakage current to a known earth ground (water pipe, conduit, etc.) by connecting a leakage current tester such as Simpson Model 229-2 or equivalent between the earth ground and all exposed metal parts of the appliance (input/output terminals, screwheads, metal overlays, control shaft, etc.). Plug the AC line cord of the appliance directly into a 120V AC 60 Hz outlet and turn the AC power switch on. Any current measured must not exceed 0.5 mA.

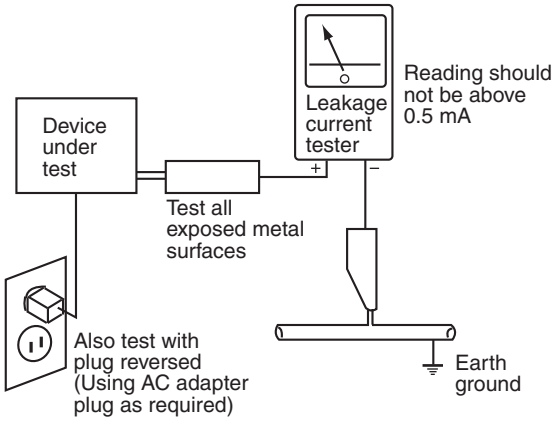


AC Leakage Test

**ANY MEASUREMENTS NOT WITHIN THE LIMITS OUTLINED ABOVE ARE INDICATIVE OF A POTENTIAL SHOCK HAZARD AND MUST BE CORRECTED BEFORE RETURNING THE APPLIANCE TO THE CUSTOMER.**

## 2. PRODUCT SAFETY NOTICE

Many electrical and mechanical parts in the appliance have special safety related characteristics. These are often not evident from visual inspection nor the protection afforded by them necessarily can be obtained by using replacement components rated for voltage, wattage, etc. Replacement parts which have these special safety characteristics are identified in this Service Manual.

Electrical components having such features are identified by marking with a ⚠ on the schematics and on the parts list in this Service Manual.
The use of a substitute replacement component which does not have the same safety characteristics as the PIONEER recommended replacement one, shown in the parts list in this Service Manual, may create shock, fire, or other hazards.

Product Safety is continuously under review and new instructions are issued from time to time. For the latest information, always consult the current PIONEER Service Manual. A subscription to, or additional copies of, PIONEER Service Manual may be obtained at a nominal charge from PIONEER.

## [Important Check Points for Good Servicing]

In this manual, procedures that must be performed during repairs are marked with the below symbol.
Please be sure to confirm and follow these procedures.

### 1. Product safety

Please conform to product regulations (such as safety and radiation regulations), and maintain a safe servicing environment by following the safety instructions described in this manual.

① Use specified parts for repair.

Use genuine parts. Be sure to use important parts for safety.

② Do not perform modifications without proper instructions.

Please follow the specified safety methods when modification(addition/change of parts) is required due to interferences such as radio/TV interference and foreign noise.

③ Make sure the soldering of repaired locations is properly performed.

When you solder while repairing, please be sure that there are no cold solder and other debris.
Soldering should be finished with the proper quantity. (Refer to the example)

④ Make sure the screws are tightly fastened.

Please be sure that all screws are fastened, and that there are no loose screws.

⑤ Make sure each connectors are correctly inserted.

Please be sure that all connectors are inserted, and that there are no imperfect insertion.

⑥ Make sure the wiring cables are set to their original state.

Please replace the wiring and cables to the original state after repairs.
In addition, be sure that there are no pinched wires, etc.

⑦ Make sure screws and soldering scraps do not remain inside the product.

Please check that neither solder debris nor screws remain inside the product.

⑧ There should be no semi-broken wires, scratches, melting, etc. on the coating of the power cord.

Damaged power cords may lead to fire accidents, so please be sure that there are no damages.
If you find a damaged power cord, please exchange it with a suitable one.

⑨ There should be no spark traces or similar marks on the power plug.

When spark traces or similar marks are found on the power supply plug, please check the connection and advise on secure connections and suitable usage. Please exchange the power cord if necessary.

⑩ Safe environment should be secured during servicing.

When you perform repairs, please pay attention to static electricity, furniture, household articles, etc. in order to prevent injuries.
Please pay attention to your surroundings and repair safely.

### 2. Adjustments

To keep the original performance of the products, optimum adjustments and confirmation of characteristics within specification.
Adjustments should be performed in accordance with the procedures/instructions described in this manual.

### 3. Lubricants, Glues, and Replacement parts

Use grease and adhesives that are equal to the specified substance.
Make sure the proper amount is applied.

### 4. Cleaning

For parts that require cleaning, such as optical pickups, tape deck heads, lenses and mirrors used in projection monitors, proper cleaning should be performed to restore their performances.

### 5. Shipping mode and Shipping screws

To protect products from damages or failures during transit, the shipping mode should be set or the shipping screws should be installed before shipment. Please be sure to follow this method especially if it is specified in this manual.

# CONTENTS


SAFETY INFORMATION ..... 2
1. SERVICE PRECAUTIONS ..... 6
2. SPECIFICATIONS ..... 7
2.1 ACCESSORIES ..... 7
2.2 SPECIFICATIONS ..... 8
2.3 PANEL FACILITIES ..... 9
3. BASIC ITEMS FOR SERVICE ..... 16
3.1 CHECK POINTS AFTER SERVICING ..... 16
3.2 PCB LOCATIONS ..... 17
3.3 JIGS LIST ..... 19
4. BLOCK DIAGRAM ..... 20
4.1 OVERALL WIRING DIAGRAM ..... 20
4.2 BLOCK DIAGRAM FOR AUDIO BLOCK ..... 22
4.3 BLOCK DIAGRAM FOR VIDEO BLOCK ..... 23
4.4 BLOCK DIAGRAM FOR HDMI & DVC ..... 25
4.5 BLOCK DIAGRAM FOR USB BLOCK ..... 26
4.6 BLOCK DIAGRAM FOR U-COM BLOCK ..... 27
4.7 BLOCK DIAGRAM FOR POWER SUPPLY BLOCK ..... 28
5. DIAGNOSIS ..... 29
5.1 DIAGNOSIS FLOWCHART ..... 29
5.2 CIRCUIT DESCRIPTION ..... 61
6. SERVICE MODE ..... 64
6.1 TEST MODE ..... 64
7. DISASSEMBLY ..... 67
8. EACH SETTING AND ADJUSTMENT ..... 71
8.1 HOW TO UPDATE FIRMWARE ..... 71
9. EXPLODED VIEWS AND PARTS LIST ..... 76
9.1 PACKING SECTION ..... 76
9.2 EXTERIOR SECTION ..... 78
9.3 CHASSIS SECTION ..... 80
9.4 POWER AMP SECTION ..... 82
9.5 FRONT PANEL SECTION ..... 84
10. SCHEMATIC DIAGRAM ..... 86
10.1 AUDIO IN ASSY (1/2) ..... 86
10.2 AUDIO IN ASSY (2/2) ..... 88
10.3 MAIN ASSY (1/4) ..... 90
10.4 MAIN ASSY (2/4) ..... 92
10.5 MAIN ASSY (3/4) ..... 94
10.6 MAIN ASSY (4/4) ..... 96
10.7 DSP & USB ASSY (1/5) ..... 98
10.8 DSP & USB ASSY (2/5) ..... 100
10.9 DSP & USB ASSY (3/5) ..... 102
10.10 DSP & USB ASSY (4/5) ..... 104
10.11 DSP & USB ASSY (5/5) ..... 106
10.12 FRONT IN ASSY ..... 108
10.13 INTERFACE ASSY ..... 110
10.14 HDMI & DVC ASSY (1/2) ..... 112
10.15 HDMI & DVC ASSY (2/2) ..... 114
10.16 BINDER, BIND L FRONT, BIND L BACK, BIND R FRONT and BIND R BACK ASSYS ..... 116
10.17 POSI1, POSI2 and POSI3 ASSYS ..... 117
10.18 DISPLAY ASSY ..... 118
10.19 MULTI JOG, POWER SW, DIODE, HEADPHONE, PRIMARY and DC/DC ASSYS ..... 120
10.20 POWER AMP ASSY (1/2) ..... 122
10.21 POWER AMP ASSY (2/2) ..... 124
10.22 PRE-STAGE AMP ASSY ..... 126
10.23 REGULATOR ASSY ..... 128
11. PCB CONNECTION DIAGRAM ..... 131
11.1 AUDIO IN ASSY ..... 132
11.2 MAIN ASSY ..... 136
11.3 DSP & USB ASSY ..... 140
11.4 FRONT IN ASSY ..... 142
11.5 INTERFACE ASSY ..... 144
11.6 HDMI & DVC ASSY ..... 146
11.7 BINDER, BIND L FRONT and BIND L BACK ASSYS ..... 150
11.8 BIND R FRONT, BIND R BACK ASSYS ..... 151

11.9 DISPLAY, MULTI JOG and POWER SW ASSYS ..... 152
11.10 DIODE ASSY ..... 156
11.11 HEADPHONE ASSY ..... 157
11.12 POWER AMP ASSY ..... 158
11.13 PRE-STAGE AMP ASSY ..... 162
11.14 PRIMARY ASSY ..... 166
11.15 REGULATOR ASSY ..... 168
11.16 DC/DC ASSY ..... 170
11.17 POSI1, POSI2 and POSI3 ASSYS ..... 171
12. PCB PARTS LIST ..... 172

# 1. SERVICE PRECAUTIONS

## 1.1 NOTES ON SOLDERING

- For environmental protection, lead-free solder is used on the printed circuit boards mounted in this unit.
  Be sure to use lead-free solder and a soldering iron that can meet specifications for use with lead-free solders for repairs accompanied by reworking of soldering.

- Compared with conventional eutectic solders, lead-free solders have higher melting points, by approximately 40 °C.
  Therefore, for lead-free soldering, the tip temperature of a soldering iron must be set to around 373 °C in general, although the temperature depends on the heat capacity of the PC board on which reworking is required and the weight of the tip of the soldering iron.

Do NOT use a soldering iron whose tip temperature cannot be controlled.

Compared with eutectic solders, lead-free solders have higher bond strengths but slower wetting times and higher melting temperatures (hard to melt/easy to harden).

The following lead-free solders are available as service parts:

- Parts numbers of lead-free solder:
  GYP1006 1.0 in dia.
  GYP1007 0.6 in dia.
  GYP1008 0.3 in dia.

## 1.2 CAUTION

- Before removing the Power Amp Assy, it is neccessary to discharge C5721 and C5722.
  For more detail, please refer to page 67.

# 2. SPECIFICATIONS
## 2.1 ACCESSORIES

### [1] Accessories

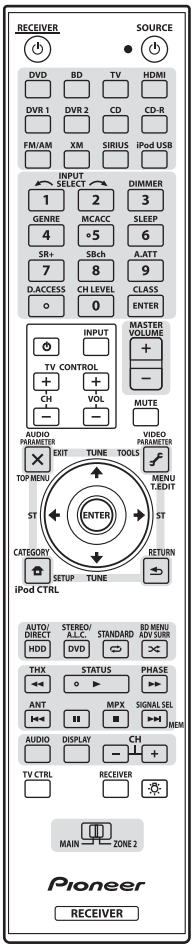

Remote Control Unit
(AXD7517: VSX-03TXH, VSX-01TXH)
(AXD7525: VSX-9130TXH, VSX-1018AH)

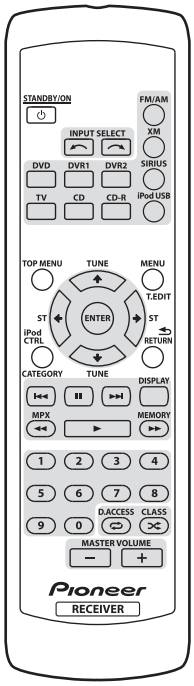

Sub Remote Control Unit
(AXD7529: VSX-03TXH)

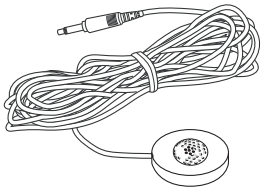

Setup Microphone
(for Auto MCACC setup)
(APM7008)

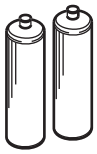

AA/LR6 Dry Cell Batteries
(VEM1031)

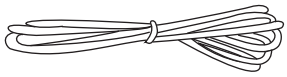

FM Wire Antenna
(ADH7030)

AM Loop Antenna
(ATB7013)

### SERVICE PARTS

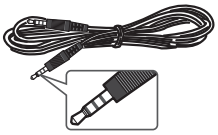

SR+ mini-plug cable
(ADE7095)

# 2.2 SPECIFICATIONS

## [1] Specifications

### Amplifier section

**Continuous average power output of 110 watts* per channel, min., at 8 ohms, from 20 Hz to 20 000 Hz with no more than 0.09 %** total harmonic distortion (front).**

Continuous Power Output (20 Hz to 20 kHz, 8 Ω, 0.09 %)
Front. . . . . 110 W + 110 W
Center . . . . . 110 W
Surround . . . . . 110 W + 110 W
Surround back . . . . . 110 W + 110 W

Continuous Power Output (1 kHz, 6 Ω, 1.0 %)
Front. . . . . 150 W + 150 W
Center . . . . . 150 W
Surround . . . . . 150 W + 150 W
Surround back . . . . . 150 W + 150 W

Total harmonic distortion. . . . . 0.09 %
(20 Hz to 20 kHz, 110 W, 8 Ω)

Related Power Output (1 kHz, 8 Ω, 0.05 %) **(9130TXH-K)**
Front. . . . . .140 W per channel
Center . . . . . 140 W
Surround . . . . . .140 W per channel

Total harmonic distortion. . . . . 0.09 %
(20 Hz to 20 kHz, 110 W, 8 Ω)

Related Power Output (1 kHz, 8 Ω, 0.05 %) **(1018AH-K)**
Front. . . . . 130 W per channel
Center . . . . . 130 W
Surround . . . . . 130 W per channel

Total harmonic distortion. . . . . .0.09 %
(20 Hz to 20 kHz, 110 W, 8 Ω)

** Measured pursuant to the Federal Trade Commission's Trade Regulation rule on Power Output Claims for Amplifiers*
*** Measured by Audio Spectrum Analyzer*

### Audio Section

Input (Sensitivity/Impedance)
LINE . . . . . .335 mV/47 kΩ
Frequency Response (LINE) . . . . . 5 Hz to 100 000 Hz $^{+0}_{-3}$ dB
Output (Level/Impedance)
REC . . . . . 335 mV/2.2 kΩ
Tone Control
BASS . . . . . .±6 dB (100 Hz)
TREBLE . . . . . .±6 dB (10 kHz)
LOUDNESS . . . . . +4 dB/+2 dB (100 Hz/10 kHz)
(at volume position –40 dB)
Signal-to-Noise Ratio (IHF, short circuited, A network)
LINE . . . . . .103 dB
Signal-to-Noise Ratio [EIA, at 1 W (1 kHz)]
LINE . . . . . .83 dB

### Composite Video/S-Video Section

Input (Sensitivity/Impedance) . . . . . .1 Vp-p/75 Ω
Output (Level/Impedance) . . . . . .1 Vp-p/75 Ω
Signal-to-Noise Ratio . . . . . .65 dB
Frequency Response . . . . . .5 Hz to 10 MHz

### Component Video Section

Input (Sensitivity/Impedance) . . . . . .1 Vp-p/75 Ω
Output (Level/Impedance) . . . . . .1 Vp-p/75 Ω
Signal-to-Noise Ratio . . . . . .65 dB
Frequency Response . . . . . .5 Hz to 100 MHz

### HDMI Section

Input. . . . . .19-pin x 3
Output . . . . . .19-pin (5 V, 100 mA)

### FM Tuner Section

Frequency Range . . . . . 87.5 MHz to 108 MHz
Usable Sensitivity . . . . . Mono: 13.2 dBf, IHF (1.3 μV/75 Ω)
50 dB Quieting Sensitivity . . . . . Mono: 20.2 dBf
Stereo: 38.6 dBf
Signal-to-Noise Ratio . . . . . Mono: 73 dB (at 85 dBf)
Stereo: 70 dB (at 85 dBf)
Distortion . . . . . .Stereo: 0.5 % (1 kHz)
Alternate Channel Selectivity . . . . . .60 dB (400 kHz)
Stereo Separation . . . . . .40 dB (1 kHz)
Frequency Response . . . . . 30 Hz to 15 kHz ±1 dB
Antenna Input . . . . . .75 Ω unbalanced

### AM Tuner Section

Frequency Range . . . . . .530 kHz to 1 700 kHz
Sensitivity (IHF, Loop antenna) . . . . . 350 μV/m
Selectivity . . . . . 25 dB
Signal-to-Noise Ratio . . . . . 50 dB
Antenna . . . . . Loop antenna

### Miscellaneous

Power Requirements . . . . . .AC 120 V, 60 Hz
Power Consumption . . . . . .390 W
In standby . . . . . .0.6 W (HDMI Control OFF)
0.75 W (HDMI Control ON)
Dimensions . . . . . 420 (W) mm x 173 (H) mm x 433 (D) mm
(16 9/16 (W) in. x 6 13/16 (H) in. x 17 1/16 (D) in.)
Weight (without package) . . . . . .13.5 kg (29 lbs 13 oz)
**(03TXH, 9130TXH)**
Weight (without package). . . . . 13.3 kg (29 lbs 6 oz)
**(01TXH, 1018AH-K)**

### Furnished Parts

Setup microphone (for Auto MCACC setup) . . . . . 1
AA/IEC R6P dry cell batteries . . . . . 4

AA/IEC R6P dry cell batteries . . . . . 2
**(9130TXH-K, 01TXH, 1018AH-K)**
Remote control unit . . . . . 1
Sub room remote control unit **(VSX-03TXH)** . . . . . 1
AM loop antenna. . . . . 1
FM wire antenna . . . . . 1
Warranty card . . . . . 1
Operating instructions

**Note**

- Specifications and the design are subject to possible modifications without notice, due to improvements.

*Manufactured under license from Dolby Laboratories. "Dolby", "Pro Logic", "Surround EX" and the double-D symbol are trademarks of Dolby Laboratories.*

*DTS is a registered trademark and the DTS logos, Symbol, DTS-HD and DTS-HD Master Audio are trademarks of DTS, Inc. © 1996-2007 DTS, Inc. All Rights Reserved.*

*THX, the THX logo and Select2 Plus are trademarks of THX Ltd. which may be registered in some jurisdictions. All rights reserved. All other trademarks are the property of their respective owners.*

*"Neural Surround", "Neural Audio", "Neural" and "NRL" are trademarks and logos owned by Neural Audio Corporation, THX is a trademark of THX Ltd., which may be registered in some jurisdictions. All rights reserved.*

# 2.3 PANEL FACILITIES

## [1] Rear panel (for VSX-03TXH, VSX-9130TXH, VSX-01TXH)

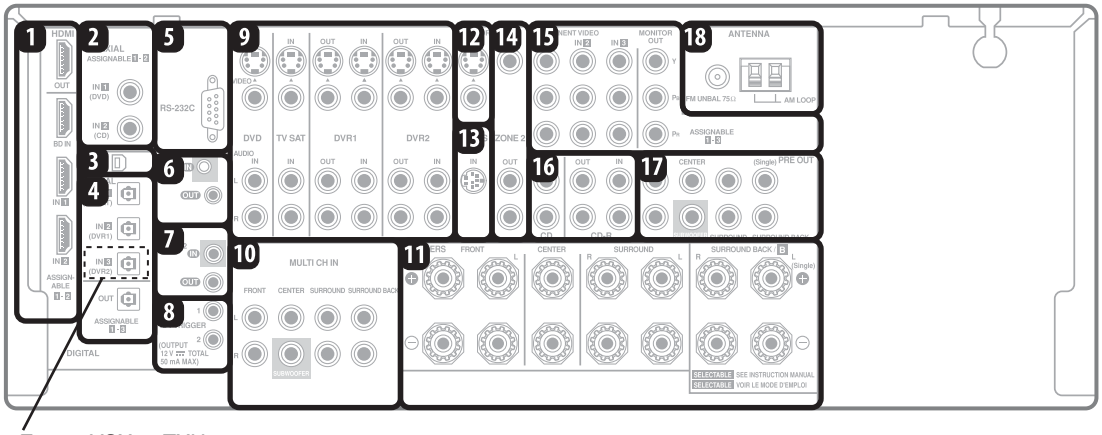


**Caution**

- Before making or changing the connections, switch off the power and disconnect the power cord from the power outlet. Plugging in should be the final step.

**1 HDMI connectors (x4)**
Three inputs and one output for high-quality audio/video connection to compatible HDMI devices.

**2 Coaxial digital audio inputs (x2)**
Use for digital audio sources, including DVD players/recorders, digital satellite receivers, CD players, etc.

**3 XM Radio input**

**4 Optical digital audio output/input(s)**
**(x4) (VSX-03TXH, VSX-9130TXH)**
**(x3) (VSX-01TXH)**

Use the **OUT** jack for recording to a CD or MiniDisc recorder.

Use the **IN** jacks for digital audio sources, including DVD players/recorders, digital satellite receivers, CD players, etc.

**5 RS-232C connector**
Use for connection to a PC for graphical output when using Advanced MCACC.

**6 Control input/output**
Use to connect other Pioneer components so that you can control all your equipment from a single IR remote sensor.

**7 Remote input/output (MULTI-ZONE)**
Use for connection to an external remote control sensor for use in a MULTI-ZONE setup, for example.

**8 12 V trigger jacks** *(total 50 mA max.)* **(x2)**
Use to switch components in your system on and off according to the input function of the receiver.

**9 Audio/video source inputs/(outputs) (x6)**
Use for connection to audio/visual sources, such as DVD players/recorders, VCRs, etc. Each set of inputs has jacks for composite video, S-Video and stereo analog audio.

**10 Multichannel analog audio inputs**
7.1 channel inputs for connection to a DVD player with multichannel analog outputs.

**11 Speaker terminals**
Use for connection to the main front, center, surround and surround back speakers.

**12 Composite and S-Video monitor outputs**
Use to connect monitors and TVs.

**13 SIRIUS Radio input**

**14 ZONE 2 audio/video outputs**
Use to connect a second receiver in a separate room.

**15 Component video connections (x4)**
Use the inputs to connect any video source that has component video output, such as a DVD recorder. Use the output for connection to a monitor or TV.

**16 Stereo analog audio source inputs/(outputs) (x3)**
Use for connection to audio sources such as CD players, tape decks, turntables, etc.

**17 Multichannel pre-amplifier outputs**
Use to connect separate amplifiers for front, center, surround, surround back and subwoofer channels.

**18 AM and FM antenna terminals**
Use to connect indoor or outdoor antennas for radio broadcasts.

## [2] Rear panel (for VSX-1018AH)

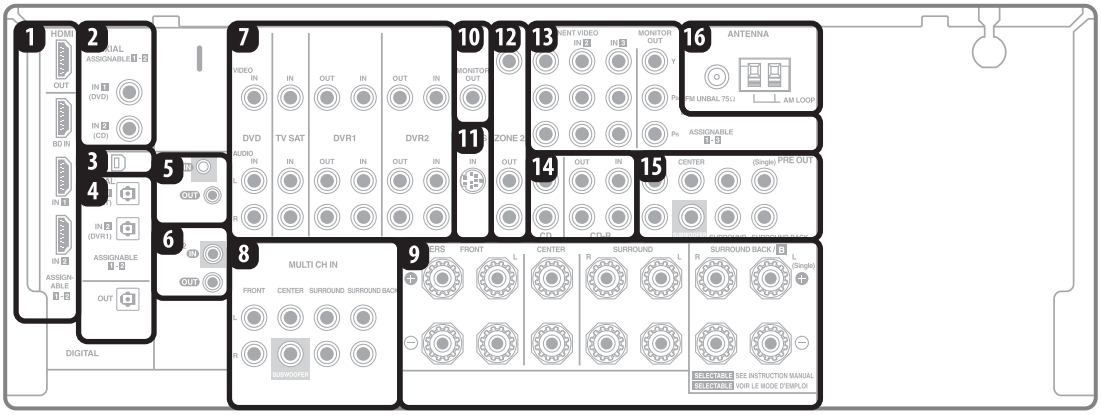


### Caution

- Before making or changing the connections, switch off the power and disconnect the power cord from the power outlet. Plugging in should be the final step.

**1 HDMI connectors (x4)**
Three inputs and one output for high-quality audio/video connection to compatible HDMI devices.

**2 Coaxial digital audio inputs (x2)**
Use for digital audio sources, including DVD players/recorders, digital satellite receivers, CD players, etc.

**3 XM Radio input**

**4 Optical digital audio output/input(s) (x3)**
Use the **OUT** jack for recording to a CD or MiniDisc recorder.

Use the **IN** jacks for digital audio sources, including DVD players/recorders, digital satellite receivers, CD players, etc.

**5 Control input/output**
Use to connect other Pioneer components so that you can control all your equipment from a single IR remote sensor.

**6 Remote input/output (MULTI-ZONE)**
Use for connection to an external remote control sensor for use in a MULTI-ZONE setup, for example.

**7 Audio/video source inputs/(outputs) (x6)**
Use for connection to audio/visual sources, such as DVD players/recorders, VCRs, etc. Each set of inputs has jacks for composite video and stereo analog audio.

**8 Multichannel analog audio inputs**
7.1 channel inputs for connection to a DVD player with multichannel analog outputs.

**9 Speaker terminals**
Use for connection to the main front, center, surround and surround back speakers.

**10 Composite monitor outputs**
Use to connect monitors and TVs.

**11 SIRIUS Radio input**

**12 ZONE 2 audio/video outputs**
Use to connect a second receiver in a separate room.

**13 Component video connections (x4)**
Use the inputs to connect any video source that has component video output, such as a DVD recorder. Use the output for connection to a monitor or TV.

**14 Stereo analog audio source inputs/(outputs) (x3)**
Use for connection to audio sources such as CD players, tape decks, turntables, etc.

**15 Multichannel pre-amplifier outputs**
Use to connect separate amplifiers for front, center, surround, surround back and subwoofer channels.

**16 AM and FM antenna terminals**
Use to connect indoor or outdoor antennas for radio broadcasts.

## [3] Front panel

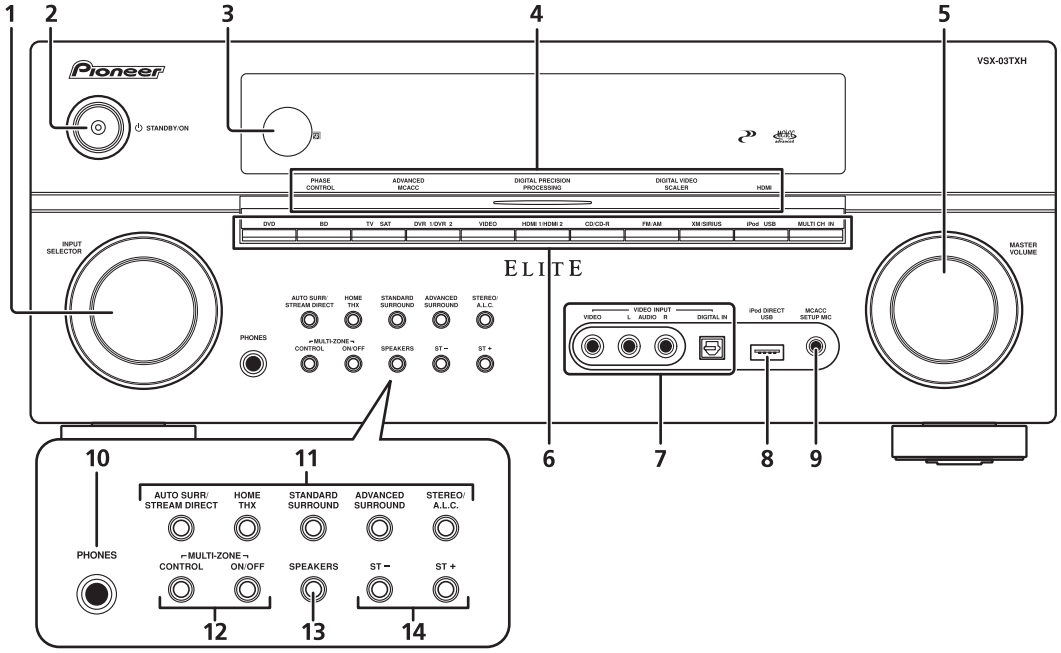


**1 INPUT SELECTOR dial**
Use to select an input source.

**2 ⏻ STANDBY/ON**
Switches the receiver between on and standby. Power indicator lights when the receiver is on.

**3 Remote sensor**
Receives the signals from the remote control.

**4 PHASE CONTROL indicator** – Lights when the Phase Control is switched on.
**ADVANCED MCACC indicator** – Lights when one of the MCACC presets is selected.[1]
**DIGITAL PRECISION PROCESSING indicator** – Lights to indicate digital processing (for example, it disappears when Pure Direct is on, or when listening through the multichannel analog inputs).
**DIGITAL VIDEO SCALER indicator** – Lights when Resolution is set to a setting other than **PURE** (for example, when the video input signal is upscaled).
**HDMI indicator** – Blinks when connecting an HDMI-equipped component; lights when the component is connected.

**5 MASTER VOLUME dial**

**6 Input source buttons**
Press to select an input source.

**7 VIDEO INPUT**

**8 iPod DIRECT USB terminal**
Use to connect your Apple iPod as an audio source, or connect a USB audio device for playback.

**9 MCACC SETUP MIC jack**
Use to connect the supplied microphone.

**10 PHONES jack**
Use to connect headphones. When the headphones are connected, there is no sound output from the speakers.

**11 Listening mode buttons**
**AUTO SURR/STREAM DIRECT** – Switches between Auto surround mode and Stream Direct playback. Stream Direct playback bypasses the bass/treble controls for the most accurate reproduction of a source.
**HOME THX (Except 1018AH)** – Press to select a Home THX listening mode.
**SOUND RETRIEVER (1018AH)** – Press to restore CD quality sound to compressed audio sources.
**STANDARD SURROUND** – Press for Standard decoding and to switch between the various DD Pro Logic IIx and Neo:6 options.
**ADVANCED SURROUND** – Use to switch between the various surround modes.
**STEREO/A.L.C.** – Switches between stereo playback, Auto level control stereo mode and Front Stage Surround Advance modes.

**12 MULTI-ZONE controls**
If you've made MULTI-ZONE connections, use these controls to control the sub zone from the main zone.

**13 SPEAKERS**
Use to change the speaker system.

**14 ST +/–**
Use to select preset radio stations.

## [4] Display

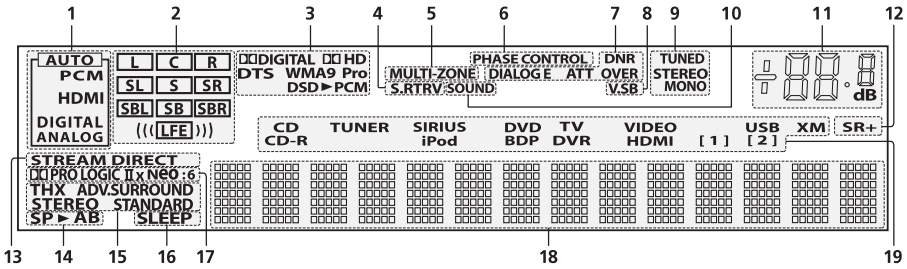


**1 SIGNAL indicators**
Light to indicate the currently selected input signal. **AUTO** lights when the receiver is set to select the input signal automatically.

**2 Program format indicators**
These change according to which channels are active in digital sources.

**L** – Left front channel
**C** – Center channel
**R** – Right front channel
**SL** – Left surround channel
**S** – Surround channel (mono)
**SR** – Right surround channel
**SBL** – Left surround back channel
**SB** – Surround back channel (mono)
**SBR** – Right surround back channel
**LFE** – Low frequency effects channel (the **((( )))** indicators light when an LFE signal is being input)

**3 Digital format indicators**
Light when a signal encoded in the corresponding format is detected (**DSD►PCM** lights during the DSD (Direct Stream Digital) to PCM conversion with SACDs).

**4 S.RTRV**
Lights when the Sound Retriever is switched on.

**5 MULTI-ZONE**
Lights when the MULTI-ZONE feature is active.

**6 PHASE CONTROL**
Lights when the Phase Control is switched on.

**7 Sound processing indicators**
Light according to the active Audio parameter(s) and/or **ANALOG ATT**.

**8 V.SB**
Lights during Virtual surround back processing.

**9 TUNER indicators**
**TUNED** – Lights when a broadcast is being received.

**STEREO** – Lights when a stereo FM broadcast is being received in auto stereo mode.

**MONO** – Lights when the mono mode is set using the **MPX** button.

**10 SOUND**
Lights when any of the Midnight, Loudness or bass/treble controls feature is selected.

**11 Master volume level**

**12 SR+**
Lights when the SR+ mode is switched on.

**13 STREAM DIRECT**
Lights when Direct/Pure Direct is selected.

**14 Speaker indicators**
Indicate the current speaker system, **A** and/or **B**.

**15 Listening mode indicators**
**THX** – Lights when a Home THX mode is selected.

**ADV. SURROUND** – Lights when an Advanced Surround mode has been selected.

**STEREO** – Lights when the stereo mode is selected.

**STANDARD** – Lights when a Standard Surround mode is switched on.

**16 SLEEP**
Lights when the receiver is in sleep mode.

**17 Matrix decoding format indicators**
**PRO LOGIC IIx –** This lights to indicate Pro Logic II / Pro Logic IIx decoding.

**Neo:6** – When one of the Neo:6 modes of the receiver is on, this lights to indicate Neo:6 processing.

**18 Character display**
Displays various system information.

**19 Input source indicators**
Light to indicate the input source you have selected.

## [5] Remote control

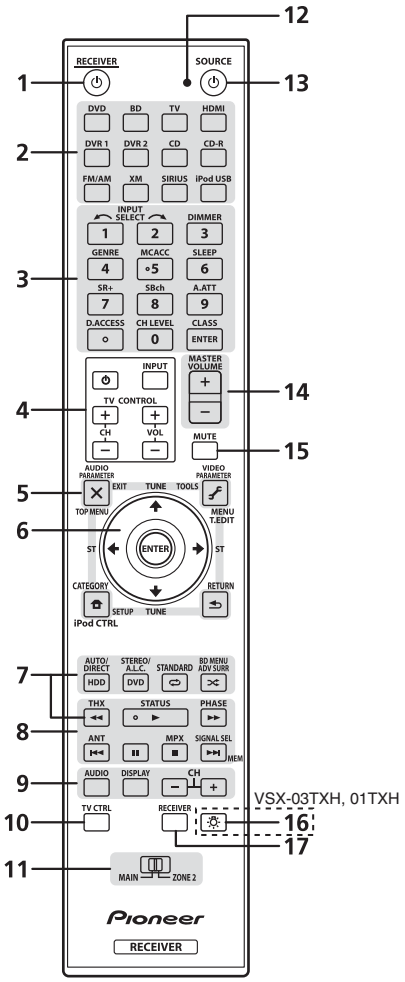


*The remote has been conveniently color-coded according to component control using the following system (press the corresponding input source button to access):*

- **White** – Receiver controls (see below)
- **Blue** – Other controls

**1 RECEIVER⏻**

This switches between standby and on for this receiver.

**2 Input source buttons**

Press to select control of other components.

**3 Number buttons and other receiver/component controls**

Use the number buttons to directly select a radio frequency or the tracks on a CD, DVD, etc.

**ENTER** can be used to enter commands for TV or DTV, and also to select a disc in a multi-CD player.

Press **RECEIVER** first to access:

**INPUT SELECT** – Use to select the input source.

**DIMMER** – Dims or brightens the display.

**GENRE** – Automatically selects the most appropriate Advanced Surround mode for the genre of the source currently being played back (this feature is available only when a Pioneer DVD recorder supporting HDMI Control is connected to this receiver via HDMI).

**MCACC** – Press to switch between MCACC presets.

**SLEEP** – Use to put the receiver in sleep mode and select the amount of time before sleep.

**SR+** – Switches the SR+ mode on/off.

**SBch** – Use to select the surround/virtual back channel mode.

**A.ATT** – Attenuates (lowers) the level of an analog input signal to prevent distortion.

**CH LEVEL** – Press repeatedly to select a channel, then use ⬅/➡ to adjust the level.

Press **FM/AM** first to access:

**D.ACCESS** – After pressing, you can access a radio station directly using the number buttons.

**CLASS** – Switches between the three banks (classes) of radio station presets.

**4 TV CONTROL buttons**

These buttons are dedicated to control the TV assigned to the **TV CTRL** button. Thus if you only have one TV to hook up to this system assign it to the **TV CTRL** input source button. If you have two TVs, assign the main TV to the **TV CTRL** button.

**TV⏻** – Use to turn on/off the power of the TV.

**INPUT** – Use to select the TV input signal.

**CH +/–** – Use to select channels.

**VOL +/–** – Use to adjust the volume on your TV.

**5 Tuner/component control buttons/SETUP**

These button controls can be accessed after you have selected the corresponding input source button (**DVD**, **DVR1**, **TV**, etc.).

Press **RECEIVER** first to access:

**AUDIO PARAMETER** – Use to access the Audio options.

**VIDEO PARAMETER** – Use to access the Video options.

**SETUP** – Use to access the System Setup menu.

**RETURN** – Press to confirm and exit the current menu screen (also use to return to the previous menu with DVDs or to select closed captioning with DTV).

**6 ⬆/⬇/⬅/➡ (TUNE/ST) /ENTER**
Use the arrow buttons when setting up your surround sound system and the Audio or Video options.
Also used to control DVD menus/options
and for deck 1 of a double cassette deck player. Use the **TUNE** ⬆/⬇ buttons to find radio frequencies and use **ST** ⬅/➡ to find preset stations.

**7 Receiver controls**
Press **RECEIVER** first to access:

**AUTO/DIRECT** – Press to select Auto Surround or Stream Direct listening.

**STEREO/A.L.C.** – Switches between the stereo playback mode and the Front Stage Surround Advance mode.

**STANDARD** – Press for Standard decoding and to switch between the various DD Pro Logic IIx and Neo:6 options.

**ADV SURR** – Use to switch among the various surround modes.

**THX** – Press to select a Home THX listening mode.

**8 Component control buttons**
The main buttons (▶, ■, etc.) are used to control a component after you have selected it using the input source buttons.

The controls above these buttons can be accessed after you have selected the corresponding input source button (for example **DVD**, **DVR1** or **TV**). These buttons also function as described below.

Press **RECEIVER** first to access:

**STATUS** – Press to check selected receiver settings.

**PHASE** – Press to switch on/off Phase Control.

**SIGNAL SEL** – Use to select an input signal.

Press **TV** first to access:

**ANT** – Use to select the VHF/UHF antennas or Cable TV.

Press **FM/AM** first to access:

**MPX** – Switches between stereo and mono reception of FM broadcasts. If the signal is weak then switching to mono will improve the sound quality.

**9 AUDIO** – Changes the audio or channel on DVD discs.
**DISPLAY** – Switches between named station presets and radio frequencies.

**CH +/–** – Use to select channels for DVR units.

**10 TV CTRL**
Use this button to set preset code of your TV's manufacturer when controlling TV.

**11 MULTI-ZONE operation selector switch**
Switch to perform operations in the main zone and zone 2.

**12 Remote control LED**
Lights when a command is sent from the remote control.

**13 SOURCE⏻**
Press to turn on/off other components connected to the receiver.

**14 MASTER VOLUME +/–**
Use to set the listening volume.

**15 MUTE**
Mutes the sound or restores the sound if it has been muted (adjusting the volume also restores the sound).

**16 Remote control illumination button (03TXH, 01TXH)**
Press to turn on/off the illumination of some of the buttons. This function is convenient when operating in dark rooms.

**17 RECEIVER**
Switches the remote to control the receiver (used to select the white commands above the number buttons (**A.ATT**, etc.)). Also use this button to set up surround sound.

## [6] Sub remote control unit (VSX-03TXH only)

The second remote control supplied with this receiver is for use with the MULTI-ZONE listening feature, as explained on page 62. Note that you must connect a separate IR receiver as explained in *Connecting an IR receiver* on page 64 for remote control in your sub room.

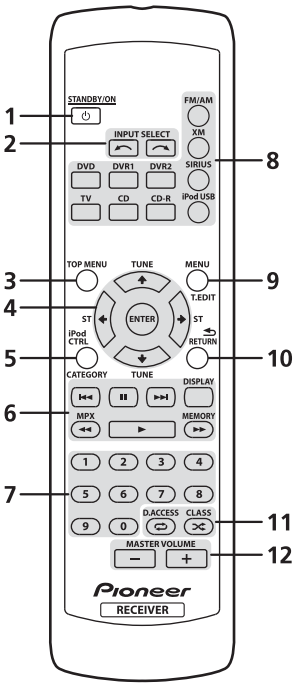


**1 STANDBY/ON⏻**
This switches between standby and on for this receiver.

**2 INPUT SELECT**
Use to select the input source.

**3 TOP MENU**
Displays the top menu of an iPod, XM and SIRIUS Radio.

**4 ⬆/⬇/⬅/➡ (TUNE/ST) /ENTER**
Use the arrow buttons when setting up your surround sound system and the Audio and Video options.
Also used to control iPod, XM and SIRIUS Radio menus.
Use the **TUNE** ⬆/⬇ buttons to find radio frequencies and use **ST** ⬅/➡ to find preset stations.

**5 iPod CTRL/CATEGORY**
Press **iPod USB** first to access:

**iPod CTRL** – Switches between the iPod controls and the receiver controls.

Press **XM** or **SIRIUS** first to access:

**CATEGORY** – Selects XM or SIRIUS Radio genre search.

**6 Component control buttons** – These are available for **FM/AM**, **XM**, **SIRIUS** and **iPod USB** and used to control a component after you have selected it using the input source buttons.
**DISPLAY** – Switches between named station presets and radio frequencies.

Press **FM/AM** first to access:

**MPX** – Switches between stereo and mono reception of FM broadcasts. If the signal is weak then switching to mono will improve the sound quality.

Press **XM** or **SIRIUS** first to access:

**MEMORY** – Use to register a song title you are currently listening to.

**7 Number buttons**
These are available for **FM/AM**, **XM**, **SIRIUS** and **iPod USB** and used to directly select a radio frequency or the tracks.

**8 Input source buttons**
Press to select control of other components.

**9 MENU**
Displays the disc menu of DVD-Video discs.

Press **FM/AM**, **XM** or **SIRIUS** first to access:

**T.EDIT** – Use with ⬅/➡ to memorize and name stations for recall.

**10 RETURN**
Press to confirm and exit the current menu screen.

**11 D.ACCESS/CLASS**
Press **FM/AM**, **XM** or **SIRIUS** first to access:

**D.ACCESS** – After pressing, you can access a radio station directly using the number buttons.

**CLASS** – Switches between the three banks (classes) of radio station presets.

Press **iPod USB** first to access:

🔁 – Selects the repeat mode of an iPod.

🔀 – Selects the shuffle mode of an iPod.

**12 MASTER VOLUME +/–**
Use to set the listening volume.

# 3. BASIC ITEMS FOR SERVICE
## 3.1 CHECK POINTS AFTER SERVICING

To keep the product quality after servicing, confirm recommended check points shown below.

| No. | Procedure | Check points |
|---|---|---|
| 1 | Confirm whether the customer complain has been solved. If the customer complain occurs with the particular source, such as Dolby Digital, DTS, AAC, DVD-A and HDMI, input it for the operation check. | The customer complain must not be reappeared. Video, Audio and operations must be normal. |
| 2 | Check the analog audio playback. (Make the analog connections with a DVD player.) | Each channel audio and operations must be normal. |
| 3 | Check the digital audio playback. (Make the digital connections with a DVD player.) | Each channel audio and operations must be normal. |
| 4 | Check surround playback. (Select Surround mode and check the multichannel operations via the DSP circuit.) | Each channel audio and operations must be normal. |
| 5 | Check the video outputs. (Connect with a DVD player.) | Video and operations must be normal. |
| 6 | Check the sound from headphone output. | Sound must be normal, without noise. |
| 7 | Check the appearance of the product. | No scratches or dirt on its appearance after receiving it for service. |

See the table below for the items to be checked regarding video and audio:

| Items to be checked regarding video | Item to be checked regarding audio |
|---|---|
| Block noise | Distortion |
| Horizontal noise | Noise |
| Dot noise | Volume too low |
| Disturbed image (video jumpiness) | Volume too high |
| Too dark | Volume fluctuating |
| Too bright | Sound interrupted |
| Mottled color | |

# 3.2 PCB LOCATIONS

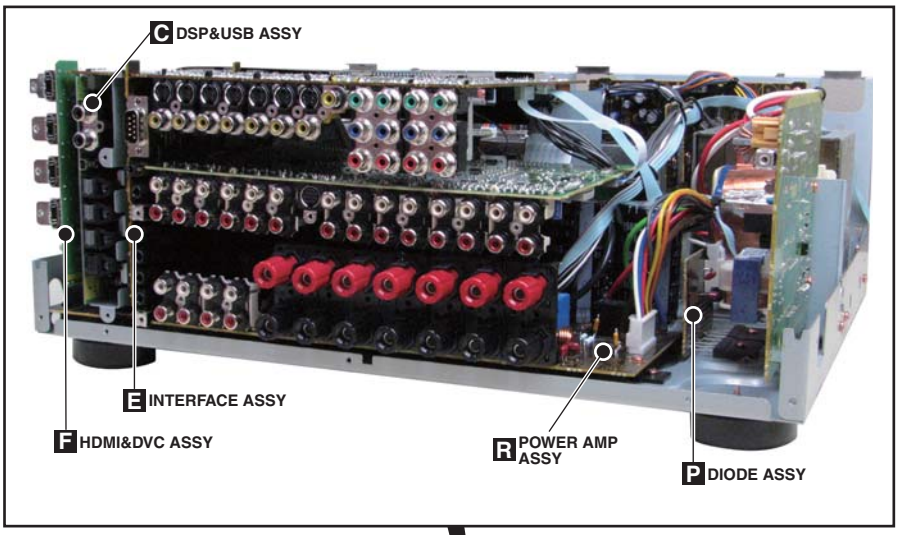


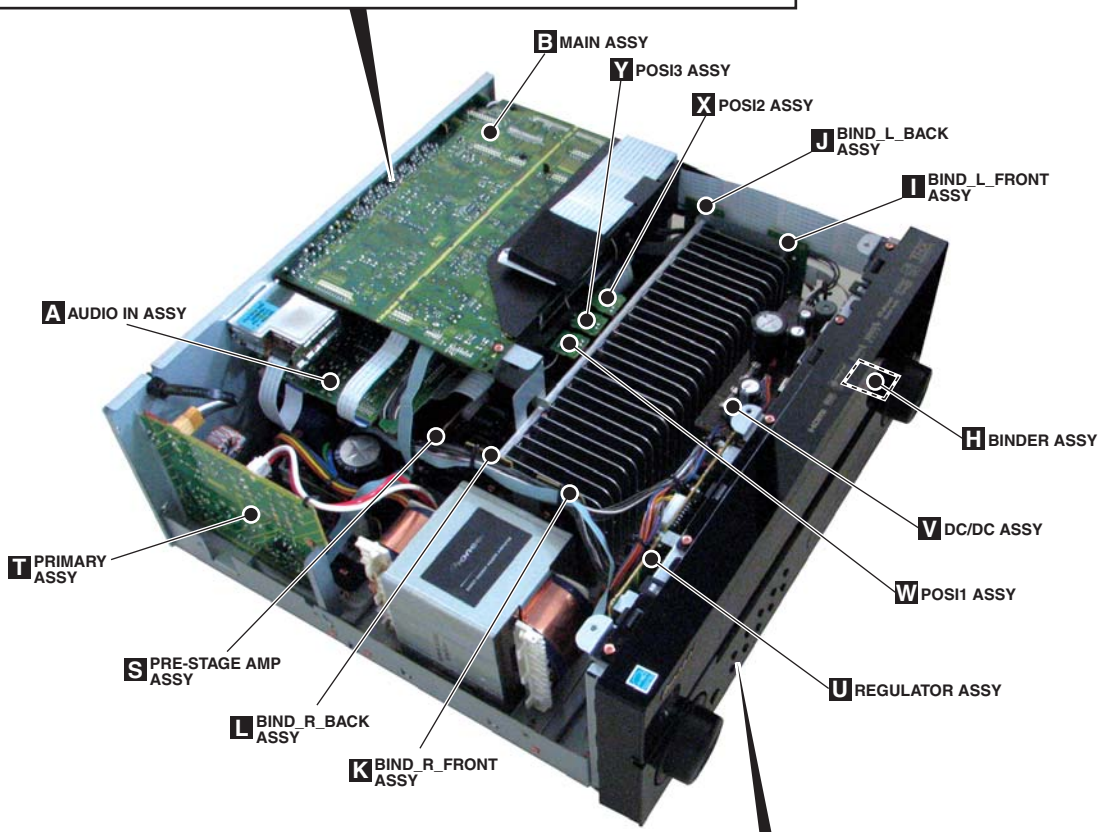


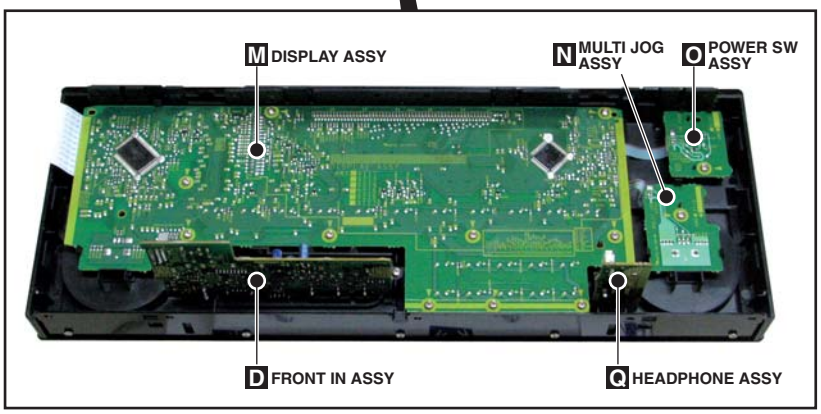

*NOTES:* ● *Parts marked by "NSP" are generally unavailable because they are not in our Master Spare Parts List.*
● *The ⚠ mark found on some component parts indicates the importance of the safety factor of the part. Therefore, when replacing, be sure to use parts of identical designation.*

◆ LIST OF ASSEMBLIES

| Mark | Symbol and Description | VSX-03TXH /KUXJ/CA | VSX-9130TXH-K /KUXJ | VSX-01TXH /KUXJ/CA | VSX-1018AH-K /KUXJ |
|---|---|---|---|---|---|
| | 1..MAIN ASSY | AWK8052 | AWK8069 | AWK8056 | AWK8057 |
| | | | | | |
| | 1..AUDIO IN ASSY | AWK8050 | AWK8050 | AWK8050 | AWK8050 |
| | | | | | |
| NSP | 1..COMPLEX ASSY | AWK8046 | AWK8067 | AWK8046 | AWK8067 |
| | 2..DISPLAY ASSY | AWX9117 | AWX9216 | AWX9117 | AWX9216 |
| | 2..POWER SW ASSY | AWX9118 | AWX9118 | AWX9118 | AWX9118 |
| | 2..MULTI JOG ASSY | AWX9119 | AWX9119 | AWX9119 | AWX9119 |
| | 2..BINDER ASSY | AWX9120 | AWX9120 | AWX9120 | AWX9120 |
| | 2..FRONT IN ASSY | AWX9121 | AWX9121 | AWX9121 | AWX9121 |
| | 2..HP ASSY | AWX9122 | AWX9122 | AWX9122 | AWX9122 |
| | 2..PRIMARY ASSY | AWX9123 | AWX9123 | AWX9123 | AWX9123 |
| | | | | | |
| NSP | 1..LOCAL POWER ASSY | AWK8041 | AWK8041 | AWK8041 | AWK8043 |
| | 2..DIODE ASSY | AWX8985 | AWX8985 | AWX8985 | AWX8985 |
| | 2..REGULATOR ASSY | AWX8986 | AWX8986 | AWX8986 | AWX8986 |
| | 2..DC/DC ASSY | AWX8988 | AWX8988 | AWX8988 | AWX8988 |
| | 2..PRE-STAGE AMP | AWX8989 | AWX8989 | AWX8989 | AWX8989 |
| | 2..INTERFACE ASSY | AWX8990 | AWX8990 | AWX8990 | AWX8993 |
| | | | | | |
| NSP | 1..AMP ASSY | AWK8037 | AWK8037 | AWK8037 | AWK8037 |
| | 2..POWER AMP ASSY | AWX8983 | AWX8983 | AWX8983 | AWX8983 |
| | 2..POSI1 ASSY | AWX9132 | AWX9132 | AWX9132 | AWX9132 |
| | 2..POSI2 ASSY | AWX9133 | AWX9133 | AWX9133 | AWX9133 |
| | 2..BIND_L_FRONT ASSY | AWX9217 | AWX9217 | AWX9217 | AWX9217 |
| | 2..BIND_L_BACK ASSY | AWX9218 | AWX9218 | AWX9218 | AWX9218 |
| | 2..BIND_R_FRONT ASSY | AWX9219 | AWX9219 | AWX9219 | AWX9219 |
| | 2..BIND_R_BACK ASSY | AWX9220 | AWX9220 | AWX9220 | AWX9220 |
| | 2..POSI3 ASSY | AWX9223 | AWX9223 | AWX9223 | AWX9223 |
| | | | | | |
| | 1..HDMI&DVC ASSY | AWX9170 | AWX9170 | AWX9233 | AWX9233 |
| | | | | | |
| | 1..DSP&USB ASSY | AWX9175 | AWX9175 | AWX9239 | AWX9239 |
| | | | | | |
| | 1..FM/AM TUNER UNIT | AXX7250 | AXX7250 | AXX7250 | AXX7250 |

# 3.3 JIGS LIST

## [1] Jigs list

| Name | Jig No. | Remarks |
|---|---|---|
| 11P board to board extension jig cable | GGD1576 | Diagonosis |
| 19P board to board extension jig cable | GGD1577 | Diagonosis |
| 30P board to board extension jig cable | GGD1492 | Diagonosis |
| 11P FFC | GGD1578 | Diagonosis |
| RS-232C I/F jig | GGF1348 | Update the Flash ROMS |
| 7-pin FFC | VDA1681 | Update the Flash ROMS |

# 4. BLOCK DIAGRAM
## 4.1 OVERALL WIRING DIAGRAM

The ⚠ mark found on some component parts indicates the importance of the safety factor of the part. Therefore, when replacing, be sure to use parts of identical designation.

⚠ *1 *2

| | T1501 | AC CORD |
|---|---|---|
| KU | ATT7418 | VDG1075 |

*3 ⚠

| | FU1 | FU2,3 | FU4 | FU5 | FU6,7 | FU8,9 |
|---|---|---|---|---|---|---|
| KU | REK1154 (10A/125V) | - | REK1150 (5A/125V) | REK1155 (3.5A/125V) | REK1143 (1.25A/125V) | REK1146 (2.5A/125V) |

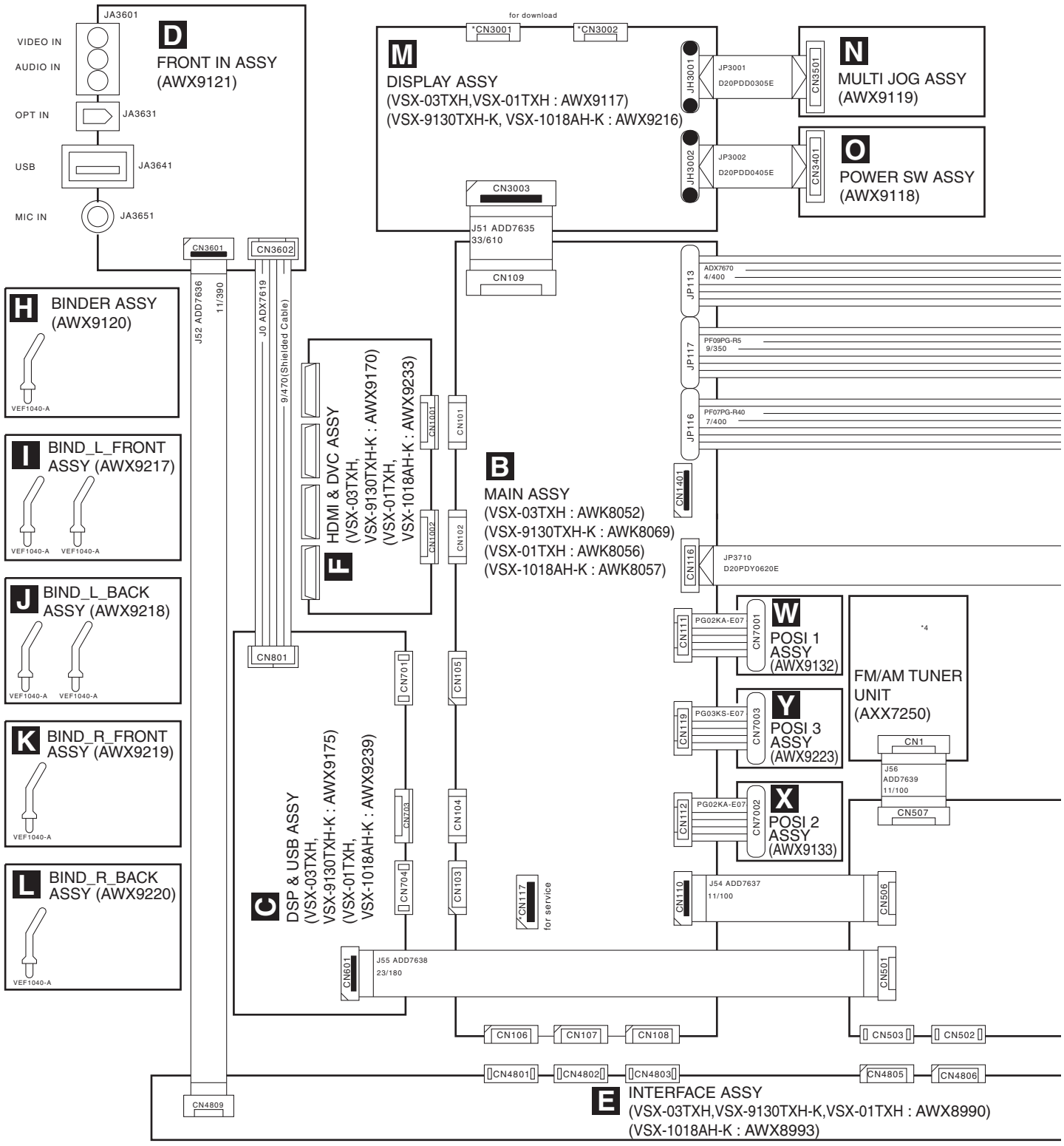


| | | | | | | | |
|---|---|---|---|---|---|---|---|
| CN** | CABLE WIRE | | BOARD IN WIRE | JH**** | 2.0mm CABLE HOLDER | CN**** | B*B-EH EH CONNECTOR | CN**** | XKP**** 1.25mm B to B |
| J** | 1.25mm FFC | CN**** | 1.25mm FFC CONNECTOR(L) (*1.00mm FFC CONNECTOR) | CN**** | 2.0mm WIRE TRAP | CN**** | ANOTHER TYPE CODE SOCKET | CN**** | TUC-P**X-B1 2.0mm B to B SOCKET |
| JP**** | 2.0mm FLAT CABLE | CN**** | 1.25mm FFC CONNECTOR(I) (*1.00mm FFC CONNECTOR) | CN**** | KM200NA* | CN**** | XKM**** 1.25mm B to B | CN**** | TUC-P**P-B1 2.0mm B to B CONNECTOR |

| | *4 TUNER MODULE | J56 | *5 FAN | *6 D-TERMINAL | J59 |
|---|---|---|---|---|---|
| KU | AXX7250 | ADD7637 | - | - | - |

When ordering service parts, be sure to refer to "EXPLODED VIEWS and PARTS LIST" or "PCB PARTS LIST".
The ⚠ mark found on some component parts indicates the importance of the safety factor of the part. Therefore, when replacing, be sure to use parts of identical designation.
: The power supply is shown with the marked box.

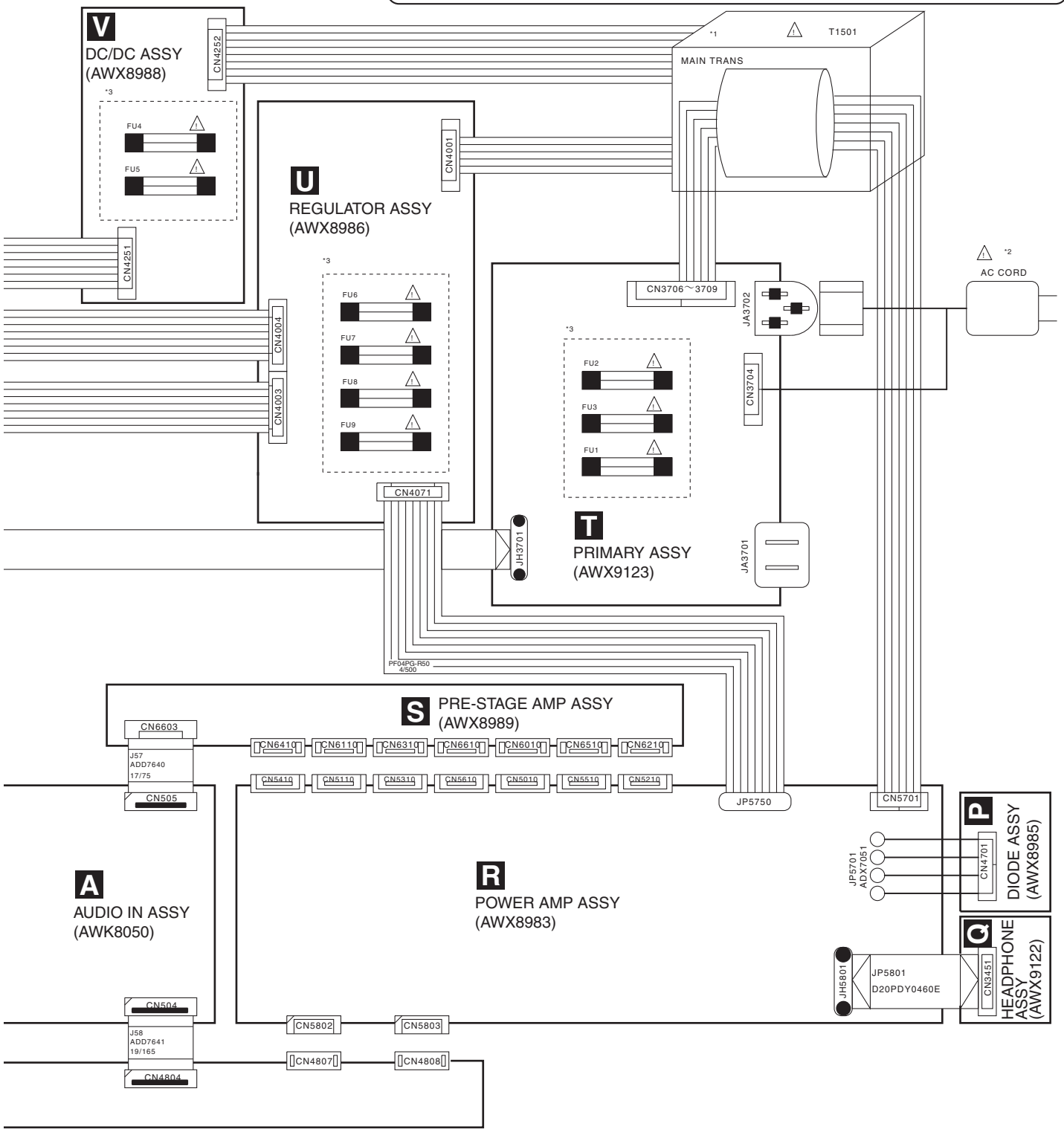

# 4.2 BLOCK DIAGRAM FOR AUDIO BLOCK

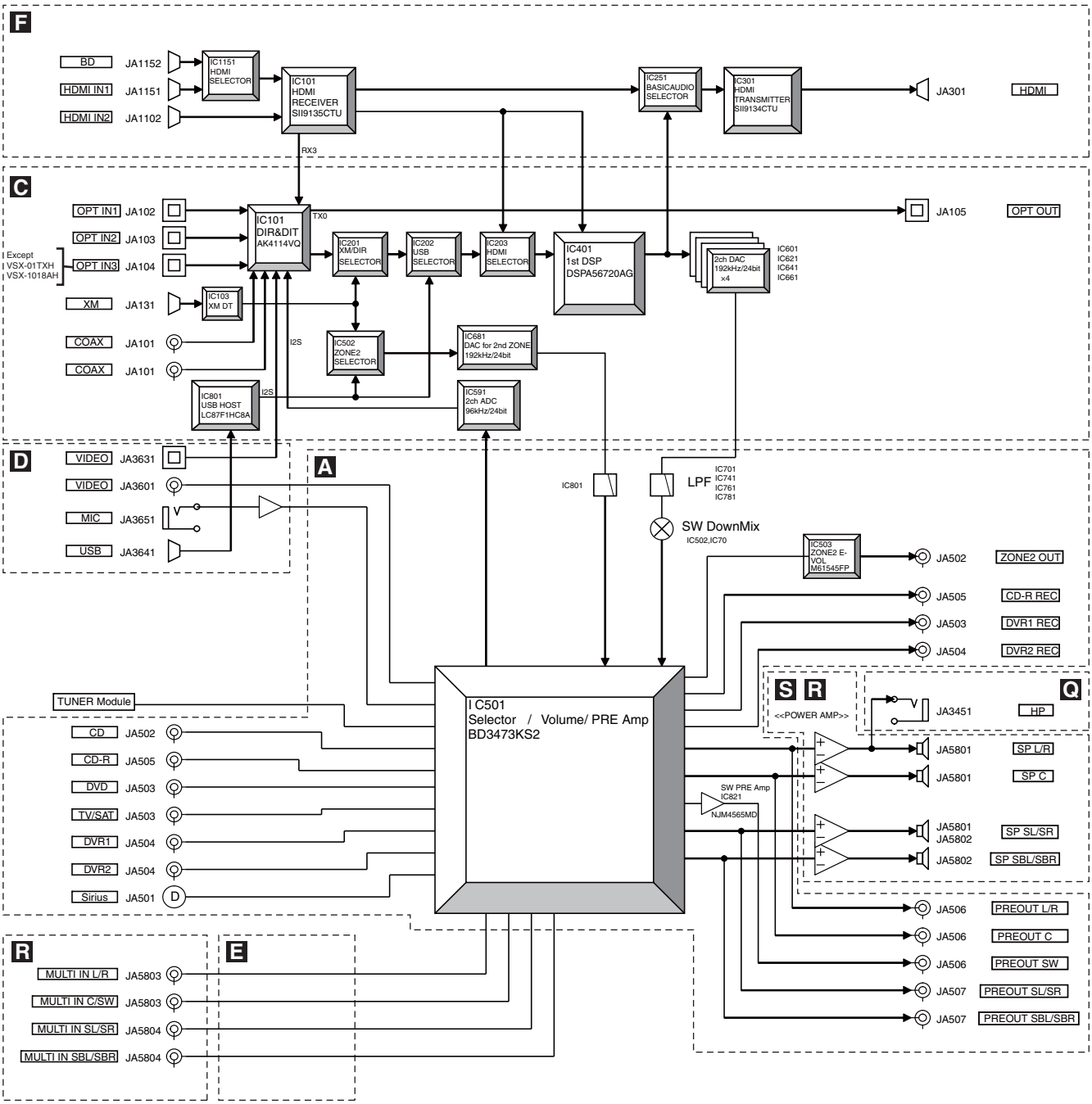

# 4.3 BLOCK DIAGRAM FOR VIDEO BLOCK

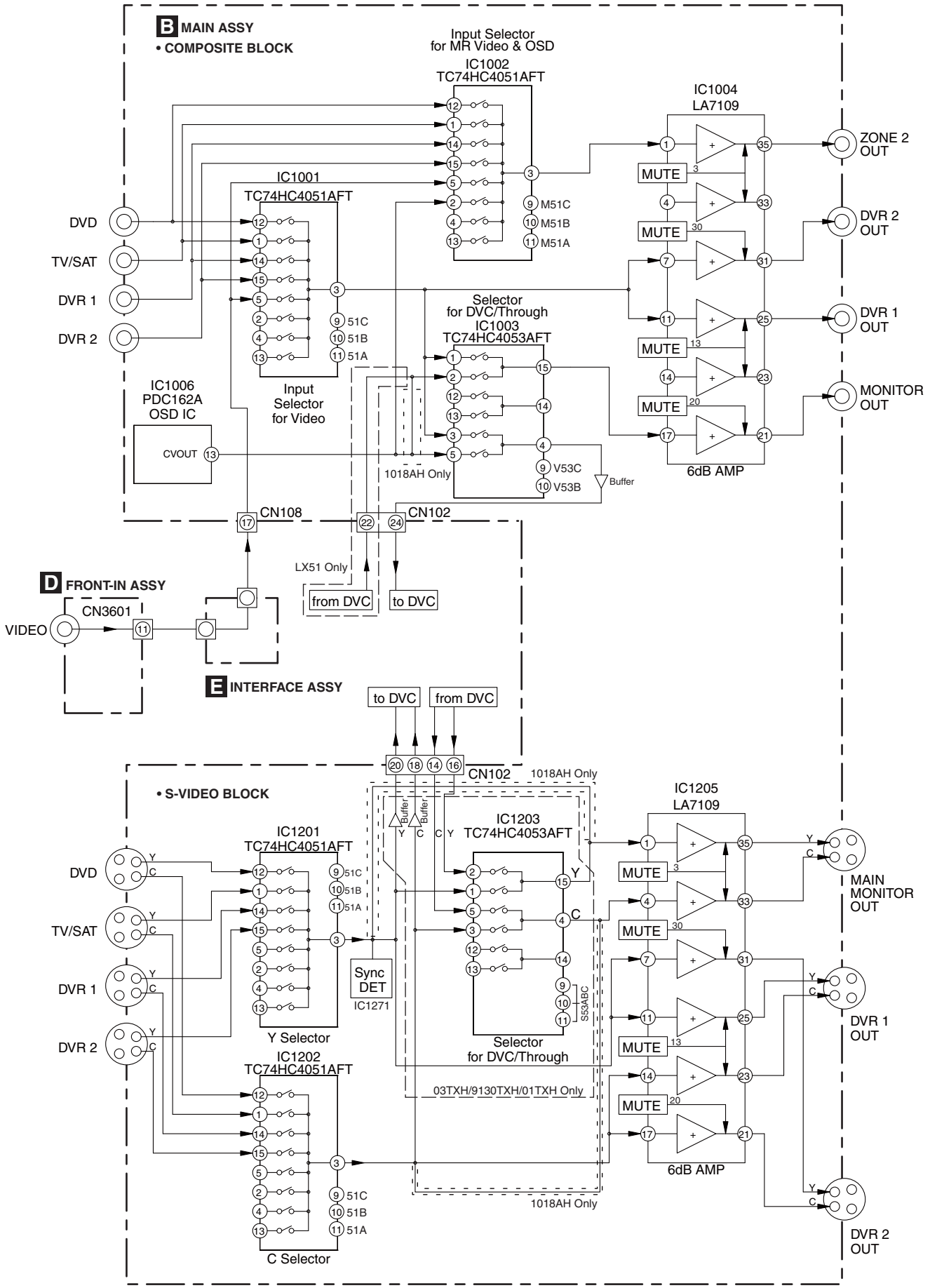

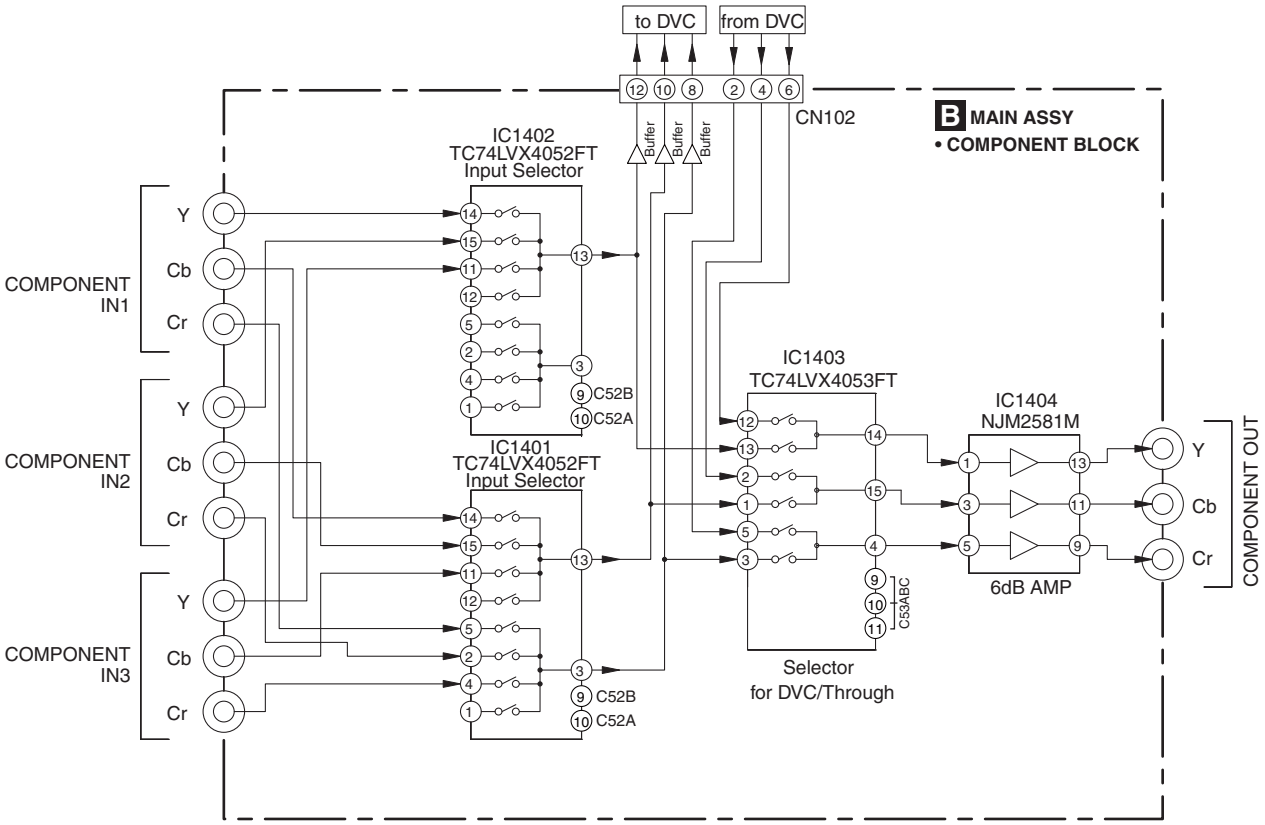
to DVC
from DVC
CN102
B MAIN ASSY
• COMPONENT BLOCK
Buffer
Buffer
Buffer
IC1402
TC74LVX4052FT
Input Selector
IC1401
TC74LVX4052FT
Input Selector
IC1403
TC74LVX4053FT
IC1404
NJM2581M
6dB AMP
C52B
C52A
C53ABC
Selector
for DVC/Through
COMPONENT
IN1
COMPONENT
IN2
COMPONENT
IN3
Y
Cb
Cr
COMPONENT OUT

# 4.4 BLOCK DIAGRAM FOR HDMI & DVC

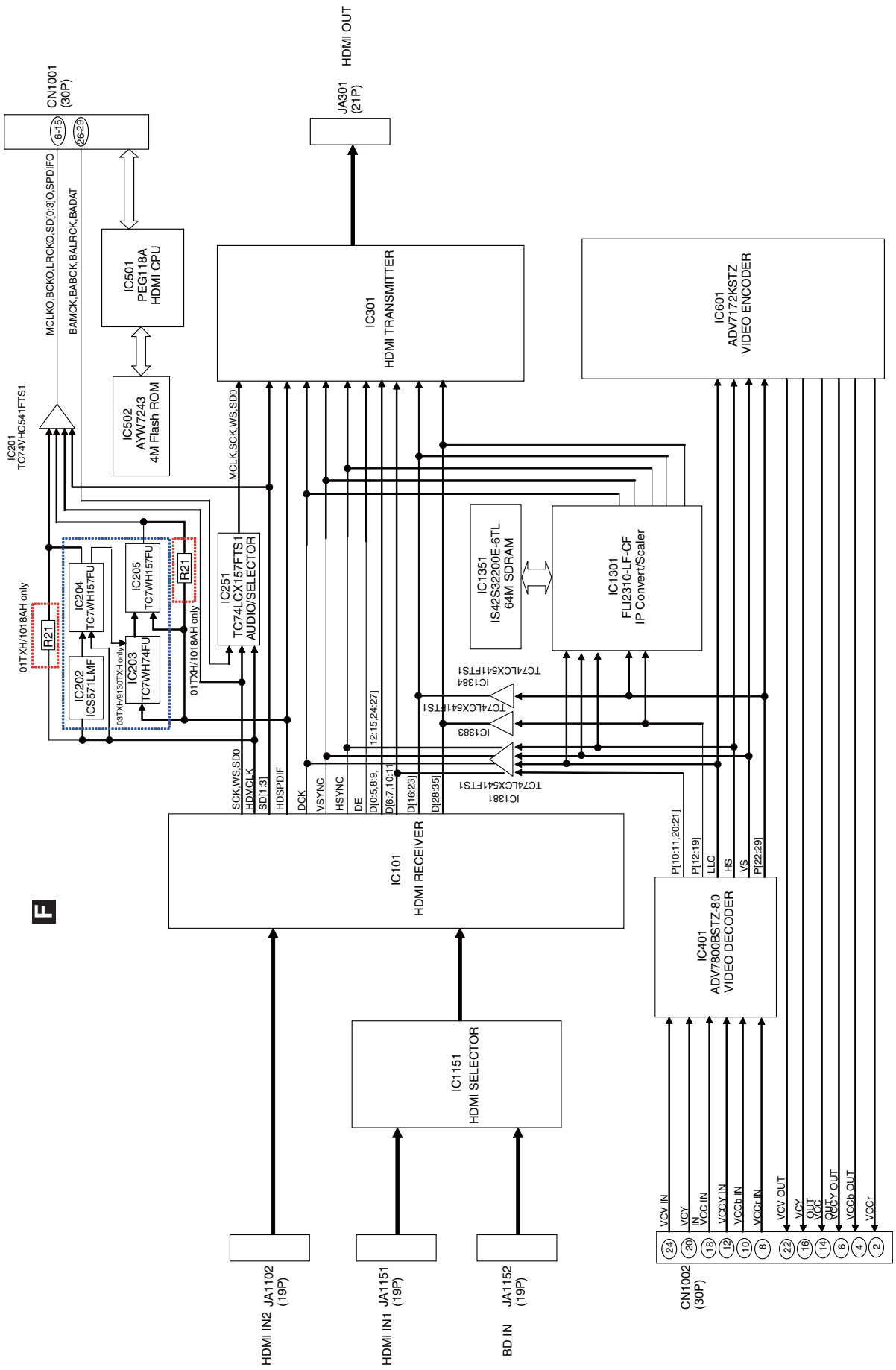

# 4.5 BLOCK DIAGRAM FOR USB BLOCK

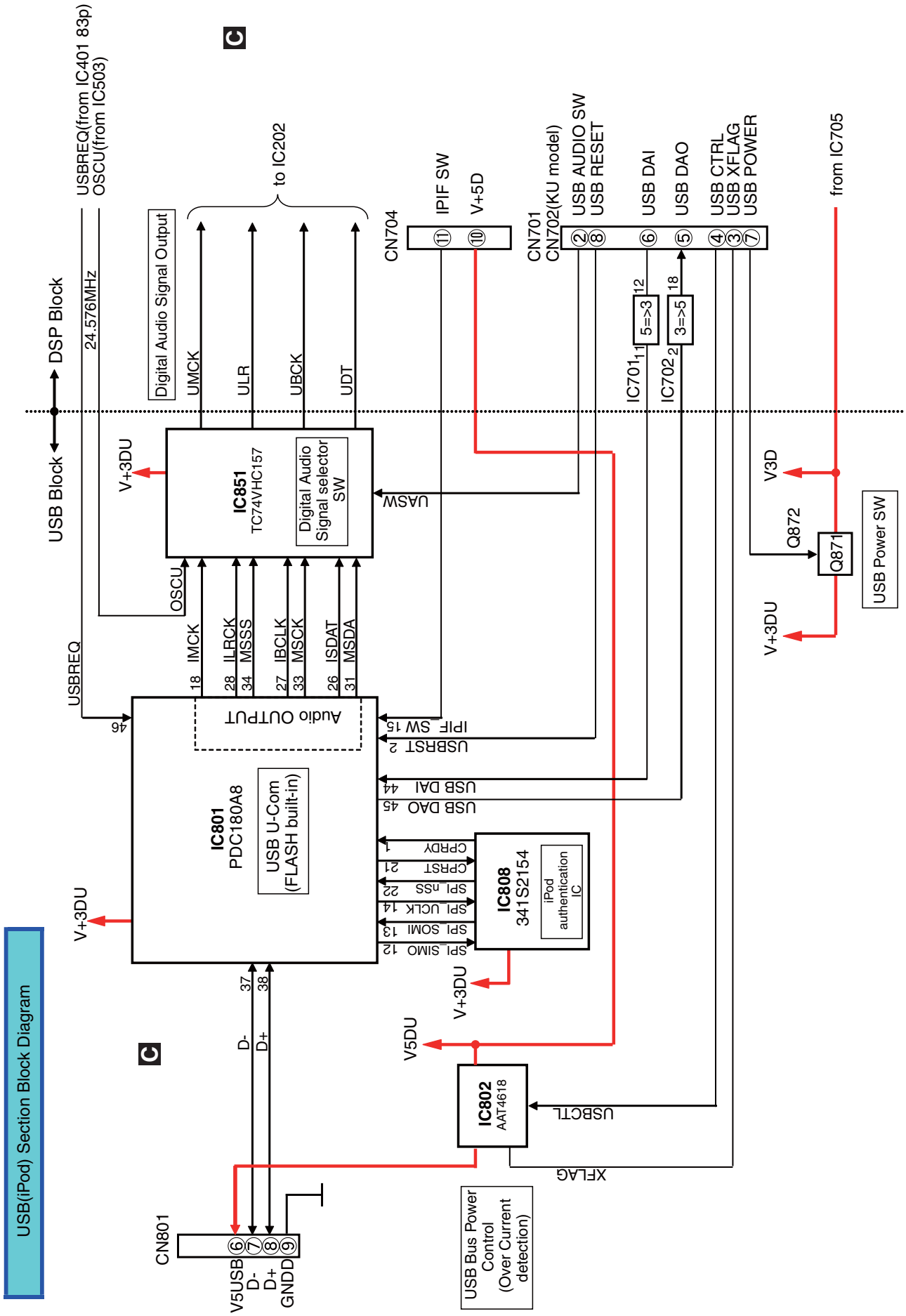

## 4.6 BLOCK DIAGRAM FOR U-COM BLOCK

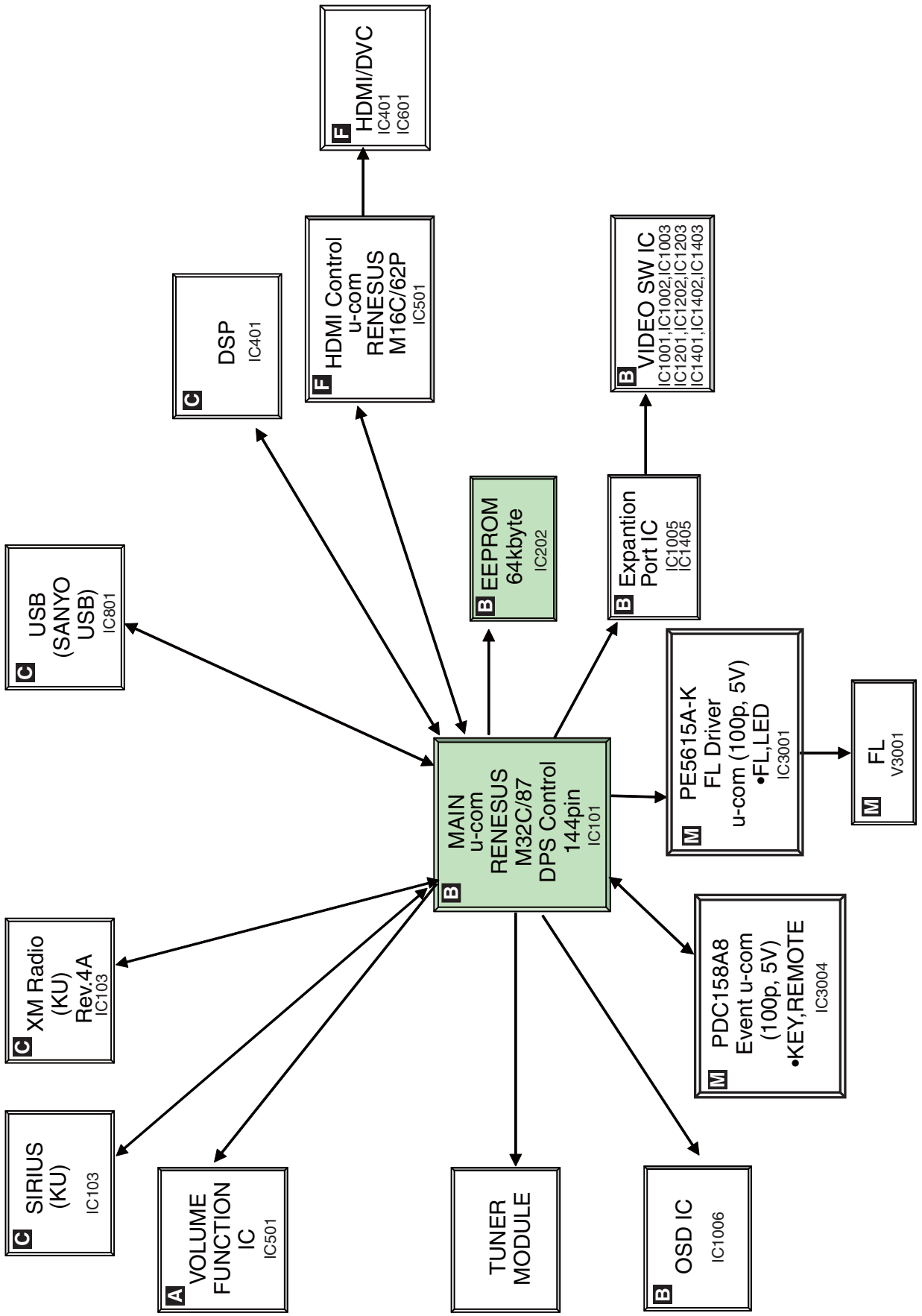

# 4.7 BLOCK DIAGRAM FOR POWER SUPPLY BLOCK

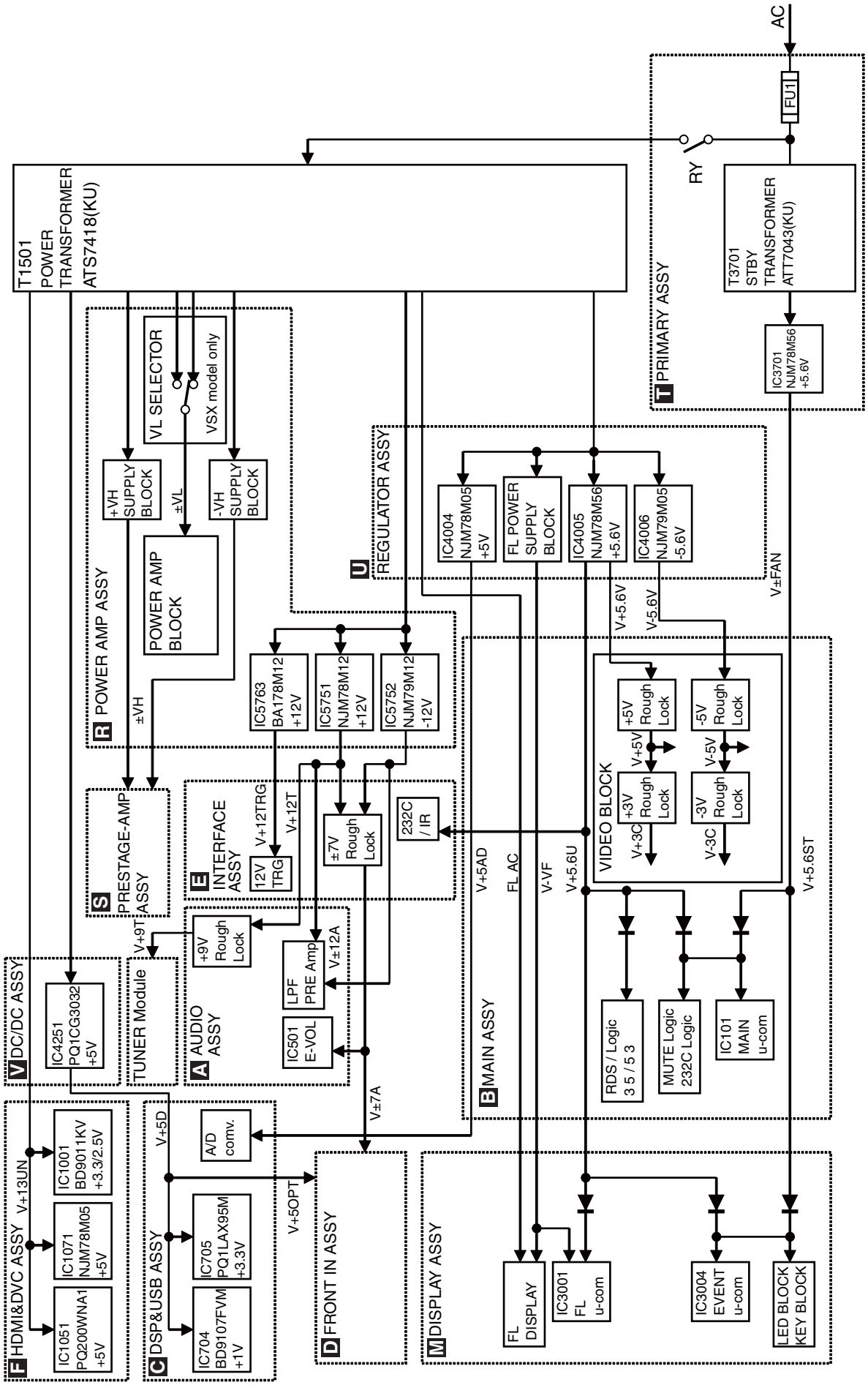

# 5. DIAGNOSIS
## 5.1 DIAGNOSIS FLOWCHART

### ■ Simplified diagnosis

Errors in DSP Assembly (Areas simply and roughly predictable by machine operation only)

- Sound abnormality in Delay
  If sound abnormality does not occur in the Delay OFF state but occurs in the Delay ON state, it is most likely that a failure has occurred in SDRAM (IC301) or LATCH (IC303, IC304) in the 1st DSP Block.
- No sound at analog signal input
  If sound abnormality does not occur with a digital signal input (COAX, OPT) but occurs only with an analog signal input, it is most likely that a failure has occurred in the AD converter (IC591).

### [1] DSP Troubleshooting

#### Step 0: Preliminary confirmation

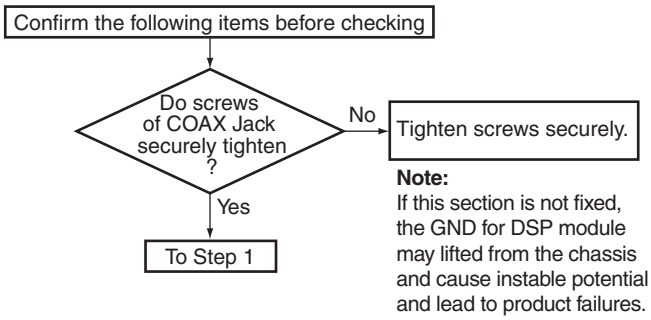


#### Step 1: MUTE pin

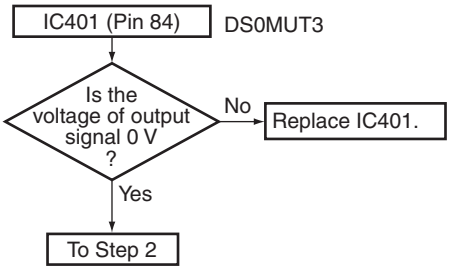


#### Step 2: BtoB connector and FFC

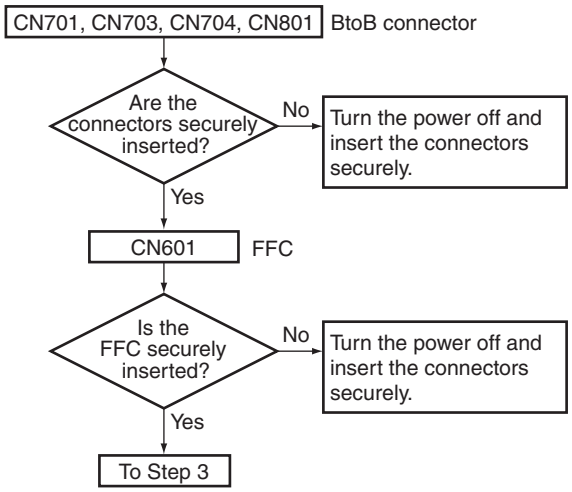


#### Step 3: Regulator IC

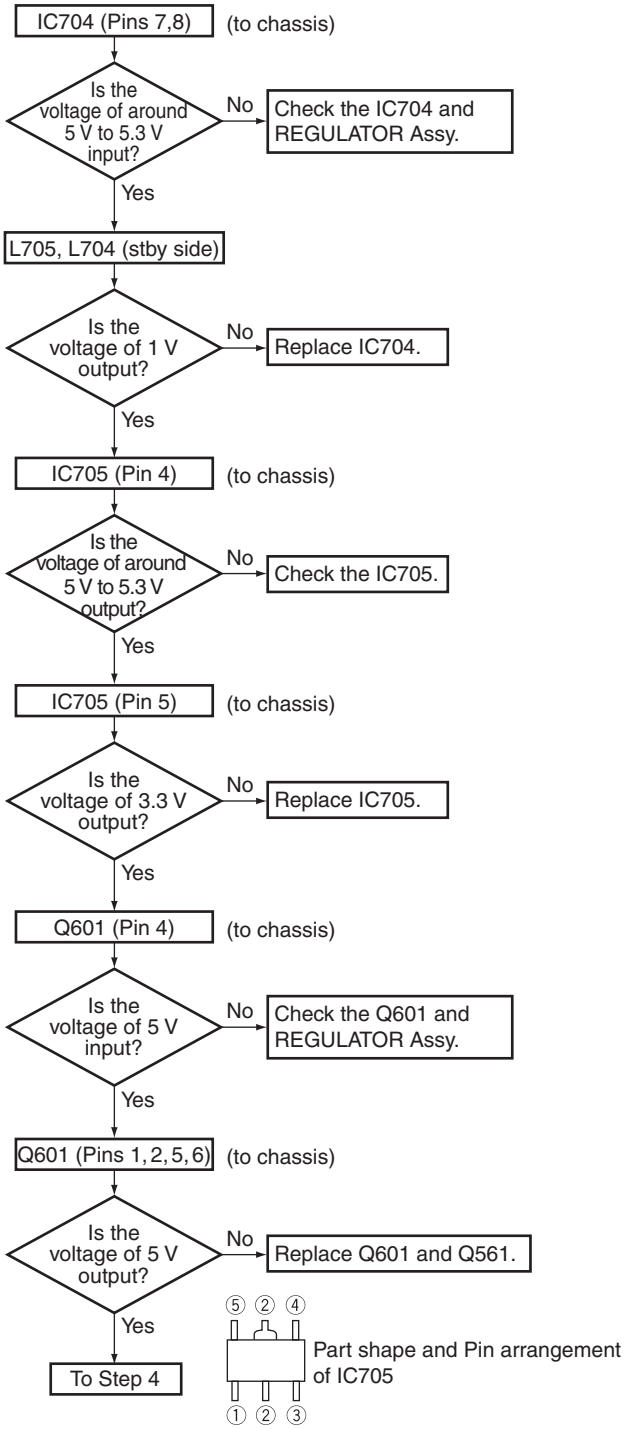

## Step 4: 3 V to 5 V conversion

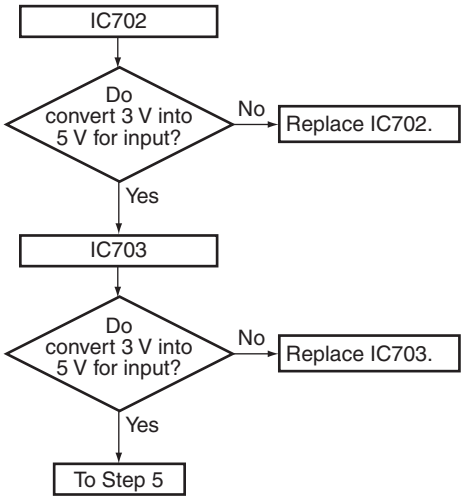


## Step 5: 5 V to 3 V conversion

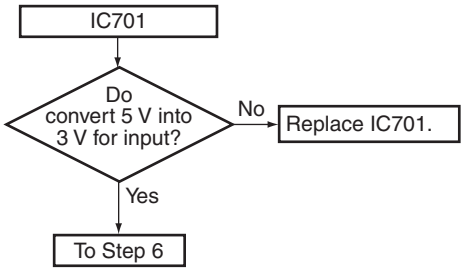


## Step 6: X'tal

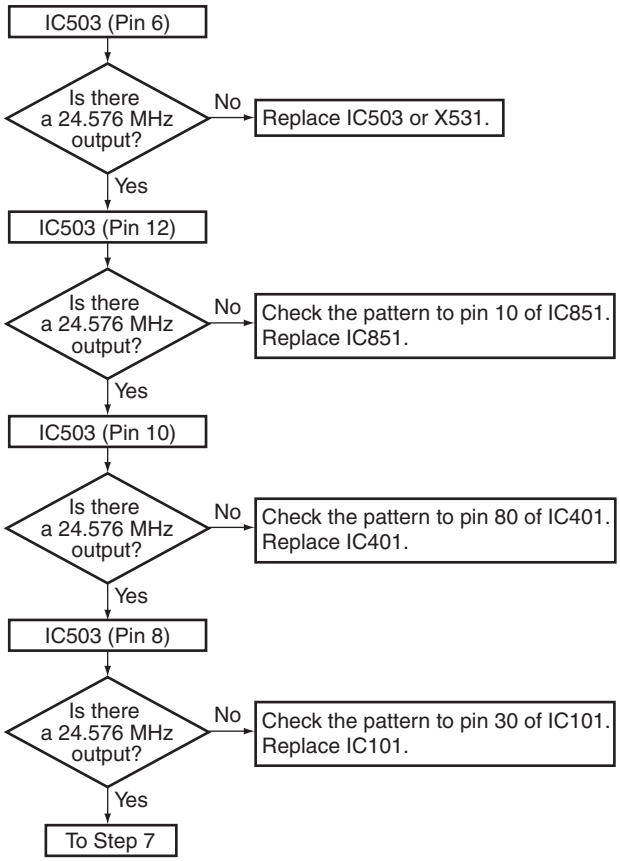


## Step 7

When the COAX or OPT is input, go to Step 7-1.
When the USB is input, go to Step 7-2.
When the HDMI (SPDIF line) is input, go to Step 7-1.
Used Source
[dts HD High Resolution Audio], [dts HD LBR],
[Dolby Digital Plus], [2ch of 48kHz sampling rate or less],
[Other compression stream]
When the HDMI (I2S line) is input, go to Step 7-3.
Used Source
[dts HD Master Audio], [Dolby True HD],
[PCM or LPCM of 88.2kHz sampling rate or more],
[LPCM Multi ch]
When the HDMI (SACD) is input, go to Step 7-5.
Used Source [SACD]

## Step 7-1-1: DIR

Check that the S/PDIF signal is output.
Check that changes by pulling out and inserting the digital input lines.

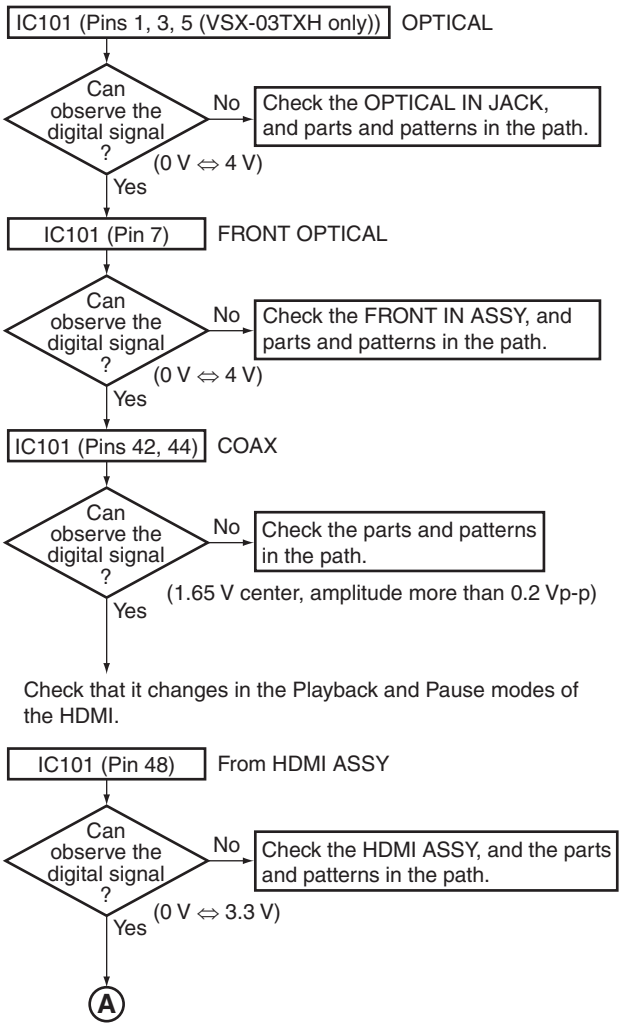

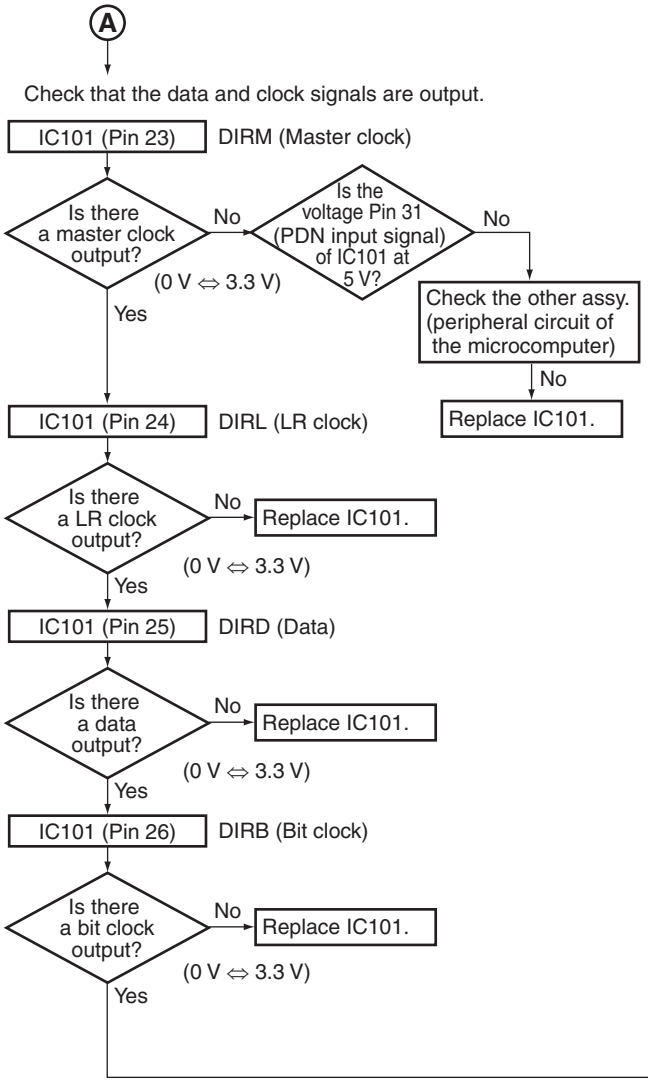
A
Check that the data and clock signals are output.
IC101 (Pin 23)
DIRM (Master clock)
Is there a master clock output?
(0 V ⇔ 3.3 V)
No
Is the voltage Pin 31 (PDN input signal) of IC101 at 5 V?
No
Check the other assy. (peripheral circuit of the microcomputer)
No
Replace IC101.
Yes
IC101 (Pin 24)
DIRL (LR clock)
Is there a LR clock output?
(0 V ⇔ 3.3 V)
No
Replace IC101.
Yes
IC101 (Pin 25)
DIRD (Data)
Is there a data output?
(0 V ⇔ 3.3 V)
No
Replace IC101.
Yes
IC101 (Pin 26)
DIRB (Bit clock)
Is there a bit clock output?
(0 V ⇔ 3.3 V)
No
Replace IC101.
Yes

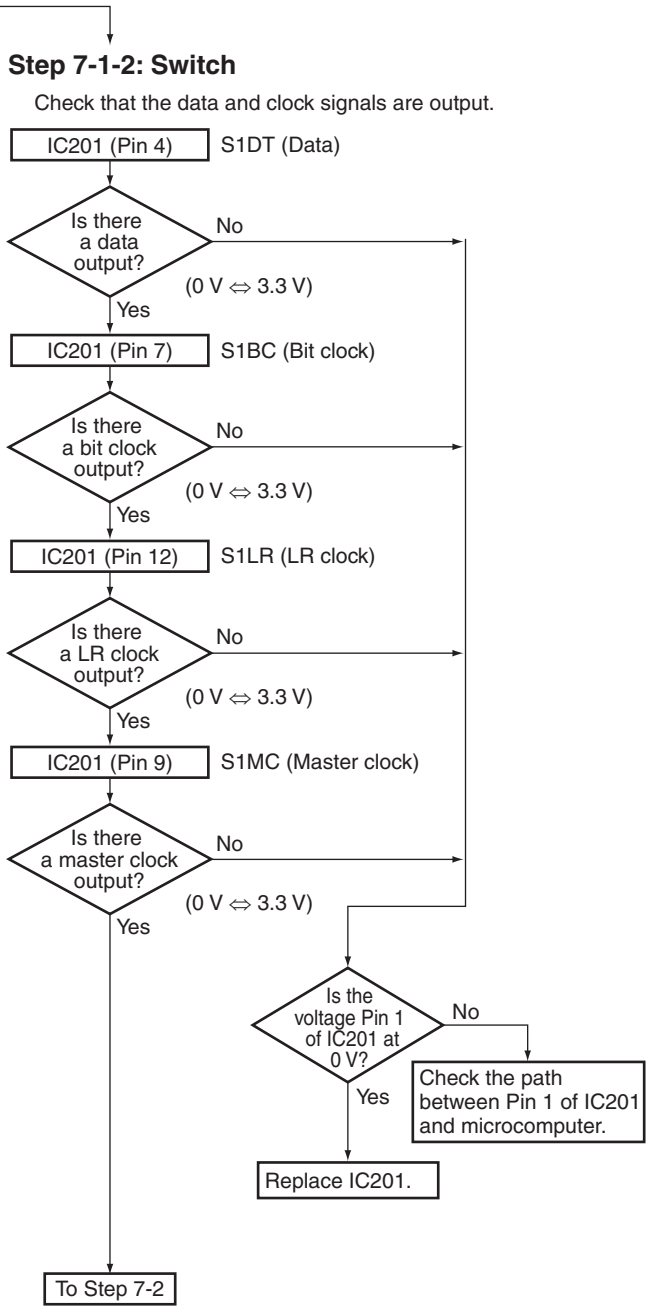
Step 7-1-2: Switch
Check that the data and clock signals are output.
IC201 (Pin 4)
S1DT (Data)
Is there a data output?
(0 V ⇔ 3.3 V)
No
Yes
IC201 (Pin 7)
S1BC (Bit clock)
Is there a bit clock output?
(0 V ⇔ 3.3 V)
No
Yes
IC201 (Pin 12)
S1LR (LR clock)
Is there a LR clock output?
(0 V ⇔ 3.3 V)
No
Yes
IC201 (Pin 9)
S1MC (Master clock)
Is there a master clock output?
(0 V ⇔ 3.3 V)
No
Yes
Is the voltage Pin 1 of IC201 at 0 V?
No
Check the path between Pin 1 of IC201 and microcomputer.
Yes
Replace IC201.
To Step 7-2

## Step 7-2: Switch

Check that the data and clock signals are output.

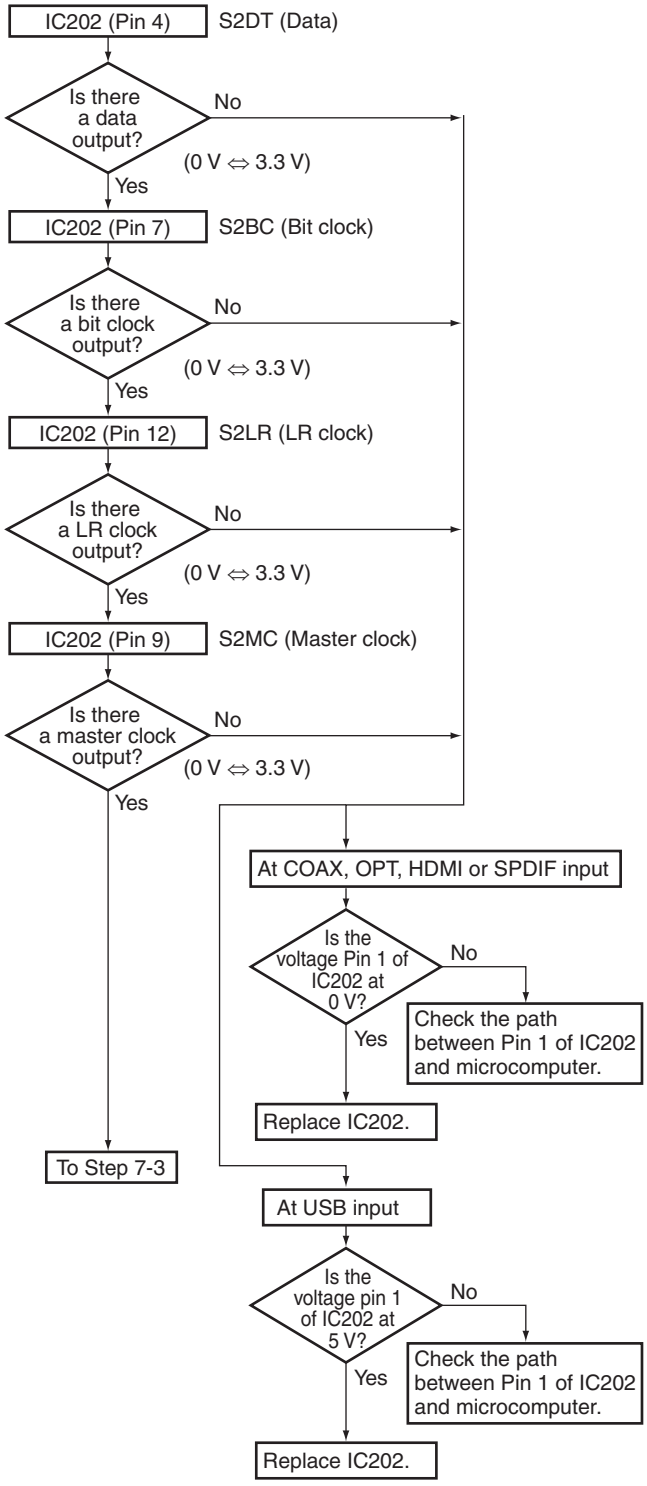


## Step 7-3: Switch

Check that the data and clock signals are output.

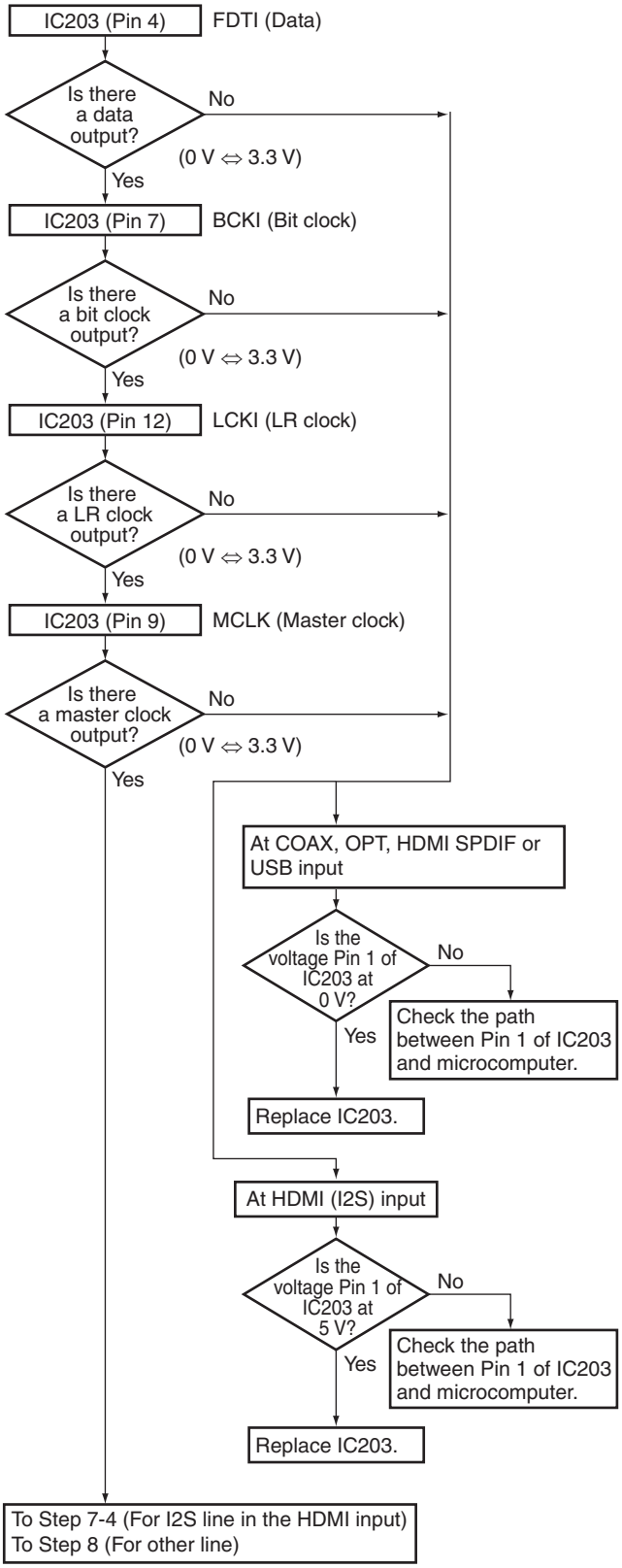

## Step 7-4: Switch

Check that the data is output. (Sch and Cch Signal having)

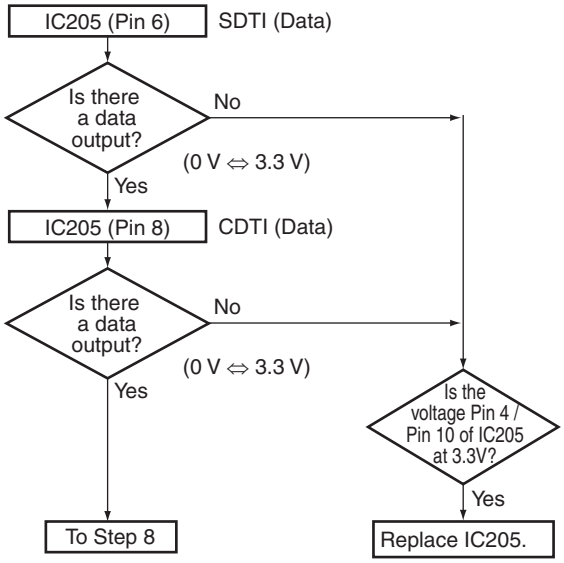


## Step 7-5: Switch (SACD only)

Check that the data and clock signals are output.

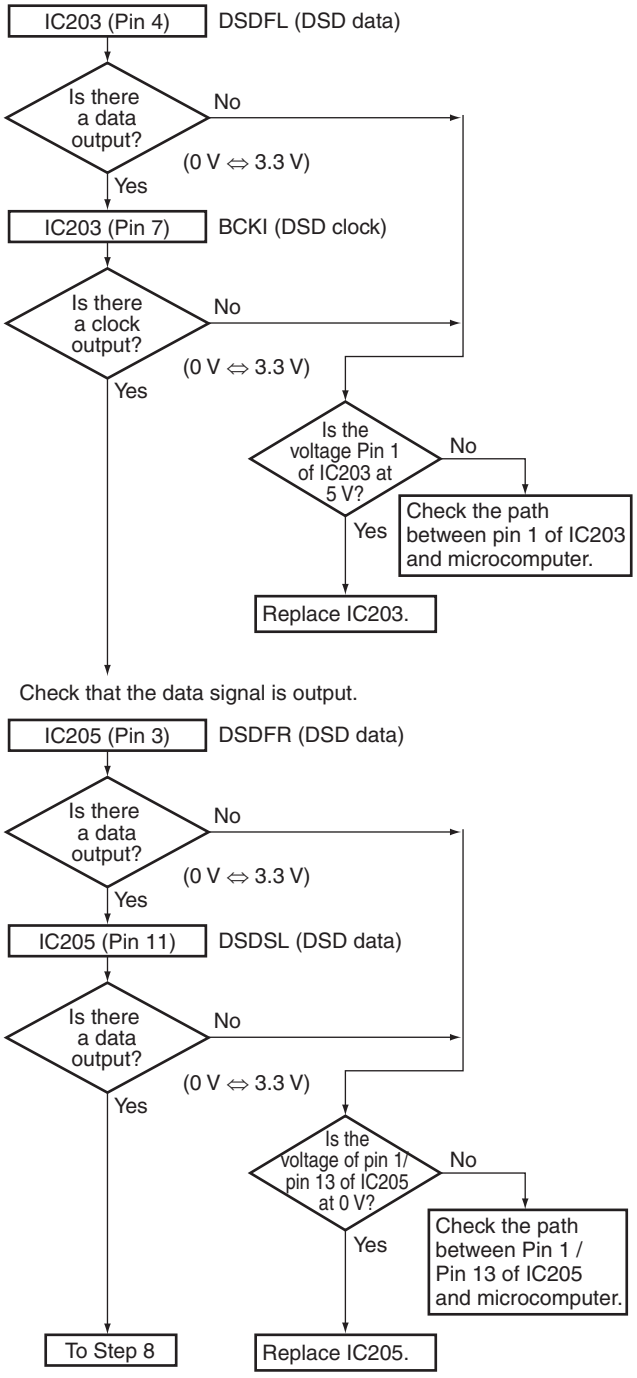

## Step 8: DSP output (digital)

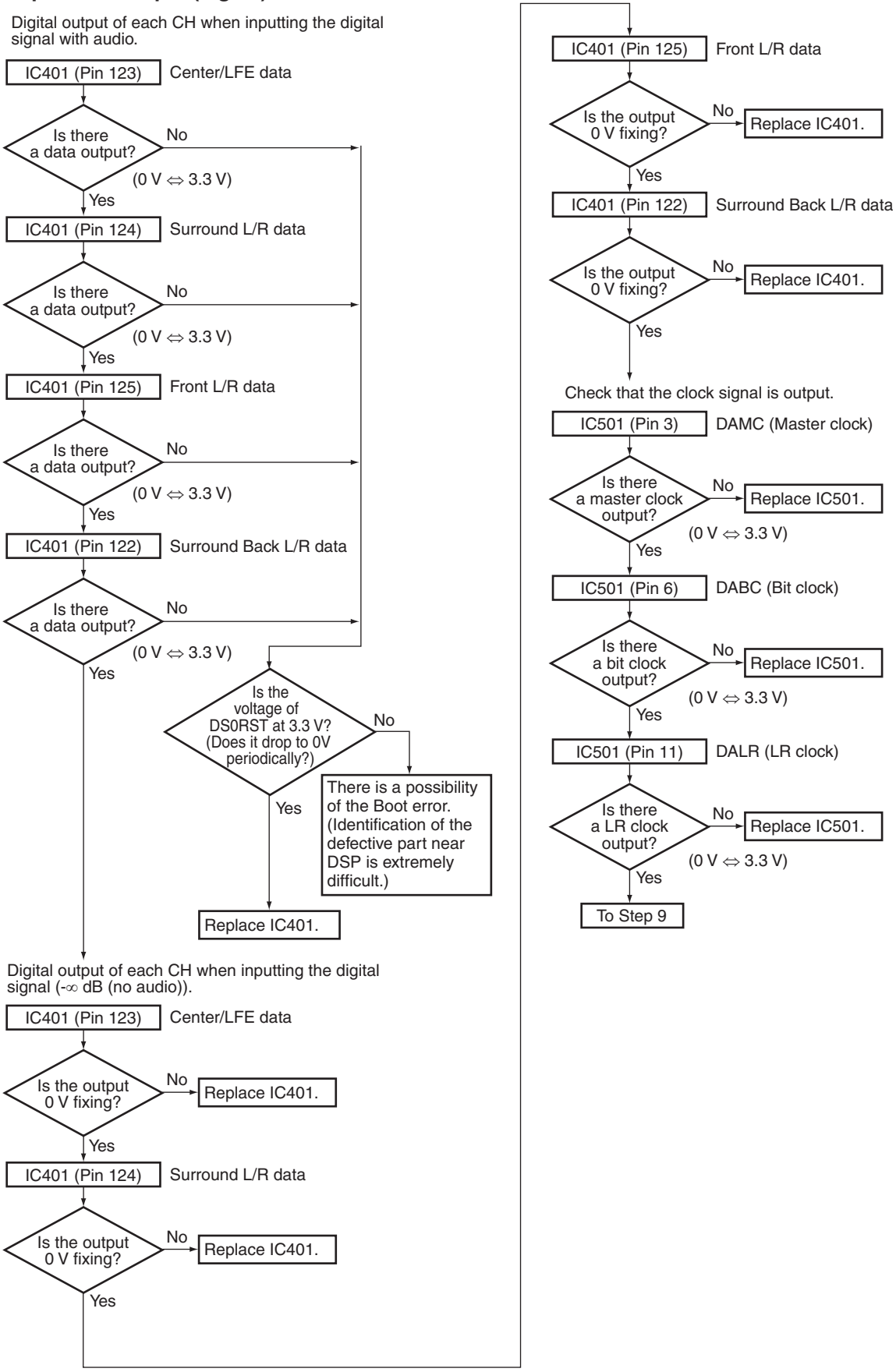

## Step 9: DAC output (analog)

Analog output of each CH when inputting the digital signal with audio.

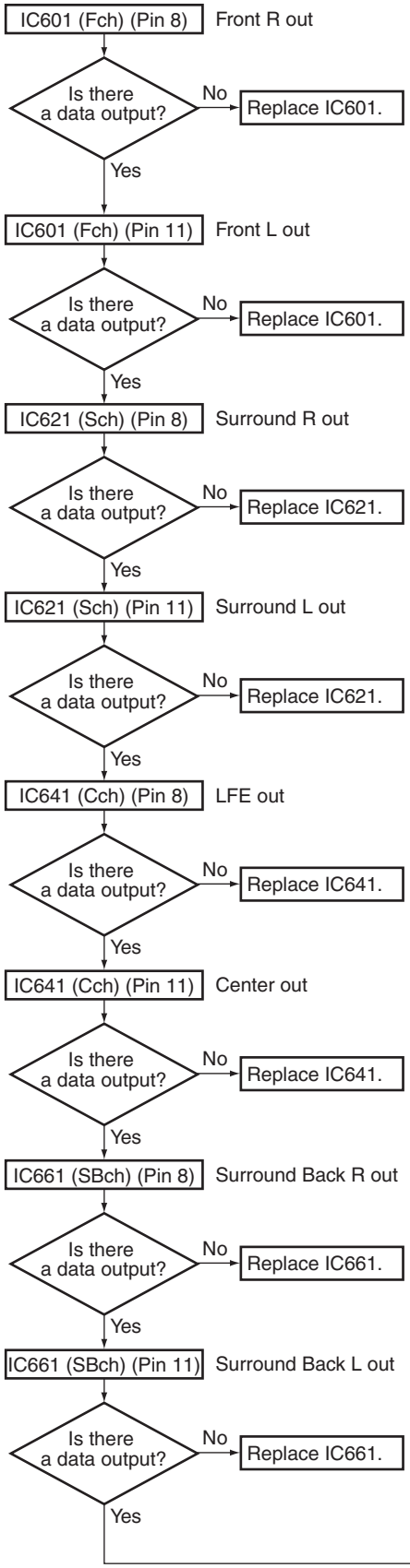


Analog output of each CH when inputting the digital signal (-∞ dB (no audio)).

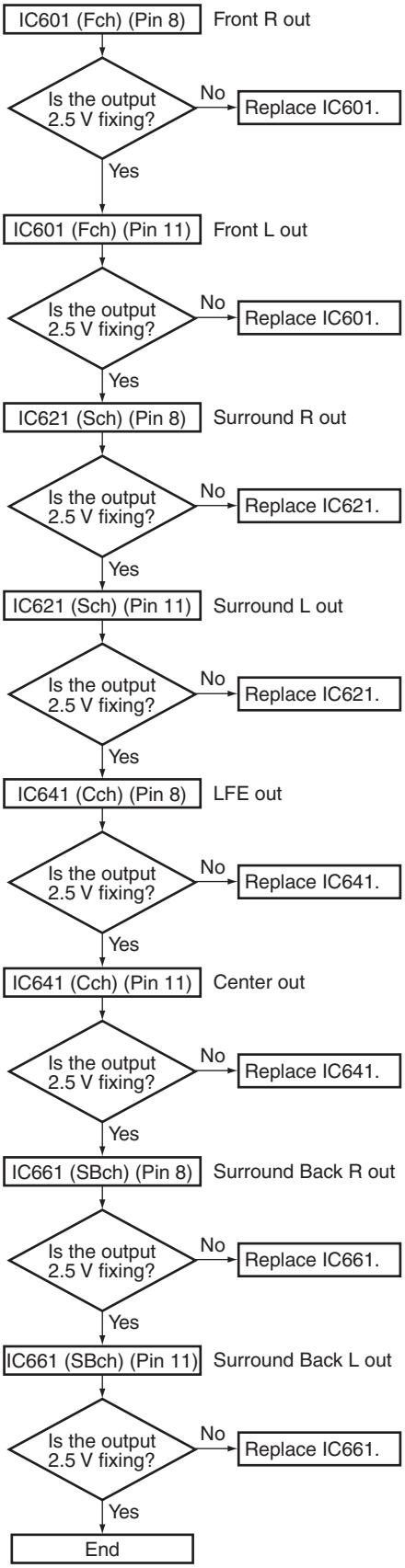

## [2] DSP Troubleshooting in the XM mode

### Step 0: Preliminary confirmation

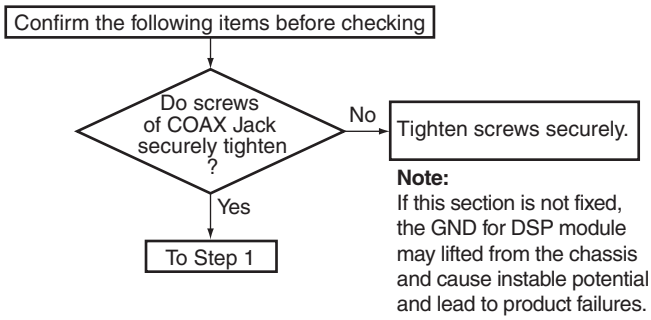


### Step 1: MUTE pin

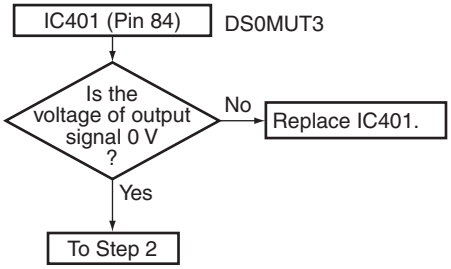


### Step 2: BtoB connector and FFC

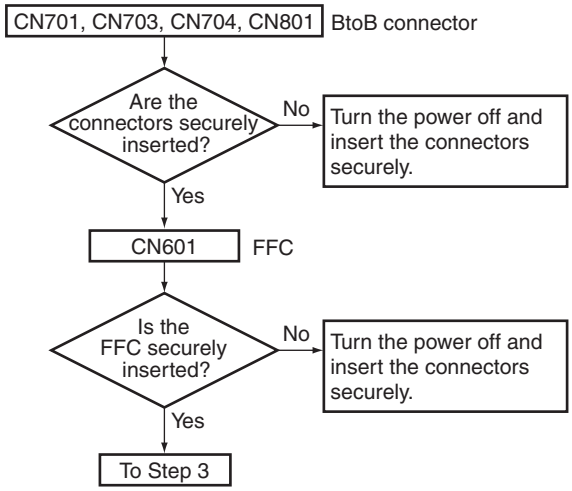


### Step 3: Regulator IC

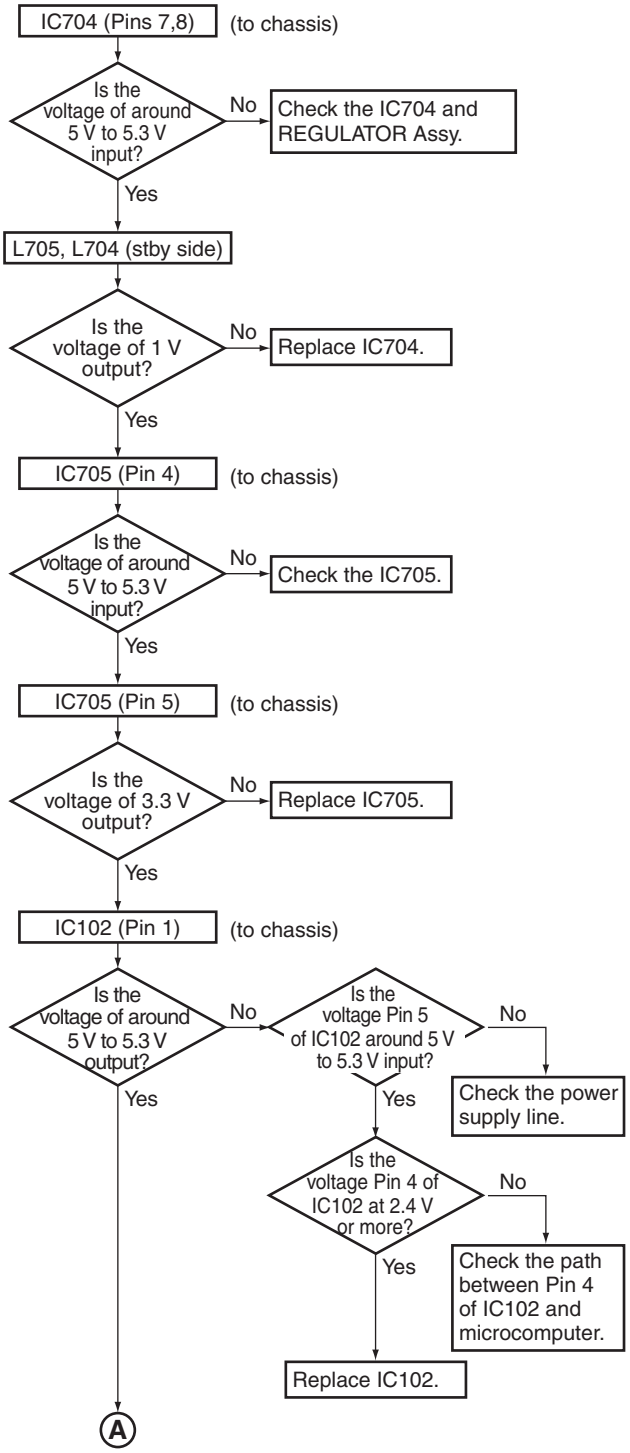

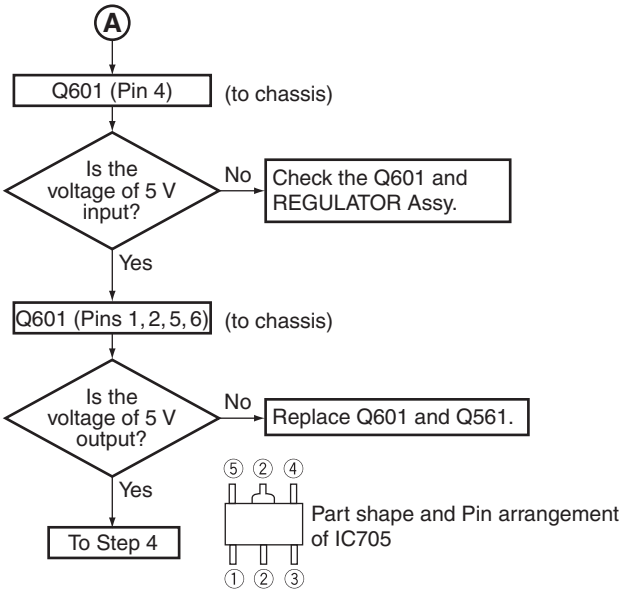


## Step 4: 3 V to 5 V conversion

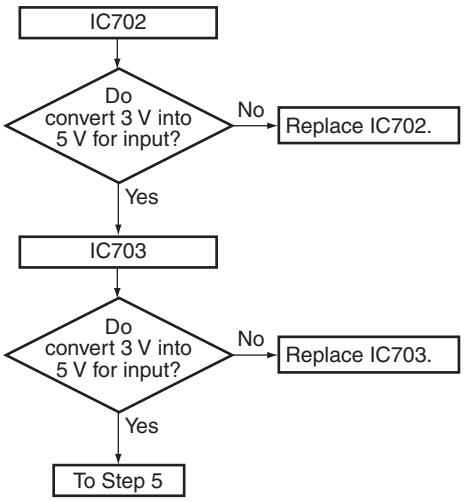


## Step 5: 5 V to 3 V conversion

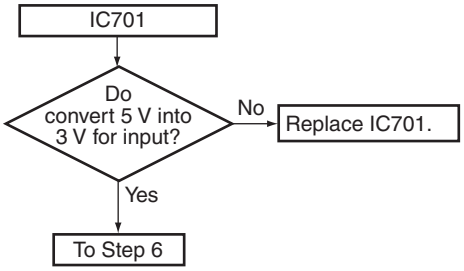


## Step 6: X'tal

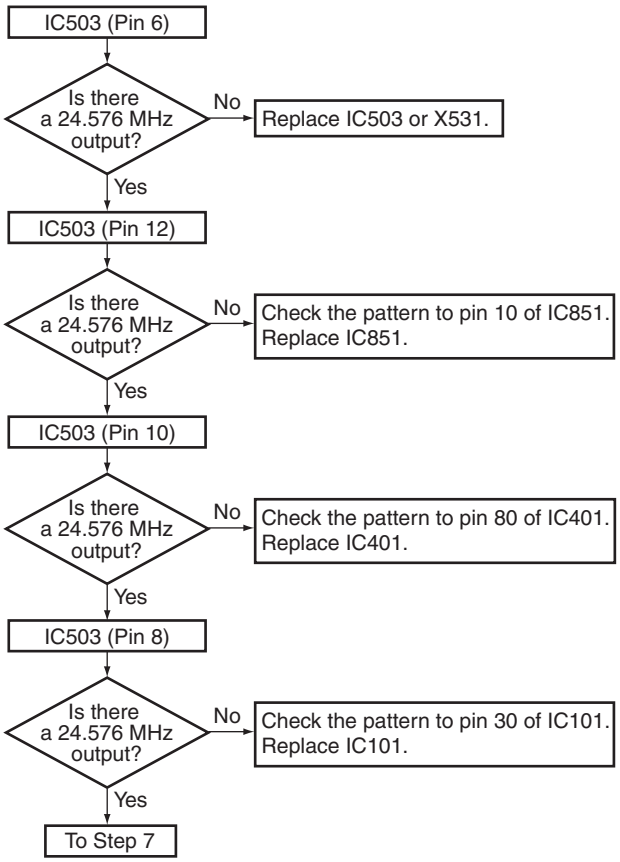

## Step 7-1: XM/DT

Check that the data and clock signals are output.

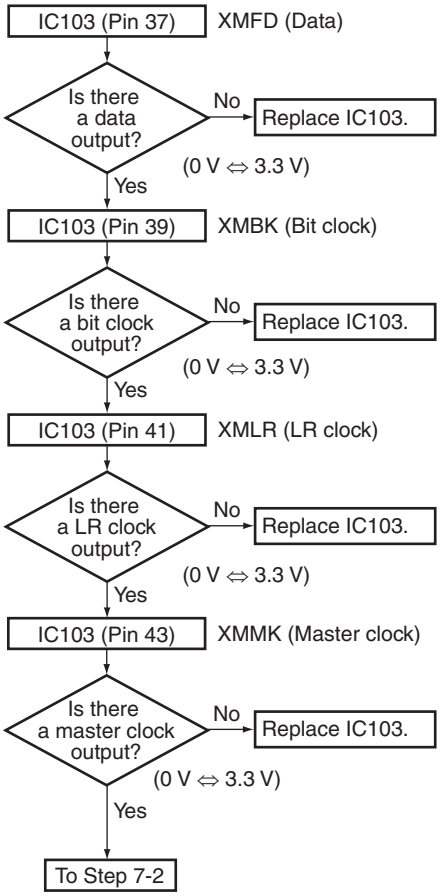


## Step 7-2: Switch

Check that the data and clock signals are output.

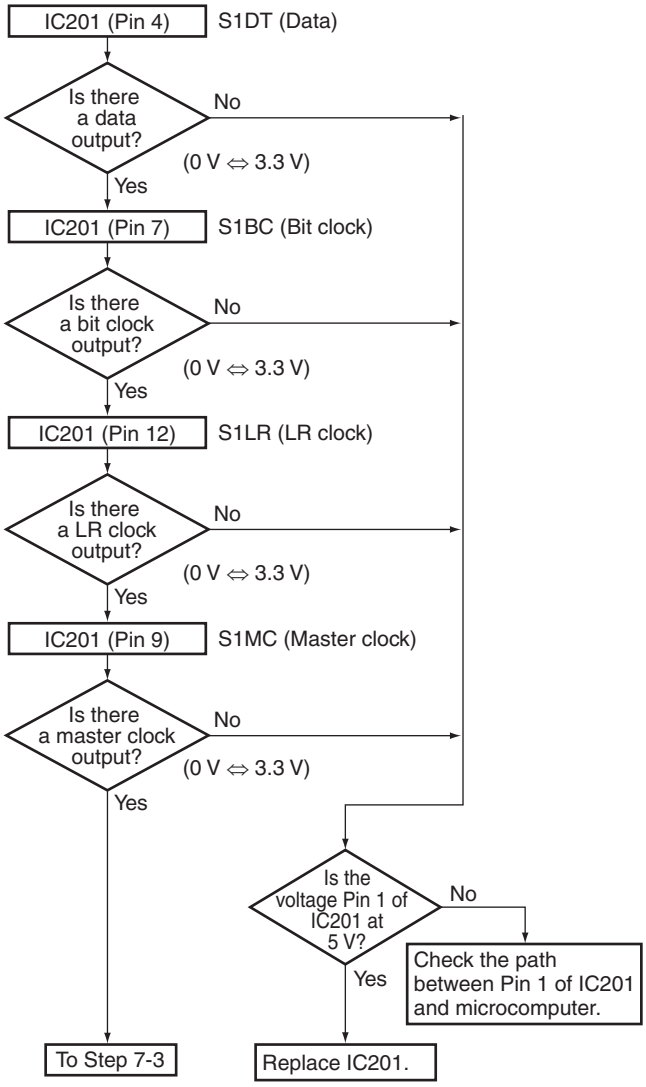

## Step 7-3: Switch

Check that the data and clock signals are output.

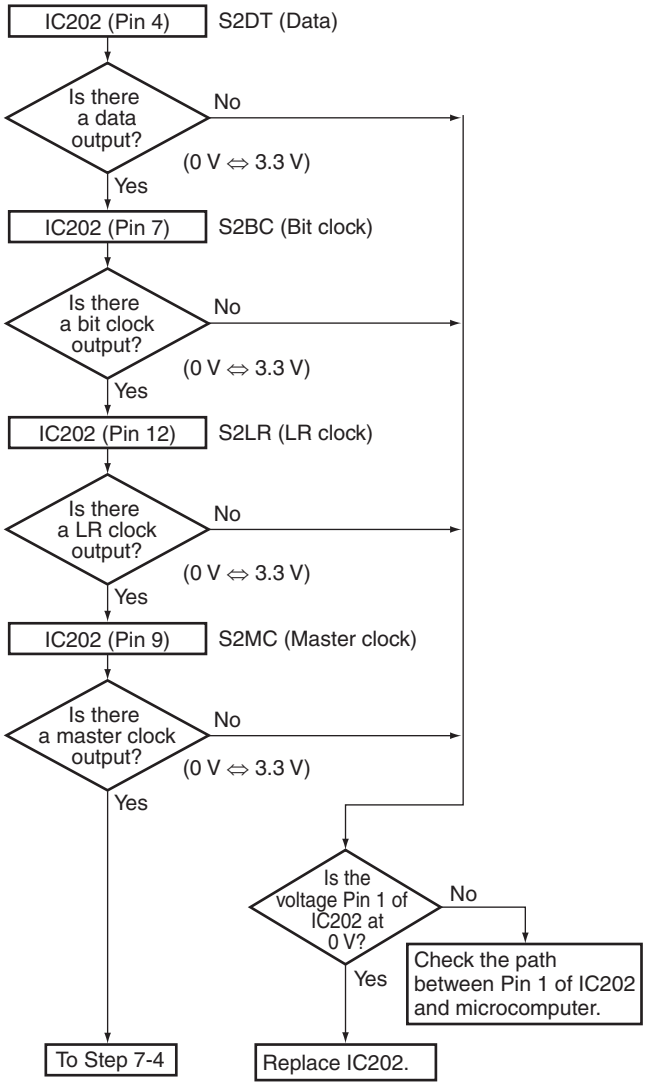


## Step 7-4: Switch

Check that the data and clock signals are output.

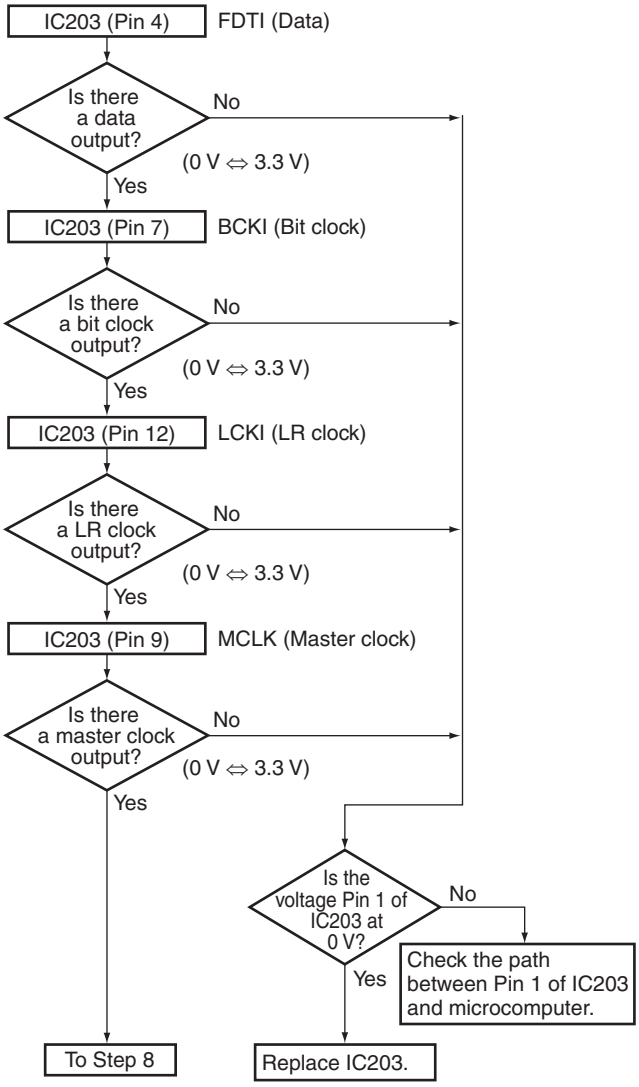

## Step 8: DSP output (digital)

Digital output of each CH when inputting the digital signal with audio.

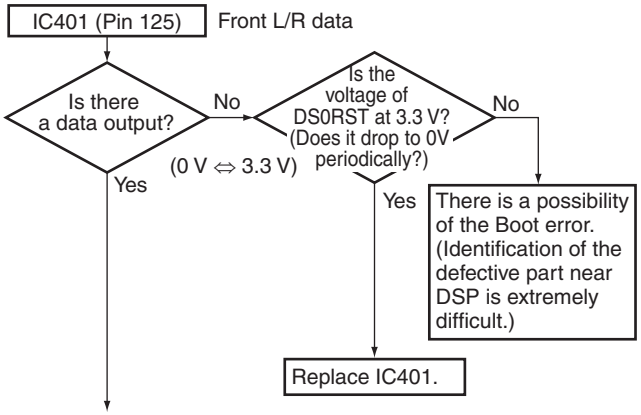


Digital output of each CH when inputting the digital signal (-∞ dB (no audio)).

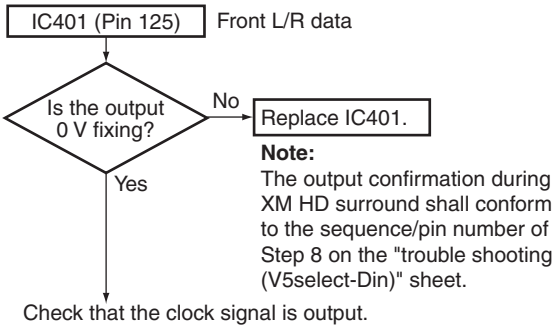


**Note:**
The output confirmation during XM HD surround shall conform to the sequence/pin number of Step 8 on the "trouble shooting (V5select-Din)" sheet.

Check that the clock signal is output.

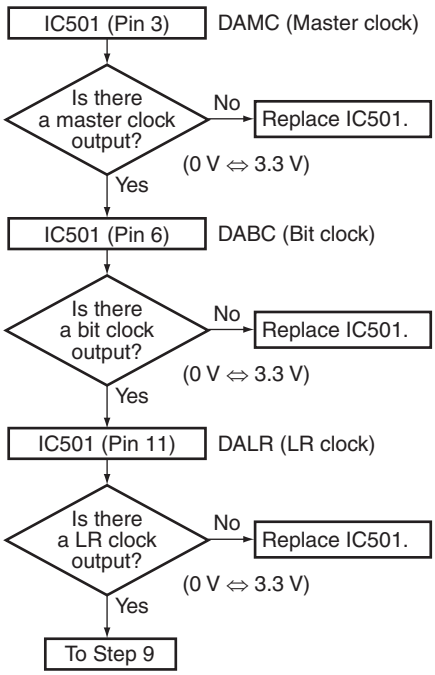


## Step 9: DAC output (analog)

Analog output of each CH when inputting the digital signal with audio.

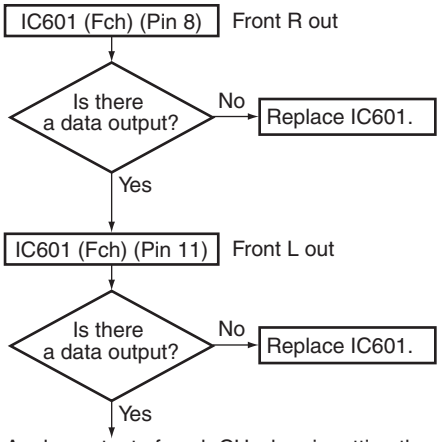


Analog output of each CH when inputting the digital signal (-∞ dB (no audio)).

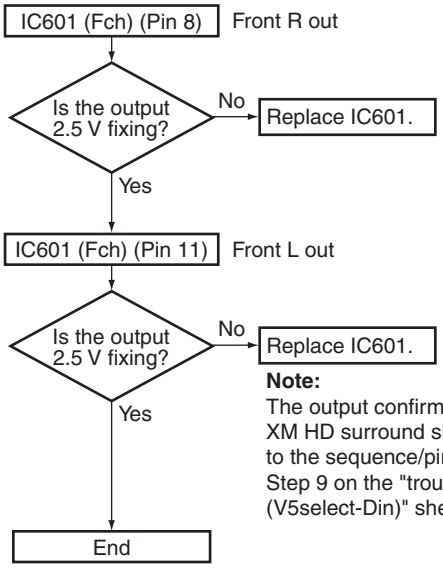


**Note:**
The output confirmation during XM HD surround shall conform to the sequence/pin number of Step 9 on the "trouble shooting (V5select-Din)" sheet.

## ■ DSP Block Diagram

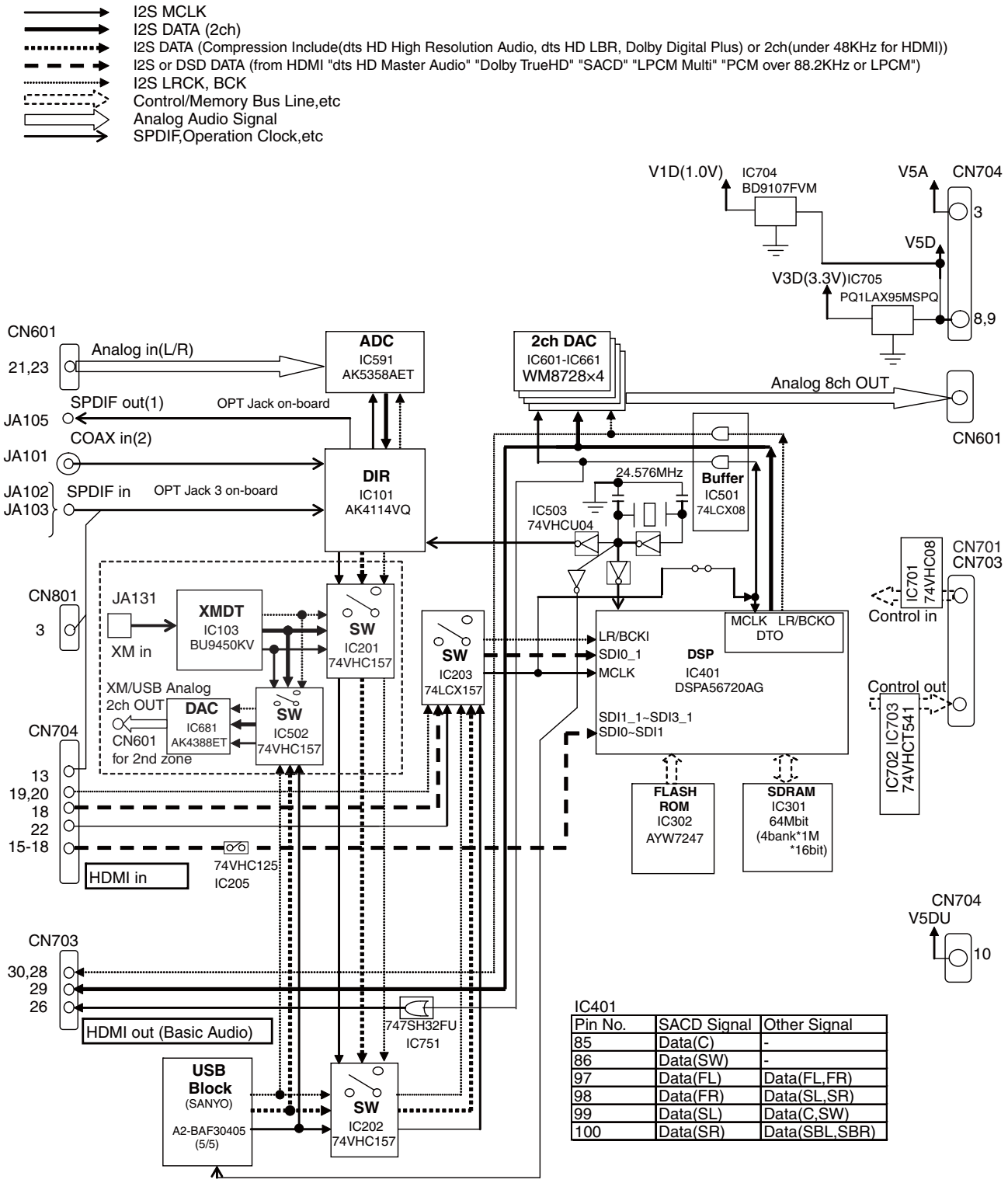


IC401

| Pin No. | SACD Signal | Other Signal |
|---|---|---|
| 85 | Data(C) | - |
| 86 | Data(SW) | - |
| 97 | Data(FL) | Data(FL,FR) |
| 98 | Data(FR) | Data(SL,SR) |
| 99 | Data(SL) | Data(C,SW) |
| 100 | Data(SR) | Data(SBL,SBR) |

## ■DSP Power Block and GND MAP

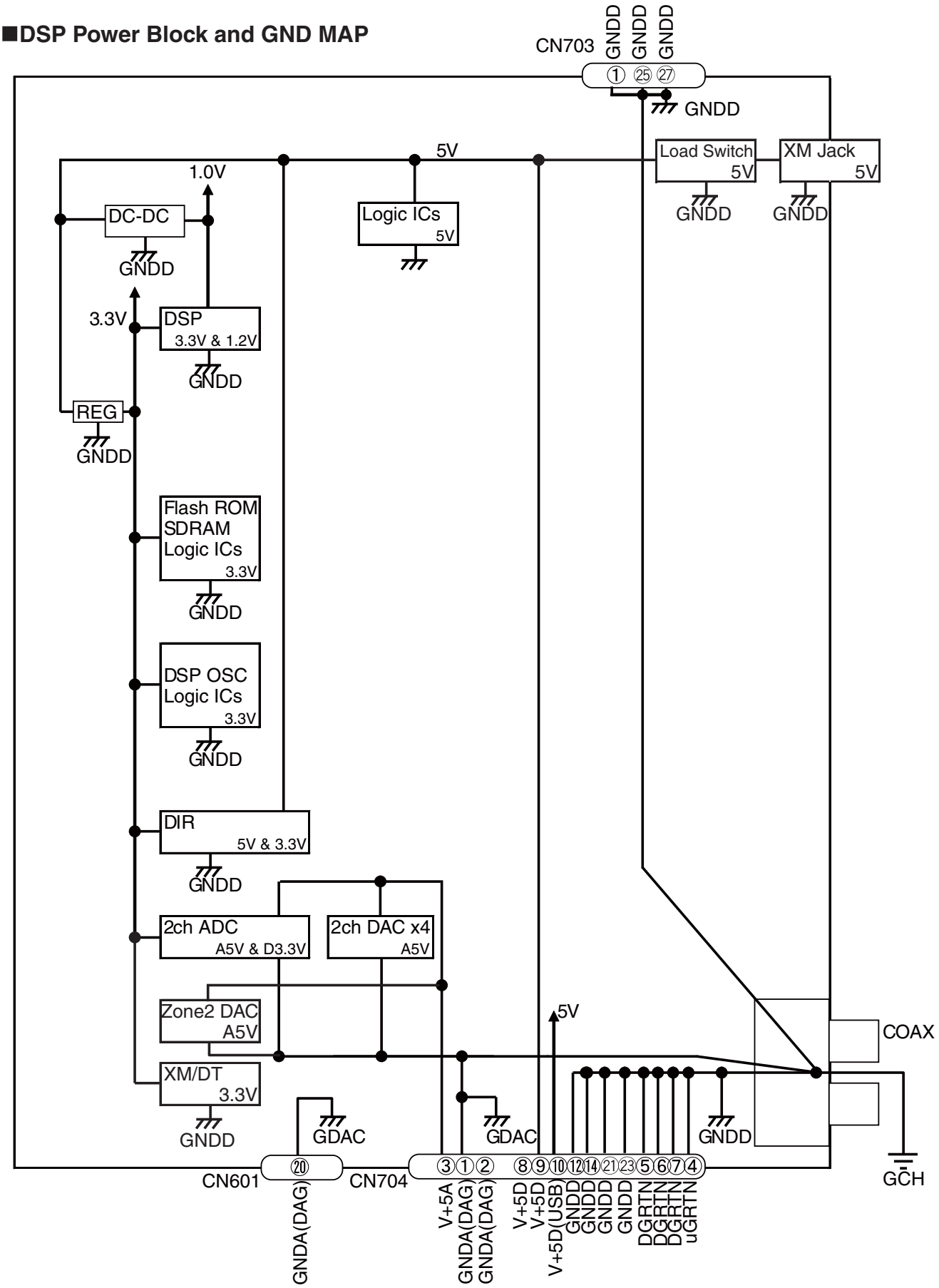

## ■ Conditions for selecting SPDIF or I2S output

Indistinguishable

| | pcm | fs(kHz) | Layout | SPDIF | I2S(3 lines) |
|---|---|---|---|---|---|
| | Compression DVD-V | 48 | 2ch | ◎ | × |
| | Compression *.WAV | 44 | 2ch | ○ | × |
| | | 48 | 2ch | ○ | × |
| | dts-CD | 44 | 2ch | ○ | × |
| | PCM | 44 | 2ch | ○ | × |
| | | 48 | 2ch | ○ | × |
| | DVD-V | 96 | 2ch | | ○ |
| | LPCM | 44 | 2ch | ○ | |
| | | | Multi | × | ○ |
| | | 48 | 2ch | ○ | |
| | | | Multi | × | ○ |
| | | 88 | 2ch | | ○ |
| | | | Multi | × | ○ |
| | DVD-A | 96 | 2ch | | ○ |
| | | | Multi | × | ○ |
| | | 176 | 2ch | × | ○ |
| | | | Multi | - | - |
| | | 192 | 2ch | × | ○ |
| | | | Multi | - | - |

| | | | | |
|---|---|---|---|---|
| SACD | 2ch | × | ○ | (DSD) |
| | Multi | × | ○ | (DSD) |

| | | |
|---|---|---|
| dts HD Master Audio | × | ○ |
| dts HD High Resolution Audio | ○ | × |
| dts HD LBR | ○ | × |
| Dolby TrueHD | × | ○ |
| Dolby Digital Plus | ○ | × |

## [3] HDMI Simple Diagnosis

**1. Causes for noncompletion of HDMI authentication between the source equipment and this unit (the HDMI indicator is unlit or flashes)**

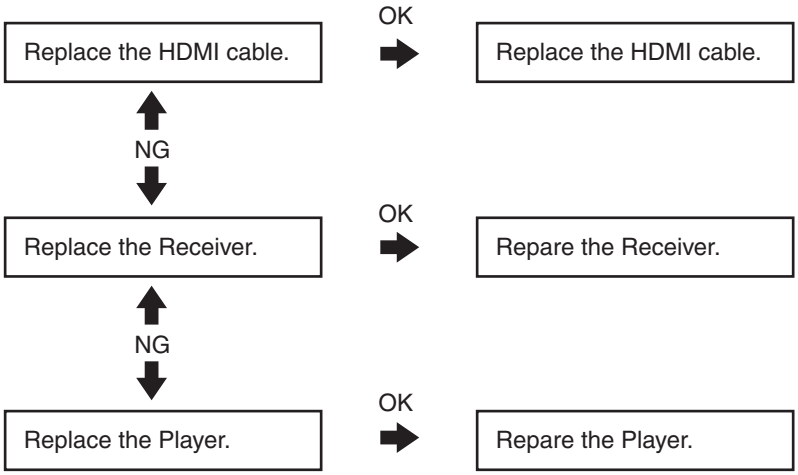


**2. Causes for noncompletion of HDMI authentication between the monitor and this unit (no display or sound from the monitor)**

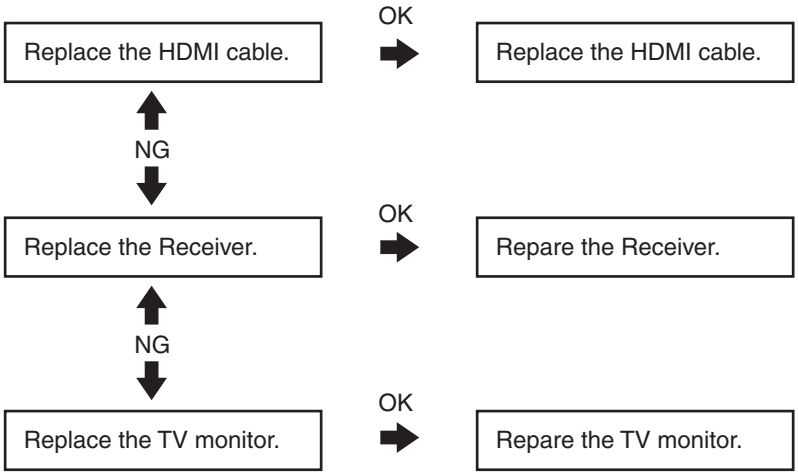

## [4] Preparations for HDMI diagnosis

**Note :** Even if the unit shown in the photos and illustrations in this manual may differ from your product, the procedures described here are common.

**Jig cable**
- Extension jig cable (GGD1492) x2
- 11P board to board extension jig cable (GGD1576)
- 19P board to board extension jig cable (GGD1577) x2
- 11P FFC (GGD1578)

### [Procedures]

① Remove the Rear Panel.

② Remove the screw that fix the MAIN Assy and the Wire Styling of the PCB Binder.

③ Remove the two screws that fix the HDMI Shield V5S.

④ Connect the four extension jig cables (two 19P board to board extension jig cable, one 11P board to board extension jig cable and 11P FFC).

⑤ Raise the MAIN Assy with the HDMI&DVC Assy and DSP&USB Assy attached and place it on the Heat Sink V5S.
Fix the lower part of the HDMI&DVC Assy with the PCB Binder.

Position of Wire Styling

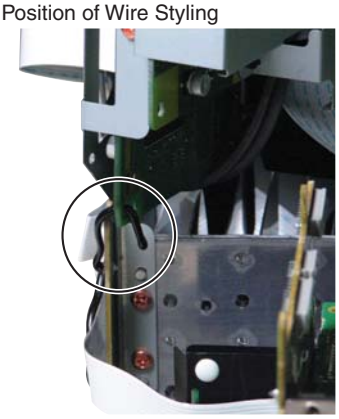

Position of Wire Styling (The above angle is different.)

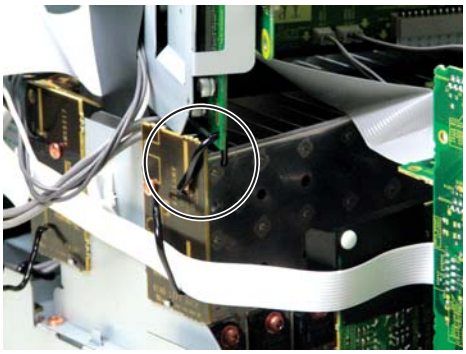

⑥ Connect the earth point.

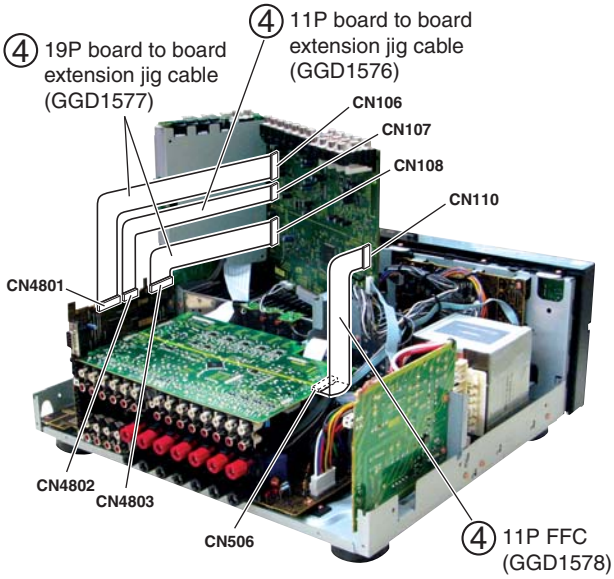


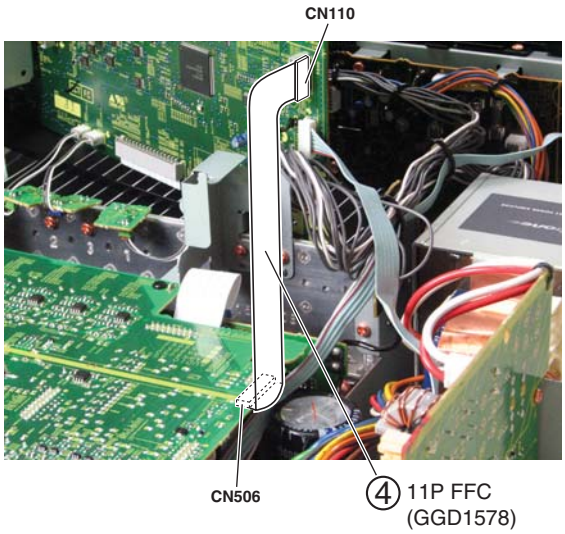

⑦ Remove the two Nylon Rivets fixing the HDMI Shield V5S on MAIN Assy.

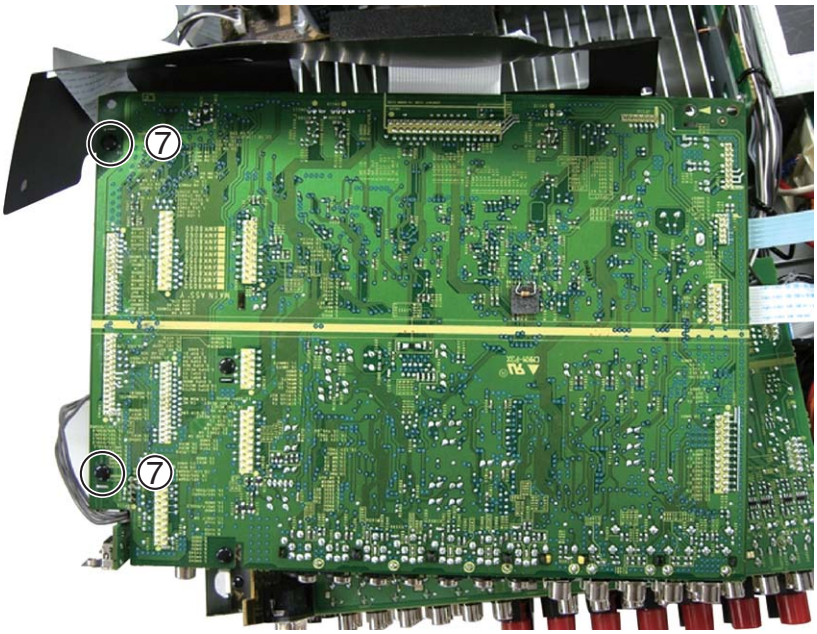


⑧ Remove the two screws from the HDMI Shield V5S.

⑨ Remove the HDMI&DVC Assy and HDMI Shield V5S together from the MAIN Assy.

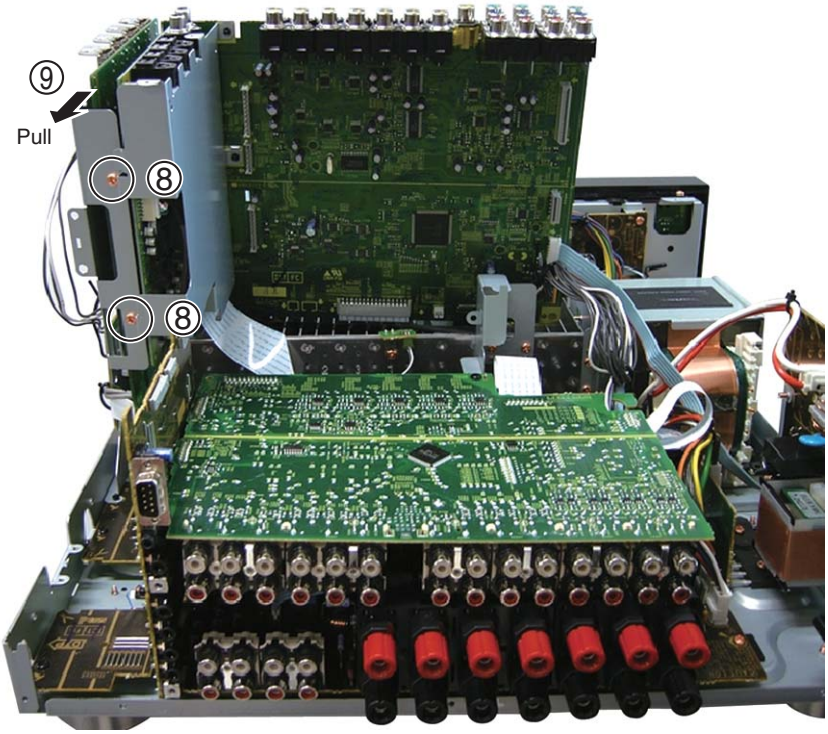

⑩ Remove the Nylon Rivet fixing the HDMI&DVC Assy and the HDMI Shield V5S.

⑪ Remove the HDMI&DVC Assy while holding the Locking Card Spacer with a Cutting Pliers.
* Caution is required not to lose the Radiation Sheet between IC1301 and the HDMI Shield V5S.

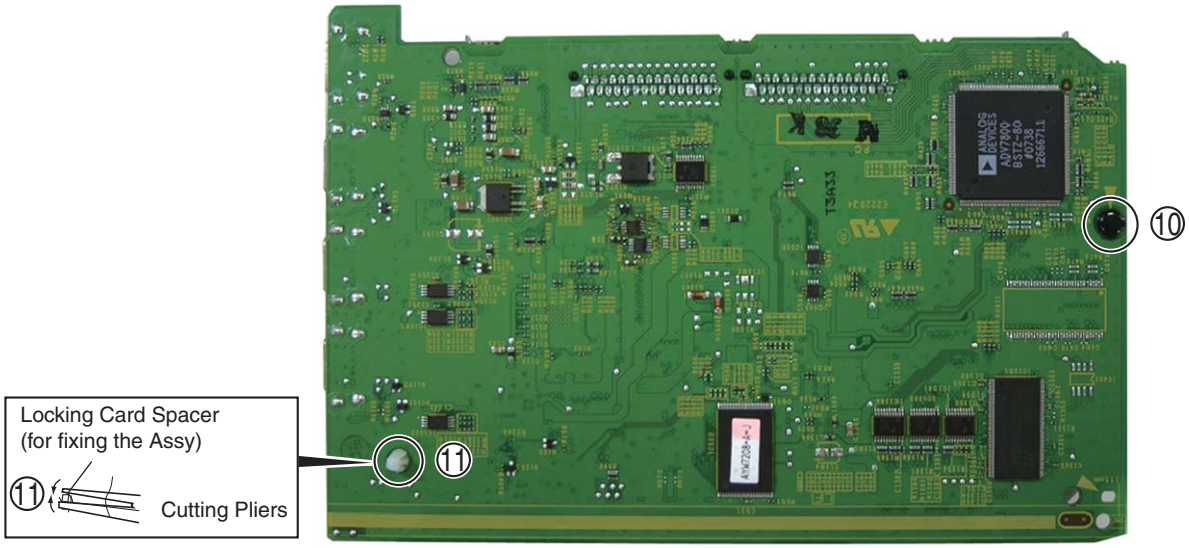


⑫ HDMI&DVC Assy MAIN Assy
CN1001 - CN101
CN1002 - CN102
Connect each combination above with an extension jig cable (GGD1492).

⑬ Connect one of the HDMI connectors and a chassis (connect GND).

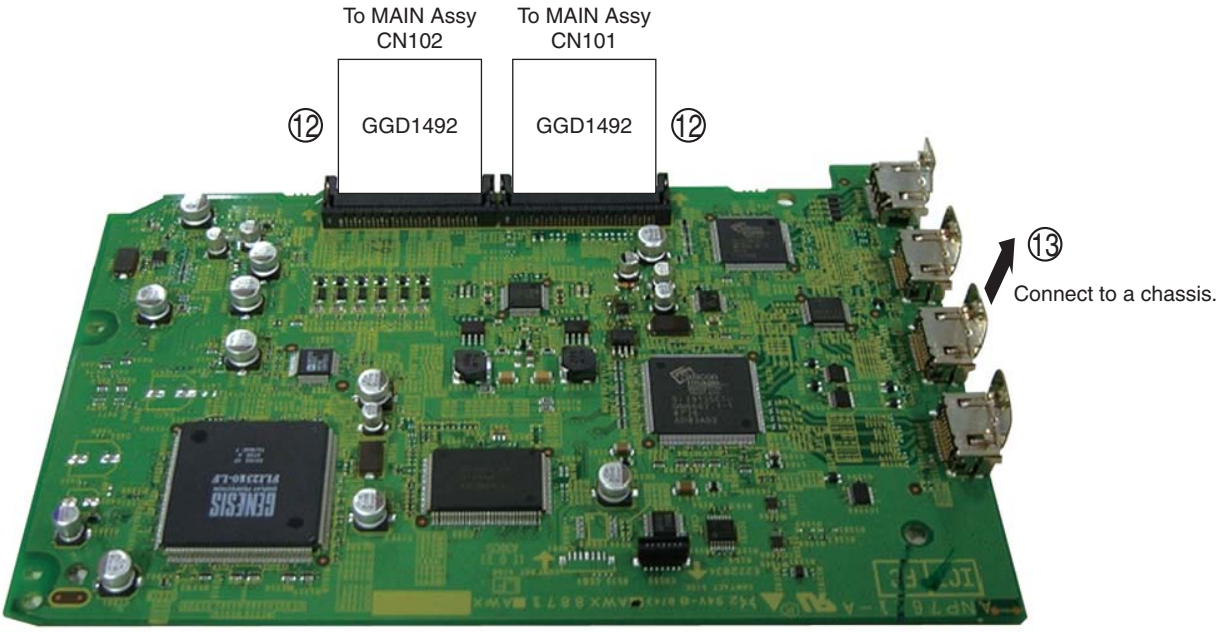

## [5] HDMI Troubleshooting

- The parts marked like **A1** in the following chart are located in "HDMI & DVC Assy Check Points".

### Common section

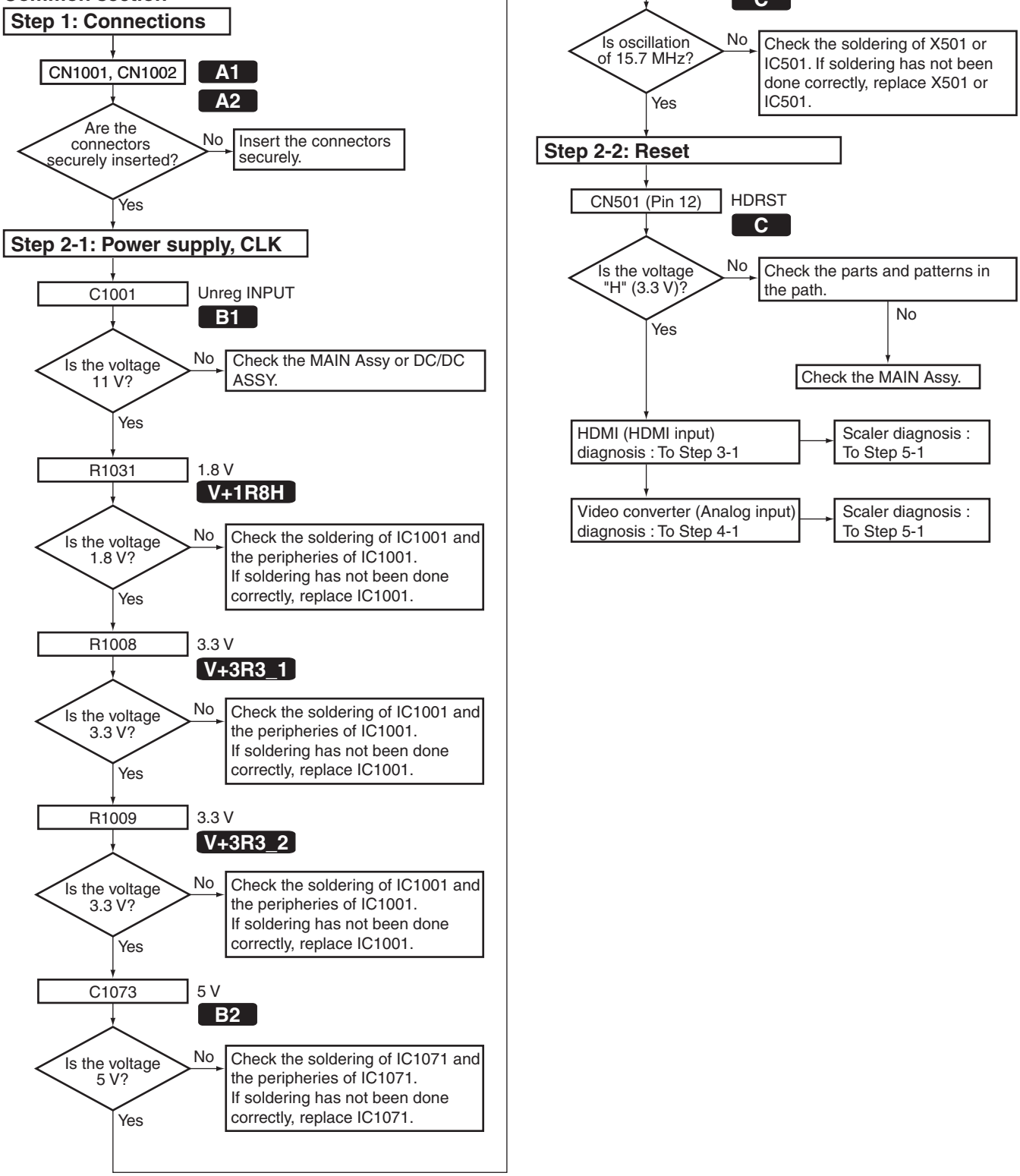

## HDMI section

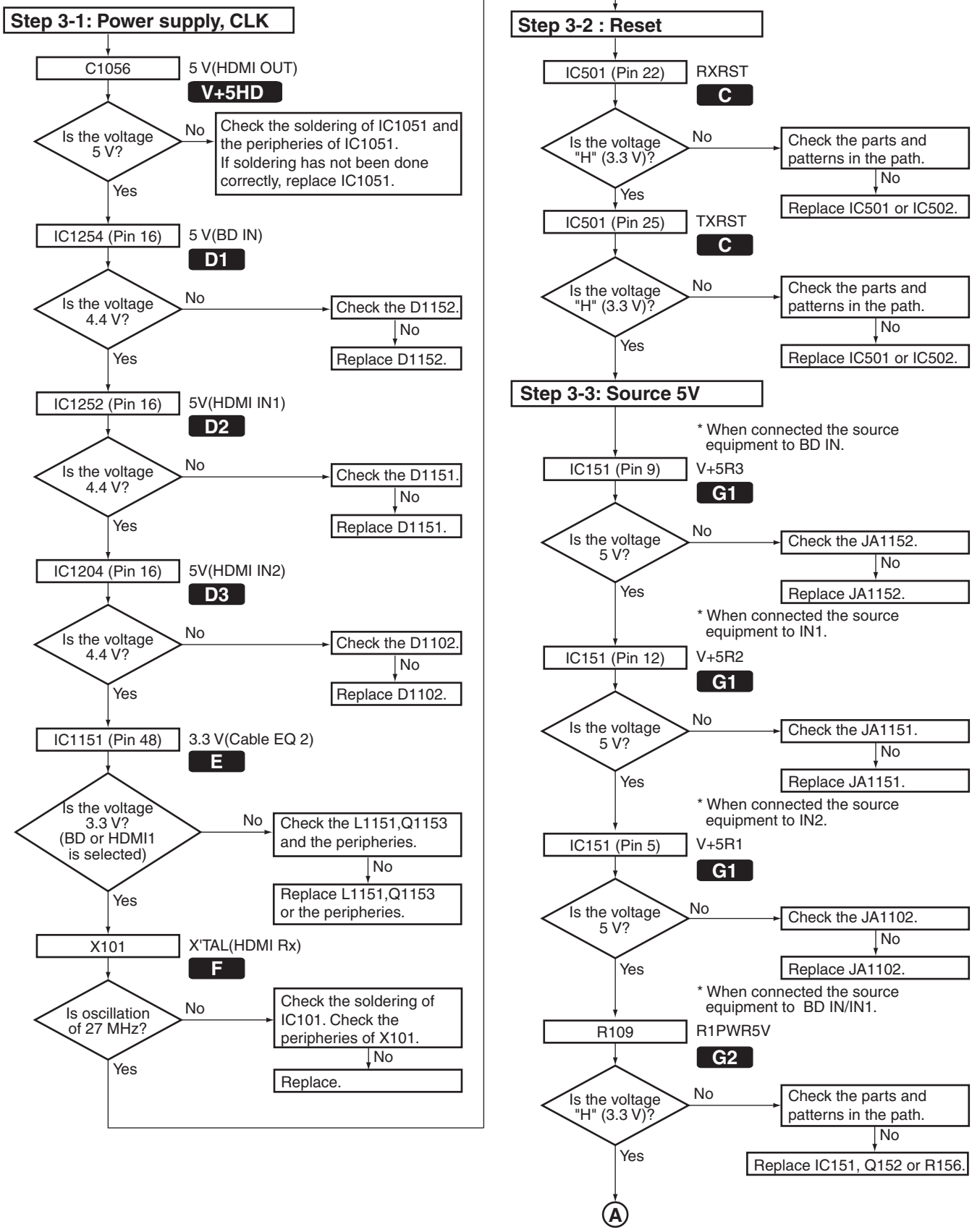

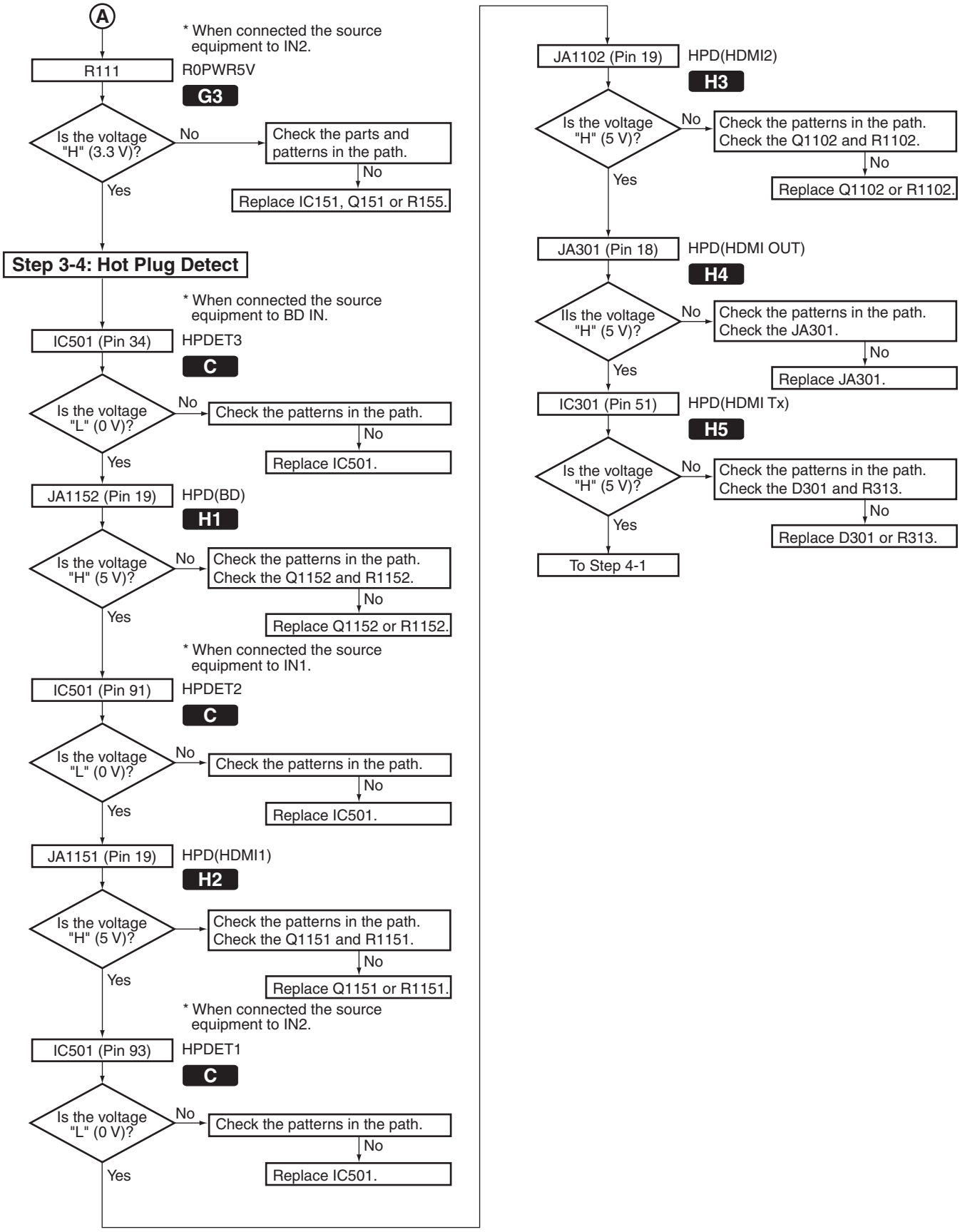
A
* When connected the source equipment to IN2.
R111
R0PWR5V
G3
Is the voltage "H" (3.3 V)?
No
Check the parts and patterns in the path.
No
Replace IC151, Q151 or R155.
Yes
Step 3-4: Hot Plug Detect
* When connected the source equipment to BD IN.
IC501 (Pin 34)
HPDET3
C
Is the voltage "L" (0 V)?
No
Check the patterns in the path.
No
Replace IC501.
Yes
JA1152 (Pin 19)
HPD(BD)
H1
Is the voltage "H" (5 V)?
No
Check the patterns in the path. Check the Q1152 and R1152.
No
Replace Q1152 or R1152.
Yes
* When connected the source equipment to IN1.
IC501 (Pin 91)
HPDET2
C
Is the voltage "L" (0 V)?
No
Check the patterns in the path.
No
Replace IC501.
Yes
JA1151 (Pin 19)
HPD(HDMI1)
H2
Is the voltage "H" (5 V)?
Check the patterns in the path. Check the Q1151 and R1151.
No
Replace Q1151 or R1151.
Yes
* When connected the source equipment to IN2.
IC501 (Pin 93)
HPDET1
C
Is the voltage "L" (0 V)?
No
Check the patterns in the path.
No
Replace IC501.
Yes
JA1102 (Pin 19)
HPD(HDMI2)
H3
Is the voltage "H" (5 V)?
No
Check the patterns in the path. Check the Q1102 and R1102.
No
Replace Q1102 or R1102.
Yes
JA301 (Pin 18)
HPD(HDMI OUT)
H4
IIs the voltage "H" (5 V)?
No
Check the patterns in the path. Check the JA301.
No
Replace JA301.
Yes
IC301 (Pin 51)
HPD(HDMI Tx)
H5
Is the voltage "H" (5 V)?
No
Check the patterns in the path. Check the D301 and R313.
No
Replace D301 or R313.
Yes
To Step 4-1

## Video converter section

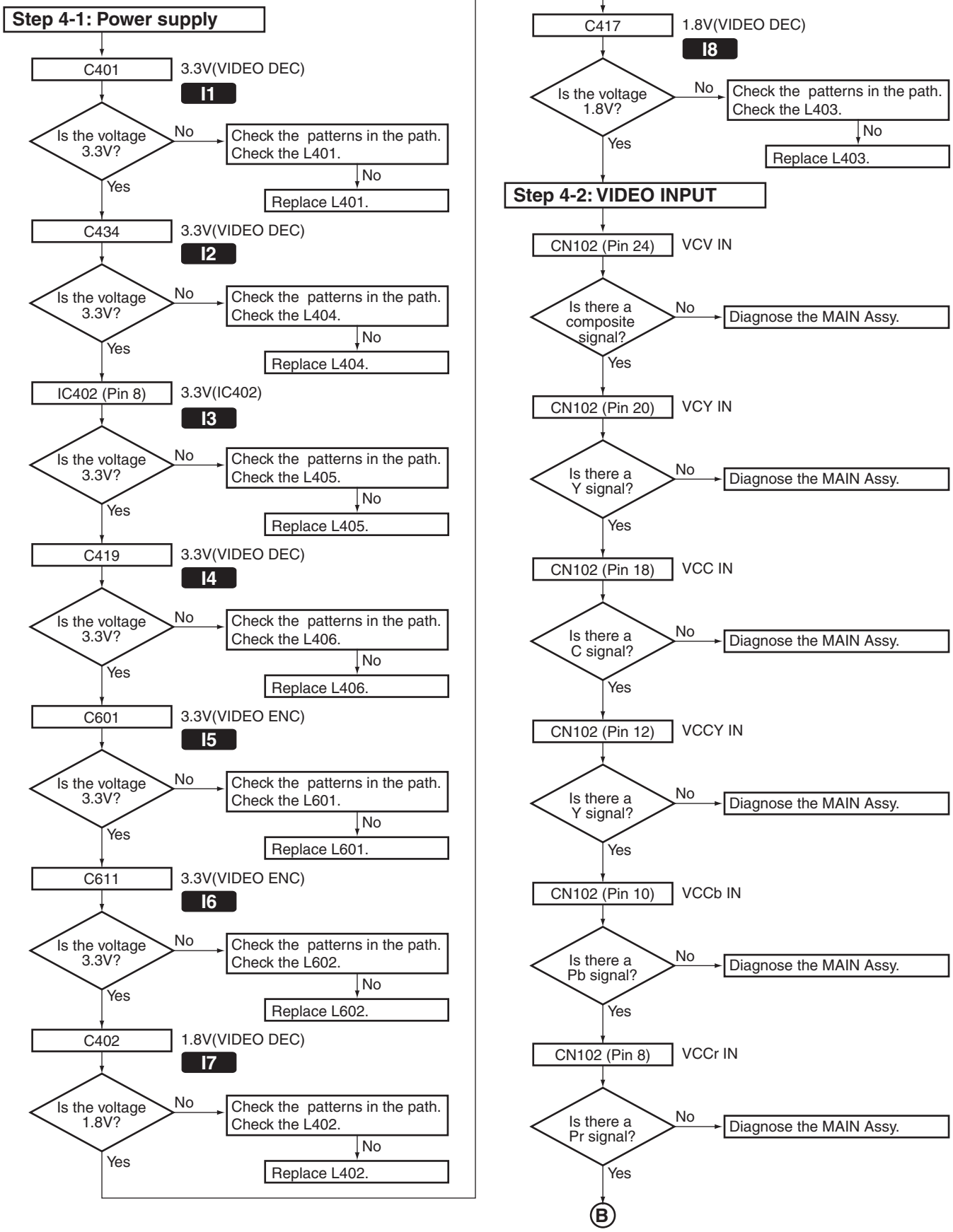

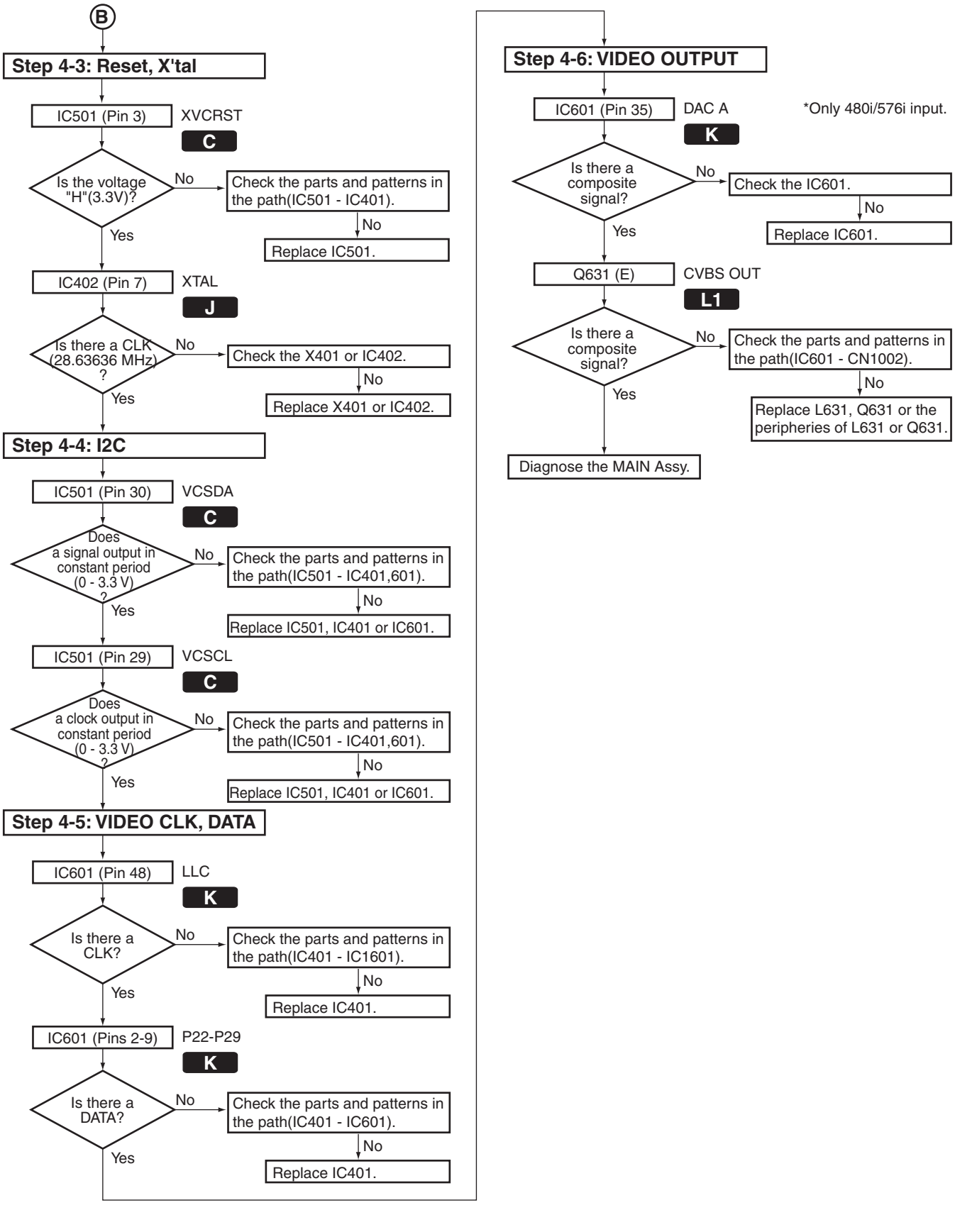
B
Step 4-3: Reset, X'tal
IC501 (Pin 3)
XVCRST
C
Is the voltage "H"(3.3V)?
No
Check the parts and patterns in the path(IC501 - IC401).
No
Replace IC501.
Yes
IC402 (Pin 7)
XTAL
J
Is there a CLK (28.63636 MHz) ?
No
Check the X401 or IC402.
No
Replace X401 or IC402.
Yes
Step 4-4: I2C
IC501 (Pin 30)
VCSDA
C
Does a signal output in constant period (0 - 3.3 V) ?
No
Check the parts and patterns in the path(IC501 - IC401,601).
No
Replace IC501, IC401 or IC601.
Yes
IC501 (Pin 29)
VCSCL
C
Does a clock output in constant period (0 - 3.3 V) ?
No
Check the parts and patterns in the path(IC501 - IC401,601).
No
Replace IC501, IC401 or IC601.
Yes
Step 4-5: VIDEO CLK, DATA
IC601 (Pin 48)
LLC
K
Is there a CLK?
No
Check the parts and patterns in the path(IC401 - IC1601).
No
Replace IC401.
Yes
IC601 (Pins 2-9)
P22-P29
K
Is there a DATA?
No
Check the parts and patterns in the path(IC401 - IC601).
No
Replace IC401.
Yes
Step 4-6: VIDEO OUTPUT
IC601 (Pin 35)
DAC A
K
*Only 480i/576i input.
Is there a composite signal?
No
Check the IC601.
No
Replace IC601.
Yes
Q631 (E)
CVBS OUT
L1
Is there a composite signal?
No
Check the parts and patterns in the path(IC601 - CN1002).
No
Replace L631, Q631 or the peripheries of L631 or Q631.
Yes
Diagnose the MAIN Assy.

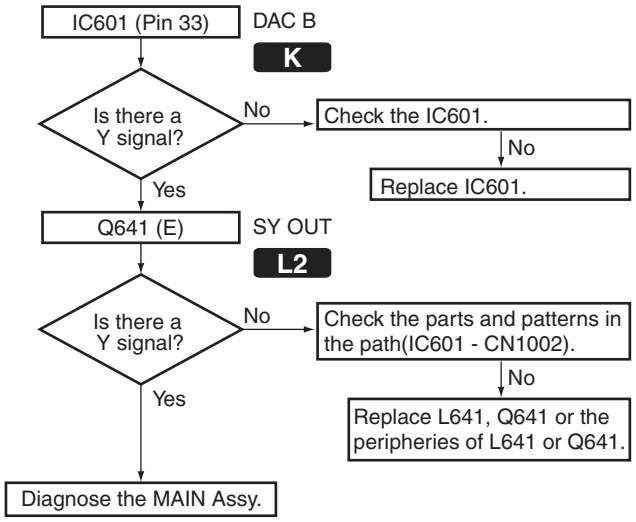
IC601 (Pin 33)
DAC B
K
Is there a Y signal?
No
Check the IC601.
No
Replace IC601.
Yes
Q641 (E)
SY OUT
L2
Is there a Y signal?
No
Check the parts and patterns in the path(IC601 - CN1002).
No
Replace L641, Q641 or the peripheries of L641 or Q641.
Yes
Diagnose the MAIN Assy.

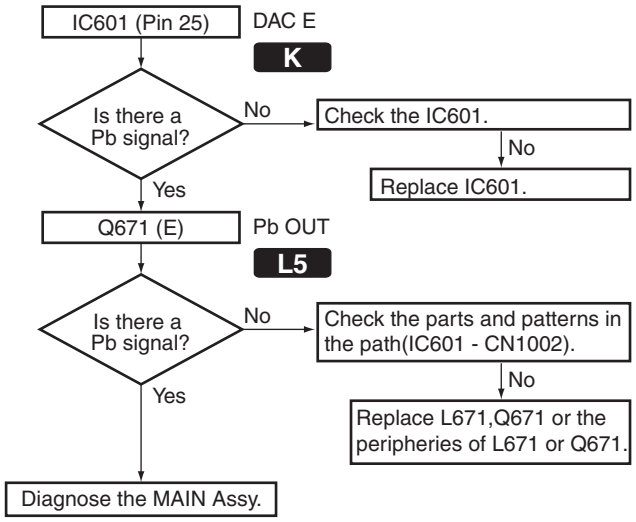
IC601 (Pin 25)
DAC E
K
Is there a Pb signal?
No
Check the IC601.
No
Replace IC601.
Yes
Q671 (E)
Pb OUT
L5
Is there a Pb signal?
No
Check the parts and patterns in the path(IC601 - CN1002).
No
Replace L671,Q671 or the peripheries of L671 or Q671.
Yes
Diagnose the MAIN Assy.

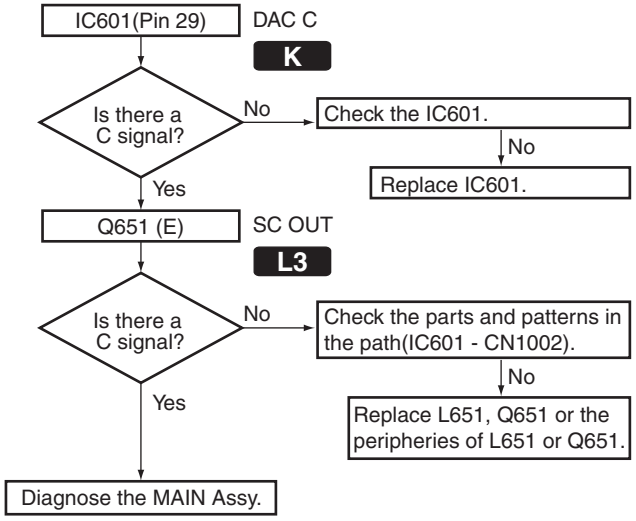
IC601(Pin 29)
DAC C
K
Is there a C signal?
No
Check the IC601.
No
Replace IC601.
Yes
Q651 (E)
SC OUT
L3
Is there a C signal?
No
Check the parts and patterns in the path(IC601 - CN1002).
No
Replace L651, Q651 or the peripheries of L651 or Q651.
Yes
Diagnose the MAIN Assy.

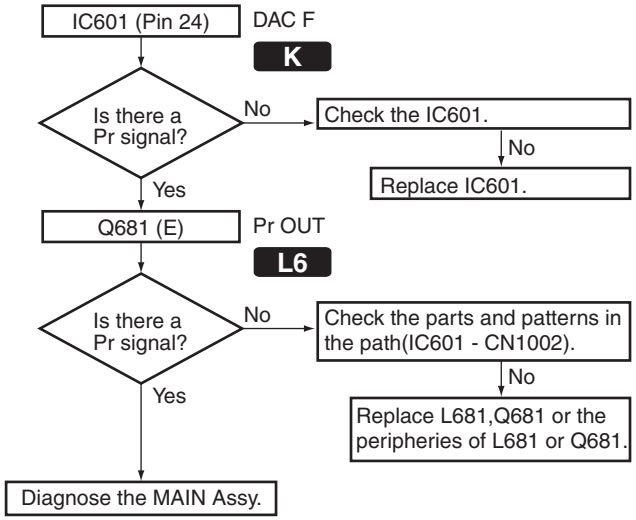
IC601 (Pin 24)
DAC F
K
Is there a Pr signal?
No
Check the IC601.
No
Replace IC601.
Yes
Q681 (E)
Pr OUT
L6
Is there a Pr signal?
No
Check the parts and patterns in the path(IC601 - CN1002).
No
Replace L681,Q681 or the peripheries of L681 or Q681.
Yes
Diagnose the MAIN Assy.

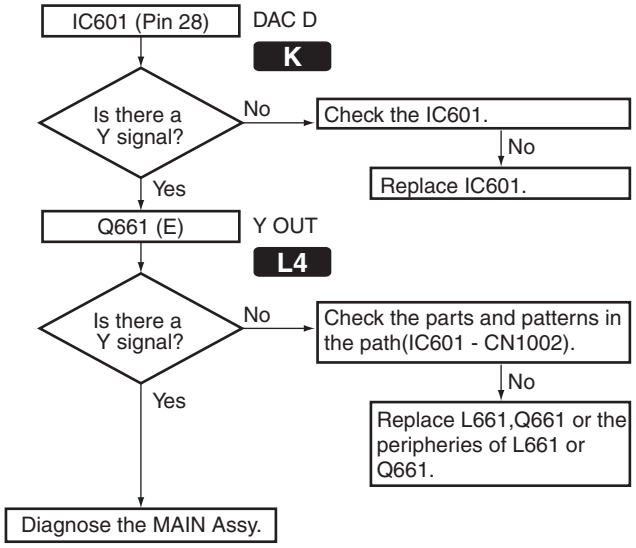
IC601 (Pin 28)
DAC D
K
Is there a Y signal?
No
Check the IC601.
No
Replace IC601.
Yes
Q661 (E)
Y OUT
L4
Is there a Y signal?
No
Check the parts and patterns in the path(IC601 - CN1002).
No
Replace L661,Q661 or the peripheries of L661 or Q661.
Yes
Diagnose the MAIN Assy.

## Scaler section

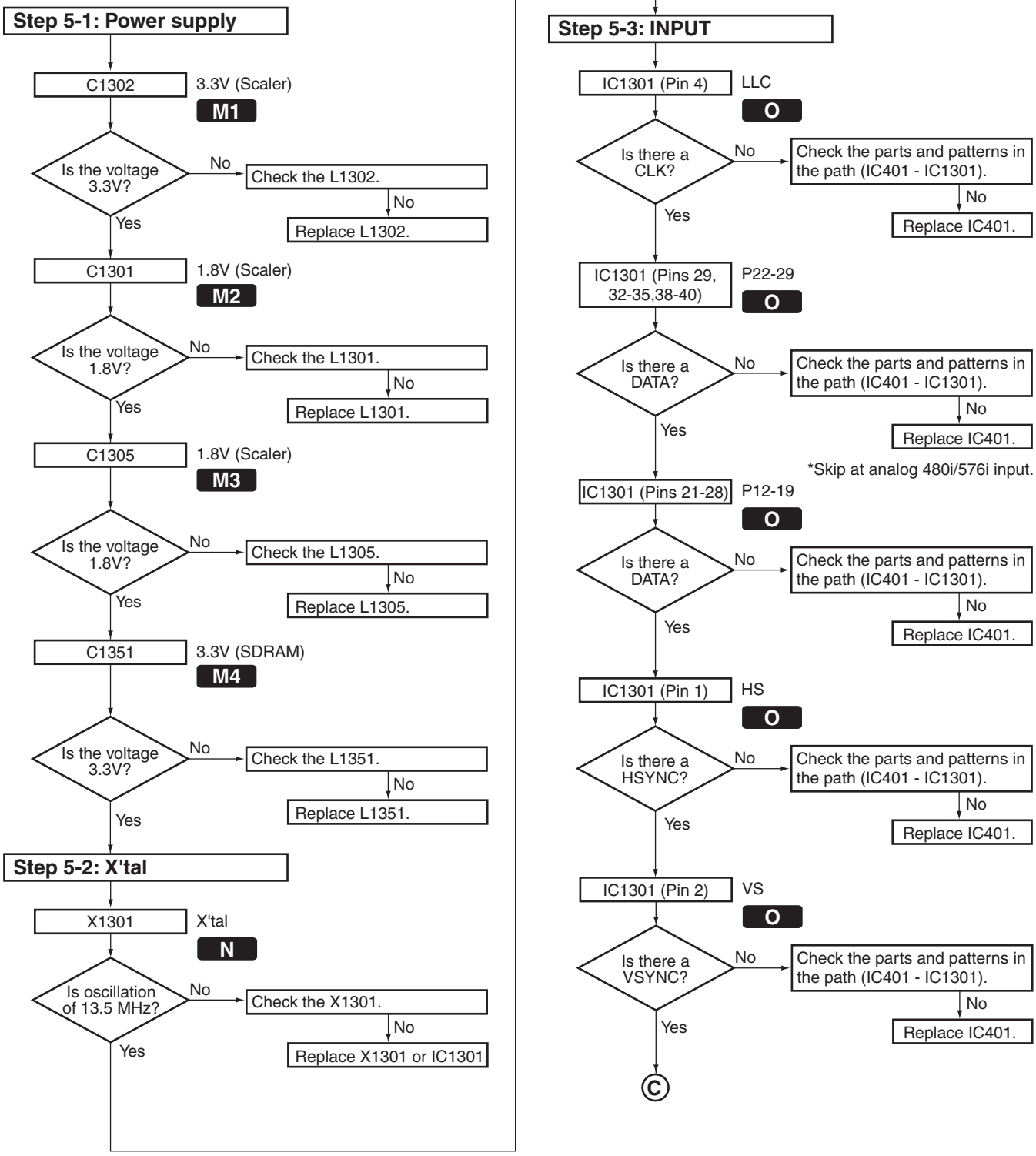

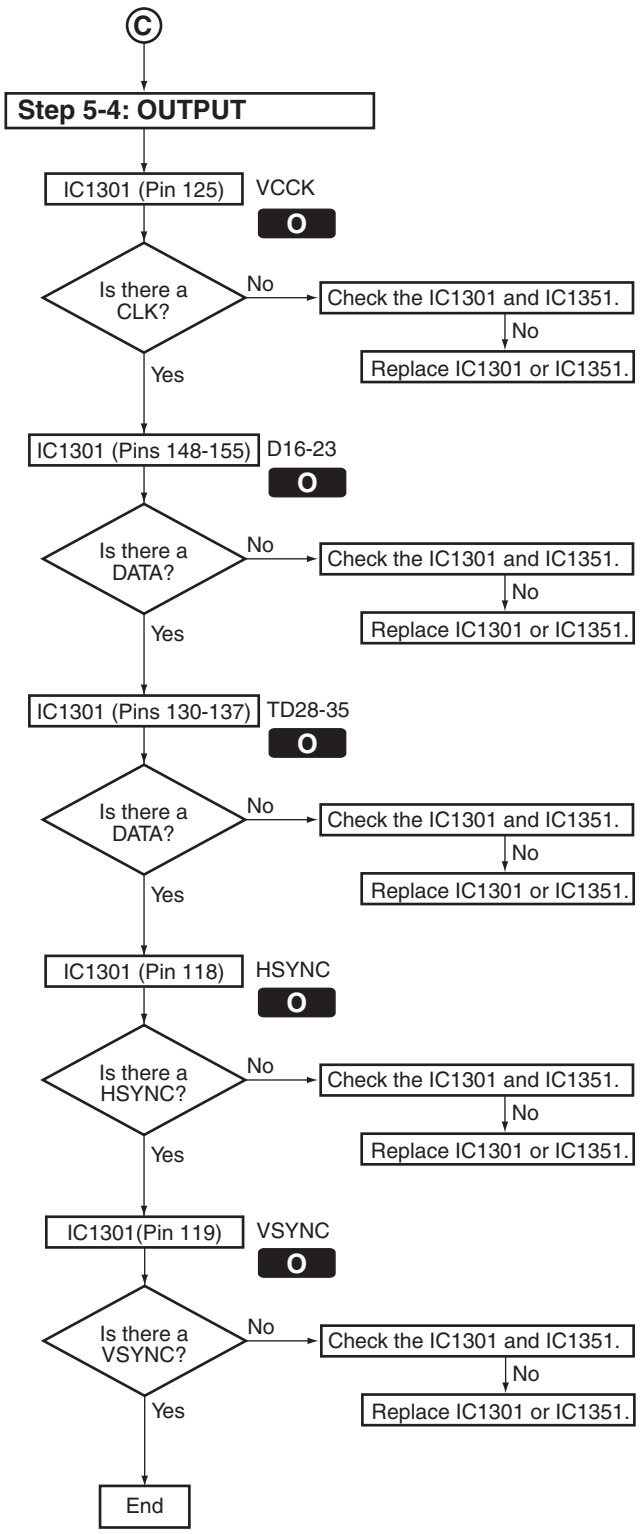
C
Step 5-4: OUTPUT
IC1301 (Pin 125)
VCCK
O
Is there a CLK?
No
Check the IC1301 and IC1351.
No
Replace IC1301 or IC1351.
Yes
IC1301 (Pins 148-155)
D16-23
O
Is there a DATA?
No
Check the IC1301 and IC1351.
No
Replace IC1301 or IC1351.
Yes
IC1301 (Pins 130-137)
TD28-35
O
Is there a DATA?
No
Check the IC1301 and IC1351.
No
Replace IC1301 or IC1351.
Yes
IC1301 (Pin 118)
HSYNC
O
Is there a HSYNC?
No
Check the IC1301 and IC1351.
No
Replace IC1301 or IC1351.
Yes
IC1301(Pin 119)
VSYNC
O
Is there a VSYNC?
No
Check the IC1301 and IC1351.
No
Replace IC1301 or IC1351.
Yes
End

## ■ HDMI & DVC Assy Check Points

**F** HDMI & DVC ASSY SIDE A

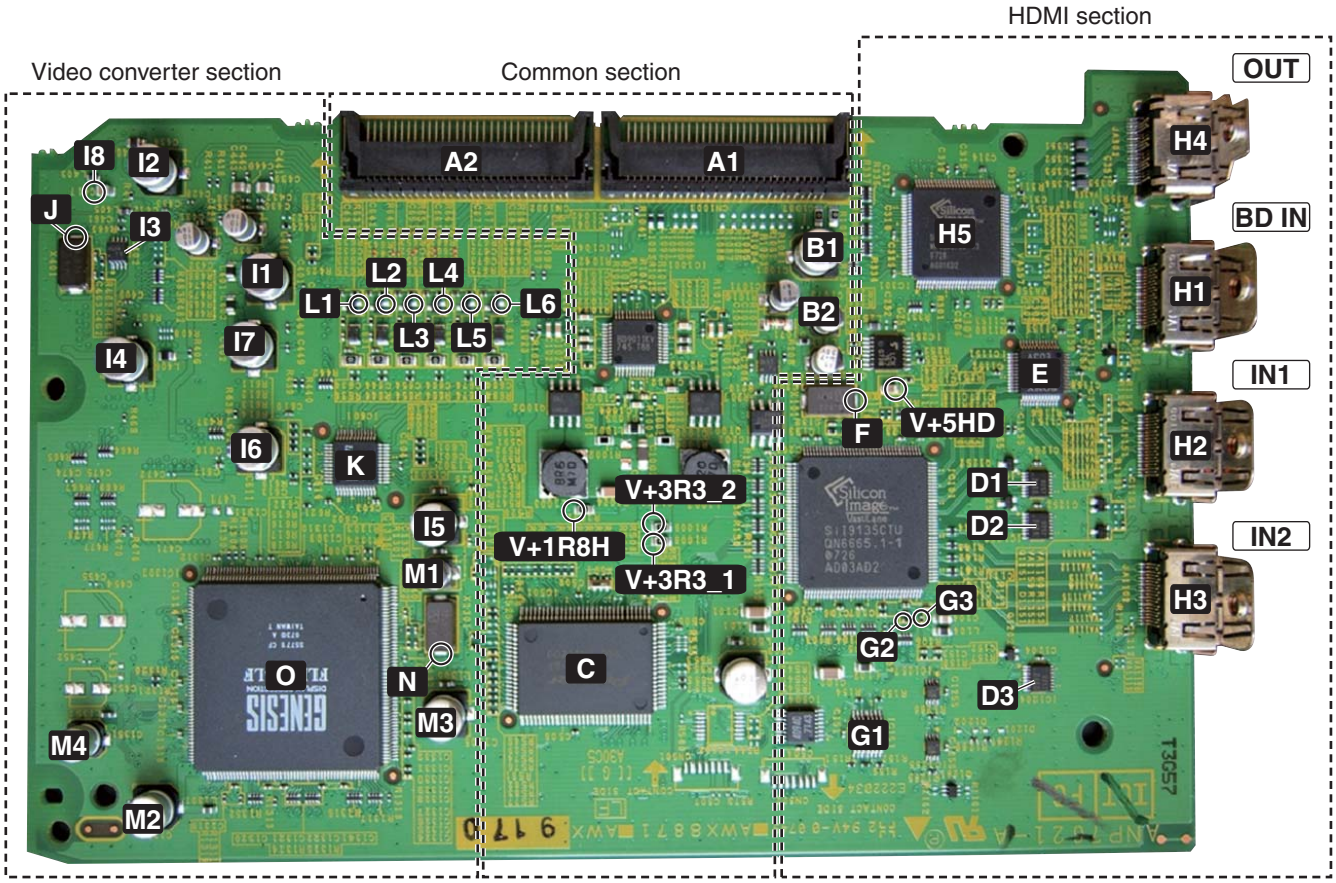

## [6] USB/iPod Troubleshooting

### Step 1: Check of power supply

* Turn ON the power of product and check the power supply by USB iPod function.

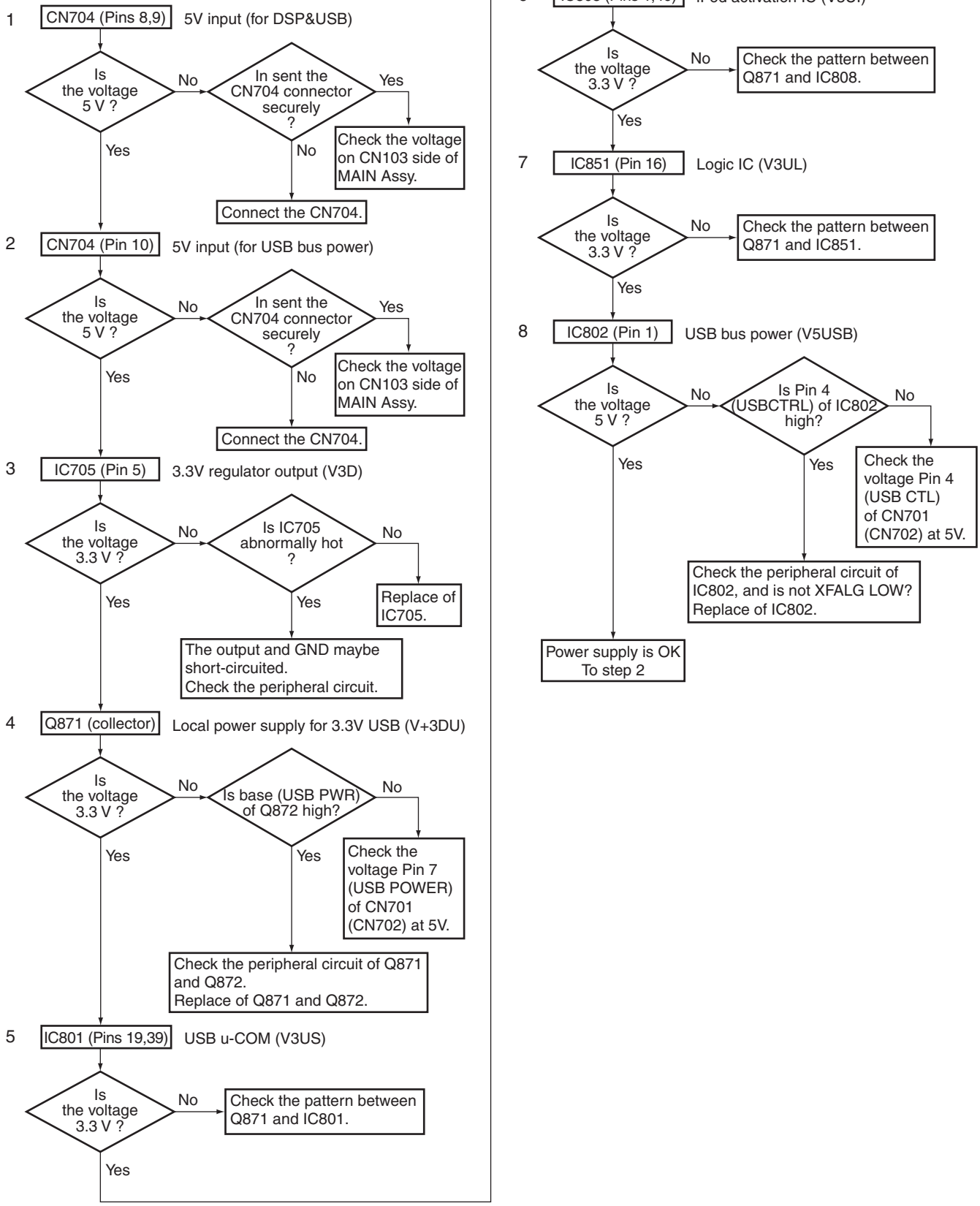

## Step 2: Check of oscillation

* Turn ON the power of product and check the power supply by USB iPod function.

9 IC801 (Pins 6,7) X801(CF1/CF2)

Does the oscillation waveform at 12MHz ?

- No → Is USBRST3 (Pin 2) high (3.3V)?
  - No → Check the Pin 8 (USB XRST) of CN701 (CN702).
    **Note :** USBRST3 is set to high during the operation.
  - Yes → Check the peripheral circuit of X801. Replace of X801.
- Yes ↓

10 IC808 (Pins 2,3) X881(XIN/XOUT)

Does the oscillation waveform 32.768MHz ?

- No → Recheck the power supply (3.3V) of IC808.
  **Note :** X801 oscillates when the power supply of IC808 is turned ON.
- Yes → Check of oscillation is OK To step 3

## Step 3: Check of operation of USB u-COM

11 IC801 (Pins 44,45) Main u-COM communication (USBDAI, USBDAO)

Do the USBDAO and USBDA perform communication with main u-COM?

- No → USBDAO and USBDAI should be set to High during the operation. Replace of IC801 or main u-COM.
- Yes ↓

Fig. 1

| | IC801 | IC701 (5 V → 3 V) | | CN701 (CN702) |
|---|---|---|---|---|
| USBDAI | Pin 44 | Pin 11 | Pins 12,13 | Pin 6 |

| | IC801 | IC702 (3 V → 5 V) | | CN701 (CN702) |
|---|---|---|---|---|
| USBDAO | Pin 45 | Pin 2 | Pin 18 | Pin 5 |

12 CN801 (Pins 7,8) D+/D-

* Make a confirmation with USB memory or iPod* connected.
* The iPod that can be used for this product is iPod 5G, iPod nano, iPod classic and iPod touch (as of April 1, 2008).

Can the waveform shown in Fig be observed ?

- No → Check the power supply voltage of IC801. Check the oscillation of X801. Check the USBRST. Replace of IC801.
- Yes → IC801 is OK. To step 4.

**Note :**
When the usable USB memory or iPod is connected, the waveform shown on right side can be observed in D-/D+.

Fig.

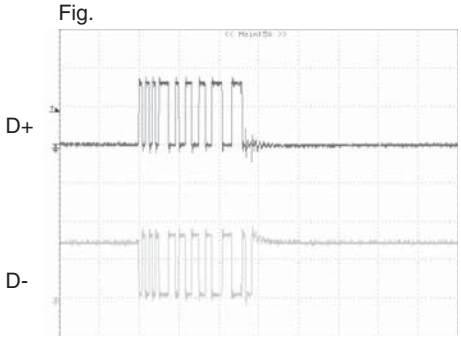


X: 1 μsec/div, Y: 2 V/div

As it is USB2.0 (FS),
the P-P value is approximately 3 to 3.5V.

## Step 4: iPod authentication process

When the USB playback is available and only the iPod cannot be played
* Connect the iPod and make a confirmation.

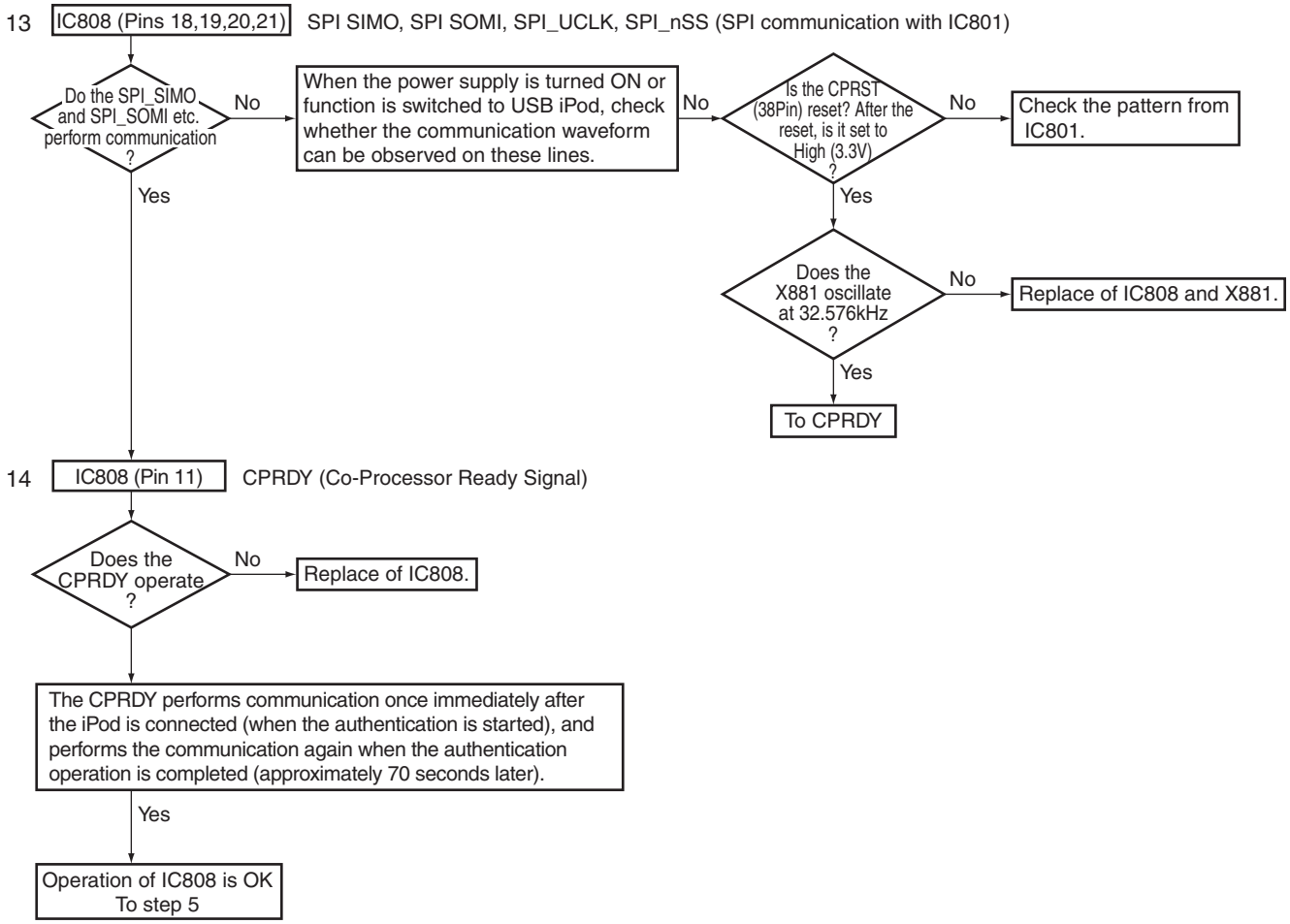

## Step 5: Digital audio output switching

With this product, the digital audio signal output route from IC801 (USB host) varies depending the USB reproduction and iPod reproduction.
It is controlled and switched by USAW (USB Audio Switch) using the IC851 (logic IC).

| | IC801 output Pin | Signal name | Meaning and details |
|---|---|---|---|
| USB playback | - | OSCU | Master clock (24.576MHz) from IC503 of DSP block is used. |
| | 33,36 | MSCK | Mass Strage Clock. |
| | 31 | MSDA | Mass Strage Data. |
| | 34 | MSSS | Mass Strage SS. |
| iPod playback | 18 | IMCK | iPod Master Clock. |
| | 26 | ISDAT | iPod Serial Data. |
| | 27 | IBCK | iPod Bit Clock. |
| | 28 | ILRCK | iPod LR Clock. |

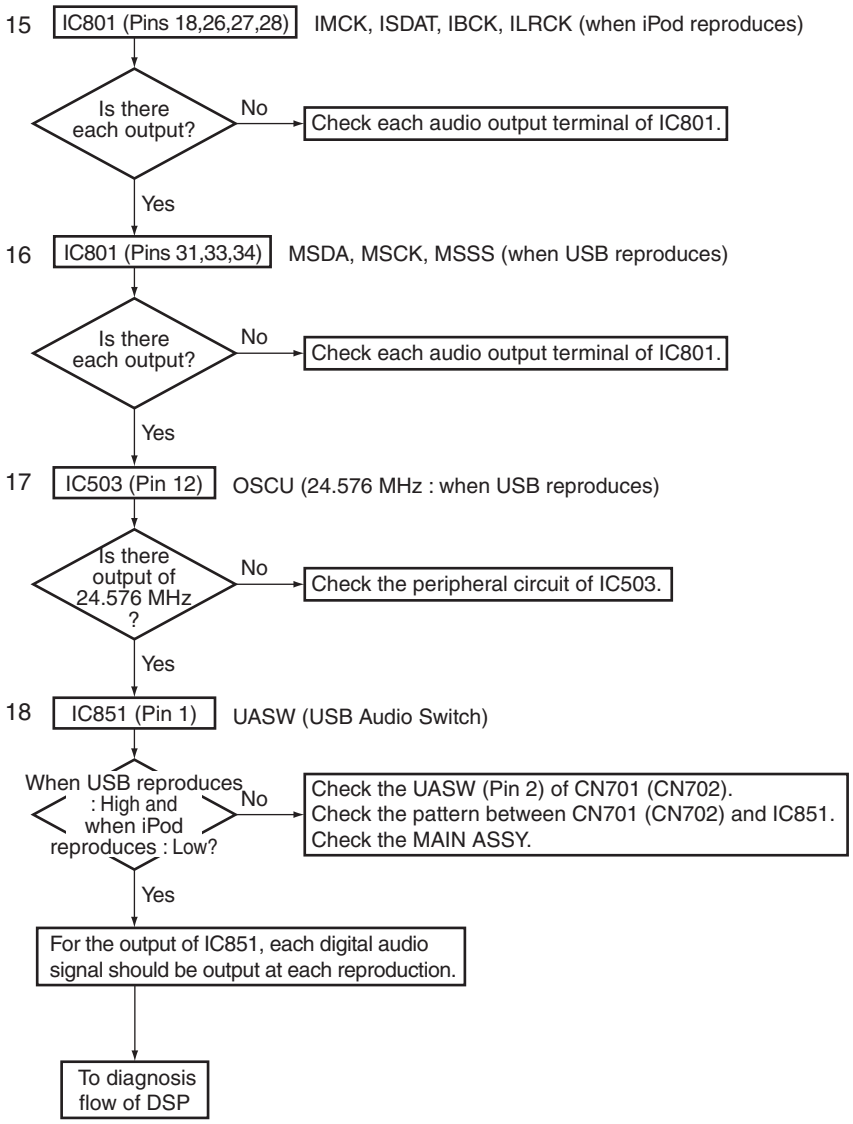

# 5.2 CIRCUIT DESCRIPTION

## [1] Protection Circuit Process List

| Item | Purpose | Detection Method | Process | Warning Indication | Remarks |
|---|---|---|---|---|---|
| DC detection | To detect amplifier damage (defect status)<br>A process to protect speakers (for protection of connected external devices) | Detects when the DC_PROTECT port becomes "L".<br>(Pin 103 of IC101) | Turns muting on and speaker relay off, then turns off the power after 3 seconds. Then flashes MCACC indicator. | Flashing "AMP ERR" for 3 seconds. | Once detected and turned the power off, input a key never again. If the DC_DET port becomes "H" within 3 seconds, the unit returns to normal condition automatically. |
| AMP overload | To detect overloading (abnormal status)<br>With low-load driving or a short circuit of the speaker terminals (for protection of the amplifier) | Detects when the OL_DET port becomes "L" (checks by interrupt).<br>(Pin 26 of IC101) | Turns muting on and speaker relay off, and immediately turns off the power. Then flashes PHASE CONTROL indicator. | None | |
| Overheat detection | Self reset type protection feature by temperature-rise of heat sink | Detects when the TEMP2 port becomes "H" .<br>(Pin 24 of IC3004) | Turns muting on and speaker relay off, then turns off the power after 3 seconds. | Flashing "OVERHEAT" for 3 seconds. | If the TEMP2 port becomes "L" within 3 seconds, the unit returns to normal condition automatically. |
| 12V trigger failure detection | To detect the shortcircuit of 12V trigger output (load more than 50mA) (for protection of the amplifier) | Detects when the 12VDET port decoms "H".<br>(Pin 122 of IC101) | Turns 12V trigger output to off. | Flashing "12V TRG ERR" | Continue showing warning.<br>Release the FL indication by switching the INPUT SEL or the turns the power off. |

## ■ DC Detection Circuit

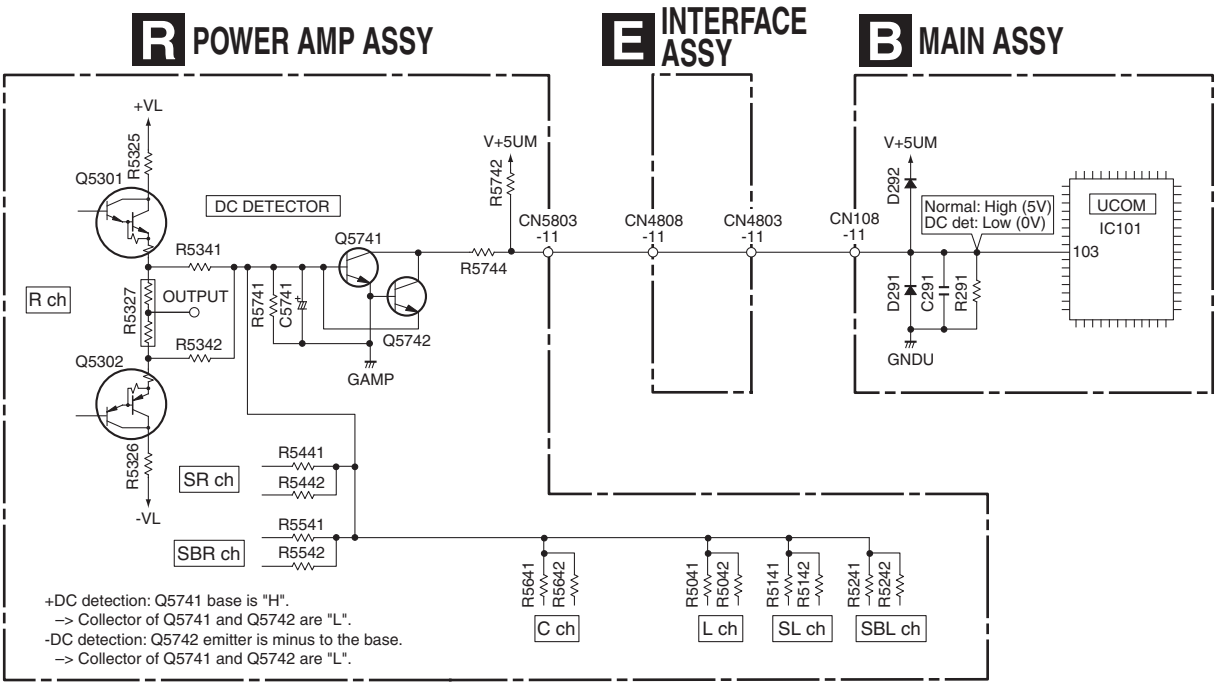

## ■ OL (Over Load) Detection Circuit

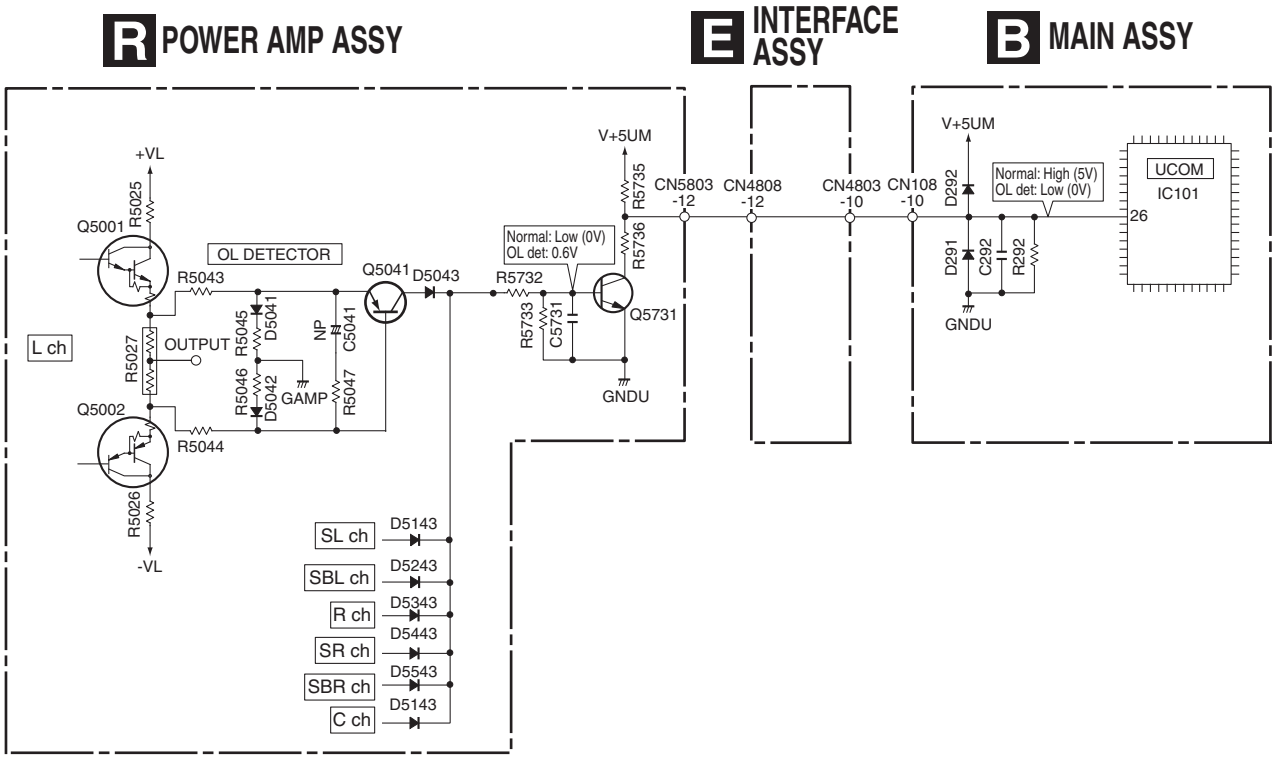

## [2] Protection Circuit Process List (XPROTECT)

| Item | Purpose | Detection Method | Process | Warning Indication | Remarks |
|---|---|---|---|---|---|
| XPROTECT | AMP power supply circuit and Transformer short circuit detect. (defect status)<br><br>Observe CN5701 pin3 or pin5 voltage, VL+ and VL- | Detects when the XPROTECT port becomes "L".<br>(Pin 102 of IC101) | Turns muting on and speaker relay off, and immediately turns off the power. Then flashes DIGITAL PRECISION PROCESSING indicator. | None | Once detected and turned the power off, input a key never again. |

## ■ XPROTECT Circuit

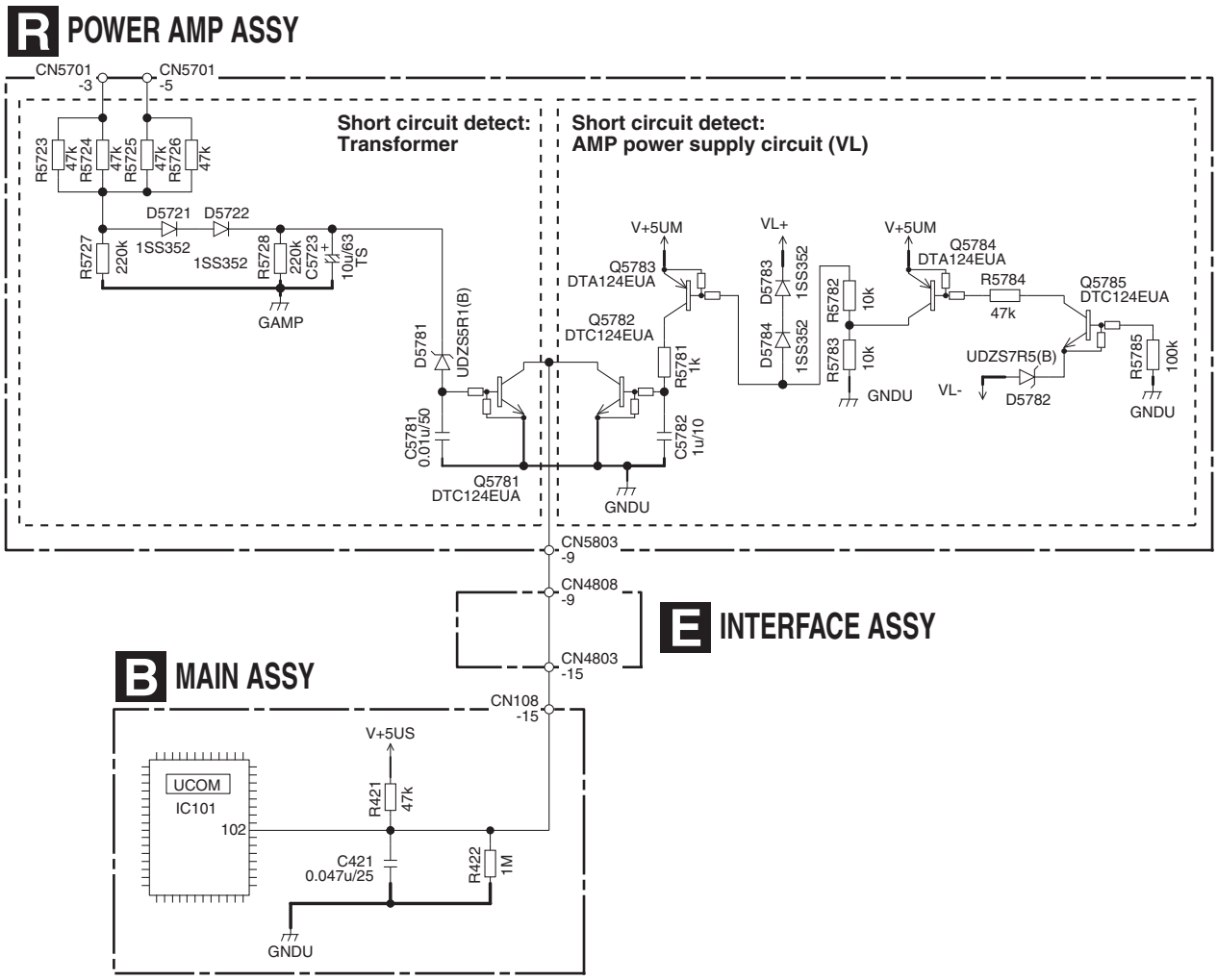

# 6. SERVICE MODE
## 6.1 TEST MODE

### [1] Version indication

**[Purpose]**

The versions for various microcomputers and DSP firmware are displayed.

**[How to enter/exit]**

During Standby mode, simultaneously press and hold the “STANDBY/ON” and “MULTI CH IN” keys for 5 seconds to enter this mode.

This mode is automatically exited when the indications of all versions have finished.

**[Basic operations]**

| FL Display | Description of Version Indications | Duration (sec.) | Devices that can be considered generally normal, with the corresponding indications |
|---|---|---|---|
| POWER OFF | | | |
| ↓ | | | |
| M0.501 E0.501 | Mx.xxx : Main microcomputer<br>Ex.xxx : EVENT microcomputer | 5 | Main microcomputer and EVENT microcomputer |
| ↓ | | | |
| H0.503 | Hx.xxx : HDMI microcomputer | 5 | HDMI microcomputer |
| ↓ | | | |
| f0.515 | fx.xxx : DSP Firm version | 5 | DSP firmware |
| ↓ | | | |
| 03TXH/KU/CA | | 5 | model/destination |
| ↓ | | | |
| Normal display | | | |

**[Notes]**

1. If the version indication becomes "**," a failure in communications between the corresponding microcomputers or a failure in the corresponding microcomputers is likely.
2. In this submode, the user settings will not be cleared.

## [2] Detected protection history

### [Purpose]

The numbers of detections for various protection processes are displayed.

### [How to enter/exit]

During Standby mode, simultaneously press and hold “STANDBY/ON” and “BD” keys for 5 seconds to enter this mode.

### [Basic operations]

| FL Display | Description of Indications | Duration (sec.) |
|---|---|---|
| POWER OFF | | |
| DC : 000 | Number of DC detections | 3 |
| OVER: 010 | Number of overload detections | 3 |
| CON : 002 | Number of detections of cord disconnection (DC and OL DET line) (simultaneous detections of DC and OVERLOAD) | 3 |
| FAN : 000 (*) | Number of detections of fan abnormalities | 3 |
| TEMP: 255 | Number of detections of abnormal temperature | 3 |
| Normal display | | |

”FAN : 000” is always displayed. (This model has no FAN)

### [Description]

When the keys are pressed, the numbers of DC detections, overload detections, detections of connectors disconnection inside unit (It is detected by both DC and OVERLOAD detections.), detections of fan abnormalities, and detections of abnormal temperature are displayed for 3 seconds each, in that order.
The maximum value of each detections is 255.

## [3] Error indications when an abnormality in the amplifier system is detected

**[Purpose]**

An error message is displayed when an abnormality in the amplifier system is detected.

**[Error Messages]**

| FL Display | Status | Duration (sec.) |
|---|---|---|
| AMP ERR | When AMP DC is detected | Flashes 3 times. |
| AMP OVERHEAT | When a thermal shutdown (abnormal temperature), etc. is detected | Flashes 3 times. |
| 12V TRG ERR | When the 12V trigger circuit is short-circuited | Flashes |
| HDMI NG | When an error is detected during communication with the HDMI microcomputer | Flashes |
| HDCP ERROR | When an HDCP ERR is detected. | Flashes 5 seconds. |
| NOT SUPPORT | When the monitor outputs a non supported video format. | Flashes |
| USB ERROR1 | When the overload USB device(over 500mA) is connected | Flashes |

**[Description]**

AMP ERROR : After a failure in the amplifier block or high DC output is detected, the shutdown process starts, then the power will be shut off. Then the MCACC LED will flash. The power cannot be turned on again. If you wish to turn on the unit after a shutdown activated by DC detection, enter DC detection cancellation mode, by proceeding with the steps described in "How to enter release mode" below.

AMP OVERHEAT : The temperature of the amplifier is abnormally high.

12V TRG ERR : The 12V trigger output is short-circuited.

After a failure is detected, the shutdown process starts, then the power will be off. The power can be turned on again in Normal mode.

HDMI NG : There is no communication response from the HDMI u-com.

HDCP ERR : The monitor is non-HDCP type or the monitor is standby state.

NOT SUPPORT : The output resolution is not correspond to the monitor at analog. –>HDMI(scaler exist)

USB ERROR1 : The connected USB device is overload

**[How to enter release mode]**

Press and hold "STANDBY/ON" and "AUTO SURR" keys on the front panel simultaneously for 2 seconds in standby mode.

# 7. DISASSEMBLY

**Note 1:** Even if the unit shown in the photos and illustrations in this manual may differ from your product, the procedures described here are common.
**Note 2:** For performing the diagnosis shown below, the following jigs for service is required:
- 11P board to board extension jig cable (GGD1576)
- 19P board to board extension jig cable (GGD1577X2)
- 11P FFC (GGD1578)

## 1. Before the Power Amp Assy is removed

Before the Power Amp Assy is removed, discharge C5721 and C5722 on the POWER AMP Assy, as indicated below.
If you don't, the protectors (P5001 and P5002) on the POWER AMP Assy may be open, and DC voltage may be generated at the power amplifier output, which will result in "AMP ERR."
The discharge operation indicated below is performed when the MAIN Assy and the AUDIO IN Assy are removed temporarily to remove the screws of the Regulators attached to the Chassis for a diagnosis of the POWER AMP Assy B side.

**[Procedure]**

① Unplug the AC Power Cord.

② Discharge C5721 and C5722 on the POWER AMP Assy by discharging Pin 1 and Pin 4 of D4701on the DIODE Assy to the earth point of POWER AMP Assy.
**Note:** For discharging, use a load of 100Ω, 3W or more, to protect the IC protectors. Do NOT discharge instantly by short-circuiting.

③ Check that the voltage between the electrodes of each C5721 and C5722 is 1V or less.

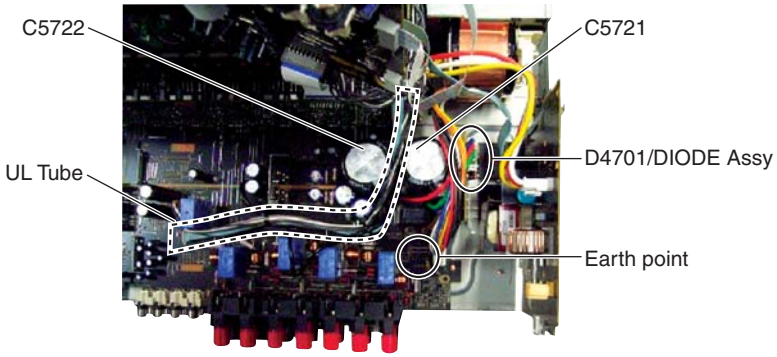


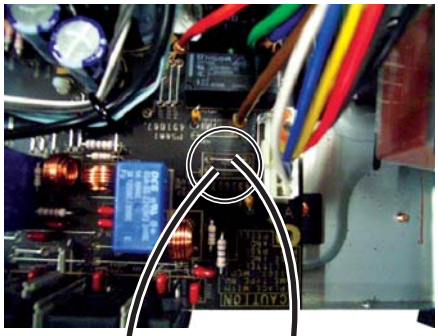

Enlarged view of the GND.

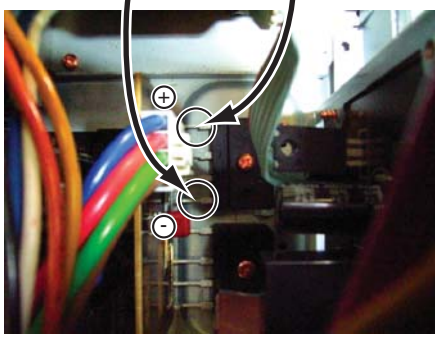


Enlarged view of the D4701 terminal discharge point.

Diode lead
Caution shall be exercised when touching the lead with a short-circuit jig so as not to touch the lead and the chassis simultaneously.

**Note :** As mentioned below, detach the Rear Panel, re-fasten the screws at the corresponding points, and connect the Chassis to the ground.

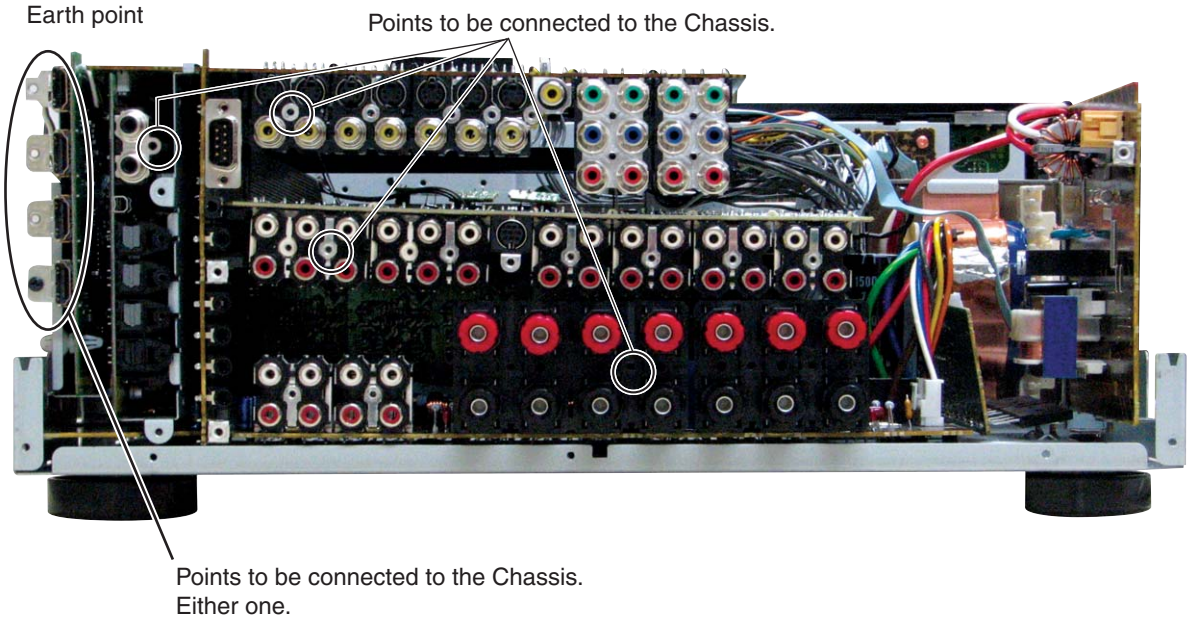

## 2. Diagnosis

### 1 POWER AMP Assy

① Remove the Rear Panel.

② Remove the MAIN Assy (equipped with HDMI&DVC Assy and DSP&USB Assy) and the AUDIO IN Assy from the INTERFACE Assy.

③ Discharge C5721 and C5722.
(See the "discharge procedures.")

④ Remove the two screws that fix the Regulators attached to the Chassis.

⑤ Remove the two Push Rivets and the two screws that fix the POWER AMP Assy.

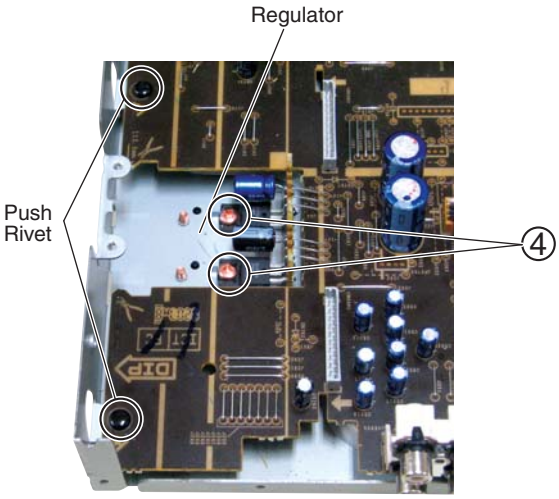


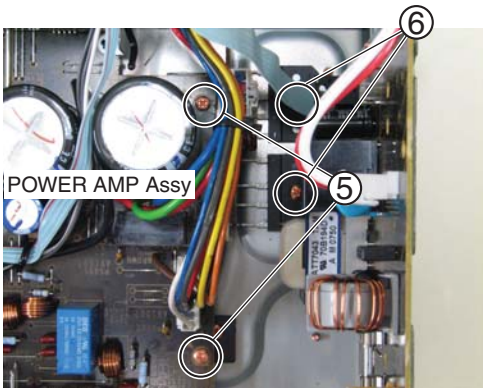


⑥ Remove the two screws that fix the diode of the DIODE Assy.

⑦ Reassembling the MAIN Assy (equipped with HDMI&DVC Assy and DSP&USB Assy) and the AUDIO IN Assy to the INTERFACE Assy.

⑧ Reassembling the Rear Panel.
(Keep a space for earth and about six to seven screws fixing places. Do not attach screws with the Chassis.)

⑨ Remove the Locking Card Spacer from the Chassis using Cutting Pliers.

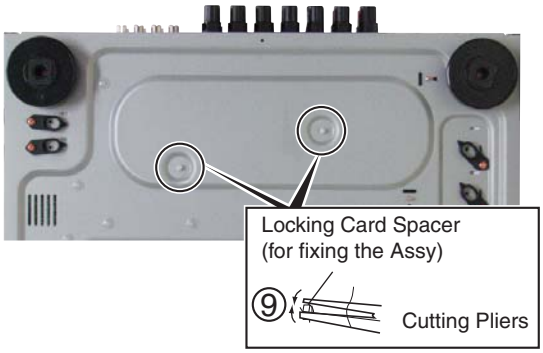


⑩ Remove the four screws that fix the Heat Sink V5S.

⑪ Cut the Binder.

⑫ Remove the four screws that fix the Power Transformer. Place a high insulating material under the Power Transformer to raise it.

⑬ Raise the block and diagnose the POWER AMP Assy B side.

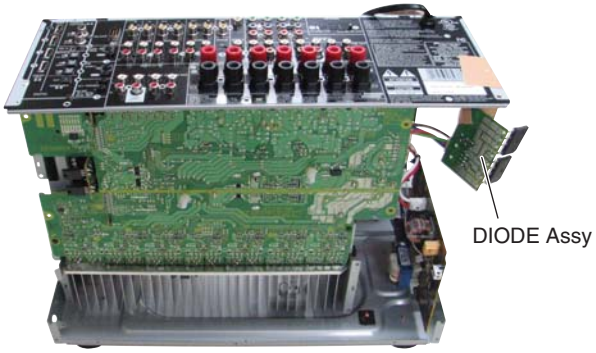


**Caution:**
Fix the DIODE Assy to the Rear Panel with Tape so that it will not come closer to other Assy.

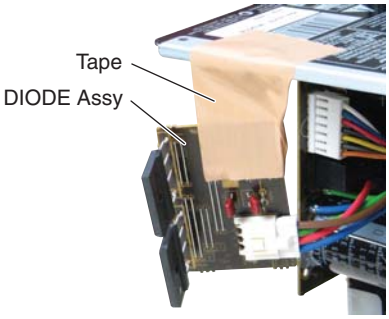


**Diagnosis**

## 2 MAIN Assy, AUDIO IN Assy, INTERFACE Assy

① Remove the Rear Panel.

② Remove the screw that fix the MAIN Assy and the Wire Styling of the PCB Binder.

③ Remove the two screws that fix the HDMI Shield V5S.

④ Connect the four extension jig cables (two 19P board to board extension jig cable, one 11P board to board extension jig cable and 11P FFC).

⑤ Raise the MAIN Assy with the HDMI&DVC Assy and DSP&USB Assy attached and place it on the Heat Sink V5S. Fix the lower part of the HDMI&DVC Assy with the PCB Binder.

Position of Wire Styling

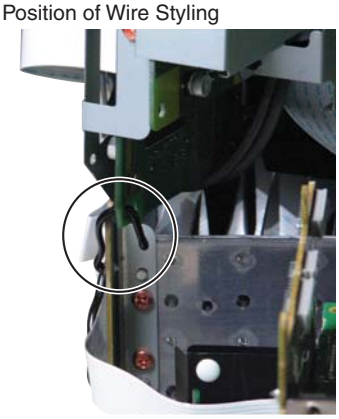

Position of Wire Styling (The above angle is different.)

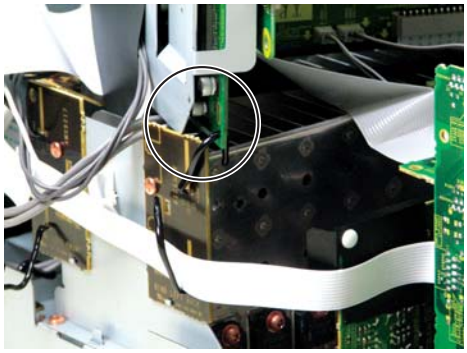

⑥ Connect the earth point.

⑦ Diagnose the MAIN Assy A side or the AUDIO IN Assy B side, and the INTERFACE Assy.

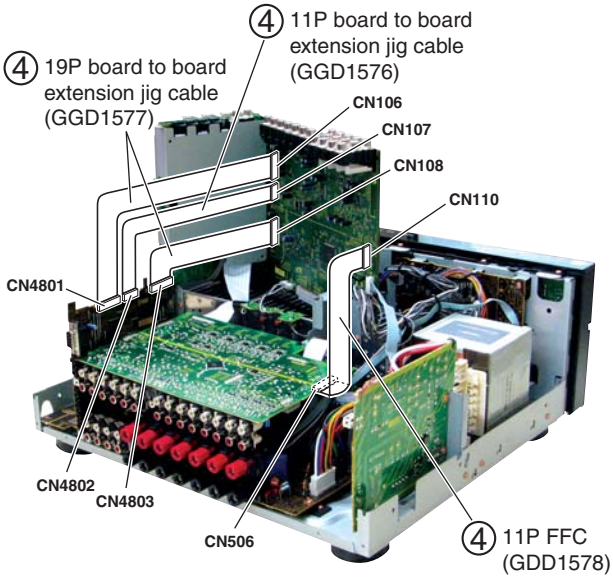


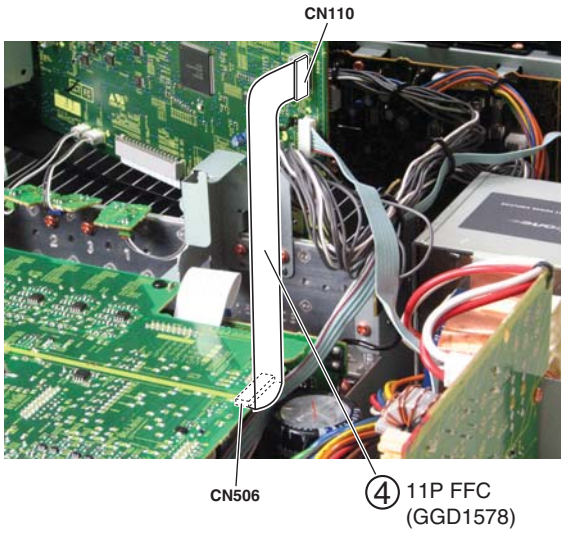


**Diagnosis**

# 8. EACH SETTING AND ADJUSTMENT
## 8.1 HOW TO UPDATE FIRMWARE

### [1] MAIN, HDMI and EVENT microcomputer

**[Purpose]**

Refer to this section when updating the firmware of each microcomputer is required by the service information, etc.

**[Necessary Tools]**

- PC with a serial port
- RS-232C cable (9-pin to 9-pin, cross)
- Firmware ("mot" extension)
- Program for updating (ufu.exe: ver. 1.08)

- RS-232C straight cable (9pin female ↔ 25pin male)
- RS-232C Interface jig : GGF1348
- 7 pin FFC : VDA1681

for VSX-1018AH

**[Connections (except VSX-1018AH)]**

Connect as indicated in the figure right:

(MAIN microcomputer)
(EVENT microcomputer)
(HDMI microcomputer)

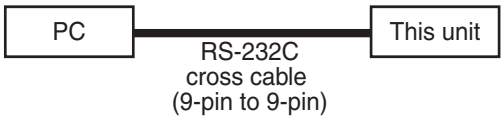


Pin-out diagram of RS-232C cross cable

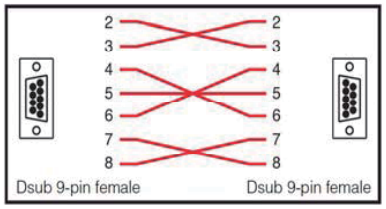


**[Connections for VSX-1018AH]**

Connect as shown in the figure below.

(MAIN microcomputer)
(EVENT microcomputer)
(HDMI microcomputer)

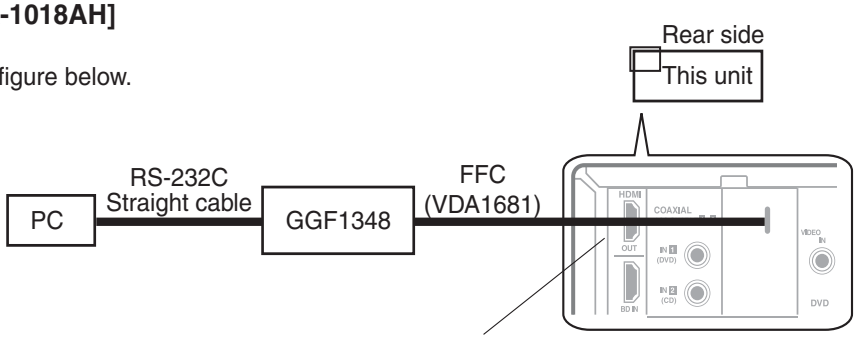


Slit for an HDMI for downloading

FFC CONTACT SIDE : RIGHTWARD

**[Note]**

**Do NOT disconnect the AC power cords of this unit nor the PC.**

**[Procedures]**

1. Set the main volume level to "---dB" then turn off the unit (Standby mode).
2. Connect the PC and the unit as shown in "Connections".
3. **MAIN ucom:**
   Simultaneously press and hold the "STANDOBY/ON" and "iPod USB" keys for about 5seconds.
   The unit is turned on and "MAIN DOWNLOAD" is displayed.
   **HDMI ucom:**
   Simultaneously press and hold the "STANDOBY/ON" and "FM/AM" keys for about 5seconds.
   The unit is turned on and "HDMI DOWNLOAD" is displayed.
   **EVENT ucom:**
   Simultaneously press and hold the "STANDOBY/ON" and "VIDEO" keys for about 5seconds.
   The unit is turned on and "EVENT DOWNLOAD" is displayed.
4. Double-click the "UFU.exe".
5. Check that "Full" is selected in Mode Select.
6. Select the firmware file (.mot file) for updating each ucom.
   **Note**: Do NOT download the firmware file for other ucom.
7. Select the communication speed.
   • Basic speed: 19200
   • Data transfer speed: 57600
8. Click the "START" button.
9. "Completed" is displayed in the "UFU.exe" window.
10. Disconnect then reconnect the AC power cord of the unit. If the unit is not reset, retry from step2.
11. Check the version.
    Please refer to 6.1 TEST MODE "Version indication" and check that the version has been changed to a new one.

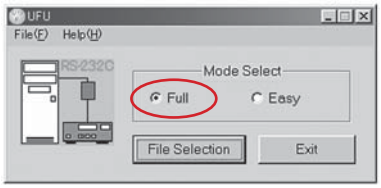


Check that "Full" is selected in Mode Select.

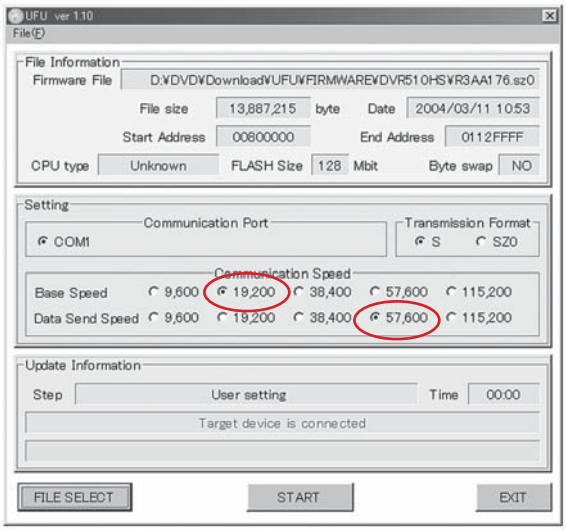


Select the communication speed.
• Base Speed: 19200
• Data Send Speed: 57600

## [2] DSP FLASH ROM

### [Purpose]

Refer to this section when updating the DSP flash ROM firmware is required by the service information, etc.
It is able to update the DSP flash ROM firmware by playing back a CD-R which is recorded a DSP firmware (.wav file) via digital connection.

### [Necessary Tools]

- DVD player
- Coaxial cable or Optical cable
- Update disc (CD-R disc)

**Note:**
Please use DVD player based on MTK system (DV-270, 370, 373, 575K, 280, 380, 383, etc.),Mitsubishi system (DV-59AVi, 868AVi, S969AVi, 668AVi, etc.) and Fujitsu system (DV-343, 444, 545, etc.).
DO NOT use DVD player based on ST system (DV-353, 454, 250, 400, 555K, 260, 363, 464, 466, 563, etc.).
The factory confirmed that DVD players based on ST system cannot send the correct data to the receiver.
You can check the base system of our DVD players on the firmware version list at PSN web (Niis).

### [Connections]

Connect as shown in the figure below.

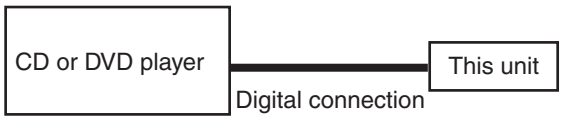


### [Preparations]

Burn the DSP flash ROM firmware (.wav file) to a CD-R disc using commercially available burning software.
It is necessary to select the writing format to "For music player", not "For PC data".

**Note:**
Depending on a burning software, data on a CD-R may not be worked for updating the DSP flash ROM.
If the HDMI indicator does not flash when playing back a update disc, the disc is not able to use for updating.
Burn the DSP flash ROM firmware to a CD-R disc, using other burning software.

### [Note]

- Do NOT disconnect the AC power cords of this unit and the CD/DVD player during a updating.
- "OK" is appeared on the FL display when updating is completed.
  If the "OK" is not appeared, updating has not been completed correctly. Be sure to perform the updating procedures again.

### [Procedures]

1. Check the version of the DSP flash ROM (1st DSP) and the DSP ucom.
   Please refer to 6.1 TEST MODE "Version indication".

2. Connect a CD or DVD player
   (1) Connect the CD or DVD player for updating to any digital input jack of this unit.
   (2) Select the input source to the connected source by pressing input source key.
   (During the default setting, COAX-1 belongs to DVD, OPT-1 belongs to TV SAT.)

3. Confirm that the digital input signal is locked on the AV receiver.
   (1) Play back the update disc on the CD/DVD player.
   (2) Set the signal select setting of the AV receiver to the "Auto" then confirm that the Signal Select indicator is Digital.

**[Procedures]**

4. Enter the DSP flash ROM updating mode.
   (1) Skip to the beginning (time:0:00) of the first track of the update disc and set to Pause.
   (2) Set the main volume level of the AV receiver to "---dB" then turn off the unit (Standby mode).
   (3) Simultaneously press and hold the "STANDOBY/ON" and "XM/SIRIUS" keys for about 5seconds.
   The unit is turned on and "DSPF DOWNLOAD" is displayed.

5. Play back the first track of the update disc.
   (1) Release Pause mode of the CD/DVD player and start to play back the DSP update program stream.
   (2) After 5-10 seconds, the HDMI indicator starts flashing. Be sure to check it.
   Flashing of the HDMI indicator means that the unit is receiving a correct streem and the updating is in progress.
   **Note:**
   Do NOT turn off the unit while the HDMI indicator is flashing. If the unit is turned off, be sure to go back to Step 4.
   (As the Flash ROM goes into unusual status if the power is off during updating, the unit may not start properly.)
   Even in such a case, you can restore the unit by performing Steps 4 to 7.

6. Wait until "OK" is appeared on the FL display.
   (1) It takes about 2 minutes for updating.
   (2) After confirming the "OK", stop or pause the CD/DVD player and wait for 5 seconds then turn off the power of the AV receiver (Standby mode).

7. Check the version of the DSP flash ROM (1st DSP).
   Please refer to 6.1 TEST MODE "Version indication" and check that the version has been changed to a new one.

## [3] Troubleshooting of DSP FLASH ROM UPDATE

| Symptoms | Items to be checked |
|---|---|
| The HDMI indicator does not start flashing, and 10 seconds or more has elapsed after a updating stream is input. | Is DSP writing mode entered? (Simultaneously press and hold the "STANDOBY/ON" and "XM/SIRIUS" keys.) |
| | Is DIR locked? –> You can check this on the Signal Select indicator if the input is set to Auto and Digital. If DIR is not locked, check the input function and digital connections between the player and this unit. |
| | Is the stream (Track No., etc.) being played back correct? |
| | Are compressed audio signals, such as WMA, being input when or after writing mode is entered ? –> As soon as the compressed audio signals are input, writing mode is exited. It is recommended that playback be paused at the beginning of the track of a updating stream then writing mode is entered by simultaneous pressing of the keys. Release Pause mode after entering of writing mode is confirmed. |
| Writing mode is not entered upon simultaneous pressing of the "STANDOBY/ON" and "XM/SIRIUS" keys. | Is the volume control of the receiver set to -∞dB? If not, set it to -∞dB (- - -). |
| | Reset the receiver then enter writing mode.<br>**Note:** All the user data stored in the receiver are cleared when the receiver is reset. |
| "OK" is not displayed. | Is the track played back from the beginning to the end?<br>–> With the receiver in writing mode, be sure to play back the stream track twice. |
| | If an error is generated because any scratches on the disc, "OK" is not displayed.<br>–> In such a case, play back the same stream stored on another track as backup. |

A

B

C

D

E

F

# 9. EXPLODED VIEWS AND PARTS LIST

*NOTES:* ● *Parts marked by "NSP" are generally unavailable because they are not in our Master Spare Parts List.*
● *The ⚠ mark found on some component parts indicates the importance of the safety factor of the part. Therefore, when replacing, be sure to use parts of identical designation.*
● *Screws adjacent to ▼ mark on product are used for disassembly.*
● *For the applying amount of lubricants or glue, follow the instructions in this manual. (In the case of no amount instructions, apply as you think it appropriate.)*

## 9.1 PACKING SECTION

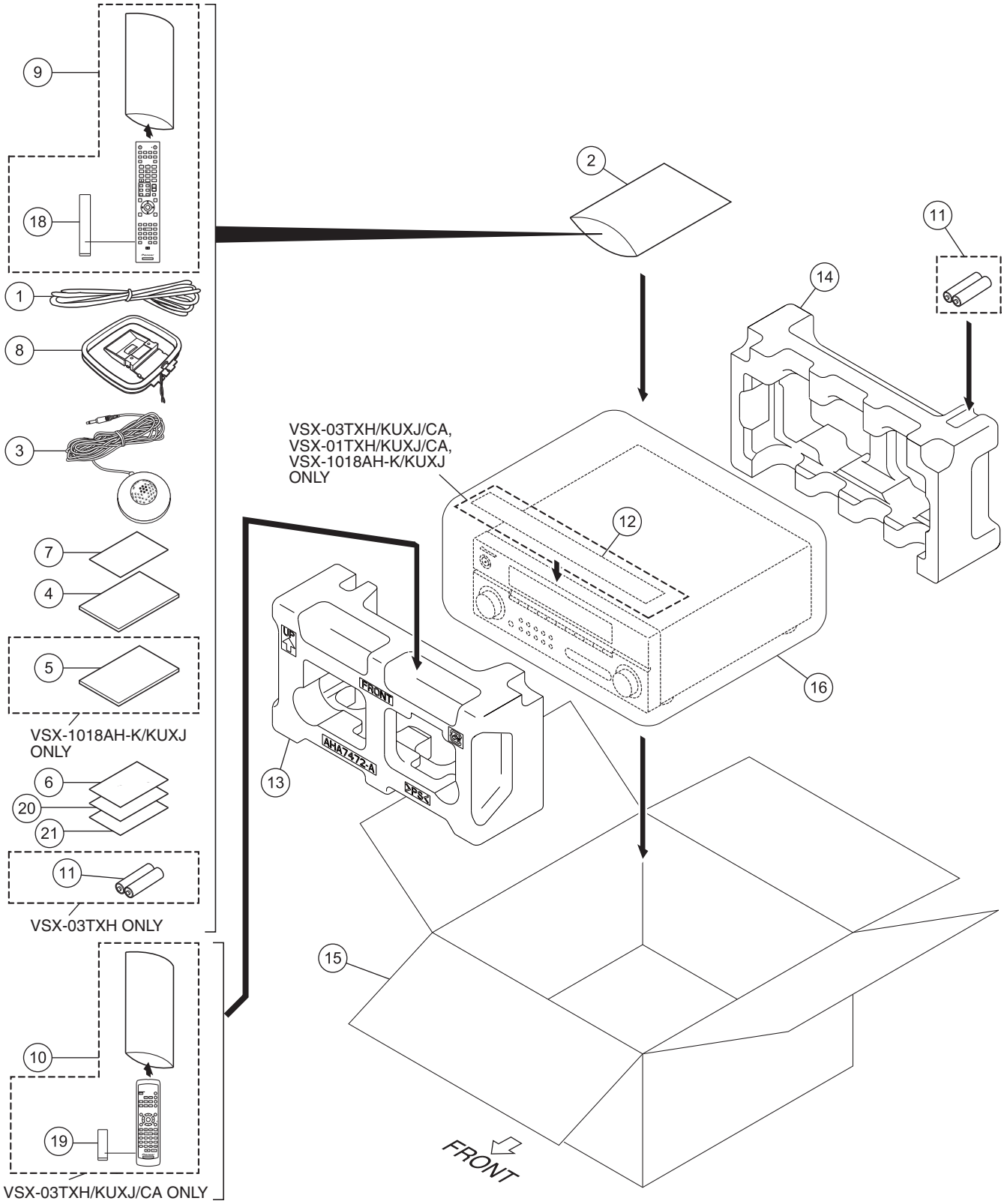

## PACKING SECTION PARTS LIST

| Mark | No. | Description | Part No. |
|---|---|---|---|
| | 1 | FM Wire Antenna | ADH7030 |
| NSP | 2 | Polyethylene Bag | AHG7117 |
| | 3 | Setup Microphone (for Auto MCACC setup) | APM7008 |
| | 4 | Operating Instructions (English) | See Contrast table(2) |
| | 5 | Operating Instructions (Spanish) | See Contrast table(2) |
| | 6 | Caution Sheet (Spanish/English) | ARM7083 |
| NSP | 7 | Warranty Card | See Contrast table(2) |
| | 8 | AM Loop Antenna | ATB7013 |
| | 9 | Remote Control Unit | See Contrast table(2) |
| | 10 | Sub Remote Control Unit | See Contrast table(2) |
| NSP | 11 | Dry Cell Battery AA/LR6 | VEM1031 |
| | 12 | Protection Sheet LX | See Contrast table(2) |
| | 13 | Front Pad V5SEL | AHA7472 |
| | 14 | Rear Pad V5SEL | AHA7473 |
| | 15 | Packing Case | See Contrast table(2) |
| | 16 | Packing Sheet | RHC1023 |
| | 17 | • • • • • | • • • • • |
| | 18 | Battery Cover | VZN1025 |
| | 19 | Battery Cover | AZN8018 |
| | 20 | Errata V5S KU | See Contrast table(2) |
| | 21 | Errata V5S UL | See Contrast table(2) |

## (2) CONTRAST TABLE

VSX-03TXH/KUXJ/CA, VSX-9130TXH-K/KUXJ, VSX-01TXH/KUXJ/CA and VSX-1018AH-K/KUXJ are constructed the same except for the following:

| Mark | No. | Symbol and Description | VSX-03TXH/ KUXJ/CA | VSX-9130TXH-K/ KUXJ | VSX-01TXH/ KUXJ/CA | VSX-1018AH-K/ KUXJ |
|---|---|---|---|---|---|---|
| | 4 | Operating Instructions (English) | ARB7395 | ARB7396 | ARB7399 | ARB7400 |
| | 5 | Operating Instructions (Spanish) | Not used | Not used | Not used | ARC7832 |
| NSP | 7 | Warranty Card | ARY7007 | ARY7045 | ARY7007 | ARY7045 |
| | 9 | Remote Control Unit | AXD7517 | AXD7525 | AXD7517 | AXD7525 |
| | 10 | Sub Remote Control Unit | AXD7529 | Not used | Not used | Not used |
| | 12 | Protection Sheet LX | AEH7030 | Not used | AEH7030 | AEH7030 |
| | 15 | Packing Case | AHD8574 | AHD8575 | AHD8580 | AHD8581 |
| | 20 | Errata V5S KU | Not used | Not used | Not used | ARX7112 |
| | 21 | Errata V5S UL | Not used | ARX7116 | Not used | ARX7116 |

# 9.2 EXTERIOR SECTION

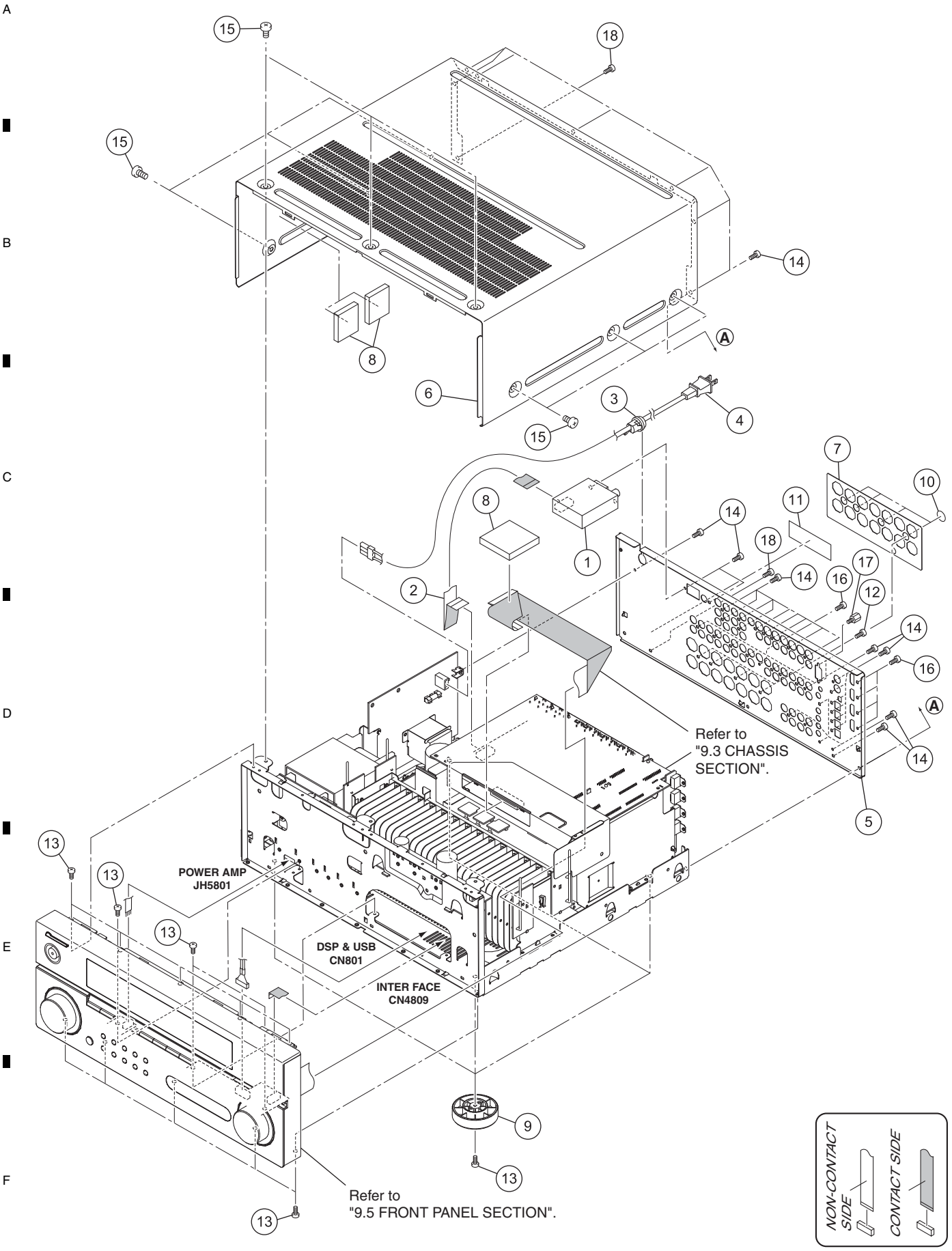

## EXTERIOR SECTION PARTS LIST

| Mark | No. | Description | Part No. |
|---|---|---|---|
| | 1 | FM/AM Tuner Unit | AXX7250 |
| | 2 | 11P FFC/60V (J56) | ADD7639 |
| | 3 | Cord Stopper | CM-22C |
| ⚠ | 4 | AC Power Cord | VDG1075 |
| | 5 | Rear Panel | See Contrast table(2) |
| | 6 | Bonnet B V5SEL | AZN8034 |
| | 7 | SP Sheet V5S | AEC7605 |
| | 8 | Top Cushion | AED7121 |
| | 9 | Insulator | See Contrast table(2) |
| | 10 | Cushion Circle 14B | AED7081 |
| NSP | 11 | LABEL | VRW1629 |
| | 12 | Screw | BBT30P100FCC |
| | 13 | Screw | BBZ30P080FCC |
| | 14 | Screw | BBZ30P080FTB |
| | 15 | Screw | BCZ40P060FTB |
| | 16 | Screw | PMZ30P060FTB |
| | 17 | Screw 2.85X7 | See Contrast table(2) |
| | 18 | Screw | IBP30P090FCC |

## (2) CONTRAST TABLE

VSX-03TXH/KUXJ/CA, VSX-9130TXH-K/KUXJ, VSX-01TXH/KUXJ/CA and VSX-1018AH-K/KUXJ are constructed the same except for the following:

| Mark | No. | Symbol and Description | VSX-03TXH/ KUXJ/CA | VSX-9130TXH-K/ KUXJ | VSX-01TXH/ KUXJ/CA | VSX-1018AH-K/ KUXJ |
|---|---|---|---|---|---|---|
| | 5 | Rear Panel | ANC8512 | ANC8513 | ANC8518 | ANC8519 |
| | 9 | Insulator | AMR7198 | PNW2766 | AMR7198 | PNW2766 |
| | 17 | Screw 2.85X7 | ABA7078 | ABA7078 | ABA7078 | Not used |

# 9.3 CHASSIS SECTION

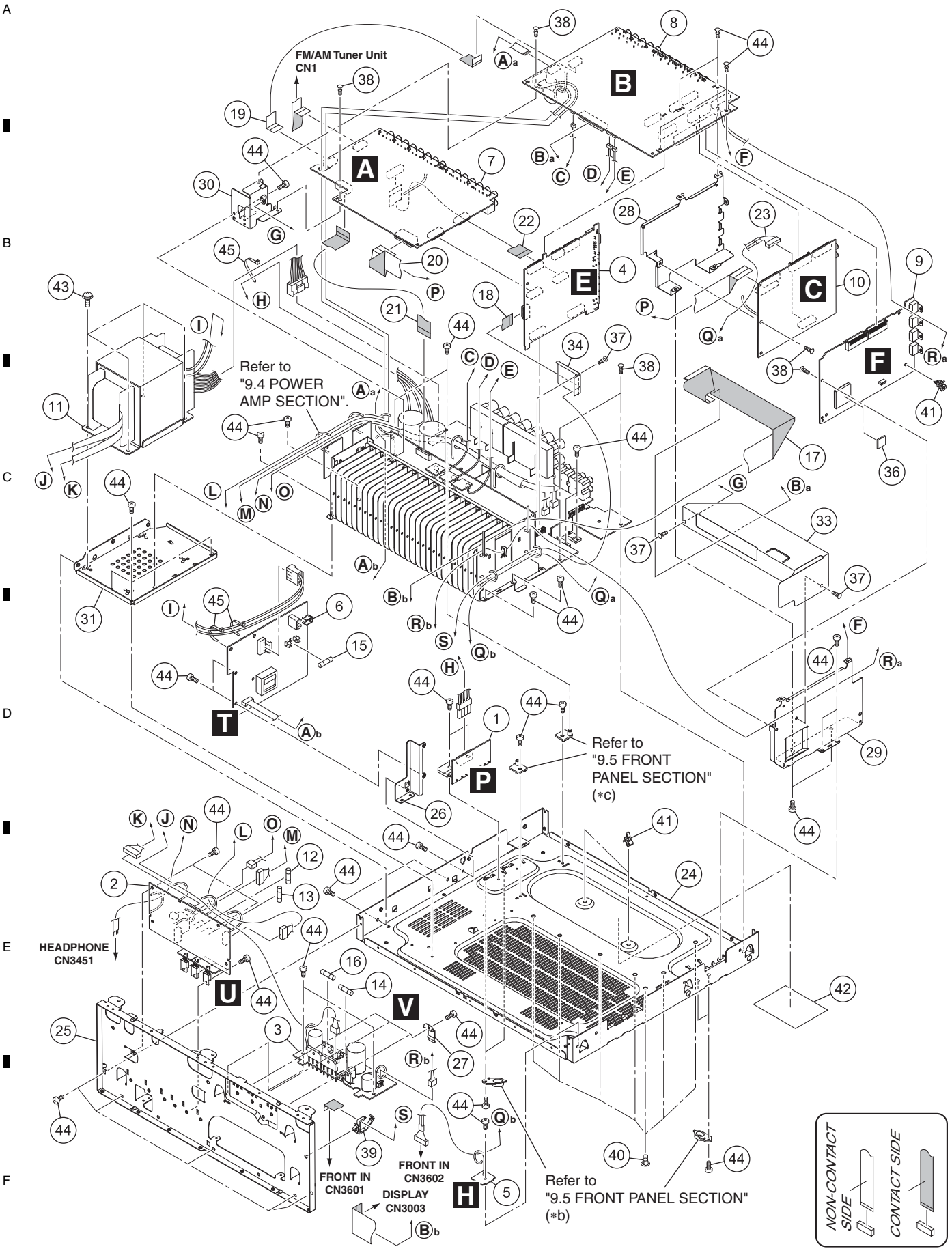

## CHASSIS SECTION PARTS LIST

| Mark | No. | Description | Part No. |
|---|---|---|---|
| | 1 | DIODE Assy | AWX8985 |
| | 2 | REGULATOR Assy | AWX8986 |
| | 3 | DC/DC Assy | AWX8988 |
| | 4 | INTERFACE Assy | See Contrast table(2) |
| | 5 | BINDER Assy | AWX9120 |
| | 6 | PRIMARY Assy | AWX9123 |
| NSP | 7 | AUDIO IN Assy | AWK8050 |
| NSP | 8 | MAIN Assy | See Contrast table(2) |
| | 9 | HDMI & DVC Assy | See Contrast table(2) |
| | 10 | DSP & USB Assy | See Contrast table(2) |
| ⚠ | 11 | Power Transformer (T1501) | ATS7418 |
| ⚠ | 12 | Fuse (T1.25A) (FU6,FU7) | REK1143 |
| ⚠ | 13 | Fuse (T2.5A) (FU8,FU9) | REK1146 |
| ⚠ | 14 | Fuse (T5A) (FU4) | REK1150 |
| ⚠ | 15 | Fuse (T10A) (FU1) | REK1154 |
| ⚠ | 16 | Fuse (T3.5A) (FU5) | REK1155 |
| | 17 | 33P FFC/60V (J51) | ADD7635 |
| | 18 | 11P FFC/60V (J52) | ADD7636 |
| | 19 | 11P FFC/60V (J54) | ADD7637 |
| | 20 | 23P FFC/60V (J55) | ADD7638 |
| | 21 | 17P FFC/60V (J57) | ADD7640 |
| | 22 | 19P FFC/60V (J58) | ADD7641 |
| | 23 | 9P Housing Assy | ADX7619 |
| NSP | 24 | Chassis V5S | ANA7209 |
| NSP | 25 | Panel Stay V5SEL | AND7086 |
| | 26 | Primary Angle 56 | ANG7526 |
| NSP | 27 | Transistor Holder | ANG7543 |
| | 28 | DSP Shield V5SEL | ANG7614 |
| | 29 | HDMI Shield V5S | ANG7616 |
| | 30 | PCB Stay V5S | ANG7617 |
| NSP | 31 | Trans Frame V5S | ANG7629 |
| | 32 | ••••• | ••••• |
| | 33 | Main Barrier V5S | AEC7602 |
| | 34 | PS Barrier | AEC7611 |
| | 35 | ••••• | ••••• |
| | 36 | Radiation Sheet | PEB1306 |
| | 37 | Push Rivet | AEC7370 |
| | 38 | Nylon Rivet | AEC7406 |
| | 39 | Wire Saddle | DEC1450 |
| | 40 | Card Spacer | DNK2769 |
| | 41 | Locking Card Spacer | PNW2917 |
| | 42 | Lisence Label V5S | ARW7372 |
| | 43 | Screw 4X12 | ABA7109 |
| | 44 | Screw | BBZ30P080FCC |
| NSP | 45 | Binder (BK-1) | ZCA-BK1 |

### (2) CONTRAST TABLE

VSX-03TXH/KUXJ/CA, VSX-9130TXH-K/KUXJ, VSX-01TXH/KUXJ/CA and VSX-1018AH-K/KUXJ are constructed the same except for the following:

| Mark | No. | Symbol and Description | VSX-03TXH/ KUXJ/CA | VSX-9130TXH-K/ KUXJ | VSX-01TXH/ KUXJ/CA | VSX-1018AH-K/ KUXJ |
|---|---|---|---|---|---|---|
| NSP | 4 | INTERFACE Assy | AWX8990 | AWX8990 | AWX8990 | AWX8993 |
| | 8 | MAIN Assy | AWK8052 | AWK8069 | AWK8056 | AWK8057 |
| | 9 | HDMI & DVC Assy | AWX9170 | AWX9170 | AWX9233 | AWX9233 |
| | 10 | DSP & USB Assy | AWX9175 | AWX9175 | AWX9239 | AWX9239 |

# 9.4 POWER AMP SECTION

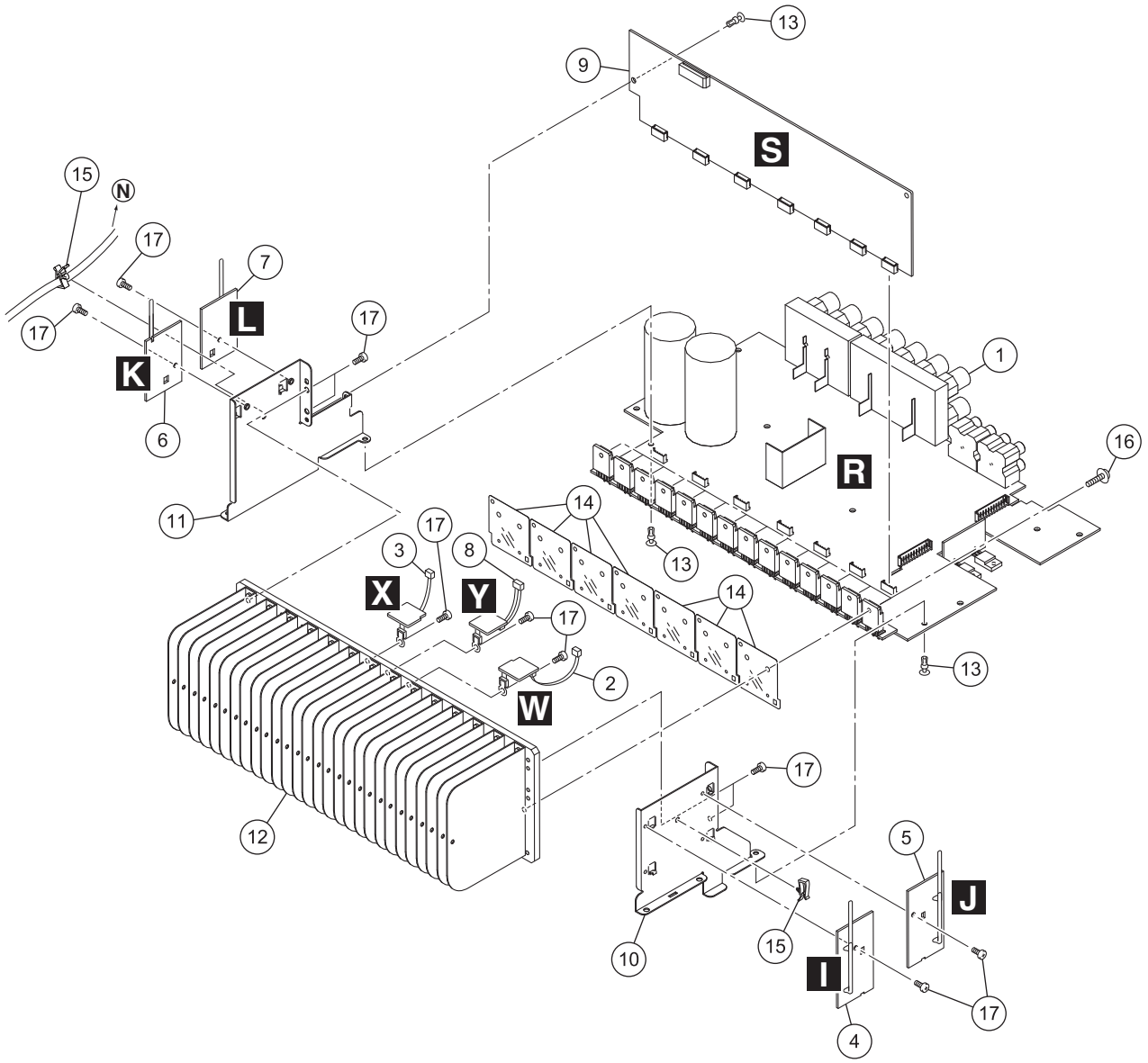

## POWER AMP SECTION PARTS LIST

| Mark | No. | Description | Part No. |
|---|---|---|---|
| | 1 | POWER AMP Assy | AWX8983 |
| | 2 | POSI1 Assy | AWX9132 |
| | 3 | POSI2 Assy | AWX9133 |
| | 4 | BIND_L_FRONT Assy | AWX9217 |
| | 5 | BIND_L_BACK Assy | AWX9218 |
| | 6 | BIND_R_FRONT Assy | AWX9219 |
| | 7 | BIND_R_BACK Assy | AWX9220 |
| | 8 | POSI3 Assy | AWX9223 |
| | 9 | PRE-STAGE AMP Assy | AWX8989 |
| | 10 | H.S.Angle V5S L | ANG7611 |
| | 11 | H.S.Angle V5S R | ANG7612 |
| NSP | 12 | Heat Sink V5S | ANH7199 |
| | 13 | Nylon Rivet | AEC7406 |
| | 14 | Mica Sheet V5SEL | AEE7068 |
| | 15 | Side Clamp | DEC2007 |
| | 16 | SEMS Screw 3X19 | ABA7085 |
| | 17 | Screw | BBZ30P080FCC |

# 9.5 FRONT PANEL SECTION

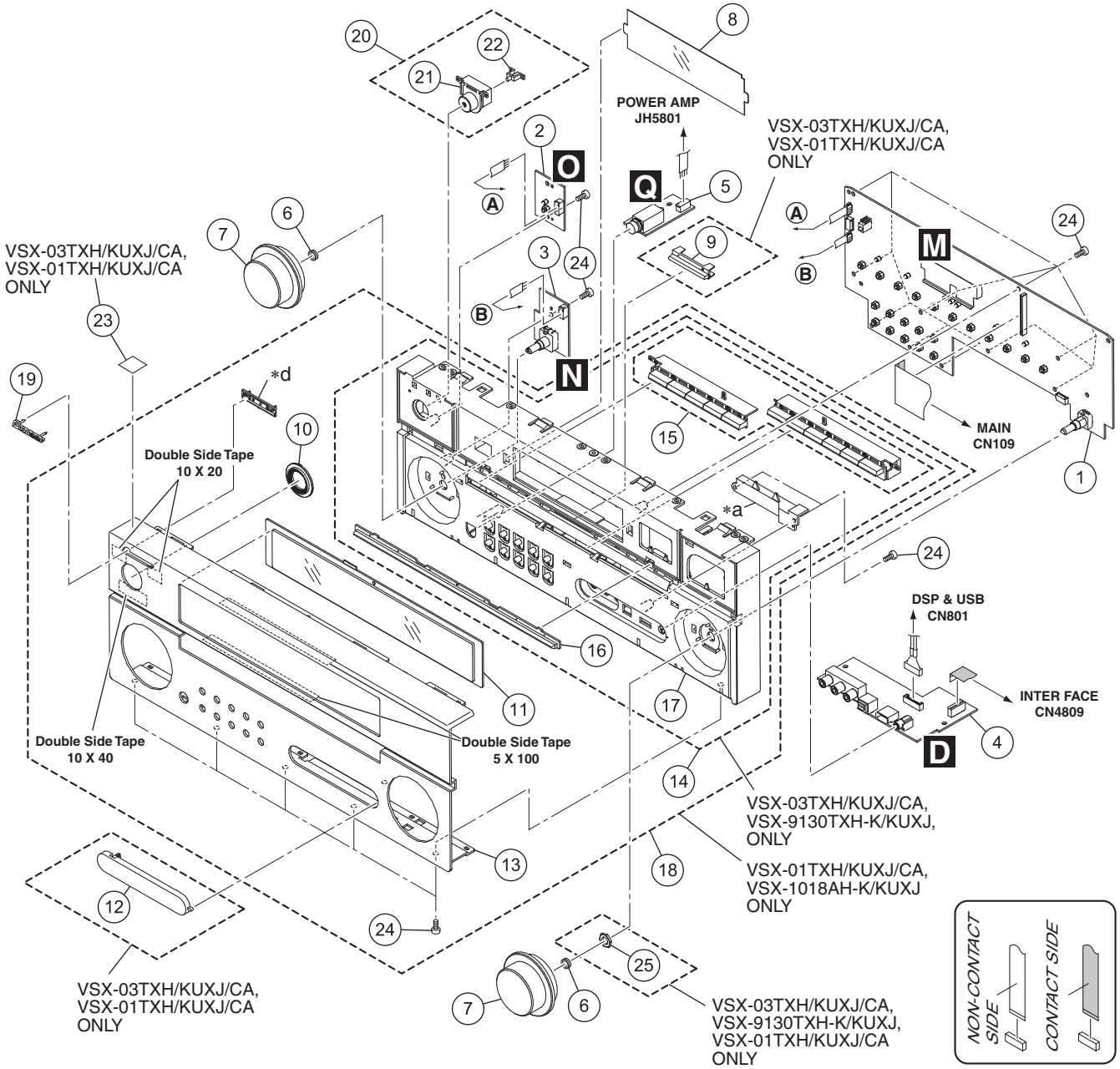


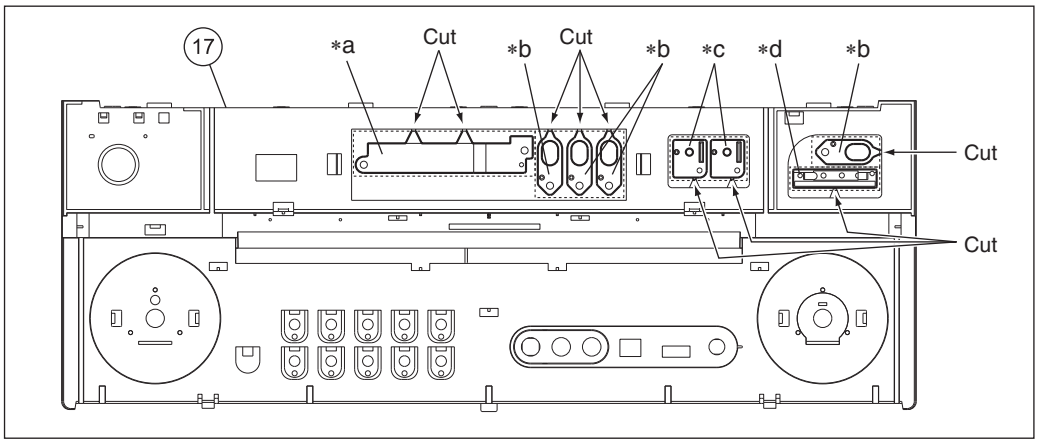

## FRONT PANEL SECTION PARTS LIST

| Mark | No. | Description | Part No. |
|---|---|---|---|
| | 1 | DISPLAY Assy | See Contrast table(2) |
| | 2 | POWER SW Assy | AWX9118 |
| | 3 | MULTI JOG Assy | AWX9119 |
| | 4 | FRONT IN Assy | AWX9121 |
| | 5 | HEADPHONE Assy | AWX9122 |
| | 6 | VOL Ring 60 | ABH7249 |
| | 7 | VOL.Knob 1017B | AAA7049 |
| | 8 | Filter | See Contrast table(2) |
| | 9 | IB Lens | See Contrast table(2) |
| | 10 | Power Ring B | AAK8431 |
| | 11 | Window | See Contrast table(2) |
| | 12 | Input Cover 01TX | See Contrast table(2) |
| | 13 | Front Panel | See Contrast table(2) |
| | 14 | Panel Base Assy | See Contrast table(2) |
| NSP | 15 | Func BTN B V5S | AAD7786 |
| | 16 | Center Lens | See Contrast table(2) |
| | 17 | Panel Base | See Contrast table(2) |
| | 18 | Panel Assy | See Contrast table(2) |
| | 19 | Name Plate | See Contrast table(2) |
| | 20 | STDBY BTN 915K Assy | XAD3216 |
| NSP | 21 | Standby BTN 915K | XAD3200 |
| NSP | 22 | Standby Lens V2 | XAK3477 |
| NSP | 23 | Energy Star Label | See Contrast table(2) |
| | 24 | Screw | PPZ30P080FNI |

## (2) CONTRAST TABLE

VSX-03TXH/KUXJ/CA, VSX-9130TXH-K/KUXJ, VSX-01TXH/KUXJ/CA and VSX-1018AH-K/KUXJ are constructed the same except for the following:

| Mark | No. | Symbol and Description | VSX-03TXH/ KUXJ/CA | VSX-9130TXH-K/ KUXJ | VSX-01TXH/ KUXJ/CA | VSX-1018AH-K/ KUXJ |
|---|---|---|---|---|---|---|
| | 1 | DISPLAY Assy | AWX9117 | AWX9216 | AWX9117 | AWX9216 |
| | 8 | Filter | AAK8412 | AAK8413 | AAK8412 | AAK8413 |
| | 9 | IB Lens | AAK8430 | Not used | AAK8430 | Not used |
| | 11 | Window | AAK8434 | AAK8433 | AAK8434 | AAK8433 |
| | 12 | Input Cover 01TX | AAK8436 | Not used | AAK8436 | Not used |
| | 13 | Front Panel | ANB7475 | ANB7476 | AMB7980 | AMB7981 |
| | 14 | Panel Base Assy | AXG7366 | AXG7367 | Not used | Not used |
| | 16 | Center Lens | AAK8428 | AAK8429 | AAK8428 | AAK8429 |
| | 17 | Panel Base | AMB7986 | AMB7989 | AMB7986 | AMB7989 |
| | 18 | Panel Assy | Not used | Not used | AXG7370 | AXG7371 |
| | 19 | Name Plate | PAN1376 | AAN7218 | PAN1376 | XAM3006 |
| NSP | 23 | Energy Star Label | AAX8022 | Not used | AAX8022 | Not used |

# 10. SCHEMATIC DIAGRAM
## 10.1 AUDIO IN ASSY (1/2)

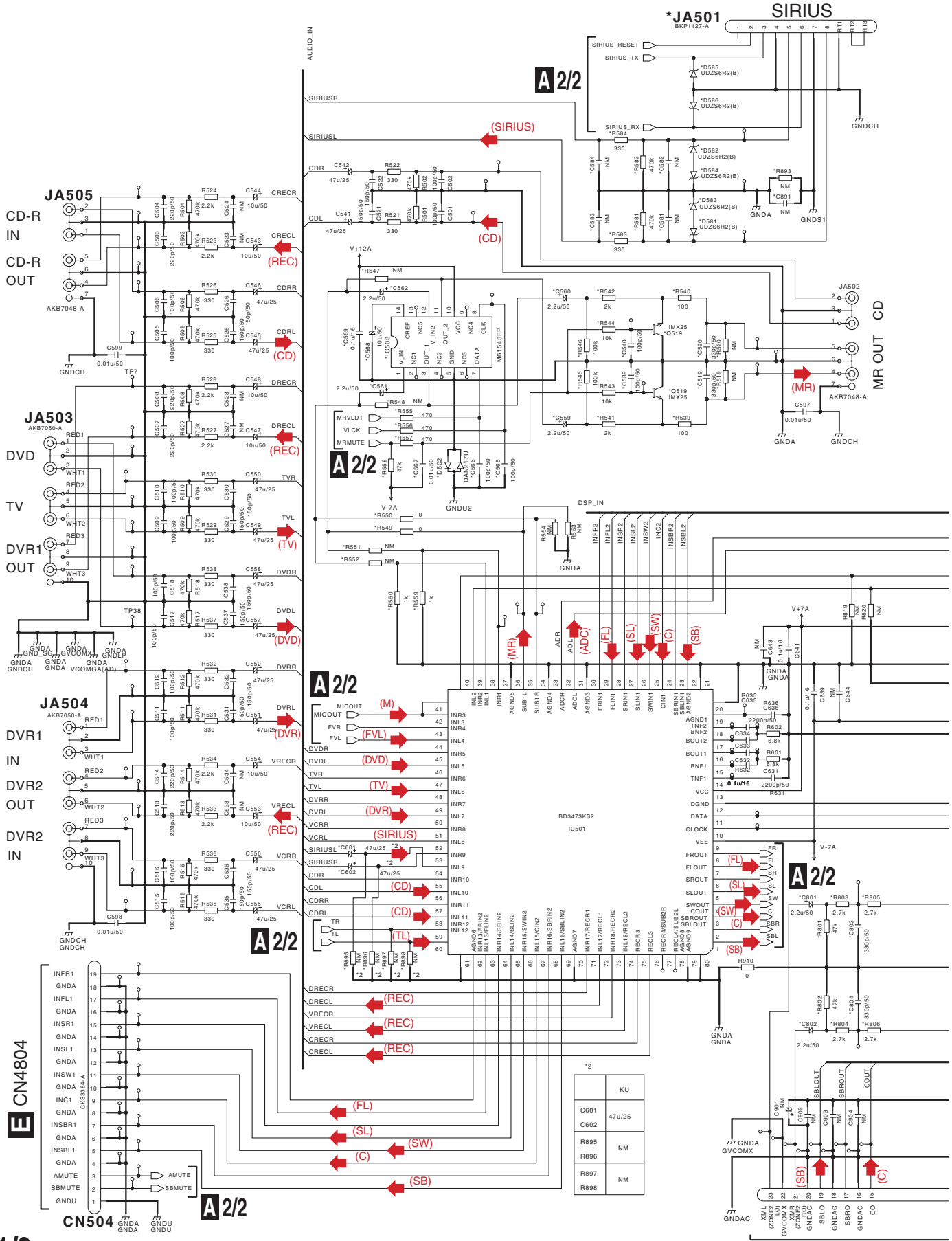

(DVD): Audio Signal Route (DVD L ch)
(DVR): Audio Signal Route (DVR L ch)
(TV): Audio Signal Route (TV L ch)
(TL): Audio Signal Route (Tuner L ch)
(CD): Audio Signal Route (CD L ch)

(FL): Audio Signal Route (Front L ch)
(FVL): Audio Signal Route (Video L ch)
(SL): Audio Signal Route (Surround L ch)
(C): Audio Signal Route (Center ch)
(SB): Audio Signal Route (Surround Back L ch)

# A 1/2 AUDIO IN ASSY (AWK8050)

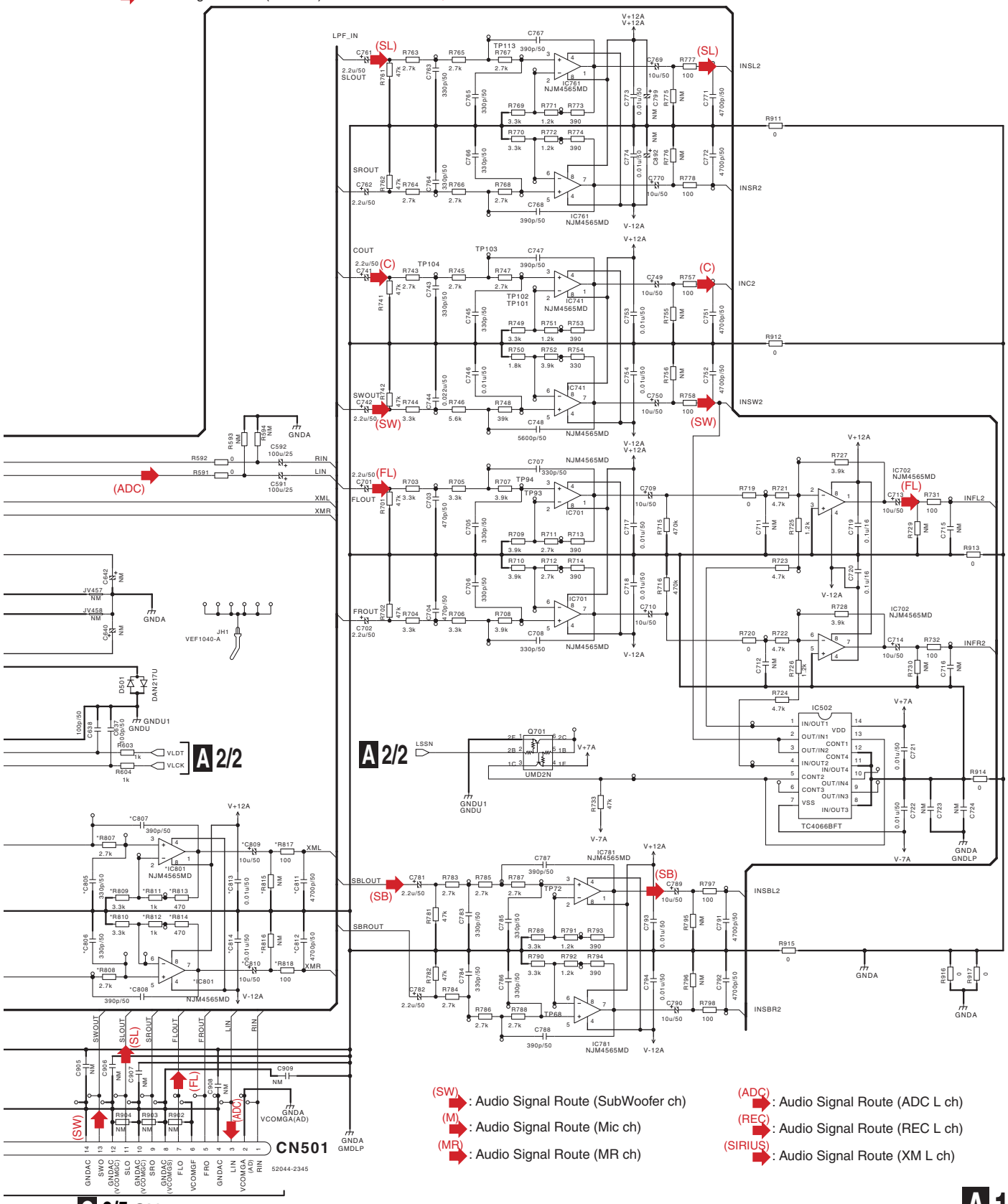


(SW): Audio Signal Route (SubWoofer ch)
(M): Audio Signal Route (Mic ch)
(MR): Audio Signal Route (MR ch)

(ADC): Audio Signal Route (ADC L ch)
(REC): Audio Signal Route (REC L ch)
(SIRIUS): Audio Signal Route (XM L ch)

A 1/2

# 10.2 AUDIO IN ASSY (2/2)

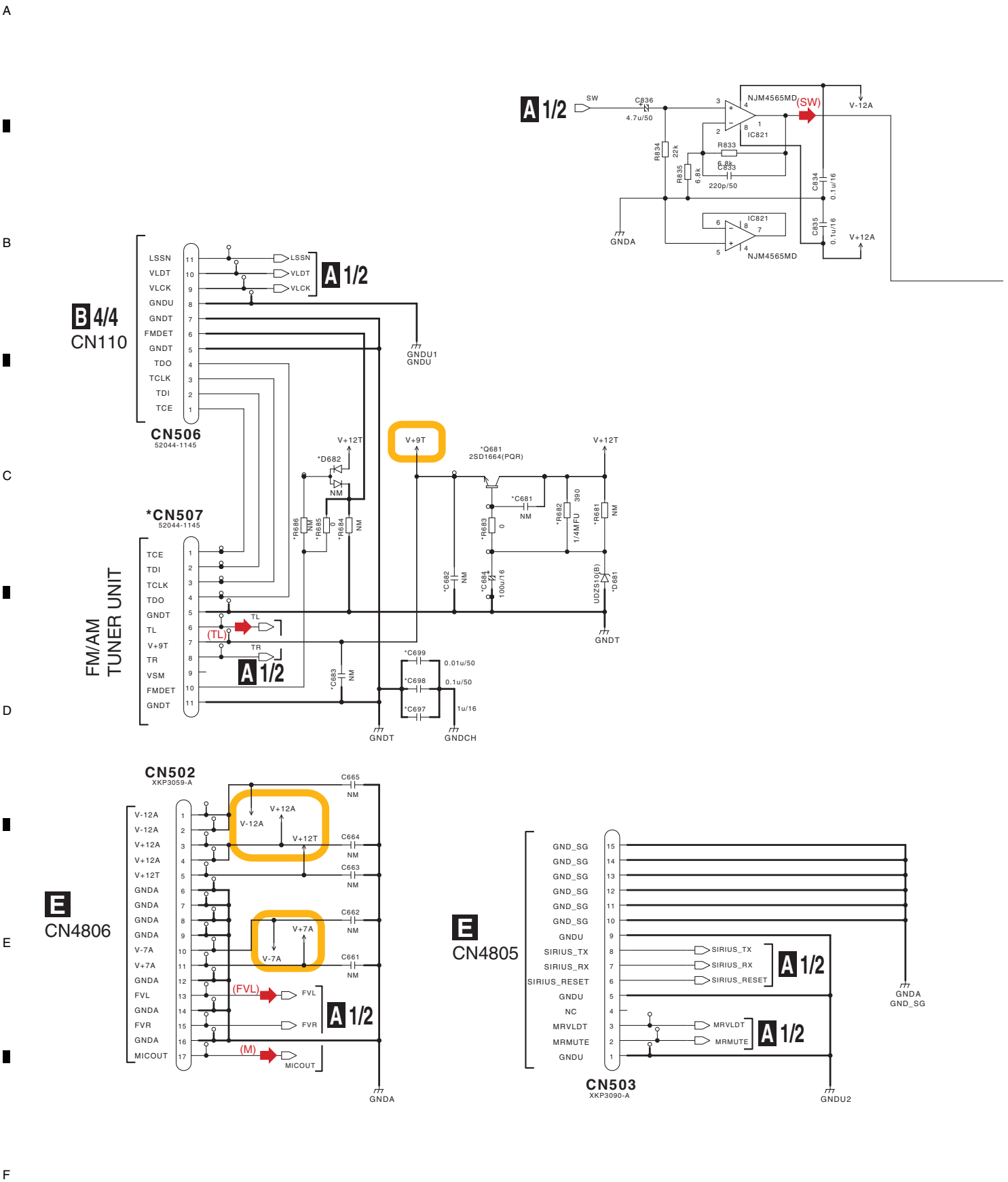

# A 2/2 AUDIO IN ASSY (AWK8050)

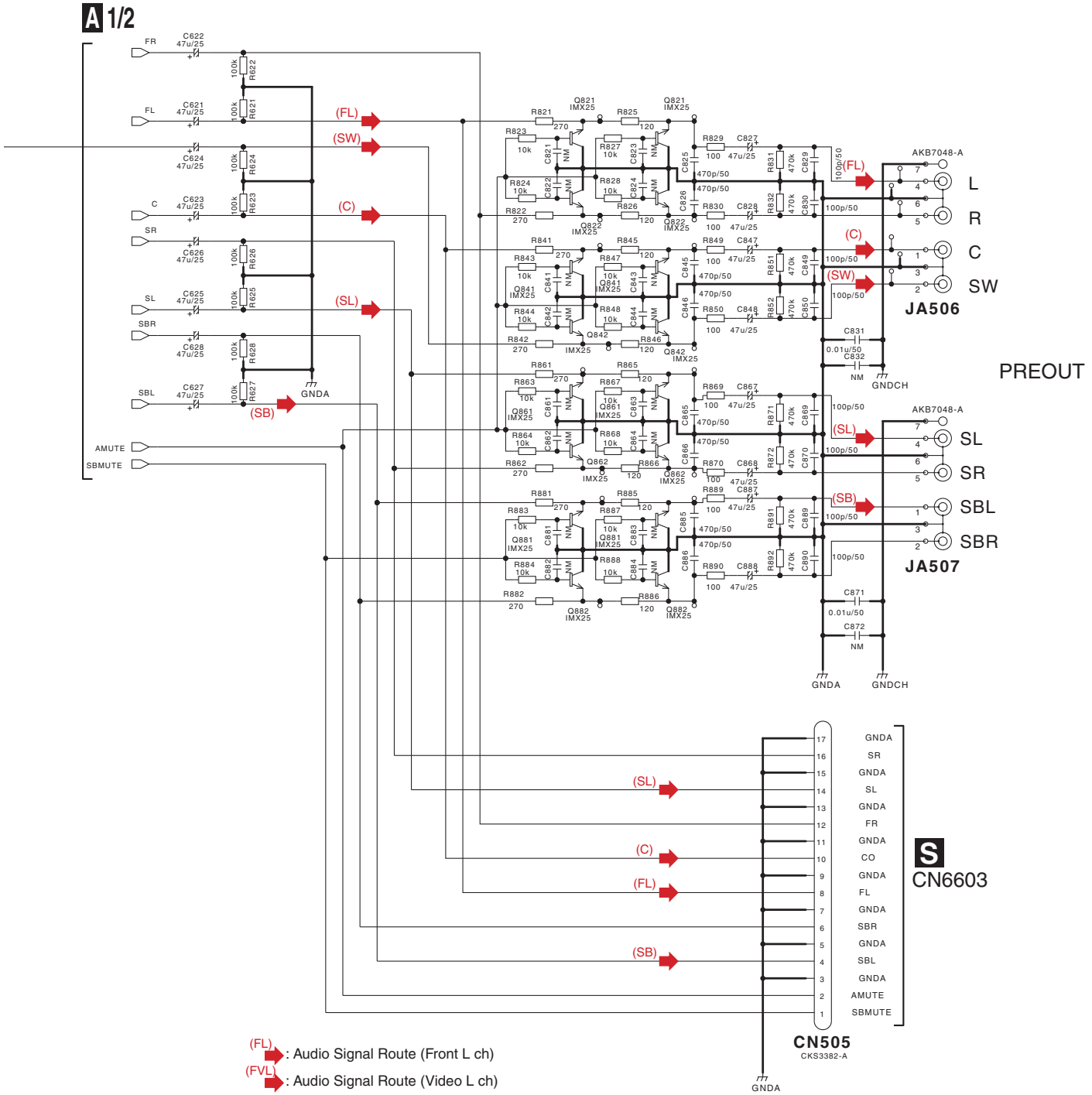


(FL): Audio Signal Route (Front L ch)
(FVL): Audio Signal Route (Video L ch)
(SL): Audio Signal Route (Surround L ch)
(C): Audio Signal Route (Center ch)
(SB): Audio Signal Route (Surround Back L ch)
(SW): Audio Signal Route (SubWoofer ch)
(TL): Audio Signal Route (Tuner L ch)

# 10.3 MAIN ASSY (1/4)

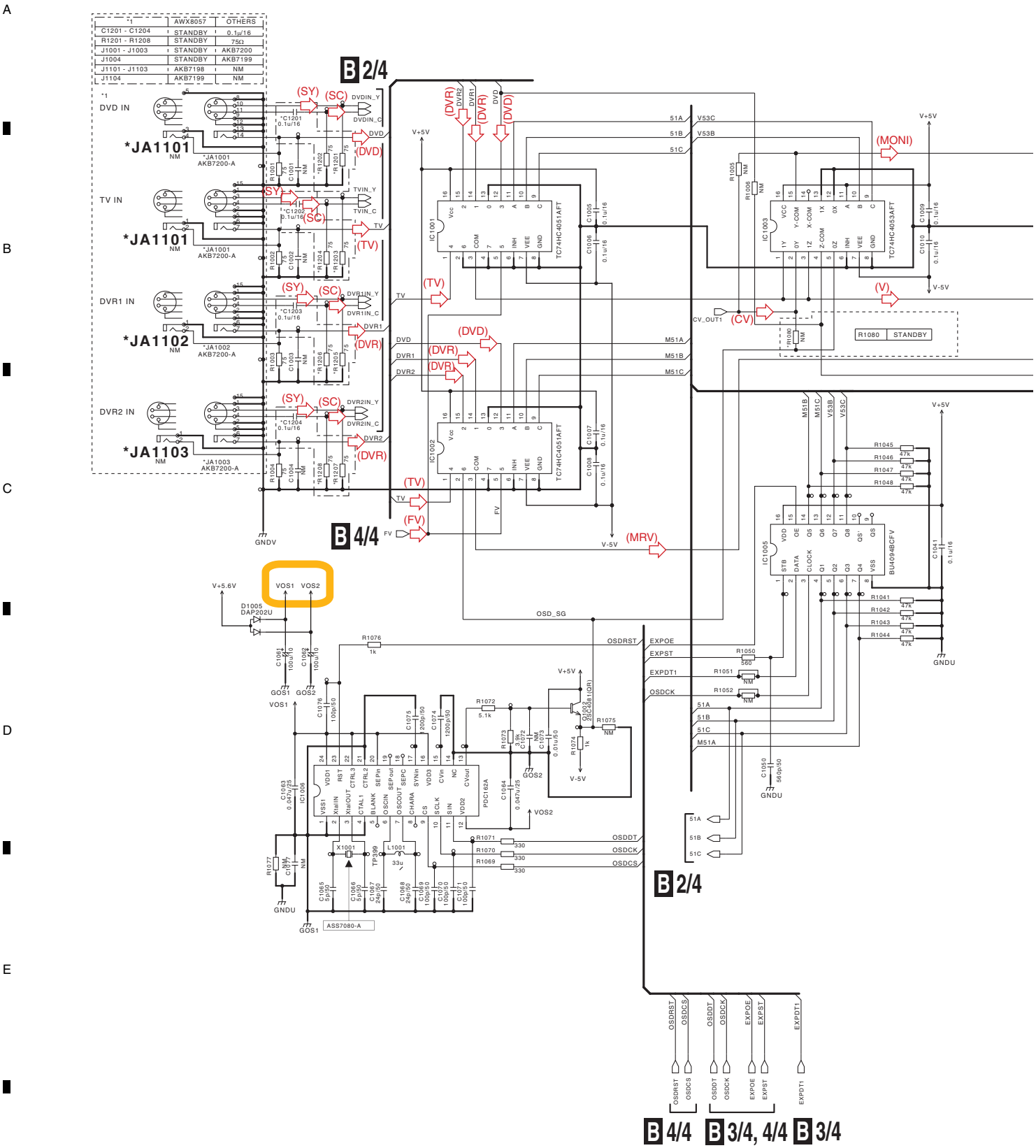

# B 1/4 MAIN ASSY
(VSX-03TXH : AWK8052)
(VSX-9130TXH-K : AWK8069)
(VSX-01TXH : AWK8056)
(VSX-1018AH-K : AWK8057)

(V) : Video Signal Route
(MRV) : Video Signal Route (Zone)
(MONI) : Video Signal Route (Monitor)

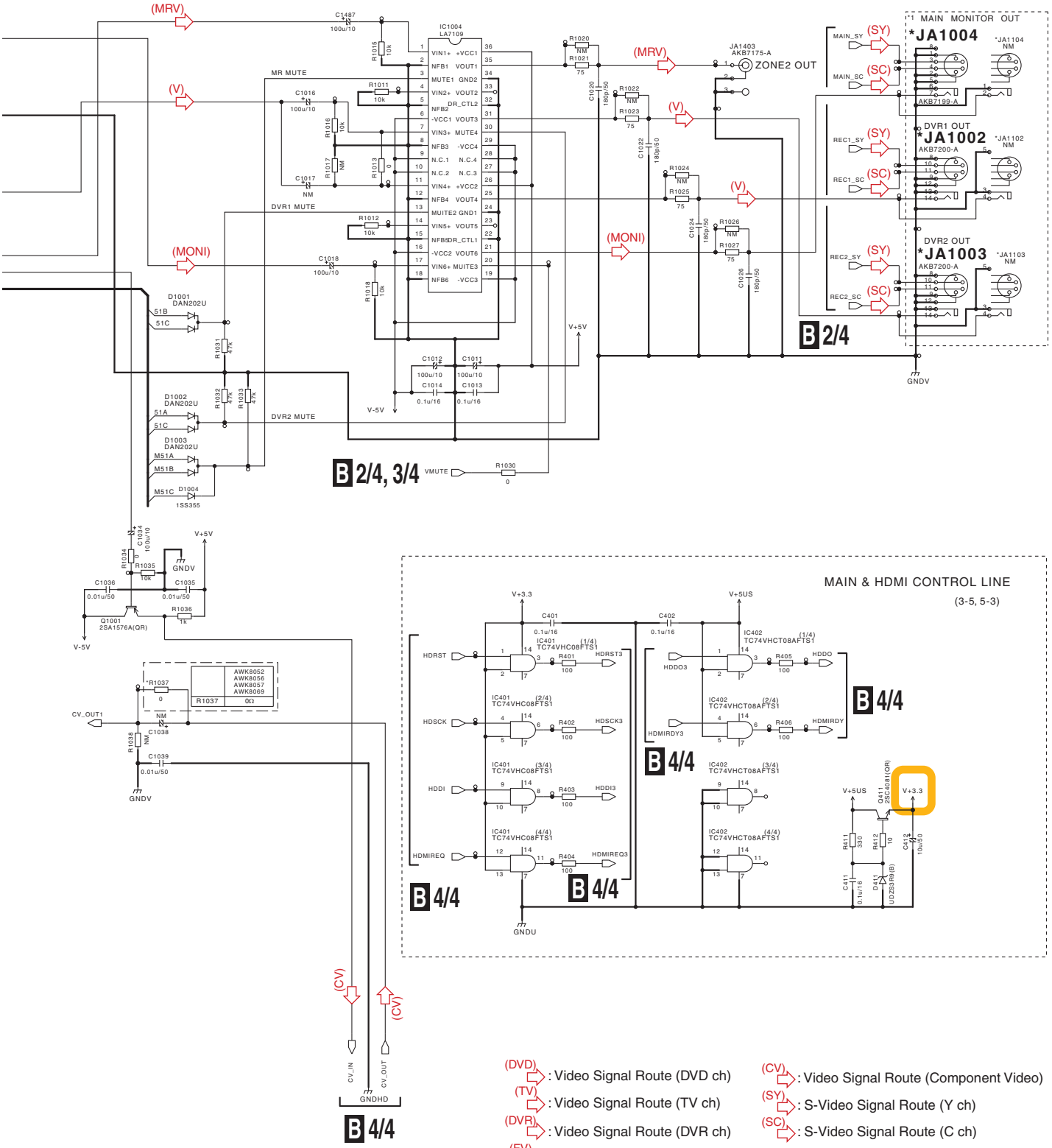


(DVD) : Video Signal Route (DVD ch)
(TV) : Video Signal Route (TV ch)
(DVR) : Video Signal Route (DVR ch)
(FV) : Video Signal Route (Video)
(CV) : Video Signal Route (Component Video)
(SY) : S-Video Signal Route (Y ch)
(SC) : S-Video Signal Route (C ch)

# 10.4 MAIN ASSY (2/4)

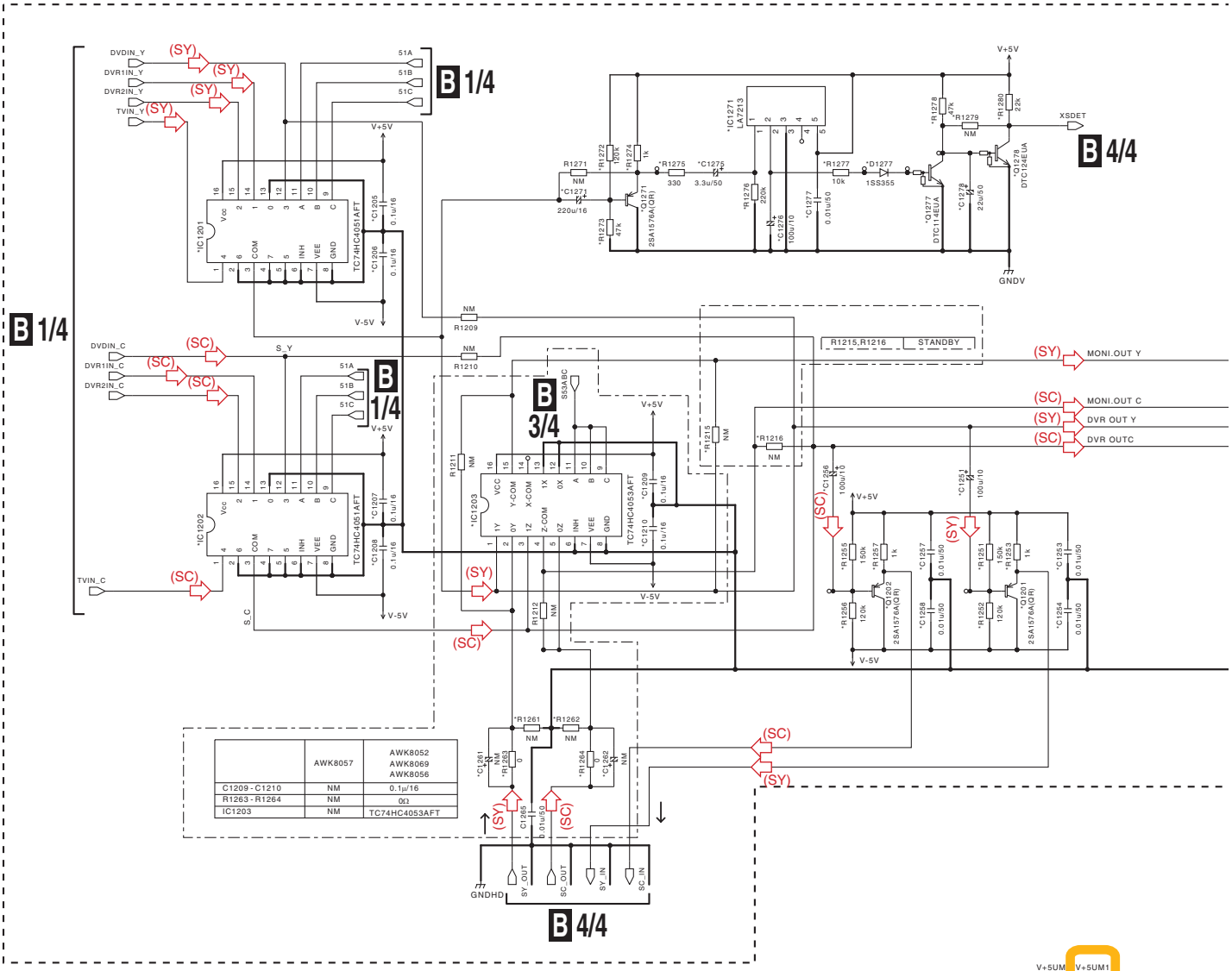


| | AWK8057 | AWK8052<br>AWK8069<br>AWK8056 |
|---|---|---|
| C1209 - C1210 | NM | 0.1μ/16 |
| R1263 - R1264 | NM | 0Ω |
| IC1203 | NM | TC74HC4053AFT |

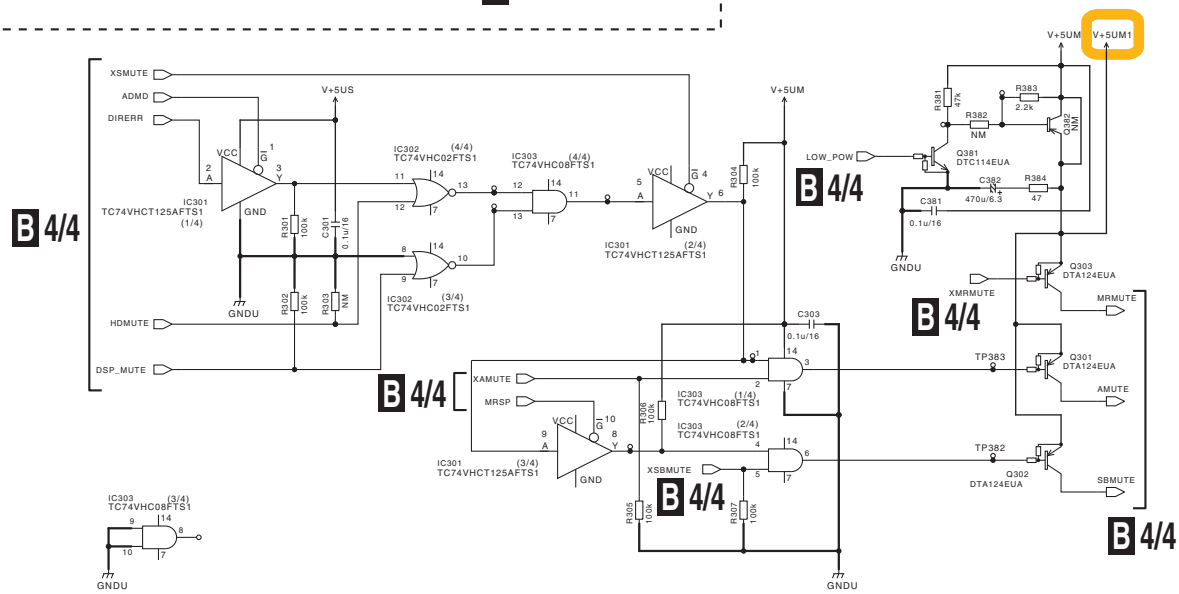


B 2/4

# B 2/4 MAIN ASSY
(VSX-03TXH : AWK8052)
(VSX-9130TXH-K : AWK8069)
(VSX-01TXH : AWK8056)
(VSX-1018AH-K : AWK8057)

| S-VIDEO PART | AWK8057 | NO NEED |
|---|---|---|
| | AWK8052,AWK8069,AWK8056 | NEED |

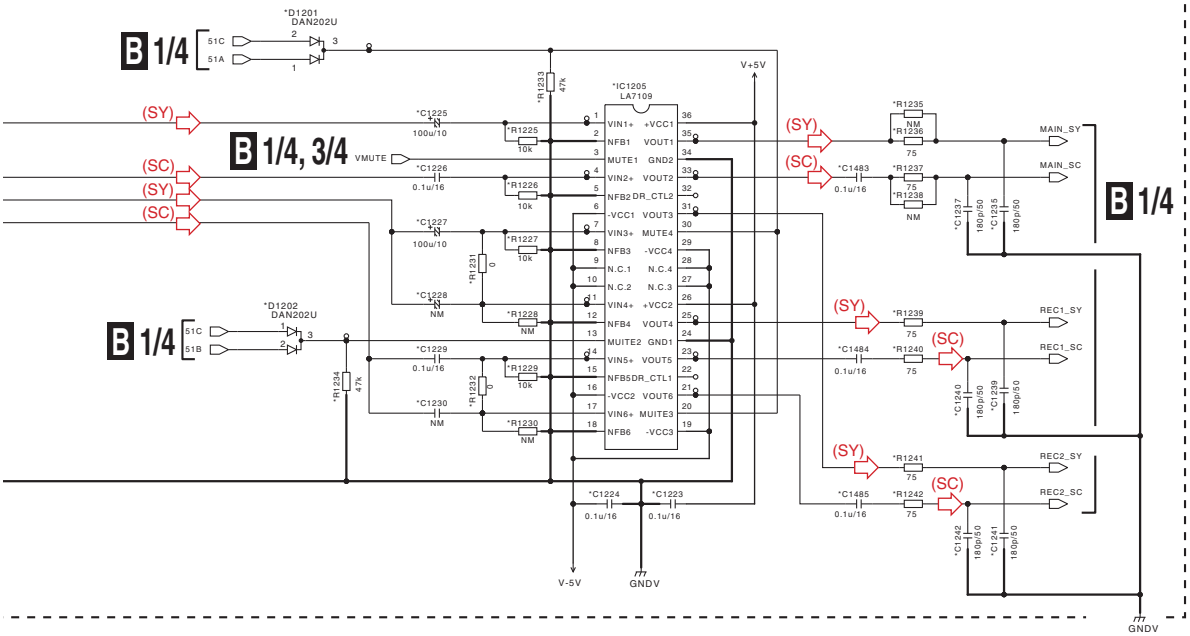


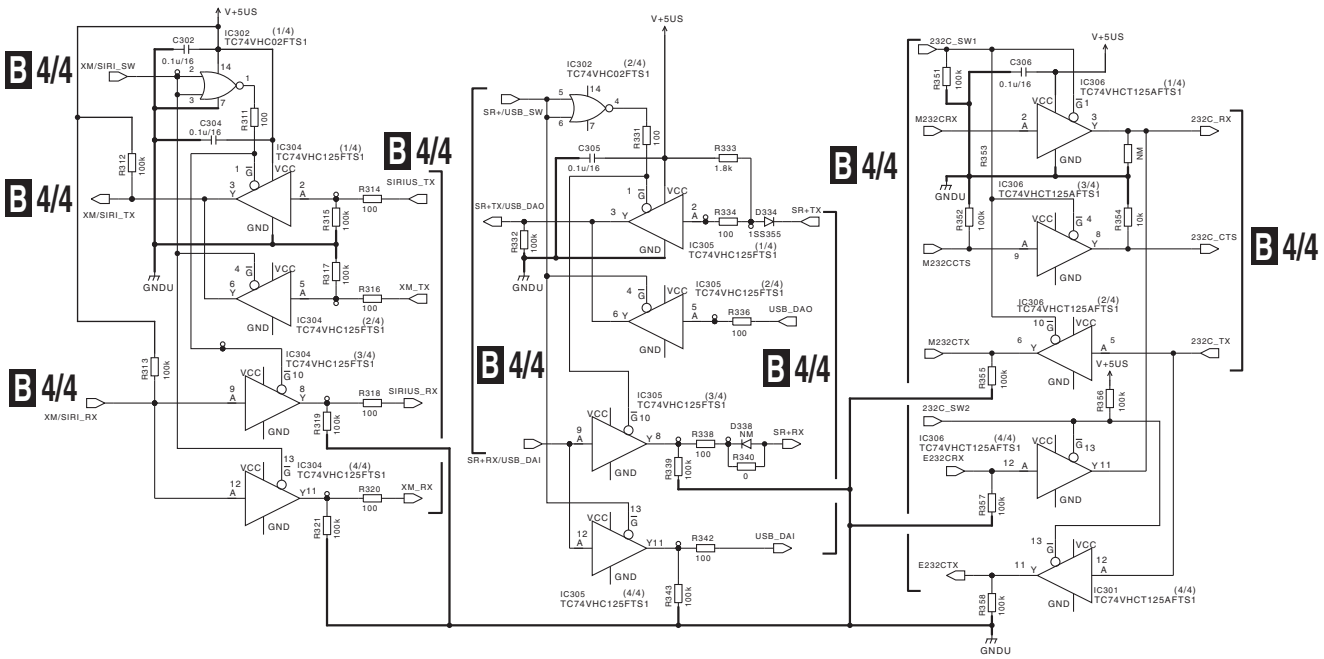


(SY) : S-Video Signal Route (Y ch)

(SC) : S-Video Signal Route (C ch)

B 2/4

# 10.5 MAIN ASSY (3/4)

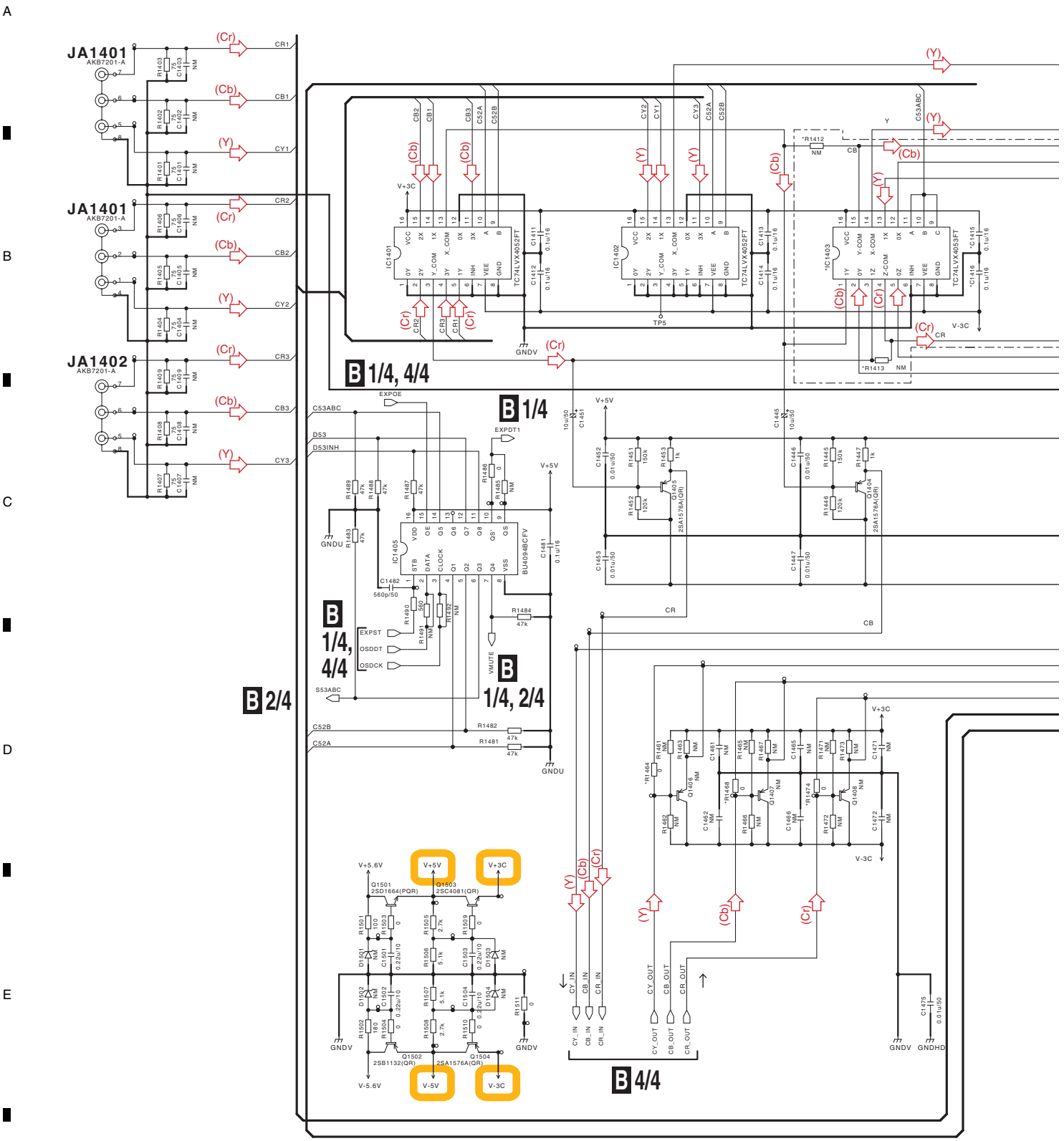


B 3/4

# B 3/4 MAIN ASSY
(VSX-03TXH : AWK8052)
(VSX-9130TXH-K : AWK8069)
(VSX-01TXH : AWK8056)
(VSX-1018AH-K : AWK8057)

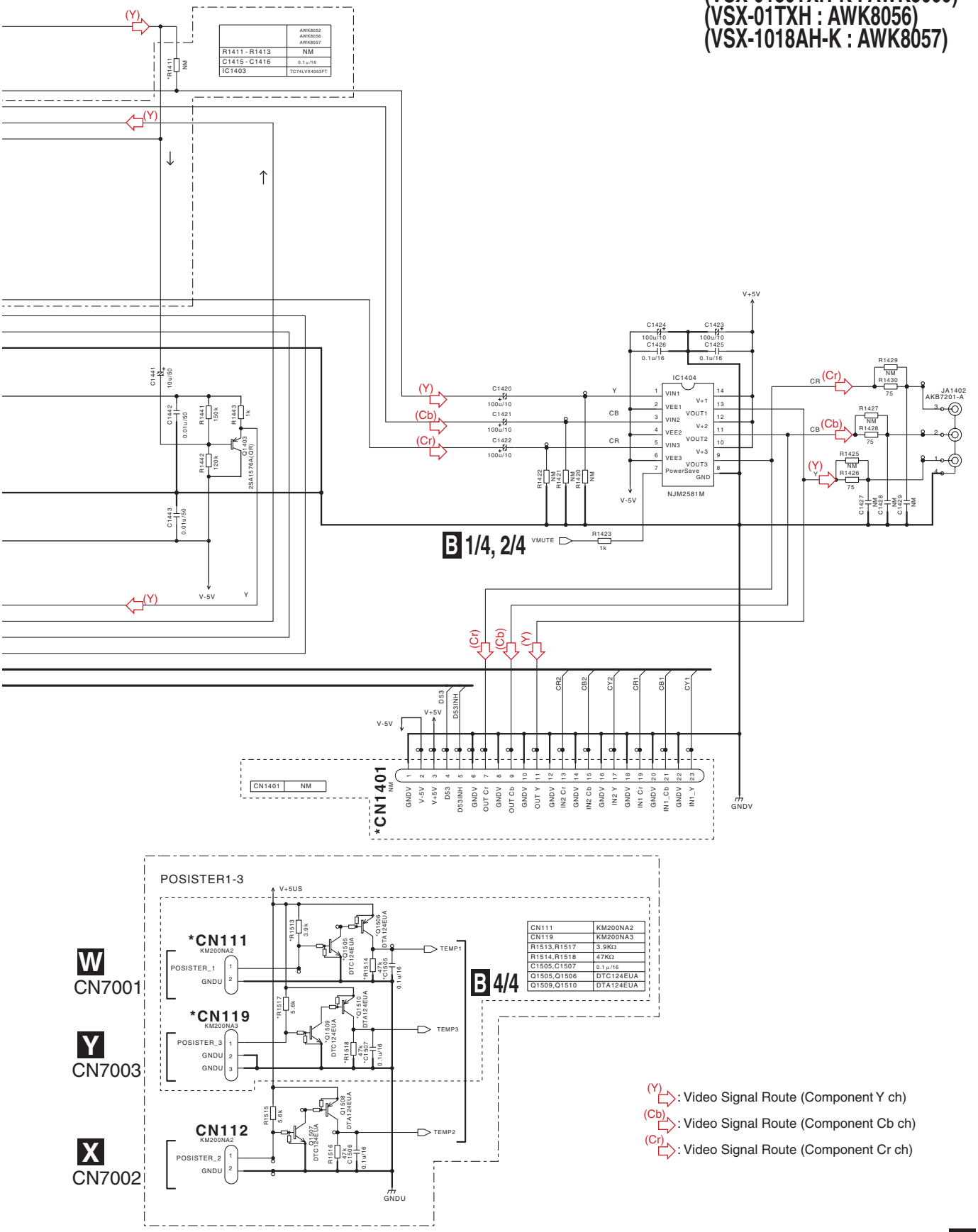


| | AWK8052 AWK8056 AWK8057 |
|---|---|
| R1411 - R1413 | NM |
| C1415 - C1416 | 0.1μ/16 |
| IC1403 | TC74LVX4053FT |

| | |
|---|---|
| CN111 | KM200NA2 |
| CN119 | KM200NA3 |
| R1513,R1517 | 3.9KΩ |
| R1514,R1518 | 47KΩ |
| C1505,C1507 | 0.1μ/16 |
| Q1505,Q1506 | DTC124EUA |
| Q1509,Q1510 | DTA124EUA |

# 10.6 MAIN ASSY (4/4)

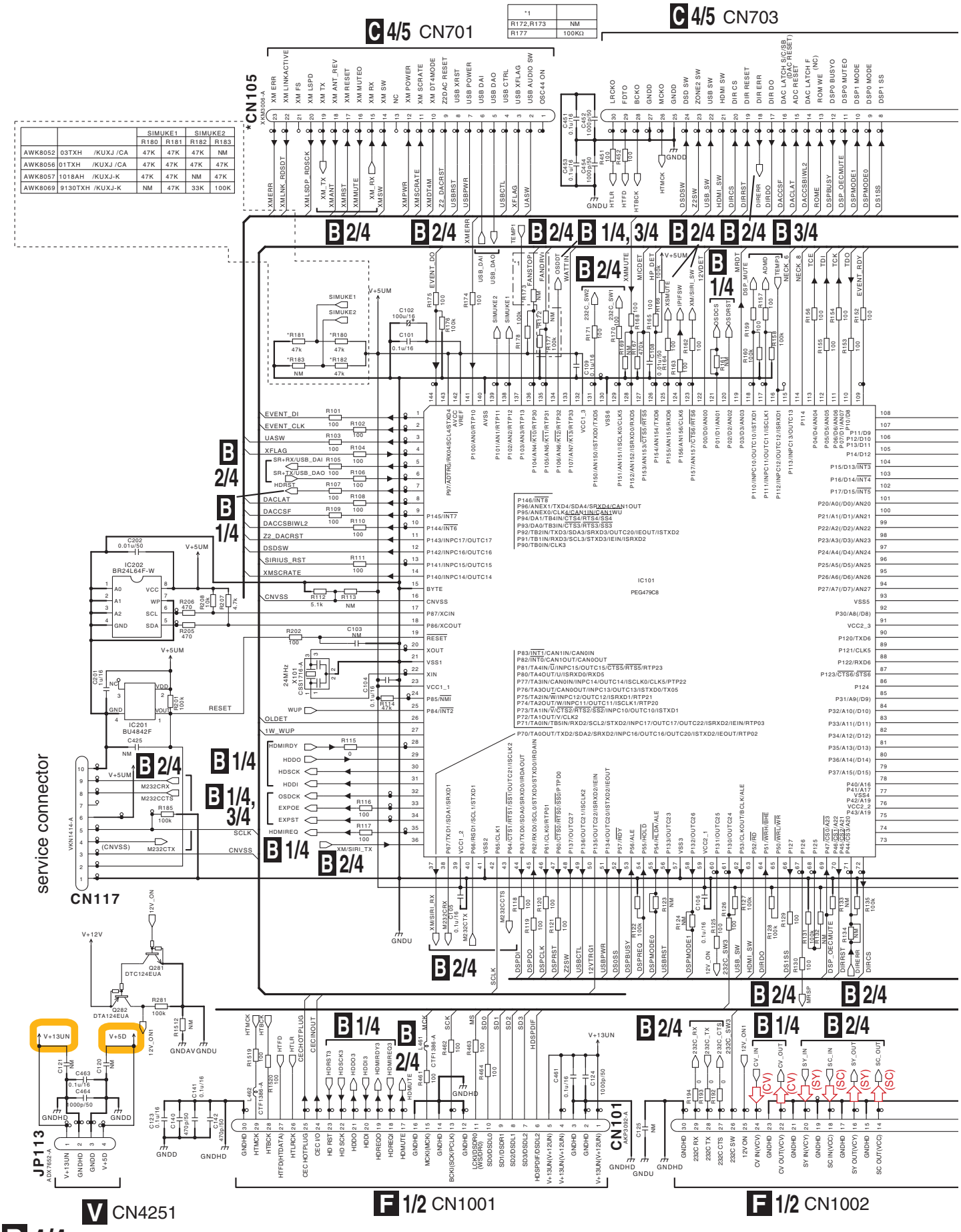


| | | SIMUKE1 | | SIMUKE2 | |
|---|---|---|---|---|---|
| | | R180 | R181 | R182 | R183 |
| AWK8052 | 03TXH /KUXJ /CA | 47K | 47K | 47K | NM |
| AWK8056 | 01TXH /KUXJ /CA | 47K | 47K | 47K | 47K |
| AWK8057 | 1018AH /KUXJ-K | 47K | 47K | NM | 47K |
| AWK8069 | 9130TXH /KUXJ-K | NM | 47K | 33K | 100K |

| *1 | |
|---|---|
| R172,R173 | NM |
| R177 | 100KΩ |

# B 4/4 MAIN ASSY
# (VSX-03TXH : AWK8052)
# (VSX-9130TXH-K : AWK8069)
# (VSX-01TXH : AWK8056)
# (VSX-1018AH-K : AWK8057)

| | | |
|---|---|---|
| *2 | AWK8057 | AWK8052<br>AWK8069<br>AWK8056 |
| R146 | 100KΩ | NM |

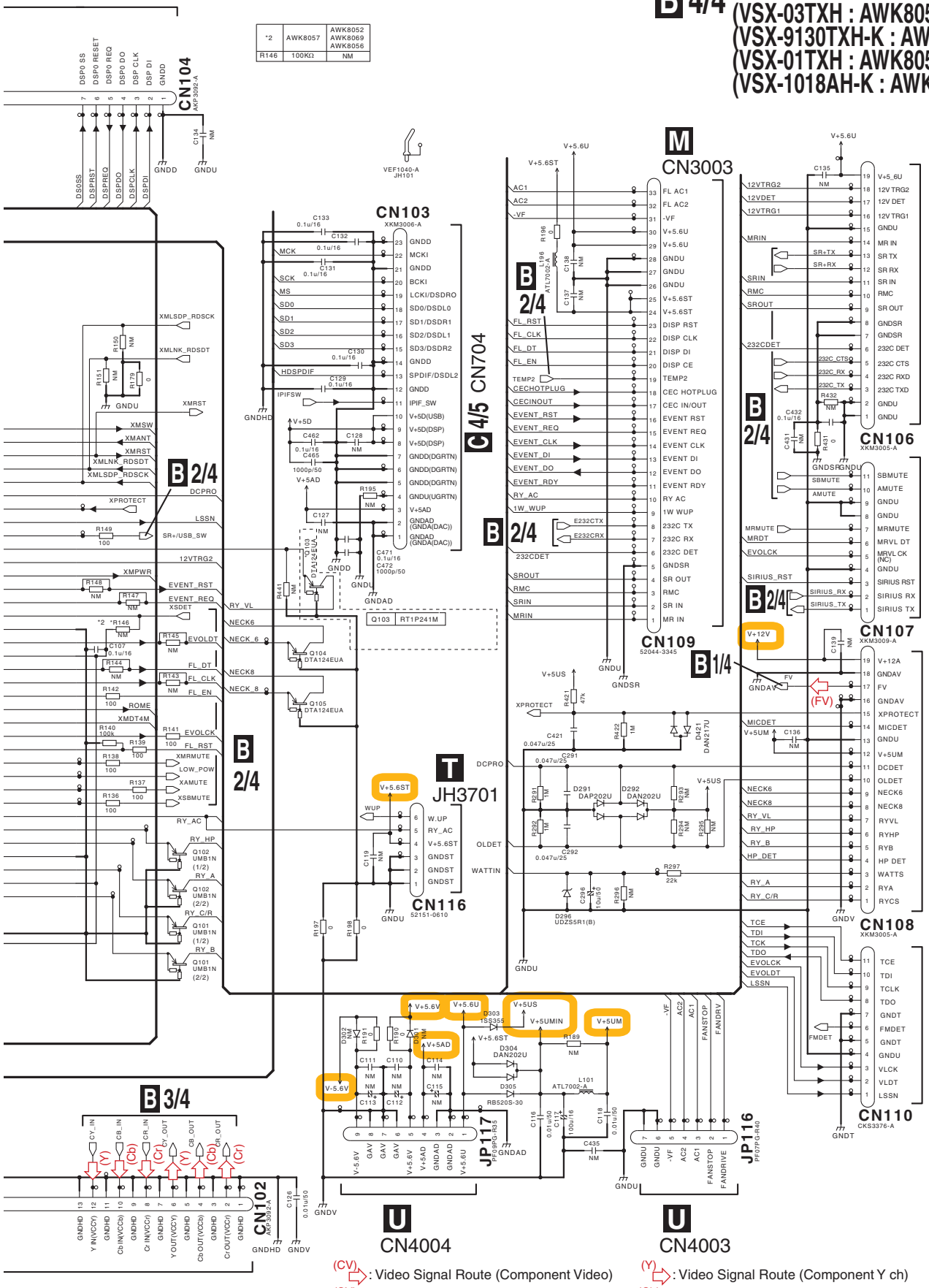


(FV): Video Signal Route (Video)

(CV): Video Signal Route (Component Video)

(SY): S-Video Signal Route (Y ch)

(SC): S-Video Signal Route (C ch)

(Y): Video Signal Route (Component Y ch)

(Cb): Video Signal Route (Component Cb ch)

(Cr): Video Signal Route (Component Cr ch)

# 10.7 DSP & USB ASSY (1/5)

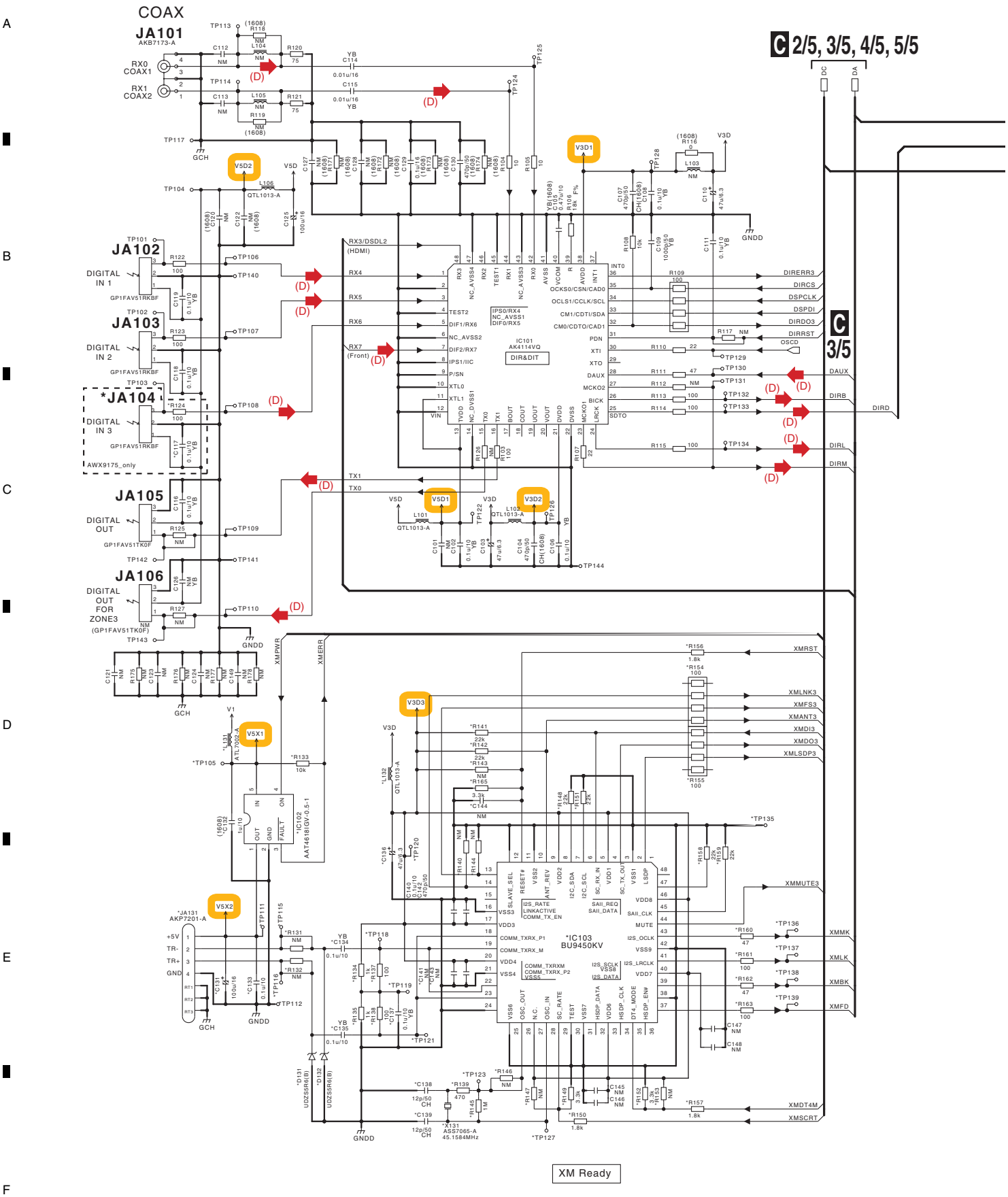


C 1/5

# C 1/5 DSP & USB ASSY (VSX-03TXH,VSX-9130TXH-K : AWX9175) (VSX-01TXH, VSX-1018AH-K : AWX9239)

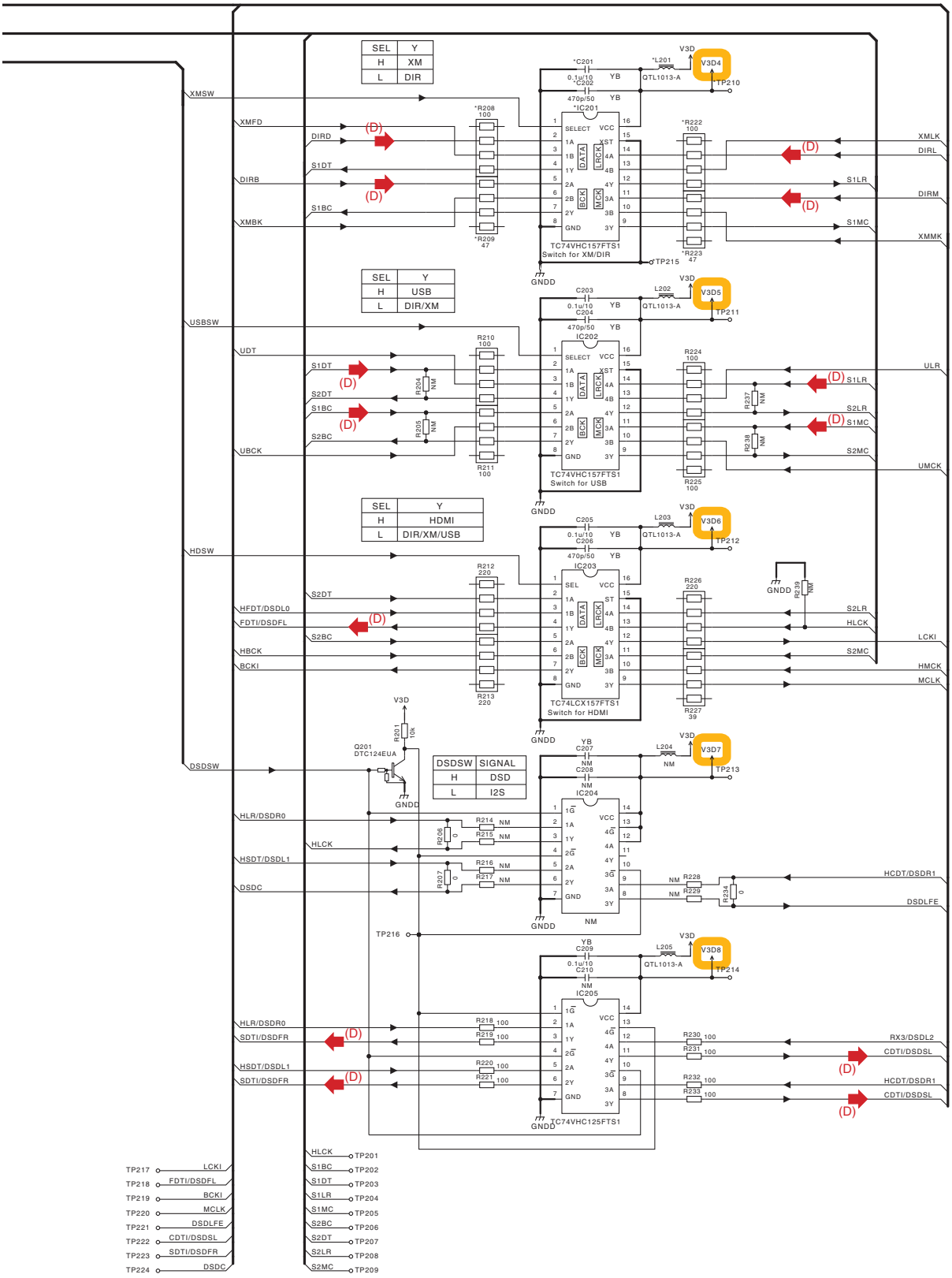

# 10.8 DSP & USB ASSY (2/5)

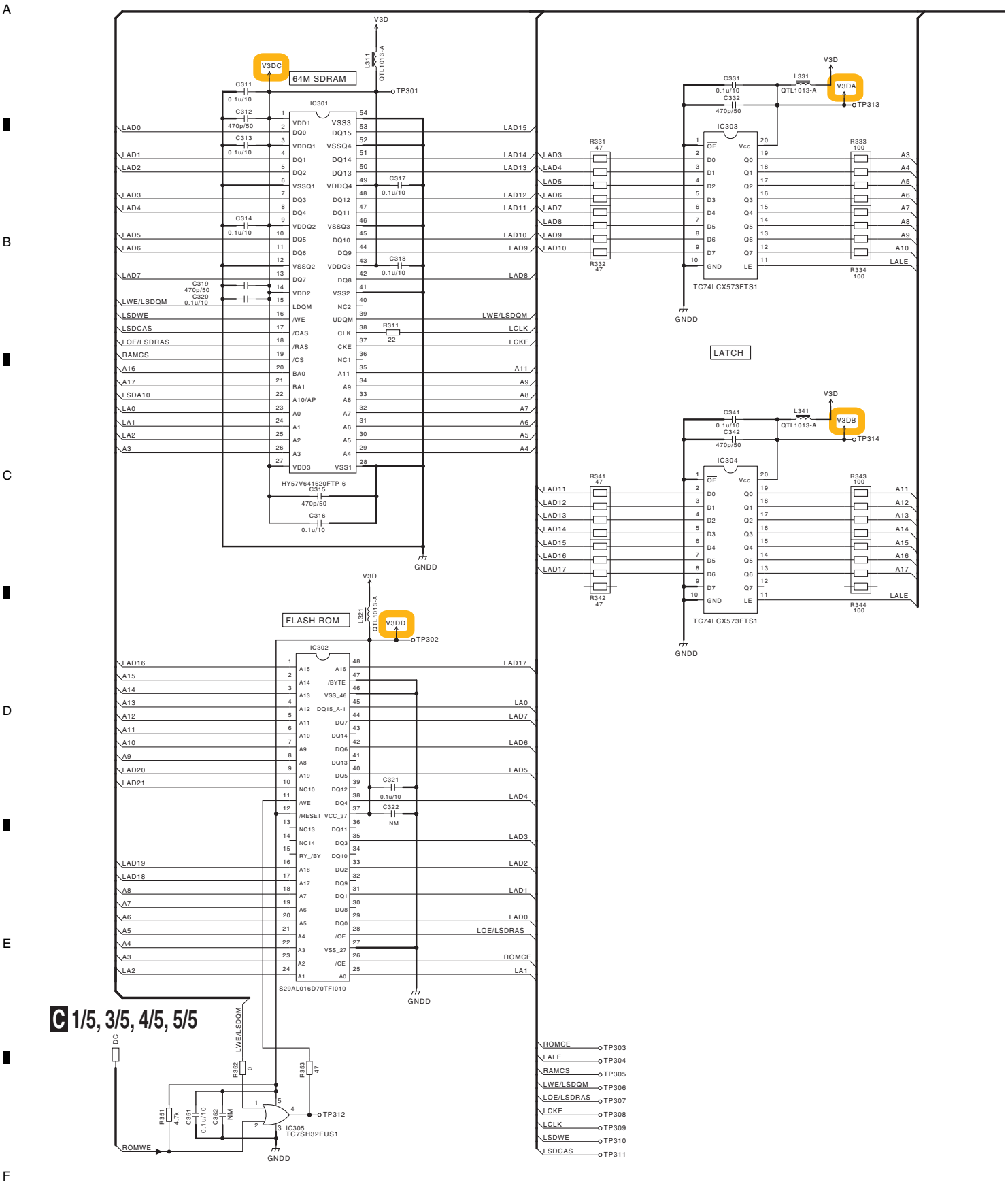


C 2/5

# C 2/5 DSP & USB ASSY (VSX-03TXH,VSX-9130TXH-K : AWX9175) (VSX-01TXH, VSX-1018AH-K : AWX9239)

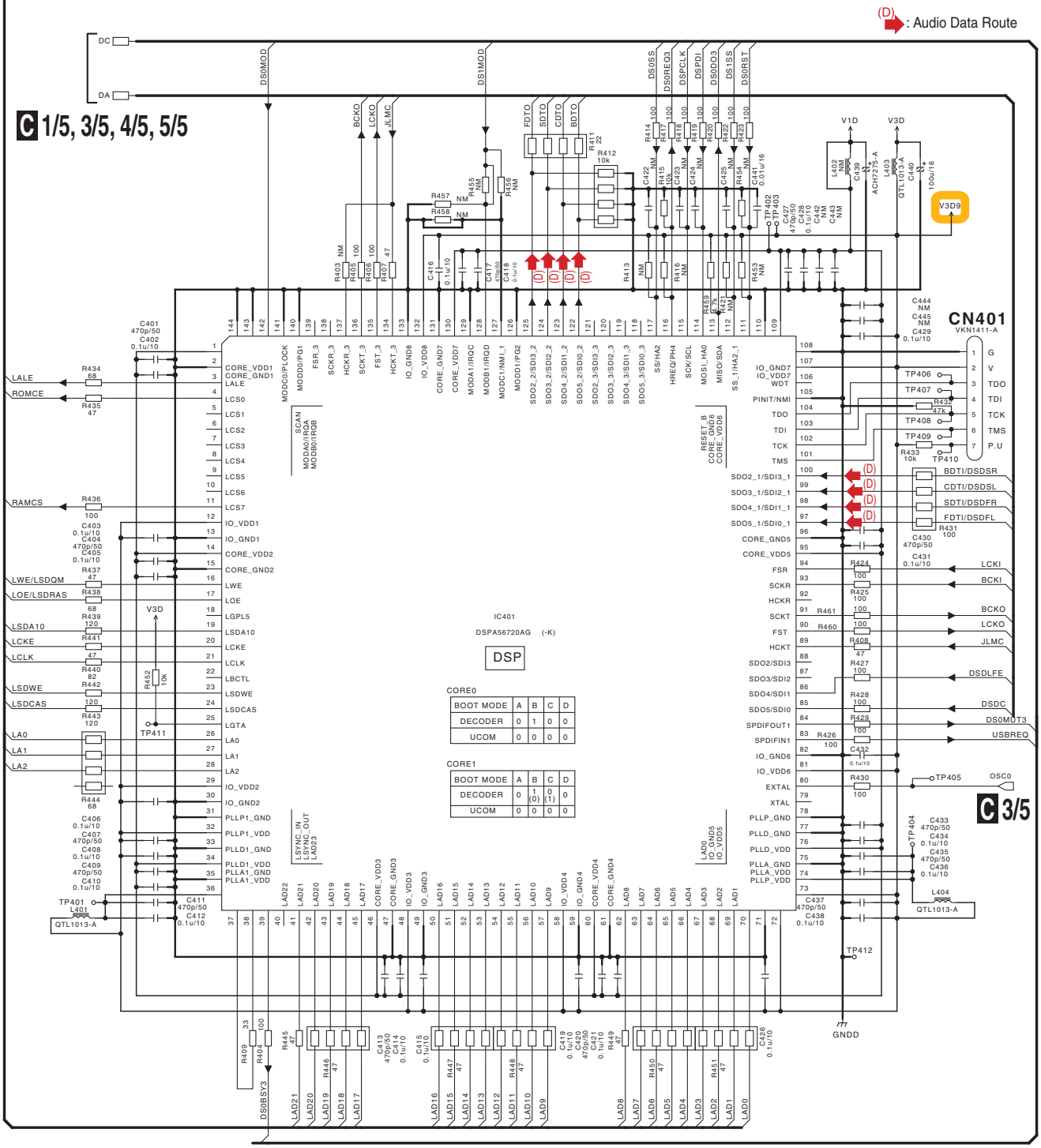

# 10.9 DSP & USB ASSY (3/5)

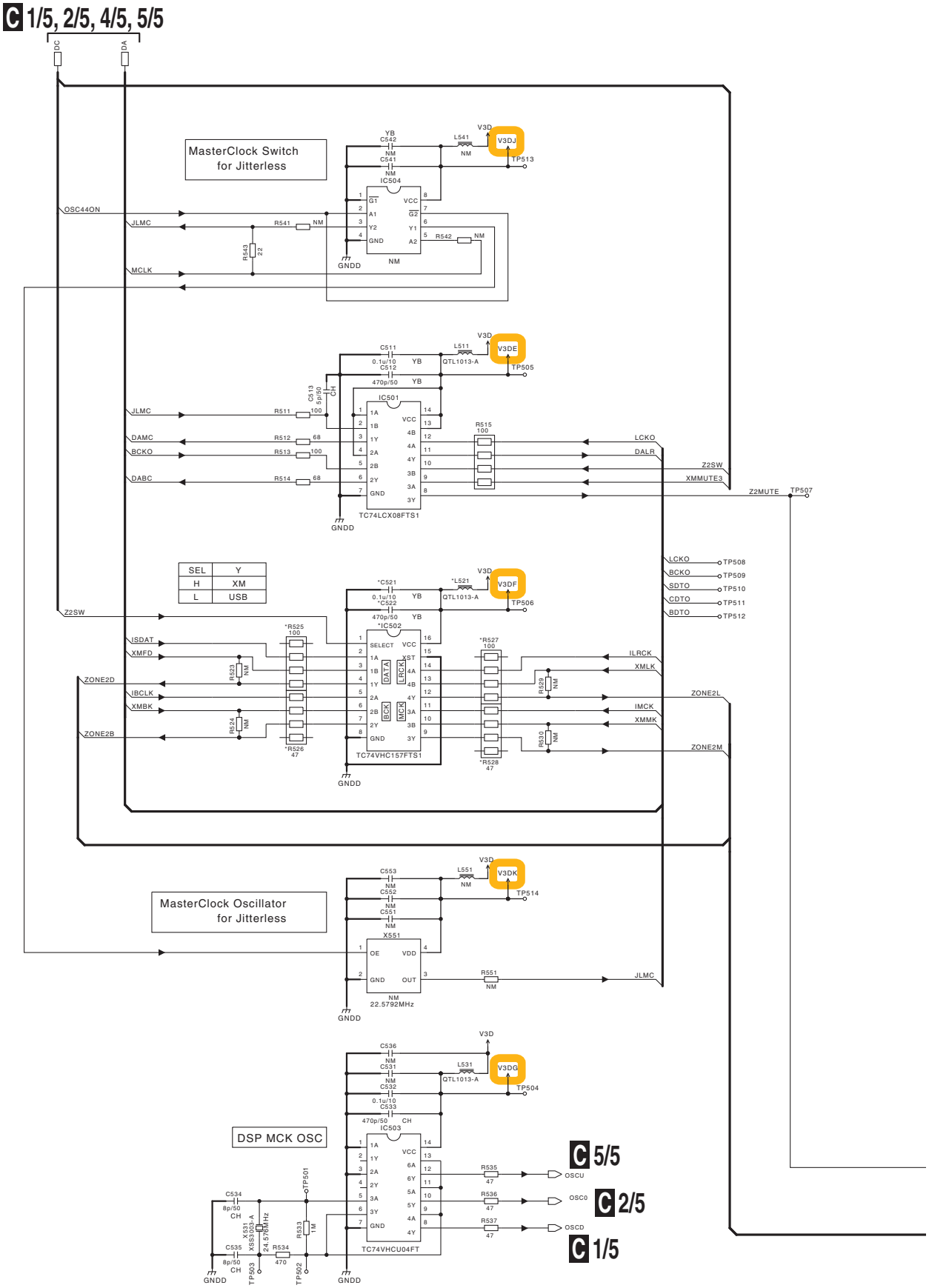


| SEL | Y |
|---|---|
| H | XM |
| L | USB |

# C 3/5 DSP & USB ASSY (VSX-03TXH,VSX-9130TXH-K : AWX9175) (VSX-01TXH, VSX-1018AH-K : AWX9239)

## C 1/5, 2/5, 4/5, 5/5

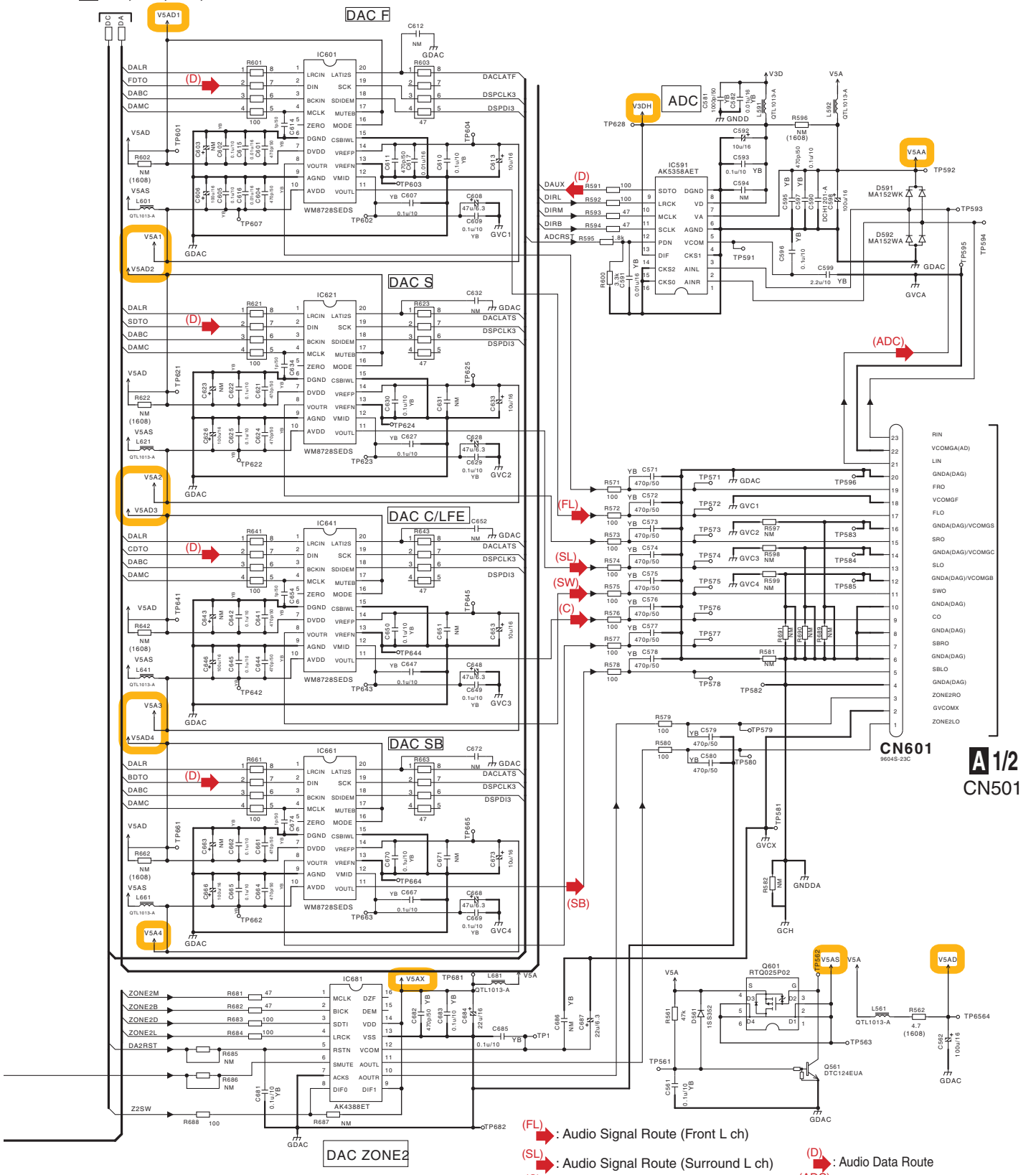


(FL) : Audio Signal Route (Front L ch)
(SL) : Audio Signal Route (Surround L ch)
(C) : Audio Signal Route (Center ch)
(SB) : Audio Signal Route (Surround Back L ch)
(SW) : Audio Signal Route (SubWoofer ch)
(D) : Audio Data Route
(ADC) : Audio Signal Route (ADC L ch)

C 3/5

# 10.10 DSP & USB ASSY (4/5)

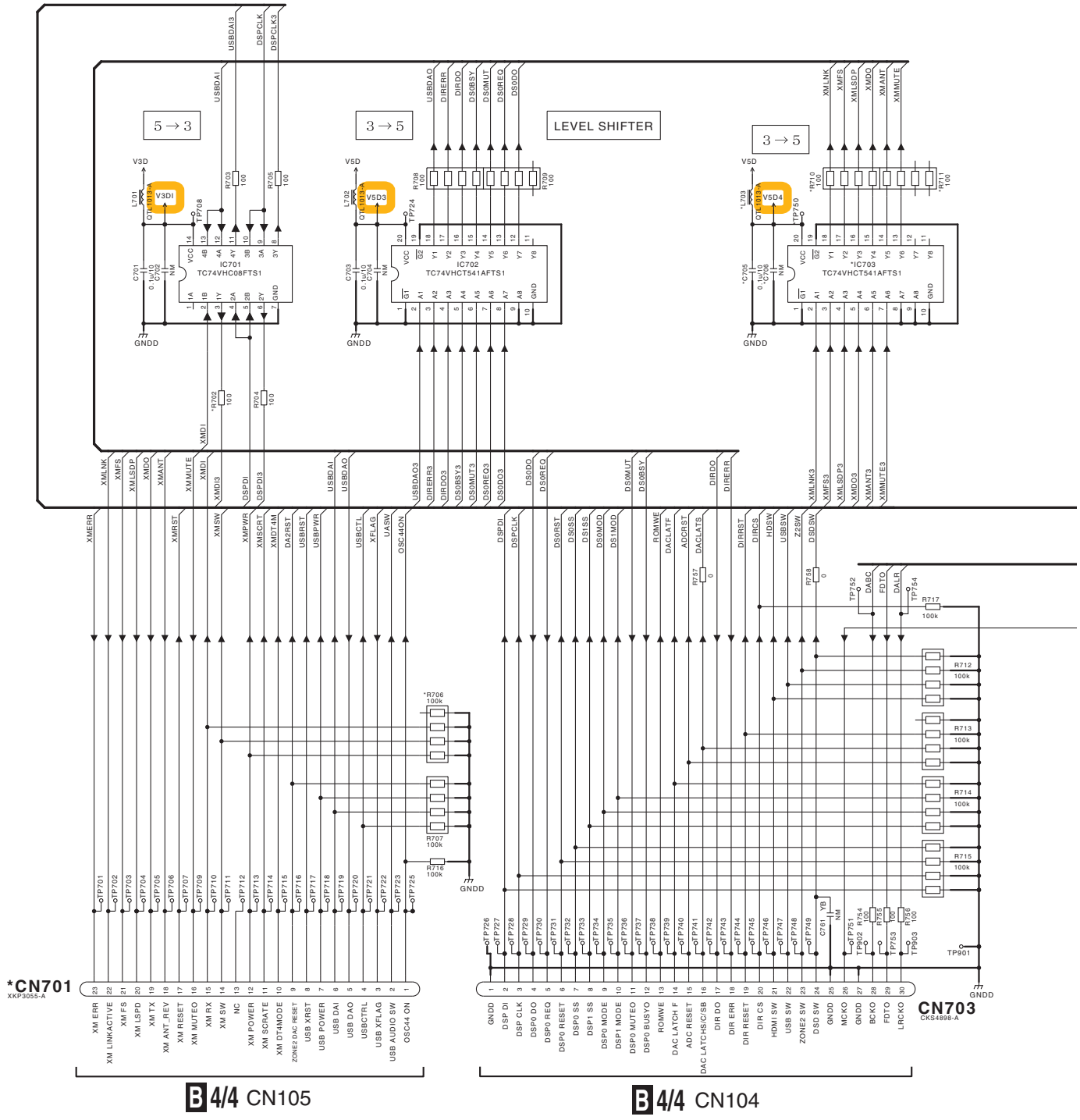


C 4/5

# C 4/5 DSP & USB ASSY (VSX-03TXH,VSX-9130TXH-K : AWX9175) (VSX-01TXH, VSX-1018AH-K : AWX9239)

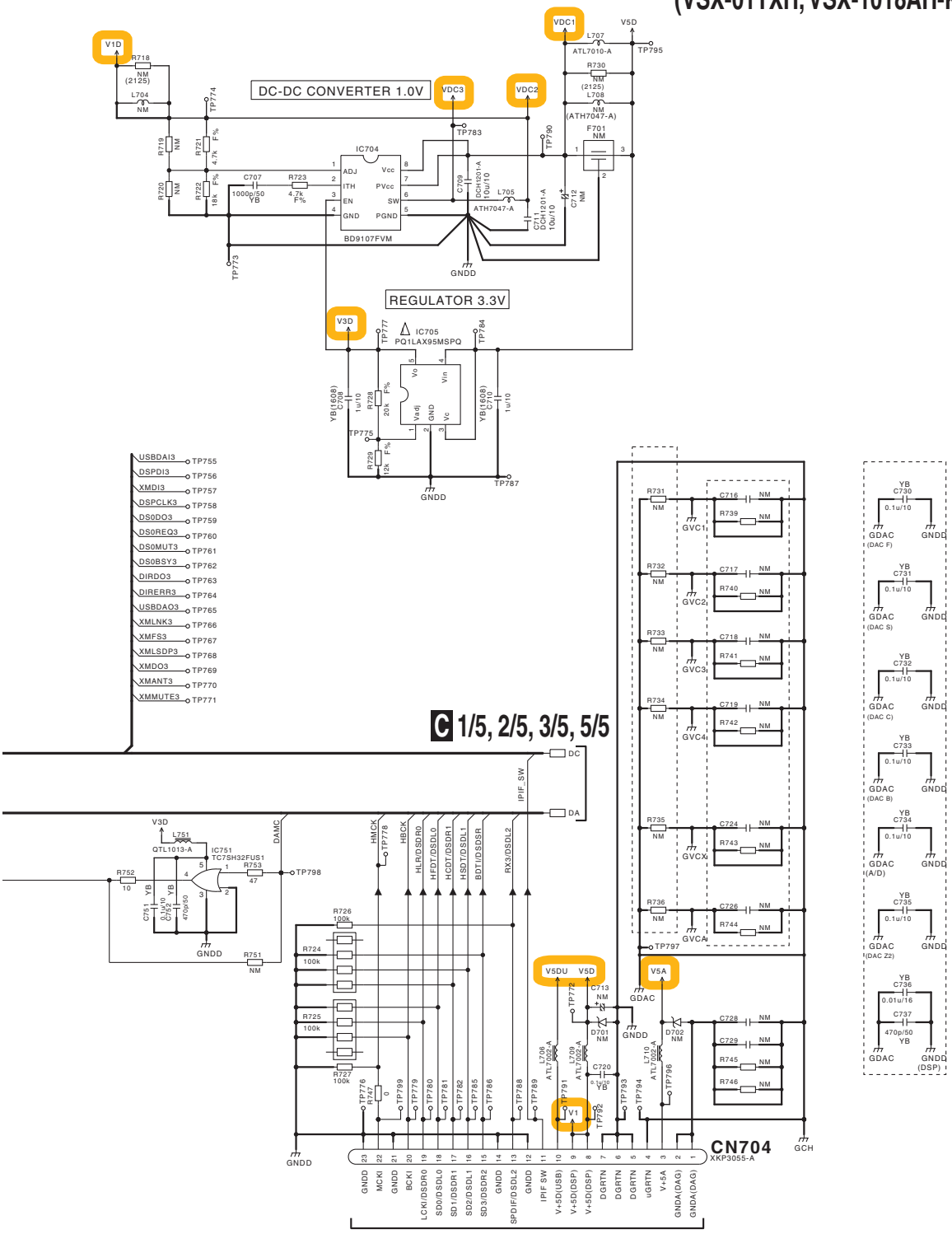

# 10.11 DSP & USB ASSY (5/5)

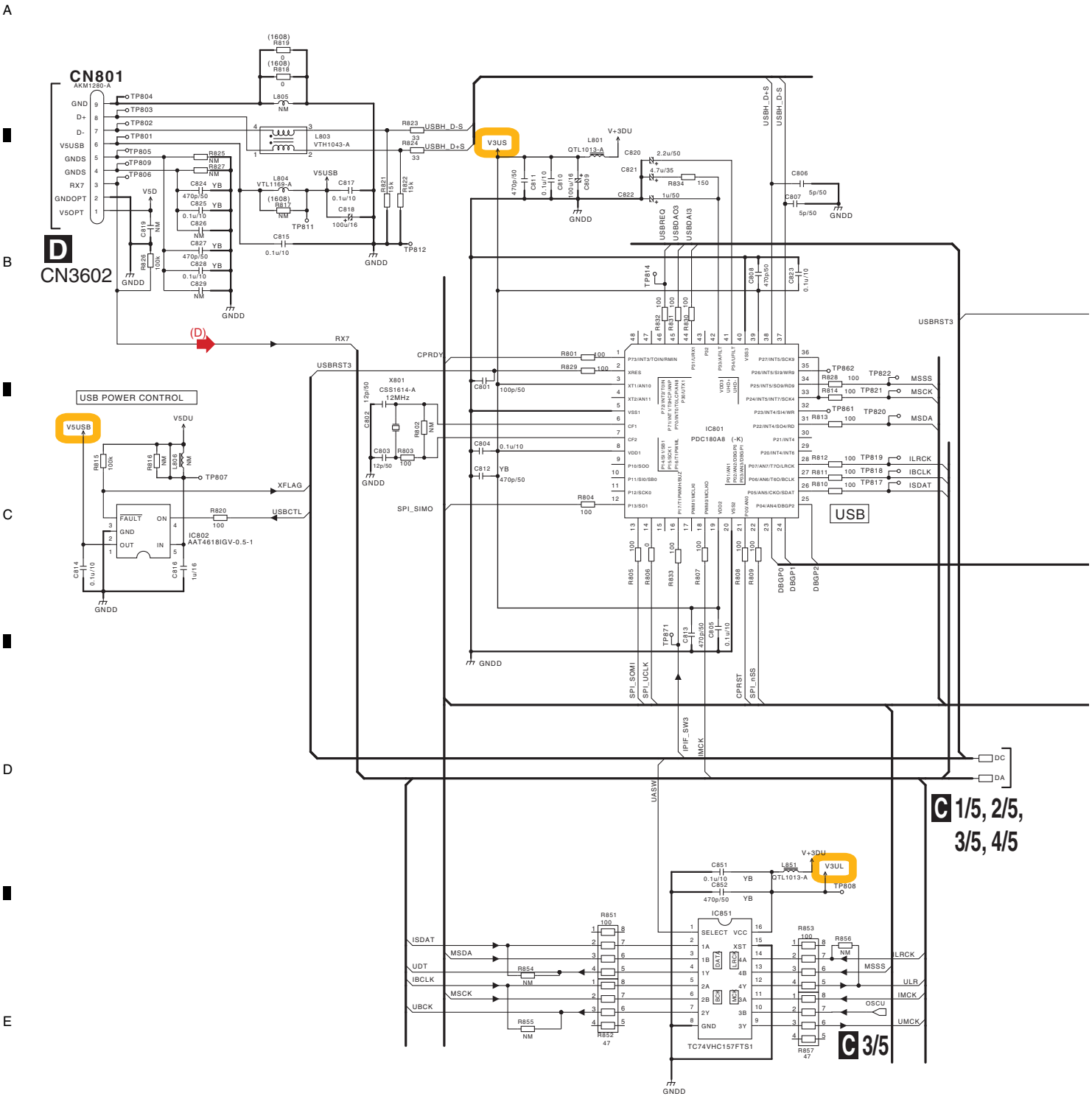


| SEL | Y |
|---|---|
| H | MSC |
| L | iPod |

(D) : Audio Data Route

C 5/5

# C 5/5 DSP & USB ASSY (VSX-03TXH,VSX-9130TXH-K : AWX9175) (VSX-01TXH, VSX-1018AH-K : AWX9239)

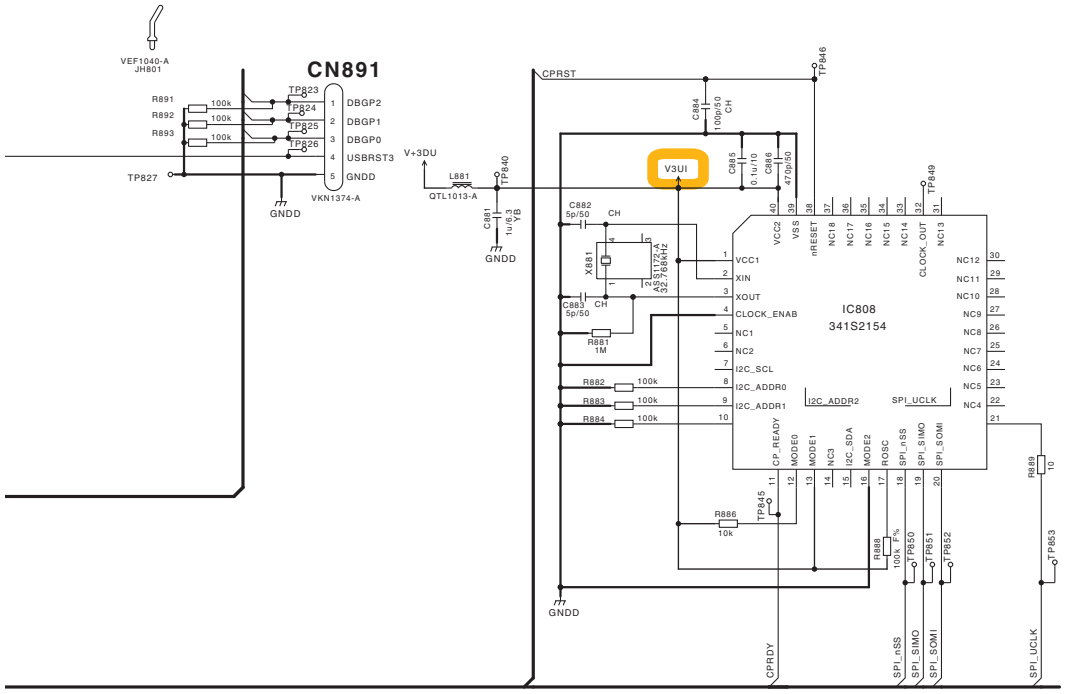


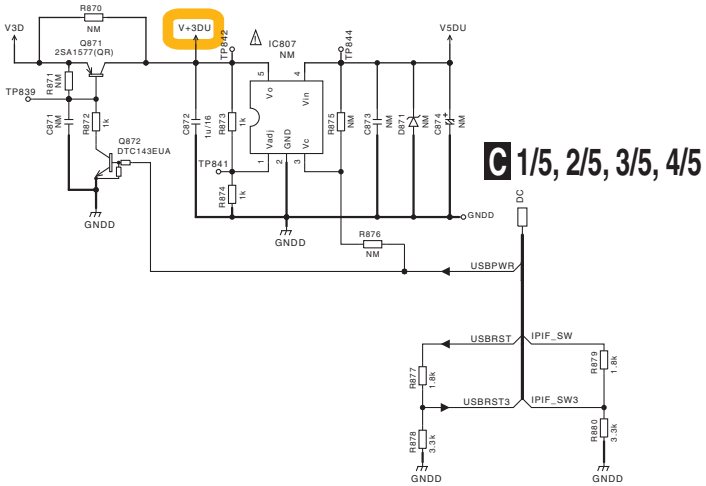


C 1/5, 2/5, 3/5, 4/5

# 10.12 FRONT IN ASSY

## D FRONT IN ASSY (AWX9121)

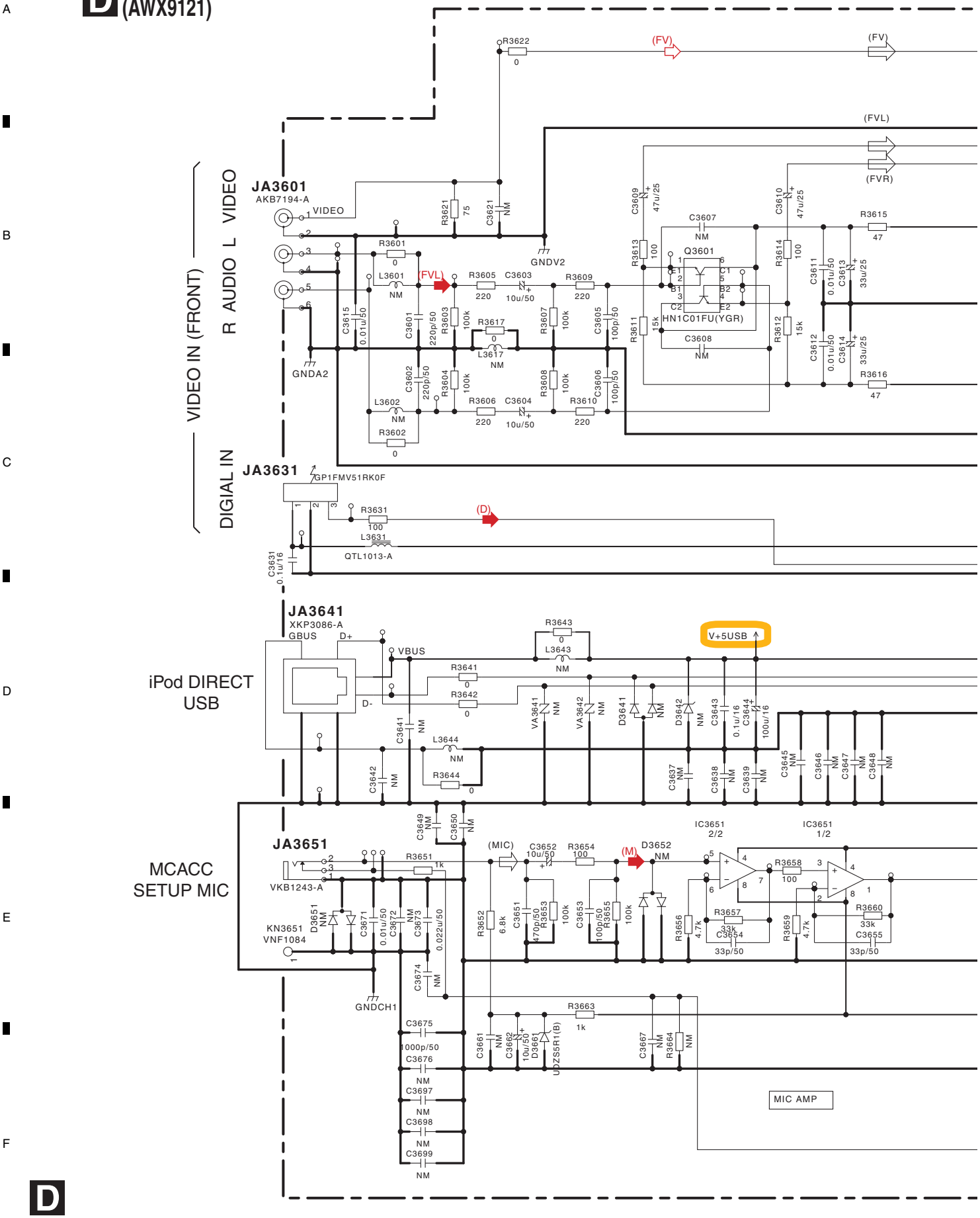

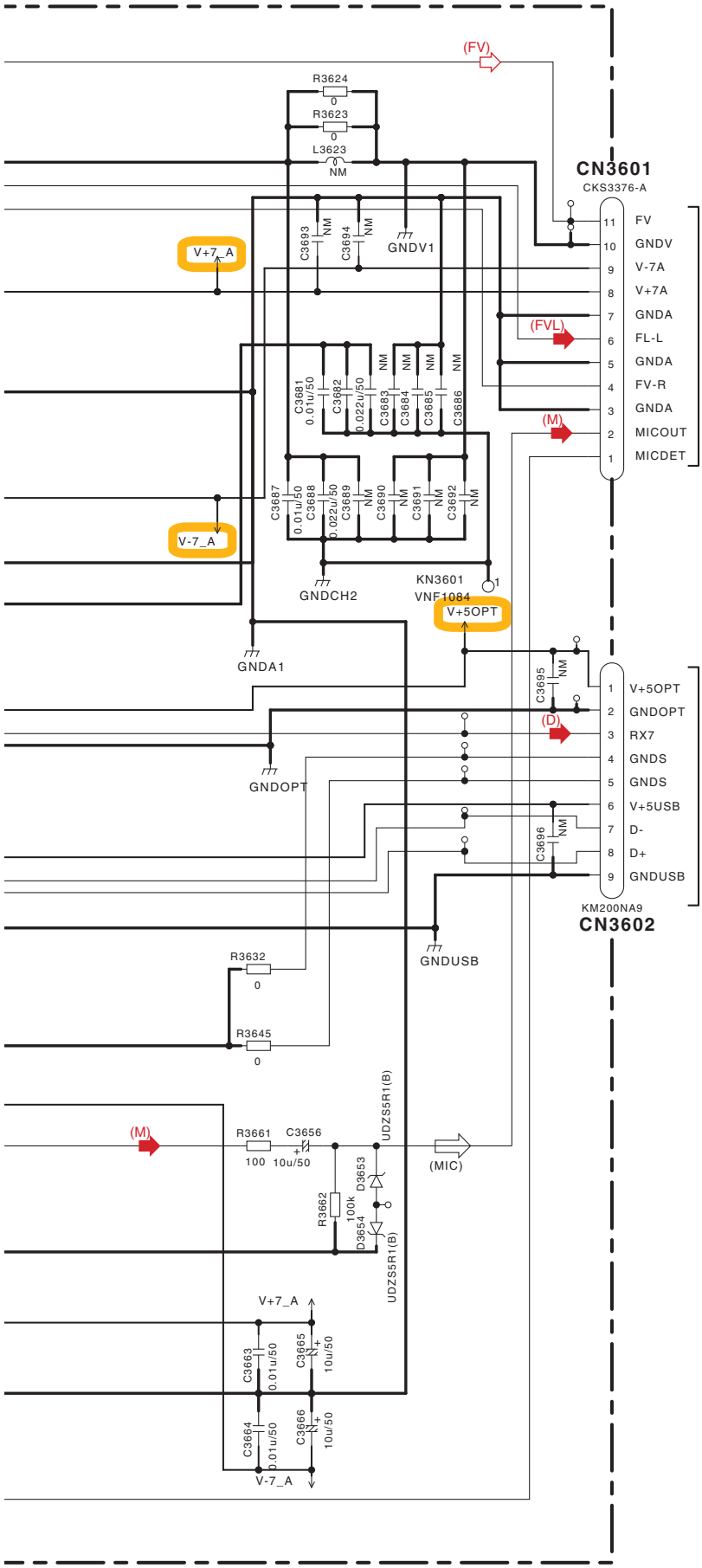


(FV) : Video Signal Route (Video)
(FL) : Audio Signal Route (Front L ch)
(FVL) : Audio Signal Route (Video L ch)
(M) : Audio Signal Route (Mic ch)
(D) : Audio Data Route

NOTE

1.RESISTORS

Unit :k-kΩ, M-MΩ or Ω unless otherwise noted.
Rated:power :1/10W unless otherwise noted.
Tolerance :(J) ±5% unless otherwise noted.

2,CAPACITORS

Unit :p-pF or μF or unless otherwise noted.
Ratings :Capacity(μF)/Voltage(V) unless otherwise noted.
Rated Voltage :50V except for electrolytic capacitors.

3,DIODES

Indicated in 1SS355

# 10.13 INTERFACE ASSY

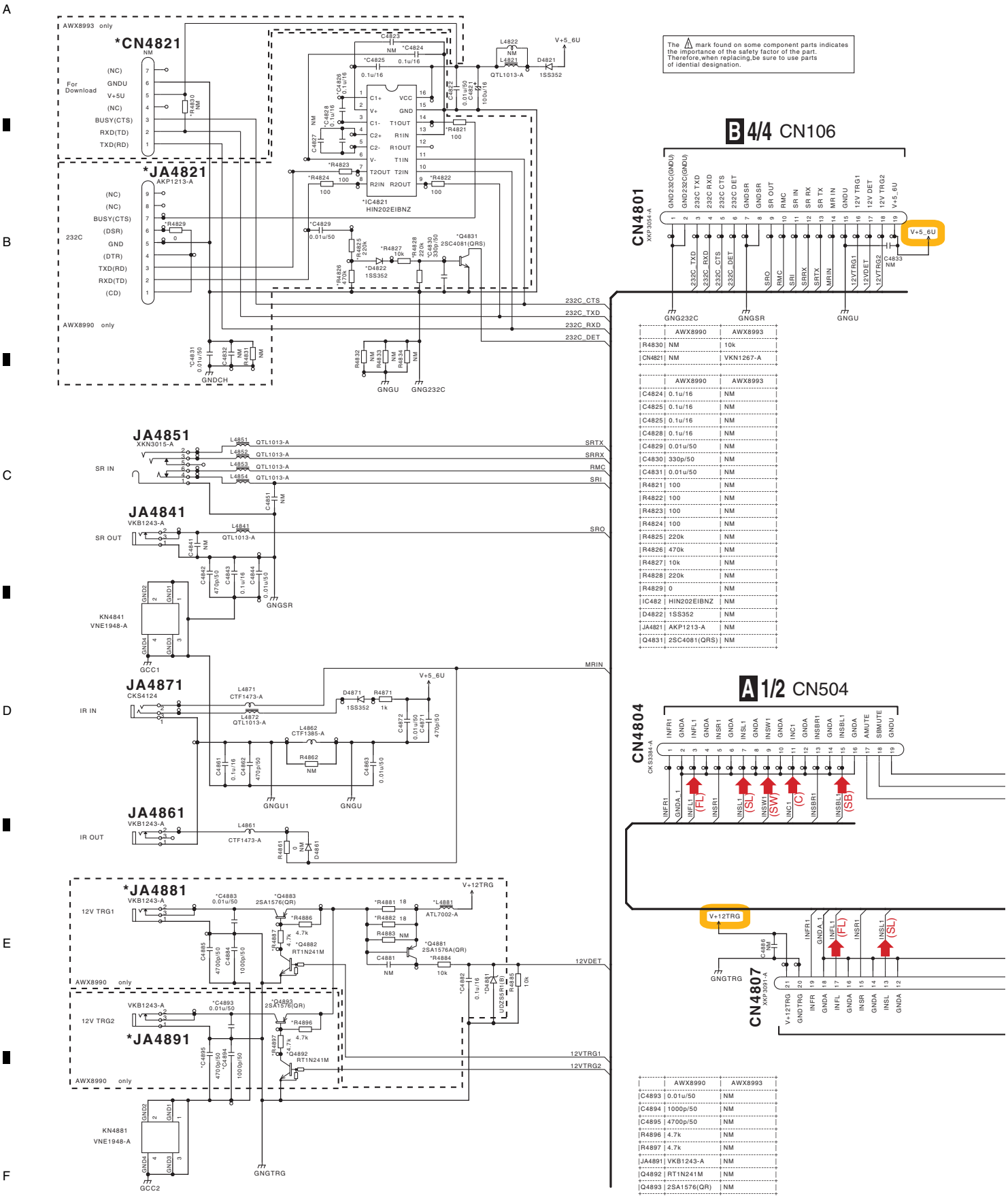


| | AWX8990 | AWX8993 |
|---|---|---|
| R4830 | NM | 10k |
| CN4821 | NM | VKN1267-A |

| | AWX8990 | AWX8993 |
|---|---|---|
| C4824 | 0.1u/16 | NM |
| C4825 | 0.1u/16 | NM |
| C4825 | 0.1u/16 | NM |
| C4828 | 0.1u/16 | NM |
| C4829 | 0.01u/50 | NM |
| C4830 | 330p/50 | NM |
| C4831 | 0.01u/50 | NM |
| R4821 | 100 | NM |
| R4822 | 100 | NM |
| R4823 | 100 | NM |
| R4824 | 100 | NM |
| R4825 | 220k | NM |
| R4826 | 470k | NM |
| R4827 | 10k | NM |
| R4828 | 220k | NM |
| R4829 | 0 | NM |
| IC482 | HIN202EIBNZ | NM |
| D4822 | 1SS352 | NM |
| JA4821 | AKP1213-A | NM |
| Q4831 | 2SC4081(QRS) | NM |

| | AWX8990 | AWX8993 |
|---|---|---|
| C4893 | 0.01u/50 | NM |
| C4894 | 1000p/50 | NM |
| C4895 | 4700p/50 | NM |
| R4896 | 4.7k | NM |
| R4897 | 4.7k | NM |
| JA4891 | VKB1243-A | NM |
| Q4892 | RT1N241M | NM |
| Q4893 | 2SA1576(QR) | NM |

# E INTERFACE ASSY (VSX-03TXH,VSX-9130TXH-K,VSX-01TXH : AWX8990) (VSX-1018AH-K : AWX8993)

NOTE
1.RESISTORS
Unit :k-kΩ, M-MΩ or Ω unless otherwise noted.
Rated power: 1/16W unless otherwise noted.
Tolerance :(J) ±5% unless otherwise noted.
2.CAPACITORS
Unit: p-pF, or μF unless otherwise noted.
Ratings: Capacity(μF)/Voltage(V) unless otherwise noted.
3.DIODES
Indicated in 1ss355.

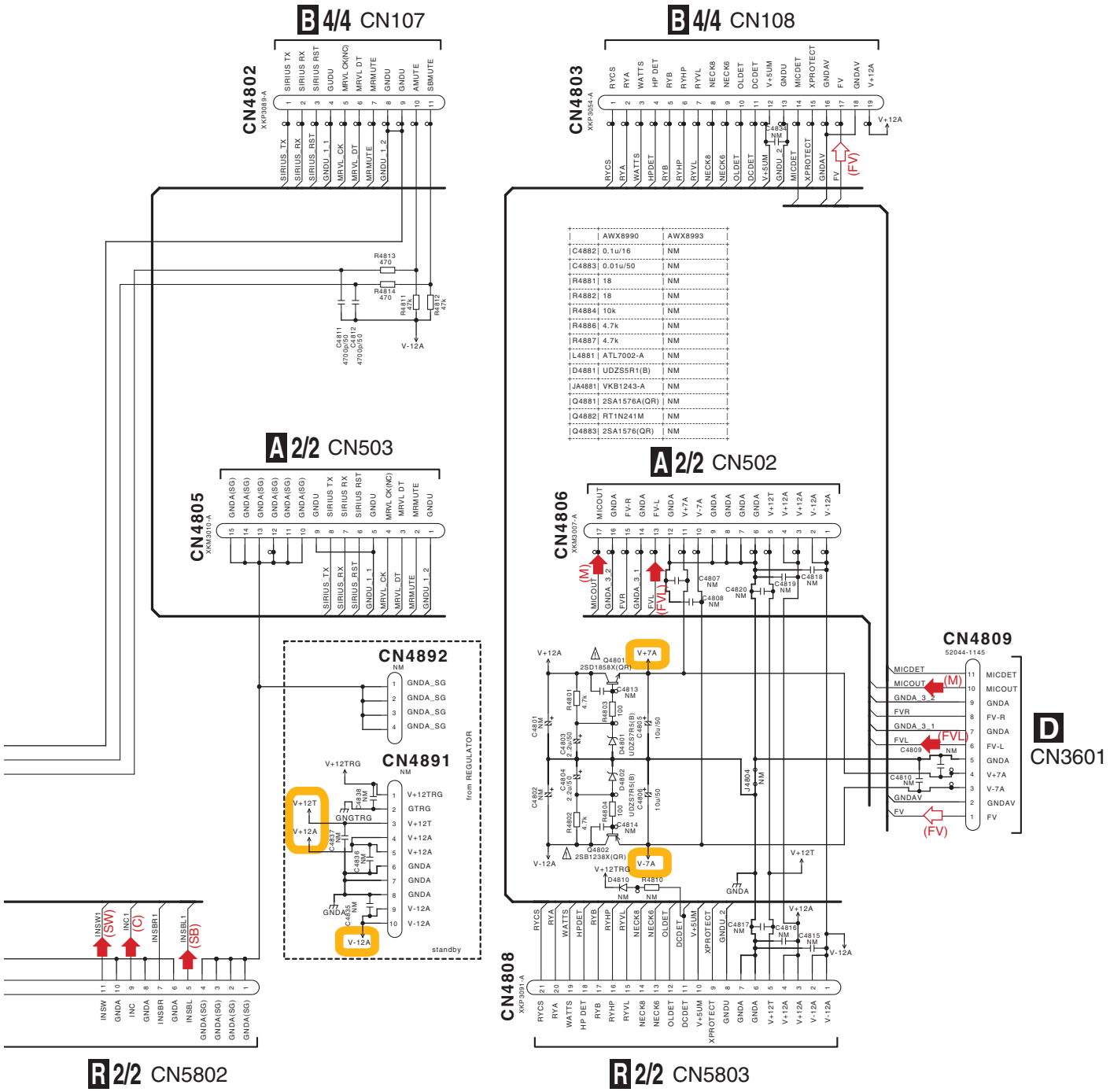


| | AWX8990 | AWX8993 |
|---|---|---|
| C4882 | 0.1u/16 | NM |
| C4883 | 0.01u/50 | NM |
| R4881 | 18 | NM |
| R4882 | 18 | NM |
| R4884 | 10k | NM |
| R4886 | 4.7k | NM |
| R4887 | 4.7k | NM |
| L4881 | ATL7002-A | NM |
| D4881 | UDZS5R1(B) | NM |
| JA4881 | VKB1243-A | NM |
| Q4881 | 2SA1576A(QR) | NM |
| Q4882 | RT1N241M | NM |
| Q4883 | 2SA1576(QR) | NM |

(FV) : Video Signal Route (Video)
(FL) : Audio Signal Route (Front L ch)
(FVL) : Audio Signal Route (Video L ch)
(SL) : Audio Signal Route (Surround L ch)
(C) : Audio Signal Route (Center ch)
(SB) : Audio Signal Route (Surround Back L ch)
(SW) : Audio Signal Route (SubWoofer ch)
(M) : Audio Signal Route (Mic ch)

# 10.14 HDMI & DVC ASSY (1/2)

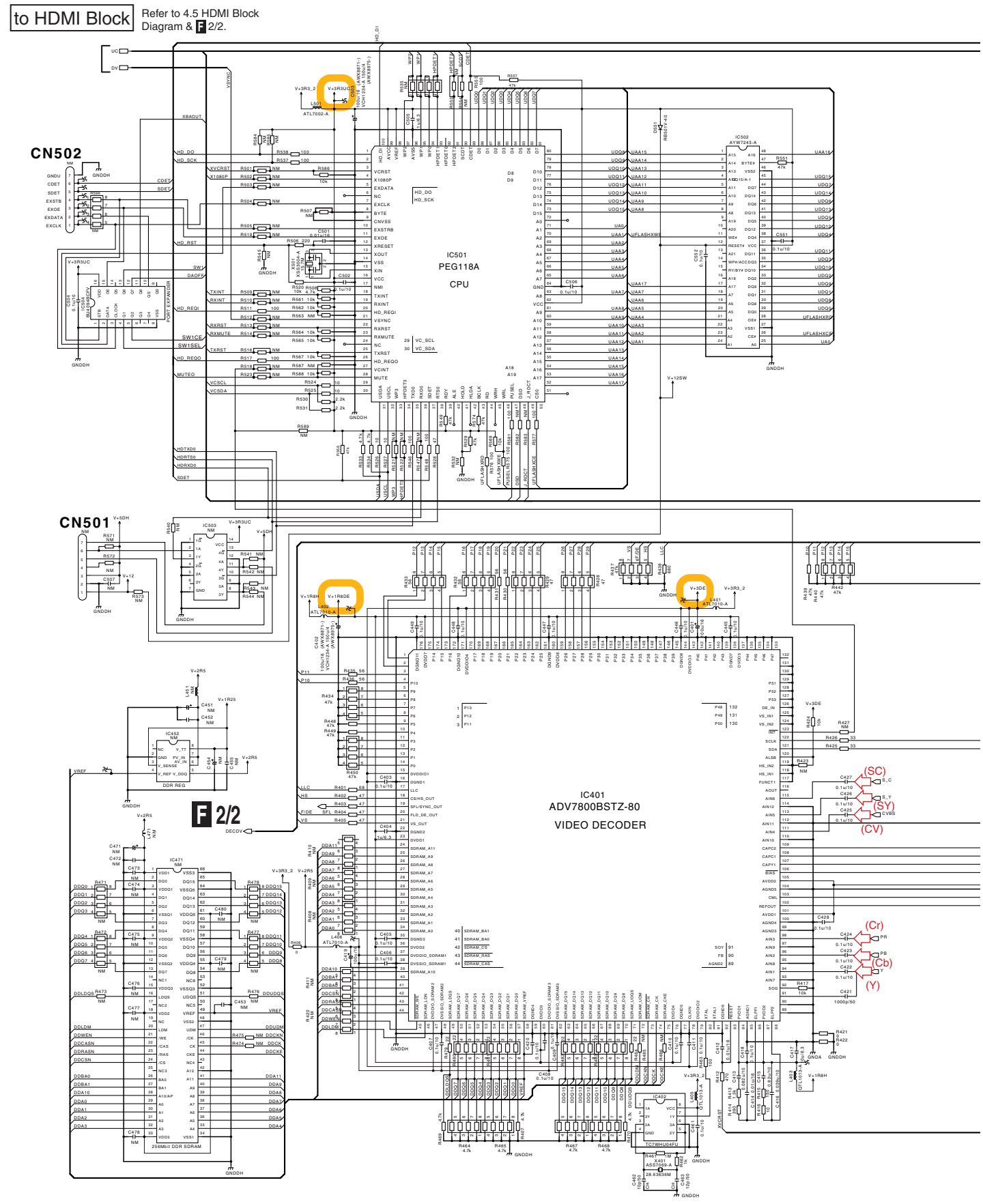

# F 1/2 HDMI & DVC ASSY (VSX-03TXH,VSX-9130TXH-K :AWX9170) (VSX-01TXH,VSX-1018AH-K :AWX9233)

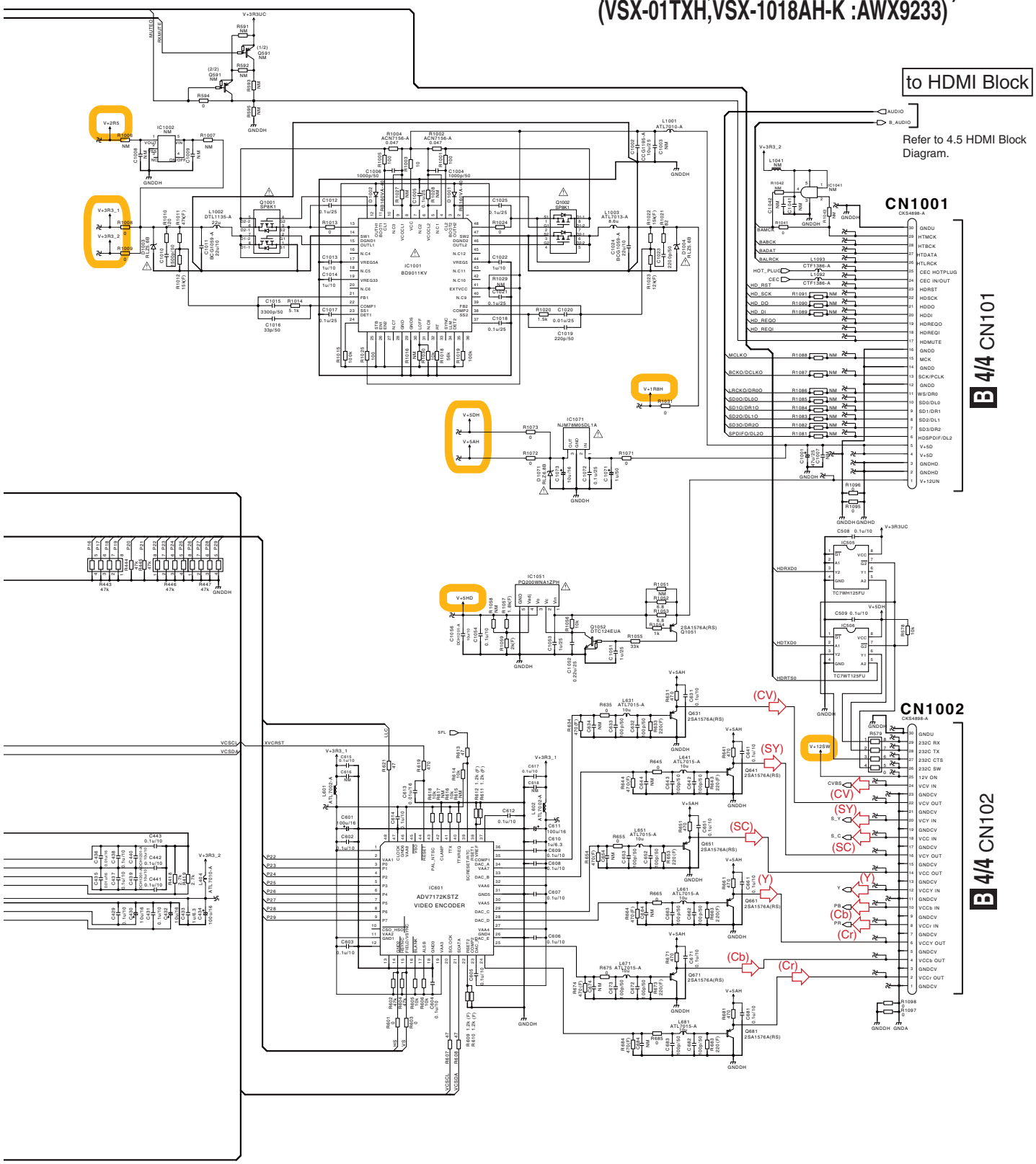


(Y) ⇨ : Video Signal Route (Component Y ch)

(Cb) ⇨ : Video Signal Route (Component Cb ch)

(Cr) ⇨ : Video Signal Route (Component Cr ch)

(CV) ⇨ : Video Signal Route (Component Video)

(SY) ⇨ : S-Video Signal Route (Y ch)

(SC) ⇨ : S-Video Signal Route (C ch)

# 10.15 HDMI & DVC ASSY (2/2)

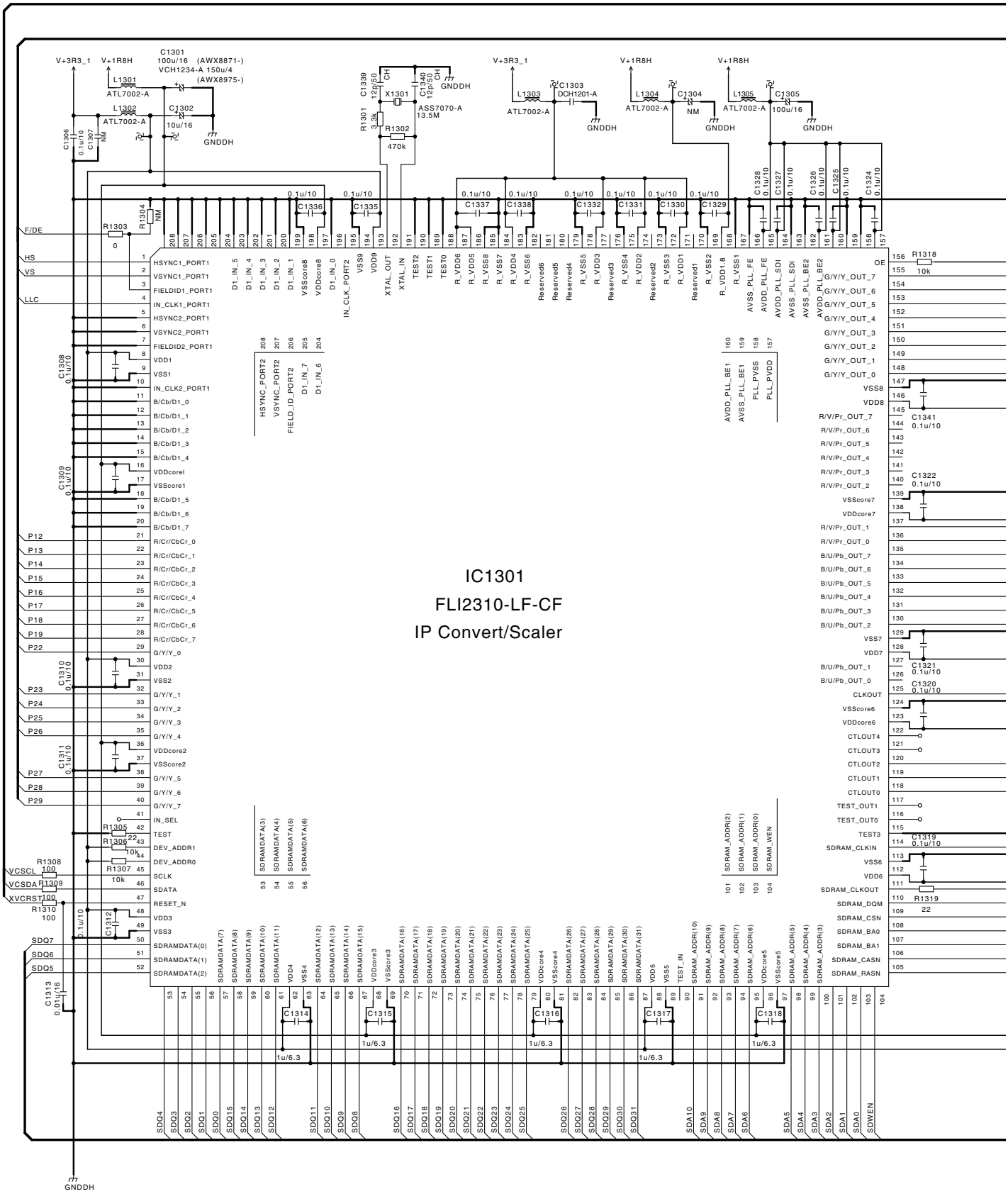


F 2/2

# F 2/2 HDMI & DVC ASSY (VSX-03TXH,VSX-9130TXH-K :AWX9170) (VSX-01TXH,VSX-1018AH-K :AWX9233)

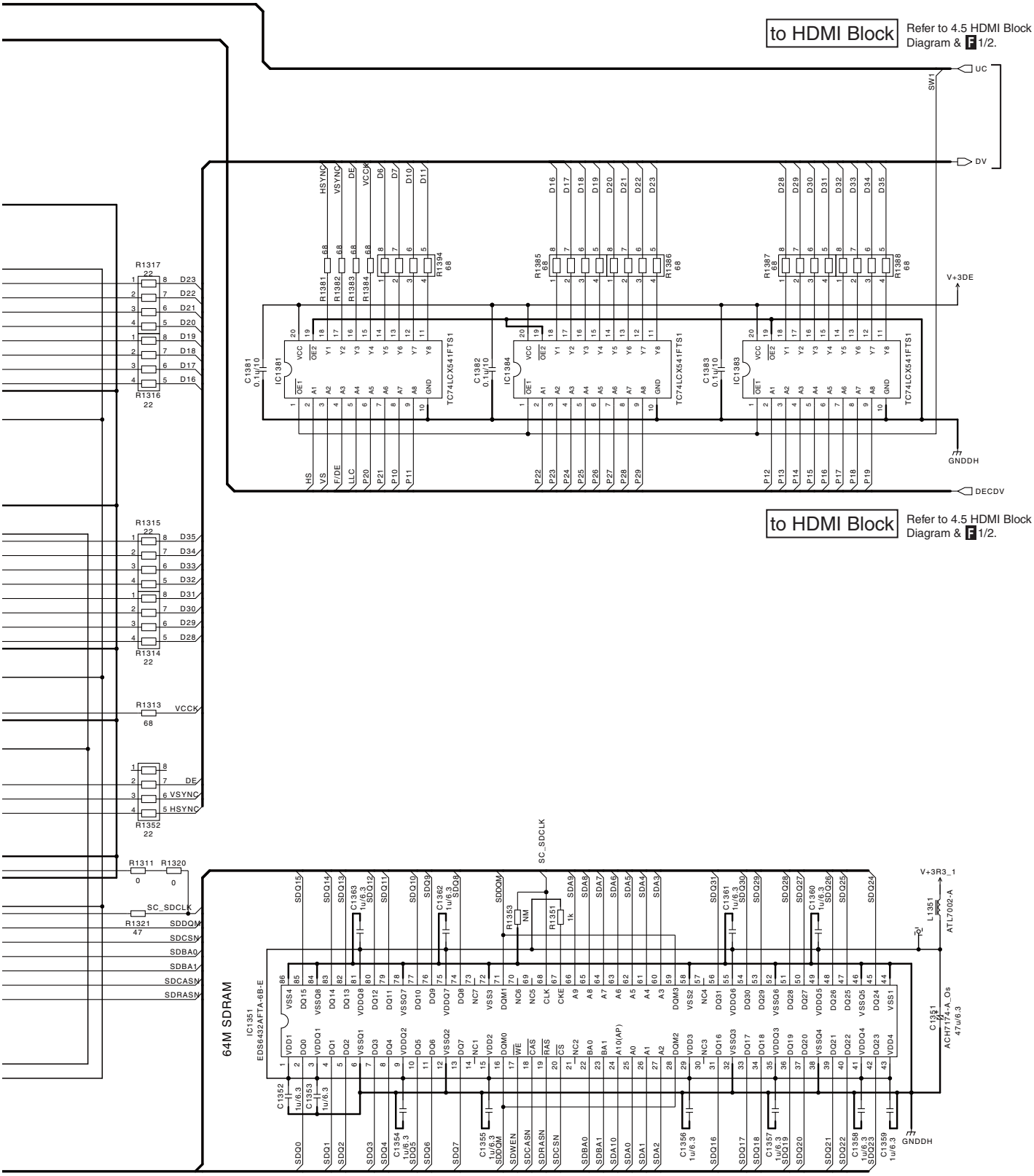

# 10.16 BINDER, BIND L FRONT, BIND L BACK, BIND R FRONT and BIND R BACK ASSYS

## H BINDER ASSY (AWX9120)

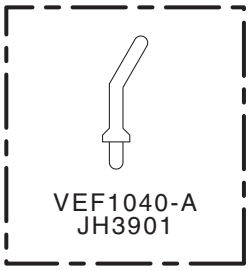


## I BIND_L_FRONT ASSY (AWX9217)

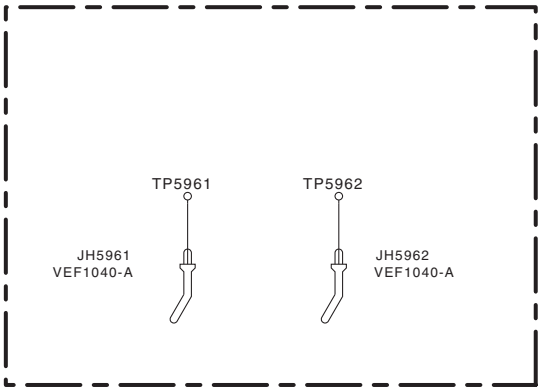


## J BIND_L_BACK ASSY (AWX9218)

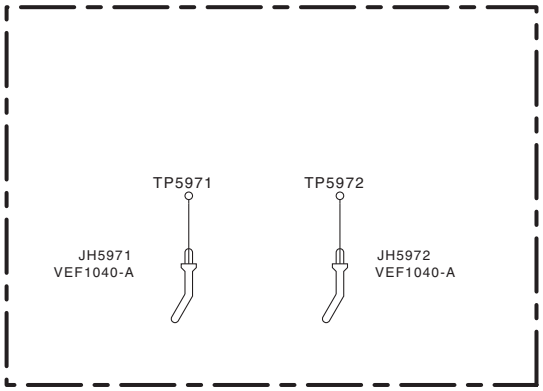


## K BIND_R_FRONT ASSY (AWX9219)

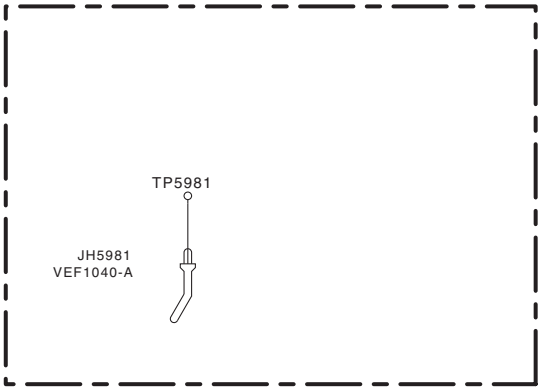


## L BIND_R_BACK ASSY (AWX9220)

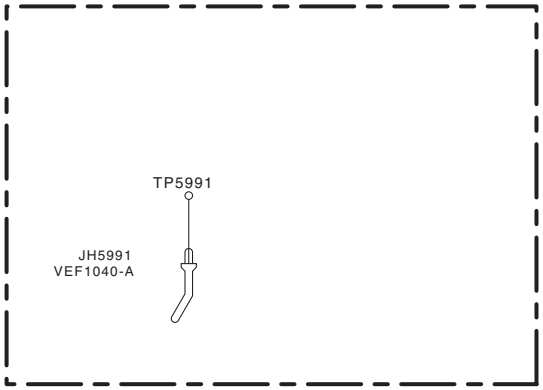

# 10.17 POSI1, POSI2 and POSI3 ASSYS

## W POSI 1 ASSY (AWX9132)

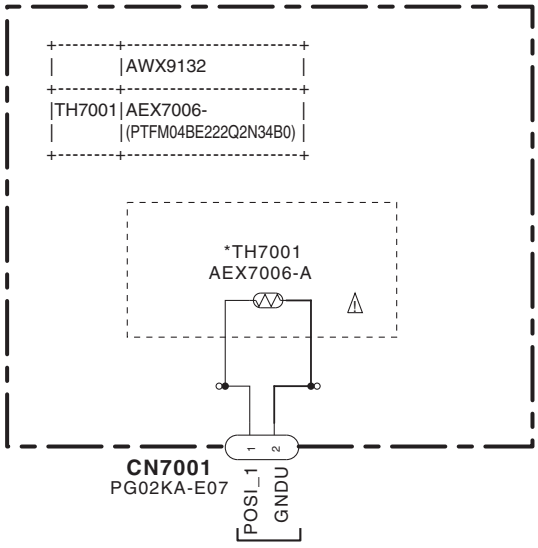


B 3/4
CN111

## X POSI 2 ASSY (AWX9133)

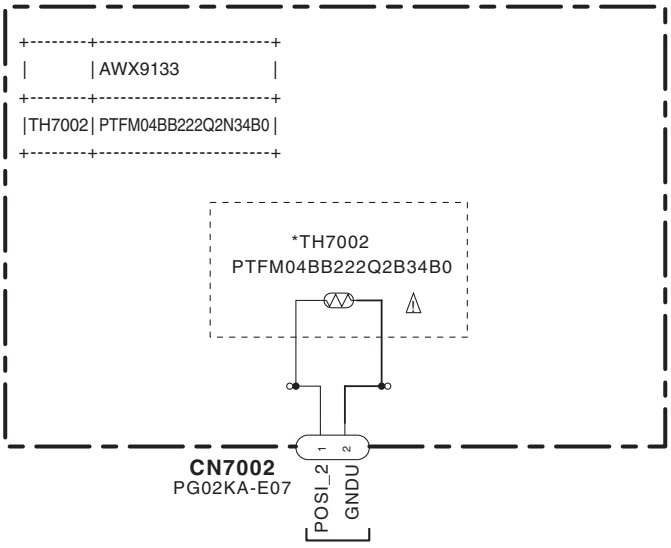


B 3/4
CN112

## Y POSI 3 ASSY (AWX9223)

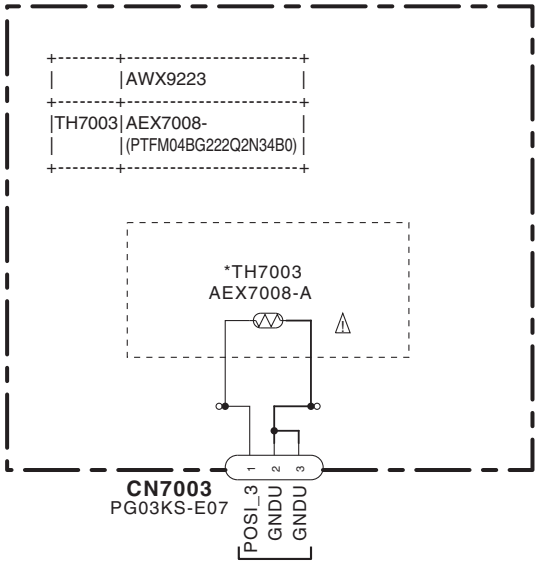


B 3/4
CN119

The ⚠mark found on some component parts indicates the importance of the safety factor of the part. Therefore,when replacing ,be,sure to use parts of identical desigantion.

# 10.18 DISPLAY ASSY

| | awx9117 | awx9216 |
|---|---|---|
| R3111 | 680 | 680 |
| R3139 | 150 | NM |
| R3148 | 560 | 150 |
| R3155 | 150 | NM |
| D3009 | SLR-343VC(NPQ) | SLR-343VC(NPQ) |
| D3015 | SLR343BC4T(JKLM) | NM |
| D3017 | SLR343WBCT(MNPQ) | SLR343BC4T(JKLM) |
| D3019 | SLR343BC4T(JKLM) | NM |
| Q3006 | DTC143EUA | DTC143EUA |
| Q3009 | DTC143EUA | NM |
| Q3011 | DTC143EUA | NM |

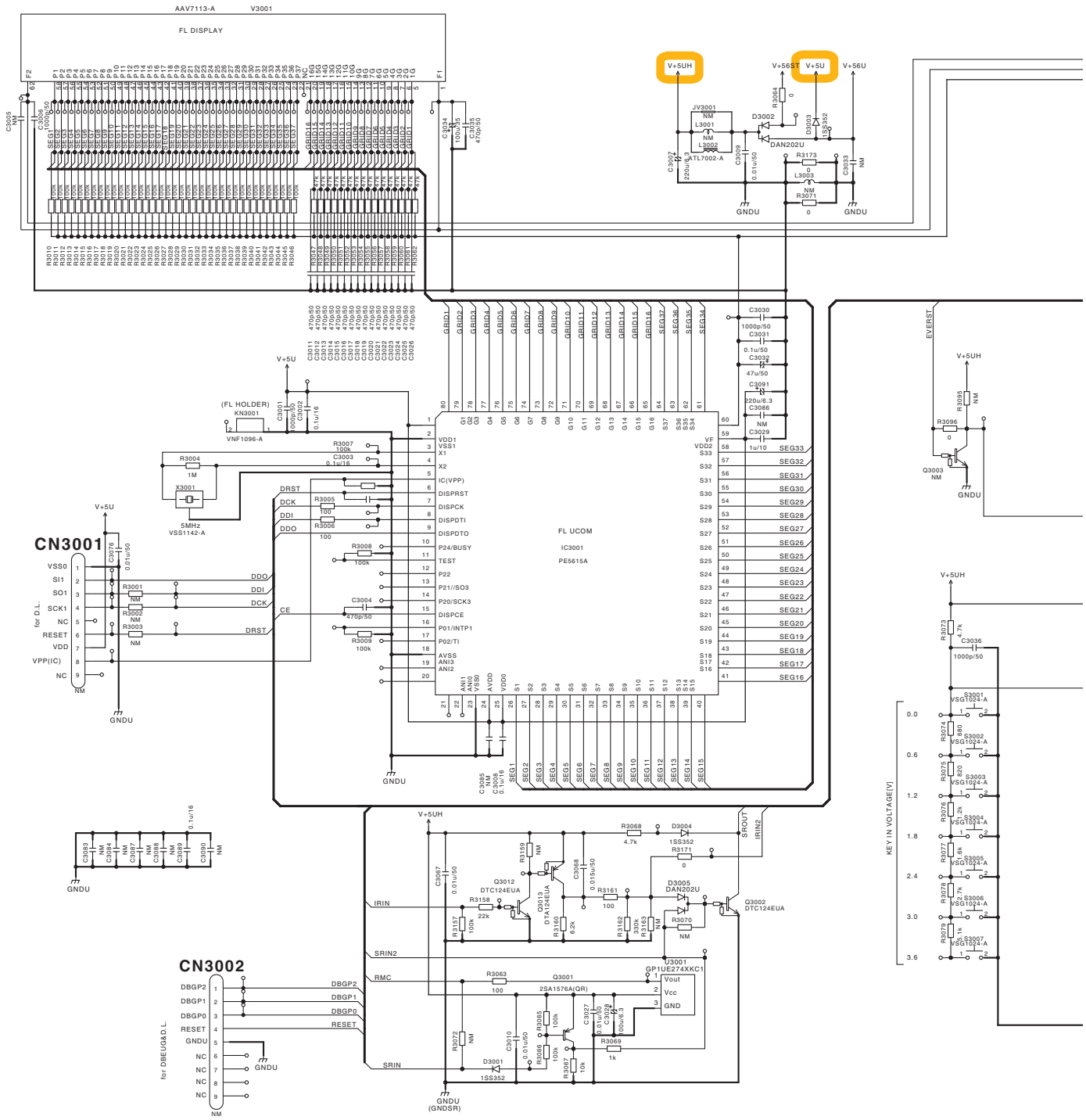

# M DISPLAY ASSY
# (VSX-03TXH,VSX-01TXH : AWX9117)
# (VSX-9130TXH-K, VSX-1018AH-K : AWX9216)

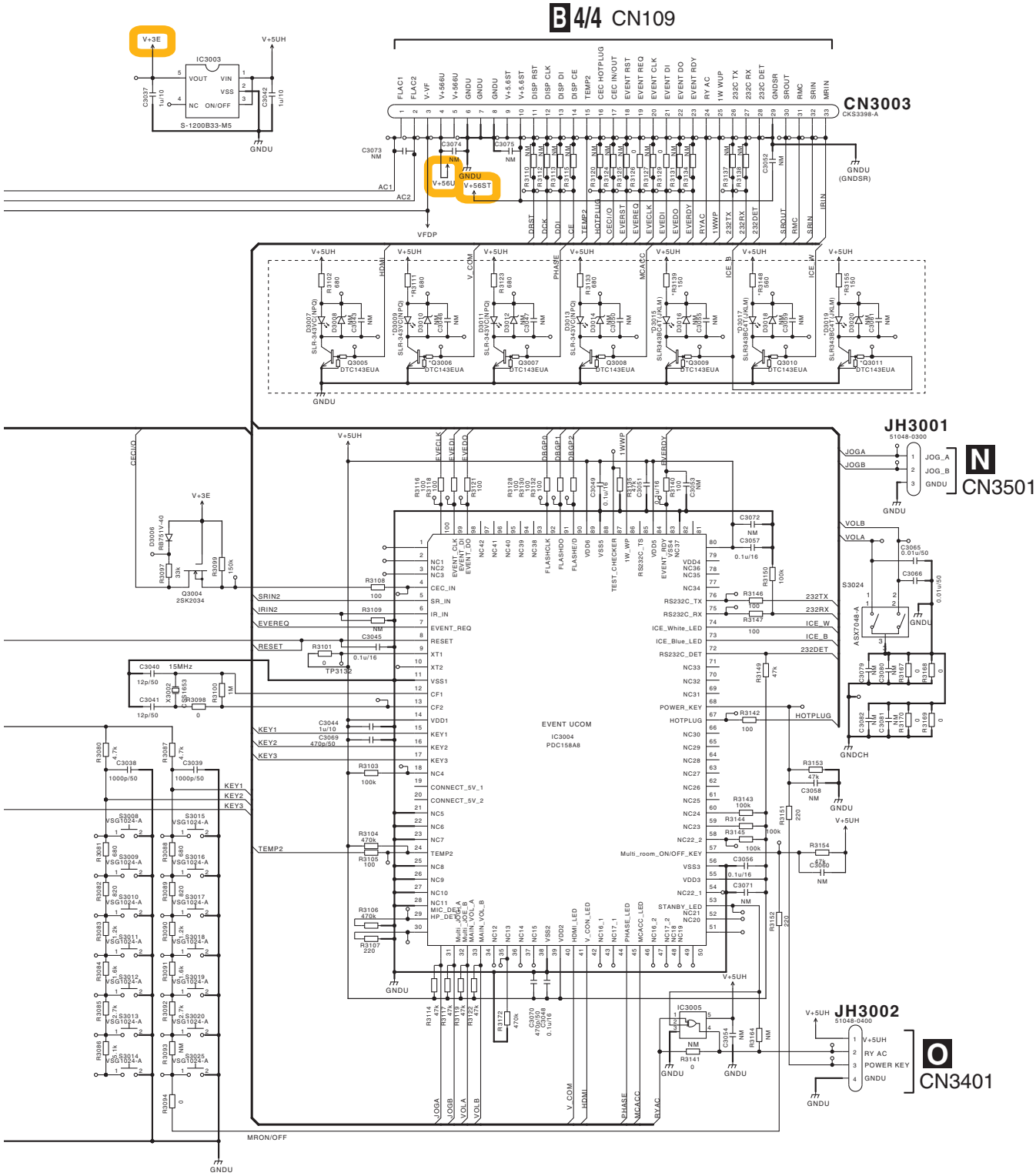

# 10.19 MULTI JOG, POWER SW, DIODE, HEADPHONE, PRIMARY and DC/DC ASSYS

## N MULTI JOG ASSY (AWX9119)

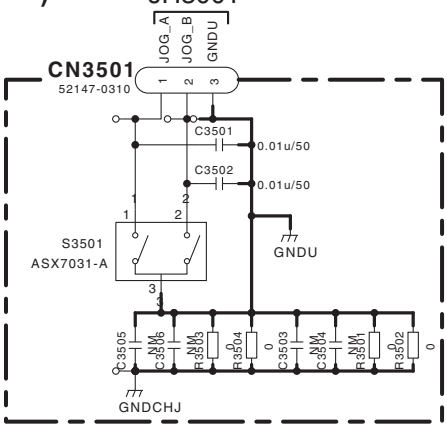


## P DIODE ASSY (AWX8985)

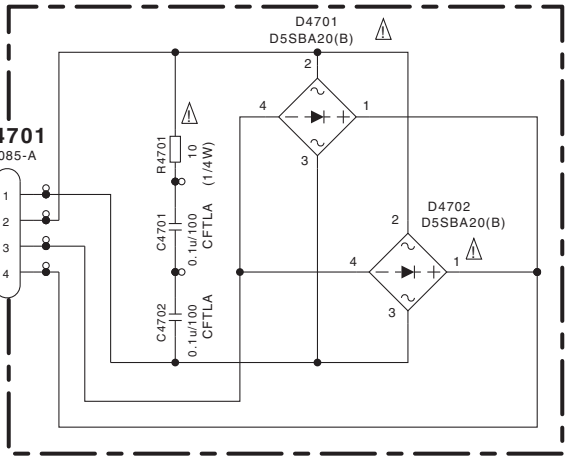


## Q HEADPHONE ASSY (AWX9122)

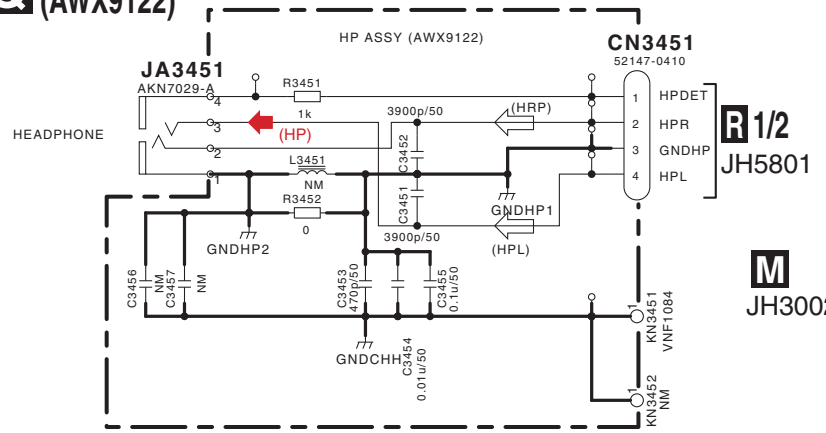


## O POWER SW ASSY (AWX9118)

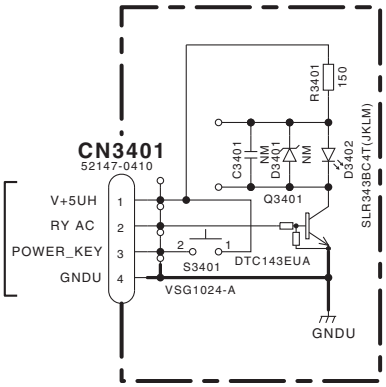


(HP) : Audio Signal Route (Headphone L ch)

## V DC/DC ASSY (AWX8988)

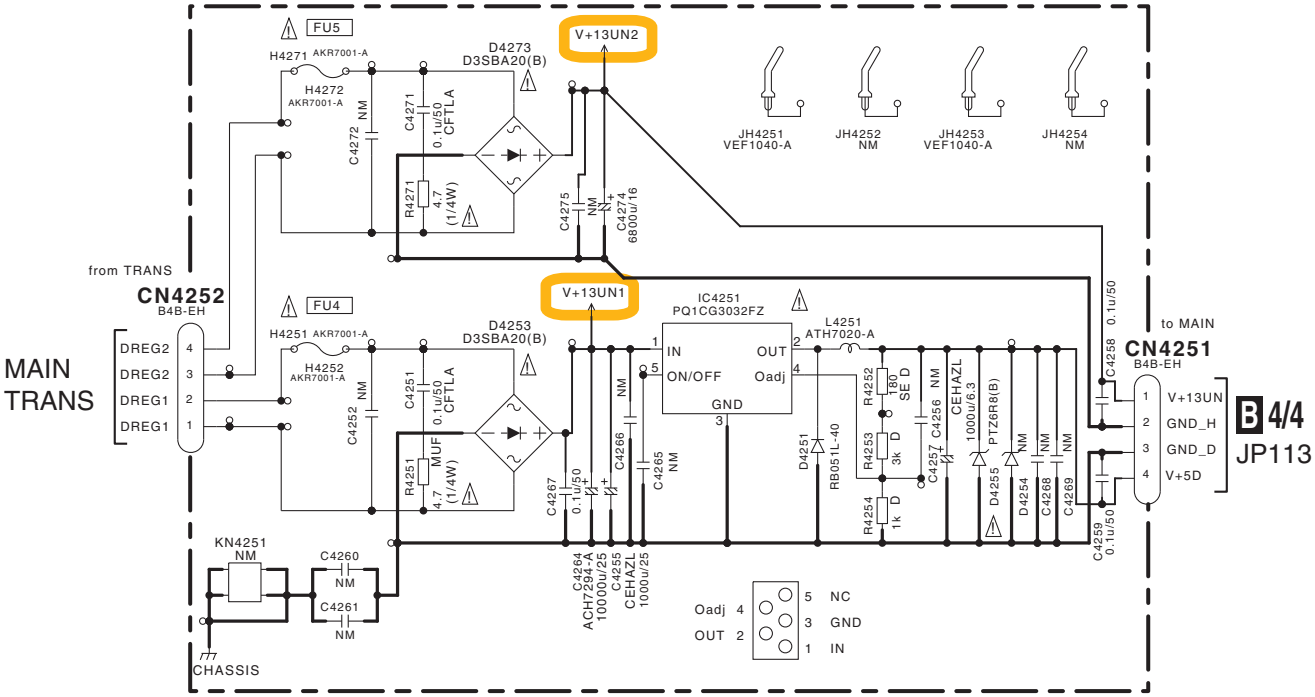


N O P Q V

# T PRIMARY ASSY (AWX9123)

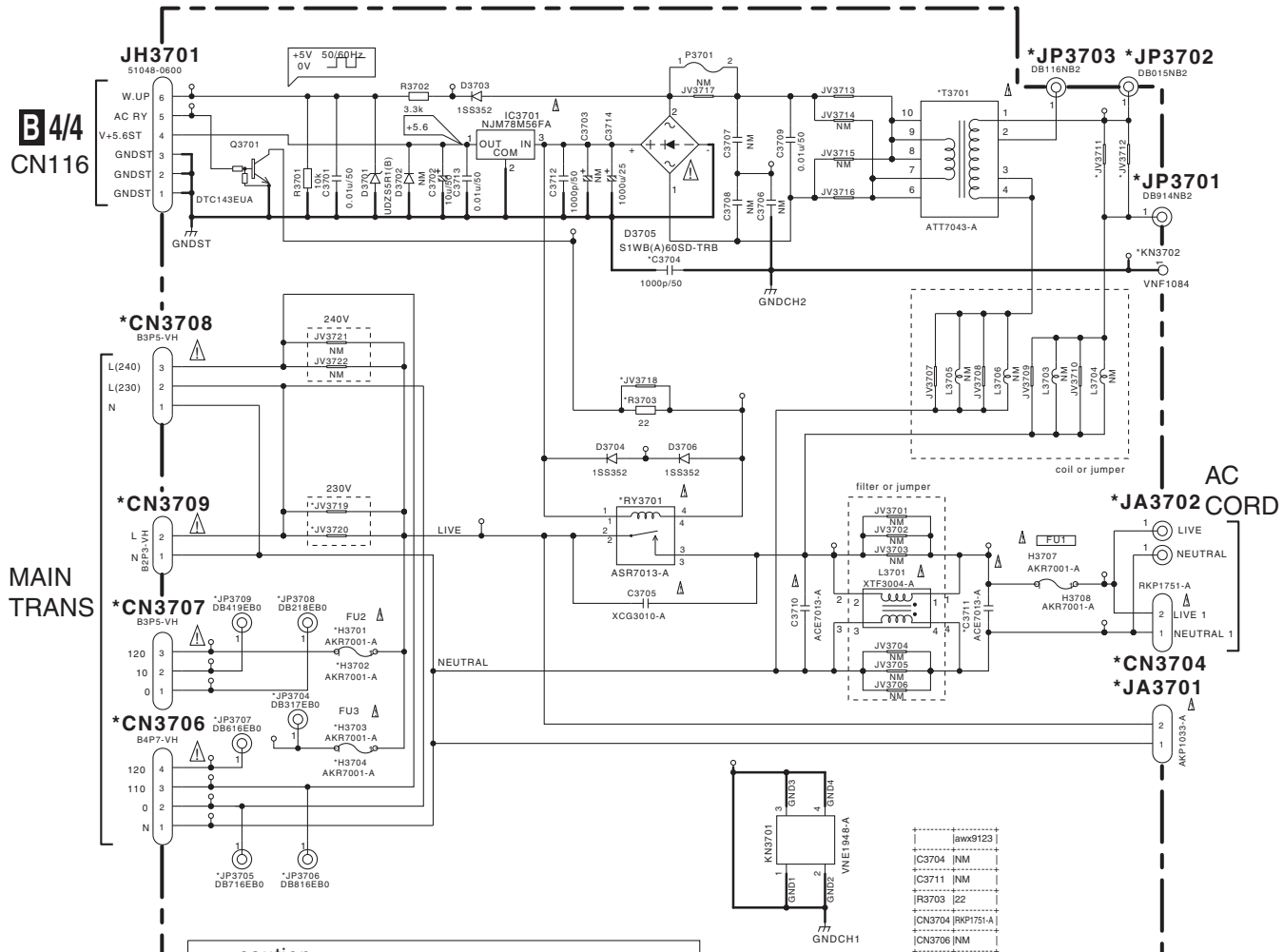


caution

FOR CONTINUED PROTECTION AGAINST RISK OF FIRE, REPLACE WITH SAME TYPE AND RATINGS OF FUSE.

| | awx9123 |
|---|---|
| C3704 | NM |
| C3711 | NM |
| R3703 | 22 |
| CN3704 | RKP1751-A |
| CN3706 | NM |
| CN3707 | NM |
| CN3708 | NM |
| CN3709 | B2P3-VH |
| H3701 | NM |
| H3702 | NM |
| H3703 | NM |
| H3704 | NM |
| JA3701 | NM |
| JA3702 | NM |
| JP3701 | NM |
| JP3702 | NM |
| JP3703 | NM |
| JP3704 | NM |
| JP3705 | NM |
| JP3706 | NM |
| JP3707 | NM |
| JP3708 | NM |
| JP3709 | NM |
| JV3711 | Yes |
| JV3712 | Yes |
| JV3718 | NM |
| JV3719 | Yes |
| JV3720 | Yes |
| KN3702 | NM |
| RY3701 | ASR7022-A |
| S3702 | NM |
| T3701 | ATT7043-A |

The ⚠mark found on some component parts indicates the importance of the safety factor of the part. Therefore,when replacing ,be,sure to use parts of identical desigantion.

NOTE

1.RESISTORS

Unit :k-kΩ, M-MΩ or Ω unless otherwise noted.
Rated:power :1/10W unless otherwise noted.
Tolerance :(J)±5% unless otherwise noted.

2.CAPACITORS

Unit :p-pF or μF or unless otherwise noted.
Ratings :Capacity(μF)/Voltage(V) unless otherwise noted.
Rated Voltage :50V except for electrolytic capacitors.

# 10.20 POWER AMP ASSY (1/2)

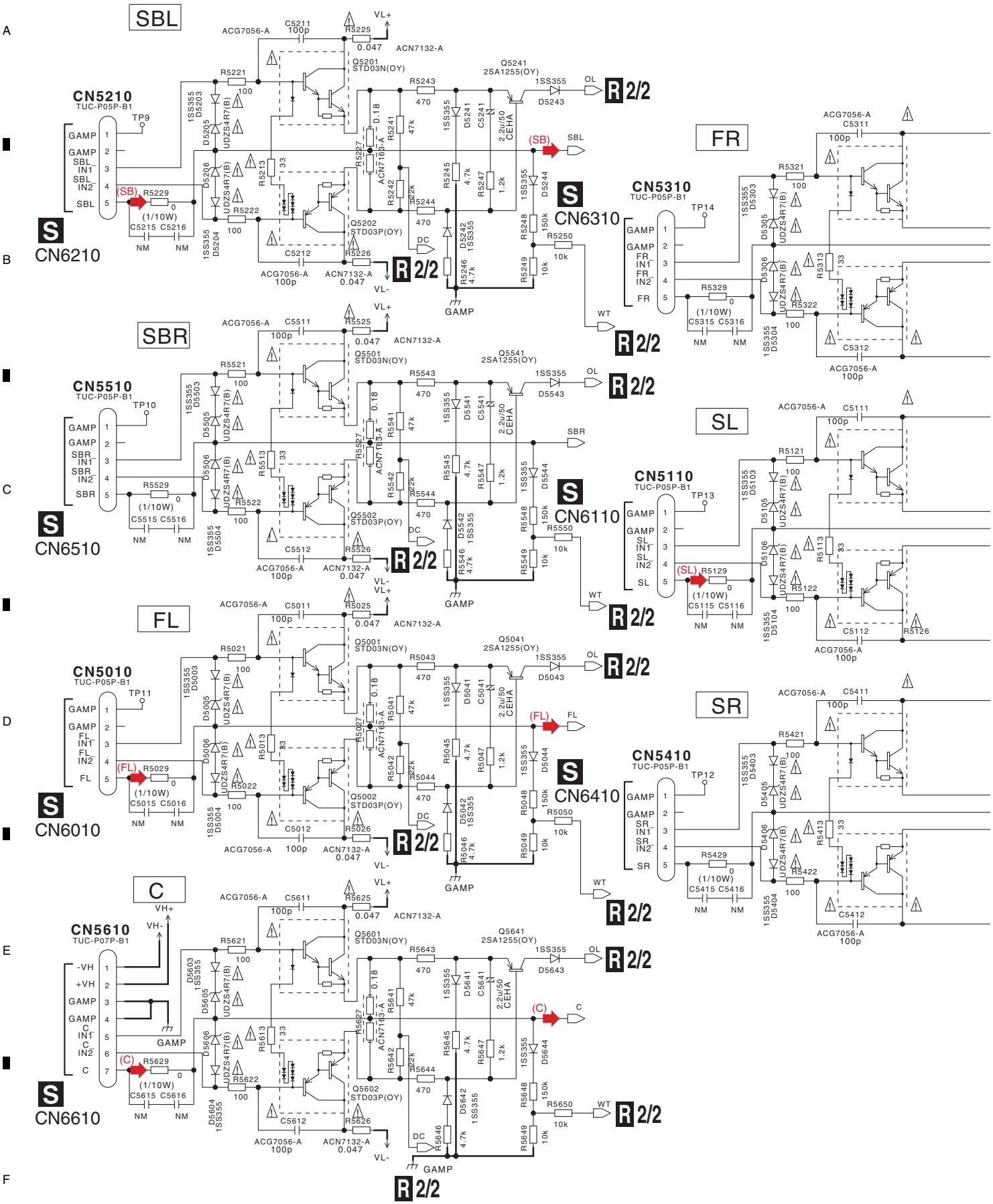


R 1/2

# R 1/2 POWER AMP ASSY (AWX8983)

The ⚠ mark found on some component parts indicates the importance of the safety factor of the part. Therefore,when replacing ,be,sure to use parts of identical desigantion.

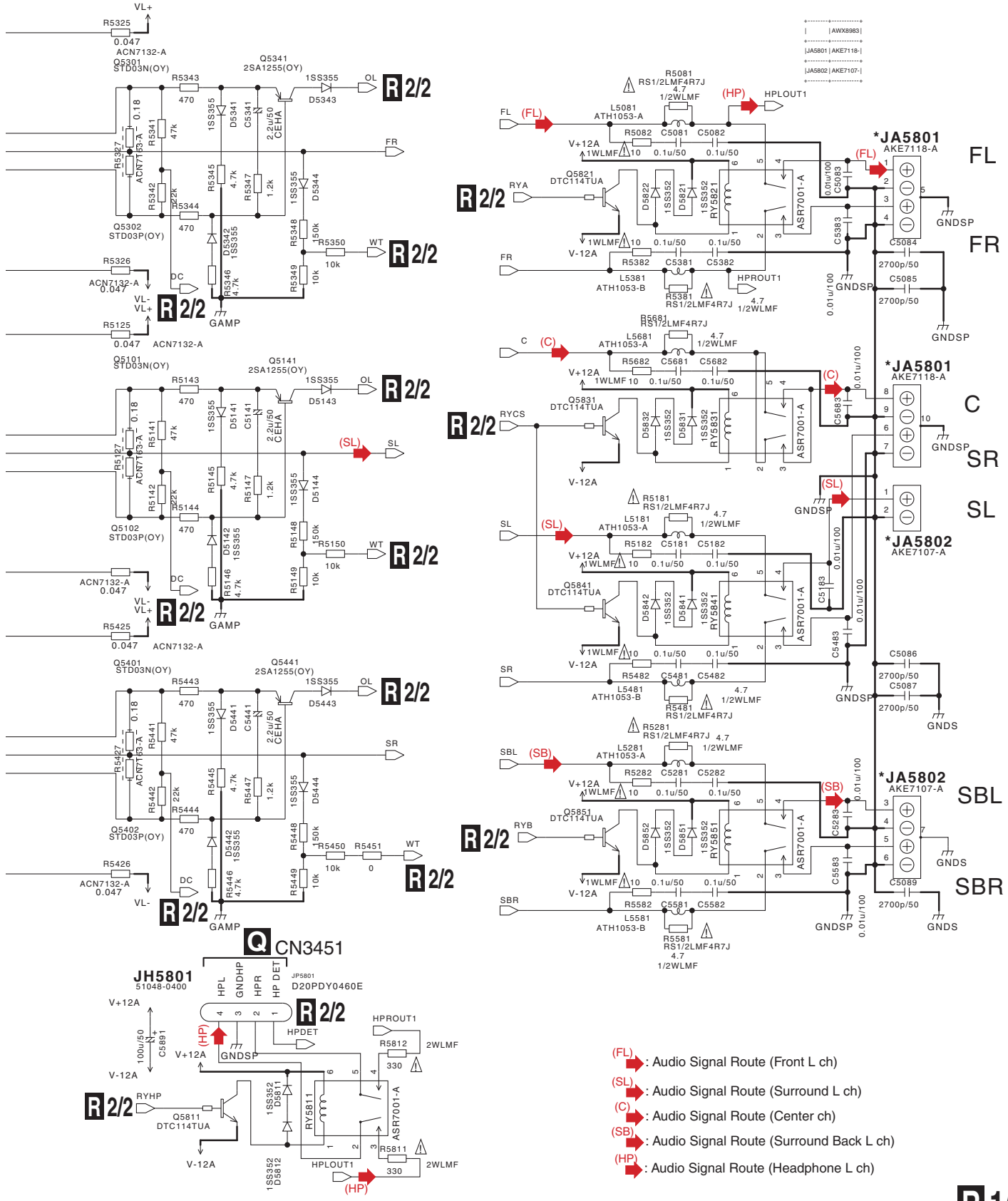


(FL) : Audio Signal Route (Front L ch)

(SL) : Audio Signal Route (Surround L ch)

(C) : Audio Signal Route (Center ch)

(SB) : Audio Signal Route (Surround Back L ch)

(HP) : Audio Signal Route (Headphone L ch)

# 10.21 POWER AMP ASSY (2/2)

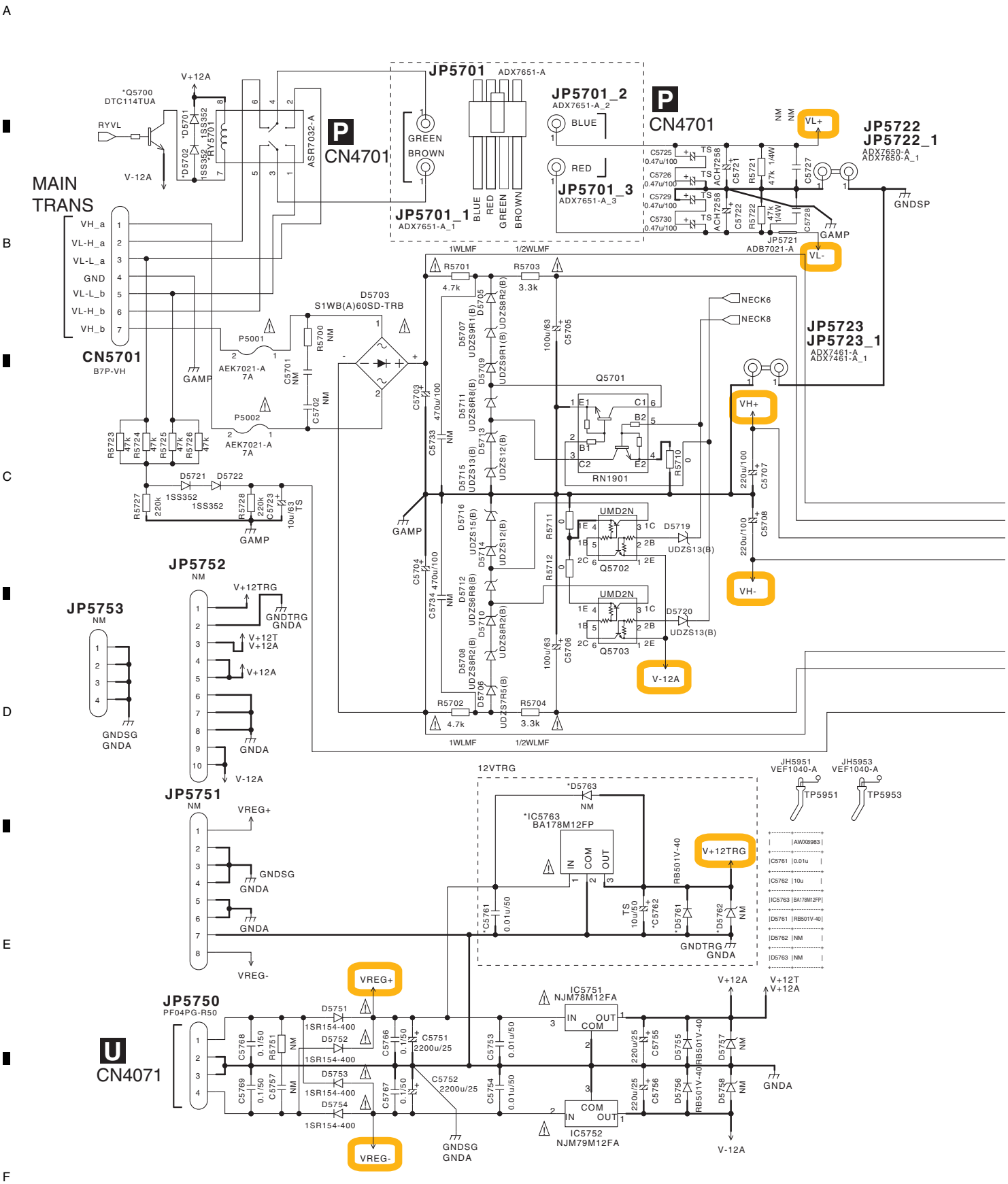

# R 2/2 POWER AMP ASSY (AWX8983)

The ⚠ mark found on some component parts indicates the importance of the safety factor of the part. Therefore,when replacing ,be,sure to use parts of identical desigantion.

caution
FOR CONTINUED PROTECTION AGAINST RISK OF FIRE, REPLACE WITH SAME TYPE AND RATINGS OF FUSE.

CAUTION : FOR CONTINUED PROTECTION AGAINST RISK OF FIRE. REPLACE ONLY WITH SAME TYPE NO. 491007 MFD, BY LITTELFUSE INK. FOR P5001 and P5002.

CAUTION : FOR CONTINUED PROTECTION AGAINST RISK OF FIRE. REPLACE ONLY WITH SAME TYPE NO. ICP-N15, MFD BY ROHM CO., LTD. FOR P5003 and P5004.

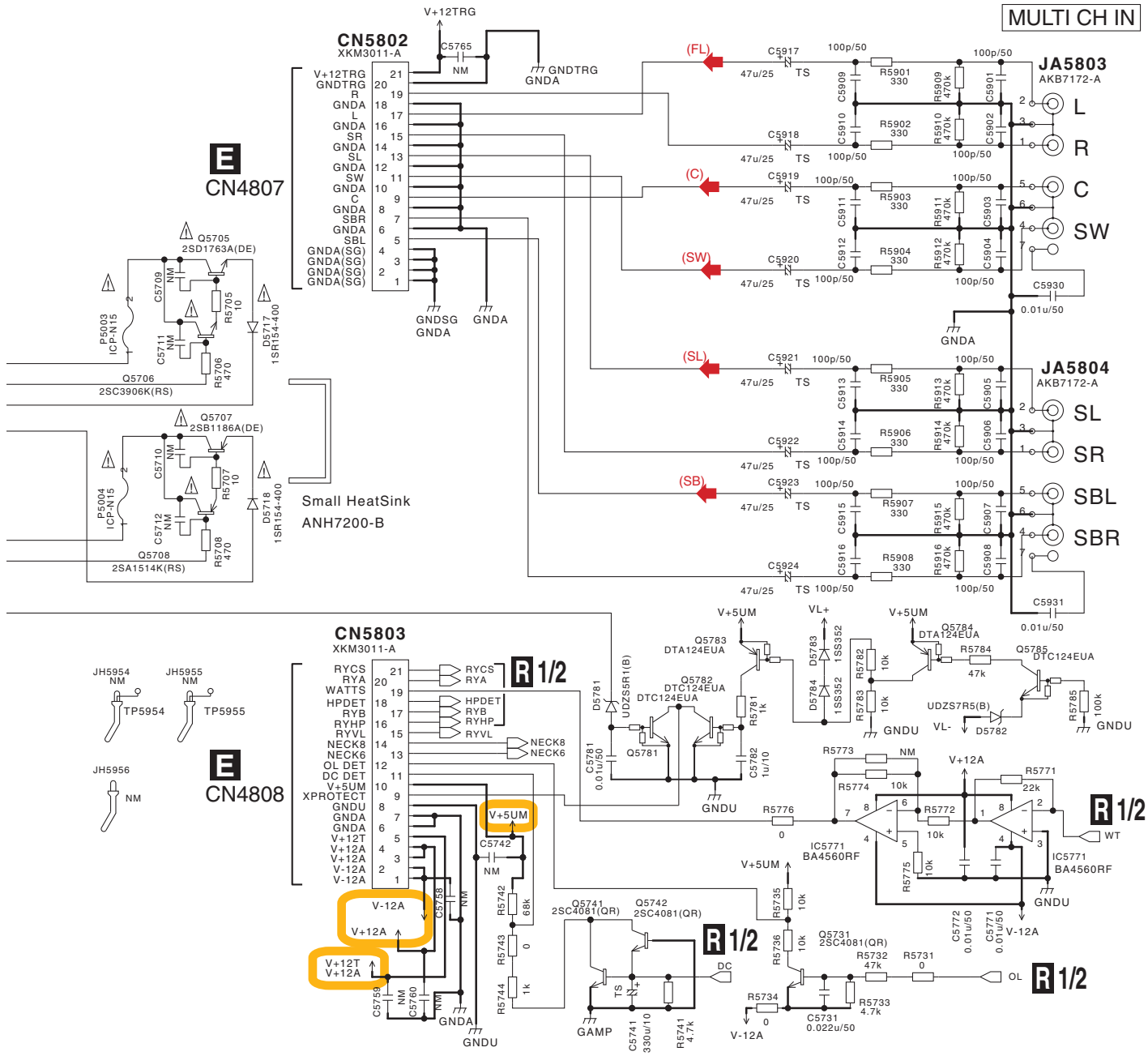


(FL) ➡ : Audio Signal Route (Front L ch)
(SL) ➡ : Audio Signal Route (Surround L ch)
(C) ➡ : Audio Signal Route (Center ch)
(SB) ➡ : Audio Signal Route (Surround Back L ch)
(SW) ➡ : Audio Signal Route (SubWoofer ch)

R 2/2

# 10.22 PRE-STAGE AMP ASSY

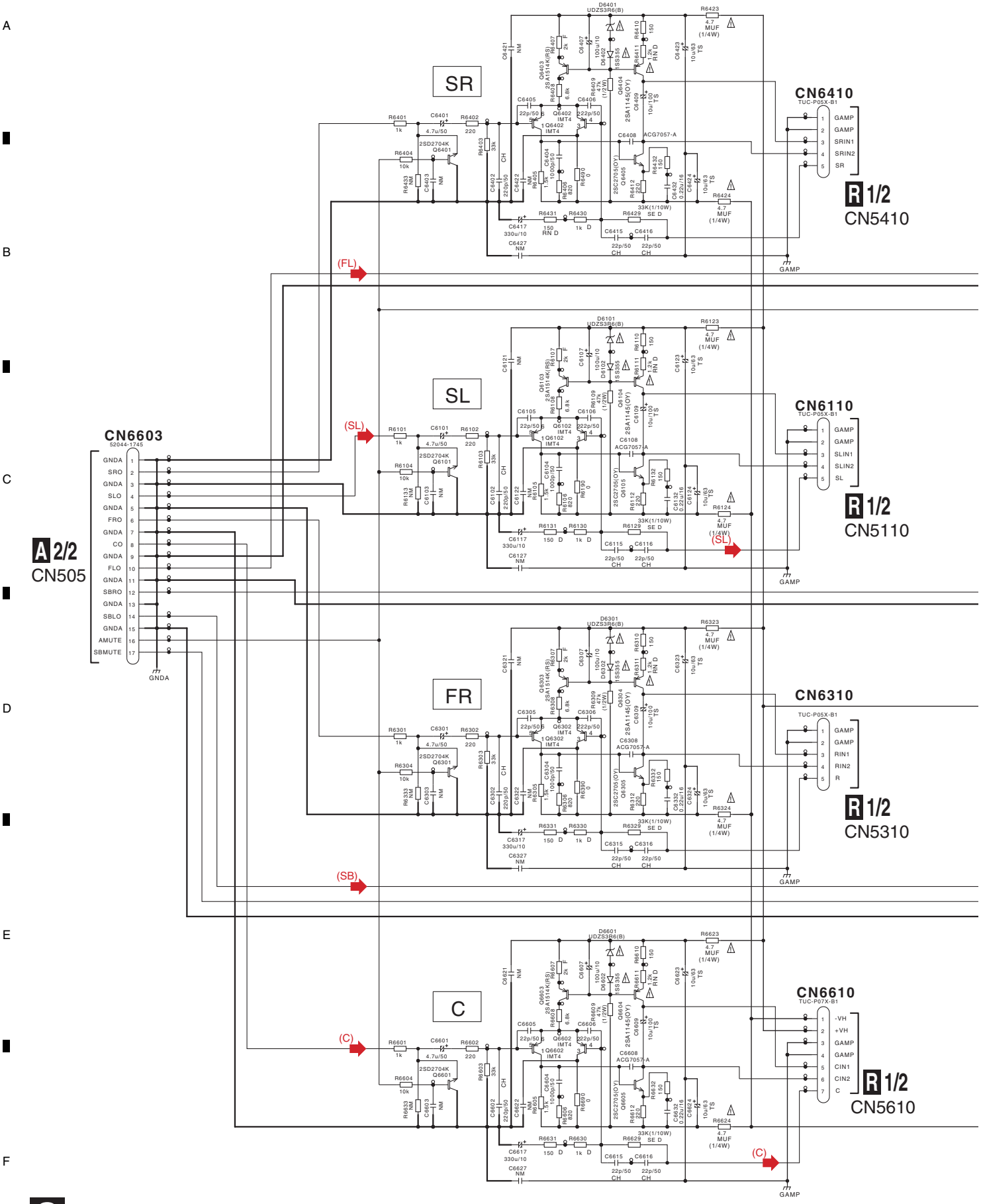

# S PRE-STAGE AMP ASSY (AWX8989)

The ⚠ mark found on some component parts indicates the importance of the safety factor of the part. Therefore,when replacing,be sure to use parts of idential designation.

NOTE
1.RESISTORS
Unit: k-kΩ, M-MΩ or Ω unless otherwise noted.
Rated power: 1/16W unless otherwise noted.
Tolerance: (J)±5% unless otherwise noted.
2.CAPACITORS
Unit: p-pF, or μF unless otherwise noted.
Ratings: Capacity(μF)/Voltage(V) unless otherwise noted.

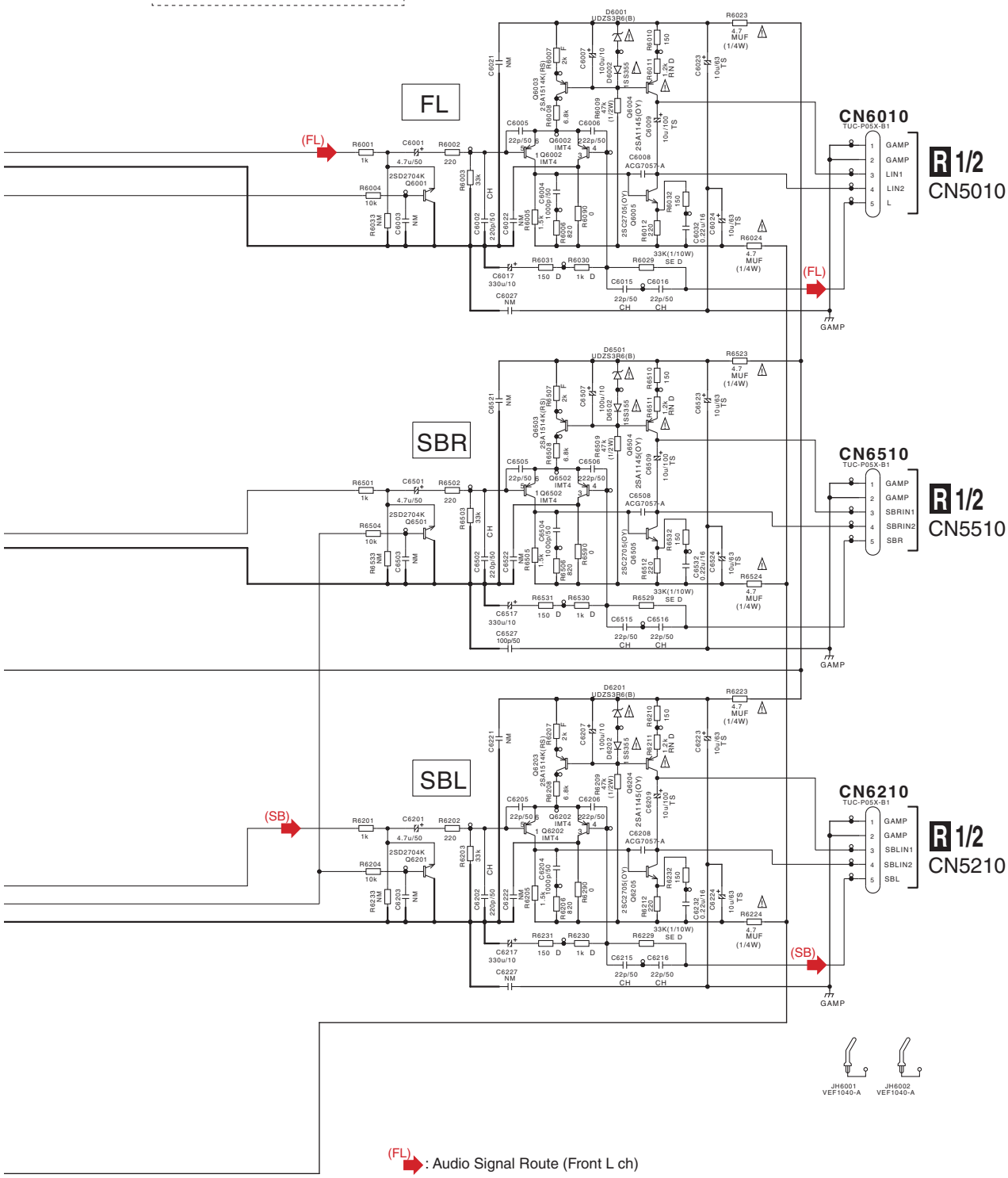


(FL) : Audio Signal Route (Front L ch)
(SL) : Audio Signal Route (Surround L ch)
(C) : Audio Signal Route (Center ch)
(SB) : Audio Signal Route (Surround Back L ch)

# 10.23 REGULATOR ASSY

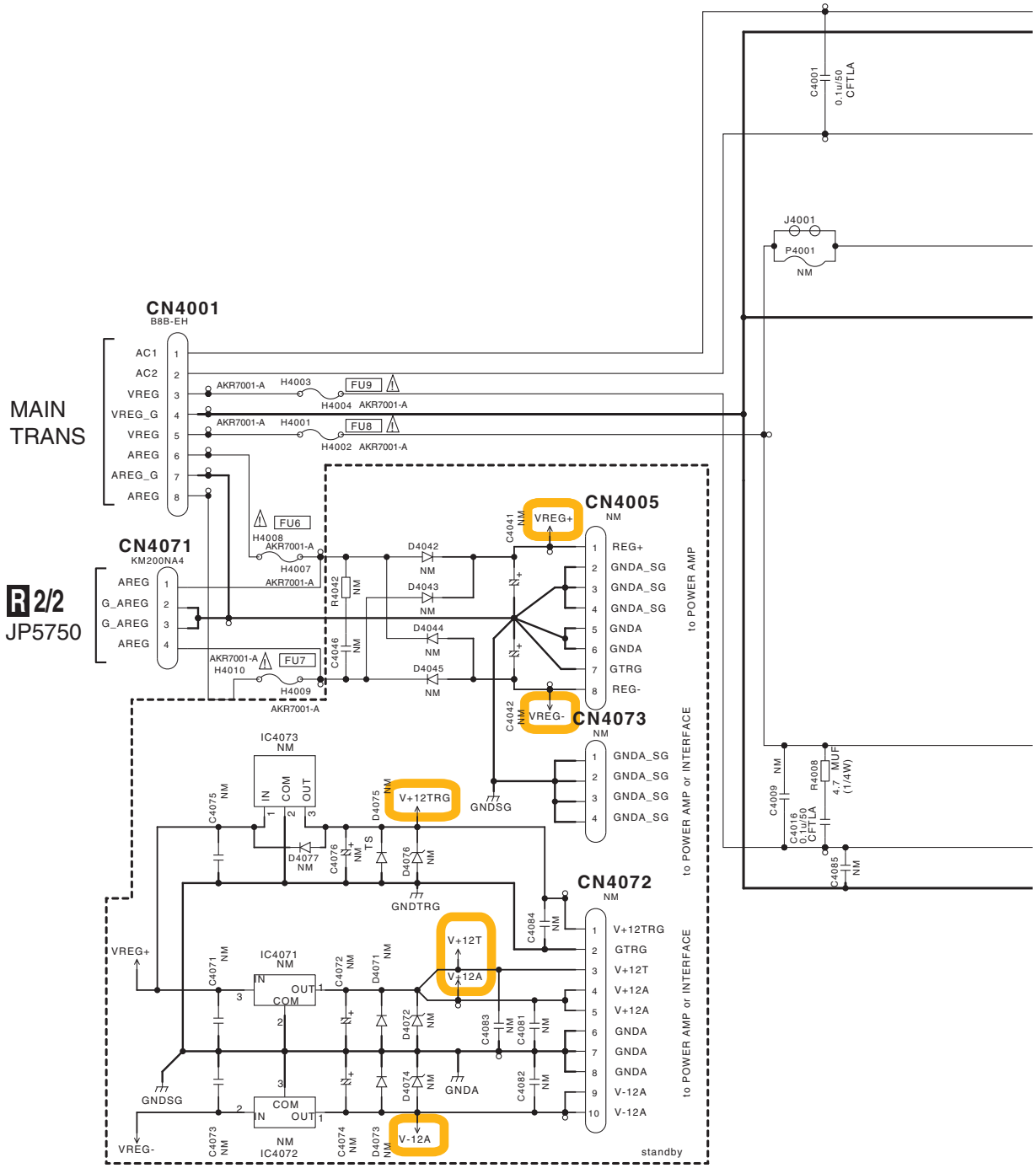

# U REGULATOR ASSY (AWX8986)

NOTE
1.RESISTORS
Unit: k-kΩ, M-MΩ or Ω unless otherwise noted.
Rated power: 1/16W unless otherwise noted.
Tolerance: (J)±5% unless otherwise noted.
2.CAPACITORS
Unit: p-pF, or μF unless otherwise noted.
Ratings: Capacity(μF)/Voltage(V) unless otherwise noted.

The ⚠ mark found on some component parts indicates the importance of the safety factor of the part. Therefore,when replacing,be sure to use parts of idential designation.

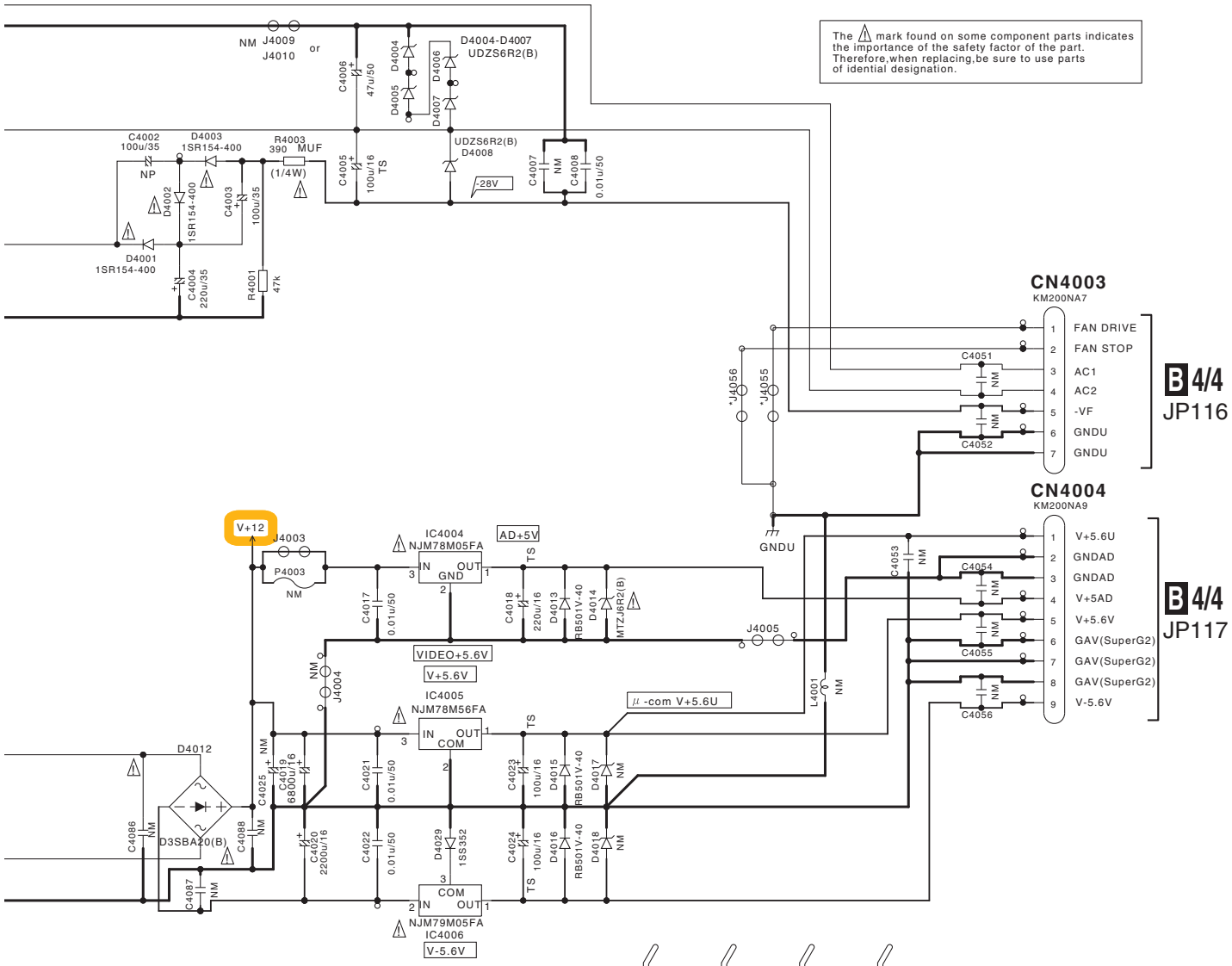


Jumper not mount

| | | |
|---|---|---|
| J4002 | J4012 | J4037 |
| J4004 | J4013 | J4038 |
| J4011 | J4014 | J4039 |
| J4007 | J4028 | |
| J4009 | J4054 | |
| | J4048 | |
| J4006 | J4049 | |
| | J4050 | |
| J4022 | J4051 | |
| | J4052 | |
| | J4053 | |

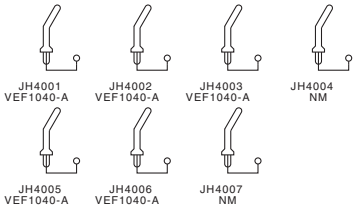


CAUTION
FOR CONTINUED PROTECTION AGAINST RISK OF FIRE, REPLACE ONLY WITH SAME TYPE NO. ***** MFD. BY LITTELFUSE INC.FOR IC****.

A

B

C

D

E

F

# 11. PCB CONNECTION DIAGRAM

## NOTE FOR PCB DIAGRAMS :

1. Part numbers in PCB diagrams match those in the schematic diagrams.
2. A comparison between the main parts of PCB and schematic diagrams is shown below.

| Symbol In PCB Diagrams | Symbol In Schematic Diagrams | Part Name |
|---|---|---|
| B C E | B C E B C E | Transistor |
| B C E | B C E B C E | Transistor with resistor |
| D G S | D G S D G S | Field effect transistor |
| | | Resistor array |
| | | 3-terminal regulator |

3. The parts mounted on this PCB include all necessary parts for several destinations.
   For further information for respective destinations, be sure to check with the schematic diagram.
4. View point of PCB diagrams.

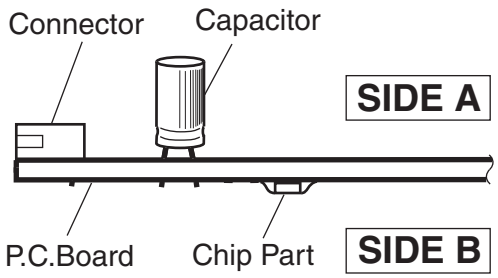

# 11.1 AUDIO IN ASSY

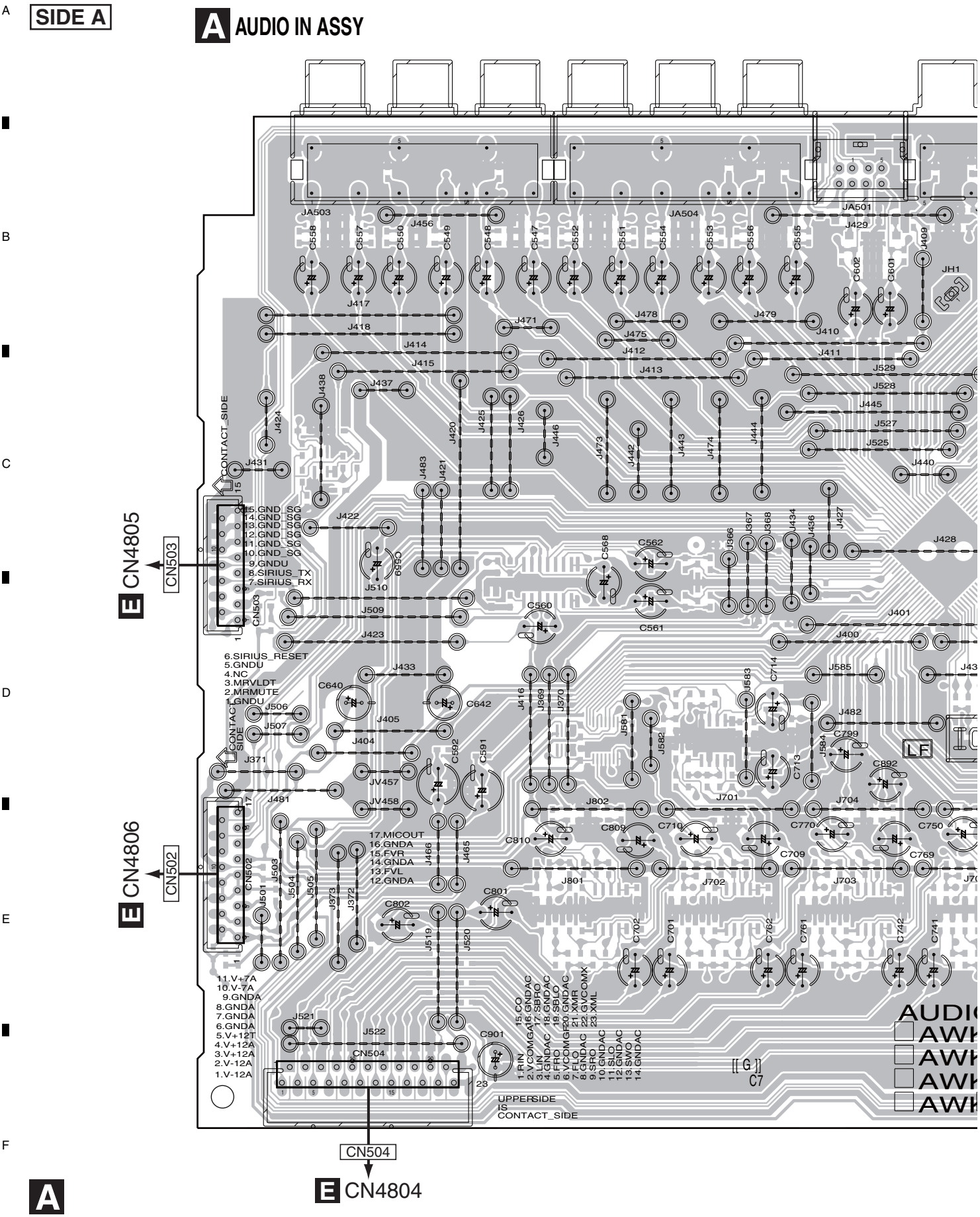

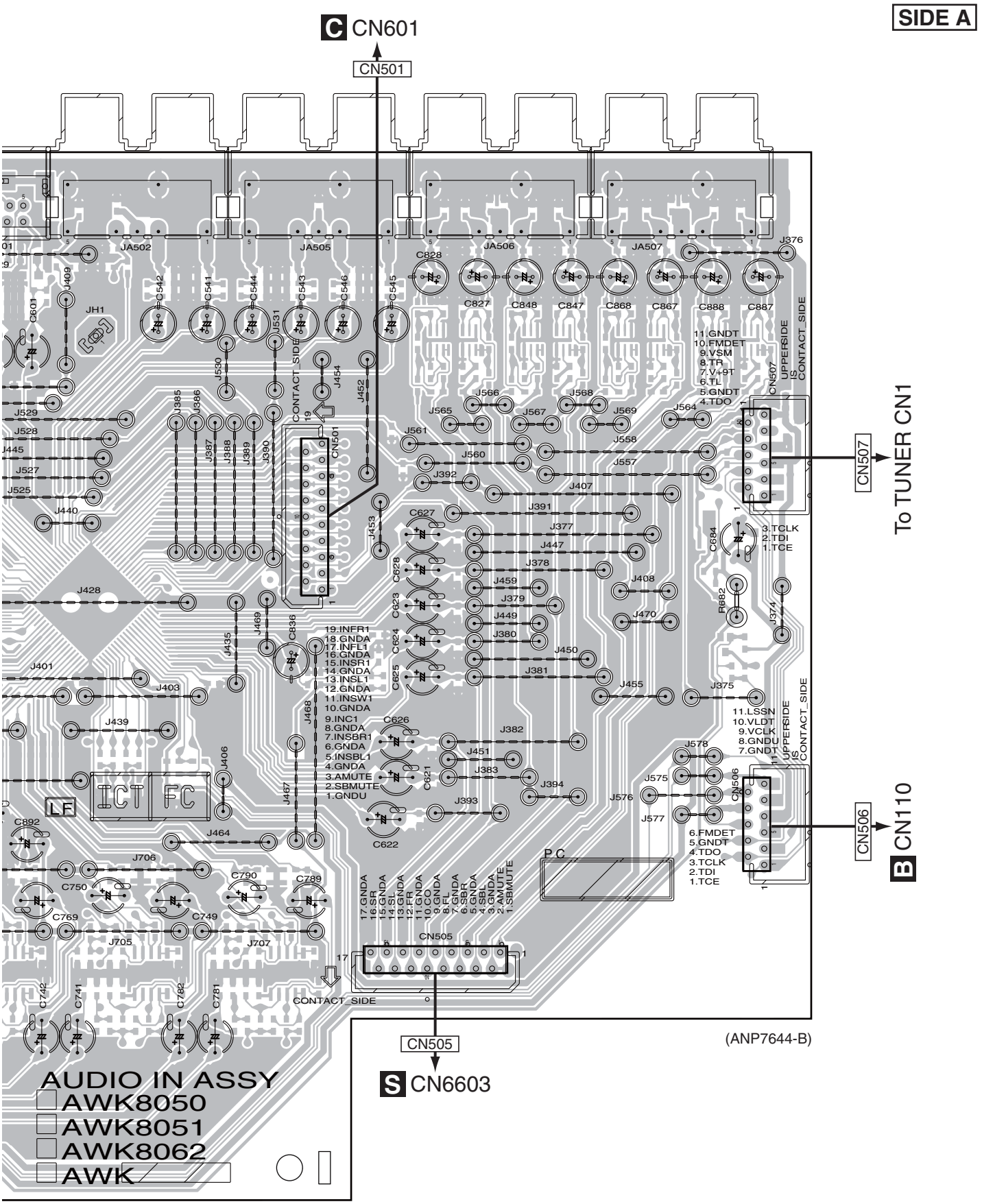
SIDE A
C CN601
CN501
CN507
To TUNER CN1
CN506
B CN110
CN505
S CN6603
(ANP7644-B)
AUDIO IN ASSY
AWK8050
AWK8051
AWK8062
AWK
11.GNDT
10.FMDET
9.VSM
8.TR
7.V+9T
6.TL
5.GNDT
4.TDO
3.TCLK
2.TDI
1.TCE
11.LSSN
10.VLDT
9.VCLK
8.GNDU
7.GNDT
6.FMDET
5.GNDT
4.TDO
3.TCLK
2.TDI
1.TCE
19.INFR1
18.GNDA
17.INFL1
16.GNDA
15.INSR1
14.GNDA
13.INSL1
12.GNDA
11.INSW1
10.GNDA
9.INC1
8.GNDA
7.INSBR1
6.GNDA
5.INSBL1
4.GNDA
3.AMUTE
2.SBMUTE
1.GNDU
17.GNDA
16.SR
15.GNDA
14.SL
13.GNDA
12.FR
11.GNDA
10.GNDA
9.GNDA
8.FL
7.GNDA
6.SBR
5.GNDA
4.SBL
3.GNDA
2.AMUTE
1.SBMUTE
CONTACT_SIDE
UPPERSIDE IS CONTACT_SIDE
LF
ICT FC
P.C

**SIDE B**

# A AUDIO IN ASSY

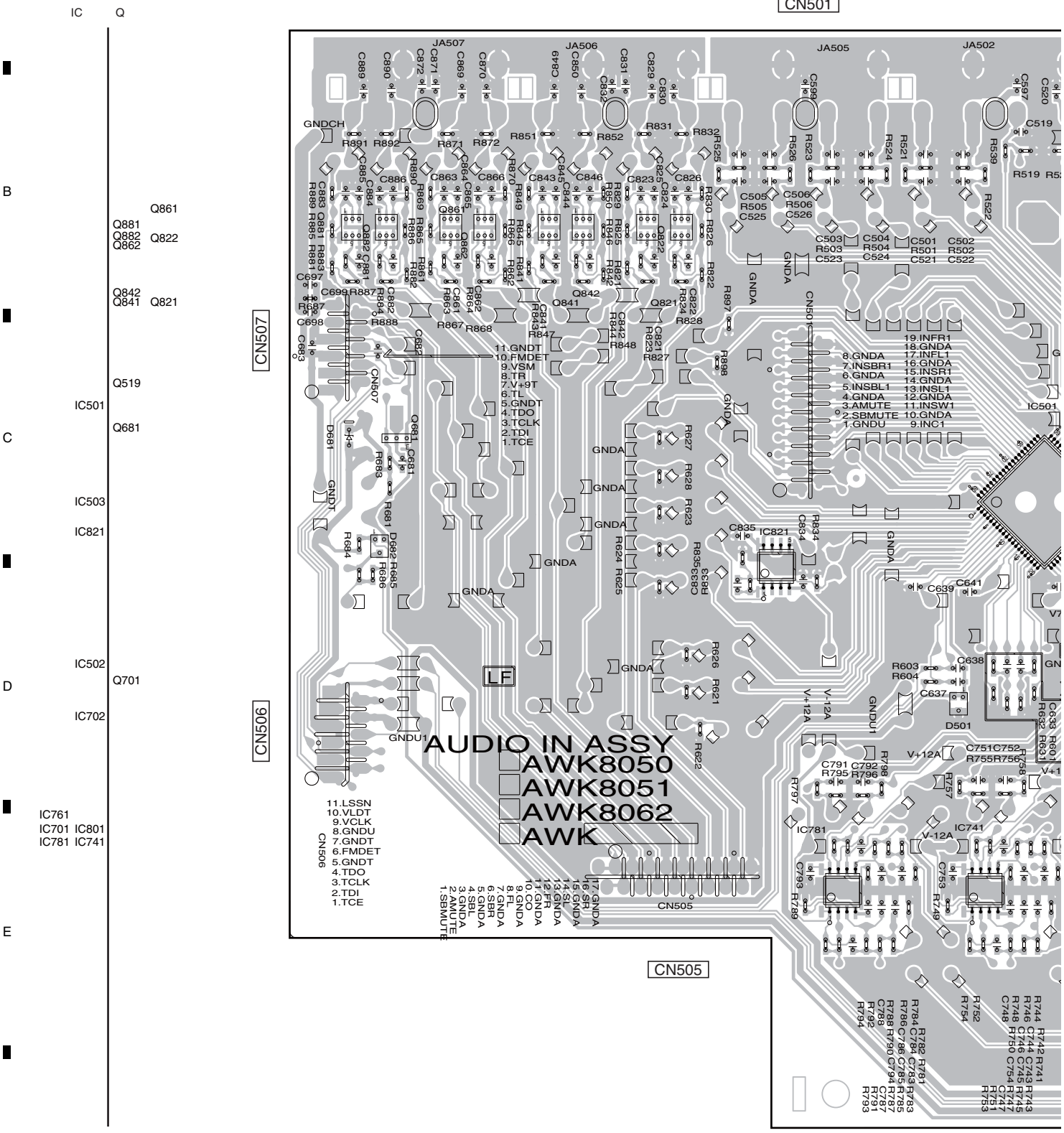

**SIDE B**

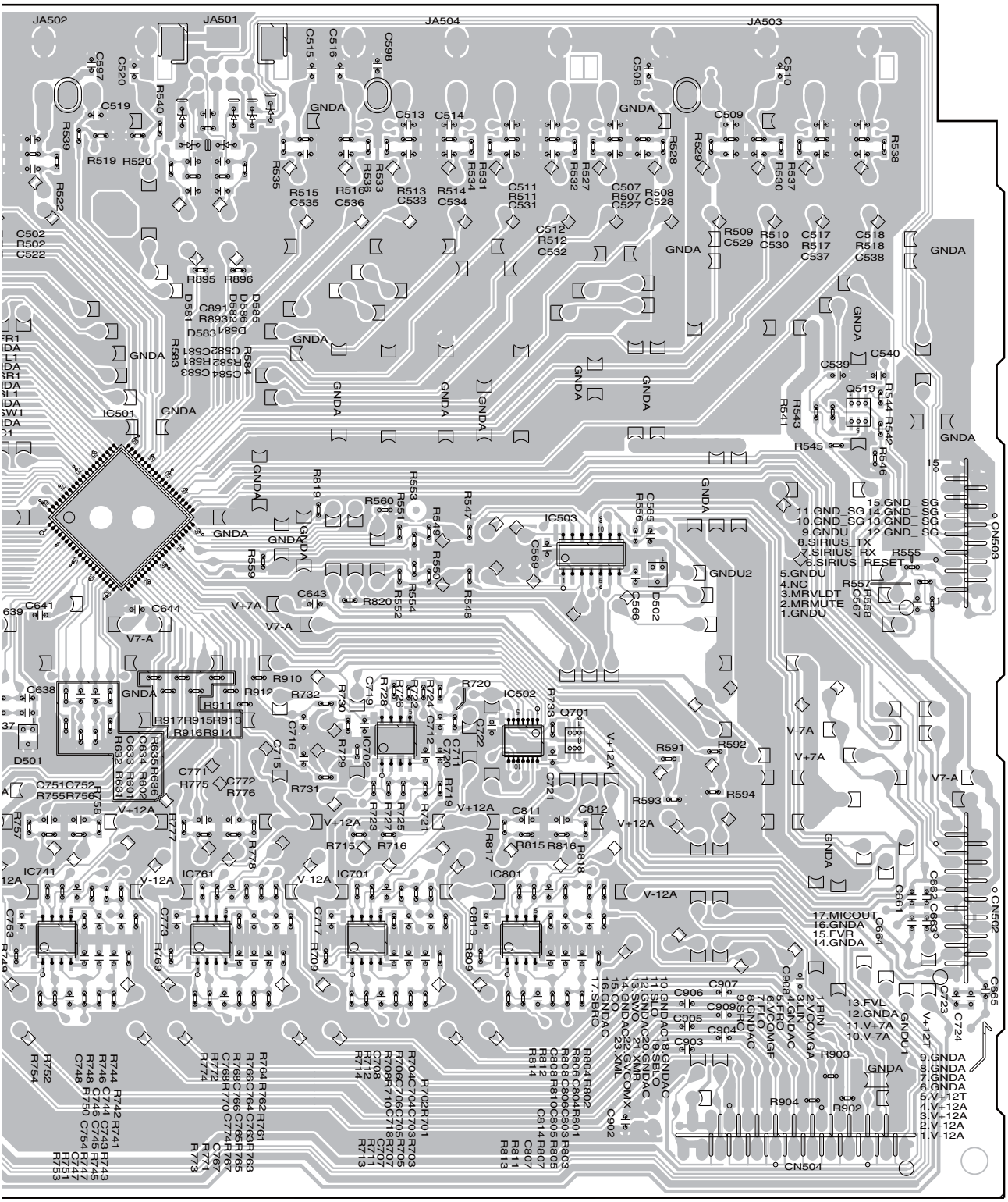


(ANP7644-B)

CN504

CN503

CN502

F

# 11.2 MAIN ASSY

SIDE A

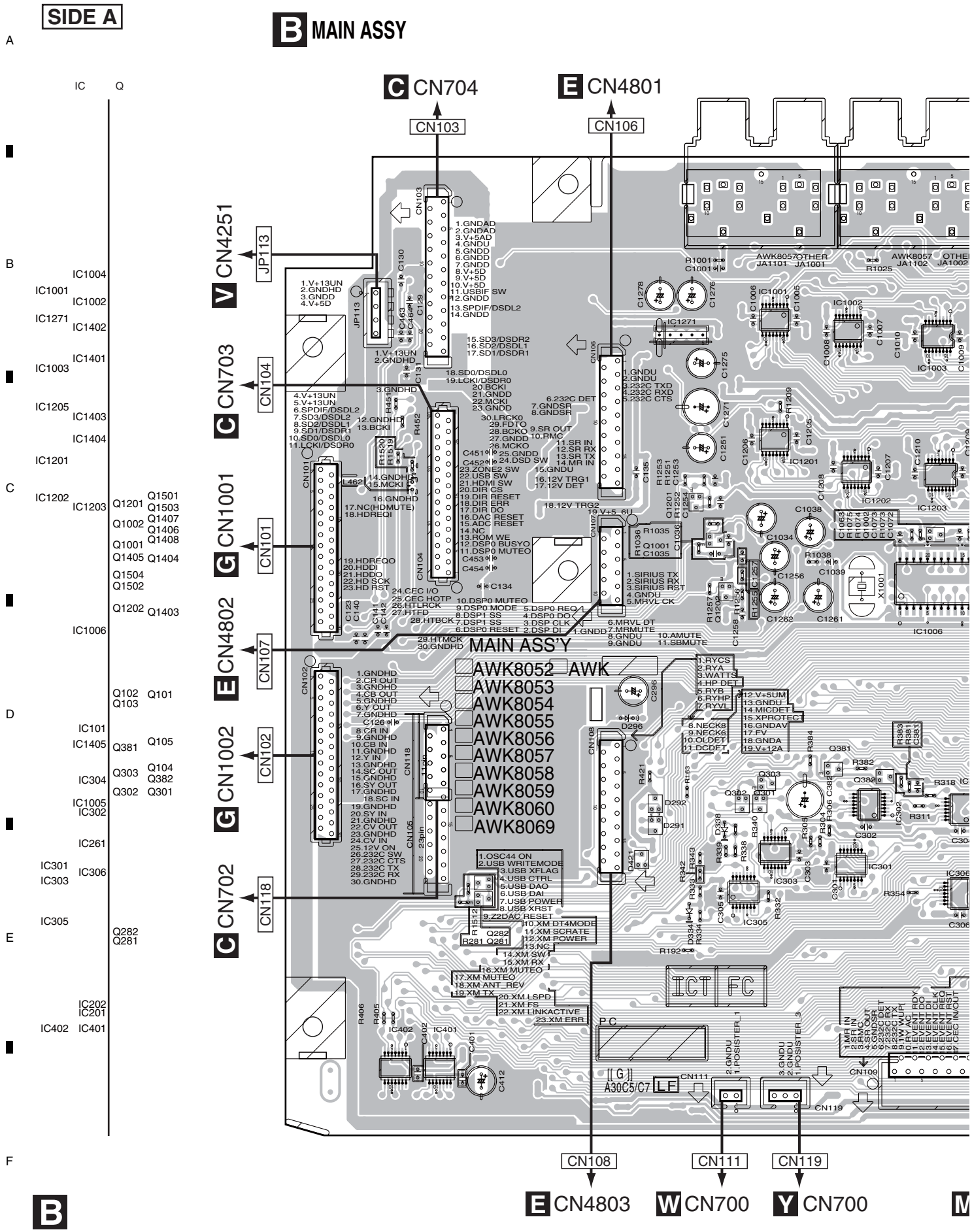

SIDE A

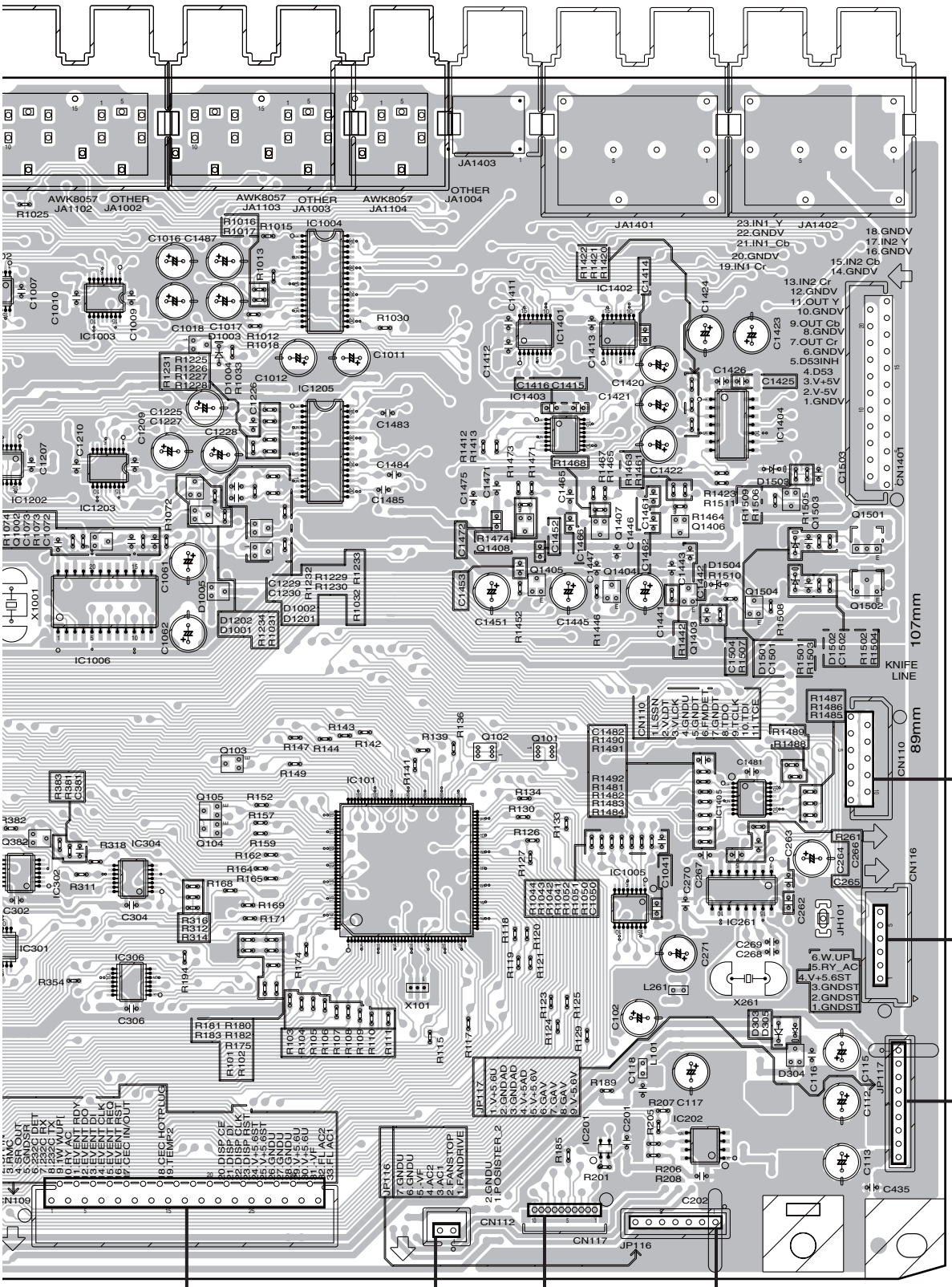


M CN3003 X CN700 For SERVICE U CN4003

**SIDE B**

A

IC Q

## B MAIN ASSY

B

Q1277

Q1278

Q1271

C

D

CN110

CN116

JP117

E

Q1508
Q1510 Q1506
Q411
Q1507
Q1509 Q1505

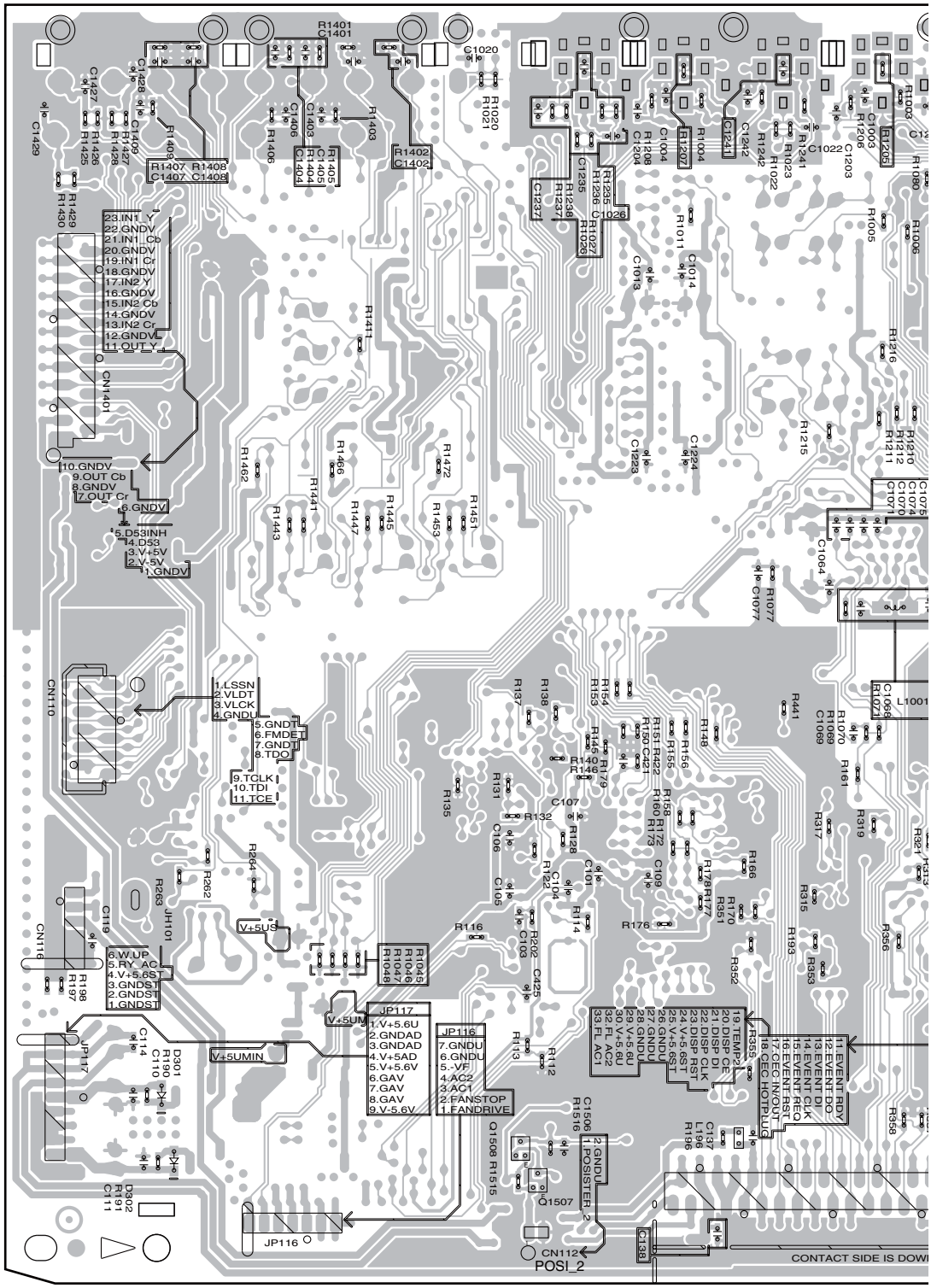


F

**SIDE B**

A

CN106 CN103

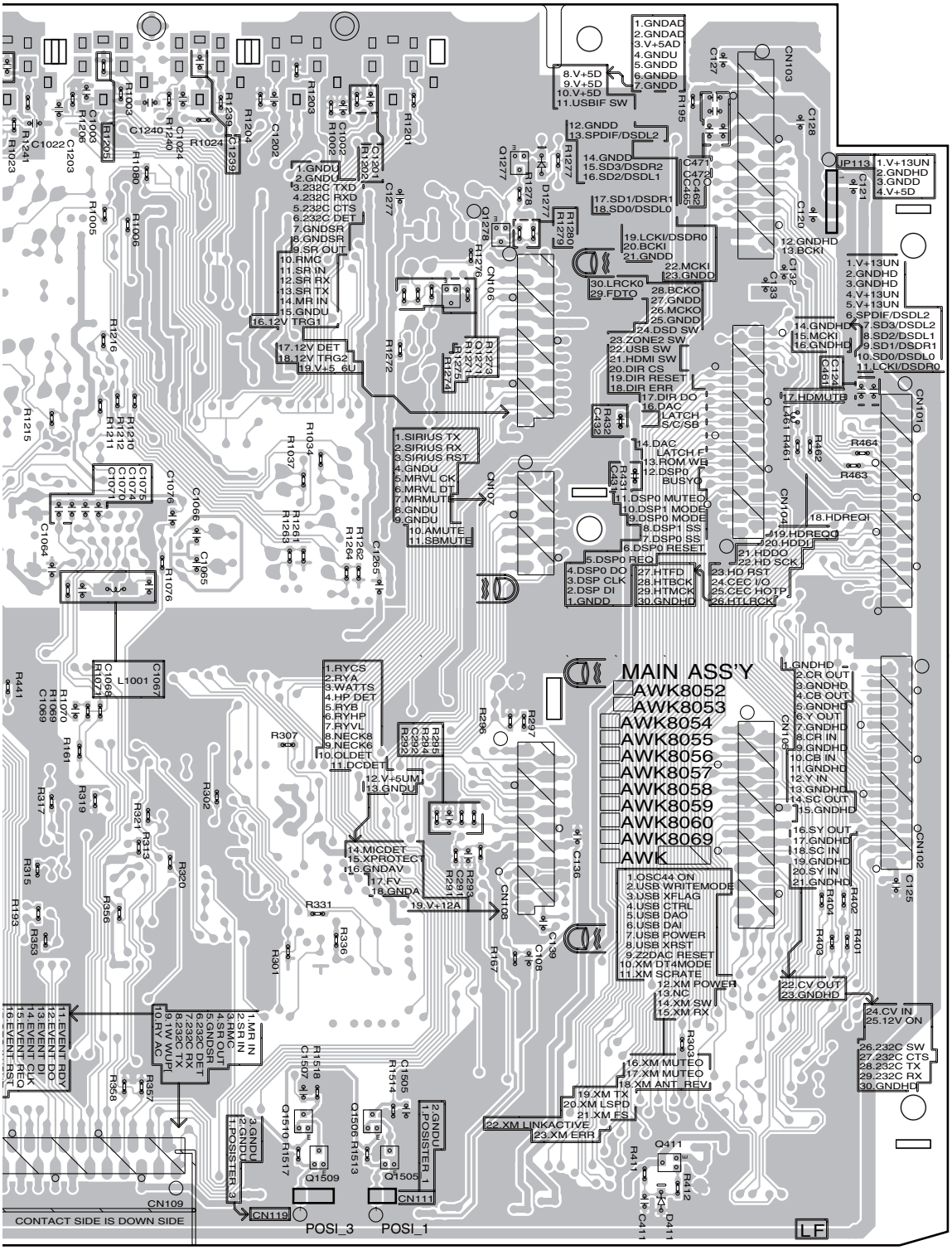


B

JP113

C

CN104

CN101

CN107

D

CN102

CN118

E

CN109 CN119 CN111 CN108 (ANP7645-B)

F

# 11.3 DSP & USB ASSY

SIDE A

SIDE A

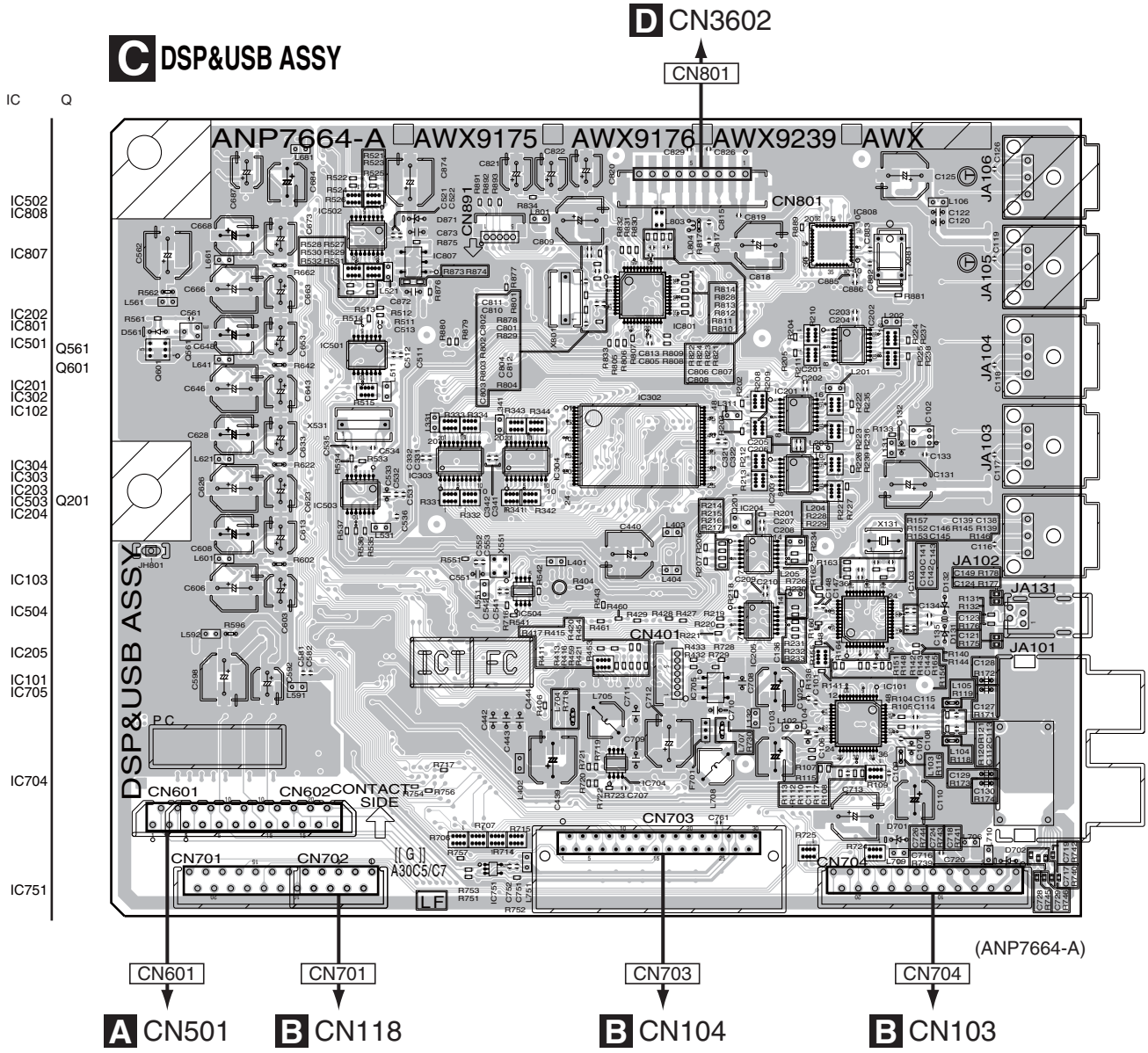


C

C

SIDE B

SIDE B

A

B

## C DSP&USB ASSY

| IC | Q |
|---|---|
| IC681 | |
| | Q872 |
| IC802 | |
| IC661 | |
| IC851 | Q871 |
| IC641 | |
| IC301 | |
| IC305 | |
| IC621 | |
| IC701 | |
| IC601 | |
| IC703 | |
| IC591 | |
| IC401 | |
| IC702 | |

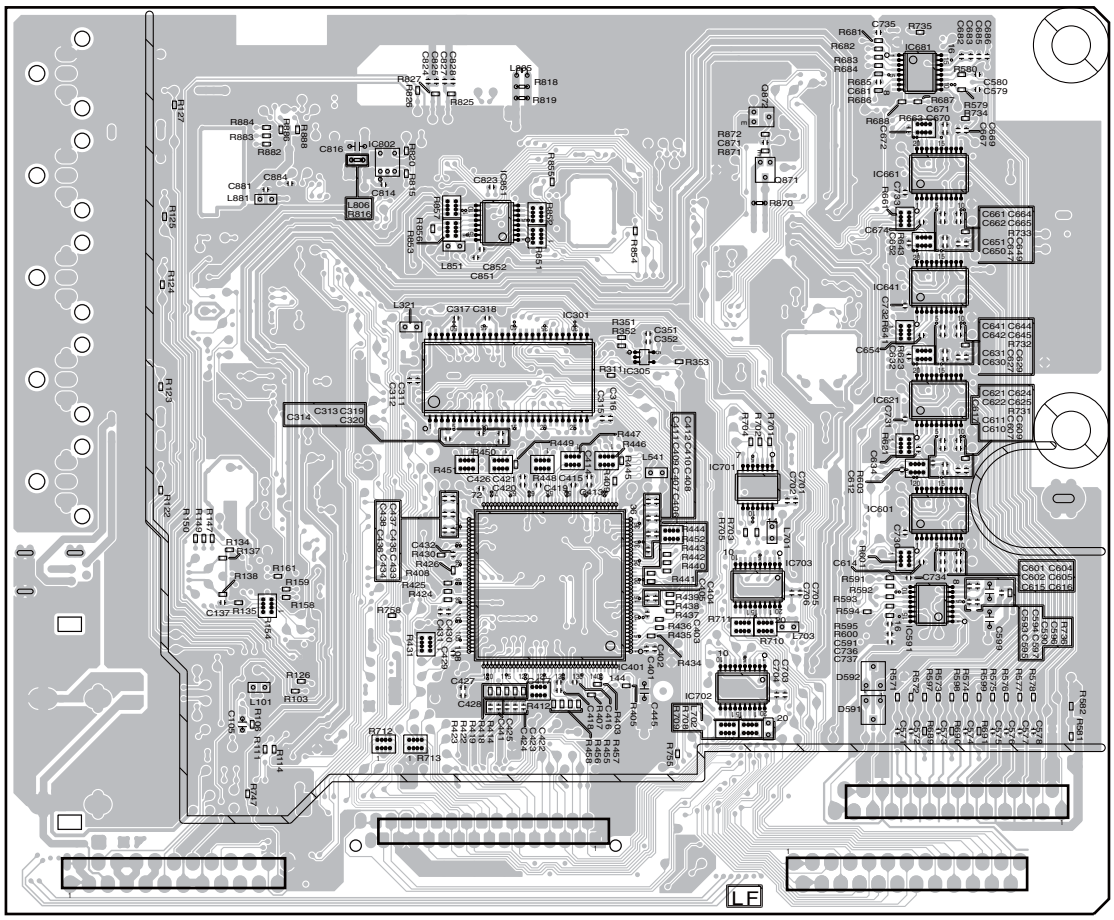


(ANP7664-A)

CN704 CN703 CN701 CN601

C

D

E

F

C

C

# 11.4 FRONT IN ASSY

SIDE A

SIDE A

## D FRONT IN ASSY

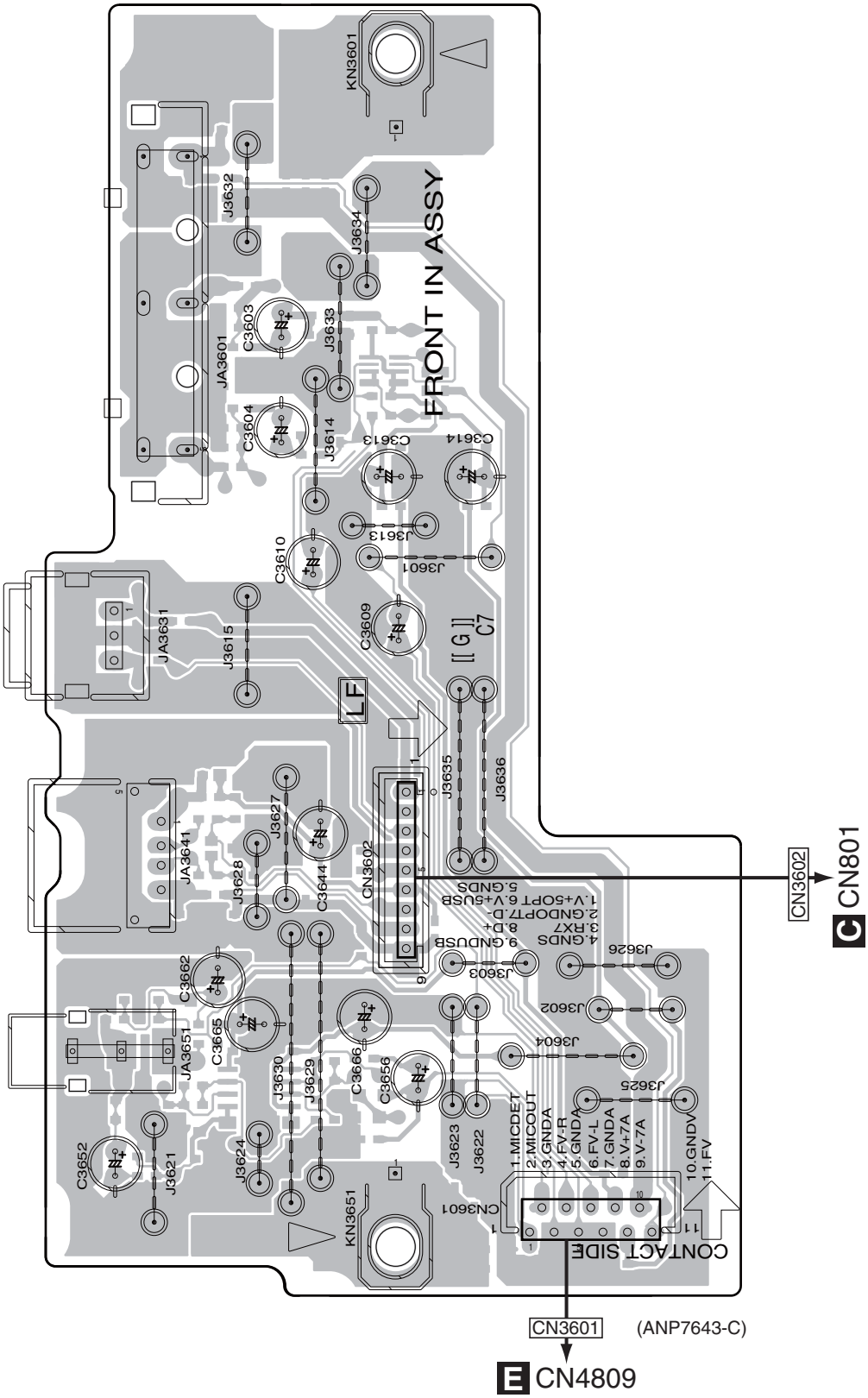


D

D

SIDE B

SIDE B

# D FRONT IN ASSY

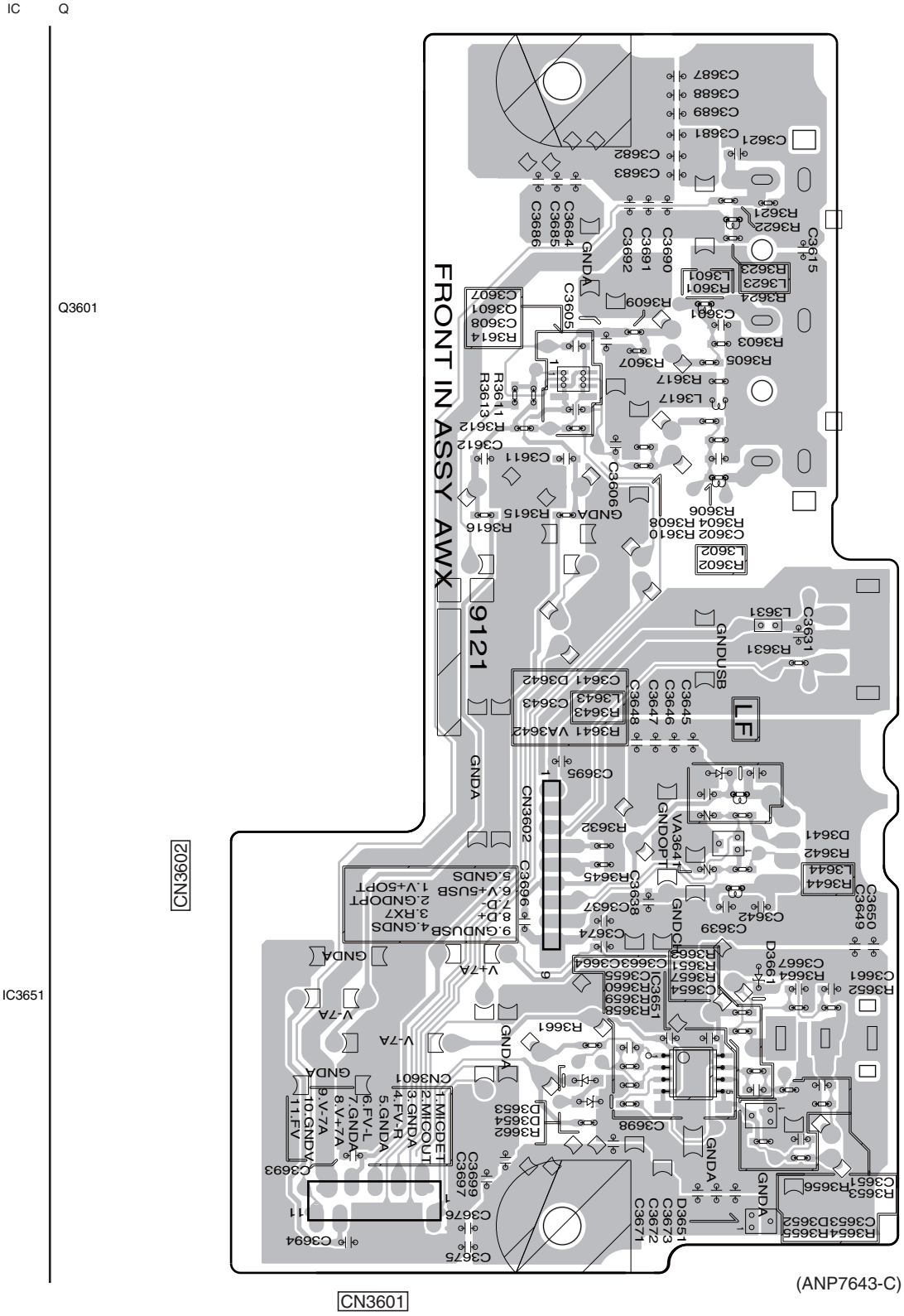

# 11.5 INTERFACE ASSY

SIDE A

SIDE A

## E INTERFACE ASSY

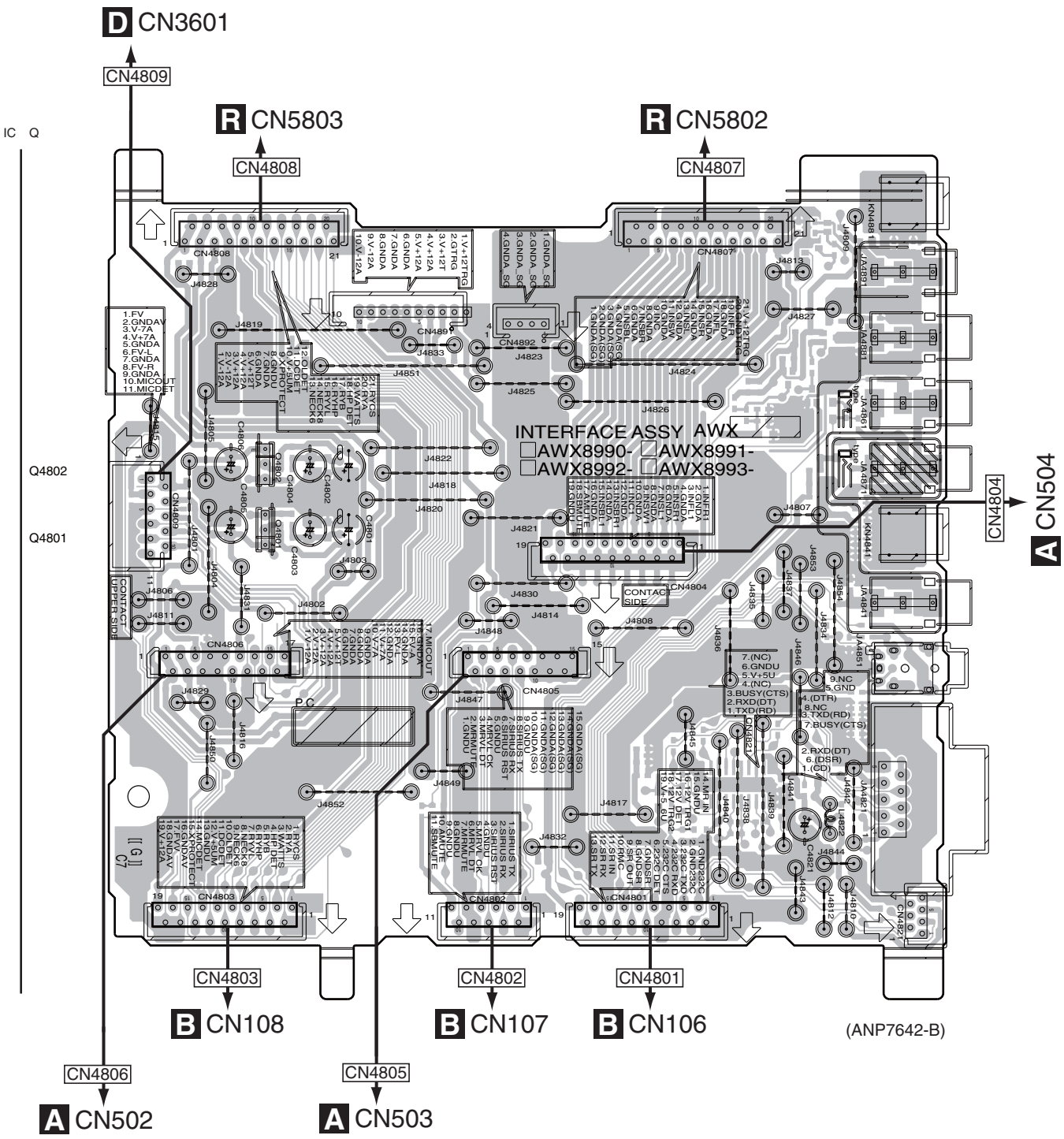

SIDE B

SIDE B

A

## E INTERFACE ASSY

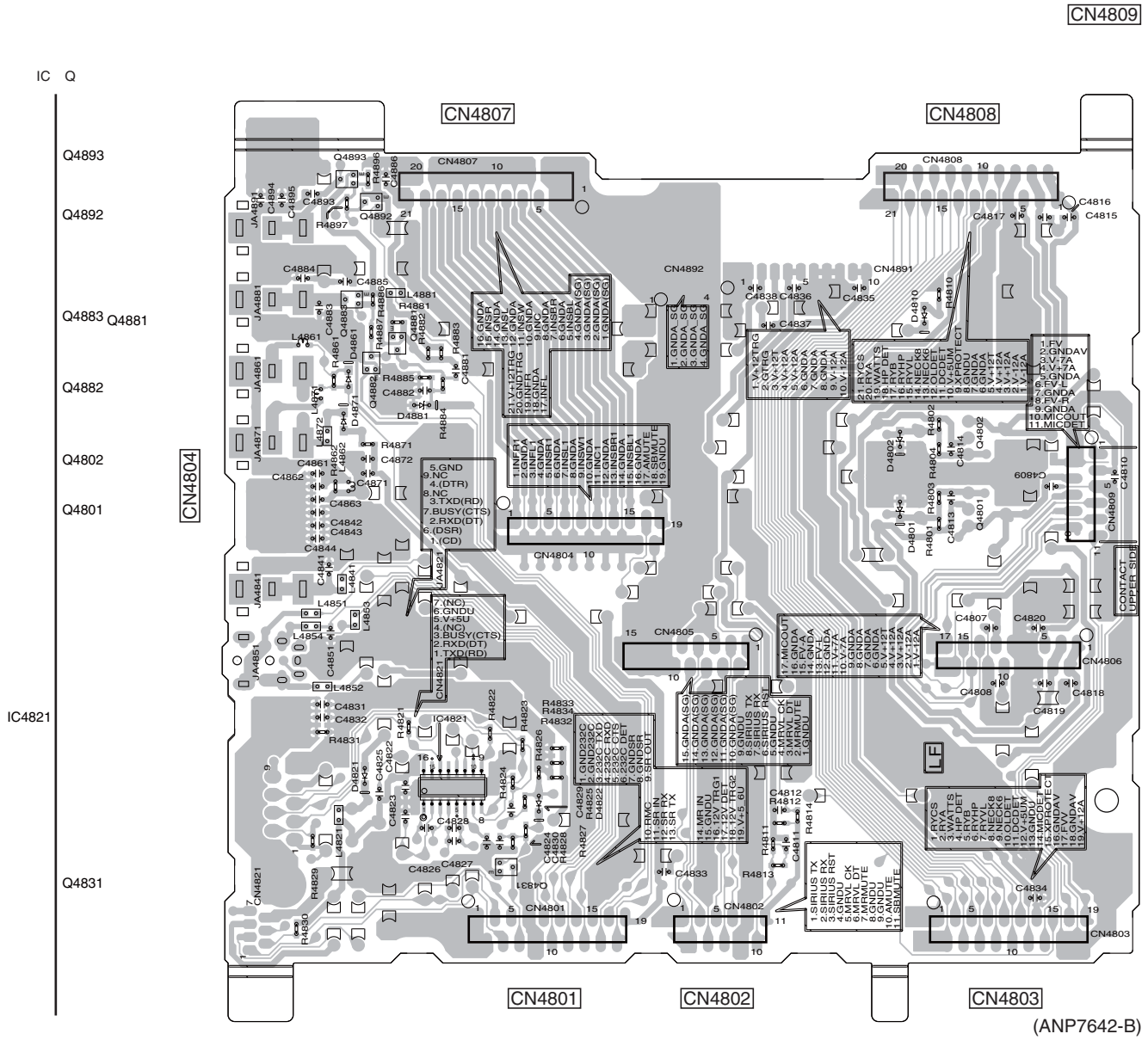


B

C

D

E

F

CN4805 CN4806

# 11.6 HDMI & DVC ASSY

**SIDE A**

## F HDMI & DVC ASSY

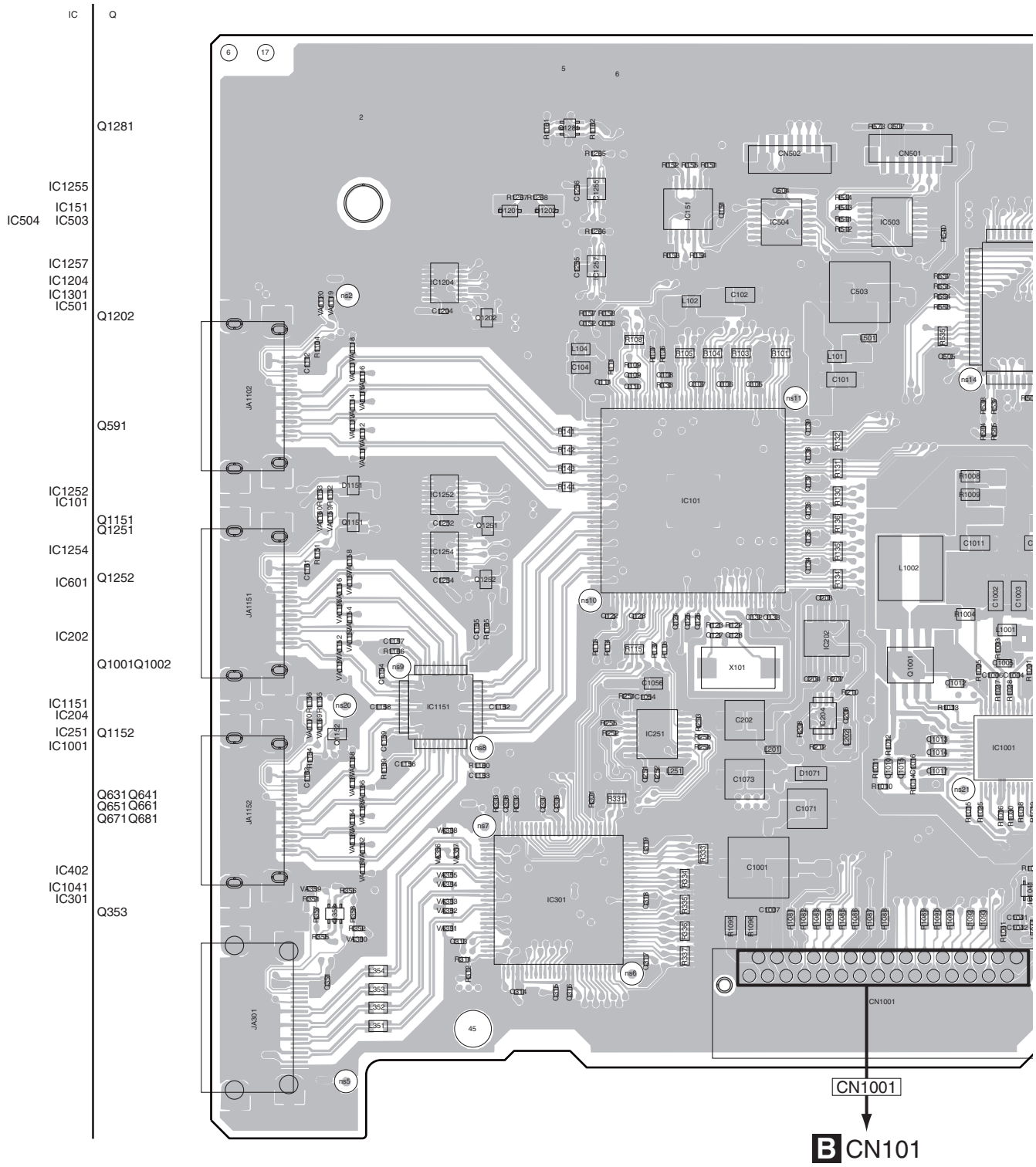

**SIDE A**

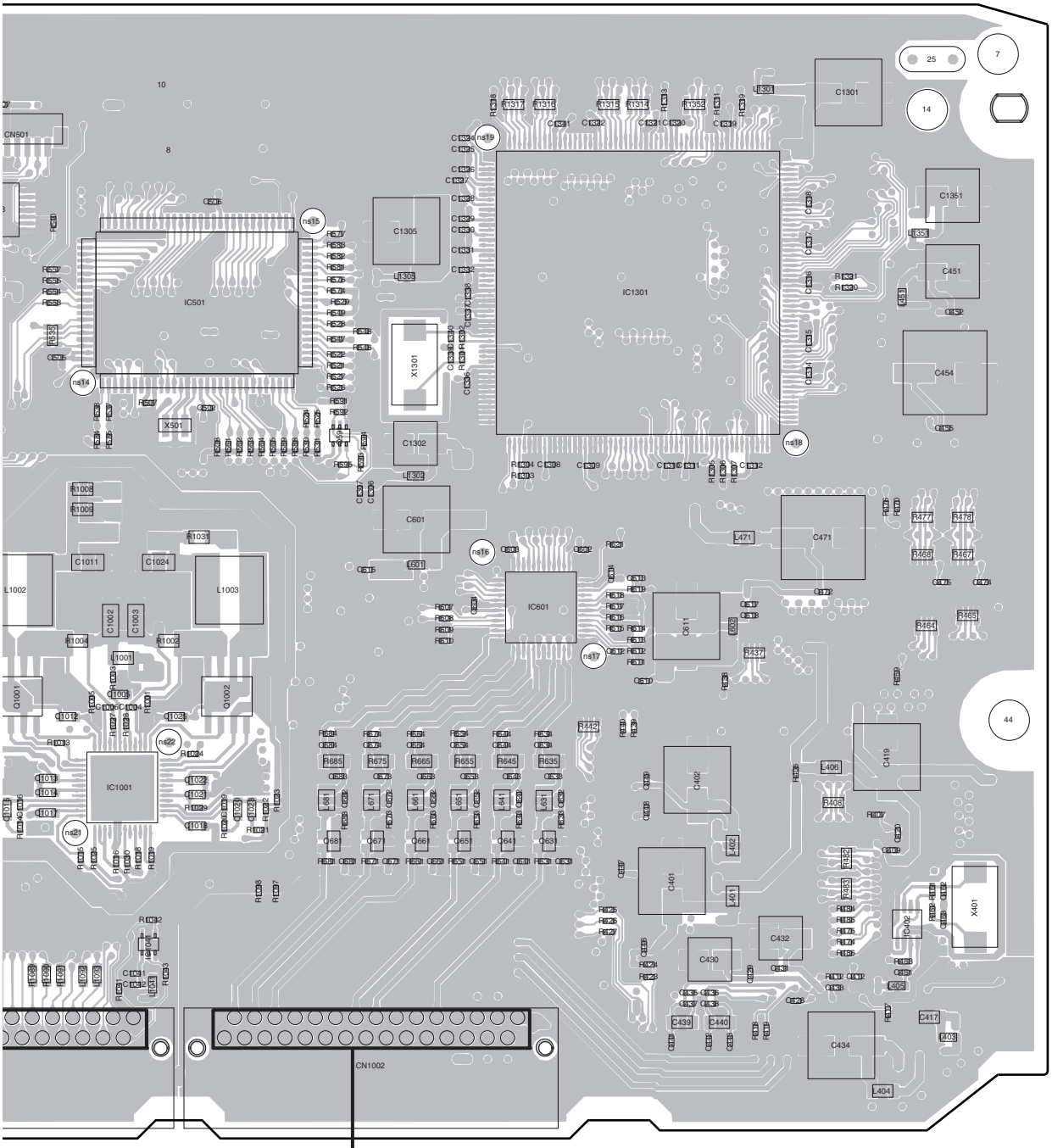


(ANP7621-A)

CN1002

01

B CN102

**SIDE B**

A

# F HDMI & DVC ASSY

| IC | Q |
|---|---|
| | Q1253 |
| IC502 | |
| | Q152 |
| IC1351 | |
| IC1381 IC1383 IC1384 | |
| IC1203 | |
| | Q1102 |
| IC452 | |
| IC1251 | |
| IC471 | |
| IC505 IC1253 | |
| IC1002 | |
| | Q1153 |
| IC506 | Q1154 |
| IC203 | |
| IC206 | |
| IC205 | |
| IC207 | Q201 |
| IC1051 | |
| | Q1052 |
| IC201 | |
| IC1071 | |
| | Q1051 |
| IC401 | Q301 |
| | Q351 |
| | Q352 |

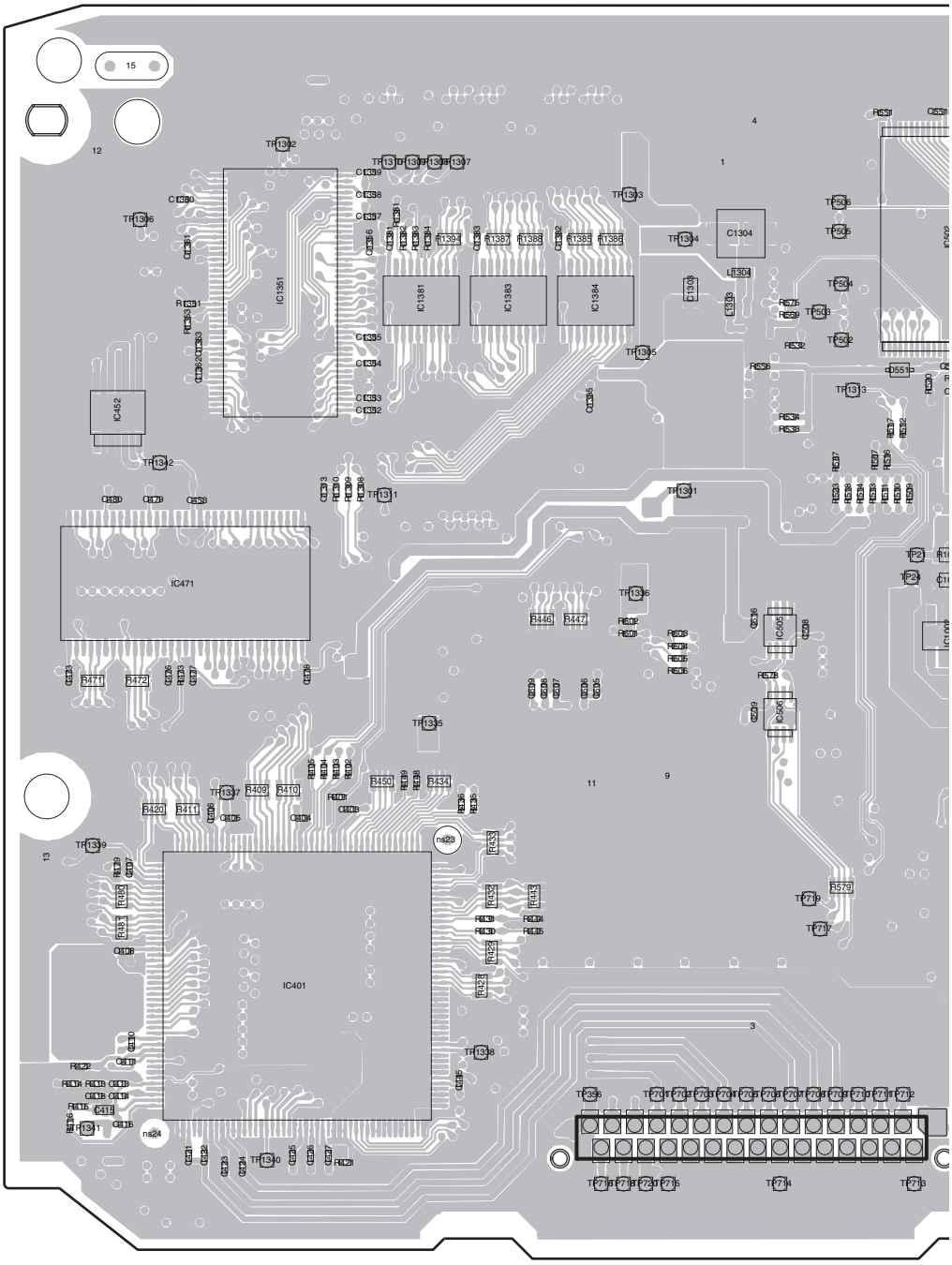


B

C

D

E

F

**SIDE B**

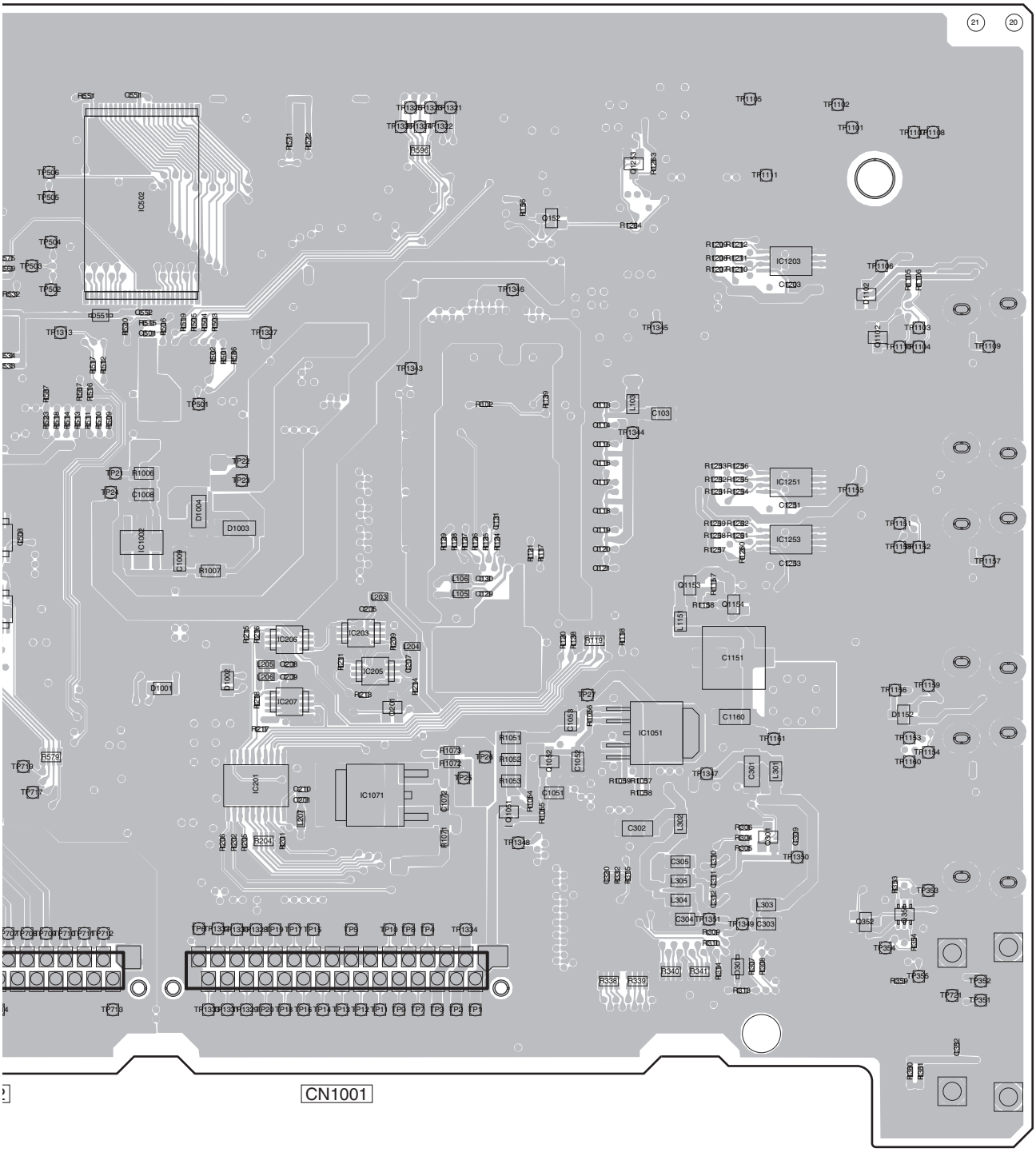


(ANP7621-A)

# 11.7 BINDER, BIND L FRONT and BIND L BACK ASSYS

SIDE A

## H BINDER ASSY

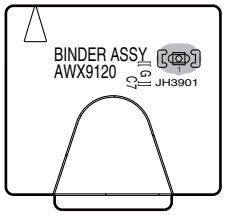


(ANP7643-C)

SIDE B

## H BINDER ASSY

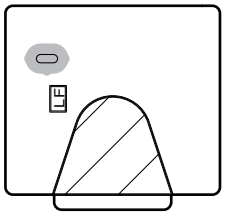


(ANP7643-C)

SIDE A

## I BIND L FRONT ASSY

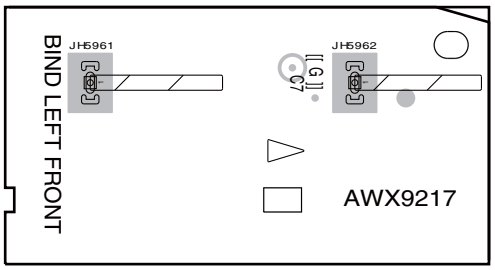


(ANP7641-C)

SIDE B

## I BIND L FRONT ASSY

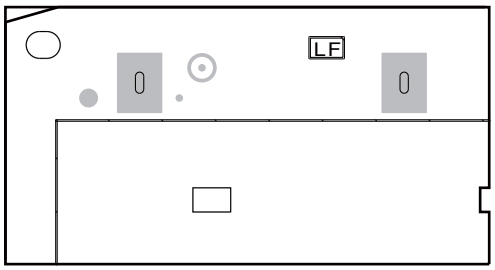


(ANP7641-C)

SIDE A

## J BIND L BACK ASSY

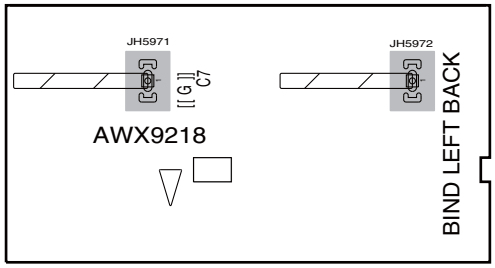


(ANP7641-C)

SIDE B

## J BIND L BACK ASSY

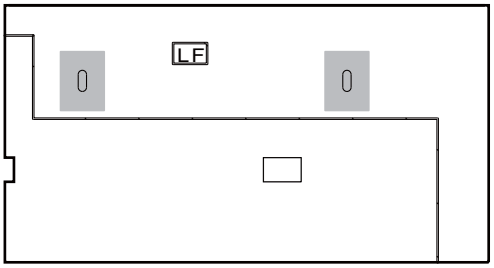


(ANP7641-C)

H I J

H I J

# 11.8 BIND R FRONT, BIND R BACK ASSYS

SIDE A

SIDE B

## K BIND R FRONT ASSY

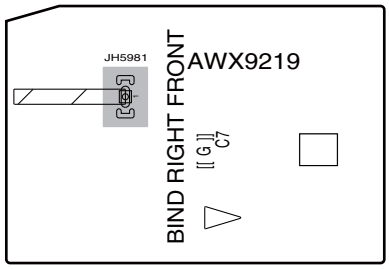


(ANP7641-C)

## K BIND R FRONT ASSY

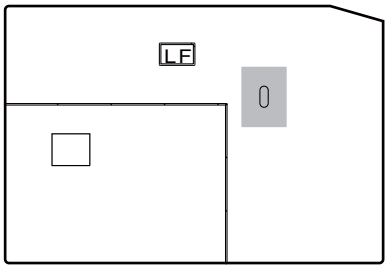


(ANP7641-C)

SIDE A

SIDE B

## L BIND R BACK ASSY

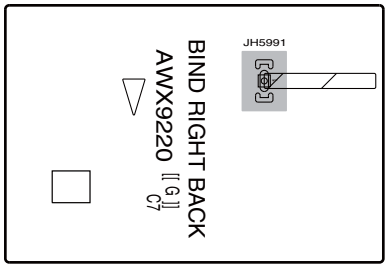


(ANP7641-C)

## L BIND R BACK ASSY

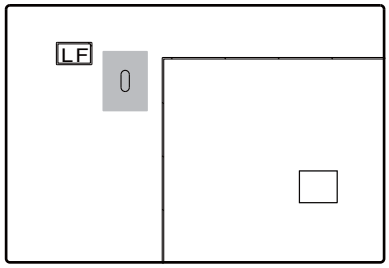


(ANP7641-C)

# 11.9 DISPLAY, MULTI JOG and POWER SW ASSYS

**SIDE A**

## M DISPLAY ASSY

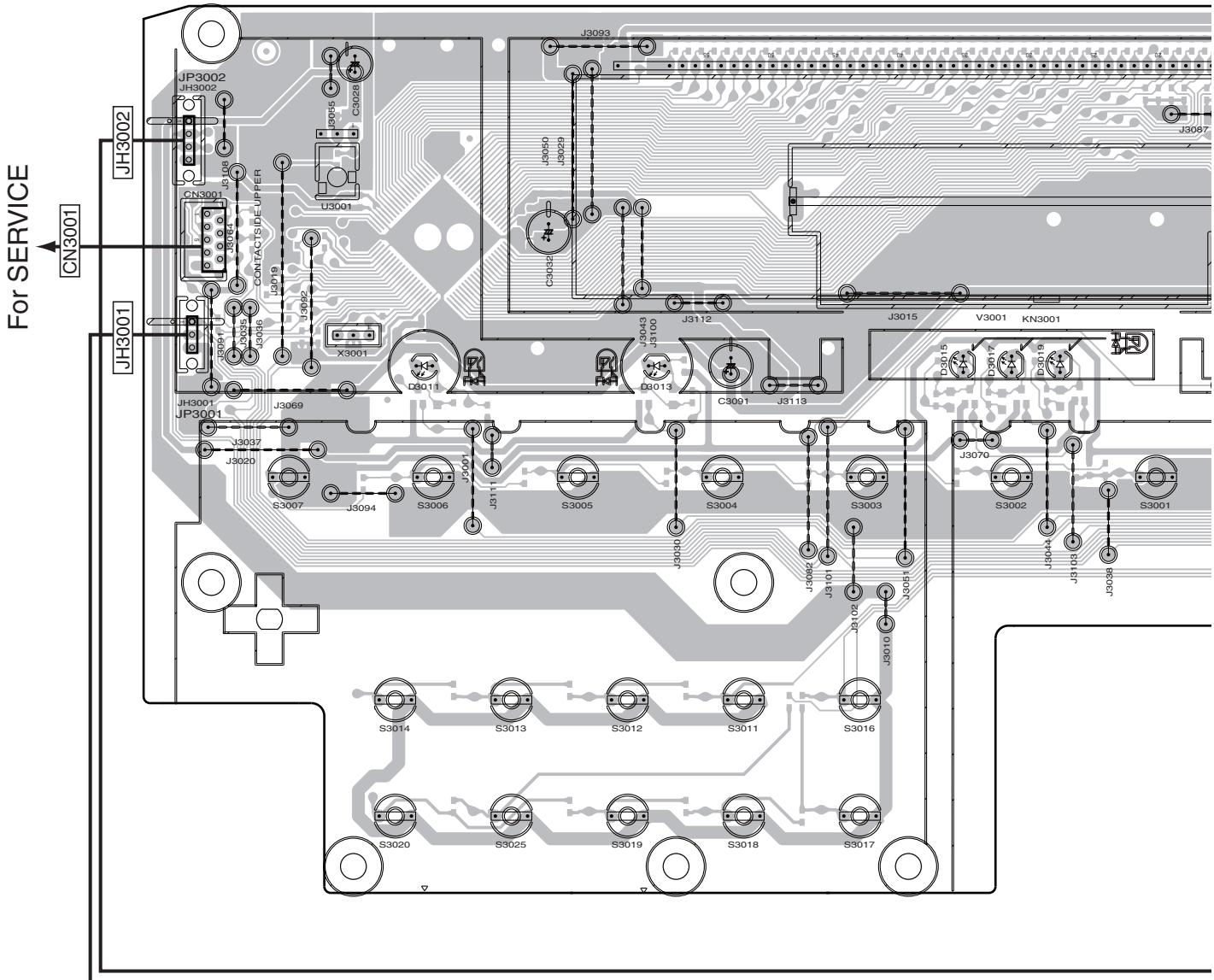


## N MULTI JOG ASSY

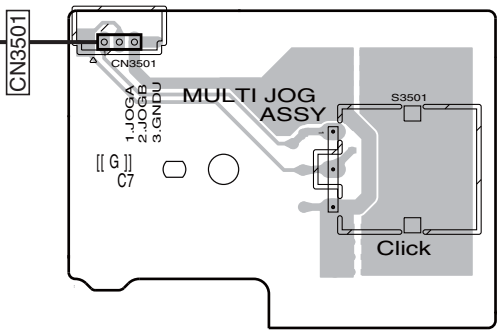


(ANP7643-C)

M N

SIDE A

B CN109

CN3003

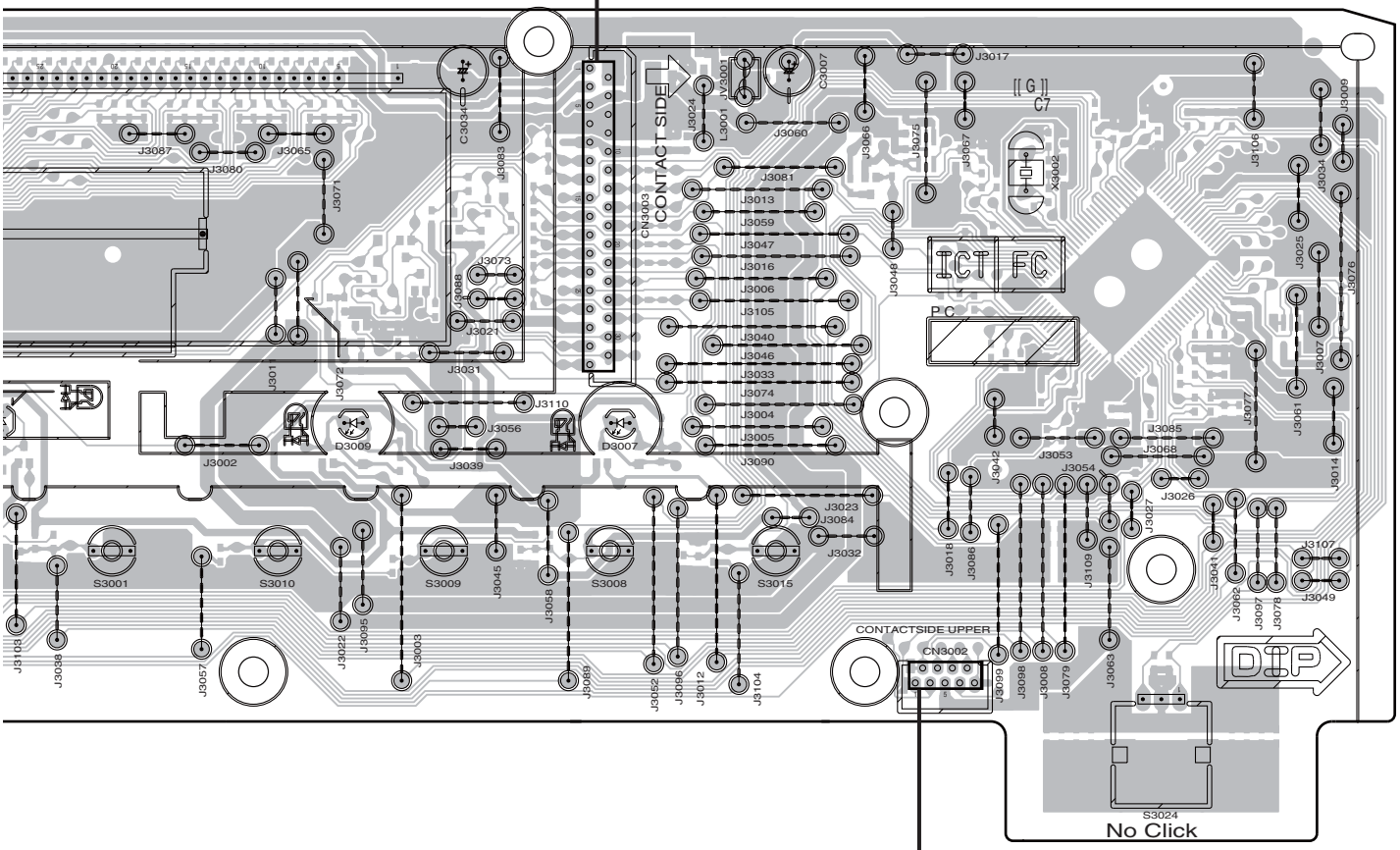


CN3002

For SERVICE

(ANP7643-C)

O POWER SW ASSY

CN3401

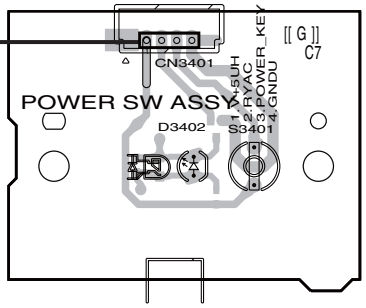


(ANP7643-C)

MO

SIDE B

## M DISPLAY ASSY

IC Q

IC3003 Q3003

IC3004 Q3001 Q3004

Q3002

IC3001 Q3013

IC3005 Q3012

Q3011

Q3005 Q3007

Q3006 Q3008

Q3010 Q3009

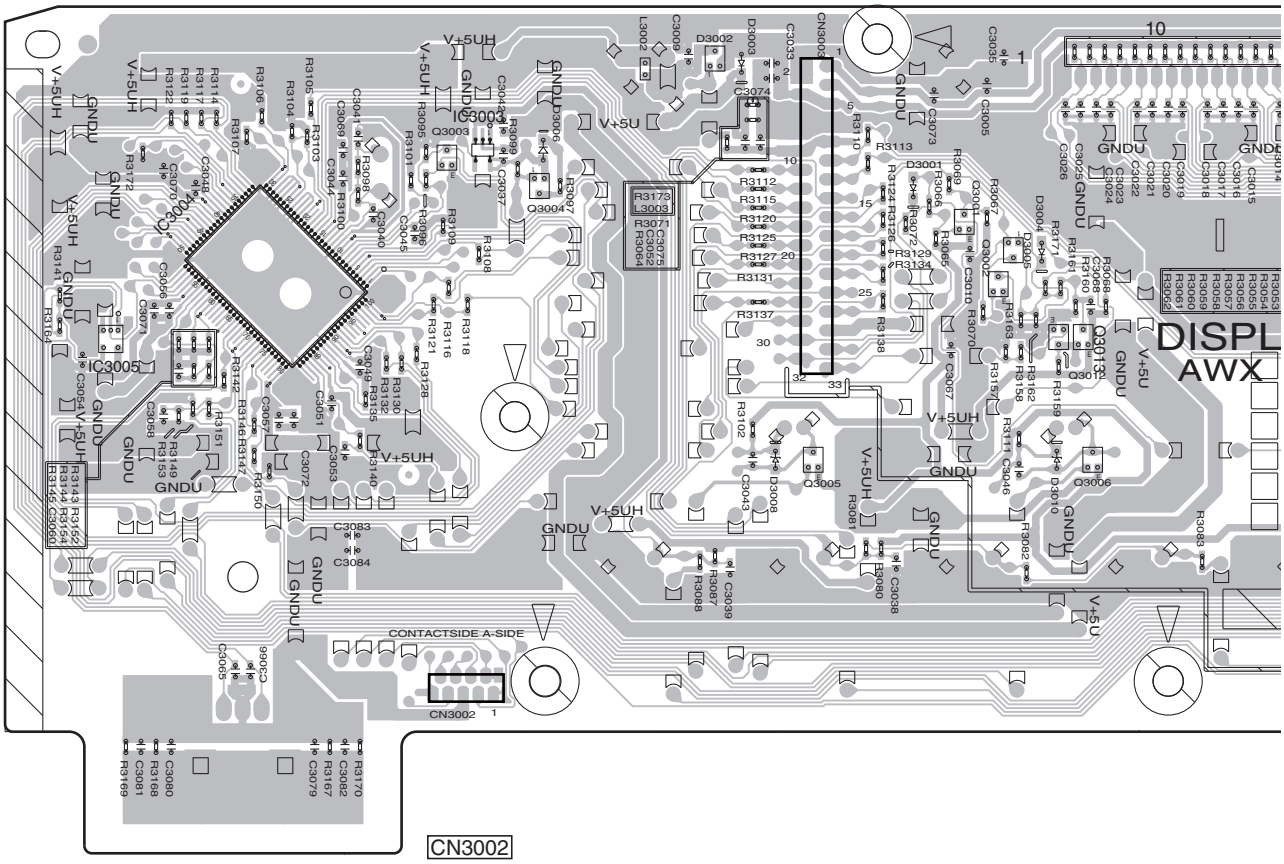


## O POWER SW ASSY

IC Q

Q3401

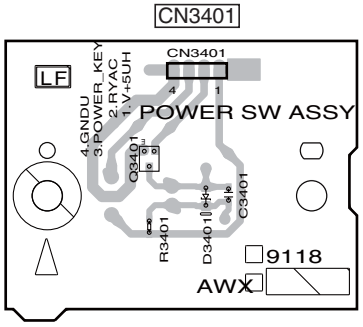


(ANP7643-C)

SIDE B

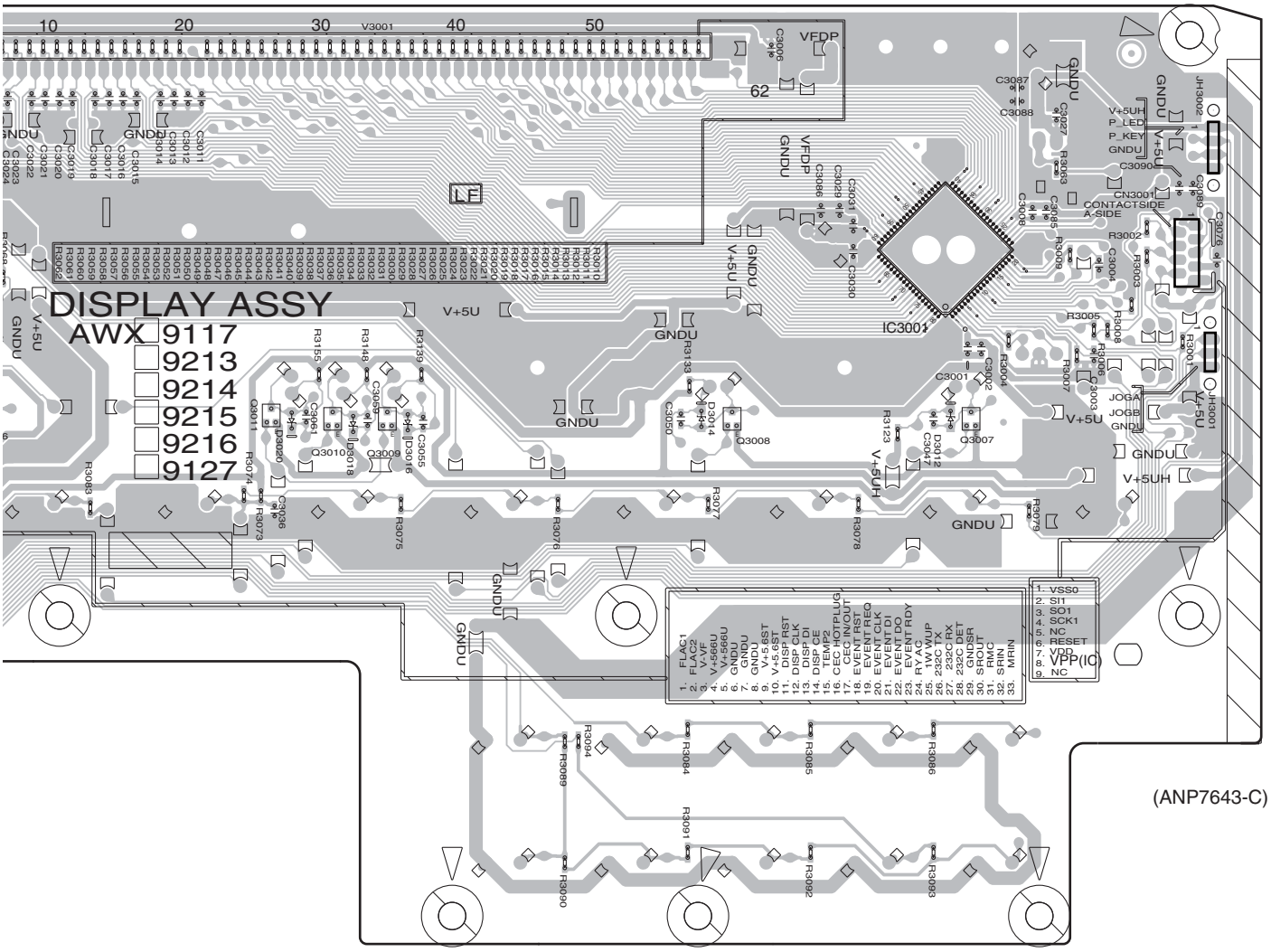


## N MULTI JOG ASSY

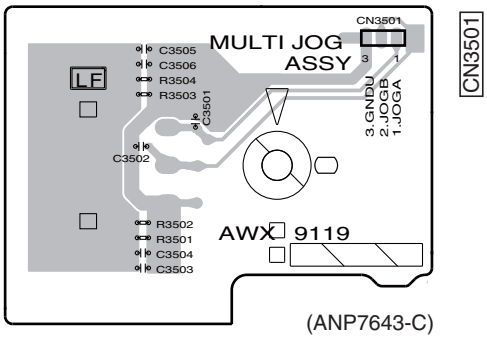

# 11.10 DIODE ASSY

SIDE A

SIDE A

P DIODE ASSY

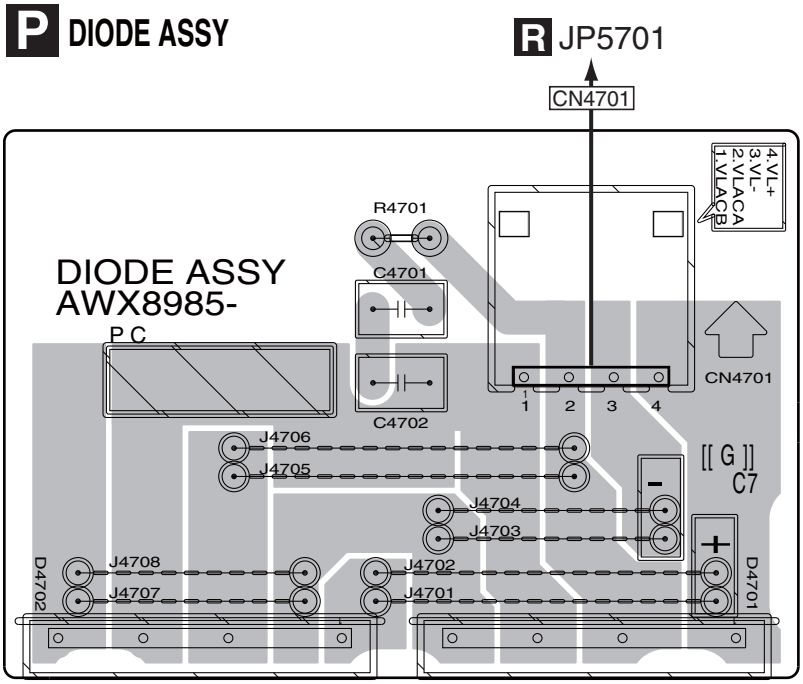


(ANP7642-B)

SIDE B

SIDE B

P DIODE ASSY

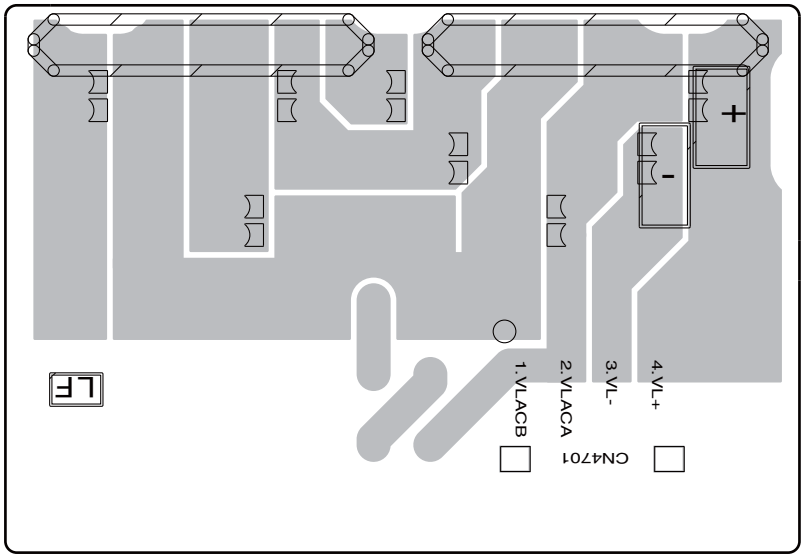


(ANP7642-B)

P

P

# 11.11 HEADPHONE ASSY

SIDE A

SIDE A

## Q HEADPHONE ASSY

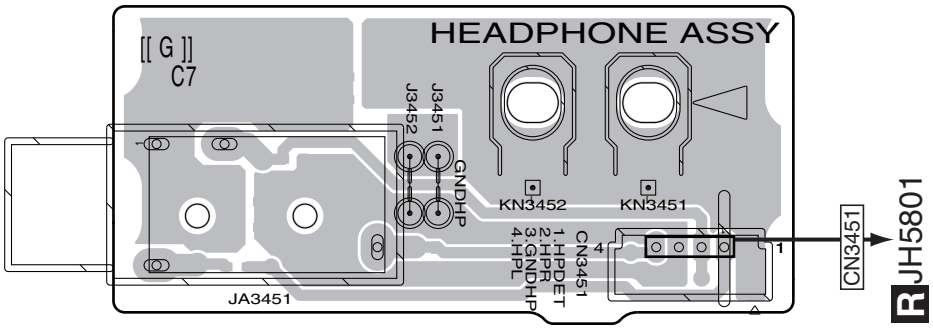


(ANP7643-C)

SIDE B

SIDE B

## Q HEADPHONE ASSY

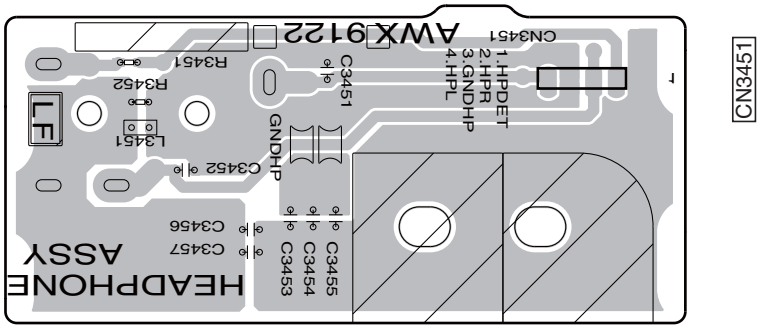


(ANP7643-C)

# 11.12 POWER AMP ASSY

SIDE A

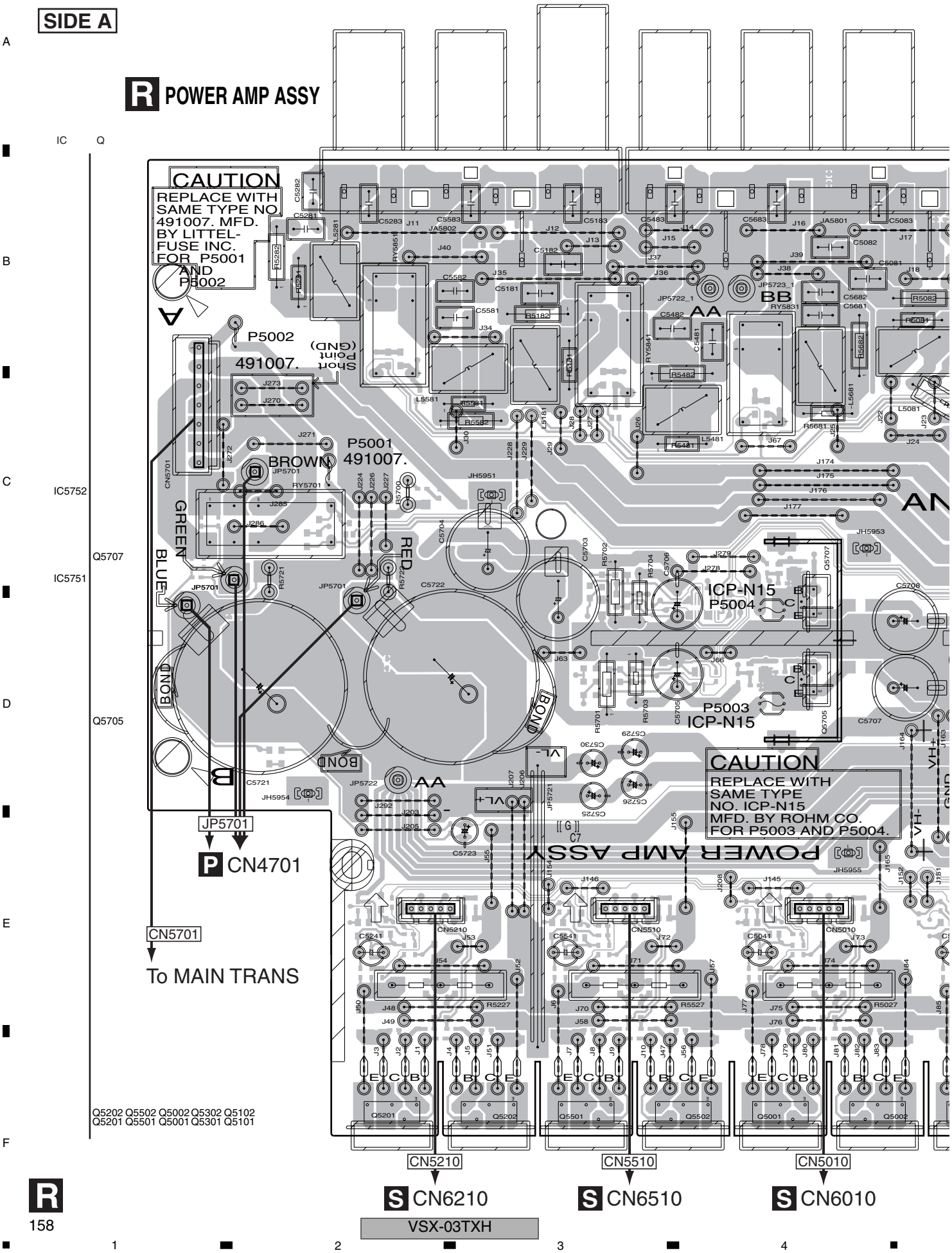

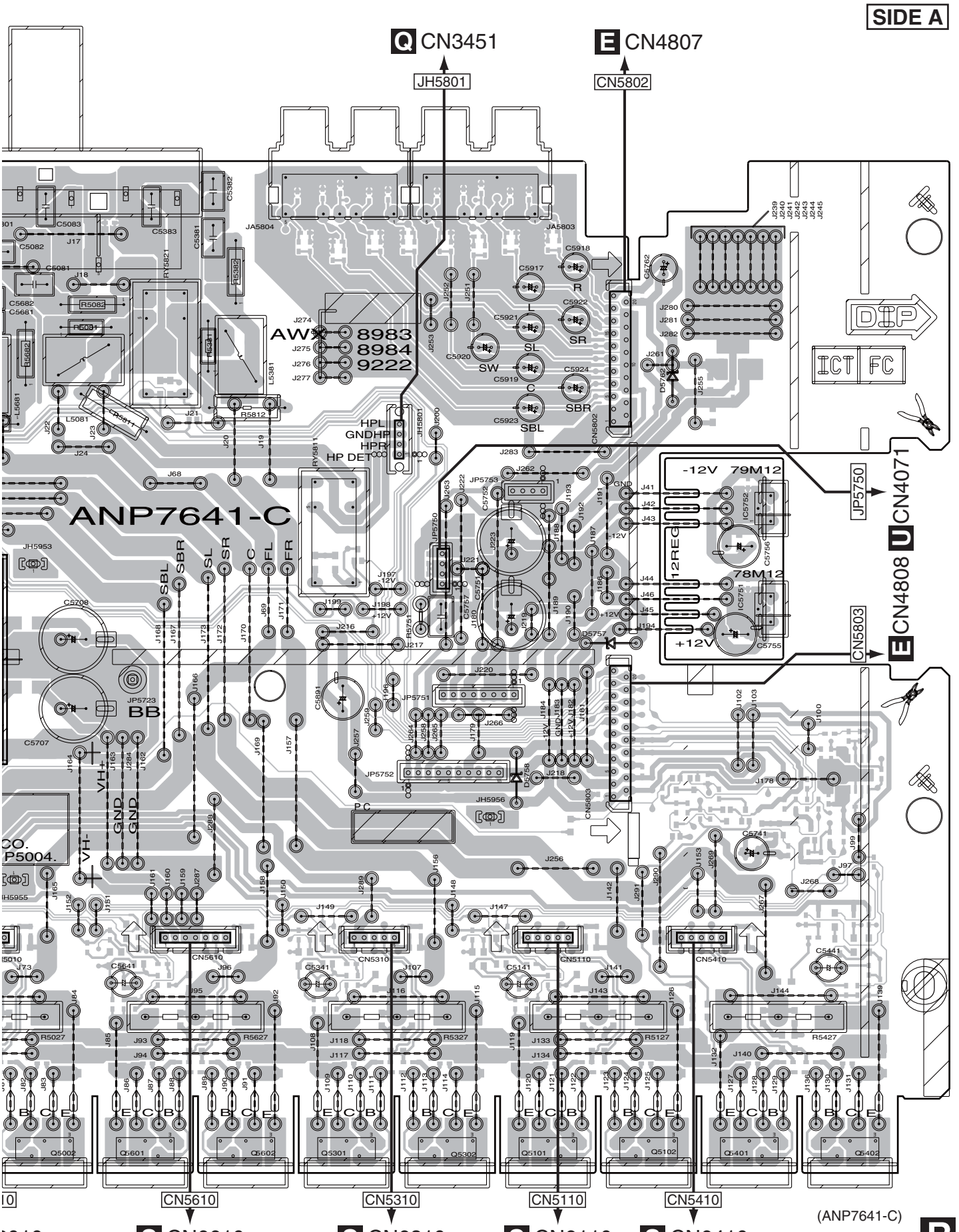
SIDE A
Q CN3451
E CN4807
JH5801
CN5802
ANP7641-C
AW
8983
8984
9222
HPL
GNDHP
HPR
HP DET
DIP
ICT
FC
-12V
79M12
12REG
78M12
+12V
JP5750
U CN4071
E CN4808
CN5803
BB
VH+
VH-
GND
GND
P C
CN5610
CN5310
CN5110
CN5410
S CN6610
S CN6310
S CN6110
S CN6410
(ANP7641-C)

SIDE B

## R POWER AMP ASSY

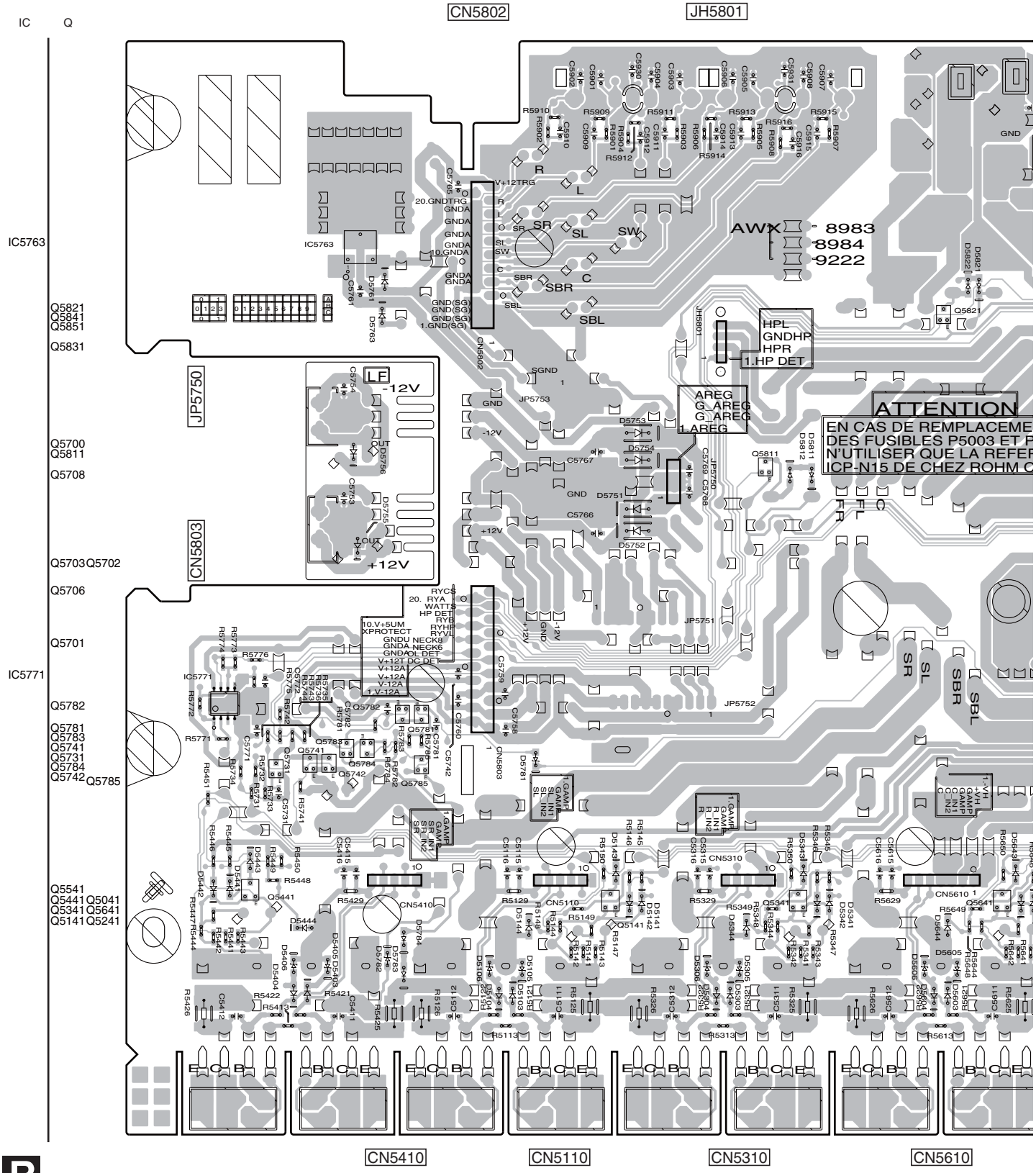

**SIDE B**

A

B

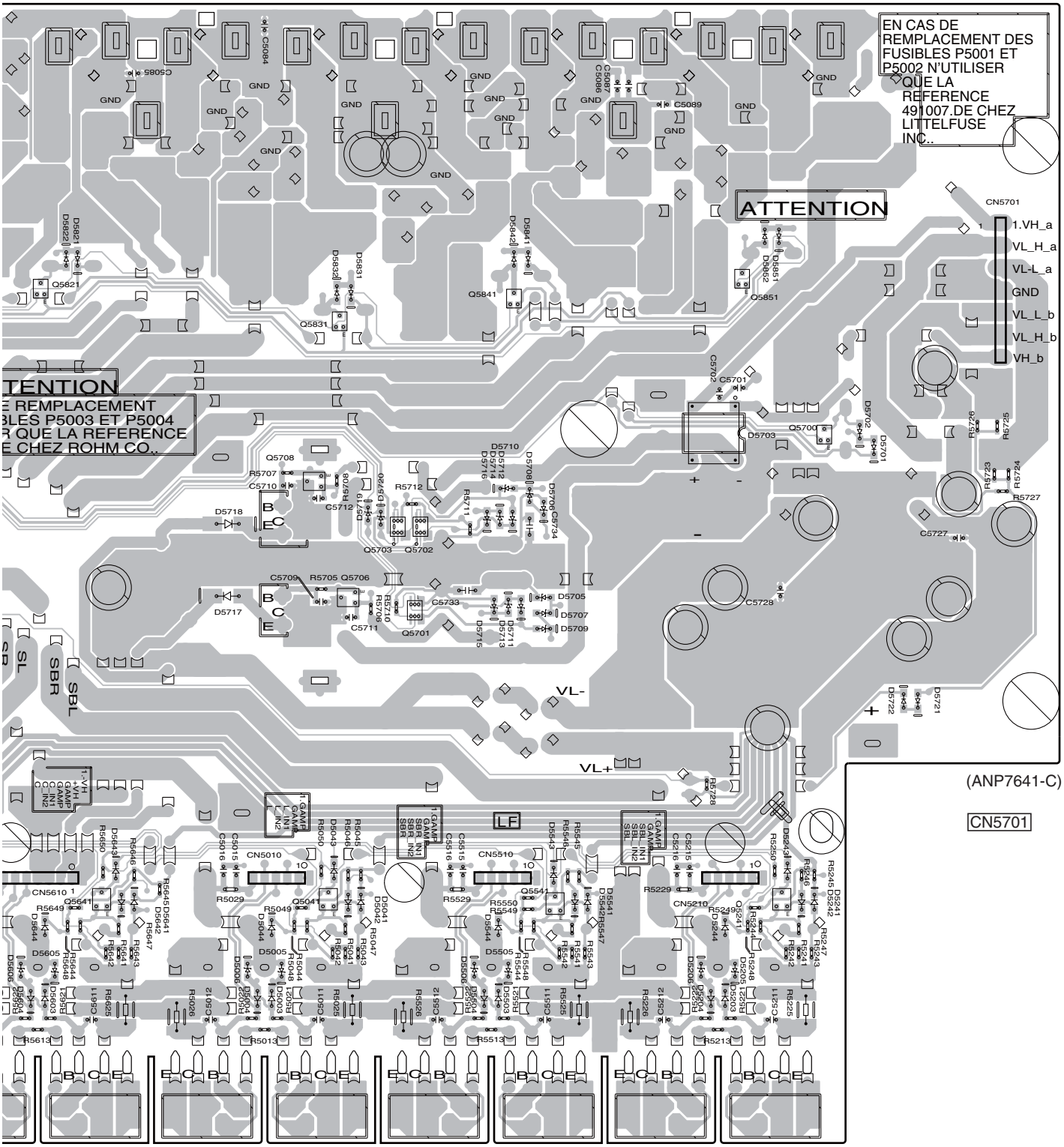


C

D

E

F

# 11.13 PRE-STAGE AMP ASSY

**SIDE A**

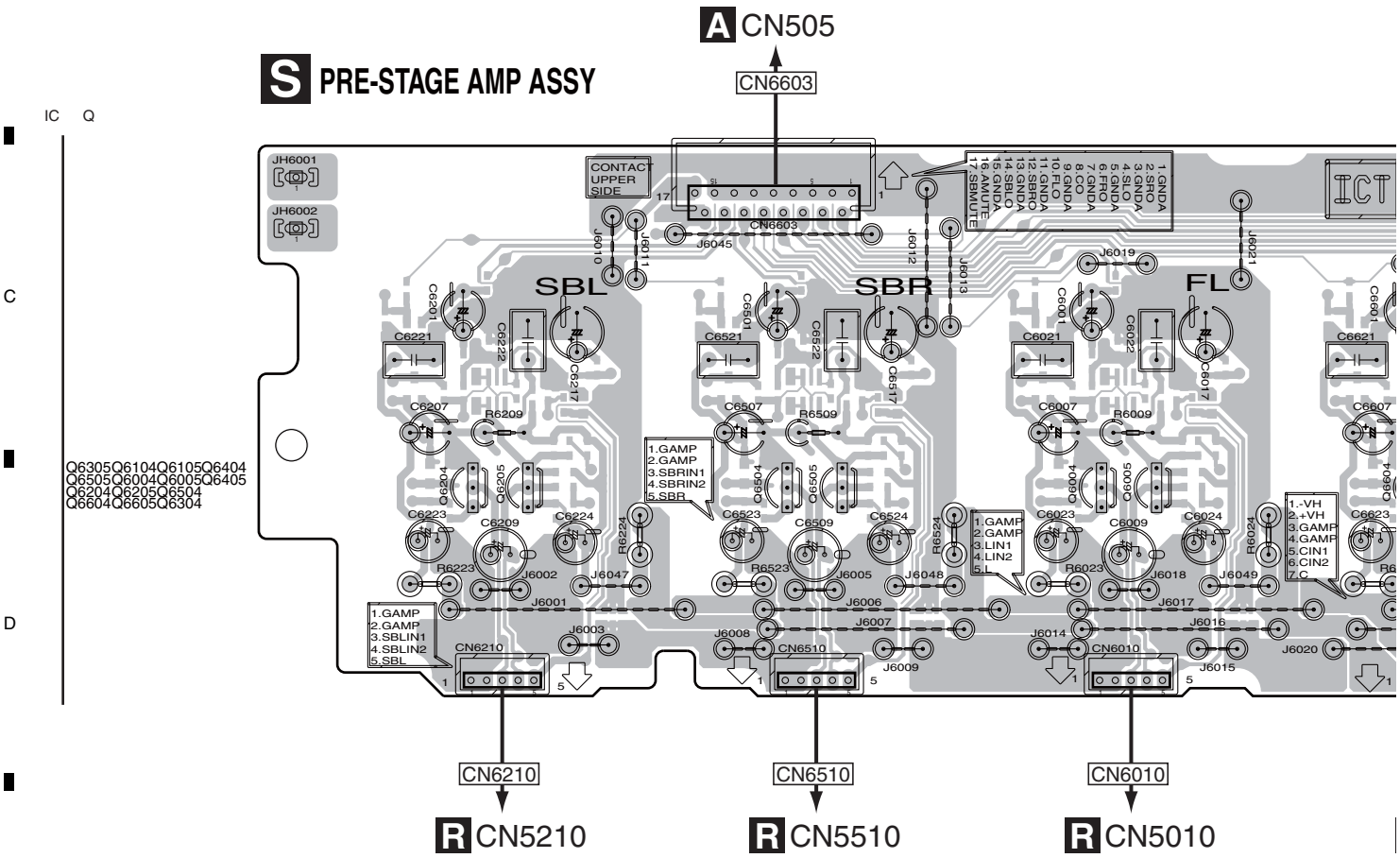

**SIDE A**

A

B

C

D

E

F

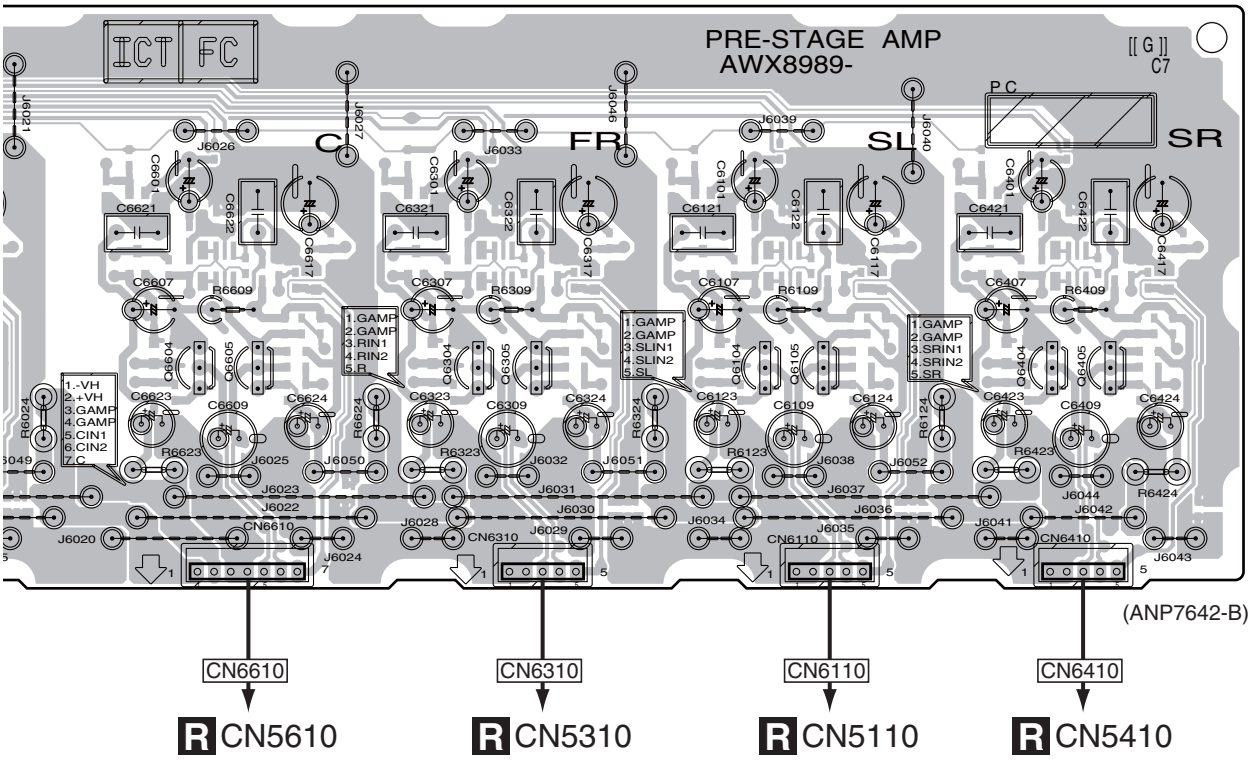


(ANP7642-B)

CN6610 → R CN5610

CN6310 → R CN5310

CN6110 → R CN5110

CN6410 → R CN5410

S

SIDE B

## S PRE-STAGE AMP ASSY

IC Q

Q6101 Q6601 Q6501
Q6401 Q6301 Q6001
Q6201

Q6403 Q6603 Q6503
Q6103 Q6303 Q6003
Q6203
Q6402 Q6302 Q6202
Q6102 Q6602 Q6002
Q6502

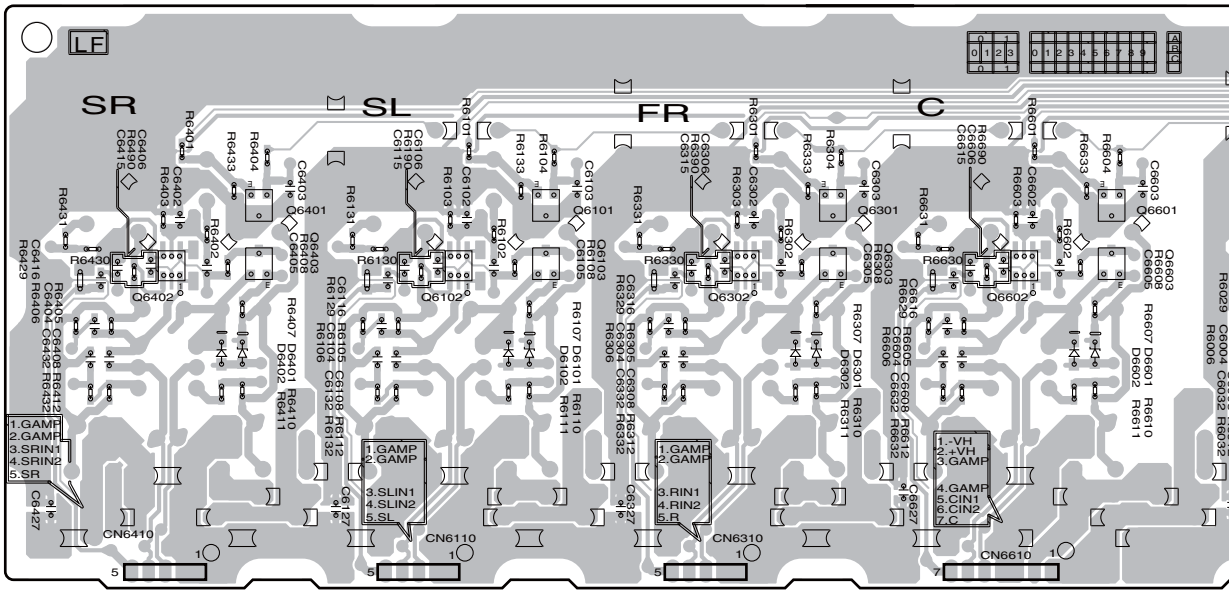


CN6410 CN6110 CN6310 CN6610

**SIDE B**

A

B

C

D

E

F

CN6603

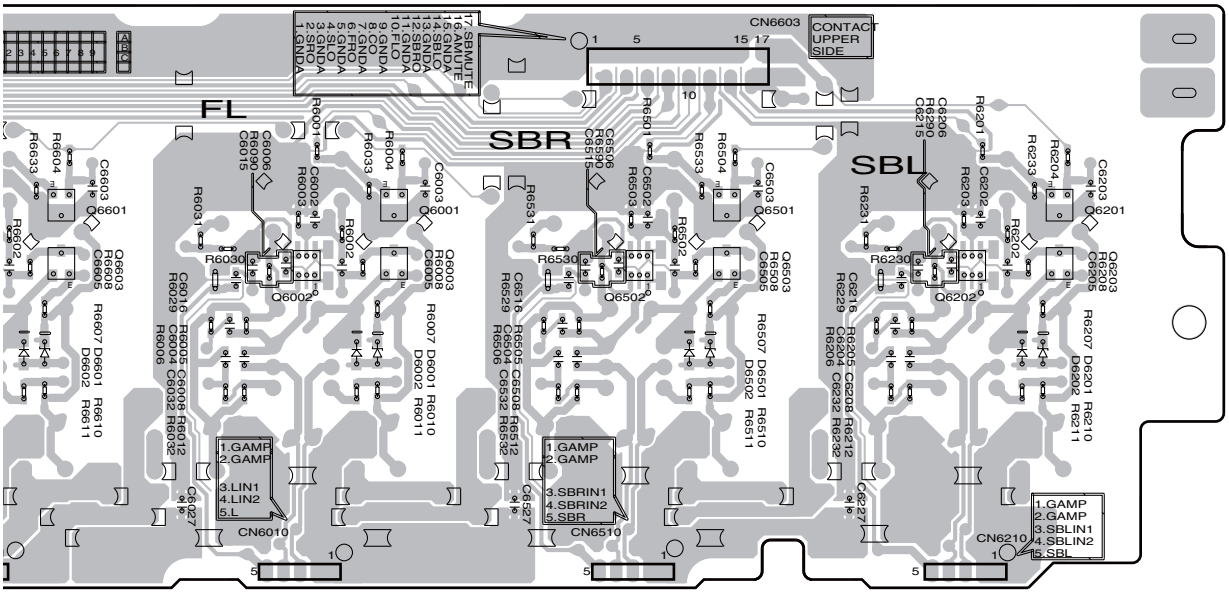


CN6010 CN6510 CN6210

(ANP7642-B)

# 11.14 PRIMARY ASSY

SIDE A

SIDE A

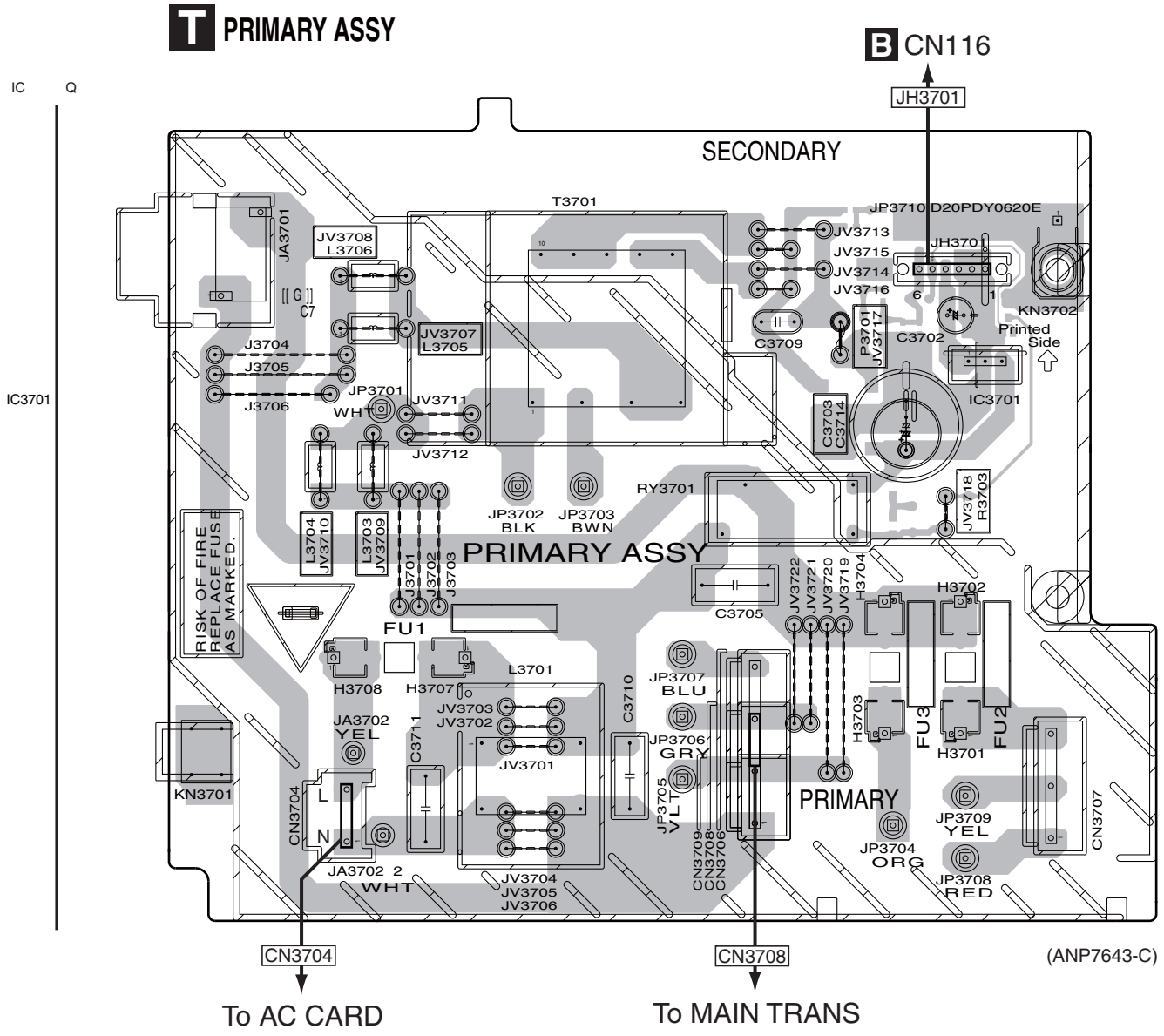

SIDE B

SIDE B

A

B

## T PRIMARY ASSY

IC Q

Q3701

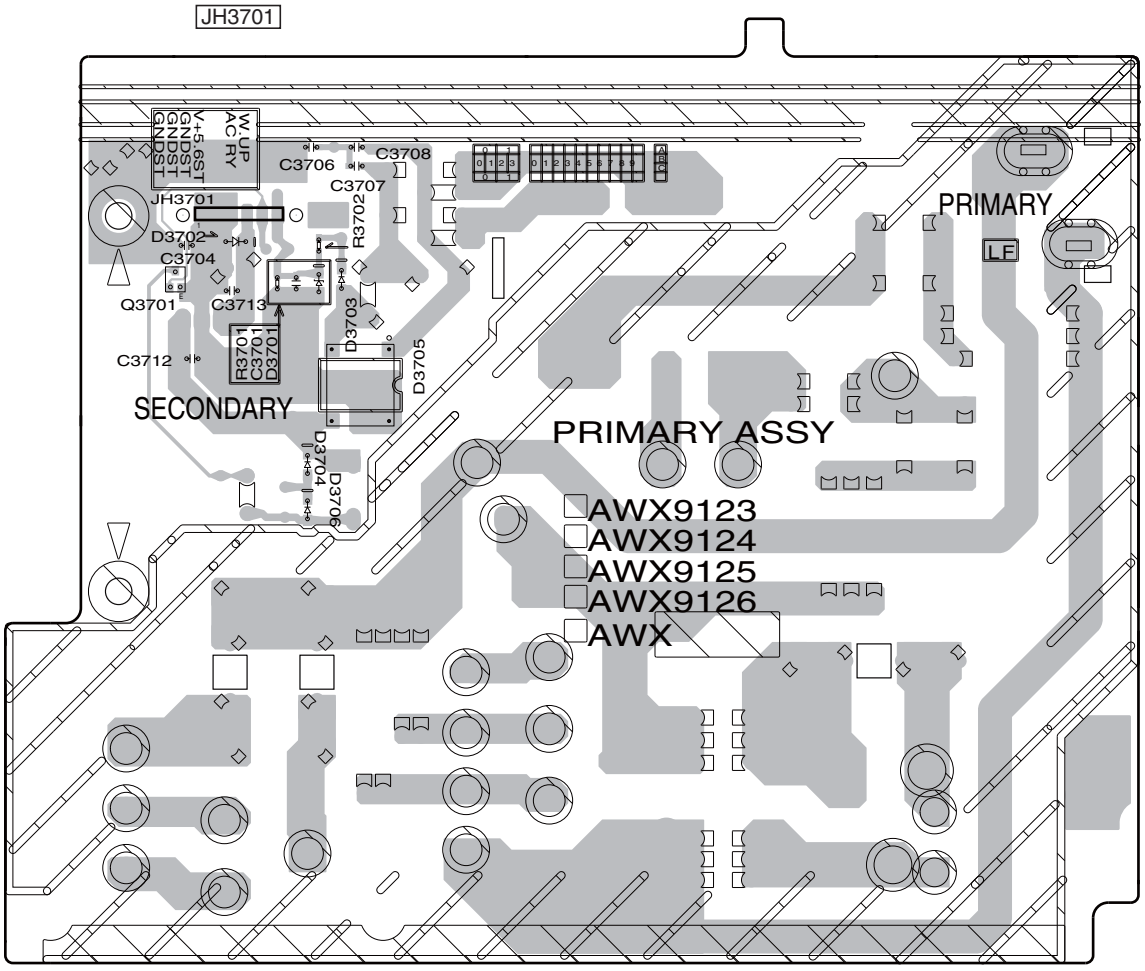


(ANP7643-C)

C

D

E

F

T T

# 11.15 REGULATOR ASSY

SIDE A

SIDE A

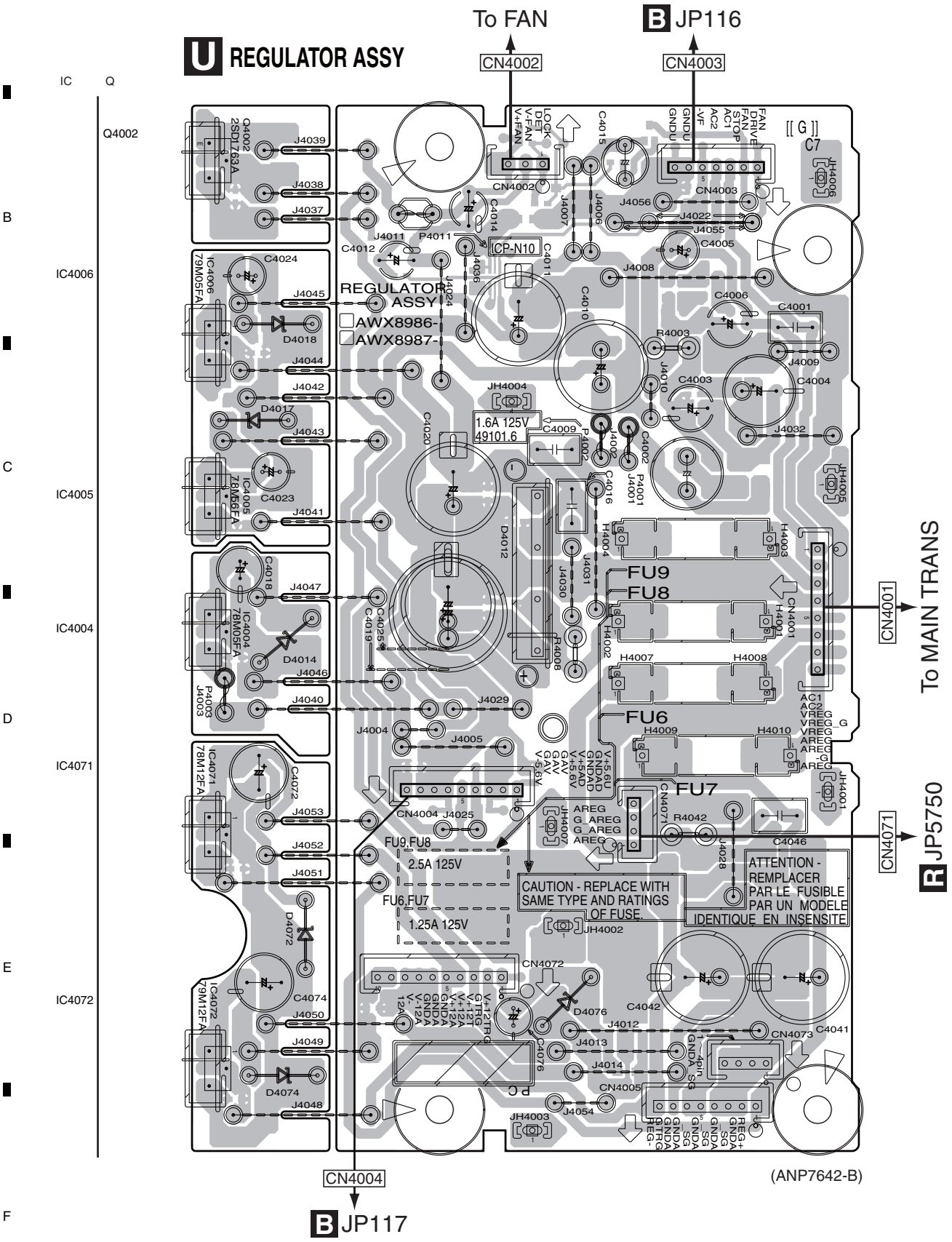

SIDE B

SIDE B

# U REGULATOR ASSY

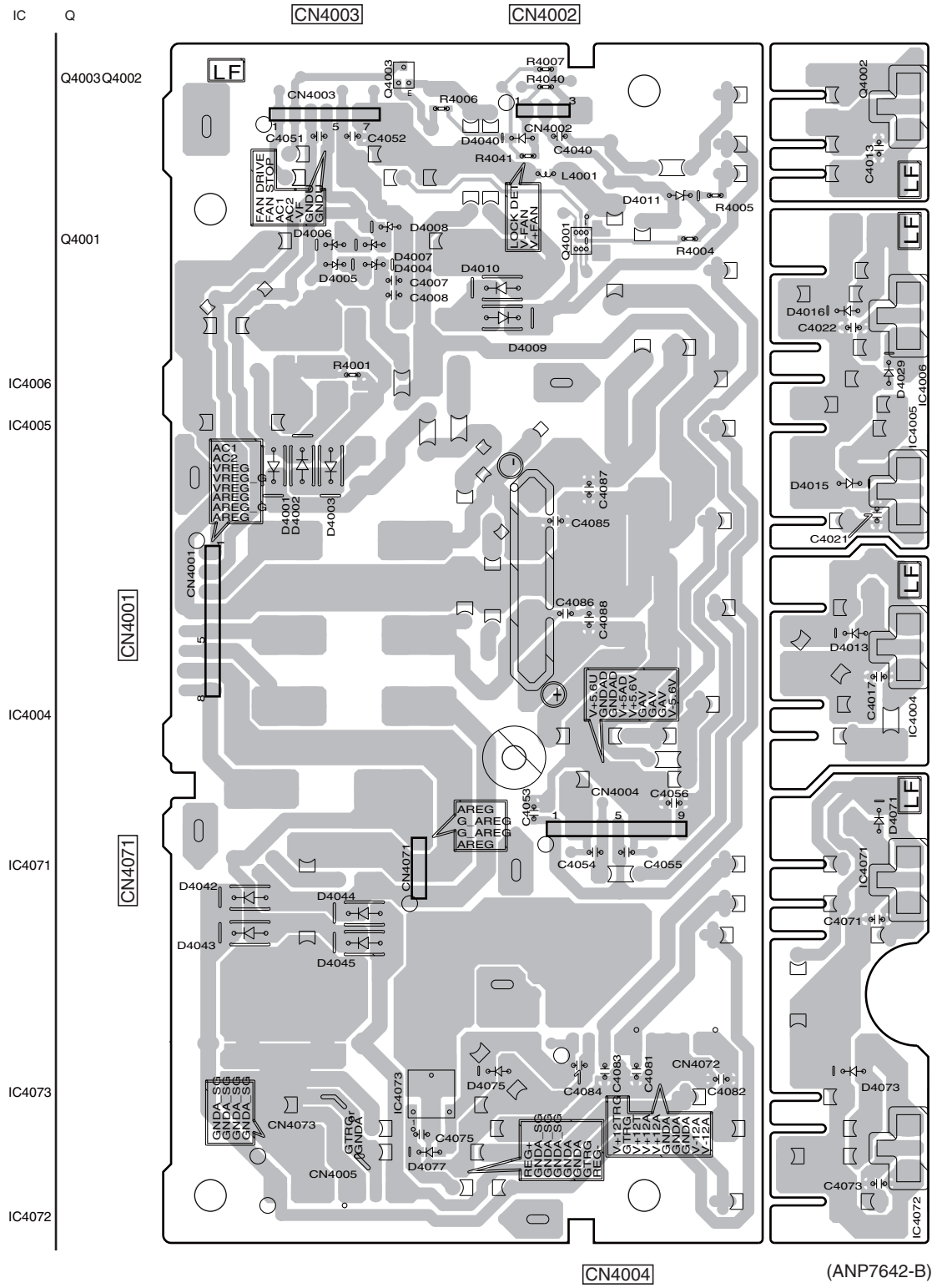

# 11.16 DC/DC ASSY

SIDE A

SIDE A

## V DC/DC ASSY

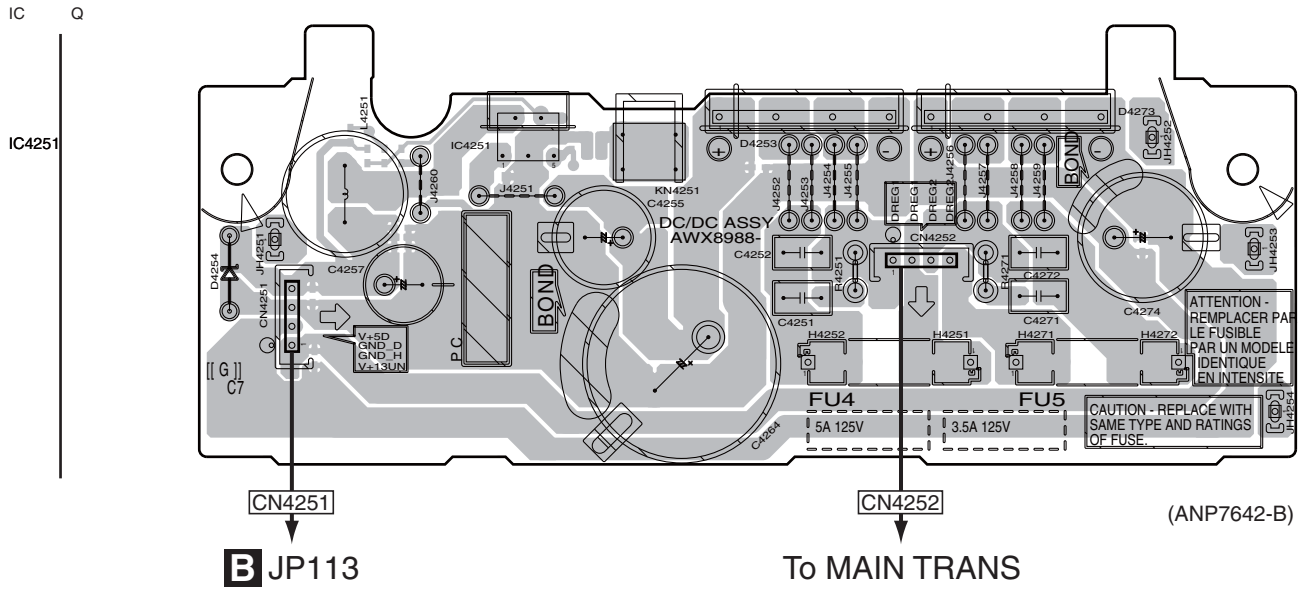


B JP113

To MAIN TRANS

SIDE B

SIDE B

## V DC/DC ASSY

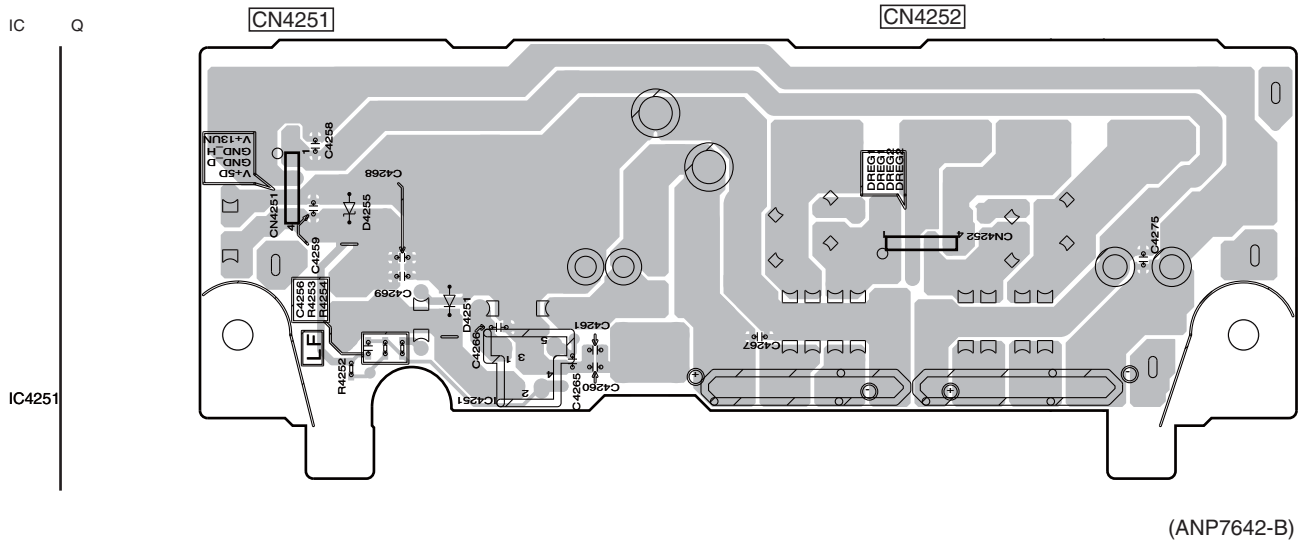


V

V

# 11.17 POSI1, POSI2 and POSI3 ASSYS

**SIDE A**

**SIDE B**

## W POSI-1 ASSY

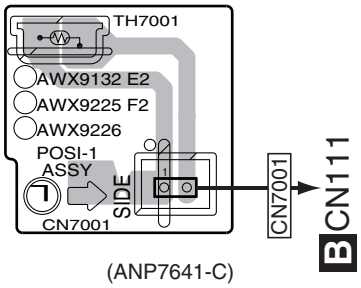


(ANP7641-C)

## W POSI-1 ASSY

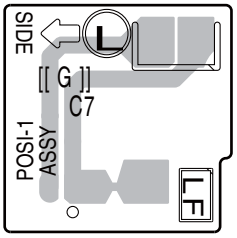


(ANP7641-C)

## X POSI-2 ASSY

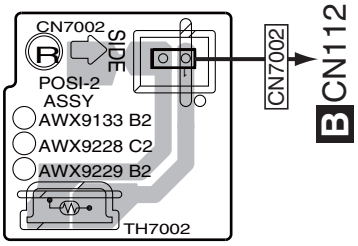


(ANP7641-C)

## X POSI-2 ASSY

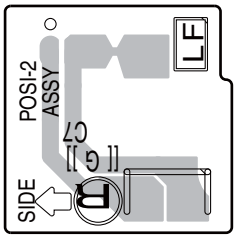


(ANP7641-C)

## Y POSI-3 ASSY

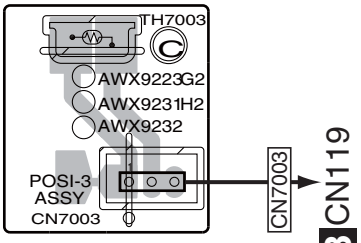


(ANP7641-C)

## Y POSI-3 ASSY

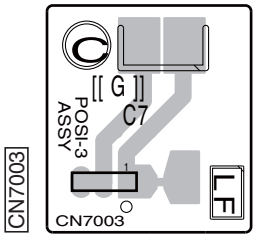


(ANP7641-C)

W X Y

W X Y

# 12. PCB PARTS LIST

*NOTES:* ● *Parts marked by "NSP" are generally unavailable because they are not in our Master Spare Parts List.*

● *The ⚠ mark found on some component parts indicates the importance of the safety factor of the part. Therefore, when replacing, be sure to use parts of identical designation.*

● *When ordering resistors, first convert resistance values into code form as shown in the following examples.*

*Ex.1 When there are 2 effective digits (any digit apart from 0), such as 560 ohm and 47 k ohm (tolerance is shown by J = 5%, and K = 10%).*

| | | | | | |
|---|---|---|---|---|---|
| 560 Ω | → | $56 \times 10^1$ | → | 561 | RD1/4PU 5 6 1 J |
| 47 kΩ | → | $47 \times 10^3$ | → | 473 | RD1/4PU 4 7 3 J |
| 0.5 Ω | → | R50 | | | RN2H R 5 0 K |
| 1 Ω | → | 1R0 | | | RS1P 1 R 0 K |

*Ex.2 When there are 3 effective digits (such as in high precision metal film resistors).*

| | | | | | |
|---|---|---|---|---|---|
| 5.62 kΩ | → | $562 \times 10^1$ | → | 5621 | RN1/4PC 5 6 2 1 F |

● *Meaning of the figures and others in the parentheses in the parts list.*

*Example) IC 301 is on the point (face A, 91 of x-axis, and 111 of y-axis) of the corresponding PC board.*
*IC 301 (A, 91, 111) IC NJM2068V*

## LIST OF ASSEMBLIES

| Mark | No. | Description | Part No. |
|---|---|---|---|
| | 1.. | MAIN ASSY(VSX-03TXH) | AWK8052 |
| | 1.. | MAIN ASSY(VSX-9130TXH) | AWK8069 |
| | 1.. | MAIN ASSY(VSX-01TXH) | AWK8056 |
| | 1.. | MAIN ASSY(VSX-1018AH) | AWK8057 |
| | 1.. | AUDIO IN ASSY | AWK8050 |
| NSP | 1.. | COMPLEX ASSY(VSX-03TXH, 01TXH) | AWK8046 |
| | 1.. | COMPLEX ASSY(VSX-9130TXH, 1018AH) | AWK8067 |
| | 2.. | DISPLAY ASSY(VSX-03TXH, 01TXH) | AWX9117 |
| | 2.. | DISPLAY ASSY(VSX-9130TXH, 1018AH) | AWX9216 |
| | 2.. | POWER SW ASSY | AWX9118 |
| | 2.. | MULTI JOG ASSY | AWX9119 |
| | 2.. | BINDER ASSY | AWX9120 |
| | 2.. | FRONT IN ASSY | AWX9121 |
| | 2.. | HEADPHONE ASSY | AWX9122 |
| | 2.. | PRIMARY ASSY | AWX9123 |
| NSP | 1.. | LOCAL POWER ASSY(Except VSX-1018AH) | AWK8041 |
| NSP | 1.. | LOCAL POWER ASSY(VSX-1018AH) | AWK8043 |
| | 2.. | DIODE ASSY | AWX8985 |
| | 2.. | REGULATOR ASSY | AWX8986 |
| | 2.. | DC/DC ASSY | AWX8988 |
| | 2.. | PRE-STAGE AMP | AWX8989 |
| | 2.. | INTERFACE ASSY(Except VSX-1018AH) | AWX8990 |
| | 2.. | INTERFACE ASSY(VSX-1018AH) | AWX8993 |
| NSP | 1.. | AMP ASSY | AWK8037 |
| | 2.. | POWER AMP ASSY | AWX8983 |
| | 2.. | POSI1 ASSY | AWX9132 |
| | 2.. | POSI2 ASSY | AWX9133 |
| | 2.. | BIND_L_FRONT ASSY | AWX9217 |
| | 2.. | BIND_L_BACK ASSY | AWX9218 |
| | 2.. | BIND_R_FRONT ASSY | AWX9219 |
| | 2.. | BIND_R_BACK ASSY | AWX9220 |
| | 2.. | POSI3 ASSY | AWX9223 |
| | 1.. | HDMI & DVC ASSY(VSX-03TXH, 9130TXH) | AWX9170 |
| | 1.. | HDMI & DVC ASSY(VSX-01TXH, 1018AH) | AWX9233 |
| | 1.. | DSP & USB ASSY(VSX-03TXH, 9130TXH) | AWX9175 |
| | 1.. | DSP & USB ASSY(VSX-01TXH, 1018AH) | AWX9239 |
| | 1.. | FM/AM TUNER UNIT | AXX7250 |

## CONTRAST OF PCB ASSEMBLIES

### B MAIN ASSY

AWK8052, AWK8069, AWK8056 and AWK8057 are constructed the same except for the following:

| Mark | Symbol and Description | AWK8052 | AWK8069 | AWK8056 | AWK8057 |
|---|---|---|---|---|---|
| | IC1201 Logic IC | TC74HC4051AFT | TC74HC4051AFT | TC74HC4051AFT | Not used |
| | IC1202 Logic IC | TC74HC4051AFT | TC74HC4051AFT | TC74HC4051AFT | Not used |
| | IC1203 | TC74HC4053AFT | TC74HC4053AFT | TC74HC4053AFT | Not used |
| | IC1205 Video Amp IC | LA7109 | LA7109 | LA7109 | Not used |
| | IC1271 | LA7213 | LA7213 | LA7213 | Not used |
| | Q1201,Q1202,Q1271 | 2SA1576A(QR) | 2SA1576A(QR) | 2SA1576A(QR) | Not used |
| | Q1277 Chip Transistor | DTC114EUA | DTC114EUA | DTC114EUA | Not used |
| | Q1278 Digital Transistor | DTC124EUA | DTC124EUA | DTC124EUA | Not used |
| | D1201,D1202 | DAN202U | DAN202U | DAN202U | Not used |
| | D1277 | 1SS355 | 1SS355 | 1SS355 | Not used |

| Mark | Symbol and Description | AWK8052 | AWK8069 | AWK8056 | AWK8057 |
|---|---|---|---|---|---|
| | JA1001,JA1002,JA1003 Comb.jack(2s+2p) | AKB7200 | AKB7200 | AKB7200 | Not used |
| | JA1004 Comb.jack(s+1p) | AKB7199 | AKB7199 | AKB7199 | Not used |
| | JA1101 Comb.jack(2p) | Not used | Not used | Not used | AKB7198 |
| | JA1102 Comb.jack(2p) | Not used | Not used | Not used | AKB7198 |
| | JA1103 Comb.jack(2p) | Not used | Not used | Not used | AKB7198 |
| | JA1104 Comb.jack(1p) | Not used | Not used | Not used | AKB7197 |
| | R180 | RS1/16S473J | Not used | RS1/16S473J | Not used |
| | R182 | RS1/16S473J | RS1/16S333J | RS1/16S473J | Not used |
| | R146,R183 | Not used | RS1/16S104J | RS1/16S473J | RS1/16S473J |
| | R1201,R1202,R1203,R1204,R1205,R1206 | RS1/16S750J | RS1/16S750J | RS1/16S750J | Not used |
| | R1207,R1208 | RS1/16S750J | RS1/16S750J | RS1/16S750J | Not used |
| | R1225,R1226,R1227,R1229 | RS1/16S103J | RS1/16S103J | RS1/16S103J | Not used |
| | R1231,R1232 | RS1/16S0R0J | RS1/16S0R0J | RS1/16S0R0J | Not used |
| | R1233,R1234 | RS1/16S473J | RS1/16S473J | RS1/16S473J | Not used |
| | R1236,R1237,R1239,R1240,R1241,R1242 | RS1/16S750J | RS1/16S750J | RS1/16S750J | Not used |
| | R1251,R1255 | RS1/16S154J | RS1/16S154J | RS1/16S154J | Not used |
| | R1252,R1256,R1272 | RS1/16S124J | RS1/16S124J | RS1/16S124J | Not used |
| | R1253,R1257,R1274 | RS1/16S102J | RS1/16S102J | RS1/16S102J | Not used |
| | R1263,R1264 | RS1/16S0R0J | RS1/16S0R0J | RS1/16S0R0J | Not used |
| | R1273 | RS1/16S473J | RS1/16S473J | RS1/16S473J | Not used |
| | R1275 | RS1/16S331J | RS1/16S331J | RS1/16S331J | Not used |
| | R1276 | RS1/16S224J | RS1/16S224J | RS1/16S224J | Not used |
| | R1277 | RS1/16S103J | RS1/16S103J | RS1/16S103J | Not used |
| | R1278 | RS1/16S473J | RS1/16S473J | RS1/16S473J | Not used |
| | R1280 | RS1/16S223J | RS1/16S223J | RS1/16S223J | Not used |
| | C1201,C1202,C1203,C1204,C1205,C1206,C1207 | CKSRYB104K16 | CKSRYB104K16 | CKSRYB104K16 | Not used |
| | C1208,C1209,C1210,C1223,C1224,C1226,C1229 | CKSRYB104K16 | CKSRYB104K16 | CKSRYB104K16 | Not used |
| | C1225,C1227,C1251,C1256,C1276 | CEAT101M10 | CEAT101M10 | CEAT101M10 | Not used |
| | C1235,C1237,C1239,C1240,C1241,C1242 | CCSRCH181J50 | CCSRCH181J50 | CCSRCH181J50 | Not used |
| | C1253,C1254,C1257,C1258,C1277 | CKSRYB103K50 | CKSRYB103K50 | CKSRYB103K50 | Not used |
| | C1271 | CEAT221M16 | CEAT221M16 | CEAT221M16 | Not used |
| | C1483,C1484,C1485 | CKSRYB104K16 | CKSRYB104K16 | CKSRYB104K16 | Not used |
| | C1275 Elect. Capacitor | CEAT3R3M50 | CEAT3R3M50 | CEAT3R3M50 | Not used |
| | C1278 Elect. Capacitor | CEAT220M50 | CEAT220M50 | CEAT220M50 | Not used |

## C DSP & USB ASSY

AWX9175 and AWX9239 are constructed the same except for the following:

| Mark | Symbol and Description | AWX9175 | AWX9239 |
|---|---|---|---|
| | JA104 Opt. Link In | GP1FAV51RKBF | Not used |
| | R124 Resistor | RS1/16SS101J | Not used |
| | C118 Capacitor | CKSSYB104K10 | Not used |

## E INTERFACE ASSY

AWX8990 and AWX8993 are constructed the same except for the following:

| Mark | Symbol and Description | AWX8990 | AWX8993 |
|---|---|---|---|
| | IC4821 RS232 IC | HIN202EIBNZ | Not used |
| | Q4831 | 2SC4081(QRS) | Not used |
| | Q4881,Q4883,Q4893 | 2SA1576A(QR) | Not used |
| | Q4882,Q4892 | RT1N241M | Not used |
| | D4881 | UDZS5R1(B) | Not used |
| | D4822 | 1SS352 | Not used |
| | L4881 Chip Solid Inductor | ATL7002 | Not used |
| | JA4821 9p D-sub Socket | AKP1213 | Not used |
| | JA4881,JA4891 | VKB1243 | Not used |
| | CN4821 7p Connector | Not used | VKN1267 |

| Mark | Symbol and Description | AWX8990 | AWX8993 |
|---|---|---|---|
| | R4821,R4822,R4823,R4824 | RS1/16S101J | Not used |
| | R4825,R4828 | RS1/16S224J | Not used |
| | R4826 | RS1/16S474J | Not used |
| | R4827,R4884 | RS1/16S103J | Not used |
| | R4829 | RS1/16S0R0J | Not used |
| | R4830 | Not used | RS1/16S103J |
| | R4881 | RS1/16S180J | Not used |
| | R4882 | RS1/16S180J | Not used |
| | R4886,R4887,R4896,R4897 | RS1/16S472J | Not used |
| | C4824,C4825,C4826,C4828,C4882 | CKSRYB104K16 | Not used |
| | C4829,C4831,C4883,C4893 | CKSRYB103K50 | Not used |
| | C4830 | CCSRCH331J50 | Not used |
| | C4894 | CKSRYB102K50 | Not used |
| | C4895 | CKSRYB472K50 | Not used |

## F HDMI & DVC ASSY

AWX9170 and AWX9233 are constructed the same except for the following:

| Mark | Symbol and Description | AWX9170 | AWX9233 |
|---|---|---|---|
| | IC202 Zero Delay Buffer | ICS571MLF | Not used |
| | IC203 | TC7WH74FU | Not used |
| | IC204,IC205 | TC7WH157FU | Not used |
| | Q201 Chip Digital Trans. | DTA124EUA | Not used |
| | L201 Inductor | CTF1379 | Not used |
| | L202,L203,L204 Chip Solid Inductor | ATL7002 | Not used |
| | R207 | RS1/16SS221J | Not used |
| | R208 | RS1/16SS680J | Not used |
| | R209 | RS1/16SS151J | Not used |
| | R210,R211 | Not used | RS1/16SS0R0J |
| | R212,R213 | RS1/16SS101J | Not used |
| | R214 | RS1/16SS473J | Not used |
| | R582,R583 | RS1/16SS0R0J | Not used |
| | C203,C204 Capacitor | CKSSYB103K16 | Not used |
| | C205,C206,C207 Capacitor | CKSSYB104K10 | Not used |
| | C202 | CEVW4R7M35 | Not used |

## M DISPLAY ASSY

AWX9117 and AWX9216 are constructed the same except for the following:

| Mark | Symbol and Description | AWX9117 | AWX9216 |
|---|---|---|---|
| | Q3009,Q3011 Digital Transistor | DTC143EUA | Not used |
| | D3015,D3019 LED(blue) | SLR343BC4T(JKLM) | Not used |
| | D3017 LED(white) | SLR343WBCT(MNPQ) | SLR343BC4T(JKLM) |
| | R3139,R3155 | RS1/16S151J | Not used |
| | R3148 | RS1/16S561J | RS1/16S151J |

## PCB PARTS LIST FOR VSX-03TXH/KUXJ/CA UNLESS OTHER WISE NOTED

| Mark | No. | Description | Part No. |
|---|---|---|---|
| **A** | | **AUDIO IN ASSY** | |
| | | **SEMICONDUCTORS** | |
| IC | 501 | | BD3473KS2 |
| IC | 502 | | TC4066BFT |
| IC | 503 | | M61545FP |
| IC | 701,702,741,761 | | NJM4565MD |
| IC | 781,801,821 | | NJM4565MD |
| Q | 519,821,822,841 | | IMX25 |
| Q | 681 | | 2SD1664 |
| Q | 701 | | UMD2N |
| Q | 842,861,862,881 | | IMX25 |
| Q | 882 | | IMX25 |
| D | 501,502 | | DAN217U |
| D | 581-586 | | UDZS6R2(B) |
| D | 681 | | UDZS10(B) |
| | | **MISCELLANEOUS** | |
| JA | 501 | SOCKET | BKP1127 |
| JA | 502,505-507 | PIN JACK(4P) | AKB7048 |
| JA | 503,504 | PIN JACK(6P) | AKB7050 |
| CN | 501 | CONNECTOR | CKS3384 |
| CN | 502 | 17P SOCKET | XKP3059 |
| CN | 503 | 15P SOCKET | XKP3090 |
| CN | 504 | 23P CONNECTOR | 52044-2345 |

| Mark | No. | Description | Part No. |
|---|---|---|---|
| CN | 505 | CONNECTOR | CKS3382 |
| CN | 506,507 | 11P CONNECTOR | 52044-1145 |
| JH | 1 | PCB BINDER | VEF1040 |

## RESISTORS

| | | | |
|---|---|---|---|
| R | 682 | | RD1/4MUF391J |
| Other Resistors | | | RS1/16S###J |

## CAPACITORS

| | | | |
|---|---|---|---|
| C | 501,502,505,506 | | CCSRCH101J50 |
| C | 503,504,507,508 | | CCSRCH221J50 |
| C | 509-512,515-518 | | CCSRCH101J50 |
| C | 513,514,833 | | CCSRCH221J50 |
| C | 519,520,705-708 | | CCSRCH331J50 |
| C | 521,522,525,526 | | CCSRCH151J50 |
| C | 529-532,535-538 | | CCSRCH151J50 |
| C | 539,540,565,566 | | CCSRCH101J50 |
| C | 541,542,545,546 | | CEAT470M25 |
| C | 543,544,547,548 | | CEAT100M50 |
| C | 549-552,555-558 | | CEAT470M25 |
| C | 553,554,568,709 | | CEAT100M50 |
| C | 559-562,701,702 | | CEAT2R2M50 |
| C | 567,597-599,699 | | CKSRYB103K50 |
| C | 569,632-635,639 | | CKSRYB104K16 |
| C | 591,592 | | CEAT101M25 |
| C | 601,602,621-628 | | CEAT470M25 |
| C | 631,636 | | CKSRYB222K50 |
| C | 637,638,829,830 | | CCSRCH101J50 |
| C | 641,719,720,832 | | CKSRYB104K16 |
| C | 684 | | CEAT101M16 |
| C | 697 | | CKSRYB105K16 |
| C | 698 | | CKSRYB104K50 |
| C | 703,704,825,826 | | CCSRCH471J50 |
| C | 710,713,714,749 | | CEAT100M50 |
| C | 717,718,721,722 | | CKSRYB103K50 |
| C | 741,742,761,762 | | CEAT2R2M50 |
| C | 743,745,763-766 | | CCSRCH331J50 |
| C | 744 | | CKSRYB223K50 |
| C | 746,753,754,773 | | CKSRYB103K50 |
| C | 747,767,768,787 | | CCSRCH391J50 |
| C | 748 | | CKSRYB562K50 |
| C | 750,769,770,789 | | CEAT100M50 |
| C | 751,752,771,772 | | CKSRYB472K50 |
| C | 774,793,794,813 | | CKSRYB103K50 |
| C | 781,782,801,802 | | CEAT2R2M50 |
| C | 783-786,803-806 | | CCSRCH331J50 |
| C | 788,807,808 | | CCSRCH391J50 |
| C | 790,809,810 | | CEAT100M50 |
| C | 791,792,811,812 | | CKSRYB472K50 |
| C | 814,831,871 | | CKSRYB103K50 |
| C | 827,828,847,848 | | CEAT470M25 |
| C | 834,835,872 | | CKSRYB104K16 |
| C | 836 | | CEAT4R7M50 |
| C | 845,846,865,866 | | CCSRCH471J50 |
| C | 849,850,869,870 | | CCSRCH101J50 |
| C | 867,868,887,888 | | CEAT470M25 |
| C | 885,886 | | CCSRCH471J50 |
| C | 889,890 | | CCSRCH101J50 |
| C | 902-909 | | CCSRCH391J50 |

# B MAIN ASSY

## SEMICONDUCTORS

| | | | |
|---|---|---|---|
| IC | 101 | | PEG479A8 |
| IC | 201 | | BU4842F |
| IC | 202 | | BR24L64F-W |
| IC | 301,306 | | TC74VHCT125AFTS1 |
| IC | 302 | | TC74VHC02FTS1 |
| IC | 303,401 | | TC74VHC08FTS1 |
| IC | 304,305 | | TC74VHC125FTS1 |
| IC | 402 | | TC74VHCT08AFTS1 |
| IC | 1001,1002,1201,1202 | | TC74HC4051AFT |
| IC | 1003,1203 | | TC74HC4053AFT |
| IC | 1004,1205 | | LA7109 |
| IC | 1005,1405 | | BU4094BCFV |
| IC | 1006 | | PDC162A |
| IC | 1271 | | LA7213 |
| IC | 1401,1402 | | TC74LVX4052FT |
| IC | 1403 | | TC74LVX4053FT |
| IC | 1404 | | NJM2581M |
| Q | 101,102 | | UMB1N |
| Q | 103-105,282 | | DTA124EUA |
| Q | 281,1278,1505,1507 | | DTC124EUA |
| Q | 301-303,1506,1508 | | DTA124EUA |
| Q | 381,1277 | | DTC114EUA |
| Q | 411,1002,1503 | | 2SC4081 |
| Q | 1001,1201,1202,1271 | | 2SA1576A |
| Q | 1403-1405,1504 | | 2SA1576A |
| Q | 1501 | | 2SD1664 |
| Q | 1502 | | 2SB1132 |
| Q | 1509 | | DTC124EUA |
| Q | 1510 | | DTA124EUA |
| D | 291,1005 | | DAP202U |
| D | 292,304,1001-1003 | | DAN202U |
| D | 296 | | UDZS5R1(B) |
| D | 303,334,1004,1277 | | 1SS355 |
| D | 305 | | RB520S-30 |
| D | 411 | | UDZS3R9(B) |
| D | 1201,1202 | | DAN202U |

## MISCELLANEOUS

| | | | |
|---|---|---|---|
| L | 101,196 | CHIP SOLID INDUCTOR | ATL7002 |
| L | 461,462 | INDUCTOR | CTF1386 |
| L | 1001 | CHIP COIL | LCYA330J2520 |
| JA | 1001-1003 | COMB.JACK(2S+2P) | AKB7200 |
| JA | 1004 | COMB.JACK(S+1P) | AKB7199 |
| JA | 1401,1402 | 6P RCA PINJACK | AKB7201 |
| JA | 1403 | PIN JACK(1P) | AKB7175 |
| X | 101 | RESONATOR (24MHz) | CSS1716 |
| X | 1001 | CRYSTAL RESONATOR (14.31818MHz) | ASS7080 |
| CN | 101,102,104 | 30P SOCKET | XKP3092 |
| CN | 103,105 | 23P PLUG | XKM3006 |
| CN | 106,108 | 19P PLUG | XKM3005 |
| CN | 107 | 11P PLUG | XKM3009 |
| CN | 109 | 33P CONNECTOR | 52044-3345 |
| CN | 110 | CONNECTOR | CKS3376 |
| CN | 111,112 | PLUG(2P) | KM200NA2 |
| CN | 116 | 6PJUMPER CONNECTOR | 52151-0610 |
| CN | 117 | 10P CONNECTOR | VKN1414 |
| CN | 119 | PLUG(3P) | KM200NA3 |

| Mark | No. | Description | Part No. |
|---|---|---|---|
| JH | 101 | PCB BINDER | VEF1040 |
| JP | 113 | 4P HOUSING WIRE ASSY | ADX7652 |
| JP | 116 | CONNECTOR ASSY | PF07PG-R40 |
| JP | 117 | CONNECTOR ASSY | PF09PG-R35 |

**RESISTORS**

| | | | |
|---|---|---|---|
| | All Resistors | | RS1/16S###J |

**CAPACITORS**

| | | | |
|---|---|---|---|
| C | 101,104-107,109 | | CKSRYB104K16 |
| C | 102,117 | | CEAT101M16 |
| C | 108,116,118,126 | | CKSRYB103K50 |
| C | 123,129-133,141 | | CKSRYB104K16 |
| C | 124,452,454,464 | | CKSRYB102K50 |
| C | 140,142 | | CCSRCH471J50 |
| C | 201 | | CKSRYB105K16 |
| C | 202,1035,1036,1039 | | CKSRYB103K50 |
| C | 291,292,421,1063 | | CKSRYB473K25 |
| C | 296,412,1441,1445 | | CEAT100M50 |
| C | 301-306,381,401 | | CKSRYB104K16 |
| C | 382 | | CEAT471M6R3 |
| C | 402,411,432,451 | | CKSRYB104K16 |
| C | 453,461-463,471 | | CKSRYB104K16 |
| C | 465,472 | | CKSRYB102K50 |
| C | 1005-1010,1013,1014 | | CKSRYB104K16 |
| C | 1011,1012,1016,1018 | | CEAT101M10 |
| C | 1020,1022,1024,1026 | | CCSRCH181J50 |
| C | 1034,1061,1062,1225 | | CEAT101M10 |
| C | 1041,1201-1210,1223 | | CKSRYB104K16 |
| C | 1050 | | CCSRCH561J50 |
| C | 1064 | | CKSRYB473K25 |
| C | 1065,1066 | | CCSRCH5R0C50 |
| C | 1067,1068 | | CCSRCH240J50 |
| C | 1069-1071,1076 | | CCSRCH101J50 |
| C | 1073,1253,1254,1257 | | CKSRYB103K50 |
| C | 1074,1075 | | CKSRYB122K50 |
| C | 1224,1226,1229 | | CKSRYB104K16 |
| C | 1227,1251,1256,1276 | | CEAT101M10 |
| C | 1235,1237,1239-1242 | | CCSRCH181J50 |
| C | 1258,1265,1277,1442 | | CKSRYB103K50 |
| C | 1271 | | CEAT221M16 |
| C | 1275 | | CEAT3R3M50 |
| C | 1278 | | CEAT220M50 |
| C | 1411-1416,1425,1426 | | CKSRYB104K16 |
| C | 1420-1424,1487 | | CEAT101M10 |
| C | 1443,1446,1447,1452 | | CKSRYB103K50 |
| C | 1451 | | CEAT100M50 |
| C | 1453,1475 | | CKSRYB103K50 |
| C | 1481,1483-1485 | | CKSRYB104K16 |
| C | 1482 | | CKSRYB561K50 |
| C | 1501-1504 | | CKSRYB224K10 |
| C | 1505-1507 | | CKSRYB104K16 |

## C DSP & USB ASSY

**SEMICONDUCTORS**

| | | | |
|---|---|---|---|
| IC | 101 | | AK4114VQ |
| ⚠ IC | 102,802 | | AAT4618IGV-0.5-1 |
| IC | 103 | | BU9450KV |
| IC | 201,202,502,851 | | TC74VHC157FTS1 |
| IC | 203 | | TC74LCX157FTS1 |
| IC | 205 | | TC74VHC125FTS1 |
| IC | 301 | | HY57V641620FTP-6 |
| IC | 302 | | AYW7213 |
| IC | 303,304 | | TC74LCX573FTS1 |
| IC | 305,751 | | TC7SH32FUS1 |
| IC | 401 | | DSPA56720AG |
| IC | 501 | | TC74LCX08FTS1 |
| IC | 503 | | TC74VHCU04FT |
| IC | 591 | | AK5358AET |
| IC | 601,621,641,661 | | WM8728SEDS |
| IC | 681 | | AK4388ET |
| IC | 701 | | TC74VHC08FTS1 |
| IC | 702,703 | | TC74VHCT541AFTS1 |
| ⚠ IC | 704 | | BD9107FVM |
| ⚠ IC | 705 | | PQ1LAX95MSPQ |
| IC | 801 | | PDC180A8 |
| IC | 808 | | 341S2154 |
| Q | 201,561 | | DTC124EUA |
| Q | 601 | | RTQ025P02 |
| Q | 871 | | 2SA1577 |
| Q | 872 | | DTC143EUA |
| D | 131,132 | | UDZS5R6(B) |
| D | 561 | | 1SS352 |
| D | 591 | | MA152WK |
| D | 592 | | MA152WA |

**MISCELLANEOUS**

| | | | |
|---|---|---|---|
| L | 101,102 | CHIP SOLID INDUCTOR | QTL1013 |
| L | 106,132 | CHIP SOLID INDUCTOR | QTL1013 |
| L | 131,706 | CHIP SOLID INDUCTOR | ATL7002 |
| L | 201-203 | CHIP SOLID INDUCTOR | QTL1013 |
| L | 205,311 | CHIP SOLID INDUCTOR | QTL1013 |
| L | 321,331 | CHIP SOLID INDUCTOR | QTL1013 |
| L | 341,401 | CHIP SOLID INDUCTOR | QTL1013 |
| L | 403,404 | CHIP SOLID INDUCTOR | QTL1013 |
| L | 511,521 | CHIP SOLID INDUCTOR | QTL1013 |
| L | 531,561 | CHIP SOLID INDUCTOR | QTL1013 |
| L | 591,592 | CHIP SOLID INDUCTOR | QTL1013 |
| L | 601,621 | CHIP SOLID INDUCTOR | QTL1013 |
| L | 641,661 | CHIP SOLID INDUCTOR | QTL1013 |
| L | 681 | CHIP SOLID INDUCTOR | QTL1013 |
| L | 701-703 | CHIP SOLID INDUCTOR | QTL1013 |
| L | 705 | POWER INDUCTOR | ATH7047 |
| L | 707 | CHIP BEADS | ATL7010 |
| L | 709,710 | CHIP SOLID INDUCTOR | ATL7002 |
| L | 751,801 | CHIP SOLID INDUCTOR | QTL1013 |
| L | 803 | COIL | VTH1043 |
| L | 804 | CHIP FERRITE BEADS | VTL1169 |
| L | 851,881 | CHIP SOLID INDUCTOR | QTL1013 |
| JA | 101 | PIN JACK(2P) | AKB7173 |
| JA | 102-104 | OPT. LINK IN | GP1FAV51RKBF |
| JA | 105 | OPT. LINK IN | GP1FAV51TK0F |
| JA | 131 | 4P SOCKET | AKP7201 |
| X | 131 | CRYSTAL RESONATOR (45.1584MHz) | ASS7065 |
| X | 531 | CRYSTAL RESONATOR (24.576MHz) | XSS3003 |
| X | 801 | CRYSTAL OSCILLATOR (12MHz) | CSS1614 |
| X | 881 | CRYSTAL OSCILLATOR (32.768kHz) | ASS1172 |
| CN | 401 | 7P CONNECTOR | VKN1411 |
| CN | 601 | CONNECTOR | 9604S-23C |
| CN | 701,704 | 23P SOCKET | XKP3055 |
| CN | 703 | CONNECTOR | CKS4898 |

| Mark | No. | Description | Part No. |
|---|---|---|---|
| CN | 801 | CONNECTOR | AKM1280 |
| CN | 891 | 5P CONNECTOR | VKN1374 |
| JH | 801 | PCB BINDER | VEF1040 |

**RESISTORS**

| | | | |
|---|---|---|---|
| R | 106,722 | | RS1/16SS1802F |
| R | 109,154,155,208 | | RAB4CQ101J |
| R | 116,818,819 | | RS1/16S0R0J |
| R | 209,223,331,332 | | RAB4CQ470J |
| R | 210,211,222,224 | | RAB4CQ101J |
| R | 212,213,226 | | RAB4CQ221J |
| R | 225,333,334,343 | | RAB4CQ101J |
| R | 227 | | RAB4CQ390J |
| R | 341,342,446-448 | | RAB4CQ470J |
| R | 344,431,515,525 | | RAB4CQ101J |
| R | 411 | | RAB4CQ220J |
| R | 412 | | RAB4CQ103J |
| R | 444 | | RAB4CQ680J |
| R | 450,451,526,528 | | RAB4CQ470J |
| R | 527,601,621,641 | | RAB4CQ101J |
| R | 562 | | RS1/16S4R7J |
| R | 603,623,643,663 | | RAB4CQ470J |
| R | 661,708-711,851 | | RAB4CQ101J |
| R | 706,707,712-715 | | RAB4CQ104J |
| R | 721,723 | | RS1/16SS4701F |
| R | 724,725 | | RAB4CQ104J |
| R | 728 | | RS1/16SS2002F |
| R | 729 | | RS1/16SS1202F |
| R | 852,857 | | RAB4CQ470J |
| R | 853 | | RAB4CQ101J |
| R | 888 | | RS1/16SS1003F |
| Other Resistors | | | RS1/16SS###J |

**CAPACITORS**

| | | | |
|---|---|---|---|
| C | 102,106,108,111 | | CKSSYB104K10 |
| C | 103,110,136,608 | | CEVW470M6R3 |
| C | 104,107,533 | | CCSRCH471J50 |
| C | 105 | | CKSRYB474K10 |
| C | 109,581,707 | | CKSSYB102K50 |
| C | 114,115,441,582 | | CKSSYB103K16 |
| C | 116-119,133-135 | | CKSSYB104K10 |
| C | 125,131,440,562 | | CEVW101M16 |
| C | 129 | | CKSRYB104K16 |
| C | 130 | | CKSRYB471K50 |
| C | 132,708,710 | | CKSRYB105K10 |
| C | 137,140,201,203 | | CKSSYB104K10 |
| C | 138,139,802,803 | | CCSSCH120J50 |
| C | 142,202,204,206 | | CKSSYB471K50 |
| C | 205,209,311,313 | | CKSSYB104K10 |
| C | 312,315,319,332 | | CKSSYB471K50 |
| C | 314,316-318,320 | | CKSSYB104K10 |
| C | 321,331,341,351 | | CKSSYB104K10 |
| C | 342,401,404,407 | | CKSSYB471K50 |
| C | 402,403,405,406 | | CKSSYB104K10 |
| C | 408,410,412 | | CKSSYB104K10 |
| C | 409,411,413,417 | | CKSSYB471K50 |
| C | 414-416,418,419 | | CKSSYB104K10 |
| C | 420,427,430,433 | | CKSSYB471K50 |
| C | 421,426,428,429 | | CKSSYB104K10 |
| C | 431,432,434,436 | | CKSSYB104K10 |
| C | 435,437,512,522 | | CKSSYB471K50 |
| C | 438,511,521,532 | | CKSSYB104K10 |
| C | 439 | | ACH7275 |
| C | 513,806,807,882 | | CCSSCH5R0C50 |
| C | 534,535 | | CCSSCH8R0D50 |
| C | 561,593,596,597 | | CKSSYB104K10 |
| C | 571-580,595,601 | | CKSSYB471K50 |
| C | 590,709,711 | | DCH1201 |
| C | 591,615-617,736 | | CKSSYB103K16 |
| C | 592,613,633,653 | | CEVW100M16 |
| C | 598,606,626,646 | | CEVW101M16 |
| C | 599 | | CKSQYB225K10 |
| C | 602,605,607,609 | | CKSSYB104K10 |
| C | 604,611,621,624 | | CKSSYB471K50 |
| C | 610,622,625,627 | | CKSSYB104K10 |
| C | 614,634,654,674 | | CCSSCK1R0C50 |
| C | 628,648,668 | | CEVW470M6R3 |
| C | 629,630,642,645 | | CKSSYB104K10 |
| C | 641,644,661,664 | | CKSSYB471K50 |
| C | 647,649,650,662 | | CKSSYB104K10 |
| C | 665,667,669,670 | | CKSSYB104K10 |
| C | 666,809,818 | | CEVW101M16 |
| C | 673 | | CEVW100M16 |
| C | 681,683,685,701 | | CKSSYB104K10 |
| C | 682,737,752,808 | | CKSSYB471K50 |
| C | 684 | | CEVW220M16 |
| C | 687 | | CEVW220M6R3 |
| C | 703,705,720 | | CKSSYB104K10 |
| C | 730-735,751,804 | | CKSSYB104K10 |
| C | 801,884 | | CCSSCH101J50 |
| C | 805,810,814,815 | | CKSSYB104K10 |
| C | 811-813,824,827 | | CKSSYB471K50 |
| C | 816,872 | | CKSQYB105K16 |
| C | 817,823,825,828 | | CKSSYB104K10 |
| C | 820 | | CEVW2R2M50 |
| C | 821 | | CEVW4R7M35 |
| C | 822 | | CEVW1R0M50 |
| C | 851,885 | | CKSSYB104K10 |
| C | 852,886 | | CKSSYB471K50 |
| C | 881 | | CKSSYB105K6R3 |
| C | 883 | | CCSSCH5R0C50 |

## D FRONT IN ASSY

**SEMICONDUCTORS**

| | | | |
|---|---|---|---|
| IC | 3651 | | NJM4565MD |
| Q | 3601 | | HN1C01FU |
| D | 3653,3654,3661 | | UDZS5R1(B) |

**MISCELLANEOUS**

| | | | |
|---|---|---|---|
| L | 3631 | CHIP SOLID INDUCTOR | QTL1013 |
| JA | 3601 | PIN JACK(3P) | AKB7194 |
| JA | 3631 | OPTICAL IN MOD. | GP1FMV51RK0F |
| JA | 3641 | USB CONNECTOR | XKP3086 |
| JA | 3651 | JACK | VKB1243 |
| KN | 3601,3651 | WRAPPING TERMINAL | VNF1084 |
| CN | 3601 | CONNECTOR | CKS3376 |
| CN | 3602 | PLUG(9P) | KM200NA9 |

**RESISTORS**

| | | | |
|---|---|---|---|
| All Resistors | | | RS1/16S###J |

| Mark | No. | Description | Part No. |
|---|---|---|---|
| | | **CAPACITORS** | |
| C | 3601,3602 | | CKSRYB221K50 |
| C | 3603,3604,3652,3656 | | CEAT100M50 |
| C | 3605,3606,3653 | | CCSRCH101J50 |
| C | 3609,3610 | | CEAT470M25 |
| C | 3611,3612,3615,3663 | | CKSRYB103K50 |
| C | 3613,3614 | | CEAT330M25 |
| C | 3631,3643 | | CKSRYB104K16 |
| C | 3644 | | CEAT101M16 |
| C | 3651 | | CKSRYB471K50 |
| C | 3654,3655 | | CCSRCH330J50 |
| C | 3662,3665,3666 | | CEAT100M50 |
| C | 3664,3671,3681,3687 | | CKSRYB103K50 |
| C | 3673,3682,3688 | | CKSRYB223K50 |
| C | 3675 | | CKSRYB102K50 |

## E INTERFACE ASSY

| Mark | No. | Description | Part No. |
|---|---|---|---|
| | | **SEMICONDUCTORS** | |
| IC | 4821 | | HIN202EIBNZ |
| ⚠ Q | 4801 | | 2SD1858X |
| ⚠ Q | 4802 | | 2SB1238X |
| Q | 4831 | | 2SC4081 |
| Q | 4881,4883,4893 | | 2SA1576A |
| Q | 4882,4892 | | RT1N241M |
| D | 4801,4802 | | UDZS7R5(B) |
| D | 4821,4822,4871 | | 1SS352 |
| D | 4881 | | UDZS5R1(B) |
| | | **MISCELLANEOUS** | |
| L | 4821,4841 | CHIP SOLID INDUCTOR | QTL1013 |
| L | 4851-4854 | CHIP SOLID INDUCTOR | QTL1013 |
| L | 4861,4871 | INDUCTOR | CTF1473 |
| L | 4862 | INDUCTOR | CTF1385 |
| L | 4872 | CHIP SOLID INDUCTOR | QTL1013 |
| L | 4881 | CHIP SOLID INDUCTOR | ATL7002 |
| JA | 4821 | 9P D-SUB SOCKET | AKP1213 |
| JA | 4841,4861,4881,4891 | JACK | VKB1243 |
| JA | 4851 | MINI JACK(4P) /W SW | XKN3015 |
| JA | 4871 | CONNECTOR | CKS4124 |
| KN | 4841,4881 | SCREW PLATE | VNE1948 |
| CN | 4801,4803 | 19P SOCKET | XKP3054 |
| CN | 4802 | 11P SOCKET | XKP3089 |
| CN | 4804 | CONNECTOR | CKS3384 |
| CN | 4805 | 15P PLUG | XKM3010 |
| CN | 4806 | 17P PLUG | XKM3007 |
| CN | 4807,4808 | 21P SOCKET | XKP3091 |
| CN | 4809 | 11P CONNECTOR | 52044-1145 |
| | | **RESISTORS** | |
| | All Resistors | | RS1/16S###J |
| | | **CAPACITORS** | |
| C | 4803,4804 | | CEAT2R2M50 |
| C | 4805,4806 | | CEAT100M50 |
| C | 4811,4812,4885,4895 | | CKSRYB472K50 |
| C | 4821 | | CEAT101M16 |
| C | 4822,4829,4831,4844 | | CKSRYB103K50 |
| C | 4824-4826,4828,4843 | | CKSRYB104K16 |
| C | 4830 | | CCSRCH331J50 |
| C | 4842,4862,4871 | | CCSRCH471J50 |
| C | 4861,4882 | | CKSRYB104K16 |
| C | 4863,4872,4883,4893 | | CKSRYB103K50 |
| C | 4884,4894 | | CKSRYB102K50 |

## F HDMI & DVC ASSY

| Mark | No. | Description | Part No. |
|---|---|---|---|
| | | **SEMICONDUCTORS** | |
| IC | 101 | | SII9135CTU |
| IC | 151 | | TC74VHC126FTS1 |
| IC | 201 | | TC74VHC541FTS1 |
| IC | 202 | | ICS571MLF |
| IC | 203 | | TC7WH74FU |
| IC | 204,205 | | TC7WH157FU |
| IC | 251 | | TC74LCX157FTS1 |
| IC | 301 | | SII9134CTU |
| IC | 401 | | ADV7800BSTZ-80 |
| IC | 402 | | TC7WHU04FU |
| IC | 501 | | PEG118A |
| IC | 502 | | AYW7243 |
| IC | 504 | | BU4094BCFV |
| IC | 505 | | TC7WH125FU |
| IC | 506 | | TC7WT125FU |
| IC | 601 | | ADV7172KSTZ |
| ⚠ IC | 1001 | | BD9011KV |
| ⚠ IC | 1051 | | PQ200WNA1ZPH |
| ⚠ IC | 1071 | | NJM78M05DL1A |
| IC | 1151 | | CXB1442AR |
| IC | 1203,1251,1253 | | S-24CS02AFT |
| IC | 1204,1252,1254 | | TC7MB3257FK |
| IC | 1255,1257 | | TC7WBD125AFK |
| IC | 1301 | | FLI2310-LF-CF |
| IC | 1351 | | IS42S32200E-6TL |
| IC | 1381,1383,1384 | | TC74LCX541FTS1 |
| Q | 152,352,1102,1151 | | DTC114YUA |
| Q | 201 | | DTA124EUA |
| Q | 351 | | UMB1N |
| Q | 631,641,651,661 | | 2SA1576A |
| Q | 671,681,1051 | | 2SA1576A |
| ⚠ Q | 1001,1002 | | SP8K1 |
| Q | 1052 | | DTC124EUA |
| Q | 1152,1154,1202 | | DTC114YUA |
| Q | 1153 | | 2SB1689 |
| Q | 1251-1253 | | DTC114YUA |
| Q | 1281 | | HN1K02FU |
| D | 301 | | UDZS5R1(B) |
| D | 551 | | RB501V-40 |
| D | 1001,1002 | | RB160VA-40 |
| ⚠ D | 1003,1004 | | RLZ5.6B |
| ⚠ D | 1071 | | RLZ6.8B |
| D | 1102,1151,1152 | | DAN202U |
| | | **MISCELLANEOUS** | |
| L | 101-104,301-305 | CHIP BEADS | ATL7010 |
| L | 105,106 | CHIP SOLID INDUCTOR | QTL1013 |
| L | 201 | INDUCTOR | CTF1379 |
| L | 202-204 | CHIP SOLID INDUCTOR | ATL7002 |
| L | 207,251 | CHIP FERRITE BEADS | VTL1169 |
| L | 351-354 | COIL | ATH7022 |
| L | 401,402,404,406 | CHIP BEADS | ATL7010 |
| L | 403,405 | CHIP SOLID INDUCTOR | QTL1013 |
| L | 501,601 | CHIP SOLID INDUCTOR | ATL7002 |

| Mark | No. | Description | Part No. |
|---|---|---|---|
| L | 602 | CHIP SOLID INDUCTOR | ATL7002 |
| L | 631,641,651,661 | INDUCTOR | ATL7015 |
| L | 671,681 | INDUCTOR | ATL7015 |
| L | 1001,1151 | CHIP BEADS | ATL7010 |
| L | 1002 | INDUCTOR | DTL1135 |
| L | 1003 | INDUCTOR | ATL7013 |
| L | 1092,1093 | INDUCTOR | CTF1386 |
| L | 1301-1305 | CHIP SOLID INDUCTOR | ATL7002 |
| L | 1351 | CHIP SOLID INDUCTOR | ATL7002 |
| JA | 301 | HDMI CONNECTOR | AKP7220 |
| JA | 1102,1151,1152 | HDMI CONNECTOR | AKP1318 |
| X | 101 | CRYSTAL RESONATOR (28.322MHz) | ASS7085 |
| X | 401 | CRYSTAL RESONATOR (28.63636MHz) | ASS7069 |
| X | 501 | CERAMIC RESONATOR (15.7MHz) | XSS3004 |
| X | 1301 | CRYSTAL RESONATOR (13.5MHZ) | ASS7070 |
| CN | 1001,1002 | CONNECTOR | CKS4898 |

## RESISTORS

| Mark | No. | Description | Part No. |
|---|---|---|---|
| R | 101,103-105 | | RAB4CQ220J |
| R | 108 | | RAB4CQ100J |
| R | 115,1385-1388,1394 | | RAB4CQ680J |
| R | 119,331,333-341 | | RAB4CQ473J |
| R | 130-132,134-136 | | RAB4CQ220J |
| R | 141-144 | | ACN1275 |
| R | 204 | | RAB4CQ330J |
| R | 304 | | RS1/16SS6800F |
| R | 428,429 | | RAB4CQ470J |
| R | 432,433 | | RAB4CQ560J |
| R | 434,437,442,443 | | RAB4CQ473J |
| R | 446,447,450 | | RAB4CQ473J |
| R | 464,465,467,468 | | RAB4CQ472J |
| R | 480-483,1314-1317 | | RAB4CQ220J |
| R | 579 | | RAB4CQ0R0J |
| R | 596 | | RAB4CQ101J |
| R | 609-612 | | RS1/16SS1201F |
| R | 633,643,653,663 | | RS1/16SS2200F |
| R | 634,644,654,664 | | RS1/16SS4700F |
| R | 635,645,655,665 | | RS1/10S0R0J |
| R | 673,683 | | RS1/16SS2200F |
| R | 674,684 | | RS1/16SS4700F |
| R | 675,685,1008,1009 | | RS1/10S0R0J |
| R | 1002,1004 | | ACN7156 |
| R | 1011 | | RS1/16SS4702F |
| R | 1012,1022 | | RS1/16SS1502F |
| R | 1023 | | RS1/16SS1202F |
| R | 1031,1095,1096 | | RS1/10S0R0J |
| R | 1052,1053 | | RS1/10S6R8J |
| R | 1057 | | RS1/16SS1801F |
| R | 1059 | | RS1/16SS2001F |
| R | 1071-1073 | | RS1/16S0R0J |
| R | 1160 | | RS1/16SS4701F |
| R | 1352 | | RAB4CQ220J |
| Other Resistors | | | RS1/16SS###J |

## CAPACITORS

| Mark | No. | Description | Part No. |
|---|---|---|---|
| C | 101,102,301,302 | | DCH1165 |
| C | 103,104,303-305 | | CKSQYB106K6R3 |
| C | 105,113,121,122 | | CKSSYB105K6R3 |
| C | 106-108,110 | | CKSSYB104K10 |
| C | 109,111,131,152 | | CKSSYB103K16 |
| C | 114-120,123-126 | | CKSSYB104K10 |
| C | 127,320,463,1339 | | CCSSCH120J50 |
| C | 128,462 | | CCSSCH100D50 |
| C | 129,130,133,307 | | CKSSYB105K6R3 |
| C | 132,134-139,151 | | CKSSYB104K10 |
| C | 153,203,204,308 | | CKSSYB103K16 |
| C | 201,205-207,251 | | CKSSYB104K10 |
| C | 202 | | CEVW4R7M35 |
| C | 210 | | CKSSYB471K50 |
| C | 306,309,311,313 | | CKSSYB104K10 |
| C | 310,312,314 | | CKSSYB105K6R3 |
| C | 315,316,351,403 | | CKSSYB104K10 |
| C | 317-319,404,433 | | CKSSYB105K6R3 |
| C | 401,402,419,434 | | CEVW101M16 |
| C | 405-411,418,420 | | CKSSYB104K10 |
| C | 412,414,435,436 | | CKSSYB103K16 |
| C | 413 | | CKSSYB823K10 |
| C | 415 | | CKSRYB824K10 |
| C | 416 | | CKSSYB393K10 |
| C | 417 | | CKSQYB106K6R3 |
| C | 421,1004,1006 | | CKSSYB102K50 |
| C | 422-429,431,437 | | CKSSYB104K10 |
| C | 430,432,1073,1302 | | CEVW100M16 |
| C | 438,441-443 | | CKSSYB104K10 |
| C | 439,440,1056,1303 | | DCH1201 |
| C | 445-449,461,502 | | CKSSYB104K10 |
| C | 501,613,1313 | | CKSSYB103K16 |
| C | 503,601,611,1301 | | CEVW101M16 |
| C | 504,506,508,509 | | CKSSYB104K10 |
| C | 505,610,1314-1318 | | CKSSYB105K6R3 |
| C | 551,552,602-609 | | CKSSYB104K10 |
| C | 612,614,615,617 | | CKSSYB104K10 |
| C | 631,641,651,661 | | CKSSYB104K10 |
| C | 632,633,642,643 | | CCSSCH101J50 |
| C | 652,653,662,663 | | CCSSCH101J50 |
| C | 671,681,1054 | | CKSSYB104K10 |
| C | 672,673,682,683 | | CCSSCH101J50 |
| C | 1001 | | CEVW470M25 |
| C | 1002 | | CCG1195 |
| C | 1005,1012,1017,1018 | | CKSRYB104K25 |
| C | 1010 | | CKSRYB152K50 |
| C | 1011,1024 | | BCG1059 |
| C | 1013,1014,1022 | | CKSRYB105K10 |
| C | 1015 | | CKSRYB332K50 |
| C | 1016 | | CCSSCH330J50 |
| C | 1019 | | CCSSCH221J50 |
| C | 1020 | | CKSRYB103K25 |
| C | 1021,1025,1072 | | CKSRYB104K25 |
| C | 1023 | | CKSRYB222K50 |
| C | 1051,1053 | | CKSQYB105K25 |
| C | 1052 | | CKSQYB224K25 |
| C | 1071 | | CEVW1R0M50 |
| C | 1152-1159,1203,1204 | | CKSSYB104K10 |
| C | 1160 | | DCH1165 |
| C | 1251-1256,1306 | | CKSSYB104K10 |
| C | 1305 | | CEVW101M16 |
| C | 1308-1312,1319-1322 | | CKSSYB104K10 |
| C | 1324-1332,1335-1338 | | CKSSYB104K10 |
| C | 1340 | | CCSSCH120J50 |
| C | 1341,1381-1383 | | CKSSYB104K10 |

| Mark | No. | Description | Part No. |
|---|---|---|---|
| C | 1351 | | ACH7174 |
| C | 1352-1363 | | CKSSYB105K6R3 |

## H BINDER ASSY

**MISCELLANEOUS**

| | | | |
|---|---|---|---|
| JH | 3901 | PCB BINDER | VEF1040 |

## I BIND L FRONT ASSY

**MISCELLANEOUS**

| | | | |
|---|---|---|---|
| JH | 5961,5962 | PCB BINDER | VEF1040 |

## J BIND L BACK ASSY

**MISCELLANEOUS**

| | | | |
|---|---|---|---|
| JH | 5971,5972 | PCB BINDER | VEF1040 |

## K BIND R FRONT ASSY

**MISCELLANEOUS**

| | | | |
|---|---|---|---|
| JH | 5981 | PCB BINDER | VEF1040 |

## L BIND R BACK ASSY

**MISCELLANEOUS**

| | | | |
|---|---|---|---|
| JH | 5991 | PCB BINDER | VEF1040 |

## M DISPLAY ASSY

**SEMICONDUCTORS**

| | | | |
|---|---|---|---|
| IC | 3001 | | PE5615A |
| IC | 3003 | | S-1200B33-M5 |
| IC | 3004 | | PDC158A8 |
| Q | 3001 | | 2SA1576A |
| Q | 3002,3012 | | DTC124EUA |
| Q | 3004 | | 2SK2034 |
| Q | 3005-3011 | | DTC143EUA |
| Q | 3013 | | DTA124EUA |
| D | 3001,3003,3004 | | 1SS352 |
| D | 3002,3005 | | DAN202U |
| D | 3006 | | RB751V-40 |
| D | 3007,3009,3011,3013 | | SLR-343VC(NPQ) |
| D | 3015,3019 | | SLR343BC4T(JKLM) |
| D | 3017 | | SLR343WBCT(MNPQ) |

**MISCELLANEOUS**

| | | | |
|---|---|---|---|
| L | 3002 | CHIP SOLID INDUCTOR | ATL7002 |
| KN | 3001 | FL HOLDER(FE) | VNF1096 |
| V | 3001 | FL TUBE DISPLAY | AAV7113 |
| S | 3001-3020,3025 | SWITCH | VSG1024 |
| S | 3024 | ROTARY ENCODER | ASX7048 |
| X | 3001 | CERAMIC RESONATOR (15.0MHz) | VSS1142 |
| X | 3002 | CRYSTAL OSCILLATOR (5.00MHz) | CSS1653 |
| CN | 3003 | CONNECTOR | CKS3398 |
| JH | 3001 | 3P CABLE HOLDER | 51048-0300 |
| JH | 3002 | 4P CABLE HOLDER | 51048-0400 |
| JP | 3001 | JUMPER WIRE | D20PDY0305E |
| JP | 3002 | JUMPER WIRE | D20PDY0405E |
| U | 3001 | REMOTE RECEIVER UNIT | GP1UE274XKC1 |

| Mark | No. | Description | Part No. |
|---|---|---|---|

**RESISTORS**

| | | | |
|---|---|---|---|
| All Resistors | | | RS1/16S###J |

**CAPACITORS**

| | | | |
|---|---|---|---|
| C | 3001,3006,3030,3036 | | CKSRYB102K50 |
| C | 3002,3003,3008,3045 | | CKSRYB104K16 |
| C | 3004 | | CCSRCH471J50 |
| C | 3007,3091 | | CEJQ221M6R3 |
| C | 3009,3010,3027 | | CKSRYB103K50 |
| C | 3011-3026,3035,3069 | | CKSRYB471K50 |
| C | 3028 | | CEJQ101M6R3 |
| C | 3029,3037,3042,3044 | | CKSRYB105K10 |
| C | 3031 | | CKSRYB104K50 |
| C | 3032 | | CEAT470M50 |
| C | 3034 | | CEAT101M35 |
| C | 3038,3039 | | CKSRYB102K50 |
| C | 3040,3041 | | CCSRCH120J50 |
| C | 3048,3049,3051,3056 | | CKSRYB104K16 |
| C | 3057,3089 | | CKSRYB104K16 |
| C | 3065-3067,3076 | | CKSRYB103K50 |
| C | 3068 | | CKSRYB153K50 |
| C | 3070 | | CKSRYB471K50 |

## N MULTI JOG ASSY

**MISCELLANEOUS**

| | | | |
|---|---|---|---|
| S | 3501 | ROTARY ENCODER | ASX7031 |
| CN | 3501 | 3P JUMPER CONNECTOR | 52147-0310 |

**RESISTORS**

All Resistors RS1/16S###J

**CAPACITORS**

| | | | |
|---|---|---|---|
| C | 3501,3502 | | CKSRYB103K50 |

## O POWER SW ASSY

**SEMICONDUCTORS**

| | | | |
|---|---|---|---|
| Q | 3401 | | DTC143EUA |
| D | 3402 | | SLR343BC4T(JKLM) |

**MISCELLANEOUS**

| | | | |
|---|---|---|---|
| S | 3401 | SWITCH | VSG1024 |
| CN | 3401 | 4P JUMPER CONNECTOR | 52147-0410 |

**RESISTORS**

| | | | |
|---|---|---|---|
| All Resistors | | | RS1/16S###J |

## P DIODE ASSY

**SEMICONDUCTORS**

| | | | |
|---|---|---|---|
| ⚠ D | 4701,4702 | | D5SBA20(B) |

**MISCELLANEOUS**

| | | | |
|---|---|---|---|
| CN | 4701 | CONNECTOR4P | AKM7085 |

**RESISTORS**

| | | | |
|---|---|---|---|
| ⚠ All Resistors | | | RD1/4MUF###J |

**CAPACITORS**

| | | | |
|---|---|---|---|
| C | 4701,4702 | | CFTLA104J2A |

| Mark | No. | Description | Part No. |
|---|---|---|---|

## Q HEADPHONE ASSY

### MISCELLANEOUS

| | | | |
|---|---|---|---|
| JA | 3451 | PHONE JACK | AKN7029 |
| KN | 3451 | WRAPPING TERMINAL | VNF1084 |
| CN | 3451 | 4P JUMPER CONNECTOR | 52147-0410 |

### RESISTORS

| | | | |
|---|---|---|---|
| | All Resistors | | RS1/16S###J |

### CAPACITORS

| | | | |
|---|---|---|---|
| C | 3451,3452 | | CKSRYB392K50 |
| C | 3453 | | CKSRYB471K50 |
| C | 3454 | | CKSRYB103K50 |
| C | 3455 | | CKSRYB104K50 |

## R POWER AMP ASSY

### SEMICONDUCTORS

| | | | |
|---|---|---|---|
| ⚠ IC | 5751 | | NJM78M12FA |
| ⚠ IC | 5752 | | NJM79M12FA |
| ⚠ IC | 5763 | | BA178M12FP |
| IC | 5771 | | BA4560RF |
| ⚠ Q | 5001,5101,5201,5301 | | STD03N |
| ⚠ Q | 5002,5102,5202,5302 | | STD03P |
| Q | 5041,5141,5241,5341 | | 2SA1255 |
| ⚠ Q | 5401,5501,5601 | | STD03N |
| ⚠ Q | 5402,5502,5602 | | STD03P |
| Q | 5441,5541,5641 | | 2SA1255 |
| Q | 5700,5811,5821,5831 | | DTC114TUA |
| Q | 5701 | | RN1901 |
| Q | 5702,5703 | | UMD2N |
| ⚠ Q | 5705 | | 2SD1763A |
| ⚠ Q | 5706 | | 2SC3906K |
| ⚠ Q | 5707 | | 2SB1186A |
| ⚠ Q | 5708 | | 2SA1514K |
| Q | 5731,5741,5742 | | 2SC4081 |
| Q | 5781,5782,5785 | | DTC124EUA |
| Q | 5783,5784 | | DTA124EUA |
| Q | 5841,5851 | | DTC114TUA |
| ⚠ D | 5003,5004,5103,5104 | | 1SS355 |
| ⚠ D | 5005,5006,5105,5106 | | UDZS4R7(B) |
| D | 5041-5044,5141-5144 | | 1SS355 |
| ⚠ D | 5203,5204,5303,5304 | | 1SS355 |
| ⚠ D | 5205,5206,5305,5306 | | UDZS4R7(B) |
| D | 5241-5244,5341-5344 | | 1SS355 |
| ⚠ D | 5403,5404,5503,5504 | | 1SS355 |
| ⚠ D | 5405,5406,5505,5506 | | UDZS4R7(B) |
| D | 5441-5444,5541-5544 | | 1SS355 |
| ⚠ D | 5603,5604 | | 1SS355 |
| ⚠ D | 5605,5606 | | UDZS4R7(B) |
| D | 5641-5644 | | 1SS355 |
| D | 5701,5702,5721,5722 | | 1SS352 |
| ⚠ D | 5703 | | S1WB(A)60SD |
| D | 5705,5708,5710 | | UDZS8R2(B) |
| D | 5706,5782 | | UDZS7R5(B) |
| D | 5707,5709 | | UDZS9R1(B) |
| D | 5711,5712 | | UDZS6R8(B) |
| D | 5713,5714 | | UDZS12(B) |
| D | 5715,5719,5720 | | UDZS13(B) |
| D | 5716 | | UDZS15(B) |
| ⚠ D | 5717,5718,5751-5754 | | 1SR154-400 |
| D | 5755,5756,5761 | | RB501V-40 |
| D | 5781 | | UDZS5R1(B) |
| D | 5783,5784,5811,5812 | | 1SS352 |
| D | 5821,5822,5831,5832 | | 1SS352 |
| D | 5841,5842,5851,5852 | | 1SS352 |

### MISCELLANEOUS

| | | | |
|---|---|---|---|
| L | 5081,5181,5281,5381 | COIL | ATH1053 |
| L | 5481,5581,5681 | COIL | ATH1053 |
| JA | 5801 | SPEAKER TERMINAL 8-P | AKE7118 |
| JA | 5802 | SPEAKER TERMINAL 6-P | AKE7107 |
| JA | 5803,5804 | PIN JACK(4P) | AKB7172 |
| RY | 5701 | RELAY | ASR7032 |
| RY | 5811,5821,5831,5841 | RELAY | ASR7001 |
| RY | 5851 | RELAY | ASR7001 |
| CN | 5010,5110,5210 | CONNECTOR(05P) | TUC-P05P-B1 |
| CN | 5310,5410,5510 | CONNECTOR(05P) | TUC-P05P-B1 |
| CN | 5610 | CONNECTOR(07P) | TUC-P07P-B1 |
| CN | 5701 | CONNECTOR | B7P-VH |
| CN | 5802,5803 | 21P PLUG | XKM3011 |
| | 5000 | SMALL HEATSINK V5S(M | ANH7200 |
| | 5001,5002 | SCREW | BBZ30P080FCC |
| JH | 5801 | 4P CABLE HOLDER | 51048-0400 |
| JH | 5951,5953 | PCB BINDER | VEF1040 |
| JP | 5701 | LEAD WITH HOUSING | ADX7651 |
| JP | 5722 | AWG14 BOARD IN | ADX7650 |
| JP | 5723 | AWG14 BOARD IN | ADX7461 |
| JP | 5750 | CONNECTOR ASSY | PF04PG-R50 |
| JP | 5801 | JUMPER WIRE | D20PDY0460E |
| ⚠ P | 5001,5002 | PROTECTOR(7A) | AEK7021 |
| ⚠ P | 5003,5004 | IC PROTECTOR | ICP-N15 |

### RESISTORS

| | | | |
|---|---|---|---|
| ⚠ R | 5025,5026,5125,5126 | | ACN7132 |
| ⚠ R | 5027,5127,5227,5327 | | ACN7163 |
| R | 5029,5129,5229,5329 | | RS1/10S0R0J |
| ⚠ R | 5081,5181,5281,5381 | | RS1/2LMF4R7J |
| ⚠ R | 5082,5182,5282,5382 | | RS1LMF100J |
| ⚠ R | 5225,5226,5325,5326 | | ACN7132 |
| ⚠ R | 5425,5426,5525,5526 | | ACN7132 |
| ⚠ R | 5427,5527,5627 | | ACN7163 |
| R | 5429,5529,5629 | | RS1/10S0R0J |
| ⚠ R | 5481,5581,5681 | | RS1/2LMF4R7J |
| ⚠ R | 5482,5582,5682 | | RS1LMF100J |
| ⚠ R | 5625,5626 | | ACN7132 |
| ⚠ R | 5701,5702 | | RS1LMF472J |
| ⚠ R | 5703,5704 | | RS1/2LMF332J |
| R | 5721,5722 | | RD1/4MUF473J |
| ⚠ R | 5811,5812 | | RS2LMF331J |
| | Other Resistors | | RS1/16S###J |

### CAPACITORS

| | | | |
|---|---|---|---|
| C | 5011,5012,5111,5112 | | ACG7056 |
| C | 5041,5141,5241,5341 | | CEHANP2R2M50 |
| C | 5081,5082,5181,5182 | | CFTLA104J50 |
| C | 5083,5183,5283,5383 | | CFTLA103J2A |
| C | 5084-5087,5089 | | CKSRYB272K50 |
| C | 5211,5212,5311,5312 | | ACG7056 |
| C | 5281,5282,5381,5382 | | CFTLA104J50 |
| C | 5411,5412,5511,5512 | | ACG7056 |
| C | 5441,5541,5641 | | CEHANP2R2M50 |
| C | 5481,5482,5581,5582 | | CFTLA104J50 |

| Mark | No. | Description | Part No. |
|---|---|---|---|
| C | 5483,5583,5683 | | CFTLA103J2A |
| C | 5611,5612 | | ACG7056 |
| C | 5681,5682 | | CFTLA104J50 |
| C | 5703,5704 | | CEAT471M2A |
| C | 5705,5706 | | CEAT101M63 |
| C | 5707,5708 | | CEAT221M2A |
| C | 5721,5722 | | ACH7258 |
| C | 5723 | | CEAT100M63 |
| C | 5725,5726,5729,5730 | | CEATR47M2A |
| C | 5731 | | CKSRYB223K50 |
| C | 5741 | | CEAT331M10 |
| C | 5751,5752 | | CEAT222M25 |
| C | 5753,5754,5761,5771 | | CKSRYB103K50 |
| C | 5755,5756 | | CEAT221M25 |
| C | 5762 | | CEAT100M50 |
| C | 5766-5769 | | CKSRYB104K50 |
| C | 5772,5781,5930,5931 | | CKSRYB103K50 |
| C | 5782 | | CKSRYB105K10 |
| C | 5891 | | CEAT101M50 |
| C | 5901-5916 | | CCSRCH101J50 |
| C | 5917-5924 | | CEAT470M25 |

## S PRE-STAGE AMP ASSY

### SEMICONDUCTORS

| Mark | No. | Description | Part No. |
|---|---|---|---|
| Q | 6001,6101,6201,6301 | | 2SD2704K |
| Q | 6002,6102,6202,6302 | | IMT4 |
| Q | 6003,6103,6203,6303 | | 2SA1514K |
| ⚠ Q | 6004,6104,6204,6304 | | 2SA1145 |
| Q | 6005,6105,6205,6305 | | 2SC2705 |
| Q | 6401,6501,6601 | | 2SD2704K |
| Q | 6402,6502,6602 | | IMT4 |
| Q | 6403,6503,6603 | | 2SA1514K |
| ⚠ Q | 6404,6504,6604 | | 2SA1145 |
| Q | 6405,6505,6605 | | 2SC2705 |
| ⚠ D | 6001,6101,6201,6301 | | UDZS3R6(B) |
| ⚠ D | 6002,6102,6202,6302 | | 1SS355 |
| ⚠ D | 6401,6501,6601 | | UDZS3R6(B) |
| ⚠ D | 6402,6502,6602 | | 1SS355 |

### MISCELLANEOUS

| Mark | No. | Description | Part No. |
|---|---|---|---|
| CN | 6010,6110,6210 | CONNECTOR(05P) | TUC-P05X-B1 |
| CN | 6310,6410,6510 | CONNECTOR(05P) | TUC-P05X-B1 |
| CN | 6603 | 17P CONNECTOR | 52044-1745 |
| CN | 6610 | CONNECTOR(07P) | TUC-P07X-B1 |
| | 6001,6002 | PCB BINDER | VEF1040 |

### RESISTORS

| Mark | No. | Description | Part No. |
|---|---|---|---|
| R | 6007,6107,6207,6307 | | RS1/16S2001F |
| R | 6009,6109,6209,6309 | | RD1/2VM473J |
| R | 6011,6111,6211,6311 | | RN1/16SE1201D |
| R | 6023,6024,6123,6124 | | RD1/4MUF4R7J |
| R | 6029,6129,6229,6329 | | RN1/10SE3302D |
| R | 6030,6130,6230,6330 | | RN1/16SE1001D |
| R | 6031,6131,6231,6331 | | RN1/16SE1500D |
| R | 6223,6224,6323,6324 | | RD1/4MUF4R7J |
| R | 6407,6507,6607 | | RS1/16S2001F |
| R | 6409,6509,6609 | | RD1/2VM473J |
| R | 6411,6511,6611 | | RN1/16SE1201D |
| R | 6423,6424,6523,6524 | | RD1/4MUF4R7J |
| R | 6429,6529,6629 | | RN1/10SE3302D |
| R | 6430,6530,6630 | | RN1/16SE1001D |
| R | 6431,6531,6631 | | RN1/16SE1500D |
| R | 6623,6624 | | RD1/4MUF4R7J |
| Other Resistors | | | RS1/16S###J |

### CAPACITORS

| Mark | No. | Description | Part No. |
|---|---|---|---|
| C | 6001,6101,6201,6301 | | CEHAT4R7M50 |
| C | 6002,6102,6202,6302 | | CCSRCH221J50 |
| C | 6004,6104,6204,6304 | | CKSRYB102K50 |
| C | 6005,6006,6015,6016 | | CCSRCH220J50 |
| C | 6007,6107,6207,6307 | | CEHAT101M10 |
| C | 6008,6108,6208,6308 | | ACG7057 |
| C | 6009,6109,6209,6309 | | CEHAT100M2A |
| C | 6017,6117,6217,6317 | | CEHAT331M10 |
| C | 6023,6024,6123,6124 | | CEHAT100M63 |
| C | 6032,6132,6232,6332 | | CKSRYB224K16 |
| C | 6105,6106,6115,6116 | | CCSRCH220J50 |
| C | 6205,6206,6215,6216 | | CCSRCH220J50 |
| C | 6223,6224,6323,6324 | | CEHAT100M63 |
| C | 6305,6306,6315,6316 | | CCSRCH220J50 |
| C | 6401,6501,6601 | | CEHAT4R7M50 |
| C | 6402,6502,6602 | | CCSRCH221J50 |
| C | 6404,6504,6604 | | CKSRYB102K50 |
| C | 6405,6406,6415,6416 | | CCSRCH220J50 |
| C | 6407,6507,6607 | | CEHAT101M10 |
| C | 6408,6508,6608 | | ACG7057 |
| C | 6409,6509,6609 | | CEHAT100M2A |
| C | 6417,6517,6617 | | CEHAT331M10 |
| C | 6423,6424,6523,6524 | | CEHAT100M63 |
| C | 6432,6532,6632 | | CKSRYB224K16 |
| C | 6505,6506,6515,6516 | | CCSRCH220J50 |
| C | 6527 | | CCSRCH101J50 |
| C | 6605,6606,6615,6616 | | CCSRCH220J50 |
| C | 6623,6624 | | CEHAT100M63 |

## T PRIMARY ASSY

### SEMICONDUCTORS

| Mark | No. | Description | Part No. |
|---|---|---|---|
| ⚠ IC | 3701 | | NJM78M56FA |
| Q | 3701 | | DTC143EUA |
| D | 3701 | | UDZS5R1(B) |
| D | 3703,3704,3706 | | 1SS352 |
| ⚠ D | 3705 | | S1WB(A)60SD |

### MISCELLANEOUS

| Mark | No. | Description | Part No. |
|---|---|---|---|
| ⚠ L | 3701 | LINE FILTER | XTF3004 |
| H | 3707,3708 | FUSE CLIP | AKR7001 |
| KN | 3701 | SCREW PLATE | VNE1948 |
| ⚠ RY | 3701 | POWER RELAY | ASR7022 |
| ⚠ T | 3701 | STANDBY TRANSFORMER | ATT7043 |
| ⚠ CN | 3704 | AC CODE SOCKET | RKP1751 |
| ⚠ CN | 3709 | CONNECTOR | B2P3-VH |
| JH | 3701 | 6P CABLE HOLDER | 51048-0600 |
| JP | 3710 | JUMPER WIRE | D20PDY0620E |

### RESISTORS

| Mark | No. | Description | Part No. |
|---|---|---|---|
| R | 3703 | | RD1/4MUF220J |
| Other Resistors | | | RS1/16S###J |

### CAPACITORS

| Mark | No. | Description | Part No. |
|---|---|---|---|
| C | 3701,3713 | | CKSRYB103K50 |
| C | 3702 | | CEAT100M50 |
| ⚠ C | 3705 | | XCG3010 |

| Mark | No. | Description | Part No. |
|---|---|---|---|
| | C 3709 | | CFTLA103J50 |
| ⚠ | C 3710 | | ACE7013 |
| | C 3712 | | CKSRYB102K50 |
| | C 3714 | | CEAT102M25 |

## U REGULATOR ASSY

**SEMICONDUCTORS**

| | | |
|---|---|---|
| ⚠ | IC 4004 | NJM78M05FA |
| ⚠ | IC 4005 | NJM78M56FA |
| ⚠ | IC 4006 | NJM79M05FA |
| ⚠ | D 4001-4003 | 1SR154-400 |
| | D 4004-4008 | UDZS6R2(B) |
| ⚠ | D 4012 | D3SBA20(B) |
| | D 4013,4015,4016 | RB501V-40 |
| ⚠ | D 4014 | MTZJ6R2(B) |
| | D 4029 | 1SS352 |

**MISCELLANEOUS**

| | | |
|---|---|---|
| | H 4001-4004,4007-4010 FUSE CLIP | AKR7001 |
| | CN 4001 8P TOP POST | B8B-EH |
| | CN 4003 PLUG(7P) | KM200NA7 |
| | CN 4004 PLUG(9P) | KM200NA9 |
| | CN 4071 PLUG(4P) | KM200NA4 |
| | 4001-4003,4005,4006 PCB BINDER | VEF1040 |

**RESISTORS**

| | | |
|---|---|---|
| | R 4001 | RS1/16S473J |
| ⚠ | Other Resistors | RD1/4MUF###J |

**CAPACITORS**

| | | |
|---|---|---|
| | C 4001,4016 | CFTLA104J50 |
| | C 4002 | CEANP101M35 |
| | C 4003 | CEAT101M35 |
| | C 4004 | CEAT221M35 |
| | C 4005,4023,4024 | CEAT101M16 |
| | C 4006 | CEAT470M50 |
| | C 4008,4017,4021,4022 | CKSRYB103K50 |
| | C 4018 | CEAT221M16 |
| | C 4019 | CEAT682M16 |
| | C 4020 | CEAT222M16 |

## V DC/DC ASSY

**SEMICONDUCTORS**

| | | |
|---|---|---|
| ⚠ | IC 4251 | PQ1CG3032FZ |
| | D 4251 | RB051L-40 |
| ⚠ | D 4253,4273 | D3SBA20(B) |
| ⚠ | D 4255 | PTZ6R8(B) |

**MISCELLANEOUS**

| | | |
|---|---|---|
| | L 4251 INDUCTOR | ATH7020 |
| | H 4251,4252,4271,4272 FUSE CLIP | AKR7001 |
| | CN 4251,4252 CONNECTOR | B4B-EH |
| | 4251,4253 PCB BINDER | VEF1040 |

**RESISTORS**

| | | |
|---|---|---|
| ⚠ | R 4251,4271 | RD1/4MUF4R7J |
| | R 4252 | RN1/16SE1800D |
| | Other Resistors | RS1/16S####D |

**CAPACITORS**

| | | |
|---|---|---|
| | C 4251,4271 | CFTLA104J50 |
| | C 4255 | CEHAZL102M25 |

| Mark | No. | Description | Part No. |
|---|---|---|---|
| | C 4257 | | CEHAZL102M6R3 |
| | C 4258,4259,4267,4275 | | CKSRYB104K50 |
| | C 4264 | | ACH7294 |
| | C 4274 | | CEAT682M16 |

## W POSI1 ASSY

**SEMICONDUCTORS**

| | | |
|---|---|---|
| ⚠ | TH 7001 | AEX7006 |

**MISCELLANEOUS**

| | | |
|---|---|---|
| | CN 7001 CONNECTOR ASS'Y | PG02KA-E07 |

## X POSI2 ASSY

**SEMICONDUCTORS**

| | | |
|---|---|---|
| ⚠ | TH 7002 | PTFM04BB222Q2N34B0 |

**MISCELLANEOUS**

| | | |
|---|---|---|
| | CN 7002 CONNECTOR ASS'Y | PG02KA-E07 |

## Y POSI3 ASSY

**SEMICONDUCTORS**

| | | |
|---|---|---|
| ⚠ | TH 7003 | AEX7008 |

**MISCELLANEOUS**

| | | |
|---|---|---|
| | CN 7003 CONNECTOR ASS'Y | PG03KS-E07 |

## FM/AM TUNER UNIT

FM/AM TUNER UNIT has no service part.