PIONEER
The Art of Entertainment

Service Manual

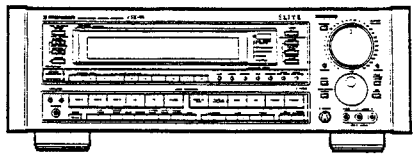

ORDER NO.
ARP2287

AUDIO/VIDEO STEREO RECEIVER

VSX-95
VSX-9900S

VSX-95 AND VSX-9900S HAVE THE FOLLOWING :

Type	Model		Power Requirement	Remarks
	VSX-95	VSX-9900S		
KUC	○	○	AC120V only	
SD	—	○	AC110V, 120V-127V, 220V, 240V (switchable)	

- **This manual is applicable to the VSX-95/KUC, VSX-9900S/KUC and SD types.**
- **As to the VSX-9900S/KUC and SD types, refer to pages 111-113.**

CONTENTS

1. SAFETY INFORMATION 2
2. EXPLODED VIEWS, PACKING AND PARTS LIST 3
3. SCHEMATIC DIAGRAMS AND P.C.BOARDS CONNECTION DIAGRAM 10
4. PCB's PARTS LIST 86
5. ADJUSTMENTS 96
6. IC INFORMATION 100
7. REMOTE CONTROL UNIT (CU-VSX031) 106
8. FOR VSX-9900S/KUC AND SD TYPES 111
9. PANEL FACILITIES 114
10. SPECIFICATIONS 121

PIONEER ELECTRONIC CORPORATION 4-1, Meguro 1-Chome, Meguro-ku, Tokyo 153, Japan
PIONEER ELECTRONICS SERVICE INC. P.O. Box 1760, Long Beach, California 90801 U.S.A.
PIONEER ELECTRONICS OF CANADA, INC. 505 Cochrane Drive, Markham, Ontario L3R 8E3 Canada
PIONEER ELECTRONIC [EUROPE] N.V. Keetberglaan 1, 9120 Beveren, Belgium
PIONEER ELECTRONICS AUSTRALIA PTY. LTD. 178-184 Boundary Road, Braeside, Victoria 3195, Australia TEL: [03] 580-9911

© PIONEER ELECTRONIC CORPORATION 1991

YO JULY 1991 Printed in Japan

This service manual is intended for qualified service technicians; it is not meant for the casual do-it-yourselfer. Qualified technicians have the necessary test equipment and tools, and have been trained to properly and safely repair complex products such as those covered by this manual.
Improperly performed repairs can adversely affect the safety and reliability of the product and may void the warranty. If you are not qualified to perform the repair of this product properly and safely, you should not risk trying to do so and refer the repair to a qualified service technician.

WARNING
Lead in solder used in this product is listed by the California Health and Welfare agency as a known reproductive toxicant which may cause birth defects or other reproductive harm (California Health & Safety Code, Section 25249.5).
When servicing or handling circuit boards and other components which contain lead in solder, avoid unprotected skin contact with the solder. Also, when soldering do not inhale any smoke or fumes produced.

1. SAFETY INFORMATION

(FOR USA MODEL ONLY)

1. SAFETY PRECAUTIONS

The following check should be performed for the continued protection of the customer and service technician.

LEAKAGE CURRENT CHECK

Measure leakage current to a known earth ground (water pipe, conduit, etc.) by connecting a leakage current tester such as Simpson Model 229-2 or equivalent between the earth ground and all exposed metal parts of the appliance (input/output terminals, screwheads, metal overlays, control shaft, etc.). Plug the AC line cord of the appliance directly into a 120V AC 60Hz outlet and turn the AC power switch on. Any current measured must not exceed 0.5mA.

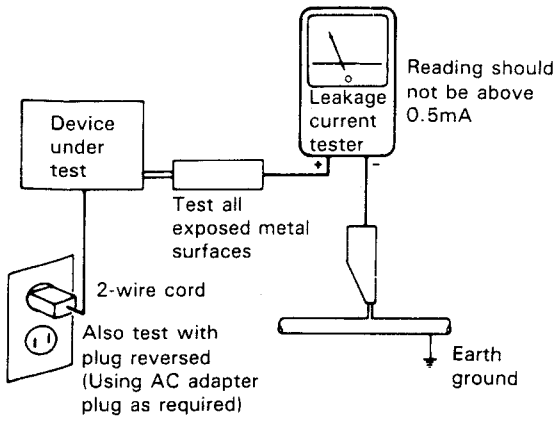

AC Leakage Test

ANY MEASUREMENTS NOT WITHIN THE LIMITS OUTLINED ABOVE ARE INDICATIVE OF A POTENTIAL SHOCK HAZARD AND MUST BE CORRECTED BEFORE RETURNING THE APPLIANCE TO THE CUSTOMER.

2. PRODUCT SAFETY NOTICE

Many electrical and mechanical parts in the appliance have special safety related characteristics. These are often not evident from visual inspection nor the protection afforded by them necessarily can be obtained by using replacement components rated for voltage, wattage, etc. Replacement parts which have these special safety characteristics are identified in this Service Manual.

Electrical components having such features are identified by marking with a ⚠ on the schematics and on the parts list in this Service Manual.
The use of a substitute replacement component which dose not have the same safety characteristics as the PIONEER recommended replacement one, shown in the parts list in this Service Manual, may create shock, fire, or other hazards.

Product Safety is continuously under review and new instructions are issued from time to time. For the latest information, always consult the current PIONEER Service Manual. A subscription to, or additional copies of, PIONEER Service Manual may be obtained at a nominal charge from PIONEER.

2. EXPLODED VIEWS, PACKING AND PARTS LIST

NOTES:
- *Parts without part number cannot be supplied.*
- *The ⚠ mark found on some component parts indicates the importance of the safety factor of the part. Therefore, when replacing, be sure to use parts of identical designation.*
- *Parts marked by "◉" are not always kept in stock. Their delivery time may be longer than usual or they may be unavailable.*

2.1 PACKING

Parts list of Packing

Mark No.	Description	Parts No.
1	FM ANTENNA	ADH1004
2	ALKALINE DRY CELL BATTERY (LR6, AA)	
3	TOP PAD	AHA1033
4	BOTTOM PAD	AHA1034
5	PACKING CASE	AHD2122
6	PACKING SHEET	
7	OPERATING INSTRUCTIONS (English)	ARB1333
8	REMOTE CONTROL UNIT (CU-VSX031)	AXD1223
9	LOOP ANTENNA	ATB1005
10	SPACER	AHB1069

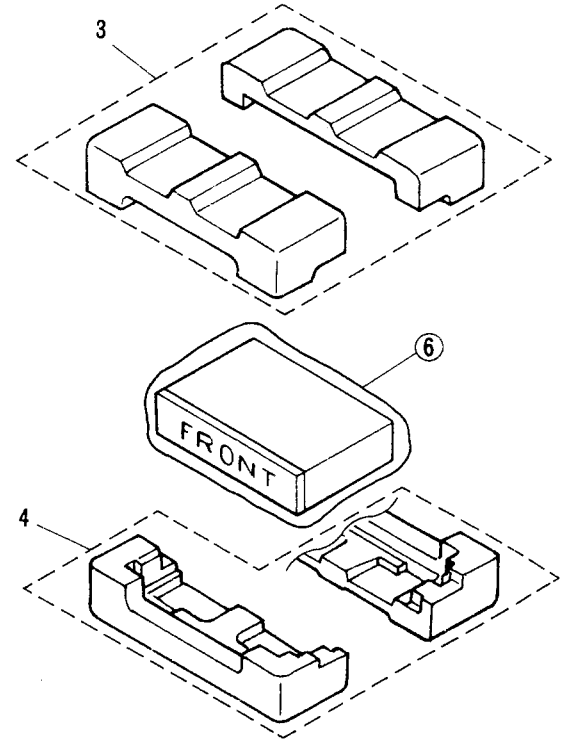

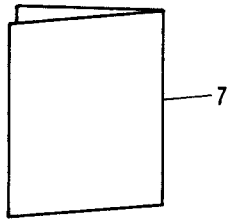

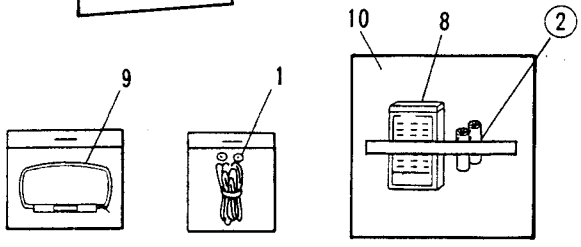

2.2 FRONT PANEL SECTION

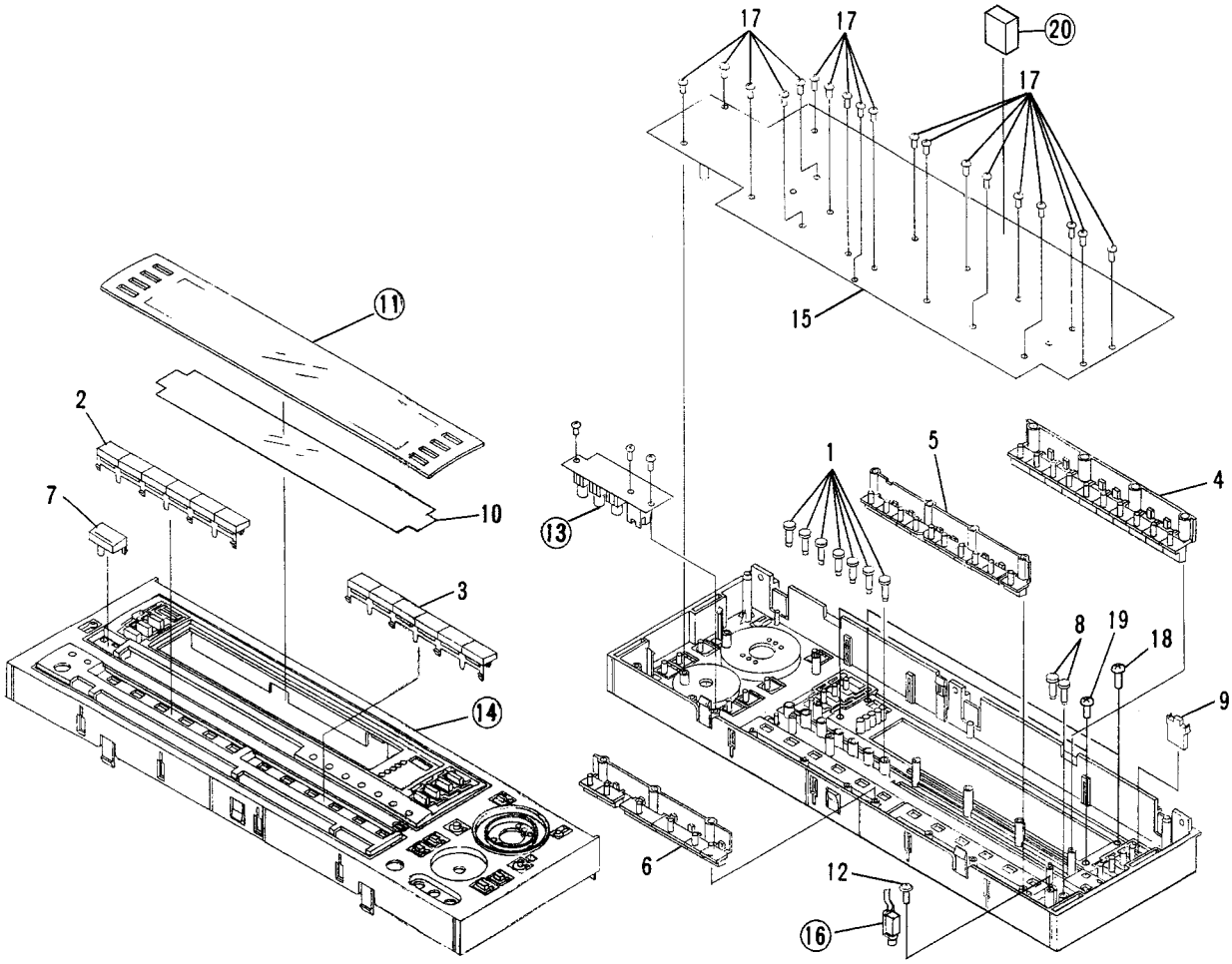

Parts list of Front panel section

Mark	No.	Description	Parts No.
	1	KIN BUTTON (SURROUND MODE)	AAD1609
	2	FUNCTION KNOB (INPUT SELECTOR)	AAD2004
	3	FUNCTION KNOB (INPUT SELECTOR)	AAD2005
	4	STATION BUTTON (PLS)	AAD2006
	5	TUNING BUTTON (PLS)	AAD2007
	6	BALANCE BUTTON (PLS)	AAD2008
	7	POWER BUTTON (PLS)	AAD2009
	8	BUTTON (SPEAKER)	AAD2030
	9	LENS	AAK2144
	10	FL FILTER	AAK2169
	11	PVC PANEL (PLS)	
	12	PWB SCREW	ABA1085
	13	FRONT VIDEO ASSEMBLY	
	14	PANEL BASE	
◉	15	FRONT CONTROL ASSEMBLY	AWZ3569
	16	HEADPHONE ASSEMBLY	
	17	SCREW	BBZ26P080FMC
	18	SCREW	ABA1137
	19	SCREW	ABA1138
	20	CUSHION RUBBER	

2.3 HEAT SINK SECTION

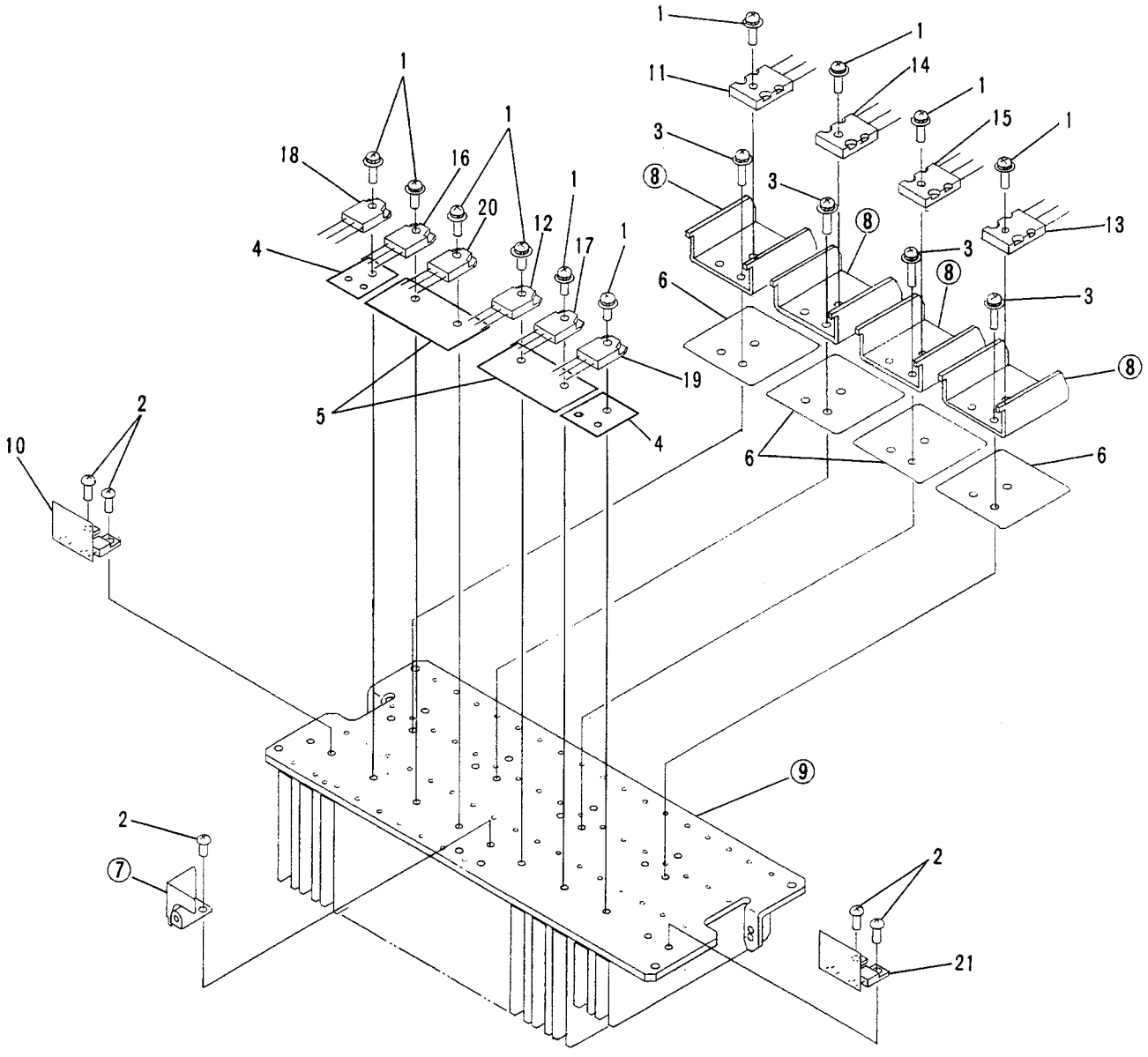

Parts list of Heat sink section

Mark	No.	Description	Parts No.
	1	SCREW (STEEL)	ABA−297
	2	SCREW	ABA−298
	3	SCREW (STEEL)	ABA1105
	4	MICA SHEET	AEC−818
	5	MICA SHEET	AEC1140
	6	MICA SHEET	AEE1033
	7	PCB SUPPORT	
	8	SUB HEAT SINK	
	9	HEAT SINK	
◉	10	REGULATOR 1 ASSEMBLY	AWZ3574

Mark	No.	Description	Parts No.
⚠	11	TRANSISTOR (Q1)	2SC3281
⚠	12	TRANSISTOR (Q10)	2SA1253N
⚠	13	TRANSISTOR (Q2)	2SC3281
⚠	14	TRANSISTOR (Q3)	2SA1302
⚠	15	TRANSISTOR (Q4)	2SA1302
⚠	16	TRANSISTOR (Q5)	2SC3180N
⚠	17	TRANSISTOR (Q6)	2SC3180N
⚠	18	TRANSISTOR (Q7)	2SA1253N
⚠	19	TRANSISTOR (Q8)	2SA1253N
⚠	20	TRANSISTOR (Q9)	2SC3180N
◉	21	REGULATOR 2 ASSEMBLY	AWZ3575

2.4 EXTERIOR

Parts list of Exterior

Mark	No.	Description	Parts No.
	1	ROTARY KNOB (JOG)	AAA1009
	2	MASTER VOL ASSEMBLY	AAB1235
	3	NAME PLATE (METAL)	
◉	4	PS.μ−COM ASSEMBLY	AWZ3571
◉	5	R.C.REG.POWER SUPPLY ASSEMBLY	AWZ3572
◉	6	TRANS ASSEMBLY	AWZ3573
	7	SCREW (STEEL)	ABA−283
	8	SCREW (STEEL)	ABA−297
	9	SCREW	ABA−298
	10	SCREW (STEEL)	ABA1006
	11	SCREW (STEEL)	ABA1009
	12	SCREW (STEEL)	ABA1011
	13	SCREW	ABA1034
	14	SCREW (STEEL)	ABA1086
	15	NUT	ABN1016
⚠	16	AC POWER CORD	ADG1072
	17	SPACER RING	
	18	DAMPER SHEET A	
	19	CUSHION (RUBBER)	
	20	NYLON BINDER	
	21	WOOD COLLAR	AEC1165
	22	SHEET B	
	23	SHEET C	
	24	BARRIER	
	25	SPACER	
	26	HOLDER	
	27	NYLON RIVET	AEP−035
	28	SCREW	VBZ40P160FZK
	29	TERMINAL SCREW	
	30	PLUG	AKM1061
	31	LEG ASSEMBLY	AMR1158
	32	LEG ASSEMBLY	AMR1159
	33	SIDE BOARD R	AMS1056
	34	SIDE BOARD L	AMS1057
	35	CHASSIS	
	36	FRONT PANEL	ANB1480
	37	REAR PANEL	
	38	PANEL STAY	
◉	39	R.C.SPEAKER ASSEMBLY	AWZ3566
	40	METAL BONNET	ANE1307
	41	BOTTOM PLATE	
	42	AC CORD SPACER	ANG1153
	43	HEAT SINK HOLDER	
	44	CASE (TUNER)	
	45	COVER (TUNER)	
	46	CASE (DSP)	
◉	47	MOTOR VOLUME ASSEMBLY	AWZ3567
◉	48	TUNER ASSEMBLY	AWE1160
◉	49	DSP ASSEMBLY	AWZ3570
	50	SCREW	FBT40P080FZK
◉	51	S.VIDEO ASSEMBLY	AWZ3564
◉	52	R.C.AMP ASSEMBLY	AWZ3568
	53	SCREW	VMZ30P060FMC
⚠	54	FUSE (8A, FU1)	AEK1035
⚠	55	FUSE (6.3A, FU3)	AEK−309
⚠	56	FUSE (6.3A, FU4)	AEK−309
⚠	57	FUSE (1.25A, FU5)	AEK−120
⚠	58	FUSE (1.25A, FU6)	AEK−120
	59	FERRITE CORE (L)	ATX1017
	60	POWER TRANSFORMER (T)	ATS1360
◉	61	OSD ASSEMBLY	AWZ3634
◉	62	MAIN FUNCTION ASSEMBLY	AWZ3673
◉	63	SUB FUNCTION ASSEMBLY	AWZ3674
◉	64	VIDEO FUNCTION ASSEMBLY	AWZ3675
◉	65	ENHANCER ASSEMBLY	AWZ3676
◉	66	BARRIER ASSEMBLY	AWZ3825
◉	67	FRONT AMP ASSEMBLY	AWH1014
⚠	68	SPEAKER IMPEDANCE SELECTOR (S1)	AKX1004
	69	SCREW	VMZ26P040FZK
	70	CERAMIC CAPACITOR (C1)	CKDYF103Z50

3. SCHEMATIC DIAGRAMS AND P.C.BOARDS CONNECTION DIAGRAM

3.1 OVER ALL SCHEMATIC DIAGRAM

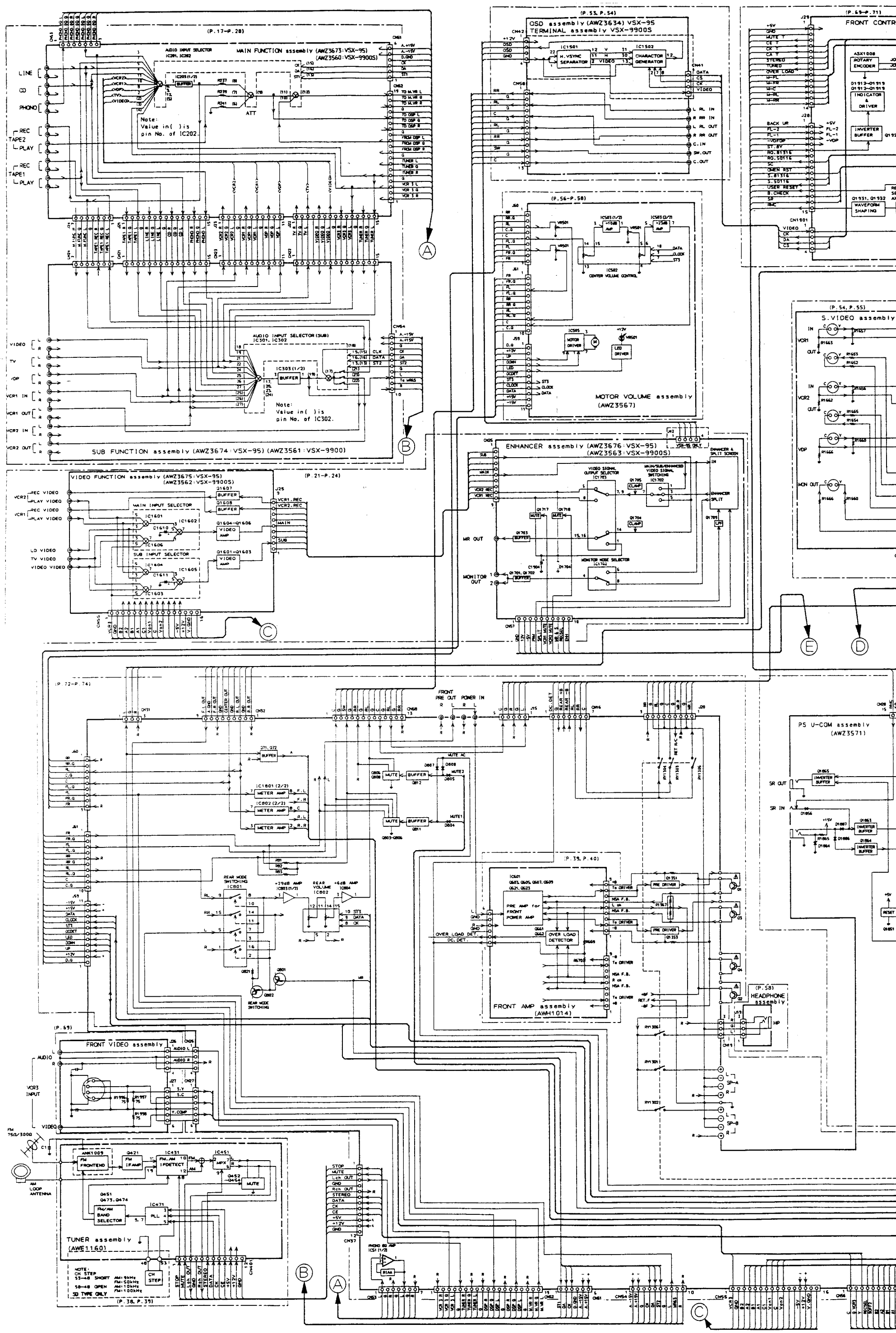

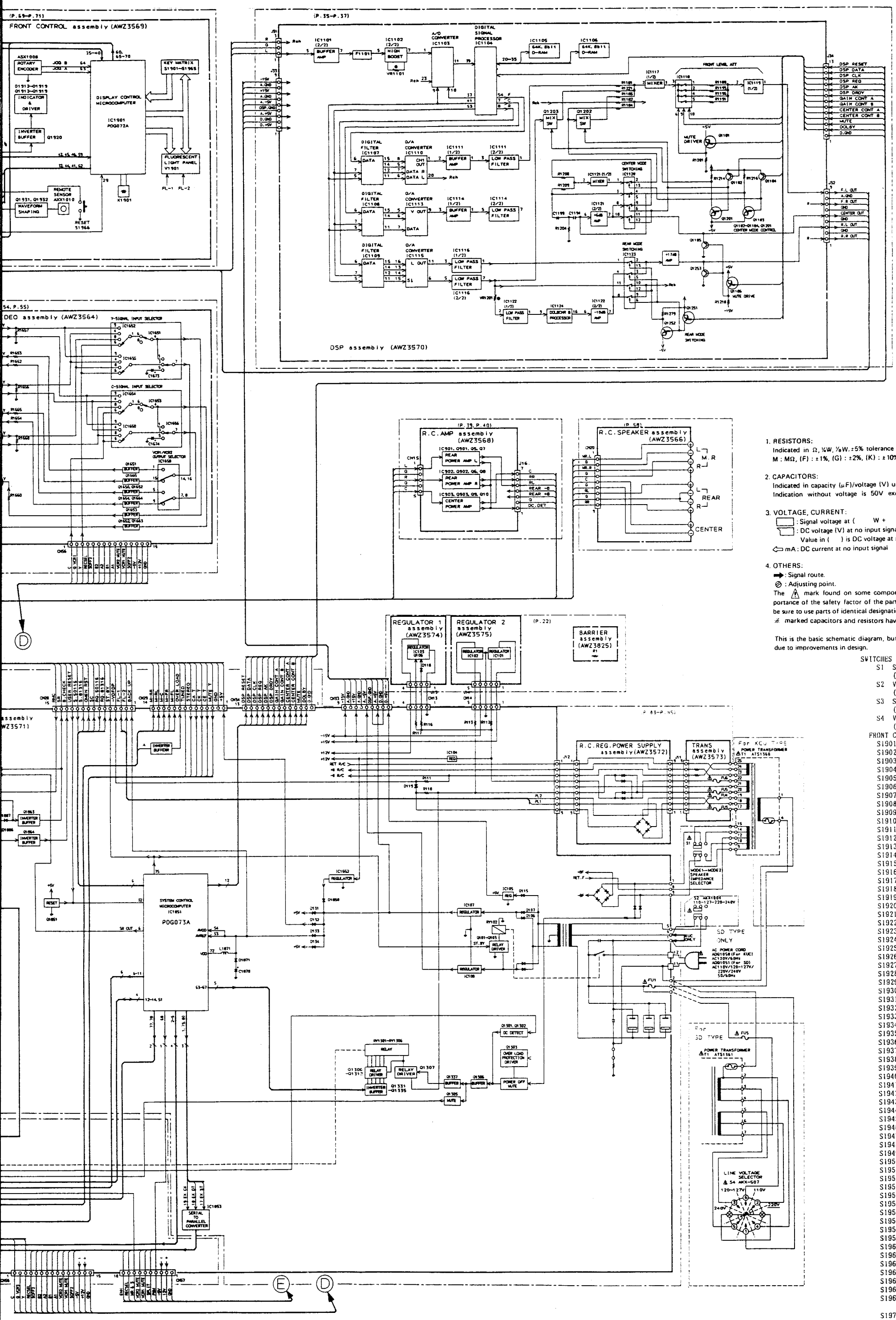

1. RESISTORS:
Indicated in Ω, ¼W, ⅛W, ±5% tolerance unless otherwise noted k : kΩ, M : MΩ, (F) : ±1%, (G) : ±2%, (K) : ±10% (M); ±20% tolerance

2. CAPACITORS:
Indicated in capacity (μF)/voltage (V) unless otherwise noted p : pF
Indication without voltage is 50V except electrolytic capacitor.

3. VOLTAGE, CURRENT:
: Signal voltage at (W + W 8Ω)output (1kHz)
: DC voltage (V) at no input signal
Value in ( ) is DC voltage at rated power.
⇦ mA : DC current at no input signal

4. OTHERS:
➡ : Signal route.
⊘ : Adjusting point.
The ⚠ mark found on some component parts indicates the importance of the safety factor of the part. Therefore, when replacing, be sure to use parts of identical designation.
※ marked capacitors and resistors have parts numbers.

This is the basic schematic diagram, but the actual circuit may vary due to improvements in design.

SWITCHES
- S1 SPEAKER IMPEDANS SELECTOR (KUC TYPE ONLY)
- S2 VOLTAGE SELECTOR SWITCH (SD TYPE ONLY)
- S3 SLIDE SWITCH (SD TYPE ONLY)
- S4 VOLTAGE SELECTOR SWITCH (SD TYPE ONLY)

FRONT CONTROL Ass'y
- S1901 3CH LOGIC
- S1902 INPUT ATT
- S1903 RETURN
- S1904 ACO.ENH SEL
- S1905 ACO.SEL
- S1906 ENH SEL
- S1907 S.S.
- S1908 MUTING
- S1909 DIRECT
- S1910 SPILT ON/OFF
- S1911 JOG MODE
- S1912 ENH ON/OFF
- S1913 HALL
- S1914 PRO.LOGIC
- S1915 DANCE
- S1916 THEATER
- S1917 CHURCH
- S1918 JAZZ
- S1919 CD
- S1920 PHONO
- S1921 TAPE 2
- S1922 TUNER
- S1923 - LINE
- S1924 TAPE 1
- S1925 TRE +
- S1926 V.SEL
- S1927 BASS
- S1928 REC.SEL
- S1929 TRE -
- S1930 BASS -
- S1931 HITS
- S1932 BAL.L
- S1933 NAME
- S1934 BAL.R
- S1935 DIRECT ACCESS
- S1936 AUTO/MONO
- S1937 CUSTOM SELECT
- S1938 MEMORY
- S1939 BAND
- S1940 MEMORY SCAN
- S1941 TUNE +
- S1942 TUNE -
- S1943 VCR 3
- S1944 VCR 1
- S1945 VIDEO
- S1946 VCR 2
- S1947 LD
- S1948 TV
- S1949 7
- S1950 5
- S1951 9
- S1952 6
- S1953 8
- S1954 10
- S1955 MR&S
- S1956 1
- S1957 4
- S1958 SCENE 1
- S1959 2
- S1960 3
- S1961 SCENE MEMO
- S1962 POWER
- S1963 SP-B
- S1964 SCENE 2
- S1965 SP-A
- S1966 RESET

S1970 ROTARY ENCODER

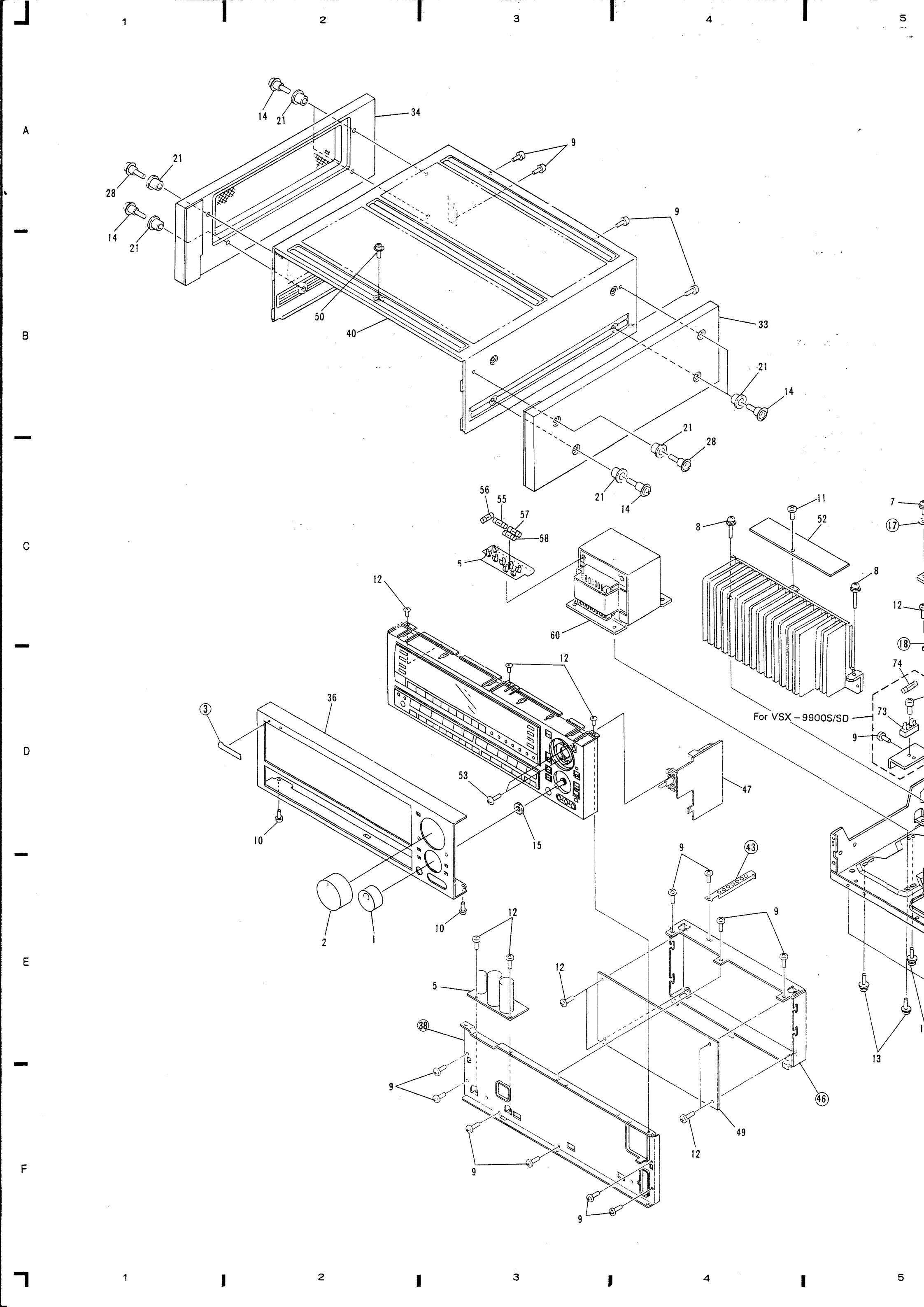
For VSX-9900S/SD

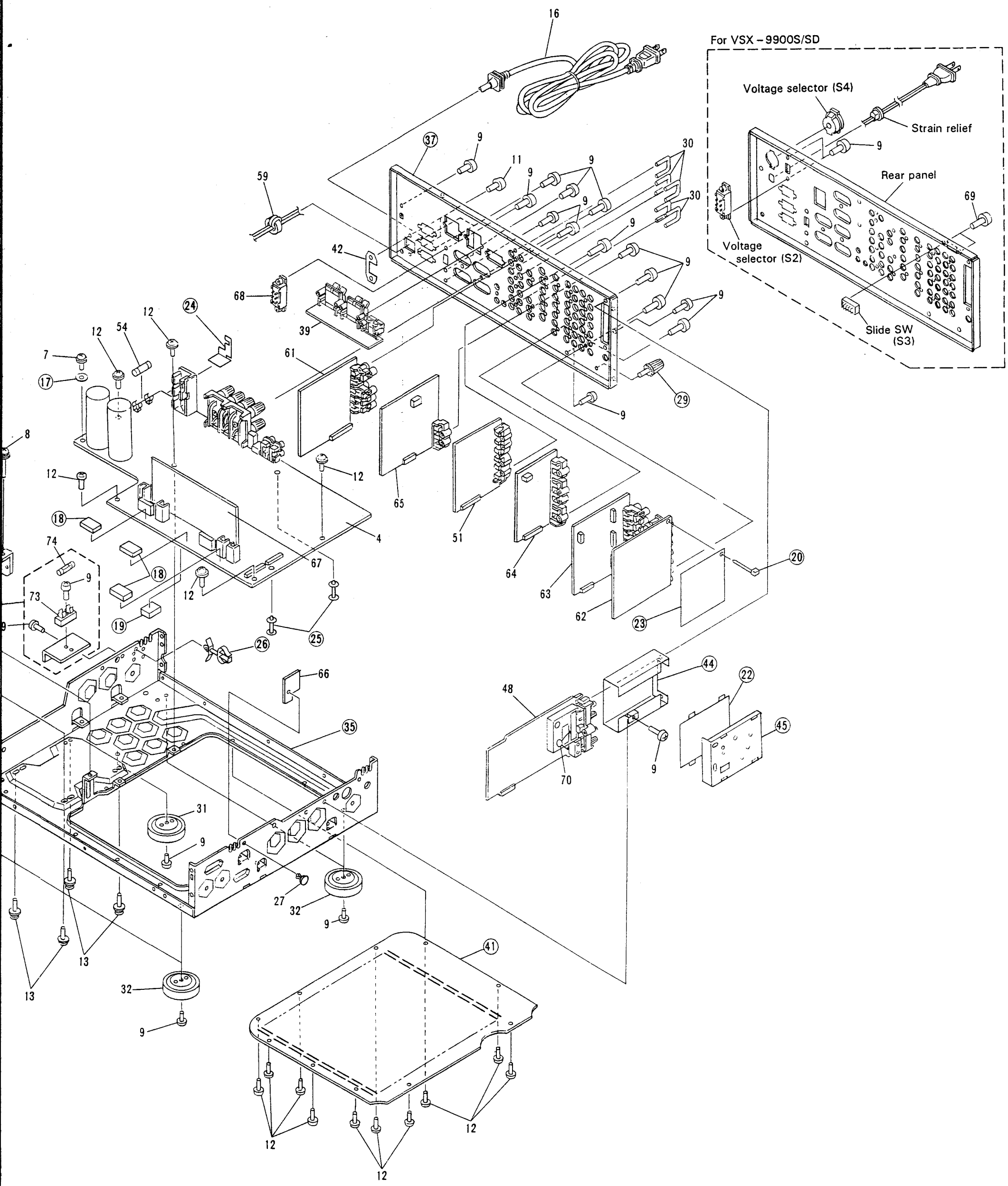
For VSX-9900S/SD
Voltage selector (S4)
Strain relief
Rear panel
Voltage selector (S2)
Slide SW (S3)
16
37
9
11
30
59
42
68
39
24
12
54
7
17
61
8
18
74
73
19
4
67
65
51
64
63
62
23
20
29
25
26
66
35
31
27
32
13
41
44
22
45
48
70

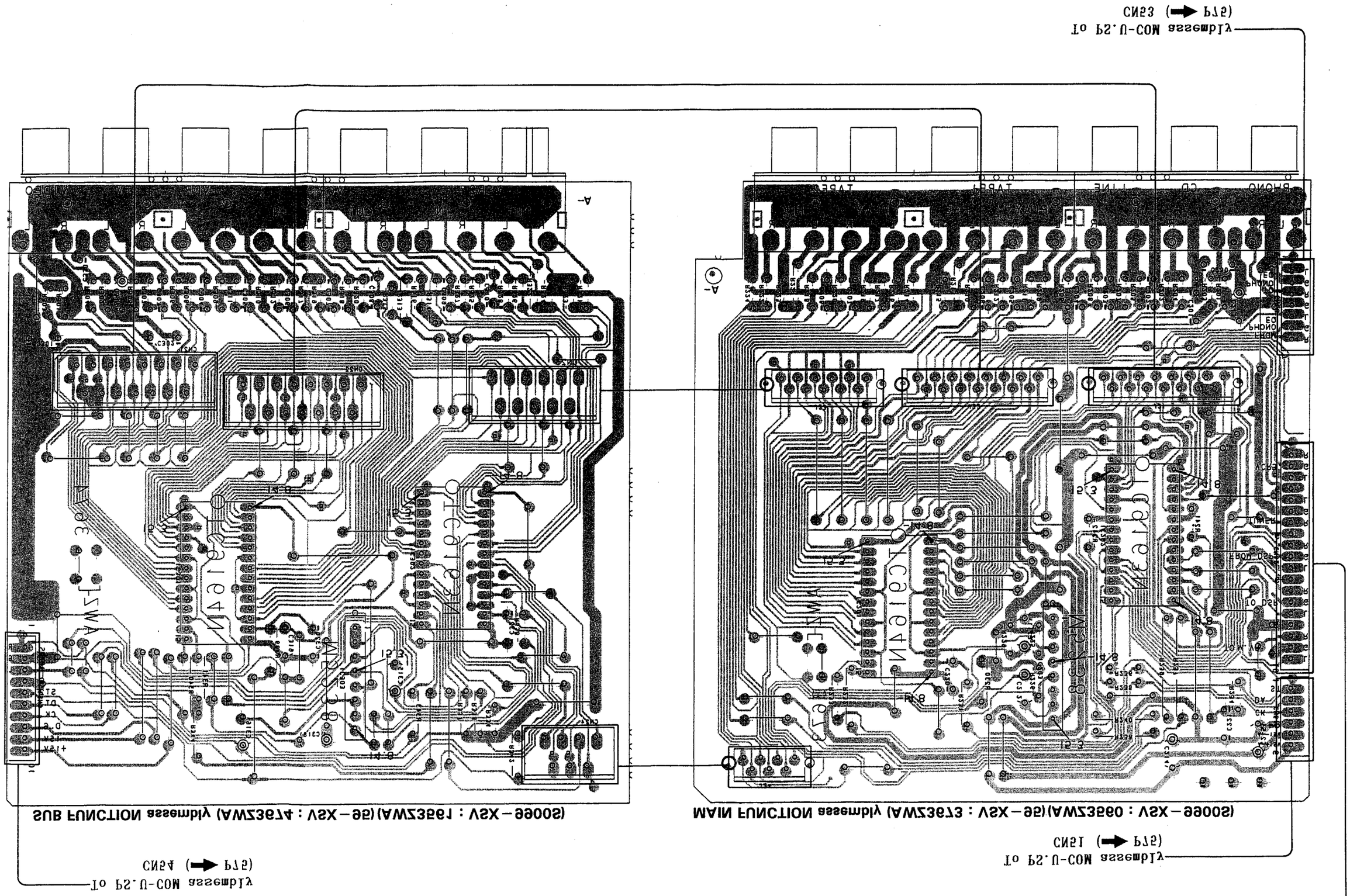

This P.C.B. connection diagram is viewed from the foil side.

3.2 MAIN FUNCTION (AWZ3673) and SUB FUNCTION assembly (AWZ3674)

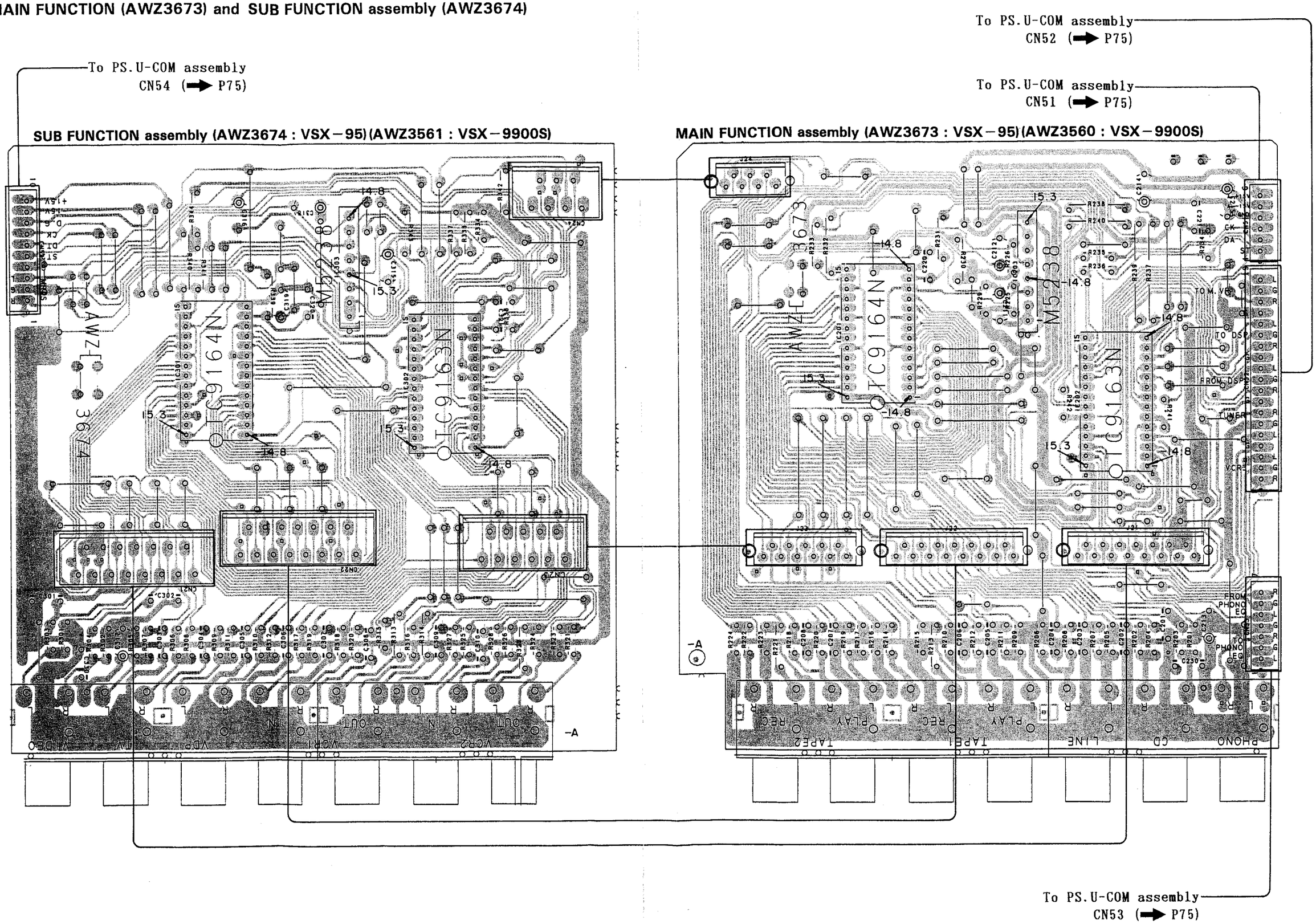

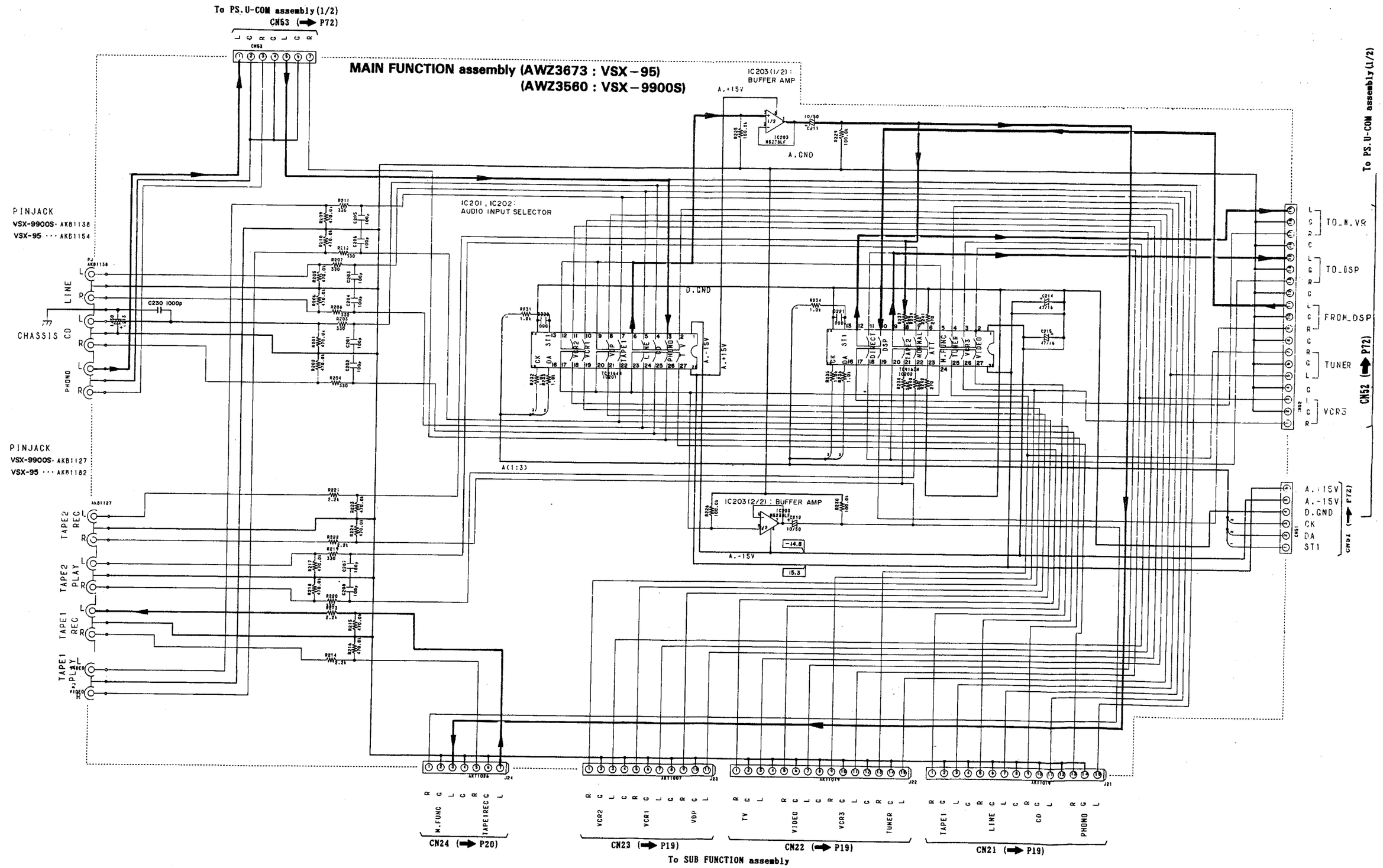
To PS.U-COM assembly(1/2)
CN53 (➡ P72)
MAIN FUNCTION assembly (AWZ3673 : VSX-95)
(AWZ3560 : VSX-9900S)
IC203(1/2) : BUFFER AMP
A.+15V
A.GND
IC201, IC202 :
AUDIO INPUT SELECTOR
D.GND
PINJACK
VSX-9900S· AKB1138
VSX-95 ··· AKB1154
LINE
CD
PHONO
CHASSIS
C250 1000p
PINJACK
VSX-9900S· AKB1127
VSX-95 ··· AKB1182
TAPE2 REC
TAPE2 PLAY
TAPE1 REC
TAPE1 PLAY
VIDEO
IC203(2/2) : BUFFER AMP
A.-15V
-14.8
15.3
TO_M.VR
TO_DSP
FROM_DSP
TUNER
VCR3
CN52 (➡ P72)
To PS.U-COM assembly(1/2)
A.+15V
A.-15V
D.GND
CK
DA
ST1
CN51 (➡ P72)
M.FUNC
TAPE1REC
CN24 (➡ P20)
VCR2
VCR1
VDP
CN23 (➡ P19)
TV
VIDEO
VCR3
TUNER
CN22 (➡ P19)
TAPE1
LINE
CD
PHONO
CN21 (➡ P19)
To SUB FUNCTION assembly

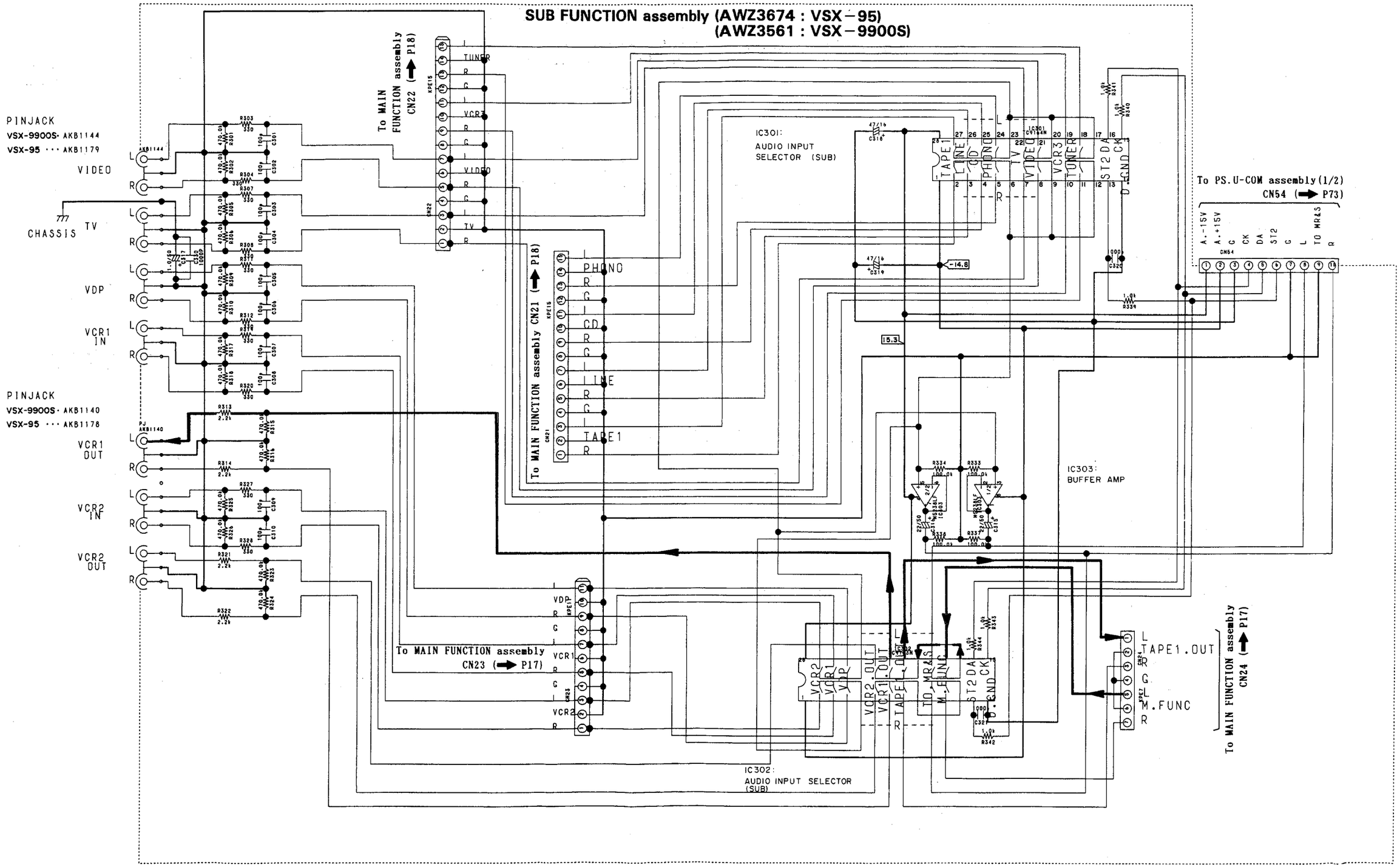
SUB FUNCTION assembly (AWZ3674 : VSX−95)
(AWZ3561 : VSX−9900S)
PINJACK
VSX-9900S· AKB1144
VSX-95 ··· AKB1179
VIDEO
CHASSIS
TV
VDP
VCR1 IN
PINJACK
VSX-9900S· AKB1140
VSX-95 ··· AKB1178
VCR1 OUT
VCR2 IN
VCR2 OUT
To MAIN FUNCTION assembly CN22 (➡ P18)
To MAIN FUNCTION assembly CN21 (➡ P18)
To MAIN FUNCTION assembly CN23 (➡ P17)
IC301:
AUDIO INPUT SELECTOR (SUB)
IC303:
BUFFER AMP
IC302:
AUDIO INPUT SELECTOR (SUB)
To PS.U-COM assembly(1/2) CN54 (➡ P73)
To MAIN FUNCTION assembly CN24 (➡ P17)
TAPE1.OUT
M.FUNC

3.3 VIDEO FUNCTION (AWZAWZ3675), REGULATOR 1 (AWZAWZ3574), REGULATOR 2 (AWZ3575), ENHANCER (AWZ3676) and BARRIER assembly (AWZ3825)

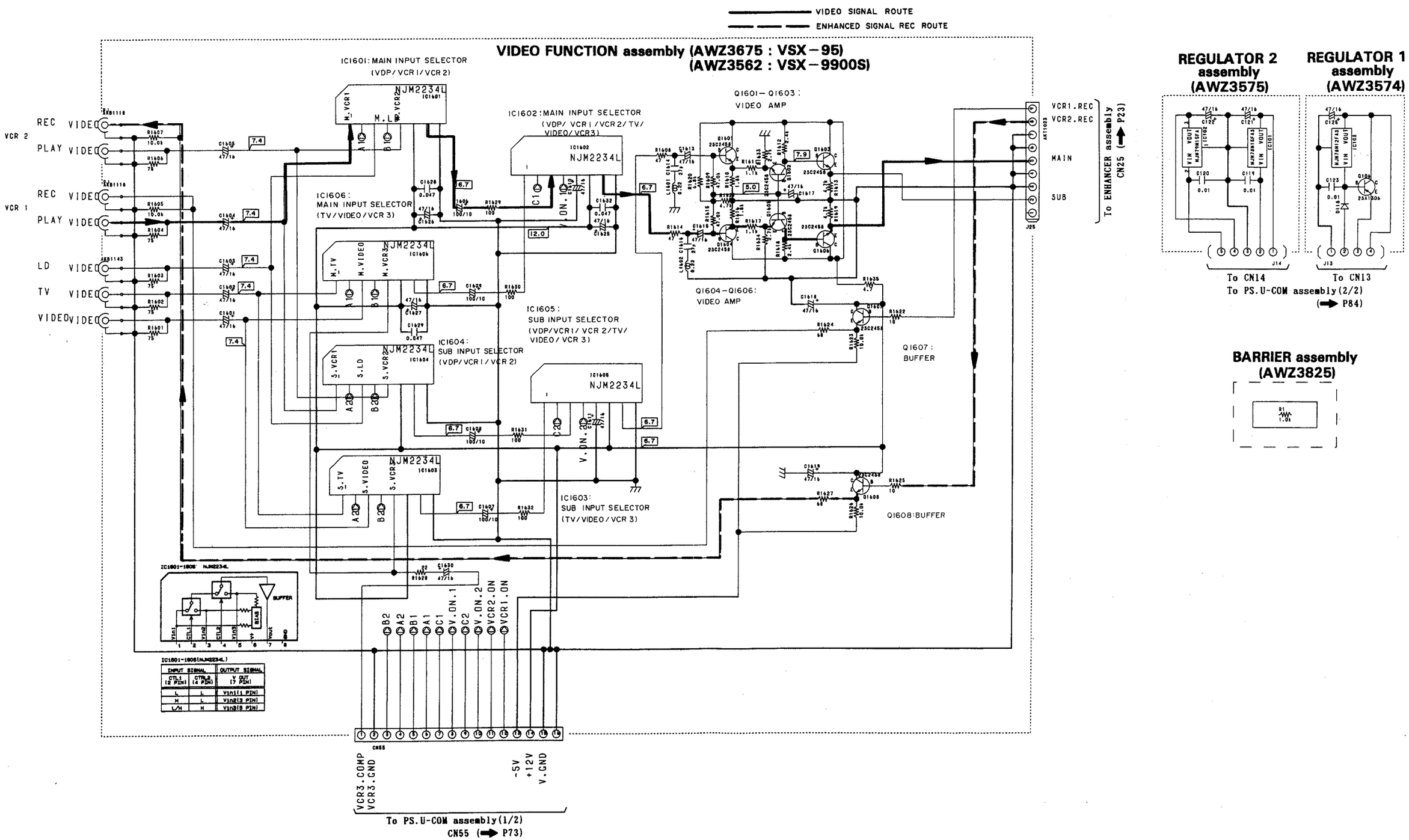

INPUT SIGNAL		OUTPUT SIGNAL
CTL1 (12 PIN)	CTL2 (4 PIN)	V OUT (7 PIN)
L	L	Vin1(1 PIN)
H	L	Vin2(3 PIN)
L/H	H	Vin3(5 PIN)

ENHANCER assembly
(AWZ3676 : VSX−95)
(AWZ3563 : VSX−9900S)

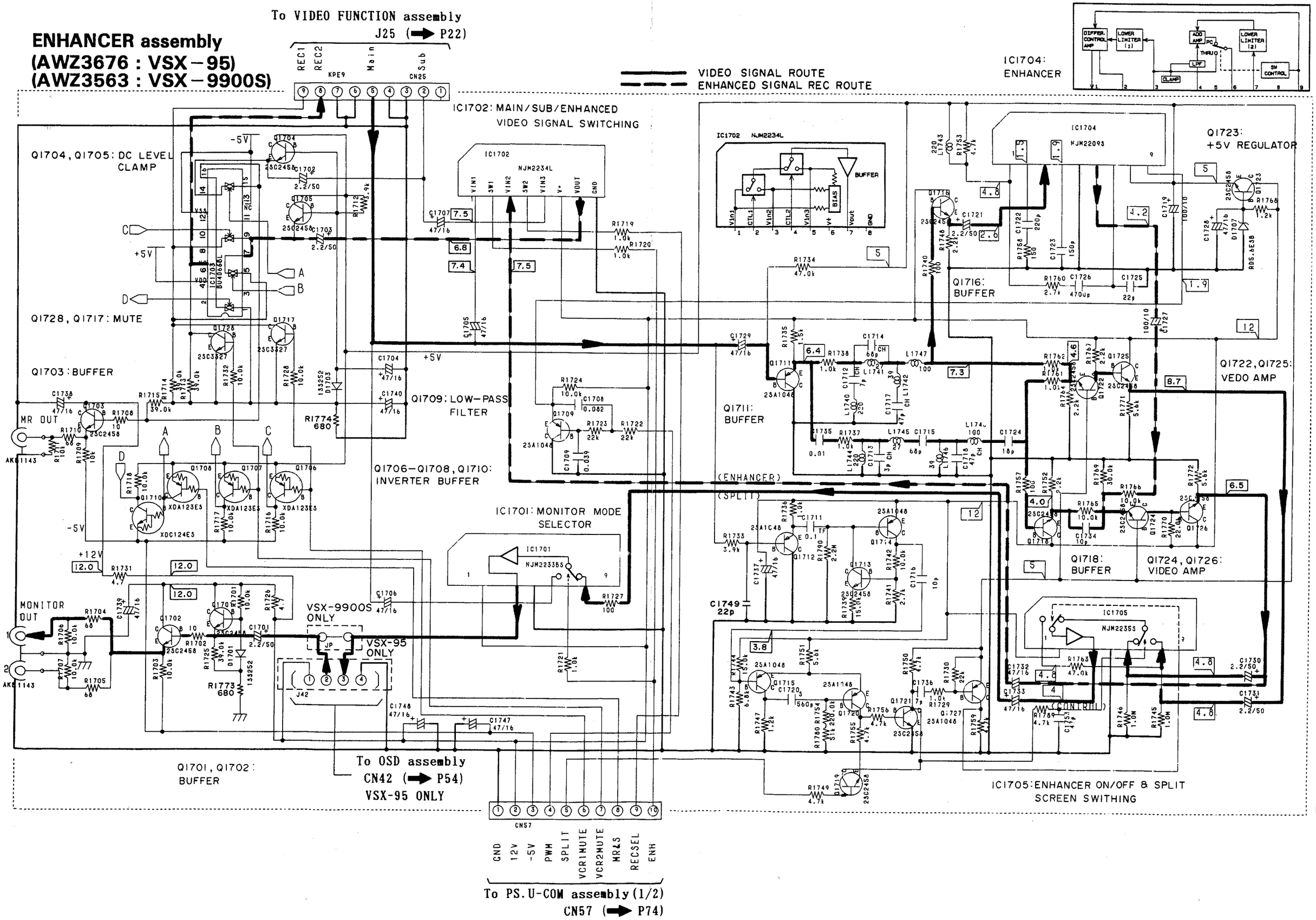

To PS.U-COM assembly
CN14 (➡ P76)

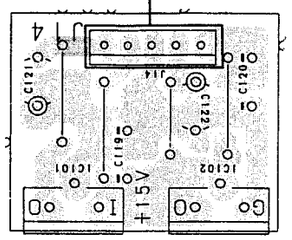

REGULATOR 2 assembly (AWZ3575)

To PS.U-COM assembly
CN13 (➡ P75)

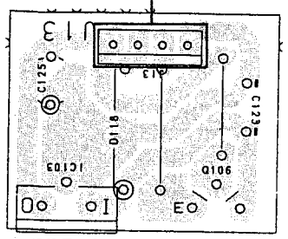

REGULATOR 1 assembly (AWZ3574)

BARRIER assembly (AWZ3825)

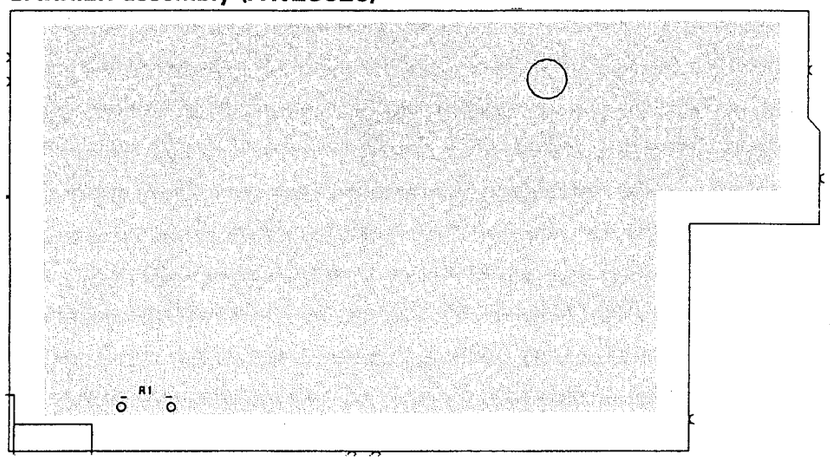

To PS.U-COM assembly
CN55 (➡ P75)

To PS.U-COM assembly
CN57 (➡ P76)

VIDEO FUNCTION assembly (AWZ3675 : VSX−95) (AWZ3562 : VSX−9900S)

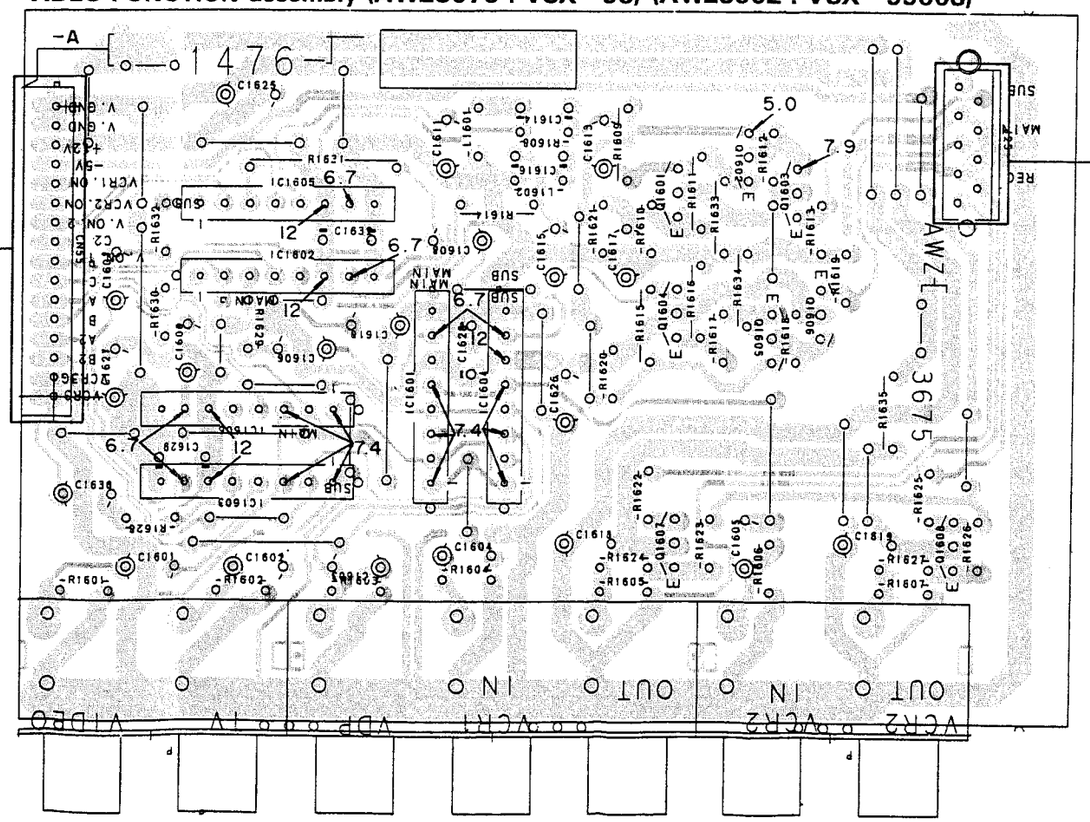

NOTE

1. This P.C.B connection diagram is viewed from the parts mounted side.
2. The parts which have been mounted on the board can be replaced with those shown with the corresponding wiring symbols listed in the following Table.

P.C.B. pattern diagram indication	Corresponding part symbol	Part Name
Q504 (E)	E or E	Transistor
Q215	or	Radiator type transistor
D203	D203	Diode
R237	R237	Resistor
C513	+	Capacitor (Polarity)
C518		Capacitor (Non-polarity)

Others

P.C.B. pattern diagram indication	Part Name
IC	IC
S	Switch
RY	Relay
L	Coil
F	Filter
VR	Variable resistor or Semi-fixed resistor

3. The capacitor terminal marked with ◎(double circles) shows negatine termianl.
4. The diode terminal marked with ◎(double circles) shows cathode side.
5. The transistor terminal to which E is affixed shows the emitter.

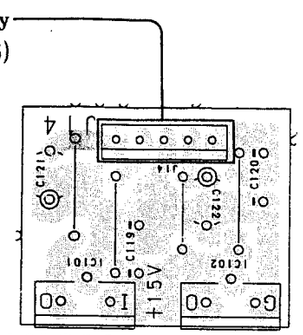

ULATOR 2 assembly (AWZ3575)

To PS.U-COM assembly
CN13 (➡ P75)

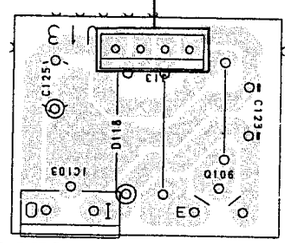

REGULATOR 1 assembly (AWZ3574)

PS.U-COM assembly
CN55 (➡ P75)

DEO FUNCTION assembly (AWZ3675 : VSX−95) (AWZ3562 : VSX−9900S)

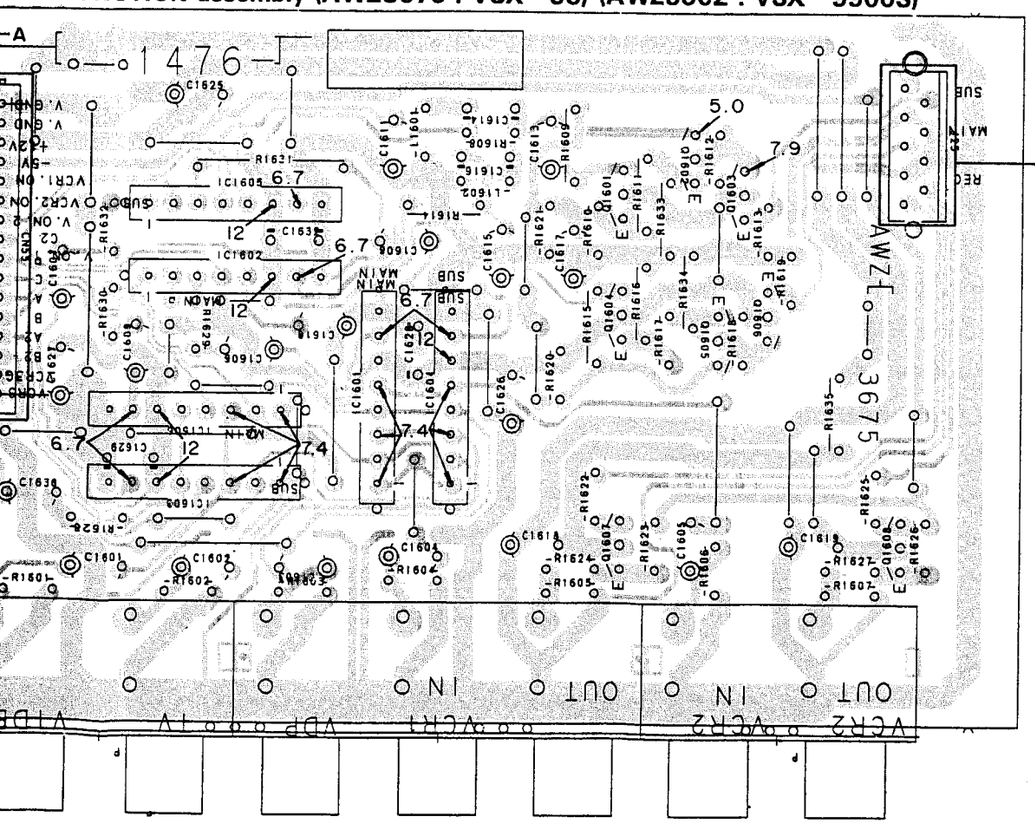

ENHANCER assembly (AWZ3676 : VSX−95)(AWZ3563 : VSX−9900S)

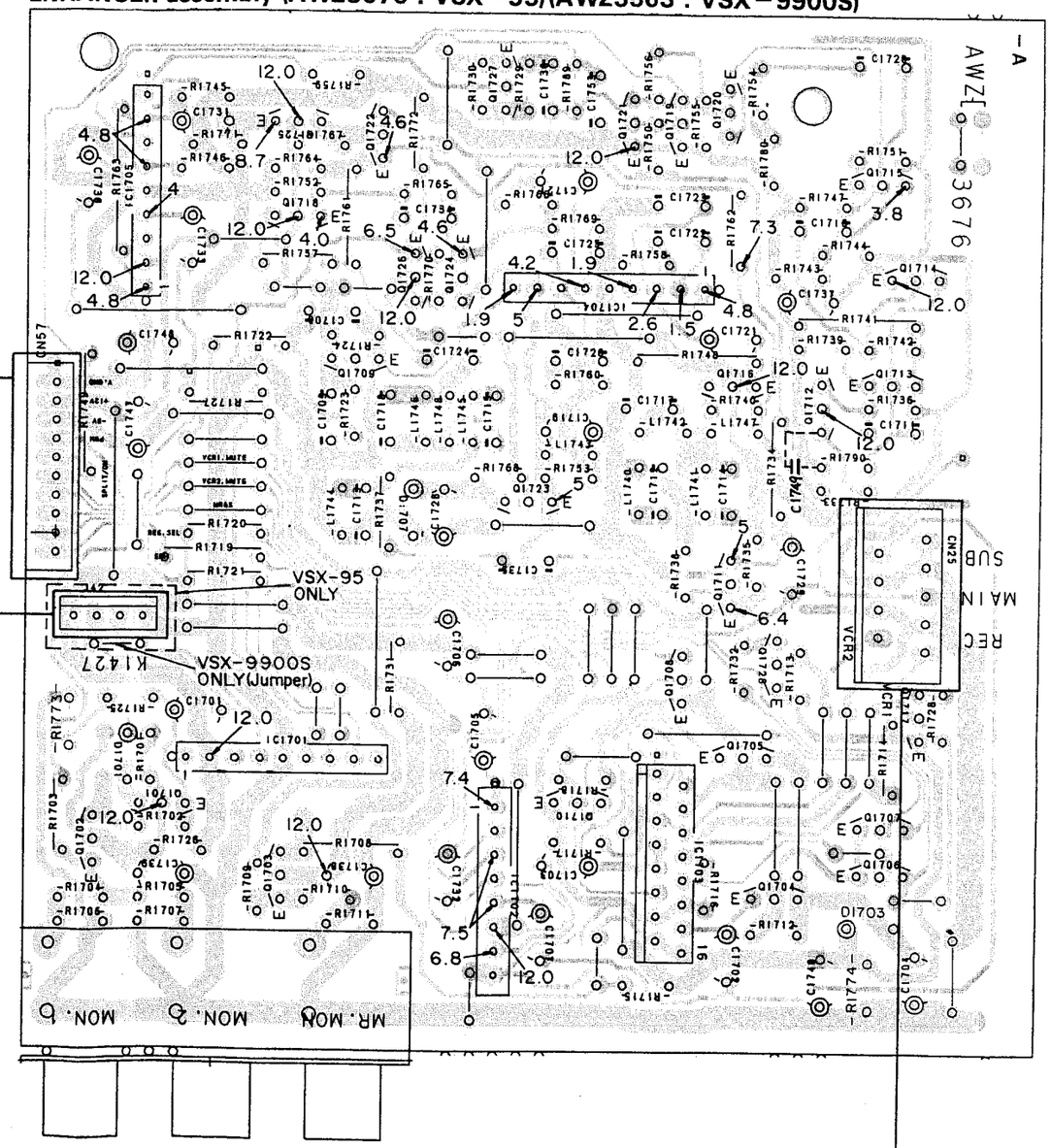

To PS.U-COM assembly
CN57 (➡ P76)

To OSD assembly
CN42 (➡ P25) VSX-95 ONLY

Q1727
Q1725 Q1720
Q1722 Q1719
Q1721
Q1715
IC1705
Q1718
Q1726
Q1724 Q1714
IC1704
Q1709
Q1716
Q1713
Q1712
Q1723
Q1711
Q1728
Q1708
Q1717
IC1701 Q1705
Q1701 Q1710
Q1702 Q1707
IC1703
Q1703 Q1706
Q1704
IC1702

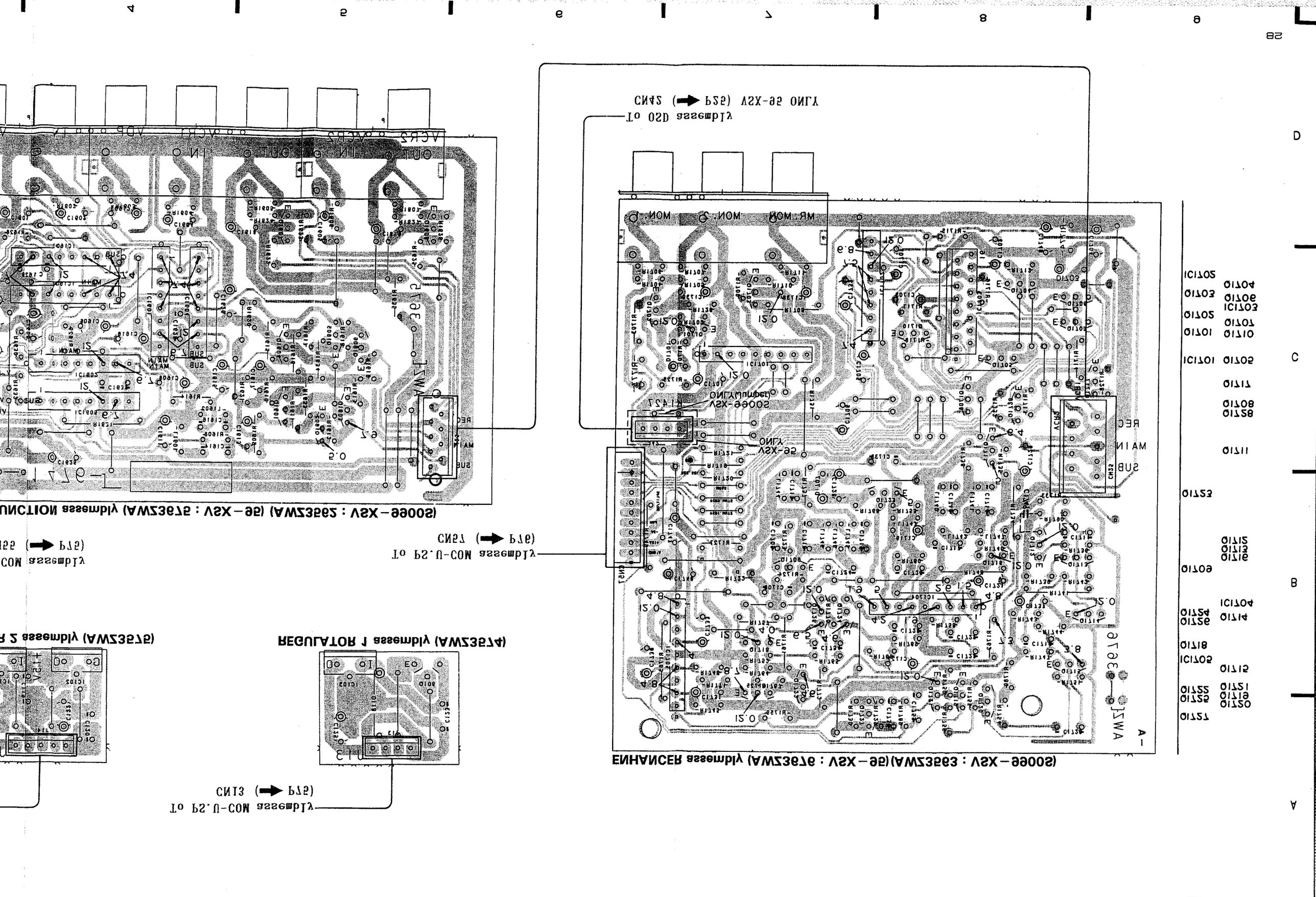
ENHANCER assembly (AWZ3675 : ASV-9E)(AWZ3683 : ASV-9GGE)
REGULATOR 1 assembly (AWZ3674)
REGULATOR 2 assembly (AWZ3675)
FUNCTION assembly (AWZ3675 : ASV-9E) (AWZ3685 : ASV-9GGE)
MOD assembly
to P2.U-CON assembly
CN13 (➡ P12)
to P2.U-CON assembly
CN21 (➡ P18)
to QSD assembly
YUNO 9E-ASV (9SA ➡) 2AN3
MAIN
SUB
REC
MON.
OUT
IN
VCR2
VDD
VCR1
ASV-9E
ASV-9GGE

ASV-9E

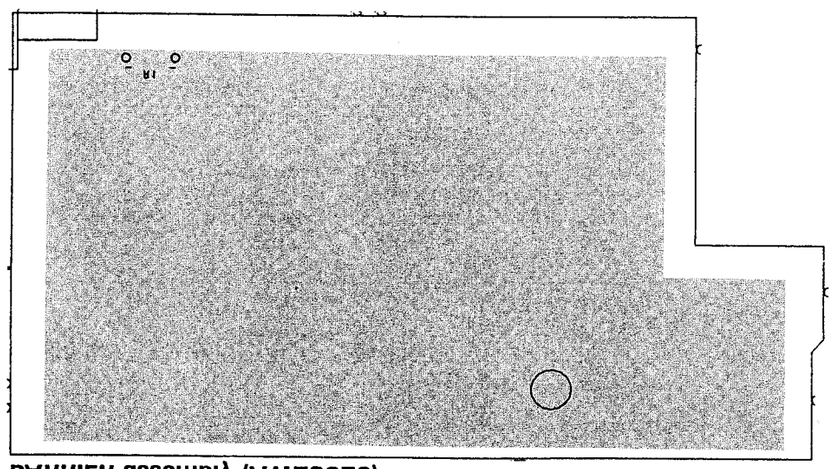

BARRIER assemply (AWZ385Z)

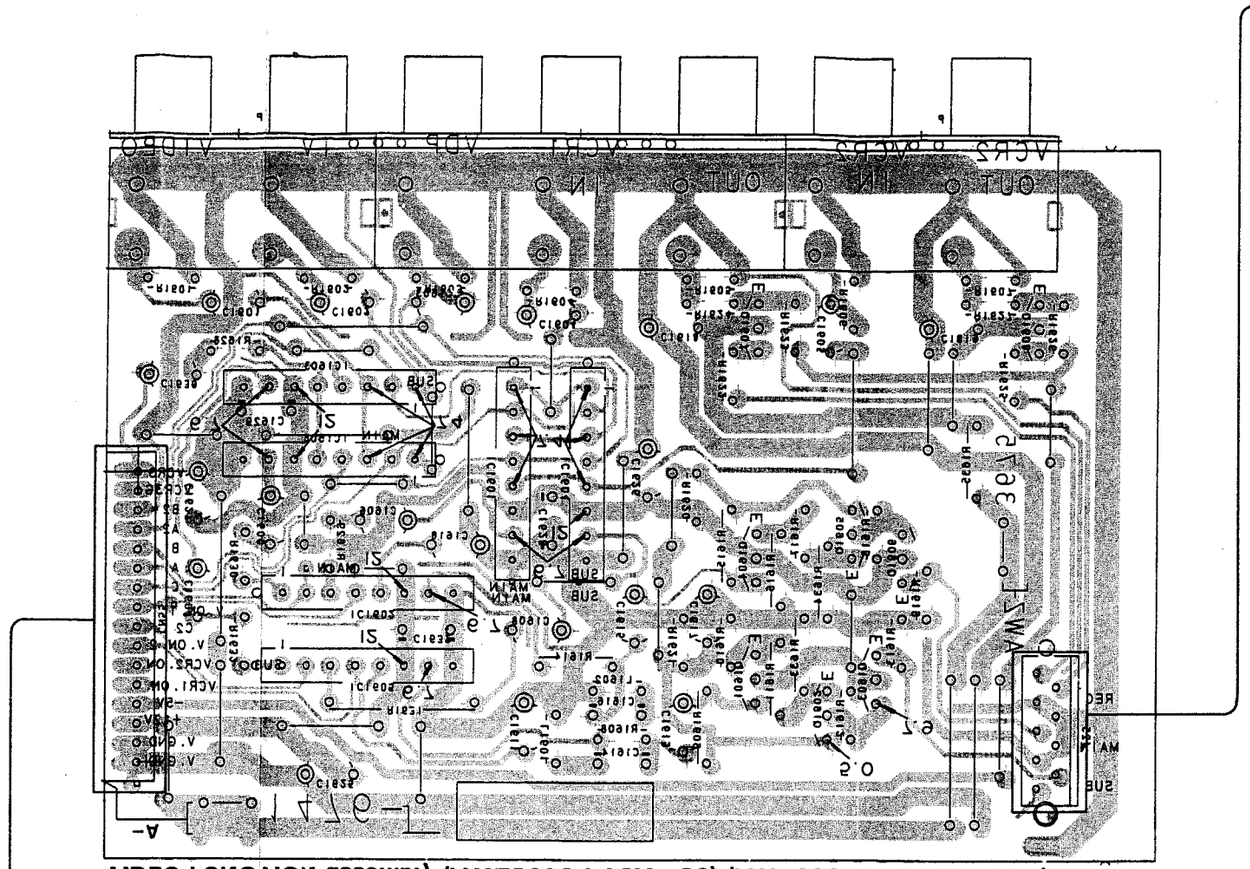

VIDEO FUNCTION assemply (AWZ367Z : XSV-9E) (AWZ365Z : XSV-9EE00)

to P2.U-COM assemply (P18 ➡) CN22

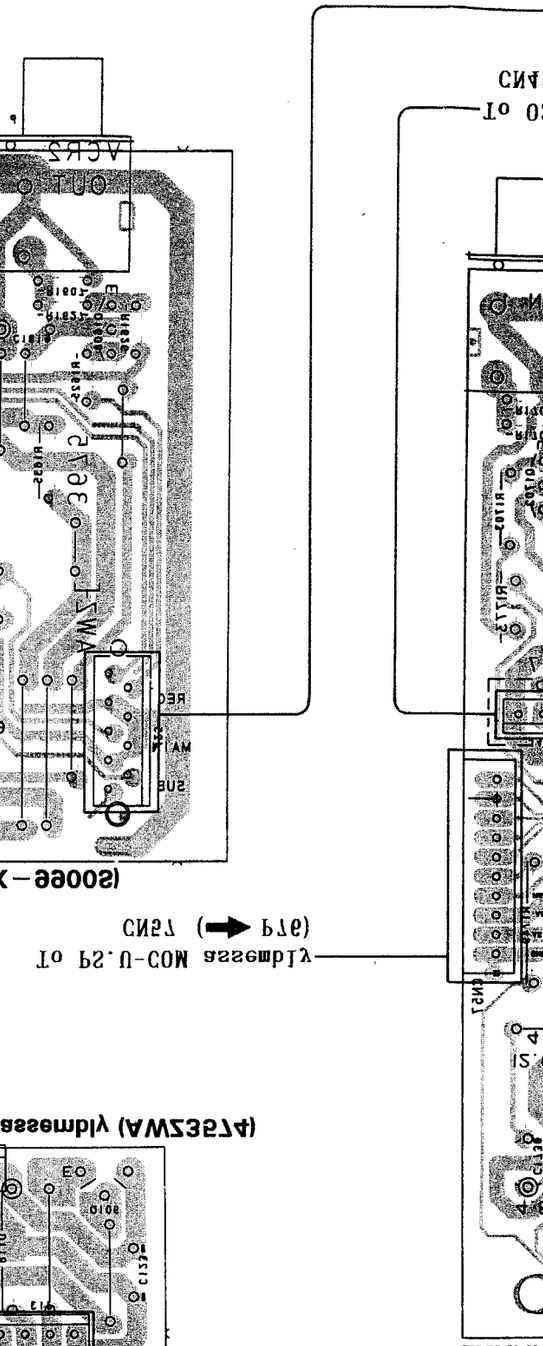

ENHANCER

to P2.U-COM assemply (P18 ➡) CN21

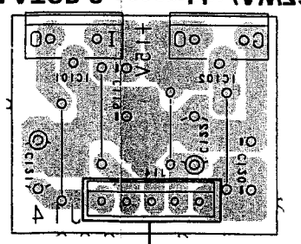

REGULATOR 2 assemply (AWZ357Z)

to P2.U-COM assemply (P18 ➡) CN14

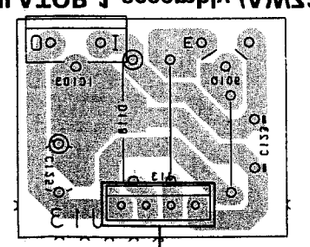

REGULATOR 1 assemply (AWZ357Y)

to P2.U-COM assemply (P18 ➡) CN13

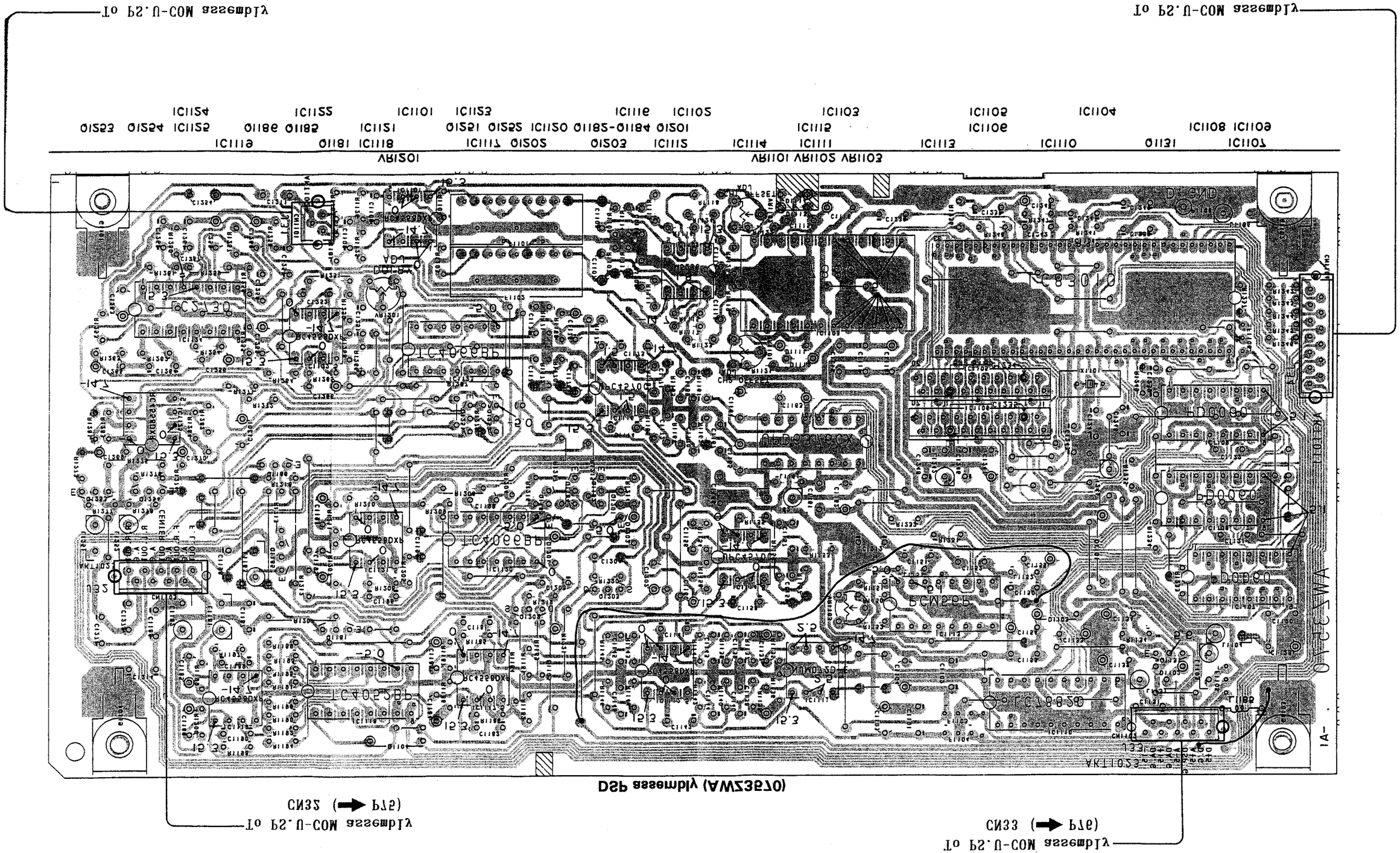
To P2.U-COM assembly
(P19 ➡ CN33)
To P2.U-COM assembly
(P19 ➡ CN35)
DSP assembly (AWZ3270)

3.4 DSP assembly (AWZ3570)

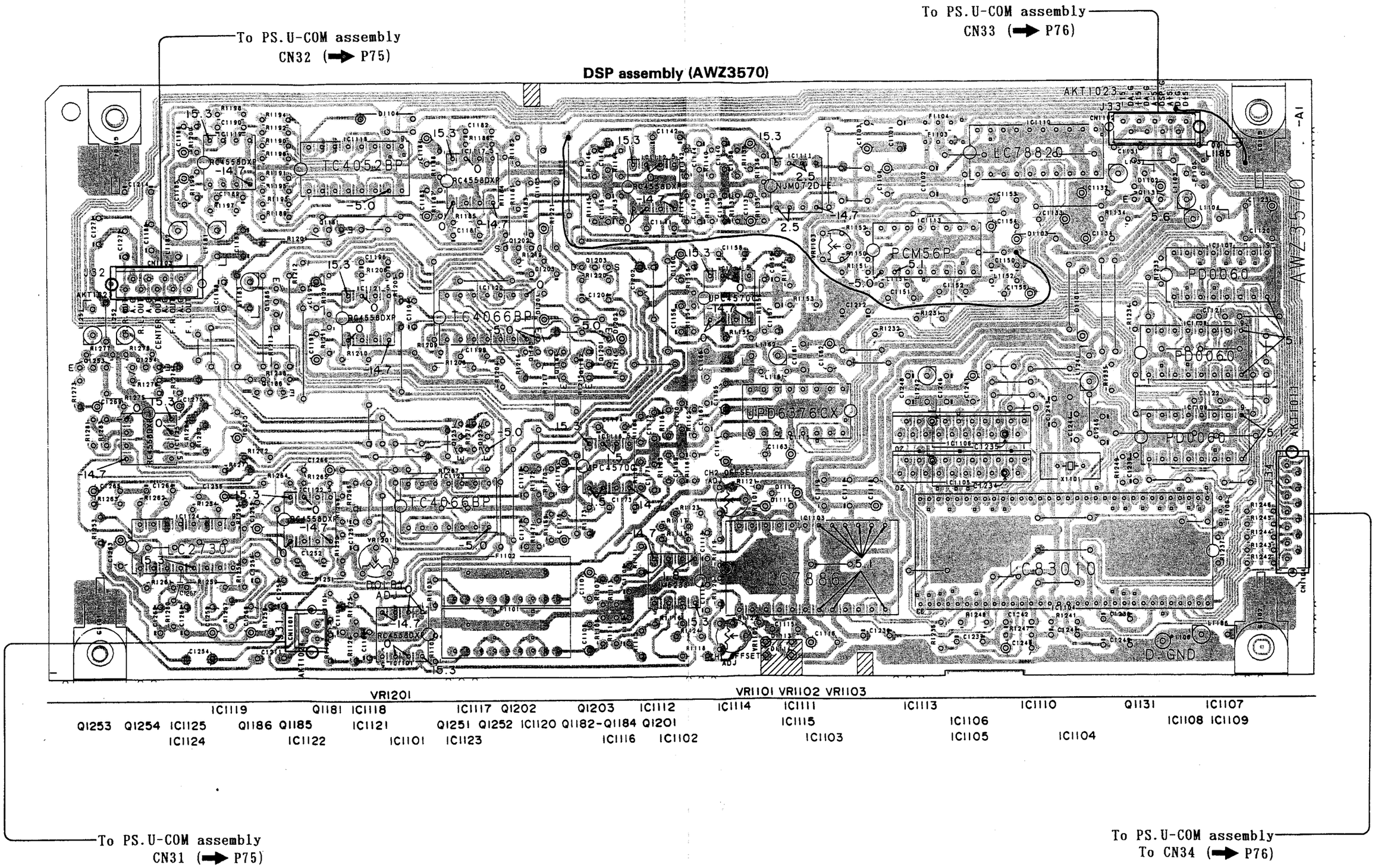

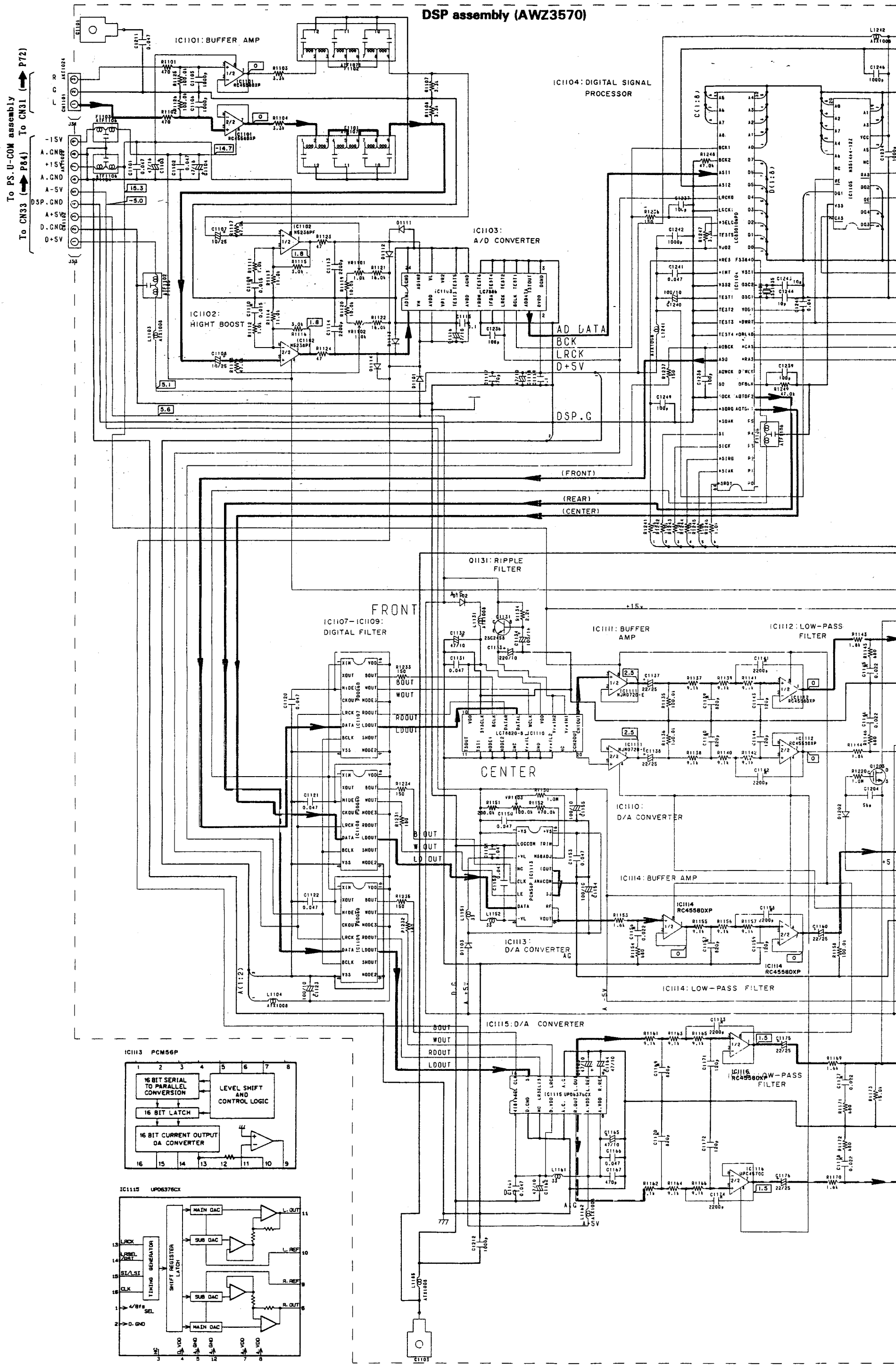
DSP assembly (AWZ3570)
IC1101: BUFFER AMP
IC1104: DIGITAL SIGNAL PROCESSOR
IC1103: A/D CONVERTER
IC1102: HIGHT BOOST
To PS.U-COM assembly
To CN33 (P84)
To CN31 (P72)
AD DATA
BCK
LRCK
D+5V
DSP.G
(FRONT)
(REAR)
(CENTER)
Q1131: RIPPLE FILTER
FRONT
IC1107–IC1109: DIGITAL FILTER
IC1111: BUFFER AMP
IC1112: LOW-PASS FILTER
CENTER
IC1110: D/A CONVERTER
IC1114: BUFFER AMP
IC1113: D/A CONVERTER
IC1114: LOW-PASS FILTER
IC1115: D/A CONVERTER
IC1116: LOW-PASS FILTER
IC1113 PCM56P
16 BIT SERIAL TO PARALLEL CONVERSION
LEVEL SHIFT AND CONTROL LOGIC
16 BIT LATCH
16 BIT CURRENT OUTPUT DA CONVERTER
IC1115 UPD6376CX
MAIN DAC
SUB DAC
TIMING GENERATOR
SHIFT REGISTER LATCH
L. OUT
L. REF
R. REF
R. OUT

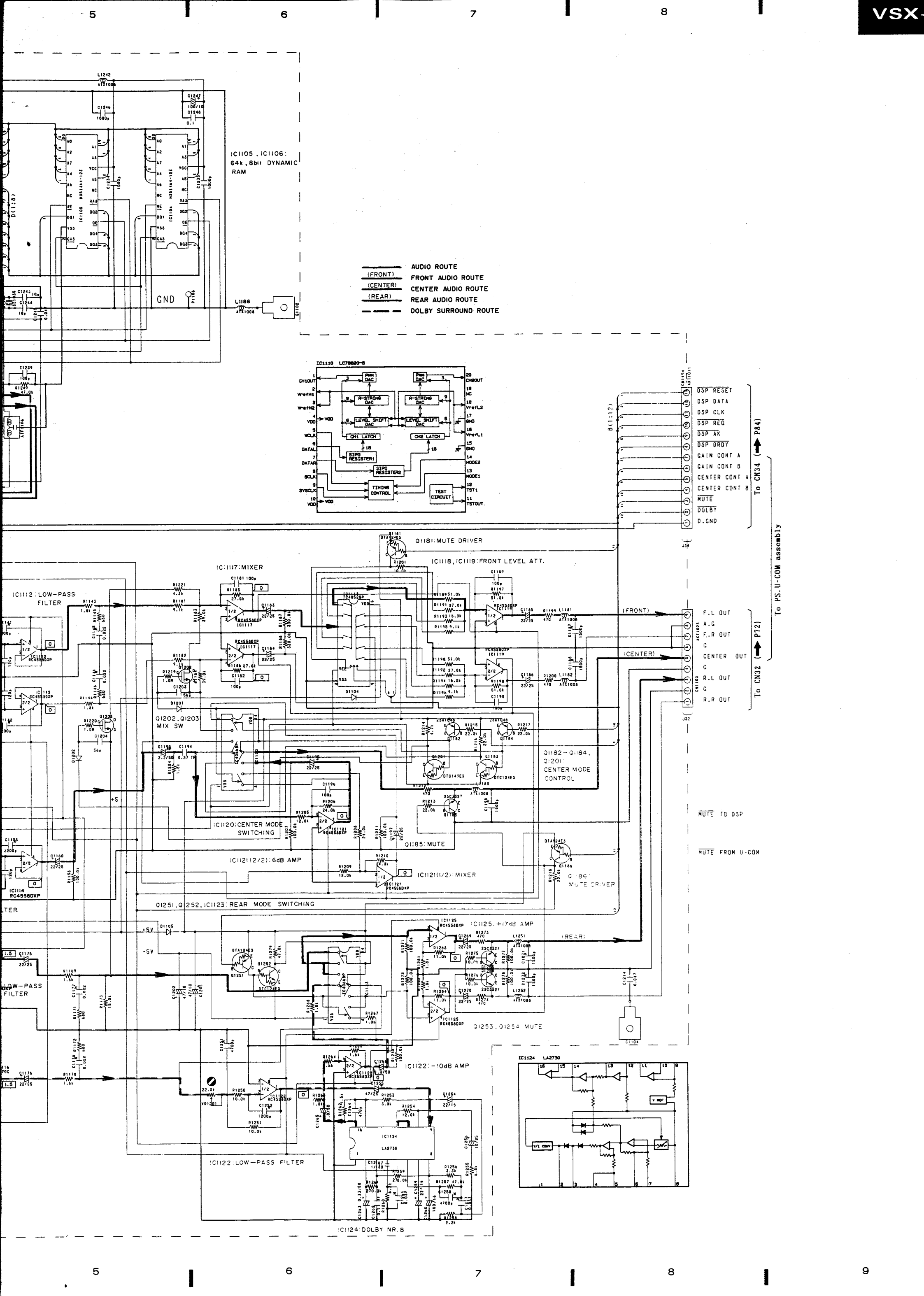
IC1105 , IC1106:
64k , 8bit DYNAMIC
RAM
GND
AUDIO ROUTE
(FRONT) FRONT AUDIO ROUTE
(CENTER) CENTER AUDIO ROUTE
(REAR) REAR AUDIO ROUTE
DOLBY SURROUND ROUTE
IC1110 LC78620-8
DSP RESET
DSP DATA
DSP CLK
DSP REQ
DSP AK
DSP DRDY
GAIN CONT A
GAIN CONT B
CENTER CONT A
CENTER CONT B
MUTE
DOLBY
D.GND
To CN34 (P84)
To PS.U-COM assembly
Q1181:MUTE DRIVER
IC1118,IC1119:FRONT LEVEL ATT.
IC1117:MIXER
IC1112:LOW-PASS FILTER
Q1202,Q1203 MIX SW
Q1182-Q1184, Q1201: CENTER MODE CONTROL
IC1120:CENTER MODE SWITCHING
Q1185:MUTE
IC1121(2/2):6dB AMP
IC1121(1/2):MIXER
Q1186 MUTE DRIVER
Q1251,Q1252,IC1123:REAR MODE SWITCHING
IC1125:+17dB AMP
Q1253,Q1254 MUTE
IC1122:-10dB AMP
IC1122:LOW-PASS FILTER
IC1124:DOLBY NR.B
IC1124 LA2730
(FRONT)
(CENTER)
(REAR)
F.L OUT
A.G
F.R OUT
C
CENTER OUT
C
R.L OUT
C
R.R OUT
To CN32 (P72)
MUTE TO DSP
MUTE FROM U-COM

3.5 TUNER (AWE1160), FRONT AMP (AWH1014) and R. C. AMP assembly (AWZ3568)

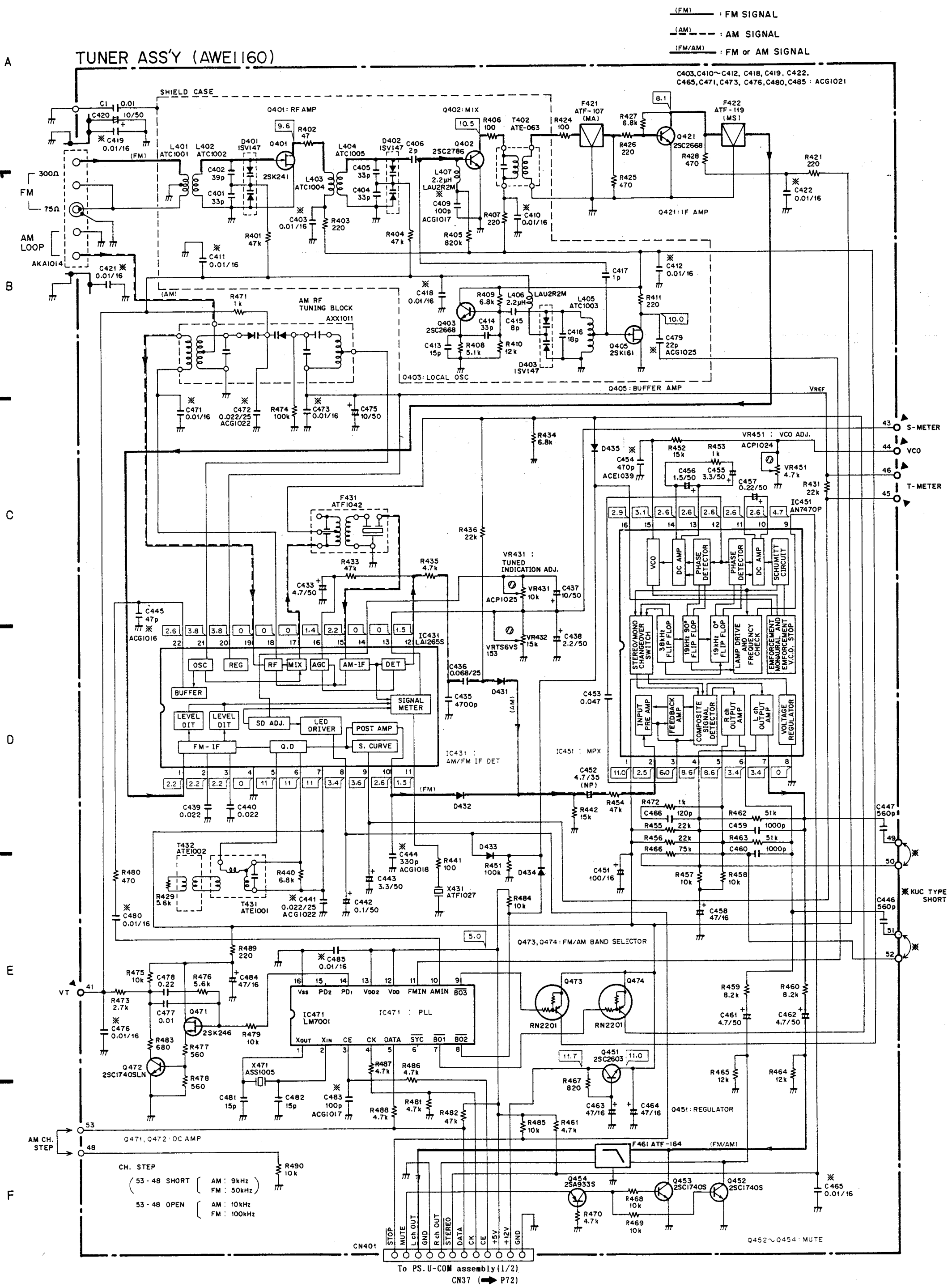

FRONT AMP assembly (AWH1014)

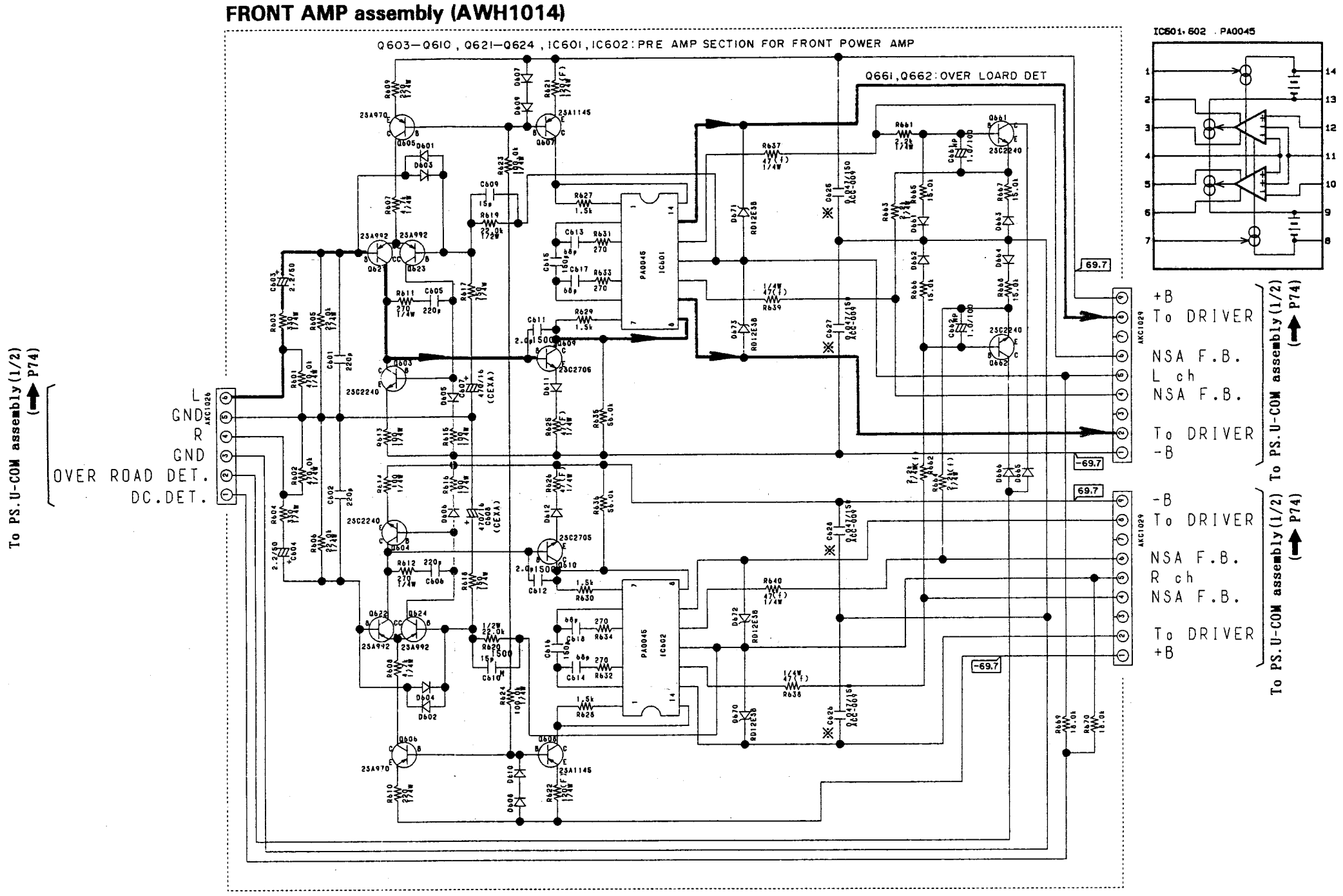

R. C. AMP assembly (AWZ3568)

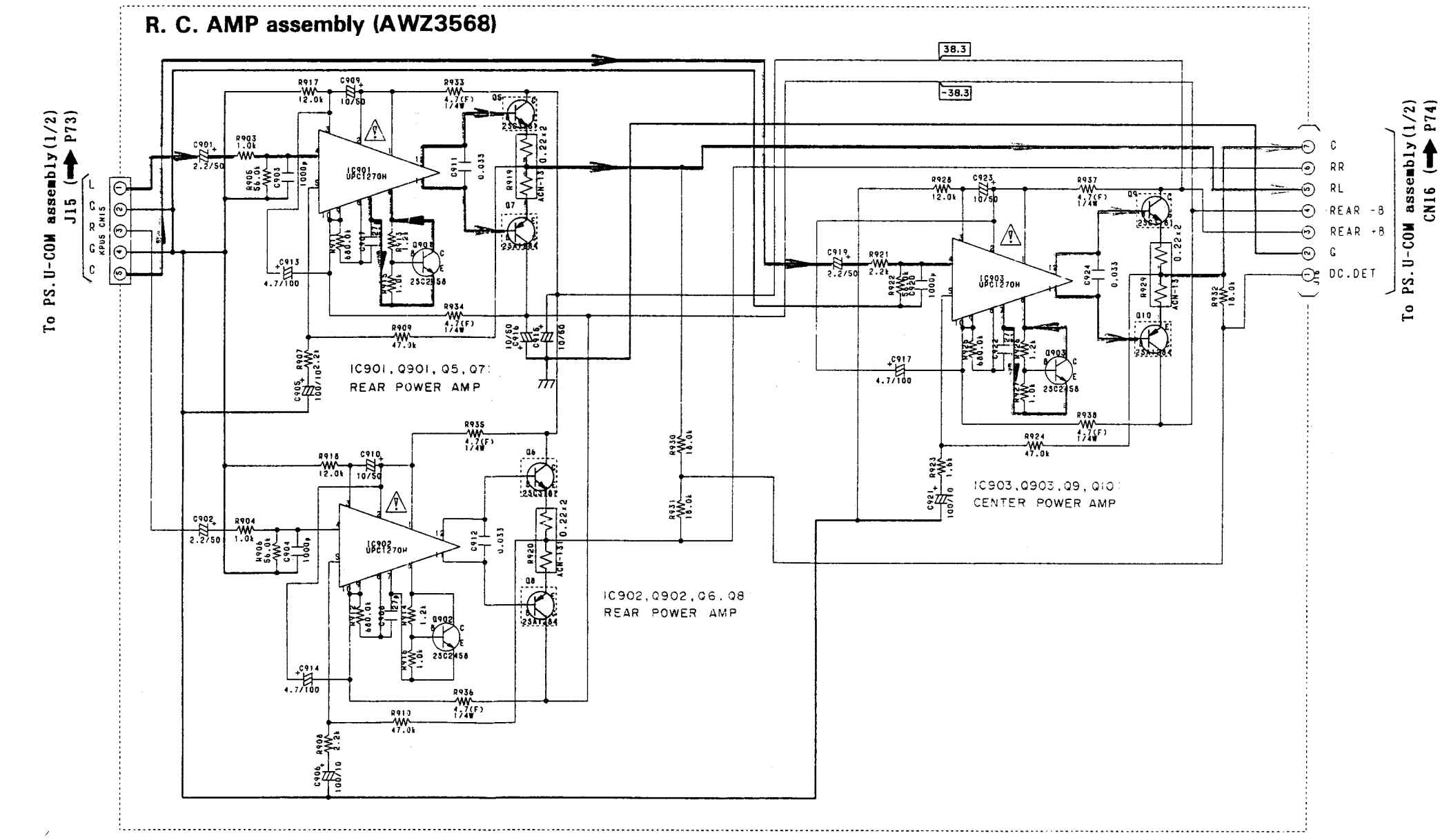

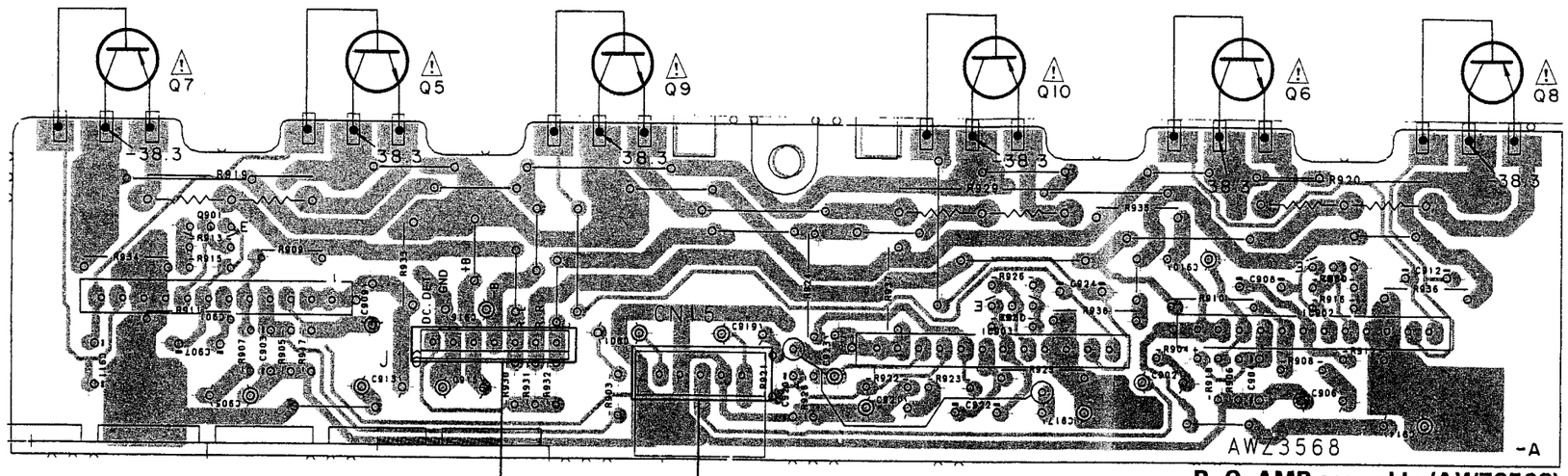

R. C. AMP assembly (AWZ3568)

To PS.U-COM assembly
CN16 (➡ P76)

To PS.U-COM assembly
J15 (➡ P76)

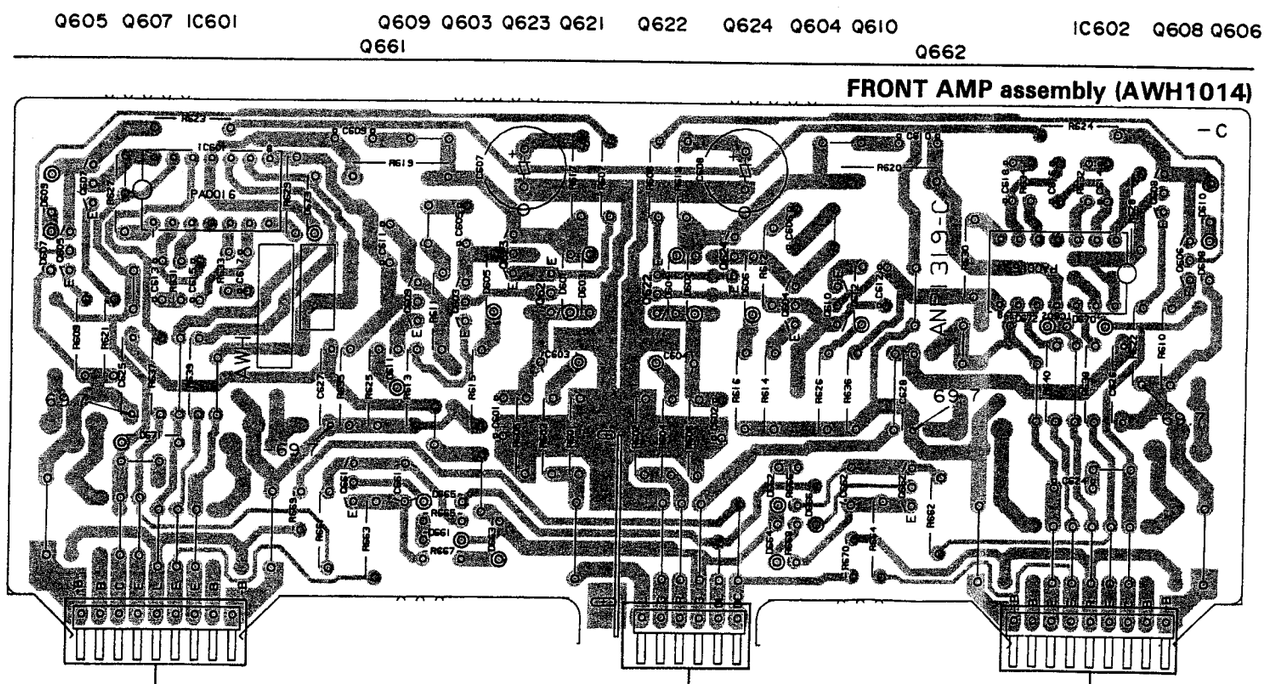

FRONT AMP assembly (AWH1014)

To PS.U-COM assembly
B,D,F (➡ P75,P76)

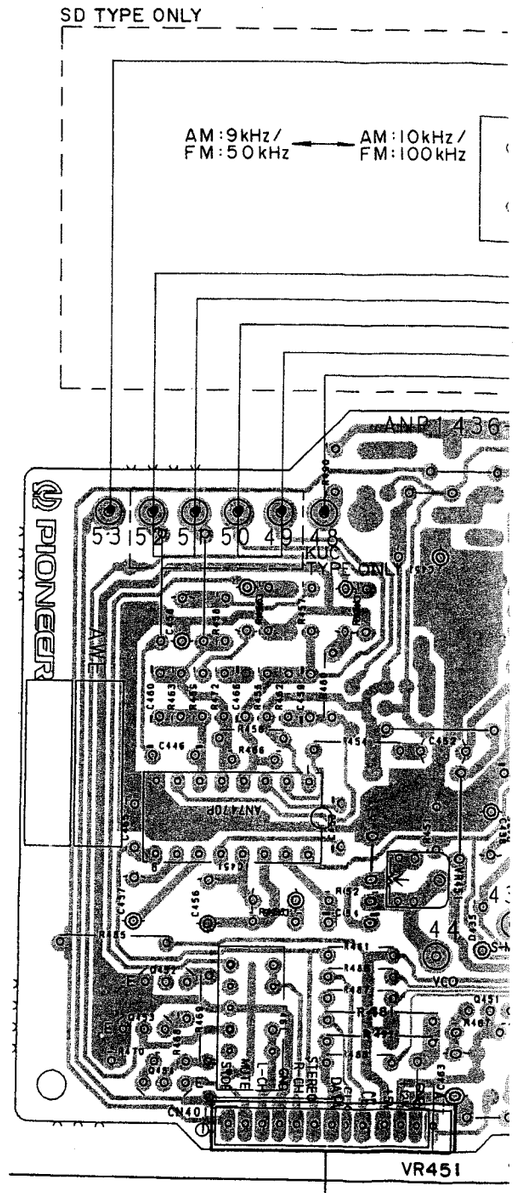

IC451
Q453 Q452 Q454

To PS.U-COM assembly
CN37 (➡ P75)

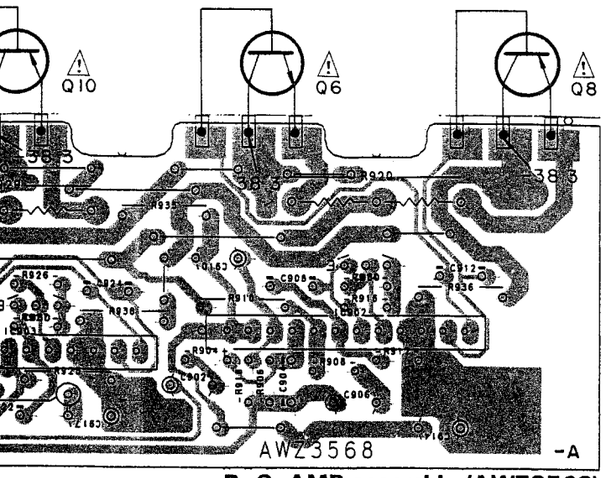

R. C. AMP assembly (AWZ3568)

sembly
▶ P76)

Q610 IC602 Q608 Q606
Q662

FRONT AMP assembly (AWH1014)

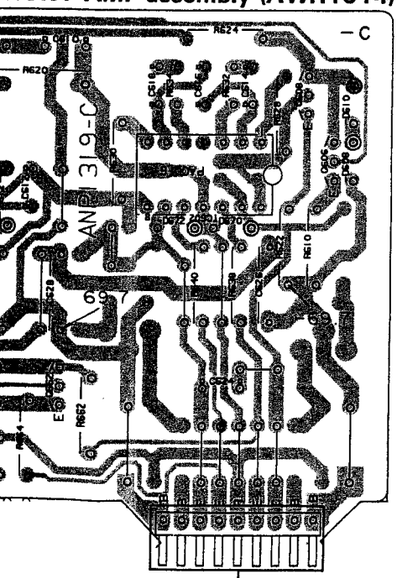

To PS.U-COM assembly
B,D,F (➡ P75,P76)

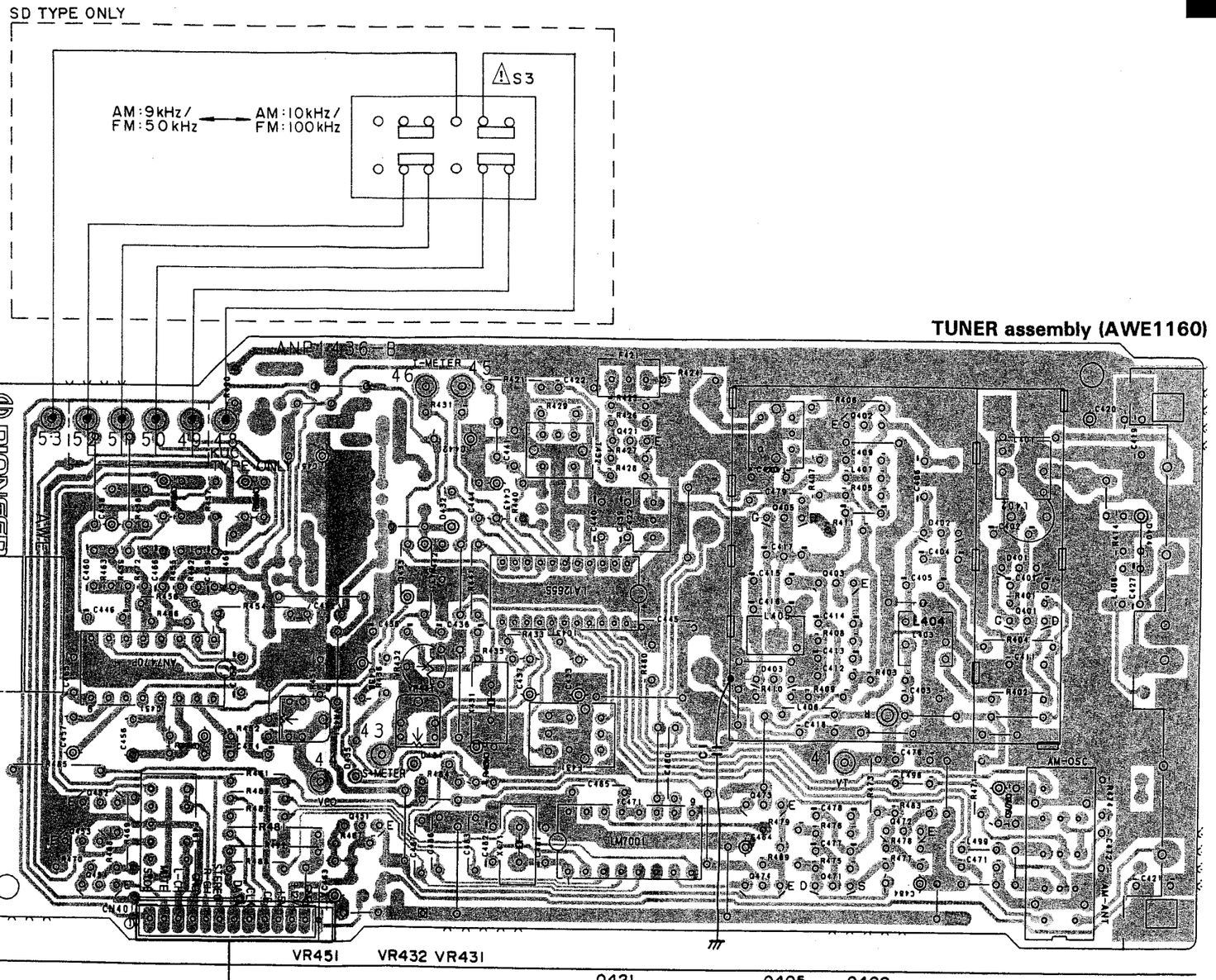

To PS.U-COM assembly
CN37 (➡ P75)

NOTE

1. This P.C.B connection diagram is viewed from the parts mounted side.
2. The parts which have been mounted on the board can be replaced with those shown with the corresponding wiring symbols listed in the following Table.

P.C.B. pattern diagram indication	Corresponding part symbol	Part Name
Q504	or	Transistor
Q215	or	Radiator type transistor
D203	D203	Diode
R237	R237	Resistor
C513	+	Capacitor (Polarity)
C518		Capacitor (Non-polarity)

Others

P.C.B. pattern diagram indication	Part Name
IC	IC
S	Switch
RY	Relay
L	Coil
F	Filter
VR	Variable resistor or Semi-fixed resistor

3. The capacitor terminal marked with ◎(double circles) shows negatine termianl.
4. The diode terminal marked with ◎(double circles) shows cathode side.
5. The transistor terminal to which E is affixed shows the emitter.

SD TYPE ONLY
S3
AM:9KHz\
FM:50KHz
AM:10KHz\
FM:100KHz
TUNER assembly (AWE1160)
AWE1160-B
To P5.U-COM assembly
CN37 (➡ P15)
R. C. AMP assembly (AWZ3568)
AWZ3568
FRONT AMP assembly (AWH1014)
To P5.U-COM assembly
B,D,F (➡ P15,P16)

R. C. AMP assembly (AWZ3568)

FRONT AMP assembly (AWH1014)

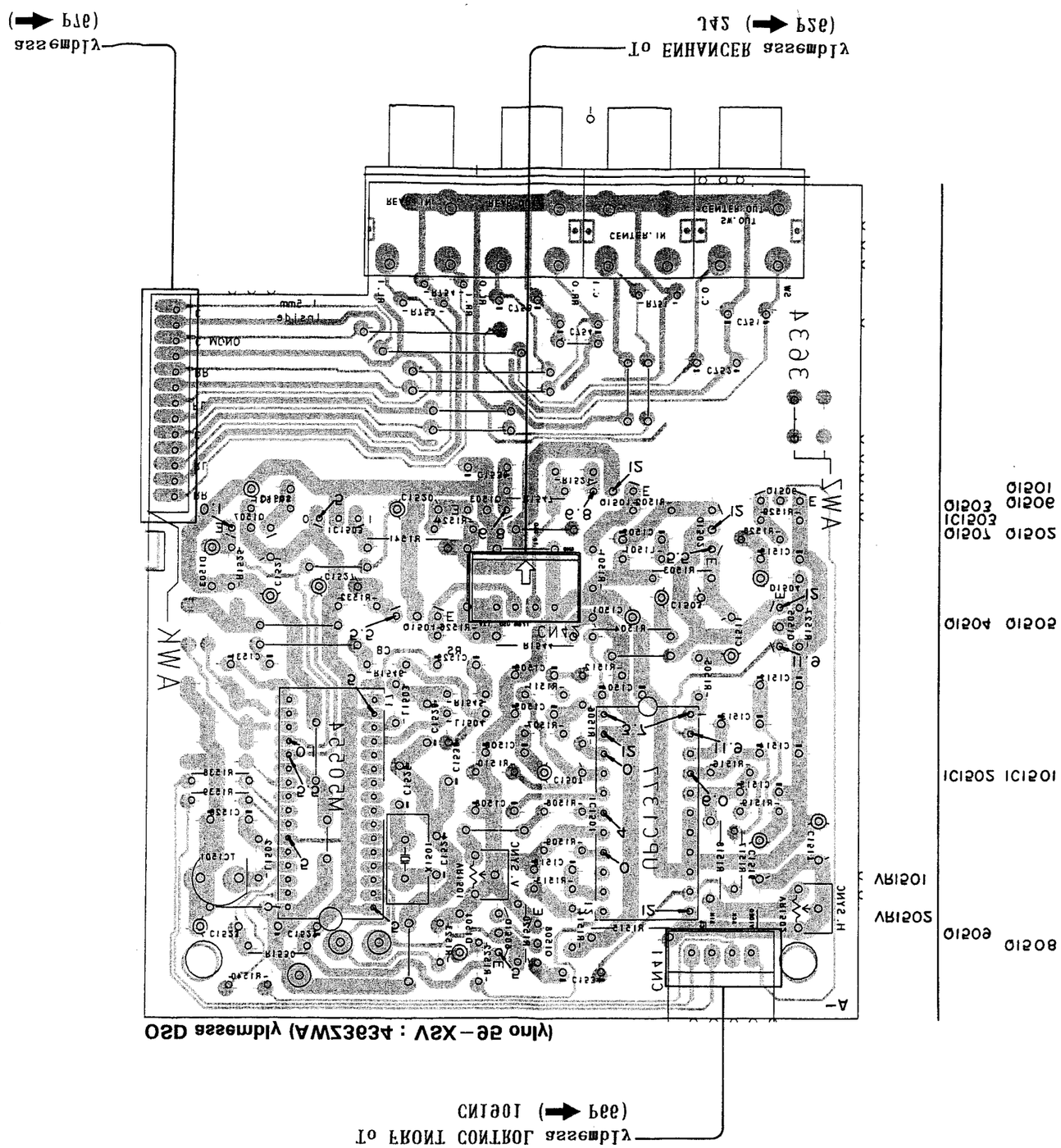

QSO assembly (AWZ383A : SE-XSV only)

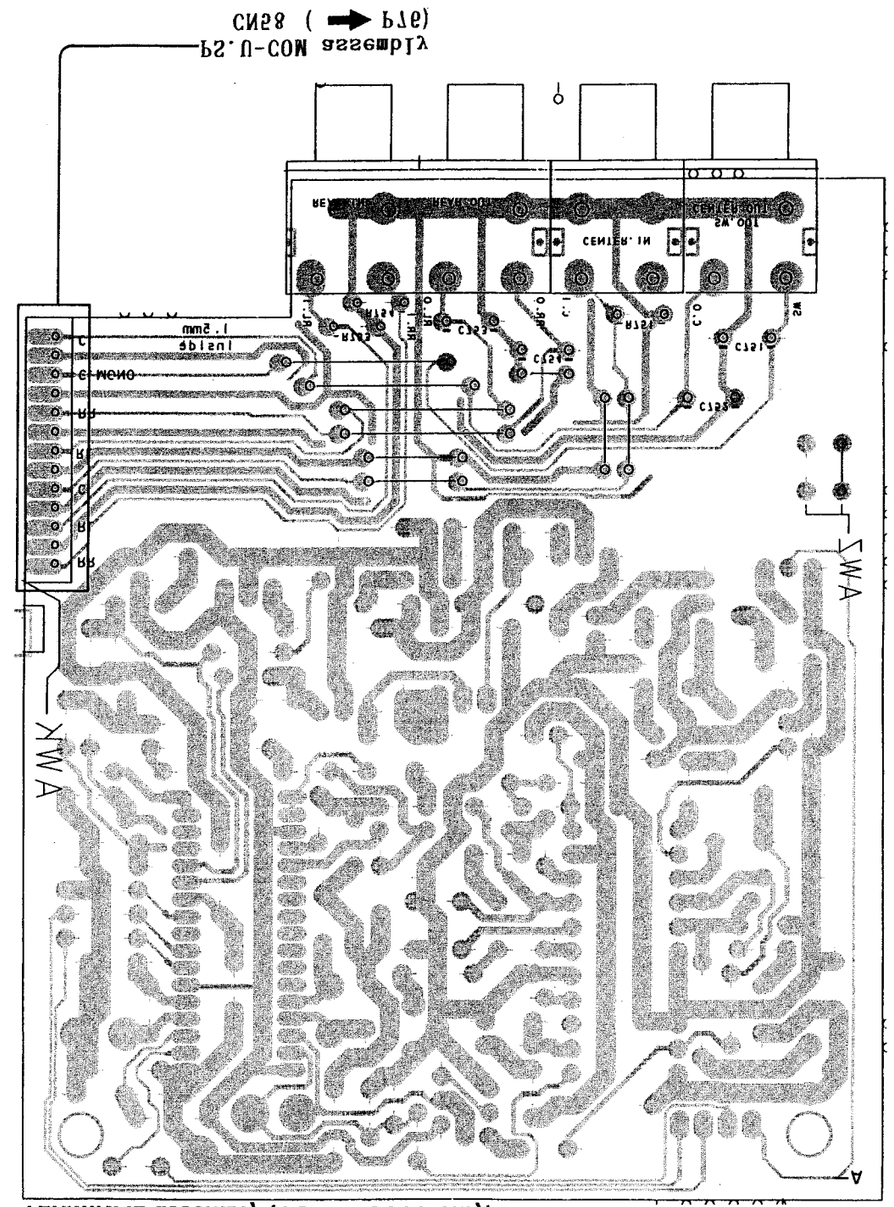

TERMINAL assembly (XSV-5006E only)

OSD assembly (AWZ3634 : VSX-95 only)
To FRONT CONTROL assembly
CN1301 (➡ P66)
To ENHANCER assembly
142 (➡ P26)
To P5.U-COM assembly
CN58 (➡ P76)
S. VIDEO assembly (AWZ3664)
To P5.U-COM assembly
CN56 (➡ P76)

3.6 OSD (AWZ3634) and S. VIDEO assembly (AWZ3564)

To PS.U-COM assembly
CN56 (➡ P76)

S. VIDEO assembly (AWZ3564)

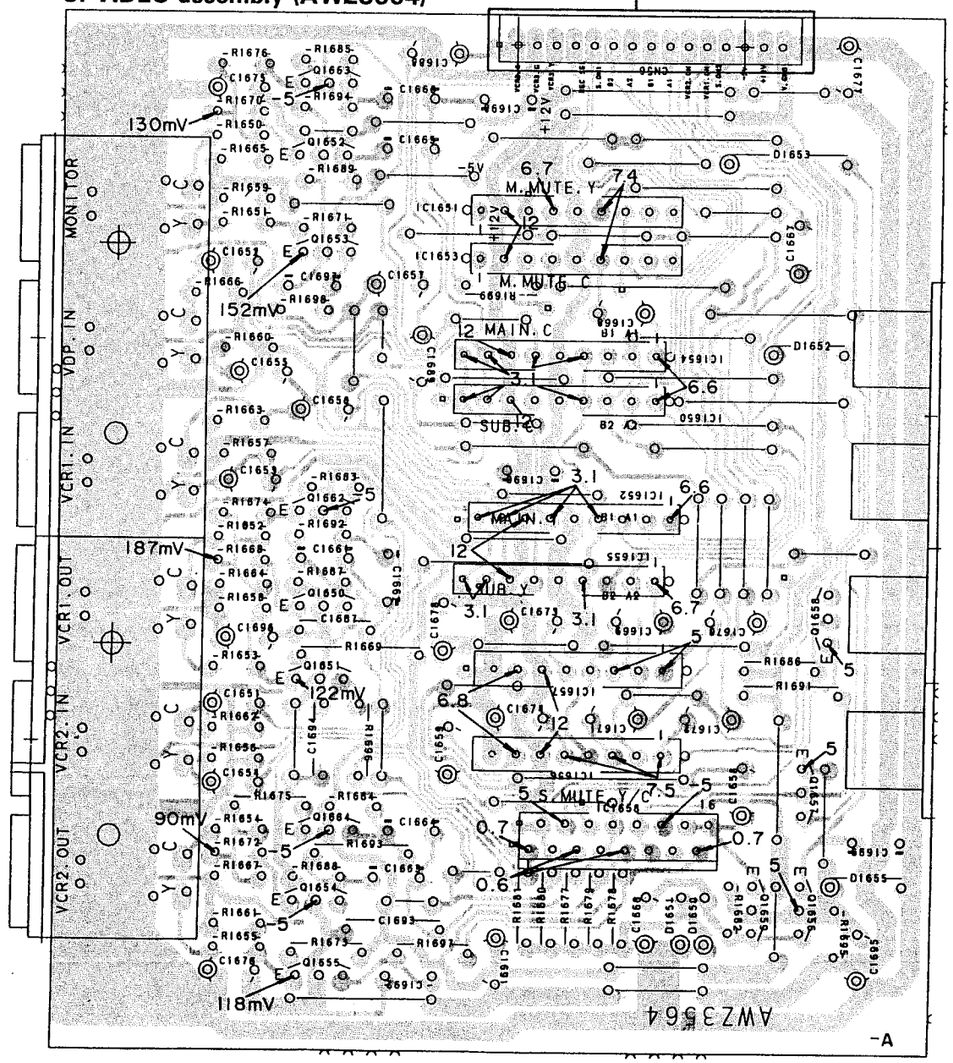

Q1663
Q1652
IC1651
Q1653
IC1653
IC1654
IC1650
Q1662 IC1652
IC1655
Q1650 Q1658
Q1651 IC1657
IC1656
Q1657
Q1664 IC1658
Q1654 Q1659 Q1656
Q1655

To FRONT CONTROL assembly
CN1901 (➡ P66)

OSD assembly (AWZ3634 : VSX−95 only)

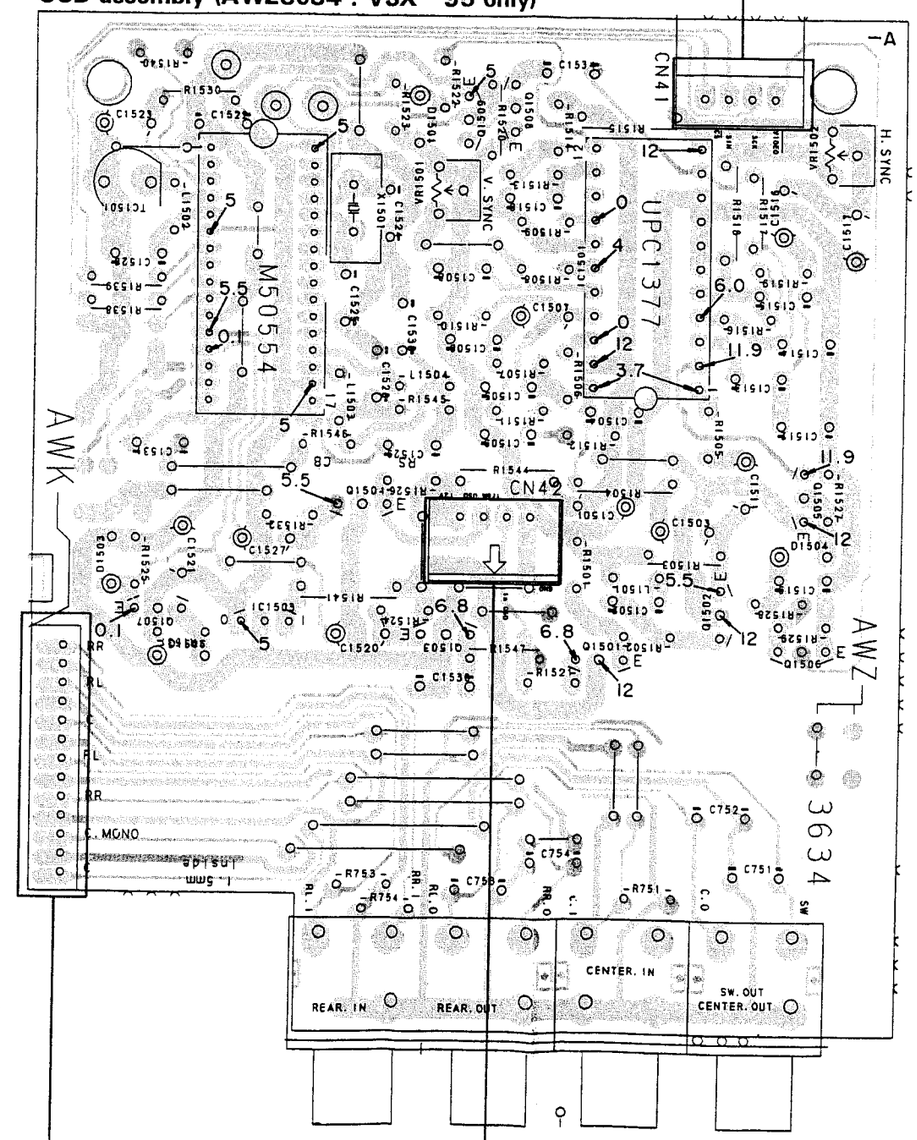

VR1502
VR1501
Q1509 Q1508
IC1502 IC1501
Q1504 Q1505
Q1507 Q1502
IC1503
Q1503 Q1506
Q1501

To PS.U-COM assembly
CN58 (➡ P76)

To ENHANCER assembly
J42 (➡ P26)

To FRONT CONTROL assembly
CN1901 (➡ P66)

OSD assembly (AWZ3634 : VSX−95 only)

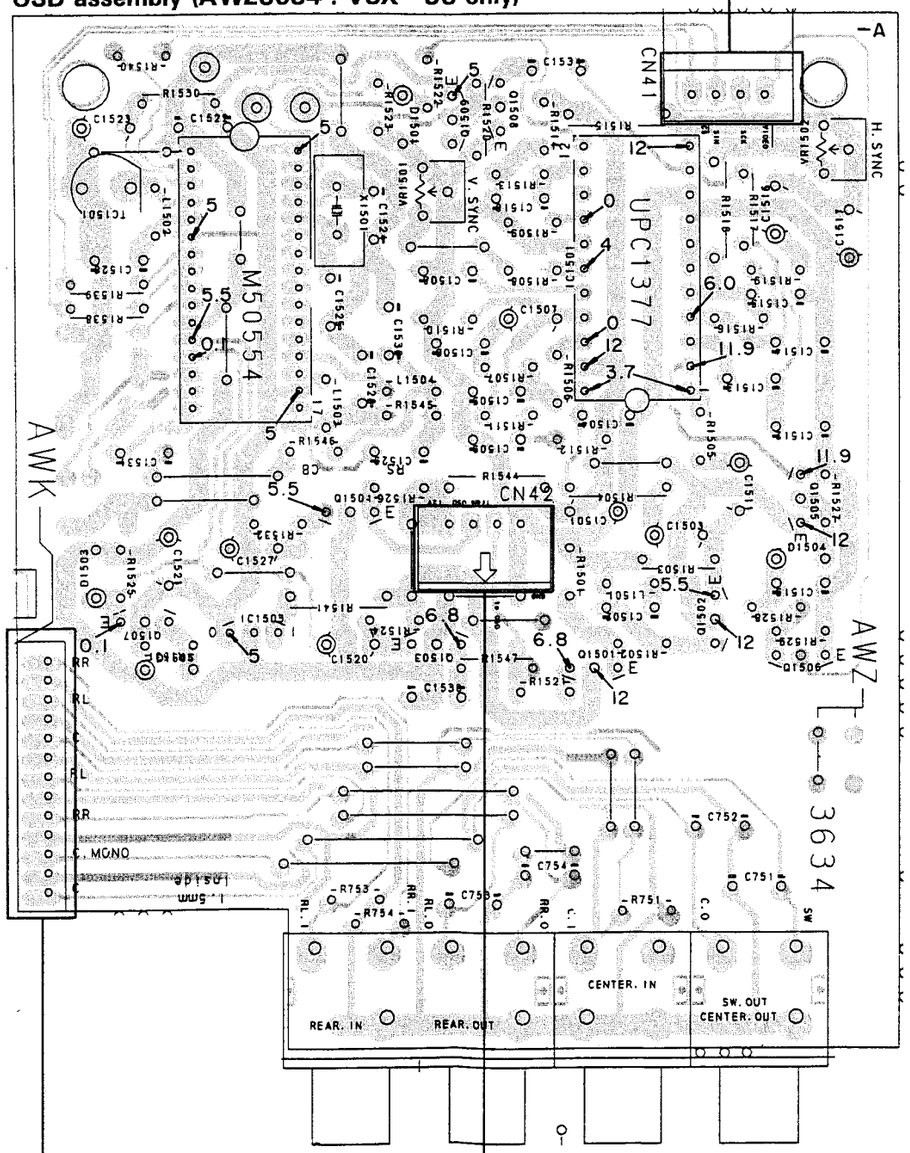

VR1502 Q1509 Q1508
VR1501
IC1502 IC1501
Q1504 Q1505
Q1507 Q1502
IC1503
Q1503 Q1506
Q1501

assembly
➡ P76)

To ENHANCER assembly
J42 (➡ P26)

TERMINAL assembly (VSX−9900S only)

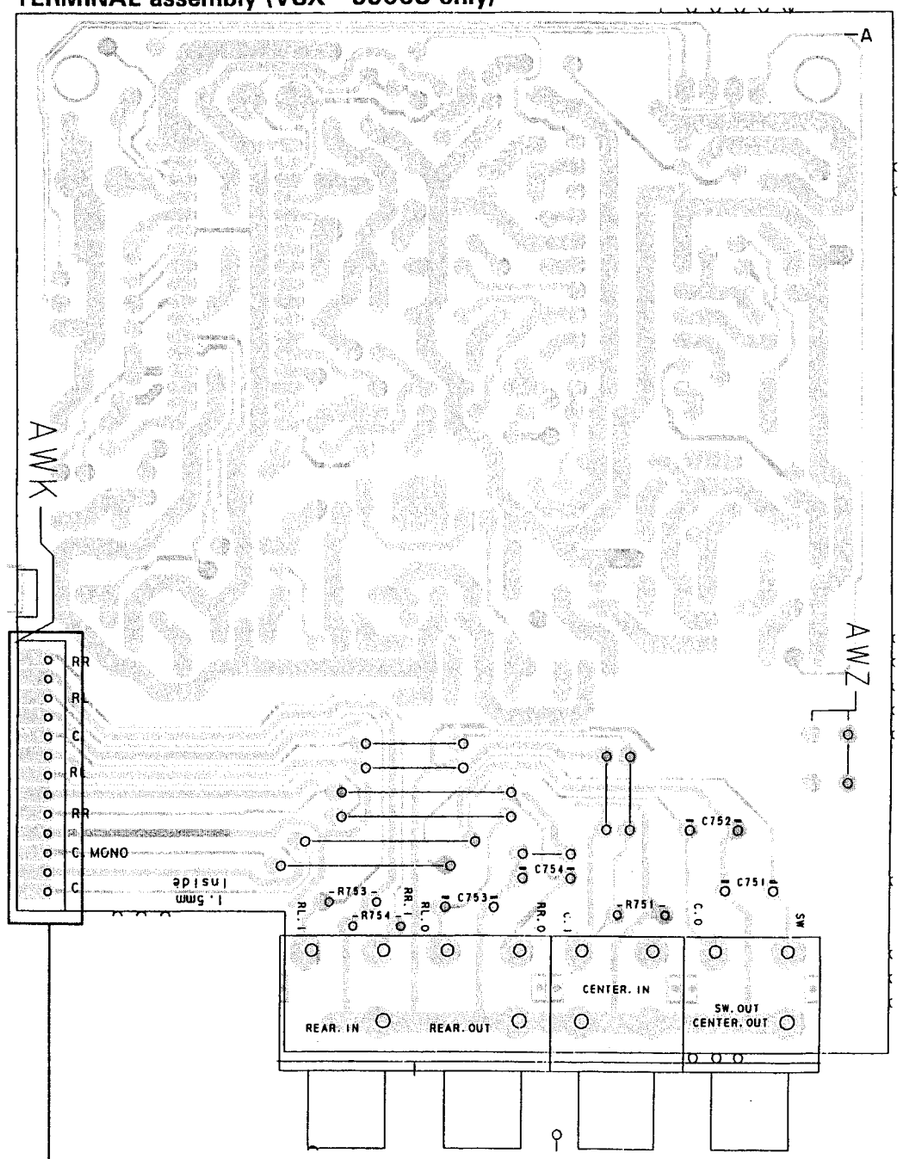

PS.U-COM assembly
CN58 (➡ P76)

OSD assembly (AWZ3634 : VSX−95 only)
TERMINAL assembly (VSX−9900S only)

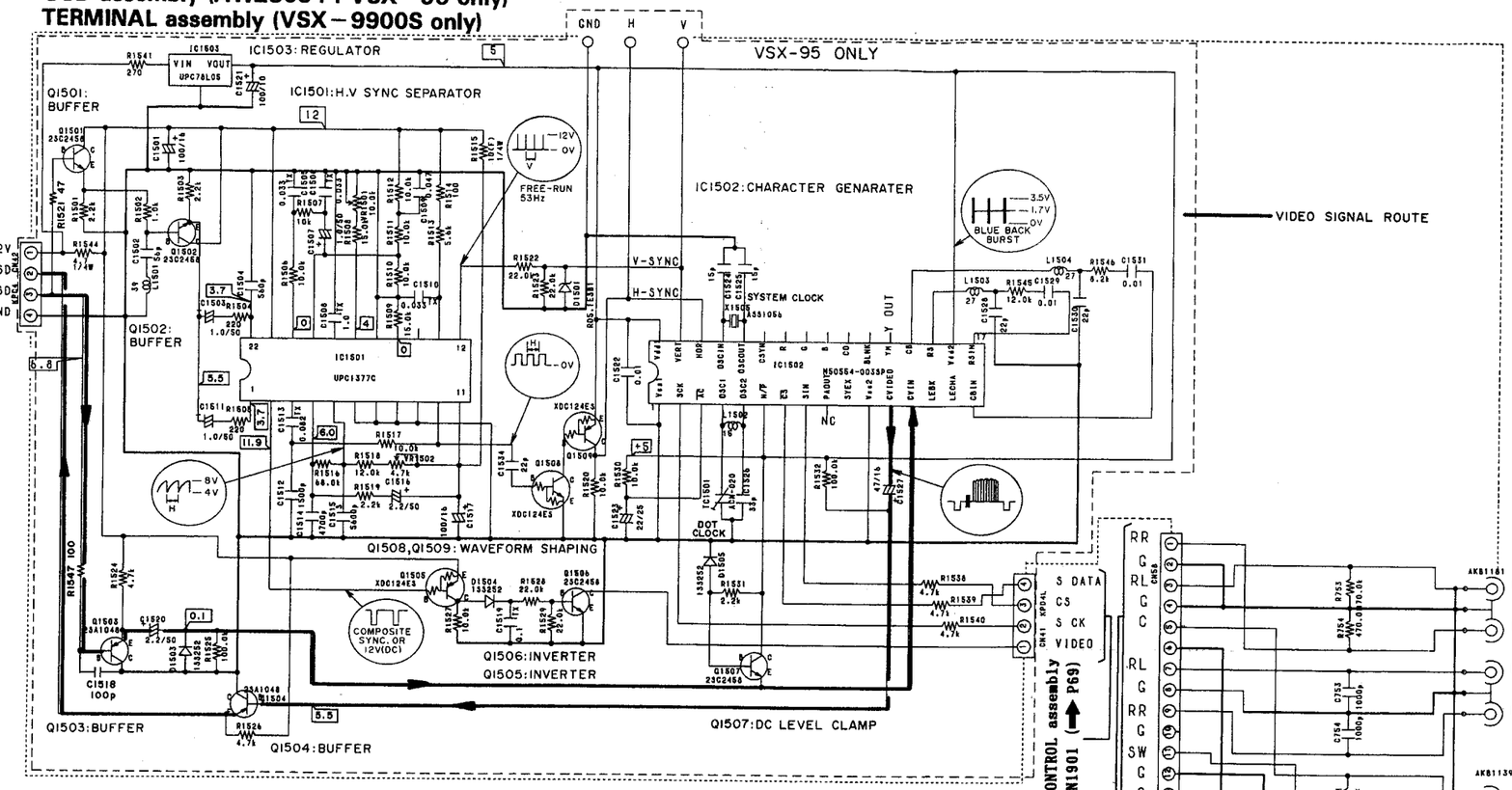

S. VIDEO assembly (AWZ3564)

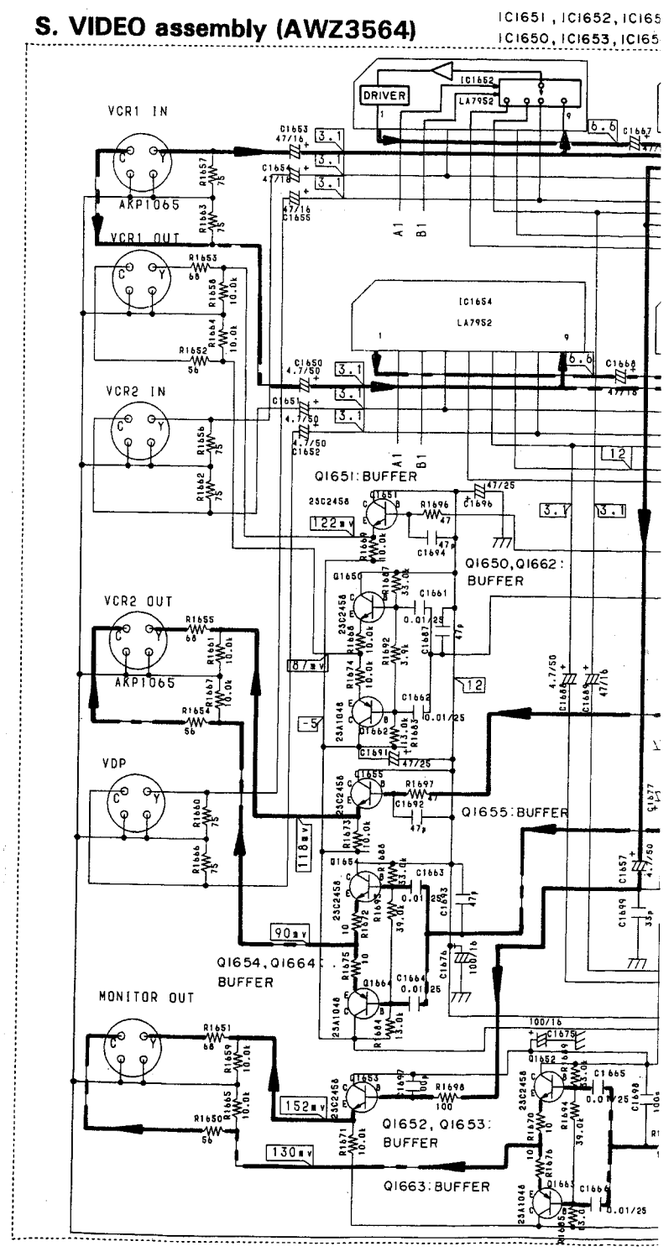

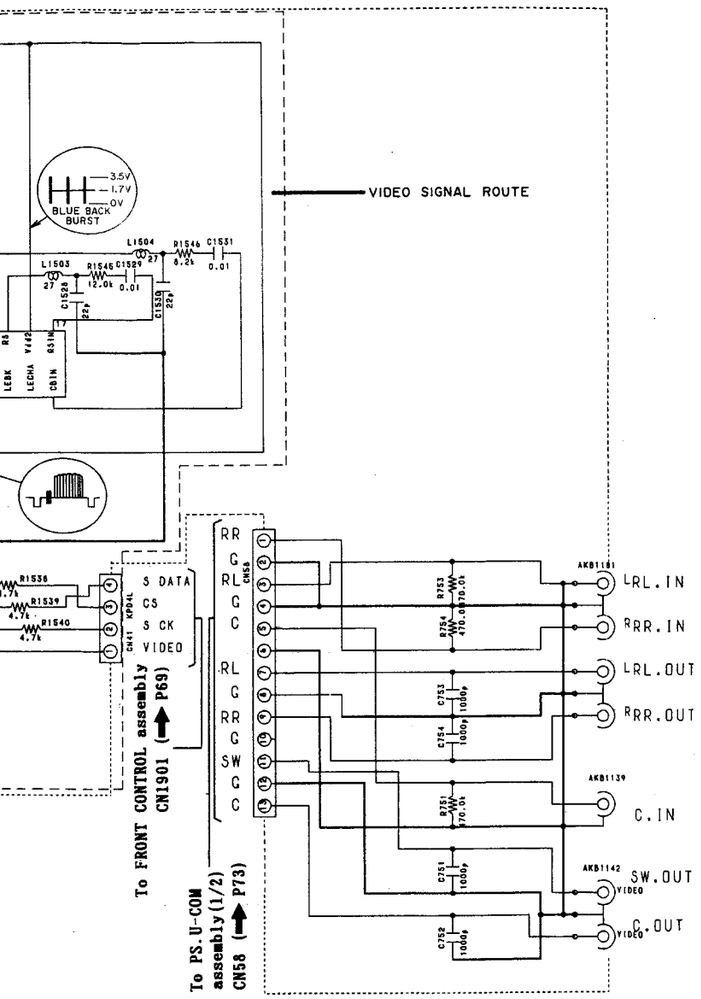

S. VIDEO assembly (AWZ3564)

IC1651, IC1652, IC1655, IC1657: Y-SIGNAL INPUT SELECTOR
IC1650, IC1653, IC1654, IC1656: C-SIGNAL INPUT SELECTOR

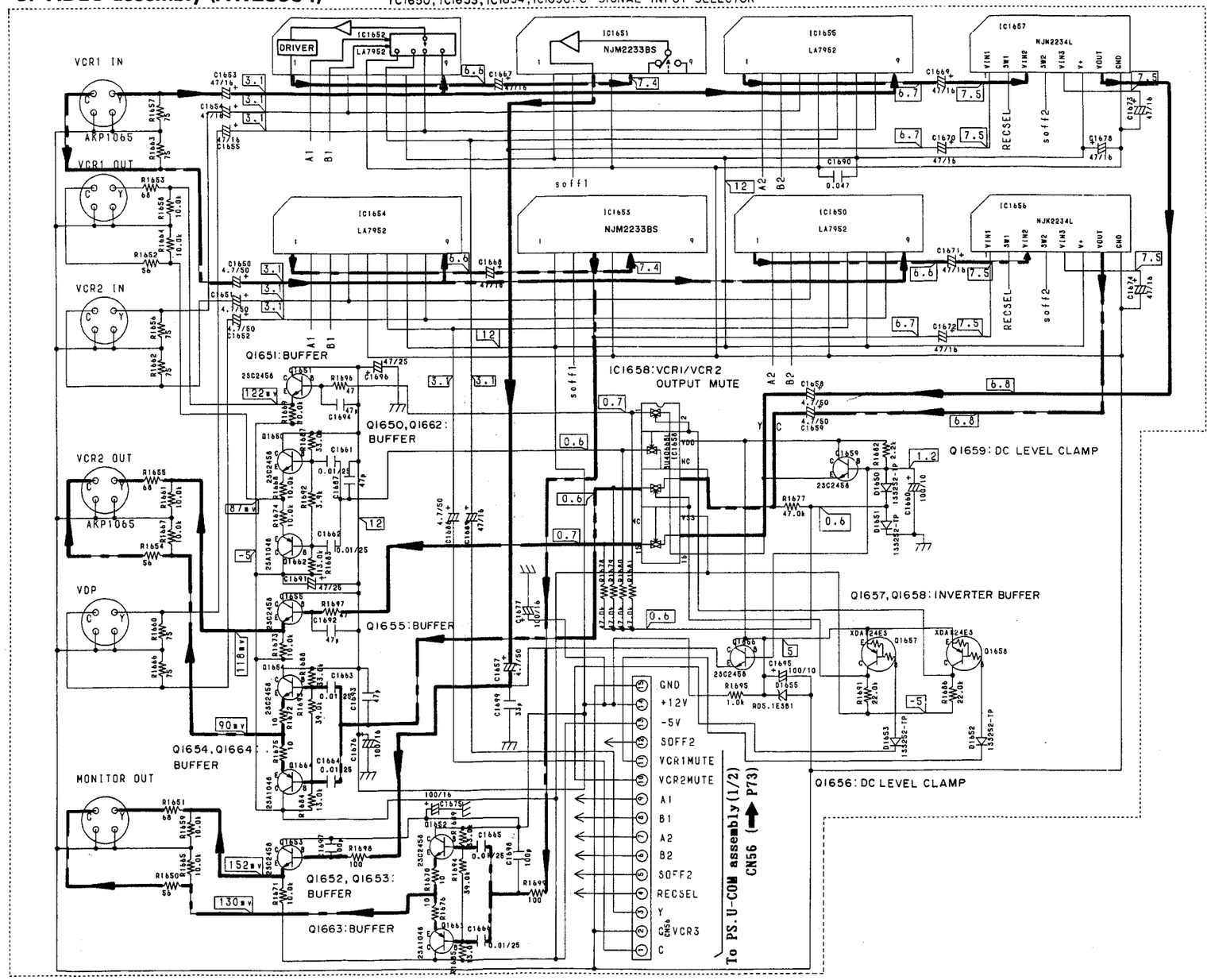

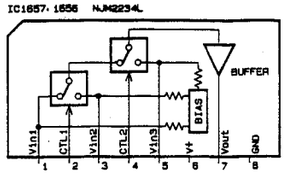

IC1601-1606(NJM2234L)

INPUT SIGNAL		OUTPUT SIGNAL
CTL1 (2 PIN)	CTL2 (4 PIN)	V OUT (7 PIN)
L	L	Vin1(1 PIN)
H	L	Vin2(3 PIN)
L/H	H	Vin3(5 PIN)

Y-SIGNAL
C-SIGNAL

3.7 MOTOR VOLUME (AWZ3567), HEADPHONE and R. C. SPEAKER assembly (AWZ3566)

MOTOR VOLUME assembly (AWZ3567)

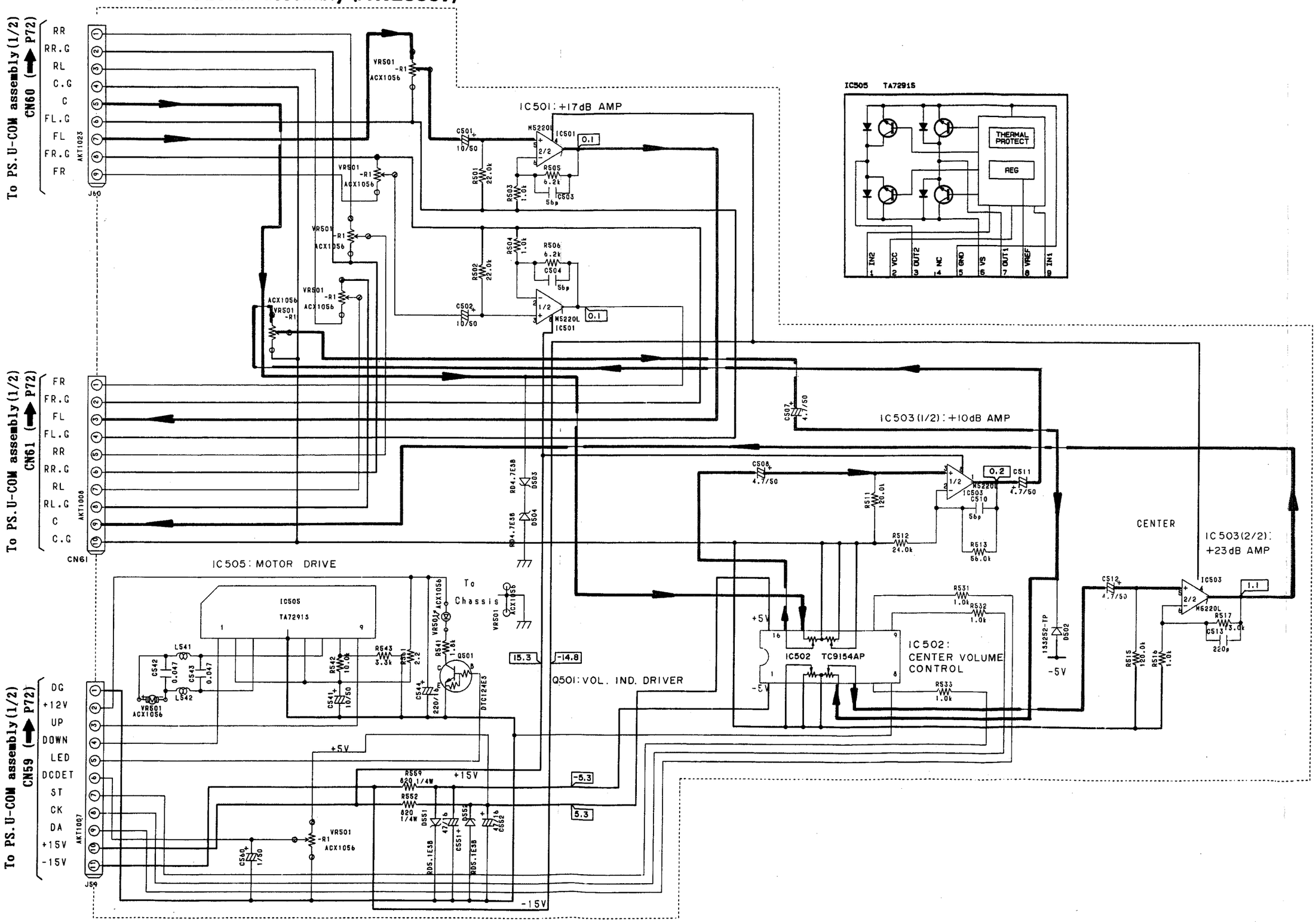

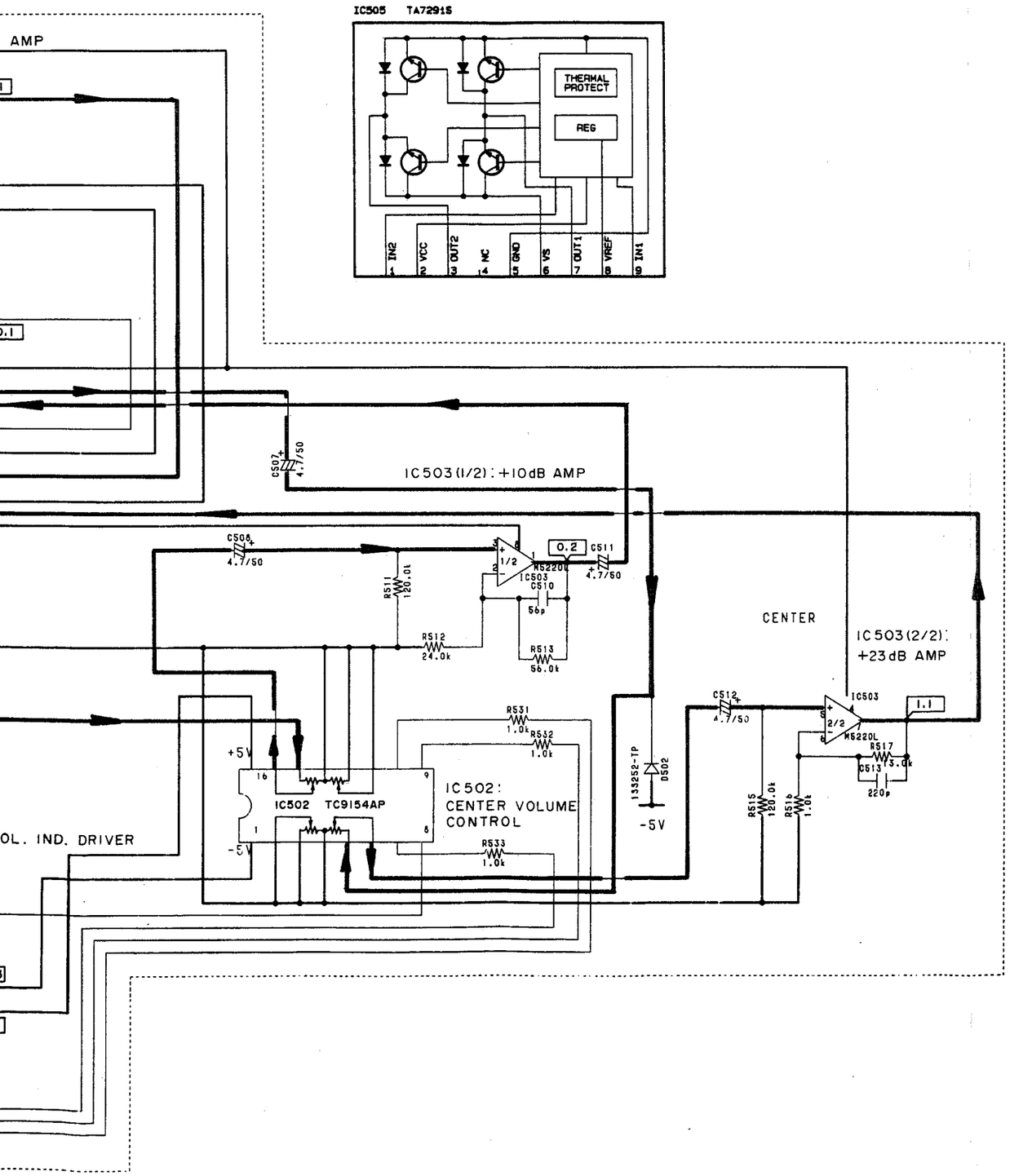

R. C. SPEAKER assembly (AWZ3566)

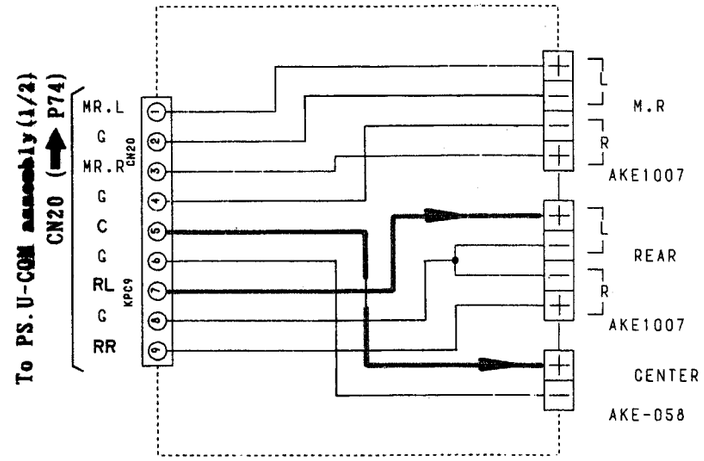

HEADPHONE assembly

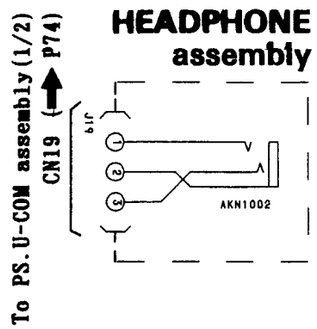

To PS.U-COM assembly
CN19 (➡ P76)

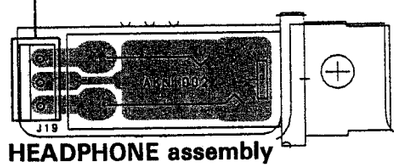

HEADPHONE assembly

To PS.U-COM assembly
CN20 (➡ P76)

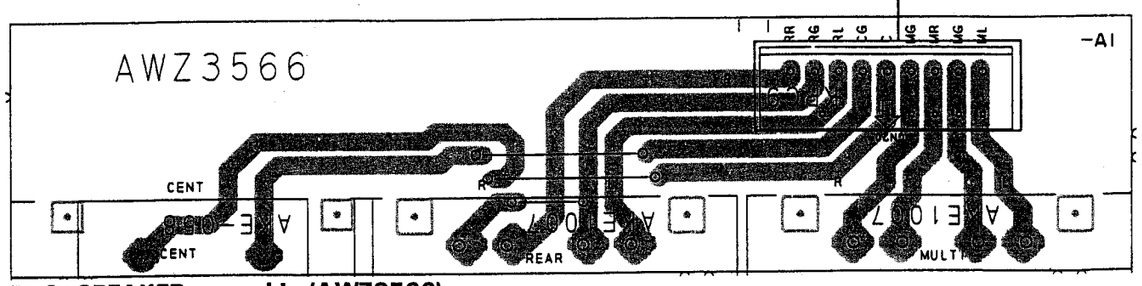

R. C. SPEAKER assembly (AWZ3566)

To PS.U-COM assembly
CN59 (➡ P75)

MOTOR VOLUME assembly (AWZ3567)

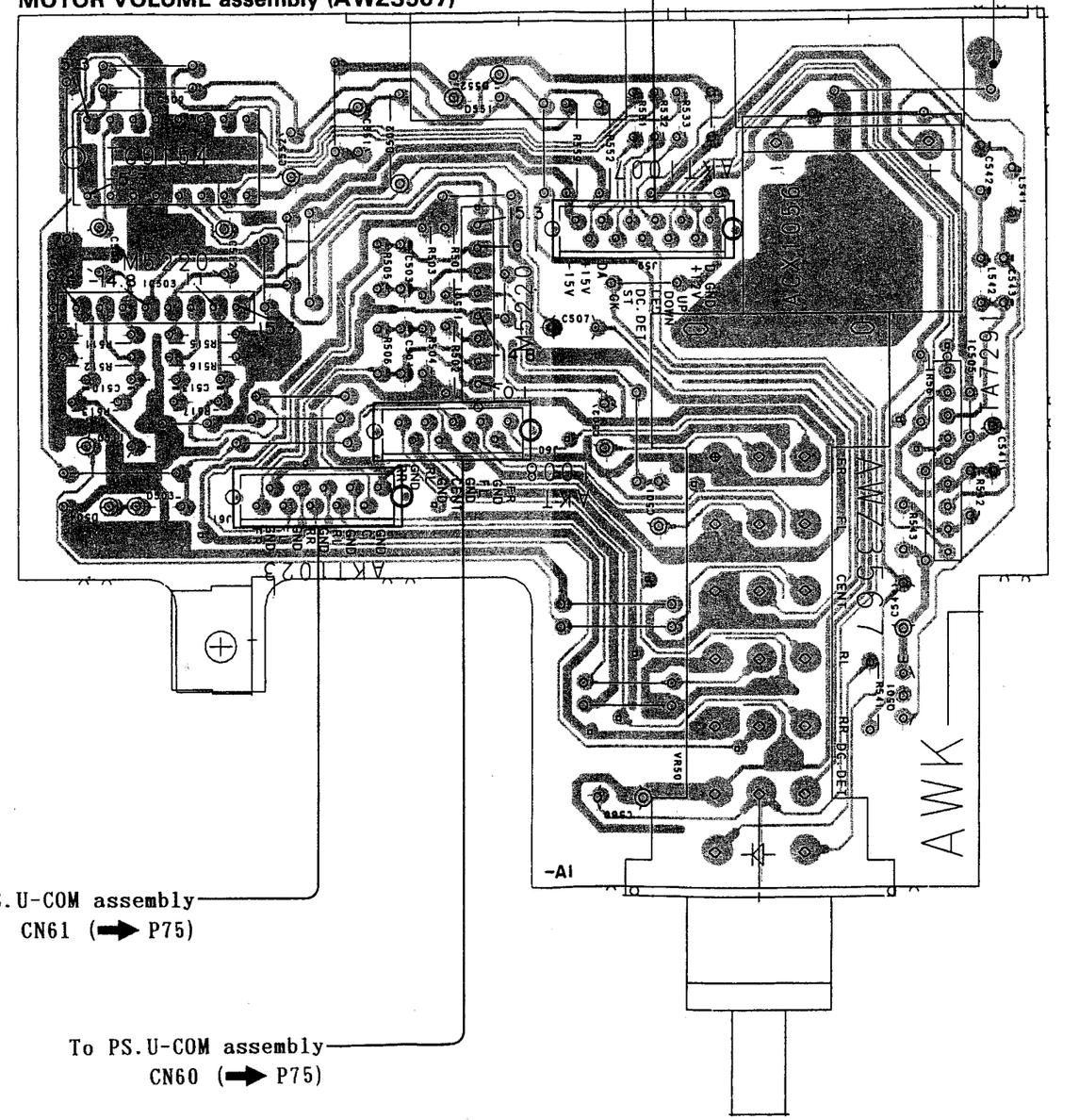

To PS.U-COM assembly
CN61 (➡ P75)

To PS.U-COM assembly
CN60 (➡ P75)

NOTE

1. This P.C.B connection diagram is viewed from the parts mounted side.
2. The parts which have been mounted on the board can be replaced with those shown with the corresponding wiring symbols listed in the following Table.

P.C.B. pattern diagram indication	Corresponding part symbol	Part Name
Q504 E C B	E C B or E C B	Transistor
Q215	or	Radiator type transistor
D203	D203	Diode
R237	R237	Resistor
C513		Capacitor (Polarity)
C518		Capacitor (Non-polarity)

Others

P.C.B. pattern diagram indication	Part Name
IC	IC
S	Switch
RY	Relay
L	Coil
F	Filter
VR	Variable resistor or Semi-fixed resistor

3. The capacitor terminal marked with ◎(double circles) shows negatine termiani.
4. The diode terminal marked with ◎ (double circles) shows cathode side.
5. The transistor terminal to which E is affixed shows the emitter.

To P5.U-COM assembly
CN59 (➡ P75)
MOTOR VOLUME assembly (AWZ3567)
To P5.U-COM assembly
CN61 (➡ P75)
To P5.U-COM assembly
CN60 (➡ P75)
-A1

To P5.U-COM assembly
CN19 (➡ P76)
HEADPHONE assembly

To P5.U-COM assembly
CN20 (➡ P76)
AWZ3566
-A1
R. C. SPEAKER assembly (AWZ3566)

FRONT VIDEO assembly

FRONT CONTROL assembly (AWZ3569)

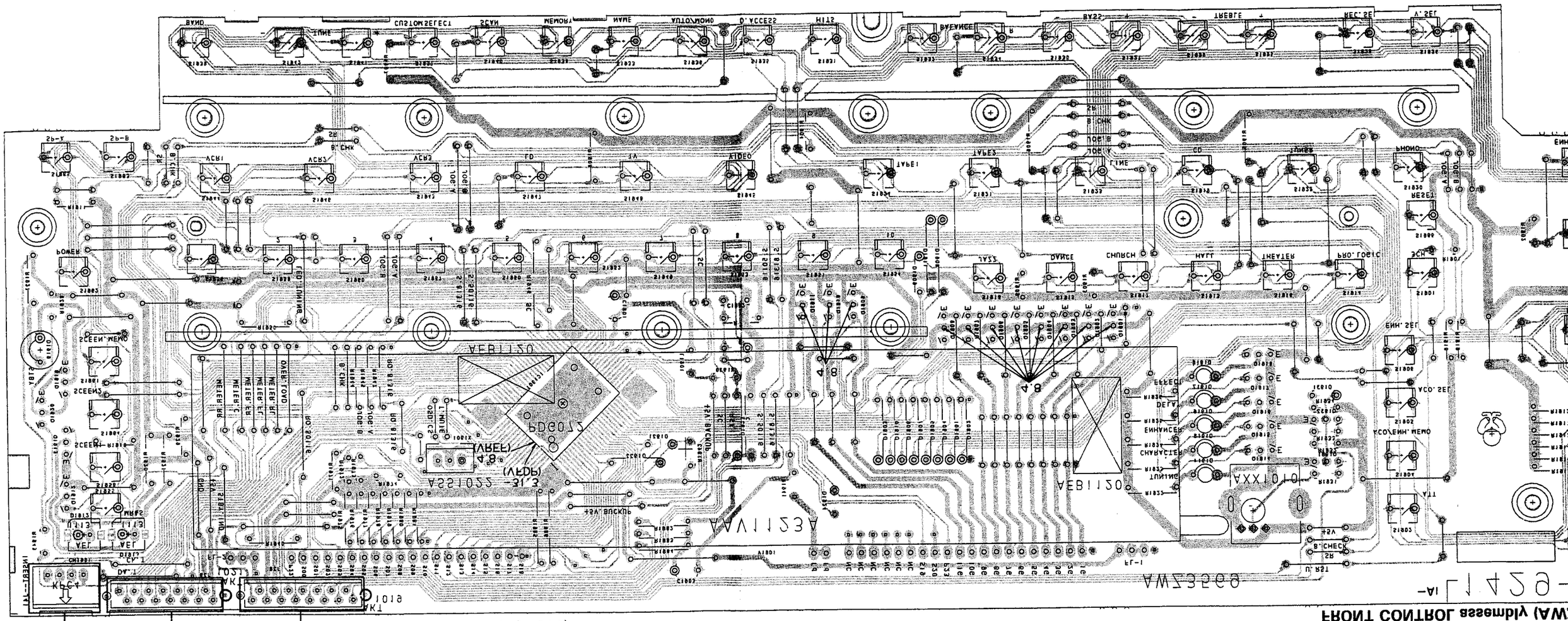
FRONT CONTROL assembly (AWZ3268)
-1A-
CN1A1 (➡ P21,P25)
To OSD or TERMINAL assembly
CN2A (➡ P12)
To P2.U-COM assembly
CN3A (➡ P19)
To P2.U-COM assembly

3.8 FRONT CONTROL (AWZ3569) and FRONT VIDEO assembly

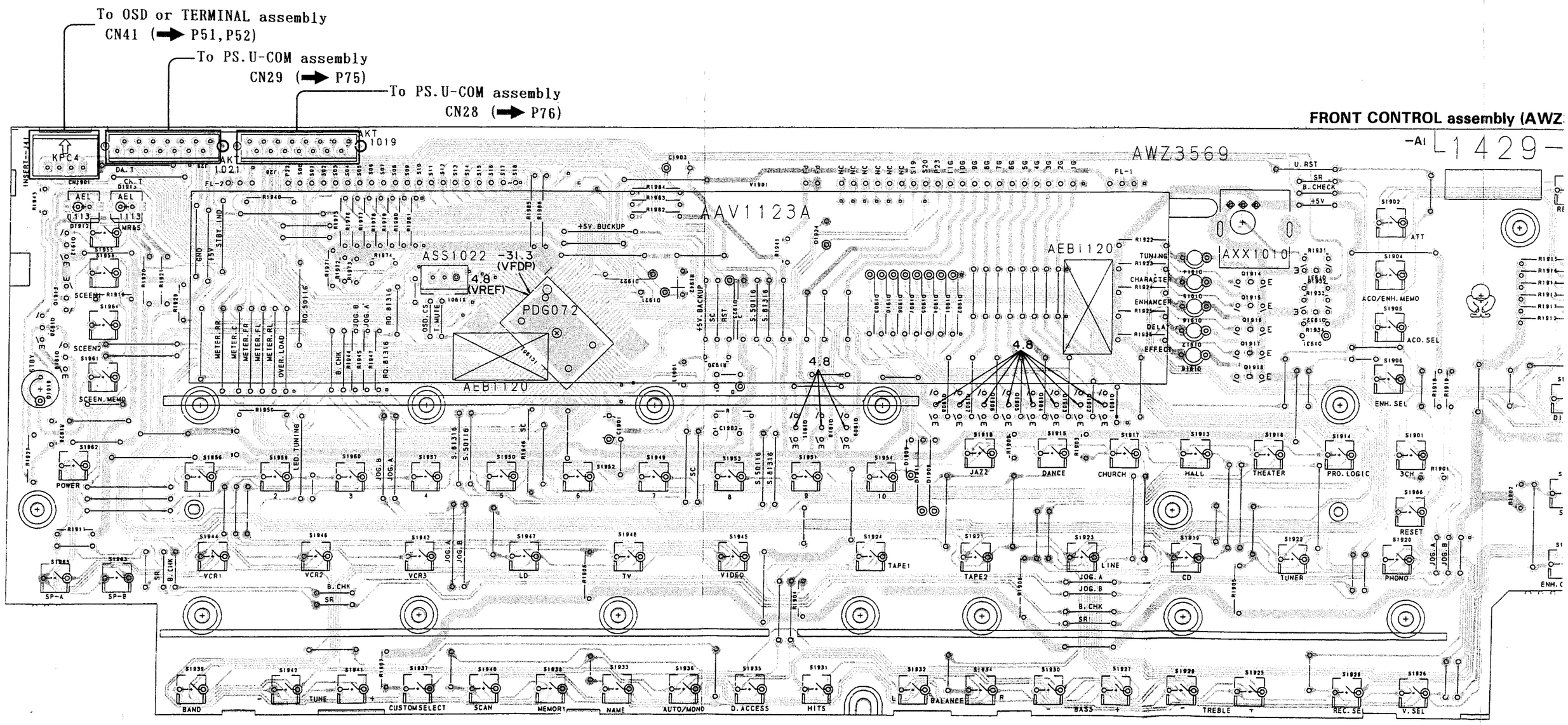

FRONT CONTROL assembly (AWZ3569)

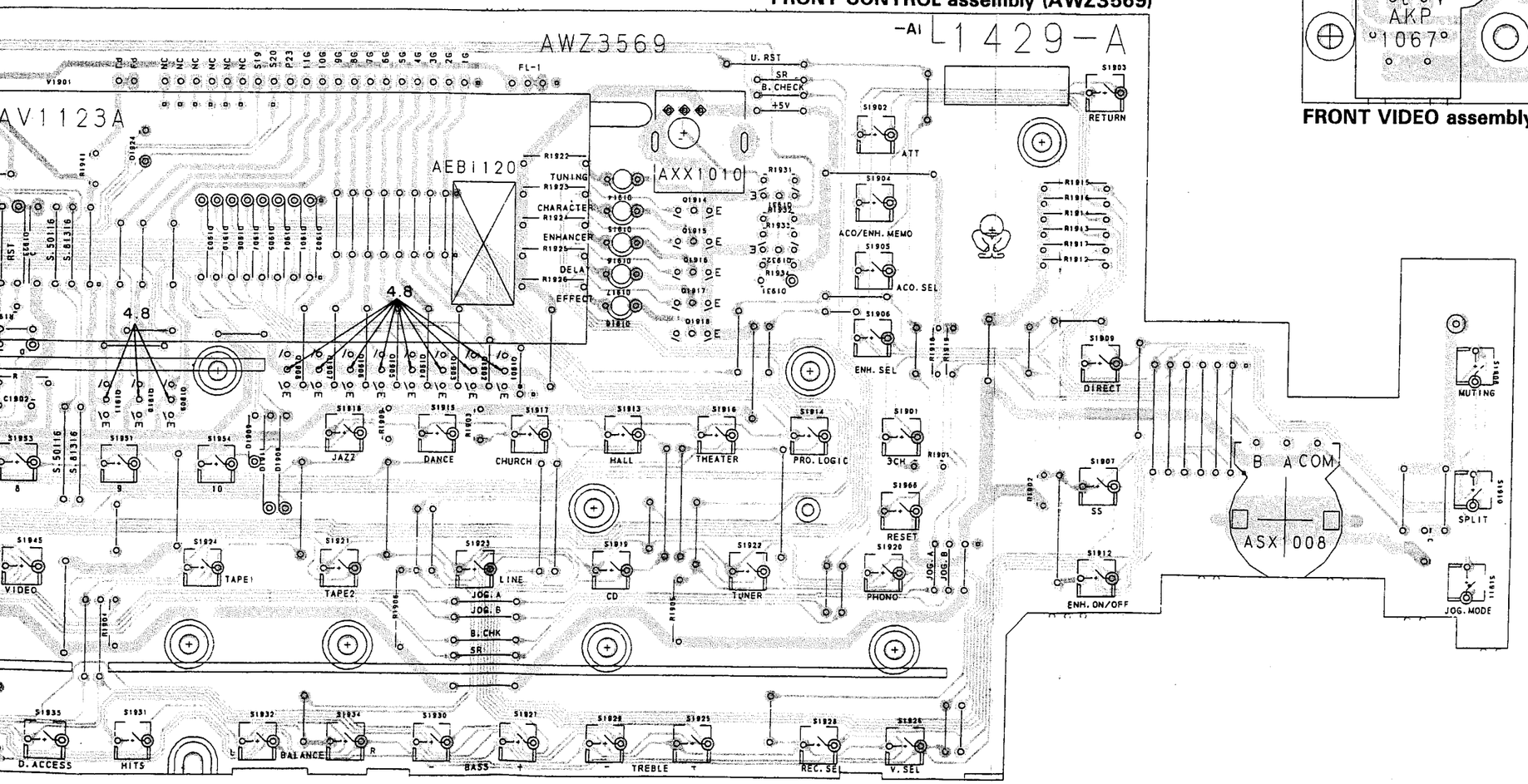

Q1911 Q1910 Q1909 Q1901 - Q1908 Q1914 - Q1918 Q1931 Q1932

To PS.U-COM assembly
CN26 (➡ P75)

To PS.U-COM assembly
CN27 (➡ P75)

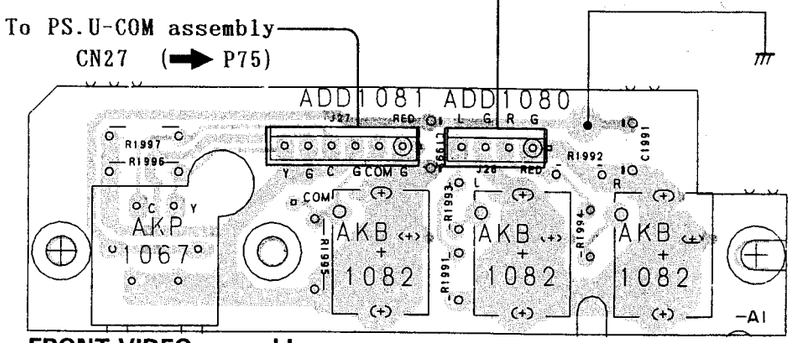

FRONT VIDEO assembly

NOTE

1. This P.C.B connection diagram is viewed from the parts mounted side.
2. The parts which have been mounted on the board can be replaced with those shown with the corresponding wiring symbols listed in the following Table.

P.C.B. pattern diagram indication	Corresponding part symbol	Part Name
Q504 E	E or E	Transistor
Q215	or	Radiator type transistor
D203	D203	Diode
R237	R237	Resistor
C513	+	Capacitor (Polarity)
C518		Capacitor (Non-polarity)

Others

P.C.B. pattern diagram indication	Part Name
IC	IC
S	Switch
RY	Relay
L	Coil
F	Filter
VR	Variable resistor or Semi-fixed resistor

3. The capacitor terminal marked with ◎(double circles) shows negative termianl.
4. The diode terminal marked with ◎(double circles) shows cathode side.
5. The transistor terminal to which E is affixed shows the emitter.

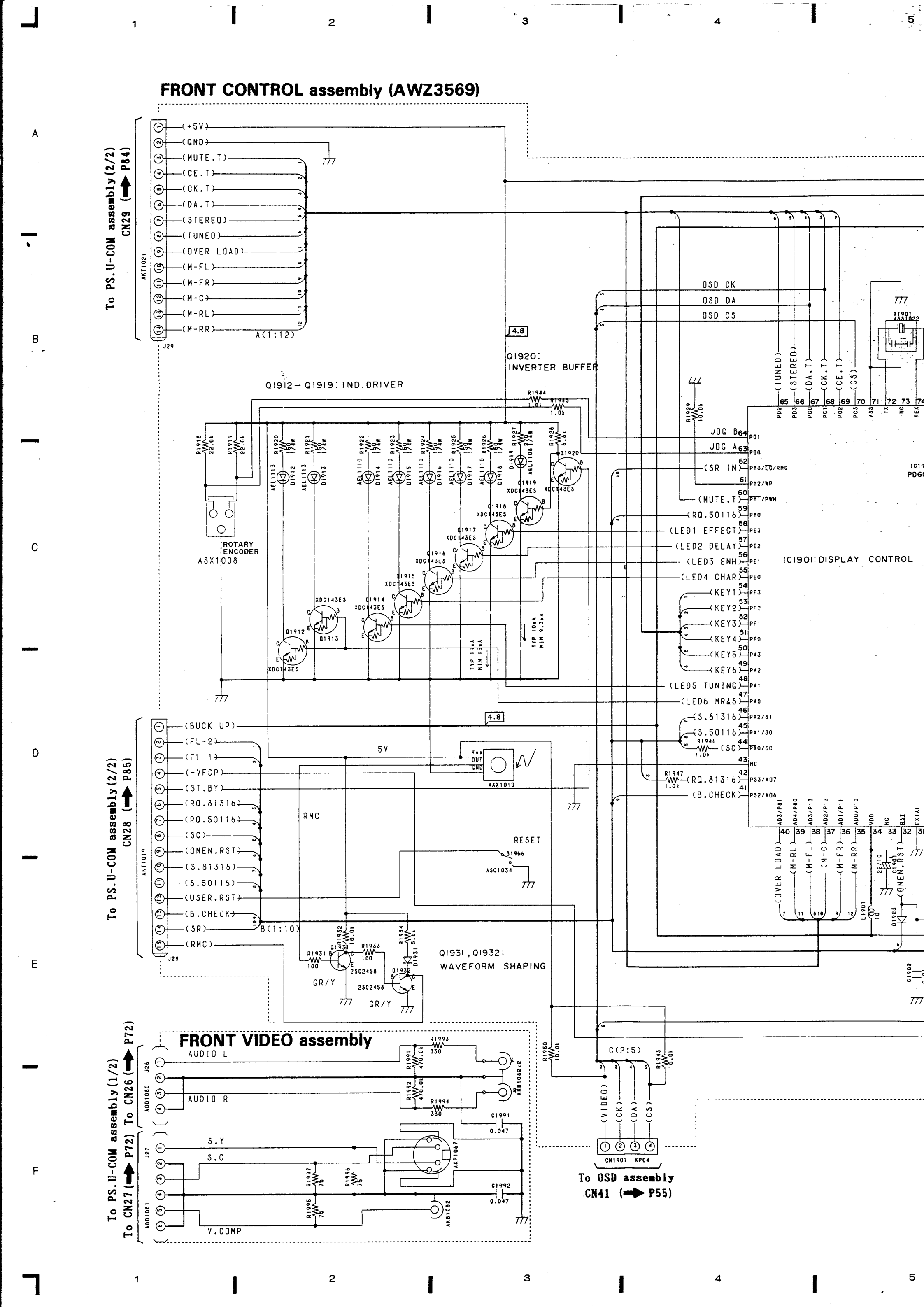
FRONT CONTROL assembly (AWZ3569)
To PS.U-COM assembly(2/2) CN29 (➡ P84)
(+5V)
(GND)
(MUTE.T)
(CE.T)
(CK.T)
(DA.T)
(STEREO)
(TUNED)
(OVER LOAD)
(M-FL)
(M-FR)
(M-C)
(M-RL)
(M-RR)
A(1:12)
J29
4.8
Q1920: INVERTER BUFFER
Q1912 – Q1919: IND.DRIVER
ROTARY ENCODER
ASX1008
OSD CK
OSD DA
OSD CS
X1901
ASX1022
IC1901: DISPLAY CONTROL
JOG B
JOG A
(SR IN)
(MUTE.T)
(RQ.50116)
(LED1 EFFECT)
(LED2 DELAY)
(LED3 ENH)
(LED4 CHAR)
(KEY1)
(KEY2)
(KEY3)
(KEY4)
(KEY5)
(KEY6)
(LED5 TUNING)
(LED6 MR&S)
(S.81316)
(S.50116)
(SC)
(RQ.81316)
(B.CHECK)
(BUCK UP)
(FL-2)
(FL-1)
(-VFDP)
(ST.BY)
(OMEN.RST)
(USER.RST)
(SR)
(RMC)
To PS.U-COM assembly(2/2) CN28 (➡ P85)
J28
B(1:10)
5V
AXX1010
RMC
RESET
ASC1034
Q1931, Q1932: WAVEFORM SHAPING
GR/Y
FRONT VIDEO assembly
AUDIO L
AUDIO R
S.Y
S.C
V.COMP
To PS.U-COM assembly(1/2) To CN26 (➡ P72)
To CN27 (➡ P72)
C(2:5)
(VIDEO)
(CK)
(DA)
(CS)
CN1901 KPC4
To OSD assembly CN41 (➡ P55)

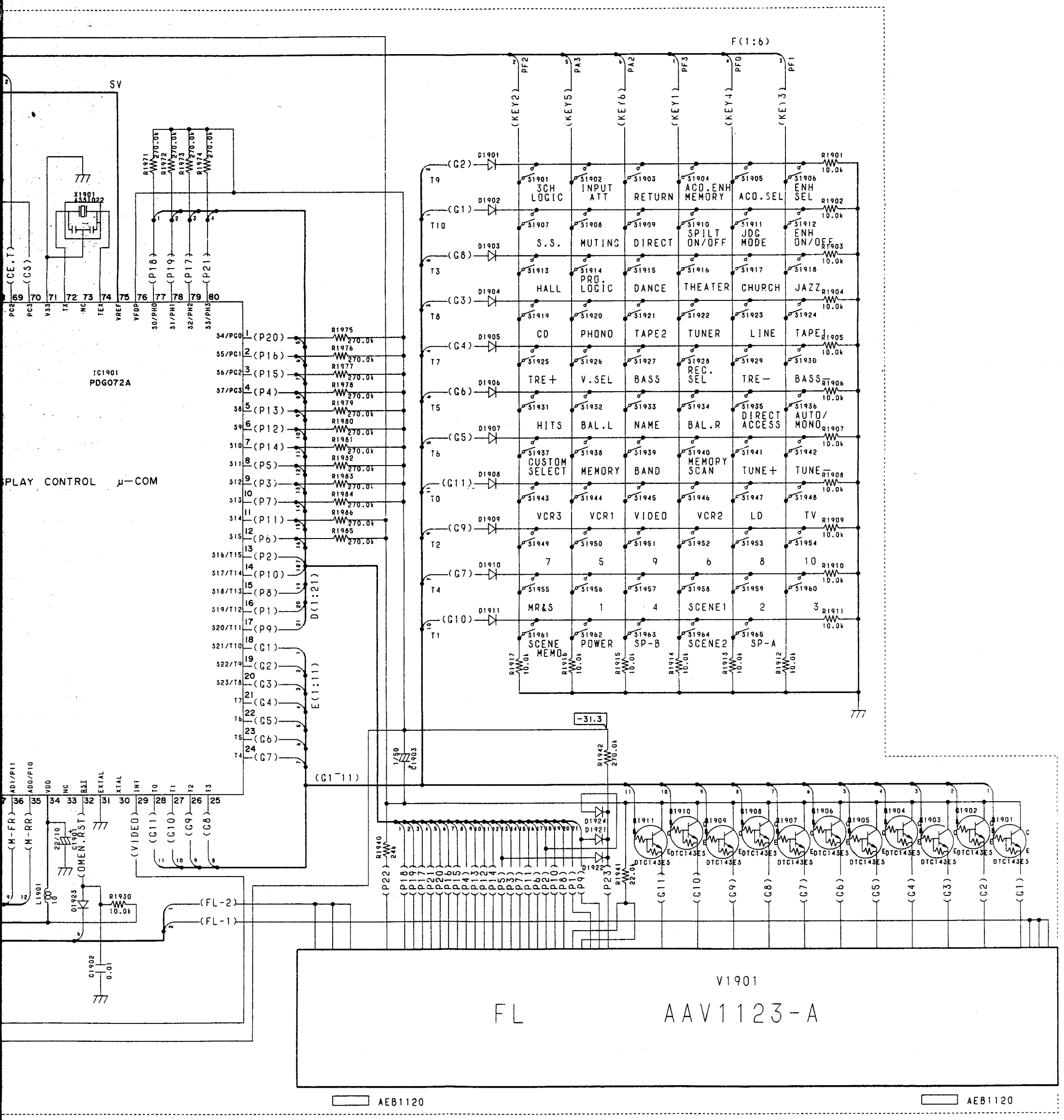
5V
IC1901
PDG072A
PLAY CONTROL μ-COM
X1901
F(1:6)
D(1:21)
E(1:11)
(G1~11)
-31.3
3CH LOGIC
INPUT ATT
RETURN
ACO.ENH MEMORY
ACO.SEL
ENH SEL
S.S.
MUTING
DIRECT
SPILT ON/OFF
JDG MODE
ENH ON/OFF
HALL
PRO. LOGIC
DANCE
THEATER
CHURCH
JAZZ
CD
PHONO
TAPE2
TUNER
LINE
TAPE1
TRE+
V.SEL
BASS
REC. SEL
TRE−
BASS−
HITS
BAL.L
NAME
BAL.R
DIRECT ACCESS
AUTO/ MONO
CUSTOM SELECT
MEMORY
BAND
MEMORY SCAN
TUNE+
TUNE−
VCR3
VCR1
VIDEO
VCR2
LD
TV
7
5
9
6
8
10
MR&S
1
4
SCENE1
2
3
SCENE MEMO
POWER
SP-B
SCENE2
SP-A
V1901
FL
AAV1123-A
AEB1120
AEB1120

3.9 PS. μ−COM (AWZ3571), R. C. REG POWER SUPPLY (AWZ3572) and TRANS assembly (AWZ3573)

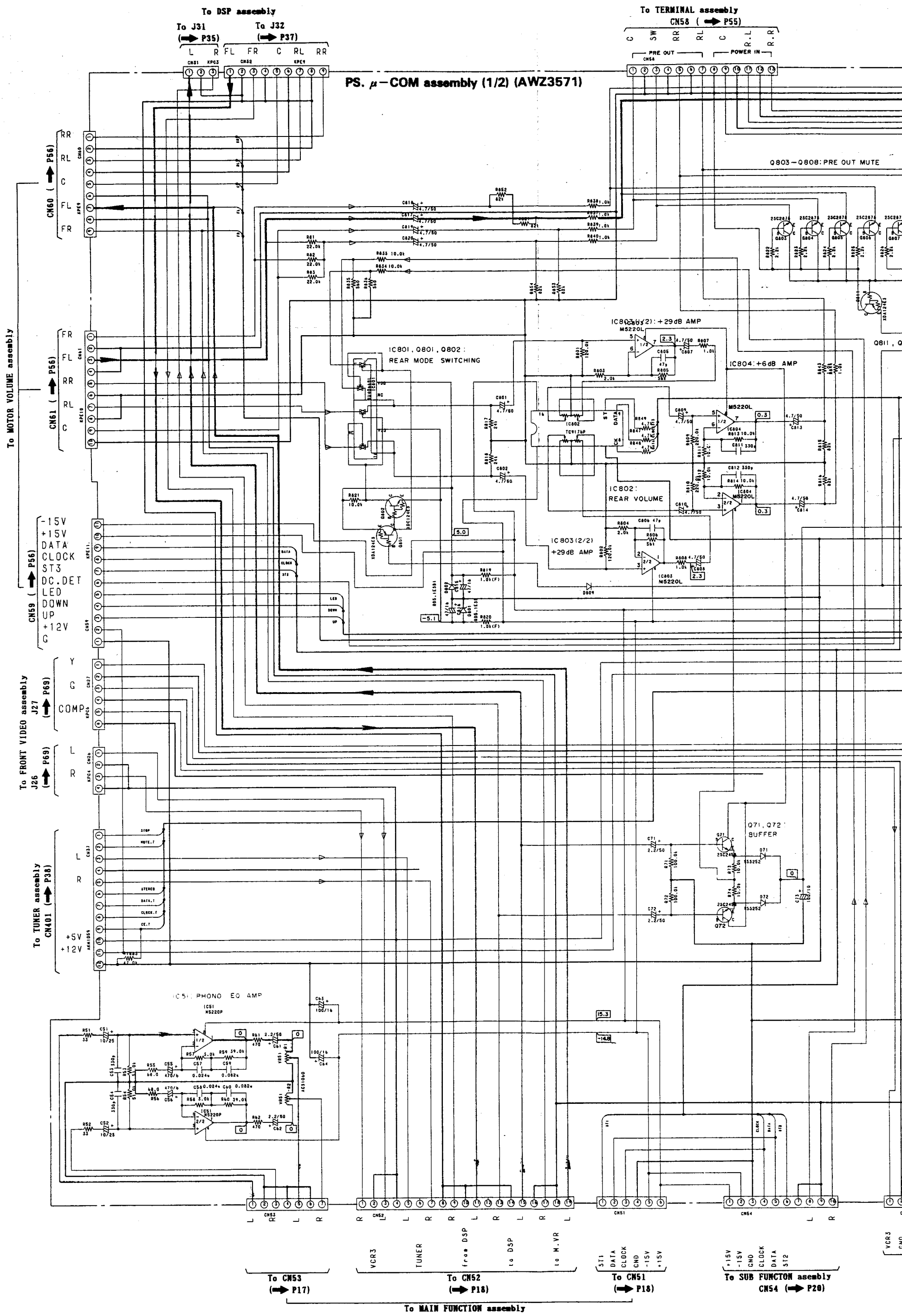

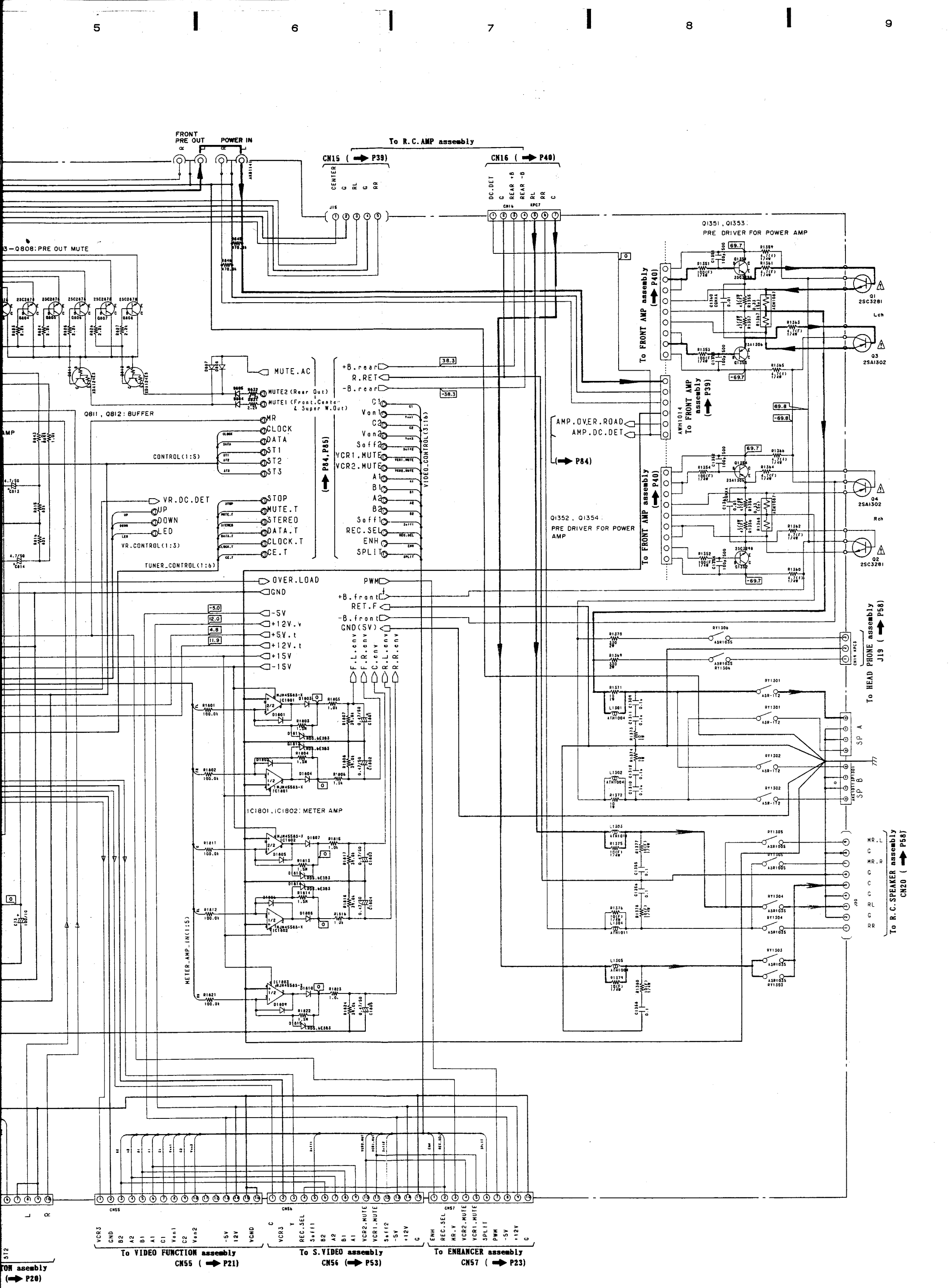
FRONT PRE OUT
POWER IN
To R.C.AMP assembly
CN15 (P39)
CN16 (P40)
CENTER
G
RL
G
RR
DC.DET
G
REAR +B
REAR -B
RL
RR
C
Q1351 , Q1353 :
PRE DRIVER FOR POWER AMP
To FRONT AMP assembly (P40)
To FRONT AMP assembly (P39)
Q1
2SC3281
Lch
Q3
2SA1302
Q4
2SA1302
Rch
Q2
2SC3281
Q811 , Q812 : BUFFER
MUTE.AC
MUTE2 (Rear Out)
MUTE1 (Front,Center & Super W.Out)
+B.rear
R.RET
-B.rear
CONTROL(1:5)
MR
CLOCK
DATA
ST1
ST2
ST3
VR.DC.DET
UP
DOWN
LED
VR.CONTROL(1:3)
TUNER_CONTROL(1:6)
STOP
MUTE.T
STEREO
DATA.T
CLOCK.T
CE.T
VIDEO_CONTROL(3:16)
VCR1.MUTE
VCR2.MUTE
REC.SEL
ENH
SPLIT
AMP.OVER.ROAD
AMP.DC.DET
Q1352 , Q1354 :
PRE DRIVER FOR POWER AMP
OVER.LOAD
GND
-5V
+12V.v
+5V.t
+12V.t
+15V
-15V
PWM
+B.front
RET.F
-B.front
GND(5V)
F.L.env
F.R.env
C.env
R.L.env
R.R.env
IC1801 , IC1802 : METER AMP
METER_AMP_IN(1:5)
To HEAD PHONE assembly J19 (P58)
SP A
SP B
MR.L
MR.R
To R.C.SPEAKER assembly CN20 (P68)
CN55
CN56
CN57
VCR3
GND
B2
A2
B1
A1
C1
Von1
C2
Von2
-5V
12V
VGND
To VIDEO FUNCTION assembly CN55 (P21)
C
VCR3
Y
REC.SEL
Saff1
B2
A2
B1
A1
VCR2.MUTE
VCR1.MUTE
Saff2
-5V
+12V
G
To S.VIDEO assembly CN56 (P53)
ENH
REC.SEL
KR.V
VCR2.MUTE
VCR1.MUTE
SPLIT
PWM
-5V
+12V
G
To ENHANCER assembly CN57 (P23)

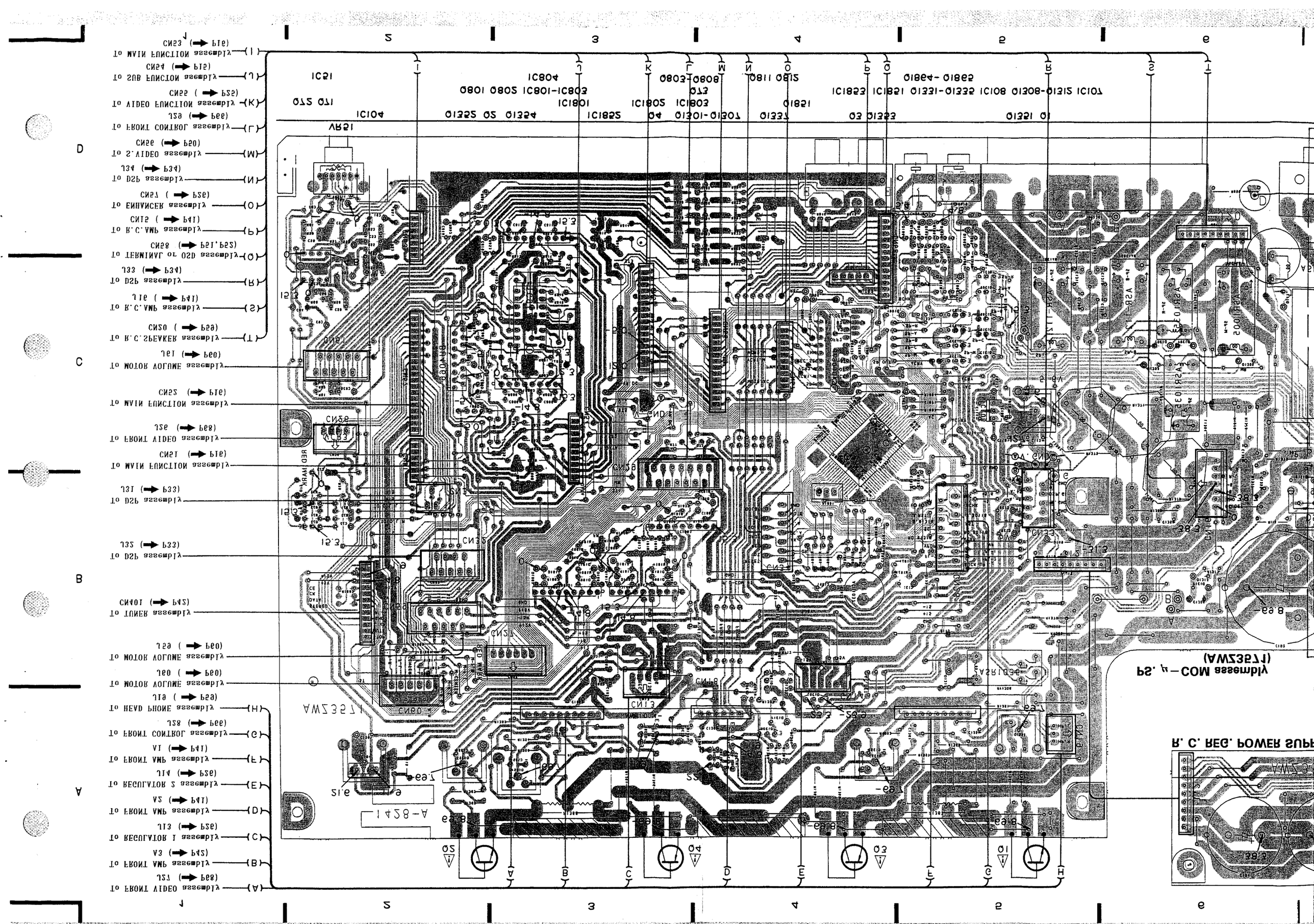
TO FRONT VIDEO assembly (A)
TO FRONT MAN assembly (B)
TO REGULATOR I assembly (C)
TO FRONT MAN assembly (D)
TO REGULATOR 5 assembly (E)
TO FRONT MAN assembly (F)
TO FRONT CONTROL assembly (G)
TO HEAD PHONE assembly (H)
TO MOTOR VOLUME assembly
TO TUNER assembly
TO MOTOR VOLUME assembly
TO MOTOR VOLUME assembly
TO D2P assembly
TO D2P assembly
TO MAIN FUNCTION assembly
TO FRONT VIDEO assembly
TO MAIN FUNCTION assembly
TO D2P assembly
TO D2P assembly
TO MOTOR VOLUME assembly
TO R.C.SPEAKER assembly (T)
TO R.C.MAN assembly (S)
TO D2P assembly (R)
TO TERMINAL TO D2D assembly (Q)
TO R.C.MAN assembly (P)
TO ENHANCER assembly (O)
TO D2P assembly (N)
TO S.VIDEO assembly (M)
TO FRONT CONTROL assembly (L)
TO AUDIO FUNCTION assembly (K)
TO SUB FUNCTION assembly (J)
TO MAIN FUNCTION assembly (I)
R.C. REG. POWER SUPPLY
R.C. MOD assembly (TT2632WA)
TT2632WA
A-BSA1
BSA-01
BSA-02
BSA-03
BSA-04
BSA-05
BSA-06
BSA-07
BSA-08
BSA-09
BSA-10
BSA-11
BSA-12
BSA-13
BSA-14
BSA-15
BSA-16
BSA-17
BSA-18
BSA-19
BSA-20
BSA-21
BSA-22
BSA-23
BSA-24
BSA-25
BSA-26
BSA-27
BSA-28
BSA-29
BSA-30
BSA-31
BSA-32
BSA-33
BSA-34
BSA-35
BSA-36
BSA-37
BSA-38
BSA-39
BSA-40
BSA-41
BSA-42
BSA-43
BSA-44
BSA-45
BSA-46
BSA-47
BSA-48
BSA-49
BSA-50
BSA-51
BSA-52
BSA-53
BSA-54
BSA-55
BSA-56
BSA-57
BSA-58
BSA-59
BSA-60
BSA-61
BSA-62
BSA-63
BSA-64
BSA-65
BSA-66
BSA-67
BSA-68
BSA-69
BSA-70
BSA-71
BSA-72
BSA-73
BSA-74
BSA-75
BSA-76
BSA-77
BSA-78
BSA-79
BSA-80
BSA-81
BSA-82
BSA-83
BSA-84
BSA-85
BSA-86
BSA-87
BSA-88
BSA-89
BSA-90
BSA-91
BSA-92
BSA-93
BSA-94
BSA-95
BSA-96
BSA-97
BSA-98
BSA-99
BSA-100
BSA-101
BSA-102
BSA-103
BSA-104
BSA-105
BSA-106
BSA-107
BSA-108
BSA-109
BSA-110
BSA-111
BSA-112
BSA-113
BSA-114
BSA-115
BSA-116
BSA-117
BSA-118
BSA-119
BSA-120
BSA-121
BSA-122
BSA-123
BSA-124
BSA-125
BSA-126
BSA-127
BSA-128
BSA-129
BSA-130
BSA-131
BSA-132
BSA-133
BSA-134
BSA-135
BSA-136
BSA-137
BSA-138
BSA-139
BSA-140
BSA-141
BSA-142
BSA-143
BSA-144
BSA-145
BSA-146
BSA-147
BSA-148
BSA-149
BSA-150
BSA-151
BSA-152
BSA-153
BSA-154
BSA-155
BSA-156
BSA-157
BSA-158
BSA-159
BSA-160
BSA-161
BSA-162
BSA-163
BSA-164
BSA-165
BSA-166
BSA-167
BSA-168
BSA-169
BSA-170
BSA-171
BSA-172
BSA-173
BSA-174
BSA-175
BSA-176
BSA-177
BSA-178
BSA-179
BSA-180
BSA-181
BSA-182
BSA-183
BSA-184
BSA-185
BSA-186
BSA-187
BSA-188
BSA-189
BSA-190
BSA-191
BSA-192
BSA-193
BSA-194
BSA-195
BSA-196
BSA-197
BSA-198
BSA-199
BSA-200
BSA-201
BSA-202
BSA-203
BSA-204
BSA-205
BSA-206
BSA-207
BSA-208
BSA-209
BSA-210
BSA-211
BSA-212
BSA-213
BSA-214
BSA-215
BSA-216
BSA-217
BSA-218
BSA-219
BSA-220
BSA-221
BSA-222
BSA-223
BSA-224
BSA-225
BSA-226
BSA-227
BSA-228
BSA-229
BSA-230
BSA-231
BSA-232
BSA-233
BSA-234
BSA-235
BSA-236
BSA-237
BSA-238
BSA-239
BSA-240
BSA-241
BSA-242
BSA-243
BSA-244
BSA-245
BSA-246
BSA-247
BSA-248
BSA-249
BSA-250
BSA-251
BSA-252
BSA-253
BSA-254
BSA-255
BSA-256
BSA-257
BSA-258
BSA-259
BSA-260
BSA-261
BSA-262
BSA-263
BSA-264
BSA-265
BSA-266
BSA-267
BSA-268
BSA-269
BSA-270
BSA-271
BSA-272
BSA-273
BSA-274
BSA-275
BSA-276
BSA-277
BSA-278
BSA-279
BSA-280
BSA-281
BSA-282
BSA-283
BSA-284
BSA-285
BSA-286
BSA-287
BSA-288
BSA-289
BSA-290
BSA-291
BSA-292
BSA-293
BSA-294
BSA-295
BSA-296
BSA-297
BSA-298
BSA-299
BSA-300
BSA-301
BSA-302
BSA-303
BSA-304
BSA-305
BSA-306
BSA-307
BSA-308
BSA-309
BSA-310
BSA-311
BSA-312
BSA-313
BSA-314
BSA-315
BSA-316
BSA-317
BSA-318
BSA-319
BSA-320
BSA-321
BSA-322
BSA-323
BSA-324
BSA-325
BSA-326
BSA-327
BSA-328
BSA-329
BSA-330
BSA-331
BSA-332
BSA-333
BSA-334
BSA-335
BSA-336
BSA-337
BSA-338
BSA-339
BSA-340
BSA-341
BSA-342
BSA-343
BSA-344
BSA-345
BSA-346
BSA-347
BSA-348
BSA-349
BSA-350
BSA-351
BSA-352
BSA-353
BSA-354
BSA-355
BSA-356
BSA-357
BSA-358
BSA-359
BSA-360
BSA-361
BSA-362
BSA-363
BSA-364
BSA-365
BSA-366
BSA-367
BSA-368
BSA-369
BSA-370
BSA-371
BSA-372
BSA-373
BSA-374
BSA-375
BSA-376
BSA-377
BSA-378
BSA-379
BSA-380
BSA-381
BSA-382
BSA-383
BSA-384
BSA-385
BSA-386
BSA-387
BSA-388
BSA-389
BSA-390
BSA-391
BSA-392
BSA-393
BSA-394
BSA-395
BSA-396
BSA-397
BSA-398
BSA-399
BSA-400
BSA-401
BSA-402
BSA-403
BSA-404
BSA-405
BSA-406
BSA-407
BSA-408
BSA-409
BSA-410
BSA-411
BSA-412
BSA-413
BSA-414
BSA-415
BSA-416
BSA-417
BSA-418
BSA-419
BSA-420
BSA-421
BSA-422
BSA-423
BSA-424
BSA-425
BSA-426
BSA-427
BSA-428
BSA-429
BSA-430
BSA-431
BSA-432
BSA-433
BSA-434
BSA-435
BSA-436
BSA-437
BSA-438
BSA-439
BSA-440
BSA-441
BSA-442
BSA-443
BSA-444
BSA-445
BSA-446
BSA-447
BSA-448
BSA-449
BSA-450
BSA-451
BSA-452
BSA-453
BSA-454
BSA-455
BSA-456
BSA-457
BSA-458
BSA-459
BSA-460
BSA-461
BSA-462
BSA-463
BSA-464
BSA-465
BSA-466
BSA-467
BSA-468
BSA-469
BSA-470
BSA-471
BSA-472
BSA-473
BSA-474
BSA-475
BSA-476
BSA-477
BSA-478
BSA-479
BSA-480
BSA-481
BSA-482
BSA-483
BSA-484
BSA-485
BSA-486
BSA-487
BSA-488
BSA-489
BSA-490
BSA-491
BSA-492
BSA-493
BSA-494
BSA-495
BSA-496
BSA-497
BSA-498
BSA-499
BSA-500
BSA-501
BSA-502
BSA-503
BSA-504
BSA-505
BSA-506
BSA-507
BSA-508
BSA-509
BSA-510
BSA-511
BSA-512
BSA-513
BSA-514
BSA-515
BSA-516
BSA-517
BSA-518
BSA-519
BSA-520
BSA-521
BSA-522
BSA-523
BSA-524
BSA-525
BSA-526
BSA-527
BSA-528
BSA-529
BSA-530
BSA-531
BSA-532
BSA-533
BSA-534
BSA-535
BSA-536
BSA-537
BSA-538
BSA-539
BSA-540
BSA-541
BSA-542
BSA-543
BSA-544
BSA-545
BSA-546
BSA-547
BSA-548
BSA-549
BSA-550
BSA-551
BSA-552
BSA-553
BSA-554
BSA-555
BSA-556
BSA-557
BSA-558
BSA-559
BSA-560
BSA-561
BSA-562
BSA-563
BSA-564
BSA-565
BSA-566
BSA-567
BSA-568
BSA-569
BSA-570
BSA-571
BSA-572
BSA-573
BSA-574
BSA-575
BSA-576
BSA-577
BSA-578
BSA-579
BSA-580
BSA-581
BSA-582
BSA-583
BSA-584
BSA-585
BSA-586
BSA-587
BSA-588
BSA-589
BSA-590
BSA-591
BSA-592
BSA-593
BSA-594
BSA-595
BSA-596
BSA-597
BSA-598
BSA-599
BSA-600
BSA-601
BSA-602
BSA-603
BSA-604
BSA-605
BSA-606
BSA-607
BSA-608
BSA-609
BSA-610
BSA-611
BSA-612
BSA-613
BSA-614
BSA-615
BSA-616
BSA-617
BSA-618
BSA-619
BSA-620
BSA-621
BSA-622
BSA-623
BSA-624
BSA-625
BSA-626
BSA-627
BSA-628
BSA-629
BSA-630
BSA-631
BSA-632
BSA-633
BSA-634
BSA-635
BSA-636
BSA-637
BSA-638
BSA-639
BSA-640
BSA-641
BSA-642
BSA-643
BSA-644
BSA-645
BSA-646
BSA-647
BSA-648
BSA-649
BSA-650
BSA-651
BSA-652
BSA-653
BSA-654
BSA-655
BSA-656
BSA-657
BSA-658
BSA-659
BSA-660
BSA-661
BSA-662
BSA-663
BSA-664
BSA-665
BSA-666
BSA-667
BSA-668
BSA-669
BSA-670
BSA-671
BSA-672
BSA-673
BSA-674
BSA-675
BSA-676
BSA-677
BSA-678
BSA-679
BSA-680
BSA-681
BSA-682
BSA-683
BSA-684
BSA-685
BSA-686
BSA-687
BSA-688
BSA-689
BSA-690
BSA-691
BSA-692
BSA-693
BSA-694
BSA-695
BSA-696
BSA-697
BSA-698
BSA-699
BSA-700
BSA-701
BSA-702
BSA-703
BSA-704
BSA-705
BSA-706
BSA-707
BSA-708
BSA-709
BSA-710
BSA-711
BSA-712
BSA-713
BSA-714
BSA-715
BSA-716
BSA-717
BSA-718
BSA-719
BSA-720
BSA-721
BSA-722
BSA-723
BSA-724
BSA-725
BSA-726
BSA-727
BSA-728
BSA-729
BSA-730
BSA-731
BSA-732
BSA-733
BSA-734
BSA-735
BSA-736
BSA-737
BSA-738
BSA-739
BSA-740
BSA-741
BSA-742
BSA-743
BSA-744
BSA-745
BSA-746
BSA-747
BSA-748
BSA-749
BSA-750
BSA-751
BSA-752
BSA-753
BSA-754
BSA-755
BSA-756
BSA-757
BSA-758
BSA-759
BSA-760
BSA-761
BSA-762
BSA-763
BSA-764
BSA-765
BSA-766
BSA-767
BSA-768
BSA-769
BSA-770
BSA-771
BSA-772
BSA-773
BSA-774
BSA-775
BSA-776
BSA-777
BSA-778
BSA-779
BSA-780
BSA-781
BSA-782
BSA-783
BSA-784
BSA-785
BSA-786
BSA-787
BSA-788
BSA-789
BSA-790
BSA-791
BSA-792
BSA-793
BSA-794
BSA-795
BSA-796
BSA-797
BSA-798
BSA-799
BSA-800
BSA-801
BSA-802
BSA-803
BSA-804
BSA-805
BSA-806
BSA-807
BSA-808
BSA-809
BSA-810
BSA-811
BSA-812
BSA-813
BSA-814
BSA-815
BSA-816
BSA-817
BSA-818
BSA-819
BSA-820
BSA-821
BSA-822
BSA-823
BSA-824
BSA-825
BSA-826
BSA-827
BSA-828
BSA-829
BSA-830
BSA-831
BSA-832
BSA-833
BSA-834
BSA-835
BSA-836
BSA-837
BSA-838
BSA-839
BSA-840
BSA-841
BSA-842
BSA-843
BSA-844
BSA-845
BSA-846
BSA-847
BSA-848
BSA-849
BSA-850
BSA-851
BSA-852
BSA-853
BSA-854
BSA-855
BSA-856
BSA-857
BSA-858
BSA-859
BSA-860
BSA-861
BSA-862
BSA-863
BSA-864
BSA-865
BSA-866
BSA-867
BSA-868
BSA-869
BSA-870
BSA-871
BSA-872
BSA-873
BSA-874
BSA-875
BSA-876
BSA-877
BSA-878
BSA-879
BSA-880
BSA-881
BSA-882
BSA-883
BSA-884
BSA-885
BSA-886
BSA-887
BSA-888
BSA-889
BSA-890
BSA-891
BSA-892
BSA-893
BSA-894
BSA-895
BSA-896
BSA-897
BSA-898
BSA-899
BSA-900
BSA-901
BSA-902
BSA-903
BSA-904
BSA-905
BSA-906
BSA-907
BSA-908
BSA-909
BSA-910
BSA-911
BSA-912
BSA-913
BSA-914
BSA-915
BSA-916
BSA-917
BSA-918
BSA-919
BSA-920
BSA-921
BSA-922
BSA-923
BSA-924
BSA-925
BSA-926
BSA-927
BSA-928
BSA-929
BSA-930
BSA-931
BSA-932
BSA-933
BSA-934
BSA-935
BSA-936
BSA-937
BSA-938
BSA-939
BSA-940
BSA-941
BSA-942
BSA-943
BSA-944
BSA-945
BSA-946
BSA-947
BSA-948
BSA-949
BSA-950
BSA-951
BSA-952
BSA-953
BSA-954
BSA-955
BSA-956
BSA-957
BSA-958
BSA-959
BSA-960
BSA-961
BSA-962
BSA-963
BSA-964
BSA-965
BSA-966
BSA-967
BSA-968
BSA-969
BSA-970
BSA-971
BSA-972
BSA-973
BSA-974
BSA-975
BSA-976
BSA-977
BSA-978
BSA-979
BSA-980
BSA-981
BSA-982
BSA-983
BSA-984
BSA-985
BSA-986
BSA-987
BSA-988
BSA-989
BSA-990
BSA-991
BSA-992
BSA-993
BSA-994
BSA-995
BSA-996
BSA-997
BSA-998
BSA-999
BSA-1000

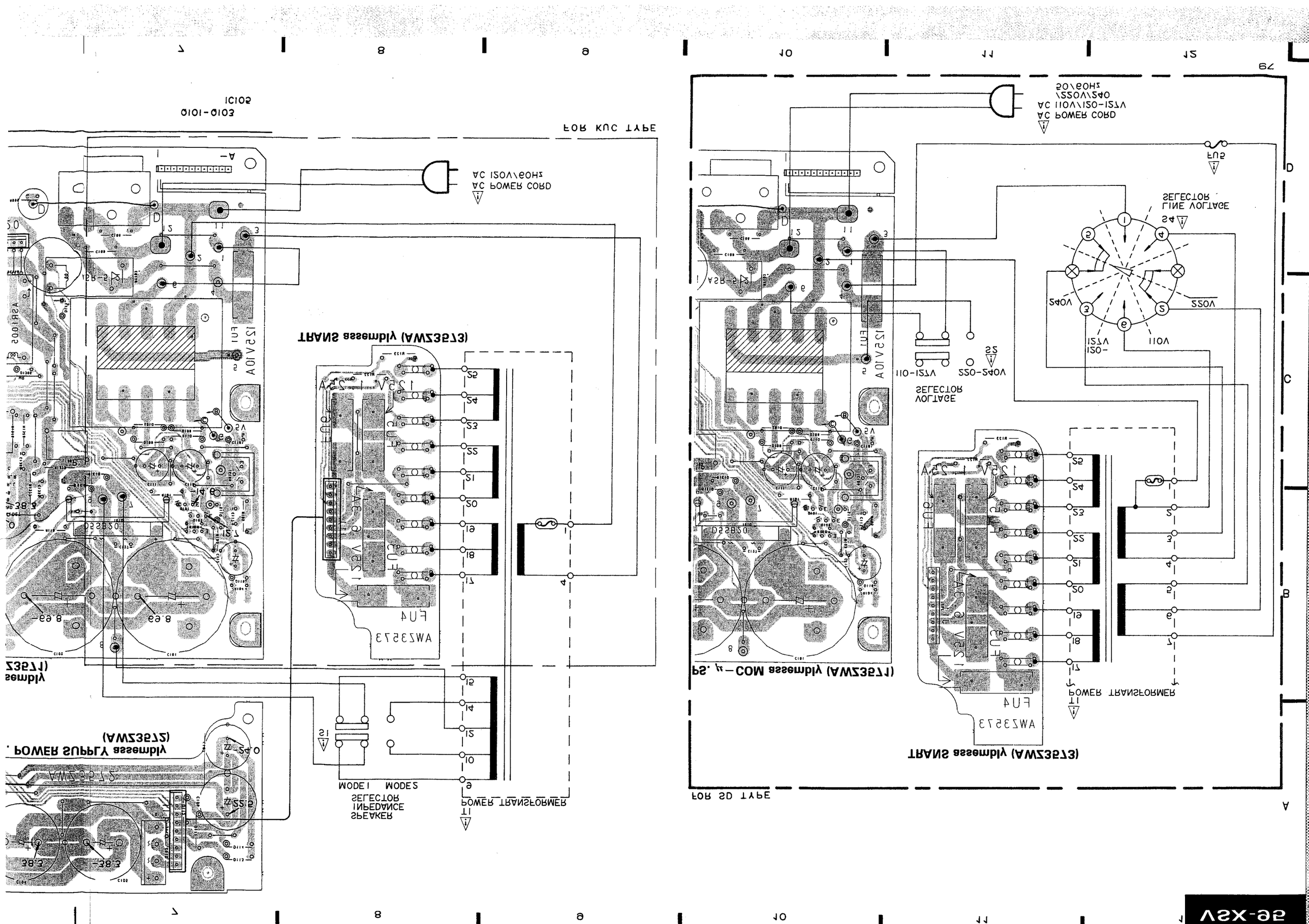
FOR US TYPE
FOR KUC TYPE
AC POWER CORD
AC 110V\120-127V
AC 220V\230V
AC 240V\250V
SELECTOR
LINE VOLTAGE
SELECTOR
VOLTAGE
SELECTOR
IMPEDANCE
SPEAKER
POWER TRANSFORMER
TRANS assembly (AWZ3213)
POWER SUPPLY assembly
(AWZ3215)
PS, μ-COM assembly (AWZ3217)
MODE1
MODE3

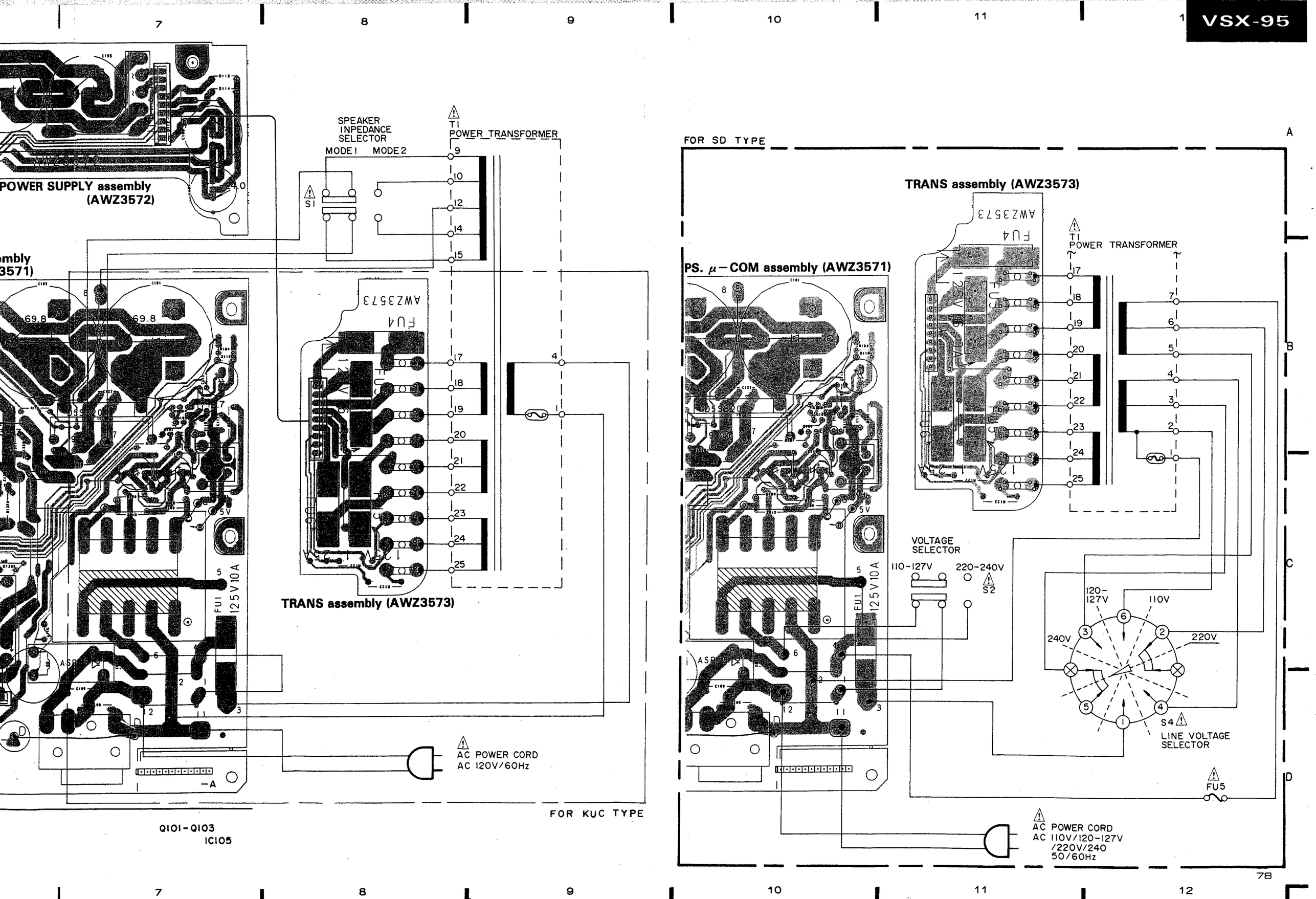
POWER SUPPLY assembly
(AWZ3572)
SPEAKER
INPEDANCE
SELECTOR
MODE 1
MODE 2
S1
T1
POWER TRANSFORMER
TRANS assembly (AWZ3573)
FU4
AWZ3573
FU1
125V 10A
AC POWER CORD
AC 120V/60Hz
FOR KUC TYPE
Q101-Q103
IC105
FOR SD TYPE
PS. μ-COM assembly (AWZ3571)
TRANS assembly (AWZ3573)
VOLTAGE
SELECTOR
110-127V
220-240V
S2
120-
127V
110V
240V
220V
S4
LINE VOLTAGE
SELECTOR
FU5
AC POWER CORD
AC 110V/120-127V
/220V/240
50/60Hz

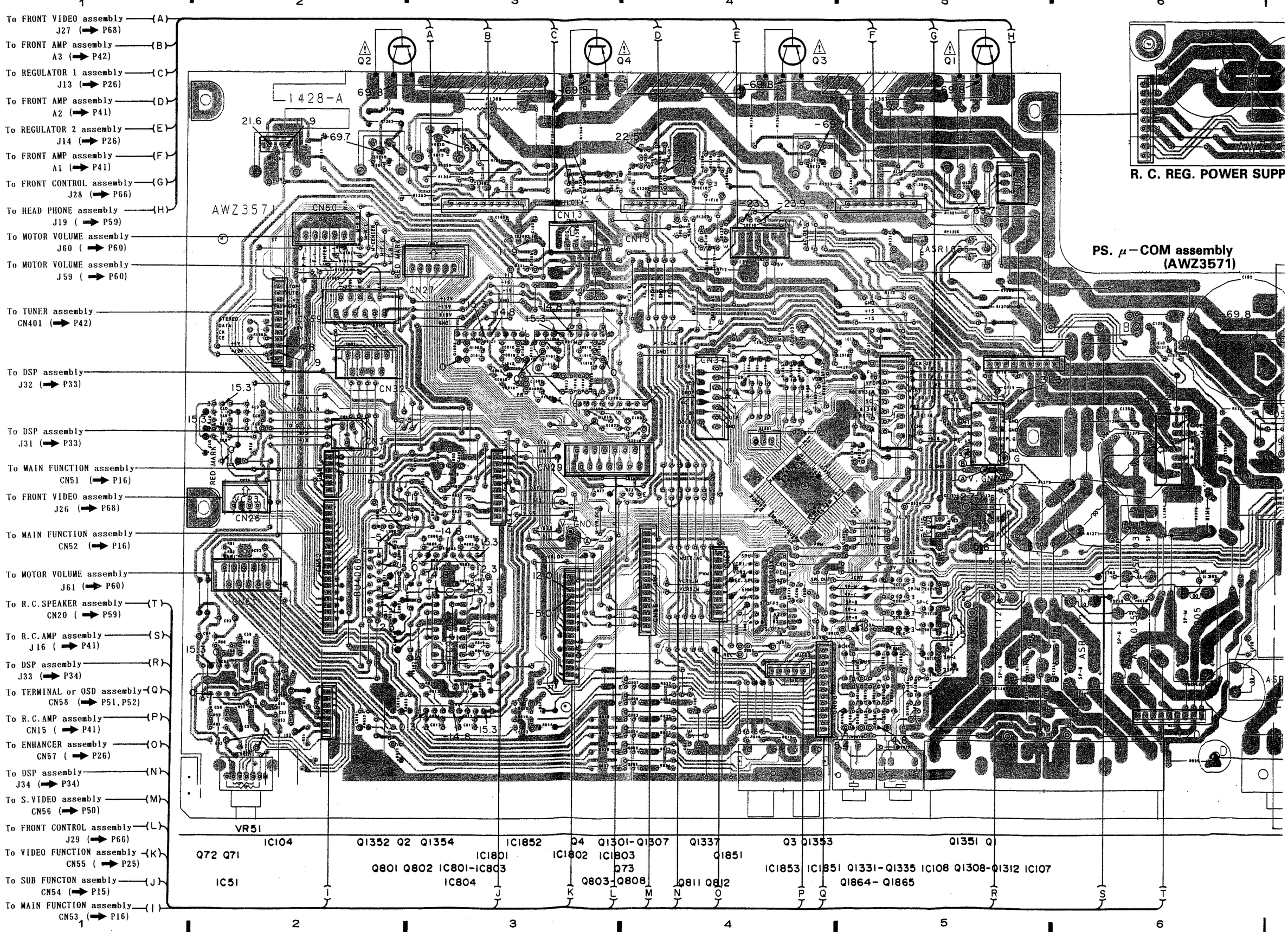
To FRONT VIDEO assembly J27 (➡ P68) (A)
To FRONT AMP assembly A3 (➡ P42) (B)
To REGULATOR 1 assembly J13 (➡ P26) (C)
To FRONT AMP assembly A2 (➡ P41) (D)
To REGULATOR 2 assembly J14 (➡ P26) (E)
To FRONT AMP assembly A1 (➡ P41) (F)
To FRONT CONTROL assembly J28 (➡ P66) (G)
To HEAD PHONE assembly J19 (➡ P59) (H)
To MOTOR VOLUME assembly J60 (➡ P60)
To MOTOR VOLUME assembly J59 (➡ P60)
To TUNER assembly CN401 (➡ P42)
To DSP assembly J32 (➡ P33)
To DSP assembly J31 (➡ P33)
To MAIN FUNCTION assembly CN51 (➡ P16)
To FRONT VIDEO assembly J26 (➡ P68)
To MAIN FUNCTION assembly CN52 (➡ P16)
To MOTOR VOLUME assembly J61 (➡ P60)
To R.C.SPEAKER assembly CN20 (➡ P59) (T)
To R.C.AMP assembly J16 (➡ P41) (S)
To DSP assembly J33 (➡ P34) (R)
To TERMINAL or OSD assembly CN58 (➡ P51,P52) (Q)
To R.C.AMP assembly CN15 (➡ P41) (P)
To ENHANCER assembly CN57 (➡ P26) (O)
To DSP assembly J34 (➡ P34) (N)
To S.VIDEO assembly CN56 (➡ P50) (M)
To FRONT CONTROL assembly J29 (➡ P66) (L)
To VIDEO FUNCTION assembly CN55 (➡ P25) (K)
To SUB FUNCTON asembly CN54 (➡ P15) (J)
To MAIN FUNCTION assembly CN53 (➡ P16) (I)
R. C. REG. POWER SUPP
PS. μ-COM assembly (AWZ3571)
AWZ3571
1428-A
VR51
IC104
Q72 Q71
IC51
Q1352 Q2 Q1354
Q801 Q802 IC801-IC803
IC804
IC1852
IC1801
Q4
IC1802
Q1301-Q1307
IC1803
Q73
Q803-Q808
Q1337
Q1851
Q811 Q812
Q3 Q1353
IC1853 IC1851 Q1331-Q1335 IC108 Q1308-Q1312 IC107
Q1864- Q1865
Q1351 Q

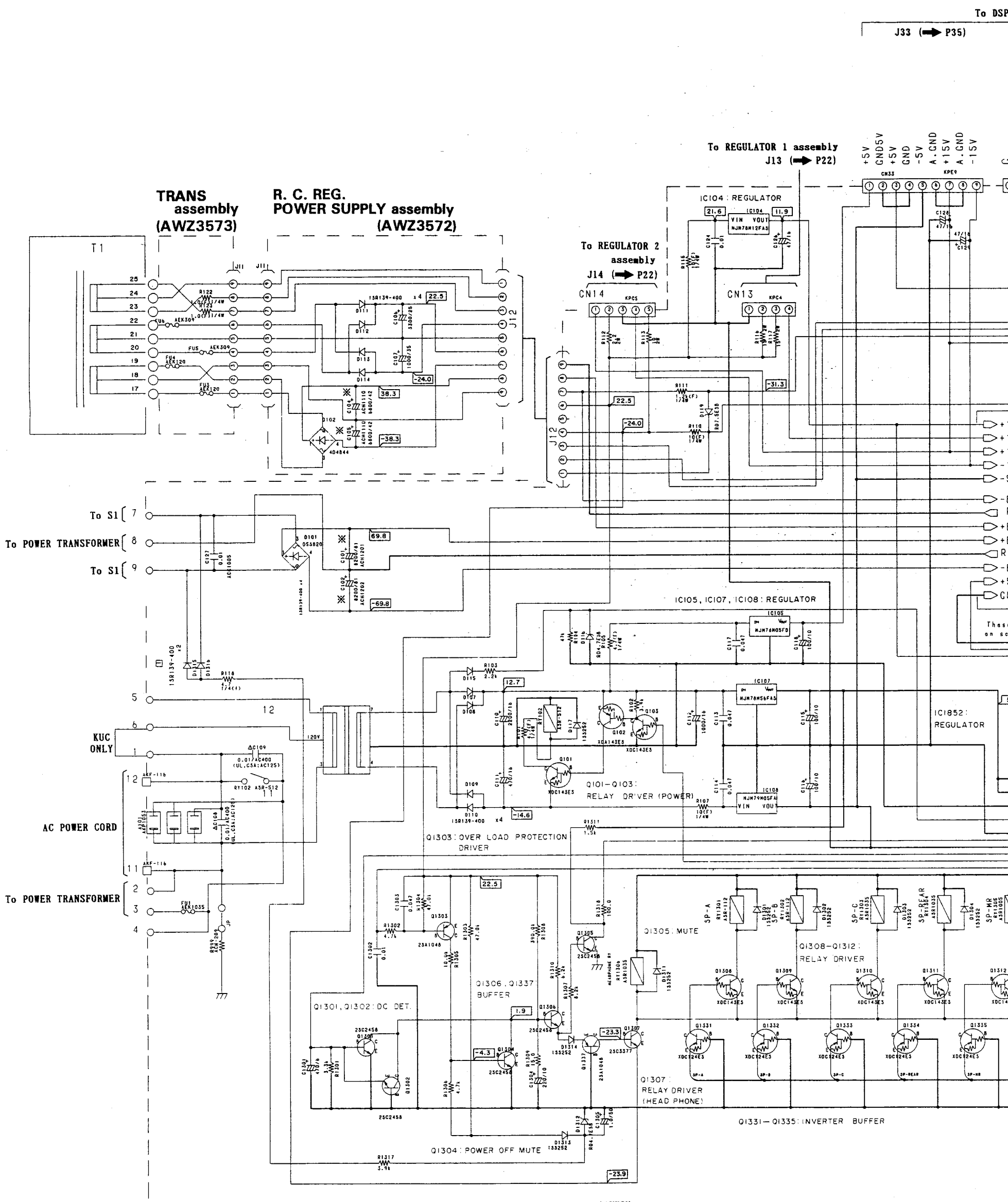

PS. μ–COM assembly (2/2) (AWZ3571)

• LOGIC TABLE FOR VIDEO CONTROL SECTION

Input Selector Condition		Pins No.																
		IC1853 (CXD1067P)												IC1851 (PDG073A)				
		1	2	3	4	5	6	7	8	9	11	12	13	2	3	4	5
MAIN	VCR1	–	H	L	–	–	–	–	L	L	L	–	–	–	–	L	H
	VCR2	–	L	H	–	–	–	–	H	H	L	–	–	–	–	L	H
	VCR3	–	L	L	–	–	–	–	L	H	L	–	–	–	–	L	L
	LD	–	L	L	–	–	–	–	H	L	L	–	–	–	–	L	H
	TV	–	L	L	–	–	–	–	L	L	H	–	–	–	–	L	L
	VIDEO	–	L	L	–	–	–	–	H	L	H	–	–	–	–	L	L
	AUDIO (CD···etc)	–	L	L	–	–	–	–	–	–	H	–	–	–	–	H	–
SUB	VCR1	–	H	L	–	–	–	L	–	–	–	L	L	L	H	–	–
	VCR2	–	L	H	–	–	–	L	–	–	–	H	H	L	H	–	–
	VCR3	–	L	L	–	–	–	L	–	–	–	H	L	L	L	–	–
	LD	–	L	L	–	–	–	L	–	–	–	L	H	L	H	–	–
	TV	–	L	L	–	–	–	H	–	–	–	L	L	L	L	–	–
	VIDEO	–	L	L	–	–	–	H	–	–	–	L	H	L	L	–	–
	AUDIO (CD···etc)	–	L	L	–	–	–	H	–	–	–	–	–	H	–	–	–

Switches Condition		Pins No.					
		IC1853 (CXD1067P)					
		1	2	3	4	5	6
SPLIT SCREEN	ON	H	–	–	–	–	–
	OFF	L	–	–	–	–	–
REC SEL	ON	–	•1		H	–	–
	OFF	–	•2		L	–	–
ENHANCER	ON	–	–	–	–	H	–
	OFF	–	–	–	–	L	–
MRS	ON	–	–	–	–	–	L
	OFF	–	–	–	–	–	H

Note)
•1 : Changes according to the status of the SUB INPUT SELECTOR. The status of H/L synchronizes with that of the SUB INPUT SELECTOR.
•2 : Changes according to the status of the MAIN INPUT SELECTOR. The status of H/L synchronizes with that of the MAIN INPUT SELECTOR.

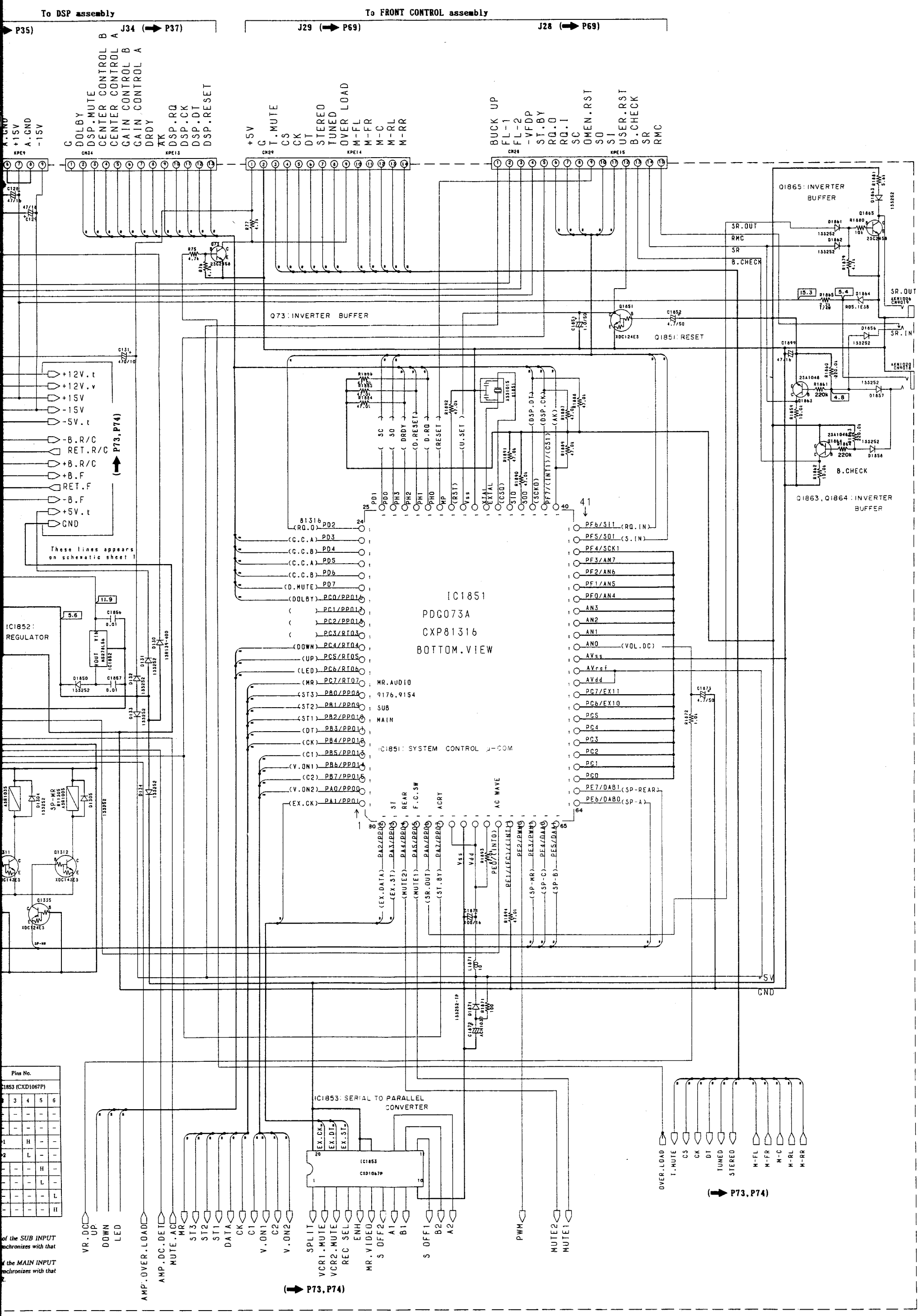
To DSP assembly
To FRONT CONTROL assembly
J34 (➡ P37)
J29 (➡ P69)
J28 (➡ P69)
Q73: INVERTER BUFFER
Q1851: RESET
Q1865: INVERTER BUFFER
Q1863, Q1864: INVERTER BUFFER
IC1851
PDG073A
CXP81316
BOTTOM.VIEW
IC1851: SYSTEM CONTROL μ-COM
IC1852: REGULATOR
IC1853: SERIAL TO PARALLEL CONVERTER
These lines appears on schematic sheet 1
(➡ P73, P74)
Pins No.

4. PCB's PARTS LIST

NOTES:

- *Parts without part number cannot be supplied.*
- *Parts marked by "◉" are not always kept in stock. Their delivery time may be longer than usual or they may be unavailable.*
- *The ⚠ mark found on some component parts indicates the importance of the safety factor of the part. Therefore, when replacing, be sure to use parts of identical designation.*
- *When ordering resistors, first convert resistance values into code form as shown in the following examples.*

Ex. 1 *When there are 2 effective digits (any digit apart from 0), such as 560 ohm and 47k ohm (tolerance is shown by J = 5%, and K = 10%).*

560Ω	*56 × 10¹*	*561*	*RD1/4PS 5 6 1 J*
47kΩ	*47 × 10³*	*473*	*RD1/4PS 4 7 3 J*
0.5Ω	*0R5*		*RN2H 0 R 5 K*
1Ω	*010*		*RS1P 0 1 0 K*

Ex. 2 *When there are 3 effective digits (such as in high precision metal film resistors).*

5.62kΩ	*562 × 10¹*	*5621*	*RN1/4SR 5 6 2 1 F*

Mark No.	Description	Parts No.
◉ TUNER assembly (AWE1160)		
SEMICONDUCTORS		
IC431	AM/FM IC	LA1265S
IC451	MPX IC	AN7470P
IC471	PLL IC	LM7001
Q401	MOS−FET	2SK241
Q402	TRANSISTOR	2SC2786
Q403	TRANSISTOR	2SC2668
Q405	N−FET	2SK161
Q421	TRANSISTOR	2SC2668
Q451	TRANSISTOR	2SC2603
Q452, 453	TRANSISTOR	2SC1740S
Q454	TRANSISTOR	2SA933S
Q471	N−FET	2SK246
Q472	TRANSISTOR	2SC1740SLN
Q473, 474	TRANSISTOR	RN2201
D401−403	VARI−CAP DIODE	1SV147
D431−435	DIODE	1SS252
COILS & TRANSFORMERS		
F421	CERAMIC FILTER	ATF−107
F422	CERAMIC FILTER	ATF−119
F431	CERAMIC FILTER	ATF1042
F461	FILTER	ATF−164
L401	COIL	ATC1001
L402	COIL	ATC1002
L403	COIL	ATC1004
L404	COIL	ATC1005
L405	COIL	ATC1003
L406, 407	AXIAL INDUCTOR	LAU2R2M
T402	IF TRANSFORMER	ATE−063
T431	IF TRANSFORMER	ATE1001
T432	IF TRANSFORMER	ATE1002

Mark No.	Description	Parts No.
CAPACITORS		
C401	CERAMIC CAPACITOR	CCDRH330J50
C402	CERAMIC CAPACITOR	CCDRH390J50
C403	CERAMIC CAPACITOR (0.01μF)	ACG1021
C404, 405	CERAMIC CAPACITOR	CCDRH330J50
C406	CERAMIC CAPACITOR	CCDCH020C50
C409	CERAMIC CAPACITOR (100p)	ACG1017
C410−412	CERAMIC CAPACITOR (0.01μF)	ACG1021
C413	CERAMIC CAPACITOR	CCDCH150J50
C414	CERAMIC CAPACITOR	CCDCH330J50
C415	CERAMIC CAPACITOR	CCDCH080D50
C416	CERAMIC CAPACITOR	CCDTH180J50
C417	CERAMIC CAPACITOR	CCDCH010C50
C418, 419	CERAMIC CAPACITOR (0.01μF)	ACG1021
C420	ELECTR.CAPACITOR	CEAS100M50
C421, 422	CERAMIC CAPACITOR (0.01μF)	ACG1021
C433	ELECTR.CAPACITOR	CEAS4R7M50
C435	CERAMIC CAPACITOR	CKCYF472Z50
C436	CERAMIC CAPACITOR	CKCYX683M25
C437	ELECTR.CAPACITOR	CEAS100M50
C438	ELECTR.CAPACITOR	CEAS2R2M50
C439, 440	CERAMIC CAPACITOR	CKCYF223Z50
C441	CERAMIC CAPACITOR (0.022μF)	ACG1022
C442	ELECTR.CAPACITOR	CEAS0R1M50
C443	ELECTR.CAPACITOR	CEAS3R3M50
C444	CERAMIC CAPACITOR (330p)	ACG1018
C445	CERAMIC CAPACITOR (47p)	ACG1016

Mark No.	Description	Parts No.
C446, 447	MYLOR FILM CAPACITOR	CQMA561J50
C451	ELECTR.CAPACITOR	CEAS101M16
C452	ELECTR.CAPACITOR	CEANP4R7M35
C453	CERAMIC CAPACITOR	CKCYF473Z50
C454	CAPACITOR (470p)	ACE1039
C455	ELECTR.CAPACITOR	CEAS3R3M50
C456	ELECTROLYTIC CAPACIT	CEAS1R5M50
C457	ELECTR.CAPACITOR	CEASR22M50
C458	ELECTR.CAPACITOR	CEAS470M16
C459, 460	MYLOR FILM CAPACITOR	CQMA102J50
C461, 462	ELECTR.CAPACITOR	CEAS4R7M50
C463, 464	ELECTR.CAPACITOR	CEAS470M16
C465	CERAMIC CAPACITOR (0.01μF)	ACG1021
C466	CERAMIC CAPACITOR	CCCSL121J50
C471	CERAMIC CAPACITOR (0.01μF)	ACG1021
C472	CERAMIC CAPACITOR (0.022μF)	ACG1022
C473	CERAMIC CAPACITOR (0.01μF)	ACG1021
C475	ELECTR.CAPACITOR	CEAS100M50
C476	CERAMIC CAPACITOR (0.01μF)	ACG1021
C477	CERAMIC CAPACITOR	CKCYF103Z50
C478	AUDIO FILM CAPACITOR	CFTXA224J50
C479	CERAMIC CAPACITOR (22p)	ACG1025
C480	CERAMIC CAPACITOR (0.01μF)	ACG1021
C481, 482	CERAMIC CAPACITOR	CCDCH150J50
C483	CERAMIC CAPACITOR (100p)	ACG1017
C484	ELECTR.CAPACITOR	CEAS470M16
C485	CERAMIC CAPACITOR (0.01μF)	ACG1021

RESISTORS

VR431	VR (10K)	ACP1025
VR432	VR	VRTS6VS153
VR451	VR (4.7K)	ACP1024
	Other resistors	RD1/8PM□□□J

OTHERS

	ANTENNA TERMINAL 4-P	AKA1014
	AM RF TUNING BLOCK	AXX1011
X431	CERAMIC RESONATOR	ATF1027
X471	CRYSTAL RESONATOR	ASS1005

Mark No.	Description	Parts No.

◉ PS. μ-COM assembly (AWZ3571)

SEMICONDUCTORS

IC104	REGULATOR IC	NJM78M12FAS
IC105	REGULATOR IC	NJM78M05FD
IC107	REGULATOR IC	NJM78M56FAS
IC108	REGULATOR IC	NJM79M05FA
IC1801-1803	OP-AMP IC	NJM4558S-X
IC1851	CONTROL MCU	PDG073A
IC1852	REGULATOR IC	M5278L56 (A)
IC1853	PORT-EXPANDER IC	CXD1067P
IC51	OP-AMP-IC	M5220P
IC801	LOGIC IC	BU4066BL
IC802	E-VR IC	TC9176P
IC803, 804	OP-AMP IC	M5220L
Q101	TRANSISTOR	XDC143ES
Q102	TRANSISTOR	XDA143ES
Q103	TRANSISTOR	XDC143ES
Q1301, 1302	TRANSISTOR	2SC2458
Q1303	TRANSISTOR	2SA1048
Q1304-1306	TRANSISTOR	2SC2458
Q1307	TRANSISTOR	2SC3377
Q1308-1312	TRANSISTOR	XDC143ES
Q1331-1335	TRANSISTOR	XDA143ES
Q1337	TRANSISTOR	2SA1048
Q1351, 1352	TRANSISTOR	2SC3298
Q1353, 1354	TRANSISTOR	2SA1306
Q1851	TRANSISTOR	XDC124ES
Q1863, 1864	TRANSISTOR	2SA1048
Q1865	TRANSISTOR	2SC2458
Q71-73	TRANSISTOR	2SC2458
Q801	TRANSISTOR	XDA124ES
Q802	TRANSISTOR	XDC124ES
Q803-808	TRANSISTOR	2SC3327
Q811, 812	TRANSISTOR	XDA124ES
D101	DIODE	D5SB20
D107-110	DIODE	1SR139-400
D115	DIODE	1SS252
D116	ZENER DIODE	RD4.7ESB
D117	DIODE	1SS252
D119	ZENER DIODE	RD7.5ESB
D1301-1305	DIODE	1SS252
D131, 1311	DIODE	1SS252
D1312	ZENER DIODE	RD4.7ESB
D1313, 1314	DIODE	1SS252
D1315, 1316	DIODE	1SR139-400
D132, 133	DIODE	1SR139-400
D134	DIODE	1SS252
D1801-1810	DIODE	1SS252
D1811-1815	ZENER DIODE	RD5.6ESB3

Mark No.	Description	Parts No.
D1850	DIODE	1SS252
D1856−1858	DIODE	1SS252
D1861−1863	DIODE	1SS252
D1864	ZENER DIODE	RD5.1ESB2
D1871	DIODE	1SR139−400
D71, 72	DIODE	1SS252
D801	ZENER DIODE	RD5.1ESB
D802	ZENER DIODE	RD5.1ESB1
D804, 805	DIODE	1SS252
D807−809	DIODE	1SS252
RELAIES		
RY102	RELAY	ASR−512
RY1301, 1302	RELAY	ASR−112
RY1303, 1304	RELAY	ASR1035
RY1305	RELAY	ASR1005
RY1306	RELAY	ASR1035
COILS & TRANSFORMER		
L1301, 1302	COIL	ATH1004
L1303, 1304	COIL	ATH1011
L1305	COIL	ATH1004
L1871	AXIAL INDUCTOR	LAU100K
T101	POWER TRANSFORMER	ATT1121
CAPACITORS		
C101	CAPACITOR (8200/81)	ACH1201
C102	CAPACITOR (8200/81)	ACH1202
C108, 109	CKA (0.01/AC400V)	ACG1003
C110	ELECTR.CAPACITOR	CEAS222M16
C111	ELECTR.CAPACITOR	CEAS471M16
C112	ELECTR.CAPACITOR	CEAS102M16
C113, 114	CERAMIC CAPACITOR	CKCYF473Z50
C115, 116	ELECTR.CAPACITOR	CEAS101M10
C117	CERAMIC CAPACITOR	CKCYF473Z50
C118	ELECTR.CAPACITOR	CEAS101M10
C124	CERAMIC CAPACITOR	CKCYF103Z50
C126	ELECTR.CAPACITOR	CEAS470M16
C127	CKA (0.01/AC250V)	ACG1005
C128, 129	ELECTR.CAPACITOR	CEAS470M16
C1301	ELECTROLYTIC CAPACIT	CEAS471M6
C1302	CERAMIC CAPACITOR	CKCYF103Z50
C1303	CERAMIC CAPACITOR	CKCYF473Z50
C1304	ELECTR.CAPACITOR	CEAS221M10
C1305	ELECTR.CAPACITOR	CEAS010M50
C1309	AUDIO FILM CAPACITOR	CFTXA104J50
C131	ELECTR.CAPACITOR	CEAS471M10
C1310−1312	AUDIO FILM CAPACITOR	CFTXA104J50
C1351−1354	CERAMIC CAPACITOR	CCDSL101K500
C1355, 1356	AUDIO FILM CAPACITOR	CFTXA104J50
C1358	AUDIO FILM CAPACITOR	CFTXA104J50

Mark No.	Description	Parts No.
C1360, 1361	POLYESTER CAPACITOR	CQMXA103J100
C1801−1805	ELECTR.CAPACITOR	CEASR47M50
C1851	ELECTR.CAPACITOR	CEAS0R1M50
C1852	ELECTR.CAPACITOR	CEAS4R7M50
C1856, 1857	CERAMIC CAPACITOR	CKCYF103Z50
C1871	ELECTR.CAPACITOR	CEAS101M10
C1872	CEA (47000/5.5V)	ACH1037
C1873	ELECTR.CAPACITOR	CEAS4R7M50
C1899	ELECTR.CAPACITOR	CEAS470M16
C51, 52	ELECTR.CAPACITOR	CEAS100M25
C53, 54	CERAMIC CAPACITOR	CKCYB331K50
C55, 56	ELECTROLYTIC CAPACIT	CEAS471M6
C57, 58	AUDIO FILM CAPACITOR	CFTXA243J50
C59, 60	AUDIO FILM CAPACITOR	CFTXA823J50
C61, 62	ELECTR.CAPACITOR	CEAS2R2M50
C63, 64	ELECTR.CAPACITOR	CEAS101M16
C71, 72	ELECTR.CAPACITOR	CEAS2R2M50
C73	ELECTR.CAPACITOR	CEAS101M10
C801, 802	ELECTR.CAPACITOR	CEAS4R7M50
C805, 806	CERAMIC CAPACITOR	CCCSL470J50
C807−810	ELECTR.CAPACITOR	CEAS4R7M50
C811, 812	CERAMIC CAPACITOR	CKCYB331K50
C813, 814	ELECTR.CAPACITOR	CEAS4R7M50
C815, 816	ELECTR.CAPACITOR	CEAS470M16
C817−820	ELECTR.CAPACITOR	CEAS4R7M50
RESISTORS		
VR51	VR	ACS1060
R101, 105	CARBON FILM RESISTOR	RD1/4PMF4R7J
R107, 110	CARBON FILM RESISTOR	RD1/4PMF100J
R111	CARBON FILM RESISTOR	RD1/4PMF122J
R112	METAL OXIDE RESISTOR	RS2LMF2R2J
R113	METAL OXIDE RESISTOR	RS2LMF100J
R115	CARBON FILM RESISTOR	RD1/4PMF100J
R116, 117	METAL OXIDE RESISTOR	RS2LMF150J
R118	FUSIBLE RESISTOR	RFA1/4PS4R7J
R1351−1354	CARBON FILM RESISTOR	RD1/4PMF101J
R1355−1358	CARBON FILM RESISTOR	RD1/4PMF470J
R1359, 1360	FUSIBLE RESISTOR	RFA1/4PS4R7J
R1361−1364	CARBON FILM RESISTOR	RD1/4PMF4R7J
R1365, 1366	FUSIBLE RESISTOR	RFA1/4PS4R7J
R1367, 1368	RESISTOR (0.33, 5W)	ACN1087

Mark No.	Description	Parts No.
R1369,. 1370	METAL OXIDE RESISTOR	RS2LMF331J
R1371−1374	METAL OXIDE RESISTOR	RS1LMF100J
R1375−1380	CARBON FILM RESISTOR	RD1/4PMF100J
R1865	CARBON FILM RESISTOR	RD1/4PM222J
R819, 820	CARBON FILM RESISTOR	RD1/4PMF102J
R999	RESISTOR (2.2M, 1/2W)	ACN−209
	Other resistors	RD1/8PM□□□J

OTHERS

	TERMINAL 4P	AKB1141
	SPEAKER TERMINAL 8P	AKE1011
	JACK (CONTROL)	AKN1006
	JACK (REMOTE)	AKN1020
	AC OUTLET (3P)	AKP1053
CN13	CONNECTOR (4P)	KPC4
CN16	CONNECTOR (7P)	KPC7
CN26	CONNECTOR (4P)	KPC4
CN27	JUMPER CONNECTOR	KPC6
CN28	CONNECTOR (15P)	KPE15
CN29	CONNECTOR (14P)	KPE14
CN31	CONNECTOR (3P)	KPE3
CN32, 33	CONNECTOR (9P)	KPE9
CN34	CONNECTOR (13P)	KPE13
CN59	CONNECTOR (11P)	KPE11
CN60	CONNECTOR (9P)	KPE9
CN61	CONNECTOR (10P)	KPE10
X1851	CRYSTAL RESONATOR	ASS1015
	FRONT AMP ASSEMBLY	AWH1014

◉ FRONT AMP assembly (AWH1014)

The FRONT AMP assembly (AWH1014) is a part of PS. μ−COM assembly (AWZ3571).

SEMICONDUCTORS

IC601, 602	AUDIO IC	PA0045
Q603, 604	TRANSISTOR	2SC2240
Q605, 606	TRANSISTOR	2SA970
Q607, 608	TRANSISTOR	2SA1145
Q609, 610	TRANSISTOR	2SC2705
Q621−624	TRANSISTOR	2SA992
Q661, 662	TRANSISTOR	2SC2240
D601−612	DIODE	1SS252
D661−666	DIODE	1SS252
D670−673	ZENER DIODE	RD12ESB

Mark No.	Description	Parts No.

CAPACITORS

C601, 602	CERAMIC CAPACITOR	CCCSL221J50
C603, 604	ELECTR.CAPACITOR	CEAS2R2M50
C605, 606	CERAMIC CAPACITOR	CKCYB331K50
C607, 608	ELECTROLYTIC CAPACIT	CEXA471M16
C609, 610	MICA CAPACITOR	CMA150J500
C611, 612	CERAMIC CAPACITOR	CCCSL020C500
C613, 614	CERAMIC CAPACITOR	CCCSL680J50
C615, 616	CERAMIC CAPACITOR	CCCSL151J50
C617, 618	CERAMIC CAPACITOR	CCCSL680J50
C625−628	CERAMIC CAPACITOR (0.047/150)	ACG−009
C661, 662	ELECTROLYTIC CAPACIT	CEANP010M100

RESISTORS

R601−604	CARBON FILM RESISTOR	RD1/4PM□□□J
R605, 606	CARBON FILM RESISTOR	RDR1/4PM223J
R607−612	CARBON FILM RESISTOR	RD1/4PM□□□J
R613−616	FUSIBLE RESISTOR	RFA1/4PS101J
R617, 618	CARBON FILM RESISTOR	RDR1/4PM751J
R619, 620	CARBON FILM RESISTOR	RDR1/2PM223J
R621, 622	FUSIBLE RESISTOR	RFA1/4PS121J
R623, 624	CARBON FILM RESISTOR	RD1/4PM104J
R625, 625	FUSIBLE RESISTOR	RFA1/4PS470J
R637−640	CARBON FILM RESISTOR	RD1/4PMF470J
R661−664	CARBON FILM RESISTOR	RD1/4PMF222J
	Other resistors	RD1/8PM□□□J

◉ R.C.REG. POWER SUPPLY assembly (AWZ3572)

SEMICONDUCTORS

D102	DIODE	4D4B44
D111−114	DIODE	1SR139−400

CAPACITORS

C104, 105	ELECTROLYTIC CAPACIT (6800/42)	ACH1110
C106	ELECTR.CAPACITOR	CEAS332M25
C107	ELECTROLYTIC CAPACIT	CEAS102M35

Mark No.	Description	Parts No.
◉ TRANS assembly (AWZ3573)		
RESISTORS		
R122, 123	CARBON FILM RESISTOR	RD1/4PMF010J
FRONT VIDEO assembly		
CAPACITORS		
C1991, 1992	CERAMIC CAPACITOR	CKCYX473M25
RESISTORS		
	All resistors	RD1/8PM□□□J
OTHERS		
	PIN JACK 1P (VCR 3)	AKB1082
	SOCKET (S VIDEO)	AKP1067
◉ R.C.SPEAKER assembly (AWZ3566)		
OTHERS		
	SPEAKER TERMINAL 2-P	AKE-058
	SPEAKER TERMINAL 4-P	AKE1007
CN20	CONNECTOR (9P)	KPC9
◉ MOTOR VOLUME assembly (AWZ3567)		
SEMICONDUCTORS		
IC501	OP-AMP IC	M5220L
IC502	E-VR IC	TC9154AP
IC503	OP-AMP IC	M5220L
IC505	MECHANISM DRIVER IC	TA7291S
Q501	TRANSISTOR	XDC124ES
D502	DIODE	1SS252
D503, 504	ZENER DIODE	RD4.7ESB
D551, 552	ZENER DIODE	RD5.1ESB
COILS		
L541, 542	AXIAL INDUCTOR	LAU560K
CAPACITORS		
C501, 502	ELECTR.CAPACITOR	CEAS100M50
C503, 504	CERAMIC CAPACITOR	CCCSL560J50
C507, 508	ELECTR.CAPACITOR	CEAS4R7M50
C510	CERAMIC CAPACITOR	CCCSL560J50
C511, 512	ELECTR.CAPACITOR	CEAS4R7M50
C513	CERAMIC CAPACITOR	CCCSL221J50
C541	ELECTR.CAPACITOR	CEAS100M50
C542, 543	CERAMIC CAPACITOR	CKCYF473Z50
C544	ELECTR.CAPACITOR	CEAS221M16
C551, 552	ELECTR.CAPACITOR	CEAS470M16
C560	ELECTR.CAPACITOR	CEAS010M50
RESISTORS		
VR501	VR	ACX1056
R552, 559	CARBON FILM RESISTOR	RD1/4PM821J
	Other resistors	RD1/8PM□□□J
◉ FRONT CONTROL assembly (AWZ3569)		
SEMICONDUCTORS		
IC1901	SYSTEM CONTROL MCU	PDG072A
Q1901-1918	TRANSISTOR	XDC143ES
Q1919	TRANSISTOR	XDC124ES
Q1920	TRANSISTOR	XDC143ES
Q1931, 1932	TRANSISTOR	2SC2458
D1901-1911	DIODE	1SS252
D1912, 1913	LED	AEL1113
D1914-1918	LED	AEL1100
D1919	LED (RED)	AEL1108
D1921-1924	DIODE	1SS252
D1931	DIODE	1SS252
SWITCHES		
S1901-1966	SWITCH	ASG1034
S1970	ROTARY ENCODER	ASX1008
COIL		
L1901	AXIAL INDUCTOR	LAU100K
CAPACITORS		
C1901	ELECTR.CAPACITOR	CEJA220M10
C1902	AXIAL CERAMIC CAPACITOR	CKPUYF103Z25
C1903	ELECTR.CAPACITOR	CEAS010M50
RESISTORS		
R1920-1926	CARBON FILM RESISTOR	RD1/4PM151J
R1927	CARBON FILM RESISTOR	RD1/4PM271J
	Other resistors	RD1/8PM□□□J
OTHERS		
	FL SPACER	AEB1120
	REMOTE RECEIVER UNIT	AXX1010

Mark No.	Description	Parts No.
CN1901	CONNECTOR (4P)	KPC4
V1901	FL TUBE	AAV1123
X1901	CERAMIC OSCILLATOR	ASS1022

◉ DSP assembly (AWZ3570)

SEMICONDUCTORS

IC1101	OP-AMP IC	RC4558DXP
IC1102	OP AMP	M5238PF
IC1103	A/D CONVERTER	LC7886
IC1104	DSP IC	LC83010NPD
IC1105, 1106	MEMORY IC	MS51464-12Z
IC1107-1109	IC DIGITAL FILTER	PD0060
IC1110	D/A CONVERTER	LC78820-B
IC1111	IC	NJM072D-E
IC1112	OP-AMP IC	RC4558DXP
IC1113	IC	PCM56P
IC1114	IC	RC4558DXP
IC1115	D/A CONVERTER	UPD6376CX
IC1116	IC	RC4558DXP
IC1117	OP-AMP IC	RC4558DXP
IC1118	LOGIC IC	TC4052BP
IC1119	OP-AMP IC	RC4558DXP
IC1120	LOGIC IC	TC4066BP
IC1121, 1122	OP-AMP IC	RC4558DXP
IC1123	LOGIC IC	TC4066BP
IC1124	DOLBY-B IC	LA2730
IC1125	OP-AMP IC	RC4558DXP
Q1131	TRANSISTOR	2SC2458
Q1181	TRANSISTOR	XDA124ES
Q1182	TRANSISTOR	2SA1048
Q1183	TRANSISTOR	XDC124ES
Q1184	TRANSISTOR	2SA1048
Q1185	TRANSISTOR	2SC3327
Q1186	TRANSISTOR	XDA124ES
Q1201	TRANSISTOR	XDC143ES
Q1202, 1203	N-FET	2SK373
Q1251	TRANSISTOR	XDA124ES
Q1252	TRANSISTOR	XDC124ES
Q1253, 1254	TRANSISTOR	2SC3327
D1101-1105	DIODE	1SS252
D1111-1114	DIODE	1SS252
D1201, 1202	DIODE	1SS252

COILS

F1101, 1102	FILTER	ATF1071
F1103, 1104	FILTER	ATF1106
F1105	FILTER	ATF1102
F1106	FILTER	ATF1106
L1103, 1104	FERRITE BEAD	ATX1008
L1131	FERRITE BEAD	ATX1008
L1151, 1152	AXIAL INDUCTOR	LAU330K
L1161	AXIAL INDUCTOR	LAU330K
L1162	FERRITE BEAD	ATX1008
L1181-1185	FERRITE BEAD	ATX1008
L1241, 1242	FERRITE BEAD	ATX1008
L1251, 1252	FERRITE BEAD	ATX1008
L1186	FERRITE BEAD	ATX1008

CAPACITORS

C1101, 1102	CERAMIC CAPACITOR	CKDYX473M25
C1103, 1104	ELECTR.CAPACITOR	CEAS470M16
C1105, 1106	CERAMIC CAPACITOR	CKDYB102K50
C1107, 1108	ELECTR.CAPACITOR	CEAS100M25
C1109, 1110	MYLOR FILM CAPACITOR	CQMA153J50
C1113, 1114	CERAMIC CAPACITOR	CKDYB222K50
C1115	CERAMIC CAPACITOR	CKDYX104M25
C1116	ELECTR.CAPACITOR	CEAS470M10
C1117	CERAMIC CAPACITOR	CKDYB471K50
C1118	ELECTR.CAPACITOR	CEAS470M10
C1119	CERAMIC CAPACITOR	CKDYX104M25
C1120-1122	CERAMIC CAPACITOR	CKDYX473M25
C1123	ELECTR.CAPACITOR	CEAS101M10
C1131	CERAMIC CAPACITOR	CKDYX473M25
C1132	ELECTR.CAPACITOR	CEAS470M10
C1133	ELECTR.CAPACITOR	CEAS221M10
C1134	ELECTR.CAPACITOR	CEAS101M16
C1137, 1138	ELECTR.CAPACITOR	CEAS220M25
C1139, 1140	MYLOR FILM CAPACITOR	CQMA821J50
C1141, 1142	MYLOR FILM CAPACITOR	CQMA222J50
C1143, 1144	CERAMIC CAPACITOR	CCDCH121J50
C1145, 1146	MYLOR FILM CAPACITOR	CQMA223J50
C1150-1153	CERAMIC CAPACITOR	CKDYX473M25
C1154, 1155	ELECTR.CAPACITOR	CEAS101M10
C1156	MYLOR FILM CAPACITOR	CQMA223J50
C1157	MYLOR FILM CAPACITOR	CQMA821J50
C1158	MYLOR FILM CAPACITOR	CQMA222J50
C1159	CERAMIC CAPACITOR	CCDCH121J50
C1160	ELECTR.CAPACITOR	CEAS220M25
C1161	CERAMIC CAPACITOR	CKDYX473M25
C1162-1165	ELECTR.CAPACITOR	CEAS470M10
C1166	CERAMIC CAPACITOR	CKDYX473M25
C1167	CERAMIC CAPACITOR	CKDYB471K50
C1169, 1170	MYLOR FILM CAPACITOR	CQMA821J50
C1171, 1172	CERAMIC CAPACITOR	CCDCH121J50
C1173, 1174	MYLOR FILM CAPACITOR	CQMA222J50

Mark No.	Description	Parts No.
C1175, 1176	ELECTR.CAPACITOR	CEAS220M25
C1177, 1178	MYLOR FILM CAPACITOR	CQMA223J50
C1181, 1182	CERAMIC CAPACITOR	CCDCH101J50
C1183–1186	ELECTR.CAPACITOR	CEAS220M25
C1187, 1188	MYLOR FILM CAPACITOR	CQMA152K50
C1189, 1190	CERAMIC CAPACITOR	CCDCH101J50
C1194	AUDIO FILM CAPACITOR	CFTXA274J50
C1195	ELECTR.CAPACITOR	CEAS220M25
C1196	CERAMIC CAPACITOR	CCDCH101J50
C1197	ELECTR.CAPACITOR	CEAS220M25
C1198	MYLOR FILM CAPACITOR	CQMA152K50
C1199	ELECTR.CAPACITOR	CEANP2R2M50
C1201, 1202	ELECTR.CAPACITOR	CEAS470M10
C1203, 1204	CERAMIC CAPACITOR	CCDCH560J50
C1211	CERAMIC CAPACITOR	CKDYX473M25
C1212	CERAMIC CAPACITOR	CKDYB102K50
C1214	CERAMIC CAPACITOR	CKDYX473M25
C1234, 1235	CERAMIC CAPACITOR	CKDYB102K50
C1236–1239	CERAMIC CAPACITOR	CCDCH101J50
C1240	ELECTR.CAPACITOR	CEAS101M10
C1241	CERAMIC CAPACITOR	CKDYX473M25
C1242	CERAMIC CAPACITOR	CKDYB102K50
C1243, 1244	CERAMIC CAPACITOR	CCDCH100D50
C1245	CERAMIC CAPACITOR	CKDYX473M25
C1246	CERAMIC CAPACITOR	CKDYB102K50
C1247	ELECTR.CAPACITOR	CEAS101M10
C1248	CERAMIC CAPACITOR	CKDYX104M25
C1249	CERAMIC CAPACITOR	CCDCH101J50
C1251	MYLOR FILM CAPACITOR	CQMA472J50
C1252	MYLOR FILM CAPACITOR	CQMA122J50
C1254	ELECTR.CAPACITOR	CEAS220M16
C1255	ELECTR.CAPACITOR	CEAS470M25
C1256	ELECTR.CAPACITOR	CEAS100M25
C1257	MYLOR FILM CAPACITOR	CQMA333K50
C1258	MYLOR FILM CAPACITOR	CQMA472K50
C1259	ELECTR.CAPACITOR	CEAS220M16
C1260	ELECTR.CAPACITOR	CEAS101M16
C1261	MYLOR FILM CAPACITOR	CQMA333K50
C1262	AUDIO FILM CAPACITOR	CFTXA104J50
C1267	ELECTR.CAPACITOR	CEAS010M50
C1263	ELECTR.CAPACITOR	CEASR33M50
C1264	CERAMIC CAPACITOR	CKDYB471K50
C1265, 1266	ELECTR.CAPACITOR	CEAS010M50
C1269, 1270	ELECTR.CAPACITOR	CEAS220M25
C1271, 1272	MYLOR FILM CAPACITOR	CQMA152K50

Mark No.	Description	Parts No.
RESISTORS		
VR1101, 1102	VR	VRTB6VS102
VR1103	VR	VRTB6VS104
VR1201	VR	VRTB6VS223
	Other resistors	RD1/8PM□□□J
OTHERS		
X1101	CRYSTAL RESONATOR	ASS1035

HEADPHONE assembly

Mark No.	Description	Parts No.
OTHERS		
	JACK (HEADPHONE)	AKN1002

◉ S. VIDEO assembly (AWZ3564)

Mark No.	Description	Parts No.
SEMICONDUCTORS		
IC1650	VIDEO SEITCH	LA7952
IC1651	E–SW IC	NJM2233BS
IC1652	VIDEO SEITCH	LA7952
IC1653	E–SW IC	NJM2233BS
IC1654, 1655	VIDEO SEITCH	LA7952
IC1656, 1657	E–SW IC	NJM2234L
IC1658	LOGIC IC	BU4066BL
Q1650–1656	TRANSISTOR	2SC2458
Q1657, 1658	TRANSISTOR	XDA124ES
Q1659	TRANSISTOR	2SC2458
Q1662–1664	TRANSISTOR	2SA1048
D1650–1653	DIODE	1SS252
D1655	ZENER DIODE	RD5.1ESB1
CAPACITORS		
C1650–1652	ELECTR.CAPACITOR	CEAS4R7M50
C1653–1655	ELECTR.CAPACITOR	CEAS470M16
C1657–1659	ELECTR.CAPACITOR	CEAS4R7M50
C1660	ELECTR.CAPACITOR	CEAS101M10
C1661–1666	CERAMIC CAPACITOR	CKCYX103M25
C1667–1674	ELECTR.CAPACITOR	CEAS470M16
C1675–1677	ELECTR.CAPACITOR	CEAS101M16
C1678	ELECTR.CAPACITOR	CEAS470M16
C1687	AXIAL CERAMIC C.	CCPUSL470J50
C1688	ELECTR.CAPACITOR	CEAS4R7M50
C1689	ELECTR.CAPACITOR	CEAS470M16
C1690	CERAMIC CAPACITOR	CKCYF473Z50
C1691	ELECTR.CAPACITOR	CEAS470M25
C1692–1694	AXIAL CERAMIC C.	CCPUSL470J50
C1695	ELECTR.CAPACITOR	CEAS101M10
C1696	ELECTR.CAPACITOR	CEAS470M25
C1697, 1698	CERAMIC CAPACITOR	CCCSL101J50
C1699	CERAMIC CAPACITOR	CCCSL330J50

Mark No.	Description	Parts No.
RESISTORS		
	All resistors	RD1/8PM□□□J
OTHERS		
	SOCKET (S.TERM.)	AKP1065

◉ R.C.AMP assembly (AWZ3568)

Mark No.	Description	Parts No.
SEMICONDUCTORS		
IC901–903	PREDRIVER–IC	UPC1270H
Q901–903	TRANSISTOR	2SC2458
CAPACITORS		
C901, 902	ELECTR.CAPACITOR	CEAS2R2M50
C903, 904	CERAMIC CAPACITOR	CKMYB102K50
C905, 906	ELECTROLYTIC CAPACIT	CEHAQ101M10
C907, 908	CERAMIC CAPACITOR	CCMSL270J50
C909, 910	ELECTR.CAPACITOR	CEHAQ100M50
C911, 912	AUDIO FILM CAPACITOR	CFTXA333J50
C913, 914	ELECTROLYTIC CAPACIT	CEAS4R7M100
C915, 916	ELECTR.CAPACITOR	CEAS100M50
C917	ELECTROLYTIC CAPACIT	CEAS4R7M100
C919	ELECTR.CAPACITOR	CEAS2R2M50
C920	CERAMIC CAPACITOR	CKMYB102K50
C921	ELECTROLYTIC CAPACIT	CEHAQ101M10
C922	CERAMIC CAPACITOR	CCMSL270J50
C923	ELECTR.CAPACITOR	CEHAQ100M50
C924	AUDIO FILM CAPACITOR	CFTXA333J50
RESISTORS		
R919, 920	RESISTOR (0.22, 2W)	ACN–131
R929	RESISTOR (0.22, 2W)	ACN–131
R933–938	FUSIBLE RESISTOR	RFA1/4PS4R7J
	Other resistors	RD1/8PM□□□J

◉ REGULATOR 1 assembly (AWZ3574)

Mark No.	Description	Parts No.
SEMICONDUCTORS		
IC103	REGULATOR IC	NJM78M12FAS
Q106	TRANSISTOR	2SA1306
D118	DIODE	1SS252
CAPACITORS		
C123	CERAMIC CAPACITOR	CKCYF103Z50
C125	ELECTR.CAPACITOR	CEAS470M16

◉ REGULATOR 2 assembly (AWZ3575)

Mark No.	Description	Parts No.
SEMICONDUCTORS		
IC101	REGULATOR IC	NJM78M15FAS
IC102	REGULATOR IC	NJM79M15FA
CAPACITORS		
C119, 120	CERAMIC CAPACITOR	CKCYF103Z50
C121, 122	ELECTR.CAPACITOR	CEAS470M16

◉ OSD assembly (AWZ3634)

Mark No.	Description	Parts No.
SEMICONDUCTORS		
IC1501	TV IC	UPC1377C
IC1502	OSD IC	M50554–003SP
IC1503	REGULATOR IC	UPC78L05
Q1501, 1502	TRANSISTOR	2SC2458
Q1503, 1504	TRANSISTOR	2SA1048
Q1505	TRANSISTOR	XDA124ES
Q1506, 1507	TRANSISTOR	2SC2458
Q1508	TRANSISTOR	XDC124ES
Q1509	TRANSISTOR	XDA124ES
D1501	ZENER DIODE	RD5.1ESB1
D1503–1505	DIODE	1SS252
COILS		
L1501	AXIAL INDUCTOR	LAU390K
L1502	AXIAL INDUCTOR	LAU150K
L1503, 1504	AXIAL INDUCTOR	LAU270K
CAPACITORS		
TC1501	CERAMIC TRIMMER	ACM–020
C1501	ELECTR.CAPACITOR	CEAS101M16
C1502	CERAMIC CAPACITOR	CCCSL560J50
C1503	ELECTR.CAPACITOR	CEAS010M50
C1504	CERAMIC CAPACITOR	CKCYB561K50
C1505, 1506	MYLOR FILM CAPACITOR	CQMA333J50
C1507	ELECTR.CAPACITOR	CEAS010M50
C1508	AUDIO FILM CAPACITOR	CFTXA105J50
C1509	CERAMIC CAPACITOR	CKCYF473Z50
C1510	MYLOR FILM CAPACITOR	CQMA333J50
C1511	ELECTR.CAPACITOR	CEAS010M50
C1512	CERAMIC CAPACITOR	CKCYB152K50
C1513	AUDIO FILM CAPACITOR	CFTXA823J50
C1514	CERAMIC CAPACITOR	CKCYB472K50
C1515	PL.STYRENE CAPACITOR	CQSA562J50
C1516	ELECTR.CAPACITOR	CEAS2R2M50

Mark No.	Description	Parts No.
C1517	ELECTR.CAPACITOR	CEAS101M16
C1518	CERAMIC CAPACITOR	CCCSL101J50
C1519	AUDIO FILM CAPACITOR	CFTXA104J50
C1520	ELECTR.CAPACITOR	CEAS2R2M50
C1521	ELECTR.CAPACITOR	CEAS101M10
C1522	CERAMIC CAPACITOR	CKCYF103Z50
C1523	ELECTR.CAPACITOR	CEAS220M25
C1524, 1525	CERAMIC CAPACITOR	CCCCH150J50
C1526	CERAMIC CAPACITOR	CCCSL330J50
C1527	ELECTR.CAPACITOR	CEAS470M16
C1528	CERAMIC CAPACITOR	CCCSL220J50
C1529	CERAMIC CAPACITOR	CKCYF103Z50
C1530	CERAMIC CAPACITOR	CCCSL220J50
C1531	CERAMIC CAPACITOR	CKCYF103Z50
C1534	CERAMIC CAPACITOR	CCCSL220J50
C751−754	CERAMIC CAPACITOR	CKCYB102K50
RESISTORS		
VR1501	VR	VRTS6HS103
VR1502	VR	VRTS6HS472
R1515	CARBON FILM RESISTOR	RD1/4PMF100J
R1518	METALFILM RESISTER	RN1/4PC1202F
R1544	CARBON FILM RESISTOR	RD1/4PM4R7J
	Other resistors	RD1/8PM□□□J
OTHERS		
	PIN JACK 1P (SUB WOOFER)	AKB1139
	PIN JACK 2P (CENTER AMP)	AKB1142
CN	PIN JACK 4P (REAR AMP)	AKB1181
CN42	CONNECTOR 4P	KPC4
X1505	CRYSTAL RESONATOR	ASS1056

◉ MAIN FUNCTION assembly (AWZ3673)

Mark No.	Description	Parts No.
SEMICONDUCTORS		
IC201	E−SW IC	TC9164N
IC202	E−SW IC	TC9163N
IC203	OP AMP	M5238LF
CAPACITORS		
C201−208	CERAMIC CAPACITOR	CCCSL101J50
C211, 212	ELECTR.CAPACITOR	CEAS100M50
C213	ELECTR.CAPACITOR	CEAS010M50
C214, 215	ELECTR.CAPACITOR	CEAS470M16
C220, 221	CERAMIC CAPACITOR	CKCYB102K50
C230	CERAMIC CAPACITOR	CKCYB102K50
RESISTORS		
	All resistors	RD1/8PM□□□J
OTHERS		
	PHONO JACK 6P	AKB1154
CN	PIN JACK 8P (TAPE1/DAT, TAPE2)	AKB1182

◉ SUB FUNCTION assembly (AWZ3674)

Mark No.	Description	Parts No.
SEMICONDUCTORS		
IC301	E−SW IC	TC9164N
IC302	E−SW IC	TC9163N
IC303	OP AMP	M5238LF
CAPACITORS		
C301−310	CERAMIC CAPACITOR	CCCSL101J50
C315, 316	ELECTR.CAPACITOR	CEAS220M50
C317	ELECTR.CAPACITOR	CEAS010M50
C318, 319	ELECTR.CAPACITOR	CEAS470M16
C320, 321	CERAMIC CAPACITOR	CKCYB102K50
C330	CERAMIC CAPACITOR	CKCYB102K50
RESISTORS		
	All resistors	RD1/8PM□□□J
OTHERS		
CN	6P PIN JACK (CD, CDV, TV, VIDEO)	AKB1178
CN	8P PIN JACK (VCR1, 2)	AKB1179
CN21, 22	CONNECTOR (15P)	KPE15
CN23	CONNECTOR (11P)	KPE11
CN24	CONNECTOR (7P)	KPE7

◉ VIDEO FUNCTION assembly (AWZ3675)

Mark No.	Description	Parts No.
SEMICONDUCTORS		
IC1601−1606	E−SW IC	NJM2234L
Q1601−1608	TRANSISTOR	2SC2458
COILS		
L1601, 1602	AXIAL INDUCTOR	LAUR22M
CAPACITORS		
C1601−1605	ELECTR.CAPACITOR	CEAS470M16
C1606−1609	ELECTR.CAPACITOR	CEAS101M10
C1610, 1611	ELECTR.CAPACITOR	CEAS470M16
C1613	ELECTR.CAPACITOR	CEAS470M16
C1614	CERAMIC CAPACITOR	CCCSL270J50

Mark No.	Description	Parts No.
C1615	ELECTR.CAPACITOR	CEAS470M16
C1616	CERAMIC CAPACITOR	CCCSL270J50
C1617–1619	ELECTR.CAPACITOR	CEAS470M16
C1625–1627	ELECTR.CAPACITOR	CEAS470M16
C1628, 1629	CERAMIC CAPACITOR	CKDYX473M25
C1630	ELECTR.CAPACITOR	CEAS470M16
C1632	CERAMIC CAPACITOR	CKDYX473M25
RESISTORS		
	All resistors	RD1/8PM□□□J
OTHERS		
CN	PIN JACK 3P (VIDEO IN)	AKB1170
CN	PIN JACK 2P (VIDEO IN)	AKB1173

◉ ENHANCER assembly (AWZ3676)

Mark No.	Description	Parts No.
SEMICONDUCTORS		
IC1701	E–SW IC	NJM2233BS
IC1702	E–SW IC	NJM2234L
IC1703	LOGIC IC	BU4066BL
IC1704	E–SW IC	NJM2209S
IC1705	E–SW IC	NJM2235S
Q1701–1705	TRANSISTOR	2SC2458
Q1706–1708	TRANSISTOR	XDA124ES
Q1709	TRANSISTOR	2SA1048
Q1710	TRANSISTOR	XDC124ES
Q1711, 1712	TRANSISTOR	2SA1048
Q1713	TRANSISTOR	2SC2458
Q1714, 1715	TRANSISTOR	2SA1048
Q1716	TRANSISTOR	2SC2458
Q1717	TRANSISTOR	2SC3327
Q1718, 1719	TRANSISTOR	2SC2458
Q1720	TRANSISTOR	2SA1048
Q1721–1726	TRANSISTOR	2SC2458
Q1727	TRANSISTOR	2SA1048
Q1728	TRANSISTOR	2SC3327
D1701–1704	DIODE	1SS252
D1707	ZENER DIODE	RD5.6ESB
COILS		
L1740	AXIAL INDUCTOR	LAU221K
L1741	AXIAL INDUCTOR	LAU270K
L1742	AXIAL INDUCTOR	LAU390K
L1743, 1744	AXIAL INDUCTOR	LAU221K
L1745	AXIAL INDUCTOR	LAU270K
L1746	AXIAL INDUCTOR	LAU390K
L1747, 1748	AXIAL INDUCTOR	LAU101K
CAPACITORS		
C1701–1703	ELECTR.CAPACITOR	CEAS2R2M50
C1704–1707	ELECTR.CAPACITOR	CEAS470M16
C1708	AUDIO FILM CAPACITOR	CFTXA823J50
C1709	AUDIO FILM CAPACITOR	CFTXA393J50
C1711	AUDIO FILM CAPACITOR	CFTXA104J50
C1712	CERAMIC CAPACITOR	CCCCH070D50
C1713	CERAMIC CAPACITOR	CCCCH030C50
C1714, 1715	CERAMIC CAPACITOR	CCCCH680J50
C1716	CERAMIC CAPACITOR	CCCSL100D50
C1717, 1718	CERAMIC CAPACITOR	CCCCH470J50
C1719	ELECTR.CAPACITOR	CEAS101M10
C1720	PL. STYRENE CAPACITOR	CQMA561J50
C1721	ELECTR.CAPACITOR	CEAS2R2M50
C1722	CERAMIC CAPACITOR	CCCSL221J50
C1723	CERAMIC CAPACITOR	CCCSL151J50
C1724	CERAMIC CAPACITOR	CCCCH180J50
C1725	CERAMIC CAPACITOR	CCCSL220J50
C1726	CERAMIC CAPACITOR	CKCYB472K50
C1727	ELECTR.CAPACITOR	CEAS101M10
C1728, 1729	ELECTR.CAPACITOR	CEAS470M16
C1730, 1731	ELECTR.CAPACITOR	CEAS2R2M50
C1732, 1733	ELECTR.CAPACITOR	CEAS470M16
C1734	CERAMIC CAPACITOR	CCCSL100D50
C1735	CERAMIC CAPACITOR	CKDYF103Z50
C1736	CERAMIC CAPACITOR	CCCSL070D50
C1737–1740	ELECTR.CAPACITOR	CEAS470M16
C1747, 1748	ELECTR.CAPACITOR	CEAS470M16
C1753	CERAMIC CAPACITOR	CCCSL470J50
C1749	CERAMIC CAPACITOR	CCDSL220J50
RESISTORS		
	All resistors	RD1/8PM□□□J
OTHERS		
CN	PIN JACK 3P (VIDEO OUT)	AKB1170
CN25	CONNECTOR (9P)	KPE9

◉ BARRIER assembly (AWZ3825)

Mark No.	Description	Parts No.
RESISTORS		
R1	CARBONFILM RESISTOR	RD1/8PM102J

5. ADJUSTMENTS

5.1 TUNER SECTION

1. Connect the wires as shown in Fig. 5−1 (FM ANT. terminal : 75Ω).
2. When the SD model is used, set the band select switch to AM : 10kHz/FM : 100kHz.

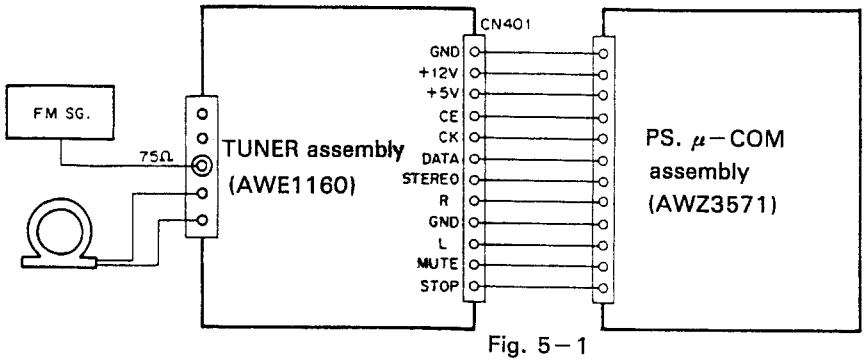

Fig. 5−1

FM Section

Note: Stereo modulation: Main 1kHz L+R ±68.25kHz
Pilet 19 kHz ±6.75kHz

Order	Item	SSG			Receiving frequency	Adjustment	
		Frequency	Modulation	Level		Adjustment location	Remarks
1	Checking front end VT	No signal			108MHz	—	Check that the voltage between terminal 41 and ground is 8.7 ±2.0V.
2	Checking front end VT				87.5MHz	—	Check that the voltage between terminal 41 and ground is 3.4±1.5V.
3	Increasing front end sensitivity	98MHz		Weak input	98MHz	L402, L404, T402	Set the voltage between terminal 43 and ground to maximum, and check that the practical sensitivity is as specified.
4	Center adjustment	98MHz		60dBμV	98MHz	L431	Adjust the voltage between terminals 45 and 46 to 0±50mV.
5	Checking monophonic distortion	98MHz	1kHz ±75kHz dev.	60dBμV	98MHz	—	Check that the monophonic distortion is as specified.
6	Adjusting VCO		OFF	60dBμV		VR451	Adjust the output of terminal 44 to 76.0kHz±1.0kHz.
7	Adjusting stereo distortion	98MHz	L−ONLY R−ONLY	60dBμV	98MHz	T402	Minimize the distortion within 1/4 rotation of the core,and check conformity to the specification.
8	Checking separation	98MHz	L−ONLY R−ONLY	60dBμV	98MHz	—	Check that the separation of L→R and R→L is as specified.
9	Checking lighting levels of TUNED and STEREO IND.	98MHz	STEREO		98MHz	—	Check that the lighting levels of TUNED and STEREO IND. are as Specified.

AM Section

Order	Item	SSG			Receiving frequency	Adjustment	
		Frequency	Modulation	Level		Adjustment location	Remarks
1	Checking front end VT	No signal			1700kHz	—	Check that the voltage between terminal 41 and ground is 7.5 ±1.0V.
2	Checking front end VT				530kHz	—	Check that the voltage between terminal 41 and ground is 1.5±0.5V.
3	Checking front end sensitivity	1000kHz	400kHz 30% MOD.	Practical sensitivity level	1000kHz	—	Check that the practical sensitivity (maximum sensitivity) is as specified.
4	Adjusting lighting level of TUNED IND.	1000kHz			1000kHz	VR431	Adjust the lighting level of TUNED IND. to 55dBμV/m ±3dB.

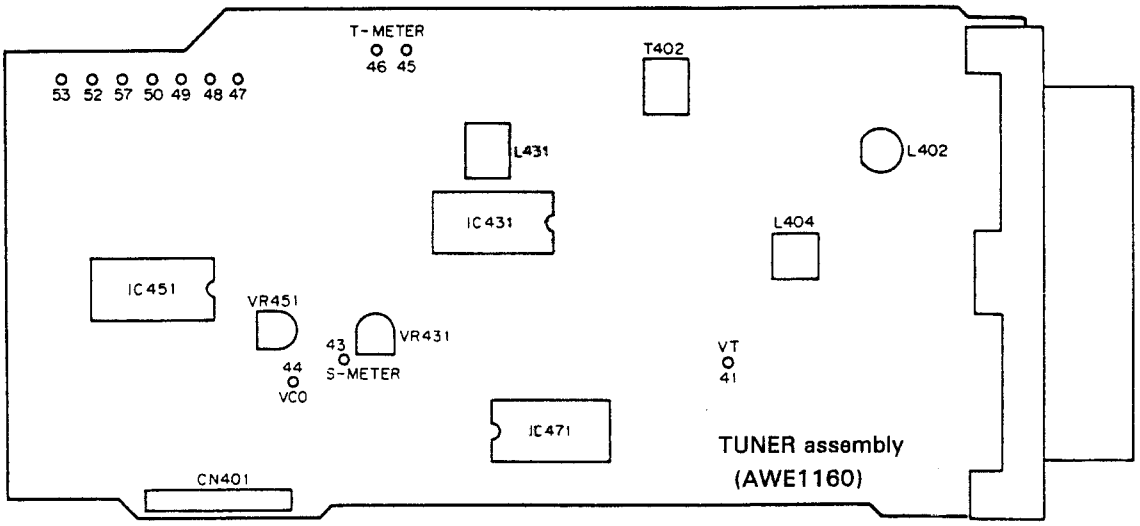

Fig. 5−2 Adjustment points

5.2 DSP ASSEMBLY SECTION (Refer to Fig. 5−4)

- Set the MUSTER VOLUME to the minimum.

1) A/D DC Bias Adjustment

- Set the INPUT SELECTOR to LINE. Set the LINE INPUT terminal to input disabled.
- Adjust the output voltage of pins 1 (ADIN1) and 23 (ADIN2) of IC1103 (LC7886) as follows :
  a) Measure the value of pin 3 (AVDD) of IC1103. Divide the value in half and record that value (1/2 AVDD).
  b) Adjust the voltage of pin 1 (ADIN1) at VR1101 to the recorded value (1/2 AVDD) ±0.005V.
  c) Adjust the voltage of pin 23 (ADIN2) at VR1102 to the recorded value (1/2 AVDD) ±0.005V.

2) Dolby Level Adjustment

- Input sine wave signal of 1kHz, 260mV to the LINE input. Rch only.
- Set the INPUT SELECTOR to the LINE.
- Set the SURROUND MODE switches to the DANCE.
- Turn the JOG dial to set the EFFECT level to "5."
- Check value of R1264.
- Adjust with VR1201 so that the output of the R1263 lead (A) (nothing is connected) of the DSP assembly becomes the following :
  50mV±5mV when R1264 is 5.6kΩ.
  63mV±5mV when R1264 is 7.5kΩ.

NOTE :
- *VR 1103 is for adjusting distortion factor.*
- *Adjust it to the mechanical center position.*

5.3 OSD ASSEMBLY SECTION (Refer to Fig. 5−4)

1) Adjusting H. SYNC and V. SYNC for Superimposed Display.

- Adjust the VR1502 so that the application of power without any signal causes the OSD assembly's TP (H. sync) to show a frequency of 15.75kHz±50Hz.
- Adjust the VR1501 so that the application of power without any signal causes the OSD assembly's TP (V. sync) to show a frequency of 53Hz±1Hz.

2) Adjusting the Superimposed Display in the Center

- Connect the VIDEO OUT (TO MONITOR TV) terminal to a monitor TV.
- Select one of JASS THEATERS of the SURROUND MODE switch.
- Turn the JOG dial to display "Effect Level 100". Then adjust the TC1501 to center the superimposed display "Effect Lavel 100", leaving equal margin on both right and left of the TV screen.

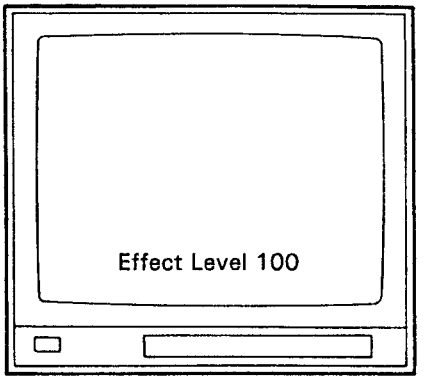

Fig. 5−3

Manufactured under license from Dolby Laboratories Licensing Corporation.Additionally licensed under one or more of the following patents: U.S.numbers 3,632,886, 3,746,792 and 3,959,590;Canadian numbers 1,004,603 and 1,037,877."Dolby"and the double-D symbol DD are trademarks of Dolby Laboratories Licensing Corporation.

Manufactured under license from Dolby Laboratories Licensing Corporation.
DOLBY and the double-D symbol DD are trademarks of Dolby Laboratories Licensing Corporation.

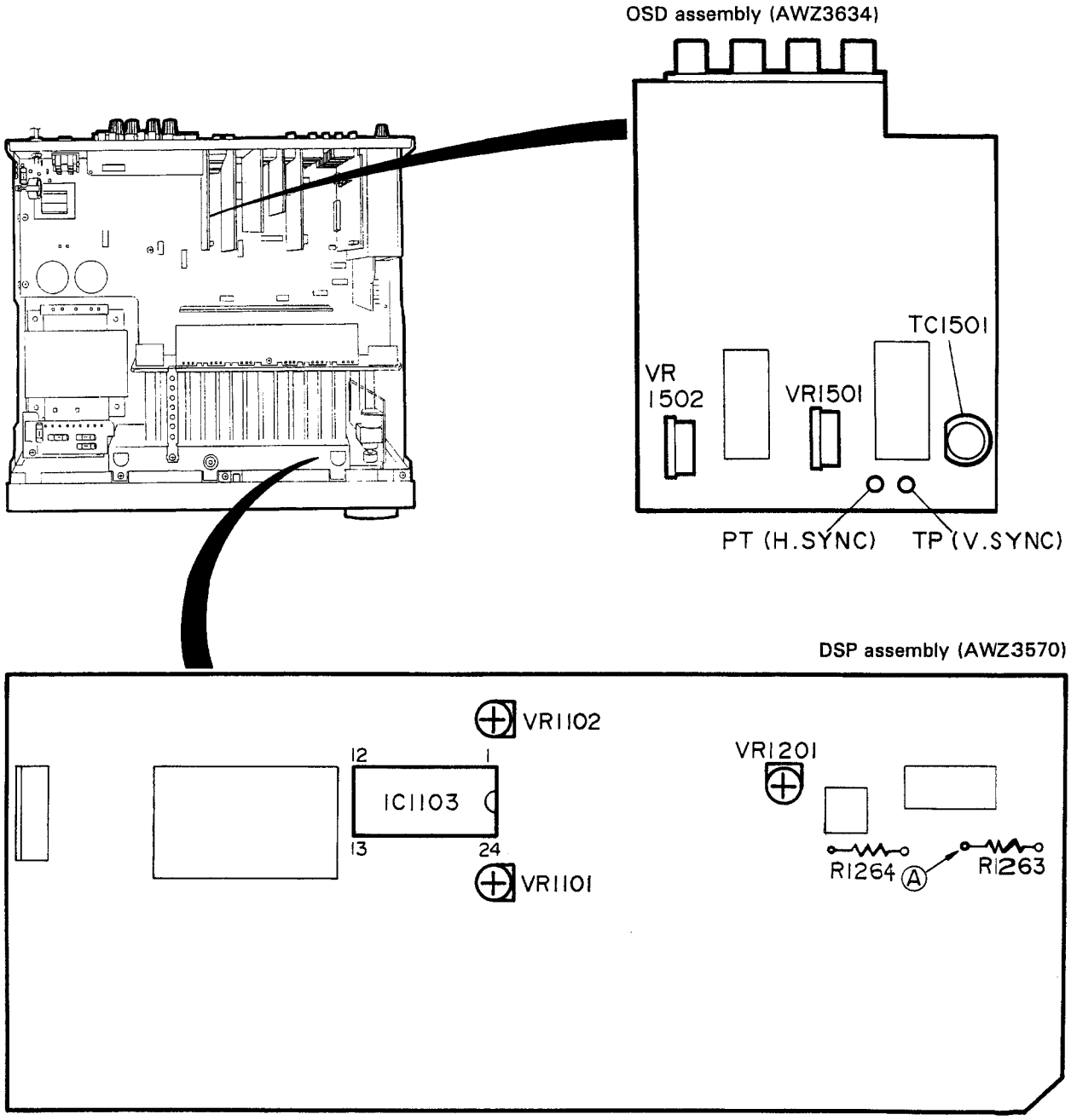

Fig. 5—4 Adjustment points

6. IN INFORMATION

■ IC1502 (M50554−003SP) : OSD IC

• Pin Function

No.	Symbol	Pin Name	Description
1	Vss1	Ground terminal	Connect to GND using a digital ground terminal.
2	SCK	Serial clock input	Collects serial data of SIN at the leading edge of SCK when the CS terminal is LOW. Hysteresis input. Equipped with a pull−up resistor.
3	$\overline{AC}$	Auto clear input	Resets the IC internal circuit when the mode is LOW. Equipped with a pull−up resistor. Hysteresis input.
4 5	OSC1 OSC2	Oscillation circuit external terminal	An external terminal for the display oscillation circuit. The standard oscillation frequency is approximately 7MHz. The oscillation frequency determines the horizontal display position and the character width on the TV monitor.
6	N/$\overline{P}$	NTSC/PAL switching input	A synchronizing signal switching terminal for NTSC or PAL. Synchronizing signals in NTSC are generated when the mode is HIGH. Synchronizing signals in PAL are generated when the mode is LOW. Equipped with a pull−up resistor.
7	$\overline{CS}$	Chip select input	A chip select terminal. Goes LOW when performing serial data transmission. Equipped with a pull−up resistor.
8	SIN	Serial date input	Inputs data and address of memory for the display controlling resistor and the display data. Equipped with a pull−up resistor.
9	PAOUT	Parity output	An odd parity output. Detects a 1−bit error in a word of SIN.
10	SYEX	Synchronizing signal switching input	A switching terminal of the external or internal synchronizing signals. Changes to the external synchronizing signal when the mode is HIGH. Changes to internal synchronizing signal when the mode is LOW. SYEX atructures the logical or of the EX resistor of address 243 in the display controlling resistor and the internal synchronization priority. Equipped with a pull−up resistor.
11	Vss2	Ground terminal	Connect to GND using an analog ground terminal.
12	CVIDEO	Composite video output	An output terminal of compound video signals. Outputs 2Vp−p compound video signals. During the superimpose mode, outputs by superimposing character output to the CVIN signal.
13	CVIN	Compound video input	An input terminal of compound video signals. During the superimpose mode, character output, etc. will be superimposed to the compound video signal.
14	LEBK	Blanking level	An input terminal to detemine the blanking level of the video signal.
15	LECHA	Character level input	An input terminal to determine the character output level of the video signal. The color of characters is white.
16	CBIN	Color burst signal input	Converts the CB output to the color burst signal level of the video signal at the external circuit and inputs it.
17	RSIN	Character background carrier color signal input	Converts the RS output to the carrier color signal level of the video signal at the external circuit and inputs it.
18	VDD2	Power terminal	Connect to +5V using an analog power terminal.
19	RS	Character background carrier color signal output	A carrier color signal output for color character background. Outputs signals with a phase angle to the color burst signal CB. Amplification: 5V
20	CB	Color burst signal output	Output color burst signals of 3.58MHz for NTSC and 4.43MHz for PAL.

No.	Symbol	Pin Name	Description
21	YM*	Luminance signal output	Outputs the luminance signal. Can select polarity when specifying the font ROM.
22	BLNK*	Character background output	Outputs the character background signal. Can select polarity when specifying the font ROM.
23	CO*	Character output	Outputs the character signal. Can select polarity when specifying the font ROM.
24	B*	Blue output	A blue output terminal. Can select polarity when specifying the font ROM.
25	G*	Green output	A green output terminal. Can select polarity when specifying the font ROM.
26	R*	Red output	A red output terminal. Can select polarity when specifying the font ROM.
27	CSYN	Compound synchronizing signal output	Outputs compound synchronizing signal in NTSC or PAL. Negative polarity. Amplification: 5V
28	OSCOUT	Oscillation circuit for synchronous signal generation	an external terminal of the oscillation circuit for synchronizing signal generation. Uses an oscillation frequency of 14.32MHz for NTSC and 17.73MHz for PAL.
29	OSCIN		
30	HOR*	Horizontal synchronizing signal	Inputs the horizontal synchronizing signal. Hysteresis input. Can select polarity when specifying the font ROM.
31	VERT*	Vertical synchronizing signal	Inputs the vertical synchronizing signal. Hysteresis input. Can select polarity when specifying the font ROM.
32	VDD	Power terminal	Connect to +5V using a digital power terminal.

- **Block Diagram**

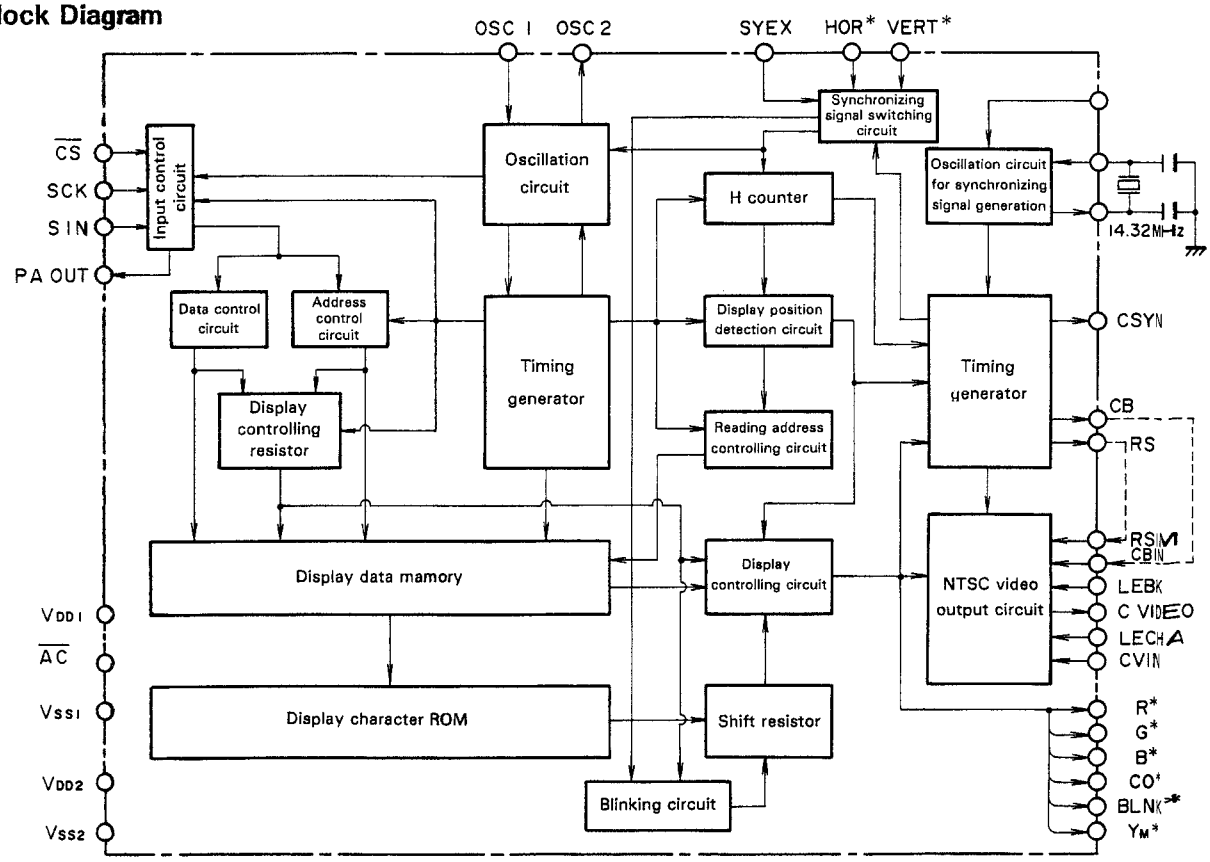

■ IC1901 (PDG072A) : DISPLAY CONTROL μ−COM)

• Pin Function

No.	Pin Name	I/O	Description	Logic
1	S4/PG0	O	Segment output	
2	S5/PG1	O	Segment output	
3	S6/PG2	O	Segment output	
4	S7/PG3	O	Segment output	
5	S8/PKO	O	Segment output	
6	S9/PK1	O	Segment output	
7	S10/PK2	O	Segment output	
8	S11/PK3	O	Segment output	
9	S12/PJ0	O	Segment output	
10	S13/PJ1	O	Segment output	
11	S14/PJ2	O	Segment output	
12	S15/PJ3	O	Segment output	
13	S16/T15	O	Segment output	
14	S17/T14	O	Segment output	
15	S18/T13	O	Segment output	
16	S19/T12	O	Segment output	
17	S20/T11	O	Segment output	
18	S21/T10	O	Grid output & Key Scan output	
19	S22/T9	O	Grid output & Key Scan output	
20	S23/T8	O	Grid output & Key Scan output	
21	T7	O	Grid output & Key Scan output	
22	T6	O	Grid output & Key Scan output	
23	T5	O	Grid output & Key Scan output	
24	T4	O	Grid output & Key Scan output	
25	T3	O	Grid output & Key Scan output	

No.	Pin Name	I/O	Description	Logic
26	T2	O	Grid output & Key Scan output	
27	T1	O	Grid output & Key Scan output	
28	T0	O	Grid output & Key Scan output	
29	INT	I	Detection of video signal existence. When the video signal is not input, output the video signal (blue) to video out terminal. L···Exist H···Not exist	
30	TX	−	Not used	
31	TEX	I	Not used	
32	$\overline{RST}$	I	RESET input	
33	NC	−		
34	VDD	−	+5V Power supply	
35	PI0/AD0	I	DC input for Level meter	
36	PI1/AD1	I	DC input for Level meter	
37	PI2/AD2	I	DC input for Level meter	
38	PI3/AD3	I	DC input for Level meter	
39	PBO/AD4	I	DC input for Level meter	
40	PB1/AD5	I	Over load Det.	
41	PB2/AD6	I	Remote control B input	
42	PB3/AD7	I	RQ. I (Request input)	
43	$\overline{EC}$			
44	PX0/$\overline{SC}$	I	CK Cmmunication	
45	PX1/SO	0	SO	
46	PX2/SI	I	SI	
47	PAO	O	LED (MR&S) control output	
48	PA1	O	LED (TUNING) control output	
49	PA2	I	Key scan input	

No.	Pin Name	I/O	Description	Logic
50	PA3	I	Key scan input	
51	PF0	I	Key scan input	
52	PF1	I	Key scan input	
53	PF2	I	Key scan input	
54	PF3	I	Key scan input	
55	PE0	0	LED (CHARACT) control output	
56	PE1	O	LED (ENHANCE) control output	
57	PE2	O	LED (DELAY) control output	
58	PE3	O	LED (EFFECT) control output	
59	PY0	O	RQ. O (Communication between PDG073A)	
60	PY1/$\overline{\text{PWM}}$	O	MUTE for TUNER	
61	PY2/WP	I	Not used	
62	PY3/REM	I	Remote control input	
63	PD0	I	Rotary Encoder IN1	
64	PD1	I	Rotary Encoder IN2	
65	PD2	I	Tuned	
66	PD3	I	Stereo	
67	PC0	O	DATA. T, 9K/$\overline{\text{10K}}$ Tuner control OSD DATA	
68	PC1	O	CK. T, J/$\overline{\text{EX}}$ OSD CK	
69	PC2	O	CS. T	
70	PC3	O	OSD CS	
71	Vss	–	GND	
72	XTAL	O	MAIN CLK output/Connected to ceramic oscillator (4.19M)	
73	NC	–	NC	
74	EXTAL	I	MAIN CLK input/Connected to ceramic oscillator (4.19M)	

No.	Pin Name	I/O	Description	Logic
75	VREF	–	Reference voltage input/ Connected to VDD	
76	VFDP	–	Power supply for FL	
77	S0	O	Segment output	
78	S1	O	Segment output	
79	S2	O	Segment output	
80	S3	O	Segment output	

■ IC1851 (PDG073A) : SYSTEM CONTROL μ−COM

• Pin Function

No.	Pin Name	I/O	Description	ACT
1	PA1	O	CLOCK for CXD1067	H
2	PA0	O	VIDEO control (VON2)	
3	PB7	O	VIDEO control (C2)	
4	PB6	O	VIDEO control (VON1)	
5	PB5	O	VIDEO control (C1)	
6	PB4	O	Serial IC CLOCK	L
7	PB3	O	Serial IC DATA	
8	PB2	O	Strobe for MAIN TC9163.9164	H
9	PB1	O	Strobe for SUB TC9163.9164	H
10	PB0	O	Strobe for VR TC9154.9176	H
11	PC7	O	Multiroom ON (H) /OFF (L)	
12	PC6	O	VR LED "H" = ON	H
13	PC5	O	VR UP	H
14	PC4	O	VR DN	H
15	PC3	O	Not used (L)	
16	PC2	O	Not used (L)	
17	PC1	O	Not used (L)	
18	PC0	O	DOLBY	
19	PD7	O	MUTE	
20	PD6	O	CENTER CONTROL B	
21	PD5	O	CENTER CONTROL A	
22	PD4	O	GAIN CONTROL B	
23	PD3	O	GAIN CONTROL A	L
24	PD2	O	REQ OUT (Comunication between μ−COM)	L
25	PD1	O	CLOCK OUT (Comunication between μ−COM)	
26	PD0	O	DATA OUT (Comunication between μ−COM)	
27	PH3	O	DSP CTL D−REDY	
28	PH2	O	DSP CTL RESET. D DSP	
29	PH1	O	DSP CTL RQ	
30	PH0	O	Front μ−COM RESET output	L
31	MP	I	Connected to GND	–
32	$\overline{RST}$	I/O	RESET input	L
33	Vss	–	Connected to GND	–
34	XTAL	O	Connected to ceramic oscillator (8MHz).	–
35	EXTAL	I	Connected to ceramic oscillator (8MHz).	–
36	$\overline{CSO}$	I	Not used (Pull-down)	–
37	S10	I	Not used (Pull-down)	–
38	S00	O	DSP CTL DATA	
39	$\overline{SCKO}$	O	DSP CTL CLOCK	L
40	PF7	I	DSP CTL $\overline{AK}$	"L"
41	PF6	I	REQ IN (Comunication between μ−COM)	L
42	PF5	I	DATA IN (Comunication between μ−COM)	
43	PF4	I	Not used (Pull-down)	–
44	PF3	I	Not used (Pull-down)	–
45	PF2	I	Not used (Pull-down)	–
46	PF1	I	Not used (Pull-down)	–
47	PF0	I	Not used (Pull-down)	–
48	AN3	I	Not used (Pull-down)	–
49	AN2	I	Not used (Pull-down)	–
50	AN1	I	Not used (Pull-down)	–
51	AN0	I	VR position detector input	–
52	AVss	–	GND for A/D	–
53	AV_{REF}	–	Reference voltage for A/D	–
54	AV_{DD}	–	Power supply for A/D	–

No.	Pin Name	I/O	Description	ACT
55	PG7	I	Not used (Pull-down)	–
56	PG6	I	Not used (Pull-down)	–
57	PG5	I	Not used (Pull-down)	–
58	PG4	I	Not used (Pull-down)	–
59	PG3	I	Not used (Pull-down)	–
60	PG2	I	Not used (Pull-down)	–
61	PG1	I	Not used (Pull-down)	–
62	PG0	I	Not used (Pull-down)	–
63	PE7	O	Speaker (REAR) relay control	H
64	PE6	O	Speaker A relay control	H
65	PE5	O	Speaker B relay control	H
66	PE4	O	Speaker (CENTER) relay control	H
67	PE3	O	Speaker (SUB) relay control	H
68	PE2	O	PWM output for enhancer	H
69	PE1/$\overline{\text{INT2}}$	I	Not used (Pulldown)	–
70	PE0/$\overline{\text{INT0}}$	I	AC 50/60Hz input	L
71	NMI	I	Not usewd (Pulldown)	–
72	V_{DD}	–	Power supply	–
73	V_{SS}	–	GND	–
74	NC	–	Connected to V_{DD}	–
75	PA7	O	AC Relay control	H
76	PA6	O	SR OUT	L
77	PA5	O	MAIN MUTE	H
78	PA4	O	SUB MUTE	H
79	PA3	O	Strobe for CXP1067	H
80	PA2	O	DATA for CXP1067	

7. REMOTE CONTROL UNIT [CU−VSX031 (AXD1223)] [CU−VSX023 (AXD1207)]

7.1 EXPLODED VIEW AND PARTS LIST

NOTES:
- *Parts without part number cannot be supplied.*
- *The ⚠ mark found on some component parts indicates the importance of the safety factor of the part. Therefore, when replacing, be sure to use parts of identical designation.*
- *Parts marked by "◉" are not always kept in stock. Their delivery time may be longer than usual or they may be unavailable.*

Parts list of Exterior

Mark No.	Description	Parts No.
1	MODE CHECK KEY	AZA1335
2	FILTER	AZA1336
3	PLATE (AXD1223)	AZA1346
3	PLATE (AXD1207)	AZA1345
4	RUBBER SHEET (AXD1223)	AZA1348
4	RUBBER SHEET (AXD1207)	AZA1347
5	KNOB	AZA1349
6	TERMINAL (+)	AZB1327
7	TERMINAL (−)	AZB1328
8	SCREW	AZB1329
9	TERMINAL (C)	AZB1330
10	CASE (A)	AZN2089
11	CASE (B)	AZN2090
12	BATTERY COVER	AZN2091
13	SLIDE SW	AZS1117
14	TACT SW	AZS1118
15	P. C. BOARD	

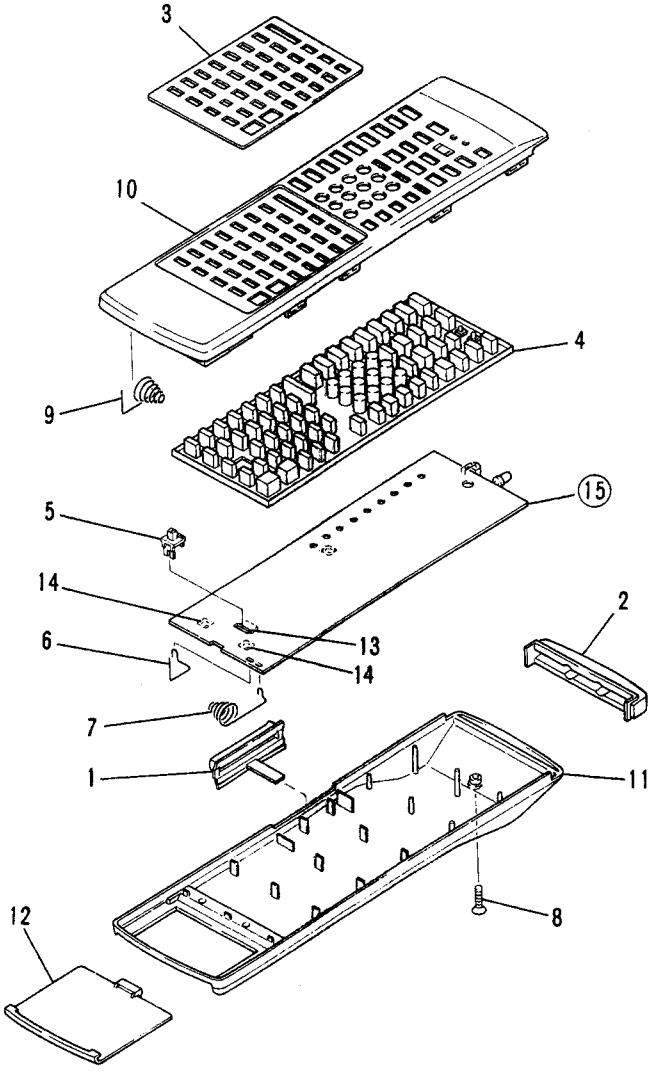

7.2 ELECTRICAL PARTS LIST

NOTES:

- *Parts without part number cannot be supplied.*
- *Parts marked by "◉" are not always kept in stock. Their delivery time may be longer than usual or they may be unavailable.*
- *The ⚠ mark found on some component parts indicates the importance of the safety factor of the part. Therefore, when replacing, be sure to use parts of identical designation.*
- *When ordering resistors, first convert resistance values into code form as shown in the following examples.*

Ex. 1 When there are 2 effective digits (any digit apart from 0), such as 560 ohm and 47k ohm (tolerance is shown by J = 5%, and K = 10%).

560Ω	*56 × 10¹*	*561*	*RD1/4PS 5 6 1 J*
47kΩ	*47 × 10³*	*473*	*RD1/4PS 4 7 3 J*
0.5Ω	*0R5*		*RN2H 0 R 5 K*
1Ω	*010*		*RS1P 0 1 0 K*

Ex. 2 When there are 3 effective digits (such as in high precision metal film resistors).

5.62kΩ	*562 × 10¹*	*5621*	*RN1/4SR 5 6 2 1 F*

Mark No.	Description	Parts No.
SEMICONDUCTORS		
IC1	μ-COM	ACM001-017
IC2	IC	AZC1564
IC3	LOGIC IC	MC74HC138F
Q1, 2	CHIP TRANSISTOR	2SC3052E
Q3, 4	POWER TRANSFORMER	2SD1622
D1	DIODE	DWA010-TE
D10-17	LED	AZC1573
D2-6	DIODE	DWA010-TE
D7	LED	SLR-938C
D8	DIODE	SPS-503C-3
D9	LED	AZC1573
CAPACITORS		
C1, 2	CERAMIC CAPACITOR	CCDSL330J50
C3	CERAMIC CAPACITOR	CCDSL221J50
C4	CERAMIC CAPACITOR	CKDYX104M25
C5	ELECTROLYTIC CAPACITOR	CEAS470M10
C6	CERAMIC CAPACITOR	CKDYB103K50
C7	ELECTROLYTIC CAPACITOR	CEAS221M10
C8	ELECTROLYTIC CAPACITOR	CEAS4R7M50
RESISTORS		
R7, 8	CARBON FILM RESISTOR	RD1/4PMFL1R5J
	Other resistors	RD1/8PM□□□J
OTHERS		
X1	RESONATOR	AZC1570

7.3 P. C. BOARD PATTERN

: Indicates a chip resistor.

: Indicates a chip capacitor.

: Indicates a chip transistor.

: Indicates a chip diode.

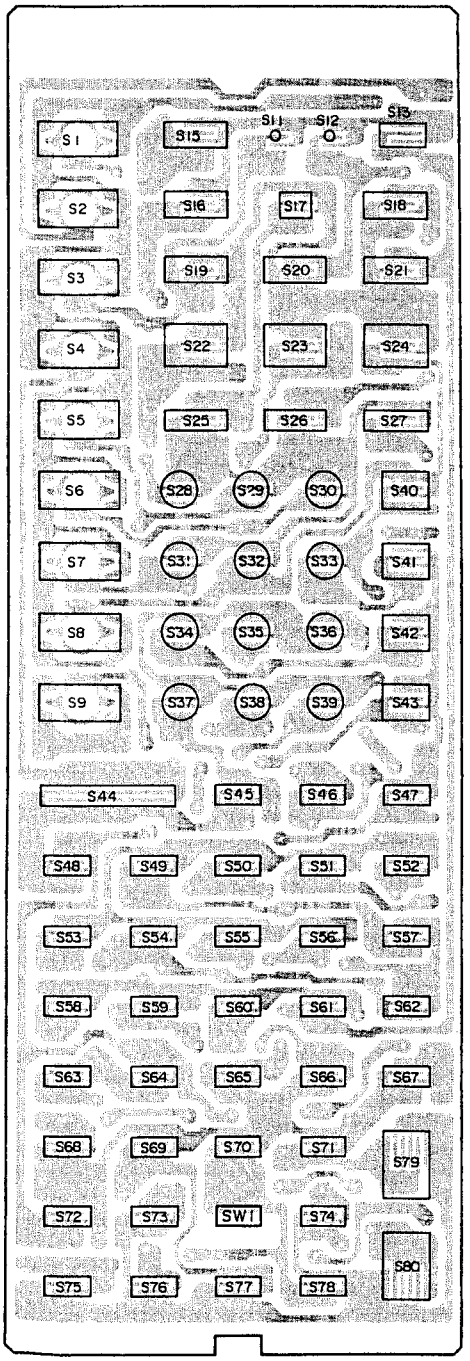

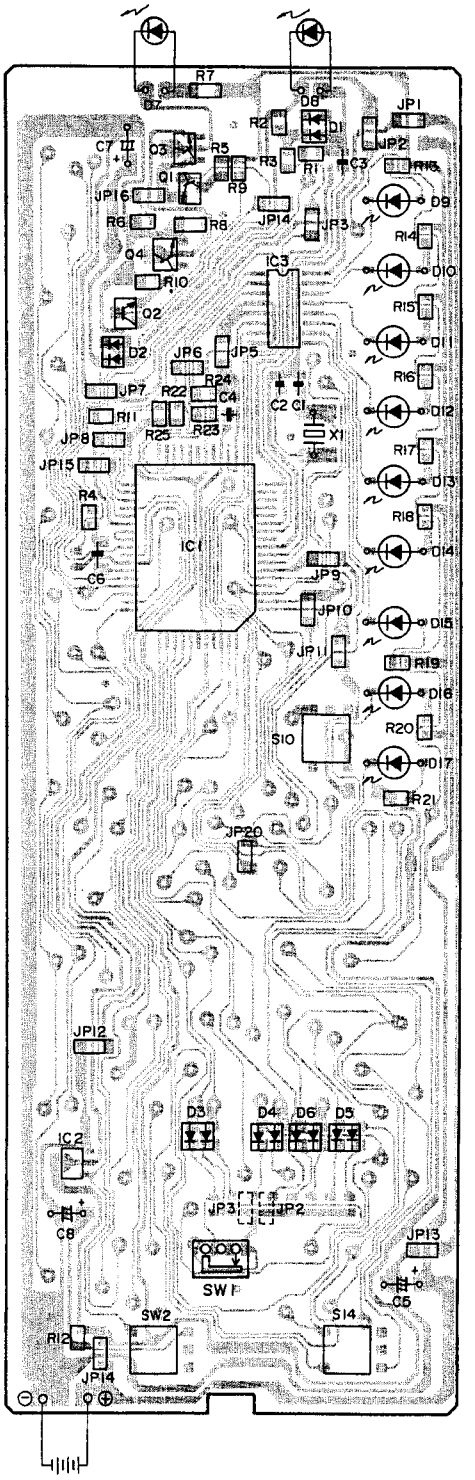

7.4 SCHEMATIC DIAGRAM

NOTE)

JP2 : The terminal for switching Fc (carrier frequency of the fixed code). This terminal is set at OPEN (Fc = 40kHz) when delivered. If a product of another manufacturer accidentally receives the PIONEER code, short the terminal so that Fc will be 36.7kHz. (In which case, the learned code and preset code do not change.)

JP3 : This remote control saves the learned data, timing data in ROM and other data (such as code data) in RAM. ROM already contains the timing data for other primary manufacturers. JP3 is a terminal for switching whether or not to use that pre-loaded timing data during learning.
This terminal is set at OPEN when delivered. If "data is learned but the product does not operate," there is the rare possibility that learned timing data is affected by the timing data for another primary manufacturer in ROM, causing the receiving product to be deactivated. In such a case, short JP3 to clear all the learned data and restart data learning, so that the data precision is increased. (In which case, the learned data in RAM is shared as is.)

NOTE:

- : Indicates a chipresistor.
- : Indicates a chipcapacitor.
- : Indicates a chiptransistor.
- : Indicates a chipdiode.

1. RESISTORS:
Indicated in Ω, 1/4W, 1/8W, ±5% tolerance unless otherwise noted k: kΩ, M: MΩ, (F): ±1%, (G): ±2%, (K): ±10%, (M): ±20% tolerance.

2. CAPACITORS:
Indicated in capacity (μF)/voltage (V) unless otherwise noed p: pF
Indication without voltage is 50V except electrolytic capacitor.

3. OTHERS:
→ : Signal route.
⊘ : Adjusting point.
The ⚠ mark found on some component parts indicates the importance of the safety factor of the part. Therefore, when replacing, be sure of use parts of identical designation.
※ marked capacitors and resistors have parts numbers.

This is the basic schematic diagram, but the actual circuit may vary due to improvements in design.

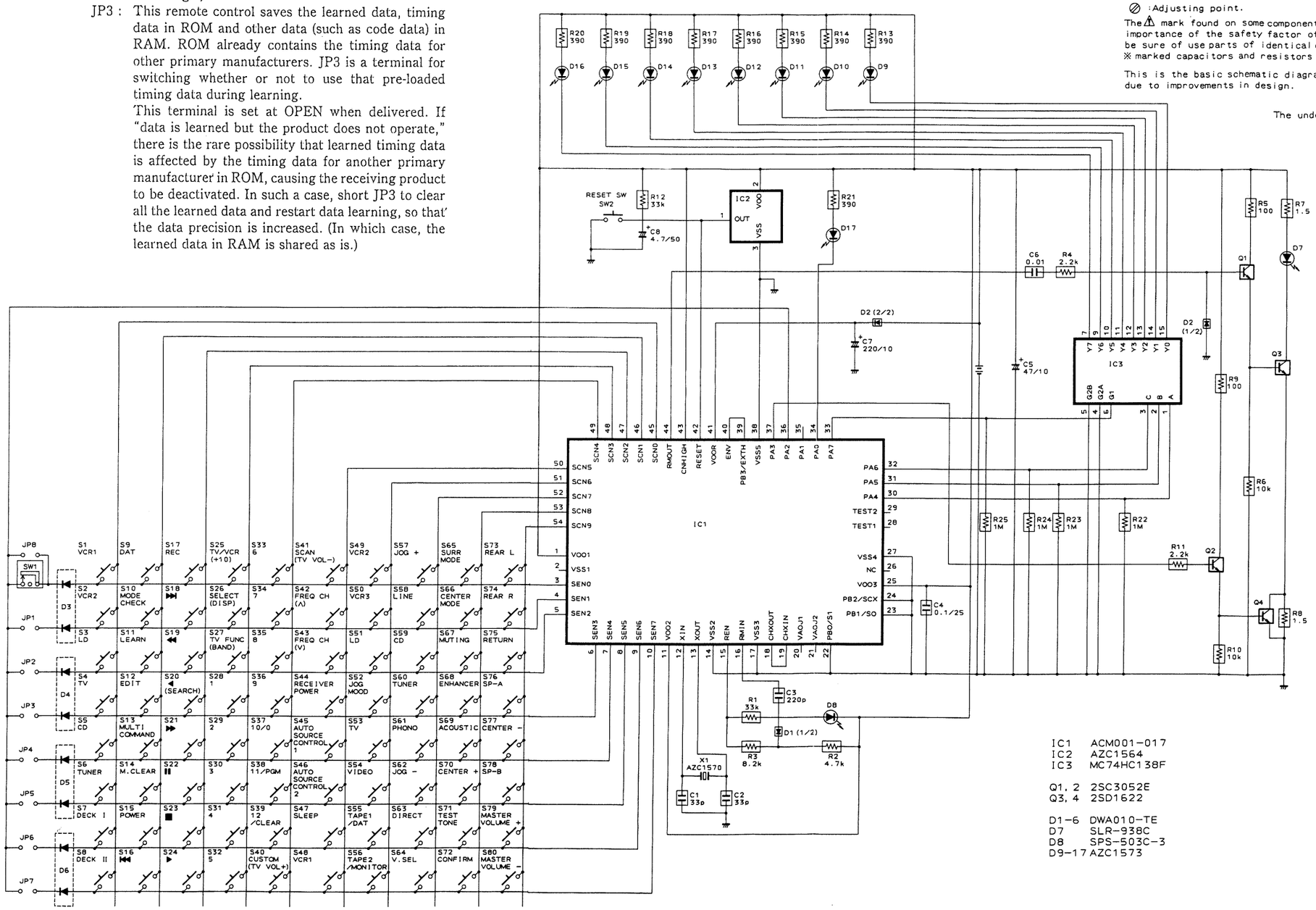

IC1 ACM001-017
IC2 AZC1564
IC3 MC74HC138F

Q1, 2 2SC3052E
Q3, 4 2SD1622

D1-6 DWA010-TE
D7 SLR-938C
D8 SPS-503C-3
D9-17 AZC1573

The underline indicates the switch position
SW1 : CENT. · BAL. / REAR · REAR BAL.
SW2 : RESET
S1 : VCR1
S2 : VCR2
S3 : LD
S4 : TV
S5 : CD
S6 : TUNER
S7 : DECK I
S8 : DECK II
S9 : DAT
S10 : MODE CHECK
S11 : LEARN
S12 : EDIT
S13 : MULTI COMMAND
S14 : M.CLEAR
S15 : POWER
S16 : ⏮
S17 : REC
S18 : ⏭
S19 : ⏪
S20 : ◀ (SEARCH)
S21 : ⏩
S22 : ⏸
S23 : ⏹
S24 : ▶
S25 : TV/VCR (+10)
S26 : SELECT (DISP)
S27 : TV FUNC (BAND)
S28 : 1
S29 : 2
S30 : 3
S31 : 4
S32 : 5
S33 : 6
S34 : 7
S35 : 8
S36 : 9
S37 : 10/0
S38 : 11/PGM
S39 : 12/CLEAR
S40 : CUSTOM (TV VOL+)
S41 : SCAN (TV VOL−)
S42 : FREQ CH (Λ)
S43 : FREQ CH (V)
S44 : RECEIVER POWER
S45 : AUTO SOURCE CONTROL 1
S46 : AUTO SOURCE CONTROL 2
S47 : SLEEP
S48 : VCR1
S49 : VCR2
S50 : VCR3
S51 : LD
S52 : JOG MODE
S53 : TV
S54 : VIDEO
S55 : TAPE1/DAT
S56 : TAPE2/MONITOR
S57 : JOG +
S58 : LINE
S59 : CD
S60 : TUNER
S61 : PHONO
S62 : JOG −
S63 : DIRECT
S64 : V.SEL
S65 : SURR MODE
S66 : CENTER MODE
S67 : MUTING
S68 : ENHANCER
S69 : ACOUSTIC
S70 : CENTER +
S71 : TEST TONE
S72 : CONFIRM
S73 : REAR L
S74 : REAR R
S75 : RETURN
S76 : SP−A
S77 : CENTER −
S78 : SP−B
S79 : MASTER VOLUME +
S80 : MASTER VOLUME −

8. FOR VSX−9900S/KUC AND SD TYPES

CONTRAST OF MISCELLANEOUS PARTS

NOTES:
- *Parts without part number cannot be supplied.*
- *The ⚠ mark found on some component parts indicates the importance of the safety factor of the part. Therefore, when replacing, be sure to use parts of identical designation.*
- *Parts marked by "◉" are not always kept in stock. Their delivery time may be longer than usual or they may be unavailable.*

The VSX−9900S/KUC and SD types are the same as the VSX−95/KUC type with the exception of the following sections.

Mark	Symbol & Description	Part No.			Remarks
		VSX−95/ KUC type	VSX−9900S/ KUC type	VSX−9900S/ SD type	
◉	MAIN FUNCTION assembly	AWZ3673	AWZ3560	AWZ3560	
◉	SUB FUNCTION assembly	AWZ3674	AWZ3561	AWZ3561	
◉	VIDEO FUNCTION assembly	AWZ3675	AWZ3562	AWZ3562	
◉	ENHANCER assembly	AWZ3676	AWZ3563	AWZ3563	
◉	OSD assembly	AWZ3634	.....	.....	
	TERMINAL assembly	.....	Non Supply	Non Supply	*
⚠	S2 Voltege selector switch (AC110V−127V/220V−240V)	.....	.....	AKX1004	
⚠	S3 Slide switch (9k/10k)	.....	.....	ASH−004	
⚠	S4 Voltege selector switch (AC110V, 120−127V, 220V, 240V)	.....	.....	AKX−507	
⚠	T Power transformer	ATS1360	ATS1360	ATS1361	
⚠	FU1 Fuse (8A/125V)	AEK1035	AEK1035	.....	
⚠	FU1 Fuse (5A/125V)	.....	.....	AEK−126	
⚠	FU2 Fuse (5A/125V)	.....	.....	AEK−126	
⚠	FU3, FU4 Fuse (6.3A/125V)	AEK−309	AEK−309	AEK−127	
⚠	AC Power cord	ADG1072	ADG1058	ADG1051	
⚠	Fuse holder	.....	.....	AKR−038	
	AC cord spacer	ANG1153	.....	.....	
	Strain relief	.....	AEP−113	AEC−882	
	FL filter	AAK2169	AAK2168	AAK2168	
	Leg assembly	AMR1158	.....	.....	
	Front panel	ANB1480	ANB1479	ANB1479	
	Bonnet case	ANE1302	AZN1804	AZN1804	
	Wood collar	AEC1165	.....	.....	
	Screw	ABA1086	.....	.....	
	Screw	VBZ40P160FZK	.....	.....	
	Screw	.....	.....	VMZ26P040FZK	

* : TERMINAL assembly of VSX9900S is in same location as OSD assembly of VSX−95.

Mark	Symbol & Description	Part No.			Remarks
		VSX−95/ KUC type	VSX−9900S/ KUC type	VSX−9900S/ SD type	
	Top pad	AHA1033	.....	.....	
	Bottom pad	AHA1034	.....	.....	
	Front, rear pad	.....	AHA1164	AHA1164	
	Packing case	AHD2122	AHD2120	AHD2121	
	Operating instructions (English)	ARB1333	ARB1332	ARB1332	
	Remote control unit (CU−VSX031)	AXD1223	.....	.....	
	Remote control unit (CU−VSX023)	.....	AXD1207	AXD1207	

◉ MAIN FUNCTION assembly (AWZ3560)

The MAIN FUNCTION assembly (AWZ3560) is the same as the MAIN FUNCTION assembly (AWZ3673) with the exception of the following sections.

Mark	Symbol & Description	Part No.		Remarks
		AWZ3673	AWZ3560	
	CN Pin jack 8P	AKB1182	AKB1127	

◉ SUB FUNCTION assembly (AWZ3561)

The SUB FUNCTION assembly (AWZ3561) is the same as the SUB FUNCTION assembly (AWZ3674) with the exception of the following sections.

Mark	Symbol & Description	Part No.		Remarks
		AWZ3674	AWZ3561	
	CN Pin jack 6P	AKB1178	AKB1140	
	CN Pin jack 8P	AKB1179	AKB1144	

◉ VIDEO FUNCTION assembly (AWZ3562)

The VIDEO FUNCTION assembly (AWZ3562) is the same as the VIDEO FUNCTION assembly (AWZ3675) with the exception of the following sections.

Mark	Symbol & Description	Part No.		Remarks
		AWZ3675	AWZ3562	
	CN Pin jack 3P	AKB1170	AKB1143	
	CN Pin jack 2P	AKB1173	AKB1118	

◉ ENHANCER assembly (AWZ3563)

The ENHANCER assembly (AWZ3563) is the same as the ENHANCER assembly (AWZ3676) with the exception of the following sections.

Mark	Symbol & Description	Part No.		Remarks
		AWZ3676	AWZ3563	
	CN Pin jack 3P	AKB1170	.....	

TERMINAL assembly

NOTES:

- *Parts without part number cannot be supplied.*
- *Parts marked by "◉" are not always kept in stock. Their delivery time may be longer than usual or they may be unavailable.*
- *The ⚠ mark found on some component parts indicates the importance of the safety factor of the part. Therefore, when replacing, be sure to use parts of identical designation.*
- *When ordering resistors, first convert resistance values into code form as shown in the following examples.*

Ex. 1 When there are 2 effective digits (any digit apart from 0), such as 560 ohm and 47k ohm (tolerance is shown by J = 5%, and K = 10%).

560Ω	*56 × 10¹*	*561*	*RD1/4PS 5 6 1 J*
47kΩ	*47 × 10³*	*473*	*RD1/4PS 4 7 3 J*
0.5Ω	*0R5*		*RN2H 0 R 5 K*
1Ω	*010*		*RS1P 0 1 0 K*

Ex. 2 When there are 3 effective digits (such as in high precision metal film resistors).

5.62kΩ	*562 × 10¹*	*5621*	*RN1/4SR 5 6 2 1 F*

Mark	No.	Description	Parts No.
CAPACITORS			
	C751–754	CERAMIC CAPACITOR	CKCYB102K50
RESISTORS			
		All resistors	RD1/8PM474J
OTHERS			
		PIN JACK 1P	AKB1139
		PIN JACK 2P	AKB1142
	CN	PIN JACK 4P	AKB1181

● PACKING (VSX-9900S)

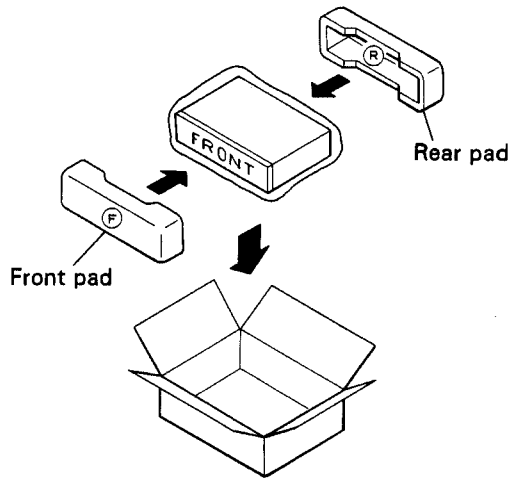

9. PANEL FACILITIES

FRONT PANEL FACILITIES

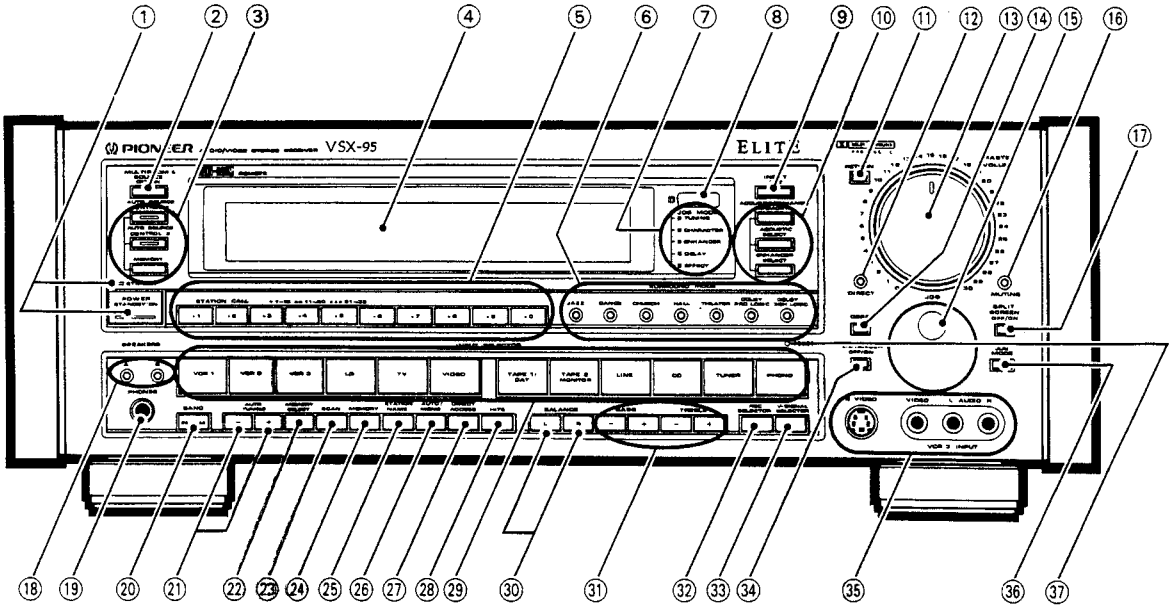

① POWER STANDBY/ON switch/indicator

This is the switch for electric power.

ON ..... When set to the ON position, power is supplied and the unit becomes operational.

STANDBY .. When set to STANDBY position, the main power flow is cut and the unit is no longer fully operational. A minute flow of power feeds the unit to maintain operation readiness.

The STANDBY indicator lights when the power is STANDBY, and goes out during ON.

② MULTI ROOM & SOURCE button

Use in combination with the separately sold MR-100 Multi-Room remote control unit.

When this button is on, the source selected with the INPUT SELECTOR at that time is set to the Sub room function. The selected sub-function's sound is output through SUB ROOM SPEAKERS, and the video signal is output through the MULTI-ROOM & SOURCE VIDEO OUT jack. If you install speaker systems connected to the MULTI-ROOM SPEAKERS terminals in a different room, you can enjoy different sources in two different rooms with a single main unit.

③ AUTO SOURCE CONTROL, MEMORY buttons

AUTO SOURCE CONTROL 1, 2:

These buttons are for memorizing and recalling your current settings. Both 1 and 2 can be used to memorize settings. If you connect another component, such as a CD player, to the CONTROL OUT jack on the rear panel, the signals to switch power on and start play are also transmitted.

MEMORY:

Use when memorizing settings to an AUTO SOURCE CONTROL button.

④ Display section

⑤ STATION CALL (RANDOM 30 CH) buttons

- These buttons are used to preset and recall desired broadcasting stations. You can also preset AUTO/MONO button settings.

Station call operation example:

If you press the [*2] button:

- Once — station 2 is selected.
- Twice — station 12 is selected.
- Three times — station 22 is selected.

NOTE:

Pressing the STATION CALL buttons when a component other than TUNER is selected causes the INPUT SELECTOR setting to switch to TUNER.

- They are also used when performing direct access tuning.

⑥ SURROUND MODE buttons

⑦ JOG MODE indicators

The indicator for the mode that can currently be operated by the JOG dial lights. If it is not the mode you want to operate, switch to the desired mode with the JOG MODE button (㊱).

⑧ Remote sensor window

⑨ INPUT ATT button

Use this when there is distortion due to excessively high input signal level. When this is switched ON, −10 dB attenuator operates, and the INPUT ATT indicator in the display section lights.

⑩ ACOUSTIC/ENHANCER MEMORY, SELECT buttons

ACOUSTIC/ENHANCER MEMORY:

Use to operate acoustic memory and enhancer memory.

ACOUSTIC SELECT:

Use this to store desired sound quality settings in memory. Also use it to recall memorized sound quality settings from memory. For further details concerning memory operation.

ENHANCER SELECT:

Use this to store a desired enhancer effect in memory, and to recall a desired enhancer effect. For further details concerning memory operation.

When the enhancer has been memorized, then the enhancer will be automatically switched ON when this button is pressed.

FRONT PANEL FACILITIES

⑪ RETURN button
Pressing this button returns the receiver to the following settings, the sound level being controlled by MASTER VOLUME control knob.

• TAPE 2 MONITOR	OFF
• SURROUND MODE	OFF
• SPEAKERS A	ON
• MUTING	OFF
• BALANCE	CENTER
• INPUT SELECTOR	TUNER
• STATION CALL	1 CH*

* When a station is not memorized in 1 CH, station search will automatically proceed from the frequency displayed.

⑫ DIRECT button
Press this to listen to source sound without passing the audio signal through sound quality and balance adjusting circuitry.
The surround mode, and rear and center speakers are automatically switched off.

⑬ MASTER VOLUME control
Use to adjust the sound volume from the front, center and rear speakers. When you adjust volume by remote control, the indicator on the knob flashes.
When the MULTI ROOM & SOURCE switch is ON, volume level in sub room cannot be adjusted with this knob. To adjust sub room volume, point the remote control at the MR-100 in the sub room and operate.

⑭ DSSS (Digital Simulated Stereo System) button
Operate this when inputting a monaural signal to enjoy a simulated stereo sound. You can use it when a monaural signal is input into both the left and right channels or when a monaural signal is input into only one of the channels.

⑮ JOG dial
This lets you control the following five functions.
(1) Tuner frequency (manual tuning).
(2) Selection of letters for station naming.
(3) Video enhancer effect level adjustment.
(4) Surround's delay time selection.
(5) Surround's total effect level adjustment.
You can select which function you want to control with the JOG MODE button ㊱, but the mode automatically switches when a function changes. For example, if you press the STATION NAME button, the JOG MODE automatically switches to the CHARACTER mode.

⑯ MUTING button
Press to temporarily cut off the sound volume. When pressed again, the sound will return to its previous level.

⑰ SPLIT SCREEN OFF/ON button
If you turn the ENHANCER OFF/ON button ON to add the video enhancer effect, and then turn this button on, the right side of the picture will have the enhancer effect added, and the left side will be without the enhancer effect. The signal that has passed through the enhancer is output through the TO MONITOR TV jacks and VCR OUT jacks.
A split screen picture is output from the TO MONITOR TV jacks. However, S jack output is not affected by enhancer or split screen.

⑱ SPEAKERS A, B buttons
These are ON/OFF buttons for the speaker systems. When switched ON, SPEAKERS indicators (A, B) in the display section light.

⑲ PHONES jack
Connect the plug on your headphones to this jack. To hear only through the headphones, set all SPEAKERS A and B buttons to the OFF position.

NOTE:
There are no ON/OFF switches for the rear and center speakers, so when you want to listen only on headphones, switch surround OFF. If you want to listen with surround ON, reduce rear and center volume levels using the remote control.

⑳ BAND button (FM/AM)
Use this to switch between FM and AM frequency band reception.

㉑ AUTO TUNING buttons (Down (–), Up (+))
+ : Performs tuning in ascending frequency order.
– : Performs tuning in descending frequency order.

㉒ CUSTOM MEMORY SELECT button
Recall a genre name with this button.

㉓ SCAN button
Operates when the INPUT SELECTOR is set to TUNER. Station frequencies assigned to the STATION CALL buttons are tuned in, one after another, beginning with the current station no., for approximately 5 seconds each. Press the button again and reception of the station presently being received will continue. Station frequencies not assigned station numbers in the memory are skipped.
When you have selected a CUSTOM MEMORY genre, memory scan is performed on the stations in that genre.

㉔ MEMORY button
Pressing this button will result in the memorization of the current broadcast band, reception frequency, and FM AUTO/MONO mode.

This button is also used to input station names and custom memory operation.

㉕ STATION NAME button
This button is used when inputting station names.

㉖ AUTO/MONO button
Use to select the auto stereo mode or monaural mode when listening to FM broadcasts. The monaural mode has been selected when the FM MONO indicator in the display section is lit.

Auto stereo mode:
Normally, leave in this mode for reception. When a stereo broadcast is received, it will be automatically reproduced in stereo.
During stereo broadcast reception, the STEREO indicator in the display section lights.

Monaural mode:
When receiving distant stations or stations with weak broadcast signals, the input signal may be weak, thus resulting in increased noise during FM stereo broadcasts. In this event, setting the receiver to the monaural mode will reduce the noise; however, FM stereo broadcasts will be reproduced in monaural sound.

NOTE:
This button has no effect on reception of AM broadcasts.

㉗ DIRECT ACCESS button
When this button is pressed, the STATION CALL buttons function as 10-key number buttons for direct input of the desired reception frequency.
When frequencies that cannot be received are entered, the entered frequency value flashes, before reception of the previous frequency resumes.

㉘ HITS (Hyper Intelligent Tuning System) button
- If the HITS button is pressed at the currently displayed station frequency, the receiver searches up and down the frequency for the next station and stops at the first one it finds.
- If the HITS button is pressed during STATION NAME input the receiver performs a memory search in order of ascending station number for memorized stations whose names begin with the same letter as the station just input.
- If the HITS button is pressed during input of numbers for DIRECT ACCESS tuning, the receiver sets the remaining digits, which have not yet been input, to "0", searches for the corresponding frequencies, and stops on the first station it finds.

NOTE:

- *The system searches for stations within successive 1 MHz ranges for FM and 100 kHz ranges for AM. During DIRECT ACCESS tuning, it searches up and down for a station until it reaches the edges of the band. If no receivable station is found within the band range, the receiver returns to the state it was in before the HITS button was pressed.*
- *If the upper (or lower) frequency limit of the receiver is encountered during HITS operation, the receiver stops searching in that direction but continues to search in the other.*

㉙ INPUT SELECTOR buttons

- **Video input selector**

VCR 1: Press when performing playback on a first VCR unit.
VCR 2: Press when performing playback on a second VCR unit.
VCR 3: Press when performing playback on a third VCR unit.
LD: Press when performing playback on an LD player.
TV: Press to watch TV broadcasts from the TV tuner connected to the rear panel TV IN jacks.
VIDEO: Press when performing playback on a VCR connected to VIDEO IN jack.

- **Audio input selector**

TAPE 1/DAT: Press when performing playback on a DAT or cassette deck.
TAPE 2 MONITOR: Press when performing playback on a second cassette deck.
LINE: Press when performing playback on an audio component connected to the LINE IN jacks.
CD: Press when playing compact discs on a CD player.
TUNER: Press when listening to radio broadcasts.
PHONO: Press when playing records on a turntable.

NOTE:
Because of the digital processing performed by this unit's Digital Signal Processor, high level input may result in distortion. This is particularly true when using a turntable with a high output cartridge. In this case, adjust the volume level with the PHONO LEVEL control on the rear panel so that it is the same as other inputs. If there is distortion due to excessively high input level from another component, use the INPUT ATT button to adjust input level.

㉚ BALANCE buttons

Use to adjust the sound volume balance between left and right speakers.
L: Press to decrease the sound on the right side.
R: Press to decrease the sound on the left side.
Press L and R together to bring the volume balance back to standard (Left = Right).
Example: When pressing and holding the "R" button.

㉛ Tone control buttons

BASS:
Use to adjust the low-frequency level. Press the + button to increase low-frequency level, and the − button to decrease it.
When both sides (+, −) of the BASS control are pressed simultaneously, the base response will be set to the flat (normal) condition. "BASS C" is shown in the display section.

TREBLE:
Use to adjust the high-frequency level. Press the + button to increase high-frequency level, and the − button to decrease it.
When both sides (+, −) of the TREBLE control are pressed simultaneously, the treble response will be set to the flat (normal) condition. "TREBLE C" is shown in the display section.
Adjust TONE CONTROL settings are indicated in the display section for several seconds.

㉜ REC SELECTOR button

You can select the component to be recorded from, on TAPE 1, VCR 1, VCR 2, without using the INPUT SELECTOR.
Each time you press the REC SELECTOR button, the components change in the following order.

→ TUNER → PHONO → VCR 1* → VCR 2* → VCR 3 → LD →
CD ← LINE ← TAPE 1* ← VIDEO ← TV ←

When the REC SELECTOR has been through all the components once, REC SELECTOR switches off.

Recording between units marked with the "*" is possible in the following relationships.
From TAPE 1 on VCR 1 and 2, from VCR 1 on VCR 2 and TAPE 1, and from VCR 2 on VCR 1 and TAPE 1.
Do not select the component you wish to record on (for example, VCR 1), with the REC SELECTOR.

㉝ V (Video) SIGNAL SELECTOR button

Press this to switch VIDEO OUT (TO MONITOR TV) and VCR VIDEO OUT in the following sequence: (Audio does not change)

→ VCR 1 → VCR 2 → VCR 3 → LD → TV → VIDEO →
OFF ←

Indications are only displayed during operation.
There is no picture when it is OFF.

㉞ ENHANCER OFF/ON button

Use to switch the video enhancer effect ON/OFF during playback or recording of a video.
When it is switched ON, adjust the degree of effect with the JOG dial ⑮.
If you turn ON the SPLIT SCREEN OFF/ON button ⑰, the right half of the screen shows a picture with the enhancer ON, and the left half of the screen shows a picture with the enhancer OFF.
The enhancer has no effect on S jack and MULTI-ROOM & SOURCE VIDEO OUT jack video signals.

㉟ VCR 3 INPUT jacks

Video components such as a VCR or TV camera, etc. can be connected here.

㊱ JOG MODE button

Use this to select the mode you want to control with the JOG dial ⑮.
The selected mode is indicated by the JOG MODE indicators ⑦.

㊲ Reset button

Use this when normal operation becomes impossible because of external influences such as static electricity or lightning, or when operation is impossible even when operation buttons are pressed. Press this button to return to normal operating conditions.
If you press this button when the power is ON, the unit switches to POWER STANDBY, and the entire contents of the memory are erased.

FRONT PANEL FACILITIES

DISPLAY SECTION

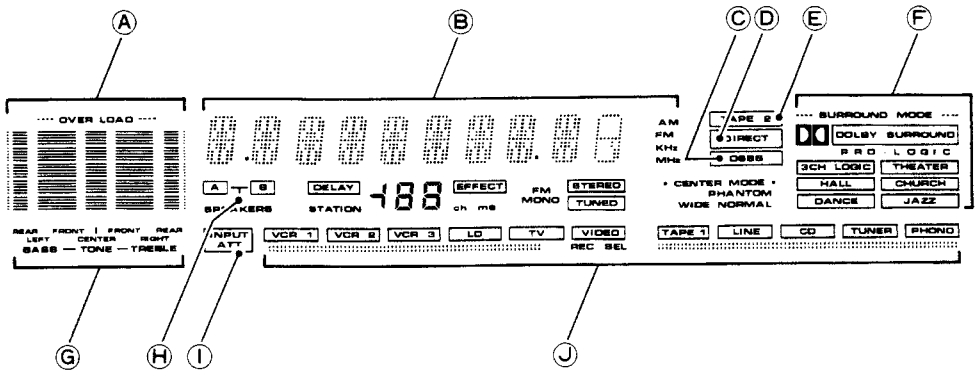

Ⓐ Level/Tone meters
The level meter is usually displayed. If the input level is too high, the display switches, and the OVER LOAD indicator lights.
During Tone control operation, the display switches accordingly.

Ⓑ Character display/Balance meter
- Character display indicates such information as function, received frequency, station name, acoustic memory, and enhancer memory, etc.
- Front and rear left/right balance is indicated. This is displayed during balance adjustment, after which indications return to character display.

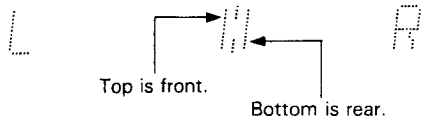

Ⓒ DSSS indicator
Lights when the DSSS button is ON.

Ⓓ DIRECT indicator
This lights when the Direct mode is switched ON.

Ⓔ TAPE 2 indicator
Lights when the TAPE 2 MONITOR button is in the ON position.

Ⓕ SURROUND MODE indicators
These display the selected surround mode. When all indicators are out, surround is OFF.

Ⓖ Meter mode indicator
Indicates the display modes mentioned in Ⓐ.

Ⓗ SPEAKERS indicators
Shows which speaker system (or systems) are switched ON.

Ⓘ INPUT ATT indicator
This lights when the INPUT ATT button is switched ON.

Ⓙ REC selector indicators
- The recording source selected with the REC SELECTOR button is usually displayed.

Ⓚ Station call no./Delay time/Surround effect/Enhancer level display
- Usually, the STATION indicator and "ch" light to display the station call number.
- When adjusting surround delay time, the DELAY indicator and ms light to display delay time.
- When adjusting surround effect level, the EFFECT indicator lights, and effect level from 5 to 100 is displayed.
- When adjusting enhancer level, enhancer level from -50 to 50 is displayed.

Ⓛ Tuning indicators

FM MONO: This lights when you select MONO with the AUTO/MONO button. When this indicator is lit, reception of FM stereo broadcasts is also monaural.

STEREO: When the FM MONO indicator is out (auto stereo mode), this lights when receiving an FM stereo broadcast.

TUNED: Lights when a station is tuned.

Ⓜ CENTER MODE indicators
These display the center mode (NORMAL, WIDE, PHANTOM) during THEATER, DOLBY PRO LOGIC SURROUND or DOLBY 3CH LOGIC operation.

Warning indication:
Display section indicators will flash to indicate that operation is not possible in a particular situation when you press a button. With Multi-Room & Source, the button itself flashes.

REAR PANEL FACILITIES

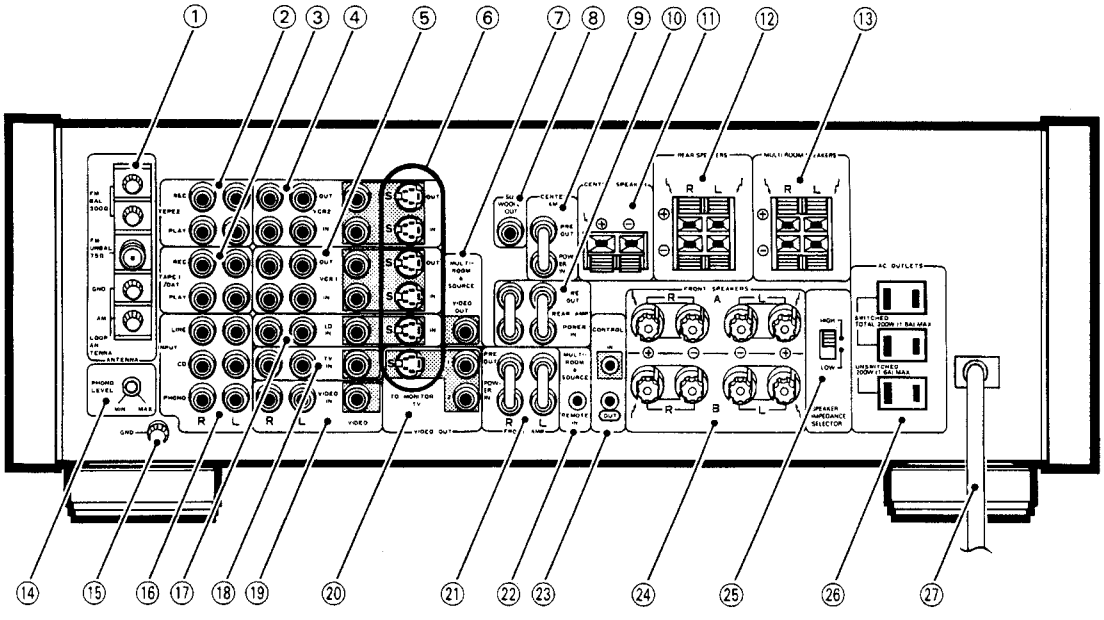

① FM/AM ANTENNA terminals

Use these antenna terminals for reception of normal FM and AM broadcasts.
Attach the accessory AM Loop and FM T-type antennas, here.

- For details regarding antenna connection, see the section "HINTS FOR BETTER RECEPTION".

② TAPE 2 jacks

Connect a second cassette deck to these jacks.

Connection for Recording
The tape recording jack (TAPE REC) on the cassette deck should be connected to the REC side of the TAPE 2 jack on the receiver with a pin plug connecting cord.

Connection for Playback
Connect the TAPE PLAY jack on the cassette deck to the PLAY side of the TAPE 2 jack on the receiver with a pin plug connecting cord.

③ TAPE 1/DAT jacks

Connect a DAT (digital audio tape deck) or your primary analog cassette deck to these jacks.

Connection for Recording
The tape recording jack (TAPE REC) on the cassette deck or DAT should be connected to the REC side of the TAPE 1/DAT jack on the receiver with a pin plug connecting cord.
Audio recording from TAPE 2 is not possible.

Connection for Playback
Connect the TAPE PLAY jack on the cassette deck or DAT to the PLAY side of the TAPE 1/DAT jack on the receiver with a pin plug connecting cord.

④ VCR 2 jacks

[VIDEO IN]
Connect to the VCR 2 VIDEO OUTPUT jacks.
[AUDIO IN (L, R)]
Connect to the VCR 2 AUDIO OUTPUT jacks.
[VIDEO OUT]
Connect to the VCR 2 VIDEO INPUT jacks.
[AUDIO OUT (L, R)]
Connect to the VCR 2 AUDIO INPUT jacks.

⑤ VCR 1 jacks

[VIDEO IN]
Connect to the VCR 1 VIDEO OUTPUT jacks.
[AUDIO IN (L, R)]
Connect to the VCR 1 AUDIO OUTPUT jacks.
[VIDEO OUT]
Connect to the VCR 1 VIDEO INPUT jacks.
[AUDIO OUT (L, R)]
Connect to the VCR 1 AUDIO INPUT jacks.

⑥ S (connector) video jacks

When used in conjunction with a VCR, Video disc player (LaserDisc player) or TV monitor equipped with S video jacks, connect to these jacks.

⑦ MULTI-ROOM & SOURCE VIDEO OUT jack

When using the Multi-Room & Source function, use this to connect the TV monitor for use in the Sub room.

⑧ SUB WOOFER OUT jack

If you want to boost the low frequencies, or you want to use the unit in a 3D system, connect to a sub woofer power amplifier.

REAR PANEL FACILITIES

⑨ CENTER AMP jacks

[POWER IN]
When a separate preamplifier is used for surround center speaker and this unit is used as a power amplifier, connect the preamplifier to this jack.

[PRE-OUT]
When a separate power amplifier is used to drive the surround center speaker, connect the power amplifier to this jack.

⑩ REAR AMP jacks

[PRE OUT]
When a separate power amplifier is used to drive the rear speakers, connect the power amplifier to these jacks.

[POWER IN]
When a separate preamplifier is used for rear speakers and this unit is used as a power amplifier, connect the preamplifier to these jacks.

⑪ CENTER SPEAKERS terminals

Connecting the surround center channel speaker system.
Speaker impedance:
Use a center speaker with a nominal impedance of 8 Ω.

NOTE:
Do not allow any of the code's conductors to protrude from the terminals or touch any other conductors. Malfunctioning or breakdown may occur when conductors come into contact with each other.

⑫ REAR SPEAKERS terminals

Connect the rear speakers to these terminals.
Speaker impedance
Connect speaker systems with a nominal impedance of between 8 and 16 Ω.

NOTE:
Do not allow any of the cord's conductors to protrude from the terminals or touch any other conductors. Malfunctioning or breakdowns may occur when conductors come into contact with each other.

⑬ MULTI-ROOM SPEAKERS terminals

Connect to the Multi-room speakers.
Speaker impedance
Connect speaker systems with a nominal impedance of between 8 and 16 Ω.

NOTE:
Do not allow any of the cord's conductors to protrude from the terminals or touch any other conductors. Malfunctioning or breakdowns may occur when conductors come into contact with each other.

⑭ PHONO LEVEL control

Use to adjust turntable input level. If distortion occurs when you are using a high-output cartridge, adjust the volume level until it's the same as another input, such as TUNER.

⑮ GND terminal

Connect the turntable ground lead to this terminal.

⑯ Audio INPUT jacks

PHONO..... Connect to turntable.
CD..... Connect to compact disc player.
LINE..... Connect to the audio output jacks of an additional audio component.

⑰ LD jacks (input)

[VIDEO IN]
When watching the video image from an LD player or a VCR used for playback, connect its VIDEO OUTPUT jack here.

[AUDIO IN (L, R)]
When playing back the audio channel from an LD player (CD CDV LD player) or a VCR for playback, connect its AUDIO OUTPUT jacks here.

⑱ TV jacks (input)

Use these jacks if you wish to connect a TV tuner with both video and audio outputs.
[VIDEO IN]
Connect the TV tuner's VIDEO OUTPUT to this jack.

[AUDIO IN (L, R)]
Connect the TV tuner's AUDIO OUTPUT to these jacks.

⑲ VIDEO jacks (input)

Connect the output jacks of video components.
For example, connect a playback-only VCR or a video camera.

⑳ VIDEO OUT TO MONITOR TV jacks (output)

Use to connect a TV monitor or a TV set with video input terminals for watching program materials from a VCR or Video disc player (LD player) connected to this unit.

㉑ FRONT AMP jacks

[PRE-OUT]
When a separate power amplifier is used to drive the front speakers, connect the power amplifier to these jacks.

[POWER IN]
When a separate preamplifier is connected and this unit is used as power amplifier, connect the preamplifier to these jacks.

㉒ MULTI-ROOM & SOURCE REMOTE IN jack

When using the MULTI-ROOM & SOURCE function, connect to the separately sold MR-100 Multi-Room remote control unit.

㉓ CONTROL IN, OUT jacks

Used for system control with other Pioneer components bearing the SR mark.
IN: For connection from the CONTROL OUT jack of another component (TV, etc.).
OUT: For connection to the CONTROL IN jack of another component.

NOTE:
The receiver's remote sensor does not function when a plug is inserted in the IN jack. To operate, point the remote control unit at the remote sensor on the component to which the receiver's IN jack is connected.

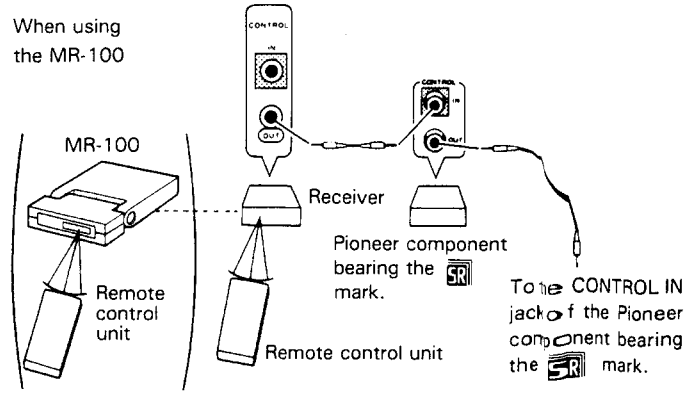

㉔ FRONT SPEAKERS terminals

A: Connect to the first set of speakers.
B: Connect to a second set of speakers.

Speaker impedance:
Refer to ㉕ SPEAKER IMPEDANCE SELECTOR switch.

NOTE:
Do not allow any of the code's conductors to protrude from the terminals or touch any other conductors. Malfunctioning or breakdown may occur when conductors come into contact with each other.

㉕ SPEAKER IMPEDANCE SELECTOR switch

Set this switch to match the impedance of your front speakers.

[I] When using one pair of speakers:

Impedance of a speaker	Selector position
8 Ω to less than 16 Ω	HIGH
4 Ω to less than 8 Ω	LOW

[II] When using two pairs of speakers:
Select LOW as the selector switch position and use speakers with a nominal impedance of between 8 and 16 Ω.

NOTE:
Turn off the receiver's power before changing the impedance selector switch setting.

㉖ AC OUTLETS

SWITCHED TOTAL 200 W (1.6 A) MAX
Power supplied through these outlets is turned on and off by the receiver's POWER switch. Total electrical power consumption of connected equipment should not exceed 200 W (1.6 A).

UNSWITCHED 200 W (1.6 A) MAX
Power flows continually to this outlet, regardless of whether the receiver is switched ON or OFF. Electrical power consumption of the connected equipment should not exceed 200 W (1.6 A).

NOTE:
Do not connect appliances with high power consumption such as heaters, irons, or television sets to these AC OUTLETS in order to avoid overheating and fire risk.
This can cause the receiver to malfunction.

CAUTION:
DO NOT CONNECT MONITOR OR TV SET.

㉗ AC Power cord

Connect to AC wall socket.

NOTE:
This unit should be disconnected by removing the power plug from the wall socket when not in regular use, e.g. when on vacation.

10. SPECIFICATIONS

Amplifier section

OUTPUT POWER (POWER AMP IN)
(Front)
Continuous average power output of 130 watts* per channel, min., at 8 ohms, from 20 Hz to 20,000 Hz with no more than 0.005 % total harmonic distortion.**

Rear, center ..... 40 W + 40 W, 40 W (1 kHz, 0.08 %, 8 Ω)

Audio section

Damping Factor
1 kHz, 8 Ω 100
Input (Sensitivity/Impedance)
PHONO MM ..... 2.5 mV/47 kΩ
CD, LINE, TAPE 1/DAT, TAPE 2, VIDEO, TV,
LD, VCR 1, VCR 2, VCR 3 ..... 150 mV/47 kΩ
POWER AMP IN ..... 1 V/47 kΩ
Phono Overload Level (T.H.D. 0.08 %, 1 kHz)
PHONO MM ..... 150 mV
Output (Level/Impedance)
TAPE 1/DAT REC, TAPE 2 REC, VCR 1 OUT, VCR 2 OUT
..... 150 mV/2.2 kΩ
PRE AMP OUT ..... 1 V/220 Ω
Frequency Response
PHONO MM ..... 20 Hz to 20,000 Hz ± 0.3 dB
CD, LINE, TAPE 1/DAT, TAPE 2, VIDEO, TV,
LD, VCR 1, VCR 2, VCR 3 ..... 5 Hz to 100,000 Hz $^{+0}_{-3}$ dB
Tone Control
BASS ..... ±8 dB (100 Hz)
MIDDLE ..... ±8 dB (1 kHz)
TREBLE ..... ±8 dB (10 kHz)
Loudness Contour ..... +6 dB (100 Hz)
+3 dB (10 kHz)
Signal-to-Noise Ratio (IHF, short-circuited, A network)
PHONO MM ..... 82 dB
CD, LINE, TAPE 1/DAT, TAPE 2, VIDEO, TV,
LD, VCR 1, VCR 2, VCR 3 ..... 98 dB
Signal-to-Noise Ratio [EIA, at 1 W (1 kHz)]
PHONO MM ..... 77 dB
CD, LINE, TAPE 1/DAT, TAPE 2, VIDEO, TV,
LD, VCR 1, VCR 2, VCR 3 ..... 80 dB

VIDEO Section

Input (Sensitivity/Impedance)
VCR 1, VCR 2, VCR 3, LD, TV, VIDEO,
ADAPTOR ..... 1 Vp-p/75 Ω
Output (Level/Impedance)
VCR 1, VCR 2, ADAPTOR, MONITOR ..... 1 Vp-p/75 Ω
Frequency Responce
VCR 1, VCR 2, VCR 3, LD, TV, VIDEO,
ADAPTOR → MONITOR ..... 5 Hz – 10 MHz $^{+0}_{-3}$ dB
Signal-to-Noise Ratio ..... 55 dB
Cross Talk ..... 55 dB (3.58 MHz)
Enhancer ..... ±3 dB (2 MHz)

[S terminals]

Input (Sensitivity/impedance)
VCR 1, VCR 2, LD ..... Luminance signal: 1 Vp-p/75 Ω
Color difference signal: 0.286 Vp-p/75 Ω
Output (Level/impedance)
VCR 1, VCR 2, TO MONITOR TV... Luminance signal: 1 Vp-p/75 Ω
Color difference signal: 0.286 Vp-p/75 Ω
Frequency response
Luminance signal ..... 5 Hz to 10 MHz, $^{+0}_{-3}$ dB
Signal-to-Noise Ratio
Luminance signal ..... 55 dB
Cross talk ..... 55 dB (3.58 MHz)

Surround section

Input (Sensitivity/Impedance)
REAR POWER AMP IN ..... 1 V/47 kΩ
CENTER POWER AMP IN ..... 1 V/47 kΩ
Output (Level/Impedance)
REAR PRE AMP OUT ..... 1 V/470 Ω
CENTER PRE AMP OUT ..... 1 V/470 Ω

FM Tuner Section

Frequency Range ..... 87.5 MHz to 108 MHz
Usable Sensitivity ..... Mono; 10.8 dBf, IHF (0.95 μV/75 Ω)
50 dB Quieting Sensitivity ..... Mono; 15.3 dBf, (1.6 μV/75 Ω)
Stereo; 37.0 dBf, (19.5 μV/75 Ω)
Signal-to-Noise Ratio ..... Mono; 80 dB (at 65 dBf)
Stereo; 76 dB (at 85 dBf)
Distortion ..... Mono; 0.08 % (100 Hz)
0.08 % (1 kHz)
0.2 % (6 kHz)
Stereo; 0.2 % (100 Hz)
0.15 % (1 kHz)
0.3 % (6 kHz)
Capture Ratio ..... 1.0 dB
Alternate Channel Selectivity ..... 65 dB (400 kHz)
Stereo Separation ..... 50 dB (1 kHz)
Frequency Response ..... 30 Hz to 15 kHz $^{+0.5}_{-2.0}$ dB
Image Interference Ratio ..... 50 dB
IF Interference Ratio ..... 80 dB
AM Suppression Ratio ..... 55 dB
Spurious Interference Ratio ..... 70 dB
Antenna Input ..... 300 Ω balanced
75 Ω unbalanced

AM Tuner Section

Frequency range ..... When 10 kHz step: 530 kHz – 1,700 kHz
When 9 kHz step: 531 kHz – 1,602 kHz
Sensitivity (IHF, Loop antenna) ..... 300 μV/m
Selectivity ..... 30 dB
Signal-to-Noise Ratio ..... 50 dB
Image Interference Ratio ..... 40 dB
Antenna ..... Loop antenna

SPECIFICATIONS

Miscellaneous

Power requirements ..... AC 120V, 60 Hz
Power consumption ..... 600 W, 790 VA
In standby condition ..... 3 W
AC Outlets ..... SWITCHED x 2: TOTAL 200 W MAX
UNSWITCHED x 1: 200 W MAX
Dimensions ..... 420 (W) x 162 (H) x 421 (D) mm
16-9/16 (W) x 6-3/8 (H) x 16-9/16 (D) in
Weight (without package) ..... 14.6 kg (32 lb 3 oz)

Furnished Parts

FM T-type antenna 1
AM Loop antenna 1
Size "AA" Alkaline batteries (LR6/AM-3) 2
Remote control unit 1
Operating Instructions 1

NOTE:
Specifications and the design subject to possible modifications without notice due to improvements.

* *Measured pursuant to the Federal Trade Commission's Trade Regulation rule on Power Output Claims for Amplifier.*
** *Measured by Audio Spectrum Analyzer.*