Pioneer sound.vision.soul

Service Manual

ORDER NO.
RRV2710

AUDIO/VIDEO MULTI-CHANNEL RECEIVER

VSX-AX10i-G

THIS MANUAL IS APPLICABLE TO THE FOLLOWING MODEL(S) AND TYPE(S).

Model	Type	Power Requirement	The voltage can be converted by the following method.
VSX-AX10i-G	SF	AC110/120-127V/220V/230-240V	With the voltage selector
VSX-AX10i-G	SDLPW	AC110/120-127V/220V/230-240V	With the voltage selector

● This service manual should be used together with the following manual(s).

Model No.	Order No.	Remarks
VSX-49TXi/KU/CA	RRV2644	

PIONEER CORPORATION 4-1, Meguro 1-chome, Meguro-ku, Tokyo 153-8654, Japan
PIONEER ELECTRONICS (USA) INC. P.O. Box 1760, Long Beach, CA 90801-1760, U.S.A.
PIONEER EUROPE NV Haven 1087, Keetberglaan 1, 9120 Melsele, Belgium
PIONEER ELECTRONICS ASIACENTRE PTE. LTD. 253 Alexandra Road, #04-01, Singapore 159936
©PIONEER CORPORATION 2002

T – ZZR NOV. 2002 Printed in Japan

1. CONTRAST OF MISCELLANEOUS PARTS

NOTES:
- *Parts marked by "NSP" are generally unavailable because they are not in our Master Spare Parts List.*
- *The ⚠ mark found on some component parts indicates the importance of the safety factor of the part. Therefore, when replacing, be sure to use parts of identical designation.*
- *Screws adjacent to ▼ mark on product are used for disassembly.*
- *For the applying amount of lubricants or glue, follow the instructions in this manual. (In the case of no amount instructions, apply as you think it appropriate.)*
- *Reference Nos. indicate the pages and Nos. in the service manual for the base model.*
- *When ordering resistors, first convert resistance values into code form as shown in the following examples.*

Ex.1 When there are 2 effective digits (any digit apart from 0), such as 560 ohm and 47k ohm (tolerance is shown by J=5%, and K=10%).

560 → 56 x 10^1 → 561 ..... RD1/4PU561J
47k → 47 x 10^3 → 473 ..... RD1/4PU473J
0.5 → R50 ..... RN2HR50K
1 → 1R0 ..... RS1P1R0K

Ex.2 When there are 3 effective digits (such as in high precision metal film resistors).

5.62k → 562 x 10^1 → 5621 ..... RN1/4PC5621F

■ CONTRAST OF TABLE

VSX-AX10i-G/SF, /SDLPW and VSX-49TXi/KU/CA are constructed the same except for the following:

Ref. No.	Mark	Symbol and Description	Part No. VSX-49TXi /KU/CA	Part No. VSX-AX10i-G /SF	Part No. VSX-AX10i-G /SDLPW	Remarks
		PCB ASSEMBLIES				
	NSP	1..VR & MOTHER ASSY	AWM7744	AWM7746	AWM7745	
P13- 1		2..MOTHER ASSY	AWX8142	AWX8144	AWX8143	
	NSP	1..PS & SP ASSY	AWK7764	AWK7765	AWK7765	
P15- 2		2..SP (B) ASSY	AWX8151	AWX8152	AWX8152	
P15- 3		2..AC PRIMARY ASSY	AWX7834	AWX7835	AWX7835	
P15- 4		2..SP (A) ASSY	AWX8148	AWX8149	AWX8149	
P17- 6		2..POSISTER (L) ASSY	AWX7844	AWX7845	AWX7845	
P17- 7		2..POSISTER (R) ASSY	AWX7846	AWX7847	AWX7847	
		2..VOLTAGE SEL ASSY	Not used	AWX7842	AWX7842	No. 1
		2..POSISTER(MT) ASSY	Not used	AWX8061	AWX8061	No. 2
	NSP	1..VIDEO ASSY	AWQ7016	AWQ7018	AWQ7017	
P15- 6		2..V-CONVERT ASSY	AWX8160	AWX8162	AWX8161	
P15- 7		2..COMPONENT ASSY	AWX7953	AWX7955	AWX7955	
P15- 9		2..COMPOSITE ASSY	AWX7942	AWX7944	AWX7944	
P15-10		2..A/V I/O ASSY	AWX7938	AWX7940	AWX7940	
	NSP	1..A/D & CONTROL ASSY	AWM7741	AWM7742	AWM7742	
P15-12		2..ANALOG IN & A/D ASSY	AWX7878	AWX7873	AWX7873	
P19- 1		2..DISPLAY ASSY	AWX8140	AWX8141	AWX8141	
P15- 1		1..FM/AM TUNER Module	AXQ7237	AXQ7238	AXQ7238	
		PACKING SECTION				
P9- 1	⚠	AC Power Cord	ADG7061	ADG7053	ADG7053	
	⚠	AC Power Cord	Not used	ADG7071	ADG7054	No. 3
P9- 4		Remote Control Unit	AXD7295	AXD7298	AXD7298	
P9- 7		Operating Instructions (English)	ARB7268	ARB7270	ARB7270	
		Operating Instructions(Chinese)	Not used	ARC7428	ARC7428	No. 4
		Operating Instructions(Spanish)	Not used	Not used	ARC7429	No. 5
P9- 9	NSP	Warranty Card	ARY1026	Not used	Not used	
P9-14		Packing Case	AHD8122	AHD8125	AHD8125	
		Caution 220V Label	Not used	ARR7019	ARR7019	No. 6
	⚠	AC Plug Adapter	Not used	AKX7011	AKX7011	Accessories
		Caution Card SD SB	Not used	ARM7063	ARM7063	No. 7
		Caution Card SB	Not used	ARM7064	Not used	No. 8
		NTSC Attention SB	Not used	ARM7066	Not used	No. 9
		PAL Attention SD	Not used	Not used	ARM7065	No.10
		Software (DVD NTSC, PAL)	Not used	AWX8035	AWX8036	No.11
		Air cap Bag	Not used	AHG7103	AHG7103	No.12
		Assist Operating Instructions(CAL.)E	Not used	ARH7060	ARH7060	No.13
		Assist Operating Instructions(CAL.)CH	Not used	ARH7064	ARH7064	No.14
		Assist Operating Instructions(CAL.)SP	Not used	Not used	ARH7065	No.15

Ref. No.	Mark	Symbol and Description	Part No. VSX-49TXi /KU/CA	Part No. VSX-AX10i-G /SF	Part No. VSX-AX10i-G /SDLPW	Remarks
		EXTERIOR SECTION				
P11- 1	NSP	Top Plate	ANE7298	ANE7299	ANE7299	
P11- 2		Side Alum	AAH7095	AAH7093	AAH7093	
P11- 6	NSP	Energy Star Label	AAX7876	Not used	Not used	
P11-12		Screw	FBT40T080FZK	RBA1099	RBA1099	
P11-24		65 Label	ARW7050	Not used	Not used	
P11-25		Screw	BBT30P100FCC	ABA1050	ABA1050	
P11-27	NSP	Fuse Caution Label	ARW7175	AAX7902	AAX7902	
		Edgeing guard	Not used	PEC1016	PEC1016	No.16
		CHASSIS SECTION				
P13-12	⚠	Power Transformer (T1) (AC120V)	ATS7320	Not used	Not used	
P13-12	⚠	Power Transformer (T1) (AC110V/120-127V/220V/230-240V)	Not used	ATS7323	ATS7323	
P13-29	NSP	Fan Holder	ANG7373	ANG7371	ANG7371	
P13-59	⚠	Fuse (FU4)	VEK1023 (4A/125V)	REK1027 (T3.15A/L250V)	REK1027 (T3.15A/L250V)	
P13-60	⚠	Fuse (FU5-FU8)	VEK1019 (2A/125V)	REK1025 (T2.0A/L250V)	REK1025 (T2.0A/L250V)	
P13-76	⚠	Fuse (FU9, FU10)	VEK1014 (1A/125V)	REK1021 (T800mA/250V)	REK1021 (T800mA/250V)	
		Fan Motor	Not used	AXM7018	AXM7018	No.17
	⚠	Fuse (FU2,FU3)	Not used	REK-108 (T6.3A/L250V)	REK-108 (T6.3A/L250V)	No.18
	NSP	Fuse Label	Not used	AXX7917	AXX7917	No.19
		REAR PANEL SECTION				
P15-13		Rear Panel	ANC8139	ANC8143	ANC8142	
P15-20	⚠	Fuse (FU1)	AEK-306 (12A/125V)	AEK7071 (T10A/L250V)	AEK7071 (T10A/L250V)	
	⚠	Voitage Selector	Not used	AKX-507	AKX-507	No. 20
		J41 2P Connector Assy	Not used	ADX7394	ADX7394	No. 21
	NSP	Fuse Label	Not used	AXX1572	AXX1572	No. 22
	NSP	AC SW lead Wire (Y1, 6004)	Not used	ZWNH1672G22-1	ZWNH1672G22-1	No. 23
	NSP	AC SW lead Wire (Y2, 6005)	Not used	ZWNH1672G22-3	ZWNH1672G22-3	
	NSP	AC SW lead Wire (Y3, 6006)	Not used	ZWNH1672G22-4	ZWNH1672G22-4	
	NSP	AC SW lead Wire (Y4, 6007)	Not used	ZWNH1672G22-2	ZWNH1672G22-2	
	NSP	AC SW lead Wire (Y5, 6008)	Not used	ZWNH1672G22-8	ZWNH1672G22-8	
		FRONT PANEL SECTION				
P19-11		Front Panel	ANB7301	ANB7303	ANB7303	
P19-12		Name Plate	PAN1376	PAN1377	PAN1377	
P19-13		Rotary Knob L	AAA7018	AAA7016	AAA7016	
P19-15		Rotary Knob S	AAA7015	AAA7013	AAA7013	
P19-17		Panel Base L	AMB7788	AMB7786	AMB7786	
P19-18		Panel Base R	AMB7791	AMB7789	AMB7789	
P19-19		POWER Button	AAD7440	AAD7485	AAD7485	
P19-20		POWER Button M	AAD7442	AAD7491	AAD7491	
P19-26		Door Pane	ANB7273	ANB7271	ANB7271	
P19-27		Door Cushion	AED7051	AED9014	AED9014	
P19-28		Door Plate	AAH7077	AAH7078	AAH7078	
P19-29		FL Lens I	AAK8069	AAK8068	AAK8068	
P19-30		Inner Panel	AAH7087	AAH7088	AAH7088	
P19-34		Panel Base C	AMB7785	AMB7783	AMB7783	
P19-40		Screw	ABA7074	ABA7073	ABA7073	
P19-62	NSP	Panel Spacer left L	AMR7411	AMR7417	AMR7417	
P19-63	NSP	Panel Spacer left S	AMR7408	AMR7415	AMR7415	
P19-64	NSP	Panel Spacer right L	AMR7412	AMR7418	AMR7418	
P19-65	NSP	Panel Spacer right S	AMR7409	AMR7416	AMR7416	

Ref. No.	Mark	Symbol and Description	Part No. VSX-49TXi /KU/CA	Part No. VSX-AX10i-G /SF, /SDLPW	Remarks
		REMOTE CONTROL SECTION			
P163- 2		PCB ASSY	AZC7299	AZC7300	
P163-13		Seal A	AZA7415	AZA7421	
P163-14		Seal B	AZA7416	AZA7420	
P163-16		Case A	AZN7783	AZN7795	
P163-17		Name Plate	AZA7406	AZA7409	
P163-21		Case B	AZN7784	AZN7796	
P163-23		Pen Holder	AZN7786	AZN7798	
P163-26		Battery Cover	AZN7785	AZN7797	
P163-32		Slide Knob	AZA7347	AZA7365	
P163-36		Key Top A	AZA7345	AZA7363	
P163-37		Key Top B	AZA7346	AZA7364	
P163-39		Rubber Sheet B	AZA7349	AZA7371	

Notes : ●The numbers in the remarks column correspond to the numbers on the " EXPLODED VIEWS ".
● For PCB ASSEMBLIES, Refer to "CONTRAST OF PCB ASSEMBLIES", "2. PCB CONNECTION DIAGRAM" and "3. SCHEMATIC DIAGRAM".

■ EXPLODED VIEWS

● PACKING SECTION

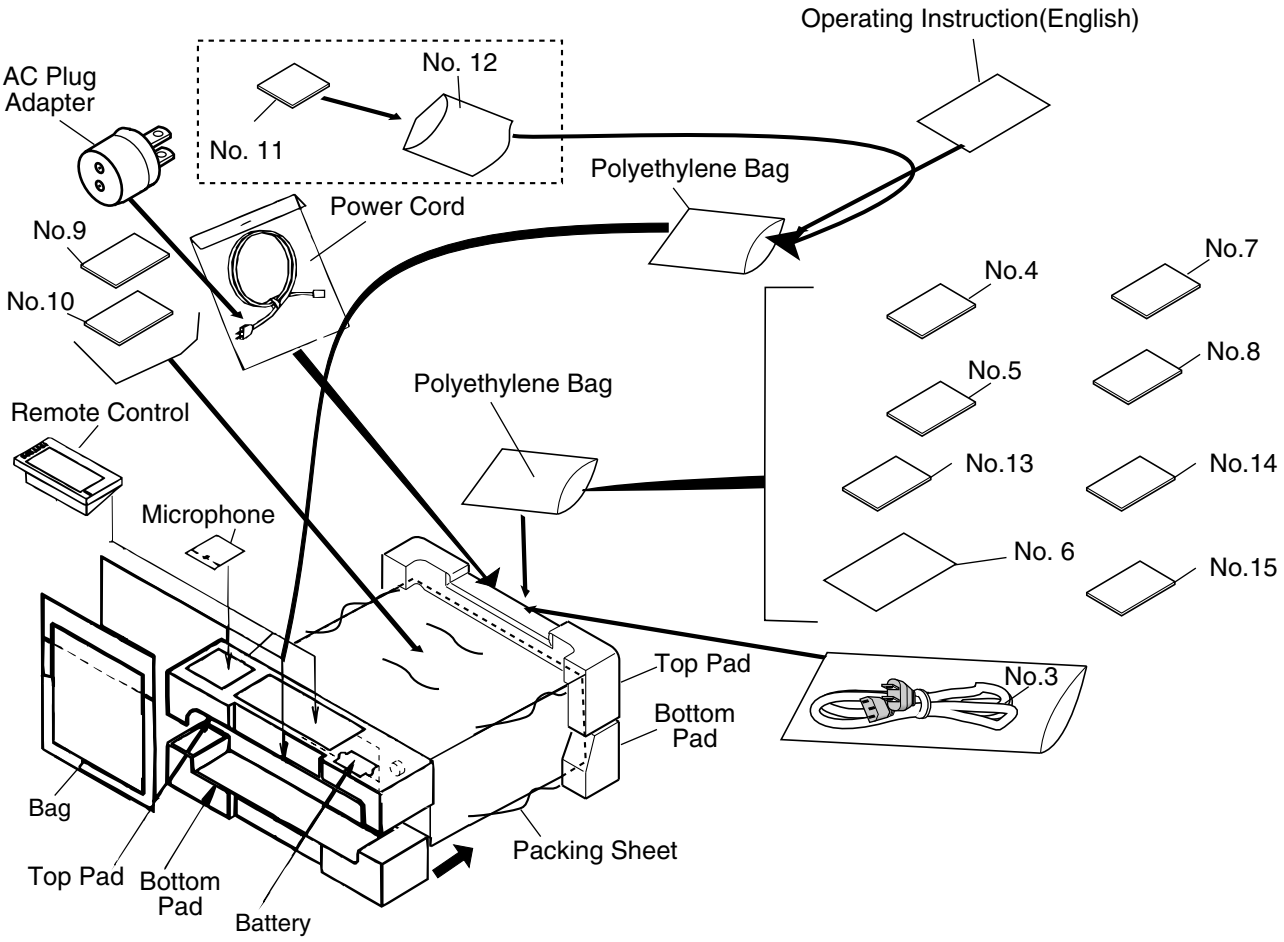

• EXTERIOR SECTIONS

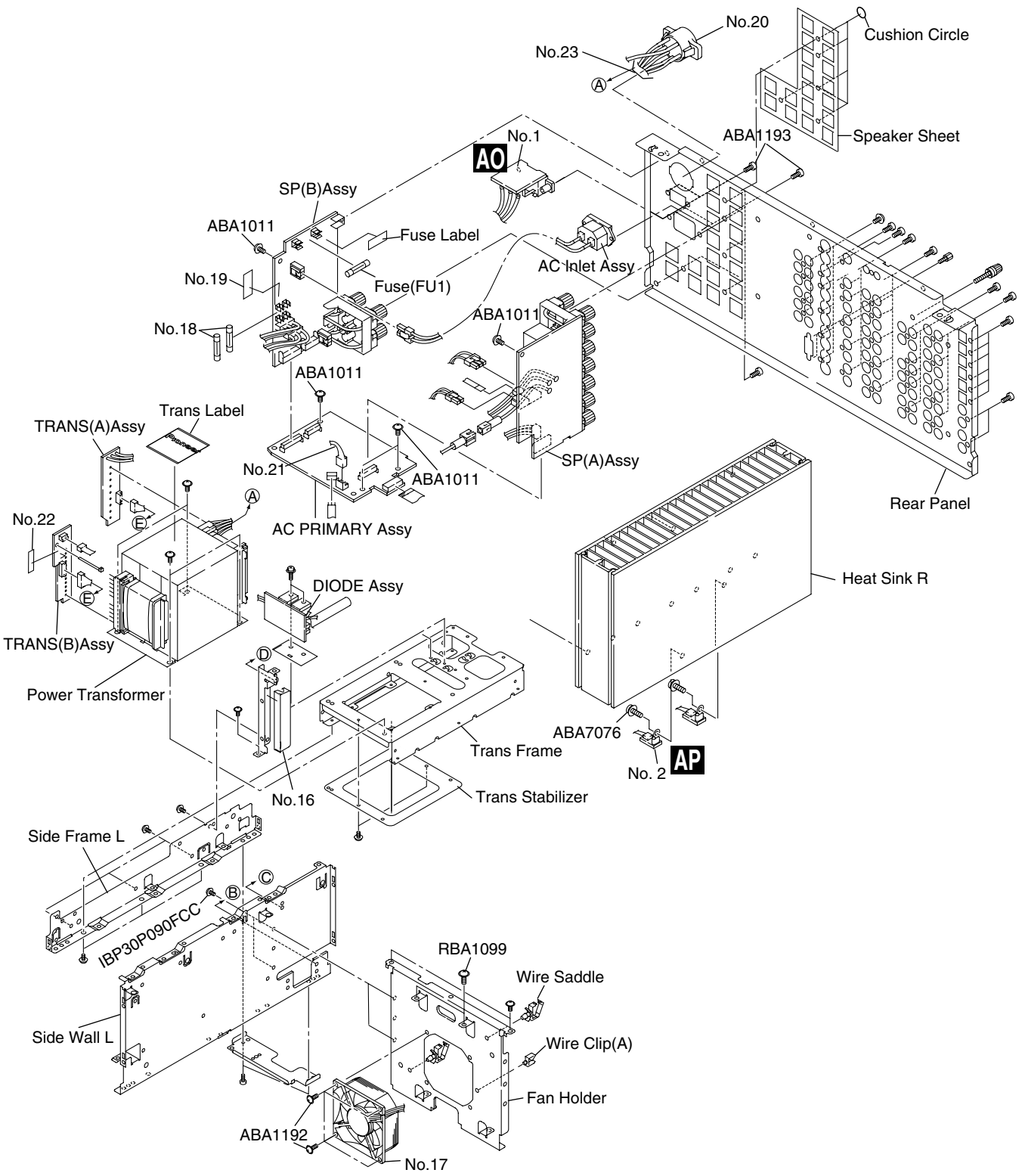

■ CONTRAST OF PCB ASSEMBLIES

A FM/AM TUNER Module

AXQ7238 and AXQ7237 are constructed the same except for the following:

Mark	Symbol and Description	Part No.		Remarks
		AXQ7237	AXQ7238	
	C216, C217	CKSRYB153K50	CKSRYB123K50	

BF A/V I/O ASSY

AWX7940 and AWX7938 are constructed the same except for the following :

Mark	Symbol and Description	Part No.		Remarks
		AWX7938	AWX7940	
	IC2051	UPC4570C	Not used	
	IC2052	M62429FP	Not used	
	Q2051	HN1C03F(AB)	Not used	
	D2051	UDZS5.6B	Not used	
	C2051,C2052,C2059,C2060	CEJQ1R0M50	Not used	
	C2053,C2054,C2063,C2064	CCSRCH101J50	Not used	
	C2061,C2065,C2066	CEJQ100M16	Not used	
	C2069	CKSRYB103K50	Not used	
	R2051,R2052	RS1/16S474J	RS1/16S0R0J	
	R2053,R2054	RS1/16S221J	Not used	
	R2055,R2056	RS1/16S474J	Not used	
	R2057,R2058	RS1/16S220J	Not used	
	R2061,R2062	RS1/16S472J	Not used	
	R2063,R2064,R2069,R2070,R2073,R2074	RS1/16S103J	Not used	
	R2065	RD1/2LMF561J	Not used	
	R2067,R2068,R2071,R2072,R2075,R2076	RS1/16S102J	Not used	
	R9069	Not used	RS1/16S0R0J	
	JA2051	DKB1045	Not used	

CF COMPOSITE ASSY

AWX7944 and AWX7942 are constructed the same except for the following :

Mark	Symbol and Description	Part No.		Remarks
		AWX7942	AWX7944	
	IC2107	TC74HC4051AFT	Not used	
	C2159,C2160,C2161	CKSRYB103K50	Not used	
	C2164	CCSRCH181J50	Not used	
	R2163,R2164,R2165	RS1/16S102J	Not used	
	R2169	RS1/16S750J	Not used	
	2105 2P PIN JACK	AKB7076	Not used	
	JA2106 1P PIN JACK	Not used	AKB7142	

EF V-CONVERT ASSY

AWX8161, AWX8162 and AWX8160 are constructed the same except for the following :

Mark	Symbol and Description	Part No.			Remarks
		AWX8160	AWX8161	AWX8162	
	IC2861	Not used	TA8772AN	TA8772AN	
	Q2855, Q2856	Not used	2SC4081	2SC4081	
	Q2857, Q2905	Not used	UN5212	UN5212	
	C2947, C2949, C2974	Not used	CKSRYB103K50	CKSRYB103K50	
	C2950	Not used	CEAT470M10	CEAT470M10	
	C2948, C2951- C2953, C2955, C2961- C2965	Not used	CKSRYB104K16	CKSRYB104K16	
	C2980	Not used	CKSRYB104K16	CKSRYB104K16	
	C2954	Not used	CEAT100M50	CEAT100M50	
	C2956, C2957	Not used	CKSRYB474K10	CKSRYB474K10	
	C2958- C2960	Not used	CEAT1R0M50	CEAT1R0M50	
	C2975	Not used	CEAT101M10	CEAT101M10	
	L2855	LAU330J	LAU270J	LAU330J	
	L2858	Not used	LAU100J	LAU100J	
	R2868	RS1/16S911J	RS1/16S821J	RS1/16S911J	
	R2909	Not used	RS1/16S103J	RS1/16S103J	
	R2910- R2914	Not used	RS1/16S102J	RS1/16S102J	
	R2915	Not used	RS1/16S362J	RS1/16S362J	
	R2916, R2948	Not used	RS1/16S473J	RS1/16S473J	
	R2936, R2937	RS1/16S0R0J	Not used	Not used	
	R2941, R2942	Not used	RS1/16S153J	Not used	
	X2851	ASS1091 (3.58MHz)	ASS1092 (4.43MHz)	ASS1091 (3.58MHz)	

F COMPONENT ASSY

AWX7955 and AWX7953 are constructed the same except for the following:

Mark	Symbol and Description	Part No.		Remarks
		AWX7953	AWX7955	
	D2501	1SS355	Not used	
	R2572	RS1/16S102J	Not used	
	JA2504	AKN7014	Not used	

L ANALOG IN&A/D ASSY

AWX7873 and AWX7878 are constructed the same except for the following:

Mark	Symbol and Description	Part No.		Remarks
		AWX7878	AWX7873	
	IC3901	BU4052BCF	Not used	
	D3901, D3902	UDZS6.2B	Not used	
	C3951, C3952	CEAT100M50	Not used	
	C3953, C3954	CKSRYB473K50	Not used	
	R3951, R3952	RS1/16S472J	Not used	
	R3955- R3957	RS1/16S221	Not used	
	R3958, R3959	RS1/16S0R0J	Not used	

MF DISPLAY ASSY

AWX8141 and AWX8140 are constructed the same except for the following:

Mark	Symbol and Description	Part No.		Remarks
		AWX8140	AWX8141	
	IC3061	TC74HC4053AFT	Not used	
	Q3003	UN5212	Not used	
	Q3063	RN2903	Not used	
	D3029	SLI-343DUW	Not used	
	D3062- D3064, D3066	1SS355	Not used	
	C3063	CKSRYB153K50	Not used	
	R3029	RS1/16S561J	Not used	
	R3063	RS1/16S223J	Not used	
	R3065, R3069	RS1/16S103J	Not used	
	R3066	RS1/16S392J	Not used	
	R3078	Not used	RS1/16S0R0J	

ABF AC PRIMARY ASSY

AWX7835 and AWX7834 are constructed the same except for the following:

Mark	Symbol and Description	Part No.		Remarks
		AWX7834	AWX7835	
	Q1105	Not used	2SC2412K	
	Q1106	Not used	DTA124EK	
	D1107	Not used	UDZ2.7B	
	D1108	Not used	1SS355	
	R1107	RS1/16S104J	RS1/16S473J	
	R1118, R1119	RS1/16S0R0J	Not used	
	R1120	Not used	RS1/16S0R0J	
	R1121	Not used	RS1/16S183J	
⚠	T1101	ATT7043	ATT7041	
	CN1106	Not used	B02B-XASK-1	

RF MOTHER ASSY

AWX8143, AWX8144 and AWX8142 are constructed the same except for the following:

Mark	Symbol and Description	Part No.			Remarks
		AWX8142	AWX8144	AWX8143	
	Q5809	UN5112	Not used	Not used	
	Q5811	Not used	RN4903	RN4903	
	Q5812	Not used	RN1903	RN1903	
	Q5813	Not used	2SC5174P	2SC5174P	
	Q5814	Not used	2SA1932P	2SA1932P	
	D5808	Not used	UDZ36B	UDZ36B	
	D5809, D5816	Not used	UDZ12B	UDZ12B	
	D5810, D5812	Not used	1SS355	1SS355	
	D5811	Not used	UDZS5.1B	UDZS5.1B	
	D5813, D5818	Not used	UDZ15B	UDZ15B	
	C5851, C5854	Not used	CEAT100M50	CEAT100M50	
	C5852, C5853	Not used	CKSRYB103K50	CKSRYB103K50	
	C5858	CKSRYB103K50	Not used	Not used	
	R5842	Not used	RS1/16S104J	RS1/16S104J	
	R5843, R5844	Not used	RS1/16S394J	RS1/16S394J	
	R5845, R5848	Not used	RS1/16S101J	RS1/16S101J	
	R5846, R5849	Not used	RS1/16S471J	RS1/16S471J	
	R5854	Not used	RS1/16S103J	RS1/16S103J	
	R5855	RS1/16S103J	RS1/16S103J	Not used	
	R5857	Not used	Not used	RS1/16S103J	
	R5862	RS1/16S102J	Not used	Not used	
	R5864	RS1/16S104J	Not used	Not used	
	R5893- R5897	RS1/16S0R0J	Not used	Not used	
	R5932	RS1/16S154J	Not used	Not used	
	CN5826	Not used	KM250MA3	KM250MA3	

AJ F SP (B) ASSY

AWX8152 and AWX8151 are constructed the same except for the following:

Mark	Symbol and Description	Part No.		Remarks
		AWX8151	AWX8152	
	Q1002	DTC124EK	Not used	
	D1003, D1004	1SS355	Not used	
	R1002	ACN7116	Not used	
	R1003	RCN1080	Not used	
	R1005, R1006	RS1/16S220J	RS1/16S0R0J	
⚠	CN1004 1P AC OUTLET	AKP1033	Not used	
	CN1003	RKP1834	Not used	
	CN1006 4P SPEAKER TERMINAL	AKE7089	AKE7092	
	H1003- H1006 FUSE CLIP	Not used	AKR1004	
⚠	J1001 3P BOARD IN WIRE	Not used	ADX7357	
⚠	J1002 3P BOARD IN WIRE	Not used	ADX7389	
	RY1002	ASR7016	Not used	

AD SP (A) ASSY

AWX8149 and AWX8148 are constructed the same except for the following :

Mark	Symbol and Description	Part No.		Remarks
		AWX8148	AWX8149	
	R1213, R1214	Not used	RS1LMF471J	
	CN1201 6P SPEAKER TERMINAL	AKE7088	AKE7091	
	CN1202 8P SPEAKER TERMINAL	AKE7087	AKE7090	

AG POSISTER (L) ASSY

AWX7845 and AWX7844 are constructed the same except for the following:

Mark	Symbol and Description	Part No.		Remarks
		AWX7844	AWX7845	
	TH1901 POSISTOR	AEX7006	AEX7008	

AH POSISTER (R) ASSY

AWX7847 and AWX7846 are constructed the same except for the following:

Mark	Symbol and Description	Part No.		Remarks
		AWX7846	AWX7847	
	TH1902 POSISTOR	AEX7006	AEX7008	

■ PCB PARTS LIST

Mark	No.	Description	Part No.
AO	**VOLTAGE SEL ASSY**		
SWITCHES			
⚠	S1401	VOLTAGE SELECTOR	AKX1033
AP	**POSISTER(MT) ASSY**		
OTHERS			
	CN1905	2P CONNECTOR ASSY	ADX7365
⚠	TH1903	POSISTOR	AEX7007

2. PCB CONNECTION DIAGRAM

2.1 VOLTAGE SEL. and POSISTER(MT) ASSYS

AO VOLTAGE SEL. ASSY

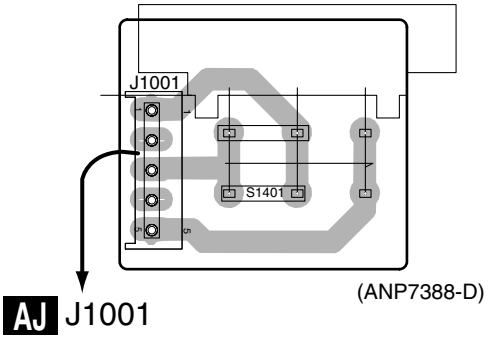

(ANP7388-D)

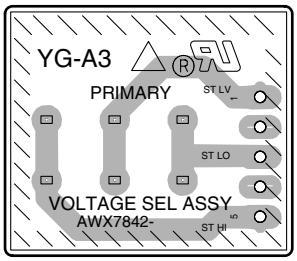

(ANP7388-D)

SIDE A

SIDE B

AP POSISTER(MT) ASSY

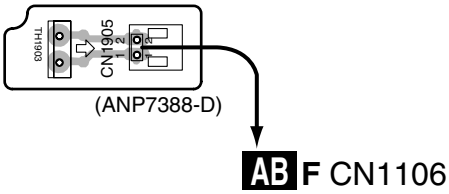

(ANP7388-D)

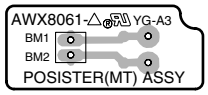

(ANP7388-D)

AO AP

2.2 SP(B) ASSY

AJ SP(B) ASSY

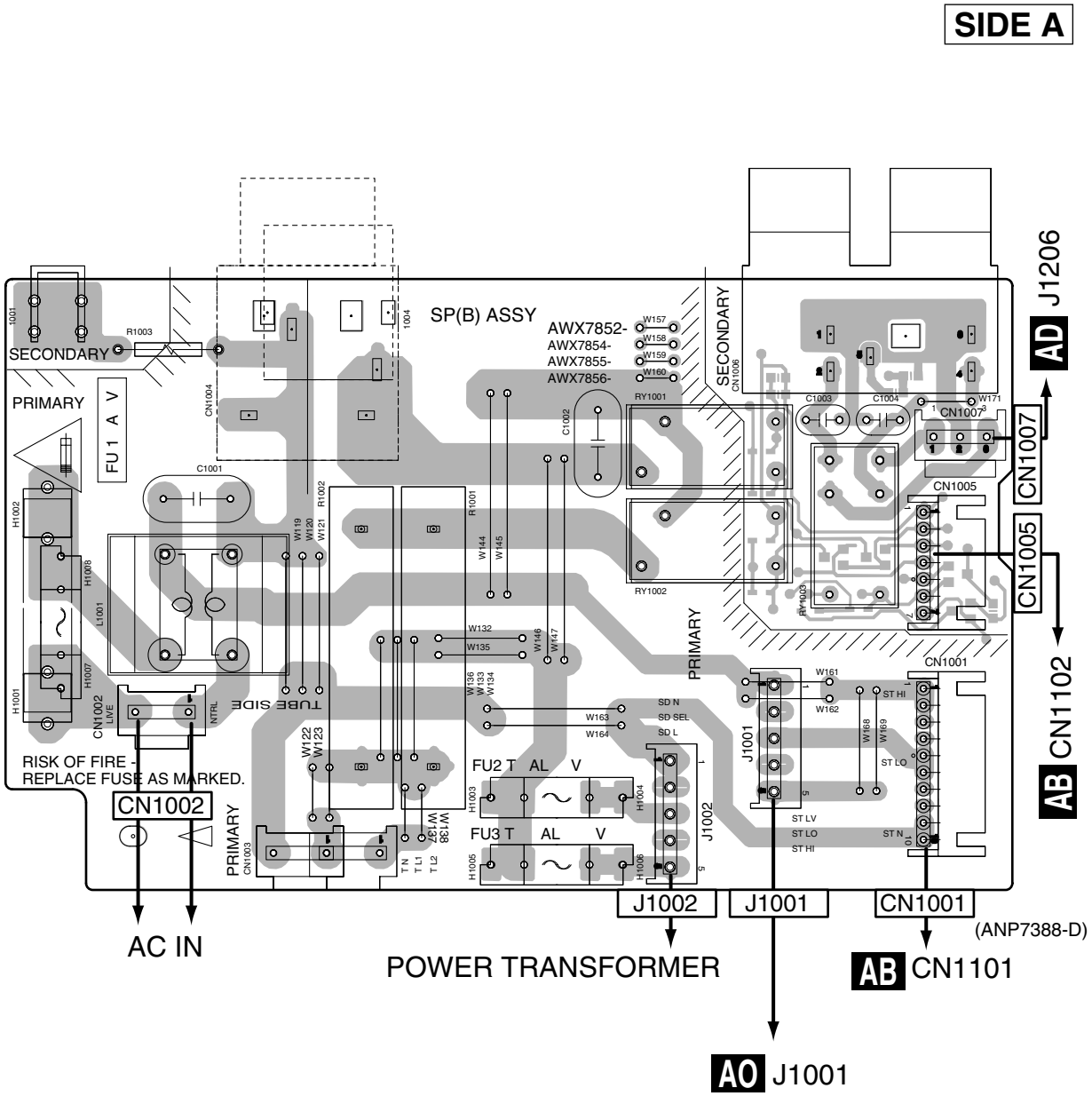

AJ

3. SCHEMATIC DIAGRAM

3.1 OVERALL WIRING DIAGRAM

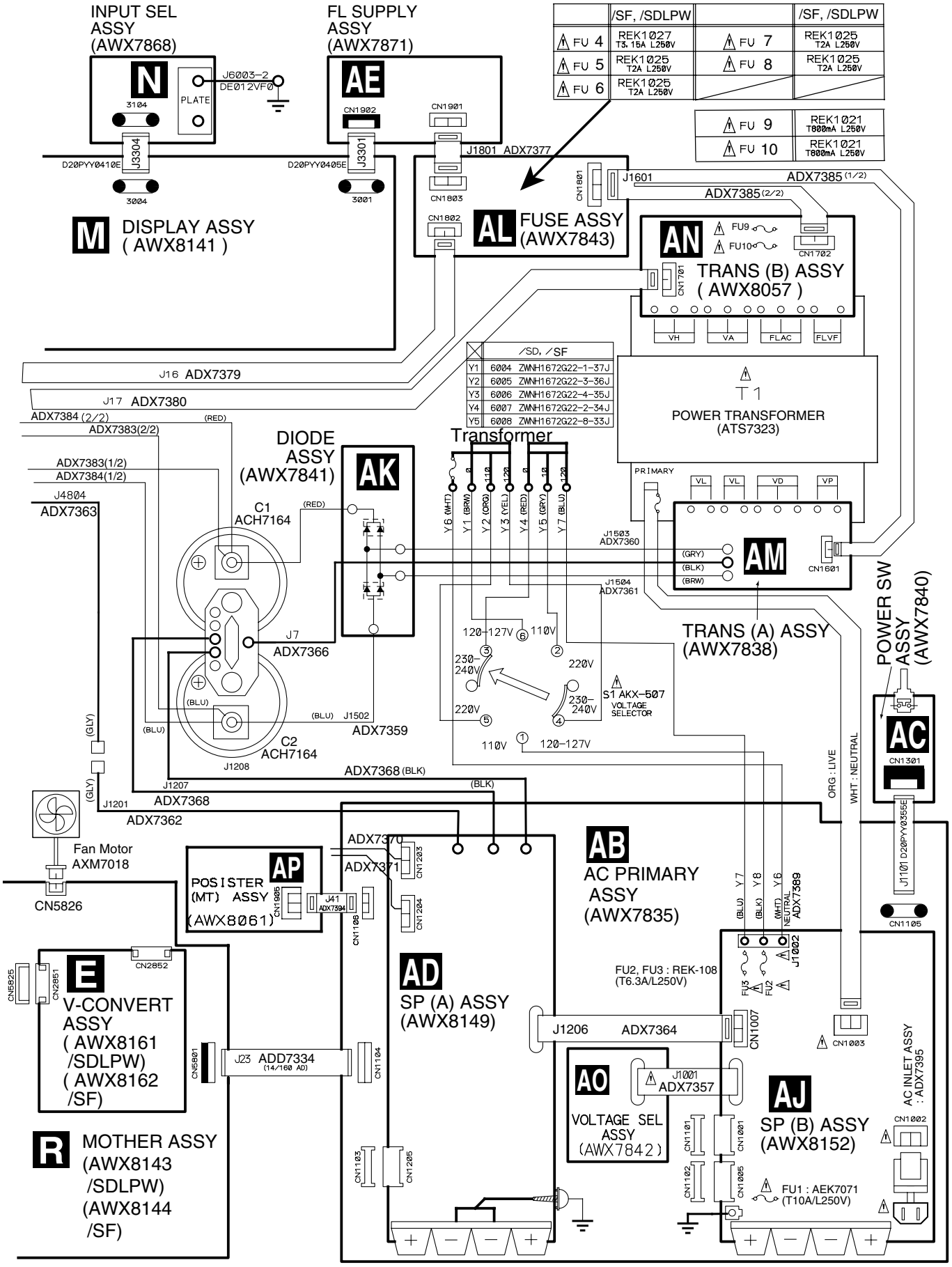

	/SF, /SDLPW		/SF, /SDLPW
FU 4	REK1027 T3.15A L250V	FU 7	REK1025 T2A L250V
FU 5	REK1025 T2A L250V	FU 8	REK1025 T2A L250V
FU 6	REK1025 T2A L250V		

FU 9	REK1021 T800mA L250V
FU 10	REK1021 T800mA L250V

	/SD, /SF
Y1	6004 ZWNH1672G22-1-37J
Y2	6005 ZWNH1672G22-3-36J
Y3	6006 ZWNH1672G22-4-35J
Y4	6007 ZWNH1672G22-2-34J
Y5	6008 ZWNH1672G22-8-33J

3.2 A/V I/O ASSY

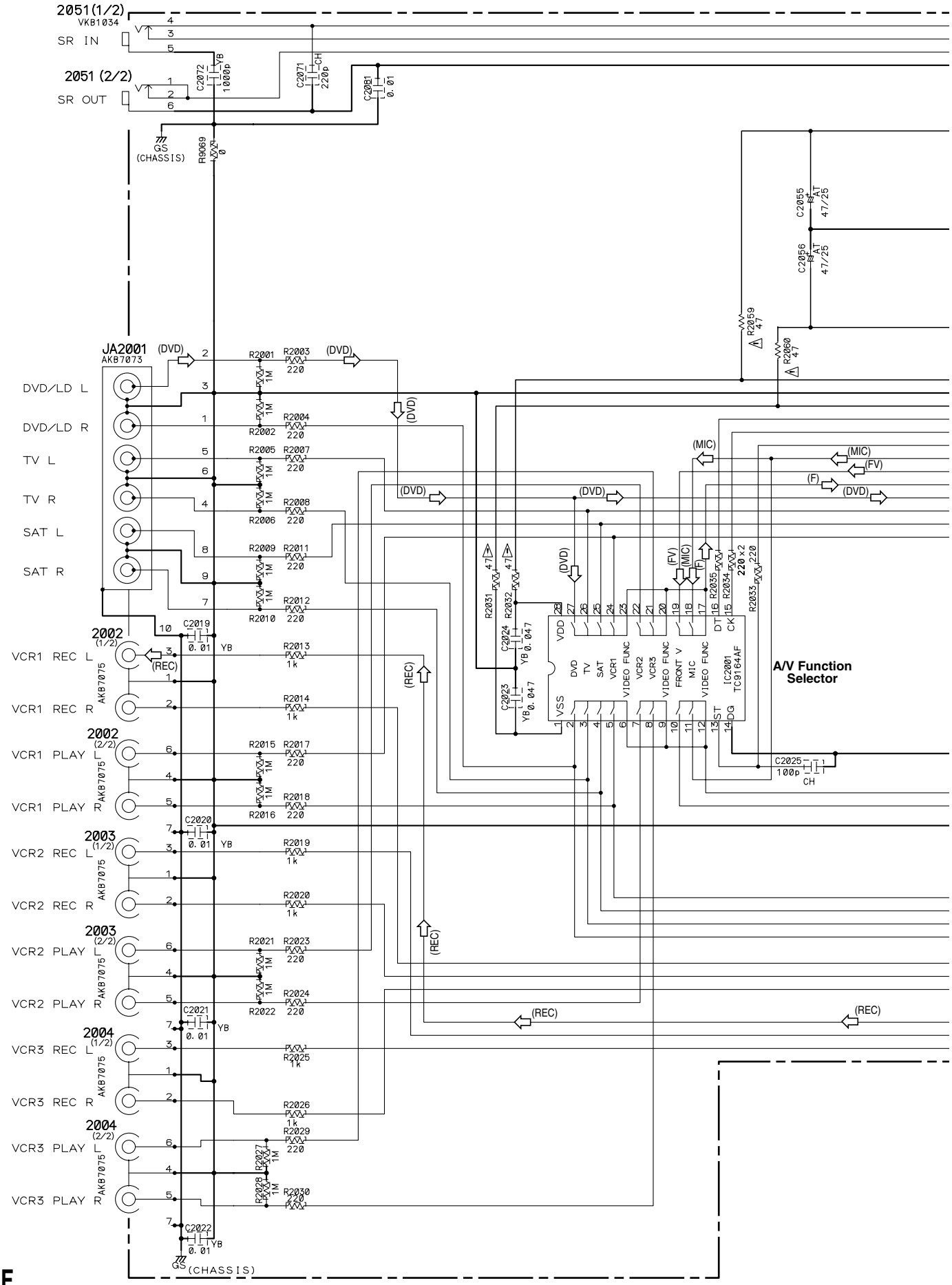
2051(1/2)
VKB1034
SR IN
2051 (2/2)
SR OUT
C2072
YB
1000p
C2071
CH
220p
C2081
0.01
GS
(CHASSIS)
R9069
0
C2055
SAT
47/25
C2056
SAT
47/25
R2059
47
R2060
47
JA2001
AKB7073
DVD/LD L
DVD/LD R
TV L
TV R
SAT L
SAT R
(DVD)
R2001
R2003
220
R2002
R2004
R2005
R2007
R2006
R2008
R2009
R2011
R2010
R2012
1M
2002
(1/2)
VCR1 REC L
VCR1 REC R
AKB7075
(REC)
C2019
0.01
R2013
1k
R2014
2002
(2/2)
VCR1 PLAY L
VCR1 PLAY R
R2015
R2017
R2016
R2018
C2020
2003
(1/2)
VCR2 REC L
VCR2 REC R
R2019
R2020
2003
(2/2)
VCR2 PLAY L
VCR2 PLAY R
R2021
R2023
R2022
R2024
C2021
2004
(1/2)
VCR3 REC L
VCR3 REC R
R2025
R2026
2004
(2/2)
VCR3 PLAY L
VCR3 PLAY R
R2027
R2028
R2029
R2030
C2022
(MIC)
(FV)
(F)
R2031
R2032
47
C2024
0.047
C2023
0.047
VDD
VSS
DVD
TV
SAT
VCR1
VIDEO FUNC
VCR2
VCR3
FRONT V
MIC
DT
CK
ST
DG
IC2001
TC9164AF
R2035
R2034
220x2
R2033
220
A/V Function
Selector
C2025
100p
CH

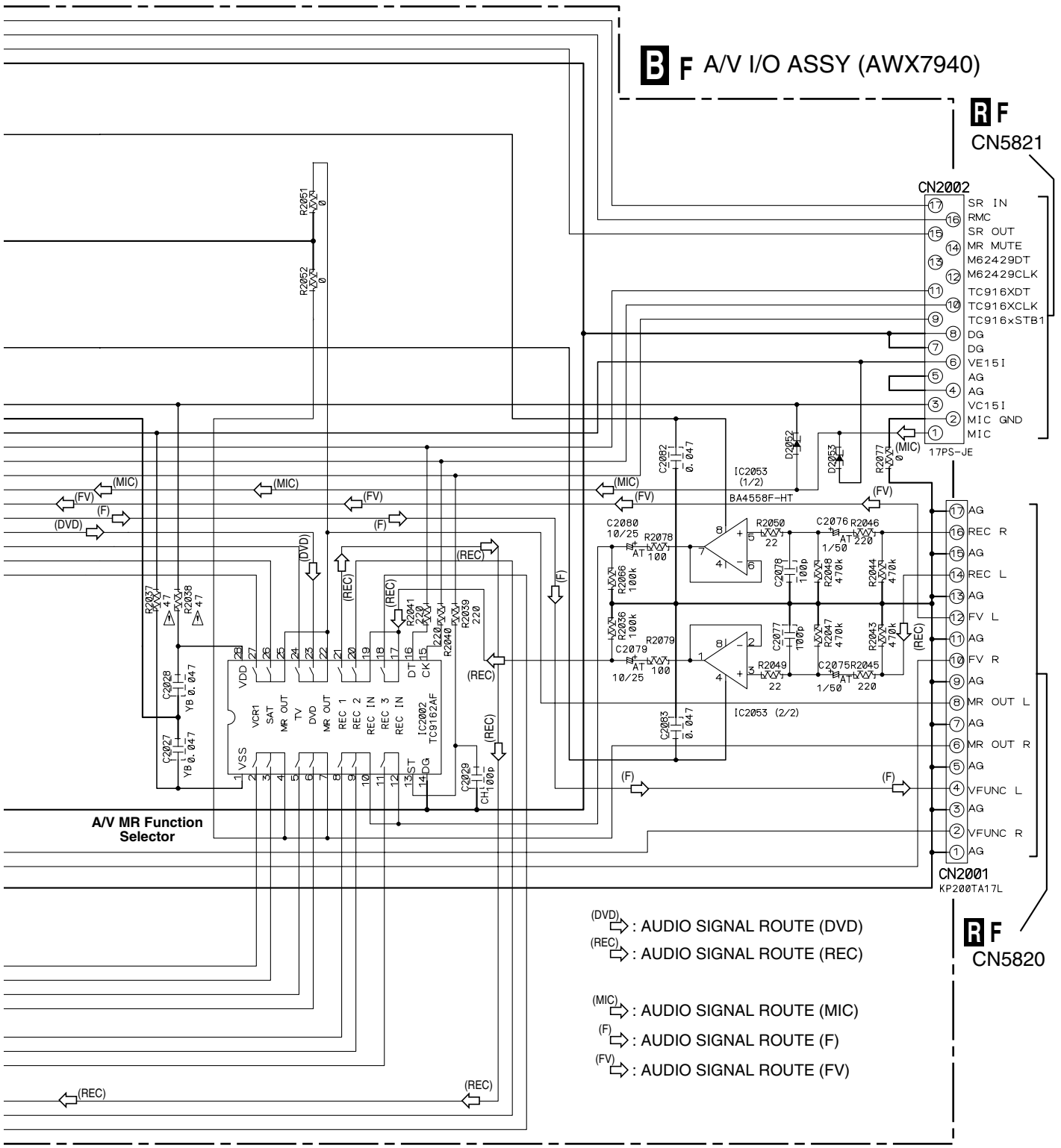

NOTES

1. RESISTORS
   Unit: k-kΩ, M-MΩ or Ω unless otherwise noted.
   Rated power: 1/16W unless otherwise noted.
   Tolerance: ±5%(J) unless otherwise noted.
2. CAPACITORS
   Unit: p-pF or μF unless otherwise noted.
   Rated Voltage: shown as "Capacity(μF)/Voltage(V)", or 50V unless otherwise noted.
3. DIODES
   No marked Diodes are 1SS355.

※Parts or parts block marked by "*" or "STBY" are standby.

The ⚠ mark found on some component parts indicates the importance of the safety factor of the part. Therefore, when replacing, be sure to use parts of identical designation.

B F

3.3 COMPOSITE ASSY

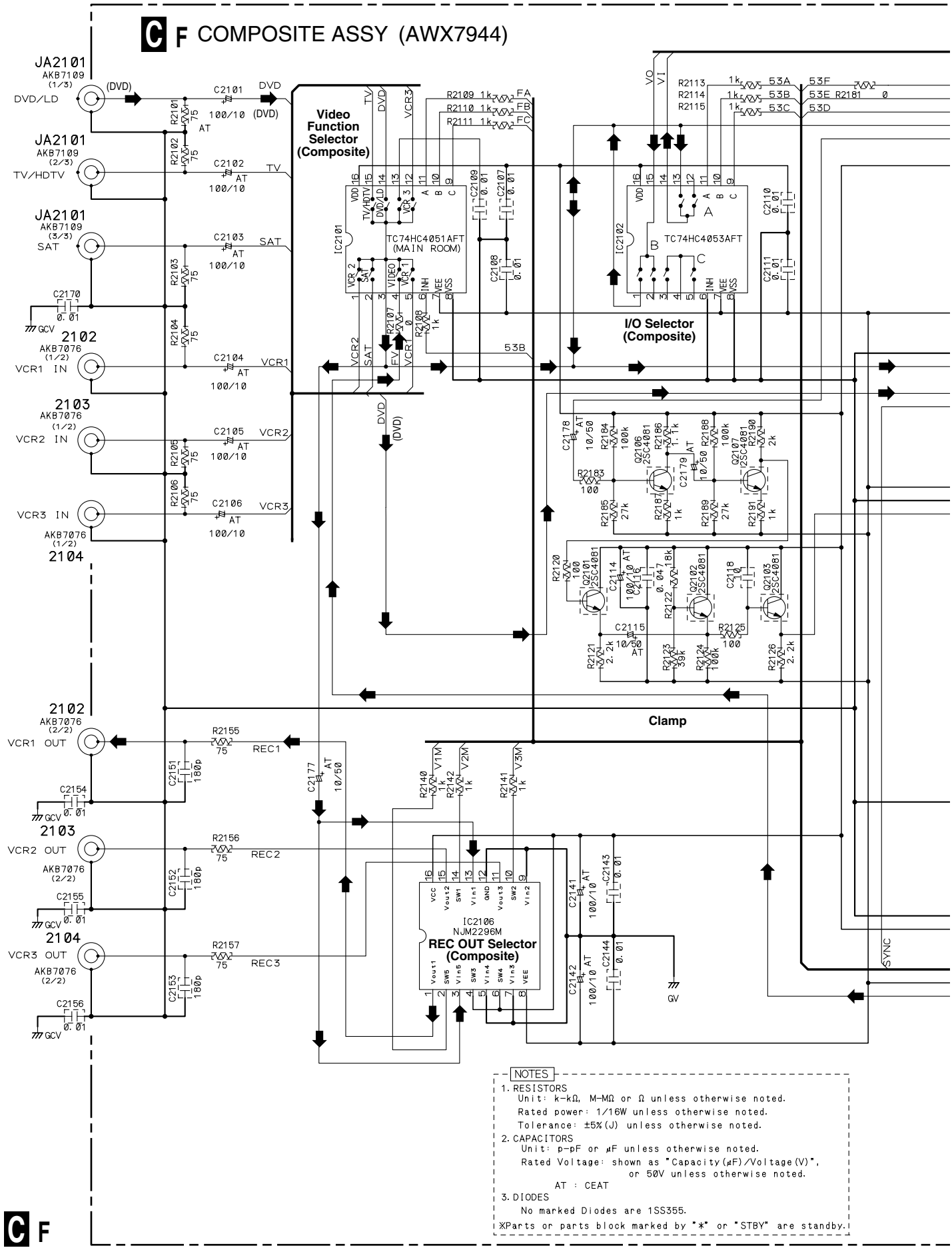

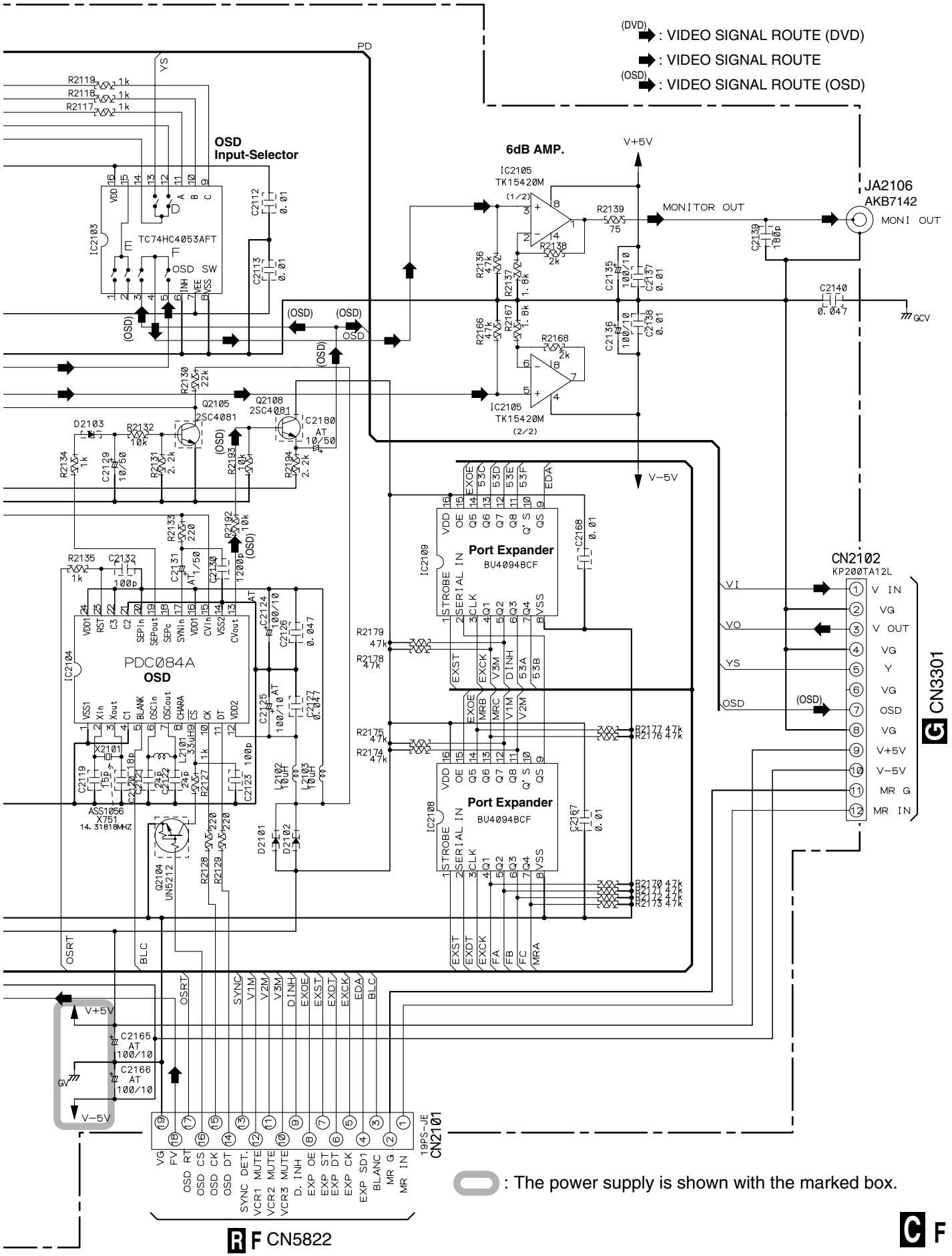
(DVD) : VIDEO SIGNAL ROUTE (DVD)
: VIDEO SIGNAL ROUTE
(OSD) : VIDEO SIGNAL ROUTE (OSD)
OSD Input-Selector
IC2103
TC74HC4053AFT
OSD SW
6dB AMP.
IC2105
TK15420M
(1/2)
(2/2)
V+5V
V−5V
MONITOR OUT
JA2106
AKB7142
MONI OUT
GCV
Q2105
2SC4081
Q2108
2SC4081
D2103
IC2104
PDC084A
OSD
X2101
ASS1056
X751
14.31818MHZ
Q2104
UN5212
IC2109
Port Expander
BU4094BCF
IC2108
Port Expander
BU4094BCF
CN2102
KP200TA12L
CN3301
CN2101
19PS-JE
CN5822
: The power supply is shown with the marked box.

3.4 V-CONVERT ASSY

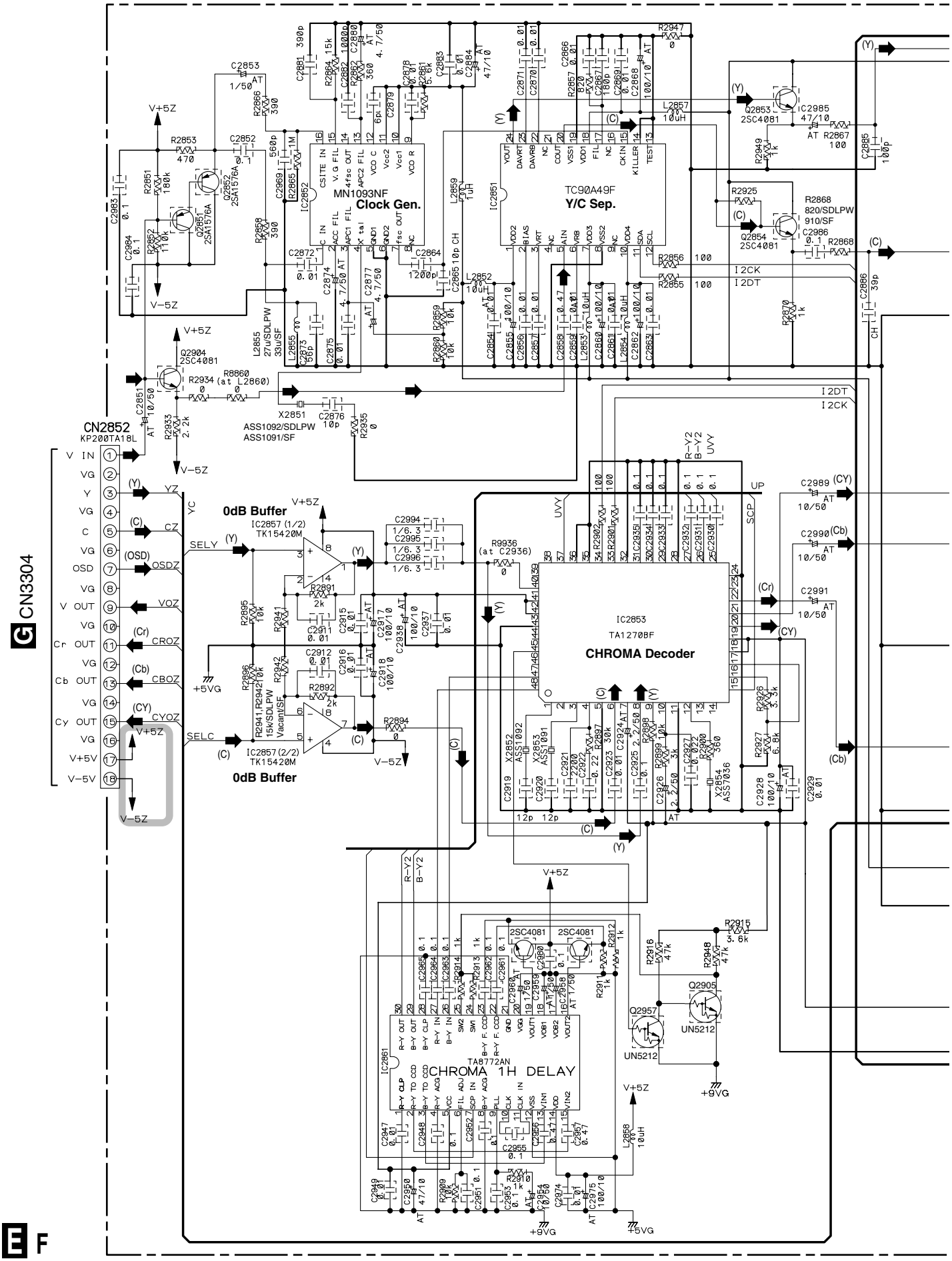

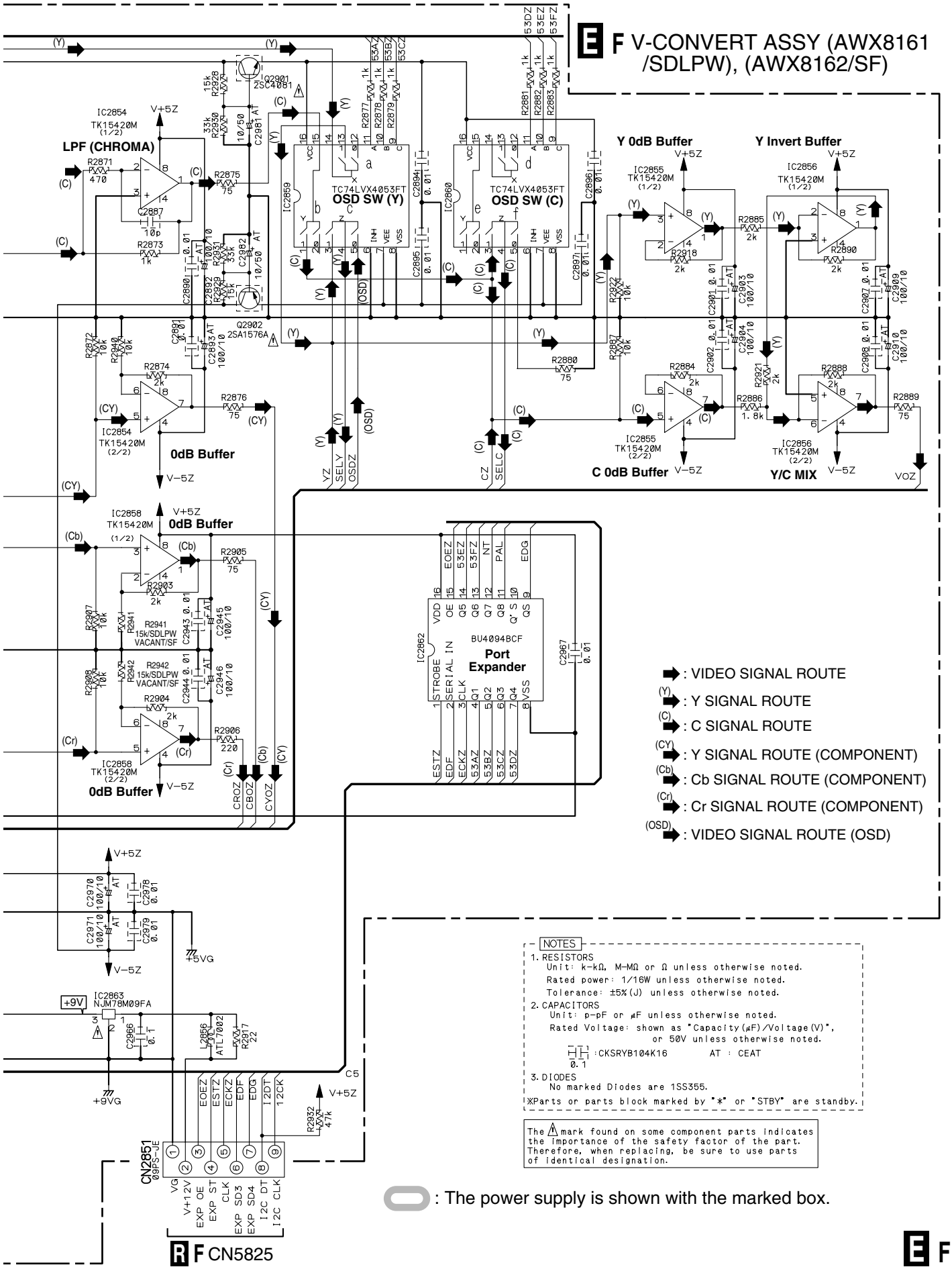
E F V-CONVERT ASSY (AWX8161 /SDLPW), (AWX8162/SF)
LPF (CHROMA)
OSD SW (Y)
TC74LVX4053FT
OSD SW (C)
TC74LVX4053FT
Y 0dB Buffer
Y Invert Buffer
0dB Buffer
C 0dB Buffer
Y/C MIX
Port Expander
BU4094BCF
: VIDEO SIGNAL ROUTE
: Y SIGNAL ROUTE
: C SIGNAL ROUTE
: Y SIGNAL ROUTE (COMPONENT)
: Cb SIGNAL ROUTE (COMPONENT)
: Cr SIGNAL ROUTE (COMPONENT)
: VIDEO SIGNAL ROUTE (OSD)
NOTES
1. RESISTORS
Unit: k-kΩ, M-MΩ or Ω unless otherwise noted.
Rated power: 1/16W unless otherwise noted.
Tolerance: ±5%(J) unless otherwise noted.
2. CAPACITORS
Unit: p-pF or μF unless otherwise noted.
Rated Voltage: shown as "Capacity(μF)/Voltage(V)", or 50V unless otherwise noted.
:CKSRYB104K16 AT : CEAT
0.1
3. DIODES
No marked Diodes are 1SS355.
※Parts or parts block marked by "*" or "STBY" are standby.
The ⚠ mark found on some component parts indicates the importance of the safety factor of the part. Therefore, when replacing, be sure to use parts of identical designation.
: The power supply is shown with the marked box.
CN2851
CN5825
R F CN5825
E F

3.5 DISPLAY ASSY

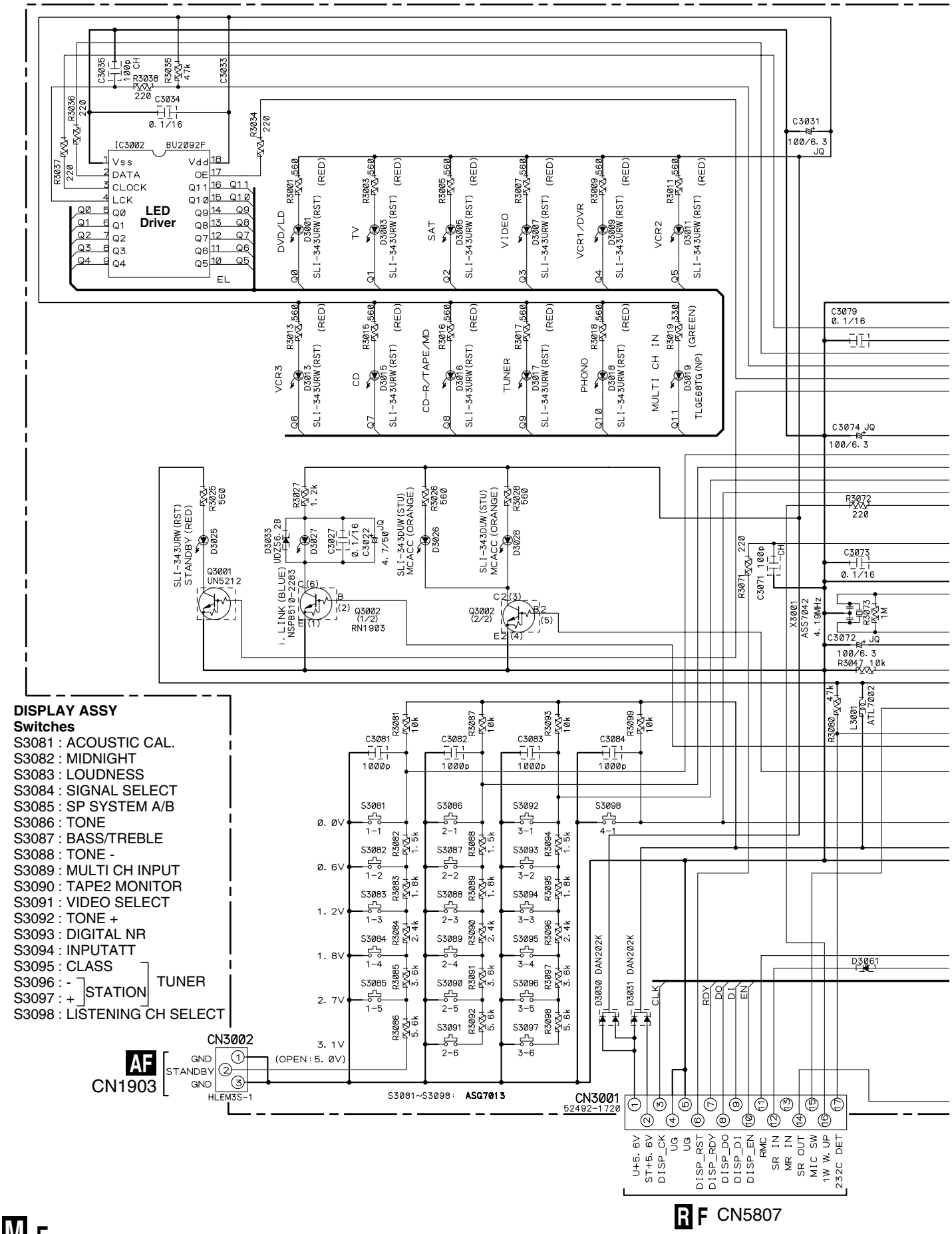

DISPLAY ASSY
Switches
S3081 : ACOUSTIC CAL.
S3082 : MIDNIGHT
S3083 : LOUDNESS
S3084 : SIGNAL SELECT
S3085 : SP SYSTEM A/B
S3086 : TONE
S3087 : BASS/TREBLE
S3088 : TONE -
S3089 : MULTI CH INPUT
S3090 : TAPE2 MONITOR
S3091 : VIDEO SELECT
S3092 : TONE +
S3093 : DIGITAL NR
S3094 : INPUTATT
S3095 : CLASS
S3096 : -] STATION] TUNER
S3097 : +
S3098 : LISTENING CH SELECT

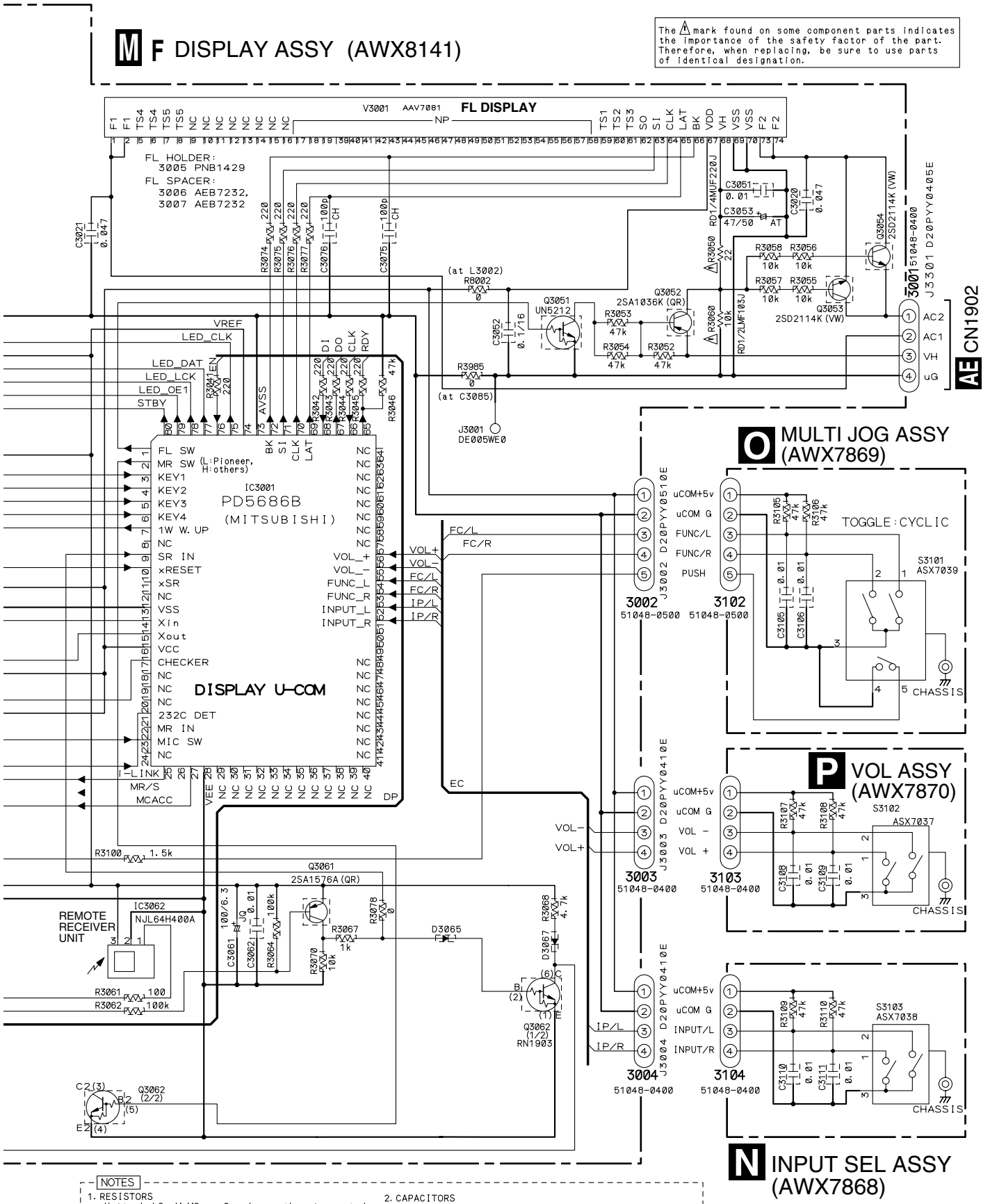
M F DISPLAY ASSY (AWX8141)
The ⚠ mark found on some component parts indicates the importance of the safety factor of the part. Therefore, when replacing, be sure to use parts of identical designation.
V3001 AAV7081 FL DISPLAY
FL HOLDER: 3005 PNB1429
FL SPACER: 3006 AEB7232, 3007 AEB7232
IC3001 PD5686B (MITSUBISHI)
DISPLAY U-COM
FL SW
MR SW (L:Pioneer, H:others)
KEY1
KEY2
KEY3
KEY4
1W W. UP
SR IN
xRESET
xSR
Xin
Xout
VCC
CHECKER
232C DET
MR IN
MIC SW
I-LINK
MR/S
MCACC
VREF
LED_CLK
LED_DAT
LED_LCK
LED_OE1
STBY
VOL_+
VOL_−
FUNC_L
FUNC_R
INPUT_L
INPUT_R
FC/L
FC/R
IP/L
IP/R
EC
J3001 DE005WE0
J3301 D20PYY0405E
3001 51048-0400
AE CN1902
AC2
AC1
VH
uG
O MULTI JOG ASSY (AWX7869)
J5002 D20PYY0510E
uCOM+5v
uCOM G
FUNC/L
FUNC/R
PUSH
3002 51048-0500
3102 51048-0500
TOGGLE:CYCLIC
S3101 ASX7039
CHASSIS
P VOL ASSY (AWX7870)
J5003 D20PYY0410E
VOL −
VOL +
3003 51048-0400
3103 51048-0400
S3102 ASX7037
J5004 D20PYY0410E
INPUT/L
INPUT/R
3004 51048-0400
3104 51048-0400
S3103 ASX7038
N INPUT SEL ASSY (AWX7868)
REMOTE RECEIVER UNIT
IC3062 NJL64H400A
Q3061 2SA1576A(QR)
Q3062 (1/2) RN1903
Q3062 (2/2)
Q3051 UN5212
Q3052 2SA1036K (QR)
Q3053 2SD2114K (VW)
Q3054 2SD2114K (VW)
D3065
NOTES
1. RESISTORS
Unit: k-kΩ, M-MΩ or Ω unless otherwise noted.
Rated power: 1/16W unless otherwise noted.
Tolerance: ±5%(J) unless otherwise noted.
2. CAPACITORS
Unit: p-pF or μF unless otherwise noted.
Rated Voltage: shown as "Capacity(μF)/Voltage(V)", or 50V unless otherwise noted.
JQ:CEJQ, CH:CCSRCH
:CKSRYB type unless otherwise noted
3. DIODES
No marked Diodes are 1SS355.
※Parts or parts block marked by "*" or "STBY" are standby.
M F N O P

3.6 MOTHER ASSY

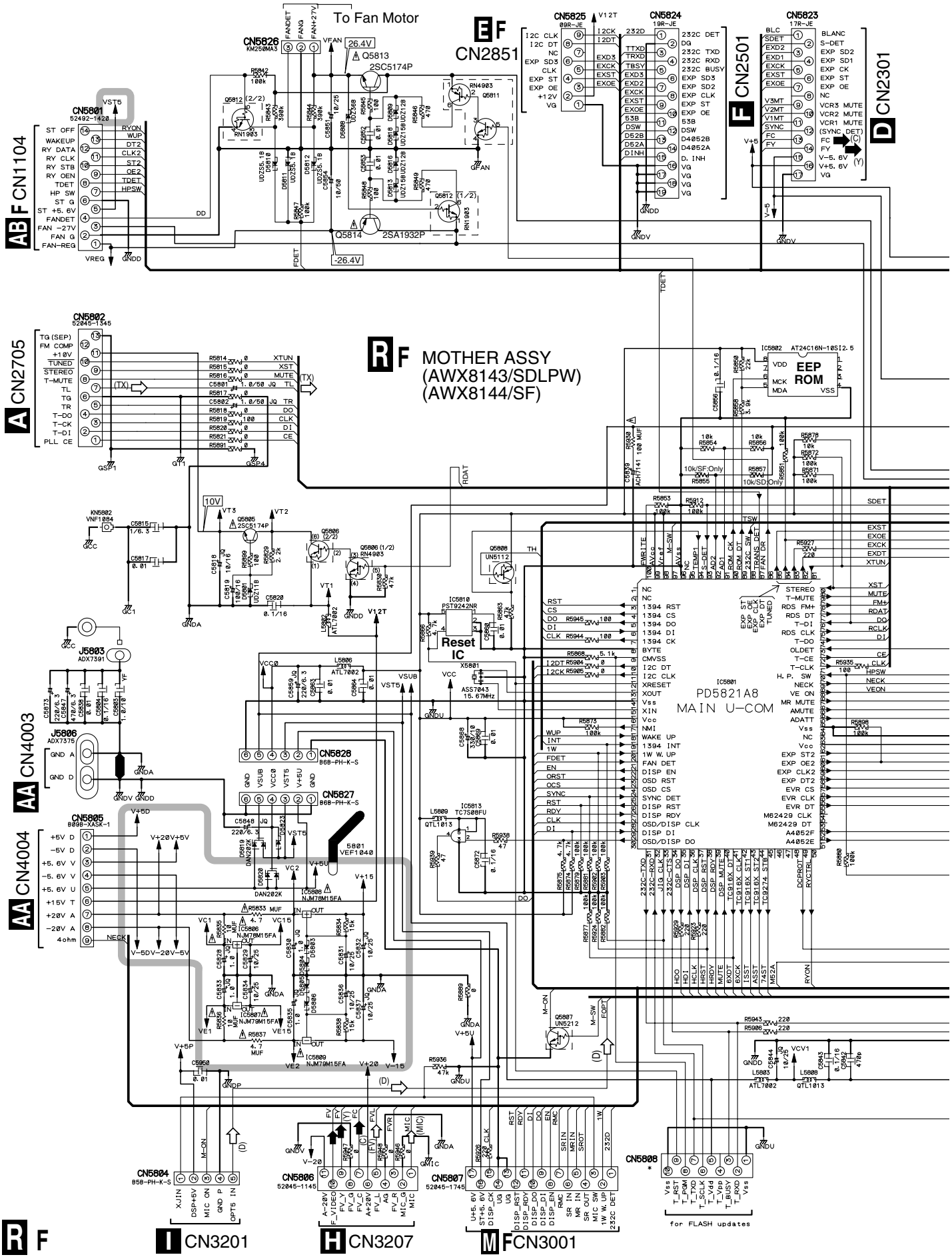

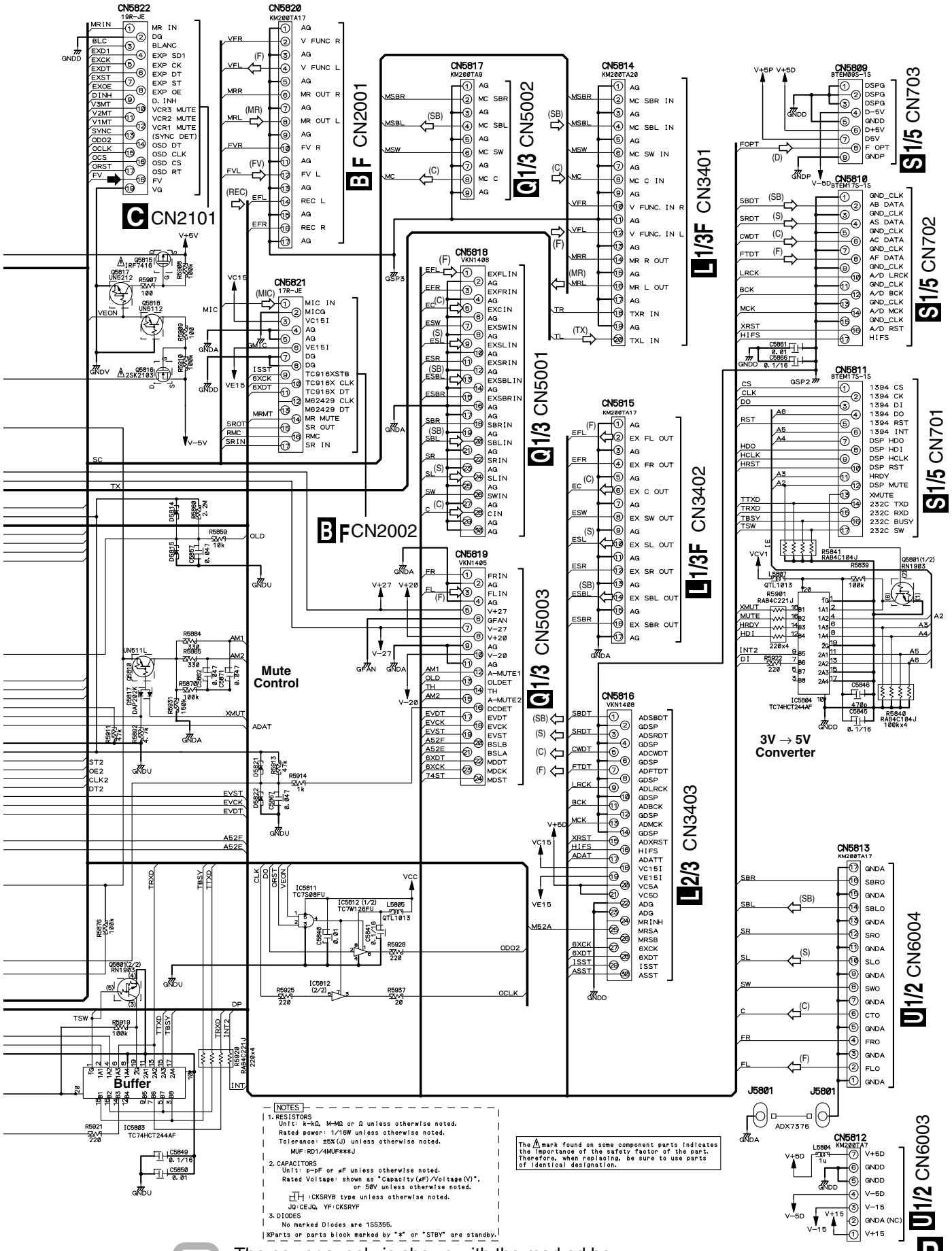
CN5822
19R-JE
MR IN
DQ
BLANC
EXP SD1
EXP CK
EXP DT
EXP ST
EXP OE
D. INH
VCR3 MUTE
VCR2 MUTE
VCR1 MUTE
(SYNC DET)
OSD DT
OSD CLK
OSD CS
OSD RT
FV
VG
C CN2101
CN5820
KM200TA17
V FUNC R
V FUNC L
MR OUT R
MR OUT L
FV R
FV L
REC L
REC R
B F CN2001
CN5817
KM200TA9
MC SBR
MC SBL
MC SW
MC C
Q 1/3 CN5002
CN5814
KM200TA20
MC SBR IN
MC SBL IN
MC SW IN
MC C IN
V FUNC. IN R
V FUNC. IN L
MR R OUT
MR L OUT
TXR IN
TXL IN
L 1/3F CN3401
CN5809
BTEM09S-1S
S 1/5 CN703
CN5810
BTEM17S-1S
S 1/5 CN702
CN5811
BTEM17S-1S
S 1/5 CN701
CN5821
17R-JE
MIC IN
MICQ
VC15I
VE15I
TC916XSTB
TC916X CLK
TC916X DT
M62429 CLK
M62429 DT
MR MUTE
SR OUT
RMC
SR IN
CN5818
VKN1408
Q 1/3 CN5001
B F CN2002
CN5819
VKN1405
Q 1/3 CN5003
CN5815
KM200TA17
EX FL OUT
EX FR OUT
EX C OUT
EX SW OUT
EX SL OUT
EX SR OUT
EX SBL OUT
L 1/3F CN3402
CN5816
VKN1408
L 2/3 CN3403
CN5813
KM200TA17
U 1/2 CN6004
CN5812
KM200TA7
U 1/2 CN6003
Mute Control
3V → 5V Converter
Buffer
IC5811 TC7S08FU
IC5812 (1/2) TC7W126FU
IC5812 (2/2)
IC5804 TC74HCT244AF
IC5803 TC74HCT244AF
J5801
ADX7376
NOTES
1. RESISTORS
Unit: k-kΩ, M-MΩ or Ω unless otherwise noted.
Rated power: 1/16W unless otherwise noted.
Tolerance: ±5%(J) unless otherwise noted.
MUF:RD1/4MUF***J
2. CAPACITORS
Unit: p-pF or μF unless otherwise noted.
Rated Voltage: shown as "Capacity(μF)/Voltage(V)", or 50V unless otherwise noted.
:CKSRYB type unless otherwise noted.
JQ:CEJQ, YF:CKSRYF
3. DIODES
No marked Diodes are 1SS355.
※Parts or parts block marked by "*" or "STBY" are standby.
The ⚠ mark found on some component parts indicates the importance of the safety factor of the part. Therefore, when replacing, be sure to use parts of identical designation.
: The power supply is shown with the marked box.
R F

3.7 AC PRIMARY and SP (A) ASSYS

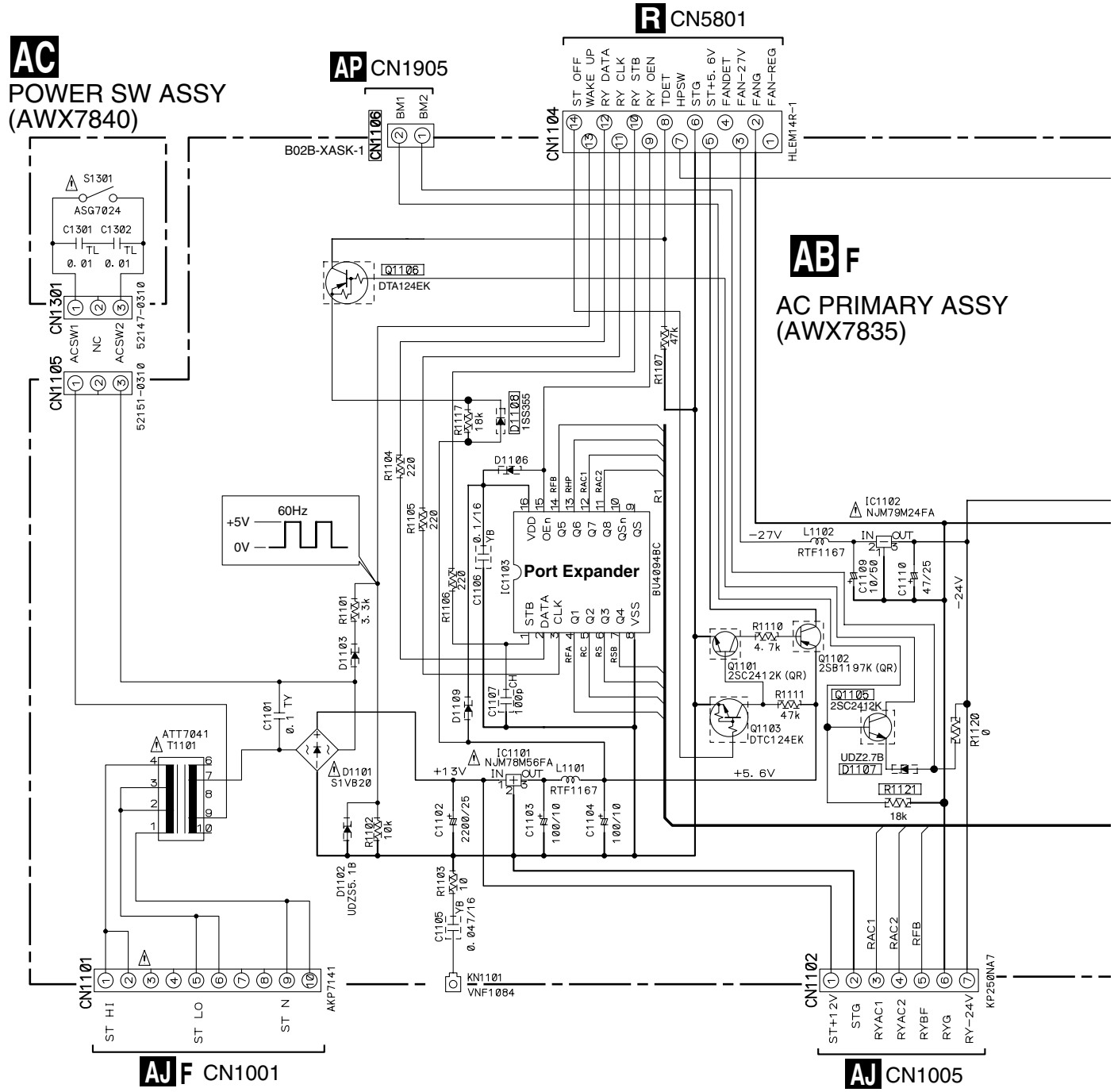

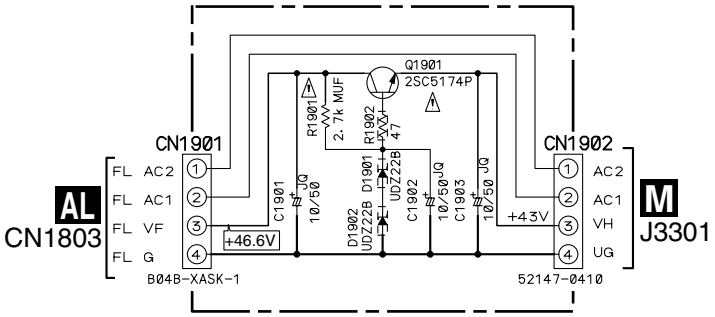

NOTES

1. RESISTORS
   Unit: k-kΩ, M-MΩ or Ω unless otherwise noted.
   Rated power: 1/16W unless otherwise noted.
   Tolerance: ±5%(J) unless otherwise noted.
2. CAPACITORS
   Unit: p-pF or μF unless otherwise noted.
   Rated Voltage: shown as "Capacity(μF)/Voltage(V)", or 50V unless otherwise noted.
3. DIODES
   No marked Diodes are 1SS355.
4. VOLTAGE
   Indicated in DC Voltage.

	RS1/16S***J	CH	CCSRCH***J**
TY	CFTYA***J50	YB	CKSRYB***K**
TL	CFTLA***J**		CEAT***M**
		JQ	CEJQ***M**

※Parts or parts block marked by "*" or "STBY" are standby.

AB F AC AE

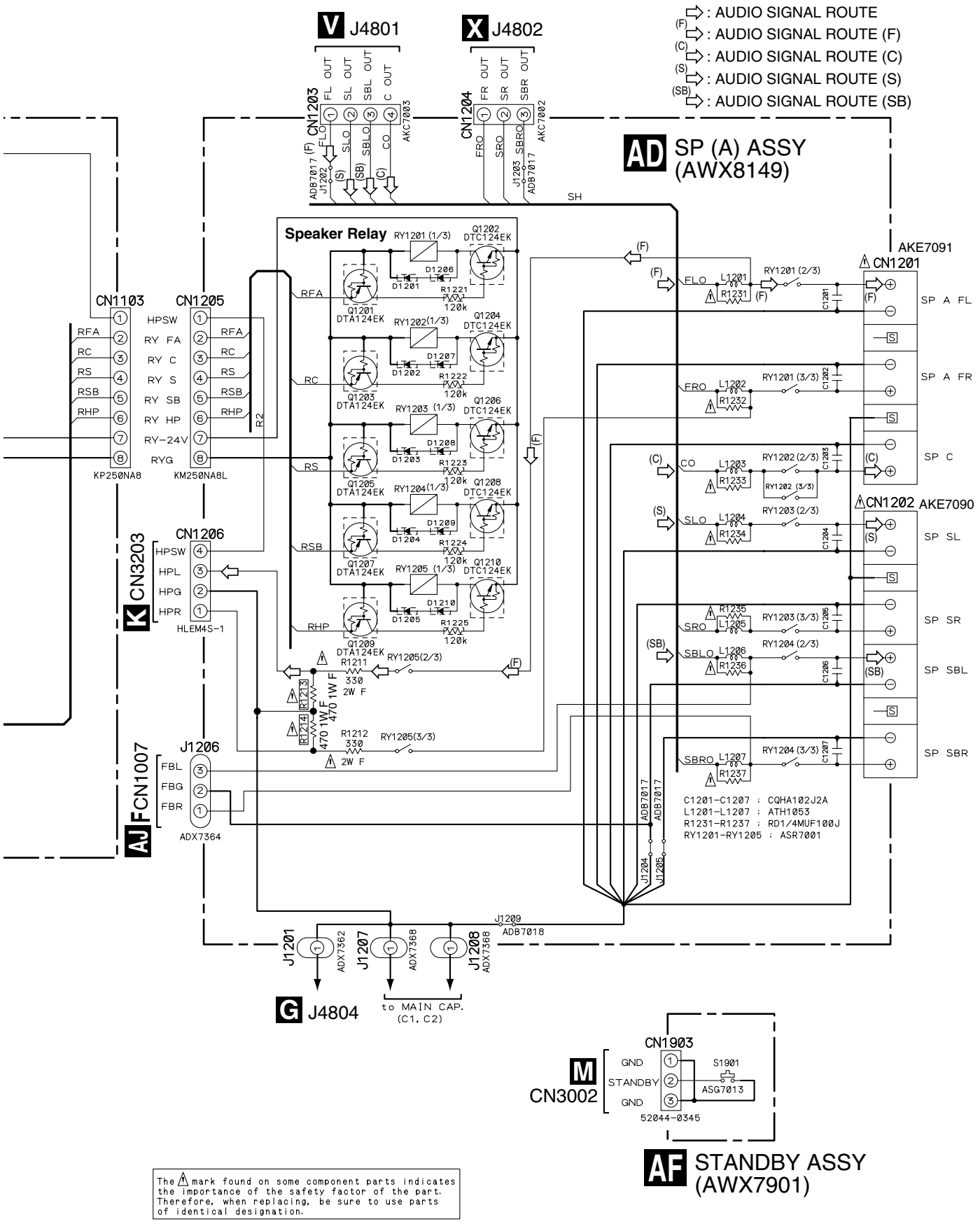

The ⚠ mark found on some component parts indicates the importance of the safety factor of the part. Therefore, when replacing, be sure to use parts of identical designation.

AB AD AF

3.8 POSISTER (L) (R), DSP DIODE, SP (B), DIODE, TRANS (A) (B), FUSE and POSISTER (MT) ASSYS

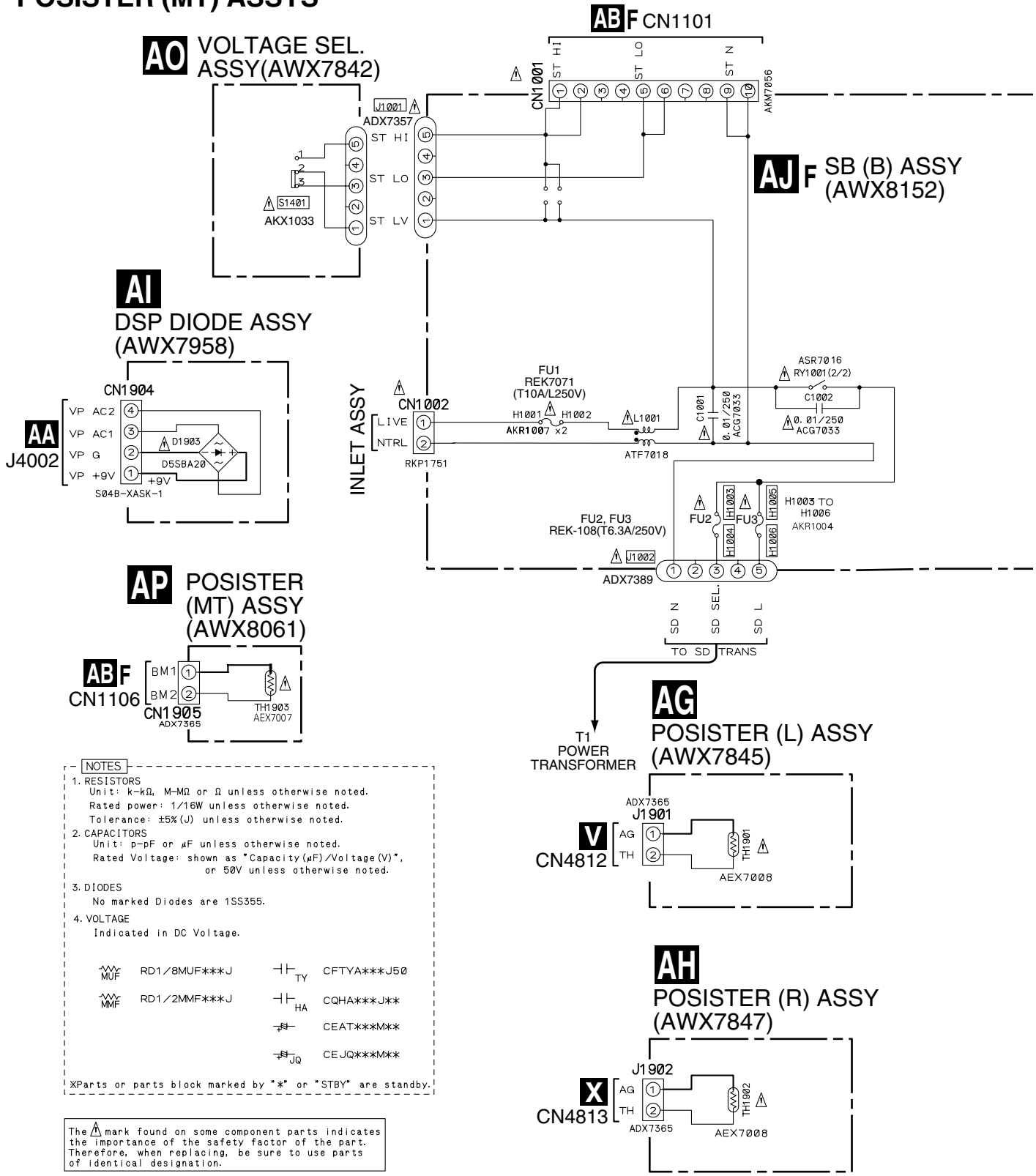

NOTES

1. RESISTORS
   Unit: k-kΩ, M-MΩ or Ω unless otherwise noted.
   Rated power: 1/16W unless otherwise noted.
   Tolerance: ±5%(J) unless otherwise noted.
2. CAPACITORS
   Unit: p-pF or μF unless otherwise noted.
   Rated Voltage: shown as "Capacity(μF)/Voltage(V)", or 50V unless otherwise noted.
3. DIODES
   No marked Diodes are 1SS355.
4. VOLTAGE
   Indicated in DC Voltage.

MUF	RD1/8MUF***J	TY	CFTYA***J50
MMF	RD1/2MMF***J	HA	CQHA***J**
			CEAT***M**
		JQ	CEJQ***M**

※Parts or parts block marked by "*" or "STBY" are standby.

The ⚠ mark found on some component parts indicates the importance of the safety factor of the part. Therefore, when replacing, be sure to use parts of identical designation.

• NOTE FOR FUSE REPLACEMENT

CAUTION - FOR CONTINUED PROTECTION AGAINST RISK OF FIRE. REPLACE WITH SAME TYPE AND RATINGS ONLY.

AG AH AI AJ F AP

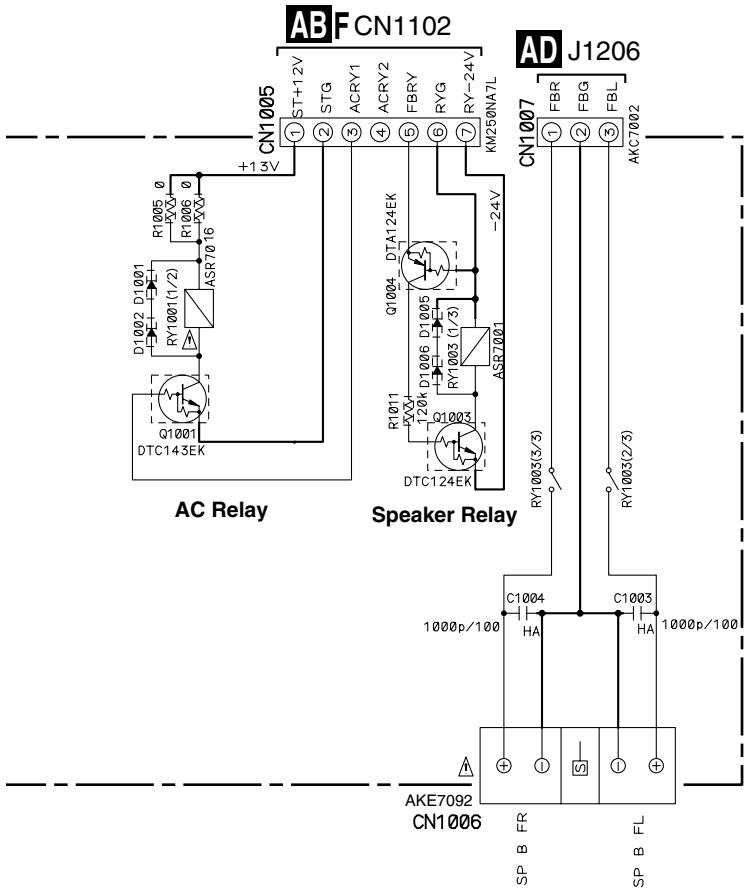

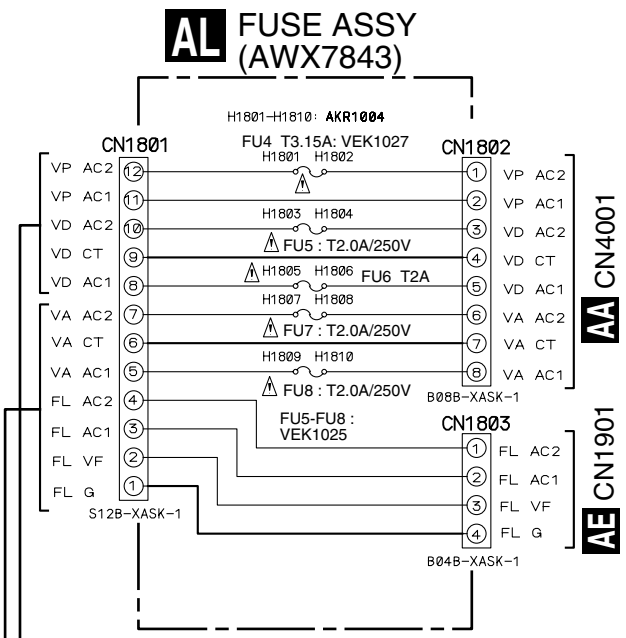

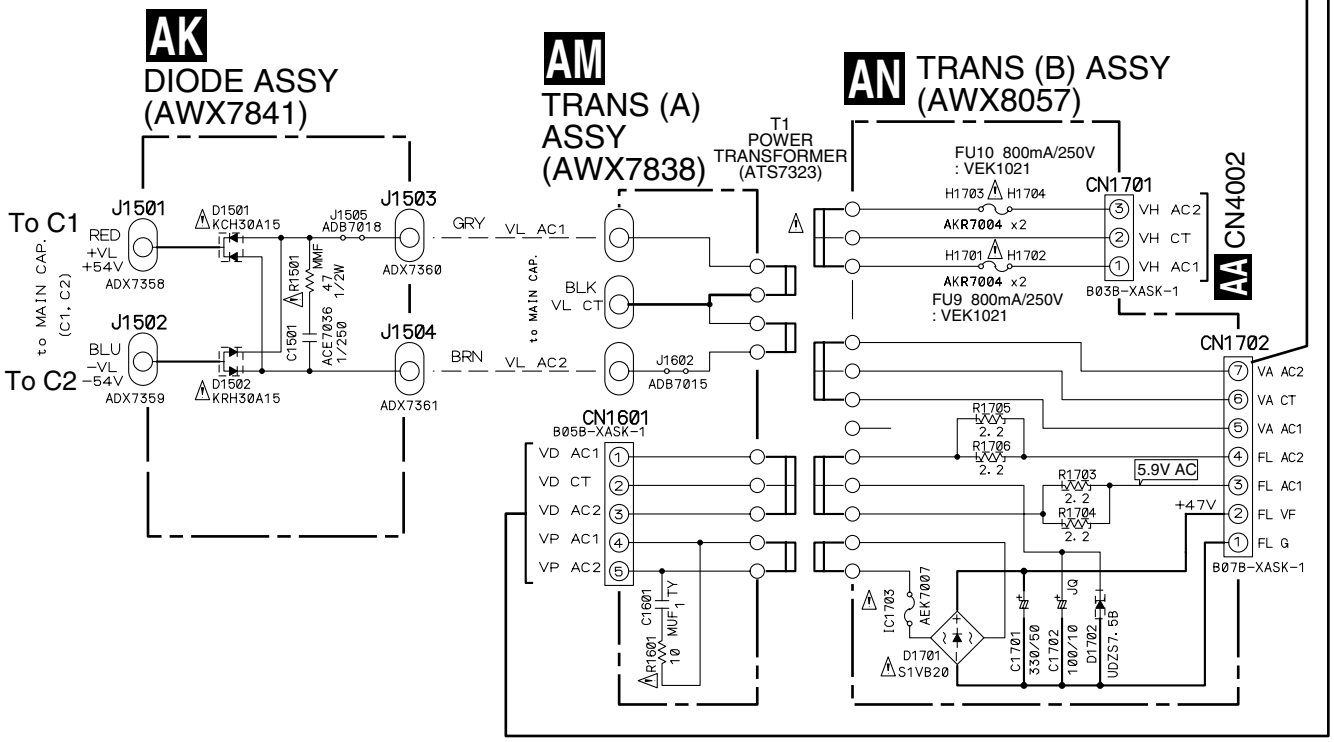

AJ F AK AL AM AN

4. REMOTE CONTROL UNIT [AXD7298]

4.1 CONTRAST OF MISCELLANEOUS PARTS

NOTES :
- *Parts marked by "NSP" are generally unavailable because they are not in our Master Spare Parts List.*
- *The ⚠ mark found on some component parts indicates the importance of the safety factor of the part. Therefore, when replacing, be sure to use parts of identical designation.*
- *Screw adjacent to ▼ mark on the product are used for disassembly.*
- *Reference Nos. indicate the pages and Nos. in the service manual for the base model.*

■ CONTRAST TABLE

AXD7298 and AXD7295 are constructed the same except for the following:

Ref. No.	Mark	Symbol and Description	Part No.		Remarks
			AXD7295	AXD7298	
P163- 2		PCB Assy	AZC7299	AZC7300	
P163-13		Seal A	AZA7415	AZA7421	
P163-14		Seal B	AZA7416	AZA7420	
P163-16		Case A	AZN7783	AZN7795	
P163-17		Name Plate	AZA7406	AZA7409	
P163-21		Case B	AZN7784	AZN7796	
P163-23		Pen Holder	AZN7786	AZN7798	
P163-26		Battery Cover	AZN7785	AZN7797	
P163-32		Slide Knob	AZA7347	AZA7365	
P163-36		Key Top A	AZA7345	AZA7363	
P163-37		Key Top B	AZA7346	AZA7364	
P163-39		Rubber Sheet B	AZA7349	AZA7371	

Pioneer sound.vision.soul

Service Manual

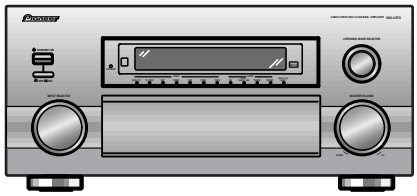

ORDER NO.
RRV2523

AUDIO/VIDEO MULTI-CHANNEL RECEIVER

VSX-49TX

VSX-47TX

THIS MANUAL IS APPLICABLE TO THE FOLLOWING MODEL(S) AND TYPE(S).

Type	Model		Power Requirement	Remarks
	VSX-49TX	VSX-47TX		
KU/CA	◯	◯	AC120V	

CONTENTS

1. SAFETY INFORMATION ····· 2
2. EXPLODED VIEWS AND PARTS LIST ····· 3
3. BLOCK DIAGRAM AND SCHEMATIC DIAGRAM ··· 14
4. PCB CONNECTION DIAGRAM ····· 82
5. PCB PARTS LIST ····· 122
6. ADJUSTMENT ····· 140
7. GENERAL INFORMATION ····· 141
7.1 DIAGNOSIS ····· 141
7.1.1 TEST MODE ····· 141
7.1.2 Protection Circuit Control ····· 142
7.1.3 DISASSEMBLY ····· 145
7.2 PARTS ····· 149
7.2.1 IC ····· 149
7.2.2 DISPLAY ····· 158
7.3 REMOTE CONTROL UNIT ····· 160
8. PANEL FACILITIES AND SPECIFICATIONS ····· 171

PIONEER ELECTRONIC CORPORATION 4-1, Meguro 1-chome, Meguro-ku, Tokyo 153-8654, Japan
PIONEER ELECTRONICS (USA) INC. P.O. Box 1760, Long Beach, CA 90801-1760, U.S.A.
PIONEER EUROPE NV Haven 1087, Keetberglaan 1, 9120 Melsele, Belgium
PIONEER ELECTRONICS ASIACENTRE PTE. LTD. 253 Alexandra Road, #04-01, Singapore 159936

©PIONEER ELECTRONIC CORPORATION 2001

T – ZZR OCT. 2001 Printed in Japan

1. SAFETY INFORMATION

This service manual is intended for qualified service technicians ; it is not meant for the casual do-it-yourselfer. Qualified technicians have the necessary test equipment and tools, and have been trained to properly and safely repair complex products such as those covered by this manual.
Improperly performed repairs can adversely affect the safety and reliability of the product and may void the warranty. If you are not qualified to perform the repair of this product properly and safely, you should not risk trying to do so and refer the repair to a qualified service technician.

WARNING
This product contains lead in solder and certain electrical parts contain chemicals which are known to the state of California to cause cancer, birth defects or other reproductive harm.

Health & Safety Code Section 25249.6 – Proposition 65

NOTICE
(FOR CANADIAN MODEL ONLY)
Fuse symbols (fast operating fuse) and/or (slow operating fuse) on PCB indicate that replacement parts must be of identical designation.

REMARQUE
(POUR MODÈLE CANADIEN SEULEMENT)
Les symboles de fusible (fusible de type rapide) et/ou (fusible de type lent) sur CCI indiquent que les pièces de remplacement doivent avoir la même désignation.

(FOR USA MODEL ONLY)

1. SAFETY PRECAUTIONS

The following check should be performed for the continued protection of the customer and service technician.

LEAKAGE CURRENT CHECK

Measure leakage current to a known earth ground (water pipe, conduit, etc.) by connecting a leakage current tester such as Simpson Model 229-2 or equivalent between the earth ground and all exposed metal parts of the appliance (input/output terminals, screwheads, metal overlays, control shaft, etc.). Plug the AC line cord of the appliance directly into a 120V AC 60Hz outlet and turn the AC power switch on. Any current measured must not exceed 0.5mA.

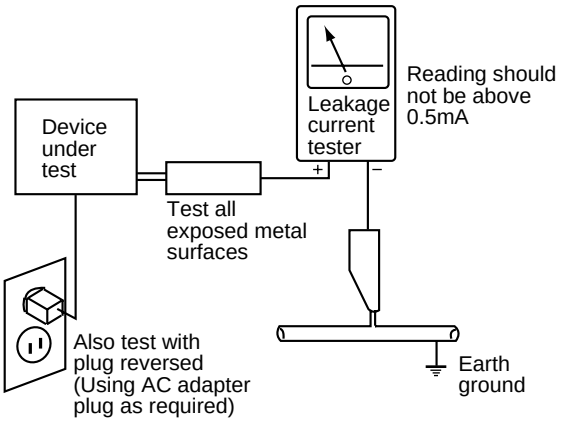

AC Leakage Test

ANY MEASUREMENTS NOT WITHIN THE LIMITS OUTLINED ABOVE ARE INDICATIVE OF A POTENTIAL SHOCK HAZARD AND MUST BE CORRECTED BEFORE RETURNING THE APPLIANCE TO THE CUSTOMER.

2. PRODUCT SAFETY NOTICE

Many electrical and mechanical parts in the appliance have special safety related characteristics. These are often not evident from visual inspection nor the protection afforded by them necessarily can be obtained by using replacement components rated for voltage, wattage, etc. Replacement parts which have these special safety characteristics are identified in this Service Manual.

Electrical components having such features are identified by marking with a ⚠ on the schematics and on the parts list in this Service Manual.
The use of a substitute replacement component which does not have the same safety characteristics as the PIONEER recommended replacement one, shown in the parts list in this Service Manual, may create shock, fire, or other hazards.

Product Safety is continuously under review and new instructions are issued from time to time. For the latest information, always consult the current PIONEER Service Manual. A subscription to, or additional copies of, PIONEER Service Manual may be obtained at a nominal charge from PIONEER.

2. EXPLODED VIEWS AND PARTS LIST

NOTES: ● *Parts marked by "NSP" are generally unavailable because they are not in our Master Spare Parts List.*
● *The ⚠ mark found on some component parts indicates the importance of the safety factor of the part. Therefore, when replacing, be sure to use parts of identical designation.*
● *Screws adjacent to ▼ mark on the product are used for disassembly.*

2.1 PACKING

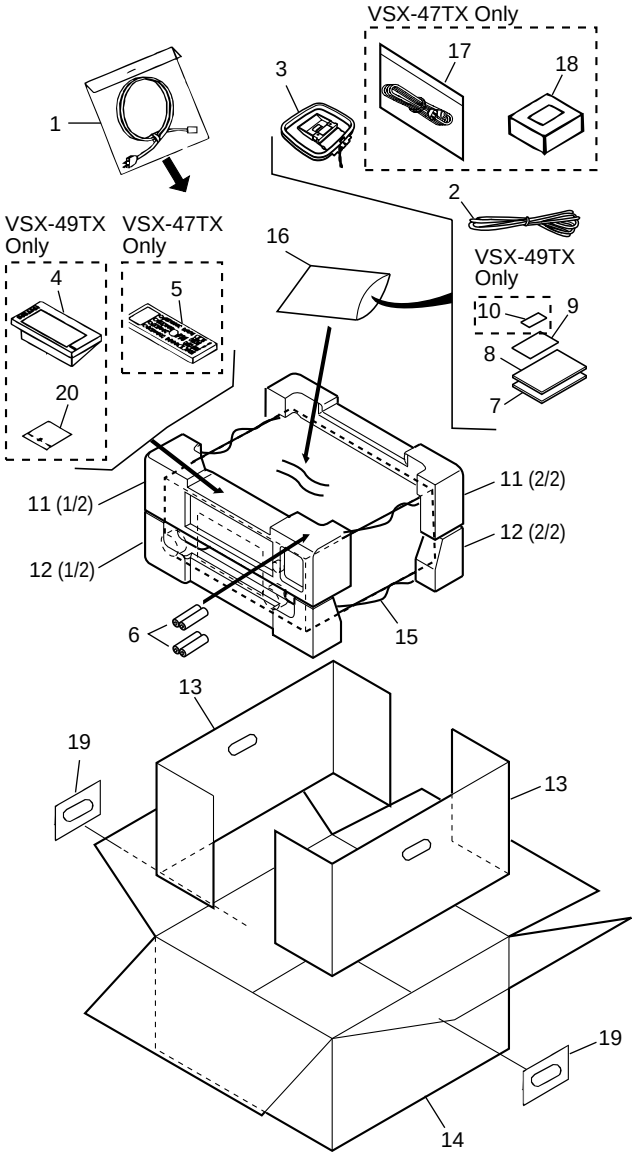

(1) PACKING PARTS LIST

Mark	No.	Description	Part No.
⚠	1	Power Cord	ADG7052
	2	FM Wire Antenna	ADH7010
	3	AM Loop Antenna	ATB7009
	4	Remote Control Unit AX10KU	See Contrast table (2)
	5	Remote Control Unit 47TXKU	See Contrast table (2)
	6	Alkaline Dry Cell Battery (LR6, AA)	VEM1021(2pcs.)
	7	Operating Instructions (English)	See Contrast table (2)
	8	Caution Sheet SP, E	ARM7056
NSP	9	Warranty Card EL	ARY1026
	10	Cushion for Remote	See Contrast table (2)
	11	Top Pad	AHA7362
	12	Bottom Pad	AHA7363
	13	Spacer	AHB7057
	14	Packing Case	See Contrast table (2)
	15	Packing Sheet	DHL1022
NSP	16	Polyethylene Bag (0.03 × 230 × 340)	Z21-038
	17	Remote Control Cable	See Contrast table (2)
	18	Remote Control Stand	See Contrast table (2)
	19	Handle Cover	AHX7034
	20	Microphone	See Contrast table (2)

(2) CONTRAST TABLE

VSX-49TX/KU/CA and VSX-47TX/KU/CA constructed the same except for the following :

Mark	No.	Symbol and Description	Part No.		Remarks
			VSX-49TX/KU/CA	VSX-47TX/KU/CA	
	4	Remote Control Unit AX10KU	AXD7295	Not used	
	5	Remote Control Unit 47TX/KU	Not used	AXD7299	
	7	Operating Instruction (English)	ARB7249	ARB7250	
	10	Cushion for Remote	AXG7080	Not used	
	14	Packing Case	AHD8029	AHD8028	
	17	Remote Control Cable	Not used	ADE7083	
	18	Remote Control Stand	Not used	AEB7243	
	20	Microphone	APM7001	Not used	

2.2 EXTERIOR SECTION

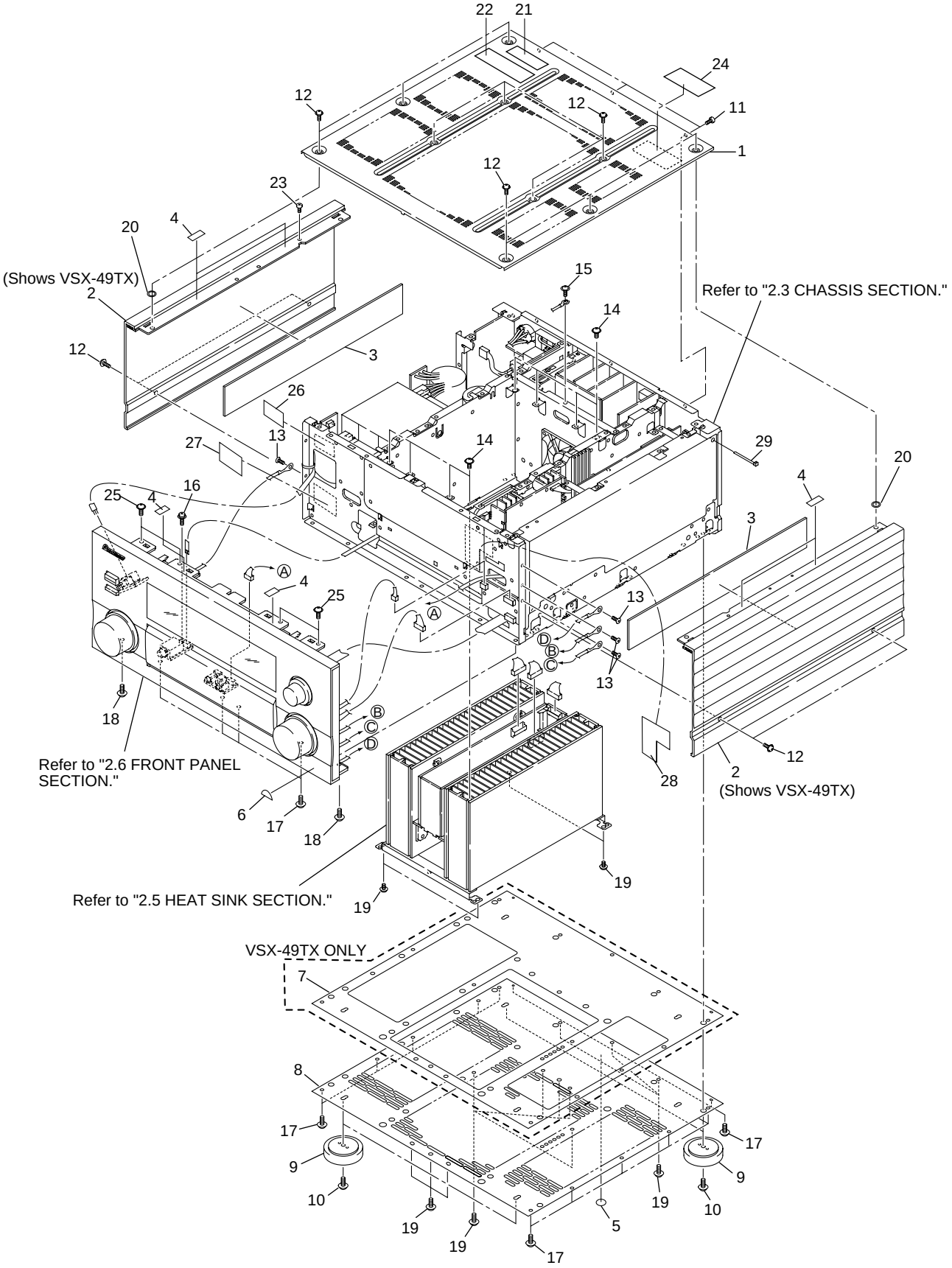

(1) EXTERIOR SECTION PARTS LIST

Mark	No.	Description	Part No.
NSP	1	Top Plate BK	ANE7282
	2	Side Alum BK	See Contrast table (2)
	2	Side Plate BK	See Contrast table (2)
NSP	3	Side Panel Sheet	See Contrast table (2)
NSP	3	Side Panel Sheet S	See Contrast table (2)
NSP	4	Tape	See Contrast table (2)
	5	UL Caution Card	AAX-313
NSP	6	Energy Star Label	AAX7876
NSP	7	Bottom Plate B	See Contrast table (2)
NSP	8	Bottom Plate A	ANF7029
	9	Insulator Assy	See Contrast table (2)
	9	Insulator	See Contrast table (2)
	10	Screw	ABA1054
	11	Screw	BBT30P060FCC
	12	Screw	FBT40P080FZK
	13	Screw	ABA7079
	14	Screw	RBA1099
	15	Screw	VBA1056
	16	Screw	ABA1011
	17	Screw	ABA1050
	18	Screw	ABA1193
	19	Screw	IBZ30P090FCC
	20	Washer	See Contrast table (2)
	21	Coution Label	See Contrast table (2)
	22	DTS License Label	See Contrast table (2)
	23	Screw	BBZ30P080FCC
	24	65 Label	ARW7050
	25	Screw	BBT30P100FCC
	26	ICP Coution Label	ARW7151
	27	FUSE Coution Label	VRW-548
	28	ICP Coution Label	ARW7150
	29	Binder	ZCA-BK1

(2) CONTRAST TABLE

VSX-49TX/KU/CA and VSX-47TX/KU/CA are constructed the same except for the following :

Mark	No.	Symbol and Description	Part No.		Remarks
			VSX-49TX/KU/CA	VSX-47TX/KU/CA	
	2	Side Alum BK	AAH7081	Not used	
	2	Side Plate BK	Not used	ANE7279	
NSP	3	Side Panel Sheet	AMR7284	Not used	
NSP	3	Side panel Sheet S	Not used	AMR7384	
NSP	4	Tape	PNM1249	Not used	
NSP	7	Bottom Plate B	ANF7030	Not used	
	9	Insulator Assy	VXA2368	Not used	
	9	Insulator	Not used	PNW2766	
	20	Washer	Not used	ABE7008	
	21	Caution Label	ARW7036	Not used	
	22	DTS License Label	ARW7148	Not used	

2.3 CHASSIS SECTION

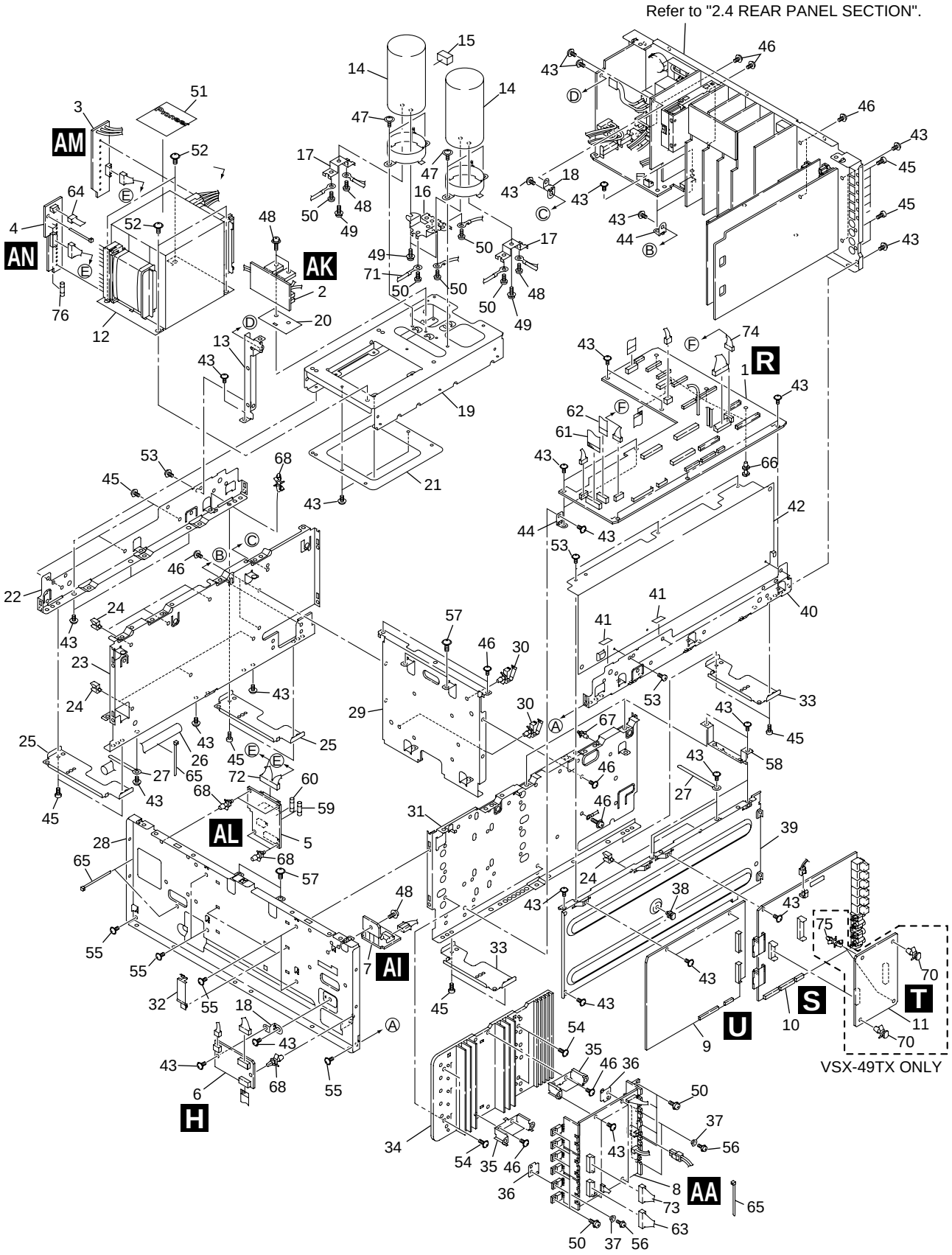

(1) CHASSIS SECTION PARTS LIST

Mark	No.	Description	Part No.
	1	MOTHER Assy	See Contrast tabel (2)
	2	DIODE Assy	AWX7841
	3	TRANS (A) Assy	AWX7838
	4	TRANS (B) Assy	AWX8057
	5	FUSE Assy	AWX7843
	6	MIC AMP Assy	AWX7872
	7	DSP DIODE Assy	AWX7958
	8	LOCAL SUPPLY Assy	AWX7887
	9	DAC10 Assy	See Contrast table (2)
	9	DAC8 Assy	See Contrast table (2)
	10	DSP Assy	See Contrast table (2)
	11	DSP3 Assy	See Contrast table (2)
⚠	12	Power Transformer (T1)	ATS7320
NSP	13	PCB Holder B	ANG7388
	14	Capacitor (C1, C2)	ACH7164
	15	Rubber Spacer	AEB7244
NSP	16	Earth Plate	ANG7381
NSP	17	Joint Plate	ANG7382
NSP	18	PCB Base	RNE1849
	19	Trans Frame	ANA7137
	20	Sheet	AEE7043
NSP	21	Trans Stabilizer	ANG7378
NSP	22	Side Frame L	See Contrast table (2)
NSP	23	Side Wall L	See Contrast table (2)
NSP	24	Wire Clip (A)	VEC1355
NSP	25	Insulator Frame B	ANG7377
	26	Glass Tube	ADN7006
	27	Cord Holder	RNH1005
	28	Panel Stay	See Contrast table (2)
NSP	29	Fan Holder B	See Contrast table (2)
NSP	30	Wire Saddle	DEC1450
NSP	31	Side Wall R	See Contrast table (2)
NSP	32	Flat Cable Clamp	AEC7376
NSP	33	Insulator Frame A	ANG7376
	34	Sub Heat Sink	ANH7154
NSP	35	PCB Holder D	ANG7392
	36	Mica Sheet S	AEE7042
	37	Bushing 26	AEC7128
NSP	38	PCB Spacer	AEC7156
NSP	39	Shield Case A	See Contrast table (2)
NSP	40	Side Frame R	See Contrast table (2)
NSP	41	Tape	PNM1249
NSP	42	Shield Case B	See Contrast table (2)
	43	Screw	ABA1011
NSP	44	PCB Holder C	ANG7389
	45	Screw	BBZ30P080FCC
	46	Screw	IBP30P090FCC
	47	Screw	VBA1056
	48	Screw	ABA1082
	49	Screw	BMH40P080FMC
	50	Screw	ABA7076
	51	Trans Label	AAX7897
	52	Screw	ABA1014
	53	Screw	BBT30P060FCC
	54	Screw	ABA1050
	55	Screw	ABA1192
	56	Screw	ABA7084
	57	Screw	RBA1099
NSP	58	PCB Frame B	ANG7386
⚠	59	Fuse (FU4, 4A)	VEK1023
⚠	60	Fuse (FU5-FU8, 2A)	VEK1019
	61	J29 FFC (17P) (MOTHER CN5807 – DISPLAY CN3001)	ADD7329
	62	J30 FFC (11P) (MOTHER CN5806 – MIC AMP CN3207)	ADD7337
	63	J16 8P Connector Assy (LOCAL SUPPLY CN4001 – FUSE CN1802)	ADX7379
	64	J17 3P Connector Assy (LOCAL SUPPLY CN4002 – TRANS(B) CN1701)	ADX7380
	65	Binder	ZCA-BK1
	66	Card Spacer	REC1156
	67	PCB Holder	PNW2100
	68	Locking Card Spacer	VEC2234
	69	Screw	ABA7017
	70	PC Support	DEC1772
	71	Oval head Terminal wire	ADX7366
	72	J1601 5P,7P Parallel wire	ADX7385
	73	J5805 9P Connector Assy (Local Supply CN4004–Mother CN5805)	ADX7378
	74	5802 Crimp Connector Assy (Mother CN5827–Mother CN5828)	PF06PP-R27
	75	PCB Spacer	VEC1508
⚠	76	Fuse (FU9-FU10, 1A)	VEK1014

(2) CONTRAST TABLE

VSX-49TX/KU/CA and VSX-47TX/KU/CA are constructed the same except for the following :

Mark	No.	Symbol and Description	Part No.		Remarks
			VSX-49TX/KU/CA	VSX-47TX/KU/CA	
	1	MOTHER Assy	AWX7890	AWX7891	
	9	DAC10 Assy	AWK7725	Not used	
	9	DAC8 Assy	Not used	AWK7726	
	10	DSP Assy	AWK7719	AWK7720	
	11	DSP3 Assy	AWK7727	Not used	
NSP	22	Side Frame L	ANA7133	ANA7134	
NSP	23	Side Wall L	AND7041	AND7042	
	28	Panel Stay	AND7045	AND7046	
NSP	29	Fan Holder	ANG7373	ANG7374	
NSP	31	Side Wall R	AND7043	AND7044	
NSP	39	Shield Case A	ANK7093	ANK7094	
NSP	40	Side Frame R	ANA7135	ANA7136	
NSP	42	Shield Case B	ANK7095	ANK7096	

2.4 REAR PANEL SECTION

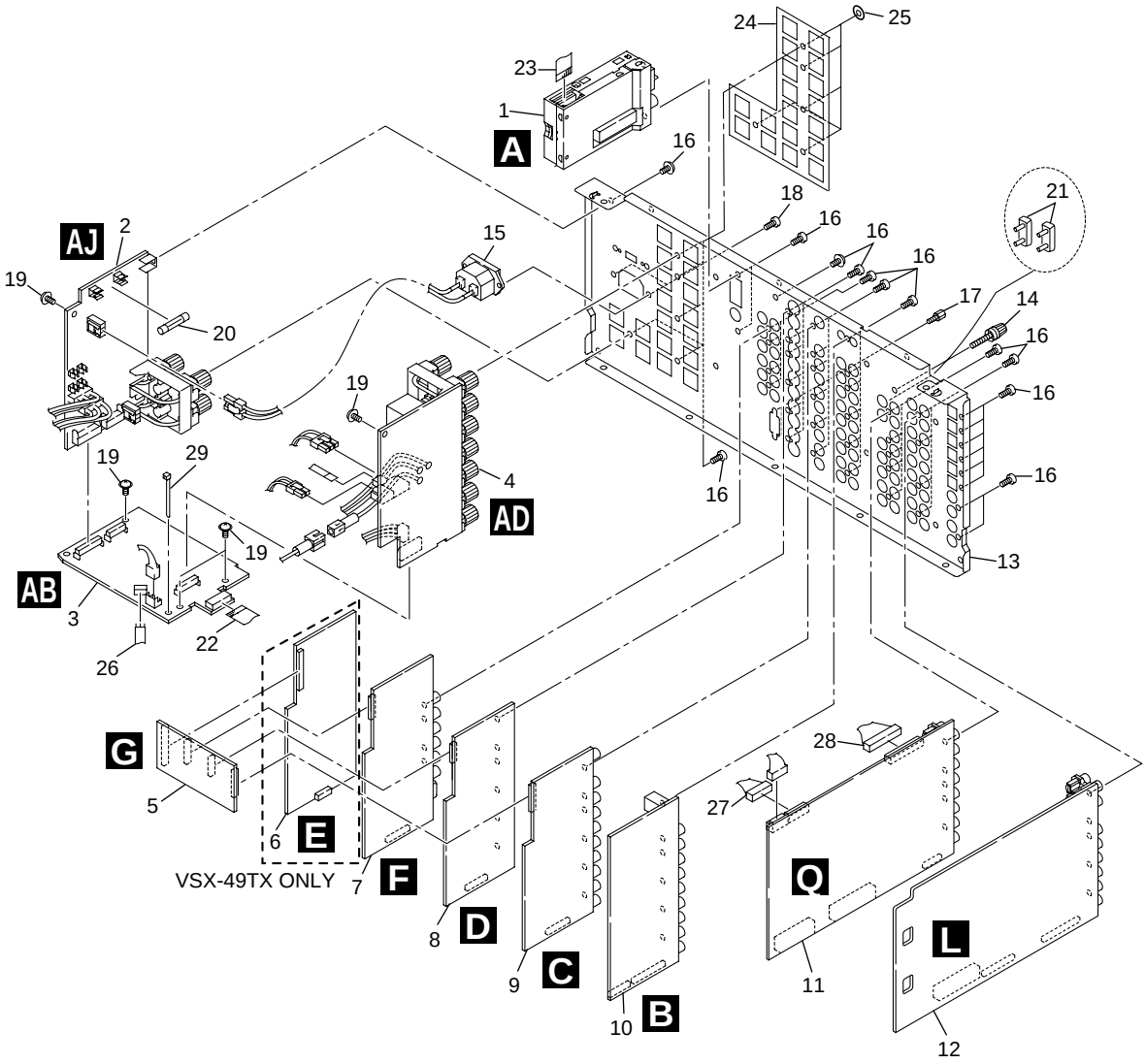

(1) REAR PANEL SECTION PARTS LIST

Mark	No.	Description	Part No.
	1	FM/AM TUNER Module	AXQ7237
	2	SP (B) Assy	AWX7852
	3	AC PRIMARY Assy	AWX7834
	4	SP (A) Assy	AWX7848
	5	VIDEO CONNECT Assy	See Contrast table (2)
	6	V-CONVERT Assy	See Contrast table (2)
	7	COMPONENT Assy	See Contrast table (2)
	8	S-VIDEO Assy	See Contrast table (2)
	9	COMPOSITE Assy	See Contrast table (2)
	10	AV I/O Assy	See Contrast table (2)
	11	VR & PRE OUT Assy	See Contrast table (2)
	12	ANALOG IN & A/D Assy	See Contrast table (2)
	13	Rear Panel	See Contrast table (2)
	14	Screw with Terminal	AKE-031
	15	AC Inlet Assy	VKP2251
	16	Screw	BBZ30P080FCC
	17	Hexagonal Screw	ABA7078
	18	Screw	ABA1193
	19	Screw	ABA1011
⚠	20	Fuse (FU1, 12A/125V)	AEK-306
	21	Short Pin Plug	AKM7005
	22	J23 FFC (14P) (SP(A) CN1104 – MOTHER CN5801)	ADD7334
	23	J22 FFC (13P) (TUNER CN2705 – MOTHER CN5802)	ADD7333
	24	Speaker Sheet 49	AAK7959
	25	Cushion Circle	AED7052
	26	Jamper Wire 3P (AC Primary CN1105 – Power SW CN1301)	D20PYY0365E
	27	J5001 8P Connector Assy (VR&PRE OUT CN5005 – Power AMP(BR) CN4811)	ADX7382
	28	J5002 14P Connector Assy (VR&PRE OUT CN5006 – Power AMP(L) CN4801 and Power AMP(R) CN4802)	ADX7381
	29	Binder	ZCA-BK1

(2) CONTRAST TABLE

VSX-49TX/KU/CA and VSX-47TX/KU/CA are constructed the same except for the following :

Mark	No.	Symbol and Description	Part No.		Remarks
			VSX-49TX/KU/CA	VSX-47TX/KU/CA	
	5	VIDEO CONNECT Assy	AWX7876	AWX7877	
	6	V-CONVERT Assy	AWX7952	Not used	
	7	COMPONENT Assy	AWX7953	AWX7954	
	8	S-VIDEO Assy	AWX7948	AWX7949	
	9	COMPOSITE Assy	AWX7942	AWX7943	
	10	AV I/O Assy	AWX7938	AWX7939	
	11	VR & PRE OUT Assy	AWX7888	AWX7917	
	12	ANALOG IN & A/D Assy	AWX7878	AWX7879	
	13	Rear Panel	ANC8036	ANC8035	

2.5 HEAT SINK SECTION

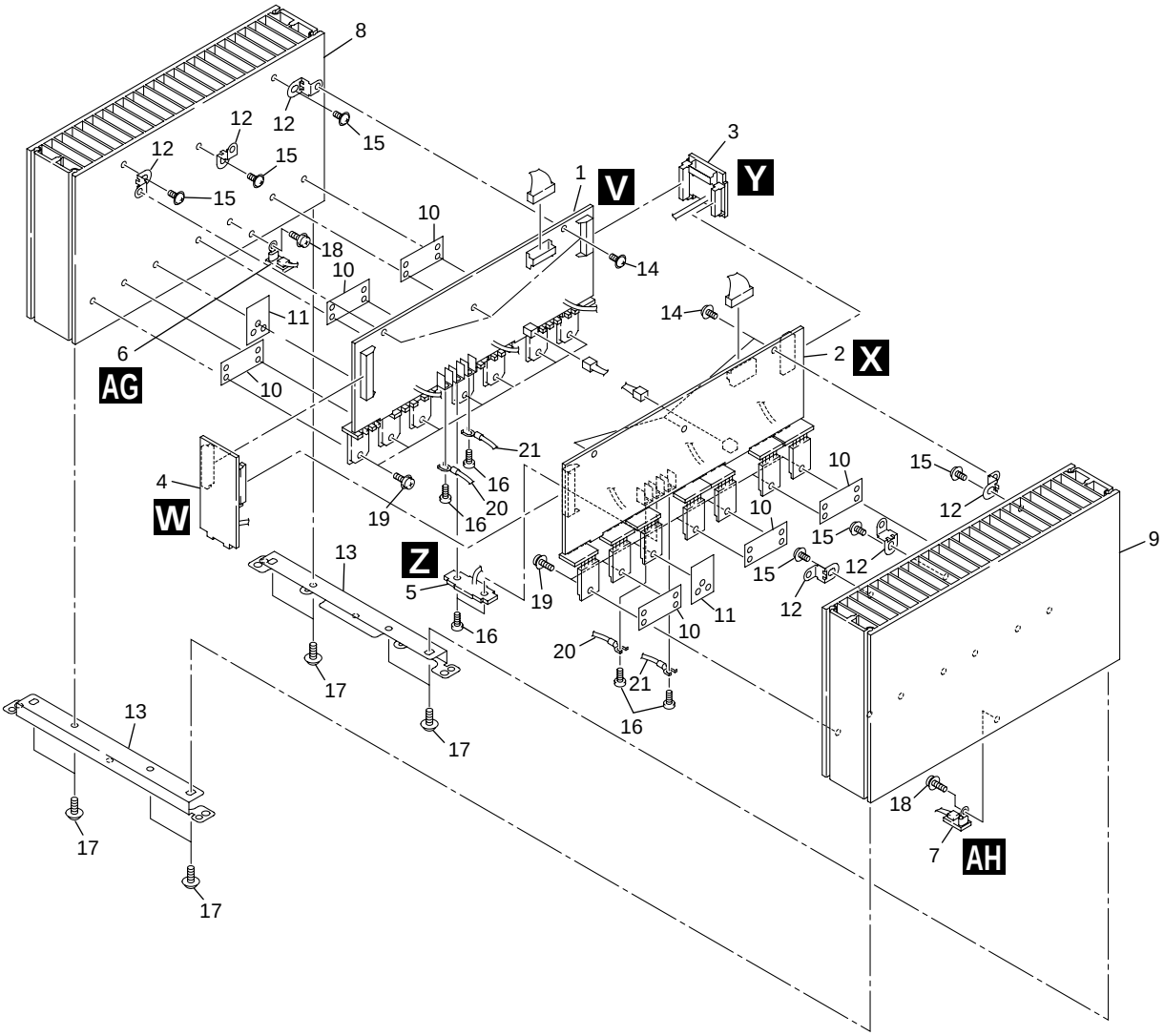

● HEAT SINK SECTION PARTS LIST

Mark	No.	Description	Part No.
	1	POWER AMP (L) Assy	AWX7882
	2	POWER AMP (R) Assy	AWX7883
	3	POWER AMP (BR) Assy	AWX7885
	4	POWER AMP (C) Assy	AWX7884
	5	POWER AMP (G) Assy	AWX7886
	6	POSISTER (L) Assy	AWX7844
	7	POSISTER (R) Assy	AWX7846
	8	Heat Sink L	See Contrast table (2)
	9	Heat Sink R	See Contrast table (2)
	10	Mica Sheet L	AEE7045
	11	Mica Sheet M	AEE7046
NSP	12	PCB Holder A	ANG7387
NSP	13	Heat Sink Holder	ANG7375
	14	Screw	ABA1011
	15	Screw	IBP30P090FCC
	16	Screw	BMZ30P060FCU
	17	Screw	RBA1099
	18	Screw	ABA7076
	19	Screw	ABA7083
	20	Over head Terminal wire(RED)	ADX7383
	21	Over head Terminal wire(BLUE)	ADX7384

(2) CONTRAST TABLE

VSX-49TX/KU/CA and VSX-47TX/KU/CA are constructed the same except for the following :

Mark	No.	Symbol and Description	Part No.		Remarks
			VSX-49TX/KU/CA	VSX-47TX/KU/CA	
	8	Heat Sink L	ANH7155	ANH7148	
	9	Heat Sink R	ANH7156	ANB7149	

2.6 FRONT PANEL SECTION

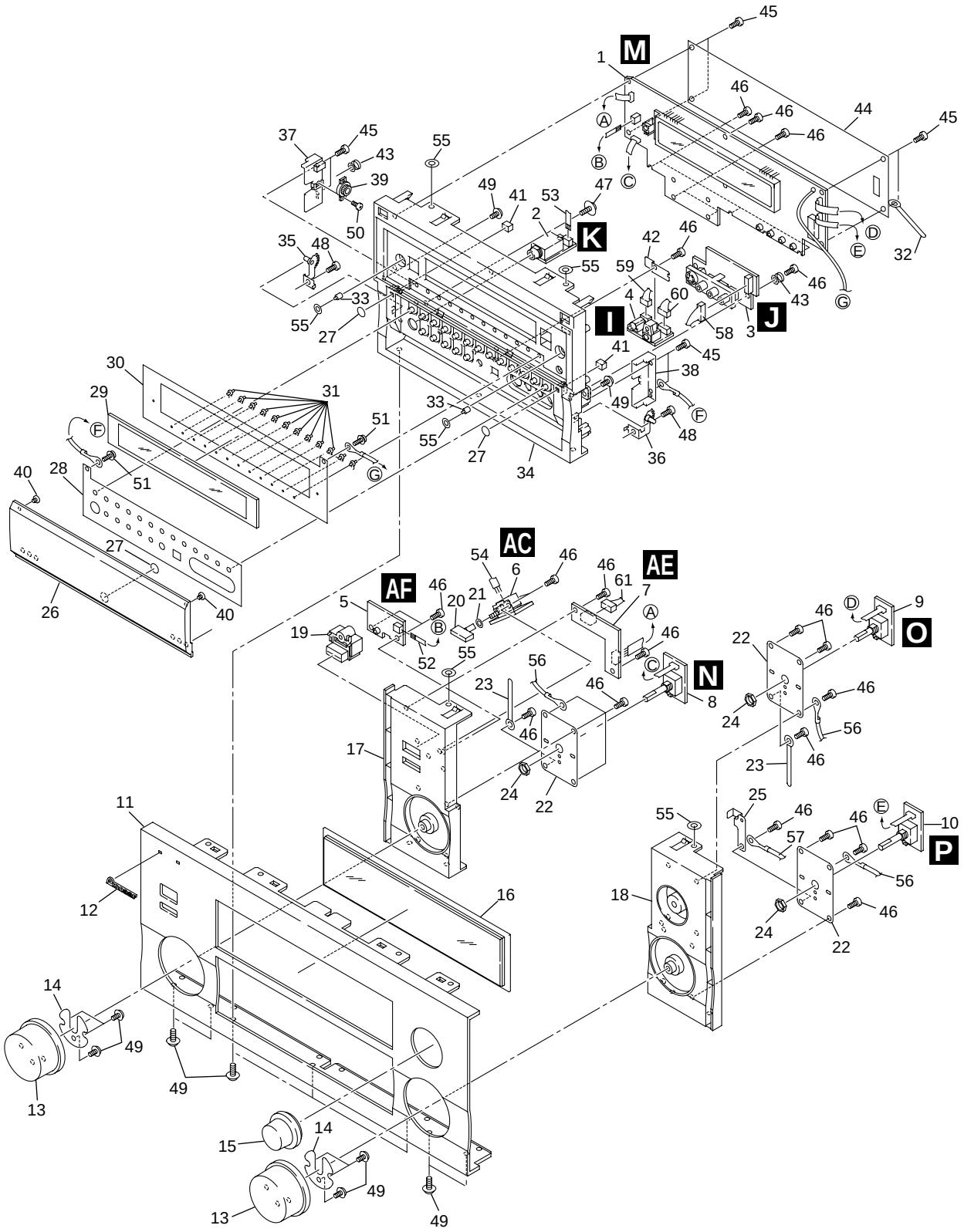

(1) FRONT PANEL SECTION PARTS LIST

Mark	No.	Description	Part No.
	1	DISPLAY Assy	See Contrast table (2)
	2	HEADPHONE Assy	AWX7874
	3	FRONT A/V Assy	AWX7902
	4	MIC & OPT Assy	AWX7875
	5	STANDBY Assy	AWX7901
	6	POWER SW Assy	AWX7840
	7	FL SUPPLY Assy	AWX7871
	8	INPUT SEL Assy	AWX7868
	9	MULTI JOG Assy	AWX7869
	10	VOL Assy	AWX7870
	11	Front Panel	See Contrast table (2)
	12	Pioneer Badge	PAN1376
	13	Rotary Knob L BK	AAA7018
	14	Plate	ANG7198
	15	Rotary Knob S BK	AAA7015
	16	Display Panel	AAK7932
	17	Panel Base L BK	AMB7788
	18	Panel Base R BK	AMB7791
	19	Power Button	AAD7440
	20	Power Button M	AAD7442
	21	Washer	ABF7008
NSP	22	VR Stabilizer	ANG7383
	23	Cord Holder	RNH1005
	24	Nut	NK90FCU
NSP	25	Earth Spring	ABK7031
	26	Door Panel BK	ANB7273
NSP	27	Door Cushion BK	AED7051
	28	Door Plate	AAH7077
	29	FL Lens	AAK7934
	30	Inner Panel	See Contrast table (2)
	31	LED Lens	AAK7931
	32	Cord Clamper	RNH-184
	33	LED Lens	PNW2019
	34	Panel Base C BK	AMB7785
NSP	35	Door Hinge L	ANG7379
NSP	36	Door Hinge R	ANG7380
	37	Door Holder L	AMR7373
	38	Door Holder R	AMR7374
	39	Damper Assy	AXA7108
	40	Screw	ABA7074
	41	Magnet	AMF7004
NSP	42	Input Holder	ANG7384
NSP	43	Earth Spring	ABH7208
	44	Shield Plate D	AMR7390
	45	Screw	BBZ30P100FZK
	46	Screw	BBZ30P080FCC
	47	Screw	ABA7053
	48	Screw	BBT30P060FCC
	49	Screw	ABA1050
	50	Screw	BBZ20P060FMC
	51	Screw	ABA7076
	52	J33 FFC (3P) (DISPLAY CN3002 – STANDBY CN1903)	ADD7331
	53	J35 FFC (4P) (SP(A) CN1206 – HEADPHONE CN3203)	ADD7332
	54	J1101 Parallel Wire 3P (POWER SW CN1301 – AC PRIMARY CN1105)	D20PYY0365E
	55	Fiber Washer	VEC1254
NSP	56	Earth Metal Fitting	DE007VC0
NSP	57	Earth Metal Fitting	DE012VF0
	58	J32 8P Connector Assy (Front A/V CN3204 – MIC AMP CN3206)	ADX7390
	59	J99 4P Connector Assy (MIC & OPT CN3202 – MIC AMP CN3205)	ADX7387
	60	J31 5P Connector Assy (MIC & OPT CN3201 – Mother CN5804)	ADX7386
	61	J1801 4P Connector Assy (FL Supply CN1901 – FUSE CN1803)	ADX7377

(2) CONTRAST TABLE

VSX-49TX/KU/CA and VSX-47TX/KU/CA are constructed the same except for the following :

Mark	No.	Symbol and Description	Part No.		Remarks
			VSX-49TX/KU/CA	VSX-47TX/KU/CA	
	1	DISPLAY Assy	AWX7864	AWX7865	
	11	Front Panel	ANB7269	ANB7268	
	30	Inner Panel	AAH7087	AAH7086	

3. BLOCK DIAGRAM AND SCHEMATIC DIAGRAM

3.1 BLOCK DIAGRAM

3.1.1 Audio Block

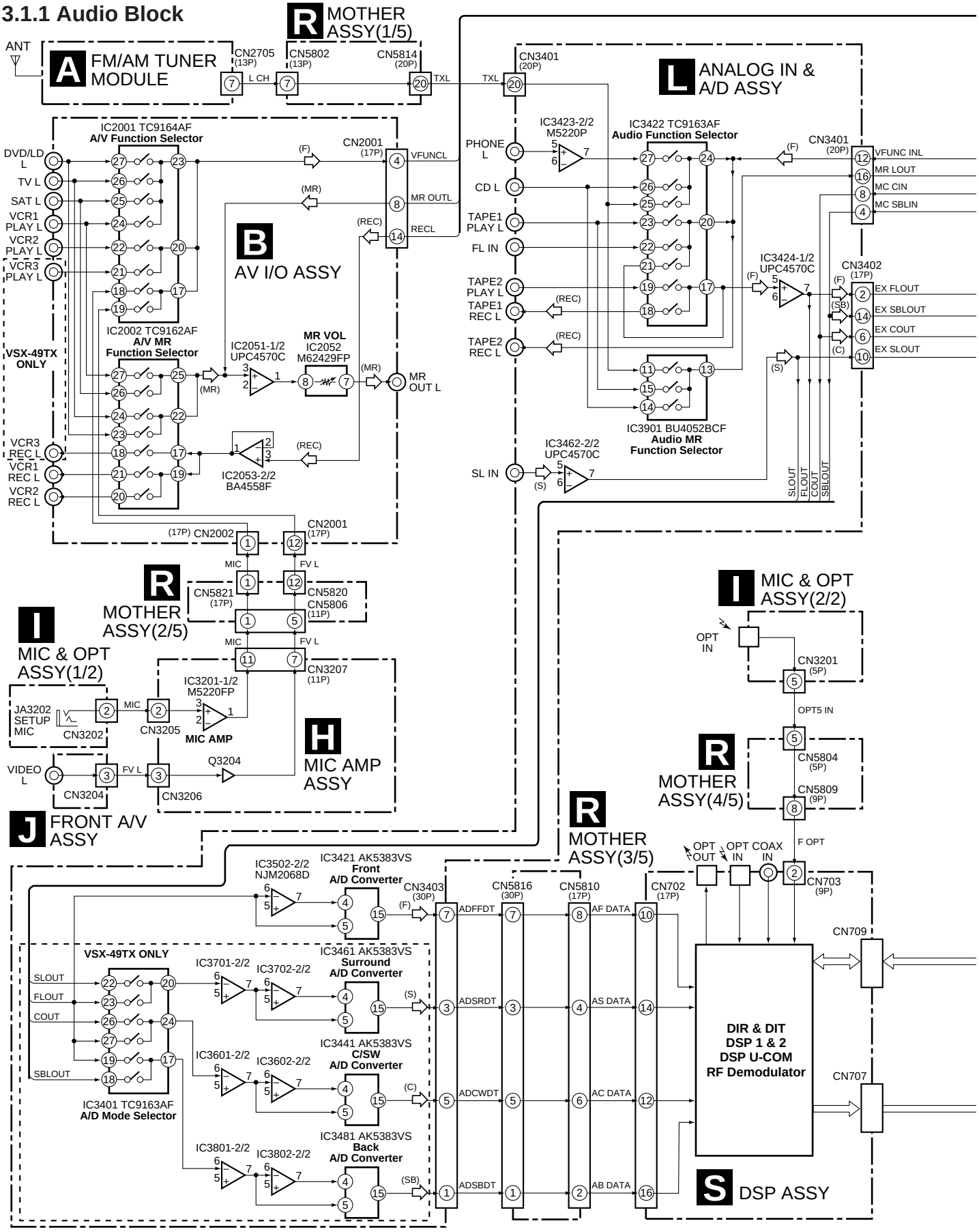

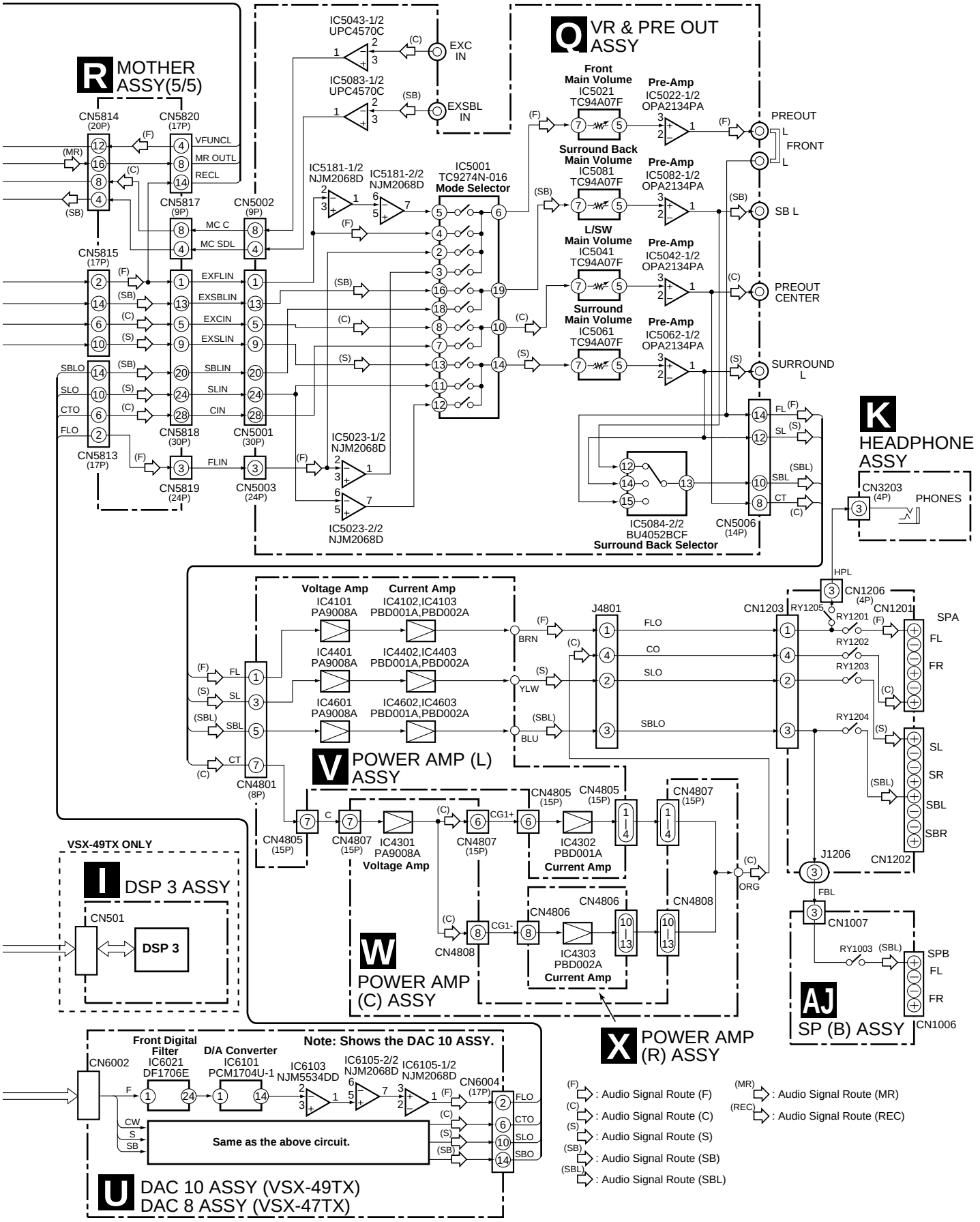
R MOTHER ASSY(5/5)
Q VR & PRE OUT ASSY
IC5043-1/2 UPC4570C
IC5083-1/2 UPC4570C
EXC IN
EXSBL IN
Front Main Volume IC5021 TC94A07F
Pre-Amp IC5022-1/2 OPA2134PA
Surround Back Main Volume IC5081 TC94A07F
Pre-Amp IC5082-1/2 OPA2134PA
L/SW Main Volume IC5041 TC94A07F
Pre-Amp IC5042-1/2 OPA2134PA
Surround Main Volume IC5061 TC94A07F
Pre-Amp IC5062-1/2 OPA2134PA
PREOUT FRONT L
SB L
PREOUT CENTER
SURROUND L
IC5181-1/2 NJM2068D
IC5181-2/2 NJM2068D
IC5001 TC9274N-016 Mode Selector
IC5023-1/2 NJM2068D
IC5023-2/2 NJM2068D
IC5084-2/2 BU4052BCF Surround Back Selector
CN5006 (14P)
CN5814 (20P)
CN5820 (17P)
CN5817 (9P)
CN5002 (9P)
CN5815 (17P)
CN5818 (30P)
CN5001 (30P)
CN5813 (17P)
CN5819 (24P)
CN5003 (24P)
VFUNCL
MR OUTL
RECL
MC C
MC SDL
EXFLIN
EXSBLIN
EXCIN
EXSLIN
SBLIN
SLIN
CIN
FLIN
SBLO
SLO
CTO
FLO
K HEADPHONE ASSY
CN3203 (4P)
PHONES
V POWER AMP (L) ASSY
Voltage Amp IC4101 PA9008A
Current Amp IC4102,IC4103 PBD001A,PBD002A
IC4401 PA9008A
IC4402,IC4403 PBD001A,PBD002A
IC4601 PA9008A
IC4602,IC4603 PBD001A,PBD002A
CN4801 (8P)
J4801
BRN
YLW
BLU
FLO
CO
SLO
SBLO
CN1203
CN1206 (4P)
CN1201
CN1202
SPA
SPB
RY1205
RY1201
RY1202
RY1203
RY1204
RY1003
J1206
CN1007
CN1006
SP (B) ASSY
CN4805 (15P)
CN4807 (15P)
IC4301 PA9008A Voltage Amp
IC4302 PBD001A Current Amp
CN4806
CN4808
IC4303 PBD002A Current Amp
W POWER AMP (C) ASSY
X POWER AMP (R) ASSY
ORG
VSX-49TX ONLY
I DSP 3 ASSY
CN501
DSP 3
Front Digital Filter IC6021 DF1706E
D/A Converter IC6101 PCM1704U-1
IC6103 NJM5534DD
IC6105-2/2 NJM2068D
IC6105-1/2 NJM2068D
Note: Shows the DAC 10 ASSY.
CN6002
CN6004 (17P)
Same as the above circuit.
U DAC 10 ASSY (VSX-49TX)
DAC 8 ASSY (VSX-47TX)
(F) : Audio Signal Route (F)
(C) : Audio Signal Route (C)
(S) : Audio Signal Route (S)
(SB) : Audio Signal Route (SB)
(SBL) : Audio Signal Route (SBL)
(MR) : Audio Signal Route (MR)
(REC) : Audio Signal Route (REC)

3.1.2 Video and Display Blocks

• Video Block

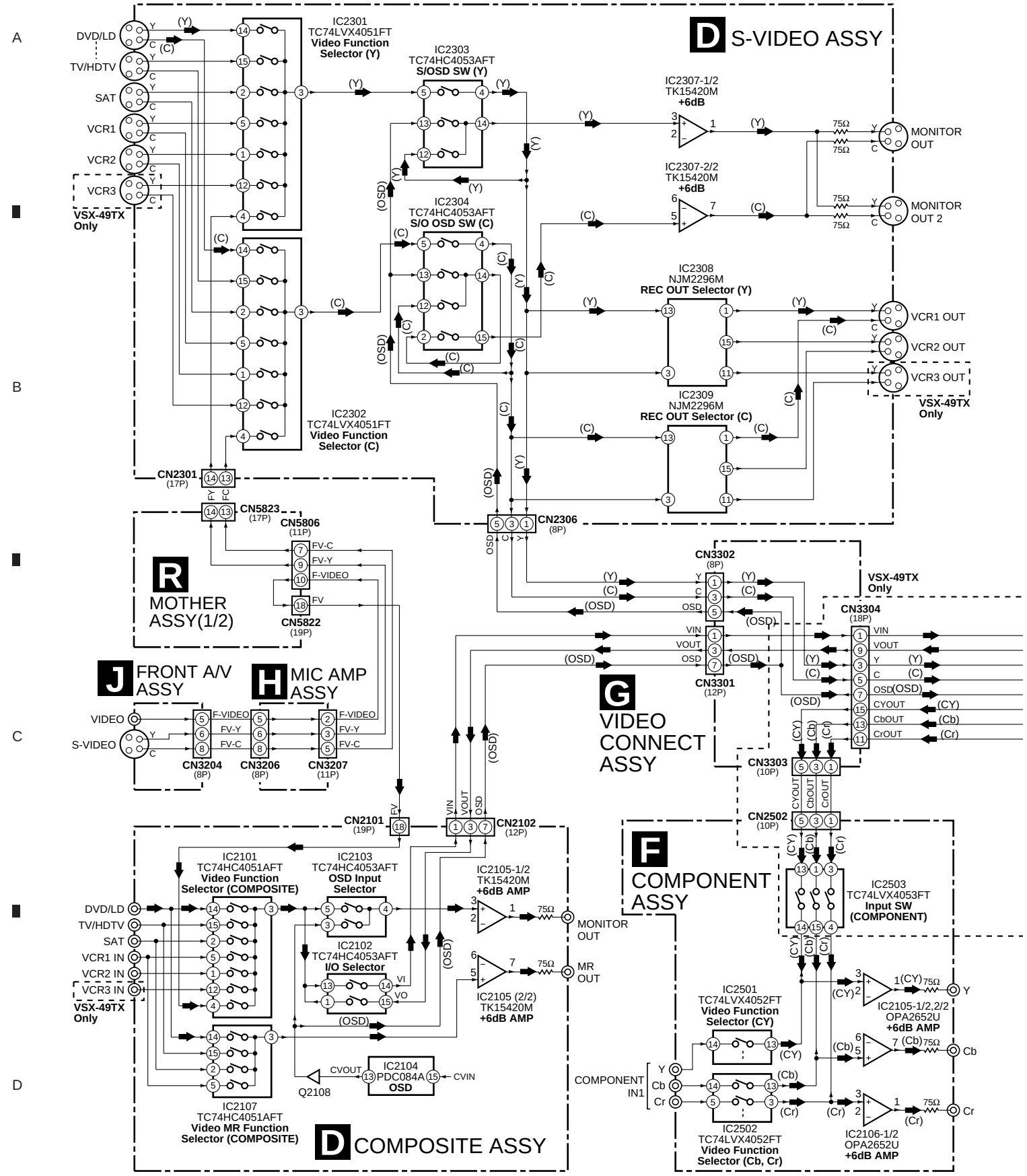

• Display Block

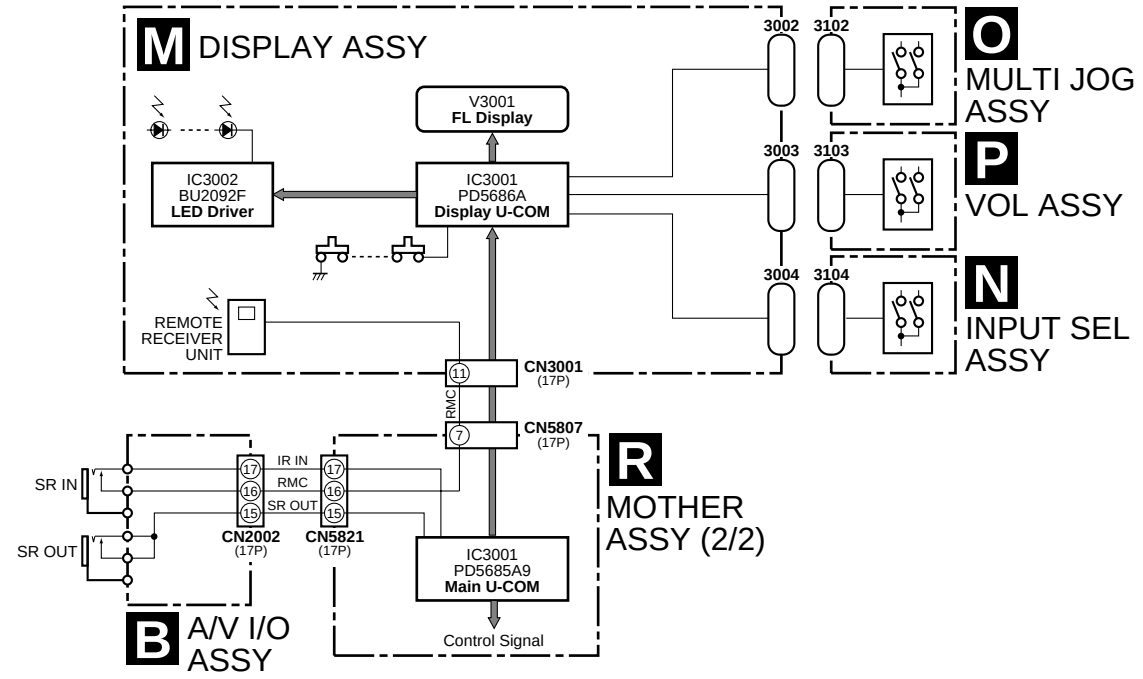

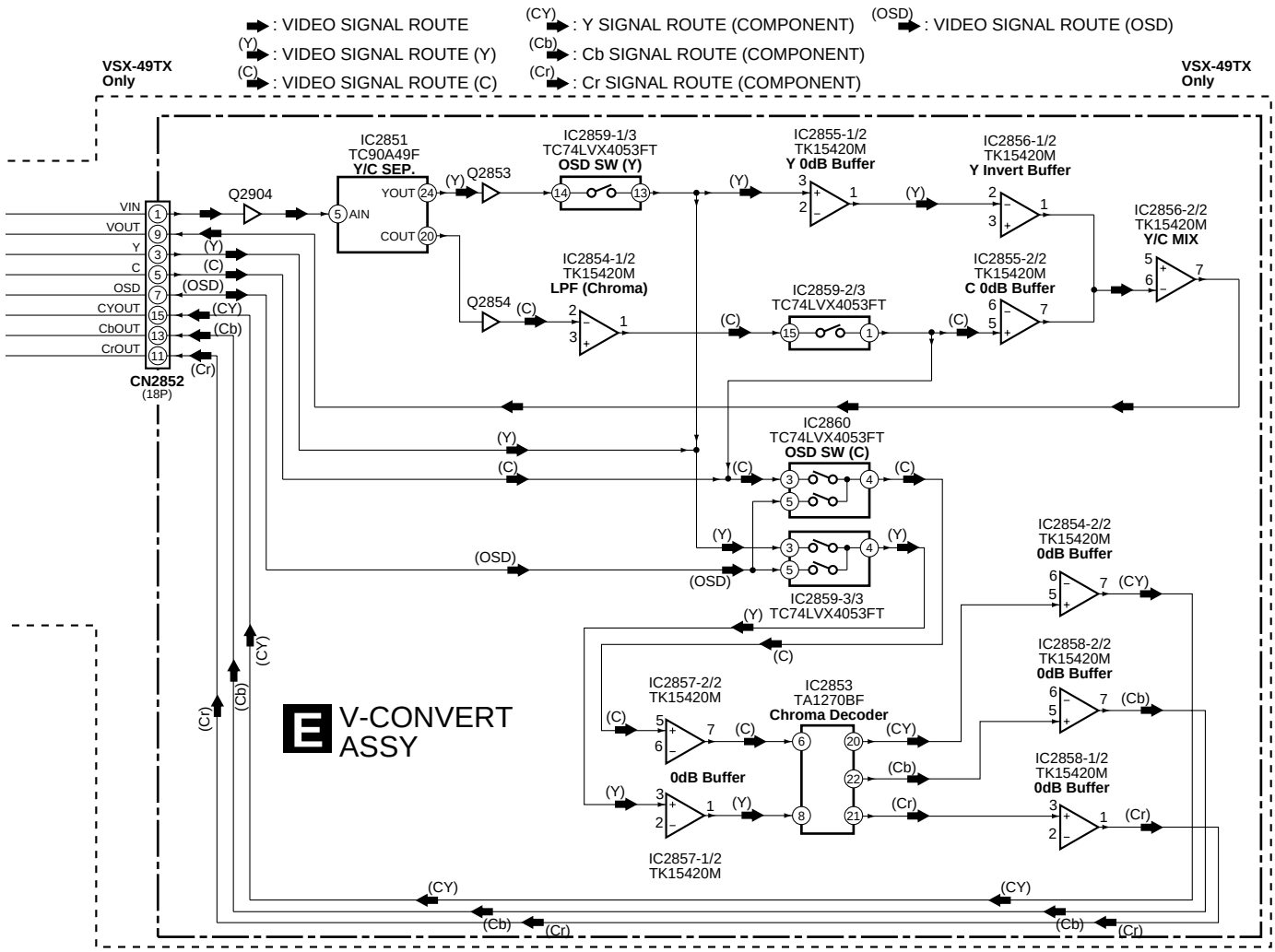

3.1.3 Power Supply Block

- **Power Supply Block**

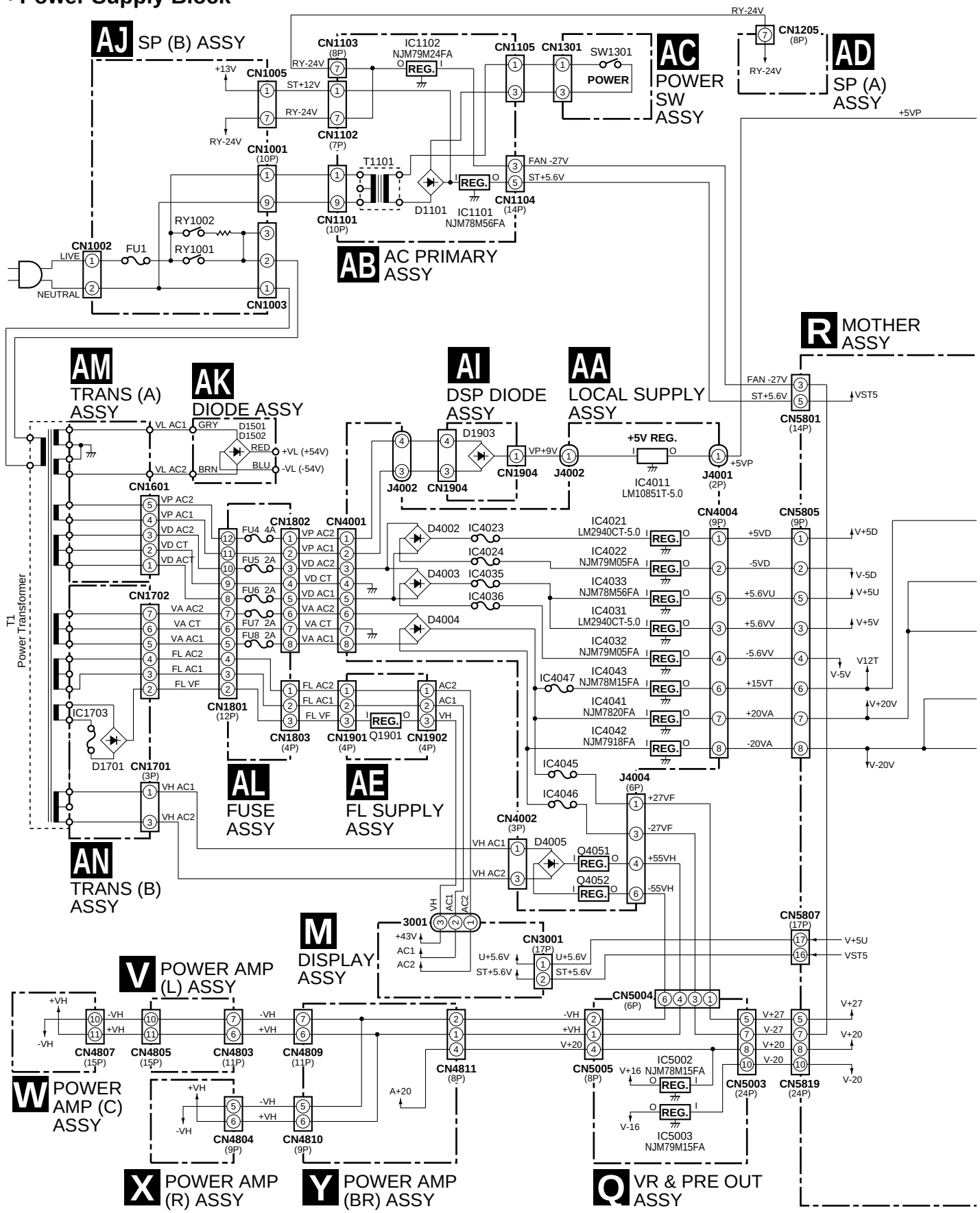

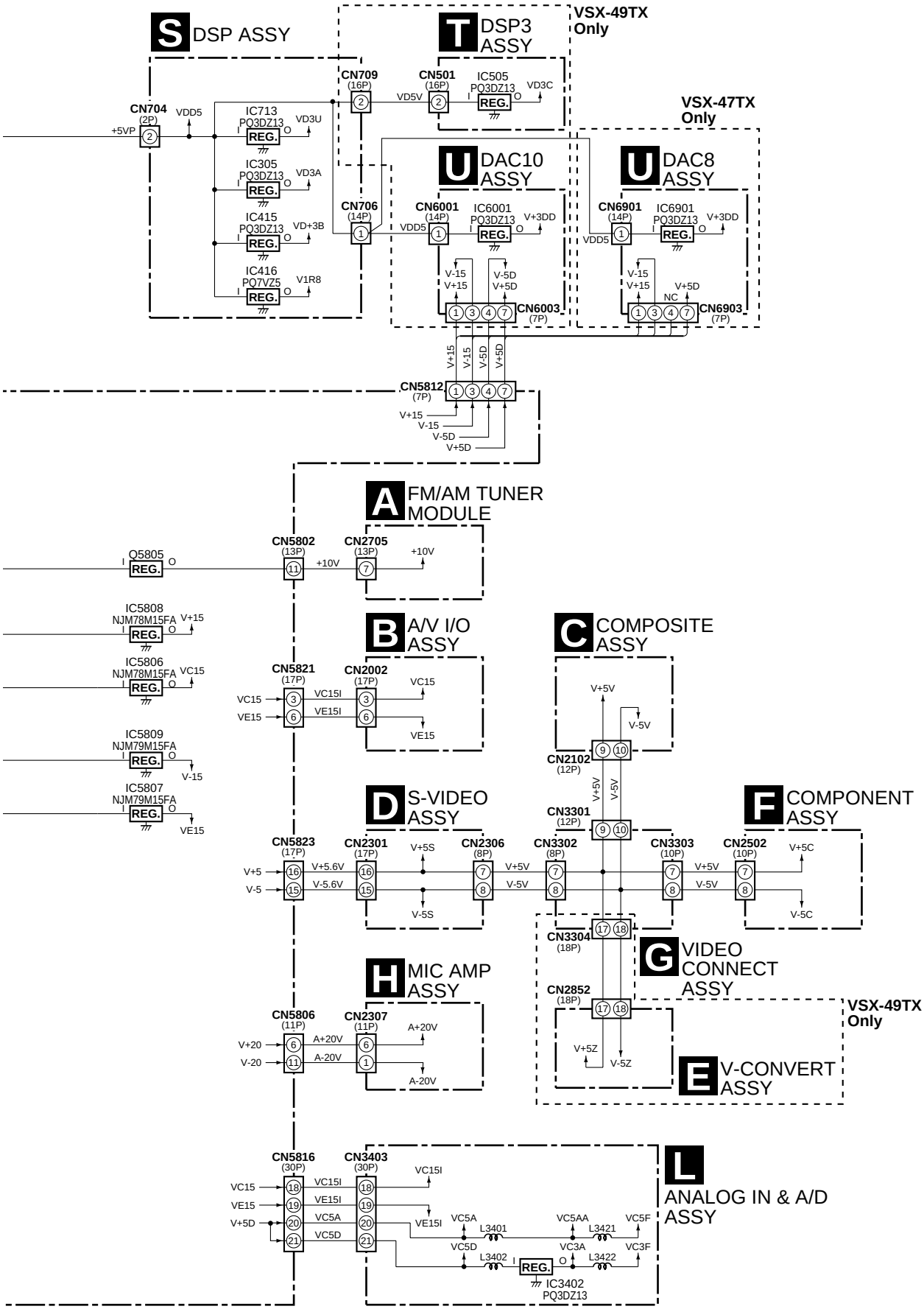
S DSP ASSY
T DSP3 ASSY
VSX-49TX Only
VSX-47TX Only
U DAC10 ASSY
U DAC8 ASSY
A FM/AM TUNER MODULE
B A/V I/O ASSY
C COMPOSITE ASSY
D S-VIDEO ASSY
F COMPONENT ASSY
G VIDEO CONNECT ASSY
H MIC AMP ASSY
E V-CONVERT ASSY
L ANALOG IN & A/D ASSY
CN704 (2P)
CN709 (16P)
CN501 (16P)
IC505 PQ3DZ13
IC713 PQ3DZ13
IC305 PQ3DZ13
IC415 PQ3DZ13
IC416 PQ7VZ5
CN706 (14P)
CN6001 (14P)
IC6001 PQ3DZ13
CN6003 (7P)
CN6901 (14P)
IC6901 PQ3DZ13
CN6903 (7P)
CN5812 (7P)
Q5805
CN5802 (13P)
CN2705 (13P)
IC5808 NJM78M15FA
IC5806 NJM78M15FA
IC5809 NJM79M15FA
IC5807 NJM79M15FA
CN5821 (17P)
CN2002 (17P)
CN2102 (12P)
CN3301 (12P)
CN5823 (17P)
CN2301 (17P)
CN2306 (8P)
CN3302 (8P)
CN3303 (10P)
CN2502 (10P)
CN3304 (18P)
CN2852 (18P)
CN5806 (11P)
CN2307 (11P)
CN5816 (30P)
CN3403 (30P)
L3401
L3421
L3402
L3422
IC3402 PQ3DZ13

3.2 OVERALL WIRING DIAGRAM

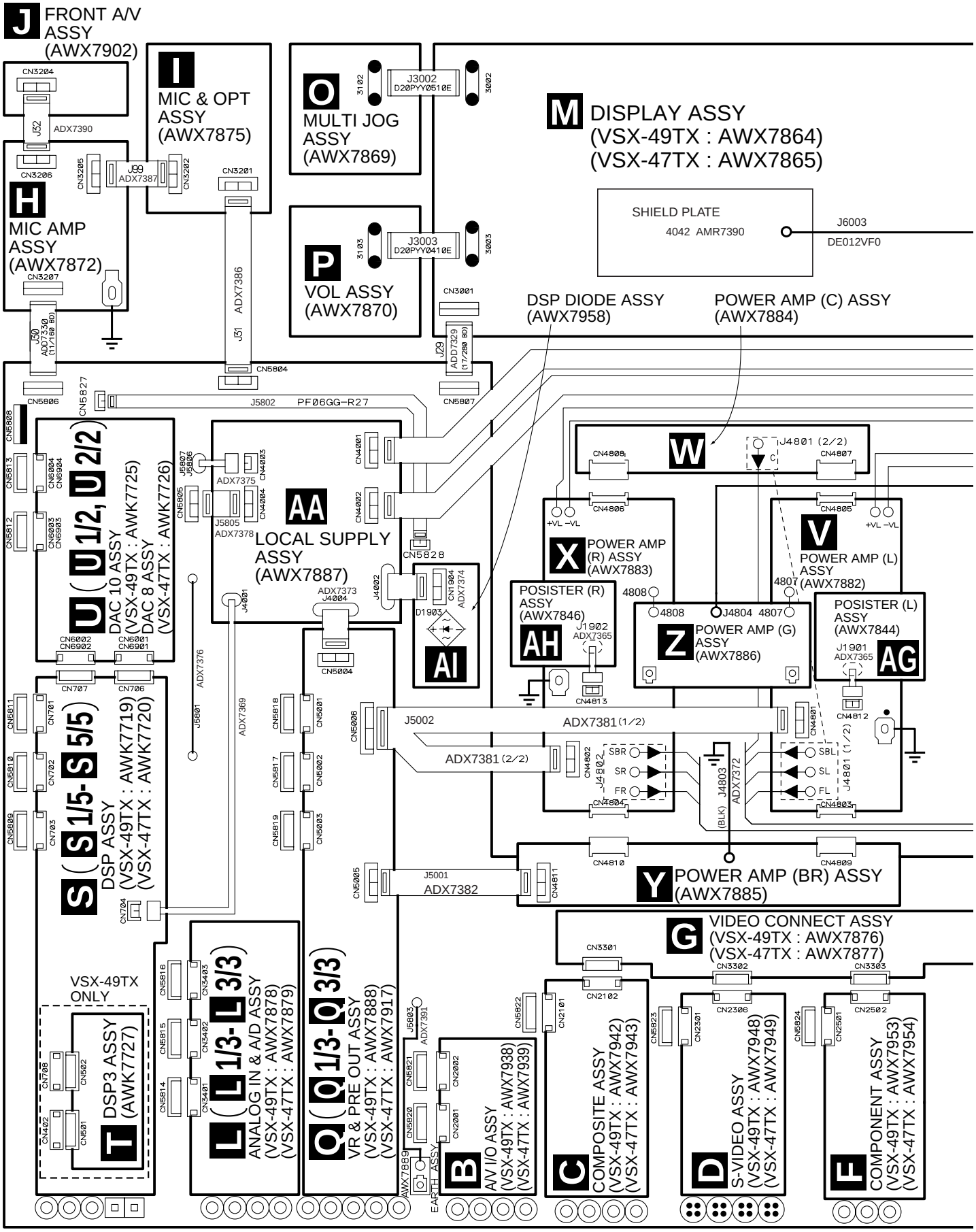

Note : When ordering service parts, be sure to refer to "EXPLODED VIEWS and PARTS LIST" or "PCB PARTS LIST".

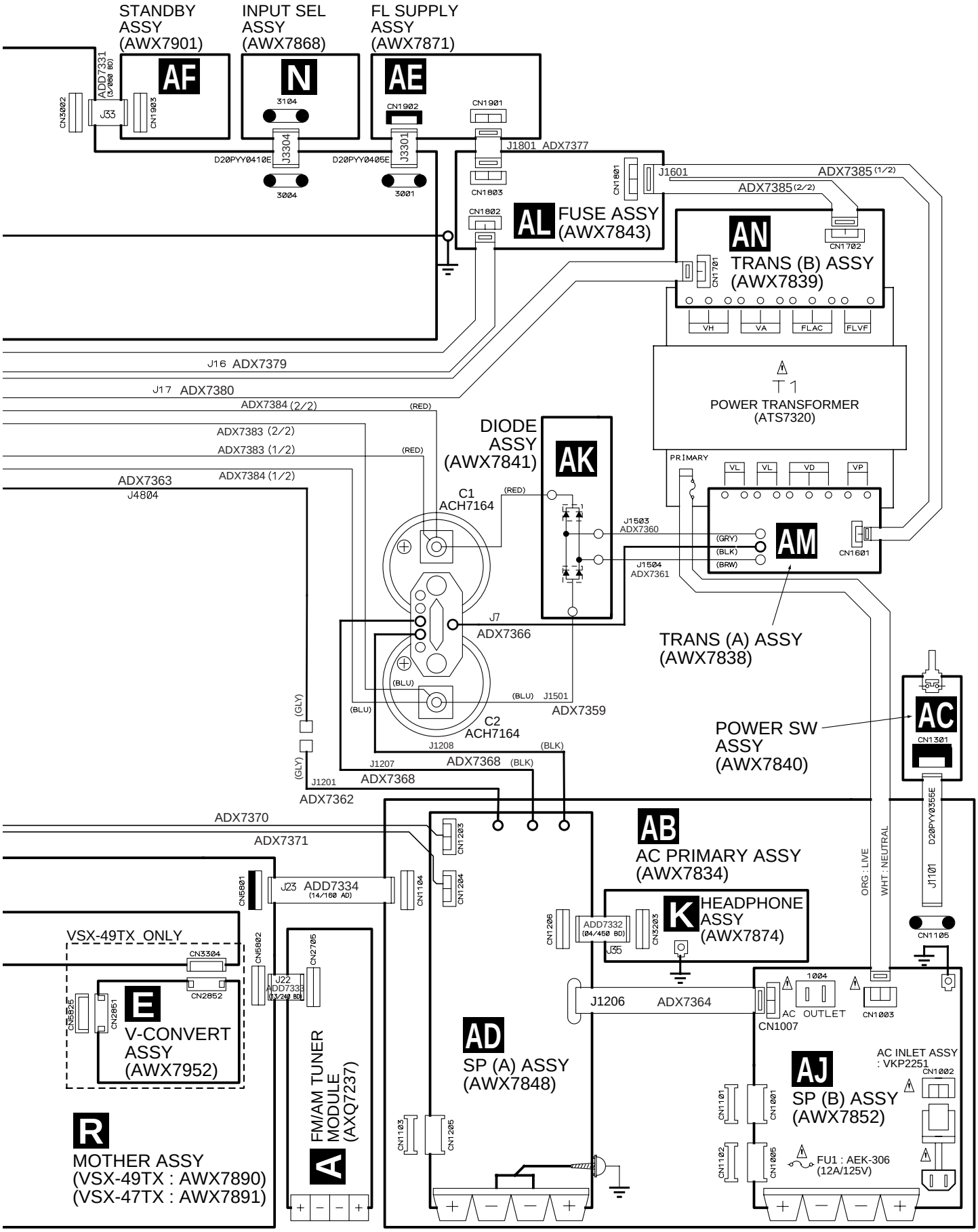

3.3 FM/AM TUNER MODULE

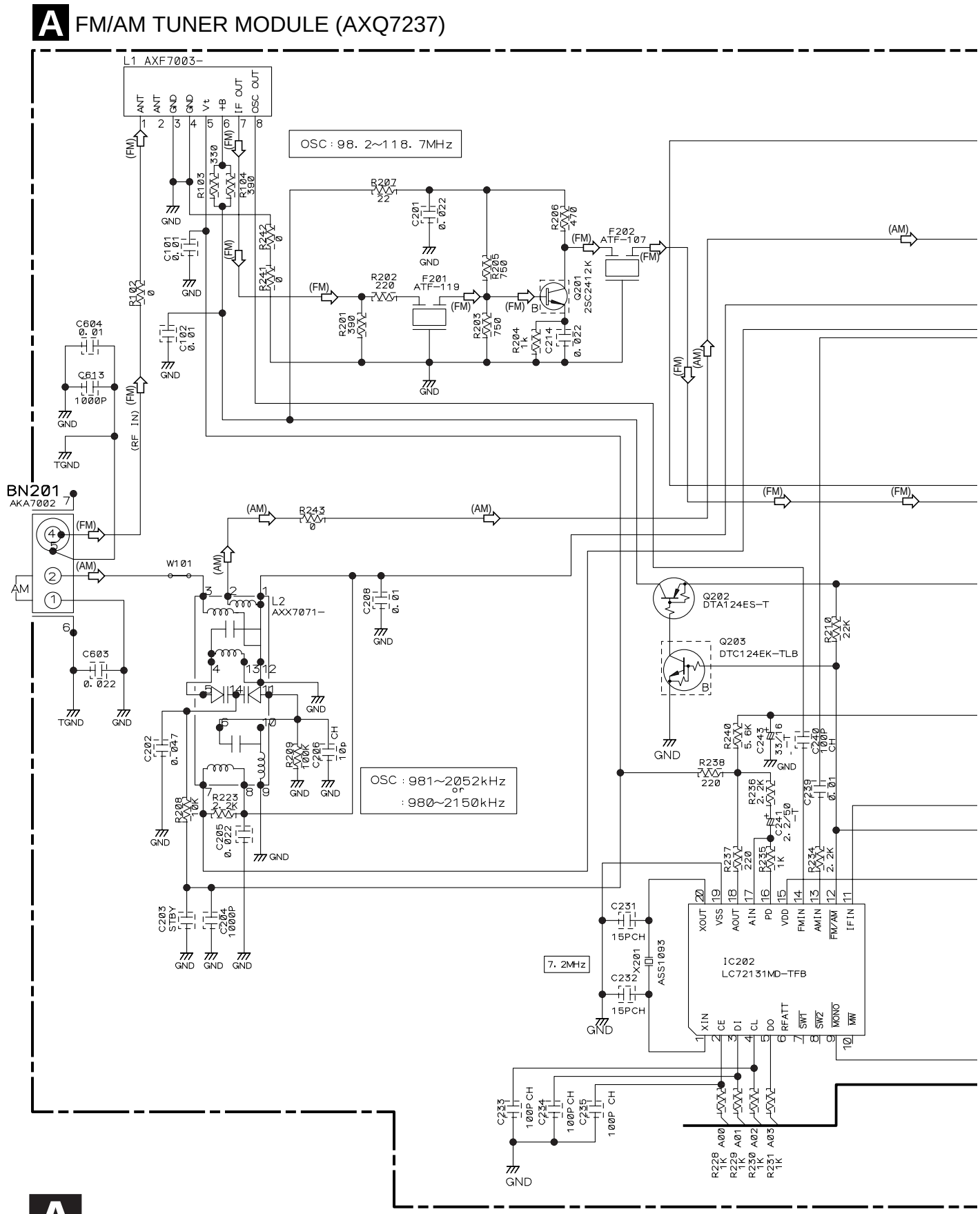

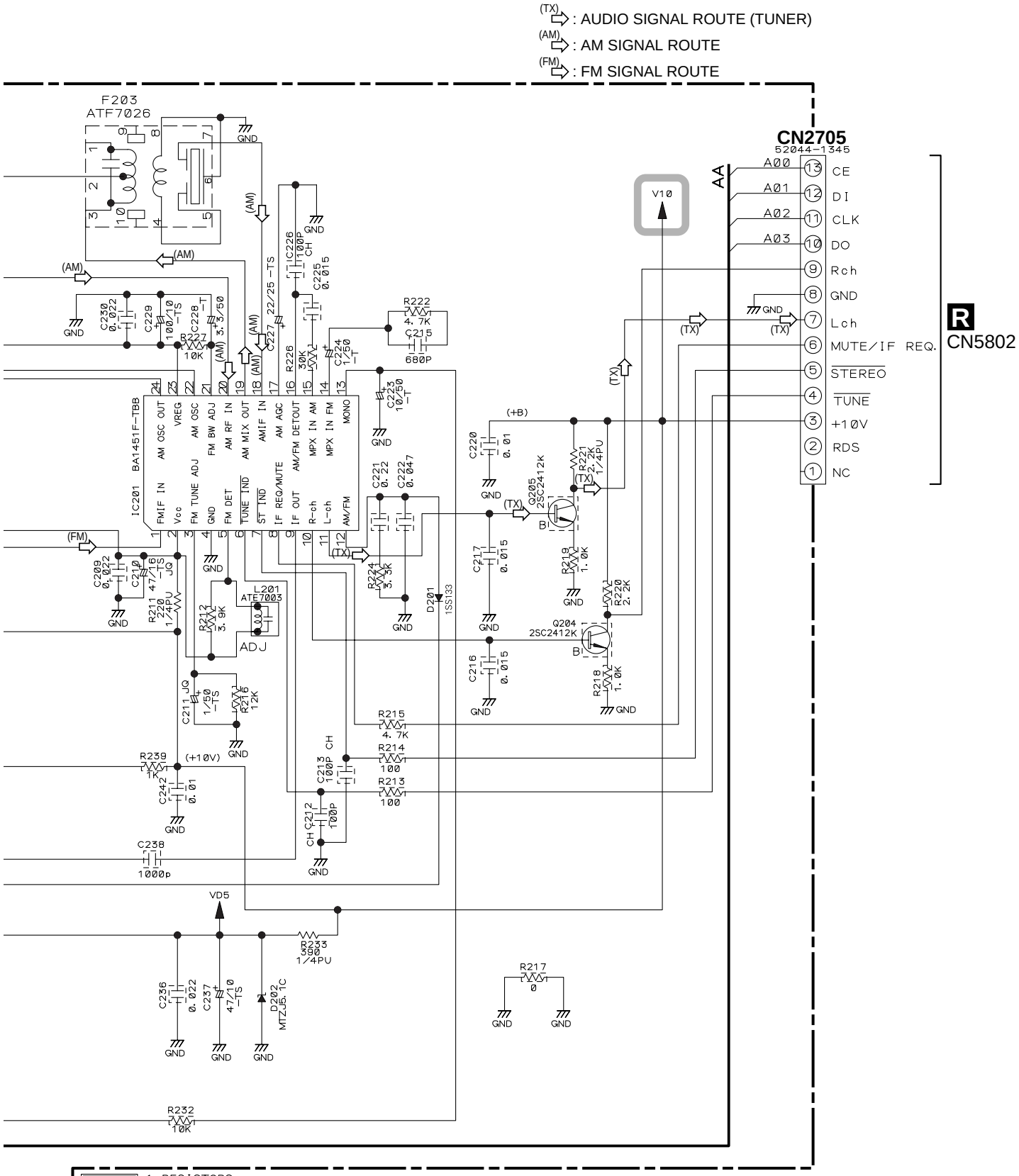

Notes

1. RESISTORS
   Indicated in Ω. 1/16W±5% Tolerance unless otherwise noted K:KΩ, M:MΩ.
2. CAPACITORS
   Indicated in Capacity(μF)/VOLTAGE(V) unless otherwise noted P:PF.
3. DIODES
   No mark diode is 1SS133.

: The power supply is shown with the marked box.

3.4 A/V I/O ASSY

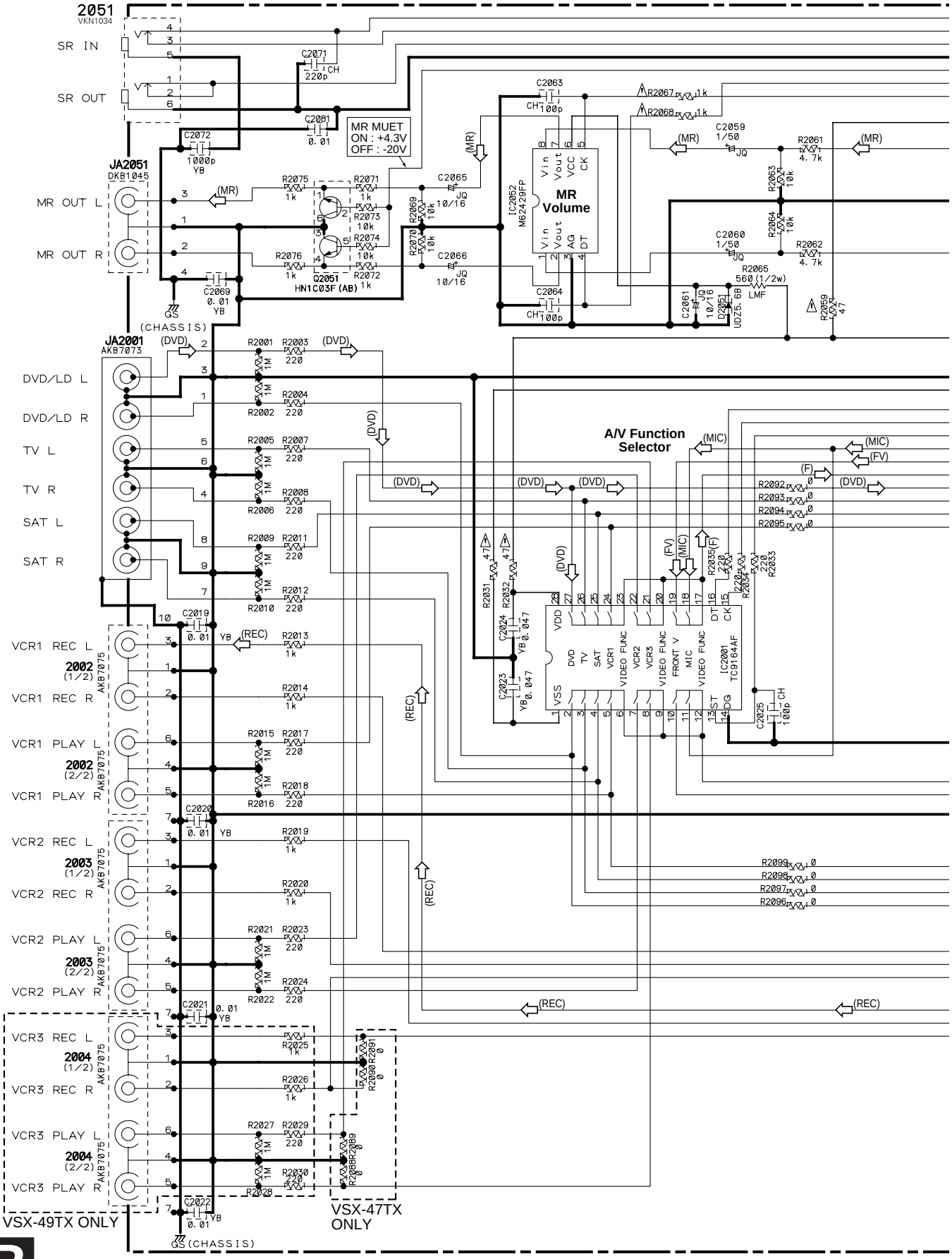
2051
VKN1034
SR IN
SR OUT
JA2051
DKB1045
MR OUT L
MR OUT R
MR MUET
ON : +4.3V
OFF : -20V
Q2051
HN1C03F (AB)
IC2052
M62429FP
MR
Volume
JA2001
AKB7073
DVD/LD L
DVD/LD R
TV L
TV R
SAT L
SAT R
A/V Function
Selector
IC2001
TC9164AF
VCR1 REC L
VCR1 REC R
VCR1 PLAY L
VCR1 PLAY R
VCR2 REC L
VCR2 REC R
VCR2 PLAY L
VCR2 PLAY R
VCR3 REC L
VCR3 REC R
VCR3 PLAY L
VCR3 PLAY R
2002 (1/2)
2002 (2/2)
2003 (1/2)
2003 (2/2)
2004 (1/2)
2004 (2/2)
AKB7075
VSX-49TX ONLY
VSX-47TX ONLY
GS (CHASSIS)

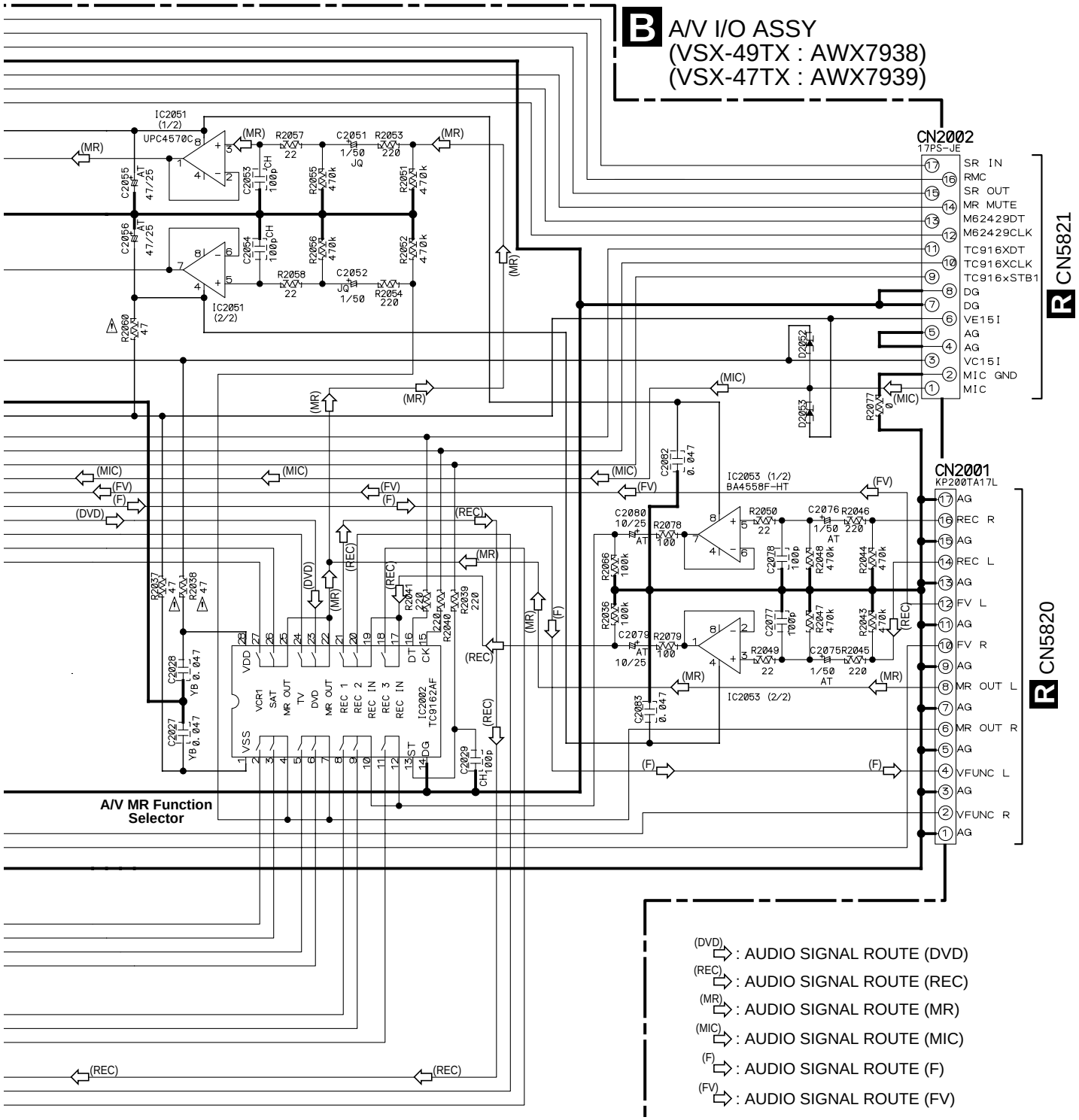

NOTES

1. RESISTORS
   Unit: k-kΩ M-MΩ or unless otherwise noted.
   Rated power: 1/16W unless otherwise noted.
   Tolerance: (J)±5% unless otherwise noted.
2. CAPACITORS
   Unit: p-pF or μF unless otherwise noted.
   Ratings: Capacity(μF)/Voltage(V)
   unless otherwise noted.
   Rated Voltage: 50V except for electrolytic capacitors.
   AT : CEAT , JQ : CEJQ
3. DIODES
   Indicated in 1SS355.

3.5 COMPOSITE ASSY

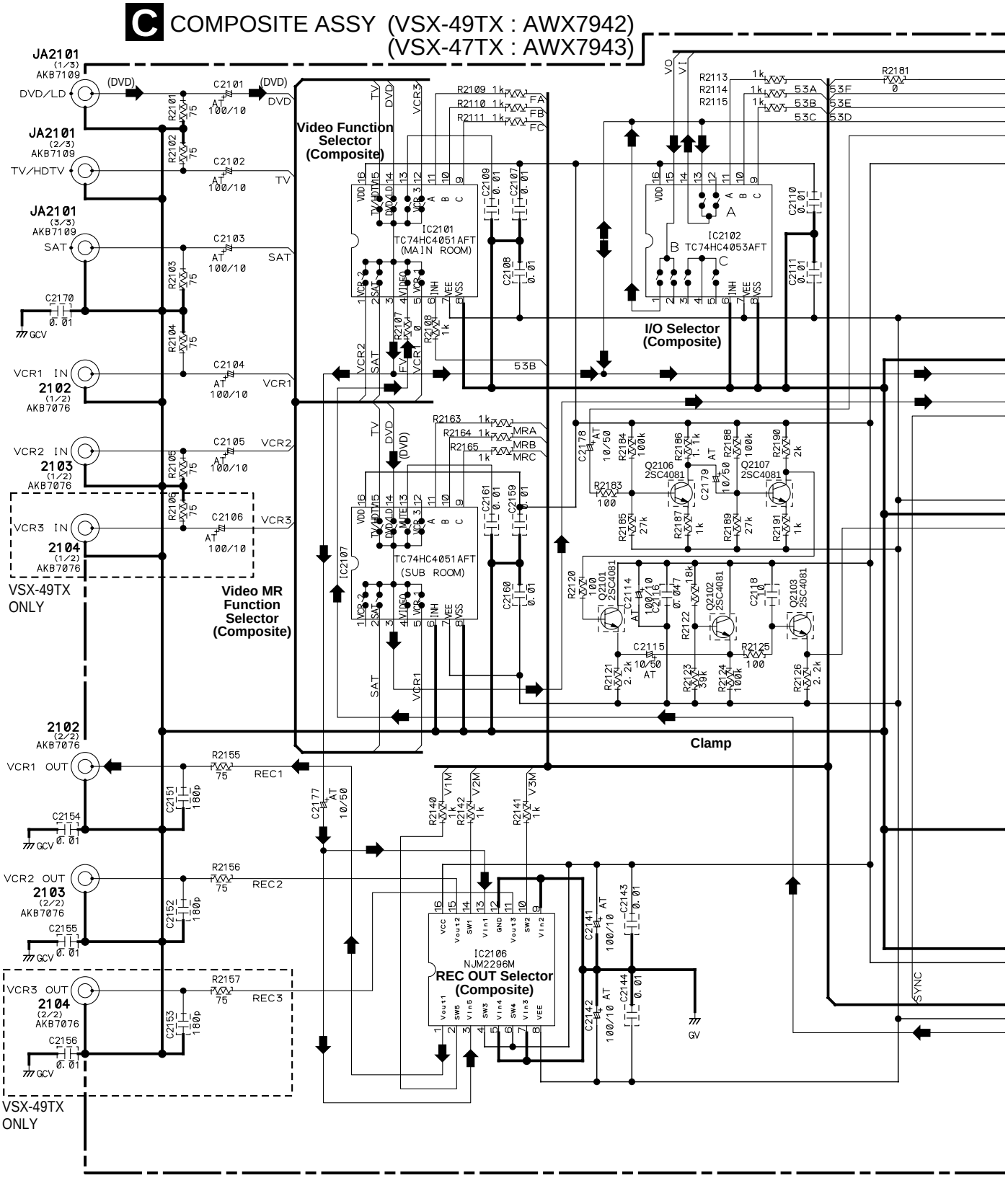

: The power supply is shown with the marked box.

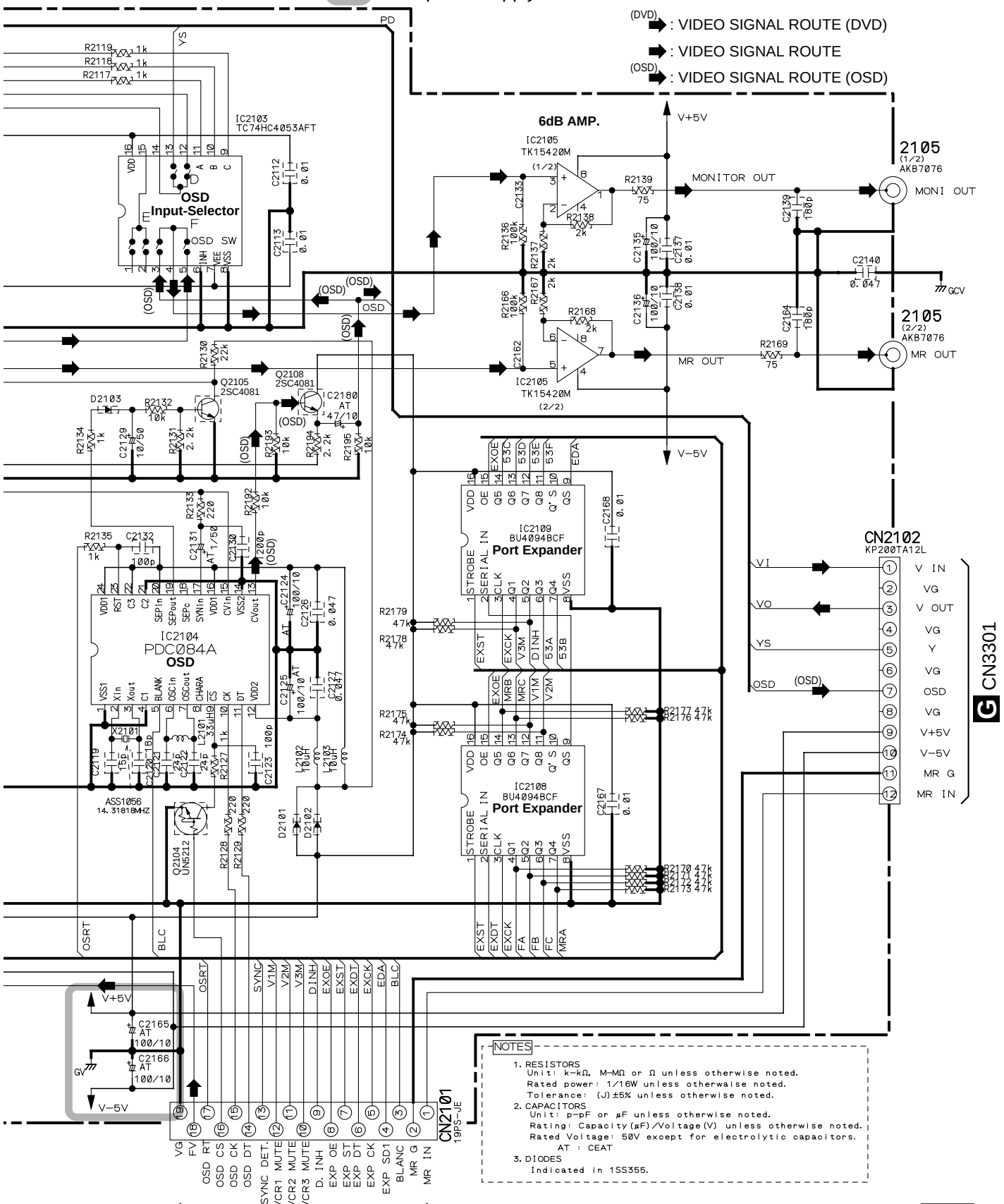

3.6 S-VIDEO ASSY

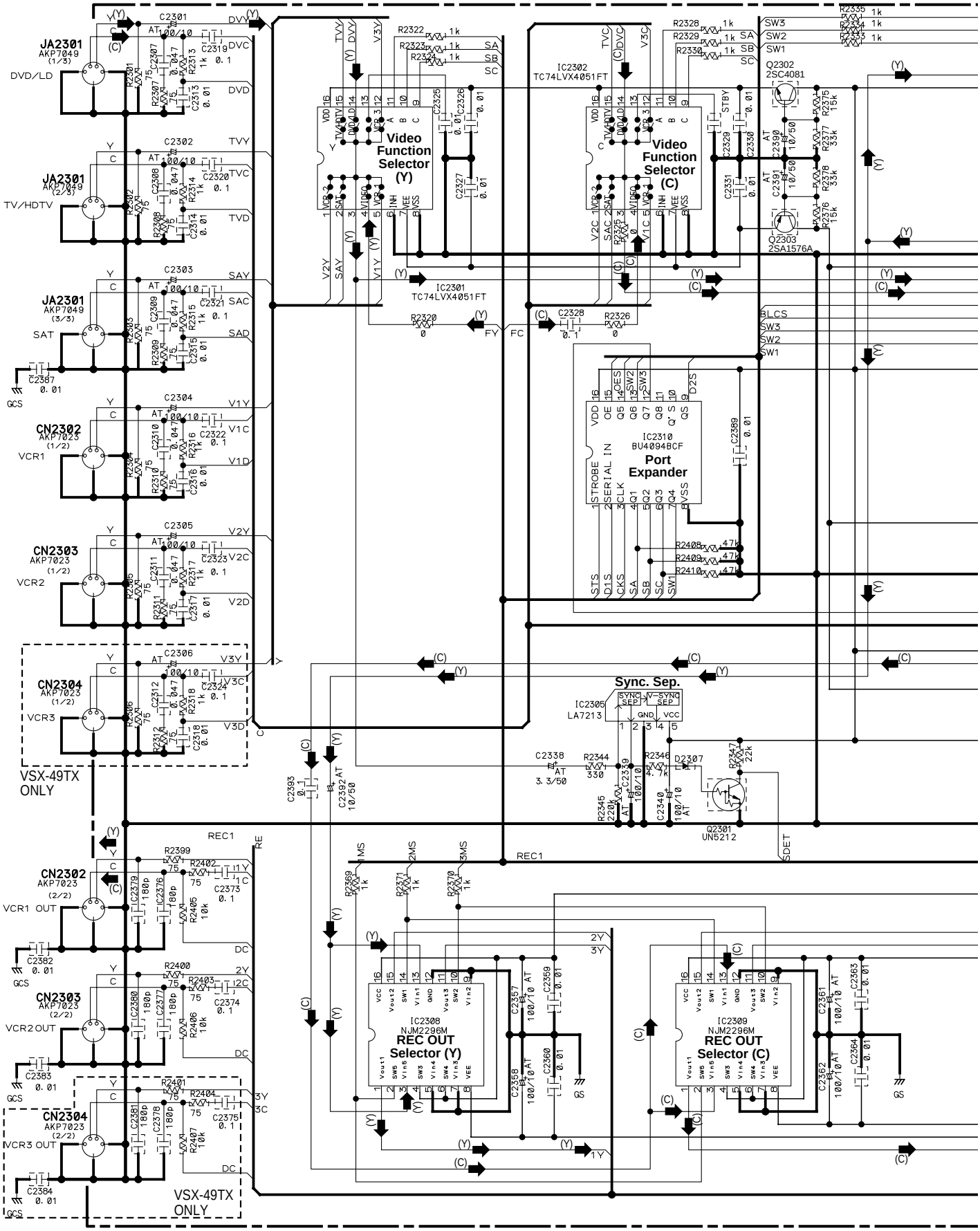

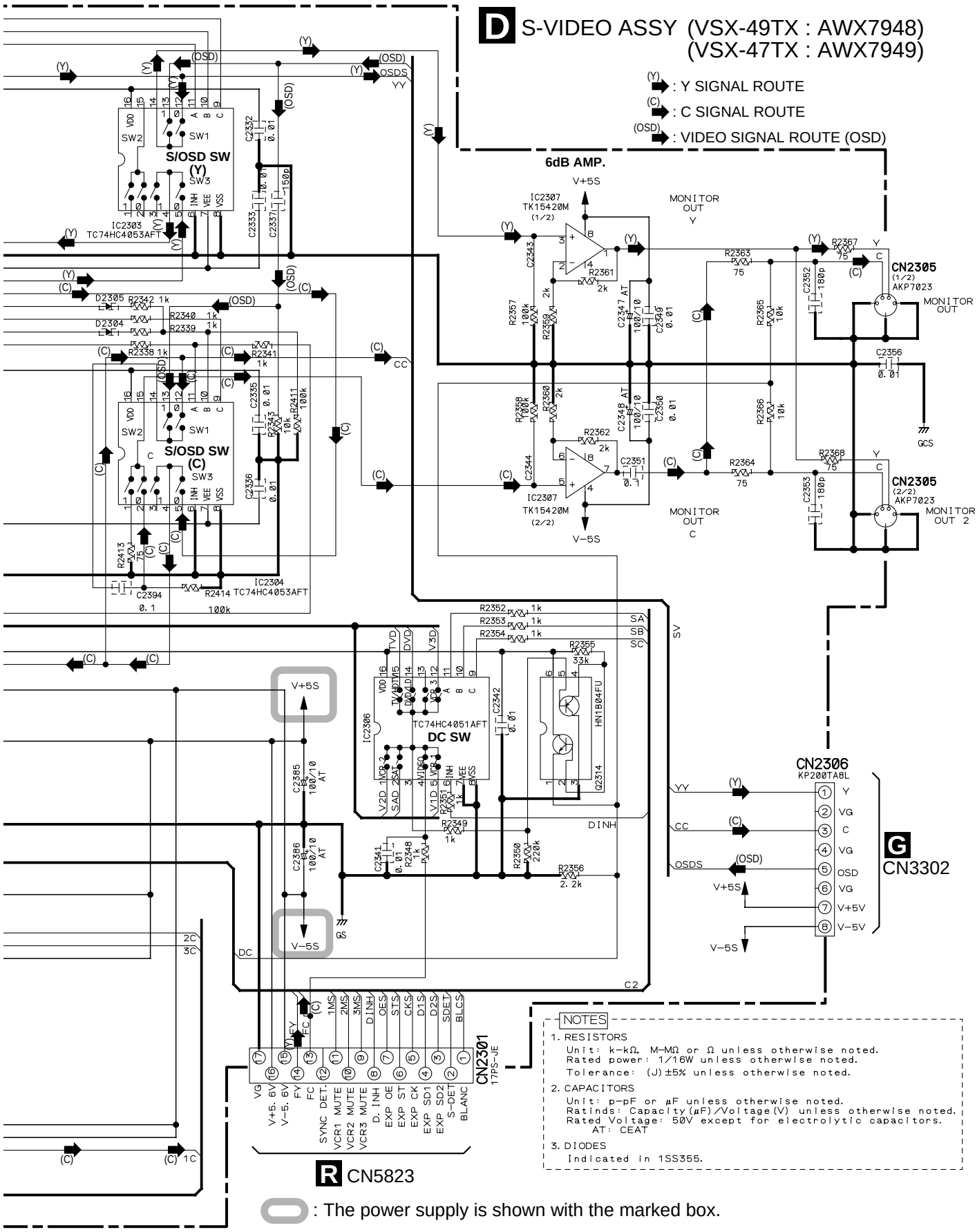
D S-VIDEO ASSY (VSX-49TX : AWX7948)
(VSX-47TX : AWX7949)
(Y) : Y SIGNAL ROUTE
(C) : C SIGNAL ROUTE
(OSD) : VIDEO SIGNAL ROUTE (OSD)
S/OSD SW (Y)
IC2303 TC74HC4053AFT
S/OSD SW (C)
IC2304 TC74HC4053AFT
6dB AMP.
IC2307 TK15420M (1/2)
IC2307 TK15420M (2/2)
MONITOR OUT Y
MONITOR OUT C
CN2305 (1/2) AKP7023
CN2305 (2/2) AKP7023
MONITOR OUT
MONITOR OUT 2
IC2306 TC74HC4051AFT
DC SW
CN2306 KP200TA8L
G CN3302
CN2301 17PS-JE
R CN5823
NOTES
1. RESISTORS
Unit: k-kΩ, M-MΩ or Ω unless otherwise noted.
Rated power: 1/16W unless otherwise noted.
Tolerance: (J)±5% unless otherwise noted.
2. CAPACITORS
Unit: p-pF or μF unless otherwise noted.
Ratinds: Capacity(μF)/Voltage(V) unless otherwise noted.
Rated Voltage: 50V except for electrolytic capacitors.
AT: CEAT
3. DIODES
Indicated in 1SS355.
: The power supply is shown with the marked box.

3.7 V-CONVERT ASSY (VSX-49TX ONLY)

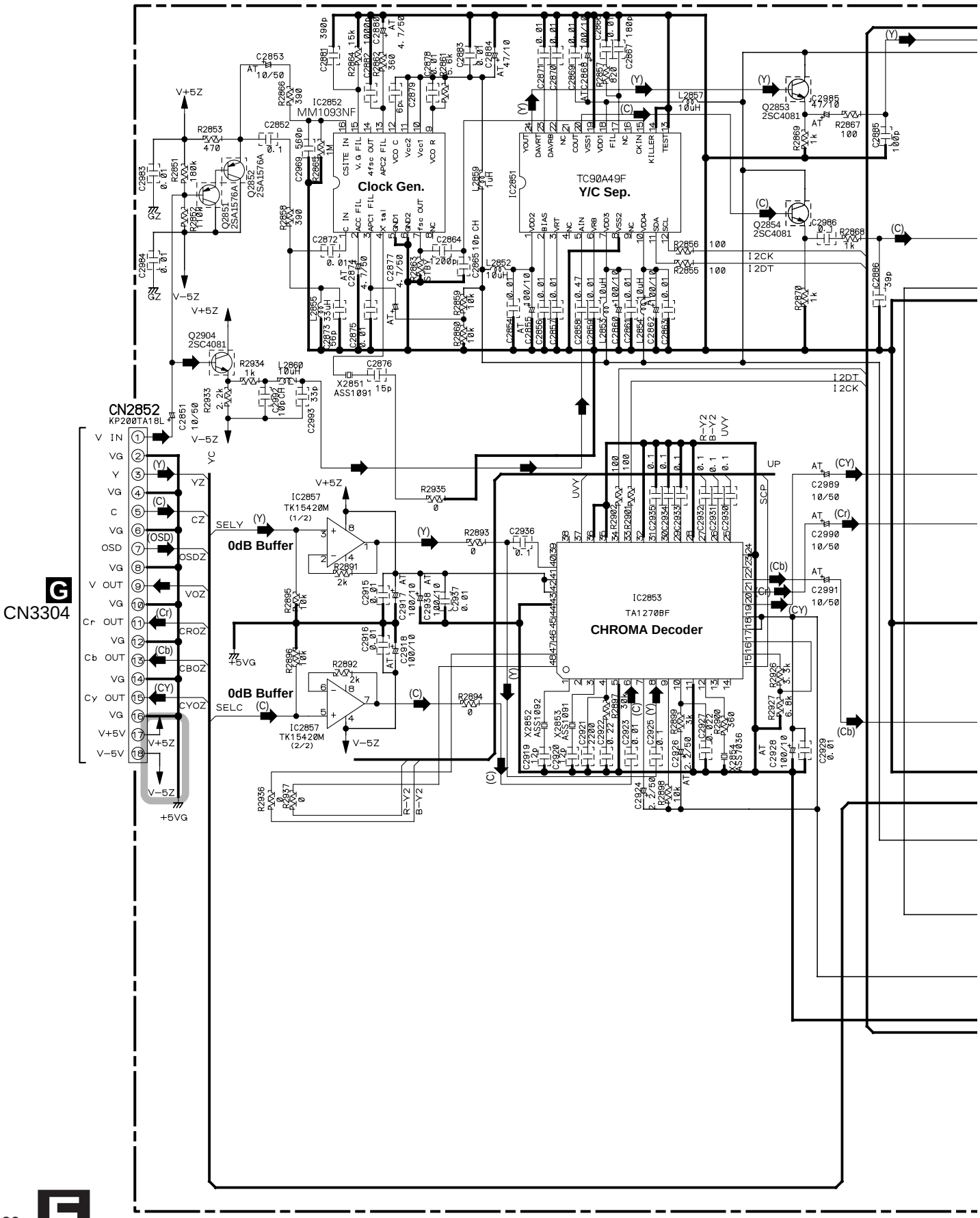

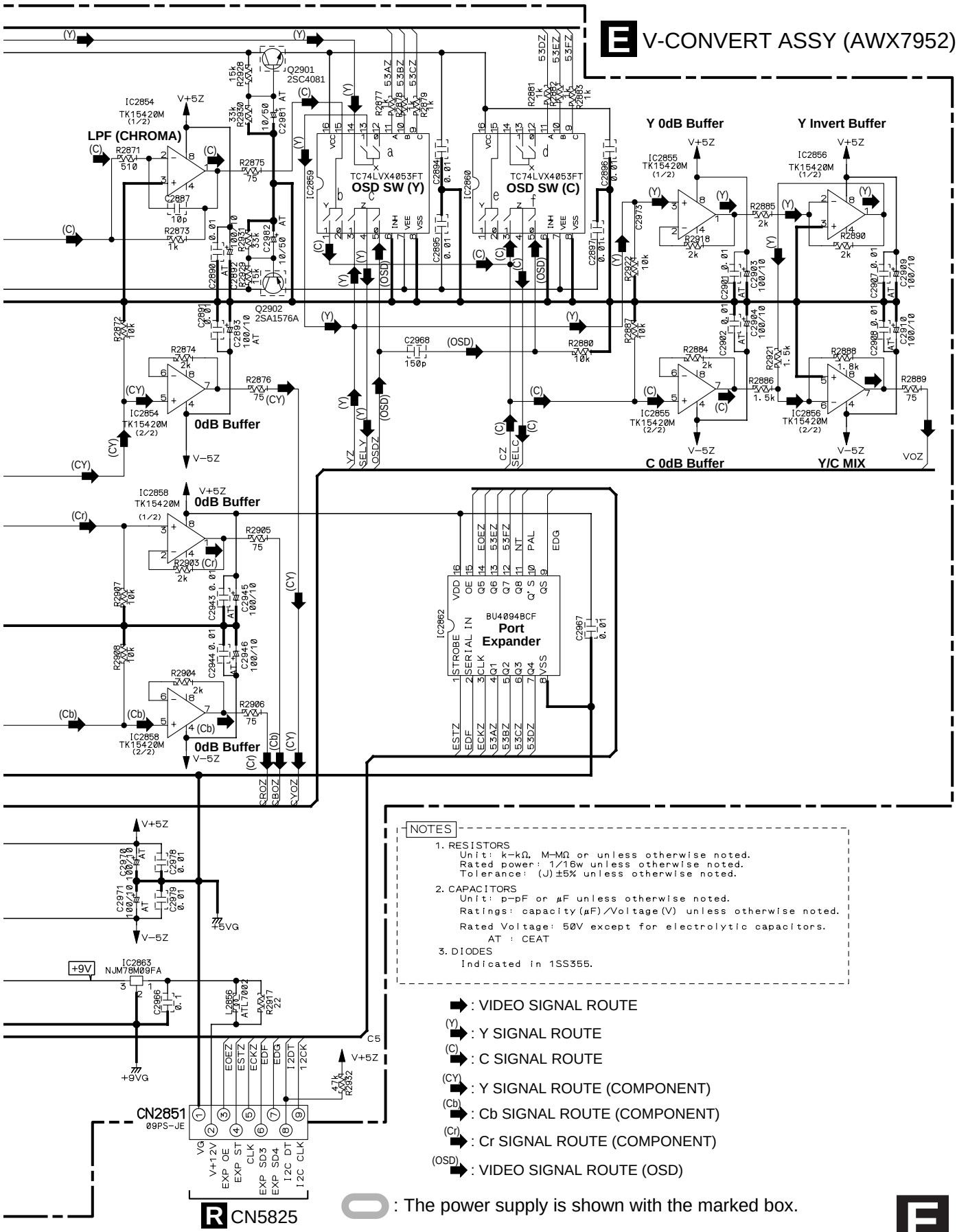
E V-CONVERT ASSY (AWX7952)
LPF (CHROMA)
OSD SW (Y)
OSD SW (C)
Y 0dB Buffer
Y Invert Buffer
0dB Buffer
C 0dB Buffer
Y/C MIX
Port Expander
BU4094BCF
TC74LVX4053FT
CN2851
09PS-JE
CN5825
NOTES
1. RESISTORS
Unit: k-kΩ, M-MΩ or unless otherwise noted.
Rated power: 1/16w unless otherwise noted.
Tolerance: (J)±5% unless otherwise noted.
2. CAPACITORS
Unit: p-pF or μF unless otherwise noted.
Ratings: capacity(μF)/Voltage(V) unless otherwise noted.
Rated Voltage: 50V except for electrolytic capacitors.
AT : CEAT
3. DIODES
Indicated in 1SS355.
: VIDEO SIGNAL ROUTE
(Y) : Y SIGNAL ROUTE
(C) : C SIGNAL ROUTE
(CY) : Y SIGNAL ROUTE (COMPONENT)
(Cb) : Cb SIGNAL ROUTE (COMPONENT)
(Cr) : Cr SIGNAL ROUTE (COMPONENT)
(OSD) : VIDEO SIGNAL ROUTE (OSD)
: The power supply is shown with the marked box.

3.8 COMPONENT and VIDEO CONNECT ASSYS

F COMPONENT ASSY (VSX-49TX : AWX7953)
(VSX-47TX : AWX7954)

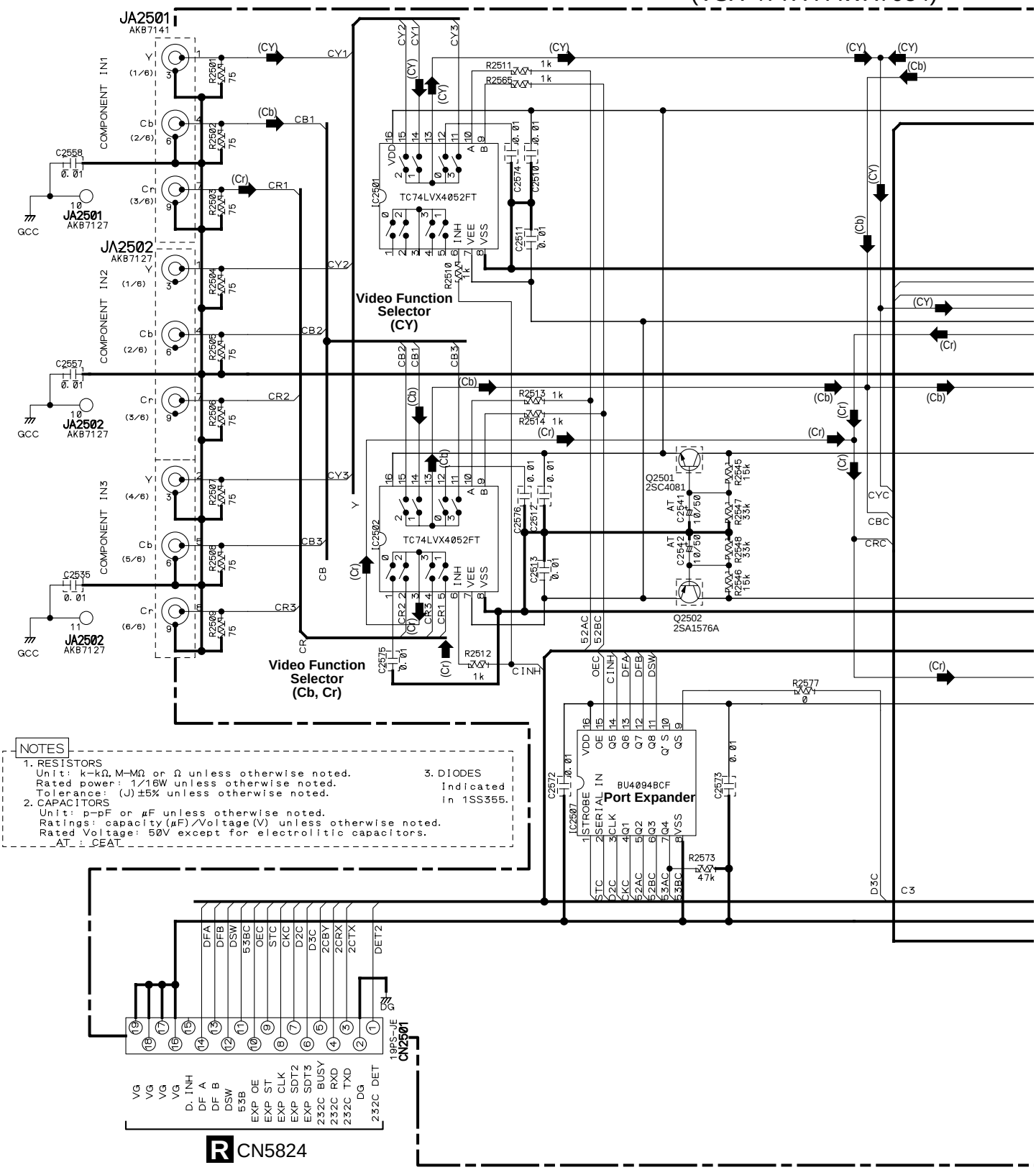

: The power supply is shown with the marked box.

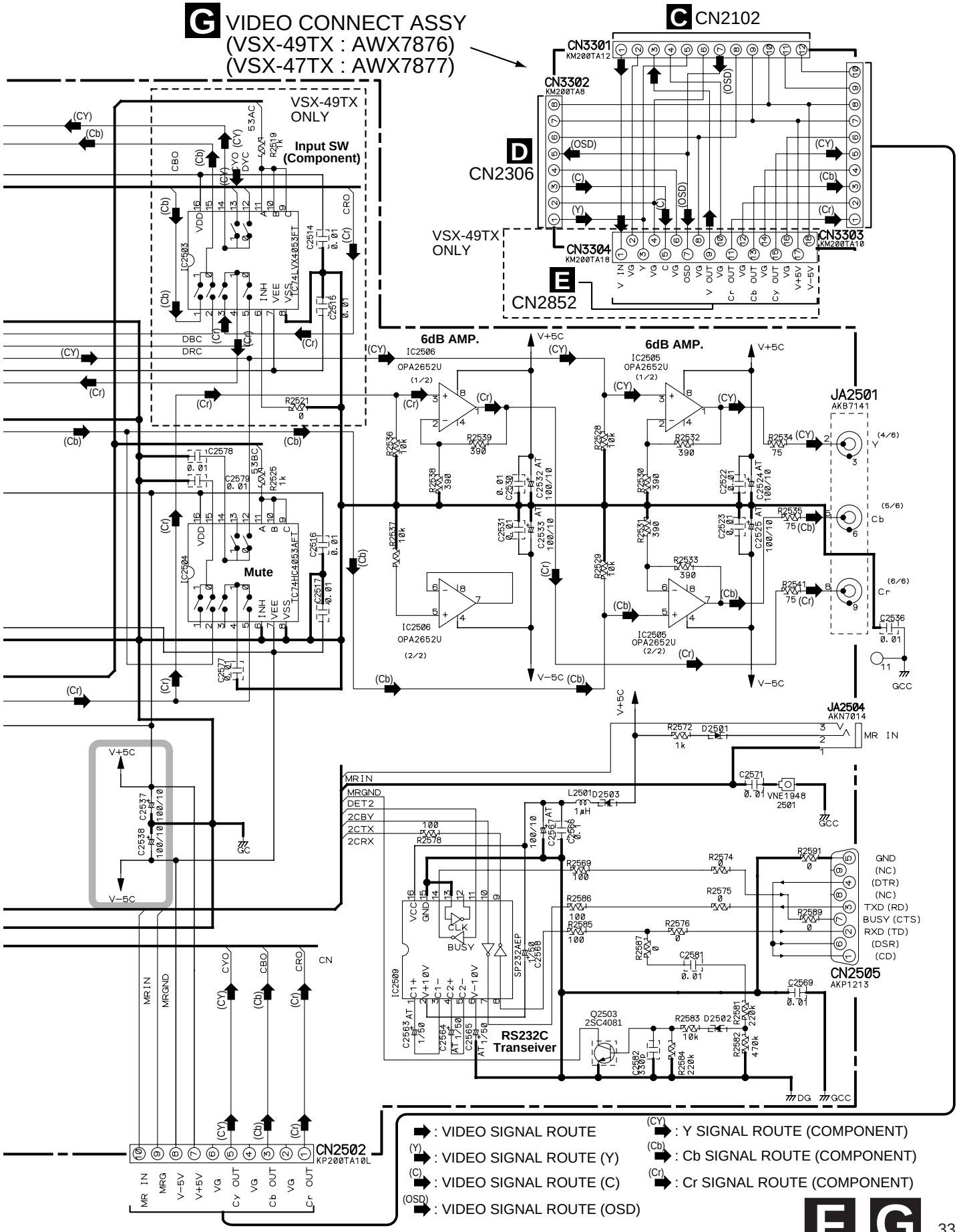
G VIDEO CONNECT ASSY
(VSX-49TX : AWX7876)
(VSX-47TX : AWX7877)
C CN2102
CN3301
KM200TA12
CN3302
KM200TA8
D
CN2306
VSX-49TX ONLY
CN3304
KM200TA18
CN3303
KM200TA10
E
CN2852
VSX-49TX ONLY
Input SW (Component)
IC2503
TC74LVX4053FT
IC2504
TC74HC4053AFT
Mute
6dB AMP.
IC2506
OPA2652U
IC2505
OPA2652U
JA2501
AKB7141
JA2504
AKN7014
MR IN
CN2505
AKP1213
RS232C Transeiver
IC2509
SP232AEP
Q2503
2SC4081
CN2502
KP200TA10L
: VIDEO SIGNAL ROUTE
: VIDEO SIGNAL ROUTE (Y)
: VIDEO SIGNAL ROUTE (C)
: VIDEO SIGNAL ROUTE (OSD)
: Y SIGNAL ROUTE (COMPONENT)
: Cb SIGNAL ROUTE (COMPONENT)
: Cr SIGNAL ROUTE (COMPONENT)

3.9 MIC AMP, MIC & OPT, FRONT A/V and HEADPHONE ASSYS

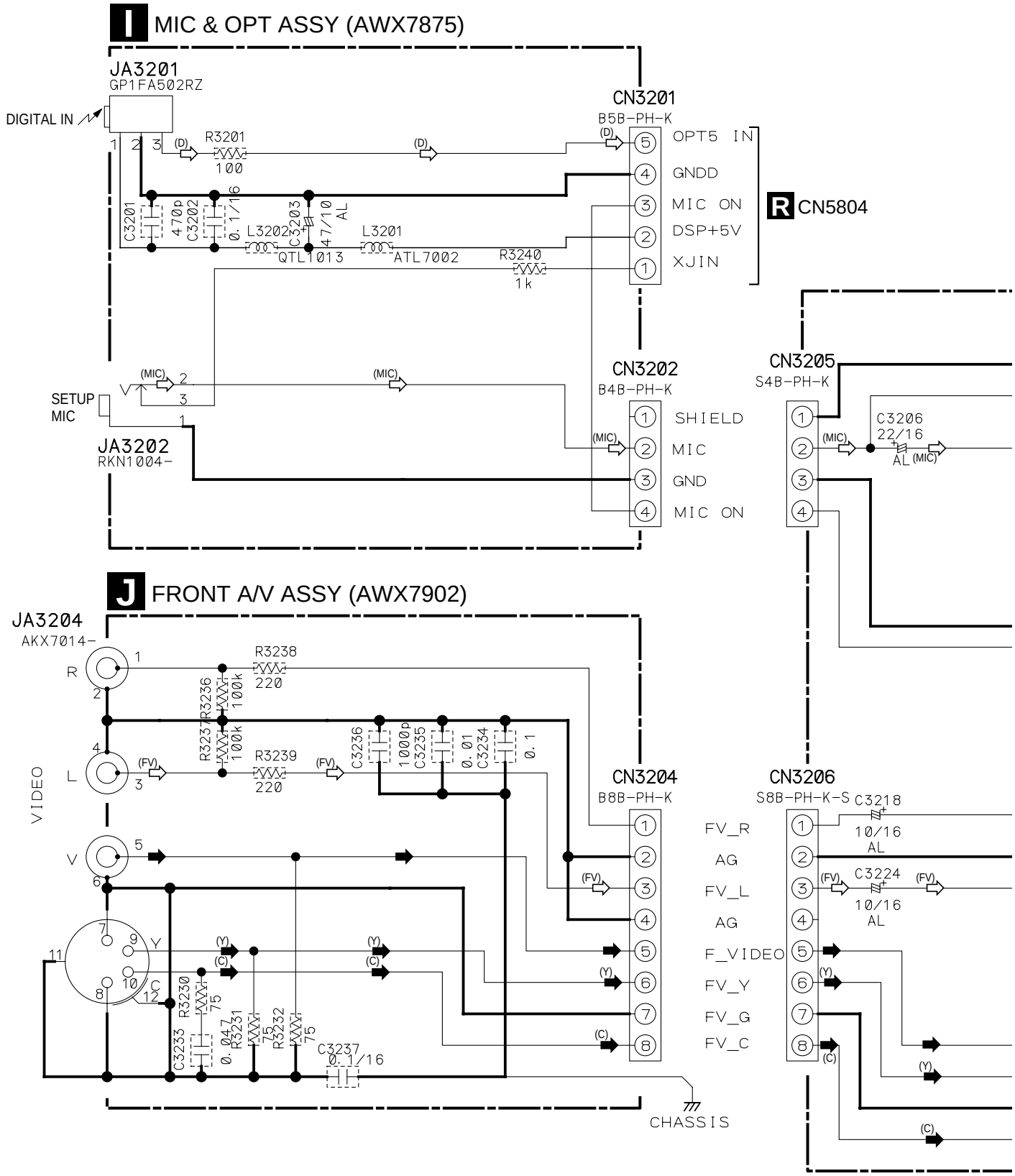

NOTE
1. RESISTORS
Indicated in ohm 1/16W ±5%
tolerance unless otherwise
noted k:kΩ, M:MΩ
2. CAPACITORS
Indicated in capacity(μF)/voltage(V)
unless otherwise noted p:pF
Indication without voltage is
50V except electrolytic capacitor.
AL:CEAL, CH:CCSRCH
3. DIODE
Diode without indication is
1SS355

➡ : VIDEO SIGNAL ROUTE
(Y) ➡ : Y SIGNAL ROUTE
(C) ➡ : C SIGNAL ROUTE
(D) ⇨ : AUDIO SIGNAL ROUTE (DIGITAL)
(MIC) ⇨ : AUDIO SIGNAL ROUTE (MIC)
(F) ⇨ : AUDIO SIGNAL ROUTE (F)
(FV) ⇨ : AUDIO SIGNAL ROUTE (FV)

K HEADPHONE ASSY (AWX7874)

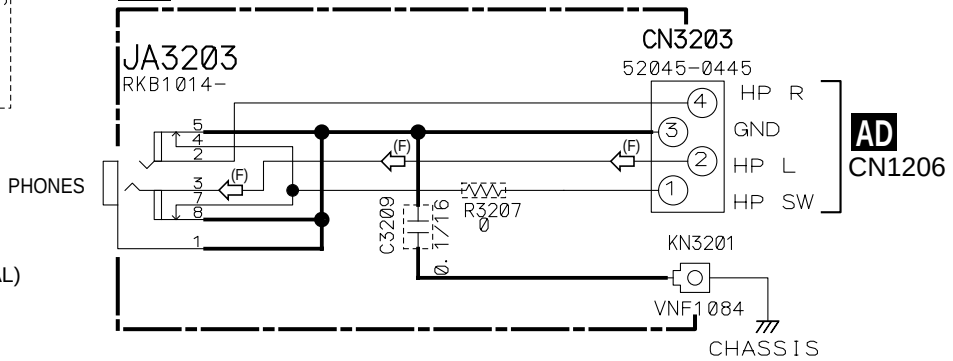

H MIC AMP ASSY (AWX7872)

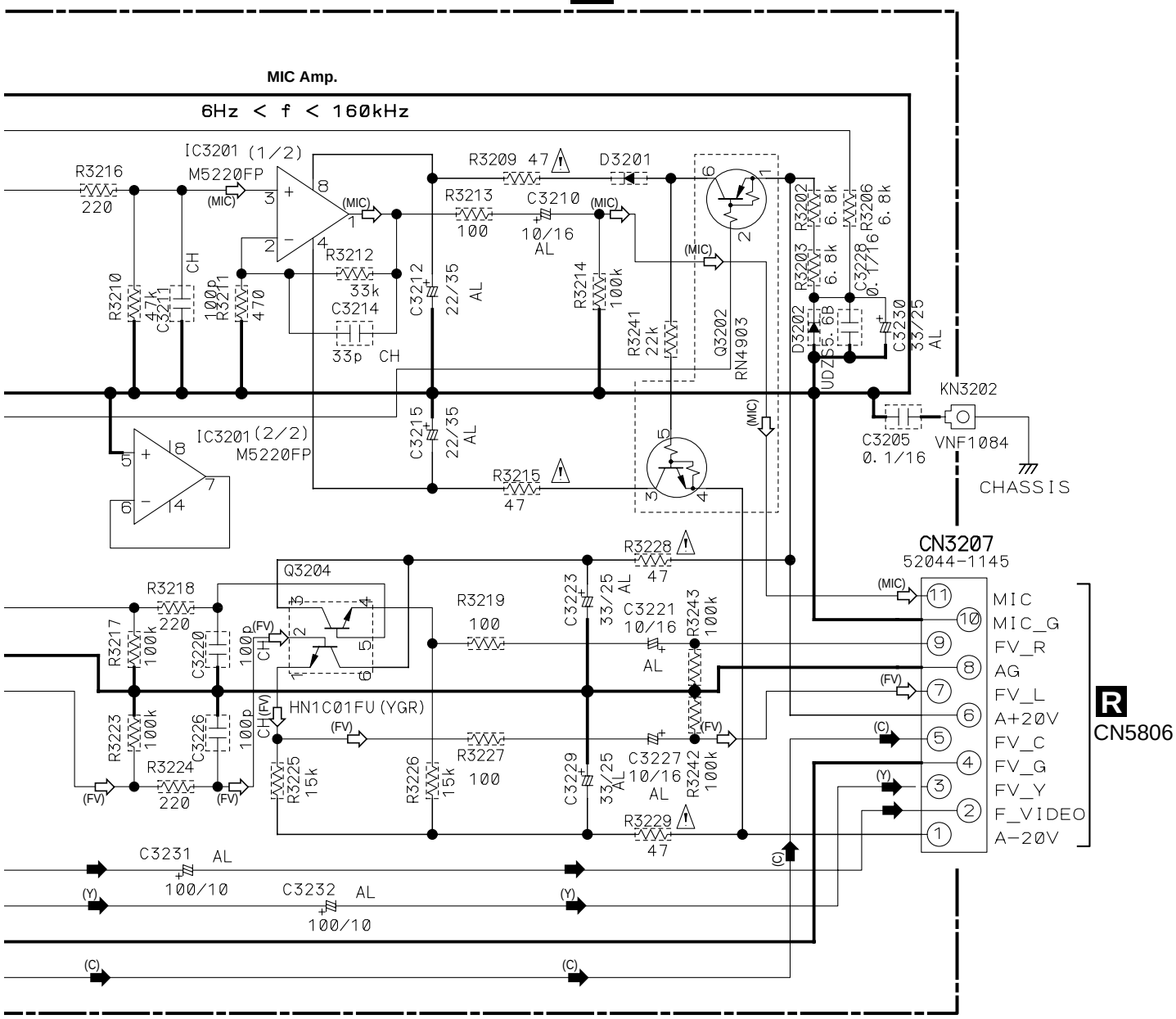

3.10 ANALOG IN & A/D ASSY (1/3)

L 1/3 ANALOG IN & A/D ASSY (VSX-49TX : AWX7878)
(VSX-47TX : AWX7879)

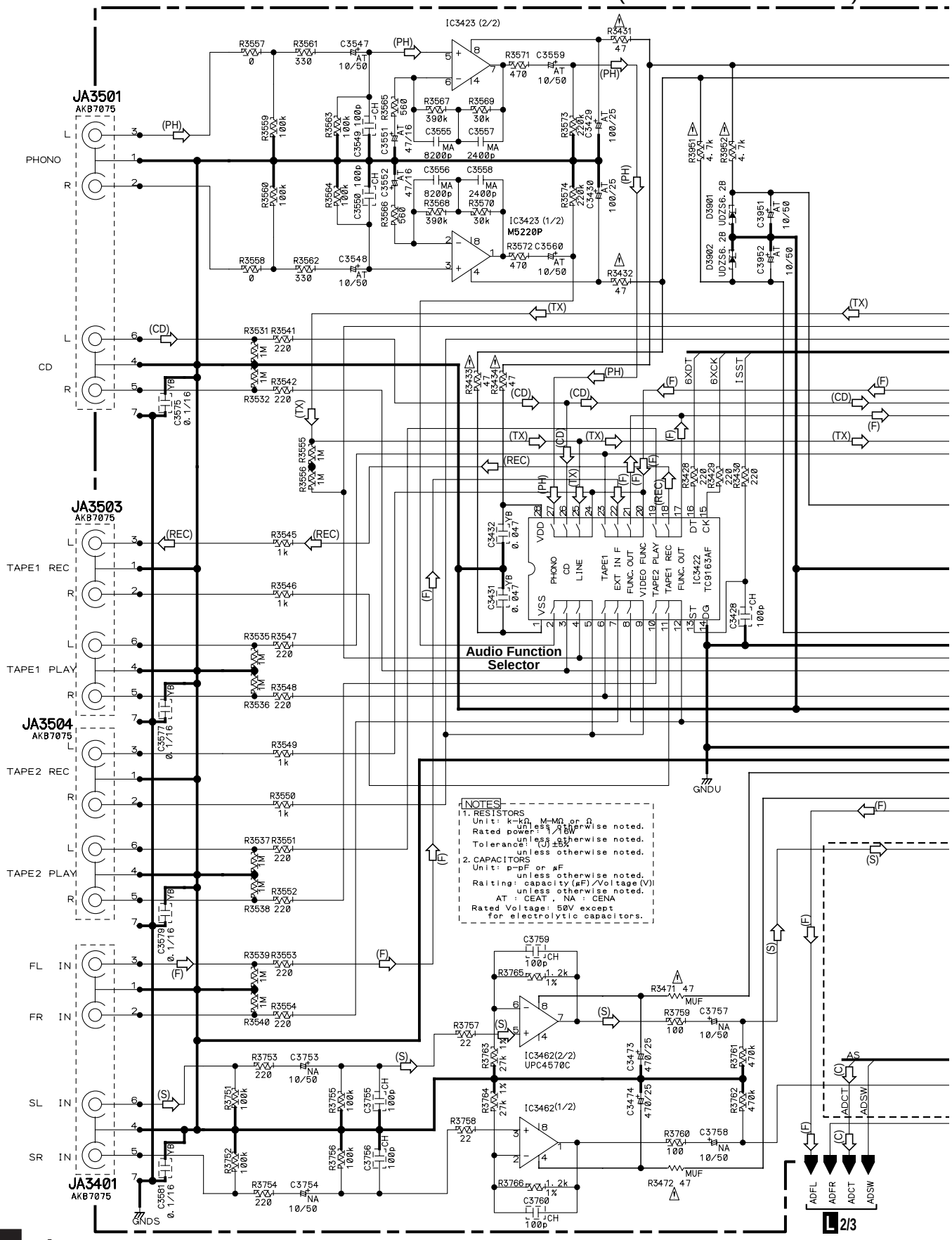

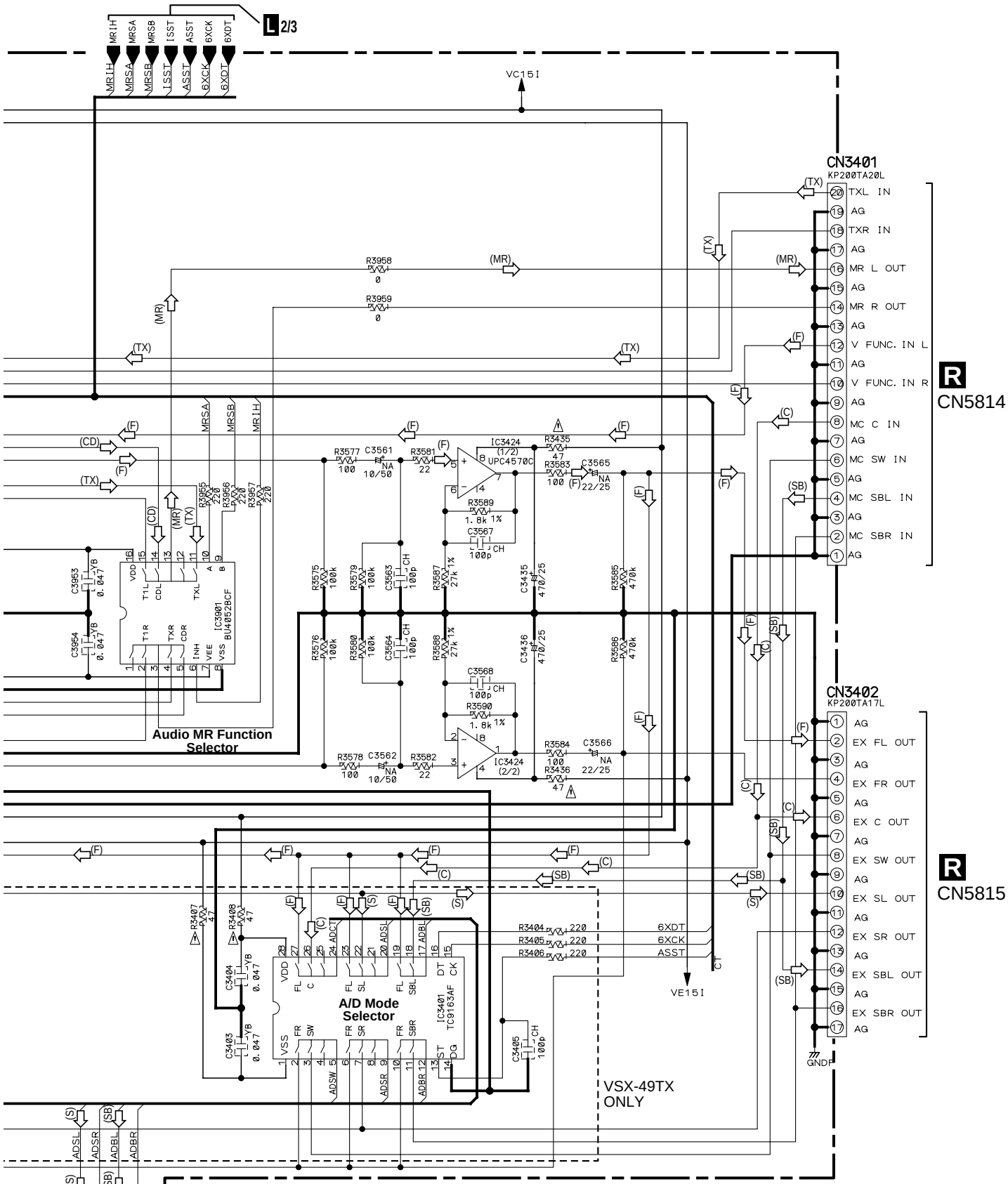

(PH) : AUDIO SIGNAL ROUTE (PHONE)
(FL) : AUDIO SIGNAL ROUTE (FL)
(SB) : AUDIO SIGNAL ROUTE (SBL)
(CD) : AUDIO SIGNAL ROUTE (CD)
(C) : AUDIO SIGNAL ROUTE (C)
(MR) : AUDIO SIGNAL ROUTE (MR)
(TX) : AUDIO SIGNAL ROUTE (TUNER)
(S) : AUDIO SIGNAL ROUTE (SL)
(REC) : AUDIO SIGNAL ROUTE (REC)

3.11 ANALOG IN & A/D ASSY (2/3)

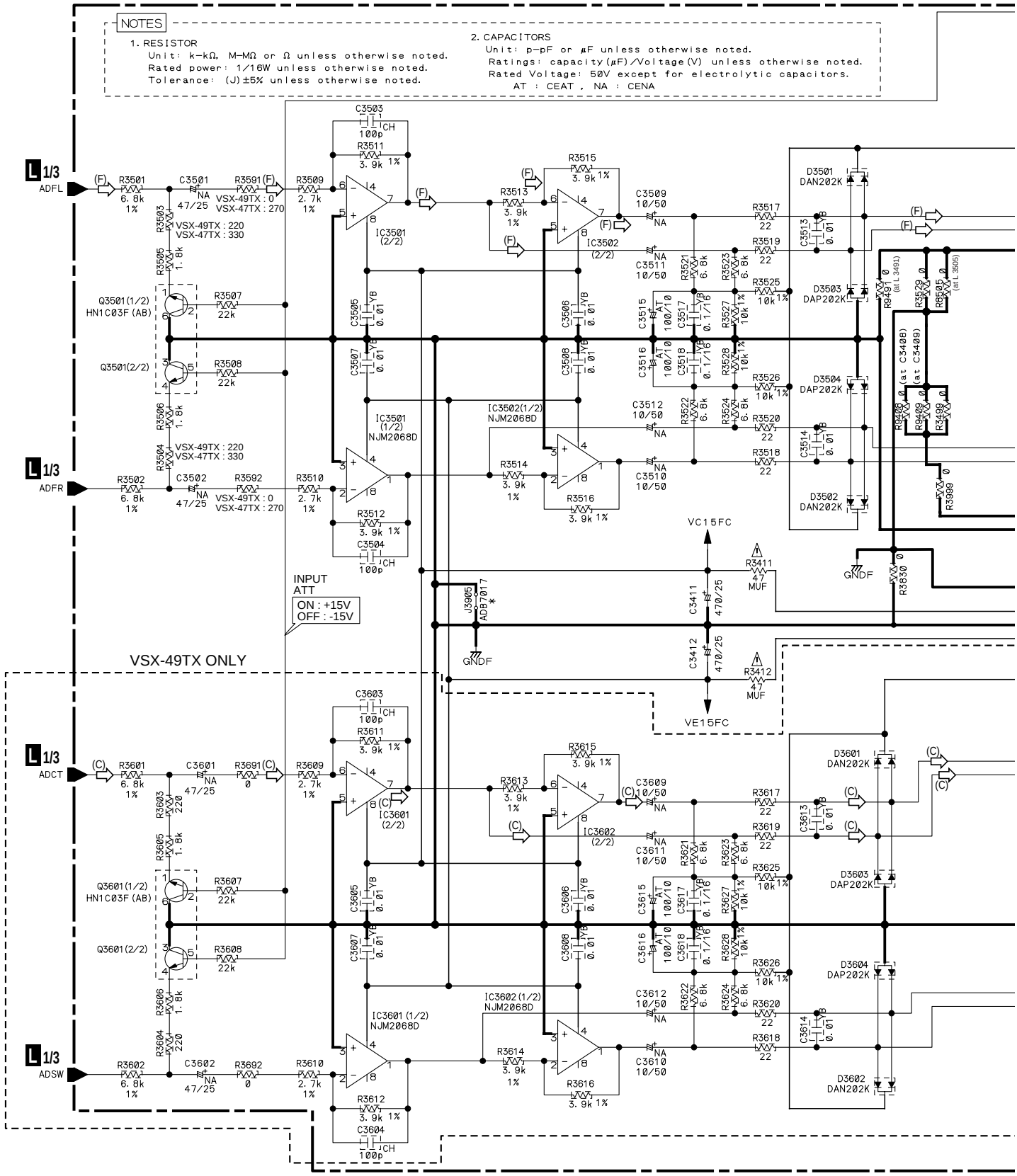

: The power supply is shown with the marked box.

(F) : AUDIO SIGNAL ROUTE (F)
(S) : AUDIO SIGNAL ROUTE (SL)
(C) : AUDIO SIGNAL ROUTE (C)
(SB) : AUDIO SIGNAL ROUTE (SBL)

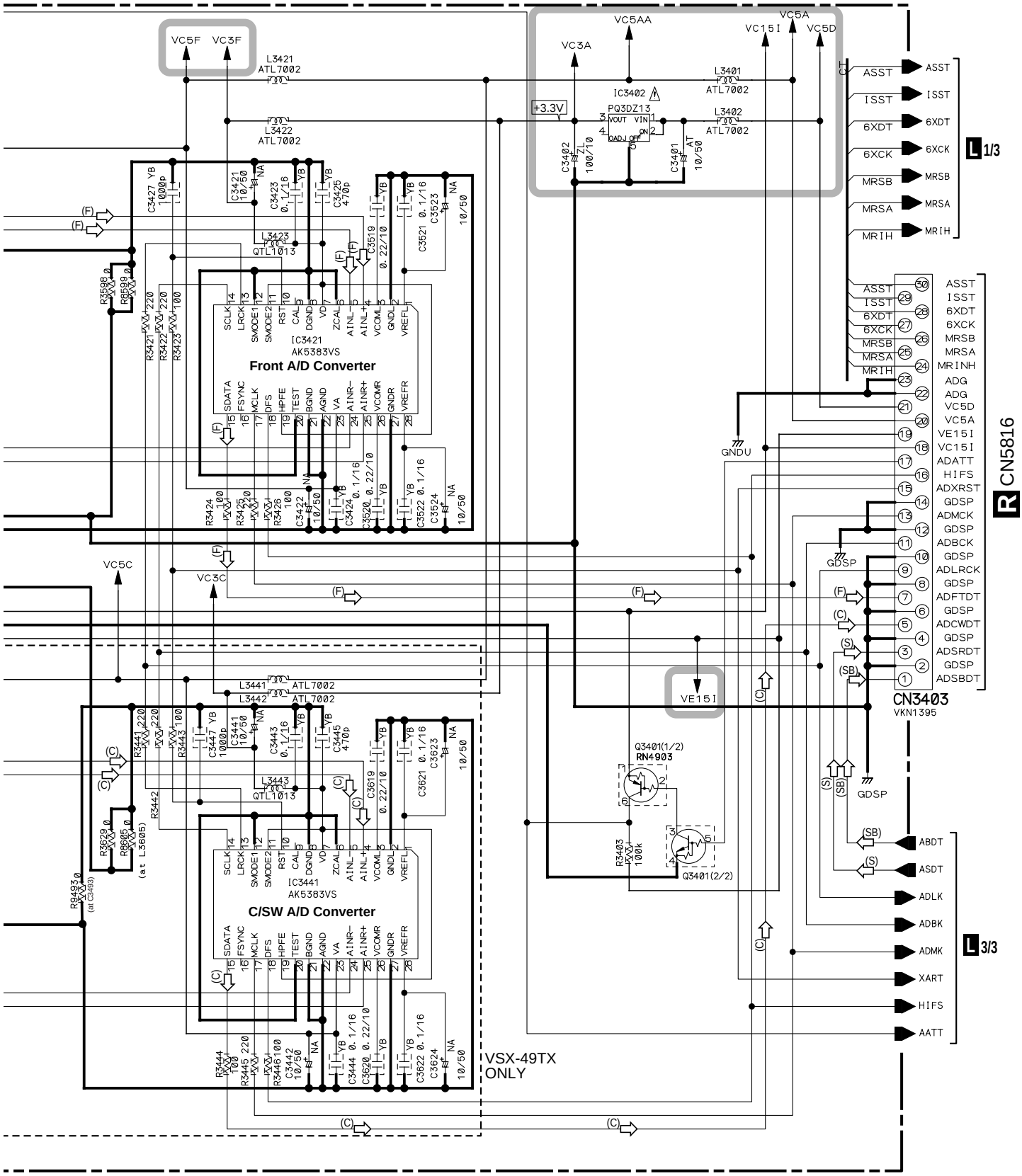

L 2/3

3.12 ANALOG IN & A/D ASSY (3/3) (VSX-49TX ONLY)

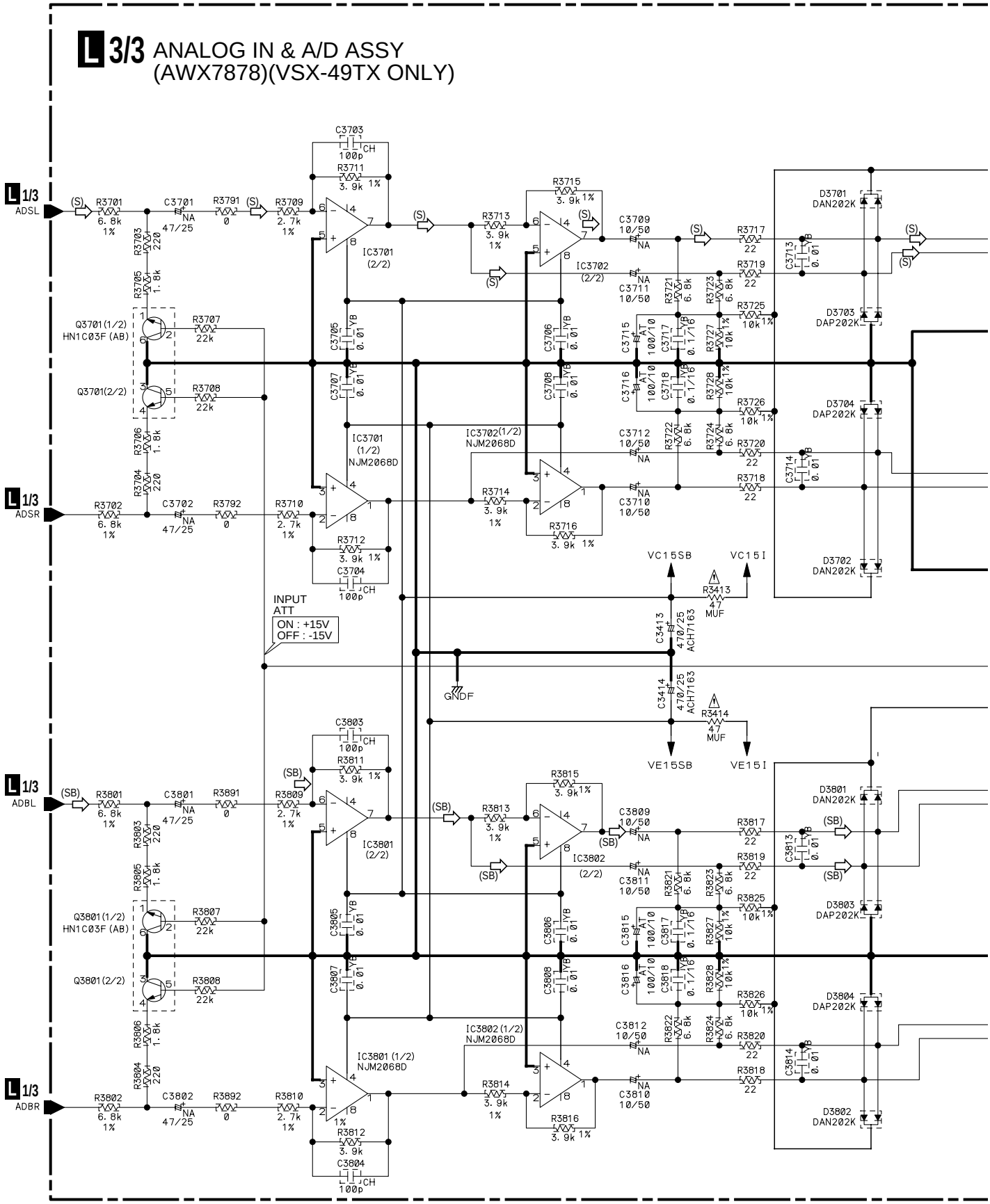

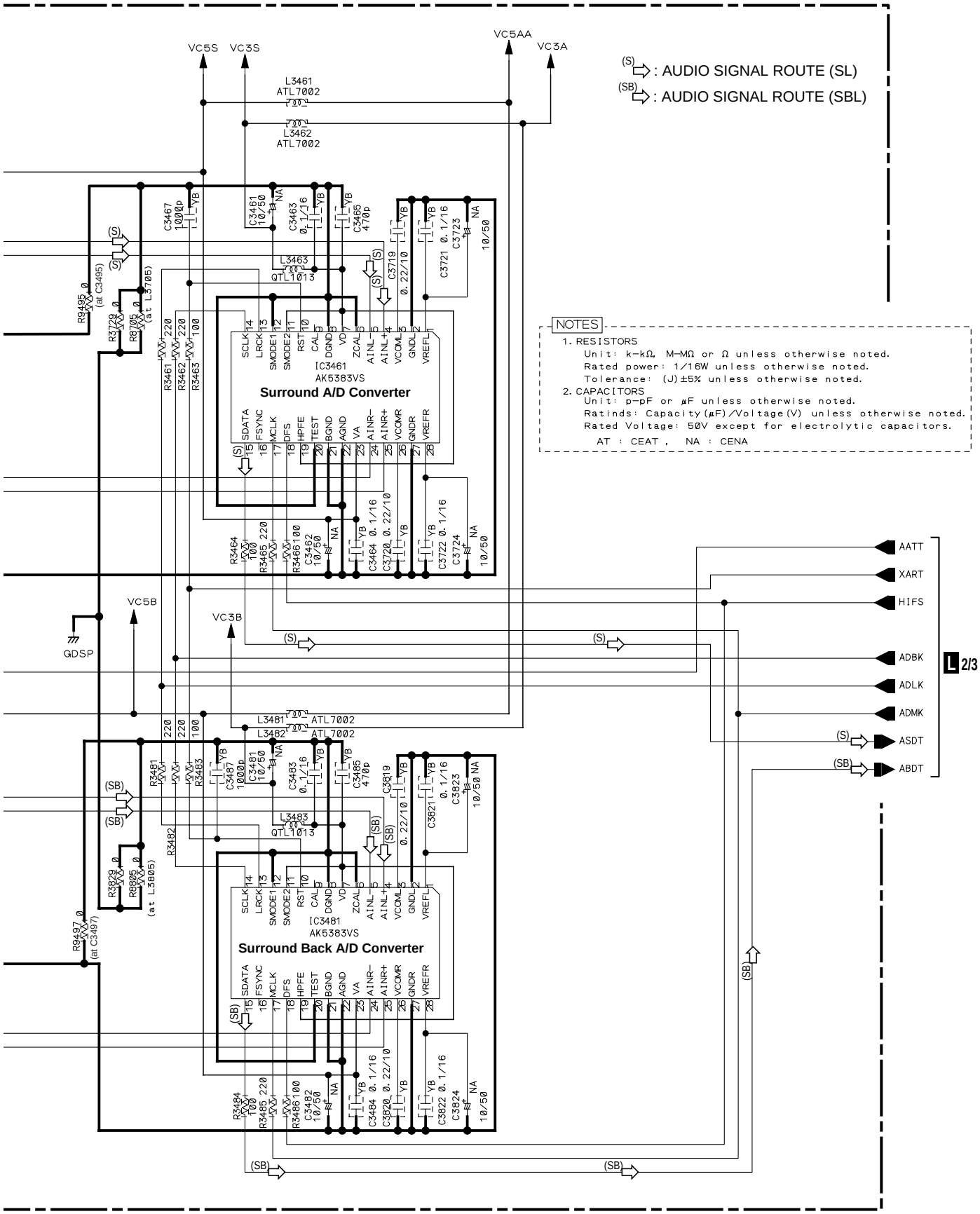
(S) : AUDIO SIGNAL ROUTE (SL)
(SB) : AUDIO SIGNAL ROUTE (SBL)
VC5S
VC3S
VC5AA
VC3A
L3461 ATL7002
L3462 ATL7002
L3463 QTL1013
IC3461 AK5383VS
Surround A/D Converter
VC5B
VC3B
GDSP
L3481 ATL7002
L3482 ATL7002
L3483 QTL1013
IC3481 AK5383VS
Surround Back A/D Converter
AATT
XART
HIFS
ADBK
ADLK
ADMK
ASDT
ABDT
L 2/3
NOTES
1. RESISTORS
Unit: k-kΩ, M-MΩ or Ω unless otherwise noted.
Rated power: 1/16W unless otherwise noted.
Tolerance: (J)±5% unless otherwise noted.
2. CAPACITORS
Unit: p-pF or μF unless otherwise noted.
Ratinds: Capacity(μF)/Voltage(V) unless otherwise noted.
Rated Voltage: 50V except for electrolytic capacitors.
AT : CEAT , NA : CENA

3.13 DISPLAY, INPUT SEL, MULTI JOG and VOL ASSYS

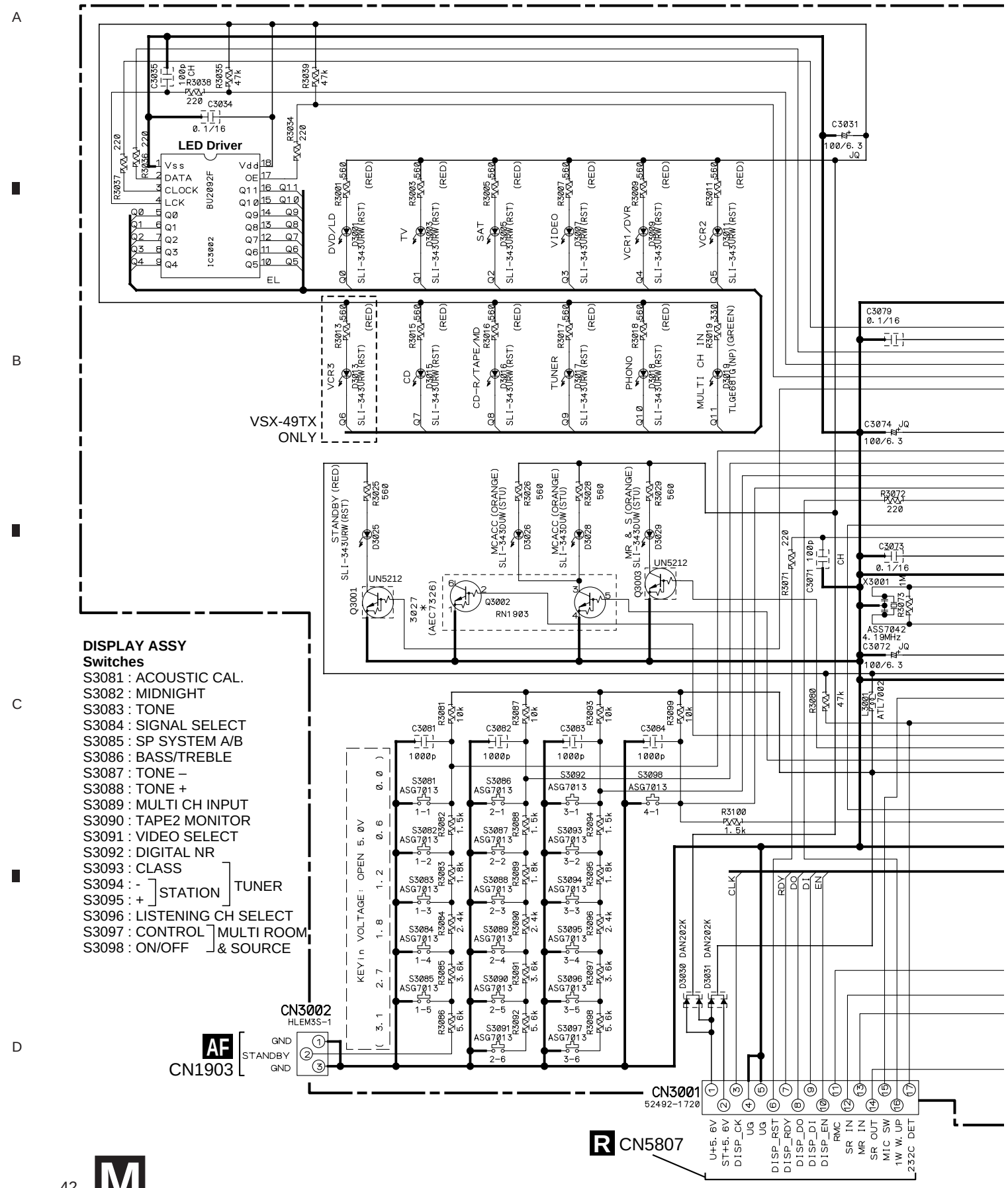

DISPLAY ASSY
Switches

S3081 : ACOUSTIC CAL.
S3082 : MIDNIGHT
S3083 : TONE
S3084 : SIGNAL SELECT
S3085 : SP SYSTEM A/B
S3086 : BASS/TREBLE
S3087 : TONE –
S3088 : TONE +
S3089 : MULTI CH INPUT
S3090 : TAPE2 MONITOR
S3091 : VIDEO SELECT
S3092 : DIGITAL NR
S3093 : CLASS
S3094 : - (STATION) TUNER
S3095 : + (STATION) TUNER
S3096 : LISTENING CH SELECT
S3097 : CONTROL (MULTI ROOM & SOURCE)
S3098 : ON/OFF (MULTI ROOM & SOURCE)

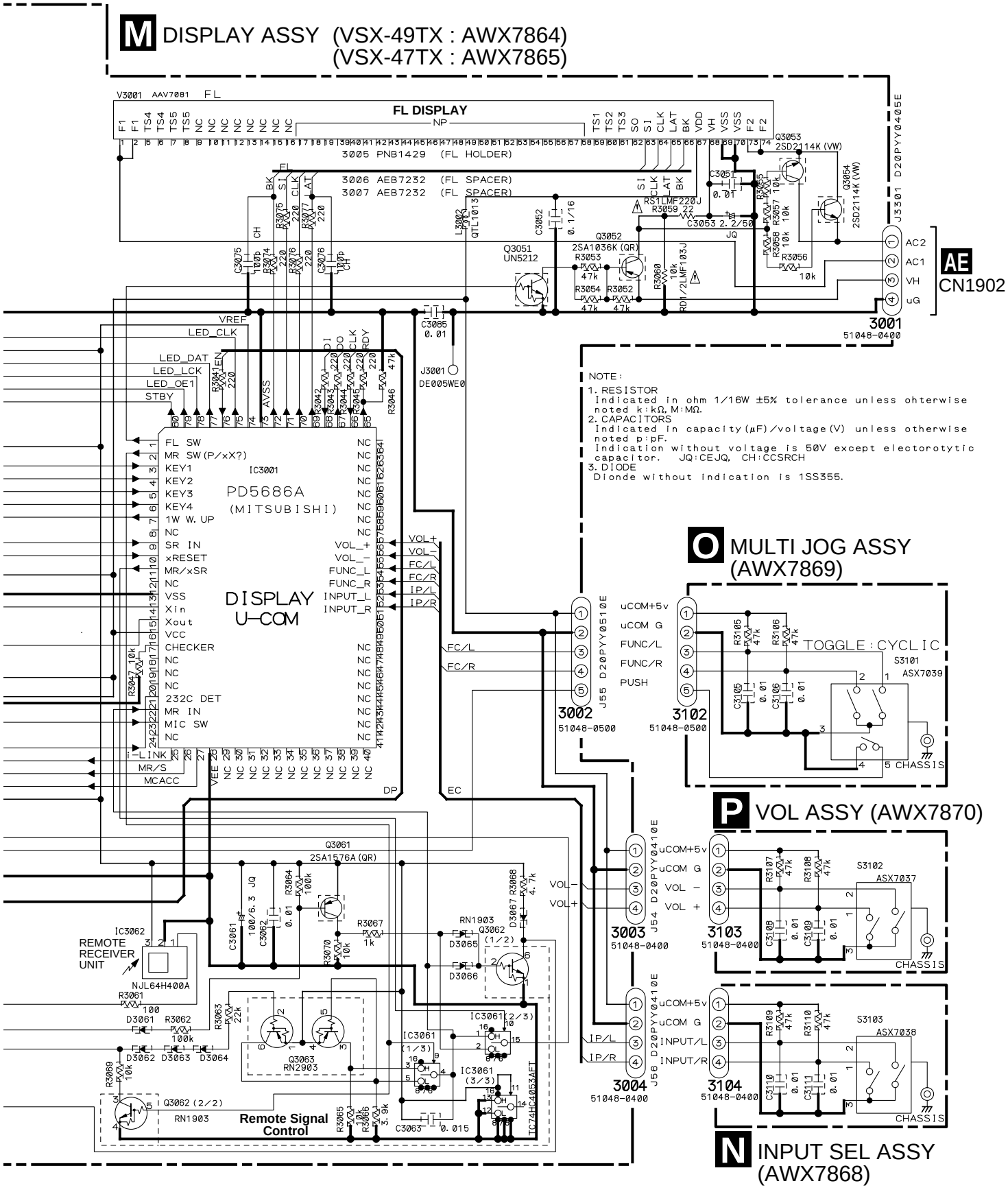
M DISPLAY ASSY (VSX-49TX : AWX7864)
(VSX-47TX : AWX7865)
FL DISPLAY
3005 PNB1429 (FL HOLDER)
3006 AEB7232 (FL SPACER)
3007 AEB7232 (FL SPACER)
AE
CN1902
3001
51048-0400
NOTE:
1. RESISTOR
Indicated in ohm 1/16W ±5% tolerance unless ohterwise noted k:kΩ, M:MΩ.
2. CAPACITORS
Indicated in capacity(μF)/voltage(V) unless otherwise noted p:pF.
Indication without voltage is 50V except electorotytic capacitor. JQ:CEJQ, CH:CCSRCH
3. DIODE
Diode without indication is 1SS355.
IC3001
PD5686A
(MITSUBISHI)
DISPLAY
U-COM
O MULTI JOG ASSY
(AWX7869)
TOGGLE : CYCLIC
S3101
ASX7039
3002
51048-0500
3102
51048-0500
P VOL ASSY (AWX7870)
S3102
ASX7037
3003
51048-0400
3103
51048-0400
S3103
ASX7038
3004
51048-0400
3104
51048-0400
N INPUT SEL ASSY
(AWX7868)
REMOTE
RECEIVER
UNIT
NJL64H400A
Remote Signal
Control
M N O P

3.14 VR & PRE OUT ASSY (1/3)

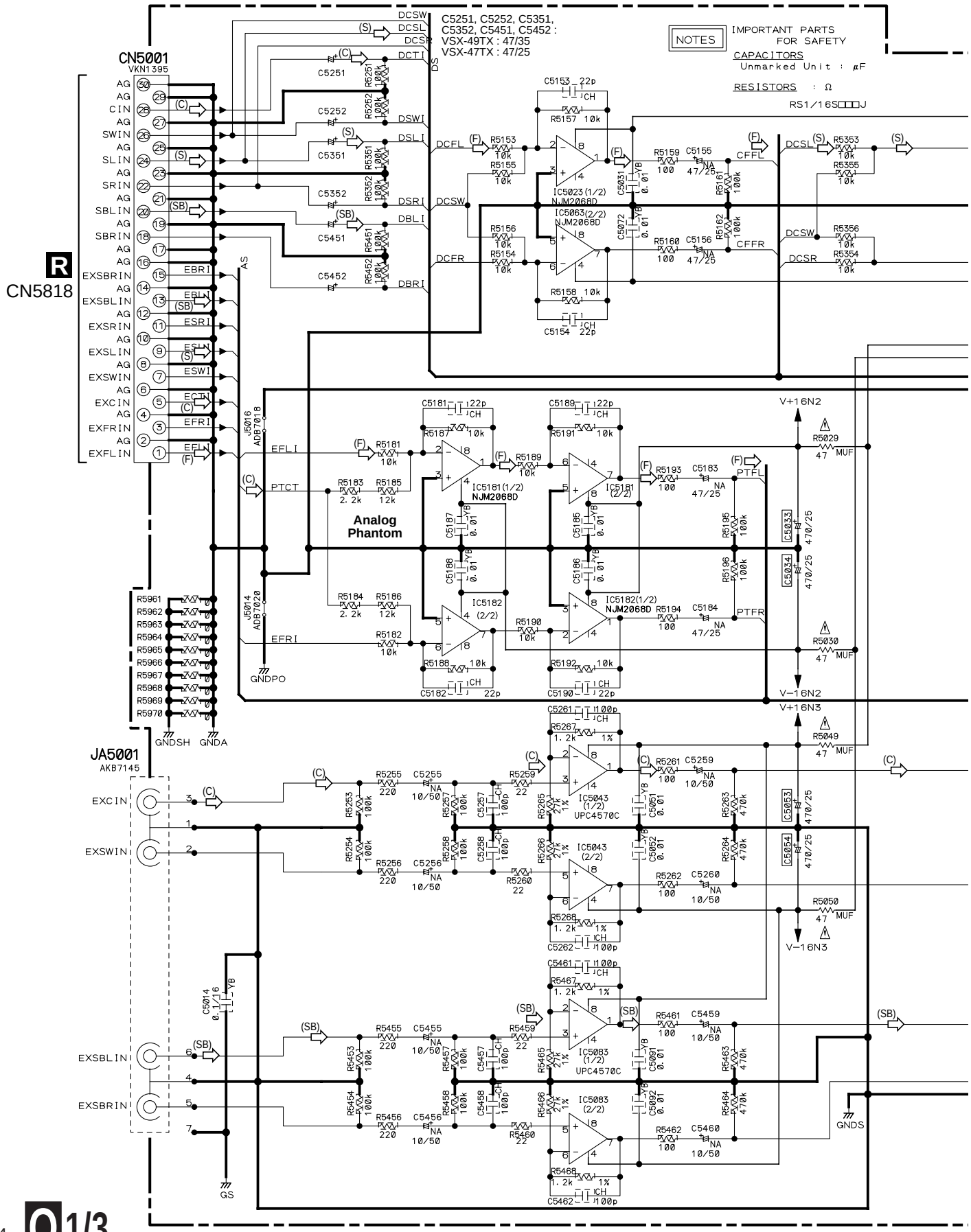

: The power supply is shown with the marked box.

Q 1/3 VR & PRE OUT ASSY (VSX-49TX : AWX7888) (VSX-47TX : AWX7917)

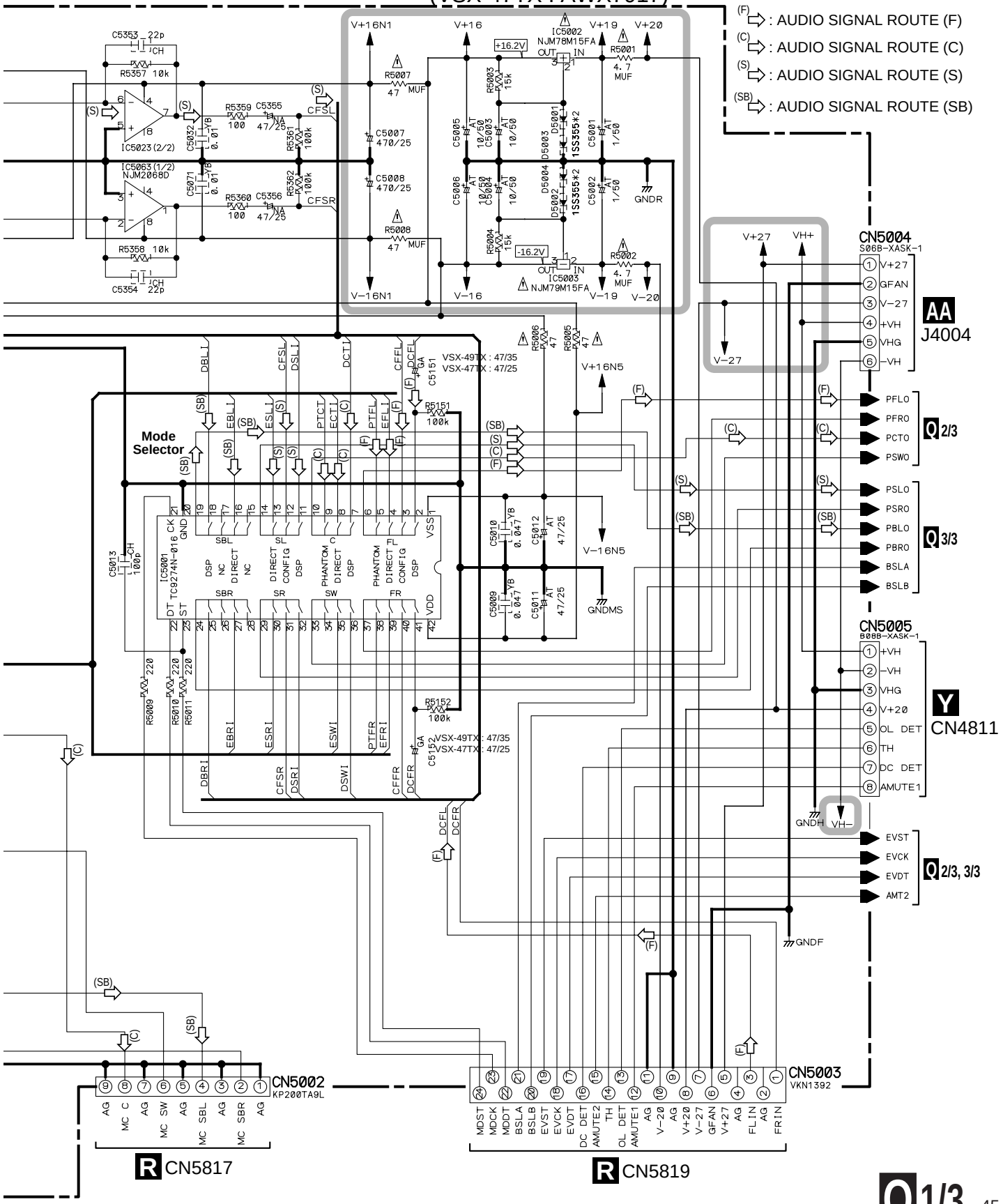

3.15 VR & PRE OUT ASSY (2/3)

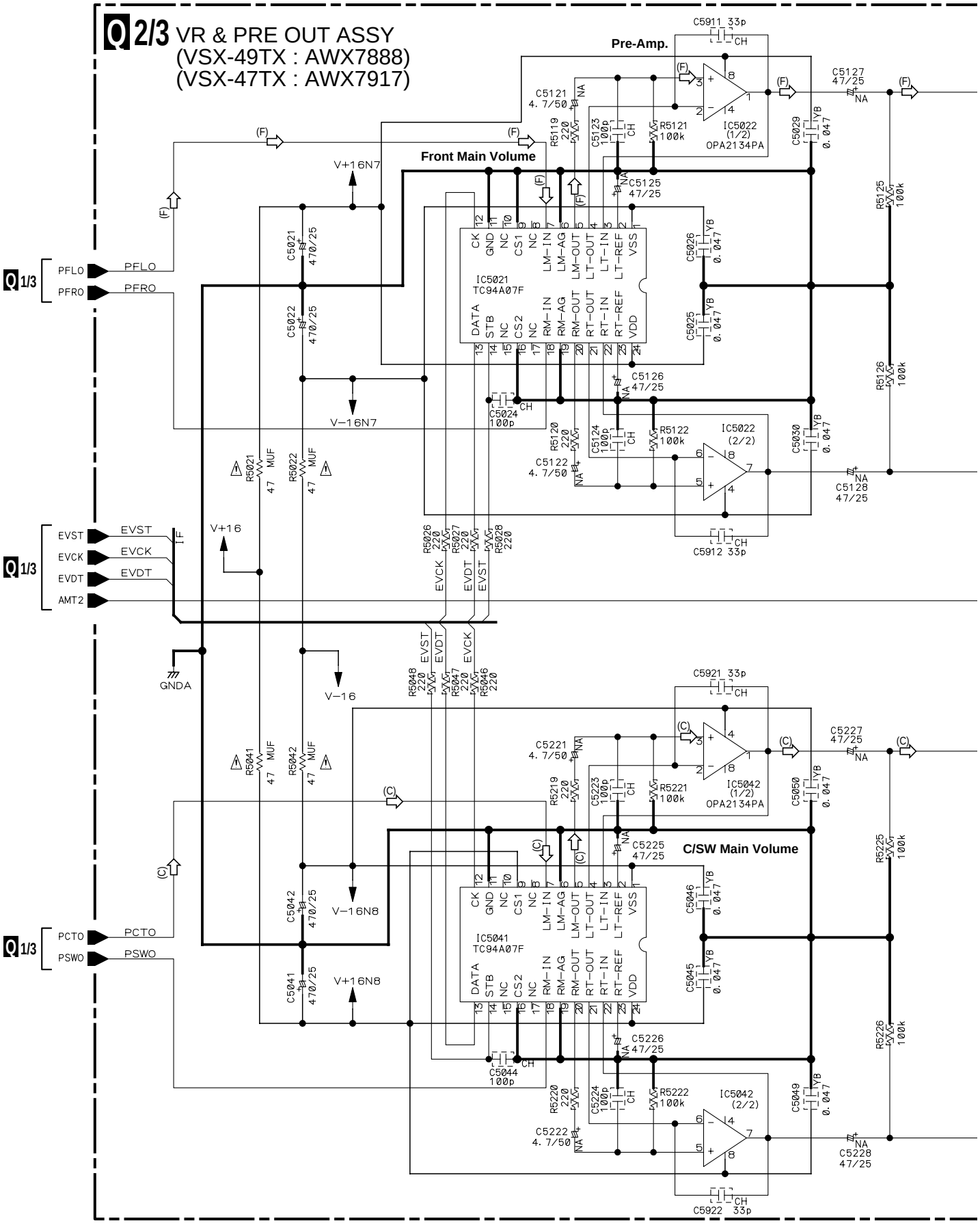

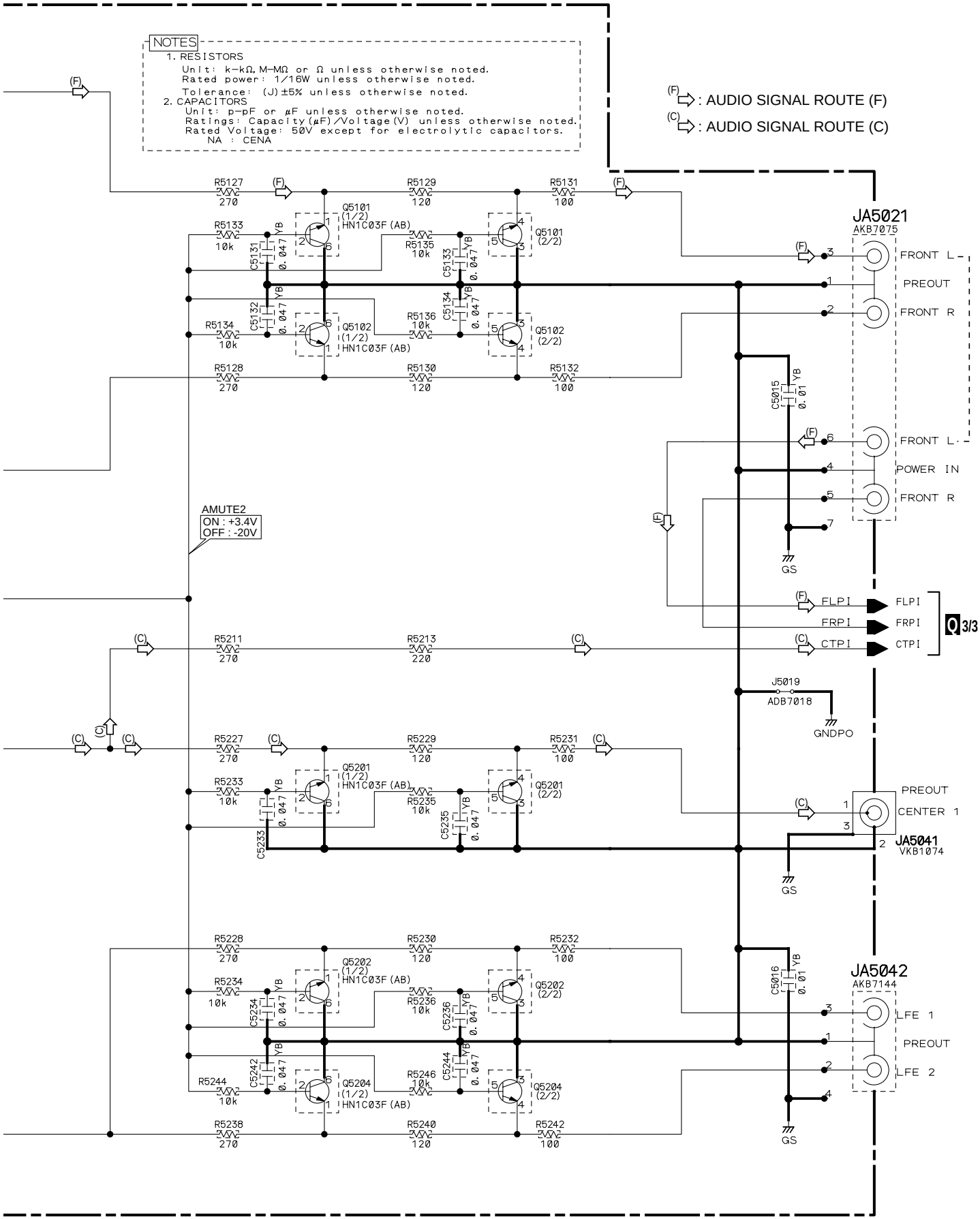
NOTES
1. RESISTORS
Unit: k-kΩ, M-MΩ or Ω unless otherwise noted.
Rated power: 1/16W unless otherwise noted.
Tolerance: (J)±5% unless otherwise noted.
2. CAPACITORS
Unit: p-pF or μF unless otherwise noted.
Ratings: Capacity(μF)/Voltage(V) unless otherwise noted.
Rated Voltage: 50V except for electrolytic capacitors.
NA : CENA
(F) : AUDIO SIGNAL ROUTE (F)
(C) : AUDIO SIGNAL ROUTE (C)
JA5021
AKB7075
FRONT L
PREOUT
FRONT R
FRONT L
POWER IN
FRONT R
AMUTE2
ON : +3.4V
OFF : -20V
FLPI
FRPI
CTPI
Q 3/3
J5019
ADB7018
GNDPO
PREOUT
CENTER 1
JA5041
VKB1074
JA5042
AKB7144
LFE 1
PREOUT
LFE 2
GS
Q5101 (1/2) HN1C03F (AB)
Q5101 (2/2)
Q5102 (1/2) HN1C03F (AB)
Q5102 (2/2)
Q5201 (1/2) HN1C03F (AB)
Q5201 (2/2)
Q5202 (1/2) HN1C03F (AB)
Q5202 (2/2)
Q5204 (1/2) HN1C03F (AB)
Q5204 (2/2)
R5127 270
R5129 120
R5131 100
R5133 10k
R5135 10k
R5134 10k
R5136 10k
R5128 270
R5130 120
R5132 100
C5131 0.047 YB
C5132 0.047 YB
C5133 0.047 YB
C5134 0.047 YB
C5015 0.01 YB
R5211 270
R5213 220
R5227 270
R5229 120
R5231 100
R5233 10k
R5235 10k
C5233 0.047 YB
C5235 0.047 YB
R5228 270
R5230 120
R5232 100
R5234 10k
R5236 10k
C5234 0.047 YB
C5236 0.047 YB
C5242 0.047 YB
C5244 0.047 YB
C5016 0.01 YB
R5244 10k
R5246 10k
R5238 270
R5240 120
R5242 100

3.16 VR & PRE OUT ASSY (3/3)

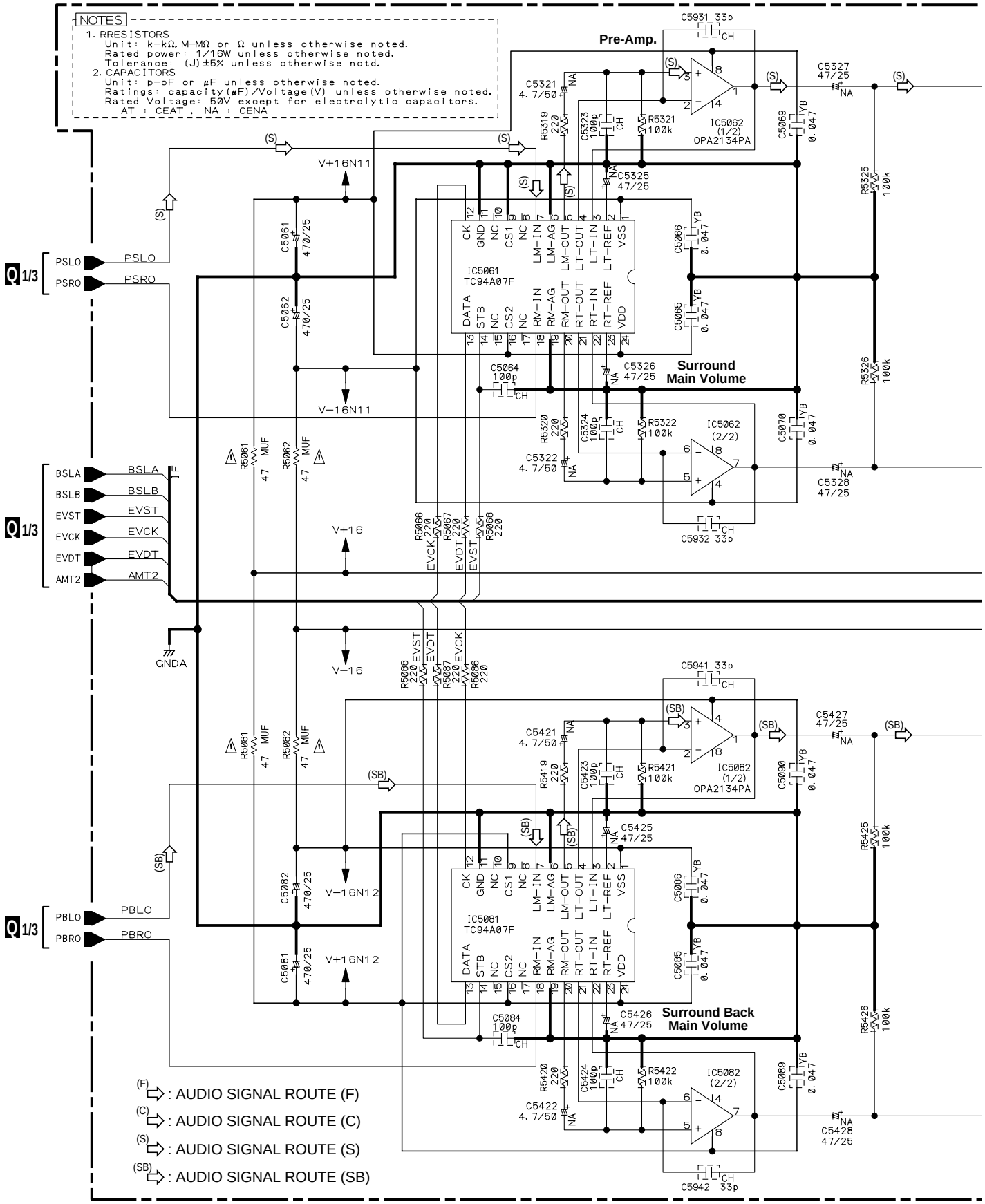

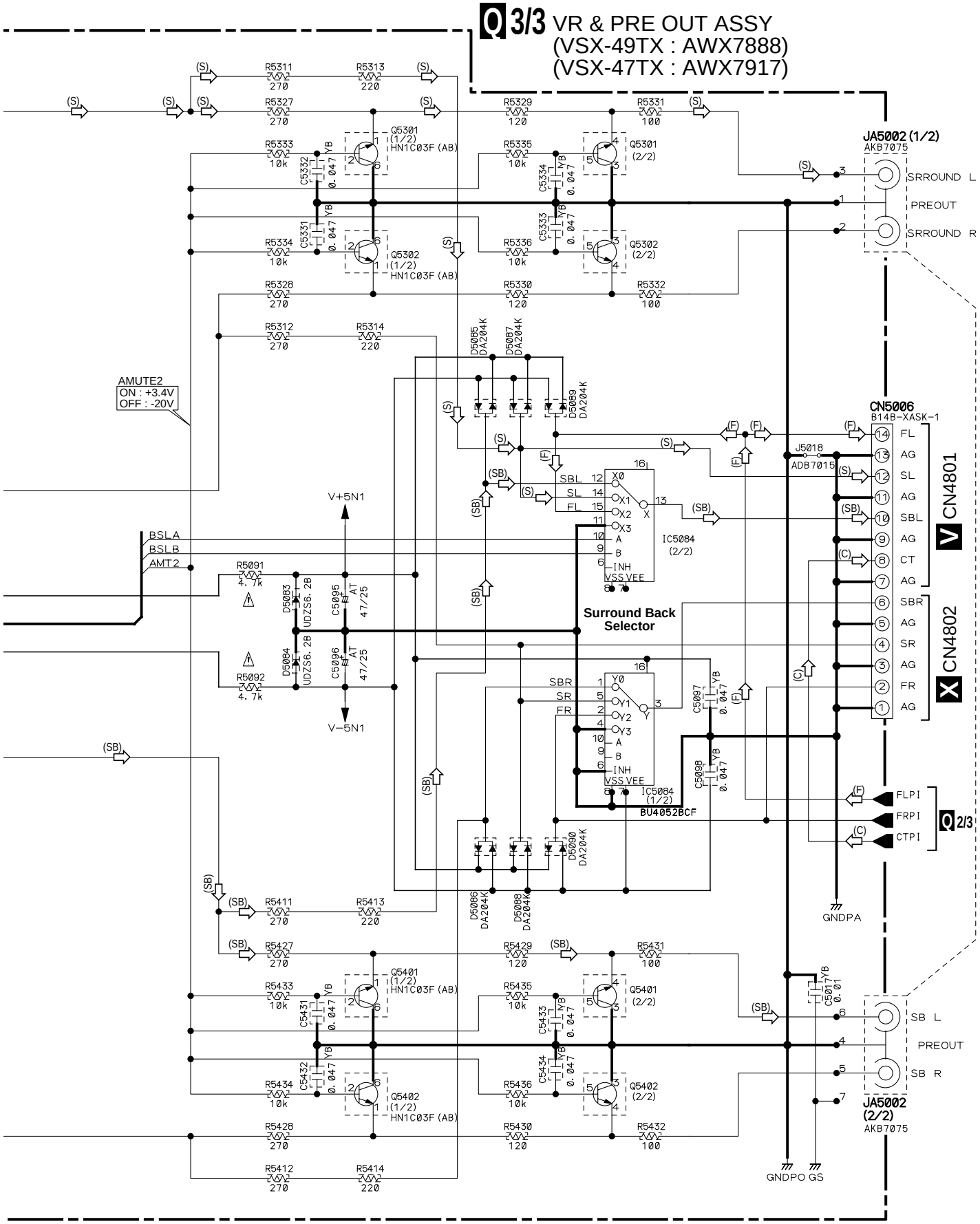
Q 3/3 VR & PRE OUT ASSY
(VSX-49TX : AWX7888)
(VSX-47TX : AWX7917)
JA5002 (1/2)
AKB7075
SRROUND L
PREOUT
SRROUND R
CN5006
B14B-XASK-1
CN4801
CN4802
J5018
ADB7015
AMUTE2
ON : +3.4V
OFF : -20V
V+5N1
V-5N1
BSLA
BSLB
AMT2
Surround Back Selector
IC5084 (2/2)
IC5084 (1/2)
BU4052BCF
FLPI
FRPI
CTPI
Q 2/3
GNDPA
GNDPO GS
SB L
PREOUT
SB R
JA5002 (2/2)
AKB7075

3.17 MOTHER ASSY

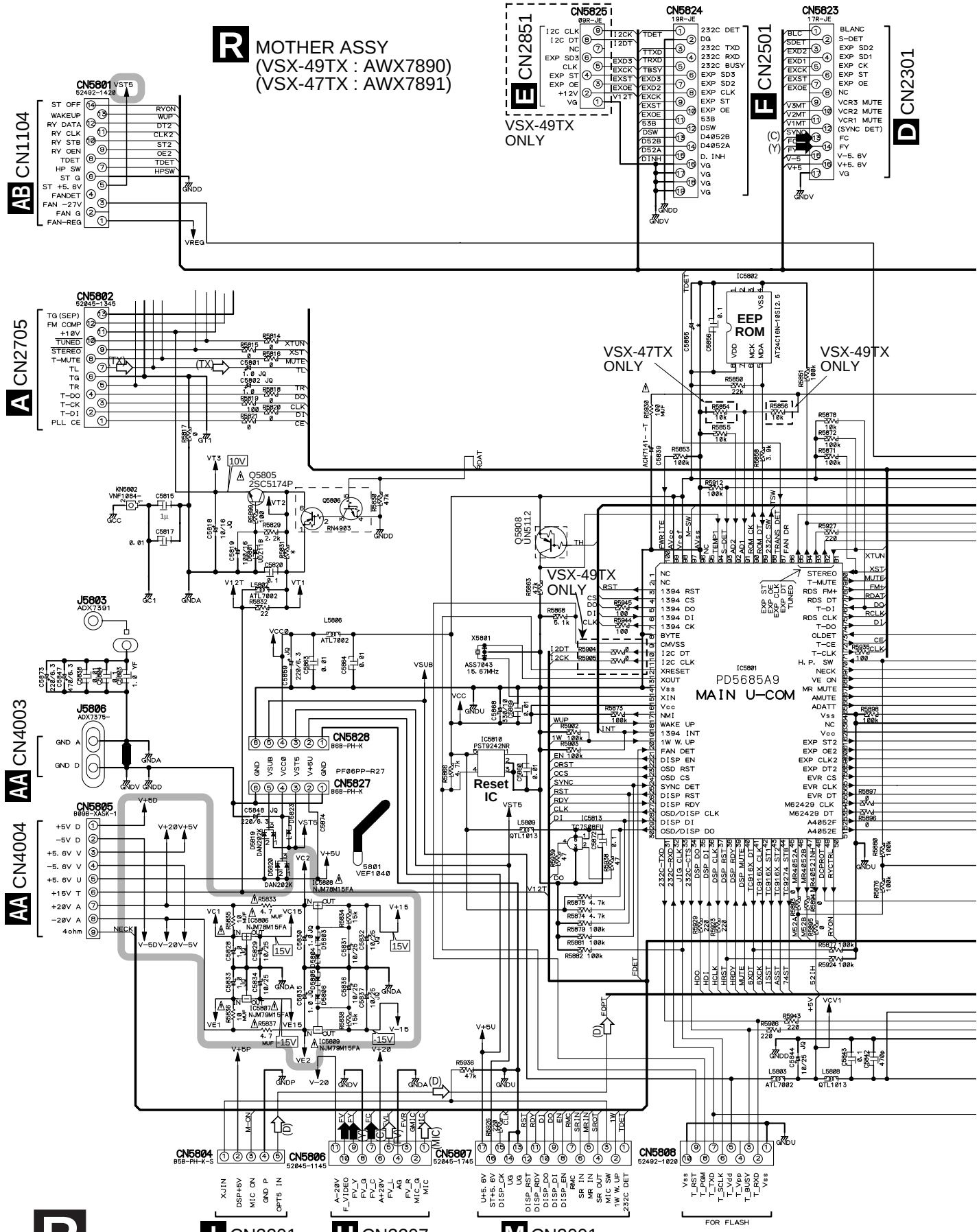

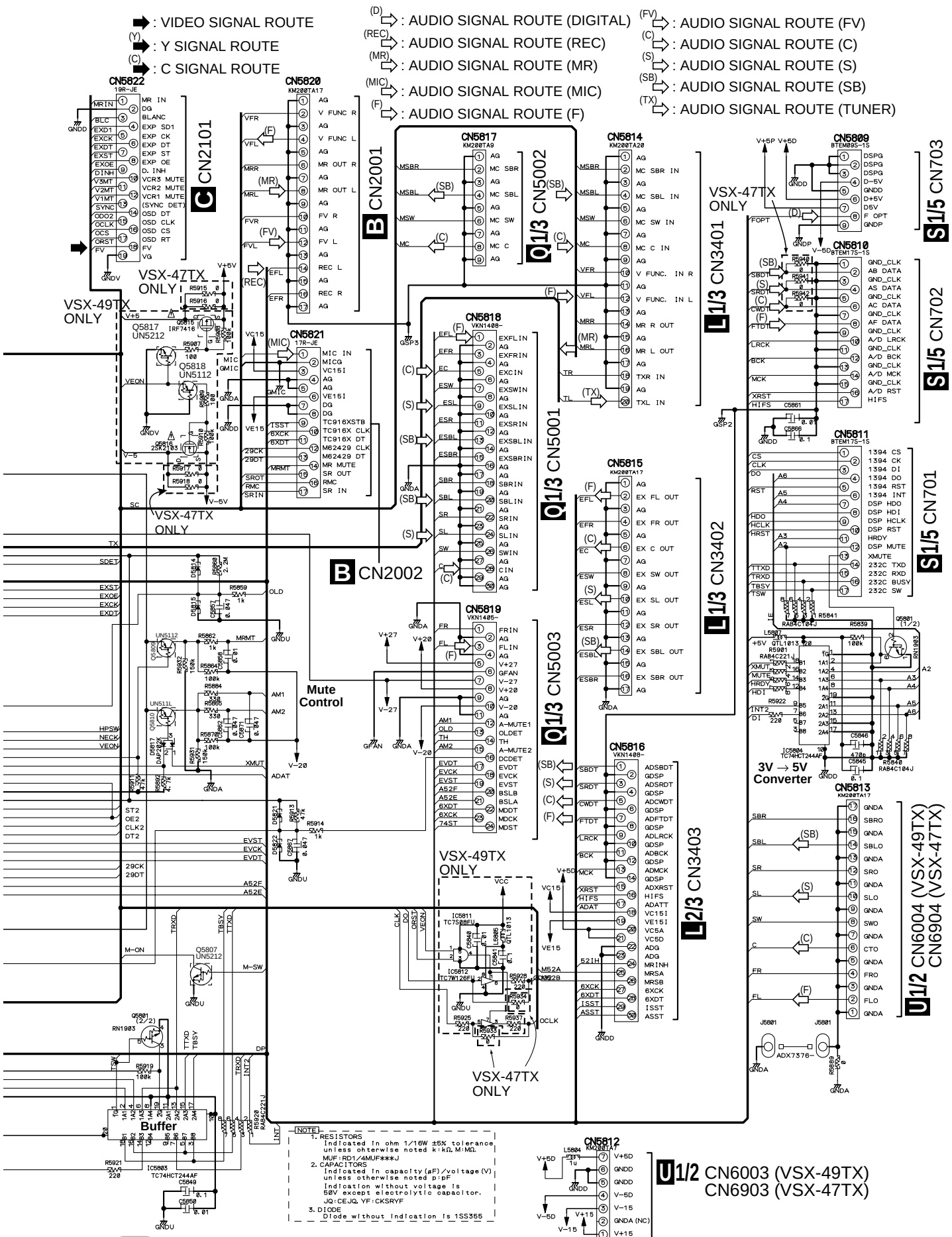
: VIDEO SIGNAL ROUTE
(Y) : Y SIGNAL ROUTE
(C) : C SIGNAL ROUTE
(D) : AUDIO SIGNAL ROUTE (DIGITAL)
(REC) : AUDIO SIGNAL ROUTE (REC)
(MR) : AUDIO SIGNAL ROUTE (MR)
(MIC) : AUDIO SIGNAL ROUTE (MIC)
(F) : AUDIO SIGNAL ROUTE (F)
(FV) : AUDIO SIGNAL ROUTE (FV)
(C) : AUDIO SIGNAL ROUTE (C)
(S) : AUDIO SIGNAL ROUTE (S)
(SB) : AUDIO SIGNAL ROUTE (SB)
(TX) : AUDIO SIGNAL ROUTE (TUNER)
CN5822
C CN2101
CN5820
B CN2001
CN5817
Q1/3 CN5002
CN5814
L1/3 CN3401
CN5809
S1/5 CN703
CN5810
S1/5 CN702
CN5811
S1/5 CN701
CN5818
Q1/3 CN5001
CN5821
B CN2002
CN5815
L1/3 CN3402
CN5819
Q1/3 CN5003
CN5816
L2/3 CN3403
CN5813
U1/2 CN6004 (VSX-49TX)
CN6904 (VSX-47TX)
CN5812
U1/2 CN6003 (VSX-49TX)
CN6903 (VSX-47TX)
VSX-47TX ONLY
VSX-49TX ONLY
Mute Control
3V → 5V Converter
Buffer
NOTE
1. RESISTORS
Indicated in ohm 1/16W ±5% tolerance unless otherwise noted k:kΩ, M:MΩ.
MUF:RD1/4MUF**J
2. CAPACITORS
Indicated in capacity(μF)/voltage(V) unless otherwise noted p:pF
Indication without voltage is 50V except electrolytic capacitor.
JQ:CEJQ, YF:CKSRYF
3. DIODE
Diode without indication is 1SS355
: The power supply is shown with the marked box.

3.18 DSP ASSY (1/5)

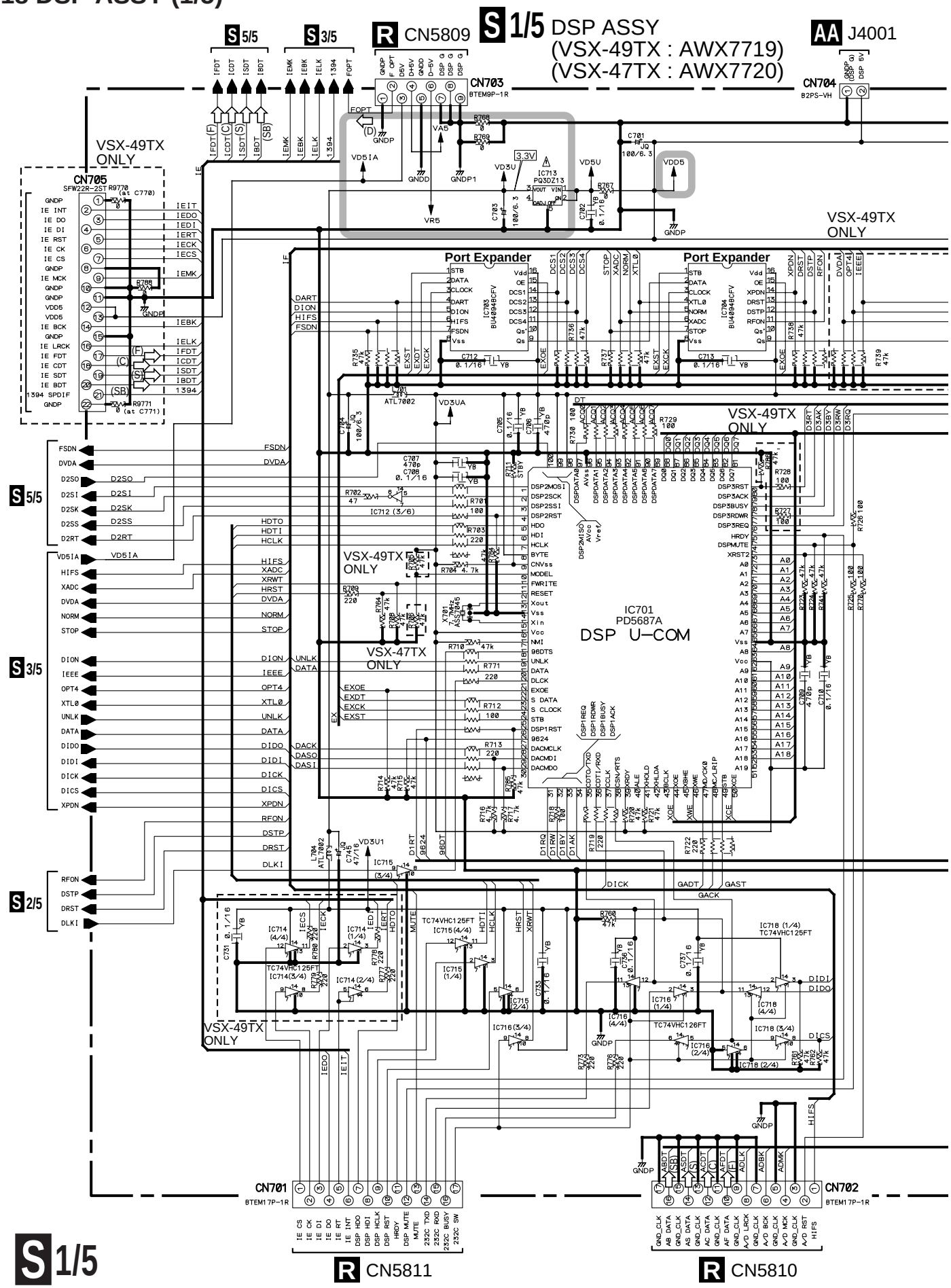

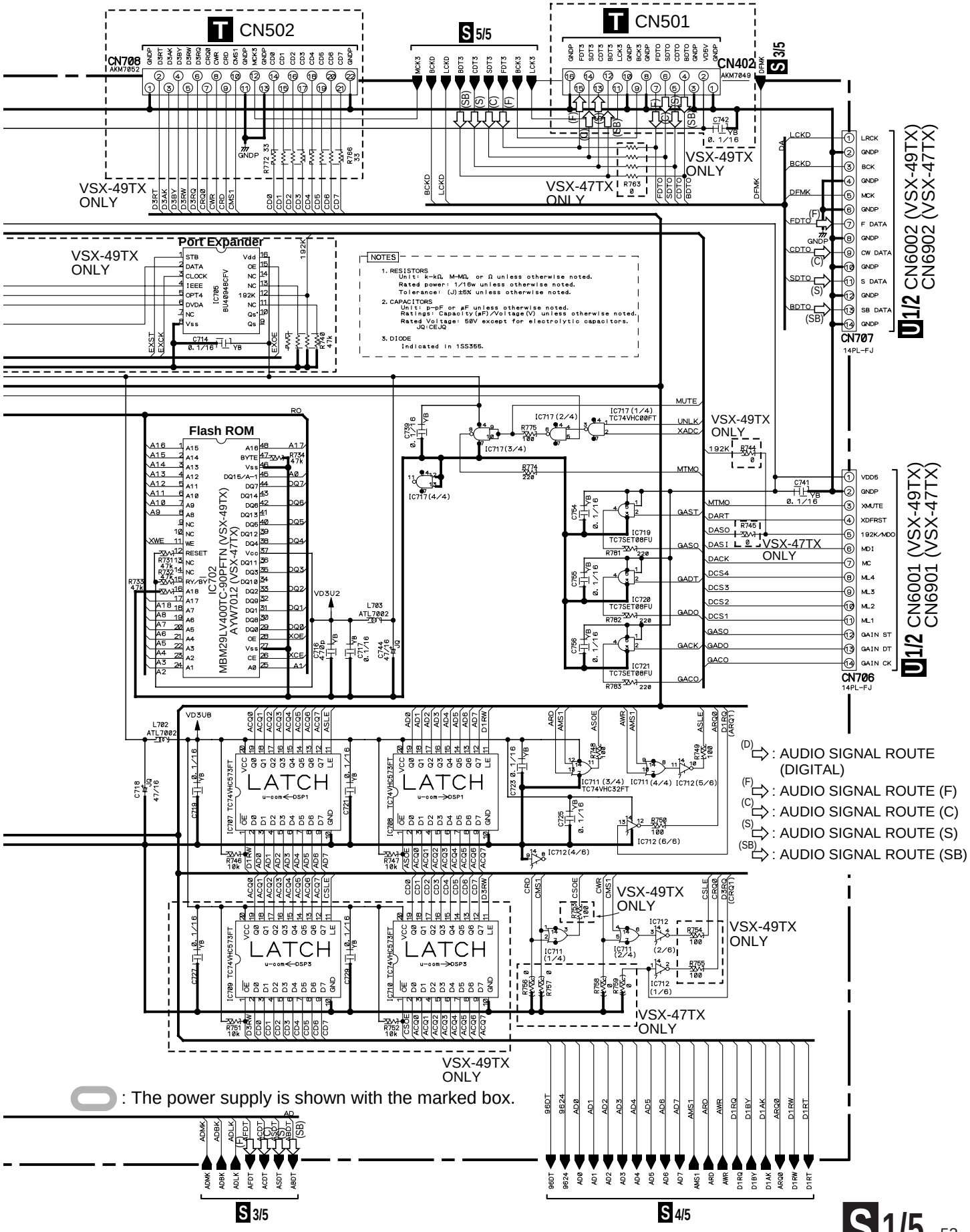
T CN502
CN708
AKM7052
S 5/5
T CN501
CN402
AKM7049
S 3/5
VSX-49TX ONLY
VSX-47TX ONLY
Port Expander
IC705
BU4094BCFV
NOTES
1. RESISTORS
Unit: k-kΩ, M-MΩ, or Ω unless otherwise noted.
Rated power: 1/16w unless otherwise noted.
Tolerance: (J)±5% unless otherwise noted.
2. CAPACITORS
Unit: p-pF or μF unless otherwise noted.
Ratings: Capacity(μF)/Voltage(V) unless otherwise noted.
Rated Voltage: 50V except for electrolytic capacitors.
JQ:CEJQ
3. DIODE
Indicated in 1SS355.
Flash ROM
IC702
MBM29LV400TC-90PFTN (VSX-49TX)
AYW7012 (VSX-47TX)
U 1/2 CN6002 (VSX-49TX)
CN6902 (VSX-47TX)
CN707
14PL-FJ
U 1/2 CN6001 (VSX-49TX)
CN6901 (VSX-47TX)
CN706
14PL-FJ
LATCH
u-com→DSP1
u-com→DSP3
(D) : AUDIO SIGNAL ROUTE (DIGITAL)
(F) : AUDIO SIGNAL ROUTE (F)
(C) : AUDIO SIGNAL ROUTE (C)
(S) : AUDIO SIGNAL ROUTE (S)
(SB) : AUDIO SIGNAL ROUTE (SB)
: The power supply is shown with the marked box.
S 3/5
S 4/5

3.19 DSP ASSY (2/5)

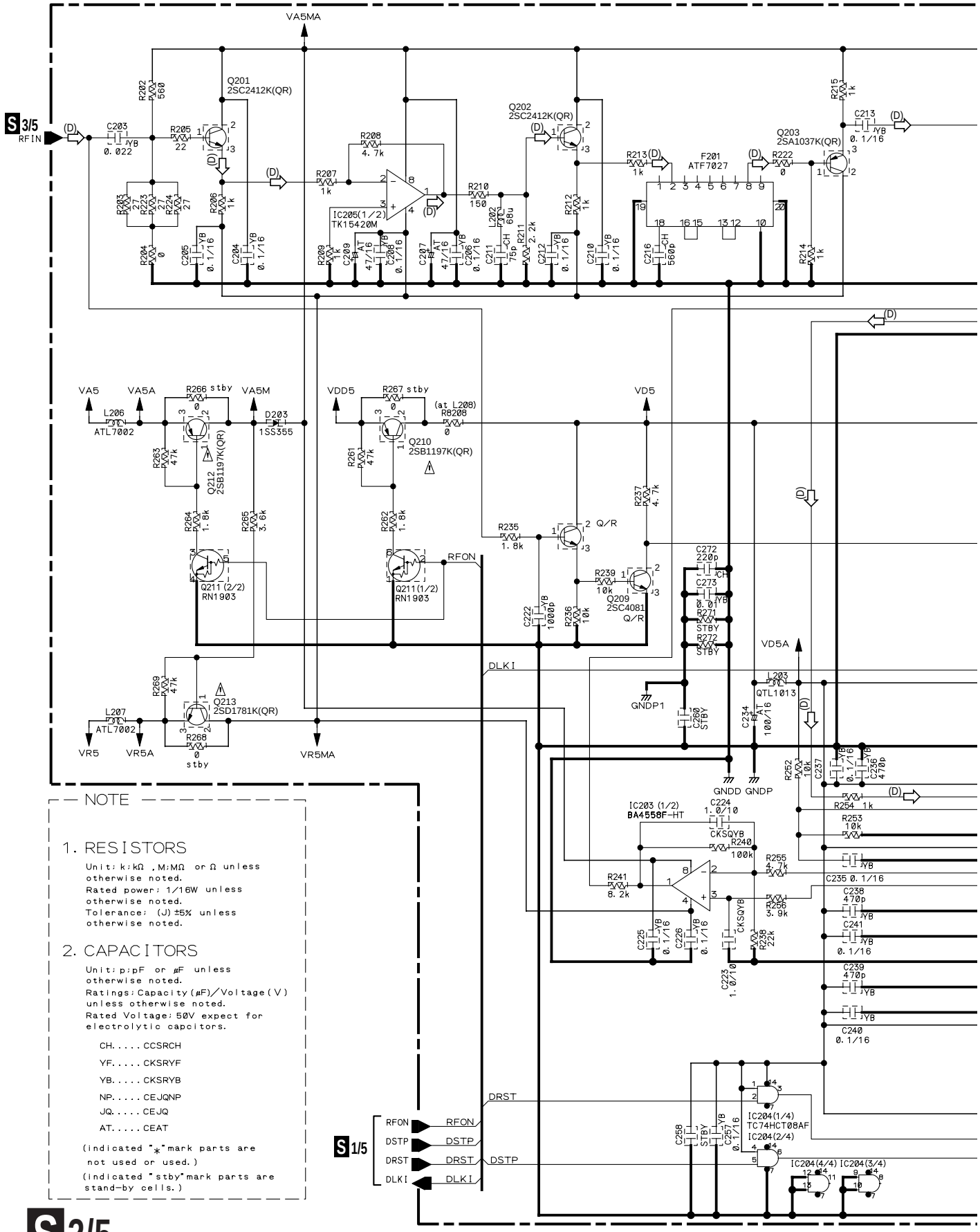

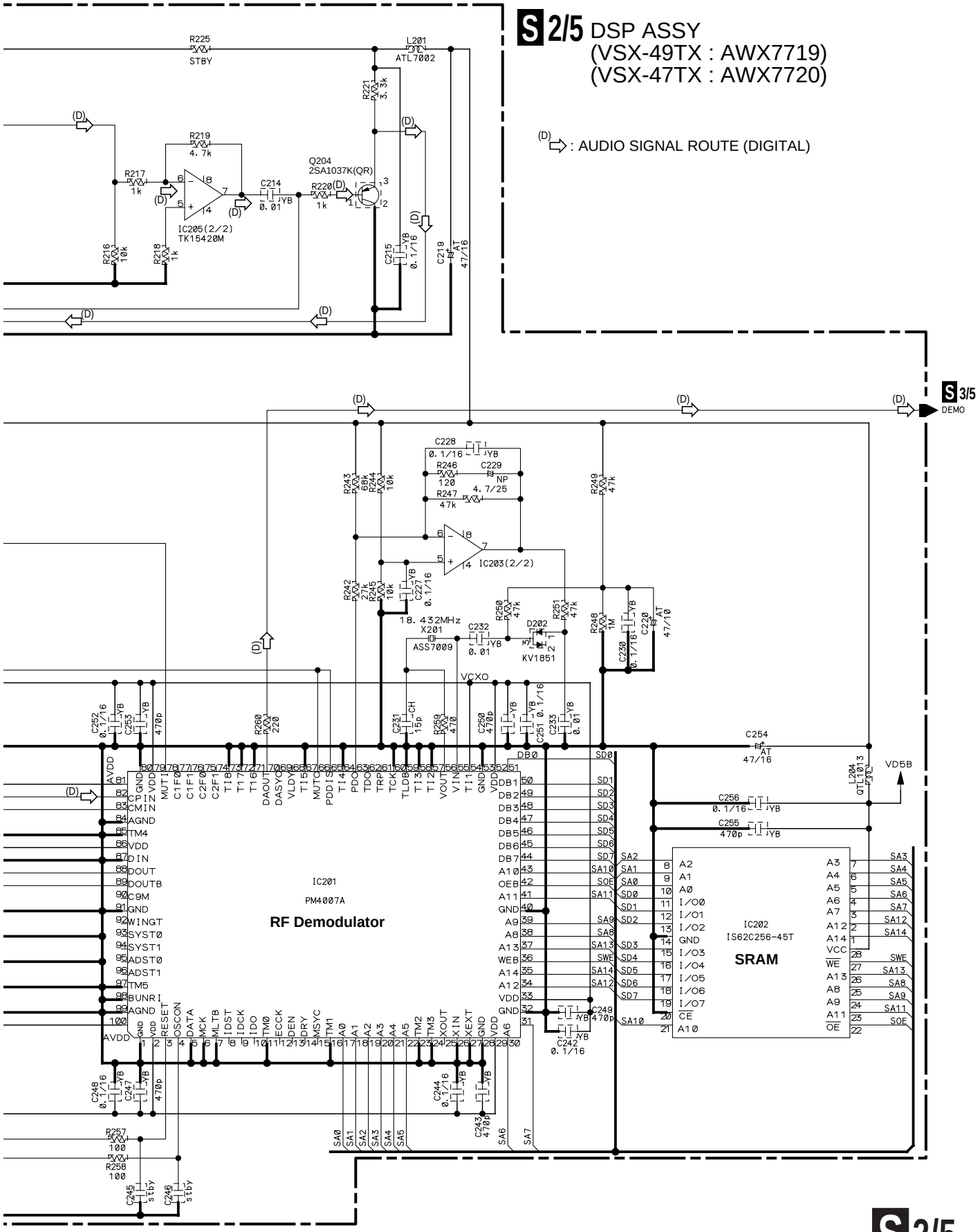
S 2/5 DSP ASSY
(VSX-49TX : AWX7719)
(VSX-47TX : AWX7720)
(D) : AUDIO SIGNAL ROUTE (DIGITAL)
S 3/5
DEMO
IC201
PM4007A
RF Demodulator
IC202
IS62C256-45T
SRAM
IC205(2/2)
TK15420M
IC203(2/2)
Q204
2SA1037K(QR)
18.432MHz
X201
ASS7009
VCXO
D202
KV1851
L201
ATL7002
L204
QTL1013
VD5B
STBY

3.20 DSP ASSY (3/5)

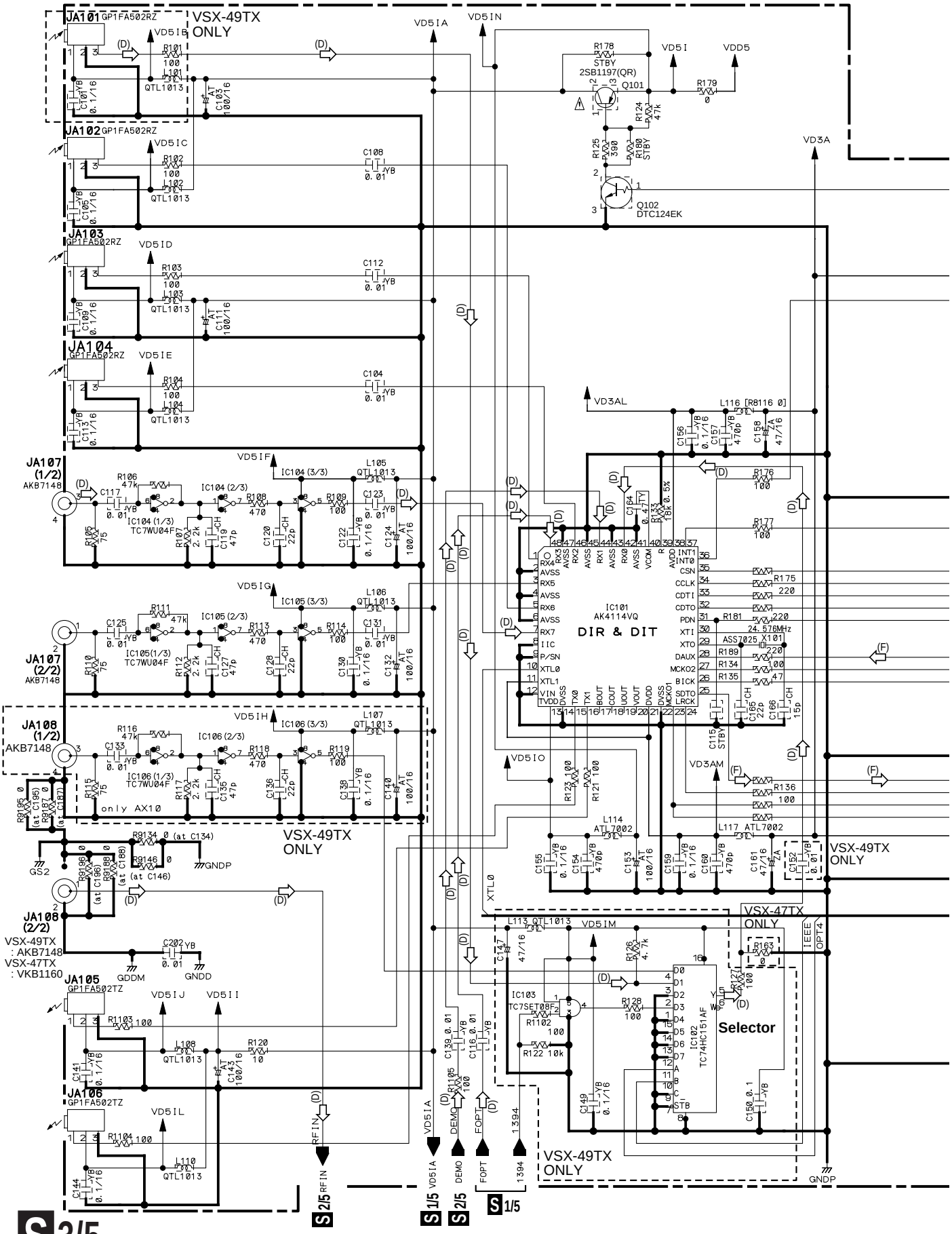

S 3/5 DSP ASSY
(VSX-49TX : AWX7719)
(VSX-47TX : AWX7720)

(D) ⇨ : AUDIO SIGNAL ROUTE (DIGITAL)
(F) ⇨ : AUDIO SIGNAL ROUTE (F)
(C) ⇨ : AUDIO SIGNAL ROUTE (C)
(S) ⇨ : AUDIO SIGNAL ROUTE (S)
(SB) ⇨ : AUDIO SIGNAL ROUTE (SB)

NOTES
1. RESISTORS
Unit:k-kΩ, M-MΩ or Ω unless otherwise noted.
Rated power: 1/16W unless otherwise noted.
Tolerance: (J)±5% unless otherwise noted.
2. CAPACITORS
Unit: p-pF or μF unless otherwise noted.
Ratings: Capacity(μF)/Voltage(V) unless otherwise noted.
Rated voltage: 50V except for electrolytic capacitors.
AT : CEAT , ZA : CEHAZA

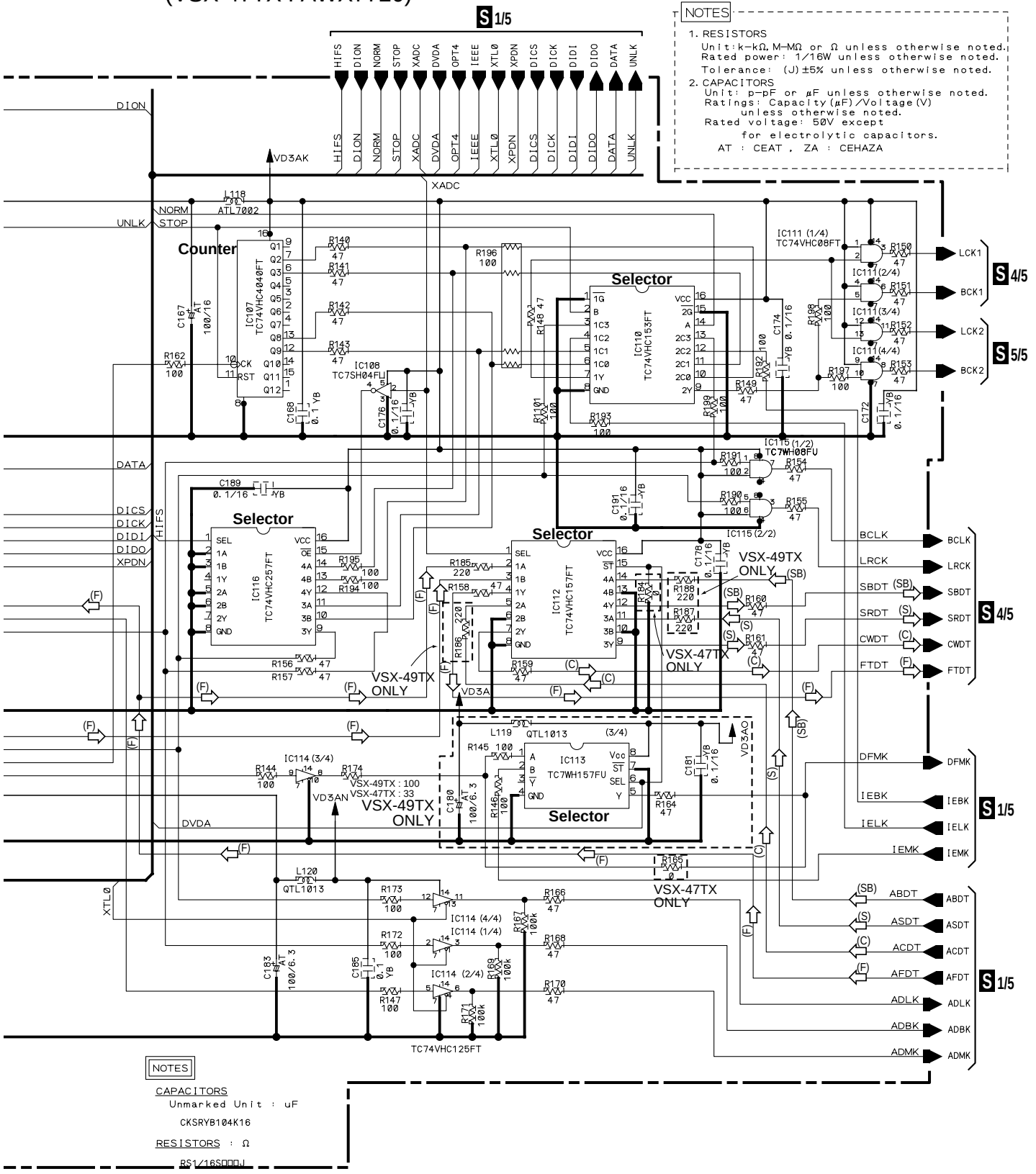

NOTES
CAPACITORS
Unmarked Unit : uF
CKSRYB104K16
RESISTORS : Ω
RS1/16S□□□J

3.21 DSP ASSY (4/5)

S 4/5 DSP ASSY (VSX-49TX : AWX7719)
(VSX-47TX : AWX7720)

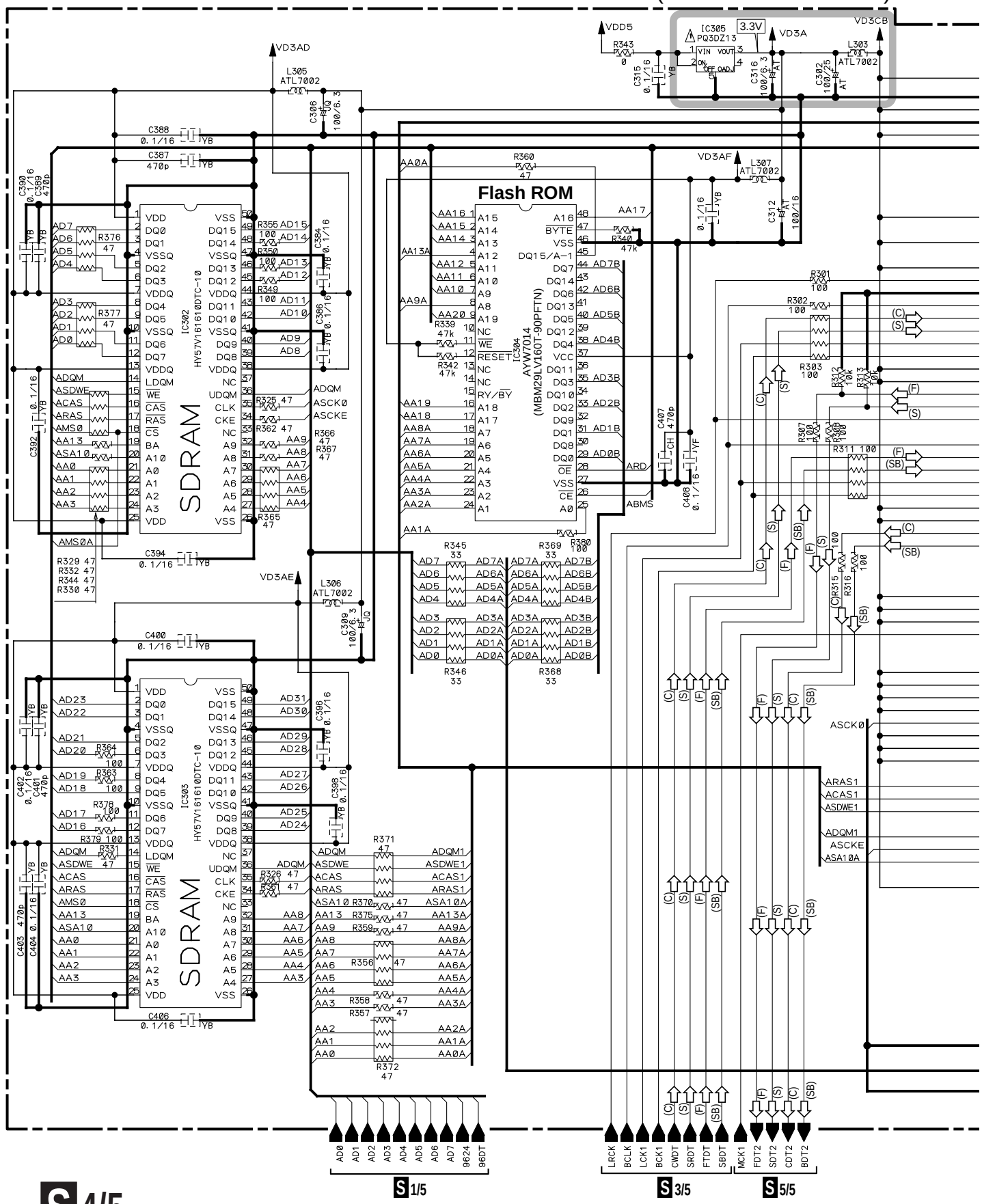

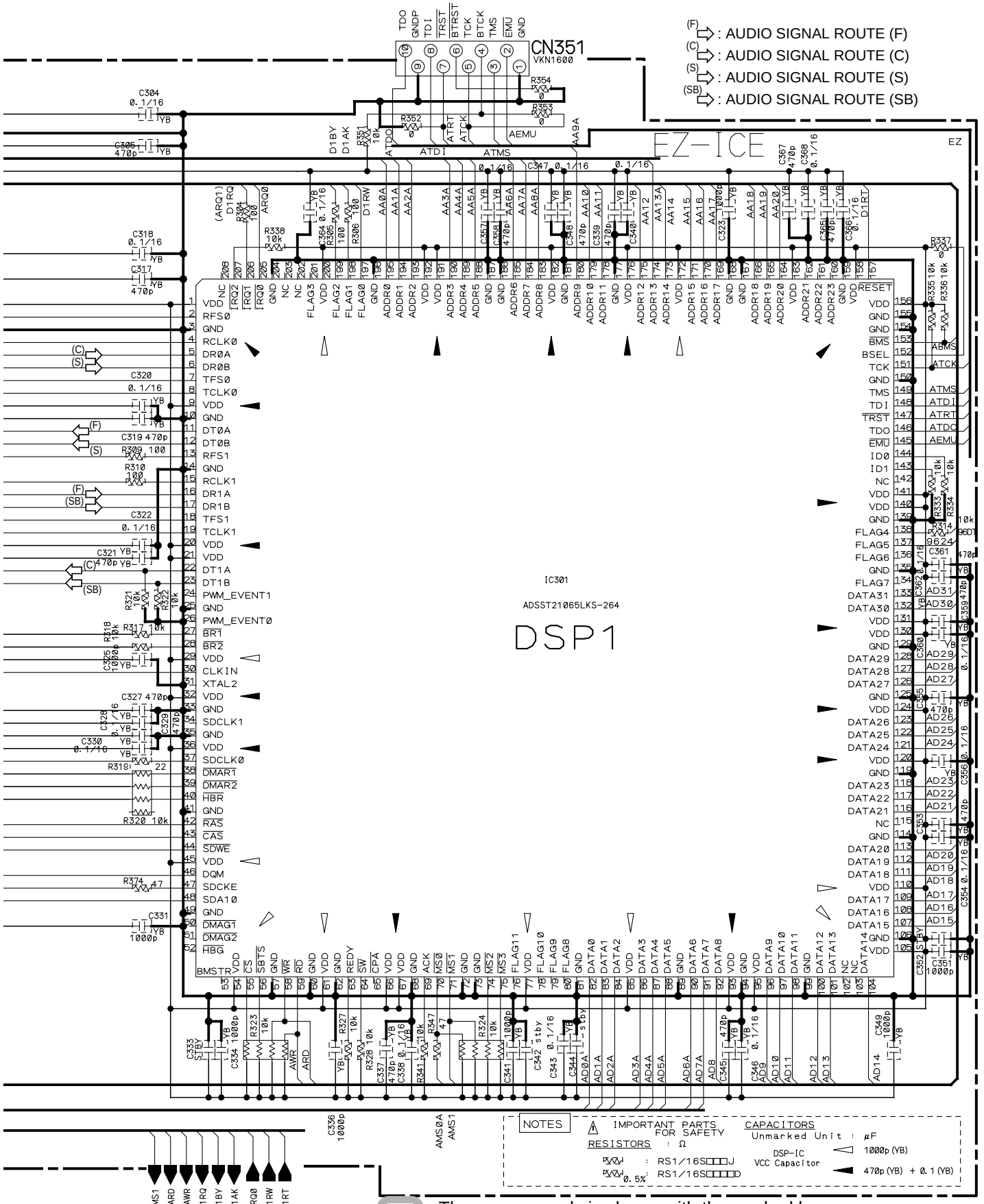

: The power supply is shown with the marked box.

3.22 DSP ASSY (5/5)

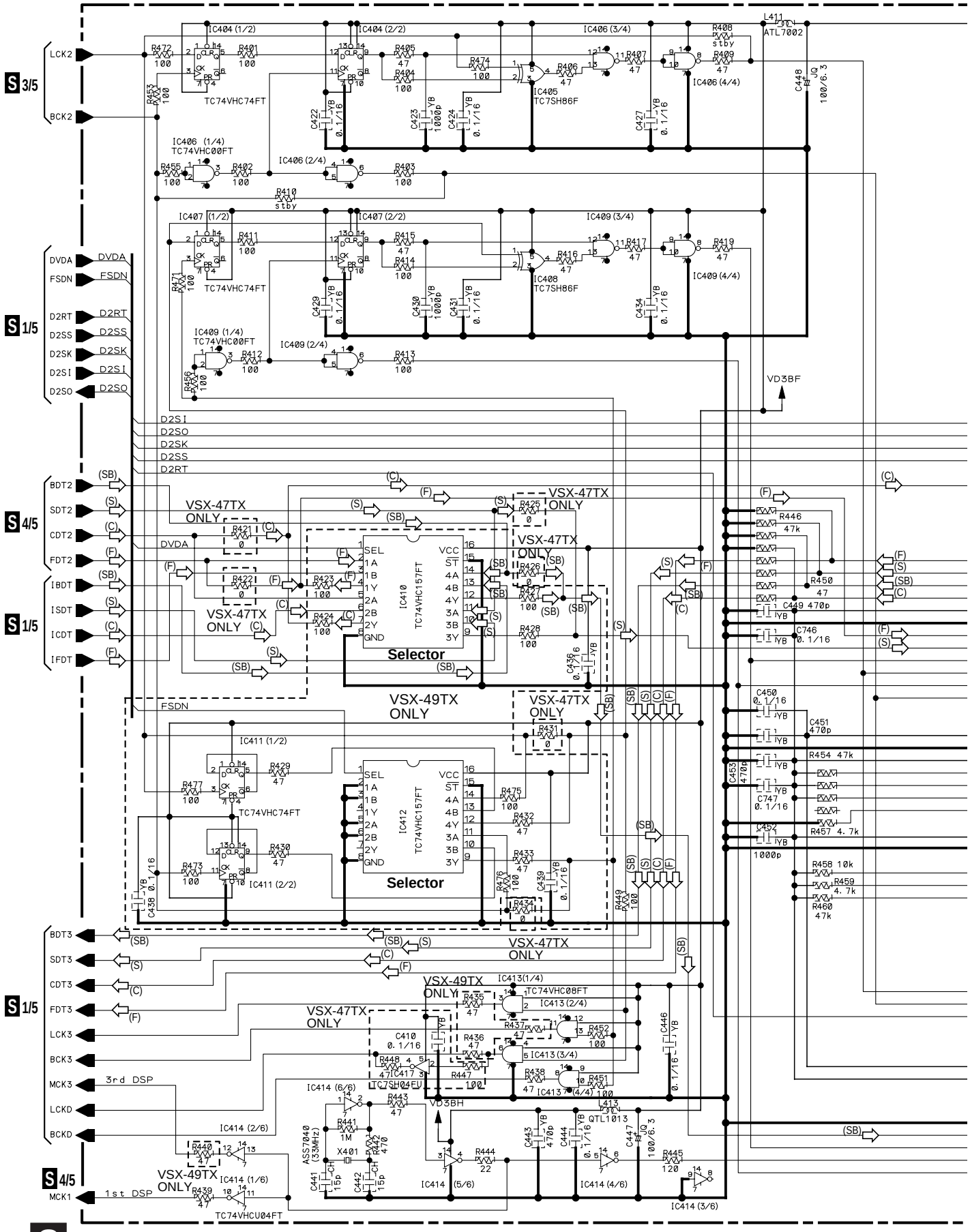

S 5/5 DSP ASSY (VSX-49TX : AWX7719) (VSX-47TX : AWX7720)

(F) : AUDIO SIGNAL ROUTE (F)
(C) : AUDIO SIGNAL ROUTE (C)
(S) : AUDIO SIGNAL ROUTE (S)
(SB) : AUDIO SIGNAL ROUTE (SB)

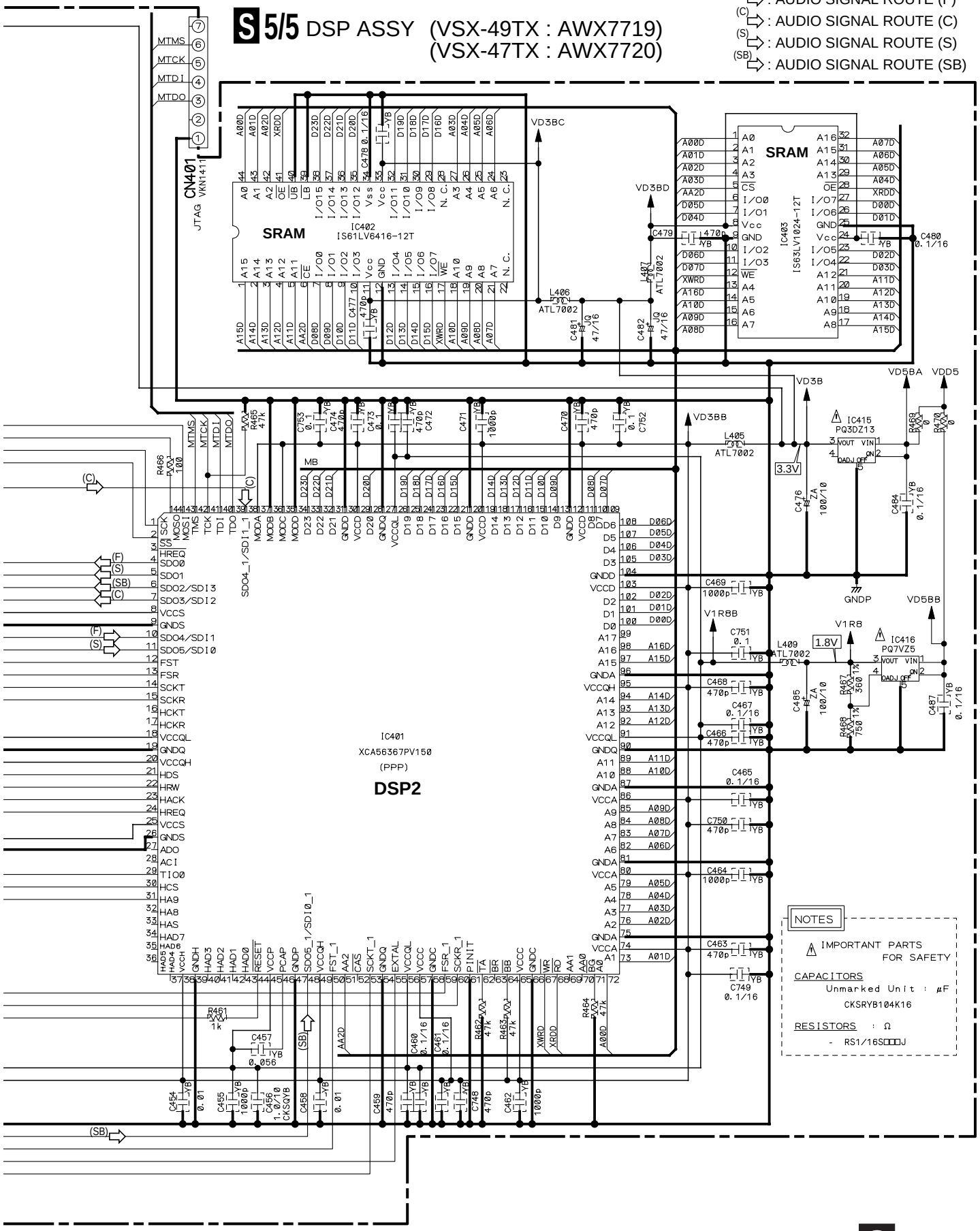

3.23 DSP3 ASSY (VSX-49TX ONLY)

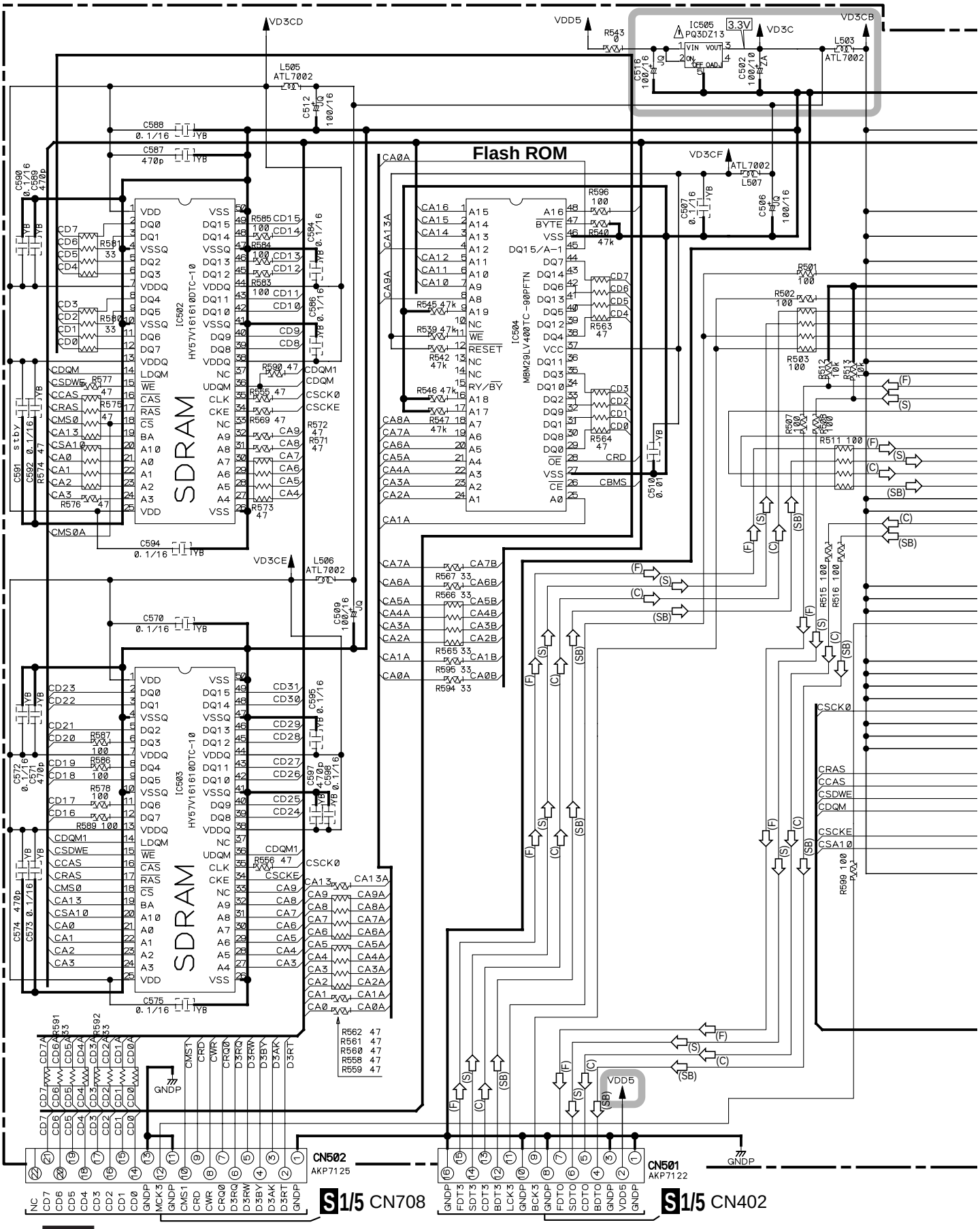

T DSP3 ASSY (AWK7727)

(F) : AUDIO SIGNAL ROUTE (F)
(C) : AUDIO SIGNAL ROUTE (C)
(S) : AUDIO SIGNAL ROUTE (S)
(SB) : AUDIO SIGNAL ROUTE (SB)

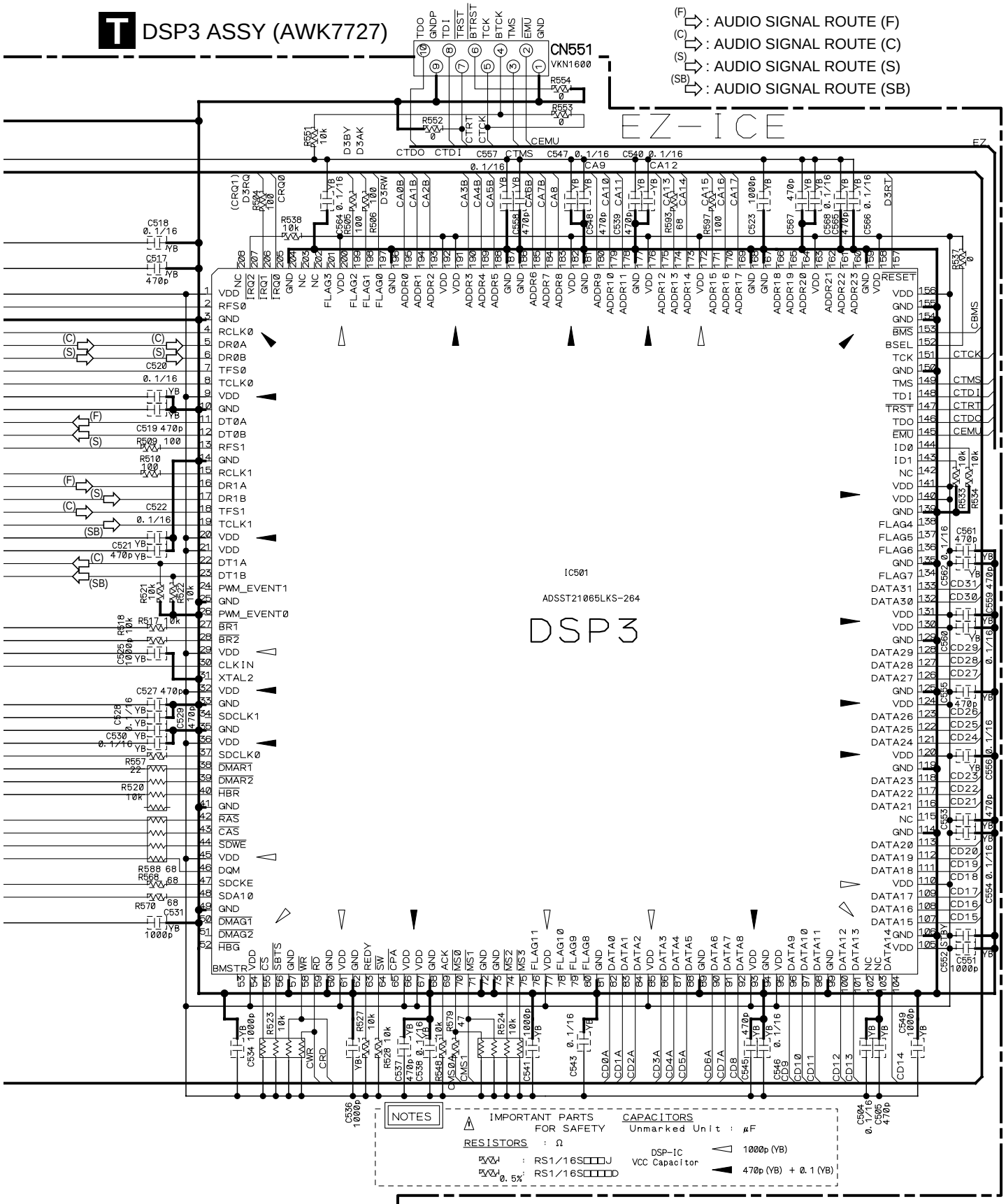

: The power supply is shown with the marked box.

3.24 DAC10 ASSY (1/2) (VSX-49TX ONLY)

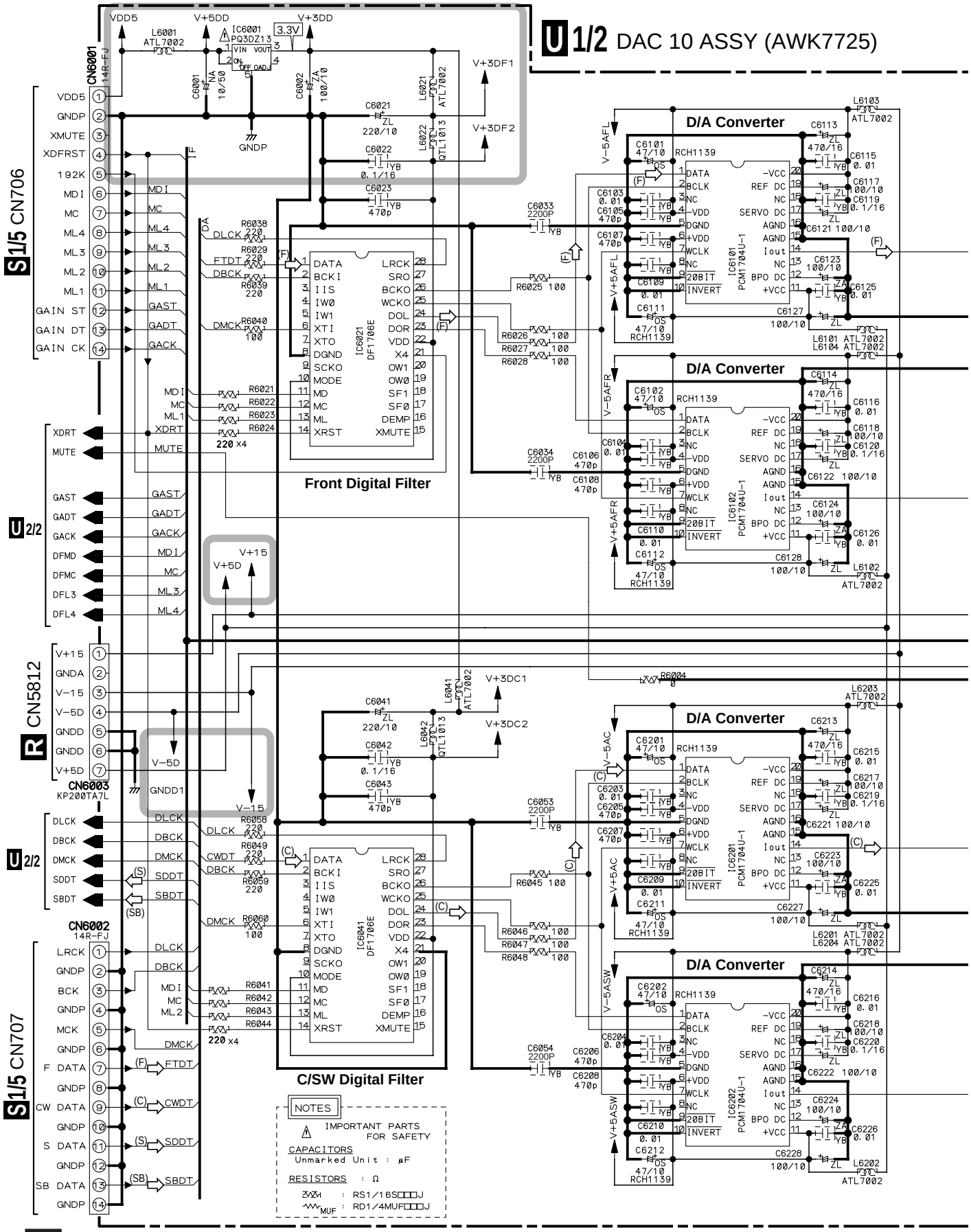

(F) : AUDIO SIGNAL ROUTE (F)
(C) : AUDIO SIGNAL ROUTE (C)
(S) : AUDIO SIGNAL ROUTE (S)
(SB) : AUDIO SIGNAL ROUTE (SB)

: The power supply is shown with the marked box.

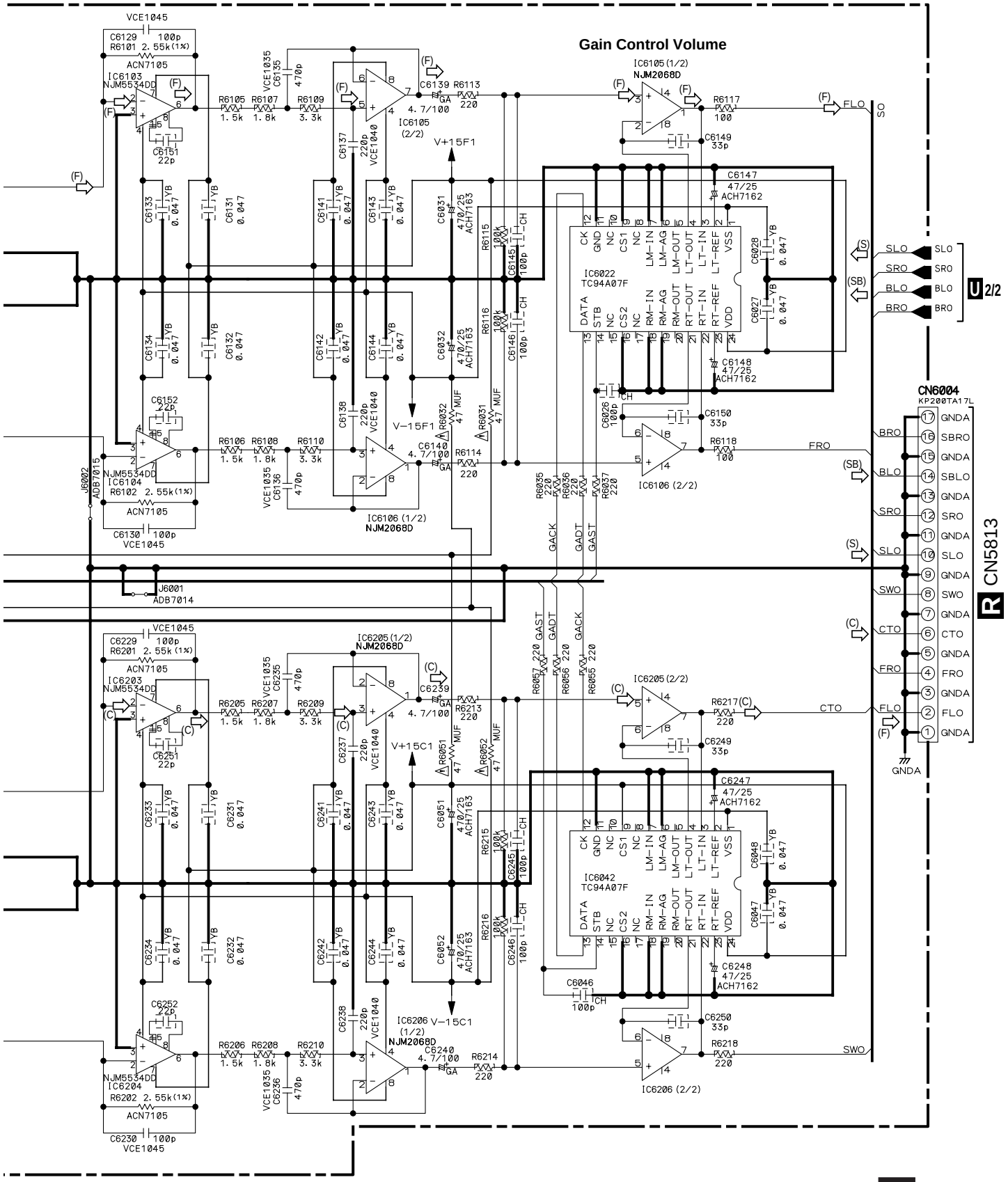

3.25 DAC10 ASSY (2/2) (VSX-49TX ONLY)

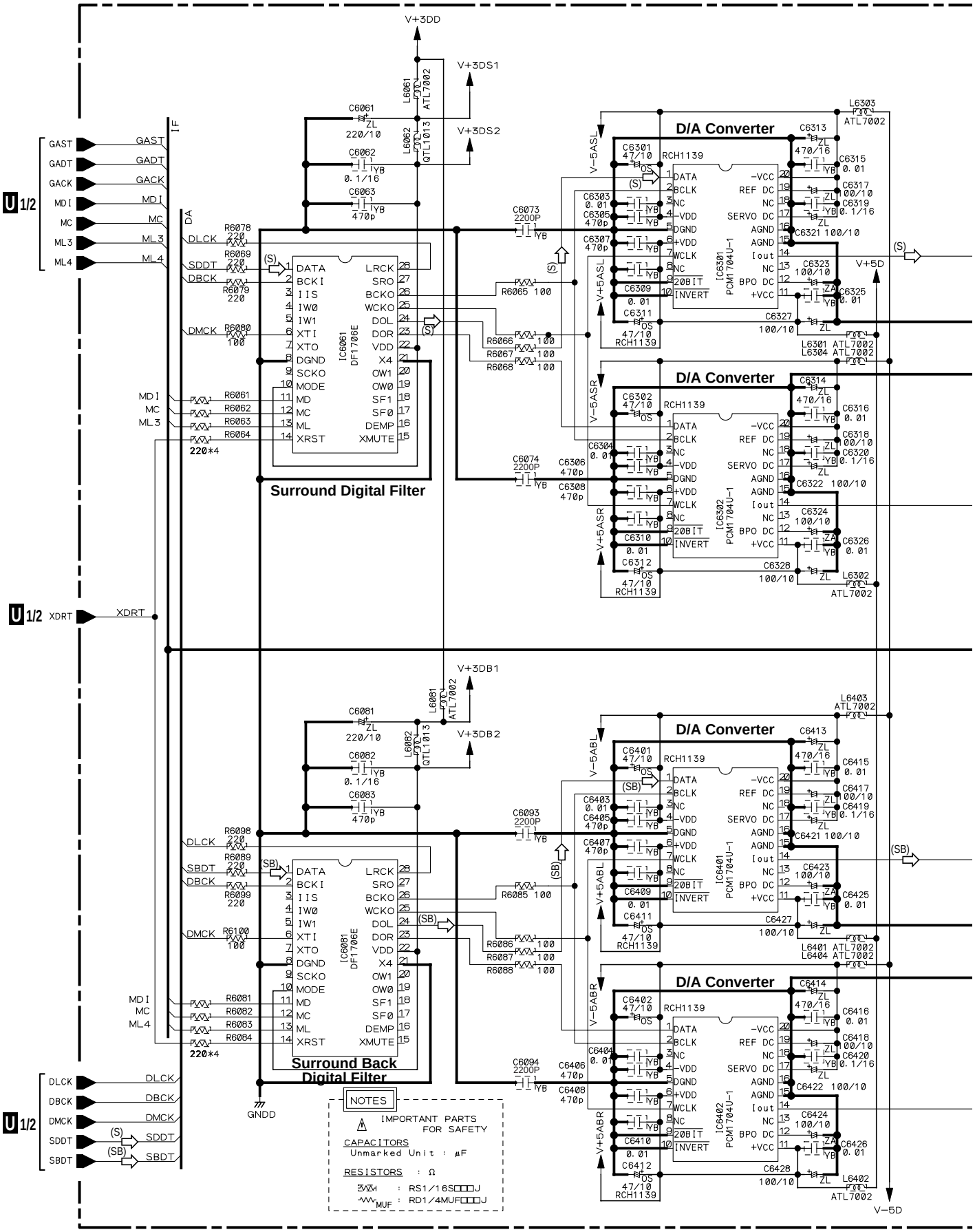

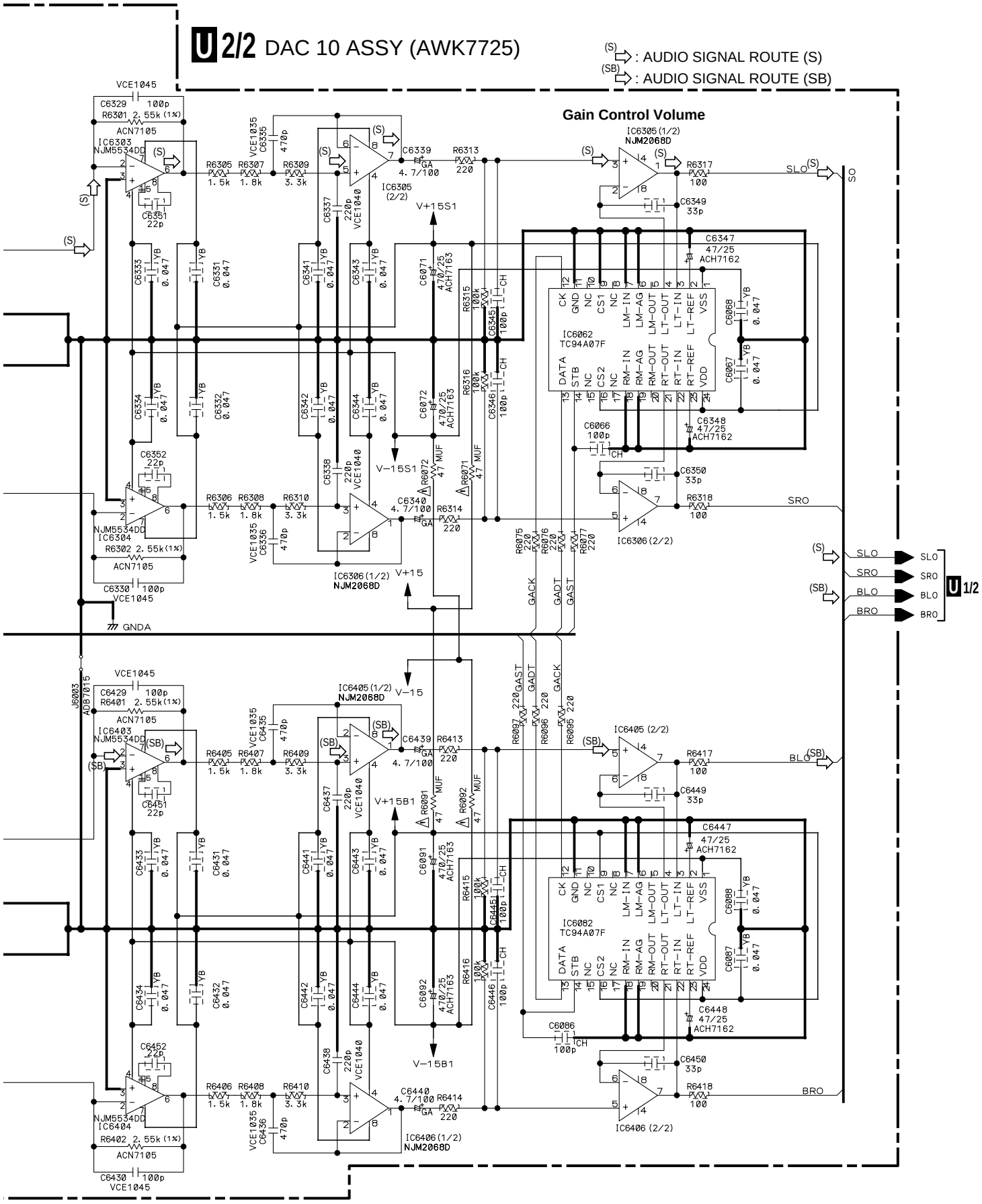
U 2/2 DAC 10 ASSY (AWK7725)
(S) : AUDIO SIGNAL ROUTE (S)
(SB) : AUDIO SIGNAL ROUTE (SB)
Gain Control Volume
IC6305 (1/2)
NJM2068D
IC6062
TC94A07F
IC6082
TC94A07F
IC6306 (2/2)
IC6405 (2/2)
IC6406 (2/2)
IC6303
NJM5534DD
IC6304
IC6403
IC6404
IC6306 (1/2)
IC6405 (1/2)
IC6406 (1/2)
V+15S1
V-15S1
V+15
V-15
V+15B1
V-15B1
GNDA
SLO
SRO
BLO
BRO
U 1/2

3.26 DAC8 ASSY (1/2) (VSX-47TX ONLY)

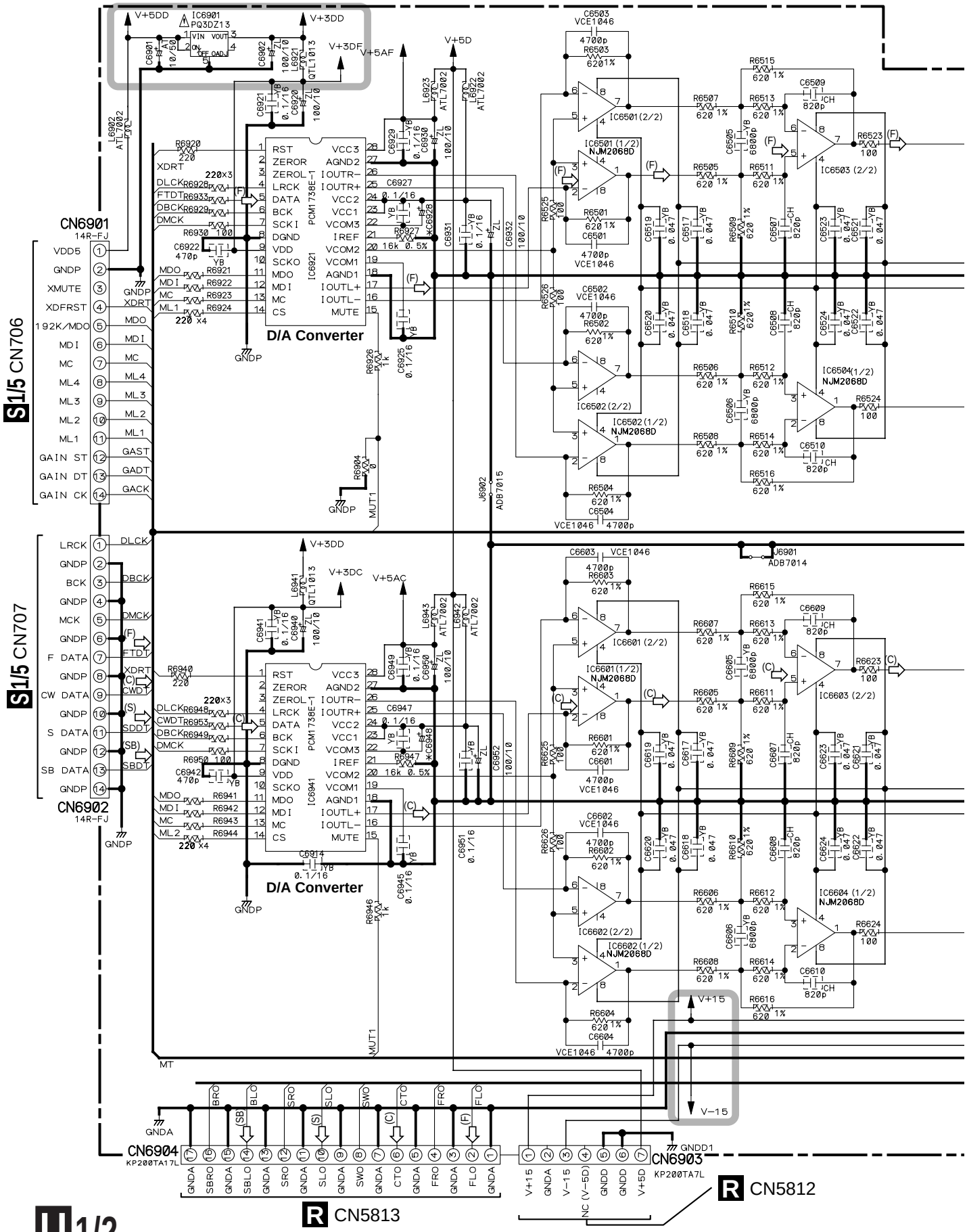

(F) : AUDIO SIGNAL ROUTE (F)
(C) : AUDIO SIGNAL ROUTE (C)
(S) : AUDIO SIGNAL ROUTE (S)
(SB) : AUDIO SIGNAL ROUTE (SB)

U 1/2 DAC 8 ASSY (AWK7726)

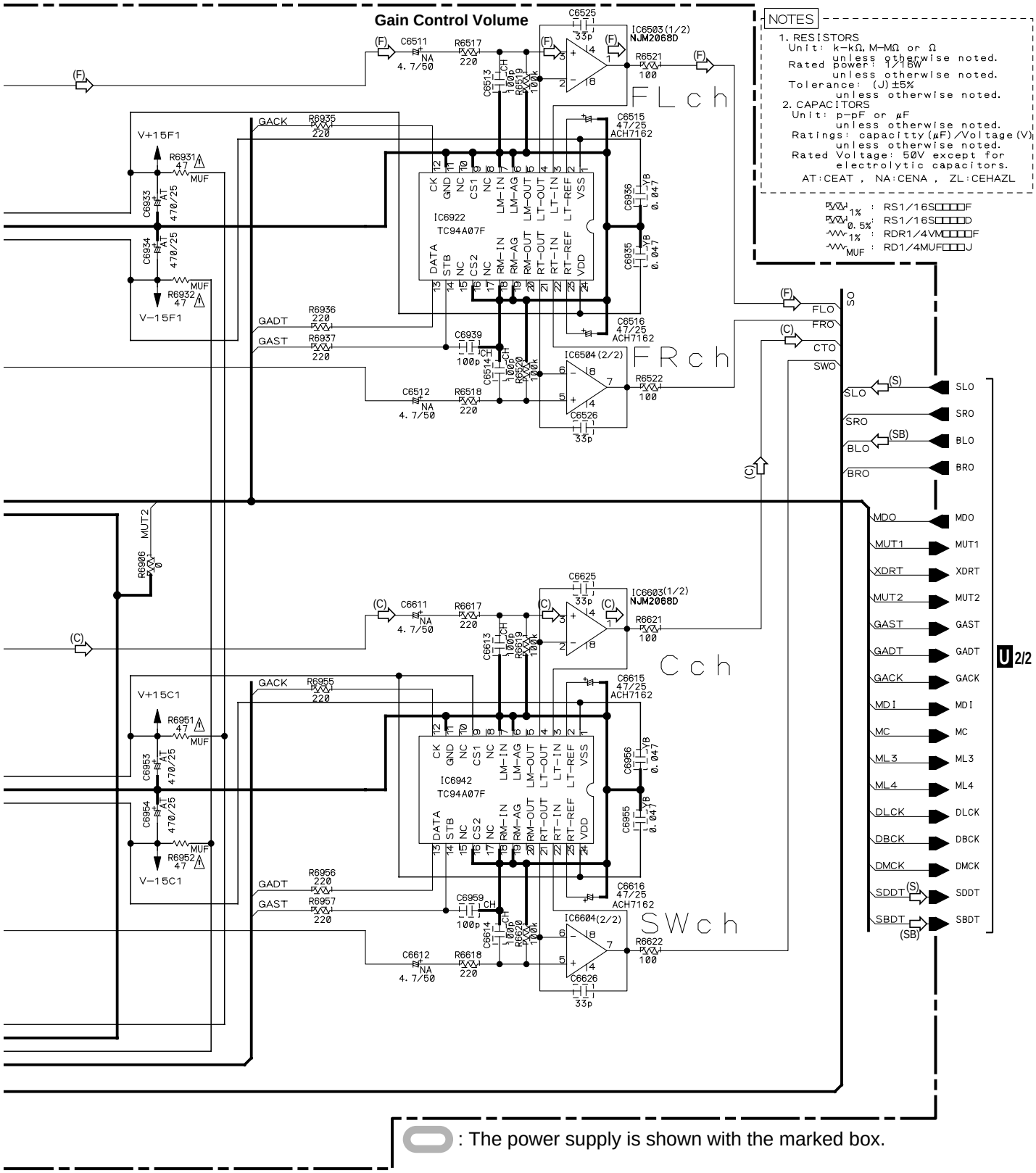

NOTES

1. RESISTORS
   Unit: k−kΩ, M−MΩ or Ω unless otherwise noted.
   Rated power: 1/16W unless otherwise noted.
   Tolerance: (J)±5% unless otherwise noted.
2. CAPACITORS
   Unit: p−pF or μF unless otherwise noted.
   Ratings: capacitty(μF)/Voltage(V) unless otherwise noted.
   Rated Voltage: 50V except for electrolytic capacitors.

AT:CEAT , NA:CENA , ZL:CEHAZL

1% : RS1/16S□□□□F
0.5% : RS1/16S□□□□D
1% : RDR1/4VM□□□□F
MUF : RD1/4MUF□□□J

: The power supply is shown with the marked box.

3.27 DAC8 ASSY (2/2) (VSX-47TX ONLY)

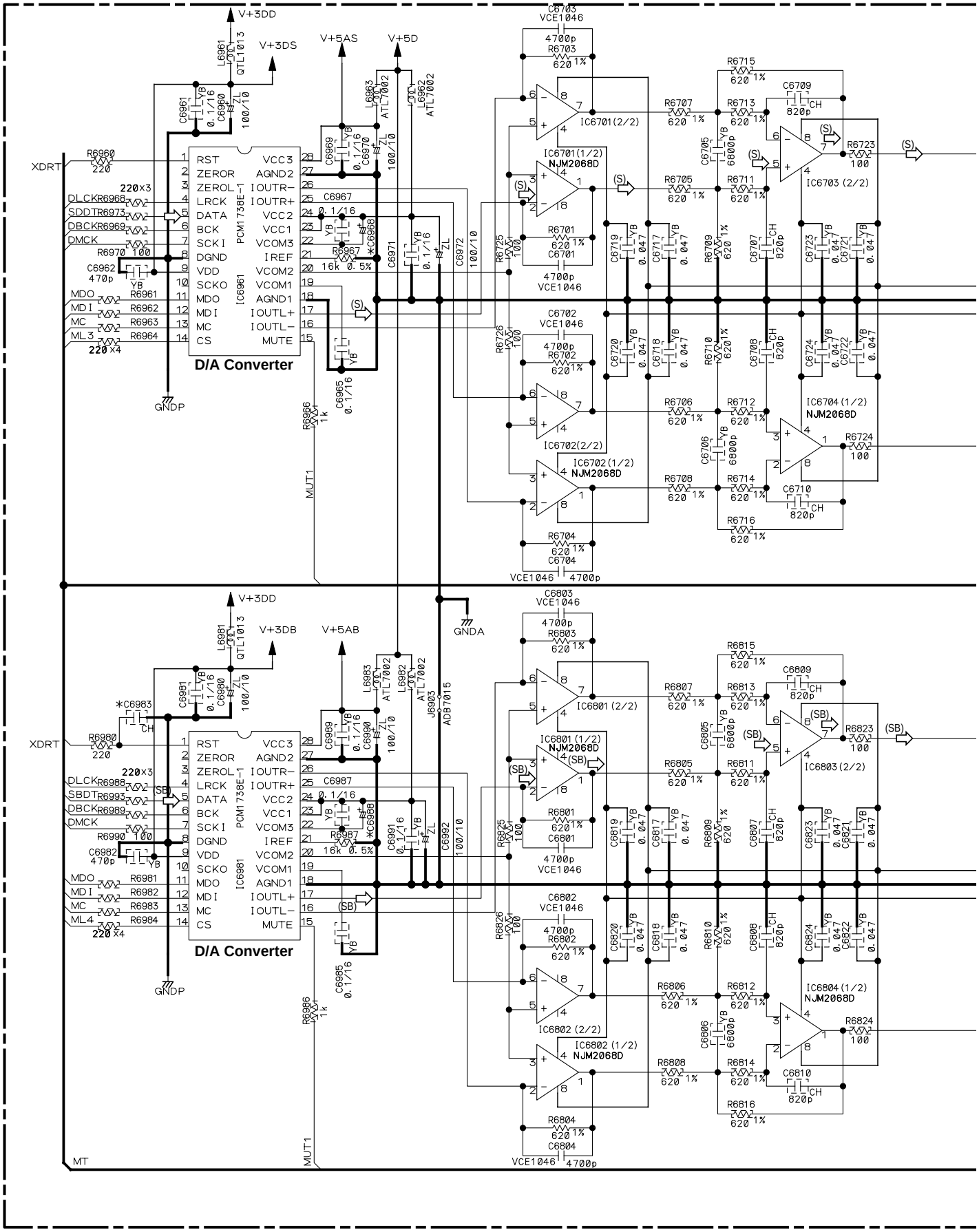

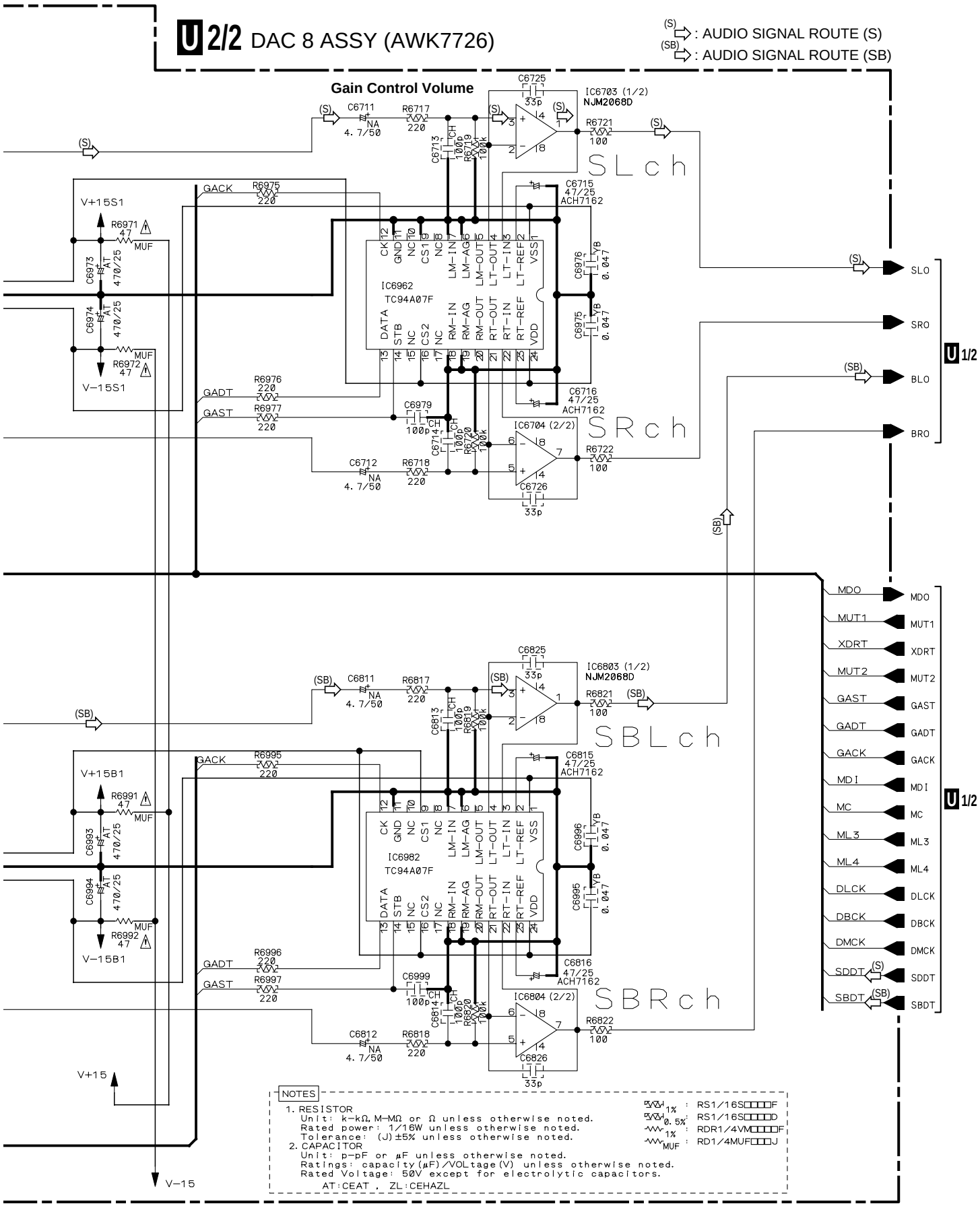
U 2/2 DAC 8 ASSY (AWK7726)
(S) : AUDIO SIGNAL ROUTE (S)
(SB) : AUDIO SIGNAL ROUTE (SB)
Gain Control Volume
SLch
SRch
SBLch
SBRch
IC6703 (1/2)
NJM2068D
IC6704 (2/2)
IC6803 (1/2)
NJM2068D
IC6804 (2/2)
IC6962
TC94A07F
IC6982
TC94A07F
V+15S1
V−15S1
V+15B1
V−15B1
V+15
V−15
GACK
GADT
GAST
SLO
SRO
BLO
BRO
MDO
MUT1
XDRT
MUT2
GAST
GADT
GACK
MDI
MC
ML3
ML4
DLCK
DBCK
DMCK
SDDT
SBDT
U 1/2
NOTES
1. RESISTOR
Unit: k−kΩ, M−MΩ or Ω unless otherwise noted.
Rated power: 1/16W unless otherwise noted.
Tolerance: (J)±5% unless otherwise noted.
2. CAPACITOR
Unit: p−pF or μF unless otherwise noted.
Ratings: capacity(μF)/VOLtage(V) unless otherwise noted.
Rated Voltage: 50V except for electrolytic capacitors.
AT:CEAT , ZL:CEHAZL
1% : RS1/16S□□□□F
0.5% : RS1/16S□□□□D
1% : RDR1/4VM□□□□F
MUF : RD1/4MUF□□□J

3.28 POWER AMP (L) and POWER AMP (C) ASSYS

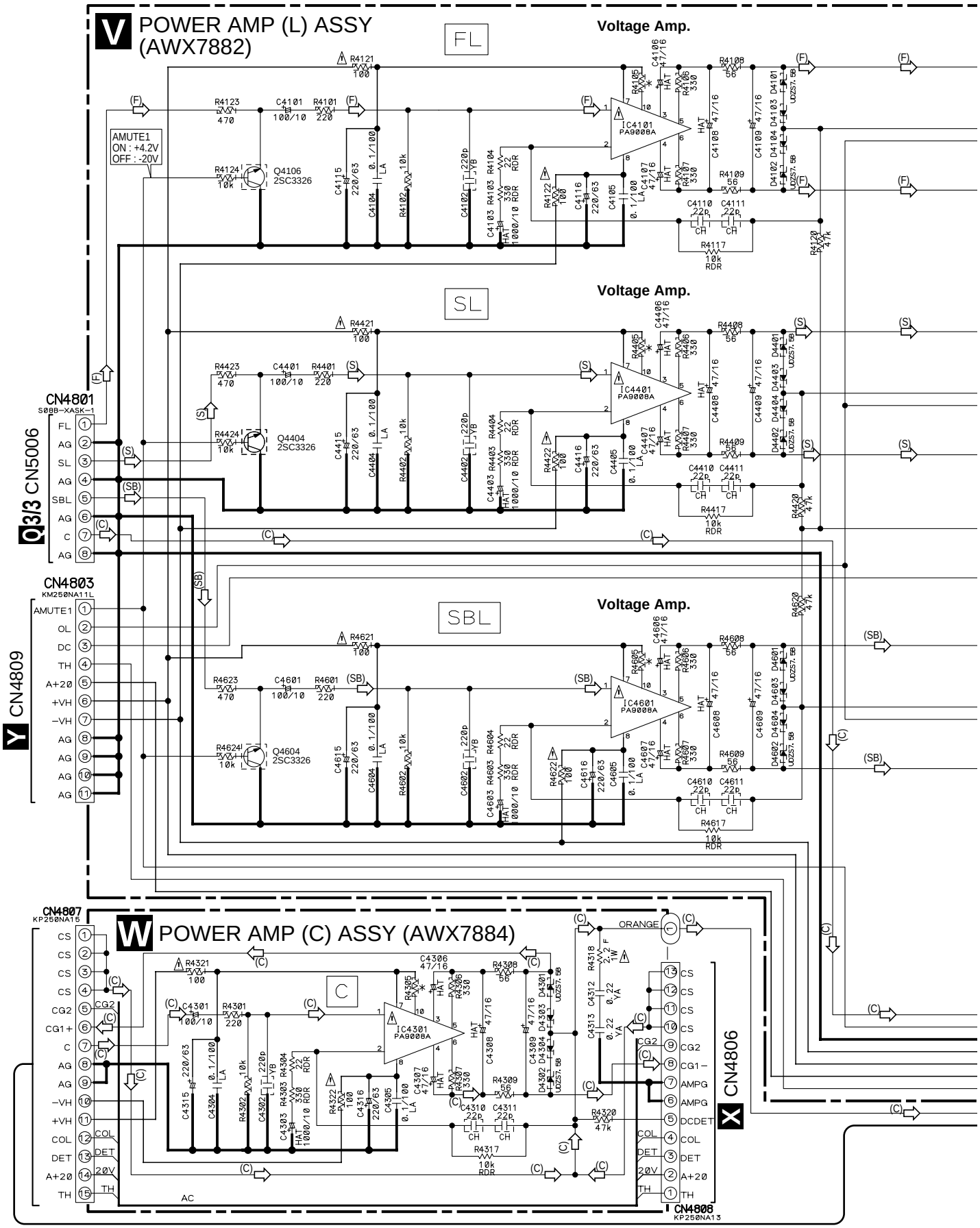

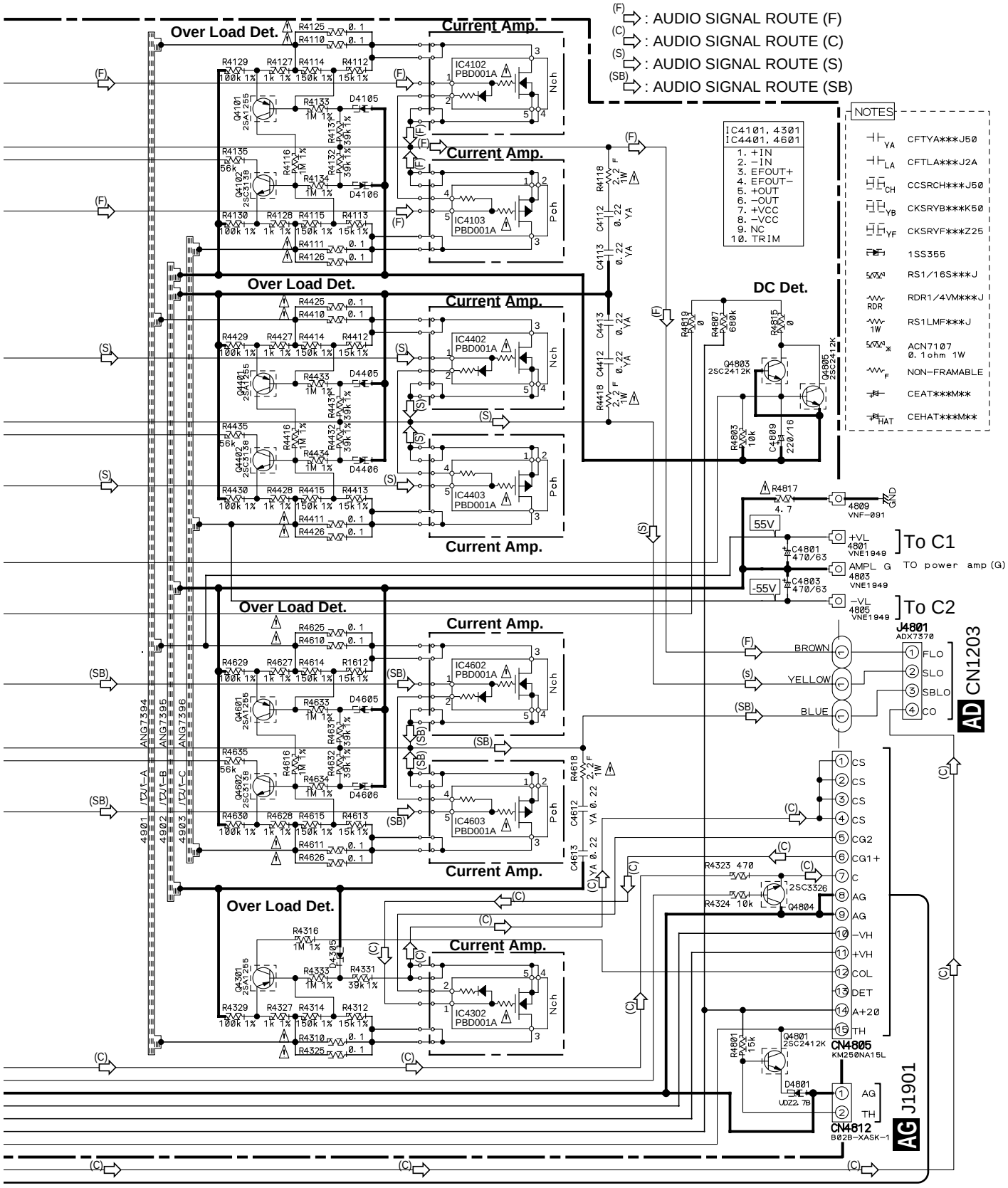

The ⚠ mark found on some component parts indicates the importance of the safety factor of the part. Therefore, when replacing, be sure to use parts of identical designation.

3.29 POWER AMP (R), POWER AMP (BR) and POWER AMP (G) ASSYS

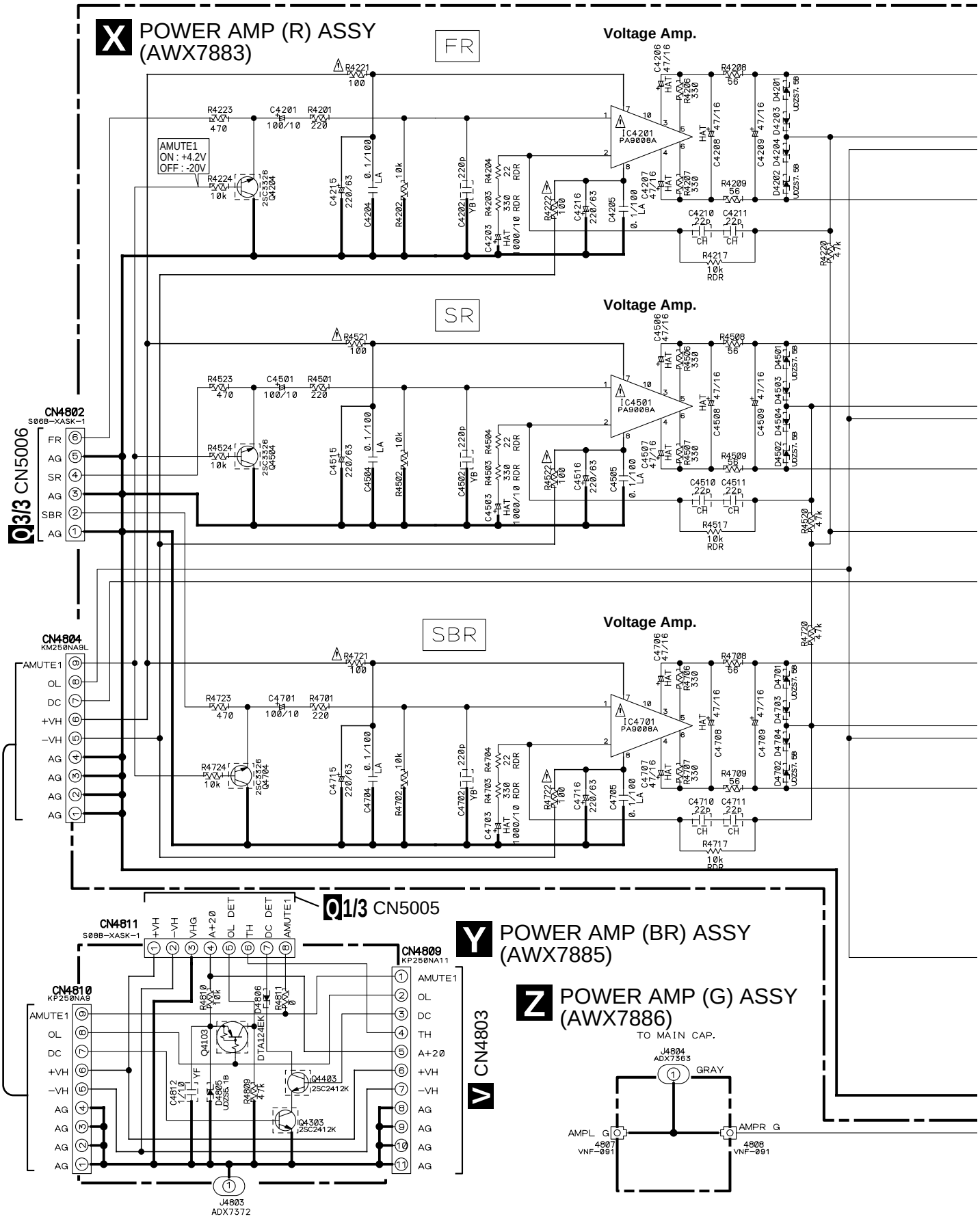

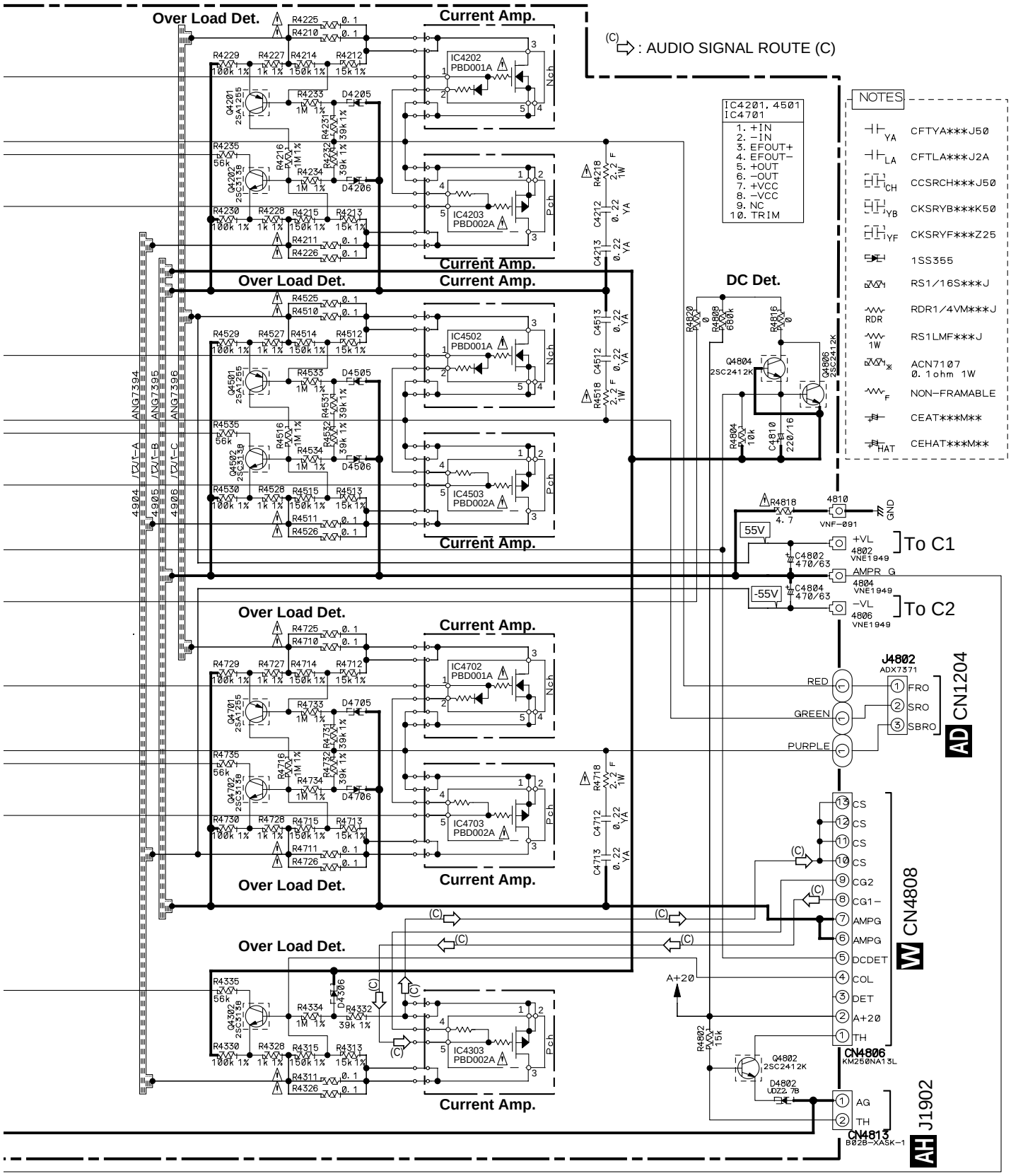

The ⚠ mark found on some component parts indicates the importance of the safety factor of the part. Therefore, when replacing, be sure to use parts of identical designation.

3.30 LOCAL SUPPLY ASSY

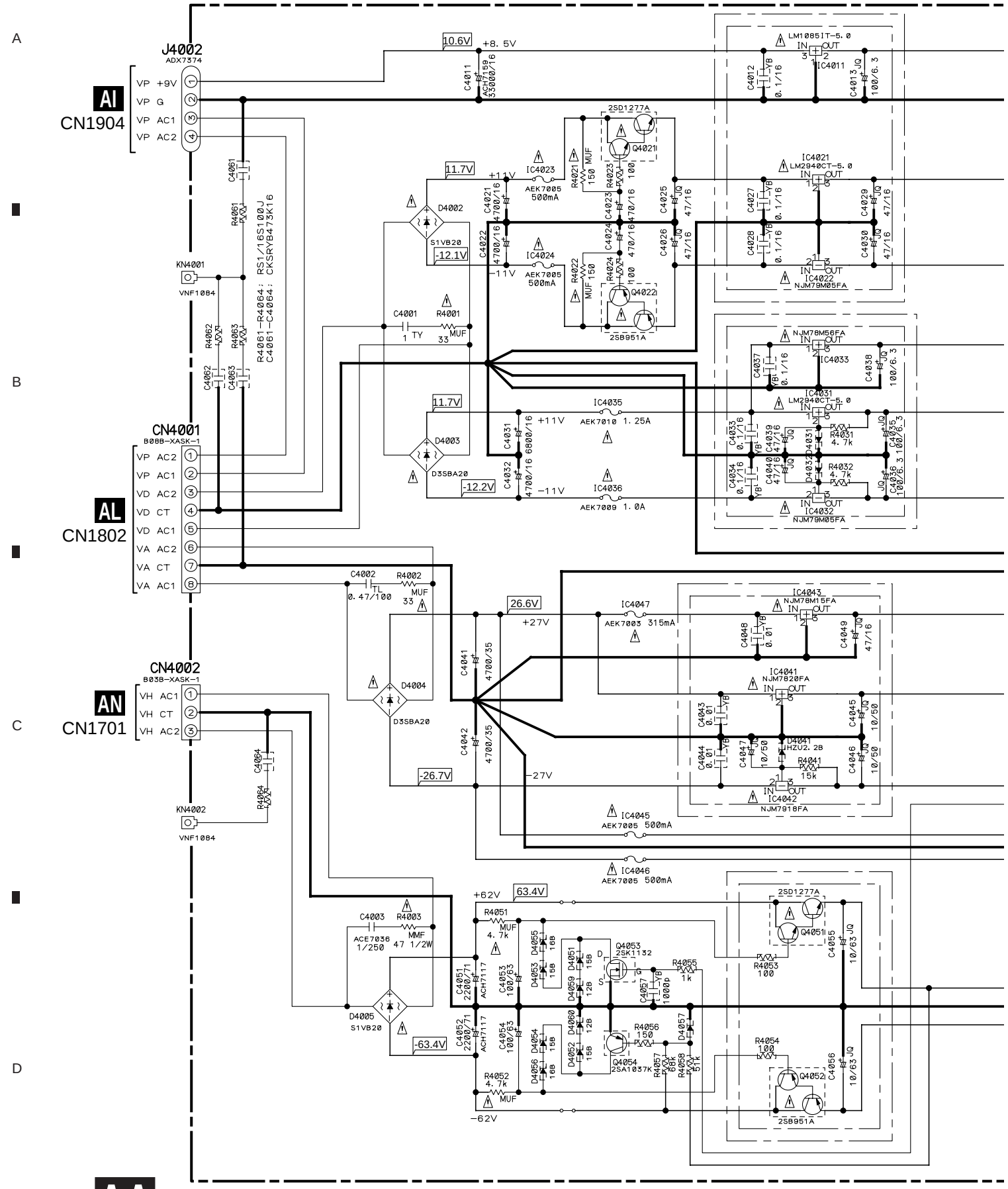

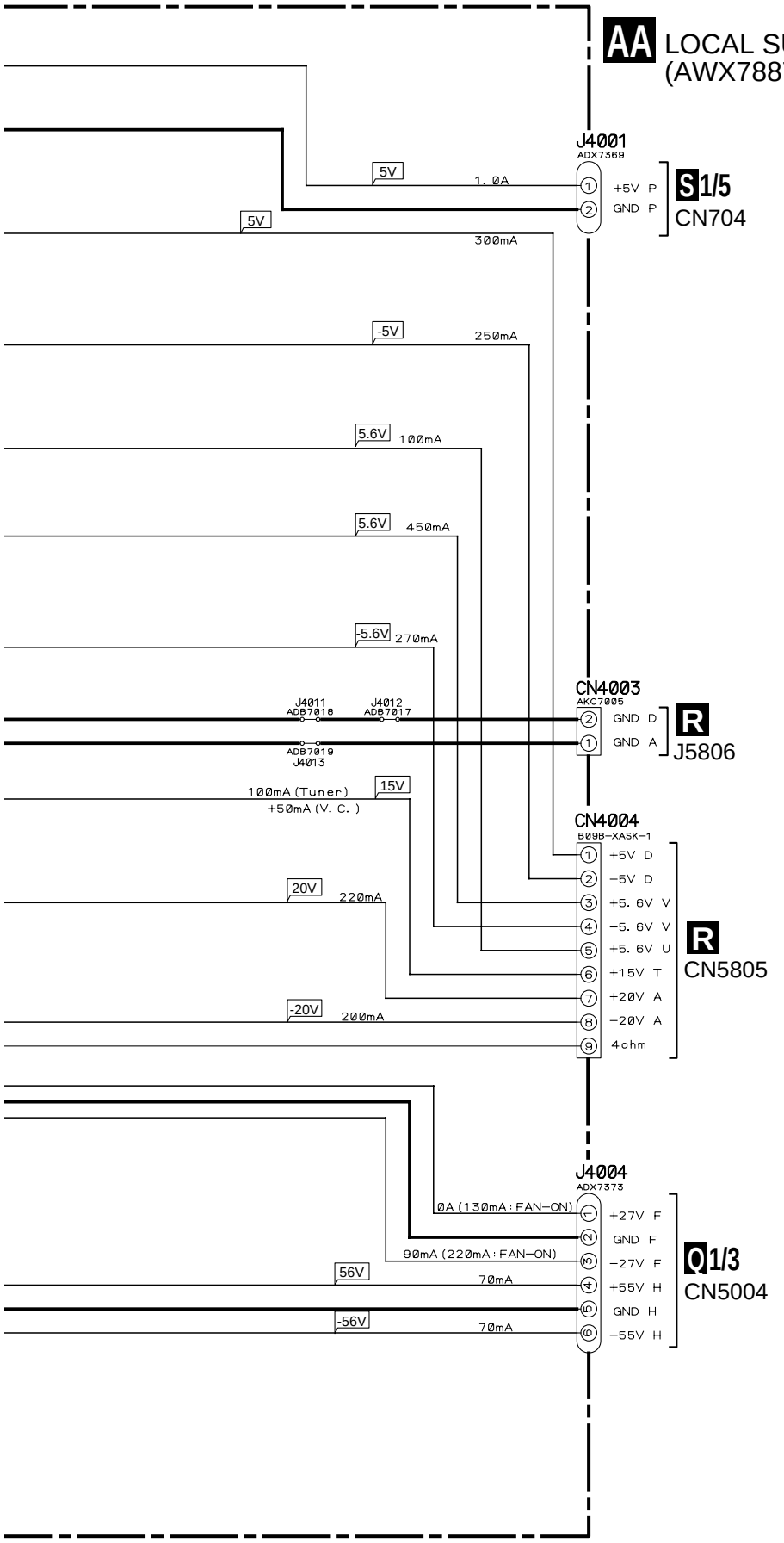

The ⚠ mark found on some component parts indicates the importance of the safety factor of the part. Therefore, when replacing, be sure to use parts of identical designation.

NOTES

TY	CFTYA***J50
TL	CFTLA***J2A
YB	CKSRYB***K**
	CEAT***M**
JQ	CEJQ***M**
	1SS355
	RS1/16S***J
MUF	RD1/8MUF***J
MMF	RD1/2MMF***J

3.31 AC PRIMARY, POWER SW, SP (A), FL SUPPLY and STANDBY ASSYS

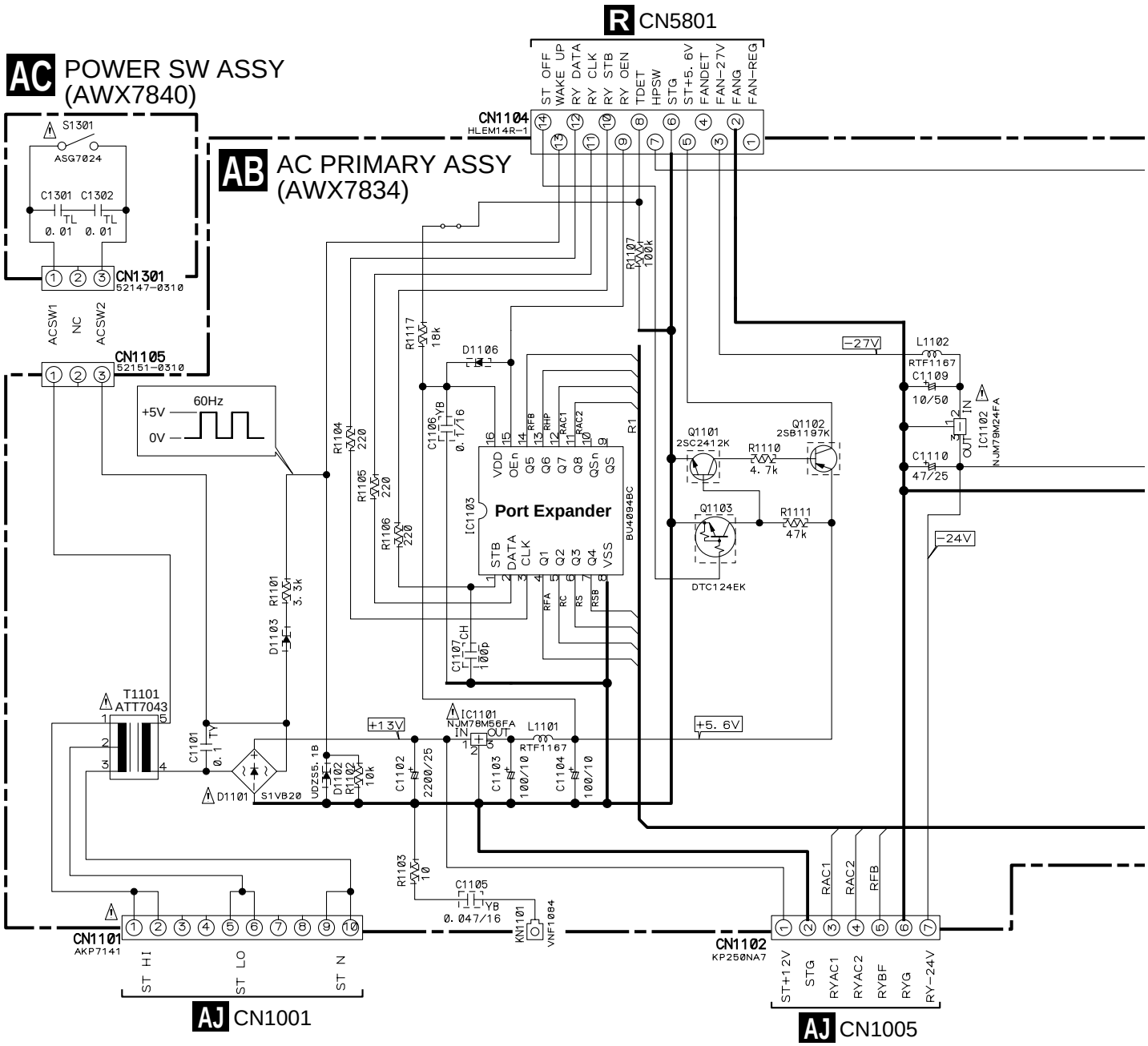

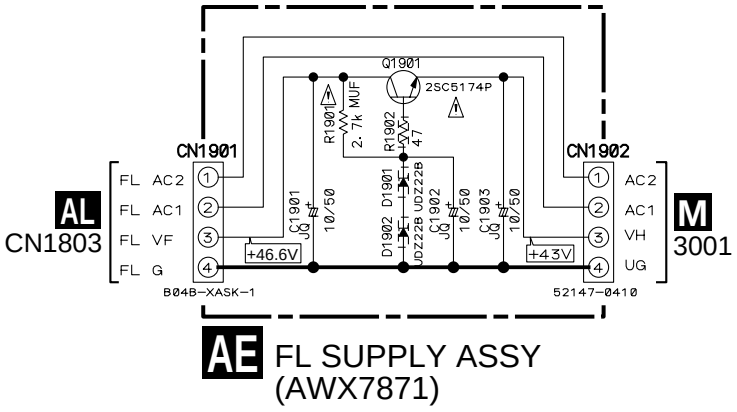

NOTES

1. RESISTORS
   INDICATED IN Ohm 1/16W ± 5% TOLERANCE UNLESS NOTED K:KOhm M:MOhm
2. CAPACITORS
   INDICATED INCAPACITY(uF)/VOLTAGE(V) UNLESS OTHERWISE NOTED p:pF
   INDICATED WITHOUT VOLTAGE IS 50V
3. DIODES
   NO MARK DIODES ARE 1SS355
4. VOLTAGE
   INDICATED IN DC VOLTAGE

	RS1/16S***J	CH	CCSRCH***J**
TY	CFTYA***J50	YB	CKSRYB***K**
TL	CFTLA***J**		CEAT***M**
			CEJQ***M**

The ⚠ mark found on some component parts indicates the importance of the safety factor of the part. Therefore, when replacing, be sure to use parts of identical designation.

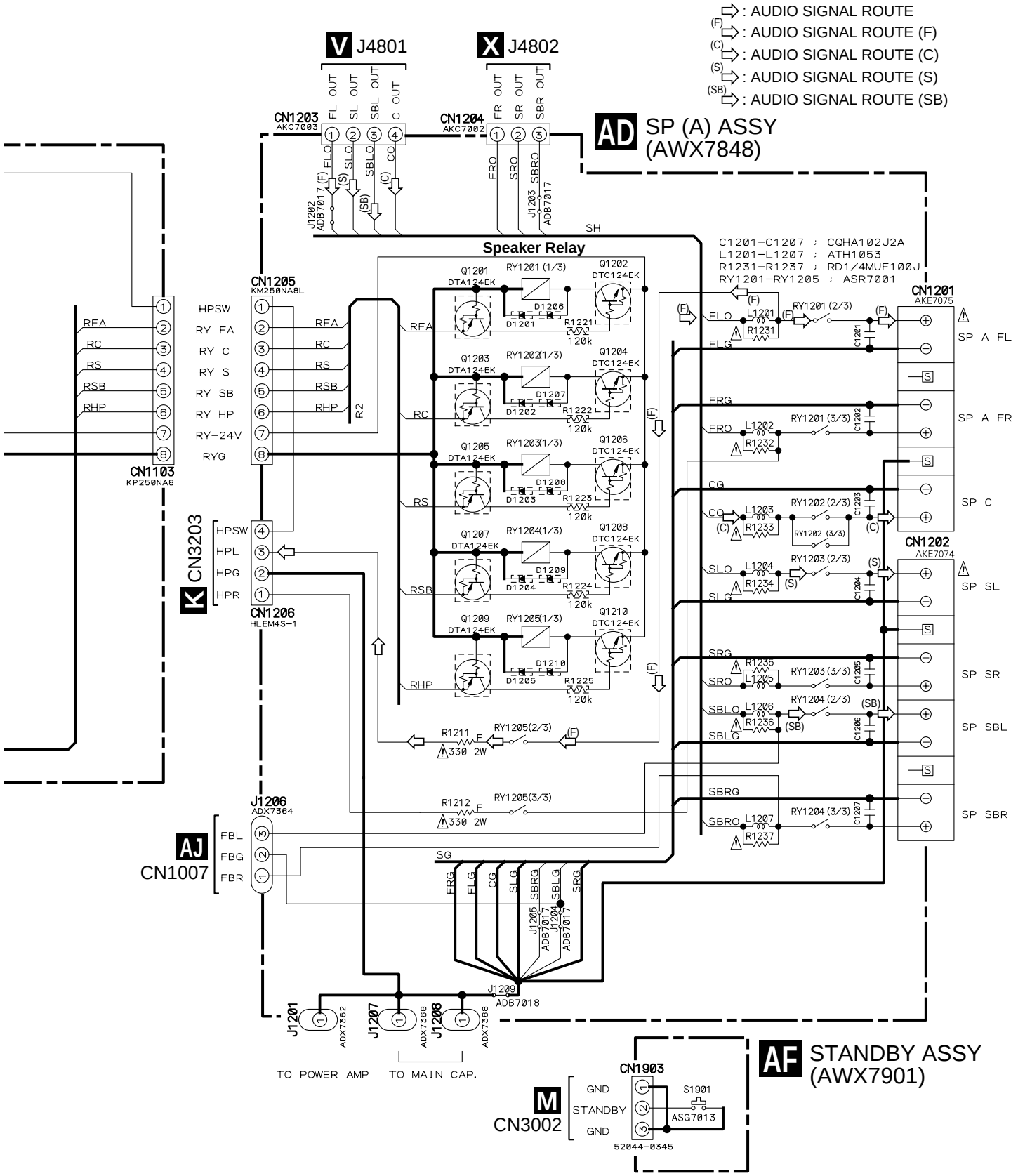
: AUDIO SIGNAL ROUTE
(F) : AUDIO SIGNAL ROUTE (F)
(C) : AUDIO SIGNAL ROUTE (C)
(S) : AUDIO SIGNAL ROUTE (S)
(SB) : AUDIO SIGNAL ROUTE (SB)
V J4801
X J4802
CN1203 AKC7003
CN1204 AKC7002
AD SP (A) ASSY (AWX7848)
Speaker Relay
C1201–C1207 : CQHA102J2A
L1201–L1207 : ATH1053
R1231–R1237 : RD1/4MUF100J
RY1201–RY1205 : ASR7001
CN1205 KM250NA8L
CN1103 KP250NA8
CN1206 HLEM4S-1
K CN3203
CN1201 AKE7075
CN1202 AKE7074
SP A FL
SP A FR
SP C
SP SL
SP SR
SP SBL
SP SBR
J1206 ADX7364
AJ CN1007
J1209 ADB7018
J1201 ADX7362
J1207 ADX7368
J1208 ADX7368
TO POWER AMP
TO MAIN CAP.
CN1903
M CN3002
GND
STANDBY
GND
S1901
ASG7013
52044-0345
AF STANDBY ASSY (AWX7901)

3.32 POSISTER (L), POSISTER (R), DSP DIODE, SP (B), DIODE, FUSE, TRANS (A) and TRANS (B) ASSYS

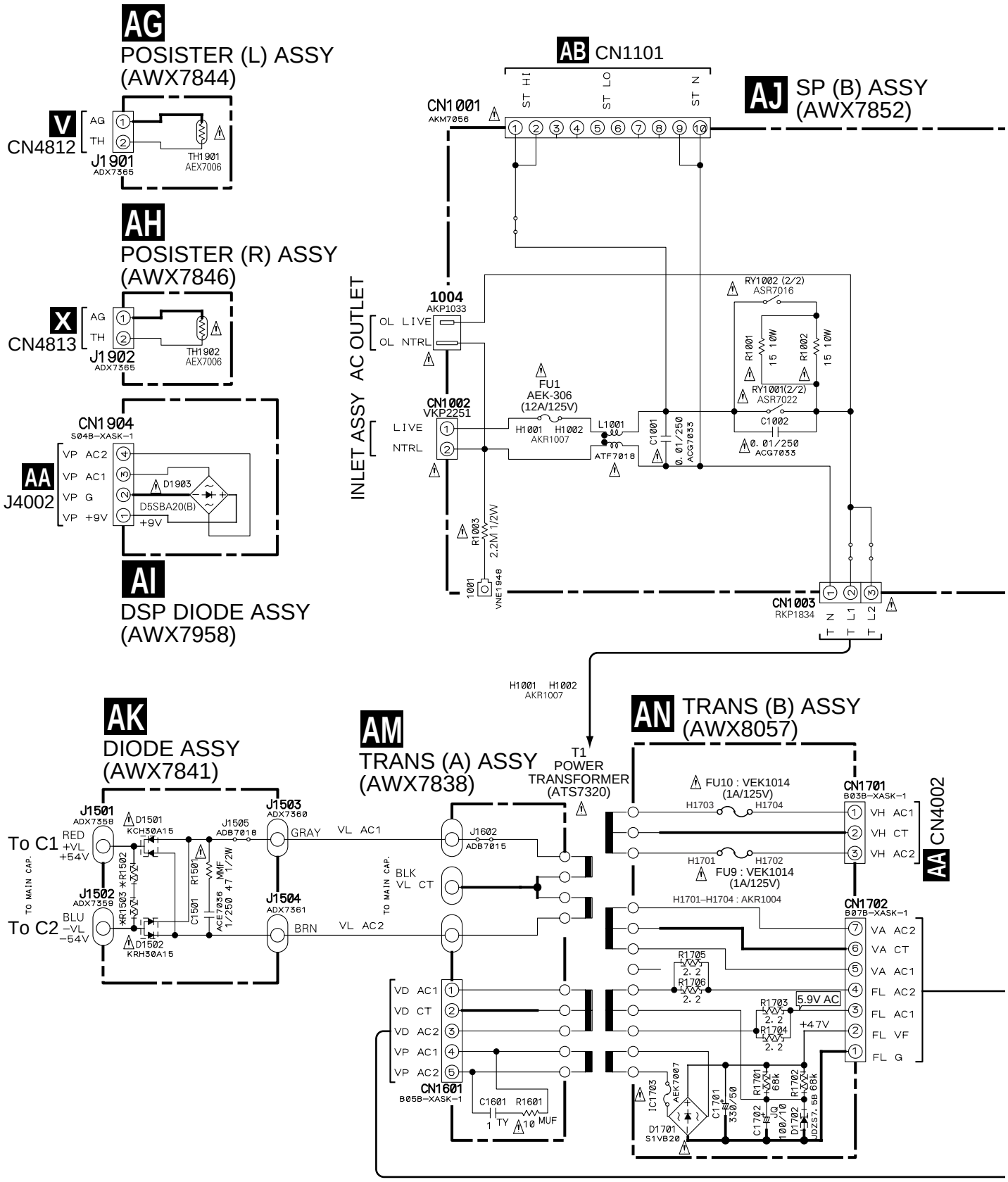

• NOTE FOR FUSE REPLACEMENT

CAUTION - FOR CONTINUED PROTECTION AGAINST RISK OF FIRE. REPLACE WITH SAME TYPE AND RATINGS ONLY.

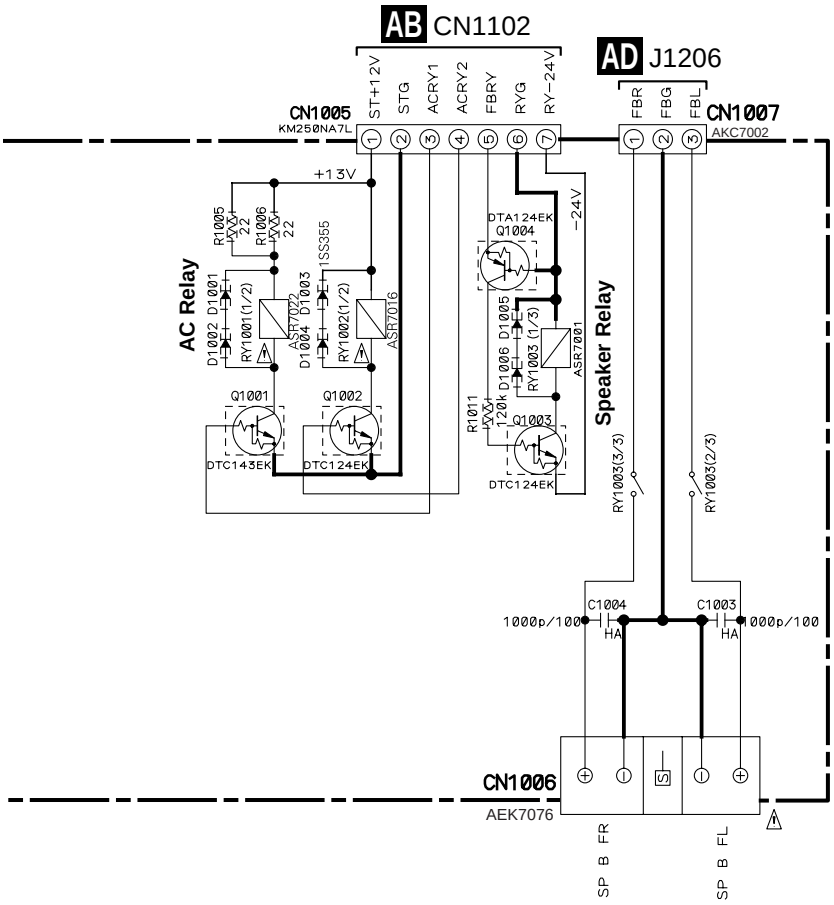

The ⚠ mark found on some component parts indicates the importance of the safety factor of the part. Therefore, when replacing, be sure to use parts of identical designation.

NOTES

1. RESISTORS
   INDICATED IN Ohm 1/16W ±5% TOLERANCE UNLESS NOTED K:KOhm M:MOhm
2. CAPACITORS
   INDICATED INCAPACITY(uF)/ VOLTAGE(V) UNLESS OTHERWISE NOTED p:pF
   INDICATED WITHOUT VOLTAGE IS 50V EXCEPT
3. DIODES
   NO MARK DIODES ARE 1SS355
4. VOLTAGE
   INDICATED IN DC VOLTAGE

MUF	RD1/8MUF***J
MMF	RD1/2MMF***J
TY	CFTYA***J50
HA	CQHA***J**
	CEAT***M**
JQ	CEJQ***M**

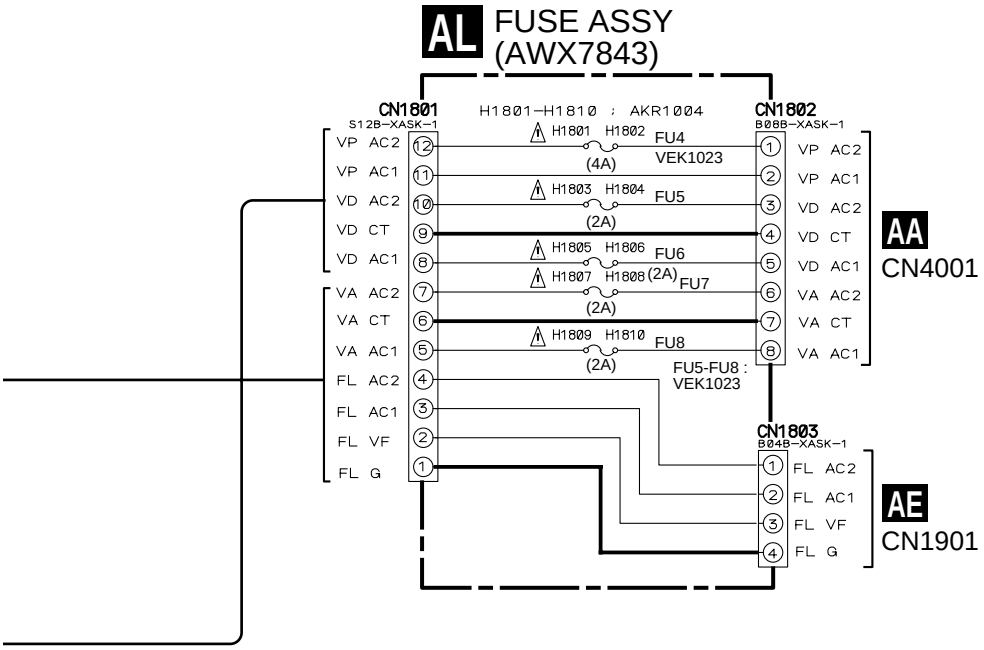

4. PCB CONNECTION DIAGRAM

NOTE FOR PCB DIAGRAMS :

1. Part numbers in PCB diagrams match those in the schematic diagrams.
2. A comparison between the main parts of PCB and schematic diagrams is shown below.

Symbol In PCB Diagrams	Symbol In Schematic Diagrams	Part Name
B C E	B C E B C E	Transistor
B C E	B C E B C E	Transistor with resistor
D G S	D G S D G S	Field effect transistor
		Resistor array
		3-terminal regulator

3. The parts mounted on this PCB include all necessary parts for several destinations.
   For further information for respective destinations, be sure to check with the schematic diagram.
4. View point of PCB diagrams.

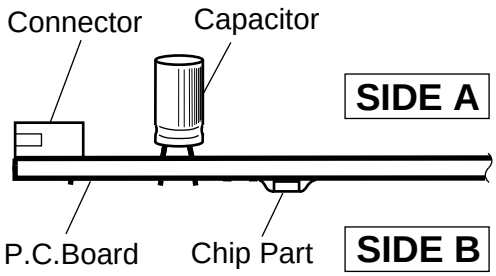

4.1 FM/AM TUNER MODULE

A FM/AM TUNER MODULE **SIDE A**

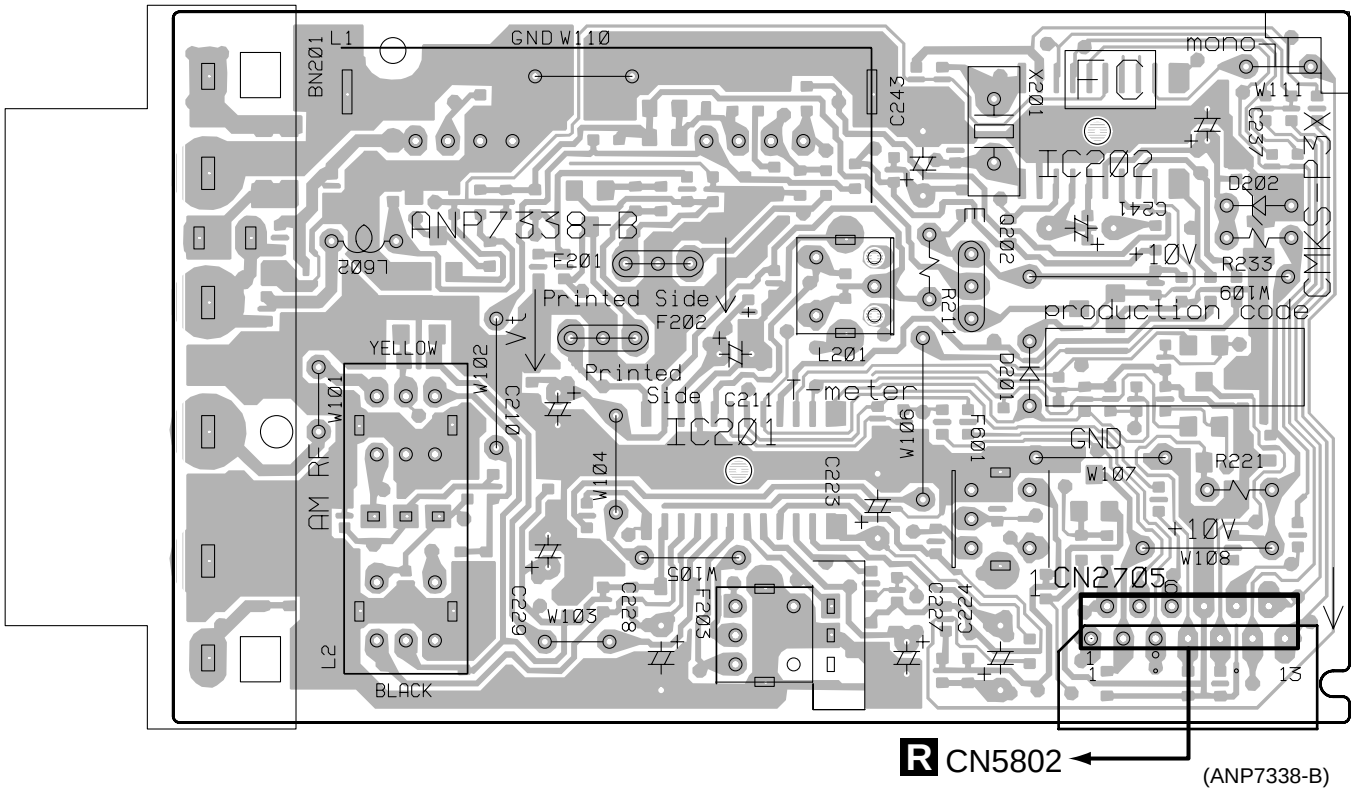

Q202

A FM/AM TUNER MODULE **SIDE B**

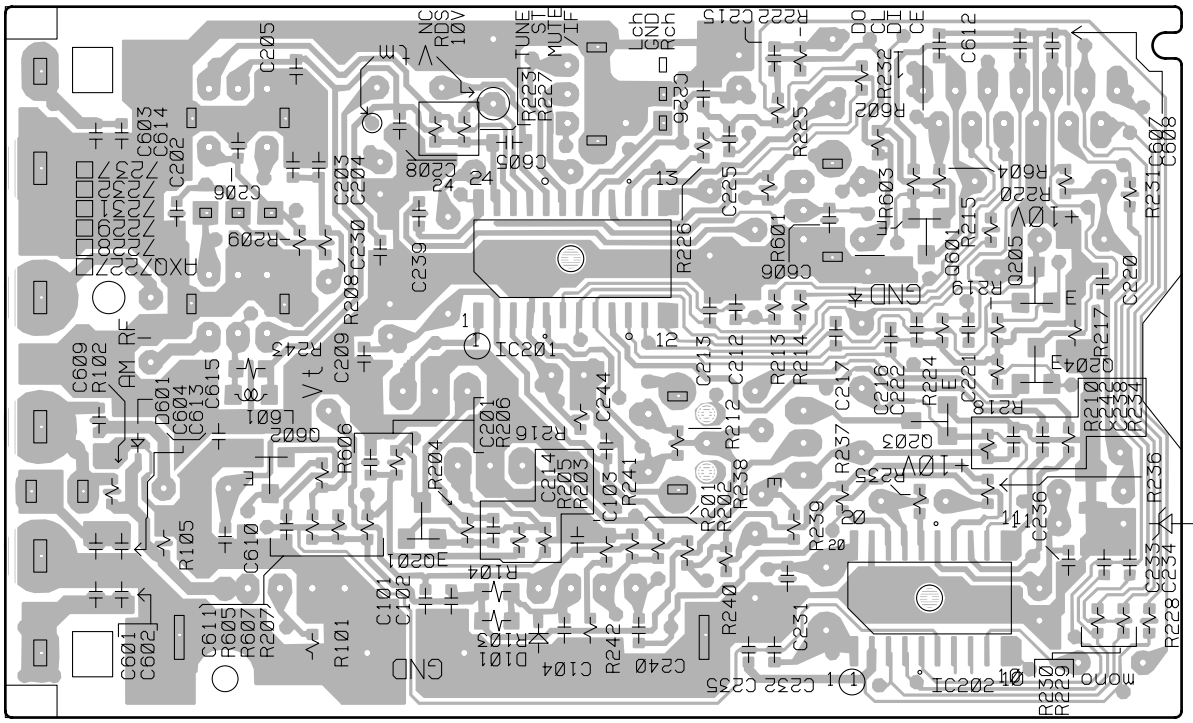

Q602 Q201 IC201 Q203 Q601 Q205 IC202 Q204

4.2 A/V I/O ASSY

B A/V I/O ASSY

SIDE A

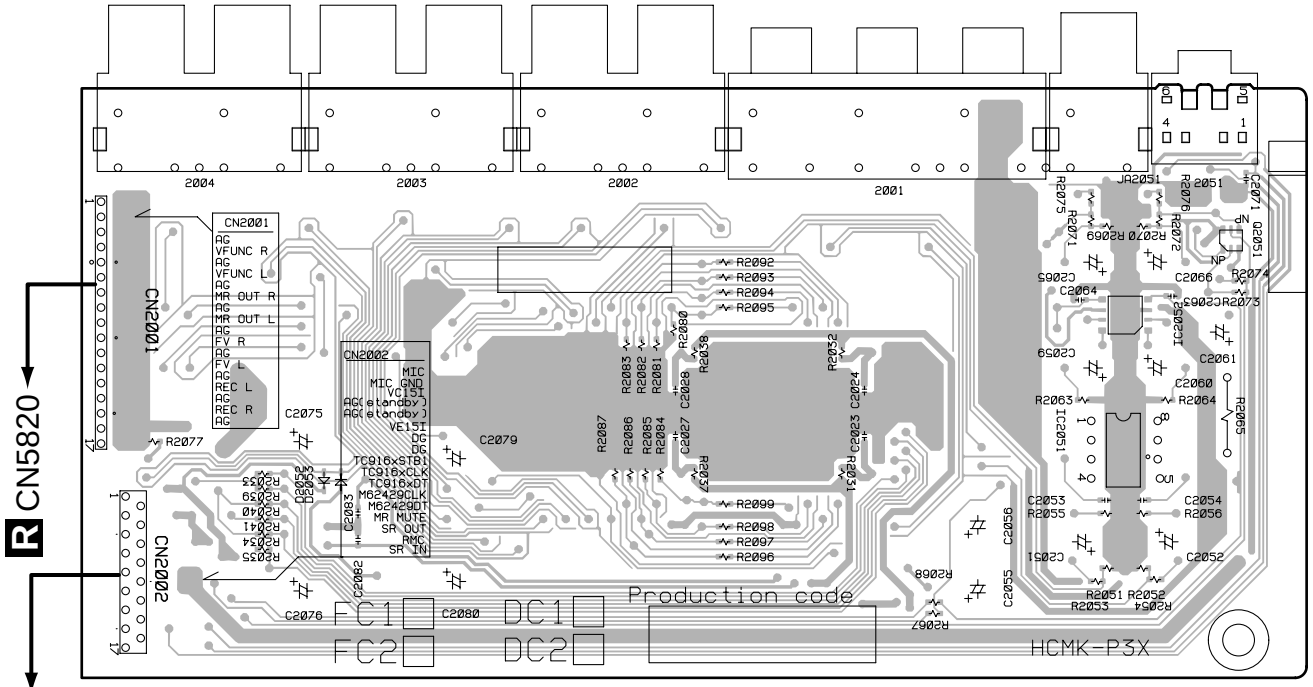

IC2051 IC2052 Q2051

(ANP7389-A)

SIDE B

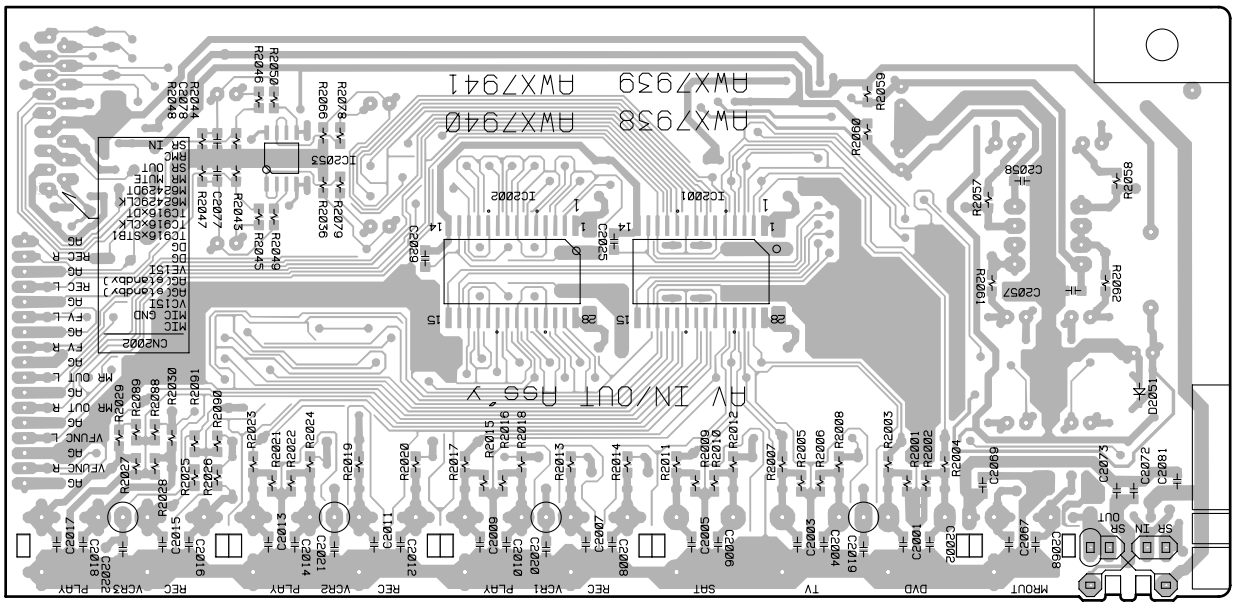

IC2053 IC2002 IC2001

(ANP7389-A)

4.3 COMPOSITE ASSY

C COMPOSITE ASSY

SIDE A

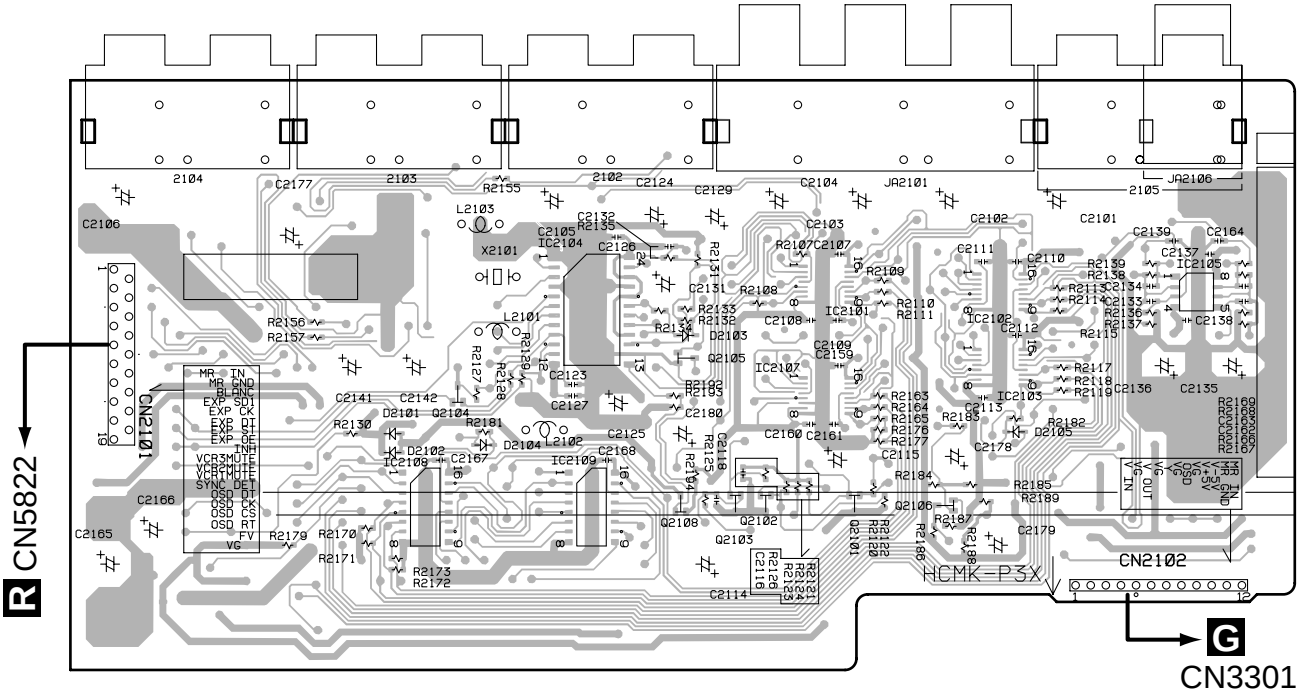

Q2104 IC2104 Q2105 Q2103 IC2107 IC2101 Q2106 IC2102 IC2105
IC2108 IC2109 Q2108 Q2102 Q2101 IC2103

(ANP7389-A)

SIDE B

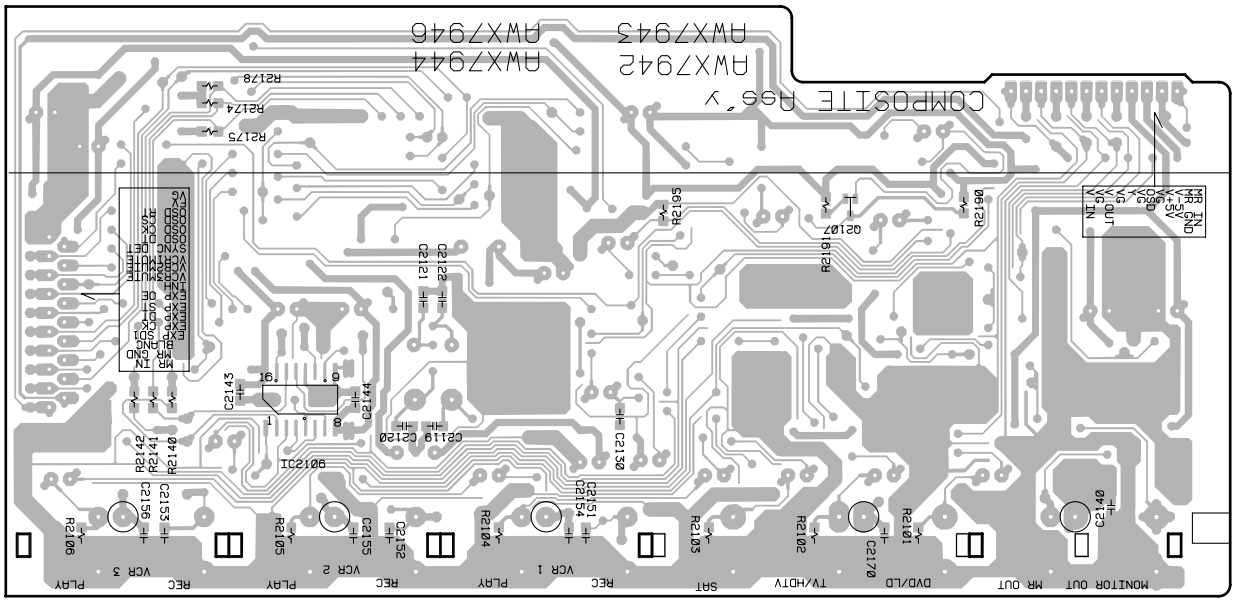

IC2106 Q2107

(ANP7389-A)

4.4 S-VIDEO ASSY

D S-VIDEO ASSY

SIDE A

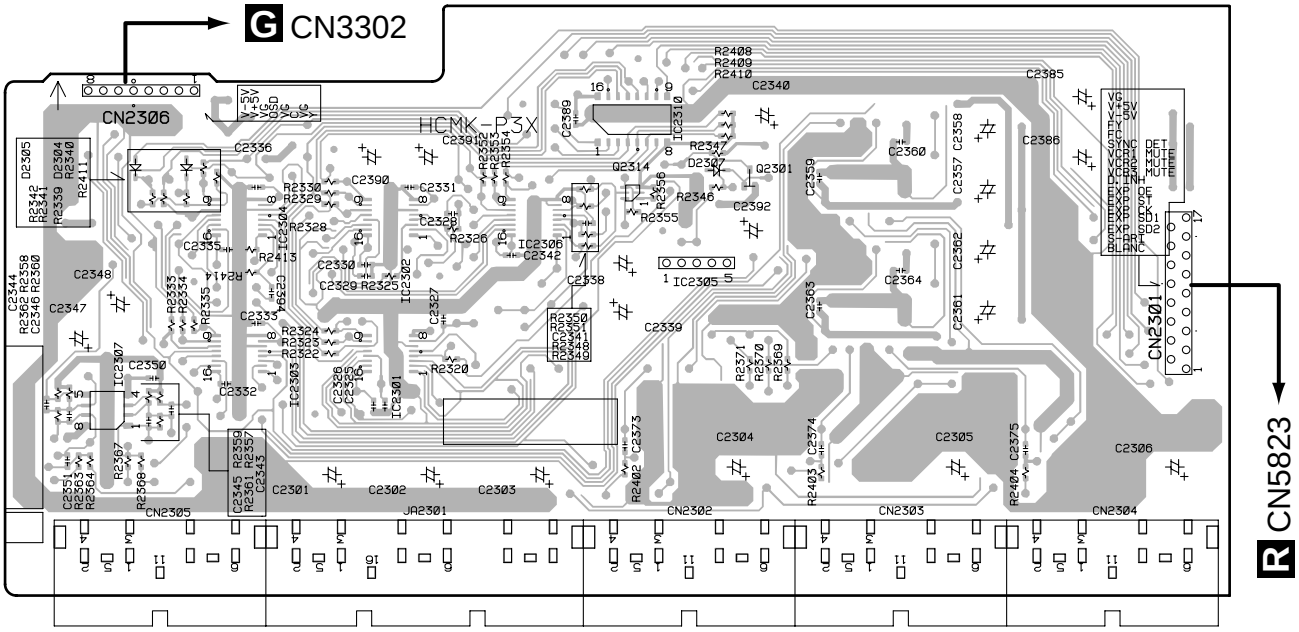

IC2307 IC2304 IC2303 IC2302 IC2301 IC2306 IC2310 Q2314 IC2305 Q2301

(ANP7389-A)

SIDE B

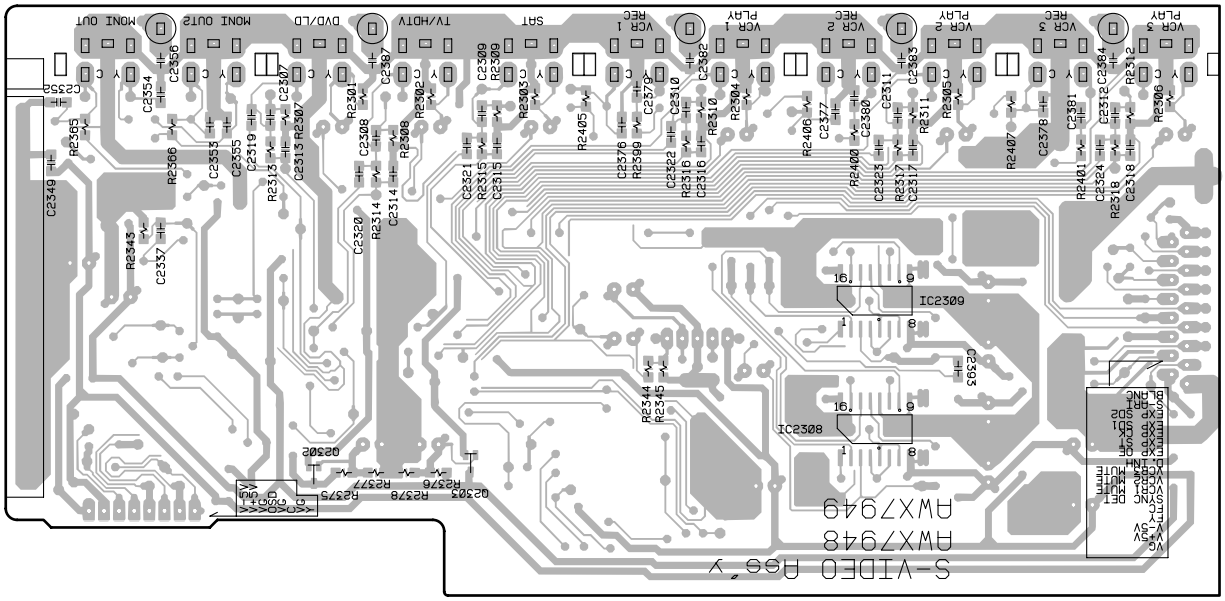

Q2302 Q2303 IC2309 IC2308

(ANP7389-A)

4.5 V-CONVERT ASSY (VSX-49TX ONLY)

SIDE A

E V-CONVERT ASSY

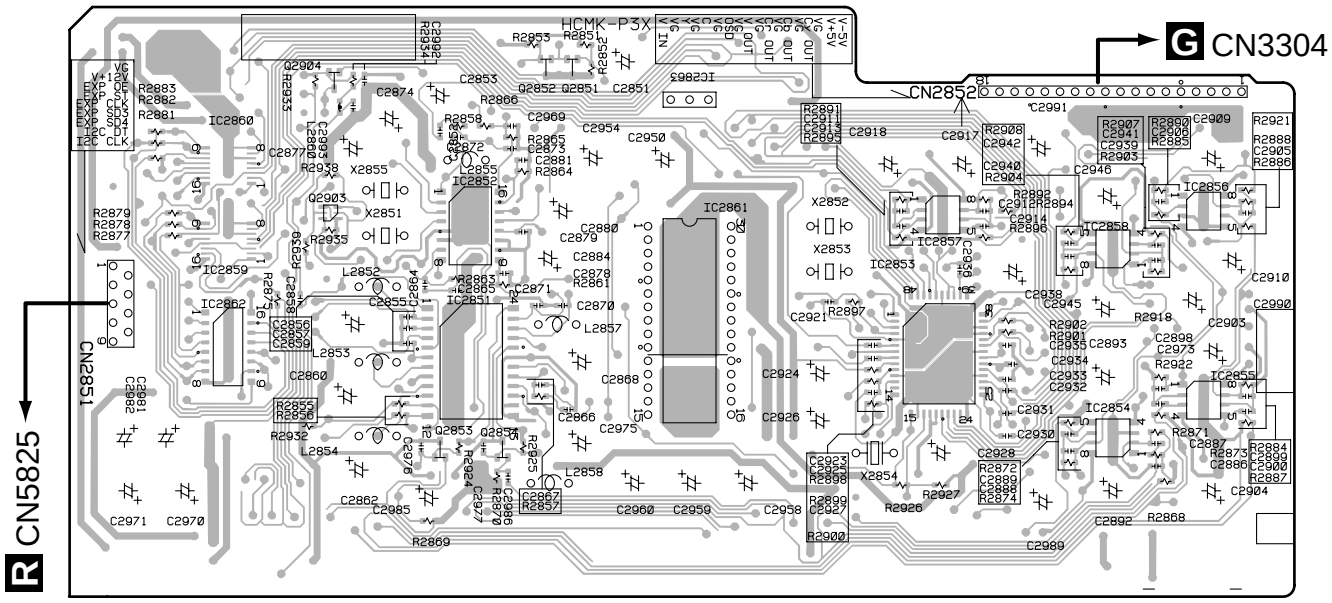

IC2860 IC2859 IC2862 | Q2904 Q2903 | Q2853 | IC2852 IC2851 | Q2854 | Q2852 Q2851 | IC2853 IC2861 | IC2857 IC2853 | IC2858 IC2854 | IC2856 IC2855

(ANP7389-A)

SIDE B

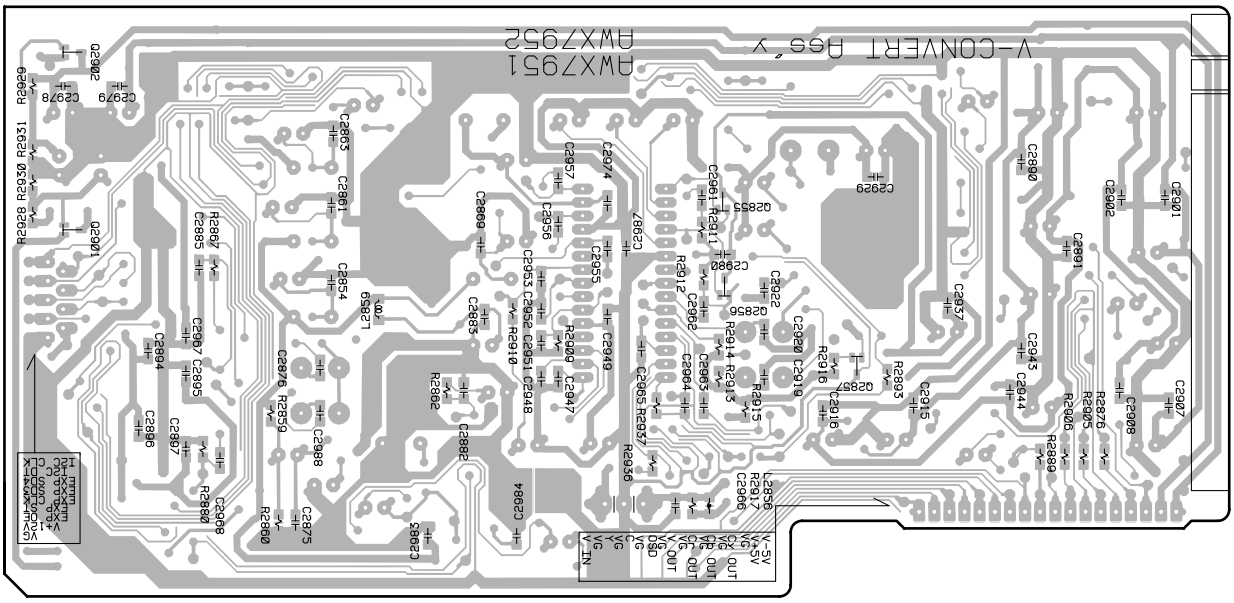

Q2902 Q2901 | Q2855 Q2980 | Q2857

(ANP7389-A)

4.6 COMPONENT ASSY

F COMPONENT ASSY

SIDE A

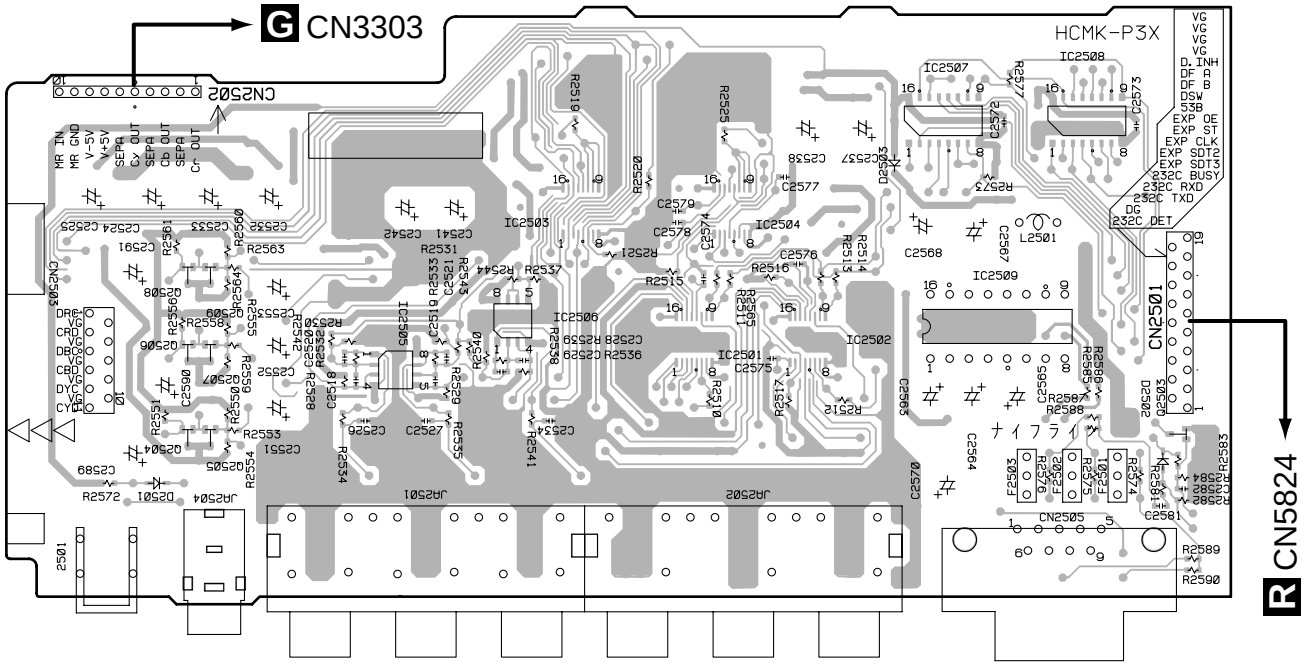

Q2508 Q2509
Q2506 Q2507
Q2504 Q2505

IC2505 IC2506 IC2503 IC2501 IC2504 IC2502 IC2507 IC2508
IC2509

(ANP7389-A)

SIDE B

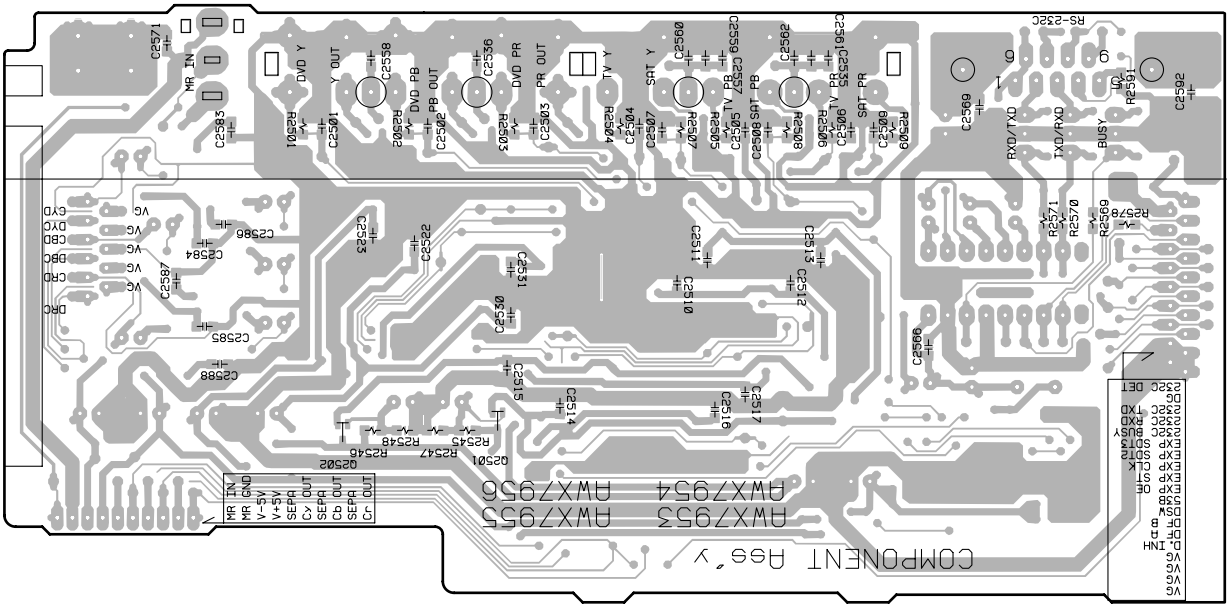

Q2502 Q2501

(ANP7389-A)

4.7 VIDEO CONNECT ASSY

SIDE A

G VIDEO CONNECT ASSY

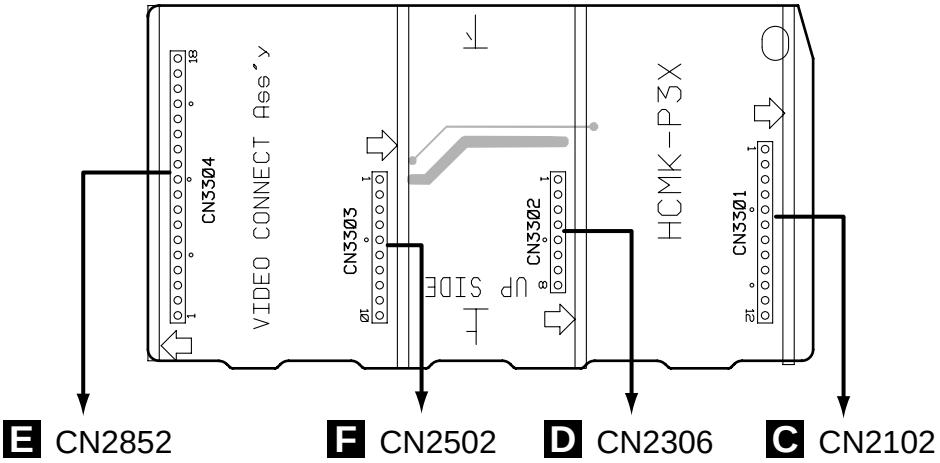

(ANP7390-A)

SIDE B

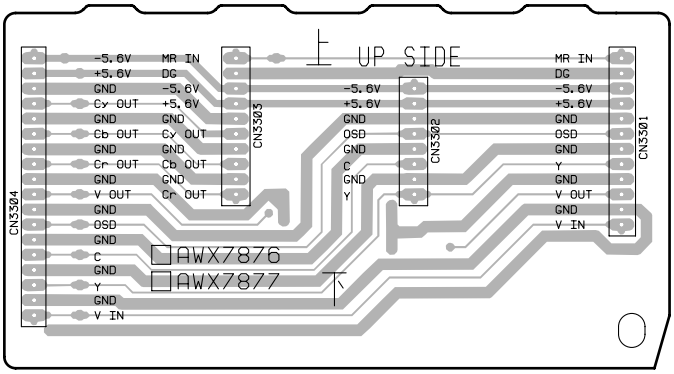

(ANP7390-A)

4.8 MIC AMP, MIC & OPT, RFONT A/V and HEADPHONE ASSYS

SIDE A

J FRONT A/V ASSY

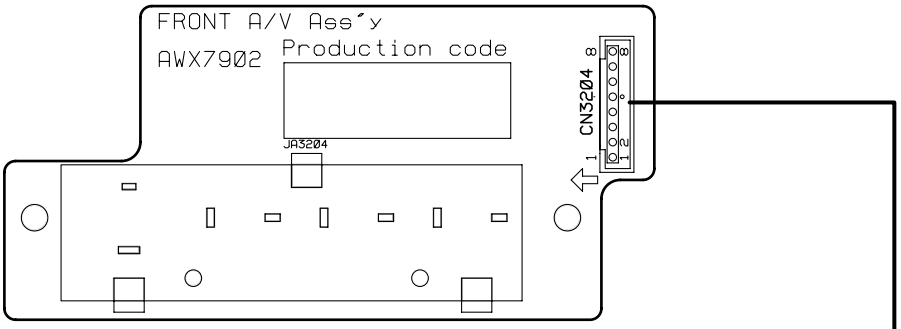

(ANP7390-A)

K HEADPHONE ASSY

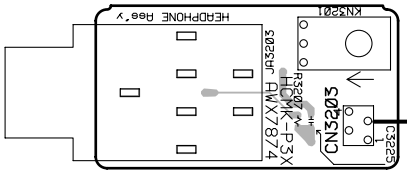

AD CN1206

(ANP7390-A)

H MIC AMP ASSY

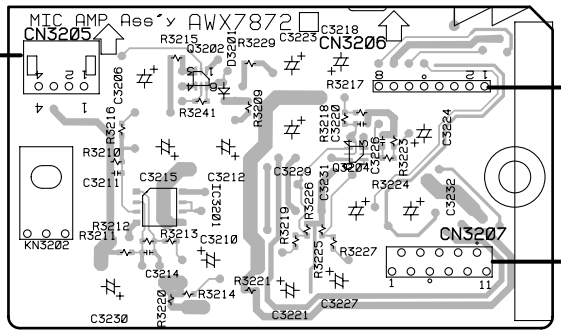

R CN5806

IC3201 Q3202 Q3204

(ANP7390-A)

I MIC & OPT ASSY

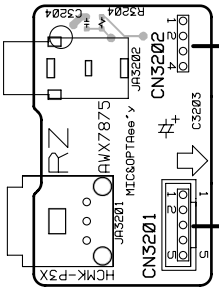

R CN5804

(ANP7390-A)

SIDE B

J FRONT A/V ASSY

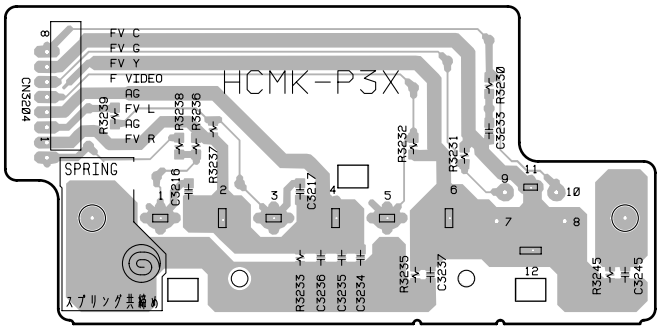

(ANP7390-A)

K HEADPHONE ASSY

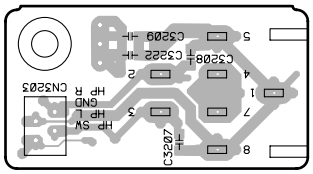

(ANP7390-A)

H MIC AMP ASSY

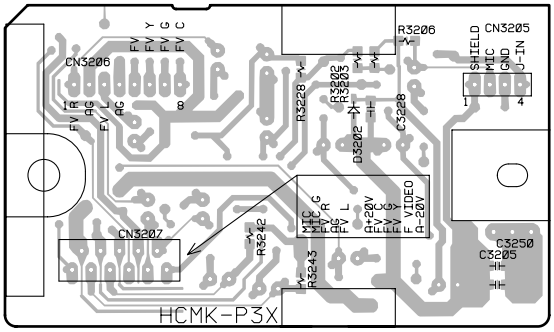

(ANP7390-A)

I MIC & OPT ASSY

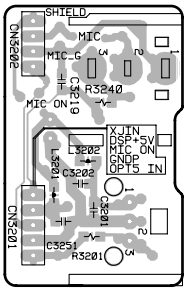

(ANP7390-A)

4.9 ANALOG IN & A/D ASSY

L ANALOG IN & A/D ASSY

SIDE A

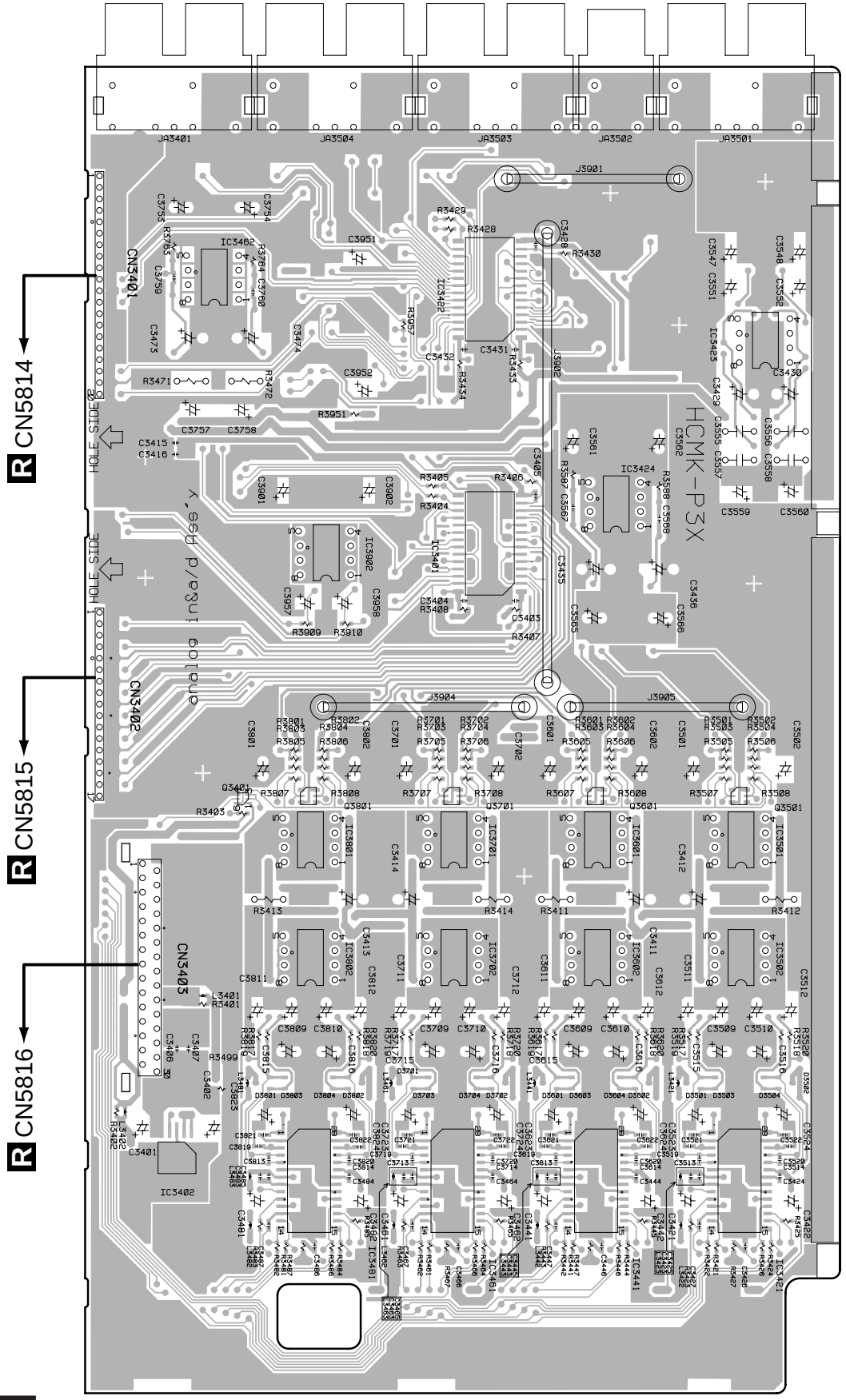

(ANP7390-A)

SIDE B

L ANALOG IN & A/D ASSY

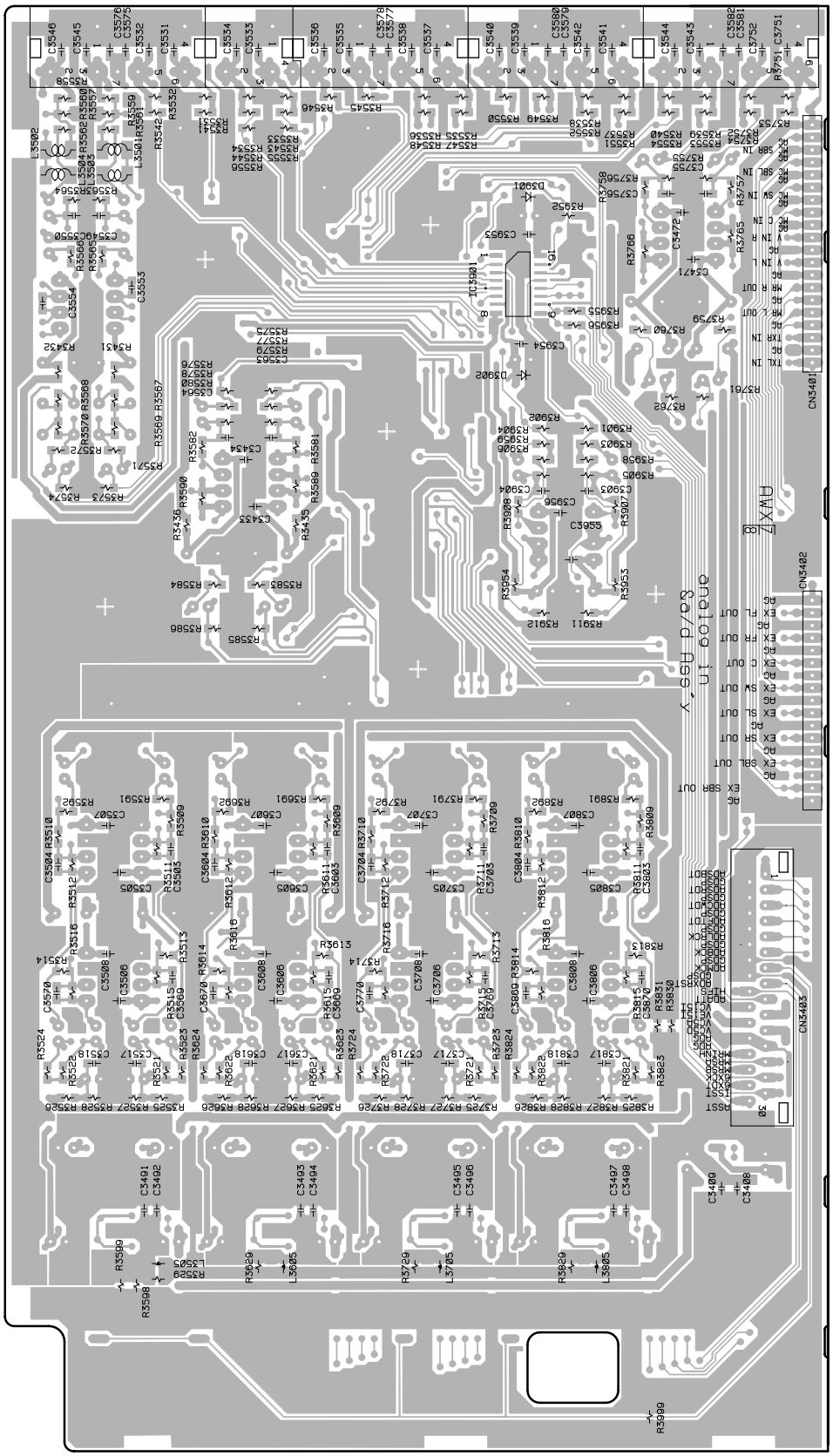

(ANP7390-A)

4.10 DISPLAY, INPUT SEL, MULTI JOG, VOL, FL SUPPLY and STANDBY ASSYS

M DISPLAY ASSY

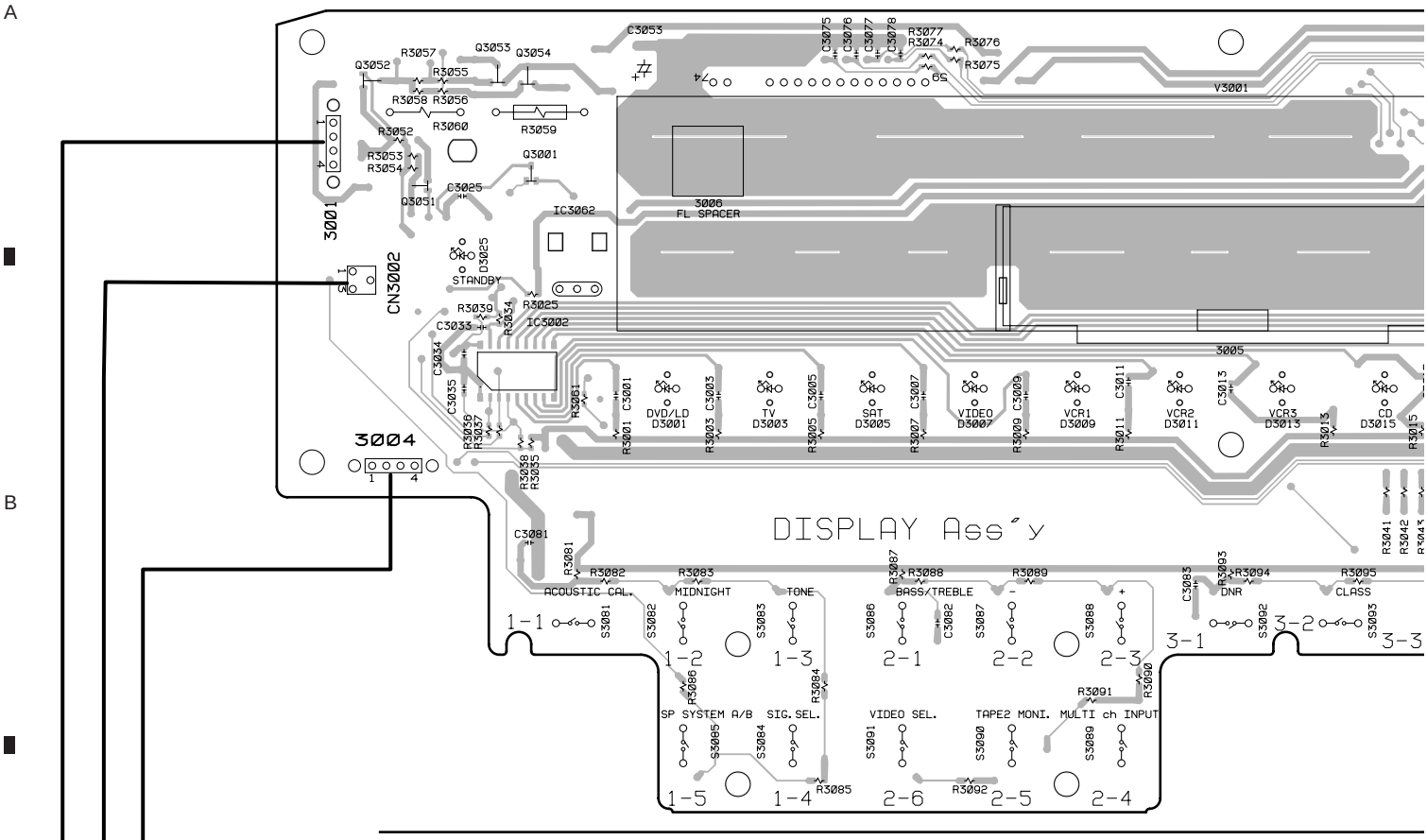

Q3052 Q3053 Q3054
Q3051 Q5001 IC3062
IC3002

N INPUT SEL ASSY

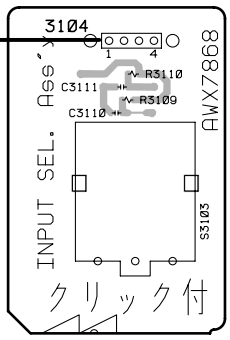

(ANP7390-A)

AE FL SUPPLY ASSY

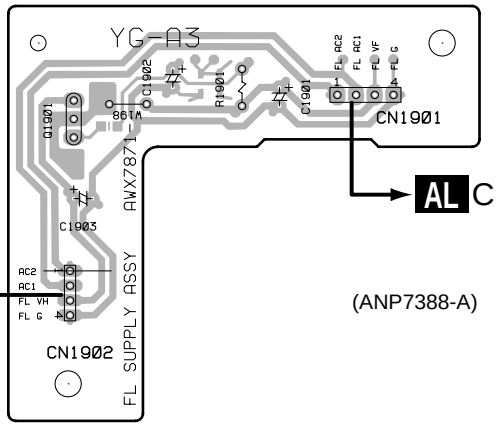

(ANP7388-A)

AL CN1803

AF STANDBY ASSY

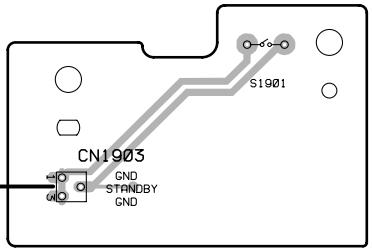

(ANP7388-A)

SIDE A

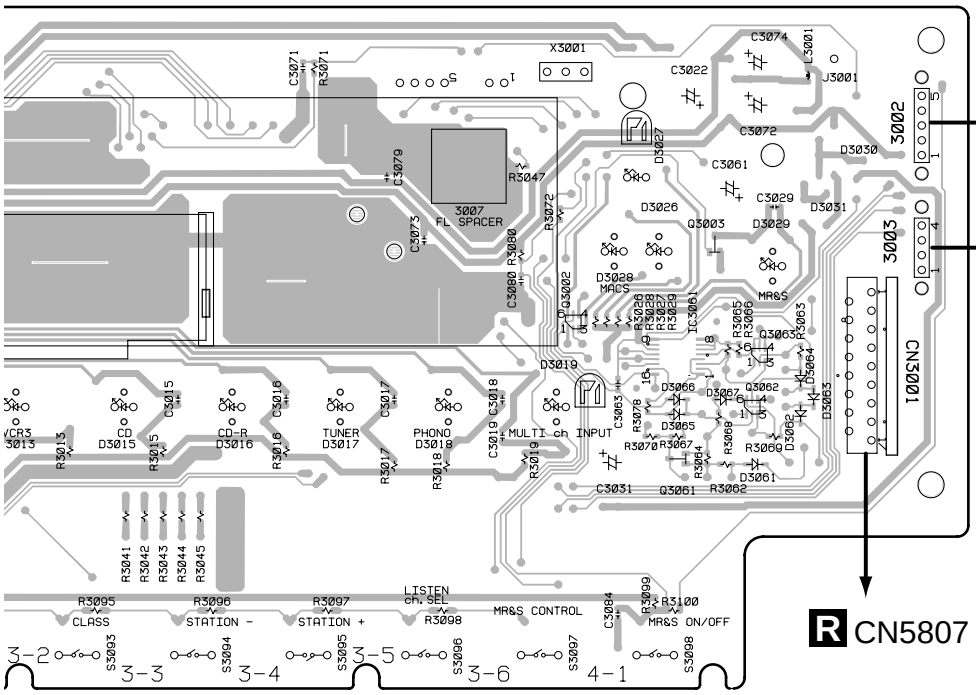

R CN5807

(ANP7390-A)

Q3002 IC3061 Q3003 Q3063
Q3061 Q3062

O MULTI JOG ASSY

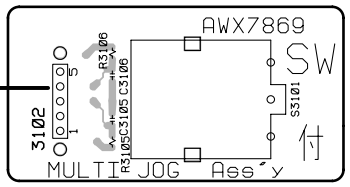

(ANP7390-A)

P VOL ASSY

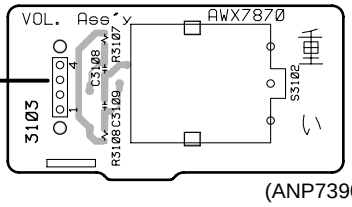

(ANP7390-A)

M DISPLAY ASSY

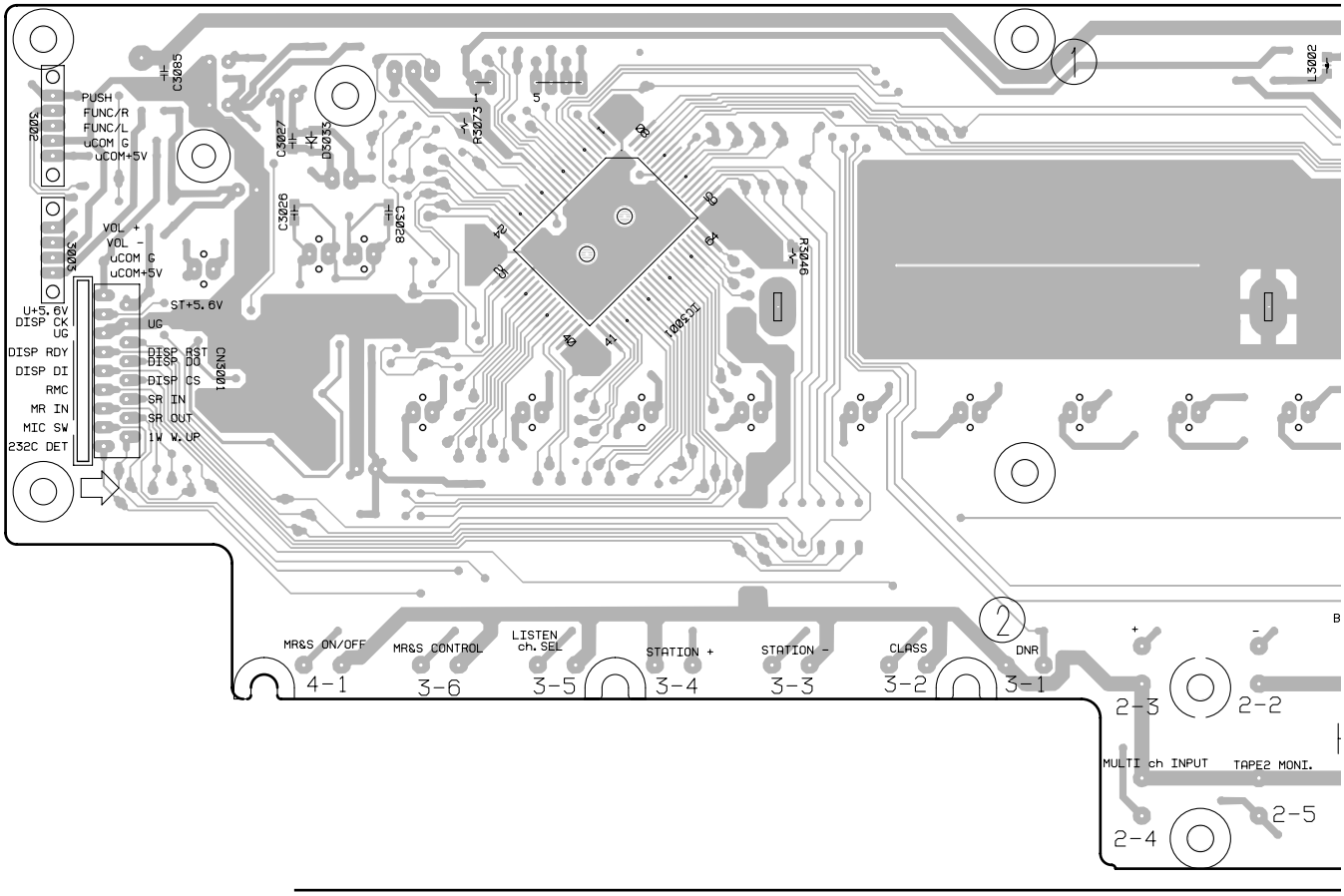

IC3001

O MULTI JOG ASSY

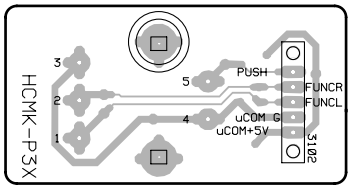

(ANP7390-A)

P VOL ASSY

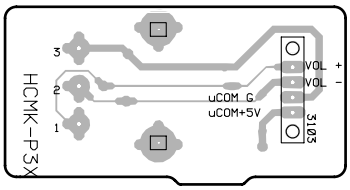

(ANP7390-A)

SIDE B

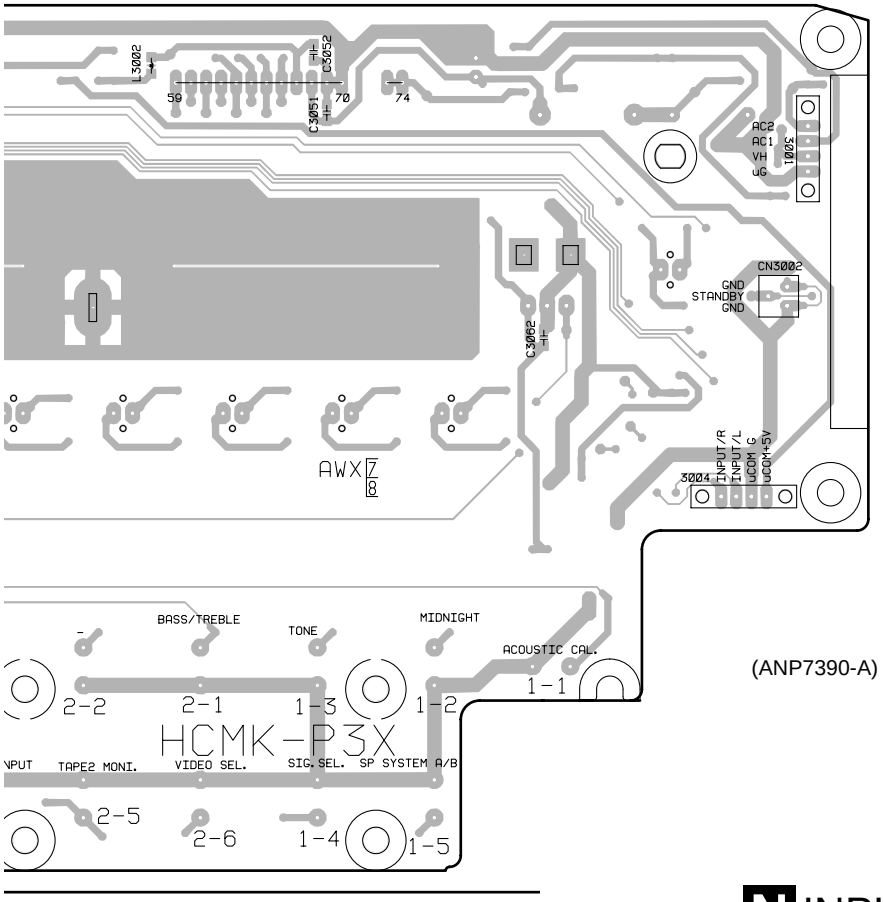

(ANP7390-A)

N INPUT SEL ASSY

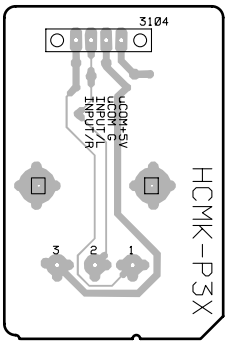

(ANP7390-A)

AE FL SUPPLY ASSY

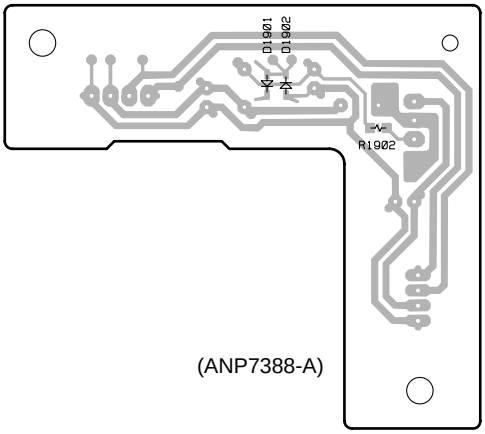

(ANP7388-A)

AF STANDBY ASSY

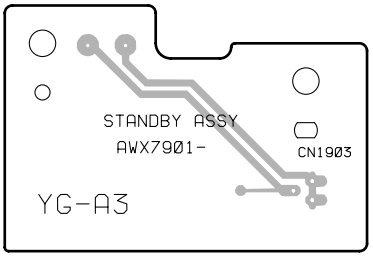

(ANP7388-A)

4.11 VR & PRE OUT ASSY

Q VR & PRE OUT ASSY

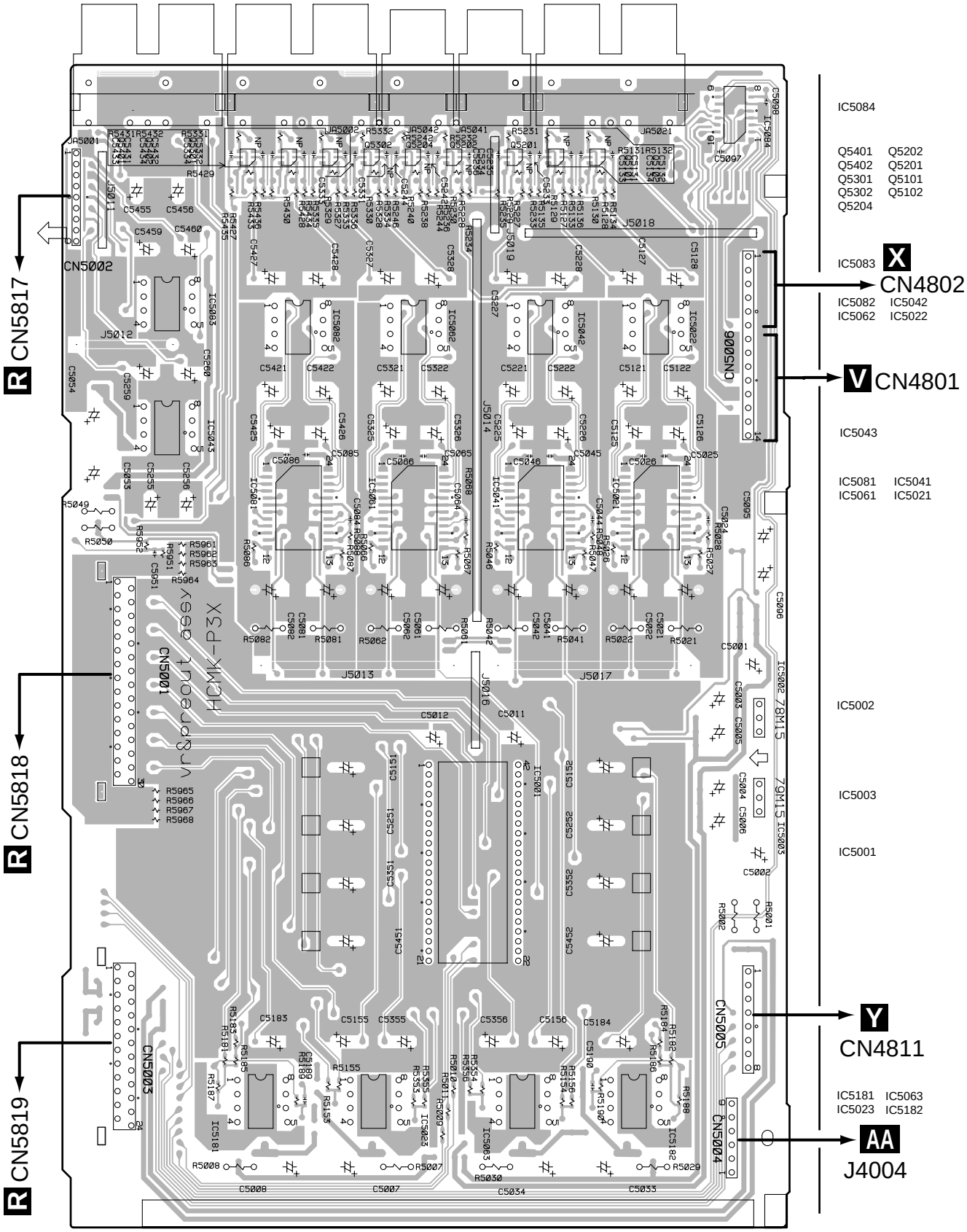

(ANP7392-A)

SIDE A

Q VR & PRE OUT ASSY

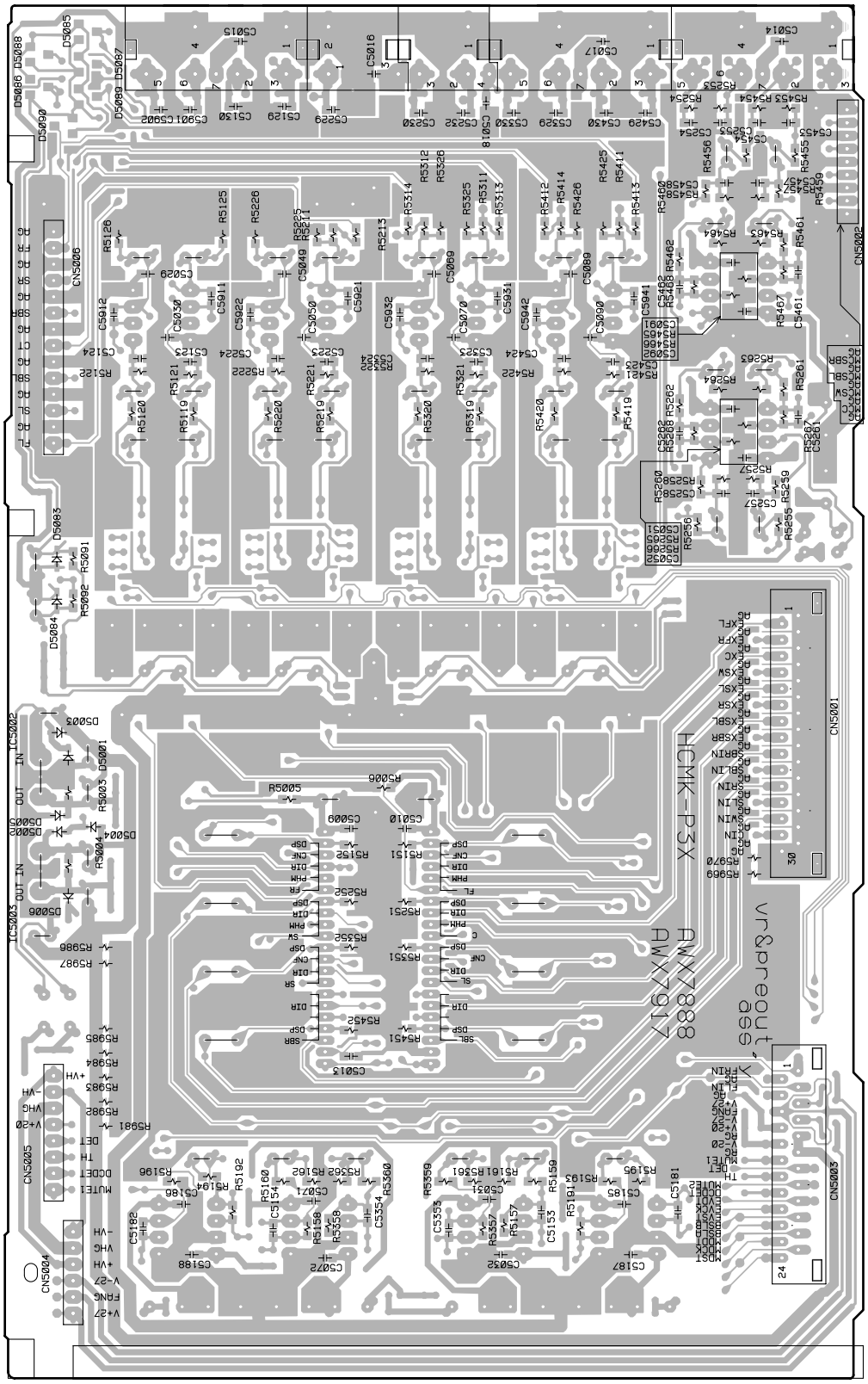

(ANP7392-A)

SIDE B

4.12 MOTHER ASSY

R MOTHER ASSY

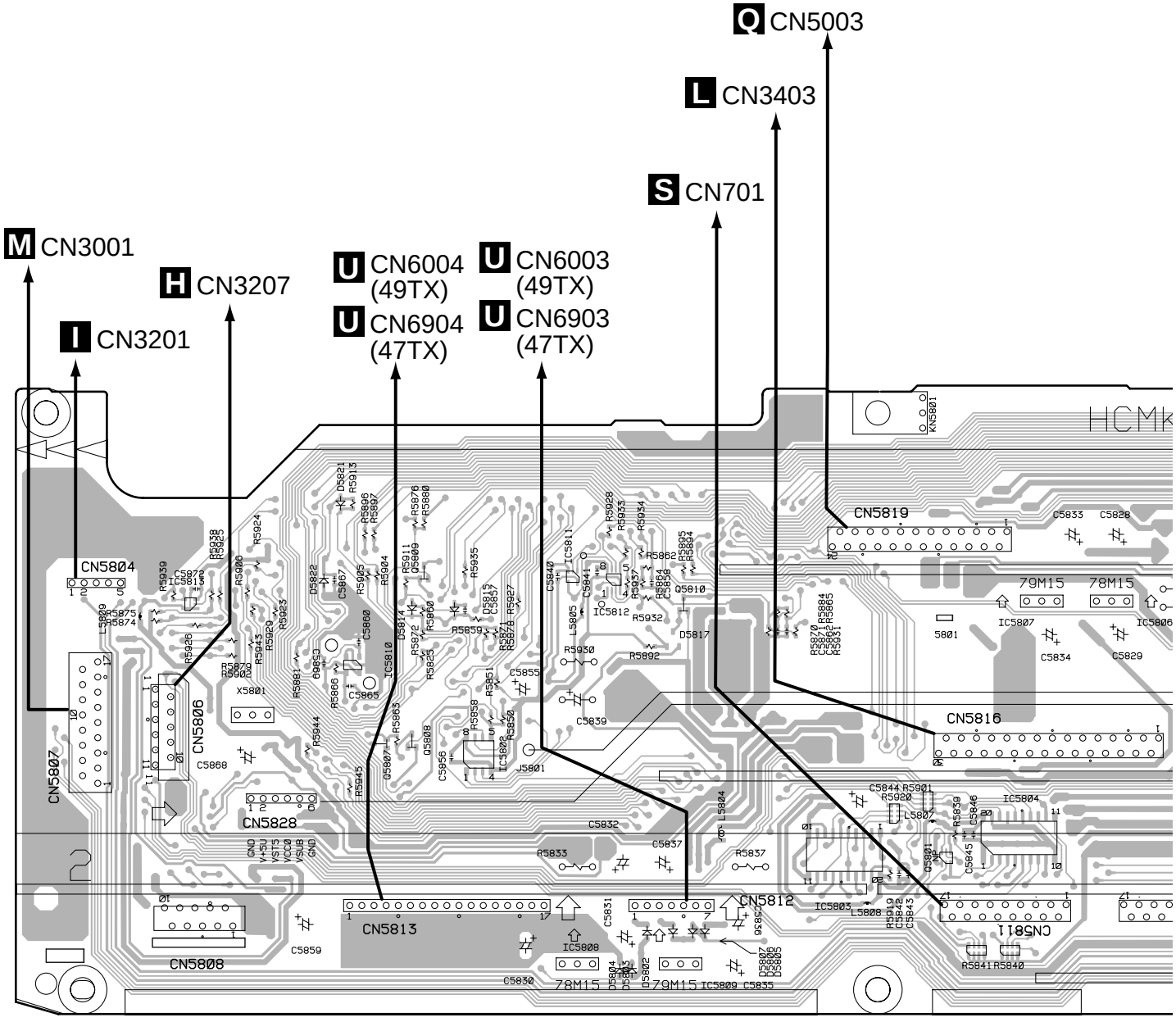

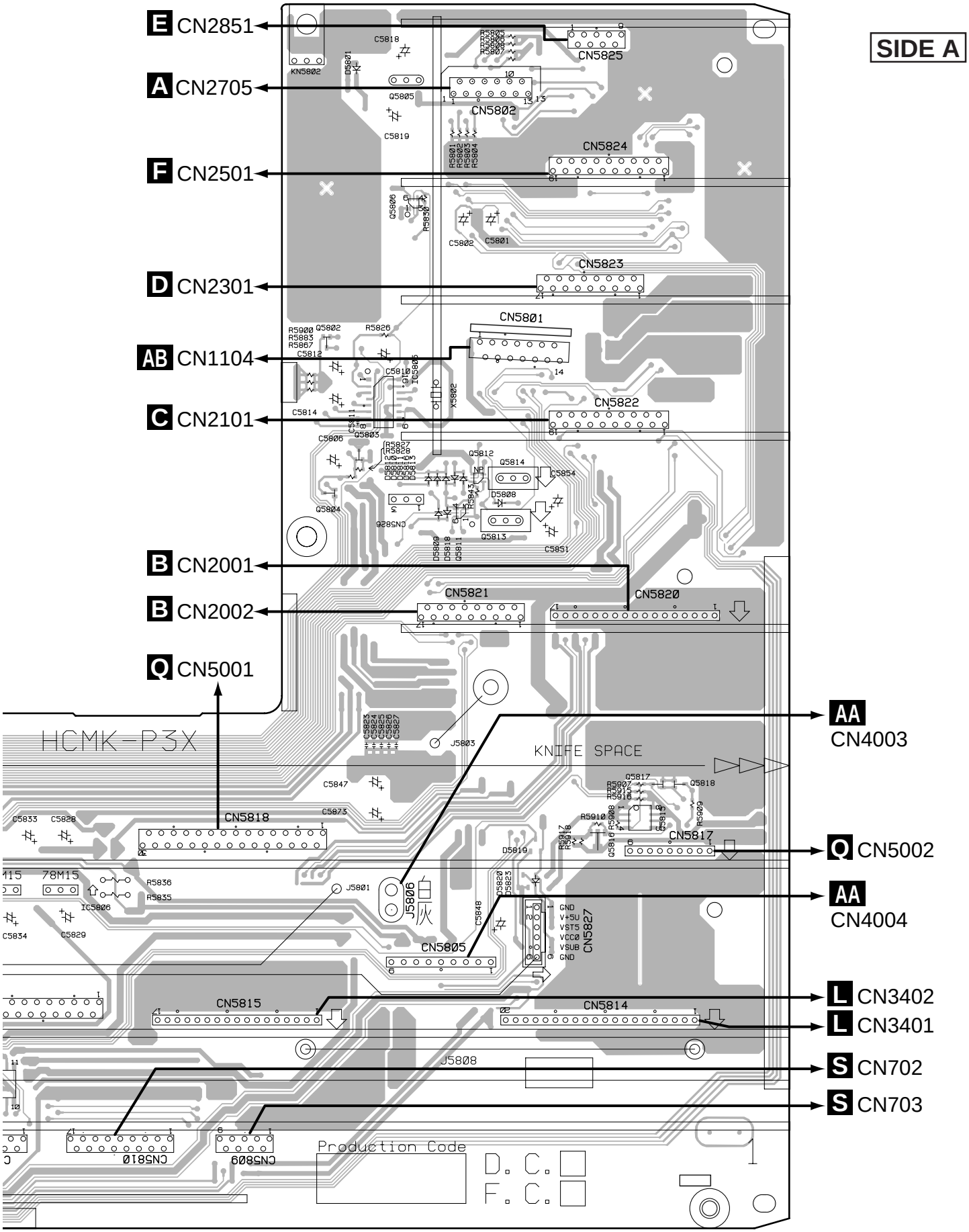

IC5806

Q5802 Q5803 Q5805 Q5812 Q5814 Q5816 Q5817 Q5818
Q5804 Q5806 Q5811 Q5813 Q5815
IC5805

(ANP7392-A)

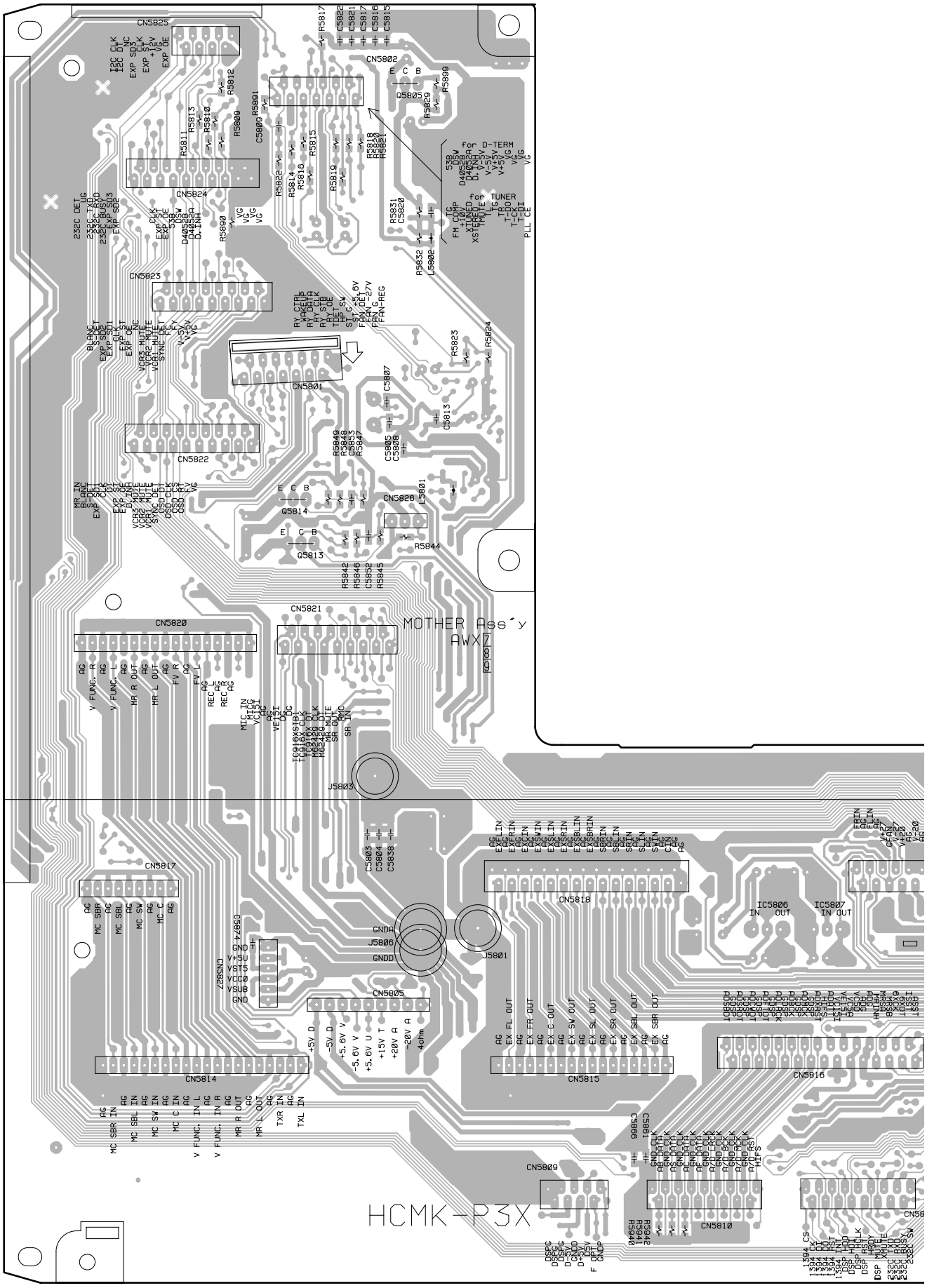

Q5814 Q5805 IC5806 IC5807
Q5813

SIDE B

R MOTHER ASSY

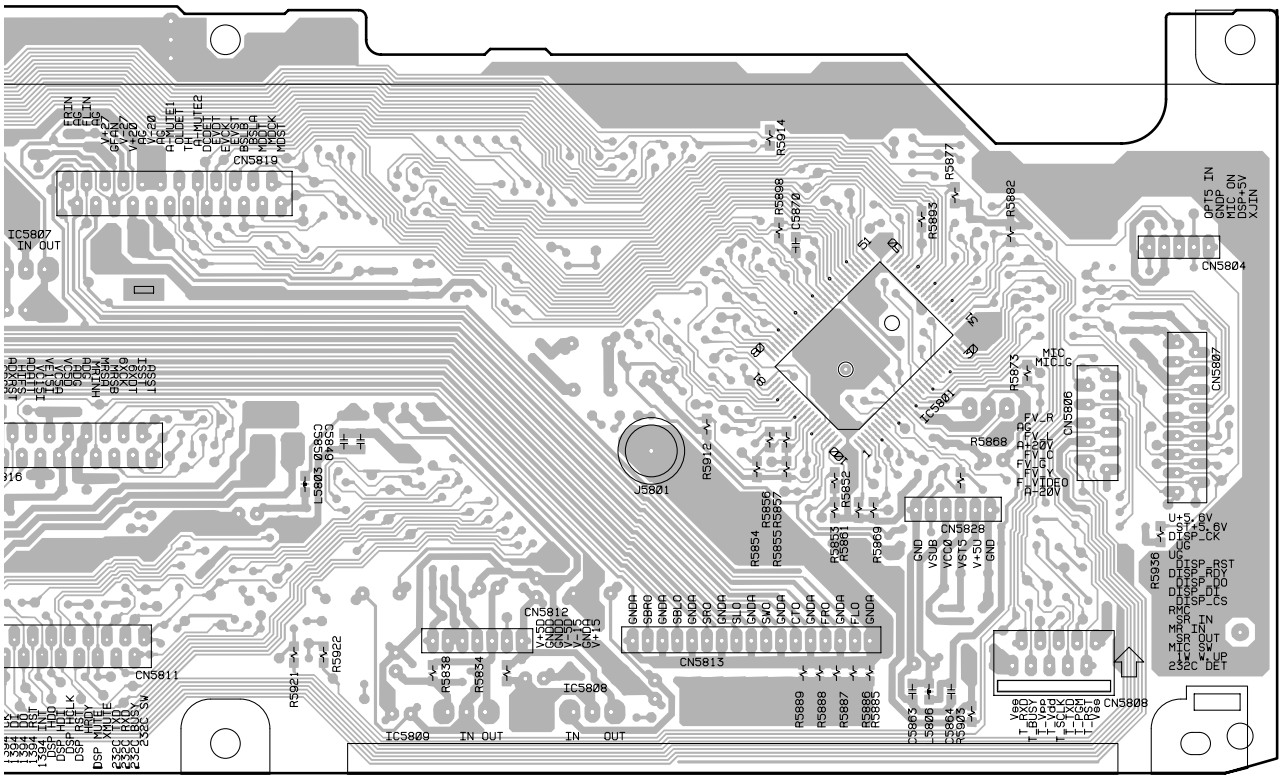
CN5819
IC5807
IN OUT
CN5811
CN5812
CN5813
IC5809
IN OUT
IC5808
IN OUT
J5801
IC5801
CN5828
CN5806
CN5807
CN5804
CN5808
MIC
MIC_LG
FV_R
FV_L
FV_C
FV_LG
FV_V
F_VIDEO
R-20V
V+5.6V
VST5.6V
DISP_CK
DISP_RST
DISP_RDY
DISP_DO
DISP_DI
DISP_CS
RMC
SR IN
MR IN
SR OUT
MIC SW
LW W_UP
232C DET
CPT5 IN
CPT5
MIC ON
DSP+5V
XJIN
GND
VSUB
VCC0
VST5
V+5U
GND
GNDA
SBR0
GNDA
SBL0
GNDA
SR0
GNDA
SL0
GNDA
SW0
GNDA
CT0
GNDA
FR0
GNDA
FL0
GNDA
V+5D
GNDD
GNDD
GNDD
V+15
GNDD
R5914
R5808
C5870
R5877
R5893
R5882
R5873
R5868
R5912
R5856
R5855
R5857
R5854
R5852
R5853
R5881
R5969
R5936
R5922
R5921
R5838
R5834
R5889
R5888
R5887
R5886
R5885
C5963
L5906
C5964
R5903
C5903
C5940
C5950
L5903
DSP MUTE
DSP XMUTE
232C RXD
232C TXD
232C SW
DSP HALT
DSP RST
DSP HDD
DSP HLK
DSP MCK
DSP BCK
DSP LRCK
DSP DI
DSP DO
DSP RST
DSP CS
DSP CK
DSP WS
DSP BCK
DSP M

4.13 DSP ASSY

S DSP ASSY

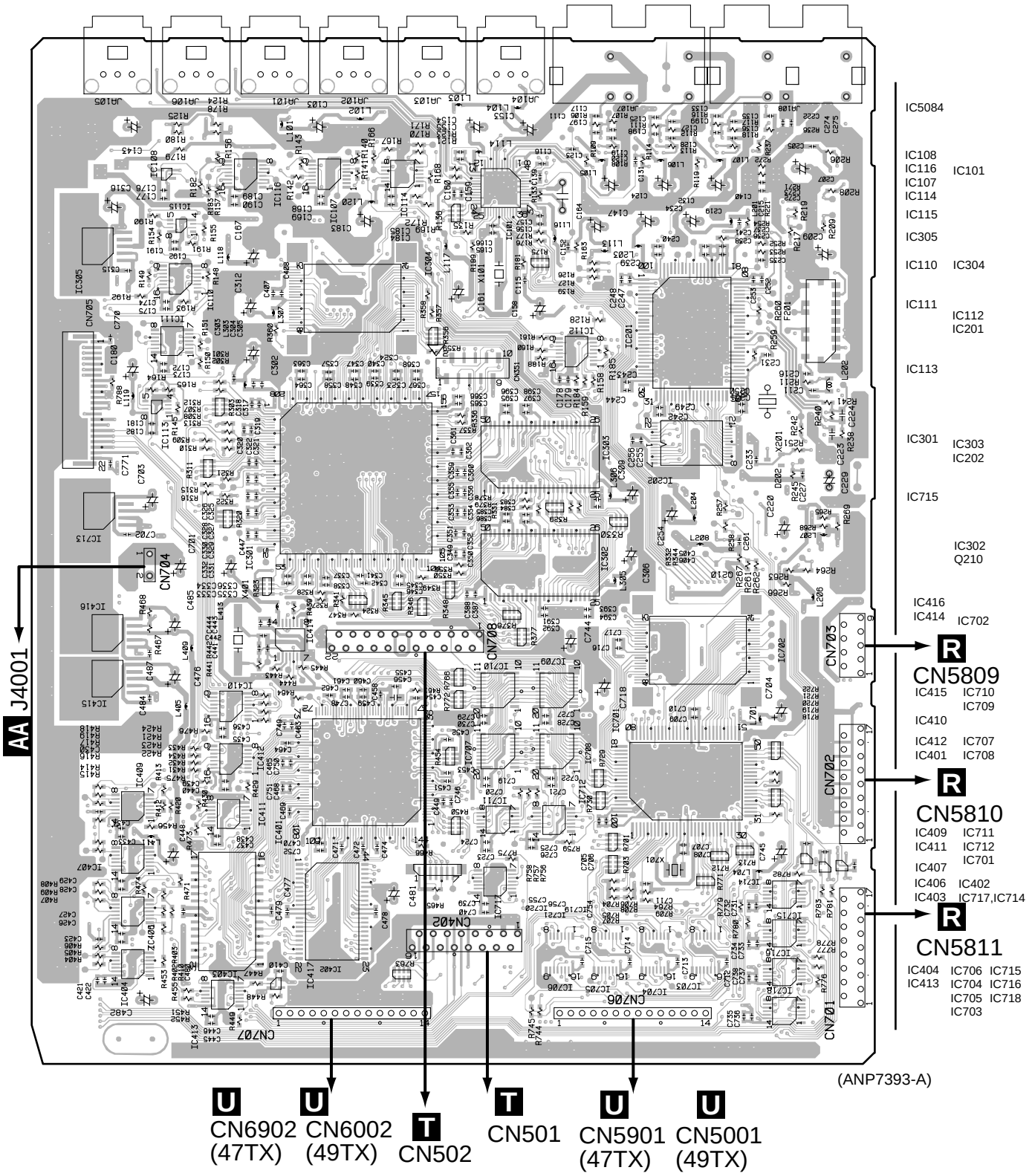

SIDE A

S DSP ASSY

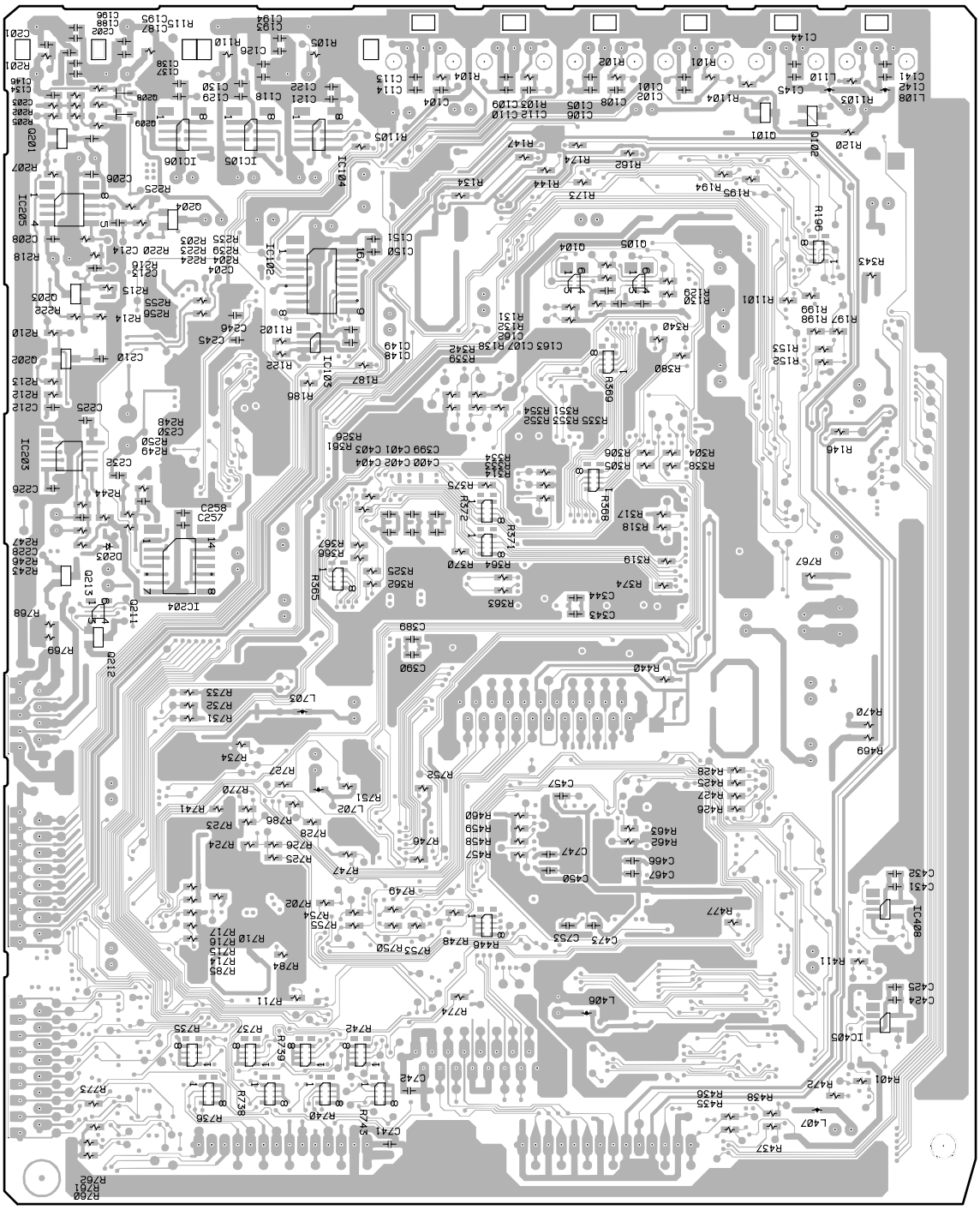

Q208 Q101
Q209 Q102
Q201 IC106 IC104
IC105
IC205 Q204
Q104 Q105
Q203 IC102
Q202 IC103
IC203
Q213 IC204
Q211
Q212
IC408
IC405

(ANP7393-A)

SIDE B

4.14 DAC10 ASSY (VSX-49TX ONLY)

U DAC10 ASSY

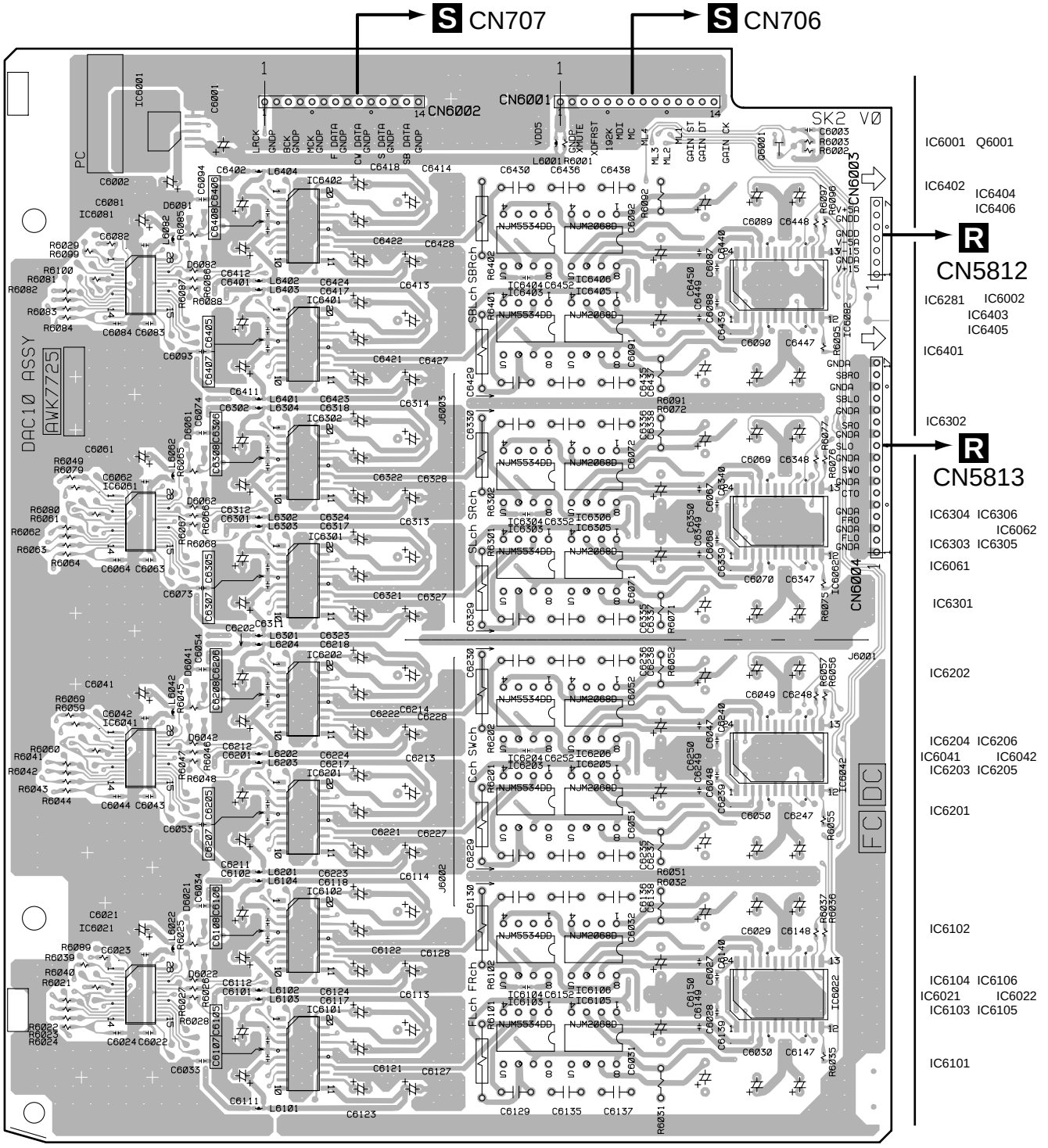

U DAC10 ASSY

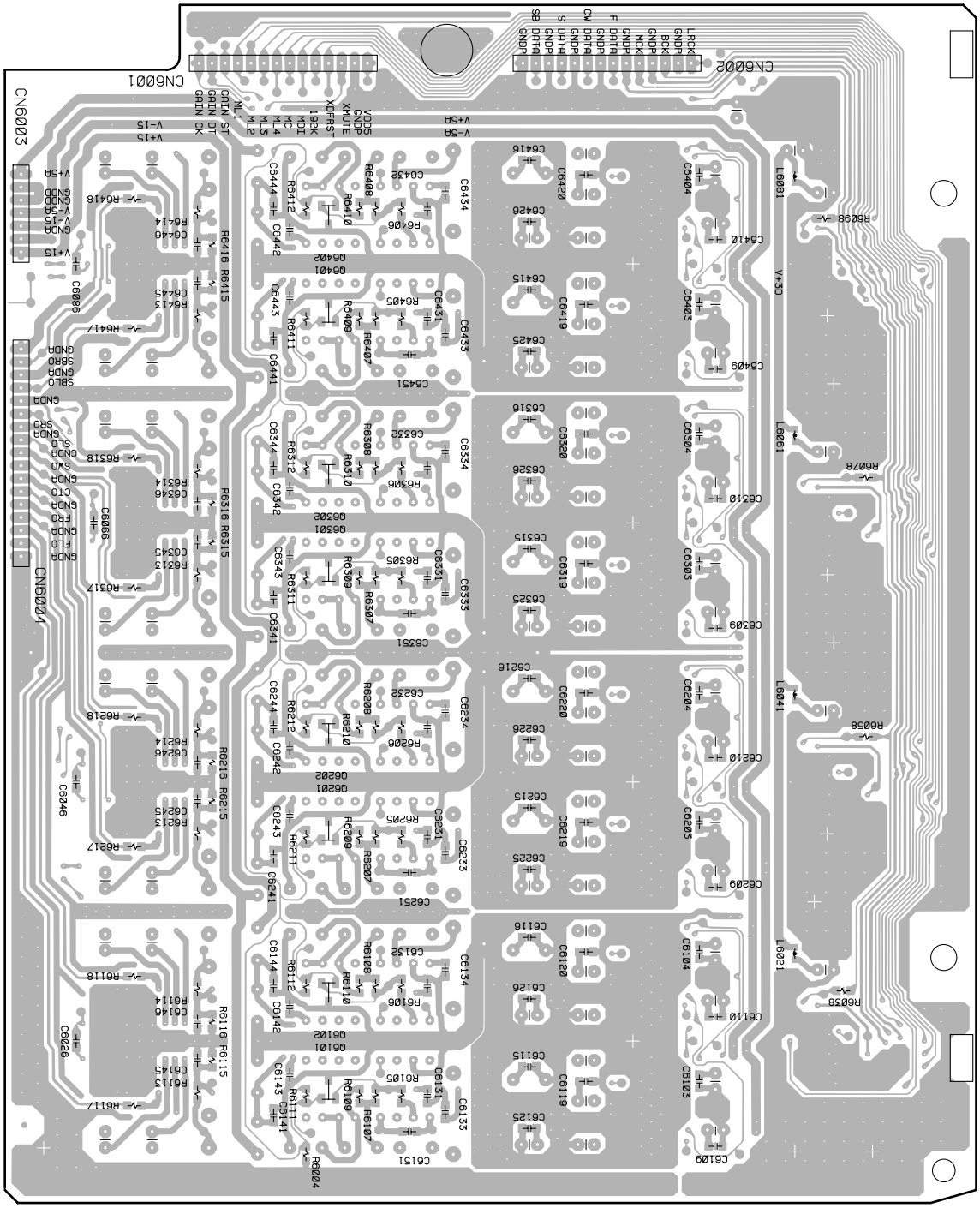

(ANP7394-A)

SIDE B

4.15 DAC8 ASSY (VSX-47TX ONLY)

U DAC8 ASSY

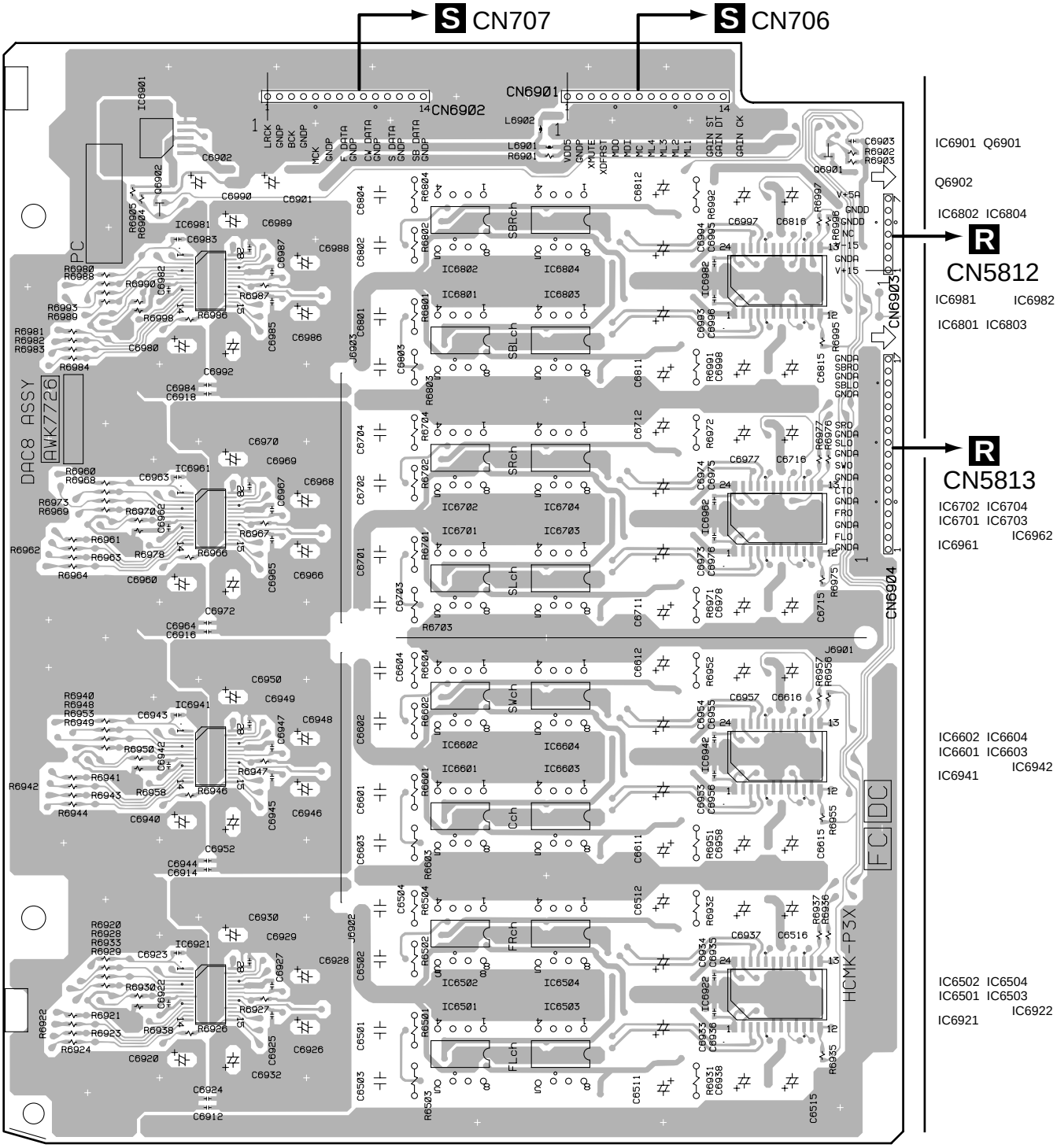

(ANP7416-A)

DAC8 ASSY

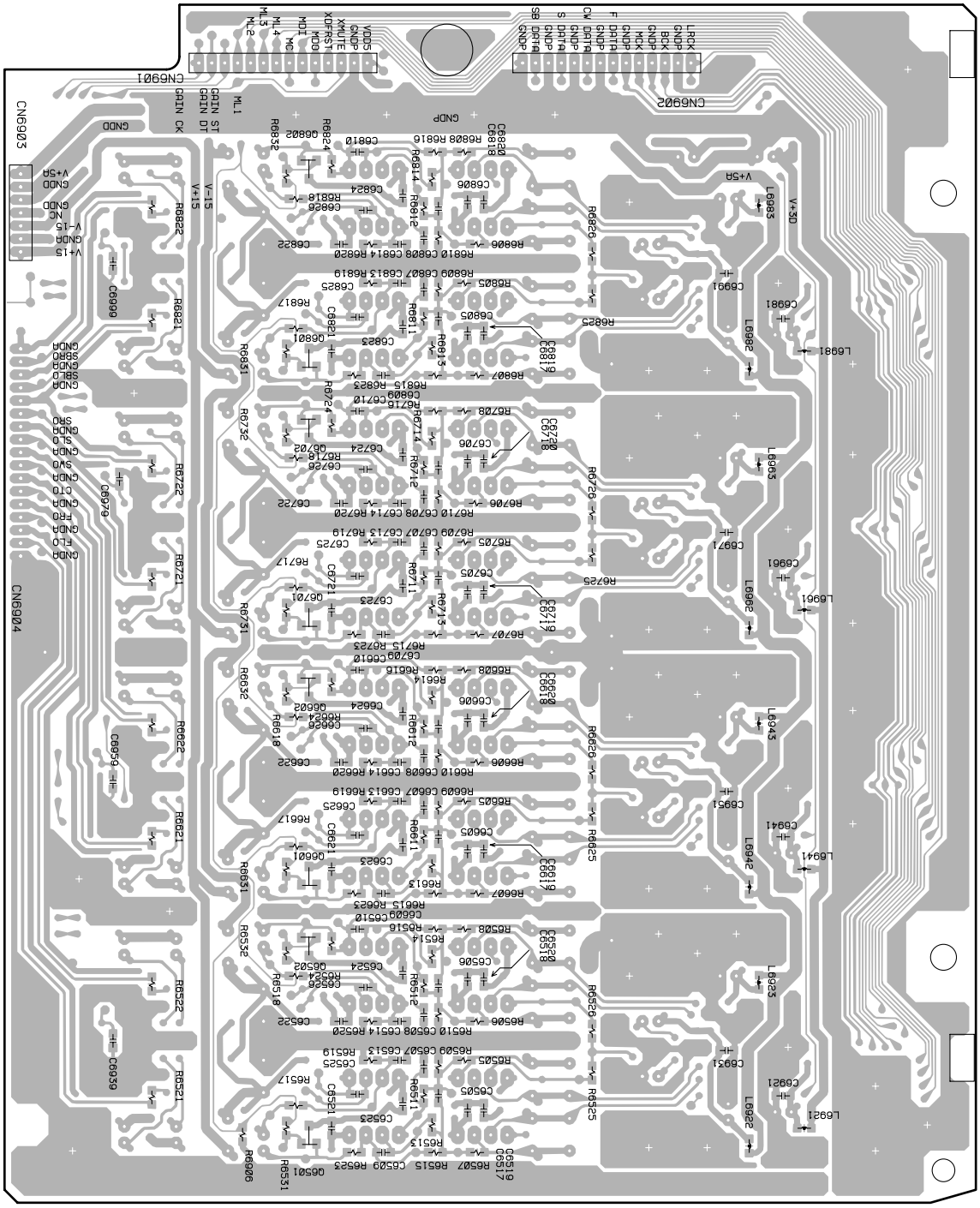

(ANP7416-A)

SIDE B

4.16 DSP3 ASSY (VSX-49TX ONLY)

T DSP3 ASSY

SIDE A

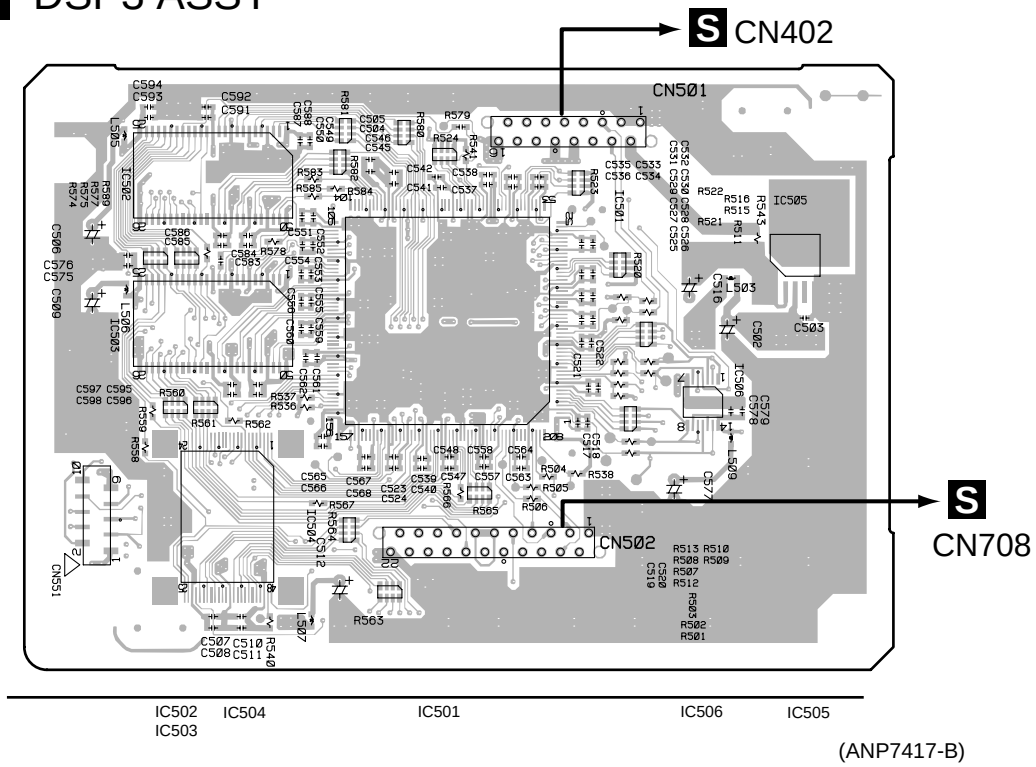

(ANP7417-B)

SIDE B

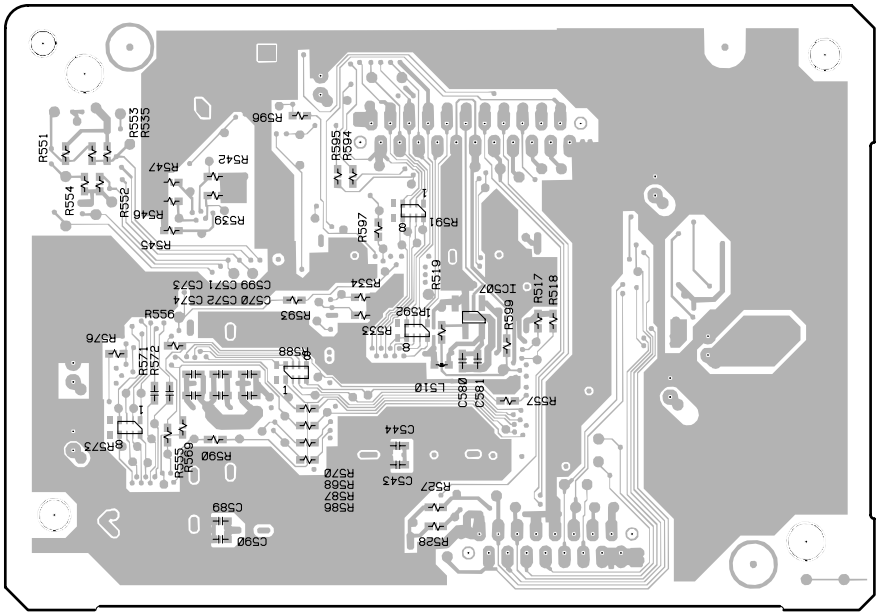

(ANP7417-B)

4.17 POWER AMP (L) and POSISTER (L) ASSYS

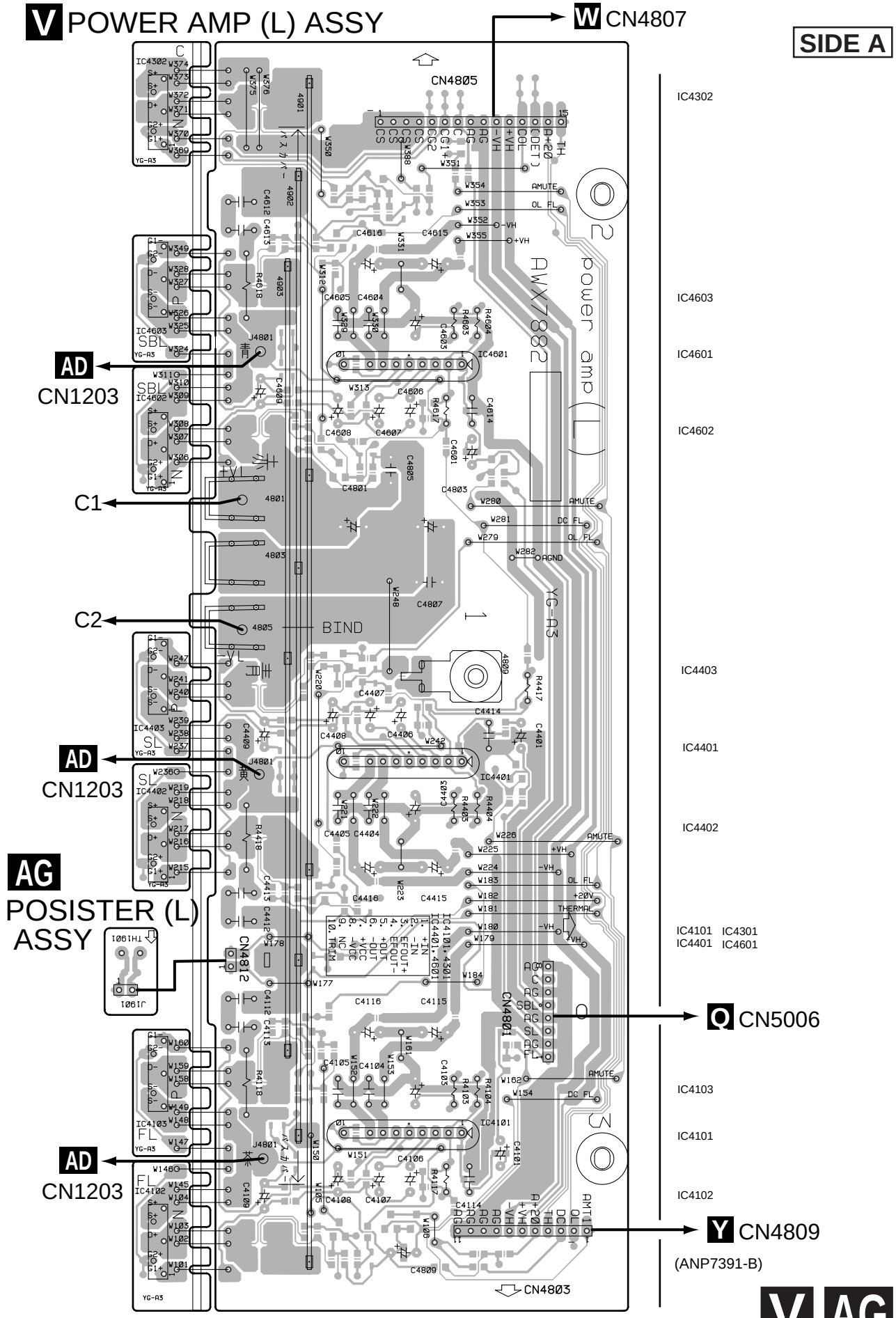

V POWER AMP (L) ASSY

SIDE B

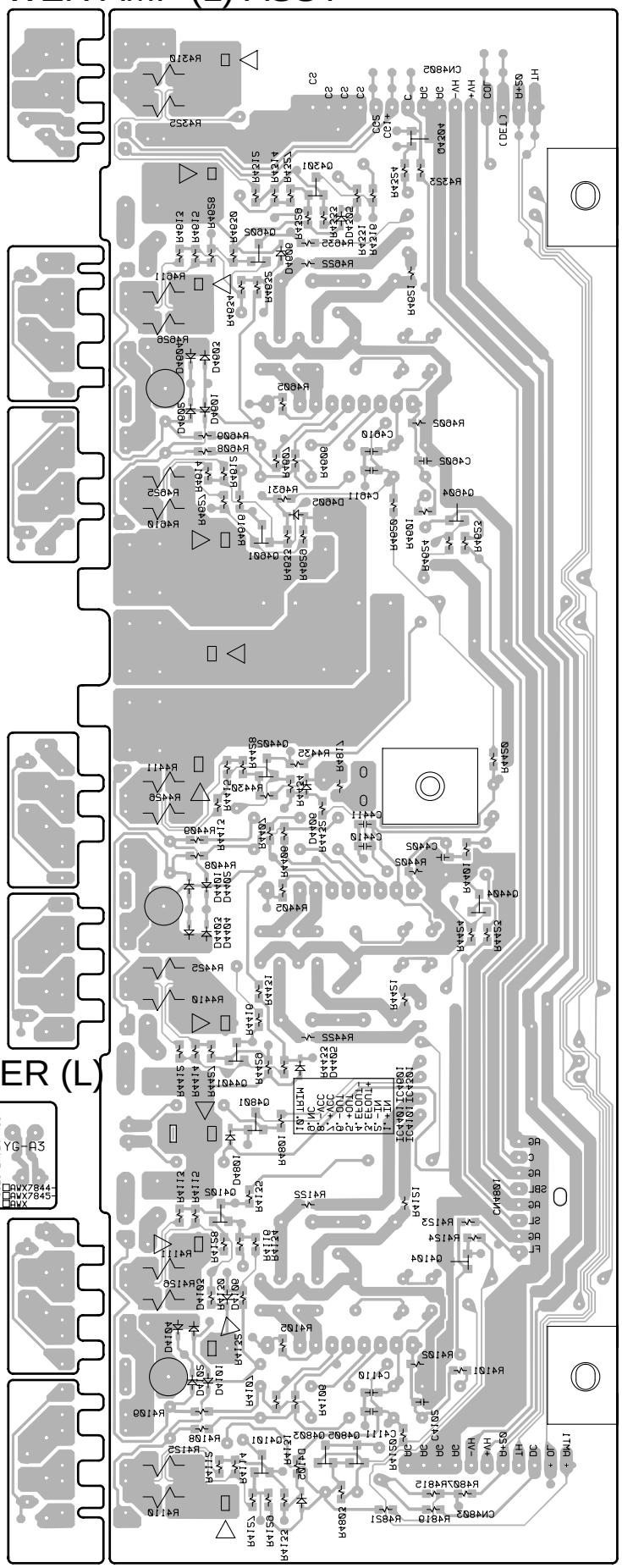

Q4304
Q4301
Q4602
Q4604
Q4601
Q4402
Q4404
Q4801
IC4101 IC4301
IC4401 IC4601
Q4401
Q4102
Q4104
Q4101 Q4803
Q4805

(ANP7391-B)

AG POSISTER (L) ASSY

4.18 POWER AMP (R) and POSISTER (R)ASSYS

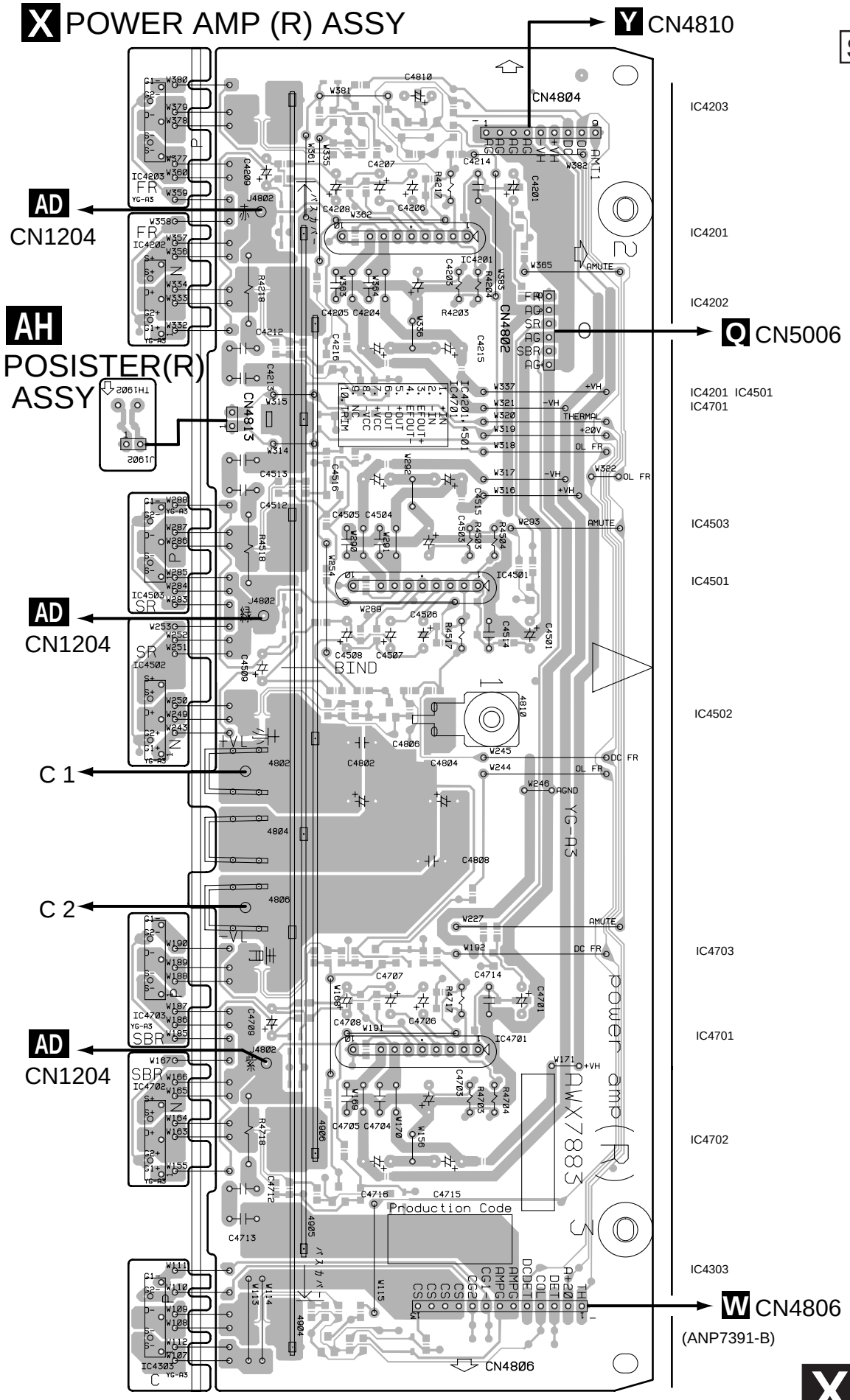

X POWER AMP (R) ASSY

SIDE B

AH

POSISTER (R) ASSY

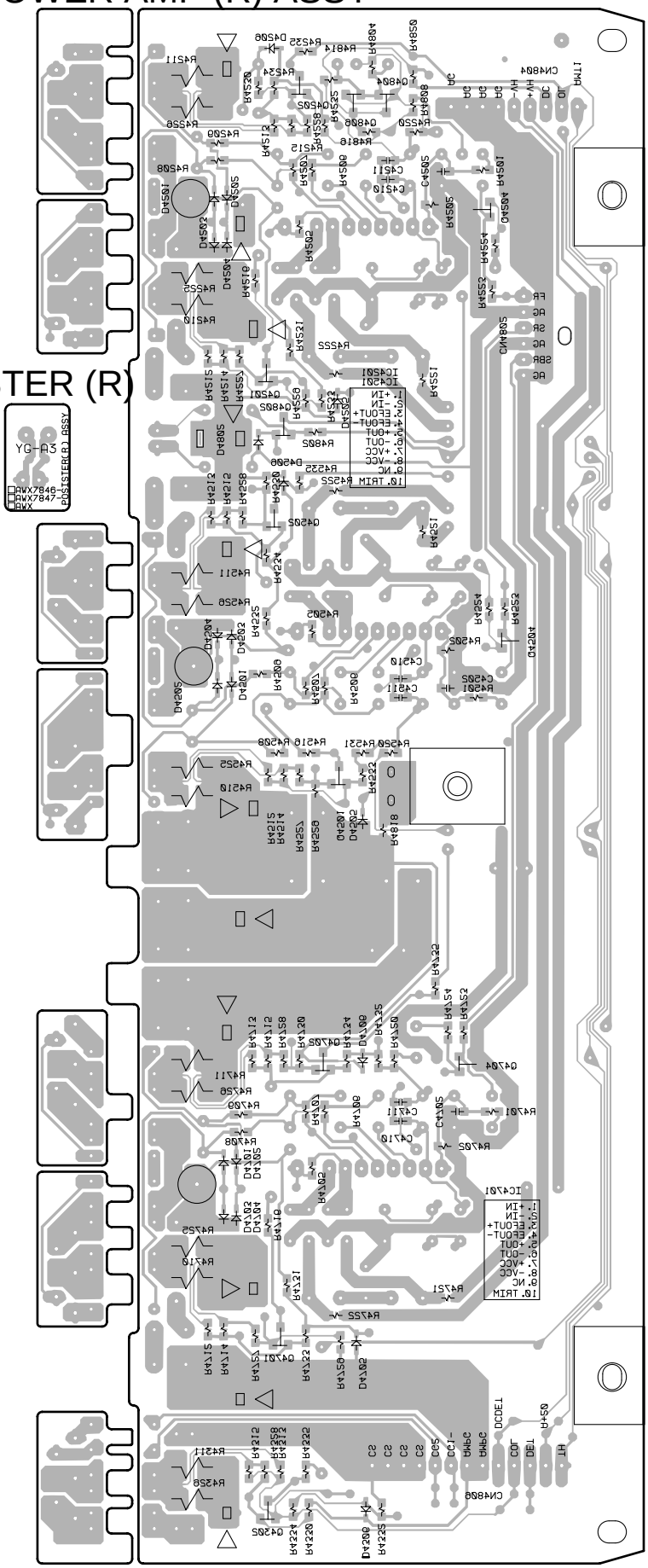

(ANP7391-B)

4.19 POWER AMP (C), POWER AMP (BR) and POWER AMP (G) ASSYS

W POWER AMP (C) ASSY

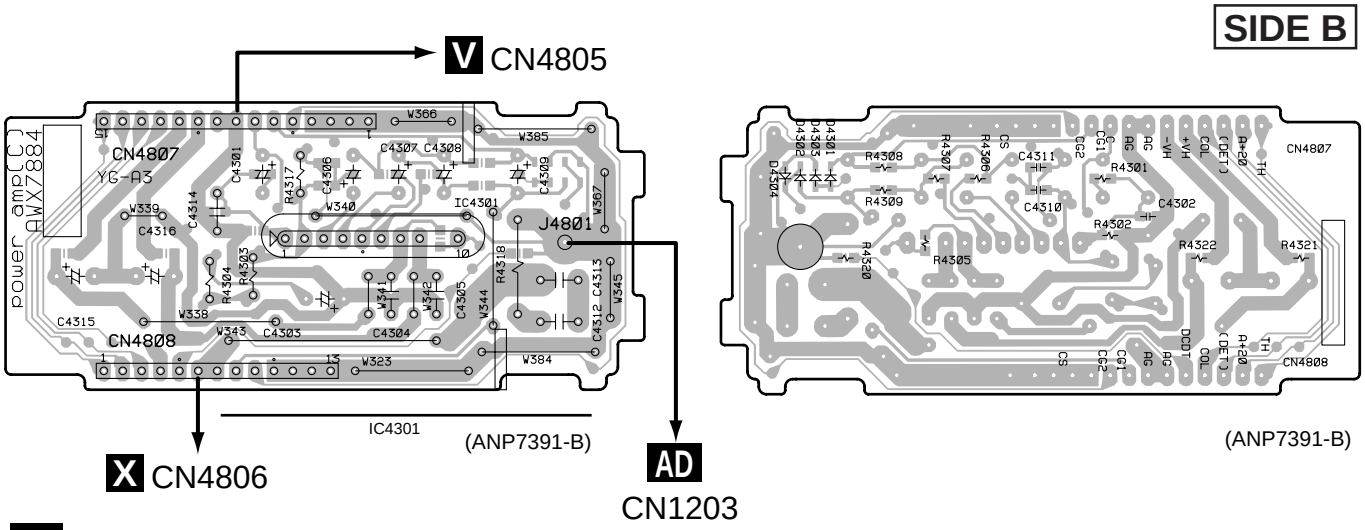

Y POWER AMP (BR) ASSY

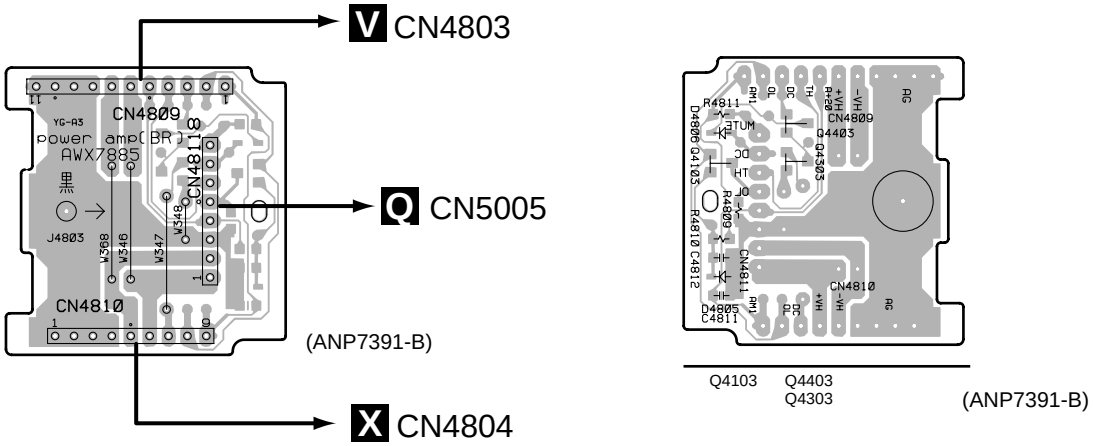

Z POWER AMP (G) ASSY

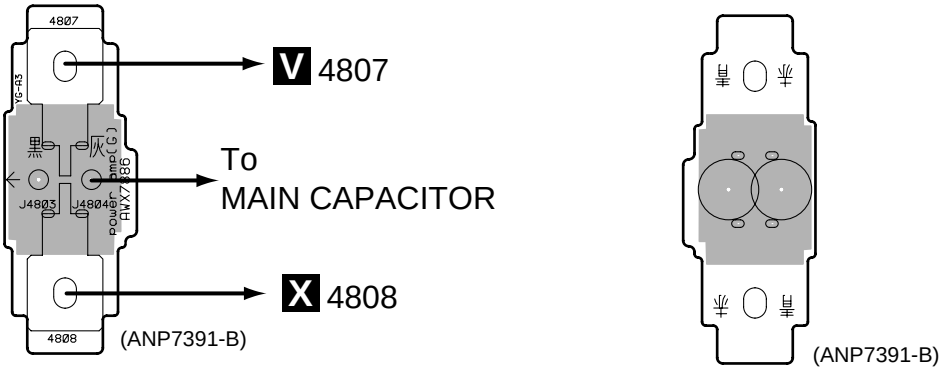

SIDE A

4.20 LOCAL SUPPLY and DSP DIODE ASSYS

AA LOCAL SUPPLY ASSY

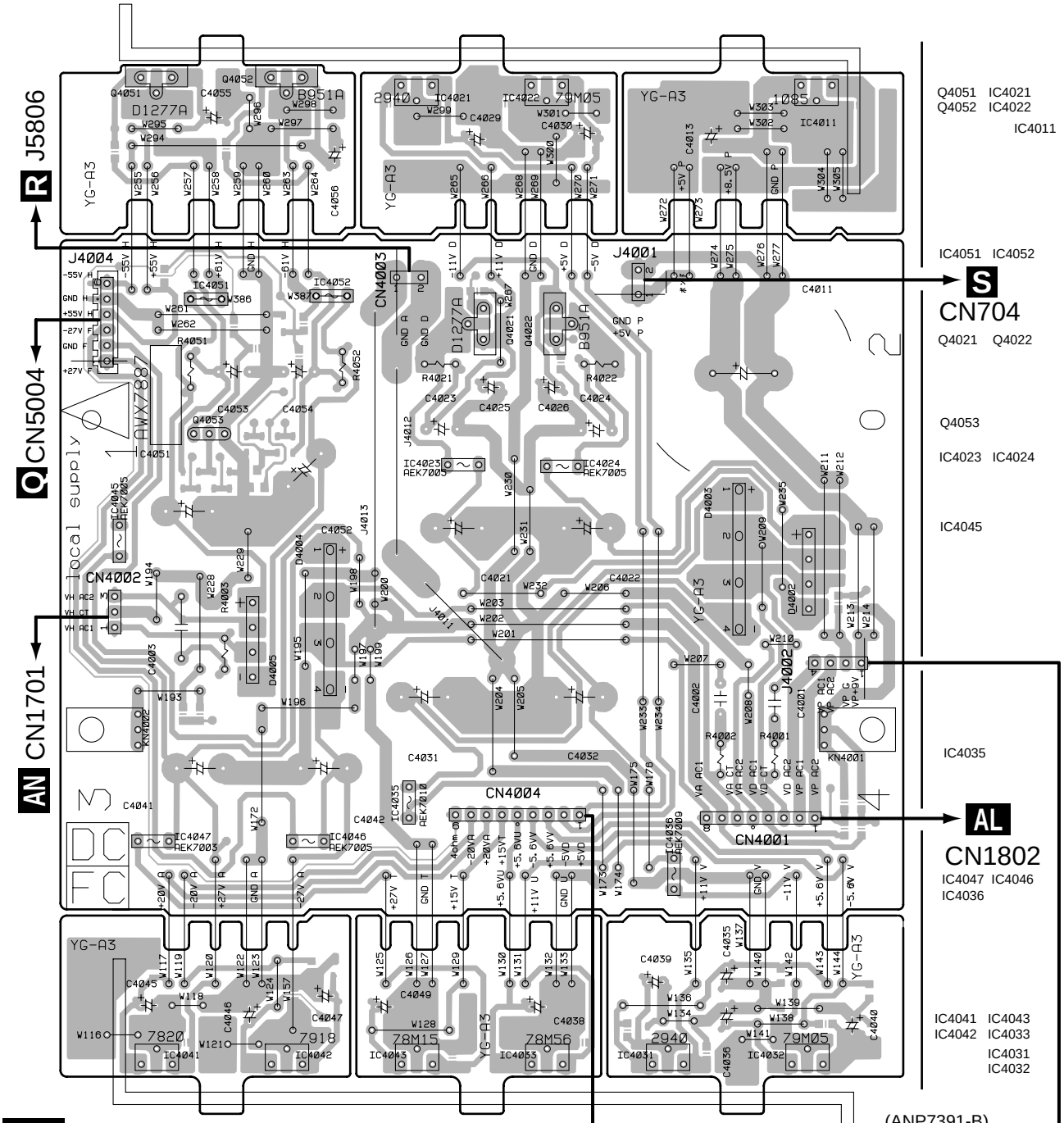

AI DSP DIODE ASSY

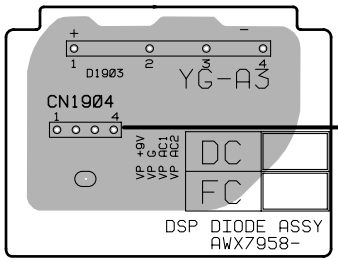

SIDE A

AA LOCAL SUPPLY ASSY

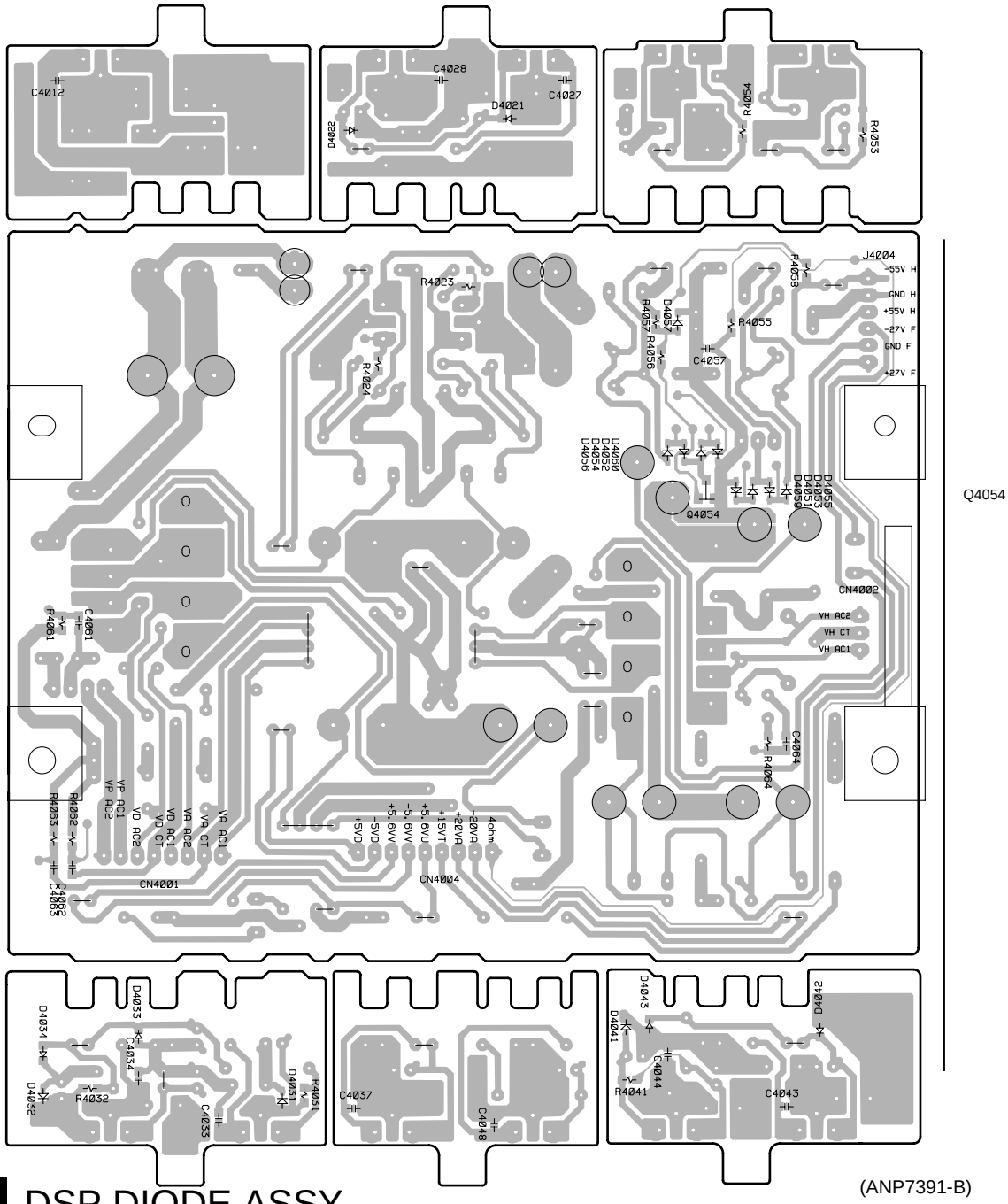

(ANP7391-B)

AI DSP DIODE ASSY

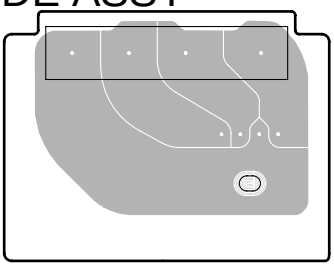

SIDE B

4.21AC PRIMARY, POWER SW and SP (A) ASSYS

AB AC PRIMARY ASSY

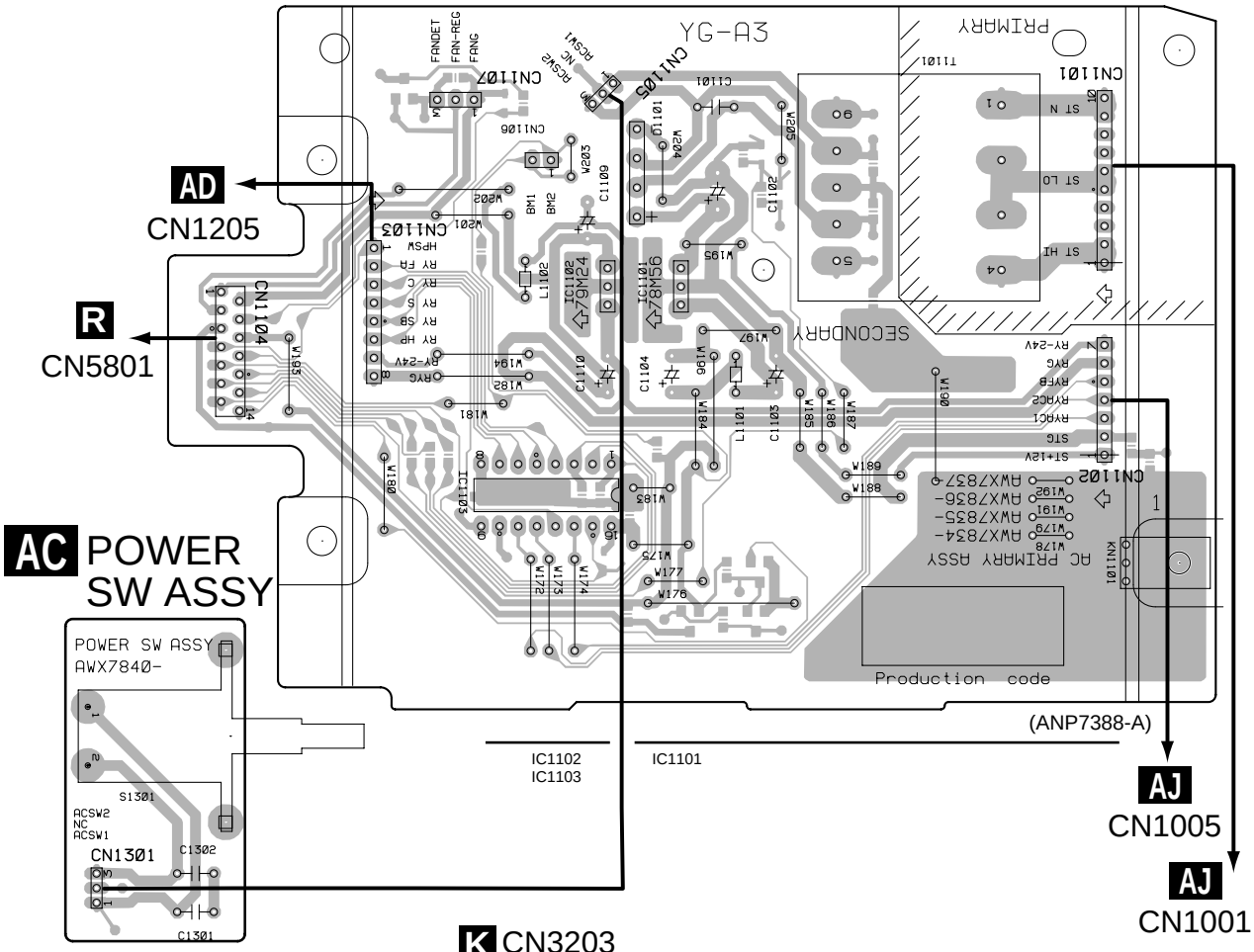

AD SP (A) ASSY

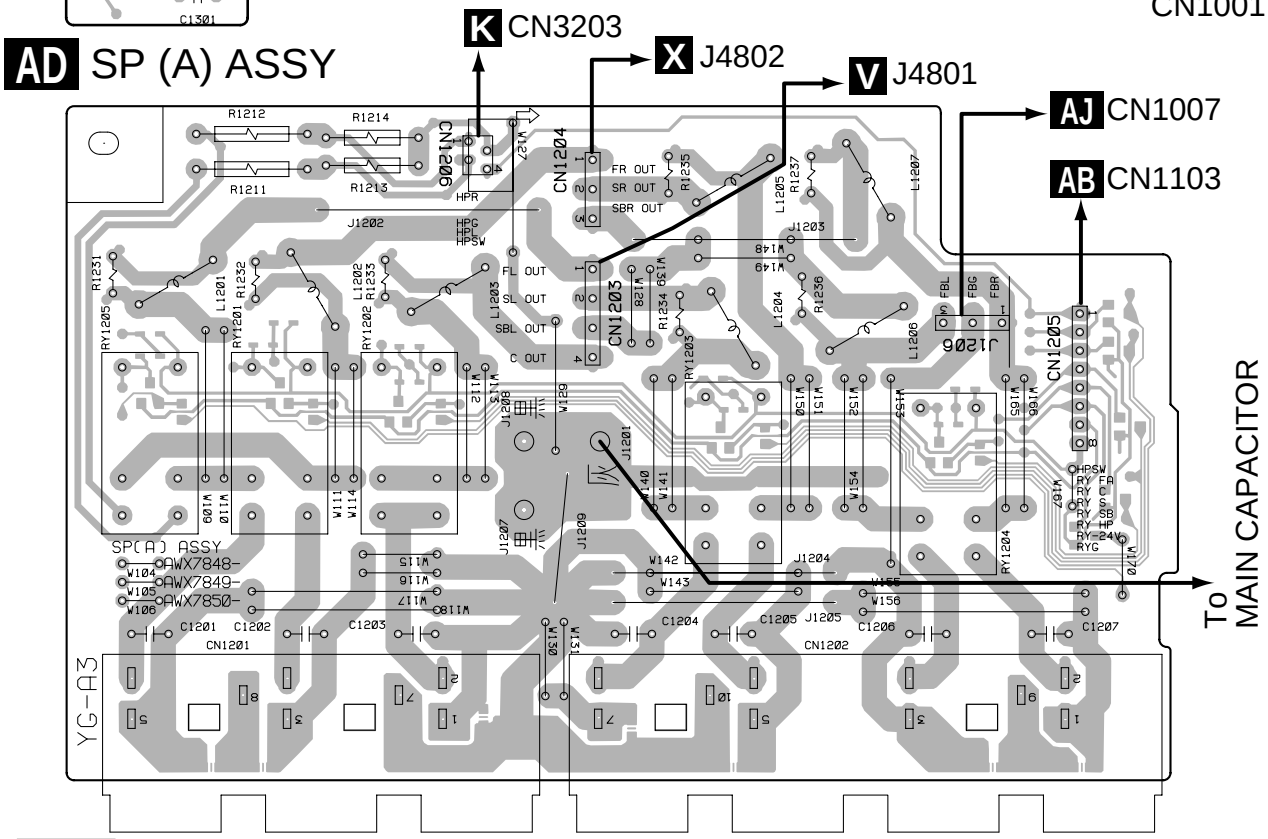

SIDE A

AB AC PRIMARY ASSY

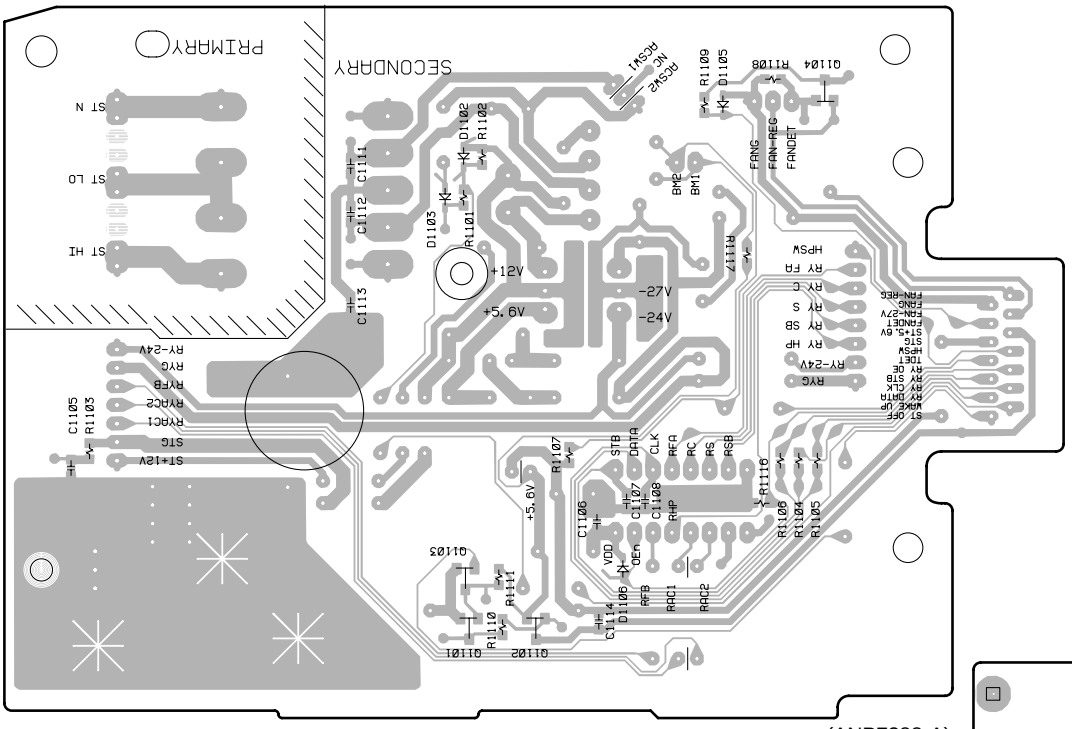

(ANP7388-A)

Q1103 Q1102 Q1104
Q1101

AC POWER SW ASSY

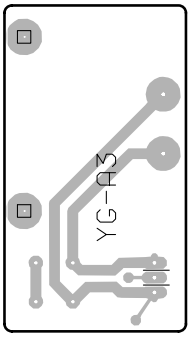

AD SP (A) ASSY

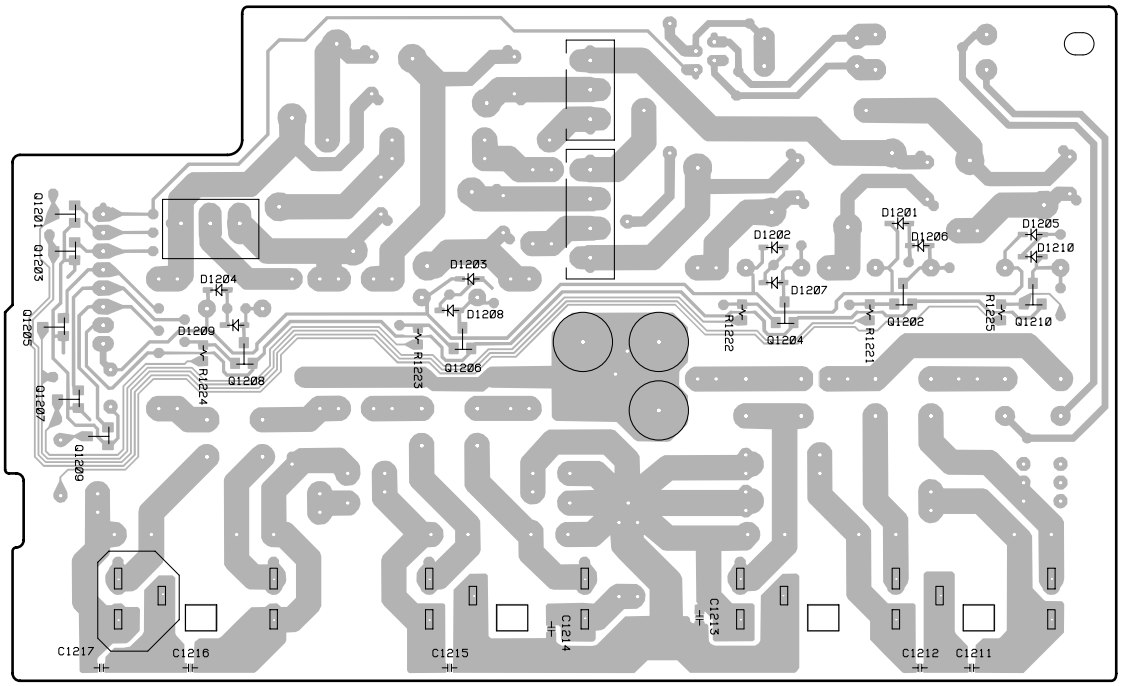

Q1201 Q1205 Q1209 Q1208 Q1206 Q1204 Q1202 Q1210
Q1203 Q1207

SIDE B

AB AC AD

4.22 TRANS(A), TRANS(B), DIODE and FUSE ASSYS

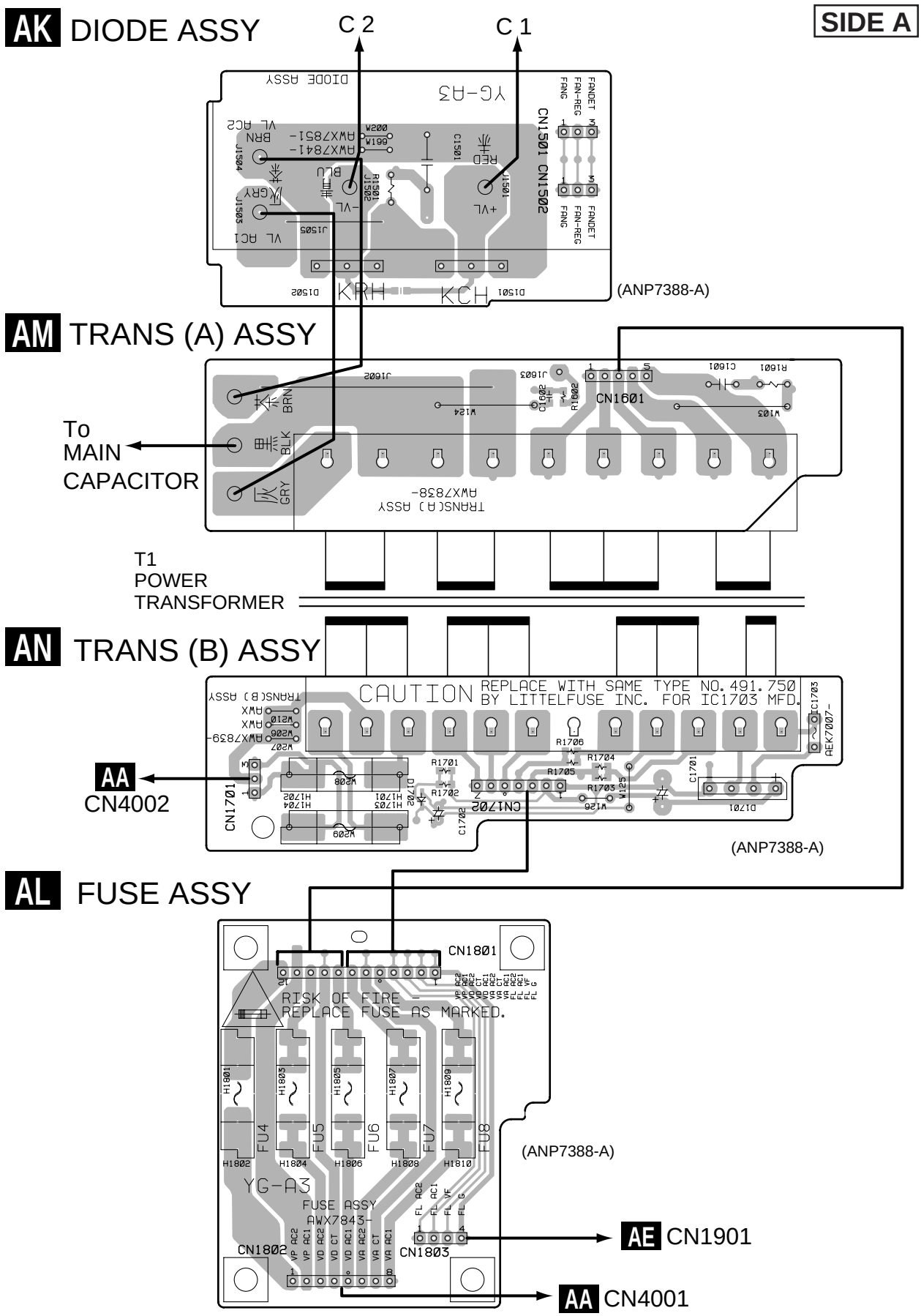

4.23 SP(B) ASSY

SIDE A

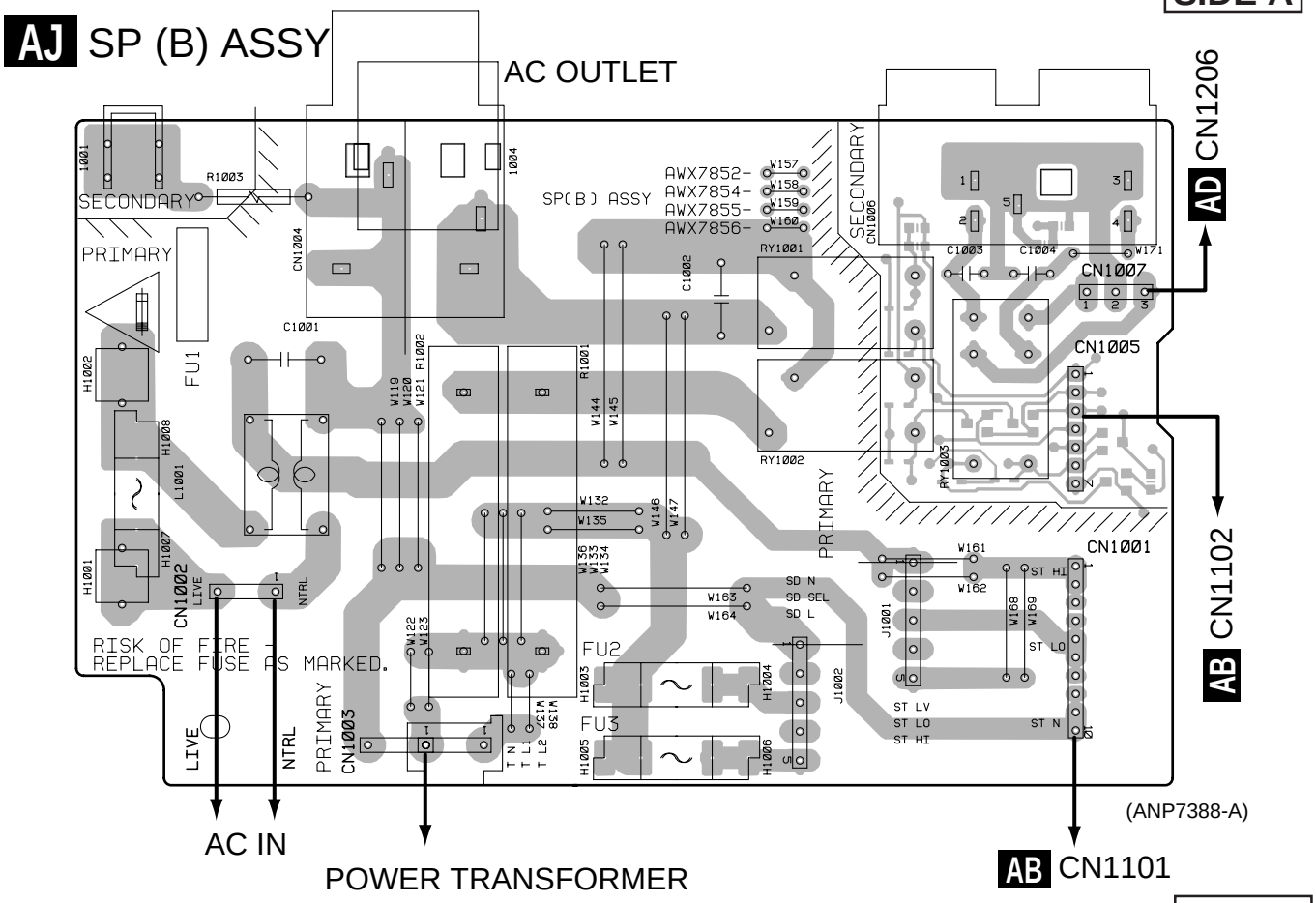

SIDE B

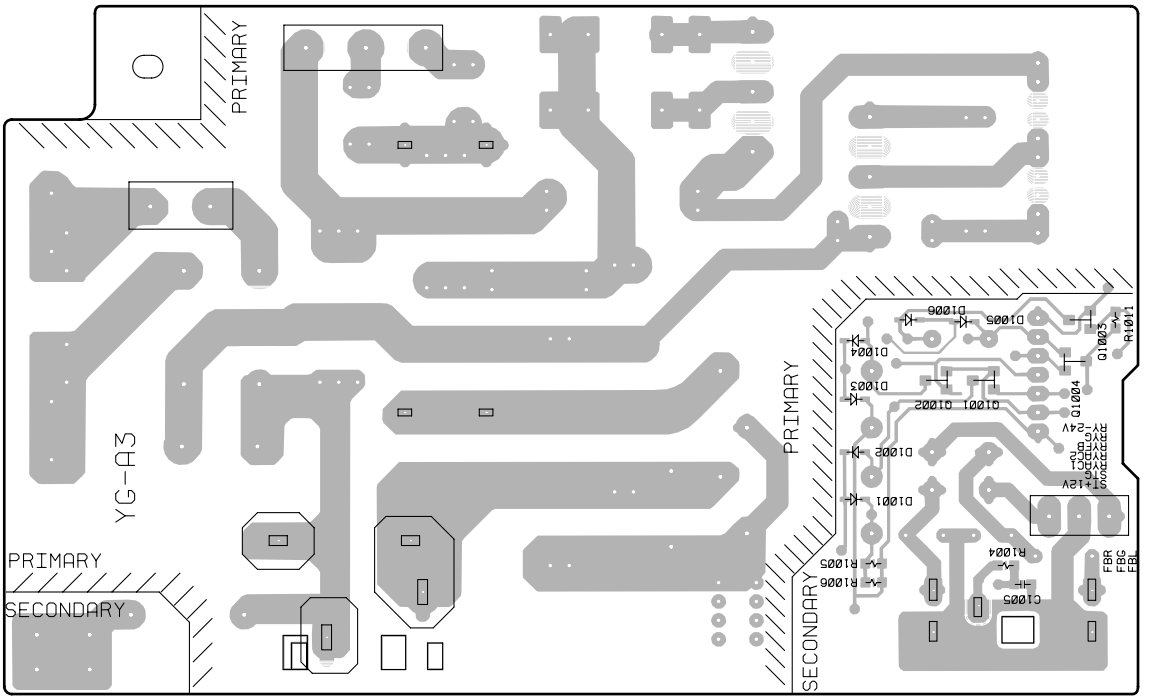

Q1002 Q1001 Q1004 Q1003
(ANP7388-A)

5. PCB PARTS LIST

NOTES: ● *Parts marked by "NSP" are generally unavailable because they are not in our Master Spare Parts List.*
● *The ⚠ mark found on some component parts indicates the importance of the safety factor of the part. Therefore, when replacing, be sure to use parts of identical designation.*
● *When ordering resistors, first convert resistance values into code form as shown in the following examples.*

Ex.1 When there are 2 effective digits (any digit apart from 0), such as 560 ohm and 47k ohm (tolerance is shown by J=5%, and K=10%).

560 Ω → 56 × 10¹ → 561 ..... RD1/4PU [5][6][1] J
47k Ω → 47 × 10³ → 473 ..... RD1/4PU [4][7][3] J
0.5 Ω → R50 ..... RN2H [R][5][0] K
1 Ω → 1R0 ..... RS1P [1][R][0] K

Ex.2 When there are 3 effective digits (such as in high precision metal film resistors).

5.62k Ω → 562 × 10¹ → 5621 ..... RN1/4PC [5][6][2][1] F

■ LIST OF WHOLE PCB ASSEMBLIES

Mark	Symbol and Description	Part No.		Remarks
		VSX-49TX/KU/CA	VSX-47TX/KU/CA	
	FM/AM TUNER Module	AXQ7237	AXQ7237	
NSP	VIDEO Assy	AWQ7010	AWQ7011	
	├─A/V I/O Assy	AWX7938	AWX7939	
	├─COMPOSITE Assy	AWX7942	AWX7943	
	├─S-VIDEO Assy	AWX7948	AWX7949	
	├─V-CONVERT Assy	AWX7952	Not used	
	└─COMPONENT Assy	AWX7953	AWX7954	
NSP	A/D & CONTROL Assy	AWM7558	AWM7559	
	├─VIDEO CONNECT Assy	AWX7876	AWX7877	
	├─MIC AMP Assy	AWX7872	AWX7872	
	├─MIC & OPT Assy	AWX7875	AWX7875	
	├─FRONT A/V Assy	AWX7902	AWX7902	
	├─HEADPHONE Assy	AWX7874	AWX7874	
	├─ANALOG IN & A/D Assy	AWX7878	AWX7879	
	├─DISPLAY Assy	AWX7864	AWX7865	
	├─INPUT SEL Assy	AWX7868	AWX7868	
	├─MULTI JOG Assy	AWX7869	AWX7869	
	└─VOL Assy	AWX7870	AWX7870	
NSP	VR & MOTHER Assy	AWM7562	AWM7563	
	├─VR & PRE OUT Assy	AWX7888	AWX7917	
	└─MOTHER Assy	AWX7890	AWX7891	
	DSP Assy	AWK7719	AWK7720	
	DSP3 Assy	AWK7727	Not used	
	DAC10 Assy	AWK7725	Not used	
	DAC8 Assy	Not used	AWK7726	
NSP	POWER AMP Assy	AWH7004	AWH7004	
	├─POWER AMP (L) Assy	AWX7882	AWX7882	
	├─POWER AMP (C) Assy	AWX7884	AWX7884	
	├─POWER AMP (R) Assy	AWX7883	AWX7883	
	├─POWER AMP (BR) Assy	AWX7885	AWX7885	
	├─POWER AMP (G) Assy	AWX7886	AWX7886	
	└─LOCAL SUPPLY Assy	AWX7887	AWX7887	
NSP	PS & SP Assy	AWK7712	AWK7712	
	├─AC PRIMARY Assy	AWX7834	AWX7834	
	├─POWER SW Assy	AWX7840	AWX7840	
	├─SP (A) Assy	AWX7848	AWX7848	
	├─FL SUPPLY Assy	AWX7871	AWX7871	
	├─STANDBY Assy	AWX7901	AWX7901	
	├─POSISTER (L) Assy	AWX7844	AWX7844	
	├─POSISTER (R) Assy	AWX7846	AWX7846	
	├─DSP DIODE Assy	AWX7958	AWX7958	
	├─SP (B) Assy	AWX7852	AWX7852	
	├─DIODE Assy	AWX7841	AWX7841	
	├─FUSE Assy	AWX7843	AWX7843	
	├─TRANS (A) Assy	AWX7838	AWX7838	
	└─TRANS (B) Assy	AWX8057	AWX8057	

B A/V I/O ASSY

AWX7938 and AWX7939 are constructed the same except for the following :

Mark	Symbol and Description	Part No.		Remarks
		AWX7938	AWX7939	
	R2025, R2026	RS1/16S102J	Not used	
	R2027, R2028	RS1/16S105J	Not used	
	R2029, R2030	RS1/16S221J	Not used	
	R2088-R2091	Not used	RS1/16S0R0J	
	2004 4P Pin Jack	AKB7075	Not used	

C COMPOSITE ASSY

AWX7942 and AWX7943 are constructed the same except for the following :

Mark	Symbol and Description	Part No.		Remarks
		AWX7942	AWX7943	
	IC2102 Logic IC	TC74HC4053AFT	Not used	
	C2106	CEAT101M10	Not used	
	C2153	CCSRCH181J50	Not used	
	C2110, C2111, C2156	CKSRYB103K50	Not used	
	R2106, R2157	RS1/16S750J	Not used	
	R2113- R2115	RS1/16S102J	Not used	
	2104 2P Pin Jack	AKB7076	Not used	

D S-VIDEO ASSY

AWX7948 and AWX7949 are constructed the same except for the following :

Mark	Symbol and Description	Part No.		Remarks
		AWX7948	AWX7949	
	C2306	CEAT101M10	Not used	
	C2312	CKSRYB473K25	Not used	
	C2318, C2384	CKSRYB103K50	Not used	
	C2324, C2375	CKSRYB104K16	Not used	
	C2378, C2381	CCSRCH181J50	Not used	
	R2306, R2312, R2401, R2404	RS1/16S750J	Not used	
	R2318	RS1/16S102J	Not used	
	R2407	RS1/16S103J	Not used	
	CN2304 Dual 4P Mini DIN Socket	AKP7023	Not used	

F COMPONENT ASSY

AWX7953 and AWX7954 are constructed the same except for the following :

Mark	Symbol and Description	Part No.		Remarks
		AWX7953	AWX7954	
	IC2503	TC74LVX4053FT	Not used	
	C2514, C2515	CKSRYB103K50	Not used	
	R2519	RS1/16S102J	Not used	
	R2521	RS1/16S0R0J	Not used	

G VIDEO CONNECT ASSY

AWX7876 and AWX7877 are constructed the same except for the following :

Mark	Symbol and Description	Part No.		Remarks
		AWX7876	AWX7877	
	CN3304 18P Plug	KM200TA18	Not used	

M DISPLAY ASSY

AWX7864 and AWX7865 are constructed the same except for the following :

Mark	Symbol and Description	Part No.		Remarks
		AWX7864	AWX7865	
	D3013	SLI-343URW	Not used	
	R3013	RS1/16S561J	Not used	

Q VR & PRE OUT ASSY

AWX7888 and AWX7917 are constructed the same except for the following :

Mark	Symbol and Description	Part No.		Remarks
		AWX7888	AWX7917	
	C5007, C5008, C5021, C5022, C5033, C5034	ACH7163	CEAT471M25	
	C5041, C5042, C5053, C5054, C5061, C5062	ACH7163	CEAT471M25	
	C5081, C5082	ACH7163	CEAT471M25	
	C5151, C5152, C5251, C5252, C5351, C5352	CEGA470M35	CENA470M25	
	C5451, C5452	CEGA470M35	CENA470M25	

R MOTHER ASSY

AWX7890 and AWX7891 are constructed the same except for the following :

Mark	Symbol and Description	Part No.		Remarks
		AWX7890	AWX7891	
	IC5811	TC7S08FU	Not used	
	IC5812	TC7W126FU	Not used	
	Q5815	IRF7416	Not used	
	Q5816	2SK2103	Not used	
	Q5817	UN5212	Not used	
	Q5818	UN5112	Not used	
	L5805	QTL1013	Not used	
	C5840	CKSRYB103K50	Not used	
	C5841	CKSRYB104K16	Not used	
	R5854	Not used	RS1/16S103J	
	R5856	RS1/16S103J	Not used	
	R5904, R5905	RS1/16S0R0J	Not used	
	R5907, R5909, R5944, R5945	RS1/16S101J	Not used	
	R5908, R5910	RS1/16S104J	Not used	
	R5915-R5918, R5933, R5934, R5940-R5942	Not used	RS1/16S0R0J	
	R5928, R5937	RS1/16S221J	Not used	
	CN5825 JE Connector Socket	09R-JE	Not used	

PCB PARTS LIST FOR VSX-49TX/KU/CA UNLESS OTHERWISE NOTED

Mark	No.	Description	Part No.
A	**FM/AM TUNER MODULE**		
	SEMICONDUCTORS		
	IC201		BA1451F
	IC202		LC72131MD
	Q201,Q204,Q205		2SC2412K
	Q202		DTA124ES
	Q203		DTC124EK
	D201		1SS133
	D202		MTZJ5.1C
	COILS AND FILTERS		
	L201	FM DET COIL	ATE7003
	F202	FM CERAMIC FILTER	ATF-107
	F201	FM CERAMIC FILTER	ATF-119
	F203	AM CERAMIC FILTER	ATF7026
	CAPACITORS		
	C206		CCSRCH100D50
	C212,C213,C226,C233-C235		CCSRCH101J50
	C240		CCSRCH101J50
	C231,C232		CCSRCH150J50
	C223		CEAT100M50
	C229		CEAT101M10
	C224		CEAT1R0M50
	C227		CEAT220M25
	C241		CEAT2R2M50
	C243		CEAT330M16
	C228		CEAT3R3M50
	C237		CEAT470M10
	C211		CEJQ1R0M50
	C210		CEJQ470M16
	C204,C238,C613		CKSRYB102K50
	C101,C102,C208,C220,C239		CKSRYB103K50
	C242,C604		CKSRYB103K50
	C216,C217,C225		CKSRYB153K50
	C201,C205,C209,C214,C230		CKSRYB223K50
	C236,C603		CKSRYB223K50
	C221		CKSRYB224K10
	C202,C222		CKSRYB473K16
	C215		CKSRYB681K50
	RESISTORS		
	R211		RD1/4PU221J
	R221		RD1/4PU222J
	R233		RD1/4PU391J
	R243		RS1/10S0R0J
	R103		RS1/10S331J
	R104		RS1/10S391J
	Other Resistors		RS1/16S□□□J
	OTHERS		
	CN201	13P FFC CONNECTOR	52044-1345
	BN201	2P ANTENNA TERMINAL	AKA7002
		SHIELD CASE T	ANK7072
		SHIELD CASE B	ANK7073
	X201	CRYSTAL RESONATOR (7.2MHz)	ASS1093

Mark	No.	Description	Part No.
B	**A/V I/O ASSY**		
	SEMICONDUCTORS		
	IC2053		BA4558F-HT
	IC2052		M62429FP
	IC2002		TC9162AF
	IC2001		TC9164AF
	IC2051		UPC4570C
	Q2051		HN1C03F
	D2052,D2053		1SS355
	D2051		UDZS5.6B
	CAPACITORS		
	C2025,C2029,C2053,C2054		CCSRCH101J50
	C2063,C2064,C2077,C2078		CCSRCH101J50
	C2071		CCSRCH221J50
	C2079,C2080		CEAT100M50
	C2075,C2076		CEAT1R0M50
	C2055,C2056		CEAT470M25
	C2061,C2065,C2066		CEJQ100M16
	C2051,C2052,C2059,C2060		CEJQ1R0M50
	C2072		CKSRYB102K50
	C2019-C2022,C2069,C2081		CKSRYB103K50
	C2023,C2024,C2027,C2028		CKSRYB473K25
	C2082,C2083		CKSRYB473K50
	RESISTORS		
	R2065		RD1/2LMF561J
	Other Resistors		RS1/16S□□□J
	OTHERS		
	CN2002	JE CONNECTOR	17PS-JE
	JA2001	6P PIN JACK	AKB7073
	2002-2004	4P PIN JACK	AKB7075
	JA2051	2P PIN JACK	DKB1045
	CN2001	17P SOCKET	KP200TA17L
	2051	2P MINI JACK	VKN1034
C	**COMPOSITE ASSY**		
	SEMICONDUCTORS		
	IC2108,IC2109		BU4094BCF
	IC2106		NJM2296M
	IC2104		PDC084A
	IC2101,IC2107		TC74HC4051AFT
	IC2102,IC2103		TC74HC4053AFT
	IC2105		TK15420M
	Q2101-Q2103,Q2105-Q2108		2SC4081
	Q2104		UN5212
	D2101-D2103		1SS355
	COILS		
	L2102,L2103		LAU100J
	L2101		LAU330J

Mark	No.	Description	Part No.

CAPACITORS

	C2118		CCSRCH100D50
	C2123,C2132		CCSRCH101J50
	C2119		CCSRCH150J50
	C2120		CCSRCH180J50
	C2139,C2151-C2153,C2164		CCSRCH181J50
	C2121,C2122		CCSRCH240J50
	C2115,C2129,C2177-C2179		CEAT100M50
	C2101-C2106,C2114,C2124,C2125		CEAT101M10
	C2135,C2136,C2141,C2142		CEAT101M10
	C2165,C2166		CEAT101M10
	C2131		CEAT1R0M50
	C2180		CEAT470M10
	C2107-C2113,C2137,C2138		CKSRYB103K50
	C2143,C2144,C2154-C2156		CKSRYB103K50
	C2159-C2161,C2167,C2168,C2170		CKSRYB103K50
	C2130		CKSRYB122K50
	C2116,C2126,C2127,C2140		CKSRYB473K25

RESISTORS

	All Resistors		RS1/16S□□□J

OTHERS

	X2101	CRYSTAL RESONATOR (14.31818MHz)	ASS1056
	CN2101	JE CONNECTOR	19PS-JE
	2102-2105	2P PIN JACK	AKB7076
	JA2101	3P PIN JACK	AKB7109
	CN2102	12P SOCKET	KP200TA12L

D S-VIDEO ASSY

SEMICONDUCTORS

	IC2310		BU4094BCF
	IC2305		LA7213
	IC2308,IC2309		NJM2296M
	IC2306		TC74HC4051AFT
	IC2303,IC2304		TC74HC4053AFT
	IC2301,IC2302		TC74LVX4051FT
	IC2307		TK15420M
	Q2303		2SA1576A
	Q2302		2SC4081
	Q2314		HN1B04FU
	Q2301		UN5212
	D2304,D2305,D2307		1SS355

CAPACITORS

	C2337		CCSRCH151J50
	C2352,C2353,C2376-C2381		CCSRCH181J50
	C2390-C2392		CEAT100M50
	C2301-C2306,C2339,C2340		CEAT101M10
	C2347,C2348,C2357,C2358		CEAT101M10
	C2361,C2362,C2385,C2386		CEAT101M10
	C2338		CEAT3R3M50
	C2313-C2318,C2325-C2327		CKSRYB103K50
	C2330-C2333,C2335,C2336		CKSRYB103K50
	C2341,C2342,C2349,C2350,C2356		CKSRYB103K50
	C2359,C2360,C2363,C2364		CKSRYB103K50
	C2382-C2384,C2387,C2389		CKSRYB103K50
	C2319-C2324,C2328,C2351		CKSRYB104K16
	C2373-C2375,C2393,C2394		CKSRYB104K16
	C2307-C2312		CKSRYB473K25

RESISTORS

	All Resistors		RS1/16S□□□J

OTHERS

	CN2301	JE CONNECTOR	17PS-JE
	CN2302-CN2305	DUAL 4P MINI DIN SOCKET	AKP7023
	JA2301	TRIPLE 4P MINI DIN SOCKET	AKP7049
	CN2306	8P SOCKET	KP200TA8L

E V-CONVERT ASSY (VSX-49TX Only)

SEMICONDUCTORS

	IC2862		BU4094BCF
	IC2852		MM1093NF
	IC2863		NJM78M09FA
	IC2853		TA1270BF
	IC2859,IC2860		TC74LVX4053FT
	IC2851		TC90A49F
	IC2854-IC2858		TK15420M
	Q2851,Q2852,Q2902		2SA1576A
	Q2853,Q2854,Q2901,Q2904		2SC4081

COILS

	L2856	CHIP FERRITE BEAD	ATL7002
	L2852-L2854,L2857		LAU100J
	L2855		LAU330J
	L2859		LCTA1R0J2520

CAPACITORS

	C2865,C2887,C2876		CCSRCH100D50
	C2885		CCSRCH101J50
	C2919,C2920		CCSRCH120J50
	C2968		CCSRCH151J50
	C2867		CCSRCH181J50
	C2881		CCSRCH391J50
	C2873,C2886		CCSRCH560J50
	C2879		CCSRCH6R0D50
	C2851,C2853,C2981,C2982		CEAT100M50
	C2989-C2991		CEAT100M50
	C2855,C2860,C2862,C2868		CEAT101M10
	C2892,C2893,C2903,C2904		CEAT101M10
	C2909,C2910,C2917,C2918,C2928		CEAT101M10
	C2938,C2945,C2946,C2970,C2971		CEAT101M10
	C2924,C2926		CEAT2R2M50
	C2884,C2985		CEAT470M10
	C2874,C2877,C2880		CEAT4R7M50
	C2882		CKSRYB102K50
	C2854,C2856,C2857,C2859,C2861		CKSRYB103K50
	C2863,C2866,C2869-C2872,C2875		CKSRYB103K50
	C2878,C2883,C2890,C2891		CKSRYB103K50
	C2894-C2897,C2901,C2902		CKSRYB103K50
	C2907,C2908,C2915,C2916,C2923		CKSRYB103K50
	C2929,C2937,C2943,C2944,C2967		CKSRYB103K50
	C2978,C2979		CKSRYB103K50
	C2852,C2925,C2930-C2936,C2966		CKSRYB104K16
	C2986,C2983,C2984		CKSRYB104K16
	C2864		CKSRYB122K50
	C2921		CKSRYB222K50
	C2927		CKSRYB223K50

Mark	No.	Description	Part No.
	C2922		CKSRYB224K10
	C2858		CKSRYB474K10
	C2969		CKSRYB561K50

RESISTORS

	All Resistors		RS1/16S□□□J

OTHERS

	CN2851	JE CONNECTOR	09PS-JE
	X2851,X2853	CRYSTAL RESONATOR (3.579545MHz)	ASS1091
	X2852	CRYSTAL RESONATOR (4.433619MHz)	ASS1092
	X2854	CERAMIC RESONATOR (503kHz)	ASS7036
	CN2852	18P SOCKET	KP200TA18L

F COMPONENT ASSY

SEMICONDUCTORS

	IC2507		BU4094BCF
	IC2505,IC2506		OPA2652U
	IC2509		SP232AEP
	IC2504		TC74HC4053AFT
	IC2501,IC2502		TC74LVX4052FT
	IC2503		TC74LVX4053FT
	Q2502		2SA1576A
	Q2501,Q2503		2SC4081
	D2501-D2503		1SS355

COIL

	L2501		LAU1R0J

CAPACITORS

	C2541,C2542		CEAT100M50
	C2524,C2525,C2532,C2533		CEAT101M10
	C2537,C2538,C2567		CEAT101M10
	C2563-C2565,C2568		CEAT1R0M50
	C2510-C2517,C2522,C2523		CKSRYB103K50
	C2530,C2531,C2535,C2536		CKSRYB103K50
	C2557,C2558,C2569,C2571-C2579		CKSRYB103K50
	C2581		CKSRYB103K50
	C2566		CKSRYB104K25
	C2582		CKSRYB331K50

RESISTORS

	All Resistors		RS1/16S□□□J

OTHERS

	CN2501	JE CONNECTOR	19PS-JE
	JA2502	6P PIN JACK	AKB7127
	JA2501	6P PIN JACK	AKB7141
	JA2504	MULTI ROOM JACK	AKN7014
	CN2505	9P D-SUB SOCKET	AKP1213
	CN2502	10P SOCKET	KP200TA10L
	2501	SCREW TERMINAL	VNE1948

G VIDEO CONNECT ASSY

OTHERS

	CN3303	10P PLUG	KM200TA10
	CN3301	12P PLUG	KM200TA12
	CN3304	18P PLUG	KM200TA18
	CN3302	8P PLUG	KM200TA8

H MIC AMP ASSY

SEMICONDUCTORS

	IC3201		M5220FP
	Q3204		HN1C01FU
	Q3202		RN4903
	D3201		1SS355
	D3202		UDZS5.6B

CAPACITORS

	C3211,C3220,C3226		CCSRCH101J50
	C3214		CCSRCH330J50
	C3210,C3218,C3221,C3224,C3227		CEAL100M16
	C3231,C3232		CEAL101M10
	C3206		CEAL220M16
	C3212,C3215		CEAL220M35
	C3223,C3229,C3230		CEAL330M25
	C3205,C3228		CKSRYB104K16

RESISTORS

	All Resistors		RS1/16S□□□J

OTHERS

	CN3207	11P FFC CONNECTOR	52044-1145
	CN3205	KR CONNECTOR	S4B-PH-K
	KN3202	EARTH METAL FITTING	VNF1084

I MIC & OPT ASSY

COILS

	L3202	CHIP SOLID INDUCTOR	QTL1013

CAPACITORS

	C3203		CEAL470M10
	C3202		CKSRYB104K16
	C3201		CKSRYB103K50

RESISTORS

	All Resistors		RS1/16S□□□J

OTHERS

	CN3202	KR CONNECTOR	B4B-PH-K
	CN3201	KR CONNECTOR	B5B-PH-K
	JA3201	OPTICAL LINK IN	GP1FA502RZ
	JA3202	REMOTE CONTROL JACK	RKN1004

J FRONT A/V ASSY

CAPACITORS

	C3234,C3237		CKSRYB104K16
	C3233		CKSRYB473K50

Mark	No.	Description	Part No.
RESISTORS			
	All Resistors		RS1/16S□□□J
OTHERS			
	JA3204	FRONT PIN JACK 4P	AKX7014
	CN3204	KR CONNECTOR	B8B-PH-K
	J3301	4P JUMPER WIRE	D20PYY0405E
	J3003,J3004	4P JUMPER WIRE	D20PYY0410E
	J3002	5P JUMPER WIRE	D20PYY0510E

K HEADPHONE ASSY

Mark	No.	Description	Part No.
CAPACITOR			
	C3209		CKSRYB104K16
RESISTORS			
	R3207		RS1/16S0R0J
OTHERS			
	CN3203	4P FFC CONNECTOR	52045-0445
	JA3203	HEADPHONE JACK	RKB1014
	KN3201	EARTH METAL FITTING	VNF1084

L ANALOG IN & A/D ASSY (AWX7878 for VSX-49TX)

Mark	No.	Description	Part No.
SEMICONDUCTORS			
	IC3421,IC3441,IC3461,IC3481		AK5383VS
	IC3901		BU4052BCF
	IC3423		M5220P
	IC3501,IC3502,IC3601,IC3602		NJM2068D
	IC3701,IC3702,IC3801,IC3802		NJM2068D
⚠	IC3402		PQ3DZ13
	IC3401,IC3422		TC9163AF
	IC3424,IC3462		UPC4570C
	Q3501,Q3601,Q3701,Q3801		HN1C03F
	Q3401		RN4903
	D3501,D3502,D3601,D3602		DAN202K
	D3701,D3702,D3801,D3802		DAN202K
	D3503,D3504,D3603,D3604		DAP202K
	D3703,D3704,D3803,D3804		DAP202K
	D3901,D3902		UDZS6.2B
COILS			
	L3401,L3402,L3421,L3422	CHIP FERRITE BEAD	ATL7002
	L3441,L3442,L3461,L3462	CHIP FERRITE BEAD	ATL7002
	L3481,L3482	CHIP FERRITE BEAD	ATL7002
	L3423,L3443,L3463,L3483	CHIP SOLID INDUCTOR	QTL1013
CAPACITORS			
	C3411-C3414,C3435,C3436	(470µF/25V)	ACH7163
	C3473,C3474 (470µF/25V)		ACH7163
	C3405,C3428,C3503,C3504		CCSRCH101J50
	C3549,C3550,C3563,C3564		CCSRCH101J50
	C3567,C3568,C3603,C3604		CCSRCH101J50
	C3703,C3704,C3755,C3756		CCSRCH101J50
	C3759,C3760,C3803,C3804		CCSRCH101J50
	C3401,C3547,C3548,C3559,C3560		CEAT100M50
	C3951,C3952		CEAT100M50
	C3515,C3516,C3615,C3616		CEAT101M10
	C3715,C3716,C3815,C3816		CEAT101M10
	C3429,C3430		CEAT101M25
	C3551,C3552		CEAT470M16
	C3402		CEHAZL101M10
	C3421,C3422,C3441,C3442		CENA100M50
	C3461,C3462,C3481,C3482		CENA100M50
	C3509-C3512,C3523,C3524		CENA100M50
	C3561,C3562,C3609-C3612		CENA100M50
	C3623,C3624,C3709-C3712		CENA100M50
	C3723,C3724,C3753,C3754		CENA100M50
	C3757,C3758,C3809-C3812		CENA100M50
	C3823,C3824		CENA100M50
	C3565,C3566		CENA220M25
	C3501,C3502,C3601,C3602		CENA470M25
	C3701,C3702,C3801,C3802		CENA470M25
	C3427,C3447,C3467,C3487		CKSRYB102K50
	C3505-C3508,C3513,C3514		CKSRYB103K50
	C3605-C3608,C3613,C3614		CKSRYB103K50
	C3705-C3708,C3713,C3714		CKSRYB103K50
	C3805-C3808,C3813,C3814		CKSRYB103K50
	C3423,C3424,C3443,C3444		CKSRYB104K16
	C3463,C3464,C3483,C3484		CKSRYB104K16
	C3517,C3518,C3521,C3522,C3575		CKSRYB104K16
	C3577,C3579,C3581,C3617,C3618		CKSRYB104K16
	C3621,C3622,C3717,C3718		CKSRYB104K16
	C3721,C3722,C3817,C3818		CKSRYB104K16
	C3821,C3822		CKSRYB104K16
	C3519,C3520,C3619,C3620		CKSRYB224K10
	C3719,C3720,C3819,C3820		CKSRYB224K10
	C3425,C3445,C3465,C3485		CKSRYB471K50
	C3403,C3404,C3431,C3432		CKSRYB473K50
	C3953,C3954		CKSRYB473K50
	C3557,C3558		CQMA242J50
	C3555,C3556		CQMA822J50
RESISTORS			
⚠	R3411-R3414,R3471,R3472		RD1/4MUF470J
	R3525-R3528,R3625-R3628		RS1/16S1002F
	R3725-R3728,R3825-R3828		RS1/16S1002F
	R3765,R3766		RS1/16S1201F
	R3589,R3590		RS1/16S1801F
	R3509,R3510,R3609,R3610		RS1/16S2701F
	R3709,R3710,R3809,R3810		RS1/16S2701F
	R3587,R3588,R3763,R3764		RS1/16S2702F
	R3511-R3516,R3611-R3616		RS1/16S3901F
	R3711-R3716,R3811-R3816		RS1/16S3901F
⚠	R3407,R3408,R3431-R3436		RS1/16S470J
⚠	R3951,R3952		RS1/16S472J
	R3501,R3502,R3601,R3602		RS1/16S6801F
	R3701,R3702,R3801,R3802		RS1/16S6801F
	Other Resistors		RS1/16S□□□J
OTHERS			
	3401,3501,3503,3504	4P PIN JACK	AKB7075
	CN3402	17P SOCKET	KP200TA17L
	CN3401	20P SOCKET	KP200TA20L
	CN3403	B TO B CONNECTOR 30P	VKN1395

Mark	No.	Description	Part No.

L ANALOG IN & A/D ASSY (AWX7879 for VSX-47TX)

SEMICONDUCTORS

	IC3421		AK5383VS
	IC3901		BU4052BCF
	IC3423		M5220P
	IC3501,IC3502		NJM2068D
⚠	IC3402		PQ3DZ13
	IC3422		TC9163AF
	IC3424,IC3462		UPC4570C
	Q3501		HN1C03F
	Q3401		RN4903
	D3501,D3502		DAN202K
	D3503,D3504		DAP202K
	D3901,D3902		UDZS6.2B

COILS

	L3401,L3402,L3421,L3422	CHIP FERRITE BEAD	ATL7002
	L3423	CHIP SOLID INDUCTOR	QTL1013

CAPACITORS

	C3428,C3503,C3504,C3549,C3550		CCSRCH101J50
	C3563,C3564,C3567,C3568		CCSRCH101J50
	C3755,C3756,C3759,C3760		CCSRCH101J50
	C3401,C3547,C3548,C3559,C3560		CEAT100M50
	C3951,C3952		CEAT100M50
	C3515,C3516		CEAT101M10
	C3429,C3430		CEAT101M25
	C3551,C3552		CEAT470M16
	C3411,C3412,C3435,C3436		CEAT471M25
	C3473,C3474		CEAT471M25
	C3402		CEHAZL101M10
	C3421,C3422,C3509-C3512		CENA100M50
	C3523,C3524,C3561,C3562		CENA100M50
	C3753,C3754,C3757,C3758		CENA100M50
	C3565,C3566		CENA220M25
	C3501,C3502		CENA470M25
	C3427		CKSRYB102K50
	C3505-C3508,C3513,C3514		CKSRYB103K50
	C3423,C3424,C3517,C3518		CKSRYB104K16
	C3521,C3522,C3575,C3577,C3579		CKSRYB104K16
	C3581		CKSRYB104K16
	C3519,C3520		CKSRYB224K10
	C3425		CKSRYB471K50
	C3431,C3432,C3953,C3954		CKSRYB473K50
	C3557,C3558		CQMA242J50
	C3555,C3556		CQMA822J50

RESISTORS

⚠	R3411,R3412,R3471,R3472		RD1/4MUF470J
	R3525-R3528		RS1/16S1002F
	R3765,R3766		RS1/16S1201F
	R3589,R3590		RS1/16S1801F
	R3591,R3592		RS1/16S2700F
	R3509,R3510		RS1/16S2701F
	R3587,R3588,R3763,R3764		RS1/16S2702F
	R3511-R3516		RS1/16S3901F
⚠	R3431-R3436		RS1/16S470J
⚠	R3951,R3952		RS1/16S472J
	R3501,R3502		RS1/16S6801F
	Other Resistors		RS1/16S□□□J

OTHERS

	3401,3501,3503,3504	4P PIN JACK	AKB7075
	CN3402	17P SOCKET	KP200TA17L
	CN3401	20P SOCKET	KP200TA20L
	CN3403	B TO B CONNECTOR 30P	VKN1395

M DISPLAY ASSY

SEMICONDUCTORS

	IC3002		BU2092F
	IC3001		PD5686B
	IC3061		TC74HC4053AFT
	Q3052		2SA1036K
	Q3061		2SA1576A
	Q3053,Q3054		2SD2114K
	Q3002,Q3062		RN1903
	Q3063		RN2903
	Q3001,Q3003,Q3051		UN5212
	D3061-D3067		1SS355
	D3030,D3031		DAN202K
	D3026,D3028,D3029		SLI-343DUW(STU)
	D3001,D3003,D3005,D3007,D3009		SLI-343URW(RST)
	D3011,D3013,D3015-D3018,D3025		SLI-343URW(RST)
	D3019		TLGE68TG(NP)

COILS

	L3001	CHIP FERRITE BEAD	ATL7002
	L3002	CHIP SOLID INDUCTOR	QTL1013

SWITCHES

	S3081-S3098		ASG7013

CAPACITORS

	C3035,C3071,C3075,C3076		CCSRCH101J50
	C3031,C3061,C3072,C3074		CEJQ101M6R3
	C3053		CEJQ2R2M50
	C3081-C3084		CKSRYB102K50
	C3051,C3062,C3085		CKSRYB103K50
	C3034,C3052,C3073,C3079		CKSRYB104K16
	C3063		CKSRYB153K50
	C3020,C3021		CKSRYB473K50

RESISTORS

	R3060		RD1/2LMF103J
	R3059		RS1LMF220J
	Other Resistors		RS1/16S□□□J

OTHERS

	X3001	CERAMIC RESONATOR (4.19MHz)	ASS7042
	3001,3003,3004	4P CABLE HOLDER	51048-0400
	3002	5P CABLE HOLDER	51048-0500
	CN3001	FFC CONNECTOR 17P	52492-1720
	V3001	FL TUBE	AAV7081
	J3001	EARTH LEAD WIRE	DE005WE0
	CN3002	FFC CONNECTOR 3P	HLEM3S-1
	IC3062	REMOTE RECEIVER UNIT	NJL64H400A
	3006,3007	SOACER	AEB7232

Mark	No.	Description	Part No.
N	**INPUT SEL ASSY**		
	SWITCH		
	S3103		ASX7038
	CAPACITORS		
	C3110,C3111		CKSRYB103K50
	RESISTORS		
	R3109,R3110		RS1/16S437J
	OTHERS		
	3104	4P CABLE HOLDER	51048-0400
O	**MULTI JOG ASSY**		
	SWITCH		
	S3101		ASX7039
	CAPACITORS		
	C3105,C3106		CKSRYB103K50
	RESISTORS		
	R3105,R3106		RS1/16S473J
	OTHERS		
	3102	5P CABLE HOLDER	51048-0500
P	**VOL ASSY**		
	SWITCH		
	S3102		ASX7037
	CAPACITORS		
	C3108,C3109		CKSRYB103K50
	RESISTORS		
	R3107,R3108		RS1/16S473J
	OTHERS		
	3103	4P CABLE HOLDER	51048-0400
Q	**VR & PRE OUT ASSY**		
	SEMICONDUCTORS		
	IC5084		BU4052BCF
	IC5023,IC5063,IC5181,IC5182		NJM2068D
⚠	IC5002		NJM78M15FA
⚠	IC5003		NJM79M15FA
	IC5022,IC5042,IC5062,IC5082		OPA2134PA
	IC5001		TC9274N-016
	IC5021,IC5041,IC5061,IC5081		TC94A07F
	IC5043,IC5083		UPC4570C
	Q5101,Q5102,Q5201,Q5202,Q5204		HN1C03F
	Q5301,Q5302,Q5401,Q5402		HN1C03F
	D5001-D5004		1SS355
	D5085-D5090		DA204K
	D5083,D5084		UDZS6.2B
	CAPACITORS		
	C5007,C5008,C5021,C5022 (470µF/25V)		ACH7163
	C5033,C5034,C5041,C5042 (470µF/25V)		ACH7163
	C5053,C5054,C5061,C5062 (470µF/25V)		ACH7163
	C5081,C5082 (470µF/25V)		ACH7163
	C5013,C5024,C5044,C5064,C5084		CCSRCH101J50
	C5123,C5124,C5223,C5224		CCSRCH101J50
	C5257,C5258,C5261,C5262		CCSRCH101J50
	C5323,C5324,C5423,C5424		CCSRCH101J50
	C5457,C5458,C5461,C5462		CCSRCH101J50
	C5153,C5154,C5181,C5182		CCSRCH220J50
	C5189,C5190,C5353,C5354		CCSRCH220J50
	C5911,C5912,C5921,C5922		CCSRCH330J50
	C5931,C5932,C5941,C5942		CCSRCH330J50
	C5003-C5006		CEAT100M50
	C5001,C5002		CEAT1R0M50
	C5011,C5012,C5095,C5096		CEAT470M25
	C5151,C5152,C5251,C5252		CEGA470M35
	C5351,C5352,C5451,C5452		CEGA470M35
	C5255,C5256,C5259,C5260		CENA100M50
	C5455,C5456,C5459,C5460		CENA100M50
	C5125-C5128,C5155,C5156		CENA470M25
	C5183,C5184,C5225-C5228		CENA470M25
	C5325-C5328,C5355,C5356		CENA470M25
	C5425-C5428		CENA470M25
	C5121,C5122,C5221,C5222		CENA4R7M50
	C5321,C5322,C5421,C5422		CENA4R7M50
	C5015-C5017,C5031,C5032		CKSRYB103K50
	C5051,C5052,C5071,C5072		CKSRYB103K50
	C5091,C5092,C5185-C5188		CKSRYB103K50
	C5014		CKSRYB104K16
	C5009,C5010,C5025,C5026		CKSRYB473K50
	C5029,C5030,C5045,C5046		CKSRYB473K50
	C5049,C5050,C5065,C5066		CKSRYB473K50
	C5069,C5070,C5085,C5086		CKSRYB473K50
	C5089,C5090,C5097,C5098		CKSRYB473K50
	C5131-C5134,C5233-C5236,C5242		CKSRYB473K50
	C5244,C5331-C5334,C5431-C5434		CKSRYB473K50
	RESISTORS		
⚠	R5007,R5008,R5021,R5022		RD1/4MUF470J
⚠	R5029,R5030,R5041,R5042		RD1/4MUF470J
⚠	R5049,R5050,R5061,R5062		RD1/4MUF470J
⚠	R5081,R5082		RD1/4MUF470J
⚠	R5001,R5002		RD1/4MUF4R7J
	R5267,R5268,R5467,R5468		RS1/16S1201F
	R5265,R5266,R5465,R5466		RS1/16S2702F
⚠	R5005,R5006		RS1/16S470J
⚠	R5091,R5092		RS1/16S472J
	Other Resistors		RS1/16S□□□J
	OTHERS		
	5002,5021	4P PIN JACK	AKB7075
	JA5042	AUDIO 2P PIN JACK	AKB7144
	JA5001	4P PIN JACK	AKB7145
	CN5005	8P CONNECTOR	B08B-XASK-1
	CN5006	14P CONNECTOR	B14B-XASK-1

Mark	No.	Description	Part No.
	CN5002	9P SOCKET	KP200TA9L
	CN5004	6P CONNECTOR	S06B-XASK-1
	JA5041	1P PIN JACK (AU, BLK)	VKB1074
	CN5003	B TO B CONNECTOR 24P	VKN1392
	CN5001	B TO B CONNECTOR 30P	VKN1395

R MOTHER ASSY

SEMICONDUCTORS

	IC5802	AT24C16N-10SI2.5
⚠	IC5806,IC5808	NJM78M15FA
⚠	IC5807,IC5809	NJM79M15FA
	IC5801	PD5685A9
	IC5810	PST9242NR
	IC5803,IC5804	TC74HCT244AF
	IC5811,IC5813	TC7S08FU
	IC5812	TC7W126FU
⚠	Q5805	2SC5174P
⚠	Q5816	2SK2103
⚠	Q5815	IRF7416
	Q5801	RN1903
	Q5806	RN4903
	Q5808,Q5809,Q5818	UN5112
	Q5810	UN511L
	Q5807,Q5817	UN5212
	D5803-D5806,D5814,D5815	1SS355
	D5821-D5823	1SS355
	D5819,D5820	DAN202K
	D5817	DAP202K
	D5801	UDZ11B

COILS

	L5802,L5803,L5806 CHIP FERRITE BEAD	ATL7002
	L5804	LCTA1R0J2520
	L5805,L5807-L5809 CHIP SOLID INDUCTOR	QTL1013

CAPACITORS

	C5839 (0.1µF/5.5V)	ACH7141
	C5829,C5831,C5834,C5836	CEAT100M50
	C5819	CEAT101M16
	C5873	CEAT221M6R3
	C5868	CEAT331M10
	C5847	CEAT471M6R3
	C5818	CEJQ100M16
	C5832,C5837,C5844	CEJQ100M25
	C5801,C5802,C5828,C5830,C5833	CEJQ1R0M50
	C5835	CEJQ1R0M50
	C5848,C5859	CEJQ221M6R3
	C5817,C5838,C5840,C5850,C5858	CKSRYB103K50
	C5860,C5861,C5863,C5864,C5869	CKSRYB103K50
	C5804,C5820,C5841,C5843,C5845	CKSRYB104K16
	C5849,C5856,C5866,C5872	CKSRYB104K16
	C5842,C5846	CKSRYB471K50
	C5857,C5862,C5867,C5871	CKSRYB473K50
	C5803	CKSRYF105Z10

RESISTORS

	R5840,R5841	RAB4C104J
	R5901,R5920	RAB4C221J
⚠	R5835,R5836	RD1/4MUF100J
⚠	R5930	RD1/4MUF101J
⚠	R5833,R5837	RD1/4MUF4R7J
	Other Resistors	RS1/16S□□□J

OTHERS

	CN5825 JE CONNECTOR	09R-JE
	CN5821,CN5823 JE CONNECTOR	17R-JE
	CN5822,CN5824 JE CONNECTOR	19R-JE
	CN5806 11P FFC CONNECTOR	52045-1145
	CN5802 13P FFC CONNECTOR	52045-1345
	CN5807 17P FFC CONNECTOR	52045-1745
	CN5801 14P FFC CONNECTOR	52492-1420
	J5806 2P CONNECTOR ASSY	ADX7375
	J5801 1P BOARD IN WIRE	ADX7376
	J5803 1P BOARD IN WIRE	ADX7391
	X5801 CERAMIC RESONATOR (15.67MHz)	ASS7043
	CN5805 9P CONNECTOR	B09B-XASK-1
	CN5804 KR CONNECTOR	B5B-PH-K
	CN5827,CN5828 KR CONNECTOR	B6B-PH-K
	CN5810,CN5811 B TO B CONNECTOR 17P	BTEM17S-1S
	CN5809 CONNECTOR	BTEM9S-1S
	CN5813,CN5815,CN5820 17P PLUG	KM200TA17
	CN5814 20P PLUG	KM200TA20
	CN5812 7P PLUG	KM200TA7
	CN5817 9P PLUG	KM200TA9
	5801 PCB BINDER	VEF1040
	CN5819 B TO B CONNECTOR 24P	VKN1405
	CN5816,CN5818 B TO B CONNECTOR 30P	VKN1408
	KN5802 EARTH METAL FITTING	VNF1084

S DSP ASSY (AWK7719 for VSX-49TX)

SEMICONDUCTORS

	IC301	ADSST21065LKS-264
	IC101	AK4114VQ
	IC203	BA4558F-HT
	IC703-IC705	BU4094BCFV
	IC302,IC303	HY57V161610DTC-10
	IC402	IS61LV6416-12T
	IC202	IS62C256-45T
	IC403	IS63LV1024-12T
	IC702	AYW7012
	IC304	AYW7014
	IC701	M30620SAFP
	IC201	PM4007A
⚠	IC305,IC415,IC713	PQ3DZ13
⚠	IC416	PQ7VZ5
	IC102	TC74HC151AF
	IC204	TC74HCT08AF
	IC406,IC409,IC717	TC74VHC00FT
	IC712	TC74VHC04FT
	IC111,IC413	TC74VHC08FT
	IC114,IC714,IC715,IC718	TC74VHC125FT
	IC716	TC74VHC126FT
	IC110	TC74VHC153FT
	IC112,IC410,IC412	TC74VHC157FT
	IC116	TC74VHC257FT
	IC711	TC74VHC32FT

Mark	No.	Description	Part No.
	IC107		TC74VHC4040FT
	IC707-IC710		TC74VHC573FT
	IC404,IC407,IC411		TC74VHC74FT
	IC414		TC74VHCU04FT
	IC103		TC7SET08F
	IC719-IC721		TC7SET08FU
	IC108		TC7SH04FU
	IC405,IC408		TC7SH86F
	IC115		TC7WH08FU
	IC113		TC7WH157FU
	IC104-IC106		TC7WU04F
	IC205		TK15420M
	IC401		XCA56367PV150
	Q203,Q204		2SA1037K
⚠	Q101,Q210,Q212		2SB1197K
	Q201,Q202		2SC2412K
	Q208,Q209		2SC4081
⚠	Q213		2SD1781K
	Q102		DTC124EK
	Q211		RN1903
	D203		1SS355
	D202		KV1851

COILS AND FILTERS

	F201	BAND PASS FILTER	ATF7027
	L114,L117,L201,L206,L207	CHIP FERRITE BEAD	ATL7002
	L303,L305-L307,L405-L407	CHIP FERRITE BEAD	ATL7002
	L409,L411,L701-L704	CHIP FERRITE BEAD	ATL7002
	L202		LCTA680J2520
	L101-L108,L110,L113	CHIP SOLID INDUCTOR	QTL1013
	L118-L120,L203,L204,L413	CHIP SOLID INDUCTOR	QTL1013

CAPACITORS

	C166,C231,C441,C442		CCSRCH150J50
	C120,C128,C136,C165		CCSRCH220J50
	C272		CCSRCH221J50
	C119,C127,C135		CCSRCH470J50
	C216		CCSRCH561J50
	C211		CCSRCH750J50
	C103,C111,C124,C132,C140		CEAT101M16
	C143,C153,C167,C234		CEAT101M16
	C180,C183,C312,C316,C703		CEAT101M6R3
	C220		CEAT470M10
	C147,C207,C209,C219,C254		CEAT470M16
	C476,C485		CEHAZA101M10
	C158,C161		CEHAZA470M16
	C302		CEHAZL101M25
	C306,C309,C447,C448,C701		CEJQ101M6R3
	C704		CEJQ101M6R3
	C481,C482,C718,C744,C745		CEJQ470M16
	C229		CEJQNP4R7M25
	C164		CFTYA474J50
	C223,C224,C456		CKSQYB105K10
	C222,C323,C325,C331,C334		CKSRYB102K50
	C336,C341,C349,C351,C364		CKSRYB102K50
	C423,C430,C452,C455,C462		CKSRYB102K50
	C464,C469,C471		CKSRYB102K50
	C104,C108,C112,C116,C117		CKSRYB103K50
	C123,C125,C131,C133,C139		CKSRYB103K50
	C152,C202,C214,C232,C233		CKSRYB103K50
	C273,C454,C458		CKSRYB103K50
	C101,C105,C109,C113,C121		CKSRYB104K16
	C129,C138,C141,C144		CKSRYB104K16
	C149,C150,C155,C156,C160		CKSRYB104K16
	C168,C172,C174,C176,C178		CKSRYB104K16
	C181,C185,C189,C191		CKSRYB104K16
	C204-C206,C208,C210		CKSRYB104K16
	C212,C213,C215,C225-C228		CKSRYB104K16
	C230,C235,C237,C240-C242		CKSRYB104K16
	C244,C248,C251,C252,C255		CKSRYB104K16
	C257,C304,C315,C318,C320		CKSRYB104K16
	C322,C328,C330,C338,C340		CKSRYB104K16
	C343,C346,C347,C354		CKSRYB104K16
	C356,C357,C360,C362,C366		CKSRYB104K16
	C368,C384,C388-C391,C393		CKSRYB104K16
	C395,C398,C400,C401,C403		CKSRYB104K16
	C405,C407,C422,C424,C427		CKSRYB104K16
	C429,C431,C434,C436		CKSRYB104K16
	C438,C439,C444,C446,C450		CKSRYB104K16
	C460,C461,C467,C473,C478		CKSRYB104K16
	C480,C484,C487,C702,C705		CKSRYB104K16
	C708,C710,C712-C714,C717		CKSRYB104K16
	C719,C721,C723,C725,C727		CKSRYB104K16
	C729,C731,C733,C736,C737		CKSRYB104K16
	C739,C741,C742,C746,C747		CKSRYB104K16
	C749,C751-C756		CKSRYB104K16
	C203		CKSRYB223K50
	C154,C157,C159,C236		CKSRYB471K50
	C238,C239,C243,C247		CKSRYB471K50
	C249,C250,C253,C256,C305		CKSRYB471K50
	C317,C319,C321,C327,C329		CKSRYB471K50
	C337,C339,C345,C348,C353		CKSRYB471K50
	C355,C358,C359,C361,C365		CKSRYB471K50
	C367,C386,C387,C397,C402		CKSRYB471K50
	C404,C408,C443,C449,C451		CKSRYB471K50
	C453,C459,C463,C465,C466		CKSRYB471K50
	C468,C470,C472,C474,C477		CKSRYB471K50
	C479,C706,C707,C709,C716		CKSRYB471K50
	C748,C750		CKSRYB471K50
	C457		CKSRYB563K16

RESISTORS

	R136,R196,R303,R311,R348		RAB4C101J
	R701,R712,R729,R730		RAB4C101J
	R320,R323,R324		RAB4C103J
	R175,R703,R713,R719,R722		RAB4C221J
	R771		RAB4C221J
	R345,R346,R368,R369,R766		RAB4C330J
	R772		RAB4C330J
	R329,R330,R365,R376,R377		RAB4C470J
	R450		RAB4C470J
	R446,R454,R735-R740		RAB4C473J
	R356,R371,R372		RAB4C680J
	R133		RS1/16S1802D
	R467		RS1/16S3600F
	R468		RS1/16S7500F
	Other Resistors		RS1/16S□□□J

OTHERS

	CN706,CN707	FJ CONNECTOR 14P	14PL-FJ
	JA107,JA108	2P PIN JACK	AKB7148

Mark	No.	Description	Part No.
	CN709	16P PLUG	AKM7049
	CN708	22P PLUG	AKM7052
	X201	CRYSTAL RESONATOR (18.432MHz)	ASS7009
	X101	CRYSTAL RESONATOR (24.576MHz)	ASS7025
	X401	CRYSTAL RESONATOR (33MHz)	ASS7040
	X701	CERAMIC RESONATOR (7.7MHz)	ASS7045
	CN704	2P VH SIDE CONNECTOR	B2PS-VH
	CN701,CN702	B TO B CONNECTOR 17P	BTEM17P-1R
	CN703	B TO B CONNECTOR 9P	BTEM9P-1R
	JA101-JA104	OPTICAL LINK IN	GP1FA502RZ
	JA105,JA106	OPTICAL LINK OUT	GP1FA502TZ
	CN705	FLEXIBLE CONNECTOR	SFW22R-2ST
	CN401	7P FFC CONNECTOR	VKN1411
	CN351	10P FFC CONNECTOR	VKN1600
	CN9304	ROM SOCKET	AKP7169

S DSP ASSY (AWK7720 for VSX-47TX)

SEMICONDUCTORS

Mark	No.	Description	Part No.
	IC301		ADSST21065LKS-264
	IC101		AK4114VQ
	IC702		AYW7012
	IC304		AYW7014
	IC203		BA4558F-HT
	IC703,IC704		BU4094BCFV
	IC302,IC303		HY57V161610DTC-10
	IC402		IS61LV6416-12T
	IC202		IS62C256-45T
	IC403		IS63LV1024-12T
	IC201		PM4007A
⚠	IC305,IC415,IC713		PQ3DZ13
⚠	IC416		PQ7VZ5
	IC204		TC74HCT08AF
	IC406,IC409,IC717		TC74VHC00FT
	IC712		TC74VHC04FT
	IC111,IC413		TC74VHC08FT
	IC114,IC715,IC718		TC74VHC125FT
	IC716		TC74VHC126FT
	IC110		TC74VHC153FT
	IC112		TC74VHC157FT
	IC116		TC74VHC257FT
	IC711		TC74VHC32FT
	IC107		TC74VHC4040FT
	IC707,IC708		TC74VHC573FT
	IC404,IC407		TC74VHC74FT
	IC414		TC74VHCU04FT
	IC719-IC721		TC7SET08FU
	IC108,IC417		TC7SH04FU
	IC405,IC408		TC7SH86F
	IC115		TC7WH08FU
	IC104,IC105		TC7WU04F
	IC205		TK15420M
	IC401		XCA56367PV150
	IC701		M30620SAFP
	Q203,Q204		2SA1037K
⚠	Q101,Q210,Q212		2SB1197K
	Q201,Q202		2SC2412K
	Q208,Q209		2SC4081
⚠	Q213		2SD1781K
	Q102		DTC124EK
	Q211		RN1903
	D203		1SS355
	D202		KV1851

COILS AND FILTERS

Mark	No.	Description	Part No.
	F201	BAND PASS FILTER	ATF7027
	L114,L117,L201,L206,L207	CHIP FERRITE BEAD	ATL7002
	L303,L305-L307,L405-L407	CHIP FERRITE BEAD	ATL7002
	L409,L411,L701-L704	CHIP FERRITE BEAD	ATL7002
	L202		LCTA680J2520
	L102-L106,L108,L110,L118	CHIP SOLID INDUCTOR	QTL1013
	L120,L203,L204,L413	CHIP SOLID INDUCTOR	QTL1013

CAPACITORS

Mark	No.	Description	Part No.
	C166,C231,C441,C442		CCSRCH150J50
	C120,C128,C165		CCSRCH220J50
	C272		CCSRCH221J50
	C119,C127		CCSRCH470J50
	C216		CCSRCH561J50
	C211		CCSRCH750J50
	C103,C111,C124,C132,C143		CEAT101M16
	C153,C167,C234		CEAT101M16
	C183,C312,C316,C703		CEAT101M6R3
	C220		CEAT470M10
	C207,C209,C219,C254		CEAT470M16
	C476,C485		CEHAZA101M10
	C158,C161		CEHAZA470M16
	C302		CEHAZL101M25
	C306,C309,C447,C448,C701		CEJQ101M6R3
	C704		CEJQ101M6R3
	C481,C482,C718,C744,C745		CEJQ470M16
	C229		CEJQNP4R7M25
	C164		CFTYA474J50
	C223,C224,C456		CKSQYB105K10
	C222,C323,C325,C331,C334		CKSRYB102K50
	C336,C341,C349,C351,C364		CKSRYB102K50
	C423,C430,C452,C455,C462		CKSRYB102K50
	C464,C469,C471		CKSRYB102K50
	C104,C108,C112,C116,C117		CKSRYB103K50
	C123,C125,C131,C139,C202		CKSRYB103K50
	C214,C232,C233,C273,C454		CKSRYB103K50
	C458		CKSRYB103K50
	C105,C109,C113,C121,C129		CKSRYB104K16
	C141,C144,C155,C156,C160		CKSRYB104K16
	C168,C172,C174,C176,C178		CKSRYB104K16
	C185,C189,C191,C204-C206		CKSRYB104K16
	C208,C210,C212,C213,C215		CKSRYB104K16
	C225-C228,C230,C235,C237		CKSRYB104K16
	C240-C242,C244,C248		CKSRYB104K16
	C251,C252,C255,C257,C304		CKSRYB104K16
	C315,C318,C320,C322,C328		CKSRYB104K16
	C330,C338,C340,C343		CKSRYB104K16
	C346,C347,C354,C356,C357		CKSRYB104K16
	C360,C362,C366,C368,C384		CKSRYB104K16

Mark	No.	Description	Part No.
	C388-C391,C393,C395,C398		CKSRYB104K16
	C400,C401,C403,C405,C407		CKSRYB104K16
	C410,C422,C424,C427,C429		CKSRYB104K16
	C431,C434,C444,C446,C450		CKSRYB104K16
	C460,C461,C467,C473,C478		CKSRYB104K16
	C480,C484,C487,C702,C705		CKSRYB104K16
	C708,C710,C712,C713,C717		CKSRYB104K16
	C719,C721,C723,C725,C733		CKSRYB104K16
	C736,C737,C739,C741		CKSRYB104K16
	C746,C747,C749,C751-C756		CKSRYB104K16
	C203		CKSRYB223K50
	C154,C157,C159,C236		CKSRYB471K50
	C238,C239,C243,C247		CKSRYB471K50
	C249,C250,C253,C256,C305		CKSRYB471K50
	C317,C319,C321,C327,C329		CKSRYB471K50
	C337,C339,C345,C348,C353		CKSRYB471K50
	C355,C358,C359,C361,C365		CKSRYB471K50
	C367,C386,C387,C397,C402		CKSRYB471K50
	C404,C408,C443,C449,C451		CKSRYB471K50
	C453,C459,C463,C465,C466		CKSRYB471K50
	C468,C470,C472,C474,C477		CKSRYB471K50
	C479,C706,C707,C709,C716		CKSRYB471K50
	C748,C750		CKSRYB471K50
	C457		CKSRYB563K16

RESISTORS

	R763		RAB4C0R0J
	R136,R196,R303,R311,R348		RAB4C101J
	R701,R712,R729,R730		RAB4C101J
	R320,R323,R324		RAB4C103J
	R175,R703,R713,R719,R722		RAB4C221J
	R771		RAB4C221J
	R345,R346,R368,R369		RAB4C330J
	R329,R330,R365,R376,R377		RAB4C470J
	R450		RAB4C470J
	R446,R454,R735-R738		RAB4C473J
	R356,R371,R372		RAB4C680J
	R133		RS1/16S1802D
	R467		RS1/16S3600F
	R468		RS1/16S7500F
	Other Resistors		RS1/16S□□□J

OTHERS

	CN706,CN707	FJ CONNECTOR 14P	14PL-FJ
	JA107	2P PIN JACK	AKB7148
	X201	CRYSTAL RESONATOR (18.432MHz)	ASS7009
	X101	CRYSTAL RESONATOR (24.576MHz)	ASS7025
	X401	CRYSTAL RESONATOR (33MHz)	ASS7040
	X701	CERAMIC RESONATOR (7.7MHz)	ASS7045
	CN704	2P VH SIDE CONNECTOR	B2PS-VH
	CN701,CN702	B TO B CONNECTOR 17P	BTEM17P-1R
	CN703	B TO B CONNECTOR 9P	BTEM9P-1R
	JA102-JA104	OPTICAL LINK IN	GP1FA502RZ
	JA105,JA106	OPTICAL LINK OUT	GP1FA502TZ
	JA108	1P PIN JACK (BLK, AU)	VKB1160
	CN401	7P FFC CONNECTOR	VKN1411
	CN351	10P FFC CONNECTOR	VKN1600
	CN9304	ROM SOCKET	AKP7169

T DSP3 ASSY (VSX-49TX Only)

SEMICONDUCTORS

Mark	No.	Description	Part No.
	IC501		ADSST21065LKS-264
	IC502,IC503		HY57V161610DTC-10
	IC504		AYW7013
⚠	IC505		PQ3DZ13

COILS

	L503,L505-L507	CHIP FERRITE BEAD	ATL7002

CAPACITORS

	C502		CEHAZA101M10
	C506,C509,C512,C516		CEJQ101M16
	C523,C525,C531,C534,C536		CKSRYB102K50
	C541,C549,C551,C564		CKSRYB102K50
	C510		CKSRYB103K50
	C504,C507,C518,C520,C522		CKSRYB104K16
	C528,C530,C538,C540,C543		CKSRYB104K16
	C546,C547,C554,C556,C557		CKSRYB104K16
	C560,C562,C566,C568,C570		CKSRYB104K16
	C572,C573,C575,C584,C586		CKSRYB104K16
	C588,C590,C592,C594,C595		CKSRYB104K16
	C598		CKSRYB104K16
	C505,C517,C519,C521,C527		CKSRYB471K50
	C529,C537,C539,C545,C548		CKSRYB471K50
	C553,C555,C558,C559,C561		CKSRYB471K50
	C565,C567,C571,C574,C587		CKSRYB471K50
	C589,C597		CKSRYB471K50

RESISTORS

	R503,R511,R582		RAB4C101J
	R520,R523,R524		RAB4C103J
	R565,R580,R581,R591,R592		RAB4C330J
	R560,R561,R563,R564		RAB4C470J
	R573-R575		RAB4C470J
	R588		RAB4C680J
	Other Resistors		RS1/16S□□□J

OTHERS

	CN501	16P SOCKET	AKP7122
	CN502	22P SOCKET	AKP7125
	CN551	10P FFC CONNECTOR	VKN1600
	CN9504	ROM SOCKET	AKP7169

U DAC10 ASSY (VSX-49TX Only)

SEMICONDUCTORS

Mark	No.	Description	Part No.
	IC6021,IC6041,IC6061,IC6081		DF1706E
	IC6105,IC6106,IC6205,IC6206		NJM2068D
	IC6305,IC6306,IC6405,IC6406		NJM2068D
	IC6103,IC6104,IC6203,IC6204		NJM5534DD
	IC6303,IC6304,IC6403,IC6404		NJM5534DD
	IC6101,IC6102,IC6201,IC6202		PCM1704U-1
	IC6301,IC6302,IC6401,IC6402		PCM1704U-1
⚠	IC6001		PQ3DZ13
	IC6022,IC6042,IC6062,IC6082		TC94A07F

COILS

	L6001,L6021,L6041,L6061,L6081	CHIP FERRITE BEAD	ATL7002

Mark	No.	Description	Part No.
	L6101-L6104,L6201-L6204	CHIP FERRITE BEAD	ATL7002
	L6301-L6304,L6401-L6404	CHIP FERRITE BEAD	ATL7002
	L6022,L6042,L6062,L6082	CHIP SOLID INDUCTOR	QTL1013

CAPACITORS

	C6147,C6148,C6247,C6248	(47µF/25V)	ACH7162
	C6347,C6348,C6447,C6448	(47µF/25V)	ACH7162
	C6031,C6032,C6051,C6052	(470µF/25V)	ACH7163
	C6071,C6072,C6091,C6092	(470µF/25V)	ACH7163
	C6026,C6046,C6066,C6086		CCSRCH101J50
	C6145,C6146,C6245,C6246		CCSRCH101J50
	C6345,C6346,C6445,C6446		CCSRCH101J50
	C6151,C6152,C6251,C6252		CCSRCH220J50
	C6351,C6352,C6451,C6452		CCSRCH220J50
	C6149,C6150,C6249,C6250		CCSRCH330J50
	C6349,C6350,C6449,C6450		CCSRCH330J50
	C6139,C6140,C6239,C6240		CEGA4R7M2A
	C6339,C6340,C6439,C6440		CEGA4R7M2A
	C6002,C6123,C6124,C6223,C6224		CEHAZA101M10
	C6323,C6324,C6423,C6424		CEHAZA101M10
	C6117,C6118,C6121,C6122		CEHAZL101M10
	C6127,C6128,C6217,C6218		CEHAZL101M10
	C6221,C6222,C6227,C6228		CEHAZL101M10
	C6317,C6318,C6321,C6322		CEHAZL101M10
	C6327,C6328,C6417,C6418		CEHAZL101M10
	C6421,C6422,C6427,C6428		CEHAZL101M10
	C6021,C6041,C6061,C6081		CEHAZL221M10
	C6113,C6114,C6213,C6214		CEHAZL471M16
	C6313,C6314,C6413,C6414		CEHAZL471M16
	C6001		CENA100M50
	C6103,C6104,C6109,C6110		CKSRYB103K50
	C6115,C6116,C6125,C6126		CKSRYB103K50
	C6203,C6204,C6209,C6210		CKSRYB103K50
	C6215,C6216,C6225,C6226		CKSRYB103K50
	C6303,C6304,C6309,C6310		CKSRYB103K50
	C6315,C6316,C6325,C6326		CKSRYB103K50
	C6403,C6404,C6409,C6410		CKSRYB103K50
	C6415,C6416,C6425,C6426		CKSRYB103K50
	C6022,C6033,C6034,C6042		CKSRYB104K16
	C6053,C6054,C6062,C6073,C6074		CKSRYB104K16
	C6082,C6093,C6094,C6119,C6120		CKSRYB104K16
	C6219,C6220,C6319,C6320		CKSRYB104K16
	C6419,C6420		CKSRYB104K16
	C6033,Z6034,C6053,C6054		CKSRYB222K50
	C6073,C6074,C6093,C6094		CKSRYB222K50
	C6023,C6043,C6063,C6083		CKSRYB471K50
	C6105-C6108,C6205-C6208		CKSRYB471K50
	C6305-C6308,C6405-C6408		CKSRYB471K50
	C6027,C6028,C6047,C6048		CKSRYB473K50
	C6067,C6068,C6087,C6088		CKSRYB473K50
	C6131-C6134,C6141-C6144		CKSRYB473K50
	C6231-C6234,C6241-C6244		CKSRYB473K50
	C6331-C6334,C6341-C6344		CKSRYB473K50
	C6431-C6434,C6441-C6444		CKSRYB473K50
	C6101,C6102,C6111,C6112	(47µF/10V)	RCH1139
	C6201,C6202,C6211,C6212	(47µF/10V)	RCH1139
	C6301,C6302,C6311,C6312	(47µF/10V)	RCH1139
	C6401,C6402,C6411,C6412	(47µF/10V)	RCH1139
	C6135,C6136,C6235,C6236	(470pF)	VCE1035
	C6335,C6336,C6435,C6436	(470pF)	VCE1035
	C6137,C6138,C6237,C6238	(220pF)	VCE1040
	C6337,C6338,C6437,C6438	(220pF)	VCE1040
	C6129,C6130,C6229,C6230	(100pF)	VCE1045
	C6329,C6330,C6429,C6430	(100pF)	VCE1045

RESISTORS

	R6101,R6102,R6201,R6202	(2.55kΩ, 1/2W)	ACN7105
	R6301,R6302,R6401,R6402	(2.55kΩ, 1/2W)	ACN7105
⚠	R6031,R6032,R6051,R6052		RD1/4MUF470J
⚠	R6071,R6072,R6091,R6092		RD1/4MUF470J
	Other Resistors		RS1/16S□□□J

OTHERS

	CN6001,CN6002	FJ CONNECTOR14P	14R-FJ
	CN6004	17P SOCKET	KP200TA17L
	CN6003	7P SOCKET	KP200TA7L

U DAC8 ASSY (VSX-47TX Only)

SEMICONDUCTORS

	IC6501-IC6504,IC6601-IC6604	NJM2068D
	IC6701-IC6704,IC6801-IC6804	NJM2068D
	IC6921,IC6941,IC6961,IC6981	PCM1738E-1
⚠	IC6901	PQ3DZ13
	IC6922,IC6942,IC6962,IC6982	TC94A07F

COILS

	L6902,L6922,L6923,L6942,L6943	CHIP FERRITE BEAD	ATL7002
	L6962,L6963,L6982,L6983	CHIP FERRITE BEAD	ATL7002
	L6921,L6941,L6961,L6981	CHIP SOLID INDUCTOR	QTL1013

CAPACITORS

	C6515,C6516,C6615,C6616	(47µF/25V)	ACH7162
	C6715,C6716,C6815,C6816	(47µF/25V)	ACH7162
	C6513,C6514,C6613,C6614		CCSRCH101J50
	C6713,C6714,C6813,C6814,C6939		CCSRCH101J50
	C6959,C6979,C6999		CCSRCH101J50
	C6525,C6526,C6625,C6626		CCSRCH330J50
	C6725,C6726,C6825,C6826		CCSRCH330J50
	C6507-C6510,C6607-C6610		CCSRCH821J50
	C6707-C6710,C6807-C6810		CCSRCH821J50
	C6901		CEAT100M50
	C6933,C6934,C6953,C6954		CEAT471M25
	C6973,C6974,C6993,C6994		CEAT471M25
	C6902,C6920,C6930,C6932,C6940		CEHAZL101M10

Mark	No.	Description	Part No.
	C6950,C6952,C6960,C6970,C6972		CEHAZL101M10
	C6980,C6990,C6992		CEHAZL101M10
	C6511,C6512,C6611,C6612		CENA4R7M50
	C6711,C6712,C6811,C6812		CENA4R7M50
	C6914,C6921,C6925,C6927,C6929		CKSRYB104K16
	C6931,C6941,C6945,C6947,C6949		CKSRYB104K16
	C6951,C6961,C6965,C6967,C6969		CKSRYB104K16
	C6971,C6981,C6985,C6987,C6989		CKSRYB104K16
	C6991		CKSRYB104K16
	C6922,C6942,C6962,C6982		CKSRYB471K50
	C6517-C6524,C6617-C6624		CKSRYB473K50
	C6717-C6724,C6817-C6824		CKSRYB473K50
	C6935,C6936,C6955,C6956		CKSRYB473K50
	C6975,C6976,C6995,C6996		CKSRYB473K50
	C6505,C6506,C6605,C6606		CKSRYB682K50
	C6705,C6706,C6805,C6806		CKSRYB682K50
	C6501-C6504,C6601-C6604	(4700pF/40V)	VCE1046
	C6701-C6704,C6801-C6804	(4700pF/40V)	VCE1046

RESISTORS

Mark	No.	Description	Part No.
⚠	R6931,R6932,R6951,R6952		RD1/4MUF470J
⚠	R6971,R6972,R6991,R6992		RD1/4MUF470J
	R6501-R6504,R6601-R6604		RDR1/4VM6200F
	R6701-R6704,R6801-R6804		RDR1/4VM6200F
	R6927,R6947,R6967,R6987		RS1/16S1602D
	R6505-R6516,R6605-R6616		RS1/16S6200F
	R6705-R6716,R6805-R6816		RS1/16S6200F
	Other Resistors		RS1/16S□□□J

OTHERS

Mark	No.	Description	Part No.
	CN6901,CN6902	FJ CONNECTOR 14P	14R-FJ
	CN6904	17P SOCKET	KP200TA17L
	CN6903	7P SOCKET	KP200TA7L

V POWER AMP (L) ASSY

SEMICONDUCTORS

Mark	No.	Description	Part No.
⚠	IC4101,IC4401,IC4601		PA9008A
⚠	IC4102,IC4302,IC4402,IC4602		PBD001A
⚠	IC4103,IC4403,IC4603		PBD002A
	Q4101,Q4301,Q4401,Q4601		2SA1255
	Q4801,Q4803,Q4805		2SC2412K
	Q4102,Q4402,Q4602		2SC3138
	Q4104,Q4204,Q4304,Q4404,Q4604		2SC3326
	D4103-D4106,D4305,D4403-D4406		1SS355
	D4603-D4606		1SS355
	D4801		UDZ2.7B
	D4101,D4102,D4401,D4402		UDZS7.5B
	D4601,D4602		UDZS7.5B

CAPACITORS

Mark	No.	Description	Part No.
	C4110,C4111,C4410,C4411		CCSRCH220J50
	C4610,C4611		CCSRCH220J50
	C4101,C4401,C4601		CEAT101M10
	C4809		CEAT221M16
	C4115,C4116,C4415,C4416		CEAT221M63
	C4615,C4616		CEAT221M63
	C4109,C4409,C4609		CEAT470M16
	C4801,C4803		CEAT471M63
	C4103,C4403,C4603		CEHAT102M10
	C4106-C4108,C4406-C4408		CEHAT470M16
	C4606-C4608		CEHAT470M16
	C4104,C4105,C4404,C4405		CFTLA104J2A
	C4604,C4605		CFTLA104J2A
	C4112,C4113,C4412,C4413		CFTYA224J50
	C4612,C4613		CFTYA224J50
	C4102,C4402,C4602		CKSRYB221K50

RESISTORS

Mark	No.	Description	Part No.
⚠	R4110,R4111,R4125,R4126,R4310	(0.1Ω)	ACN7107
⚠	R4325,R4410,R4411,R4425,R4426	(0.1Ω)	ACN7107
⚠	R4610,R4611,R4625,R4626 (0.1Ω)		ACN7107
	R4117,R4417,R4617		RDR1/4VM103J
	R4104,R4404,R4604		RDR1/4VM220J
	R4103,R4403,R4603		RDR1/4VM331J
	R4127,R4128,R4327,R4427,R4428		RS1/16S1001F
	R4627,R4628		RS1/16S1001F
	R4129,R4130,R4329,R4429,R4430		RS1/16S1003F
	R4629,R4630		RS1/16S1003F
	R4116,R4133,R4134,R4316,R4333		RS1/16S1004F
	R4416,R4433,R4434,R4616		RS1/16S1004F
	R4633,R4634		RS1/16S1004F
	R4112,R4113,R4312,R4412,R4413		RS1/16S1502F
	R4612,R4613		RS1/16S1502F
	R4114,R4115,R4314,R4414,R4415		RS1/16S1503F
	R4614,R4615		RS1/16S1503F
	R4131,R4132,R4331,R4431,R4432		RS1/16S3902F
	R4631,R4632		RS1/16S3902F
⚠	R4118,R4418,R4618		RS1LMF2R2J
	Other Resistors		RS1/16S□□□J

OTHERS

Mark	No.	Description	Part No.
	J4801	LEAD WITH HOUSING	ADX7370
	CN4812	2P CONNECTOR	B02B-XASK-1
	CN4803	11P PLUG	KM250NA11L
	CN4805	15P PLUG	KM250NA15L
	CN4801	8P CONNECTOR	S08B-XASK-1
	4801,4803,4805	SCREW TERMINAL	VNE1949
	4809	EARTH METAL FITTING	VNF-091

W POWER AMP (C) ASSY

SEMICONDUCTORS

Mark	No.	Description	Part No.
⚠	IC4301		PA9008A
	D4303,D4304		1SS355
	D4301,D4302		UDZS7.5B

CAPACITORS

Mark	No.	Description	Part No.
	C4310,C4311		CCSRCH220J50
	C4315,C4316		CEAT221M63
	C4309		CEAT470M16
	C4301		CEHAT101M10
	C4303		CEHAT102M10
	C4306-C4308		CEHAT470M16
	C4304,C4305		CFTLA104J2A
	C4312,C4313		CFTYA224J50
	C4302		CKSRYB221K50

Mark	No.	Description	Part No.
RESISTORS			
	R4317		RDR1/4VM103J
	R4304		RDR1/4VM220J
	R4303		RDR1/4VM331J
⚠	R4318		RS1LMF2R2J
	Other Resistors		RS1/16S□□□J
OTHERS			
	CN4808	13P SOCKET	KP250NA13
	CN4807	15P SOCKET	KP250NA15

X POWER AMP (R) ASSY

Mark	No.	Description	Part No.
SEMICONDUCTORS			
⚠	IC4201,IC4501,IC4701		PA9008A
⚠	IC4202,IC4502,IC4702		PBD001A
⚠	IC4203,IC4303,IC4503,IC4703		PBD002A
	Q4201,Q4501,Q4701		2SA1255
	Q4802,Q4804,Q4806		2SC2412K
	Q4202,Q4302,Q4502,Q4702		2SC3138
	Q4504,Q4704		2SC3326
	D4203-D4206,D4306,D4503-D4506		1SS355
	D4703-D4706		1SS355
	D4802		UDZ2.7B
	D4201,D4202,D4501,D4502		UDZS7.5B
	D4701,D4702		UDZS7.5B
CAPACITORS			
	C4210,C4211,C4510,C4511		CCSRCH220J50
	C4710,C4711		CCSRCH220J50
	C4201,C4501,C4701		CEAT101M10
	C4810		CEAT221M16
	C4215,C4216,C4515,C4516		CEAT221M63
	C4715,C4716		CEAT221M63
	C4209,C4509,C4709		CEAT470M16
	C4802,C4804		CEAT471M63
	C4203,C4503,C4703		CEHAT102M10
	C4206-C4208,C4506-C4508		CEHAT470M16
	C4706-C4708		CEHAT470M16
	C4204,C4205,C4504,C4505		CFTLA104J2A
	C4704,C4705		CFTLA104J2A
	C4212,C4213,C4512,C4513		CFTYA224J50
	C4712,C4713		CFTYA224J50
	C4202,C4502,C4702		CKSRYB221K50
RESISTORS			
⚠	R4210,R4211,R4225,R4226,R4311 (0.1Ω)		ACN7107
⚠	R4326,R4510,R4511,R4525,R4526 (0.1Ω)		ACN7107
⚠	R4710,R4711,R4725,R4726 (0.1Ω)		ACN7107
	R4217,R4517,R4717		RDR1/4VM103J
	R4204,R4504,R4704		RDR1/4VM220J
	R4203,R4503,R4703		RDR1/4VM331J
	R4227,R4228,R4328,R4527,R4528		RS1/16S1001F
	R4727,R4728		RS1/16S1001F
	R4229,R4230,R4330,R4529,R4530		RS1/16S1003F
	R4729,R4730		RS1/16S1003F
	R4216,R4233,R4234,R4334,R4516		RS1/16S1004F
	R4533,R4534,R4716,R4733,R4734		RS1/16S1004F
	R4212,R4213,R4313,R4512,R4513		RS1/16S1502F
	R4712,R4713		RS1/16S1502F
	R4214,R4215,R4315,R4514,R4515		S1/16S1503F
	R4714,R4715		RS1/16S1503F
	R4231,R4232,R4332,R4531,R4532		RS1/16S3902F
	R4731,R4732		RS1/16S3902F
⚠	R4218,R4518,R4718		RS1LMF2R2J
	Other Resistors		RS1/16S□□□J
OTHERS			
	J4802	LEAD WITH HOUSING	ADX7371
	CN4813	2P CONNECTOR	B02B-XASK-1
	CN4806	13P PLUG	KM250NA13L
	CN4804	9P PLUG	KM250NA9L
	CN4802	6P CONNECTOR	S06B-XASK-1
	4802,4804,4806	SCREW TERMINAL	VNE1949
	4810	EARTH METAL FITTING	VNF-091

Y POWER AMP (BR) ASSY

Mark	No.	Description	Part No.
SEMICONDUCTORS			
	Q4303,Q4403		2SC2412K
	Q4103		DTA124EK
	D4806		1SS355
	D4805		UDZS5.1B
CAPACITOR			
	C4812		CKSRYF105Z10
RESISTORS			
	All Resistors		RS1/16S□□□J
OTHERS			
	J4803	BOARD IN WIRE	ADX7372
	CN4809	11P SOCKET	KP250NA11
	CN4810	9P SOCKET	KP250NA9
	CN4811	8P CONNECTOR	S08B-XASK-1

Z POWER AMP (G) ASSY

Mark	No.	Description	Part No.
OTHERS			
	J4804	BOARD IN WIRE	ADX7363
	4807,4808	EARTH METAL FITTING	VNF-091

AA LOCAL SUPPLY ASSY

Mark	No.	Description	Part No.
SEMICONDUCTORS			
	IC4047	(315mA)	AEK7003
⚠	IC4023,IC4024	(500mA)	AEK7005
	IC4045,IC4046	(500mA)	AEK7005
⚠	IC4036	(1A)	AEK7009
	IC4035	(1.25A)	AEK7010
⚠	IC4011		LM1085IT-5.0
⚠	IC4021,IC4031		LM2940CT-5.0
⚠	IC4041		NJM7820FA
⚠	IC4043		NJM78M15FA
⚠	IC4033		NJM78M56FA

Mark	No.	Description	Part No.
⚠	IC4042		NJM7918FA
⚠	IC4022,IC4032		NJM79M05FA
	Q4054		2SA1037K
⚠	Q4022,Q4052		2SB951A
⚠	Q4021,Q4051		2SD1277A
	Q4053		2SK1132
	D4031,D4032,D4057		1SS355
⚠	D4003,D4004		D3SBA20(B)
	D4041		HZU2.2B
⚠	D4002,D4005		S1VB20/F03
	D4059,D4060		UDZ12B
	D4051-D4054		UDZ15B
	D4055,D4056		UDZ16B

CAPACITORS

	C4003 (1µF/250V)		ACE7036
	C4051,C4052 (2200µF/71V)		ACH7117
	C4011 (333µF/16V)		ACH7159
	C4053,C4054		CEAT101M63
	C4023,C4024		CEAT471M16
	C4021,C4022,C4032		CEAT472M16
	C4041,C4042		CEAT472M35
	C4031		CEAT682M16
	C4045-C4047		CEJQ100M50
	C4055,C4056		CEJQ100M63
	C4013,C4035,C4036,C4038		CEJQ101M6R3
	C4025,C4026,C4029,C4030		CEJQ470M16
	C4039,C4040,C4049		CEJQ470M16
	C4002		CFTLA474J2A
	C4001		CFTYA105J50
	C4057		CKSRYB102K50
	C4043,C4044,C4048		CKSRYB103K50
	C4012,C4027,C4028,C4033,C4034		CKSRYB104K16
	C4037		CKSRYB104K16
	C4061-C4064		CKSRYB473K16

RESISTORS

⚠	R4003		RD1/2MMF470J
⚠	R4021,R4022		RD1/4MUF151J
⚠	R4001,R4002		RD1/4MUF330J
⚠	R4051,R4052		RD1/4MUF472J
	Other Resistors		RS1/16S□□□J

OTHERS

	J4001	2P CONNECTOR ASSY	ADX7369
	J4004	6P CONNECTOR ASSY	ADX7373
	J4002	4P CONNECTOR ASSY	ADX7374
	CN4002	3P CONNECTOR	B03B-XASK-1
	CN4001	8P CONNECTOR	B08B-XASK-1
	CN4004	9P CONNECTOR	B09B-XASK-1
	KN4001,KN4002	EARTH METAL FITTING	VNF1084

AB AC PRIMARY ASSY

SEMICONDUCTORS

	IC1103		BU4094BC
⚠	IC1101		NJM78M56FA
⚠	IC1102		NJM79M24FA
	Q1102		2SB1197K
	Q1101		2SC2412K
	Q1103		DTC124EK
	D1103,D1106		1SS355
⚠	D1101		S1VB20/F03
	D1102		UDZS5.1B

COILS

	L1101,L1102	NOISE FILTER	RTF1167

TRANSFORMER

⚠	T1101		ATT7043

CAPACITORS

	C1107		CCSRCH101J50
	C1109		CEAT100M50
	C1103,C1104		CEAT101M10
	C1102		CEAT222M25
	C1110		CEAT470M25
	C1101		CFTYA104J50
	C1106		CKSRYB104K16
	C1105		CKSRYB473K16

RESISTORS

	All Resistors		RS1/16S□□□J

OTHERS

	CN1105	3P JUMPER CONNECTOR	52151-0310
⚠	CN1101	6P SOCKET	AKP7141
	CN1104	FFC CONNECTOR 14P	HLEM14R-1
	CN1102	7P SOCKET	KP250NA7
	CN1103	8P SOCKET	KP250NA8
	KN1101	EARTH METAL FITTING	VNF1084

AC POWER SW ASSY

SWITCH

⚠	S1301		ASG7024

CAPACITORS

	C1301,C1302		CFTLA103J50

OTHERS

	CN1301	3P JUMPER CONNECTOR	52147-0310

AD SP (A) ASSY

SEMICONDUCTORS

	Q1201,Q1203,Q1205,Q1207,Q1209		DTA124EK
	Q1202,Q1204,Q1206,Q1208,Q1210		DTC124EK
	D1201-D1210		1SS355

COILS

	L1201-L1207	AF CHOKE COIL	ATH1053

RELAYS

	RY1201-RY1205		ASR7001

Mark	No.	Description	Part No.
CAPACITORS			
	C1201-C1207		CQHA102J2A
RESISTORS			
⚠	R1231-R1237		RD1/4MUF100J
⚠	R1211,R1212		RS2LMF331J
	R1221-R1225		RS1/16S124J
OTHERS			
	J1201	BOARD IN WIRE	ADX7362
	J1206	3P CONNECTOR ASSY	ADX7364
	J1207,J1208	1P WIRE	ADX7368
⚠	CN1202	8P SPEAKER TERMINAL	AKE7074
⚠	CN1201	6P SPEAKER TERMINAL	AKE7075
	CN1206	FFC CONNECTOR 4P	HLEM4S-1
	CN1205	8P PLUG	KM250NA8L

AE FL SUPPLY ASSY

Mark	No.	Description	Part No.
SEMICONDUCTORS			
⚠	Q1901		2SC5174P
	D1901,D1902		UDZ22B
CAPACITORS			
	C1901-C1903		CEJQ100M50
RESISTORS			
⚠	R1901		RD1/4MUF272J
	R1902		RS1/16S470J
OTHERS			
	CN1902	4P JUMPER CONNECTOR	52147-0410
	CN1901	4P CONNECTOR	B04B-XASK-1

AF STANDBY ASSY

Mark	No.	Description	Part No.
SWITCH			
	S1901		ASG7013
OTHERS			
	CN1903	3P FFC CONNECTOR	52044-0345

AG POSISTER (L) ASSY

Mark	No.	Description	Part No.
OTHERS			
	J1901	2P CONNECTOR ASSY	ADX7365
⚠	TH1901	POSISTOR	AEX7006

AH POSISTER (R) ASSY

Mark	No.	Description	Part No.
OTHERS			
	J1902	2P CONNECTOR ASSY	ADX7365
⚠	TH1902	POSISTOR	AEX7006

AI DSP DIODE ASSY

Mark	No.	Description	Part No.
SEMICONDUCTOR			
⚠	D1903		D5SBA20(B)
OTHERS			
	CN1904	4P CONNECTOR	S04B-XASK-1

AJ SP (B) ASSY

Mark	No.	Description	Part No.
SEMICONDUCTORS			
	Q1004		DTA124EK
	Q1002,Q1003		DTC124EK
	Q1001		DTC143EK
	D1001-D1006		1SS355
COIL			
⚠	L1001	LINE FILTER	ATF7018
RELAYS			
	RY1003		ASR7001
⚠	RY1002		ASR7016
⚠	RY1001		ASR7022
CAPACITORS			
⚠	C1001,C1002 (0.01μF/AC250V)		ACG7033
	C1003,C1004		CQHA102J2A
RESISTORS			
⚠	R1001,R1002 (15Ω, 10W)		ACN7104
⚠	R1003 (2.2MΩ, 1/2W)		RCN1080
	Other Resistors		RS1/16S□□□J
OTHERS			
⚠	CN1006	4P SPEAKER TERMINAL	AKE7076
⚠	CN1001	6P PLUG	AKM7056
⚠	1004	1P AC OUTLET	AKP1033
	H1001,H1002	FUSE HOLDER	AKR1007
	CN1005	7P PLUG	KM250NA7L
⚠	CN1002	AC CORD SOCKET	RKP1751
⚠	CN1003	AMP U-P CONNECTOR	RKP1834
	1001	SCREW TERMINAL	VNE1948

AK DIODE ASSY

Mark	No.	Description	Part No.
SEMICONDUCTORS			
⚠	D1501		KCH30A15
⚠	D1502		KRH30A15
CAPACITOR			
	C1501 (1μF/250V)		ACE7036
RESISTOR			
⚠	R1501		RD1/2MMF470J
OTHERS			
	J1501	BOARD IN WIRE	ADX7358
	J1502	BOARD IN WIRE	ADX7359
	J1503	BOARD IN WIRE	ADX7360
	J1504	BOARD IN WIRE	ADX7361

Mark	No.	Description	Part No.

AL FUSE ASSY

OTHERS

	H1801-H1810	FUSE CLIP	AKR1004
	CN1803	4P CONNECTOR	B04B-XASK-1
	CN1802	8P CONNECTOR	B08B-XASK-1
	CN1801	12P CONNECTOR	S12B-XASK-1

AM TRANS (A) ASSY

CAPACITOR

	C1601		CFTYA105J50

RESISTOR

⚠	R1601		RD1/4MUF100J

OTHERS

	CN1601	5P CONNECTOR	B05B-XASK-1

AN TRANS (B) ASSY

SEMICONDUCTORS

⚠	IC1703	PROTECTOR (750mA)	AEK7007
⚠	D1701		S1VB20/F03
	D1702		UDZS7.5B

CAPACITORS

	C1701		CEAT331M50
	C1702		CEJQ101M10

RESISTORS

⚠	R1703-R1706		RS1/16S2R2J
	R1701,R1702		RS1/16S683J

OTHERS

	CN1701	3P CONNECTOR	B03B-XASK-1
	CN1702	7P CONNECTOR	B07B-XASK-1
	H701-H704	FUSE CLIP	AKR1004

6. ADJUSTMENT

There is no information to be shown in this chapter.

7. GENERAL INFORMATION

7.1 DIAGNOSIS

7.1.1 Test Mode

• How to Enter the Test Mode

With the attached Remote Control Unit.

1. Press the [REMOTE SETUP]+[1] keys simultaneously to enter the "SECRET" mode.
   LCD displays the "SECRET [DVD/LD]"
2. Press the [△]+[▽]+[VCR2] keys simultaneously to enter the Test Mode.
   LCD displays the "SECRET [VCR2]".

1. Test Mode ON (Press [C] key)

• Set the function to CD.
• Set the signal selection to AUTO.
• Set the tuner-preset data.
• Set speaker A to ON and speaker B to OFF.
• Set the BASS and TREBLE to +6.
• Set the remaining items to their factory settings.

Display: TEST MODE

2. Test Mode OFF (Press [0] key)

When you quit Test mode, the unit automatically enters STANDBY status.

Note: Do NOT quit Test mode by disconnecting the power cord. Doing so prevents factory-set data from being written to EEPROM to backup the data.

3. Items to be checked in Test mode

For checking the main unit of a product: Remote control codes A55F+A500 ([1] key) through A509 ([0] key).

1. FL display check (Press [1] key)

Normal display → All FLs and LEDs on → All FLs and LEDs off → Normal display→ . . .

Display transition:
TEST MODE → FL ALL ON → FL ALL OFF → TEST MODE

2. Bass and treble operations (Press [4] key)

Each time this code is issued, the bass and treble values change.
In modes (THX, Direct, Multichannel-Direct) in which tone control is invalid, the display also changes as shown below.
To use, select a mode (Standard, etc.) in which tone control is valid.

Display transition:
TRE/BASS 0dB → TRE/BASS MAX → TRE/BASS 0dB

Remarks:
In Test mode, the bass and treble keys on the main unit functions as follows:
+ : 0 dB → +6 dB → 0 dB → +6 dB, . . .
– : 0 dB → – 6 dB → 0 dB → – 6 dB, . . .

3. Master volume switching (Press [5] key)

When this code is issued, the master volume changes.
Trimming of all channels becomes 0 dB at this time.

Display transition:
TEST VOL MIN → TEST VOL MAX → TEST VOL MIN

4. Tuner 9K/10K switching (Press [6] key)

When this code is issued, the reception frequency interval of the tuner cyclically changes.
The code is valid only with models (SD models) having 9K/10K switching capability.

Display transition:
TEST TUN 9K → TEST TUN 10K → TEST TUN 9K

5. FAN ON/OFF (Press [8] key)

When this code is issued, the fan turns on or off.
The code is valid only with models having a fan.

Display transition: FAN OFF → FAN ON

OFF : Fan stops.
ON : Fan operates.

6. Microphone input check (Press [9] key)

When this code is issued, Direct mode is selected (a path that bypasses DSP), and a microphone input signal will be output from the pre-output on the front panel.
• Set the function to CD.
• Set the signal selection to AUTO.

Display transition: TEST MIC CHECK

7. RS232C operation check (Press [2] key)

When this code is issued, the RS-232C transmission port is switched to act as a general-purpose port, and self-check of data input/output ports is performed.
The signal ("L" output) at the data output port is read to the data-input port and checked as to whether it is correct or not. "H" is output from the CTS port.

If the port self-check successfully ends:

Display: MAIN RS232C OK

If the port self-check fails:

Display: MAIN RS232C NG

8. Tuner: Auto scan (Press [3] key)

When this code is issued, an auto scan operation begins.
The step of frequency increment is forcibly set to 9K.
If the function is not Tuner, it is switched to Tuner, then auto scanning starts from 88.5 MHz FM in the + direction.
When the code is issued again, auto scan starts from 1062 kHz AM in the – direction.

The reception points on the line:
AM : 1008 kHz
FM : 89 MHz
* If this code is issued during auto scanning, it merely causes the operation to stop. Issue the code again to resume auto scanning.

9. Video converter operation check (Press [7] key)

When this code is issued, All-through mode will be selected.
The video converter operation is deactivated.
The following assignment will be made for component connectors 1 to 3 and D4 connectors 1 and 2.
Component 1 : DVD/LD
Component 2 : TV/DVD
Component 3 : VCR2
D4-1 : SAT
D4-2 : VCR1/DVR

For checkers: Remote control codes other than A55F+A500 ([1] key) through A509 ([0] key).

4. DSP Microcomputer Test Mode

232C Test Mode

Overview

This test is for checking the operations of the buffer IC in the 232C block.
Signal supplied to pin 36 of the DSP microcomputer will be output from pins 35 and 38.

To enter this mode

You may enter 232C test mode using an identification code for serial transmission.
Identification code: 55h

5. Display Microcomputer Test Mode

1. Test Mode ON
With pin 17 of PD5686 (M38B5) set to 5 V, set pin 10 (RESET) from 5 V to GND, then back to 5 V. Enter the Test Mode for checker.

2. How to check
Switch the mode using remote control code (k_afunc=A555) from SR_IN and MR_IN.

1. FL/LED ALL ON
↓
2. FL/LED ALL OFF
↓
3. FLSW OFF
↓
4. FLSW ON
↓
5. MRSW OFF
↓
6. MRSW ON
↓
Returns to 1

7.1.2 Protection Circuit Control Specifications

Microcomputer-related ports

TRANS_DET (pin 87)
Input port : To detect temperature rise at the transformer
Active: "L"
TEMP1 (pin 94)
Input port : To detect temperature rise at the heat sink
Active: "H"
FAN_DET (pin 21)
Input port : To detect forcible fan stop
Active: "H"
OL_DET (pin 73)
Input port : To detect overloading at the amplifier (Interrupt port)
Active: "H"
DC_DET (pin 49)
Input port : For DC detection
Active: "H"
FAN_DRIVE (pin 86)
Output port : For fan on/off
H"= ON, "L"= OFF
AMUTE (pin 66)
Output port : For system muting on/off
H"= ON, "L"= OFF
EXP_DT2 (pin 58)/EXP_CLK2 (pin 59)/EXP_OE2 (pin 60)/EXP_ST2 (pin 61)
Output ports : Data on the extension IC for relay control (IC1103 of the AC PRIMARY assembly).
The protection relays mentioned below include all the relays within the SP(B) assembly except RY1001 and RY1002.

The following control processes are activated immediately before the relay system is turned on upon power-on. The time is 4.8 seconds after power-on. (Control of the relay system is enabled 5.2 seconds after power-on.)
Only DC detection is enabled 2 seconds after power-on to activate it before other protection functions.

(1) Fan control

Valid with European and other general-area models only.

① **Fan on/off**
If the temperature at the heat sink rises, the TEMP1 port becomes "H." Detecting "H," the microcomputer starts the fan. No indication is made on the FL display.

② **Fan detection**
If the fan is forcibly stopped, the FAN_DET port becomes "H." Detecting "H," the microcomputer performs the following operations:
1. System muting on
2. Protection relays off

The warning indication "FAN STOP" appears (flashing) on the FL display.
If this status continues for more than 3 seconds, the power is turned off (for Standby mode).

If the port becomes "L" within 3 seconds, the unit resets automatically.

(2) Transformer temperature rise control

Valid with European and Japanese domestic models only.

European models

If the temperature at the transformer rises, the TRANS_DET port becomes "L."
Detecting "L," the microcomputer performs the following operations:
1. System muting on
2. Protection relays off

As long as the detection port remains "L," statuses 1 and 2 are maintained.
When the port becomes "H" (when the temperature at the transformer drops), statuses 1 and 2 are canceled, and the unit resets automatically (automatic reset is requested by safety regulations).

The warning indication "THERMAL" appears on the FL display.

(3) Temperature detection

Valid with North American and Japanese domestic models only.
The process mentioned in (1) is performed with European and other general-area models.

If the temperature at the heat sink rises, the TEMP1 port becomes "H." Detecting "H," the microcomputer performs the following operations:
1. System muting on
2. Protection relays off

The warning indication "THERMAL" appears on the FL display.
If this status continues for more than 3 seconds, the power is turned off (for Standby mode).
If the port becomes "L" within 3 seconds, the unit resets automatically.

(4) Overload detection (abnormality detection)

If the speaker terminals are short-circuited or low-load driving is detected, the OL_DET port becomes "H."
Detecting "H" in an interrupt process, the microcomputer performs the following operations:
1. System muting on
2. All relays off (expander output off)
   The expander output is turned off to perform detection during the interrupt. As the AC relay is also turned off, no warning indication appears on the FL display.
3. Power off (Standby mode)

(5) DC detection (defect detection)

Only DC detection is enabled 2 seconds after power-on.
If there is a fault in the power amplifier or a high-level signal lower than5 Hz is input, the DC_DET port becomes "H."
Detecting "H," the microcomputer performs the following operations:
1. System muting on
2. Protection relays off

The warning indication "AMP ERR" appears on the FL display.
If this status continues for more than 3 seconds, the power is turned off (for Standby mode).
If the port becomes "L" within 3 seconds, the unit resets automatically.

When the power is turned off owing to DC detection (also when a user prompted by the warning indication turns off the switch on the primary side), key inputs are disabled for 60 seconds.
The microcomputer backs up the value of the 60-second timer. The unit will only enter Standby mode, and power will not be turned on within 60 seconds in response to a key input after power-off on the primary side. (When the switch on the primary side is turned on again, key inputs will be limited for 60 seconds even if the timer value is less than 60 seconds.)
After DC detection, power-on from the multiroom side is also disabled for 60 seconds.
If the unit resets within 3 seconds (before the power is turned off) after DC detection, the normal operation is restored.

(6) Diagnostic mode

This mode is only for servicing and checking the circuit design, and not open to users.
When the DNR key and VSEL key are both held pressed for 3 seconds in Standby mode, the power is turned on, and the number of times of each defect or abnormality detection is sequentially displayed on the FL display.
Displayed items:
• DC detection
• Overload detection
• Fan detection
• Temperature detection

Hold the DNR key and VSEL key pressed for 3 seconds in Standby mode.

```
PROTECT CHECK
DC          003
      ↓
PROTECT CHECK
OVER        000
      ↓
PROTECT CHECK
FAN         000
      ↓
PROTECT CHECK
TEMP        000
```

∗ With models other than North American models

∗ With North American and Japanese domestic models

There is no specific mode for clearing the above-mentioned diagnostic mode.
Diagnostic mode is only cleared with an all-reset operation.

● Protection process list

Item	Purpose	Detection Method	Process	Warning Indication	Remarks	North America	Japan	Europe	General Areas
DC detection	To detect amplifier damage (defect status) A process to protect speakers (for protection of connected external devices)	Detects when the DC_DET port becomes "H."	Turns muting on and protection relays off, then turns off the power after 3 seconds.	Flashing "AMP ERR" for 3 seconds	Once detected, key inputs are disabled for 60 seconds. If the DC_DET port becomes "L" within 3 seconds, the unit resets automatically.	O	O	O	O
AMP overload	To detect overloading (abnormal status) With low-load driving or a short circuit of the speaker terminals (for protection of the amplifier)	Detects when the AMP_OL port becomes "H" (checks by interrupt).	Turns muting on and all relays off, and immediately turns off the power.	None		O	O	O	O
Fan control	Protection function against a temperature rise at the heat sink	Detects when the TEMP1 port becomes "H" (checks by interrupt).	Rotates the fan.	None	The fan stops when the TEMP1 port becomes "L."	X	X	O	O
Fan stop (models with a fan and J models only)	To know that the rotating fan is forcibly stopped	Detects when the FAN_DET port becomes "H."	Turns muting on and protection relays off, then turns off the power after 3 seconds.	Flashing "FAN STOP" for 3 seconds	If the FAN_DET port becomes "L" within 3 seconds, the unit resets automatically.	X	O	O	O
Transformer temperature detection (1)	Protection function against a temperature rise in the transformer	Detects when the TRANS_DET port becomes "L."	Turns muting on and protection relays off.	Indicating "THERMAL"	If the TRANS_DET port becomes "H," the unit resets automatically.	X	X	O	X
Transformer temperature detection (2)	Protection function against a temperature rise at the transformer	Detects when the TRANS_DET port becomes "L."	Rotates the fan.	None	The fan stops when the TRANS_DET port becomes "L."	X	O	X	X
Temperature detection	Protect function against a temperature rise at the heat sink	Detects when the TEMP1 port becomes "H."	Turns muting on and protection relays off, then turns off the power after 3 seconds.	Flashing "THERMAL" for 3 seconds	If the TEMP1 port becomes "L" within 3 seconds, the unit resets automatically.	O	O	X	X

Note: Reset and key input are enabled after DC detection, as the DC detection circuit is designed to detect DC as well as low frequencies (lower than 5 Hz) and the warning may be caused by something other than a defect.

7.1.3 DISASSEMBLY

1 Exterior Block

① Remove the Top Plate BK (Screws × 13)

② Remove the Side Alum BK (Screws × 5)(for VSX-49TX)
Remove the Side Plate BK (Screws × 5)(for VSX-47TX)

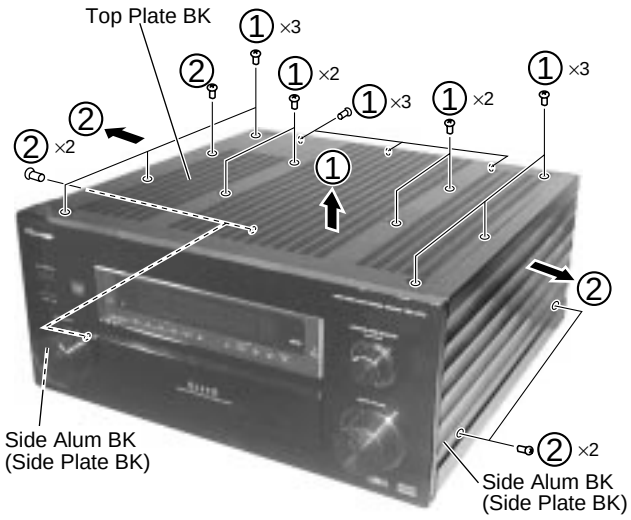

2 Heat Sink Block

① Remove the Insulator Assy (Screws × 4)

② Remove the Bottom Plate A and Bottom Plate B (Screws × 33)

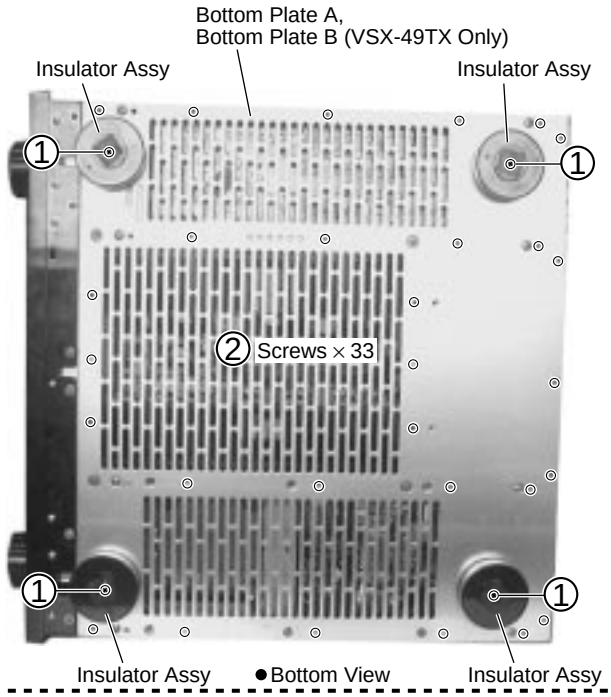

③ Remove 9 screws and three connectors

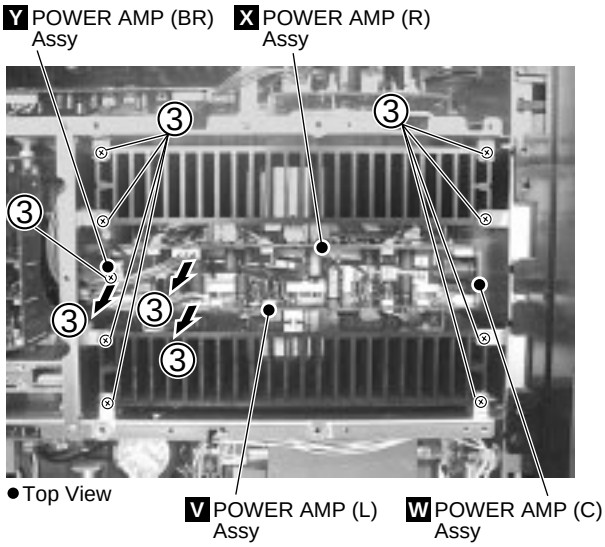

④ Remove four screws

⑤ Remove the Heat Sink Block

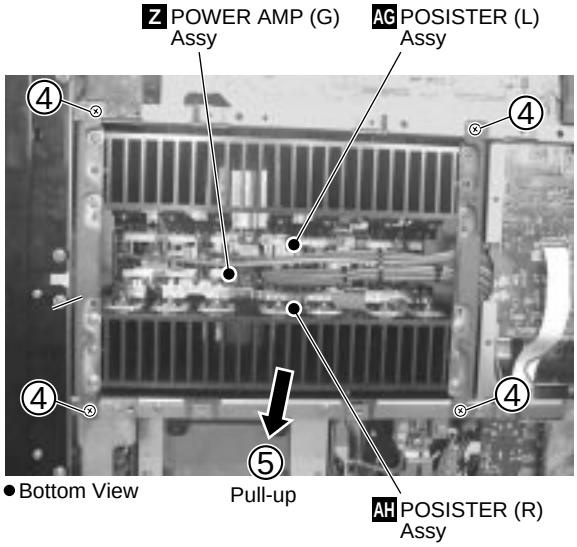

3 Rear Panel Block

① Remove screws (× 33)
② Remove the connector from SP (B) Assy
③ Remove screws (× 26)
④ Remove six connectors from MOTHER Assy
⑤ Remove the Rear Panel

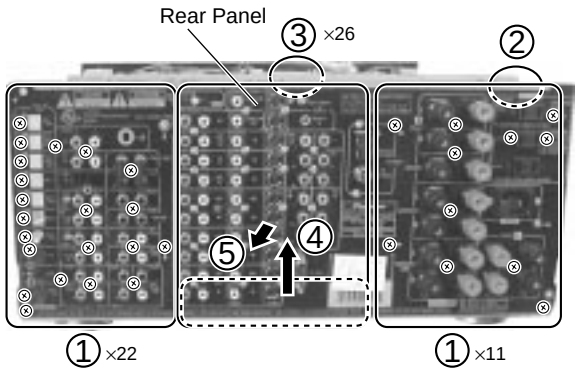

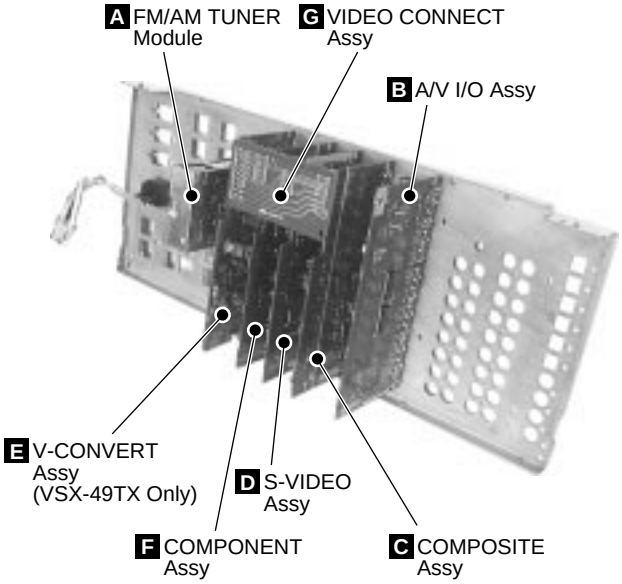

4 Power Supply Block

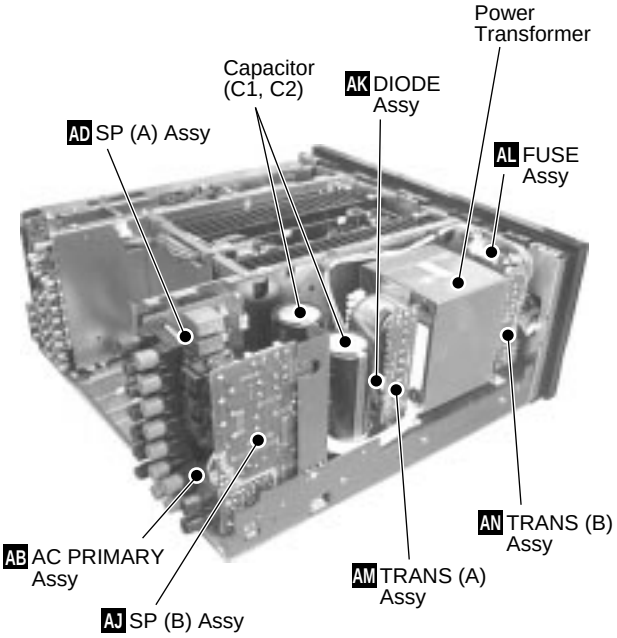

5 DSP and DAC Block

① Remove 6 screws

② Remove the Shield Case B

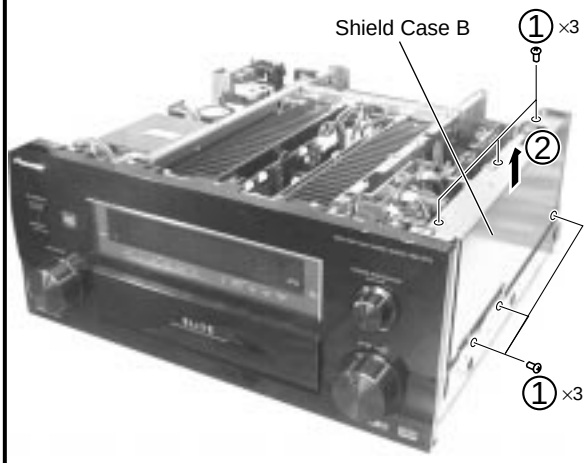

③ Remove the connector

④ Remove 3 screw

⑤ Remove DAC10 Assy (VSX-49TX), DAC8 Assy (VSX-47TX) and DSP Assy (Connectors × 5)

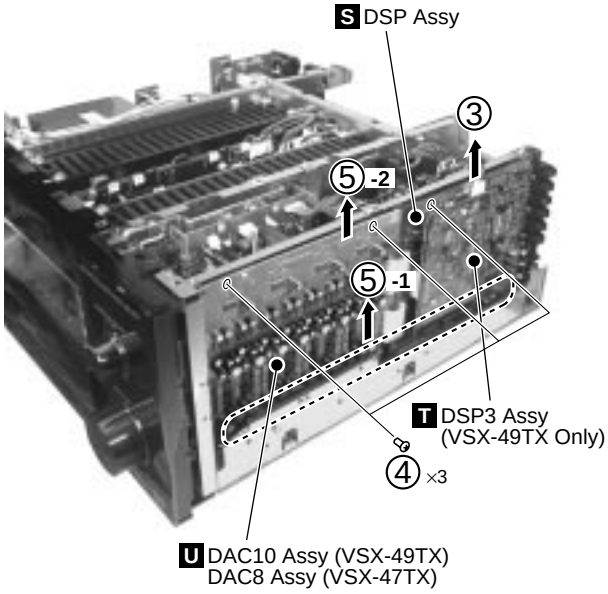

⑥ Remove two PCB Frame B (Screws × 4)

⑦ Remove two Wire Clip

⑧ Remove the screw

⑨ Remove the Shield Case A

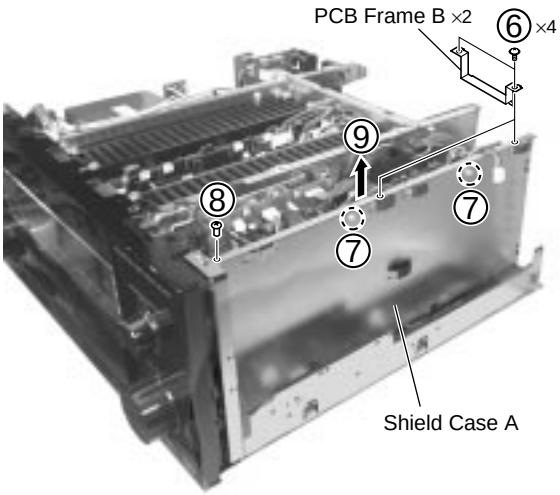

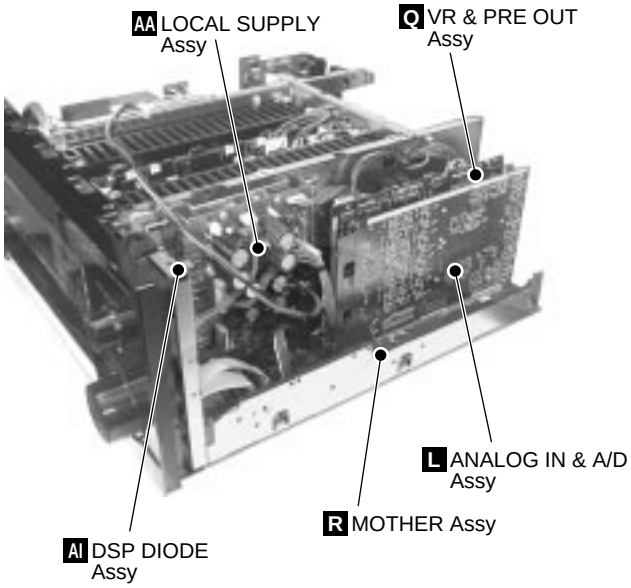

6 Front Panel Block

① Remove screws (× 15)

② Remove the Front Panel Block

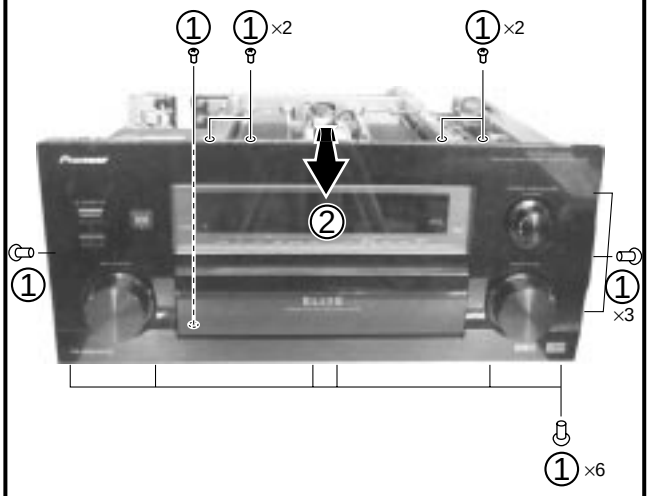

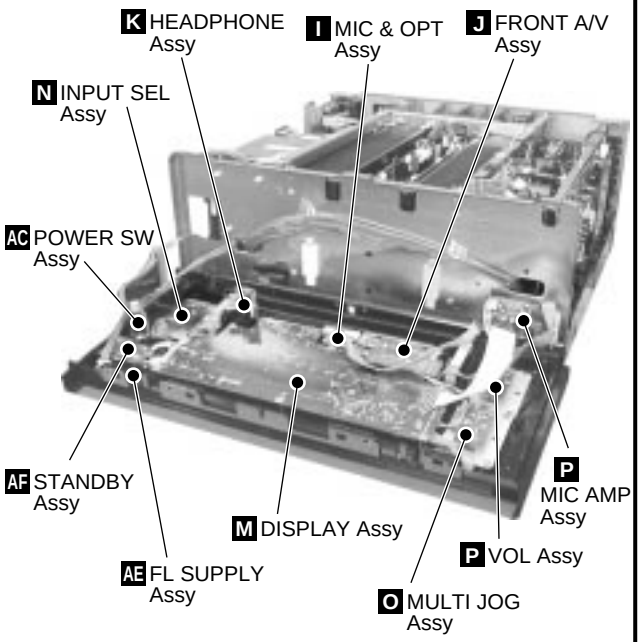

7.2 PARTS

7.2.1 IC

• The information shown in the list is basic information and may not correspond exactly to that shown in the schematic diagrams.

●List of IC

PDG5685A9, PD5686A, PD5687A, BU4094BCFV

■ PD5685A9 (MOTHER ASSY : IC5801)

• Main Microcomputer

● Pin Assignment (Top view)

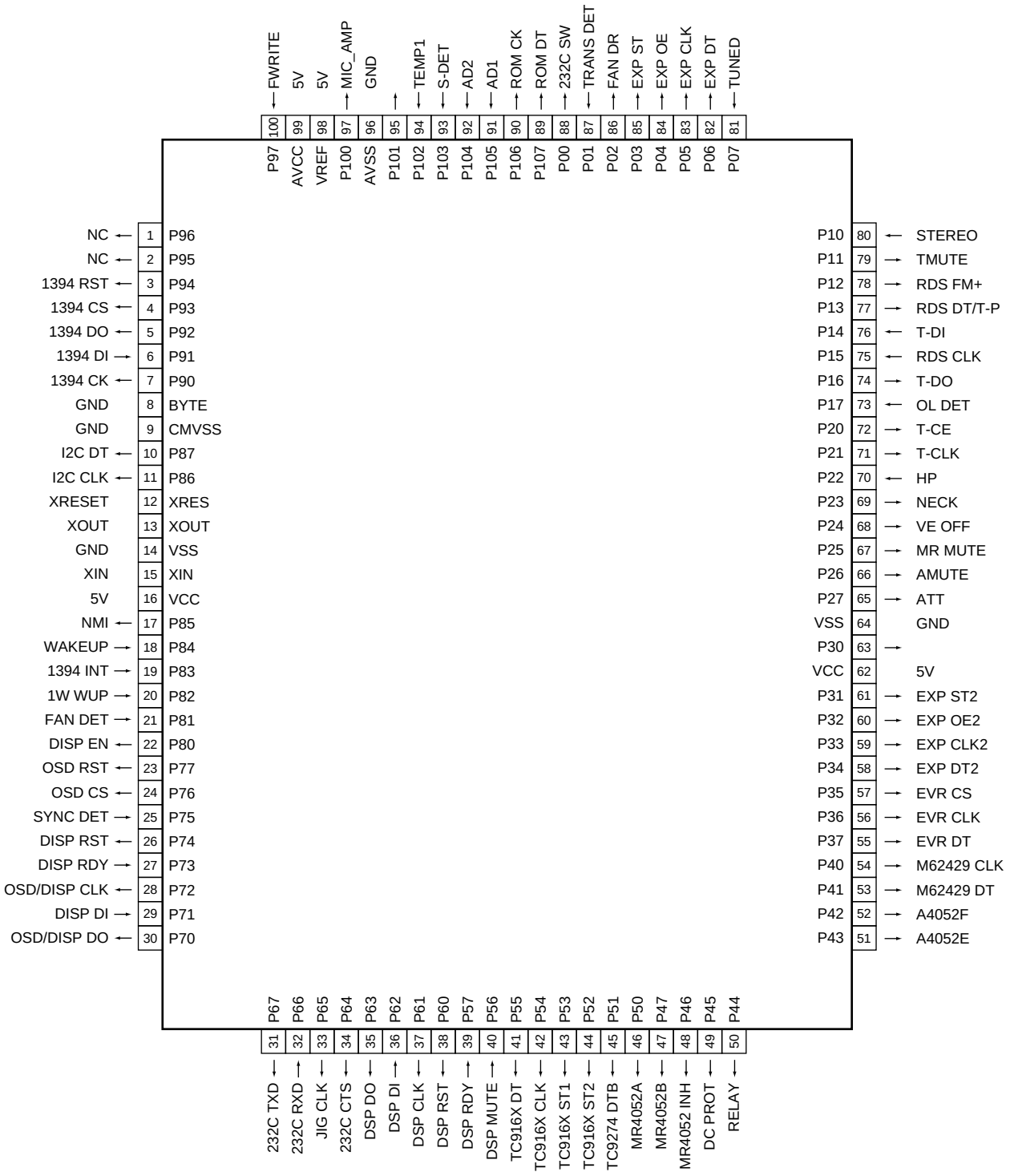

● Pin Function

No.	Pin Name	I/O	Pin Function	Active
1	–	O	NC "L" fixed.	
2	–	O	NC "L" fixed.	
3	1394 RST	O	Standby for 1394 (Not used) "L" fixed.	
4	1394 CS	O	Standby for 1394 (Not used) "L" fixed.	
5	1394 DO	O	Standby for 1394 (Not used) "L" fixed.	
6	1394 DI	I	Standby for 1394 (Not used) Standby with the circuit.	
7	1394 CK	O	Standby for 1394 (Not used) "L" fixed.	
8	GND	–	Ground	
9	GND	–	Ground	
10	I2C DT	I/O	Data signal for video converter IC control I2C bus system	
11	I2C CLK	O	Clock signal for video converter IC control I2C bus system	
12	XRESET	–	Reset	
13	XOUT	–	Oscillator	
14	GND	–	Ground	
15	XIN	–	Oscillator	
16	5V	–	5V power supply	
17	NMI	I	Cannot use it as usual input port (100kΩ pullup)	
18	WAKEUP	I	Wakeup	H
19	1394 INT	I	Standby for 1394 (Not used) Standby with the circuit.	
20	1W WUP	I	Wakeup signal at standby (from the display microcomputer) (pulldown)	H
21	FAN DET	I	Fix to "L" with the hardware.	
22	DISP EN	O	Communication enabling signal to the display microcomputer	H
23	OSD RST	O	OSD-IC reset signal L: reset, H: release reset	
24	OSD CS	O	OSD-IC chip select signal	H
25	SYNC DET	I	Internal/external sync detection (Switch the internal/external sync of OSD-IC.)	L: EXT
26	DISP RST	O	Display microcomputer reset signal L: reset, H: release reset (pulldown)	
27	DISP RDY	I	Communication enabling signal from the display microcomputer	H
28	OSD/DISP CLK	O	Communication clock signal with the OSD-IC/display microcomputer	
29	DISP DI	I	Communication data in signal with the display microcomputer (N ch open drain: pullup)	
30	OSD/DISP DO	O	Communication data out signal with the OSD-IC/display microcomputer (N ch open drain: pullup)	
31	232C TXD	O	For 232C rewriting (data output)	
32	232C RXD	I	For 232C rewriting (data input)	
33	CLK	O	Not used	
34	232C CTS	O	For 232C rewriting (communication enabling)	
35	DSP DO	O	Communication data out signal with the DSP microcomputer	
36	DSP DI	I	Communication data in signal with the DSP microcomputer	
37	DSP CLK	O	Communication clock signal with the DSP microcomputer	
38	DSP RST	O	DSP microcomputer reset signal L: reset, H: release reset	
39	DSP RDY	I	Communication enabling signal from the DSP microcomputer	H
40	DSP MUTE	I	Mute request signal from the DSP microcomputer H: Mute request	H
41	TC916X DT	O	Function SW control data	
42	TC916X CLK	O	Function SW control clock	
43	TC916X ST1	O	Main audio switching control strobe of TC9162 and TC9163. Multi audio switching control strobe of TC9164	
44	TC9163 STX	O	Multi/2ch signal switch	
45	TC9274 STB	O	DIRECT/DSP switching control strobe	
46	MR4052A	O	Switching control signal 1 of multi room audio system	
47	MR4052B	O	Switching control signal 2 of multi room audio system	
48	MR4052INH	O	Switching control signal 3 of multi room audio system H: output OFF	
49	DC PROT	I	DC detection H: detection	H
50	RELAY	O	SP relay ON/OFF	H

No.	Pin Name	I/O	Pin Function	Active
51	A4052E	O	Output switching control signal 1 of surround back ch	
52	A4052F	O	Output switching control signal 2 of surround back ch	
53	M62429 DT	O	Data signal for multi room volume IC control	
54	M62429 CLK	O	Clock signal for multi room volume IC control	
55	EVR DT	O	Data signal for erectronic volume	
56	EVR CLK	O	Clock signal for erectronic volume	
57	EVR CS	O	Chip select signal for erectronic volume	
58	EXP DT2	O	Data signal for expansion IC control	
59	EXP CLK2	O	Clock signal for expansion IC control	
60	EXP OE2	O	Output enable signal for expansion IC control	
61	EXP ST2	O	Chip clock signal for expansion IC control	
62	5V	–	5V power supply	
63	NC	O	NC "L" fixed.	
64	GND	–	Ground	
65	ATT	O	Atteneuator	H
66	AMUTE	O	System mute L: Mute ON	L
67	MRMUTE	O	Multi room mute L: Mute ON	L
68	VE OFF	O	Video system power supply switch At Power OFF of video system: L	L
69	NECK	O	4/6Ω switch 4Ω: H , 6Ω: L , Initial value: 6Ω	
70	HP	I	Headphone detection H: Detection	H
71	TUNER CLK	O	Clock signal of tuner control	
72	TUNER CE	O	Chip select signal of tuner control	
73	OL DET	I	Amp. overload detection H: Detection	H
74	TUNER DO	O	Data output signal of tuner control	
75	RDS CLK	O	"L" fixed	
76	TUNER DI	I	Data input signal of tuner control (pullup)	
77	T-POWER	O	Power ON/OFF of tuner module	H
78	NC	O	NC	
79	TMUTE	O	Tuner mute	H
80	STEREO	I	L: STEREO (pullup)	L
81	TUNED	I	L: TUNED (pullup)	L
82	EXP DT	O	Data signal of expansion IC control	
83	EXP CLK	O	Clock signal of expansion IC control	
84	EXP OE	O	Output enable signal of expansion IC control	
85	EXP ST	O	Chip clock signal of expansion IC control	
86	FAN DR	O	"L" fixed	
87	TRANS DET	I	"H" fixed by hardware	
88	232CSW	I/O	232C switch L: Main unit, H: DSP microcomputer	
89	ROM DT	I/O	EEPROM control data signal	
90	ROM CK	O	EEPROM control clock signal	
91	SIMUKE1	I	Destination read 1	
92	SIMUKE2	I	Destination read 2	
93	S-DET	I	Sync detection H: S signal present "H" for sync detection	H
94	TEMP1	I	Temperature detection H: Protection function ON	H
95	NC	O	"L" fixed	
96	AVSS	–	Connect to VSS	
97	MIC AMP	O	5-3V conversion IC control H: MIC AMP ON	H
98	VREF	–	Connect to VCC	
99	AVCC	–	Connect to VCC	
100	FWRITE	I	Forced rewriting mode detection (H: Rewriting mode)	H

■ PD5686A (DISPLAY ASSY : IC3001)

• Display Microcomputer

● Pin Assignment (Top view)

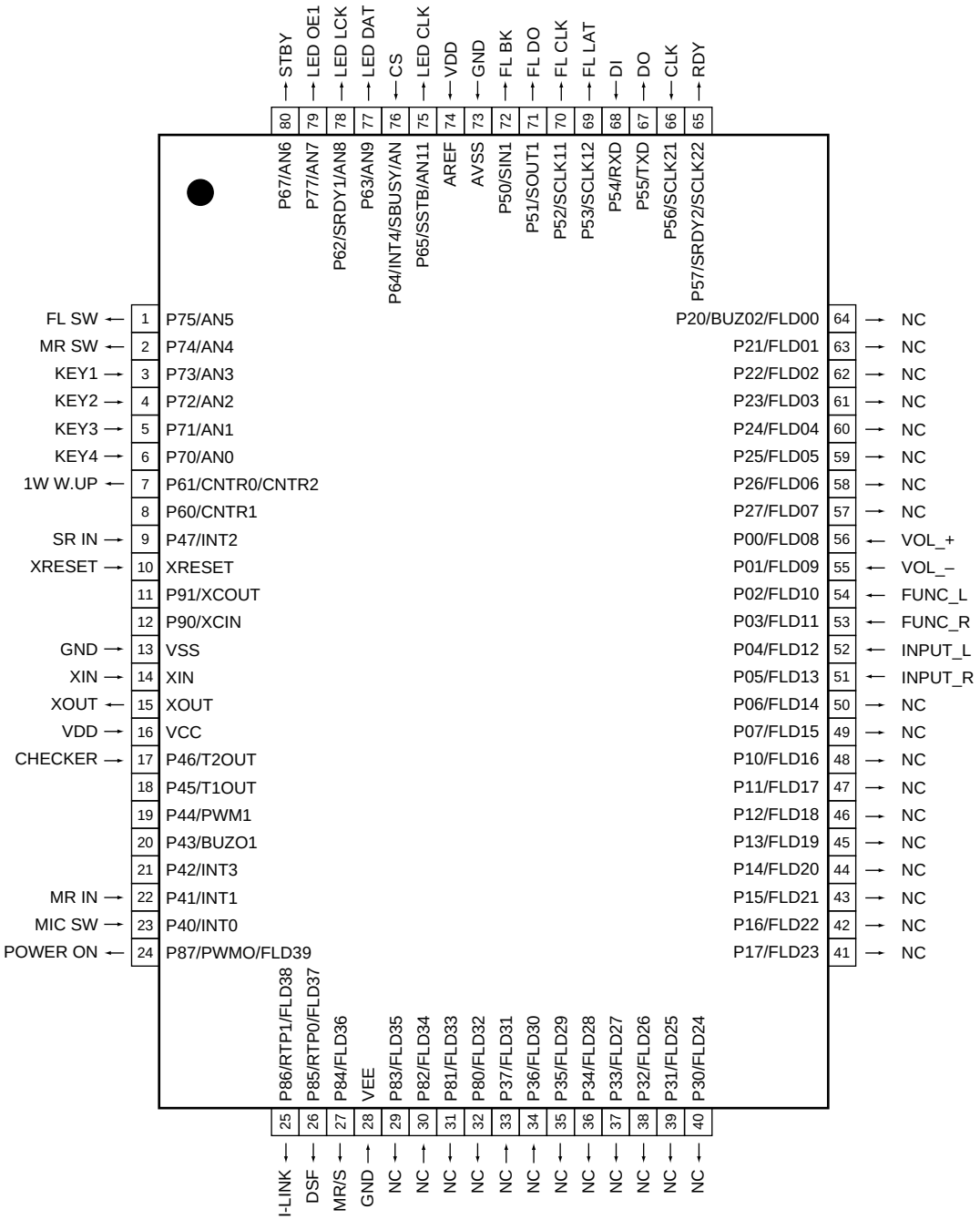

● Pin Function

No.	Pin Name	I/O	Pin Function	No.	Pin Name	I/O	Pin Function
1	FL SW	O	FL power supply ON/OFF	41	NC	O/L	Non connection
2	MR SW	O	MR PIONEER / OTHER	42	NC		
3	KEY1	I	KEY AD input	43	NC		
4	KEY2			44	NC		
5	KEY3			45	NC		
6	KEY4			46	NC		
7	1W W.UP	O	1W correspondence main wakeup	47	NC		
8	NC	O/L		48	NC		
9	SR IN	I	Remote control input of main room	49	NC		
10	RESET	–	Reset	50	NC		
11	NC	O/L	Non connection	51	NC		
12	NC			52	INPUT_R	I	Input SEL L
13	GND	–	Ground	53	INPUT_L	I	Input SEL R
14	XIN	–	Oscillator	54	FUNC_R	I	Multi JOG R
15	XOUT	–	Oscillator	55	FUNC_L	I	Multi JOG L
16	VDD	–	Power supply	56	VOL_–	I	VOL_–
17	CHECKER	I	Checker mode detection	57	VOL_+	I	VOL_+
18	NC	O/L	Non connection	58	NC	O/L	Non connection
19	NC			59	NC		
20	NC			60	NC		
21	NC			61	NC		
22	MR IN	I	Remote control input of sub room	62	NC		
23	MIC SW	I	MIC detection	63	NC		
24	POWER ON	O	Power ON LED	64	NC		
25	I-LINK	O	I-LINK LED	65	RDY	O	Main communication RDY
26	DSF	O	Sound field LED	66	CLK	I	Main communication CLK
27	MR/S	O	MR/S LED	67	DO	O	Main communication data out
28	GND	–	Ground	68	DI	I	Main communication data in
29	NC	O/L	Non connection	69	FL_LAT	O	FL DRV LAT
30	NC			70	FL_CLK	O	FL DRV CLK
31	NC			71	FL_DO	O	FL DRV DATA
32	NC			72	FL_BK	O	FL DRV BK
33	NC			73	GND	–	Ground
34	NC			74	VDD	–	Power supply
35	NC			75	LED_CLK	O	LED DRV CLK
36	NC			76	CS	O	Main communication CS
37	NC			77	LED_DAT	O	LED DRV DATA
38	NC			78	LED_LCK	O	LED DRV LCK
39	NC			79	LED_OE1	O	LED DRV OE
40	NC			80	STBY	O	STBY LED

■ PD5687A (DSP ASSY : IC701)

• DSP Microcomputer

● Pin Function

No.	Pin Name	I/O	Pin Function
1	DSP2MOSI	O	2nd DSP communication data output
2	DSP2SCK	O	2nd DSP communication clock output
3	DSP2SSI	O	2nd DSP communication strobe
4	DSP2RST	O	2nd DSP reset
5	HDO	O	Data output of microcomputer communication to main microcomputer
6	HDI	I	Data input of microcomputer communication from main microcomputer
7	HCLK	I	Clock input of microcomputer communication from main microcomputer
8	BYTE	I	Vcc (bus width 8 bit)
9	CNVSS	I	Vss (Use with memory expansion mode)
10	MODEL	I	Upper/lower model distinction input
11	FWRITE	I	FLASH rewrite control input
12	RESET	I	Reset input from main microcomputer
13	XOUT	O	Connect a ceramic resonator (7.7MHz)
14	VSS	–	Vss
15	XIN	I	Connect a ceramic resonator (7.7MHz)
16	VCC	–	Vcc
17	NMI	I	Vcc
18	96DTS	I	DTS 96kHz detection input
19	UNLK	I	UNLOCK signal input
20	DATA	I	DIR various factor data
21	DLCK	I	Demodulator UNLOCK
22	EXOE	O	OE output of expansion IC
23	S DATA	O	Data output of expansion IC
24	S CLOCK	O	Clock output of expansion IC
25	STB	O	Strobe output of expansion IC
26	DSP1RST	O	1st DSP reset
27	9624	O	DSP IC mute output (at DTS 96kHz)
28	DACMCLK	O	DAC/D.F. clock output
29	DSCMDI	I	DAC data input
30	DACMDO	O	DAC/D.F. data output
31	DSP1REQ	O	1st DSP communication request
32	DSP1RDWR	O	1st DSP READ/WRITE switch
33	DSP1BUSY	I	1st DSP BUSY communication wait
34	DSP1ACK	I	1st DSP communication completion check
35	CDTO	O	DIR serial communication data output / TxD (rewrite)
36	CDTI	I	DIR serial communication data input / RxD (rewrite)
37	CCLK	O	DIR serial communication output
38	CSN	O	DIR serial communication chip select / RTS (rewrite)
39	XRDY	I	Vcc
40	ALE	O	NC
41	XHOLD	I	Vcc
42	XHLDA	O	NC
43	BCLK	O	NC
44	XOE	O	Flash memory I/F read enable
45	XBHE	O	NC
46	XWE	O	Flash memory I/F write enable
47	MD	O	Gain amp data output
48	MC	O	Gain amp clock output
49	STB	O	Gain amp strobe output
50	XCE	O	Flash ROM CE control

No.	Pin Name	I/O	Pin Function
51	A19	O	NC
52	A18	O	Address output of flash memory communication
53	A17		
54	A16		
55	A15		
56	A14		
57	A13		
58	A12		
59	A11		
60	A10		
61	A9		
62	Vcc	–	Vcc
63	A8	O	Address output of flash memory communication
64	Vss	–	Vss
65	A7	O	Address output of flash memory communication
66	A6		
67	A5		
68	A4		
69	A3		
70	A2		
71	A1		
72	A0		
73	XRST2	O	ADC reset output
74	DSPMUTE	O	Mute (Notify to the main microcomputer)
75	HRDY	O	Communication permission to the main microcomputer
76	DSP3REQ	O	3rd DSP communication request
77	DSP3RDWR	O	3rd DSP READ / WRITE switch
78	DSP3BUSY	I	3rd DSP BUSY communication wait
79	DSP3ACK	I	3rd DSP communication complete check
80	DSP3RST	O	3rd DSP reset
81	DQ7	I/O	Data input/output of flash memory communication
82	DQ6		
83	DQ5		
84	DQ4		
85	DQ3		
86	DQ2		
87	DQ1		
88	DQ0		
89	DSPDATA7	I/O	1st/3rd DSP data bit 7 (sharing port)
90	DSPDATA6		1st/3rd DSP data bit 6 (sharing port)
91	DSPDATA5		1st/3rd DSP data bit 5 (sharing port)
92	DSPDATA4		1st/3rd DSP data bit 4 (sharing port)
93	DSPDATA3		1st/3rd DSP data bit 3 (sharing port)
94	DSPDATA2		1st/3rd DSP data bit 2 (sharing port)
95	DSPDATA1		1st/3rd DSP data bit 1 (sharing port)
96	AVss	–	Vss
97	DSPDATA0	I/O	1st/3rd DSP data bit 0 (sharing port)
98	Vref	–	Vcc
99	AVcc	–	Vcc
100	DSP2MISO	I	2nd DSP communication data input

■ BU4094BCFV (DSP ASSY : IC703)

• **Expansion IC**

● Pin Function

No.	Pin Name	I/O	Pin Function
1	STB	I	Strobe input
2	DATA	I	Serial data input
3	CLOCK	I	Serial clock input
4	DART	O	DAC/D.F. reset
5	DION	O	Digital input power ON/OFF switch
6	HIFS	O	Clock switching output
7	FSDN	O	Fs sampling frequency down output
8	Vss	–	Vss
9	Qs	O	Connect to DATA of expansion IC
10	Qs'	–	Not used
11	DACS4	O	DAC/D.F. latch output 4
12	DACS3	O	DAC/D.F. latch output 3
13	DACS2	O	DAC/D.F. latch output 2
14	DACS1	O	DAC/D.F. latch output 1
15	OE	I	Microcomputer EXOE
16	Vdd	–	Vdd

■ BU4094BCFV (DSP ASSY : IC704)

• **Expansion IC**

● Pin Function

No.	Pin Name	I/O	Pin Function
1	STB	I	Strobe input
2	DATA	I	Connect to pin 9 of expansion IC1
3	CLOCK	I	Serial clock input
4	XTLO	O	DIR XTLO control
5	NORM	O	Control output for DTS96
6	XADC	O	Analog/Digital switching output
7	STOP	O	Control output for DTS96
8	Vss	–	Vss
9	Qs	–	Connect to DATA of expansion IC3
10	Qs'	–	Not used
11	RFON	O	RF demodulation power ON/OFF switch
12	DSTP	O	Demodulator stop output
13	DRST	O	Demodulator reset output
14	XPDN	O	DIR power down
15	OE	I	Microcomputer EXOE
16	Vdd	–	Vdd

■ BU4094BCFV (DSP ASSY : IC705) (VSX-49TX only)

• **Expansion IC**

● Pin Function

No.	Pin Name	I/O	Pin Function
1	STB	I	Strobe input
2	DATA	I	Connect to pin 9 of expansion IC2
3	CLOCK	I	Serial clock input
4	IEEE	O	Input switching output 1
5	OPT4	O	2nd PLL 256/384 switch
6	DVDA	O	2nd PLL clock switch
7	NC	O	Non connection
8	Vss	–	Vss
9	Qs	–	Connect to DATA of expansion IC4
10	Qs'	–	Not used
11	NC	O	Non connection
12	192K	O	D.F. x4 sampling output
13	NC	O	Non connection
14	NC	O	Non connection
15	OE	I	Microcomputer EXOE
16	Vdd	–	Vdd

7.2.2 DISPLAY

■ AAV7081 (DISPLAY ASSY : V3001)

- **FL Indicator Tube**

● Grid Assignment

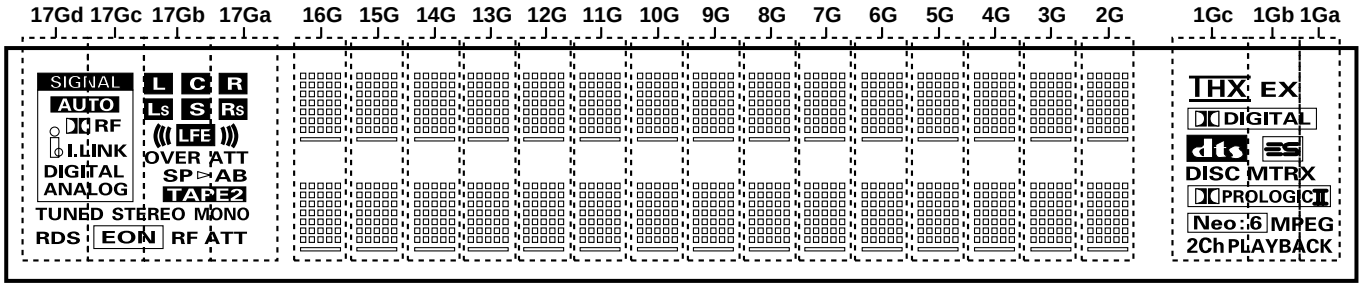

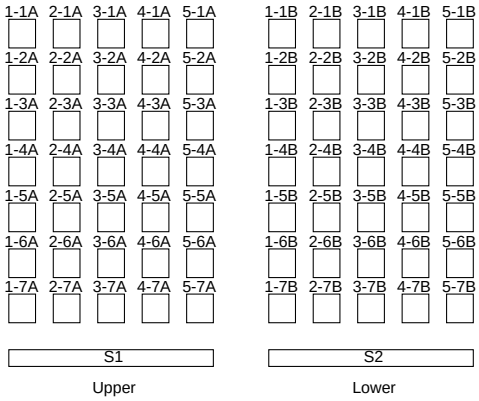

● Anode Connection

	17Gd to 17Ga	16G to 2G	1Gc to 1Ga		17Gd to 17Ga	16G to 2G	1Gc to 1Ga
P1	L	1-1A	–	P37	–	1-1B	THX
P2	C	2-1A	–	P38	–	2-1B	EX
P3	R	3-1A	–	P39	–	3-1B	DIGITAL
P4	Ls	4-1A	–	P40	–	4-1B	dts
P5	S	5-1A	–	P41	–	5-1B	ES
P6	Rs	1-2A	–	P42	–	1-2B	DISC
P7	LFE	2-2A	–	P43	–	2-2B	MTRX
P8	((( )))	3-2A	–	P44	–	3-2B	PROLOGIC II
P9	SIGNAL	4-2A	–	P45	–	4-2B	Neo:6
P10	AUTO	5-2A	–	P46	–	5-2B	MPEG
P11	RF	1-3A	–	P47	–	1-3B	2Ch PLAYBACK
P12	I.LINK	2-3A	–	P48	–	2-3B	–
P13	DIGITAL	3-3A	–	P49	–	3-3B	–
P14	ANALOG	4-3A	–	P50	–	4-3B	–
P15	OVER	5-3A	–	P51	–	5-3B	–
P16	ATT	1-4A	–	P52	–	1-4B	–
P17	SP	2-4A	–	P53	–	2-4B	–
P18	▷	3-4A	–	P54	–	3-4B	–
P19	A	4-4A	–	P55	–	4-4B	–
P20	B	5-4A	–	P56	–	5-4B	–
P21	TAPE2	1-5A	–	P57	–	1-5B	–
P22	TUNED	2-5A	–	P58	–	2-5B	–
P23	STEREO	3-5A	–	P59	–	3-5B	–
P24	MONO	4-5A	–	P60	–	4-5B	–
P25	RDS	5-5A	–	P61	–	5-5B	–
P26	EON	1-6A	–	P62	–	1-6B	–
P27	(EON)	2-6A	–	P63	–	2-6B	–
P28	RF ATT	3-6A	–	P64	–	3-6B	–
P29	–	4-6A	–	P65	–	4-6B	–
P30	–	5-6A	–	P66	–	5-6B	–
P31	–	1-7A	–	P67	–	1-7B	–
P32	–	2-7A	–	P68	–	2-7B	–
P33	–	3-7A	–	P69	–	3-7B	–
P34	–	4-7A	–	P70	–	4-7B	–
P35	–	5-7A	–	P71	–	5-7B	–
P36	–	S1	–	P72	–	S2	–

7.3 REMOTE CONTROL UNIT

7.3.1 AXD7295 (for VSX-49TX)

7.3.1.1 EXPLODED VIEWS AND PARTS LIST

NOTES:
- *Parts marked by "NSP" are generally unavailable because they are not in our Master Spare Parts List.*
- *The ⚠ mark found on some component parts indicates the importance of the safety factor of the part. Therefore, when replacing, be sure to use parts of identical designation.*
- *Screws adjacent to ▼ mark on the product are used for disassembly.*

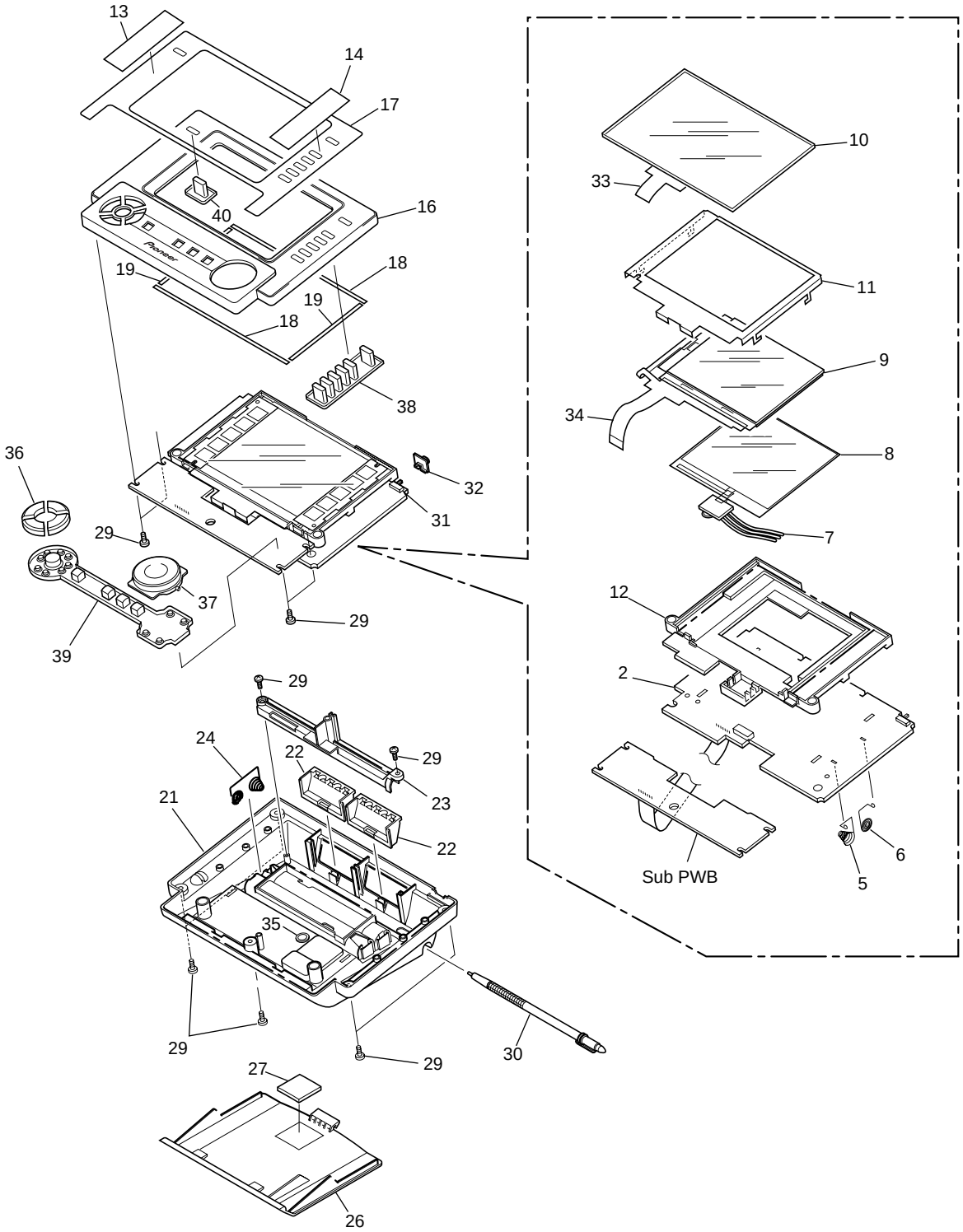

● PARTS LIST

Mark	No.	Description	Part No.
	1	• • • • •	
	2	PCB Assy	AZC7299
	3	• • • • •	
	4	• • • • •	
	5	Terminal A	411RRC15801R
	6	Terminal B	411RRC15901R
	7	Jumper Cable	E–AA1446–001
	8	EL Module	AZC7294
	9	LCD Module	AZC7295
	10	Touch Panel	NTX01005701R
	11	Frame	501RRC01901R
	12	LCD Holder	AZN7787
	13	Seal A	AZA7415
	14	Seal B	AZA7416
	15	• • • • •	
	16	Case A	AZN7783
	17	Name Plate	AZA7406
	18	Cushion A	701RRC04801R
	19	Cushion B	701RRC04901R
	20	• • • • •	
	21	Case B	AZN7784
	22	Filter	AZA7343
	23	Pen Holder	AZN7786
	24	Terminal	413RRC11201R
	25	• • • • •	
	26	Battery Cover	AZN7785
	27	Cushion C	701RRC03501R
	28	• • • • •	
	29	Screw	AZB7144
	30	Touch Pen	AZA7350
	31	Slide Switch	JSB1220–0111
	32	Slide Knob	AZA7347
	33	FPC Connector	CFP5519–0101
	34	FPC Connector	E-CP0535–008
	35	MT Switch	JPM1030–0801
	36	Key Top A	AZA7345
	37	Key Top B	AZA7346
	38	Rubber Sheet A	AZA7410
	39	Rubber Sheet B	AZA7349
	40	Rubber Sheet C	AZA7411

7.3.1.2 SCHEMATIC DIAGRAM

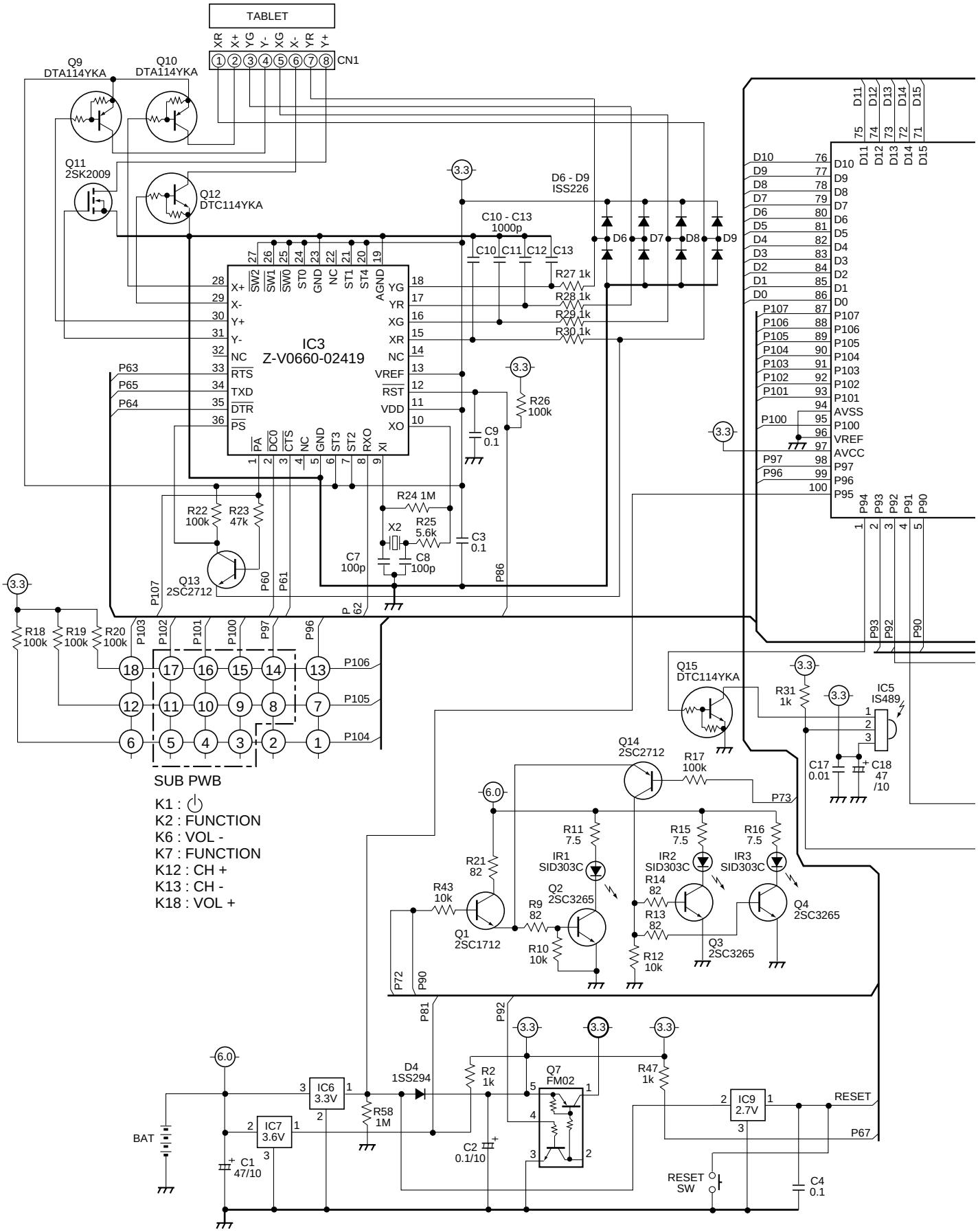

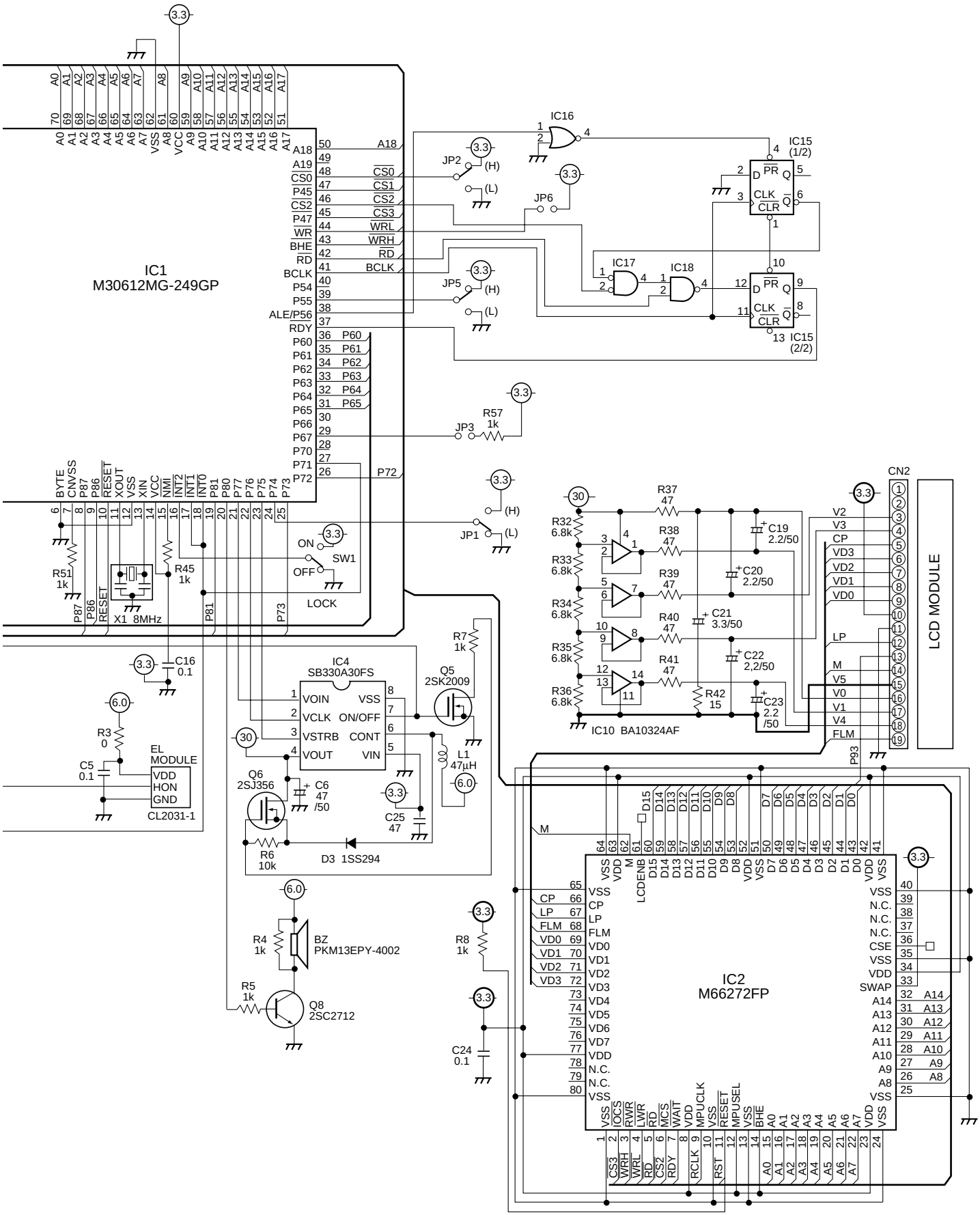
IC1
M30612MG-249GP
IC2
M66272FP
IC4
SB330A30FS
IC10 BA10324AF
IC15 (1/2)
IC15 (2/2)
IC16
IC17
IC18
CN2
LCD MODULE
EL MODULE
CL2031-1
BZ
PKM13EPY-4002
Q5
2SK2009
Q6
2SJ356
Q8
2SC2712
D3 1SS294
X1 8MHz
SW1
LOCK
JP1
JP2
JP3
JP5
JP6
L1
47µH

7.3.1.3 PCB DIAGRAM

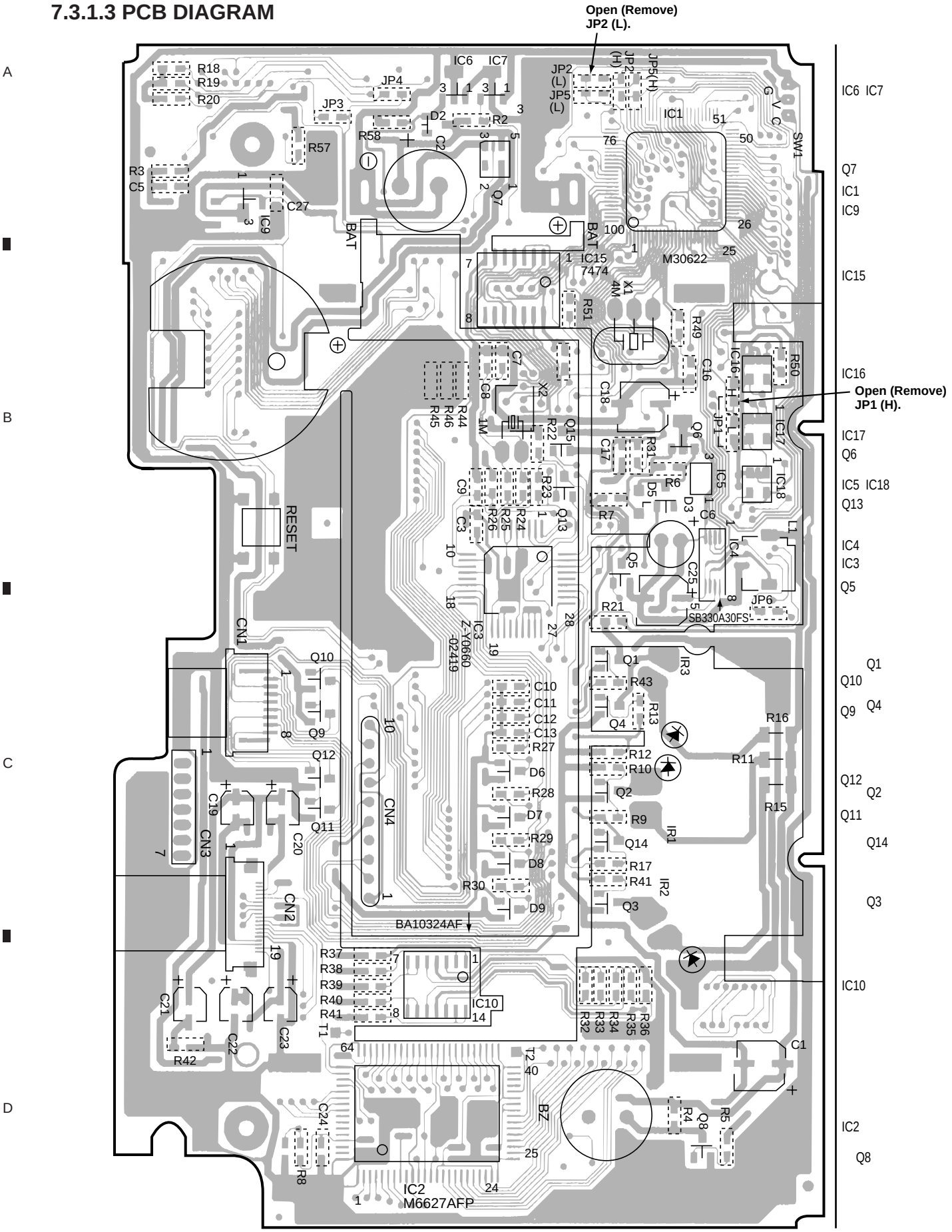

SIDE A

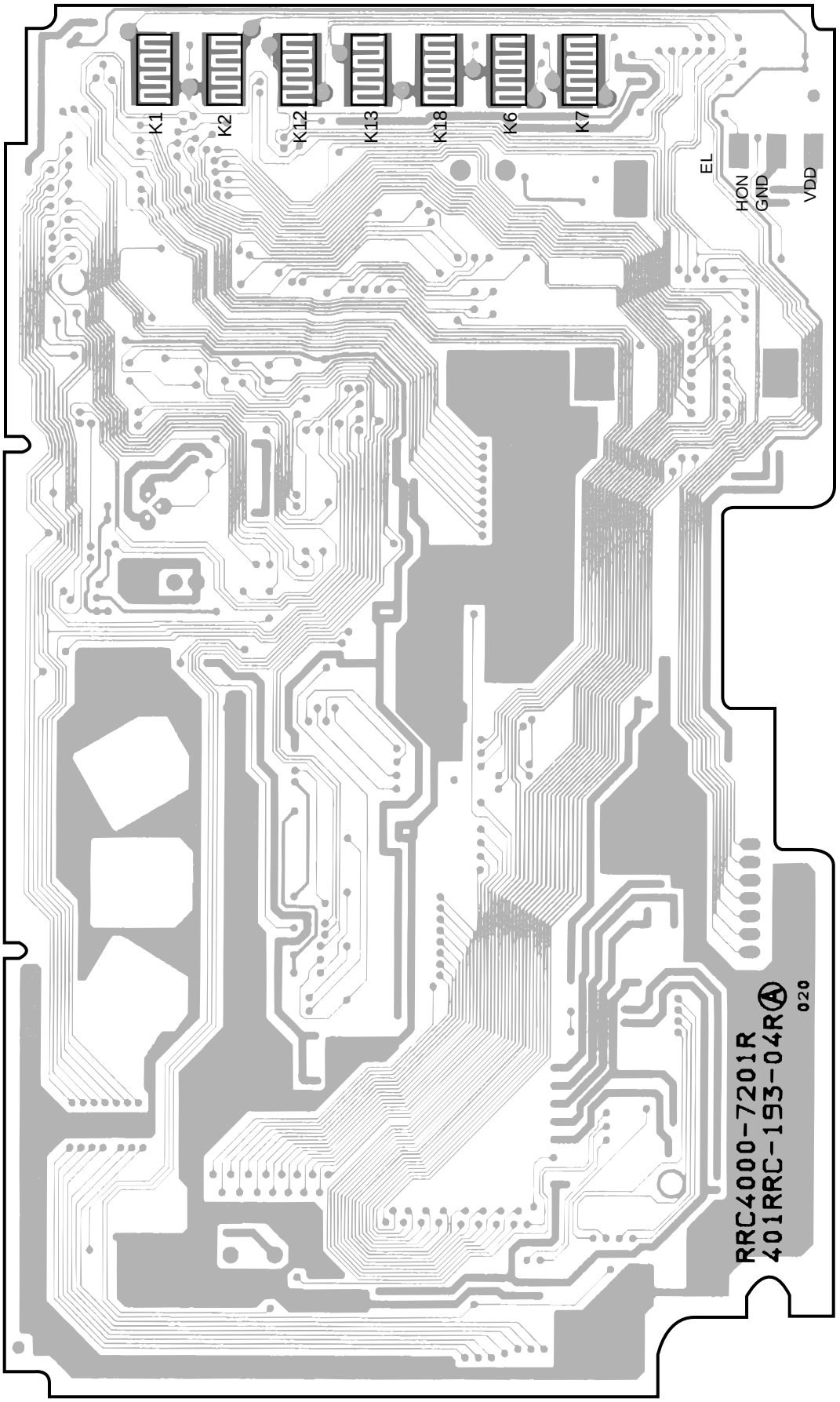
K1
K2
K12
K13
K18
K6
K7
EL
HON
GND
VDD
RRC4000-7201R
401RRC-193-04R
020

SIDE B

7.3.2 AXD7299 (for VSX-47TX)

7.3.2.1 EXPLODED VIEWS AND PARTS LIST

NOTES:
- *Parts marked by "NSP" are generally unavailable because they are not in our Master Spare Parts List.*
- *The ⚠ mark found on some component parts indicates the importance of the safety factor of the part. Therefore, when replacing, be sure to use parts of identical designation.*
- *Screws adjacent to ▼ mark on the product are used for disassembly.*

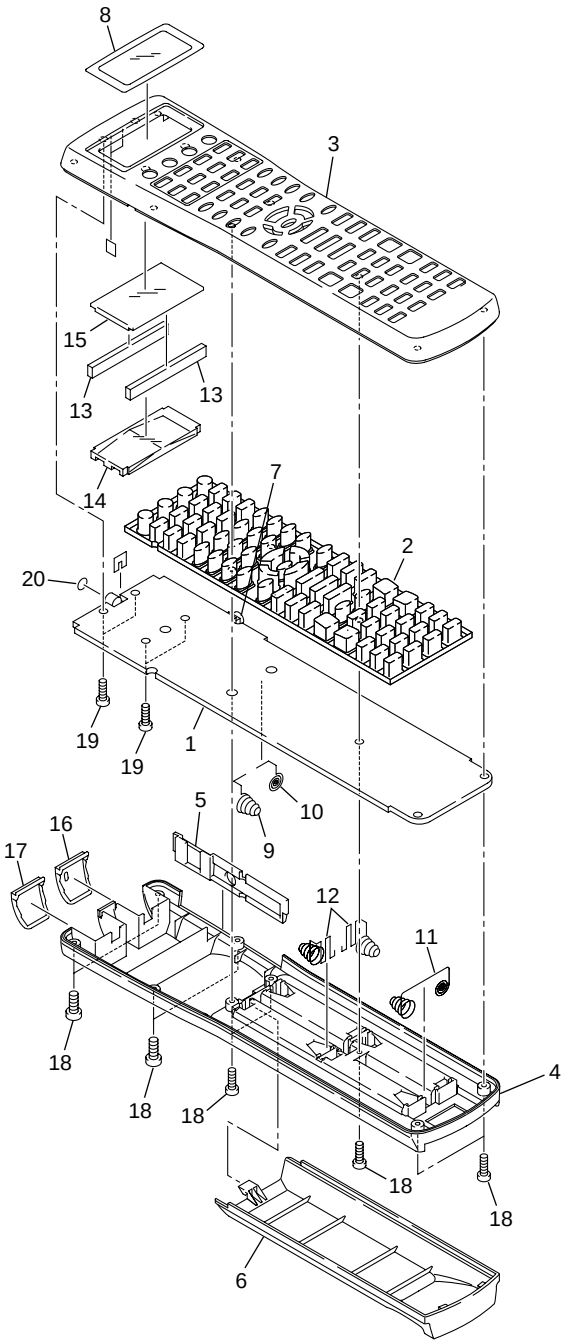

● PARTS LIST

Mark	No.	Description	Part No.
	1	PCB Assy	AZC7301
	2	Rubber Sheet	AZA7423
	3	Case A	AZN7890
	4	Case B	AZN7892
	5	Frame	AZN7894
	6	Battery Cover	AZN7896
	7	Mini Jack	LGY3312-0111
	8	Name Plate	201RRC-314-01L
	9	Terminal A	411RRC-212-01G
	10	Terminal B	411RRC-213-01G
	11	Battery Terminal	413RRC-143-01R
	12	Spring	413RRC-171-01G
	13	Connector	423RRC-046-01G
	14	Plate	481RRC-018-01G
	15	Sheeld Plate	801RRC-020-01L
	16	Filter A	811RRC-109-01G
	17	Filter B	811RRC-110-01G
	18	Screw	A-BA2008-225002
	19	Screw	A-BJ2006
	20	Microphone	WM-60A

7.3.2.2 PCB DIAGRAM

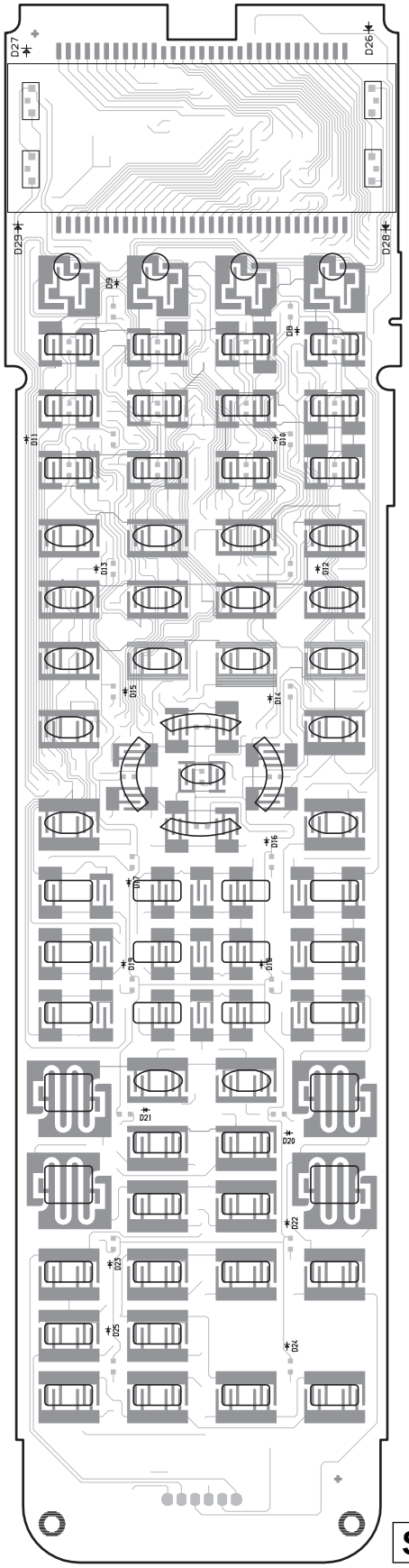

SIDE A

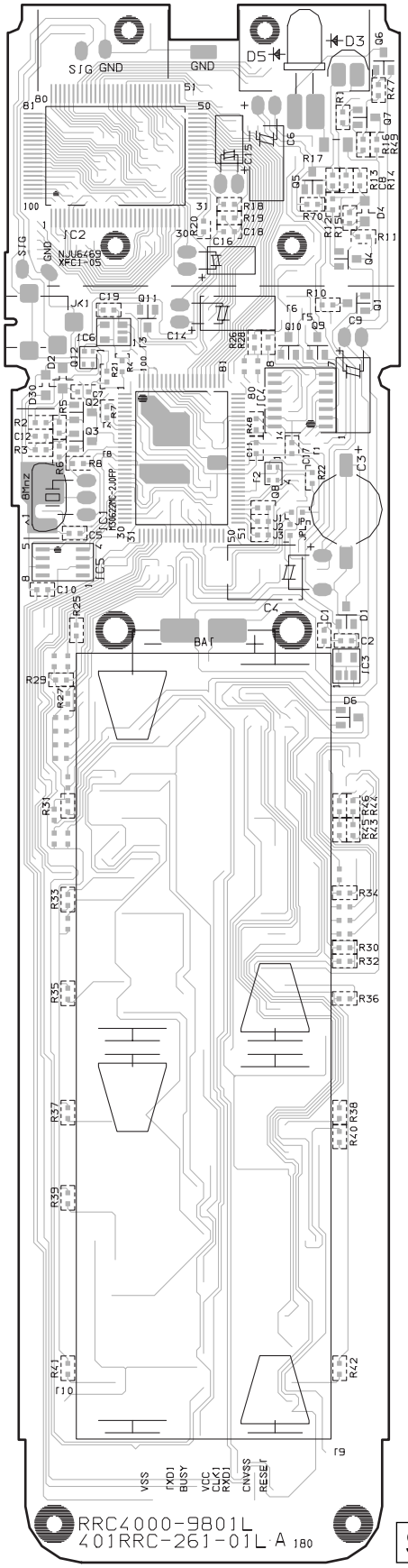

SIDE B

7.3.2.3 SCHEMATIC DIAGRAM

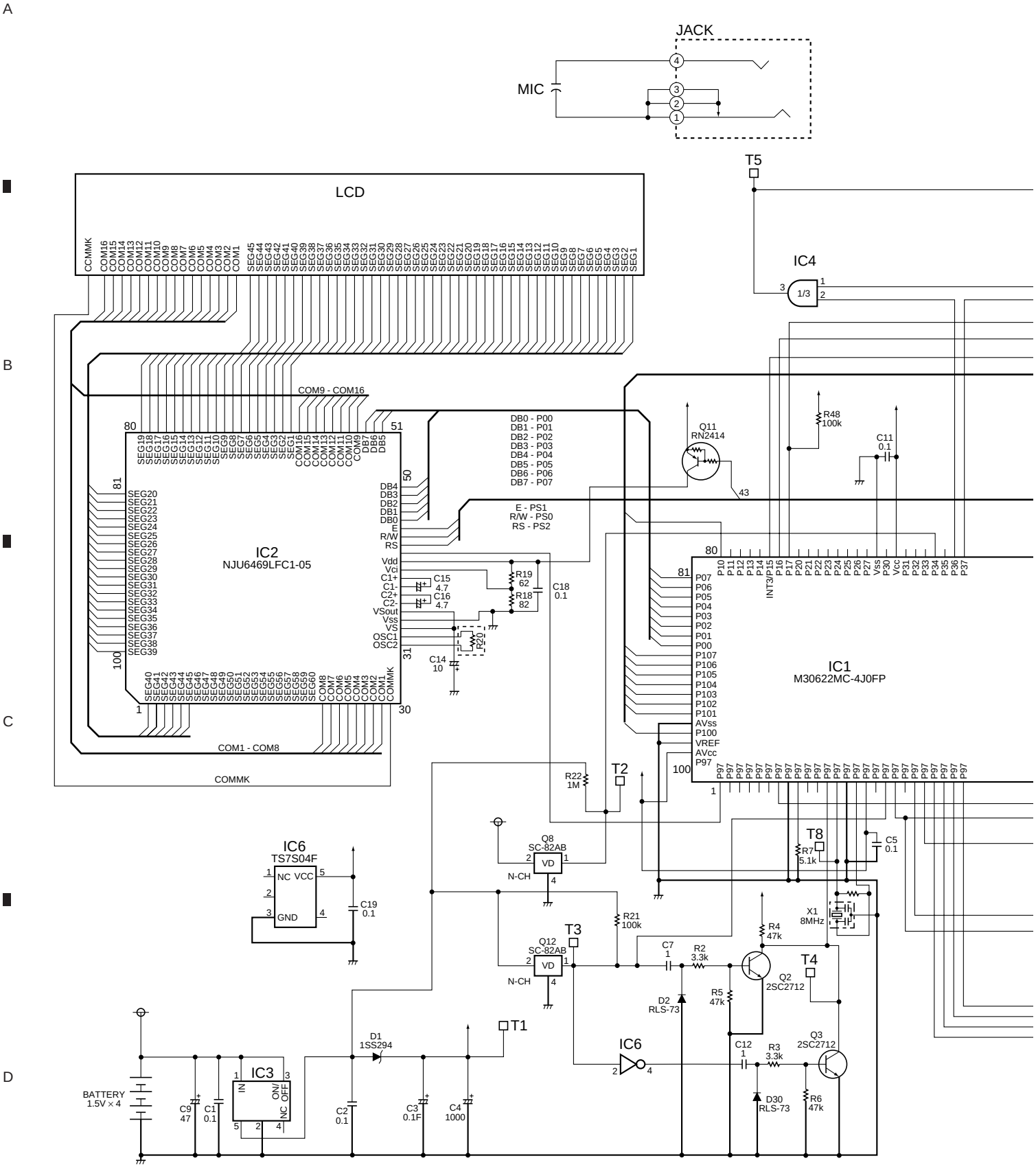

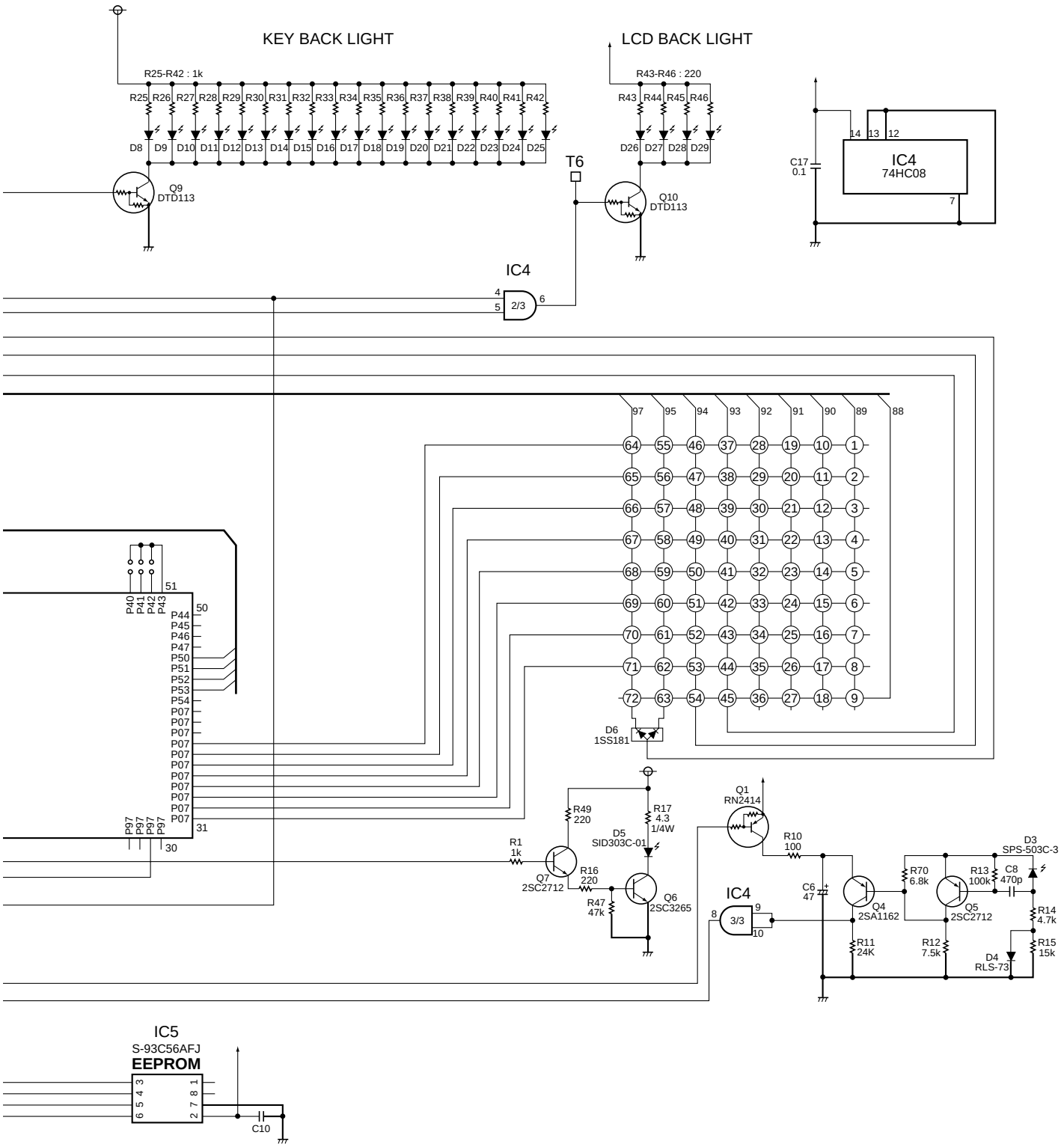
KEY BACK LIGHT
R25-R42 : 1k
R25 R26 R27 R28 R29 R30 R31 R32 R33 R34 R35 R36 R37 R38 R39 R40 R41 R42
D8 D9 D10 D11 D12 D13 D14 D15 D16 D17 D18 D19 D20 D21 D22 D23 D24 D25
Q9
DTD113
LCD BACK LIGHT
R43-R46 : 220
R43 R44 R45 R46
D26 D27 D28 D29
T6
Q10
DTD113
C17
0.1
IC4
74HC08
14 13 12
7
IC4
2/3
4
5
6
97 95 94 93 92 91 90 89 88
D6
1SS181
P40 P41 P42 P43
P44 P45 P46 P47 P50 P51 P52 P53 P54 P07 P07 P07 P07 P07 P07 P07 P07 P07 P07 P07 P07
P97 P97 P97 P97
51
50
31
30
R1
1k
Q7
2SC2712
R49
220
R16
220
R47
47k
R17
4.3
1/4W
D5
SID303C-01
Q6
2SC3265
Q1
RN2414
R10
100
IC4
3/3
8
9
10
C6
47
Q4
2SA1162
R11
24K
R70
6.8k
R12
7.5k
Q5
2SC2712
R13
100k
C8
470p
D3
SPS-503C-3
R14
4.7k
R15
15k
D4
RLS-73
IC5
S-93C56AFJ
EEPROM
C10

7.3.2.4 PCB PARTS LIST

NOTES: ● *The ⚠ mark found on some component parts indicates the importance of the safety factor of the part. Therefore, when replacing, be sure to use parts of identical designation.*

● *When ordering resistors, first convert resistance values into code form as shown in the following examples.*

Ex.1 When there are 2 effective digits (any digit apart from 0), such as 560 ohm and 47k ohm (tolerance is shown by J=5%, and K=10%).

560 Ω → 56 × 10¹ → 561 ..... RD1/4PU [5][6][1] J
47k Ω → 47 × 10³ → 473 ..... RD1/4PU [4][7][3] J
0.5 Ω → R50 ..... RN2H [R][5][0] K
1 Ω → 1R0 ..... RS1P [1][R][0] K

Ex.2 When there are 3 effective digits (such as in high precision metal film resistors).

5.62k Ω → 562 × 10¹ → 5621 ..... RN1/4PC [5][6][2][1] F

Mark	No.	Description	Part No.
	IC1		M30622MC-4JOFA
	IC2		NJU6469LFC1-05
	IC3		S-818A33AMC-BGN
	IC4		74HC08
	IC6		TC7S04F
	Q1,Q11		RN2414
	Q2,Q3,Q5,Q7		2SC2712
	Q4		2SA1162
	Q6		2SC3265
	Q9,Q10		DTD113ZK
	Q12		S-80826ANNP-EDP
	Q8		S-80836ANNP-EDO
	D5		SID303C-01
	D1		1SS294
	D3		SPS-503C
	D2,D4,D30		RLS-73
	D6		1SS181
	D8-D25		BR1111C
	D26-D29		FA1101F-430
	C3		0.1F/6.3v
	C4		1000µF/6.3v
	C6, C9		47µF/10v
	C14		10µF/10v
	C2,C5,C11,C17-C19		0.1µF/25v
	C7,C12		1µF/25v
	C8		470pF/25v
	R17		15Ω 1/4w
	Other Resistors		RS1/16S□□□J
	XI	Ceramic Resona(8MHz)	CST8.00MTW
	LCD		T557007

8. PANEL FACILITIES AND SPECIFICATIONS

8.1 PANEL FACILITIES

■ Front Section (VSX-49TX)

All the controls on the front panel are explained and/or referenced here. To open the front panel push gently on the lower third of the panel.

VSX-49TX

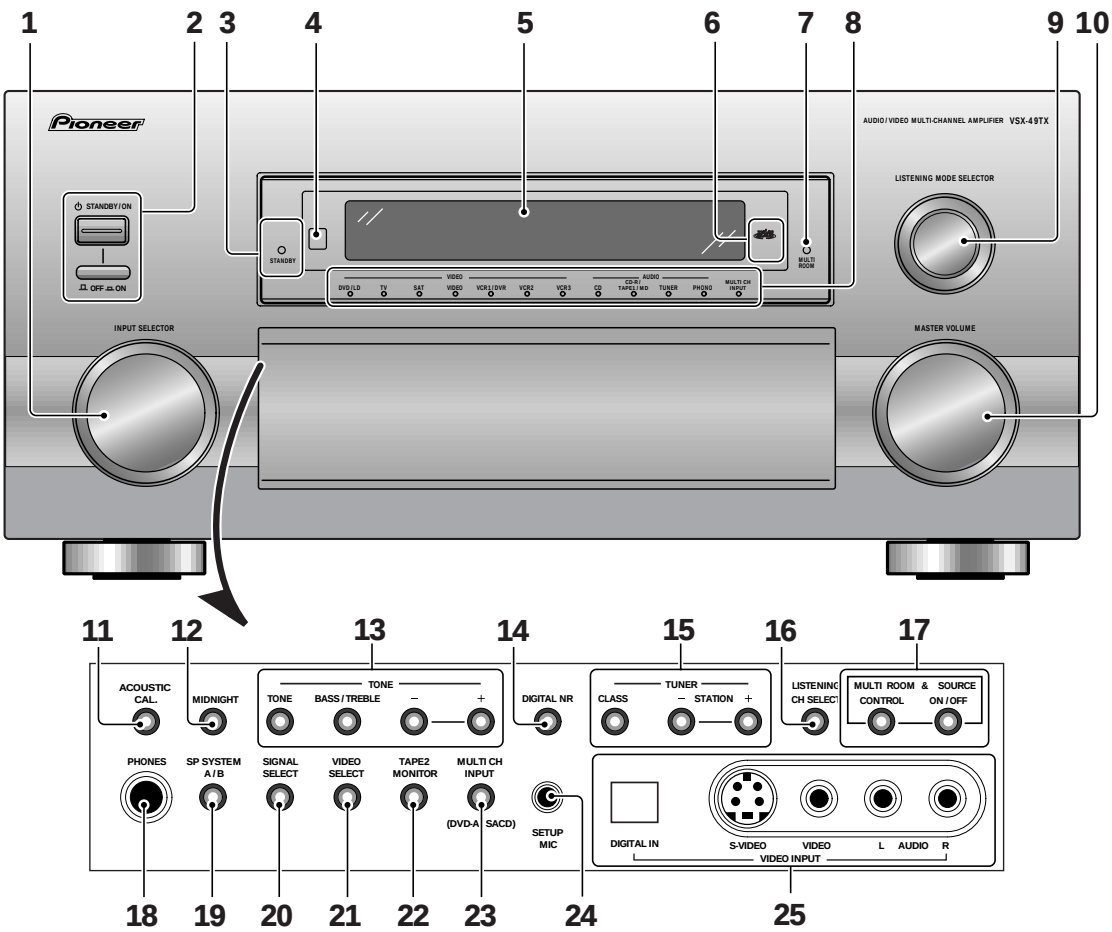

1 INPUT SELECTOR dial
Turn to select a source component. (You can also use to select a source in the MULTI-ROOM & SOURCE mode.) The input indicators show the current component.

2 ⏻ STANDBY/ON button–power ON/OFF button
Press to switch the receiver ON or into STANDBY mode or to switch OFF.

3 STANDBY indicator
Lights when the receiver is in STANDBY mode. (Please note that this receiver consumes a small amount of power [0.65 W] in the standby mode.)

4 Remote sensor
Receives the signals from the remote control.

5 Display

6 MCACC indicator
Lights when the ACOUSTIC CAL EQ is on. (After the Auto Surround Sound Setup has been completed the ACOUSTIC CAL EQ is set on and this display will light.)

7 MULTI-ROOM indicator
Shows whether the multi-room function is active or not.

8 INPUT indicators
Shows which source component is selected. The MULTI CH INPUT indicator lights when a component connected to MULTI CH INPUT is selected.

9 LISTENING MODE SELECTOR dial

10 MASTER VOLUME dial
Adjusts the overall receiver volume.

11 ACOUSTIC CAL. button
Use to switch on and off the Acoustic Calibration EQ.

12 MIDNIGHT button
Use to switch the receiver into MIDNIGHT mode.

13 TONE control buttons

TONE button

This button switches between TONE ON and TONE BYPASS, which bypasses the tone circuitry.

BASS/TREBLE button

Use to select whether the bass or treble will be adjusted..

(–/+) buttons

Use to adjust the frequencies.

14 DIGITAL NR button

Switches the DIGITAL NR on or off (cannot be used in THX).

15 TUNER CONTROL buttons

CLASS button – Press repeatedly to switch the preset station classes.

–/+ button – Use to choose programmed radio stations.

16 LISTENING CH SELECT button

Use this button to select the number of channels used for playback (5.1, 7.1, or AUTO).

17 MULTI-ROOM & SOURCE buttons

Press to use the multi room feature (requires an optional PIONEER Multi-Room Remote Sensor Unit MR-100 or another IR receiver).

CONTROL button: Used together with the INPUT SELECTOR to select the function or use with the MASTER VOLUME to select the volume of the MULTI ROOM system.

ON/OFF button: Use to switch Multi-room function on or off.

18 PHONES jack

Connect headphones for private listening (no sound will be heard through the speakers).

19 SP SYSTEM A/B button

Use to select the speaker system. A is the primary setting. The button cycles through the speaker systems as follows: A⇨B⇨A&B⇨off. Different conditions apply when bi-amping the speakers. For this case refer to page 71.

20 SIGNAL SELECT button

Use to select the type of signal being input into the receiver. Press SIGNAL SELECT repeatedly to select one of the following:

ANALOG – To select an analog signal.

DIGITAL – To select an optical or coaxial digital signal.

□□ RF – To select an □□ RF signal.

AUTO – This is the default setting. If there are analog, digital and □□ RF signals input, the receiver automatically selects the □□ RF signal. If there are analog and digital signals input the digital will be selected.

21 VIDEO SELECT button

Switches the receiver between the various types of video input.

22 TAPE 2 MONITOR button

Selects the tape deck (MD recorder, etc.) connected to the TAPE 2 MONITOR inputs/ outputs. Allows monitoring of a recording as it's being made.

23 MULTI CH INPUT button

Use when you have hooked up an external component that can decode other types of signals and input them into the VSX-49TX.

24 SETUP MIC jack

Plug in the setup mic here. This is very important for setting up your system to get proper surround sound.

25 Front VIDEO INPUT jacks

DIGITAL IN : digital input for connecting a game console, portable DVD player, video camera (etc.), that has an optical digital connection.

S VIDEO : Video input for connecting a video camera (etc.), that has an S video out.

RCA VIDEO / AUDIO (L/R) : Video input for connecting a video camera, etc. that has standard RCA video/audio outputs.

■ Front Section (VSX-47TX)

VSX-47TX

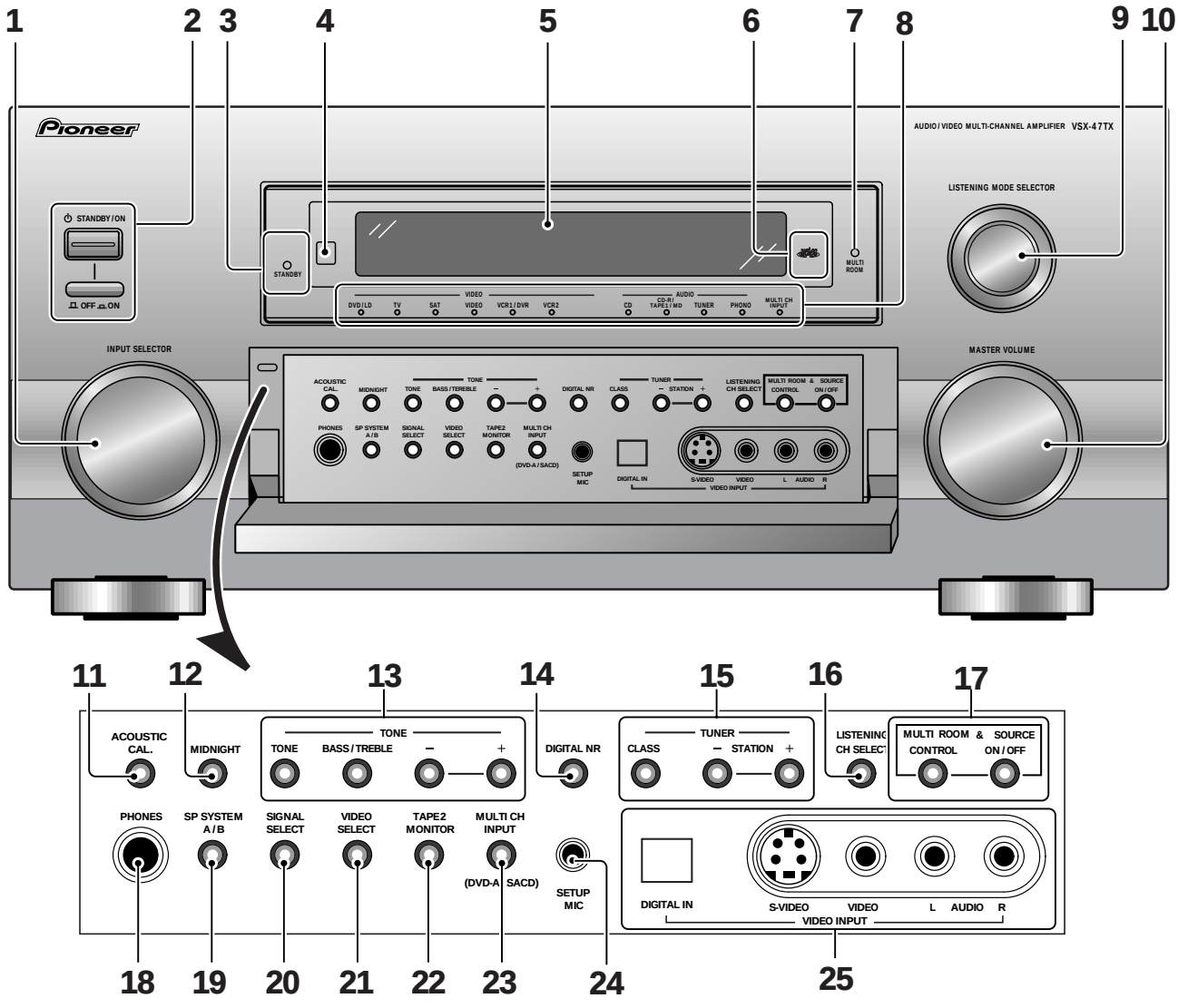

■ Display (VSX-49TX)

All the display information is explained and /or referenced here.

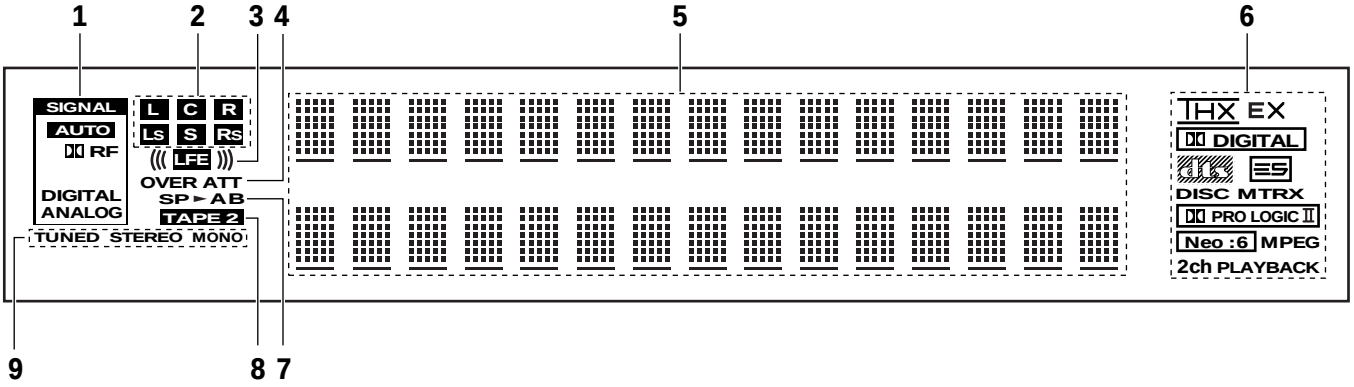

1 SIGNAL SELECT indicators

Light to indicate the input signal you selected.

ANALOG : Lights when an analog signal is selected.
DIGITAL : Lights when a digital signal is selected.
RF : Lights when an RF signal is selected.
AUTO : Lights when the receiver is set to select the input signal automatically.

2 Program Format indicators

For Dolby Digital or DTS sources : These indicators change according to which channels are active in the source. When all three **LS** (left surround), **S** (surround) and **RS** (right surround) light at the same time it means a source with a 6.1ch playback flag is being used.

L – Left front channel.
C – Center channel.
R – Right front channel.
LS – Left surround channel.
S – Surround channel (mono).
RS – Right surround channel.
LFE – Low frequency effects channel.

3 ((( ))) – Lights when LFE signal is input.

4 Analog level indicators

OVER – This lights if the signal is in danger of distorting for analog source signals. Press INPUT ATT on the front panel to lower the signal level.

ATT – Lights when INPUT ATT is used to reduce the level of the analog source signal.

5 Character display

Shows current mode, status, etc.

6 Digital format indicators

DIGITAL : Lights when a Dolby Digital signal is detected.
DTS: Lights when a DTS signal is detected.
MPEG: Lights when an MPEG signal is detected.
THX: Lights when the HOME THX mode is selected.
EX: Lights during Surround EX matrix processing.
ES: Lights when a decoding DTS ES audio.
DISC: Lights during DTS ES discrete processing
MTRX: Lights during DTS ES matrix processing
PRO LOGIC II : Lights during Dolby Pro Logic II processing.
NEO:6: Lights during NEO:6 processing.
2CH PLAYBACK Lights during two-channel playback.

7 Speaker indicators

Light to indicate the current speaker system, A and/or B.

8 TAPE 2 indicator

Lights when the TAPE 2 monitor is on.

9 TUNER indicators

MONO : Lights when the tuner is set to receive FM broadcasts and when selected MPX mode.

STEREO : Lights when a FM stereo broadcast is received in the auto stereo mode.

TUNED : Lights when a broadcast is received.

■ Remote Control Unit (VSX-49TX)

These pages describe the buttons on the remote control used to operate the receiver. Since the screen on this LCD remote control changes when you select a different function, explanations of buttons for controlling other components/functions can be found in the sections for those components/functions.

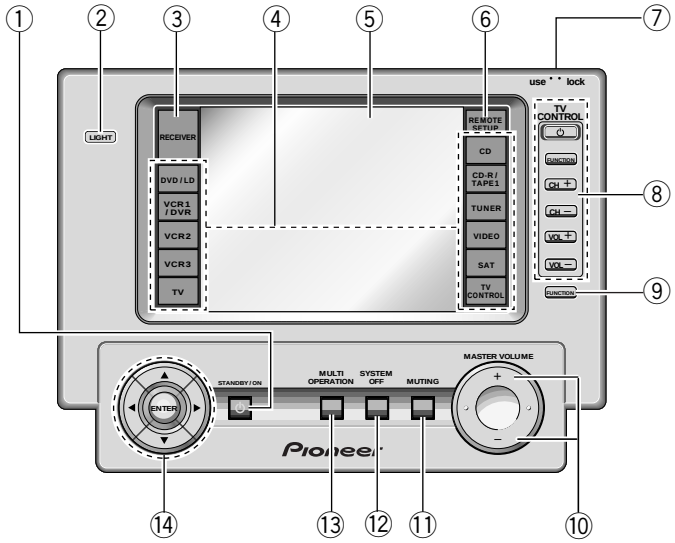

memo

To turn on the remote control touch it anywhere on the screen.

① **⏻ STANDBY/ON button**
Press to turn power of the receiver on or to STANDBY (off).

② **LIGHT button**
Use to turn on and off the backlight on the remote control receiver screen.

③ **RECEIVER button**
Press to switch the remote control into receiver mode or to get receiver screens.

④ **Function buttons**
These buttons are the basic controls that switch the mode of the receiver and the remote control, which allows you to control your other components.

⑤ **Remote control screen**

⑥ **REMOTE SETUP button**
Use to customize the remote control functions and the remote control itself. (See "Setting Up Remote Control of Other Components" starting on)

⑦ **LOCK switch**
Use to lock the remote control so it doesn't turn on by accident. For normal use keep it set in USE.

⑧ **TV CONTROL buttons**
The following buttons are used to control the TV only and can be used once they are preset to control your TV.
⏻ STANDBY/ON : Press to turn the power of the TV on/off.
INPUT : Press to select the input source for the TV.
CH +/– : Use these buttons to change the channel of the TV.
VOL +/– : Press to control the volume of the TV.

⑨ **INPUT button**
Press to select a source. The button will cycle through all the possible sources.

⑩ **MASTER VOLUME button**
Use to raise or lower the volume of the receiver.

⑪ **MUTING button**
Press to mute or restore the volume.

⑫ **SYSTEM OFF button**
This button turns off components in two ways. First, when pressed it will turn off all PIONEER components. Secondly, any component that has programmed into the SYSTEM OFF settings will be turned off.
For example : If you programmed power off in the SYSTEM OFF settings for your TV and VCR, pressing the SYSTEM OFF button will turn off these components even if they are not PIONEER products.

⑬ **MULTI OPERATION button**
Use this button to start the MULTI OPERATION mode. See p.80 & 81 for how to program and use the MULTI OPERATION mode.

⑭ **▲/▼/◄/►/ENTER buttons**
These buttons can be used for a variety of operations. In the SYSTEM SETUP menu, the ▲/▼ buttons can be used to adjust CHANNEL DELAY or CHANNEL LEVEL.
The ▲/▼ buttons, pressed simultaneously, can be use to lock or unlock a setting (see p.67).
These buttons are also used to control the DVD menu for the DVD remote control screen. Also, in TUNER mode they can select station and frequency.

Basic Receiver LCD Screens

Receiver MAIN Screen

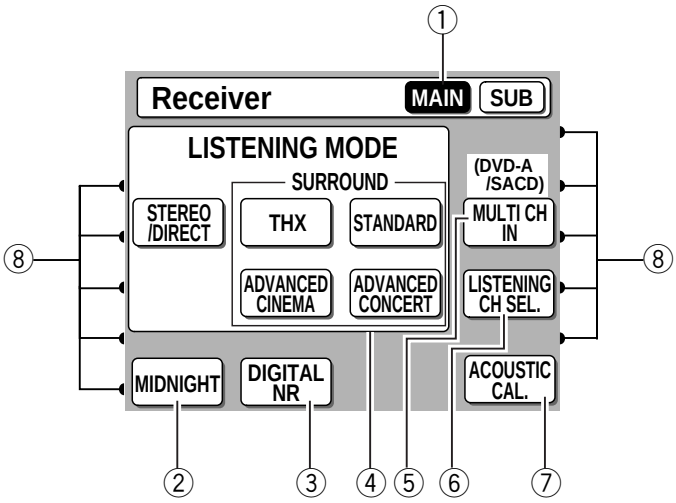

① **Receiver MAIN button**
Press this button to select the MAIN receiver screen (above) when the remote control is on the SUB receiver screen.

② **MIDNIGHT button**
Switches the MIDNIGHT listening mode on or off (for all modes except THX).

③ **DIGITAL NR button**
Switches the DIGITAL NR on or off (for all modes except THX).

④ **LISTENING MODE buttons**
STEREO/DIRECT: Switches the receiver into STEREO mode if it was in a different listening mode or toggles between DIRECT and STEREO mode.
THX: Press to put the receiver into HOME THX sound mode.
STANDARD: Press to put the receiver into STANDARD listening mode.
ADVANCED CINEMA: Press to put the receiver into ADVANCED CINEMA listening mode.
ADVANCED CONCERT: Press to put the receiver into ADVANCED CONCERT listening mode.

⑤ **MULTI CH IN button**
Use to hook up an external component (for example a DVD-Audio player) that can decode other types of signals and input them into the VSX-49TX.

⑥ **LISTENING CH SEL. button**
Use this button to select a listening channel (5.1, 7.1, or AUTO)

⑦ **ACOUSTIC CAL. button**
Press to switch on/off the acoustic calibration EQ.

⑧ **DIRECT FUNCTION on/off indicator**
These dots indicate weather the DIRECT FUNCTION is on or off for the function (DVD/LD, CD, etc.) they point to.

Receiver SUB Screen

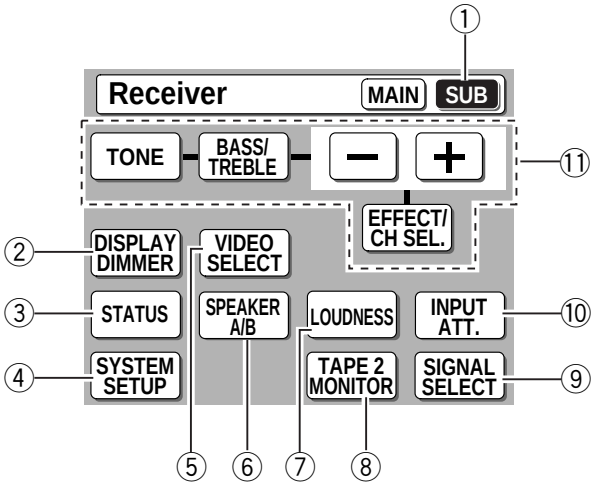

① **Receiver SUB button**
Press this button to select the SUB receiver screen (above) when the remote control is on the main receiver screen.

② **DISPLAY DIMMER button**
Use to adjust the brightness of the receiver's display.

③ **STATUS button**
Use to display the present mode of the receiver and other selected settings.

④ **SYSTEM SETUP button**
Use for all system setups, including the speaker and sound systems. For more information see "Setting up for Surround Sound" starting on.

⑤ **VIDEO SELECT button**
Use to toggle between the different video input possibilities.

⑥ **SPEAKER A/B button**
Use to select the speaker system. A is the primary setting. The button cycles through the speaker systems as follows: A⇨B⇨A&B⇨off. Different conditions apply when bi-amping the speakers.

⑦ **LOUDNESS button**
Switches the LOUDNESS mode on or off (for all modes except THX).

⑧ **TAPE 2 MONITOR button**
Selects the tape deck (or MD recorder, etc.) connected to the TAPE 2 MONITOR inputs/ outputs. Allows monitoring of a recording as it's being made.

⑨ **SIGNAL SELECT button**
Press SIGNAL SELECT repeatedly to select one of the following:
ANALOG : To select an analog signal.
DIGITAL : To select a digital signal
□□ RF : To select an □□ RF signal
AUTO : This is the default. If there are analog, digital and □□ RF signals input, the receiver automatically selects the □□ RF signal. If there are analog and digital signals input the digital will be selected.

⑩ **INPUT ATT. button**
Use to lower the input level of an analog signal that is too powerful, thus causing the receiver to distort. In this case the overload (OVER) indicator will be flashing furiously.

⑪ **TONE control/EFFECT CH SEL. buttons**

TONE button
This button has two functions. Firstly, it switches between TONE on and TONE BYPASS, which bypasses the tone circuitry. Secondly, you need to press the button before using the BASS & TREBLE (+/–) buttons.

EFFECT/CH SEL. button
Switches the tone adjust controls between the front, center, surround and surround back speakers. You can then use the + and – buttons to adjust the sound.
While in Advanced mode, you can also adjust the effect level.

■ Remote Control Unit (VSX-47TX)

These pages describe the buttons on the remote control used to operate the receiver.

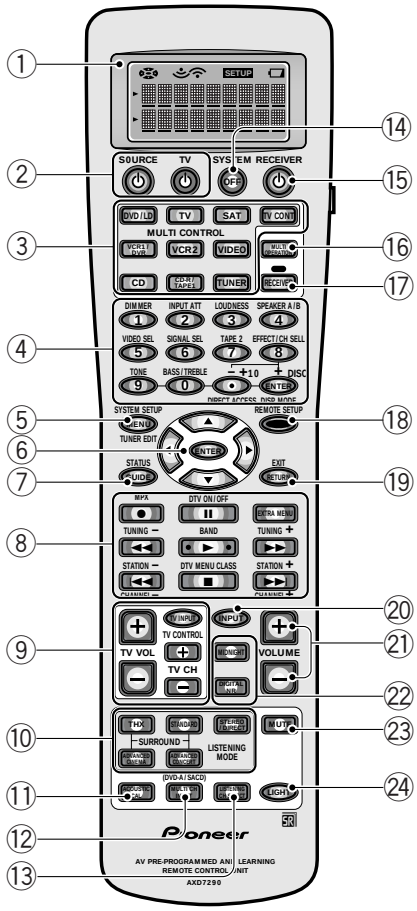

① **Remote Control Display Screen**

② **SOURCE button**

Use this button to turn off other components. You must input the preset code in order to use this function .

TV button

This is a dedicated TV button. Use it to turn on/off your TV.

③ **MULTI CONTROL buttons**

The mode of the receiver and allow you to control your other components.

DVD/LD: Press to switch the remote control into DVD/LD mode.

TV/SAT: Press to switch the remote control into TV/SAT (satellite tuner) mode.

VCR 1: Press to switch the remote control into VCR 1 mode.

VCR 2: Press to switch the remote control into VCR 2 mode.

MD/TAPE 1: Press to switch the remote control into MD/TAPE 1 mode.

CD: Press to switch the remote control into CD mode.

TUNER: Press to switch the remote control into TUNER mode.

TV CONTROL: Press so that the remote control can operate the TV CONTROL commands.

④ **Number buttons**

These can be used for many purposes depending on the mode of the receiver. When the in receiver mode the buttons operate as below:

Display DIMMER

Use to adjust the brightness of the main display.

INPUT ATT. button

Use to lower the input level of an analog signal that is too powerful, thus causing the receiver to distort (in this case the overload indicator will be flashing furiously).

LOUDNESS button

Switches the LOUDNESS mode on or off (for all modes except THX and MULTI CH IN).

SPEAKER A/B button

Use to select the speaker system. A is the primary setting. It plays all speakers hooked up to the A system. A & B setting only plays the front speakers of both the A & B systems and the subwoofer. Multi channel sources will be down-mixed to these speakers so no sound will be lost. B setting only plays the front speakers connected to the B system and multi channel sources will be down-mixed to these two speakers. The button cycles through the speaker systems as follows:
A⇨B⇨A&B⇨off.

VIDEO SELECT button

Use to toggle between the different video input possibilities.

SIGNAL SELECT button

Press SIGNAL SELECT repeatedly to select one of the following:

ANALOG : To select an analog signal.

DIGITAL : To select a digital signal (DVD/LD, TV/SAT, CD, MD/TAPE 1, VCR 1, VCR 2).

DD RF : To select an DD RF signal (DVD/LD, TV/SAT, VCR 1, VCR 2).

AUTO : This is the default. If there are analog, digital and DD RF signals input, the receiver automatically selects the DD RF signal. If there are analog and digital signals input the digital will be selected.TAPE 2 MONITOR button (See p.57)
Selects the tape deck (or MD recorder, etc.) connected to the TAPE 2 MONITOR inputs/outputs. Allows monitoring of a recording as it's being made.

EFFECT/CH SEL. button

Switches the tone adjust controls between the front, center, surround and surround back speakers. You can then use the +and – buttons to adjust the sound.

TONE buttons

This button has two functions. Firstly, it switches between TONE on and TONE DIRECT, which bypasses the tone circuitry. Secondly, you need to press the button before using the CHANNEL SELECT buttons to adjust the BASS & TREBLE.

BASS & TREBLE buttons
Use to choose the high or low frequencies to adjust.

(+/–) buttons
Use to adjust the high and low frequencies, effect level and channel level.

⑤ **SYSTEM SET UP button**
Use to set up the speaker and sound systems. For more information see "Setting up for Surround Sound" .

⑥ **▲/▼/◄/►/ENTER buttons**
These buttons can be used for a variety of operations. In the SYSTEM SETUP menu, the ▲/▼ buttons can be used to adjust CHANNEL DELAY or CHANNEL LEVEL.
These buttons are also used to control the DVD menu for the DVD remote control screen.

⑦ **STATUS button**
Use to display the present mode the receiver is in and another settings.

⑧ **Command button for other components**
Use these buttons to control other components you selected with the MULTI CONTROL buttons. You must input the preset code in order use this function .

⑨ **TV CONTROL buttons**
The following buttons are used to control the TV only and can be used once they are preset to control your TV.
TV INPUT : Press TV INPUT to select the TV for remote control operation.
TV CH +/– : Use these buttons to change the channel of the TV.
TV VOL +/– : Press to control the volume of the TV.

⑩ **LISTENING MODE buttons**
THX : Press to put the receiver into THX sound mode .
STANDARD : Press to put the receiver into STANDARD sound mode .
STEREO/DIRECT : Switches the receiver into STEREO mode if it was in a different sound mode or toggles between DIRECT and STEREO mode.
ADVANCED CINEMA : Press to put the receiver into ADVANCED CINEMA sound mode.
ADVANCED CONCERT : Press to put the receiver into ADVANCED CONCERT: sound mode .

⑪ **ACOUSTIC CAL. button**
Press to switch on/off the acoustic calibration function.

⑫ **MULTI CH INPUT button**
Use to hook up an external component that can decode other types of signals and input them into the VSX-47TX.

⑬ **LISTENING CH SELECT.**
Use this button to select a listening channel to add or subtract the amount of effect applied in Advanced Theater or other Listening modes.

⑭ **SYSTEM OFF button**
This button turns off components in two ways. First, when pressed it will turn off all PIONEER components. Secondly, any component that has programmed into the SYSTEM OFF settings will be turned off.
For example : If you programmed power off in the SYSTEM OFF settings for your TV and VCR, pressing the SYSTEM OFF button will turn off these components even if they are not PIONEER products.

⑮ **⏻ RECEIVER (standby/power on) button**
Press to turn power of the receiver on or to standby (off).

⑯ **MULTI OPERATION button**
Use this button to start the MULTI OPERATION mode. for how to program and use the MULTI OPERATION mode.

⑰ **RECEIVER button**
Use this button to switch the remote control into receiver mode in order ot get certain receiver functinos or do receiver setups .

⑱ **REMOTE SETUP button.**
Use to customize the remote control functions and the remote control itself. (See "Setting Up Remote Control of Other Components" .

⑲ **EXIT button**

⑳ **INPUT button**
Press to select an input source. The button will cycle through all the possible sources.

㉑ **VOLUME (+/–) buttons**
Use to raise or lower the volume of the receiver.

㉒ **MIDNIGHT button**
Switches the MIDNIGHT listening mode on or off (for all modes except THX and MULTI CH IN).

DIGITAL NR button
Switches the DIGITAL NR on or off (for all modes except THX and MULTI CH IN).

㉓ **MUTE button**
Press to mute or restore the volume.

㉔ **LIGHT button**
Use to light the remote control screen.

8.2 SPECIFICATIONS

VSX-49TX :

Amplifier Section

Continuous average power output of 160 watts* per channel, min., at 6 ohms, from 20 Hz to 20,000 Hz with no more than 0.09 % total harmonic distortion (front).**

Continuous Power Output
- Front ..... 130 W + 130 W (20 Hz-20 kHz, 0.09 %, 8 Ω)
- Center ..... 130 W (20 Hz-20 kHz, 0.09 %, 8 Ω)
- Surround ..... 130 W + 130 W (20 Hz-20 kHz, 0.09 %, 8 Ω)
- Surr. back ..... 130 W + 130 W (20 Hz-20 kHz, 0.09 %, 8 Ω)

Audio Section

Input (Sensitivity/Impedance)
- PHONO MM ..... 4.7 mV/47 kΩ
- LINE ..... 382 mV/47 kΩ

Phono Overload level (T.H.D.0.1 %, 1kHz)
- PHONO MM ..... 120 mV

Frequency Response
- PHONO MM ..... 20 Hz to 20,000 Hz ± 0.3 dB
- LINE ..... 5 Hz to 100,000 Hz $^{+0}_{-3}$ dB

Output (Level/Impedance)
- LINE ..... 382 mV/2.2 kΩ

Tone Control
- BASS ..... ± 6 dB (100 Hz)
- TREBLE ..... ± 6 dB (10 kHz)
- LOUDNESS ..... +4/+2 dB (100Hz/10 kHz) (at volume position -40dB)

Signal-to-Noise Ratio (IHF, short circuited, A network)
- PHONO MM ..... 86 dB
- LINE ..... 105 dB
- MULTI CHANNEL IN .... 103 dB(Channel Level: Bypass)

Signal-to-Noise Ratio [EIA, at 1 W (1 kHz)]
- PHONO MM ..... 83 dB
- LINE ..... 93 dB

* *Measured pursuant to the Federal Trade Commission's Trade Regulation rule on Power Output Claims for Amplifiers.*

** *Measured by Audio Spectrum Analyzer.*

Maintenance of External Surfaces

- Use a polishing cloth or dry cloth to wipe off dust and dirt.
- When the surfaces are dirty, wipe with a soft cloth dipped in some neutral cleanser diluted five or six times with water, and wrung out well, and then wipe again with a dry cloth. Do not use furniture wax or cleaners.
- Never use thinners, benzine, insecticide sprays or other chemicals on or near this unit, since these will corrode the surfaces.

Video Section

Input (Sensitivity) ..... 1 Vp-p/75 Ω
Output (Level/Impedance) ..... 1 Vp-p/75 Ω
Signal-to-Noise Ratio ..... 70 dB
Frequency Response ..... 5 Hz to 10 MHz $^{+0}_{-3}$ dB

Component Video Section

Input (Sensitivity) ..... 1 Vp-p/75 Ω
Output (Level/Impedance) ..... 1 Vp-p/75 Ω
Signal-to-Noise Ratio ..... 70 dB
Frequency Response ..... 5 Hz to 40 MHz $^{+0}_{-3}$ dB

FM Tuner Section

Frequency Range ..... 87.5 MHz to 108 MHz
Usable Sensitivity ..... Mono: 13.2 dBf, IHF (1.3 µV/75 Ω)
50 dB Quieting Sensitivity ..... Mono: 20.2 dBf
Stereo: 38.6 dBf
Signal-to-Noise Ratio ..... Mono: 73 dB (at 85 dBf)
Stereo: 70 dB (at 85 dBf)
Distortion ..... Stereo: 0.5 % (1 kHz)
Alternate Channel Selectivity ..... 60 dB (400 kHz)
Stereo Separation ..... 40 dB (1 kHz)
Frequency Response ..... 30 Hz to 15 kHz (± 1) dB
Antenna Input ..... 75 Ω unbalanced

AM Tuner Section

Frequency Range ..... 530 kHz to 1,700 kHz
Sensitivity (IHF, Loop antenna) ..... 350 µV/m
Selectivity ..... 25 dB
Signal-to-Noise Ratio ..... 50 dB
Antenna ..... Loop antenna

Miscellaneous

Power Requirements ..... AC 120 V, 60 Hz
Power Consumption ..... 710 W
Power Consumption in Standby mode ..... 0.65 W
AC Outlet
- SWITCHED ..... 100 W (0.8 A) MAX

Dimensions ..... 440 (W) × 203 (H) × 472 (D) mm
(17-5/16 (W) × 8 (H) × 18-9/16 (D) in.)
Weight (without package) ..... 29.3 kg (64 lb 6 oz)

Furnished Parts

FM wire Antenna 1
AM Loop Antenna 1
AC Power Cord 1
"AA" IEC LR6 batteries 4
Remote Control Unit 1
Touch Pen 1
Cushion for Remote 4
Microphone 1
U-shaped connectors 2
Operating Instructions 1

NOTE:

Specifications and the design are subject to possible modifications without notice, due to improvements.

VSX-47TX :

Amplifier Section

Continuous average power output of 160 watts* per channel, min., at 6 ohms, from 20 Hz to 20,000 Hz with no more than 0.09 % total harmonic distortion (front).**

Continuous Power Output
- Front ..... 130 W + 130 W (20 Hz-20 kHz, 0.09 %, 8 Ω)
- Center ..... 130 W (20 Hz-20 kHz, 0.09 %, 8 Ω)
- Surround ..... 130 W + 130 W (20 Hz-20 kHz, 0.09 %, 8 Ω)
- Surr. back ..... 130 W + 130 W (20 Hz-20 kHz, 0.09 %, 8 Ω)

Audio Section

Input (Sensitivity/Impedance)
- PHONO MM ..... 4.7 mV/47 kΩ
- LINE ..... 382 mV/47 kΩ

Phono Overload level (T.H.D.0.1 %, 1kHz)
- PHONO MM ..... 120 mV

Frequency Response
- PHONO MM ..... 20 Hz to 20,000 Hz ± 0.3 dB
- LINE ..... 5 Hz to 100,000 Hz $^{+0}_{-3}$ dB

Output (Level/Impedance)
- LINE ..... 382 mV/2.2 kΩ

Tone Control
- BASS ..... ± 6 dB (100 Hz)
- TREBLE ..... ± 6 dB (10 kHz)
- LOUDNESS ..... +4/+2 dB (100Hz/10 kHz) (at volume position -40dB)

Signal-to-Noise Ratio (IHF, short circuited, A network)
- PHONO MM ..... 86 dB
- LINE ..... 105 dB
- MULTI CHANNEL IN .... 103 dB(Channel Level: Bypass)

Signal-to-Noise Ratio [EIA, at 1 W (1 kHz)]
- PHONO MM ..... 83 dB
- LINE ..... 93 dB

* *Measured pursuant to the Federal Trade Commission's Trade Regulation rule on Power Output Claims for Amplifiers.*

** *Measured by Audio Spectrum Analyzer.*

Video Section

Input (Sensitivity) ..... 1 Vp-p/75 Ω
Output (Level/Impedance) ..... 1 Vp-p/75 Ω
Signal-to-Noise Ratio ..... 70 dB
Frequency Response ..... 5 Hz to 10 MHz $^{+0}_{-3}$dB

Component Video Section

Input (Sensitivity) ..... 1 Vp-p/75 Ω
Output (Level/Impedance) ..... 1 Vp-p/75 Ω
Signal-to-Noise Ratio ..... 70 dB
Frequency Response ..... 5 Hz to 40 MHz $^{+0}_{-3}$dB

FM Tuner Section

Frequency Range ..... 87.5 MHz to 108 MHz
Usable Sensitivity ..... Mono: 13.2 dBf, IHF (1.3 µV/75 Ω)
50 dB Quieting Sensitivity ..... Mono: 20.2 dBf
Stereo: 38.6 dBf
Signal-to-Noise Ratio ..... Mono: 73 dB (at 85 dBf)
Stereo: 70 dB (at 85 dBf)
Distortion ..... Stereo: 0.5 % (1 kHz)
Alternate Channel Selectivity ..... 60 dB (400 kHz)
Stereo Separation ..... 40 dB (1 kHz)
Frequency Response ..... 30 Hz to 15 kHz (± 1) dB
Antenna Input ..... 75 Ω unbalanced

AM Tuner Section

Frequency Range ..... 530 kHz to 1,700 kHz
Sensitivity (IHF, Loop antenna) ..... 350 µV/m
Selectivity ..... 25 dB
Signal-to-Noise Ratio ..... 50 dB
Antenna ..... Loop antenna

Miscellaneous

Power Requirements ..... AC 120 V, 60 Hz
Power Consumption ..... 710 W
Power Consumption in Standby mode ..... 0.65 W
AC Outlet
- SWITCHED ..... 100 W (0.8 A) MAX

Dimensions ..... 440 (W) × 203 (H) × 472 (D) mm
(17-5/16 (W) × 8 (H) × 18-9/16 (D) in.)
Weight (without package) ..... 29.3 kg (64 lb 6 oz)

Furnished Parts

FM wire Antenna 1
AC Power Cord 1
AM Loop Antenna 1
"AA" IEC LR6 batteries 4
Remote Control Unit 1
Remote Control Cable 1
Remote Control Stand 1
U-shaped connectors 2
Operating Instructions 1

NOTE:
Specifications and the design are subject to possible modifications without notice, due to improvements.

Manufactured under license from Dolby Laboratories. "Dolby", "Pro Logic" and the double-D symbol are trademarks of Dolby Laboratories.

"DTS" and "DTS Digital Surround" are trademarks of Digital Theater Systems, Inc. Manufactured under license from Digital Theater Systems, Inc.

Accessories (VSX-49TX)

FM wire antenna
(ADH7010)

AM loop antenna
(ATB7009)

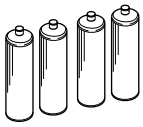

"AA" IEC LR6
batteries x 4

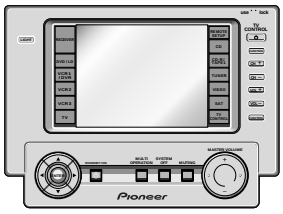

Remote control unit
(Remocon49 : AXD7295)

Touch pen
(AZA7350)

Cushion for
Remote x 4
(AXG7080)

Microphone
(APM7001)

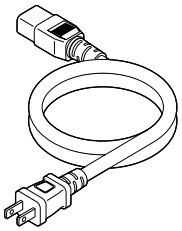

AC Power Cord
(ADG7052)

Accessories (VSX-47TX)

FM wire antenna
(ADH7010)

AM loop antenna
(ATB7009)

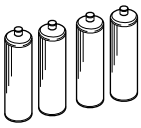

"AA" IEC LR6
batteries x 4

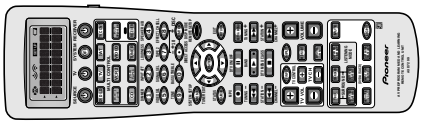

Remote control unit
(Remocon47 : AXD7299)
VSX-47TX

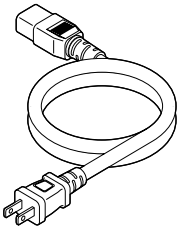

AC Power Cord
(ADG7052)

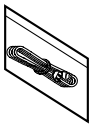

Remote Control
Cable
(ADE7083)

Remote Control
Stand
(AEB7243)