Service Manual

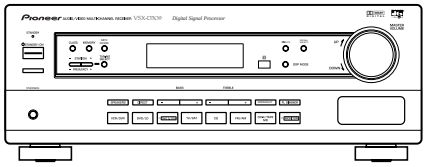

ORDER NO.
RRV2252

AUDIO/VIDEO MULTI-CHANNEL RECEIVER

VSX-D409
VSX-D309

THIS MANUAL IS APPLICABLE TO THE FOLLOWING MODEL(S) AND TYPE(S).

Type	Model		Power Requirement	Remarks
	VSX-D409	VSX-D309		
KUXJI	◯	◯	AC120V	
KCXJI	◯	◯	AC120V	

CONTENTS

1. SAFETY INFORMATION ····· 2
2. EXPLODED VIEWS AND PARTS LIST ····· 3
3. BLOCK DIAGRAM AND SCHEMATIC DIAGRAM ····· 8
4. PCB CONNECTION DIAGRAM ····· 26
5. PCB PARTS LIST ····· 39
6. ADJUSTMENT ····· 47
7. GENERAL INFORMATION ····· 48
   7.1 DISASSEMBLY ····· 48
   7.2 PARTS ····· 49
      7.2.1 IC ····· 49
      7.2.2 DISPLAY ····· 54
8. PANEL FACILITIES AND SPECIFICATIONS ····· 56

PIONEER CORPORATION 4-1, Meguro 1-chome, Meguro-ku, Tokyo 153-8654, Japan
PIONEER ELECTRONICS SERVICE, INC. P.O. Box 1760, Long Beach, CA 90801-1760, U.S.A.
PIONEER EUROPE N.V. Haven 1087, Keetberglaan 1, 9120 Melsele, Belgium
PIONEER ELECTRONICS ASIACENTRE PTE. LTD. 253 Alexandra Road, #04-01, Singapore 159936

Ⓒ PIONEER CORPORATION 2000

T – ZZK JAN. 2000 Printed in Japan

1. SAFETY INFORMATION

This service manual is intended for qualified service technicians ; it is not meant for the casual do-it-yourselfer. Qualified technicians have the necessary test equipment and tools, and have been trained to properly and safely repair complex products such as those covered by this manual.
Improperly performed repairs can adversely affect the safety and reliability of the product and may void the warranty. If you are not qualified to perform the repair of this product properly and safely, you should not risk trying to do so and refer the repair to a qualified service technician.

WARNING
This product contains lead in solder and certain electrical parts contain chemicals which are known to the state of California to cause cancer, birth defects or other reproductive harm.

Health & Safety Code Section 25249.6 – Proposition 65

NOTICE
(FOR CANADIAN MODEL ONLY)
Fuse symbols (fast operating fuse) and/or (slow operating fuse) on PCB indicate that replacement parts must be of identical designation.

REMARQUE
(POUR MODÈLE CANADIEN SEULEMENT)
Les symboles de fusible (fusible de type rapide) et/ou (fusible de type lent) sur CCI indiquent que les pièces de remplacement doivent avoir la même désignation.

(FOR USA MODEL ONLY)

1. SAFETY PRECAUTIONS

The following check should be performed for the continued protection of the customer and service technician.

LEAKAGE CURRENT CHECK

Measure leakage current to a known earth ground (water pipe, conduit, etc.) by connecting a leakage current tester such as Simpson Model 229-2 or equivalent between the earth ground and all exposed metal parts of the appliance (input/output terminals, screwheads, metal overlays, control shaft, etc.). Plug the AC line cord of the appliance directly into a 120V AC 60Hz outlet and turn the AC power switch on. Any current measured must not exceed 0.5mA.

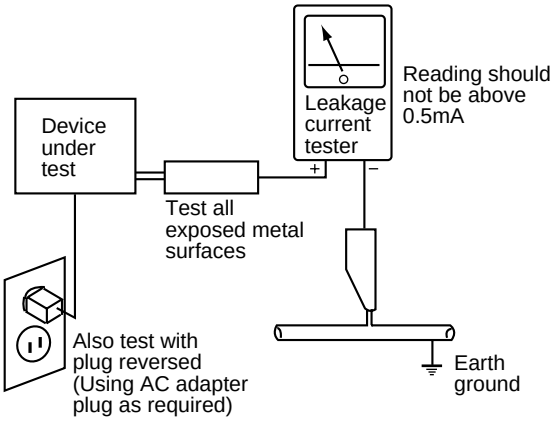

AC Leakage Test

ANY MEASUREMENTS NOT WITHIN THE LIMITS OUTLINED ABOVE ARE INDICATIVE OF A POTENTIAL SHOCK HAZARD AND MUST BE CORRECTED BEFORE RETURNING THE APPLIANCE TO THE CUSTOMER.

2. PRODUCT SAFETY NOTICE

Many electrical and mechanical parts in the appliance have special safety related characteristics. These are often not evident from visual inspection nor the protection afforded by them necessarily can be obtained by using replacement components rated for voltage, wattage, etc. Replacement parts which have these special safety characteristics are identified in this Service Manual.

Electrical components having such features are identified by marking with a ⚠ on the schematics and on the parts list in this Service Manual.
The use of a substitute replacement component which does not have the same safety characteristics as the PIONEER recommended replacement one, shown in the parts list in this Service Manual, may create shock, fire, or other hazards.

Product Safety is continuously under review and new instructions are issued from time to time. For the latest information, always consult the current PIONEER Service Manual. A subscription to, or additional copies of, PIONEER Service Manual may be obtained at a nominal charge from PIONEER.

2. EXPLODED VIEWS AND PARTS LIST

NOTES:
- *Parts marked by "NSP" are generally unavailable because they are not in our Master Spare Parts List.*
- *The ⚠ mark found on some component parts indicates the importance of the safety factor of the part. Therefore, when replacing, be sure to use parts of identical designation.*
- *Screws adjacent to ▼ mark on the product are used for disassembly.*

2.1 PACKING

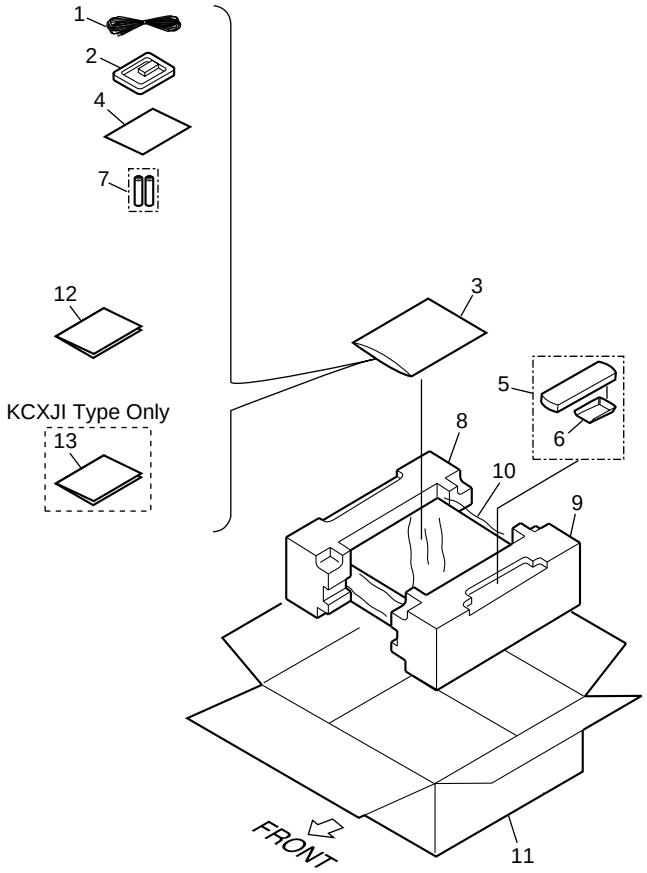

(1) PACKING PARTS LIST

Mark	No.	Description	Part No.
	1	FM Wire Antenna	ADH7004
	2	AM Loop Antenna	ATB7009
	3	Polyethylene Bag (0.03 × 230 × 340)	Z21-038
NSP	4	Warranty Card	See Contrast table (2)
	5	Remote Control Unit	AXD7246
	6	Battery Cover	AZA7378
NSP	7	Dry Cell Battery (R6P, AA)	VEM-013
	8	Left Pad	AHA7275
	9	Right Pad	AHA7276
	10	Packing Sheet	AHG7069
	11	Packing Case	See Contrast table (2)
	12	Operating Instructions (English)	See Contrast table (2)
	13	Operating Instructions (French)	See Contrast table (2)

(2) CONTRAST TABLE

VSX-D409/KUXJI, KCXJI, VSX-D309/KUXJI and KCXJI are constructed the same except for the following :

Mark	No.	Symbol and Description	Part No.				Remarks
			VSX-D409 /KUXJI	VSX-D409 /KCXJI	VSX-D309 /KUXJI	VSX-D309 /KCXJI	
NSP	4	Warranty Card	ARY7023	ARY7024	ARY7023	ARY7024	
	11	Packing Case	AHD7823	AHD7823	AHD7822	AHD7822	
	12	Operating Instructions (English)	ARB7219	ARB7219	ARB7214	ARB7214	
	13	Operating Instructions (French)	Not used	ARC7289	Not used	ARC7272	

2.2 EXTERIOR SECTION

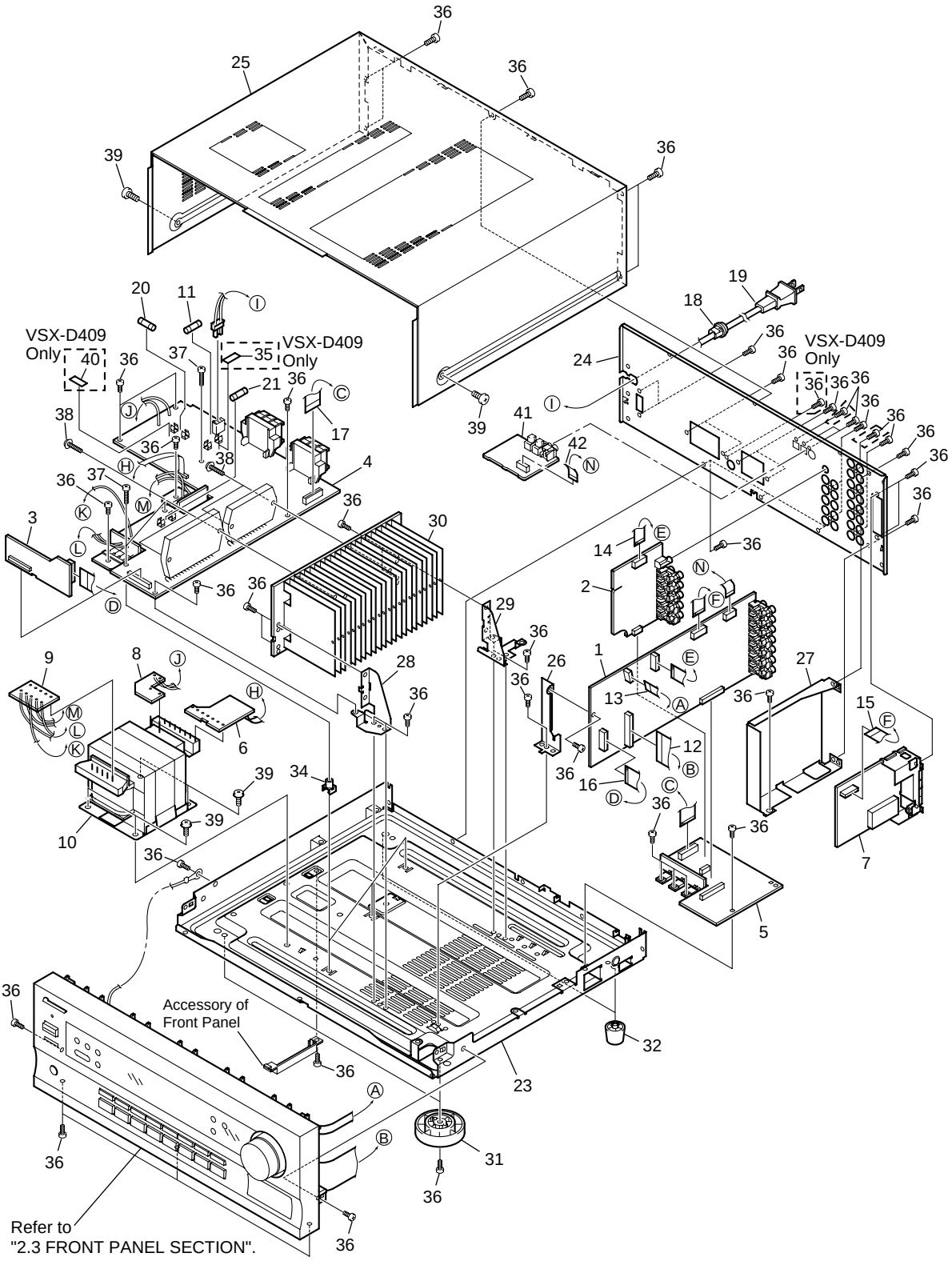

(1) EXTERIOR SECTION PARTS LIST

Mark	No.	Description	Part No.
	1	D.D & INPUT Assy	See Contrast table (2)
	2	VIDEO&6CH IN Assy	AWX7474
NSP	3	AMP INPUT Assy	AWX7382
	4	AMP&PRIMARY Assy	See Contrast table (2)
	5	REGULATOR Assy	See Contrast table (2)
	6	TRANS 2 Assy	AWX7468
	7	FM/AM TUNER Unit	AXX7046
NSP	8	TRANS 1 Assy	AWX7390
NSP	9	TRANS 3 Assy	AWX7392
⚠	10	Power Transformer (AC120V)	See Contrast table (2)
⚠	11	Fuse (FU1)	See Contrast table (2)
	12	FFC (J31 : 32P/180 BD 60V)	ADD7222
		(D.D & INPUT CN102 ↔ FRONT CN402)	
	13	FFC (J32 : 19P/200 BD 60V)	ADD7221
		(D.D & INPUT CN103 ↔ FRONT CN401)	
	14	FFC (J33 : 13P/200 BD 60V)	ADD7220
		(D.D & INPUT CN104 ↔ VIDEO&6CH IN CN303)	
	15	FFC (J34 : 13P/80 BD 60V)	ADD7189
		(D.D & INPUT CN105 ↔ FM/AM TUNER CN1)	
	16	FFC (J35 : 17P/90 BD 60V)	ADD7219
		(D.D & INPUT CN106 ↔ AMP INPUT CN290)	
	17	FFC (J36 : 22P/80 BD 60V)	ADD7224
		(REGULATOR CN801 ↔ AMP&PRIMARY CN53)	
	18	Strain Relief	CM-22C
⚠	19	AC Power Cord	ADG7024
⚠	20	Fuse (FU2)	See Contrast table (2)
⚠	21	Fuse (FU701 : 10A)	REK1087
	22	• • • • • •	
NSP	23	Under Base 409	ANA7094
	24	Rear Panel	See Contrast table (2)
	25	Bonnet Case	AZN7818
	26	PCB Angle	ANG7253
	27	Shield R3	ANG7277
	28	Heat Sink Angle F	ANG7251
	29	Heat Sink Angle R	ANG7252
NSP	30	Heat Sink 0.4	See Contrast table (2)
	31	Insulator	AMR7198
	32	Foot Assy	REC1263
	33	• • • • • •	
	34	PCB Mold	AMR2533
NSP	35	Fuse Card	See Contrast table (2)
	36	Screw	BBZ30P080FMC
	37	Screw	BBZ30P200FMC
	38	Screw	ABA7043
	39	Screw	FBT40P080FZK
NSP	40	Fuse Card	See Contrast table (2)
	41	DIGITAL IN Assy	See Contrast table (2)
	42	FFC (J37 : 6P/150 BD 60V)	ADD7223
		(D.D & INPUT CN1501 ↔ DIGITAL IN CN1901)	

(2) CONTRAST TABLE

VSX-D409/KUXJI, KCXJI, VSX-D309/KUXJI and KCXJI are constructed the same except for the following :

Mark	No.	Symbol and Description	Part No.				Remarks
			VSX-D409 /KUXJI	VSX-D409 /KCXJI	VSX-D309 /KUXJI	VSX-D309 /KCXJI	
	1	D.D & INPUT Assy	AWX7649	AWX7649	AWX7494	AWX7494	
	4	AMP&PRIMARY Assy	AWX7480	AWX7480	AWX7506	AWX7506	
	5	REGULATOR Assy	AWX7467	AWX7467	AWX7493	AWX7493	
⚠	10	Power Transformer (AC120V)	ATS7264	ATS7264	ATS7263	ATS7263	
⚠	11	Fuse (FU1 : 10A)	REK1087	REK1087	Not used	Not used	
⚠	11	Fuse (FU1 : 6.3A)	Not used	Not used	REK1069	REK1069	
⚠	20	Fuse (FU2 : 8A)	REK1086	REK1086	Not used	Not used	
⚠	20	Fuse (FU2 : 5A)	Not used	Not used	REK1067	REK1067	
	24	Rear Panel	ANC7887	ANC7886	ANC7884	ANC7885	
NSP	30	Heat Sink 0.4	ANH7109	ANH7109	Not used	Not used	
NSP	30	Heat Sink 0.4*50	Not used	Not used	ANH7123	ANH7123	
NSP	35	Fuse Card	AXX7096	AXX7096	Not used	Not used	
NSP	40	Fuse Card	AXX2332	AXX2332	Not used	Not used	
	41	DIGITAL IN Assy	AWX7505	AWX7505	AWX7476	AWX7476	

2.3 FRONT PANEL SECTION

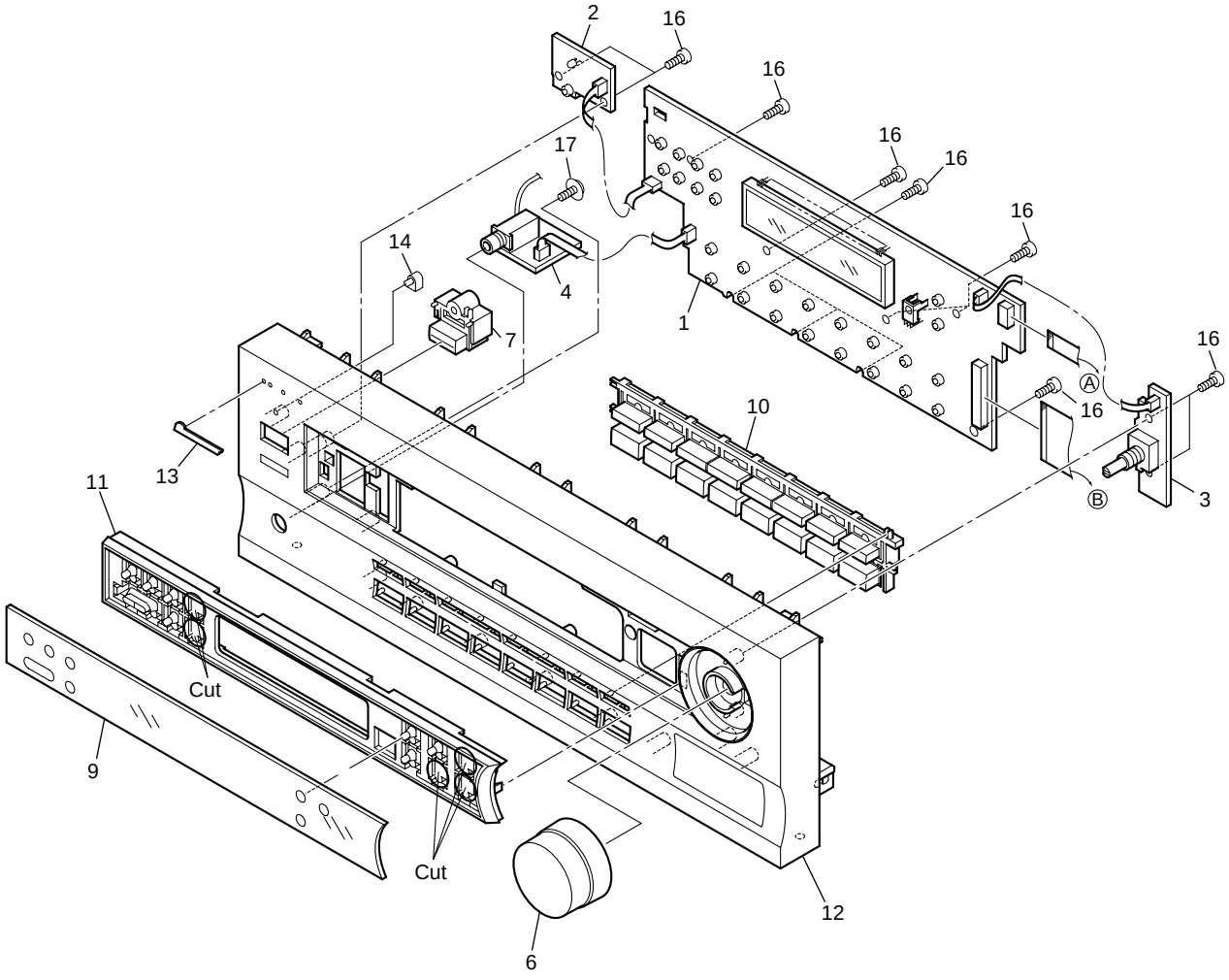

(1) FRONT PANEL SECTION PARTS LIST

Mark	No.	Description	Part No.
	1	FRONT Assy	See Contrast table (2)
	2	POWER SW Assy	AWX7385
NSP	3	R. ENCODER Assy	AWX7386
NSP	4	H.P. Assy	AWX7556
	5	• • • • • •	
	6	Volume Knob	AAB7179
	7	Power Button	AAD7440
	8	• • • • • •	
	9	Window	AAK7719
	10	F Button	See Contrast table (2)
	11	Sub Panel	AAD7552
	12	F Panel	See Contrast table (2)
	13	Name Plate	PAM1776
	14	LED Lens	PNW2019
	15	• • • • • •	
	16	Screw	PPZ30P080FMC
	17	Screw	ABA7009

(2) CONTRAST TABLE

VSX-D409/KUXJI, KCXJI, VSX-D309/KUXJI and KCXJI are constructed the same except for the following :

Mark	No.	Symbol and Description	Part No.				Remarks
			VSX-D409 /KUXJI	VSX-D409 /KCXJI	VSX-D309 /KUXJI	VSX-D309 /KCXJI	
	1	FRONT Assy	AWX7479	AWX7479	AWX7475	AWX7475	
	10	F Button	AAD7562	AAD7562	AAD7561	AAD7561	
	12	F Panel	AMB7663	AMB7663	AMB7661	AMB7661	

3. BLOCK DIAGRAM AND SCHEMATIC DIAGRAM

3.1 BLOCK DIAGRAM

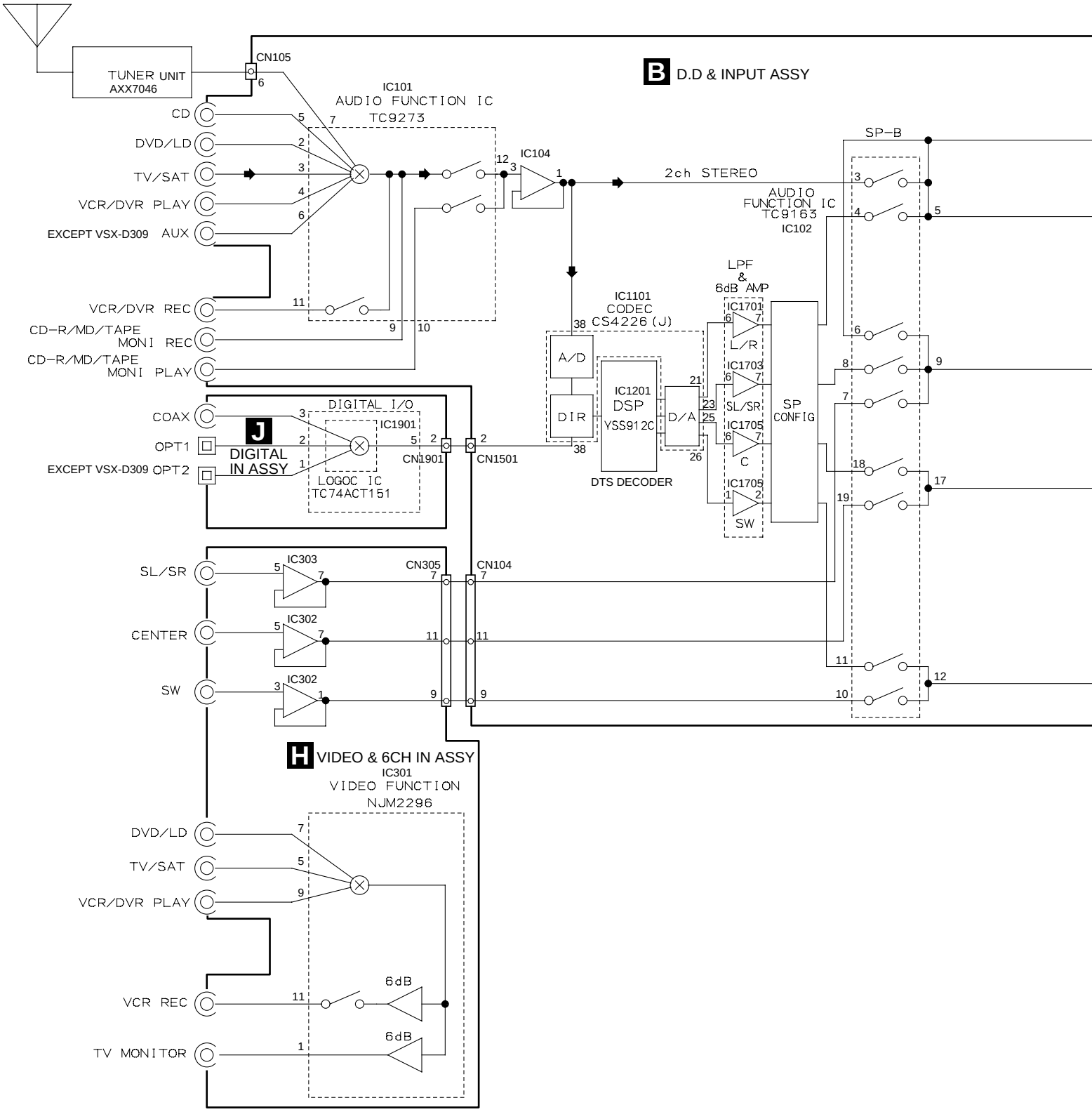

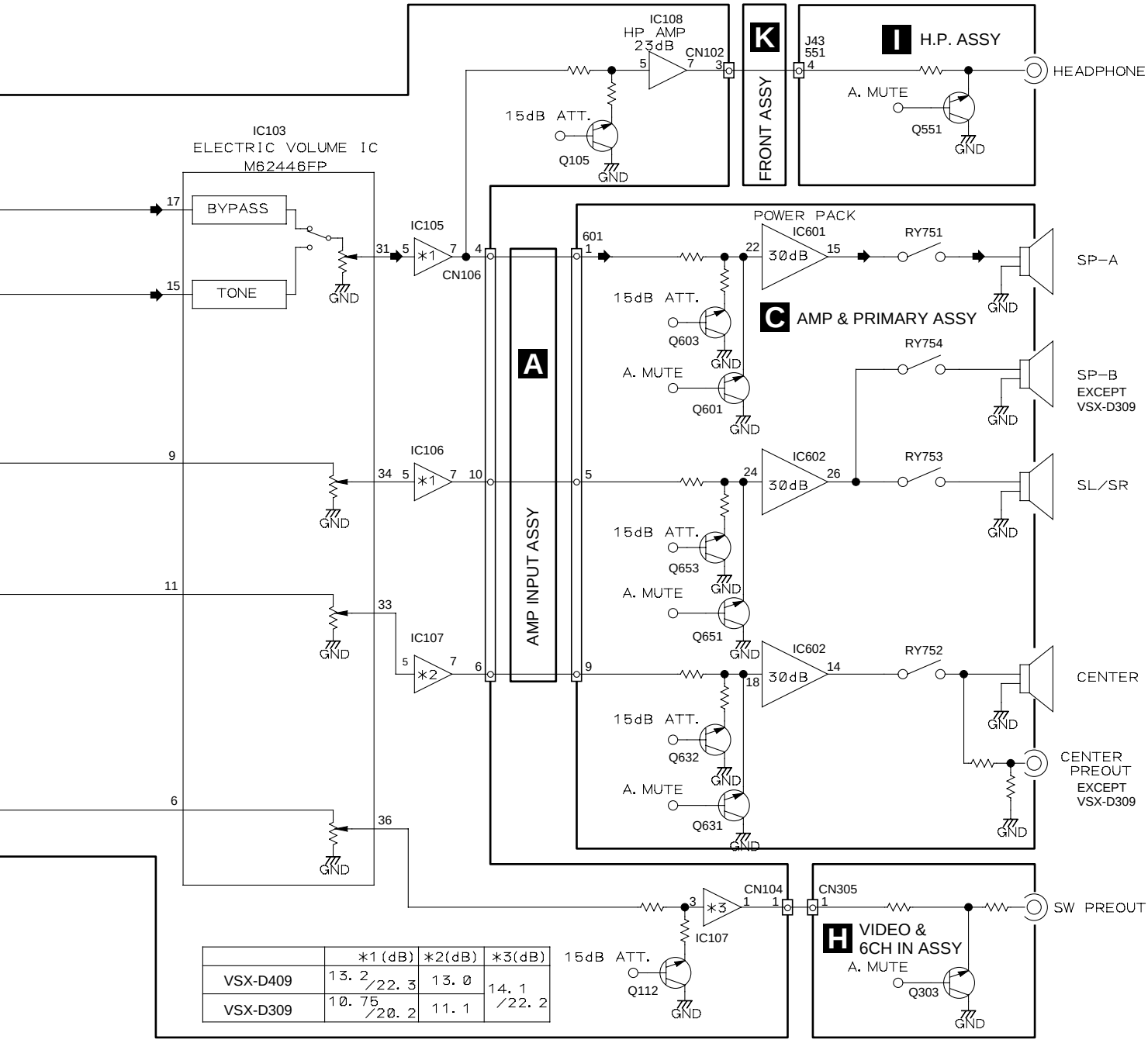

	*1(dB)	*2(dB)	*3(dB)
VSX-D409	13.2/22.3	13.0	14.1/22.2
VSX-D309	10.75/20.2	11.1	

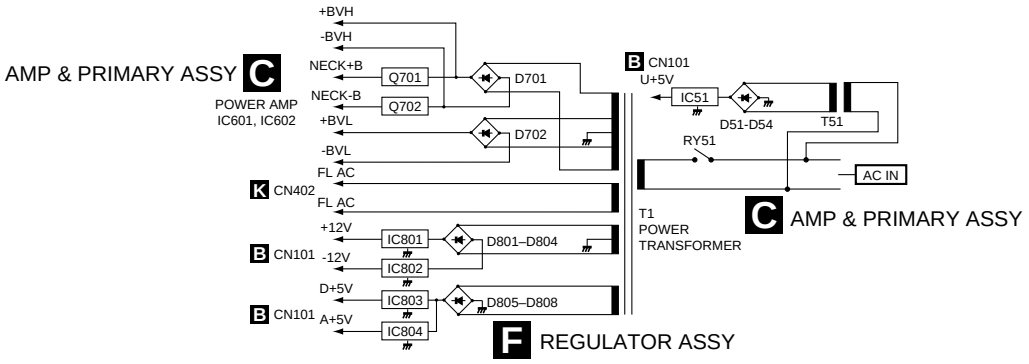

3.2 OVERALL WIRING CONNECTION DIAGRAM and AMP INPUT ASSY

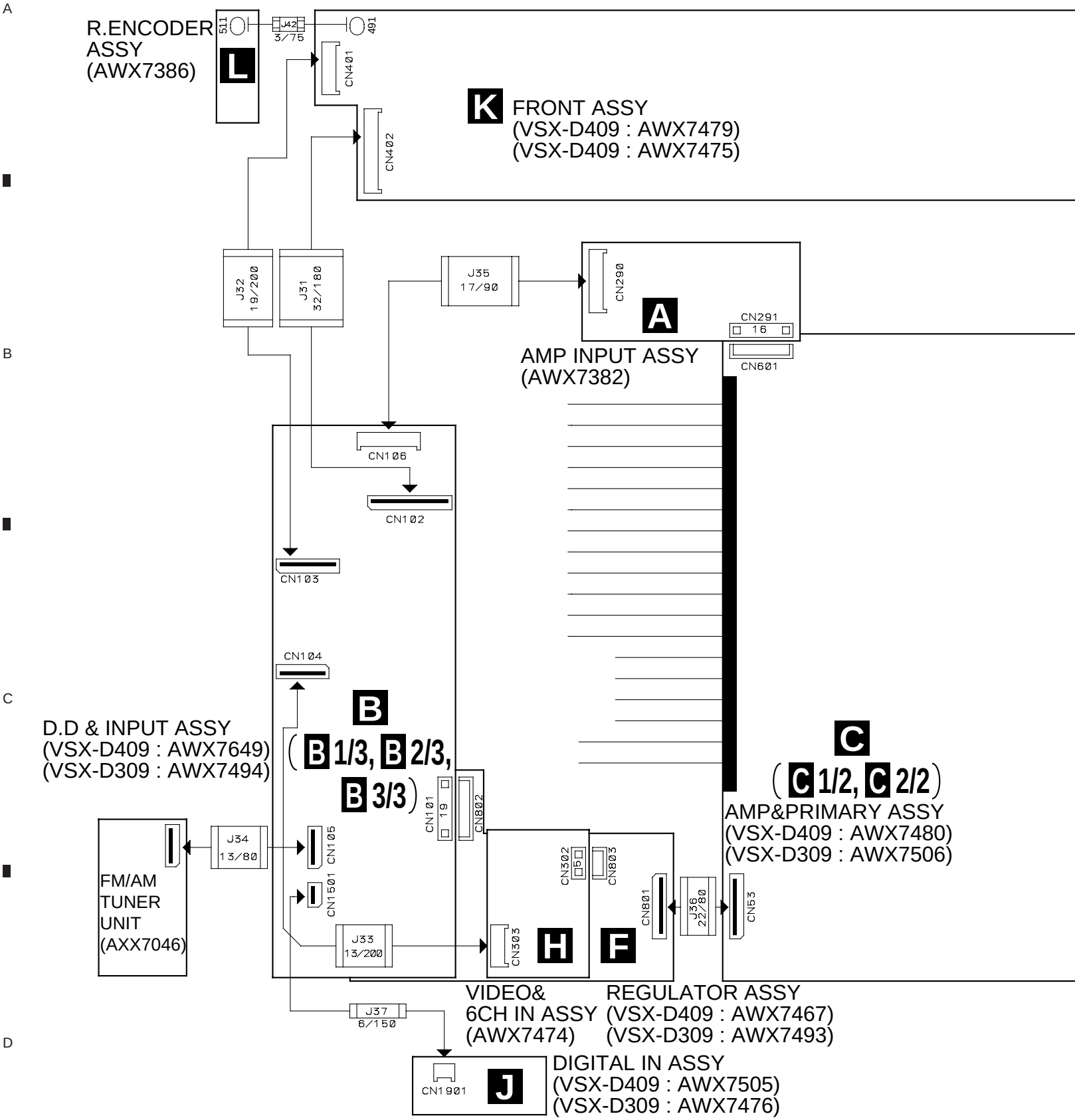

Note : When ordering service parts, be sure to refer to "EXPLODED VIEWS and PARTS LIST" or "PCB PARTS LIST".

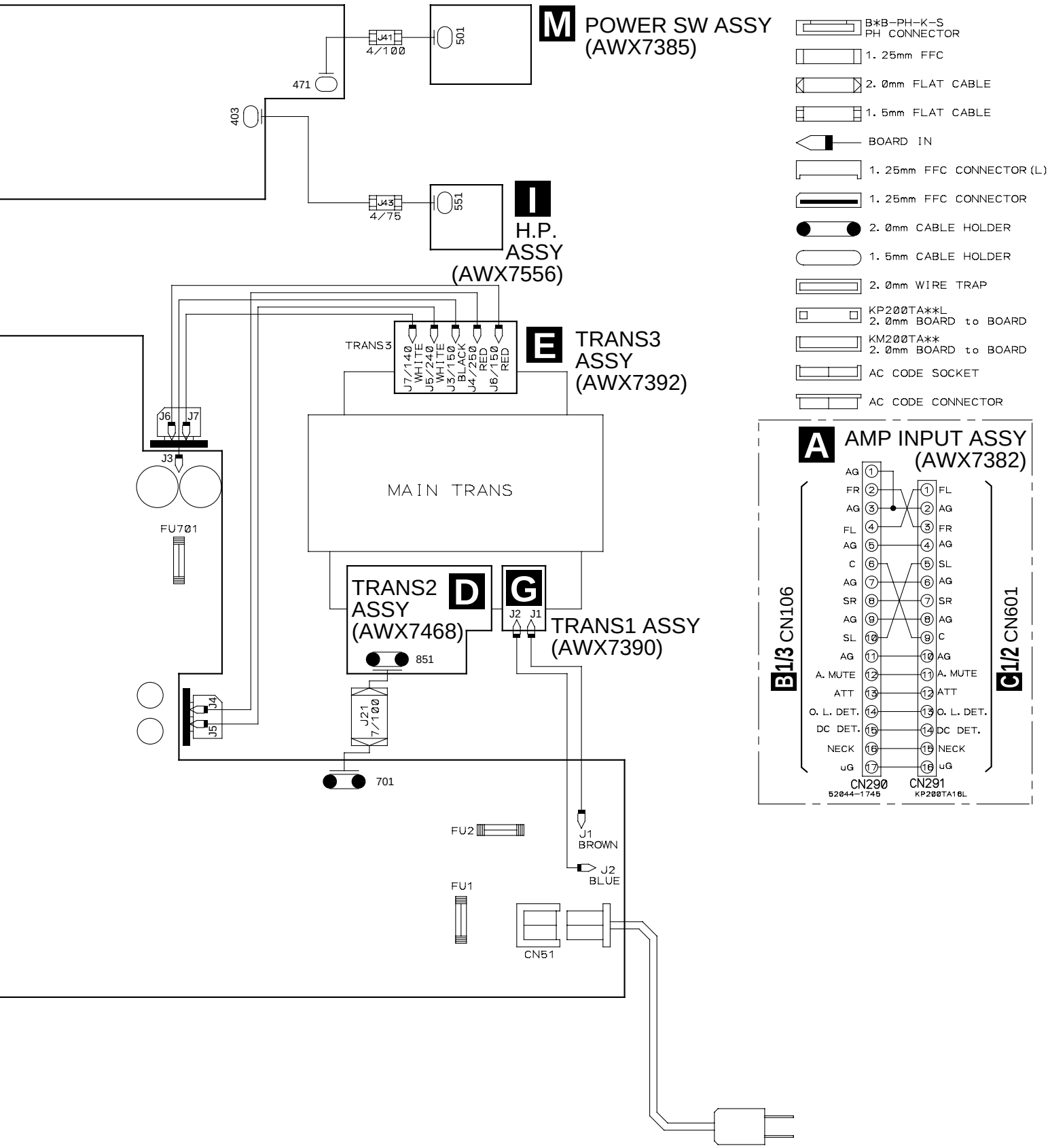

3.3 D.D & INPUT (1/3) ASSY

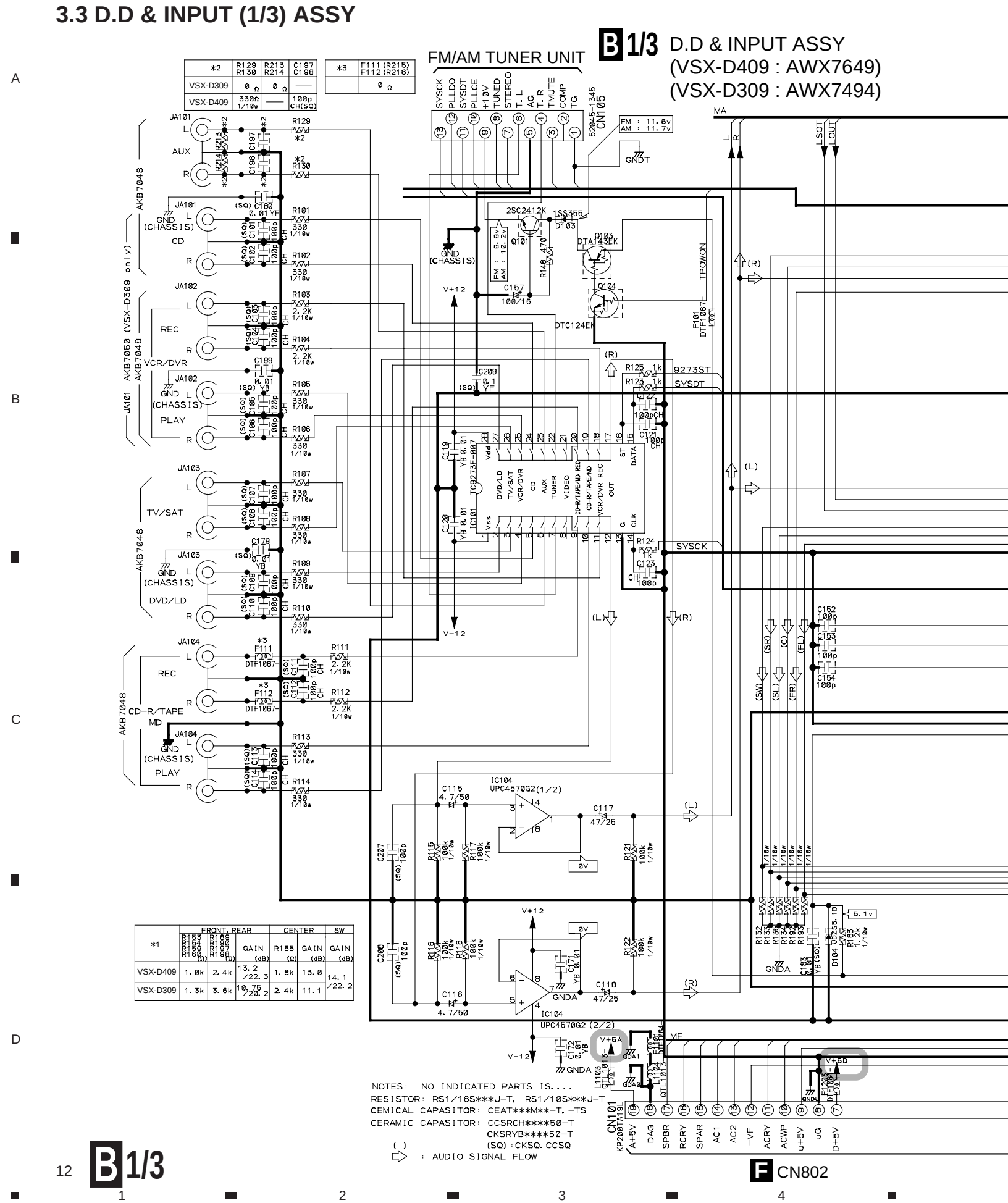

*1	FRONT, REAR R101 R102 R103 R104 R105 R106 R107 R108 R109 R110 R111 R112 R113 R114 (Ω)	FRONT, REAR R129 R130 R213 R214 R197 R198 (Ω)	FRONT, REAR GAIN (dB)	CENTER R165 (Ω)	CENTER GAIN (dB)	SW GAIN (dB)
VSX-D409	1.0k	2.4k	13.2 /22.3	1.8k	13.0	14.1 /22.2
VSX-D309	1.3k	3.6k	10.75 /20.2	2.4k	11.1	

*2	R129 R130	R213 R214	C197 C198
VSX-D309	0 Ω	0 Ω	—
VSX-D409	330Ω 1/10w	—	100p CH(SQ)

*3	F111 (R215) F112 (R216)
	0 Ω

F CN802

: The power supply is shown with the marked box.

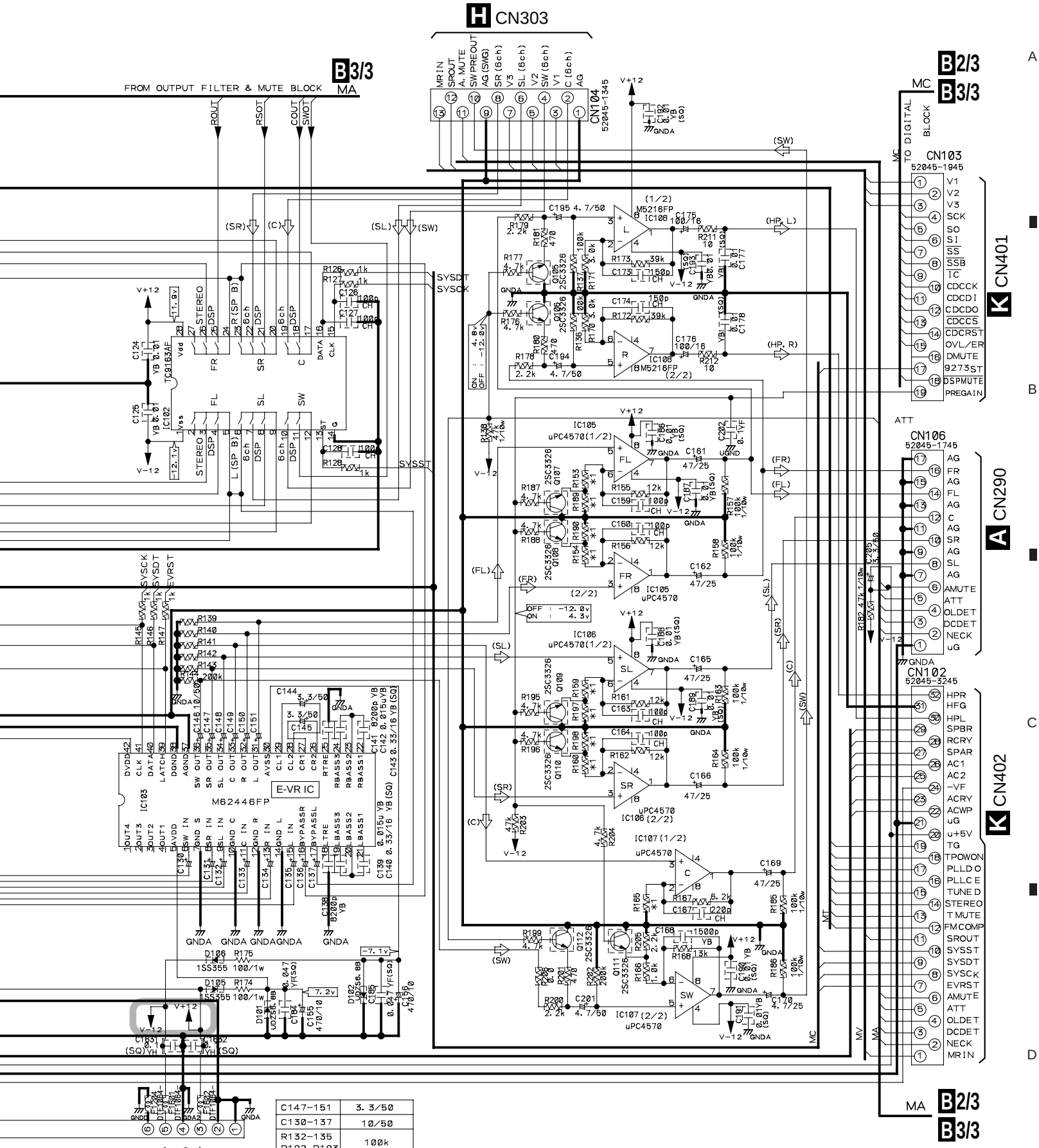

C147–151	3. 3/50
C130–137	10/50
R132–135 R192, R193	100k
R139–143	100k 1/10w

3.4 D.D & INPUT ASSY (2/3)

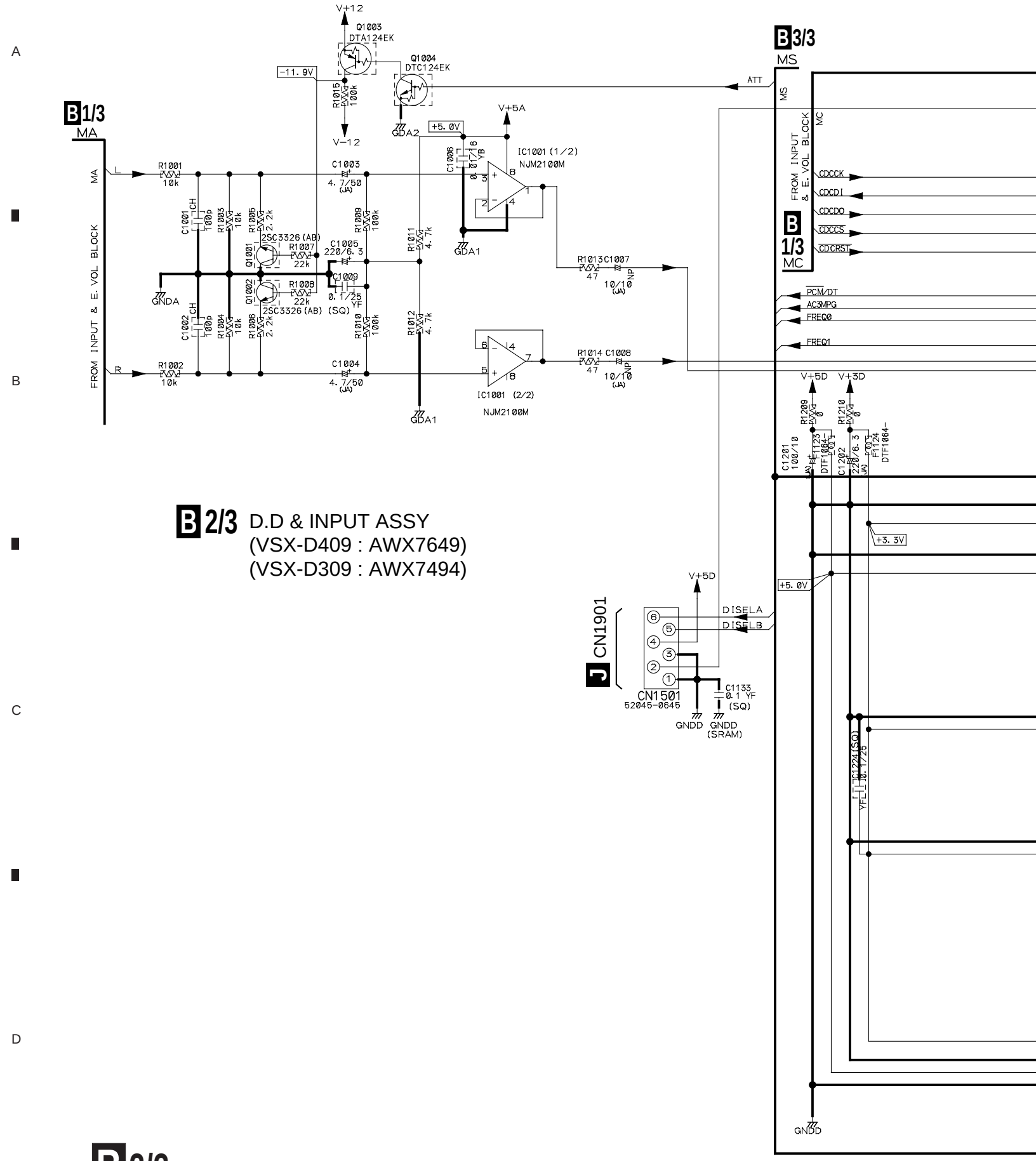

B 2/3 D.D & INPUT ASSY
(VSX-D409 : AWX7649)
(VSX-D309 : AWX7494)

: The power supply is shown with the marked box.

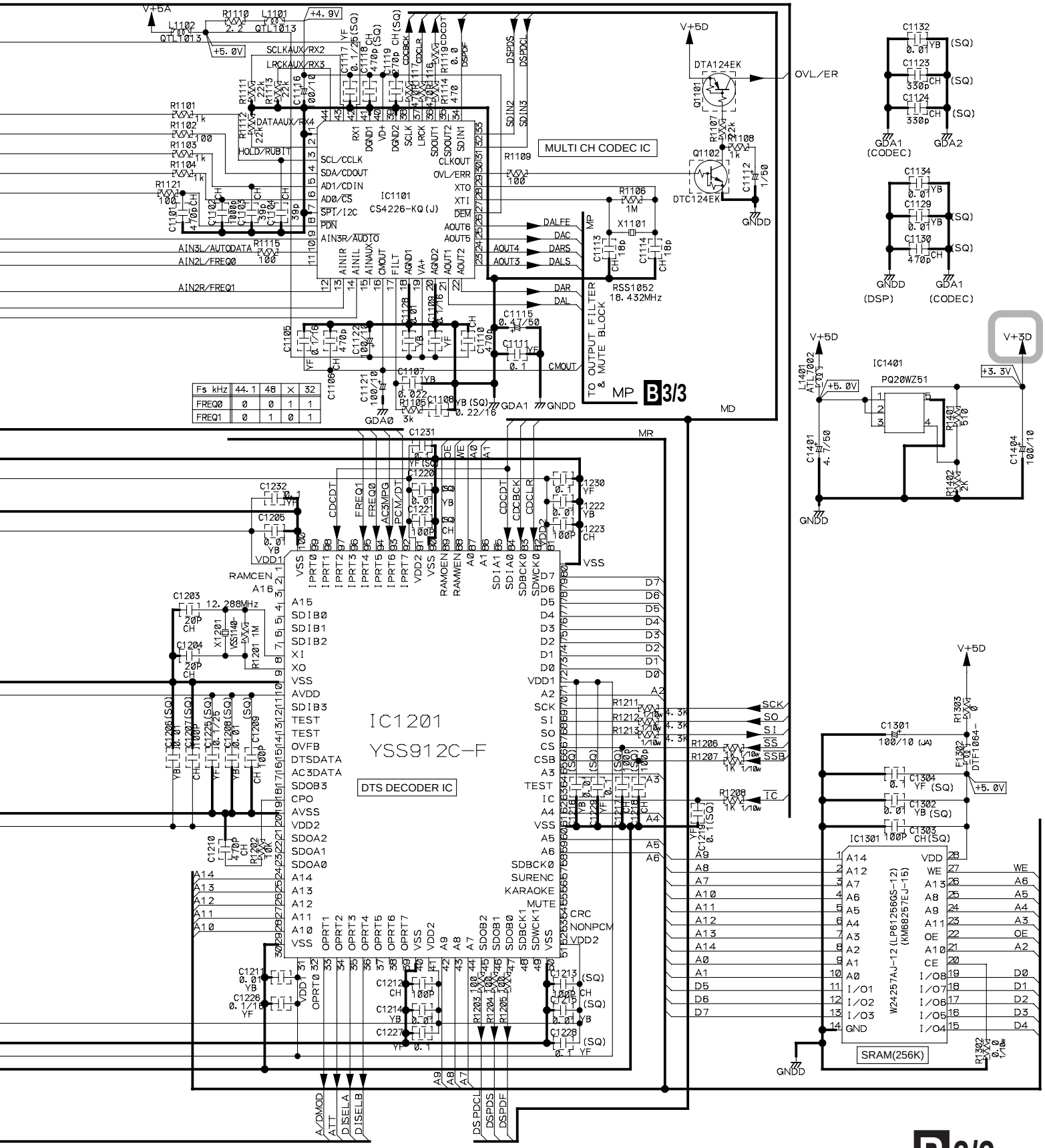

Fs kHz	44.1	48	×	32
FREQ0	0	0	1	1
FREQ1	0	1	0	1

3.5 D.D & INPUT ASSY (3/3)

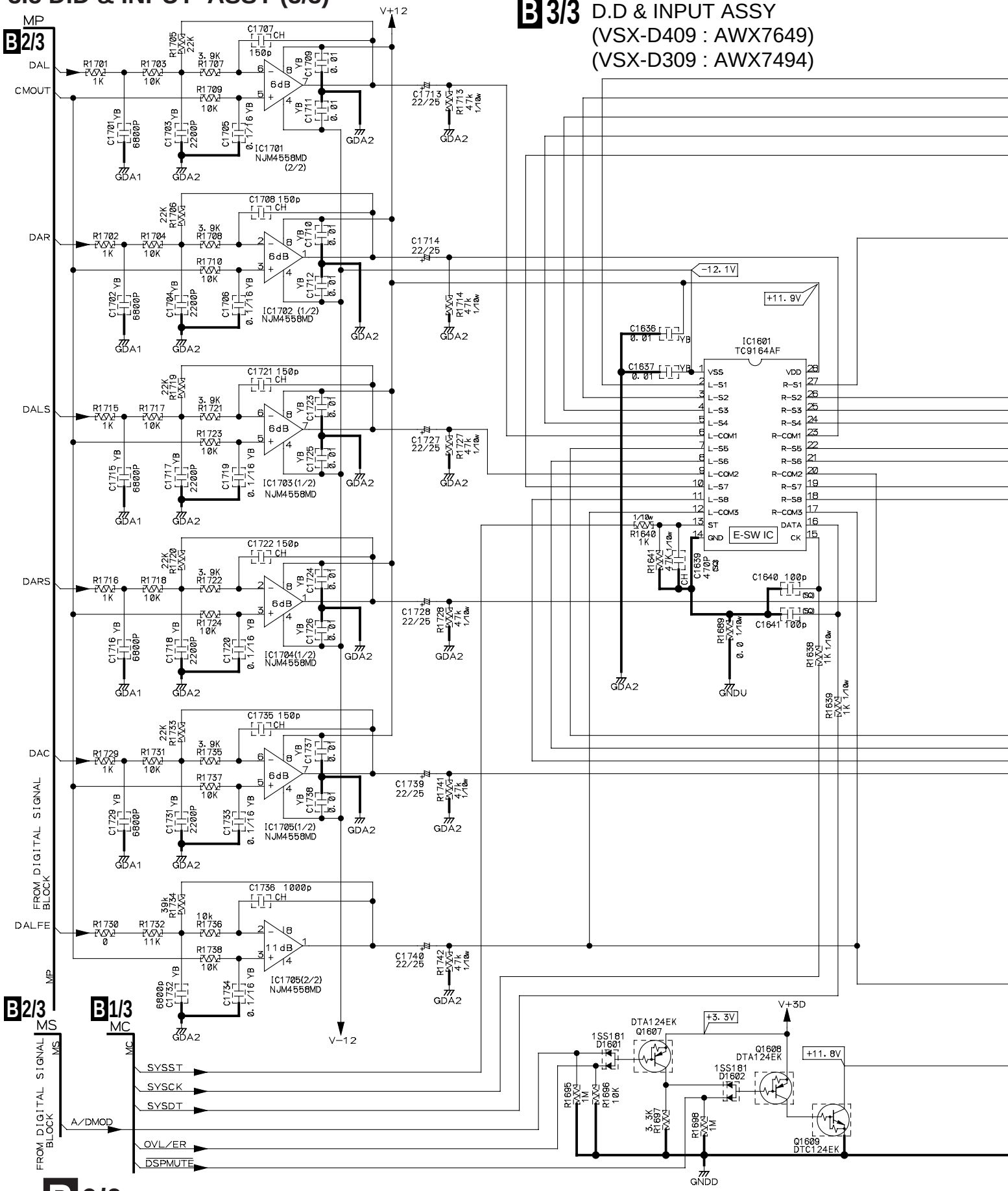

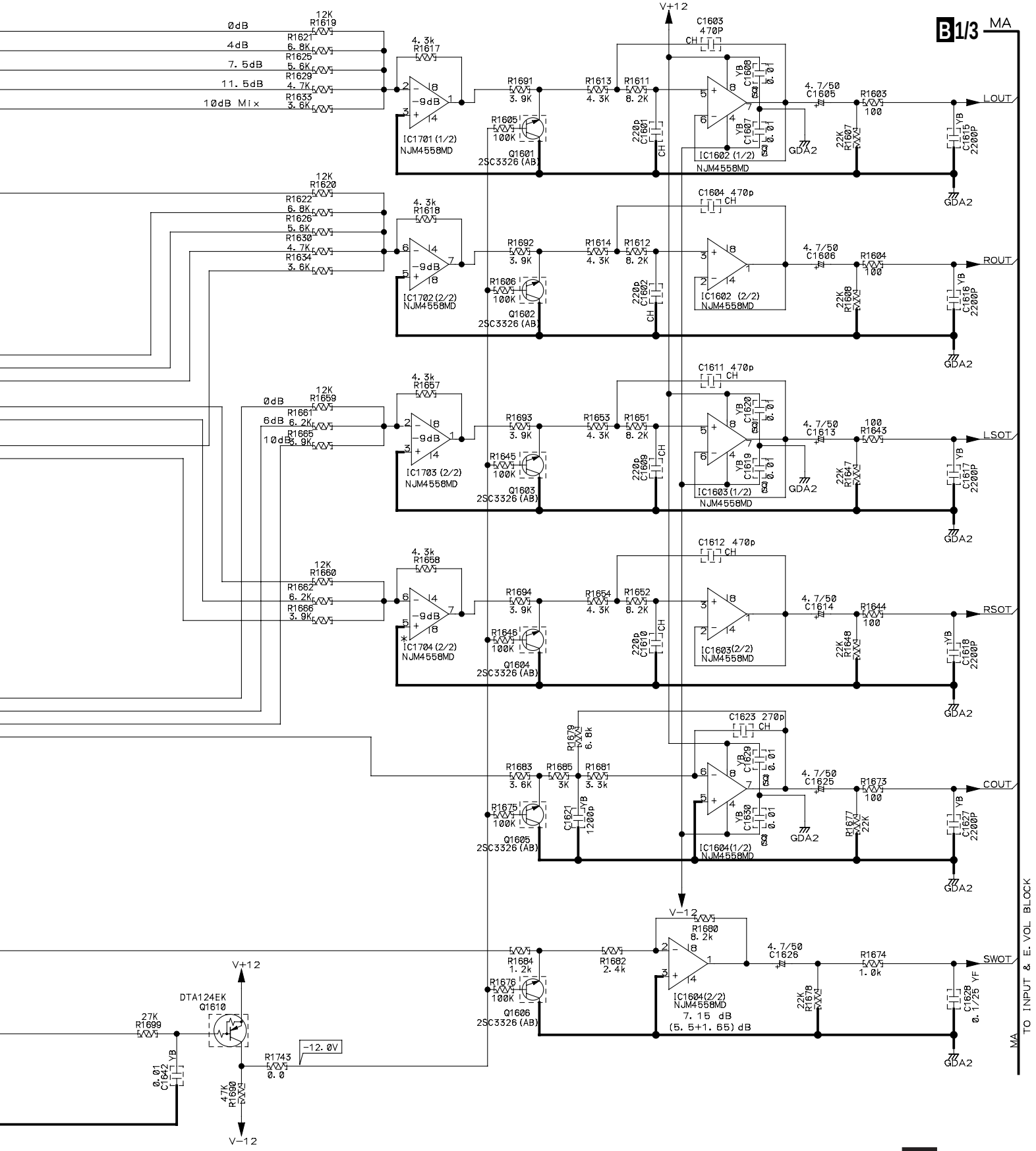
B1/3 MA
A
B
C
D
0dB
4dB
7.5dB
11.5dB
10dB Mix
12K R1619
R1621 6.8K
R1625 5.6K
R1629 4.7K
R1633 3.6K
4.3k R1617
IC1701 (1/2) NJM4558MD
R1691 3.9K
R1605 100K
Q1601 2SC3326 (AB)
R1613 4.3K
R1611 8.2K
220p C1601
C1603 470P
C1603 0.01
C1607 0.01
IC1602 (1/2) NJM4558MD
4.7/50 C1605
R1603 100
22K R1607
C1615 2200P
LOUT
GDA2
V+12
CH
YB
12K R1620
R1622 6.8K
R1626 5.6K
R1630 4.7K
R1634 3.6K
4.3k R1618
IC1702 (2/2) NJM4558MD
R1692 3.9K
R1606 100K
Q1602 2SC3326 (AB)
R1614 4.3K
R1612 8.2K
220p C1602
C1604 470p
IC1602 (2/2) NJM4558MD
4.7/50 C1606
R1604 100
22K R1608
C1616 2200P
ROUT
0dB
6dB
10dB
12K R1659
R1661 6.2K
R1665 3.9K
4.3k R1657
IC1703 (2/2) NJM4558MD
R1693 3.9K
R1645 100K
Q1603 2SC3326 (AB)
R1653 4.3K
R1651 8.2K
220p C1609
C1611 470p
C1620 0.01
C1619 0.01
IC1603(1/2) NJM4558MD
4.7/50 C1613
100 R1643
22K R1647
C1617 2200P
LSOT
12K R1660
R1662 6.2K
R1666 3.9K
4.3k R1658
IC1704 (2/2) NJM4558MD
R1694 3.9K
R1646 100K
Q1604 2SC3326 (AB)
R1654 4.3K
R1652 8.2K
220p C1610
C1612 470p
IC1603(2/2) NJM4558MD
4.7/50 C1614
R1644 100
22K R1648
C1618 2200P
RSOT
C1623 270p
R1679 6.8k
R1683 3.6K
R1685 3K
R1681 3.3k
R1675 100K
Q1605 2SC3326 (AB)
C1621 1200p
C1629 0.01
C1630 0.01
IC1604(1/2) NJM4558MD
4.7/50 C1625
R1673 100
R1677 22K
C1627 2200P
COUT
V-12
R1680 6.2k
R1684 1.2k
R1676 100K
Q1606 2SC3326 (AB)
R1682 2.4k
IC1604(2/2) NJM4558MD
7.15 dB
(5.5+1.65) dB
4.7/50 C1626
R1674 1.0k
22K R1678
C1628 0.1/25 YF
SWOT
TO INPUT & E.VOL BLOCK
MA
V+12
DTA124EK Q1610
27K R1699
0.01 C1642
R1743 0.0
-12.0V
47K R1690
V-12

3.6 AMP&PRIMARY (1/2), TRANS2 and TRANS3 ASSYS

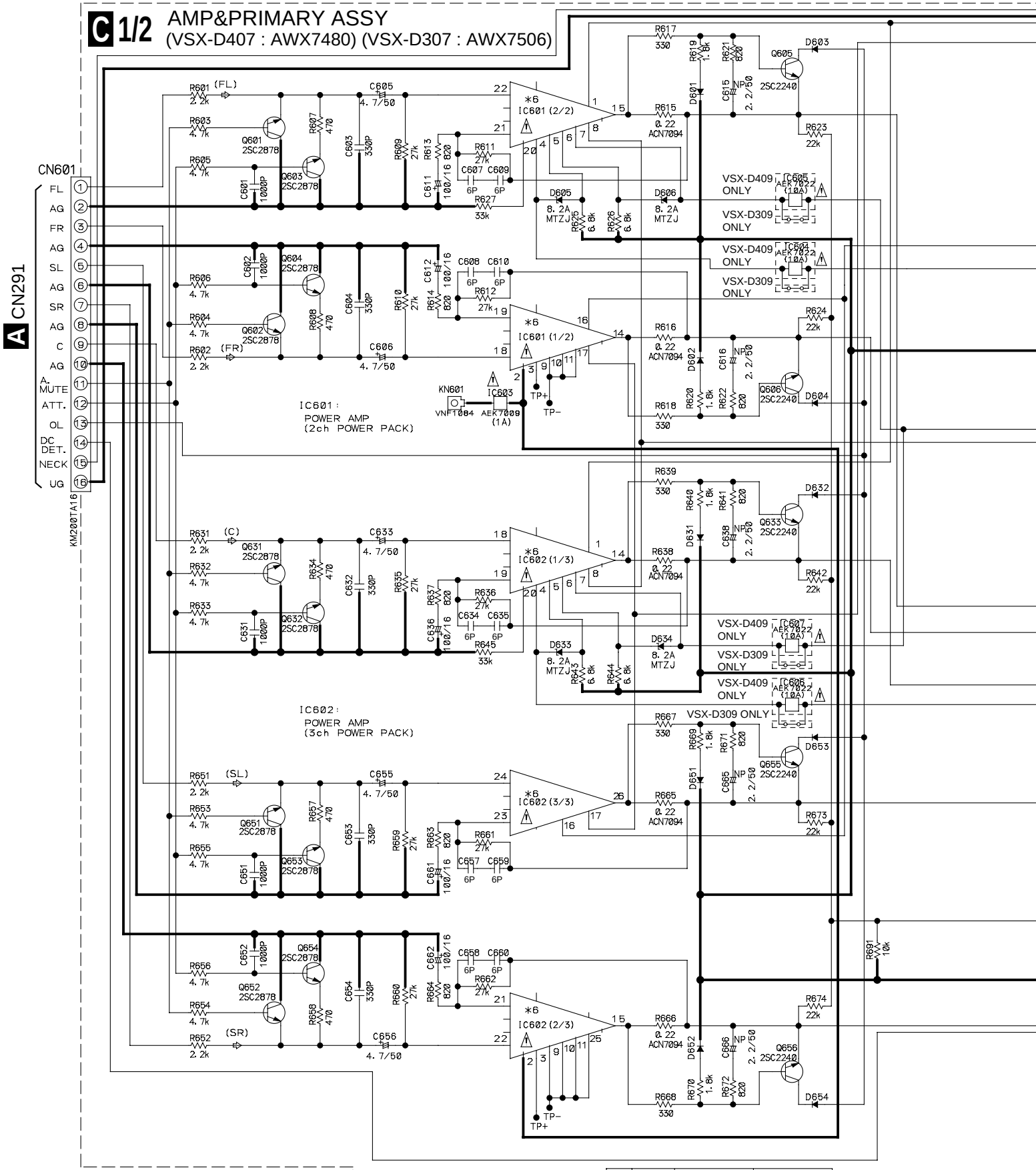

*4	R751, 752, 755, 761, 762	100 1/4W
*5	C751, 752, 755, 761, 762	0.1 YA

*6		VSX-D309	VSX-D409
	IC601	PAC012A	PAC010A
	IC602	PAC013A	PAC011A

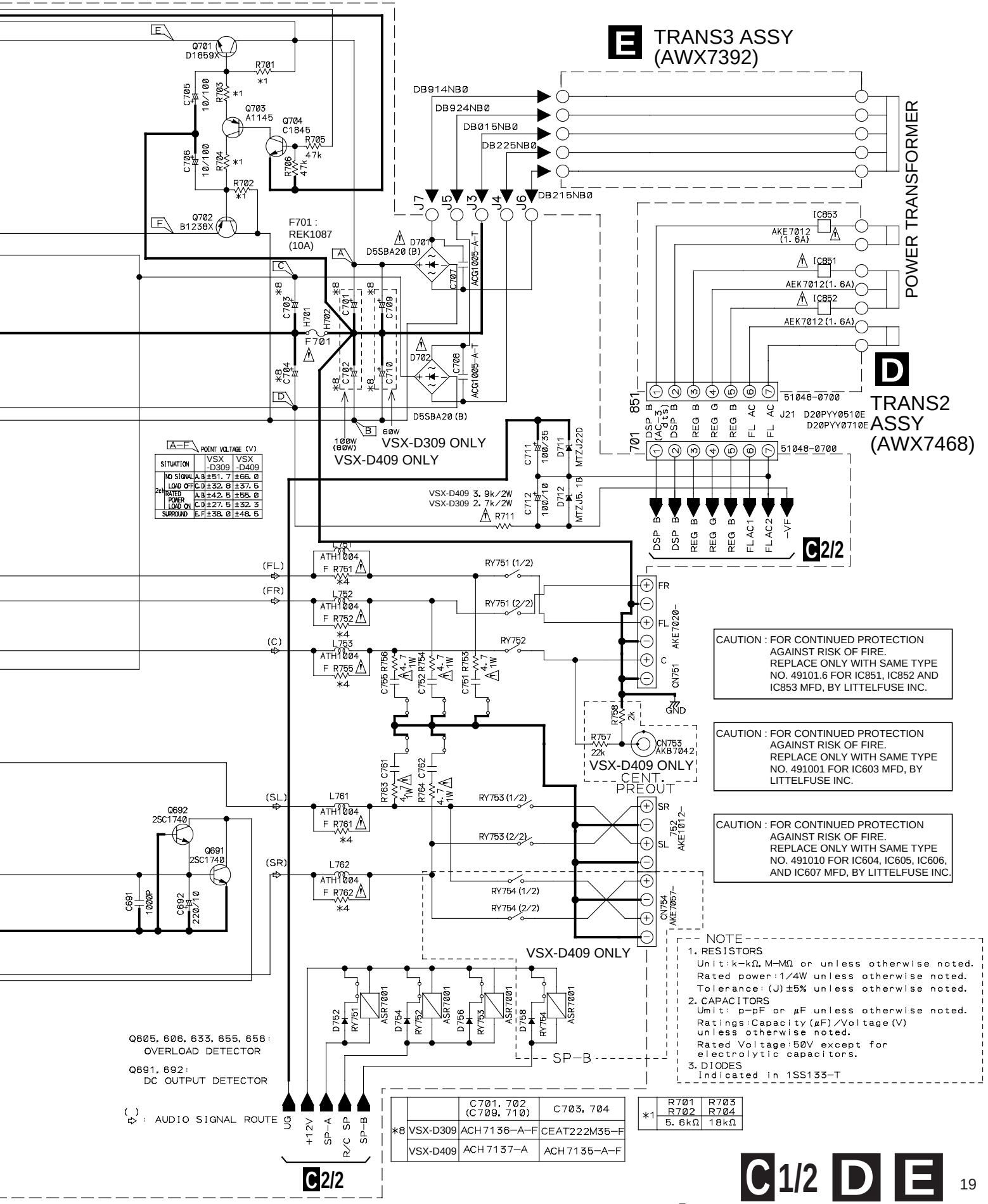

		C701, 702 (C709, 710)	C703, 704
*8	VSX-D309	ACH7136-A-F	CEAT222M35-F
	VSX-D409	ACH7137-A	ACH7135-A-F

*1	R701 R702	R703 R704
	5.6kΩ	18kΩ

3.7 AMP&PRIMARY (2/2), REGULATOR and TRANS1 ASSYS

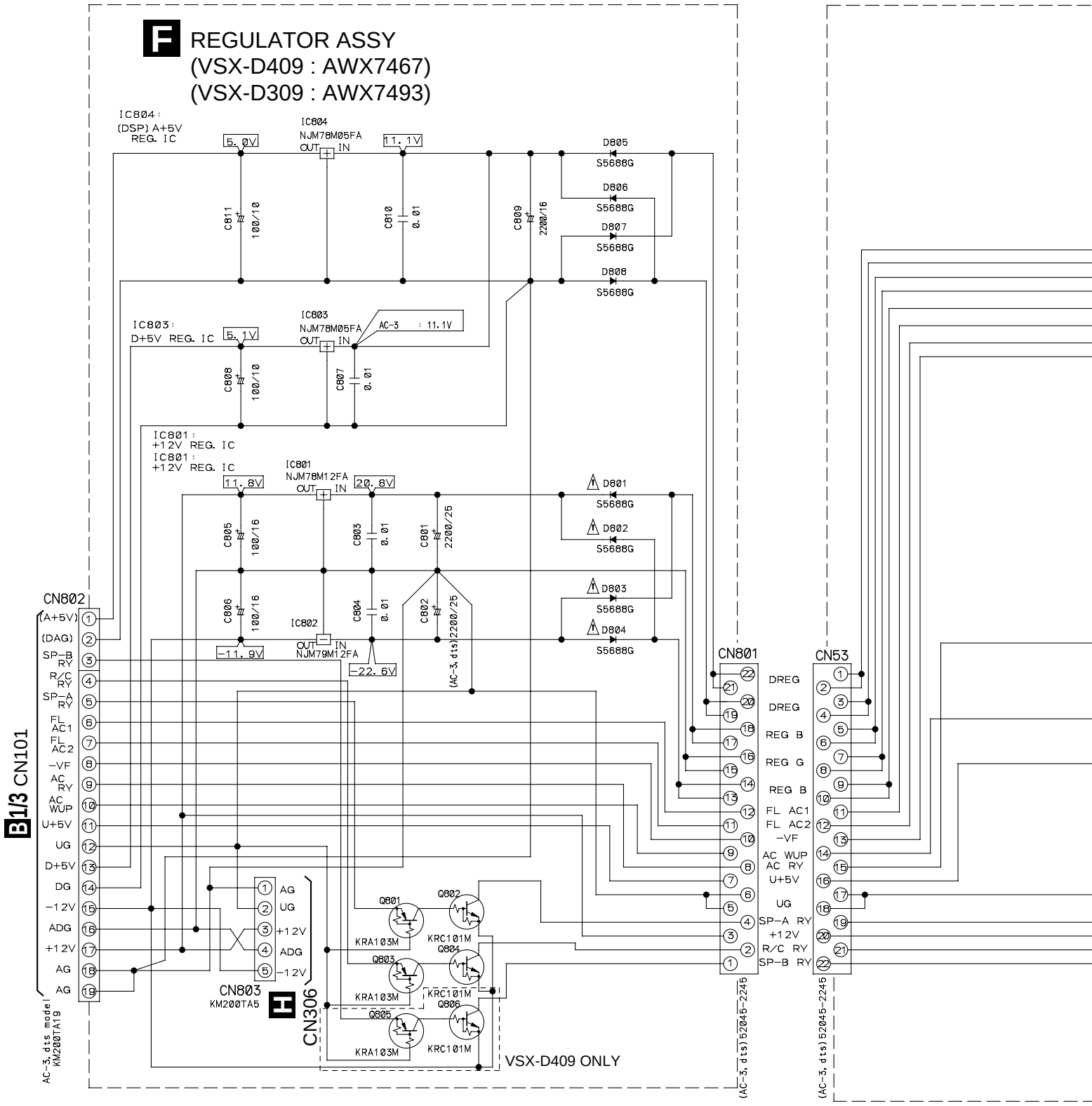

A

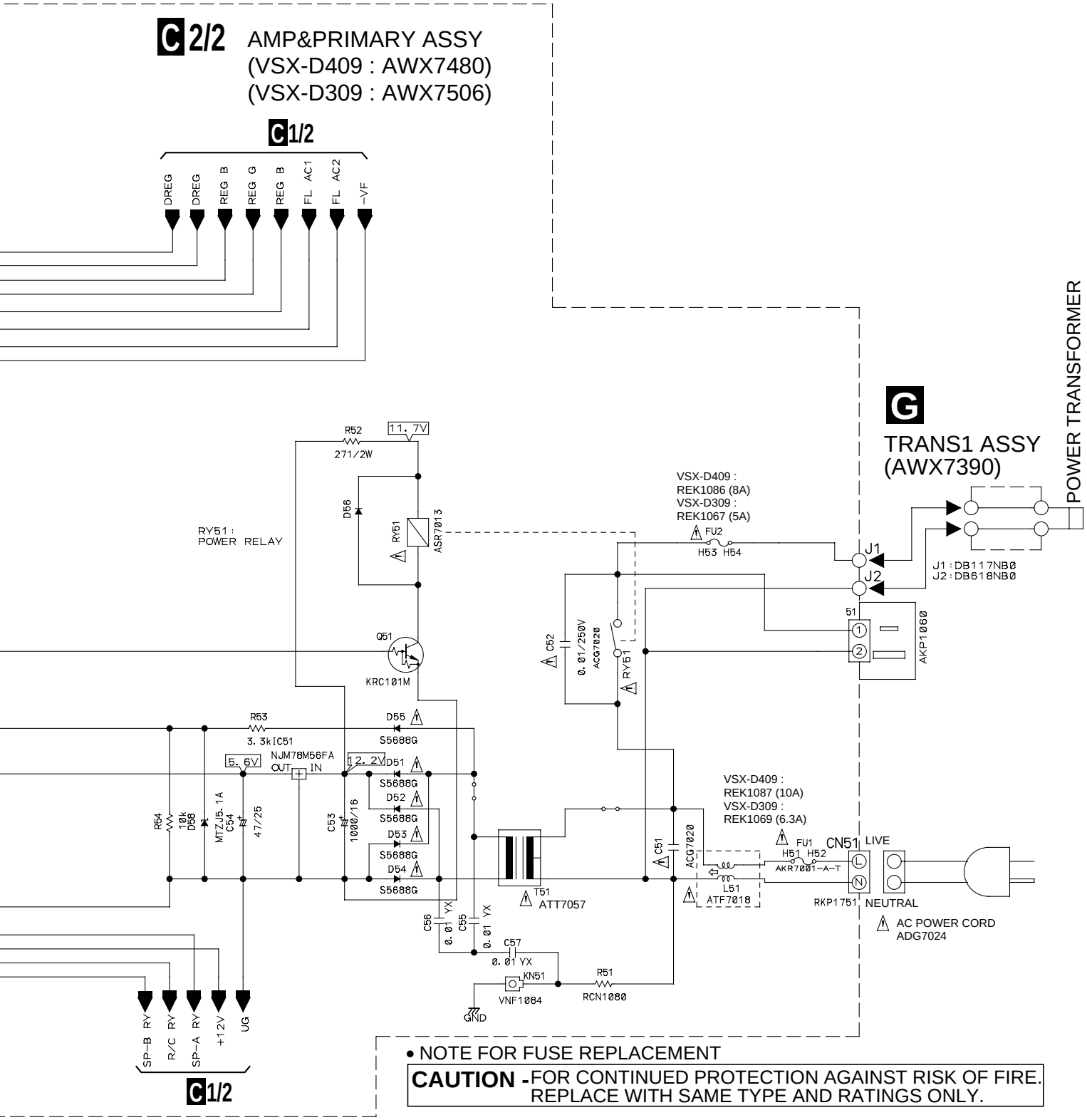

B

C

D

• NOTE FOR FUSE REPLACEMENT

CAUTION - FOR CONTINUED PROTECTION AGAINST RISK OF FIRE. REPLACE WITH SAME TYPE AND RATINGS ONLY.

3.8 VIDEO&6CH IN, H. P. and DIGITAL IN ASSYS

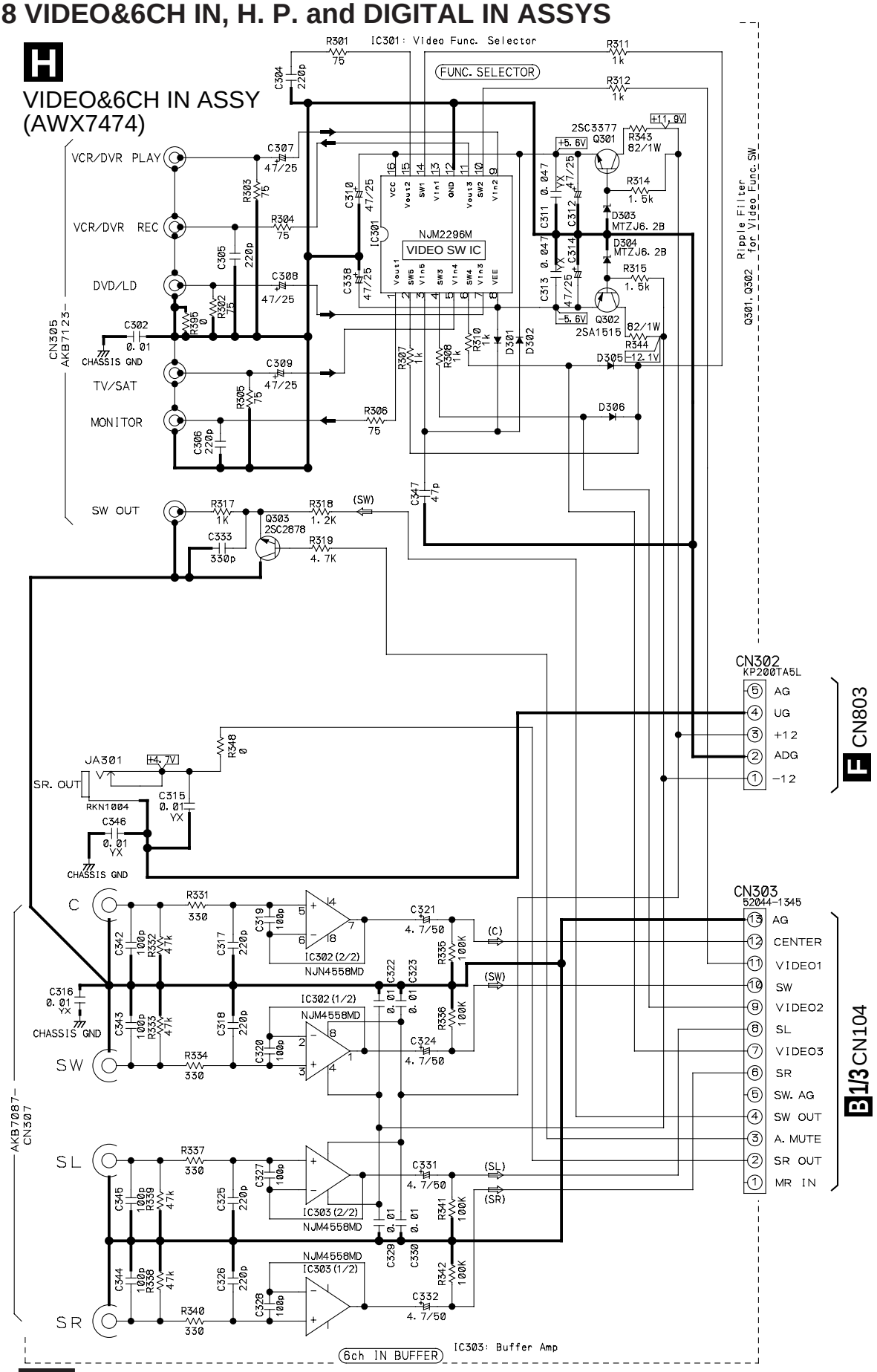

NJM2296D control port status

SW1	SW2	SW3	SW4	SW5	Vout1	Vout2	Vout3
1	0	(1)	0	1	Vin2	Vin2	mute
1	1	(1)	0	1	Vin3	Vin3	Vin3
1	1	0	1	1	Vin4	Vin4	Vin4
1	1	1	1	1	Vin5	Vin5	Vin5
0	0	(0)	(0)	0	mute	mute	mute

VIN 2. VCR/DVR
VIN 3. DVD/LD
VIN 4. TV/SAT
VIN 5. FRONT VIDEO

Vout1. MONITOR out
Vout2. MR out
Vout3. VCR/DVR out

NOTE

1. RESISTORS
   Unit: k-kΩ, M-MΩ or Ω unless otherwise noted.
   Rated power: 1/10W unless otherwise noted.
   Tolerance: (J)±5% unless otherwise noted.
2. CAPACITORS
   Unit: p-pF or μF unless otherwise noted.
   Ratings: Capacity(μF)/Voltage(V) unless otherwise noted.
   Rated Voltage: 50V expect for electrolytic capacitors.
3. DIODES
   Indicated in 1SS355-TRB

Video Signal Flow
Audio Signal Flow

		JA1903 (OPT. 2)	C1901	R1901
*1	VSX-D409	GP1F32R	0.1 YB	100
	VSX-D309	Not used	Not used	Not used

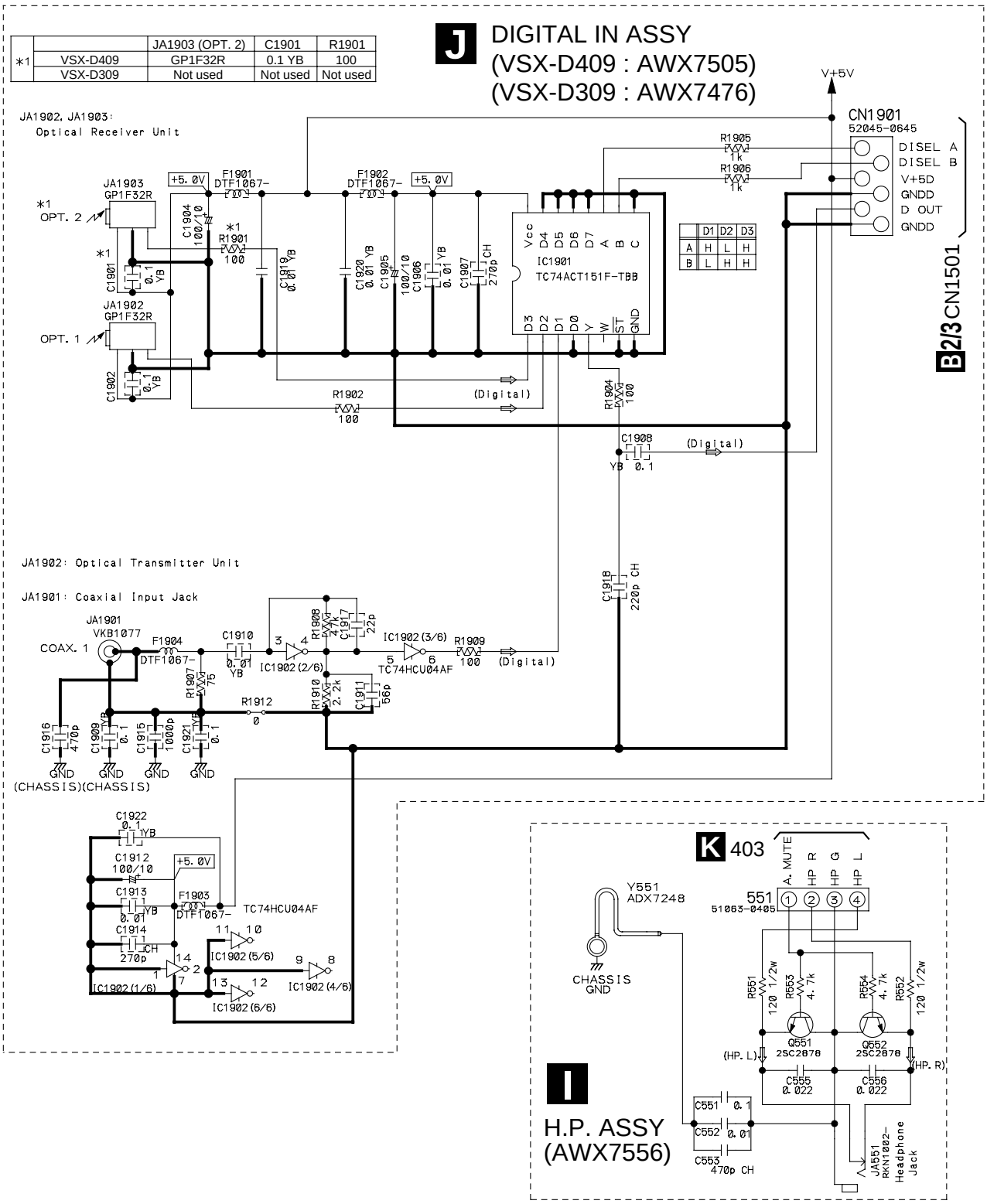

3.9 FRONT, R. ENCODER and POWER SW ASSYS

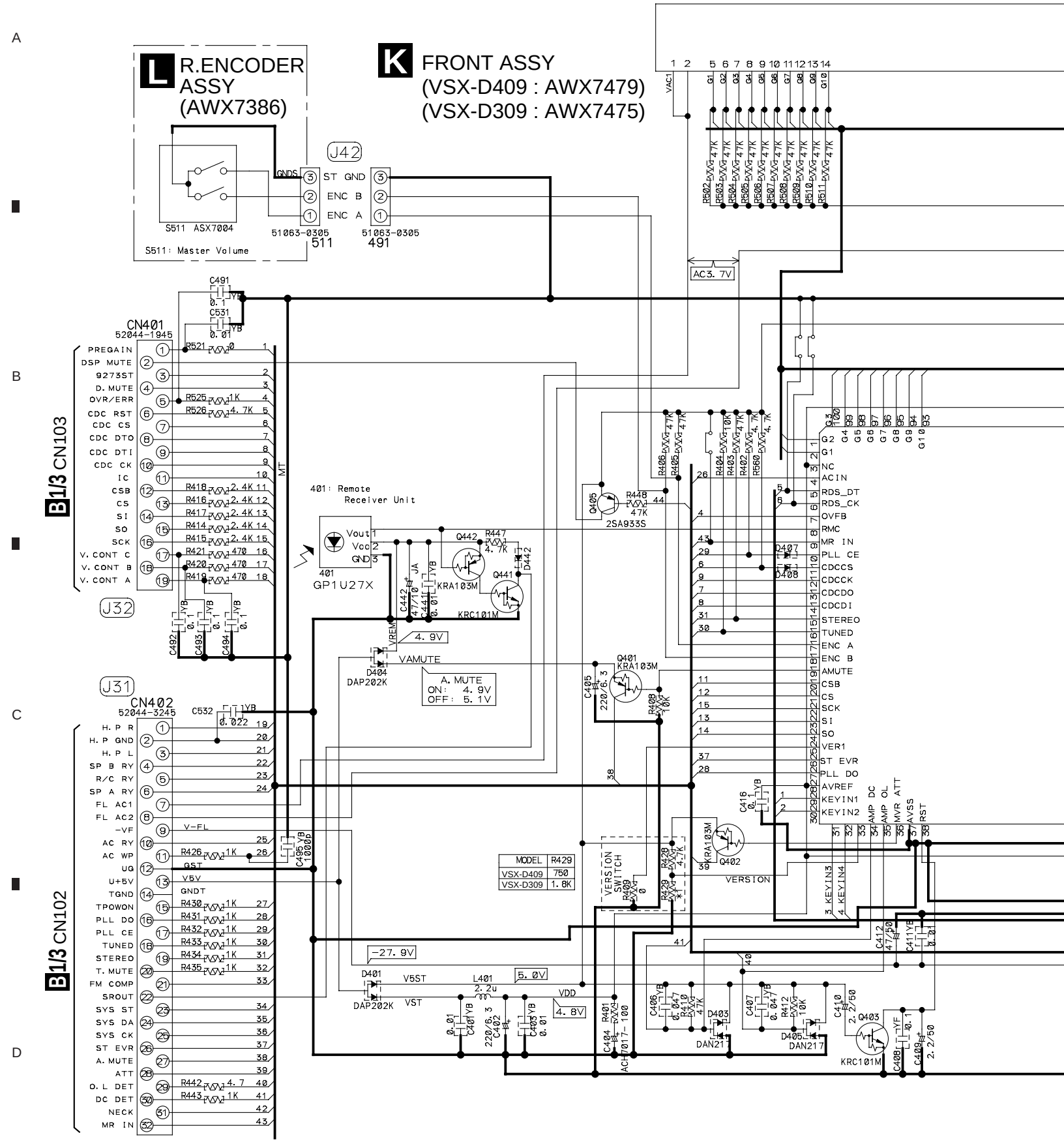

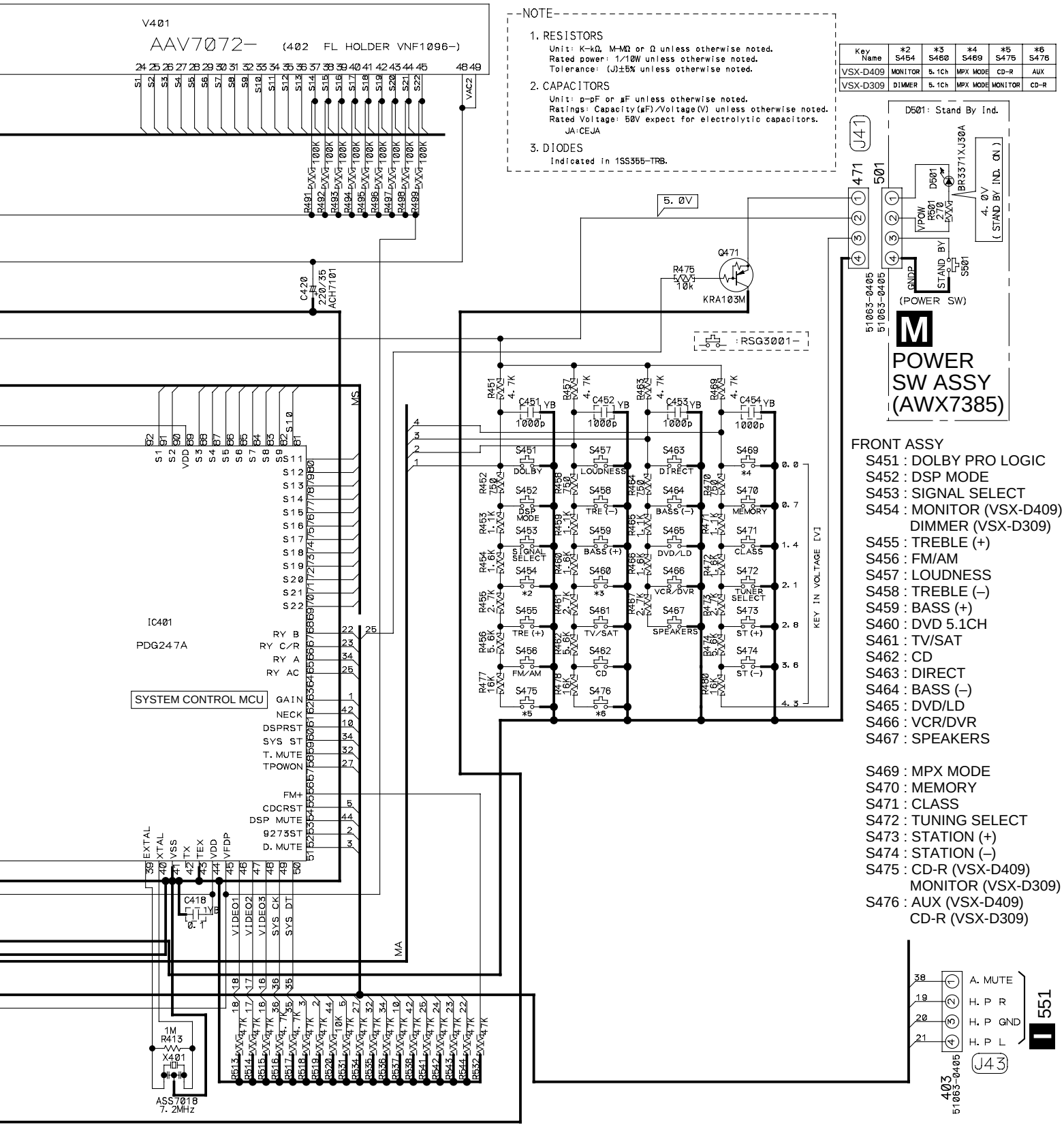

-NOTE-

1. RESISTORS
   Unit: K–kΩ, M–MΩ or Ω unless otherwise noted.
   Rated power: 1/10W unless otherwise noted.
   Tolerance: (J)±5% unless otherwise noted.
2. CAPACITORS
   Unit: p–pF or μF unless otherwise noted.
   Ratings: Capacity(μF)/Voltage(V) unless otherwise noted.
   Rated Voltage: 50V expect for electrolytic capacitors.
   JA:CEJA
3. DIODES
   Indicated in 1SS355–TRB.

Key Name	*2 S454	*3 S460	*4 S469	*5 S475	*6 S476
VSX-D409	MONITOR	5.1ch	MPX MODE	CD-R	AUX
VSX-D309	DIMMER	5.1ch	MPX MODE	MONITOR	CD-R

4. PCB CONNECTION DIAGRAM

NOTE FOR PCB DIAGRAMS :

1. Part numbers in PCB diagrams match those in the schematic diagrams.
2. A comparison between the main parts of PCB and schematic diagrams is shown below.

Symbol In PCB Diagrams	Symbol In Schematic Diagrams	Part Name
B C E	B C E B C E	Transistor
B C E	B C E B C E	Transistor with resistor
D G S	D G S D G S	Field effect transistor
		Resistor array
		3-terminal regulator

3. The parts mounted on this PCB include all necessary parts for several destinations.
   For further information for respective destinations, be sure to check with the schematic diagram.
4. View point of PCB diagrams.

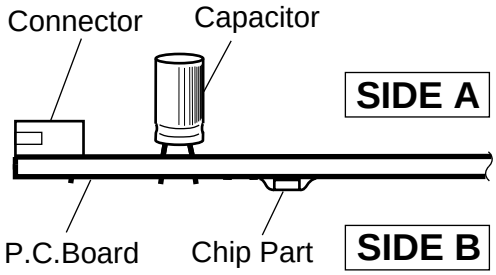

4.1 DIGITAL IN ASSY

J DIGITAL IN ASSY

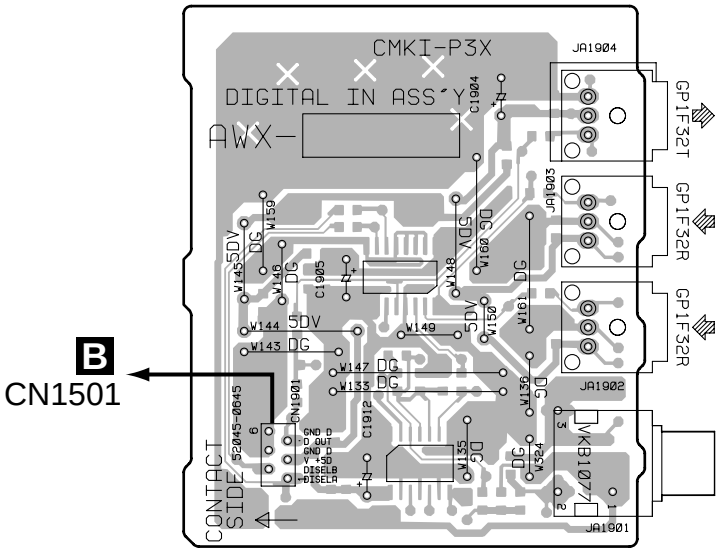

(ANP7341-A)

SIDE A

J DIGITAL IN ASSY

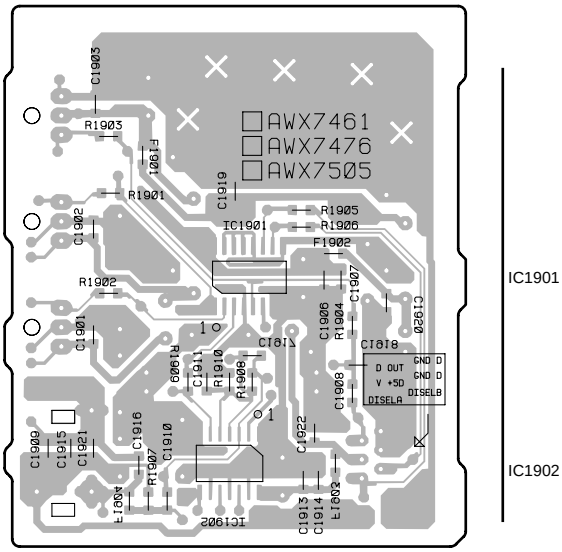

(ANP7341-A)

SIDE B

4.2 TRANS2, TRANS3, REGULATOR and TRANS1 ASSYS

F REGULATOR ASSY

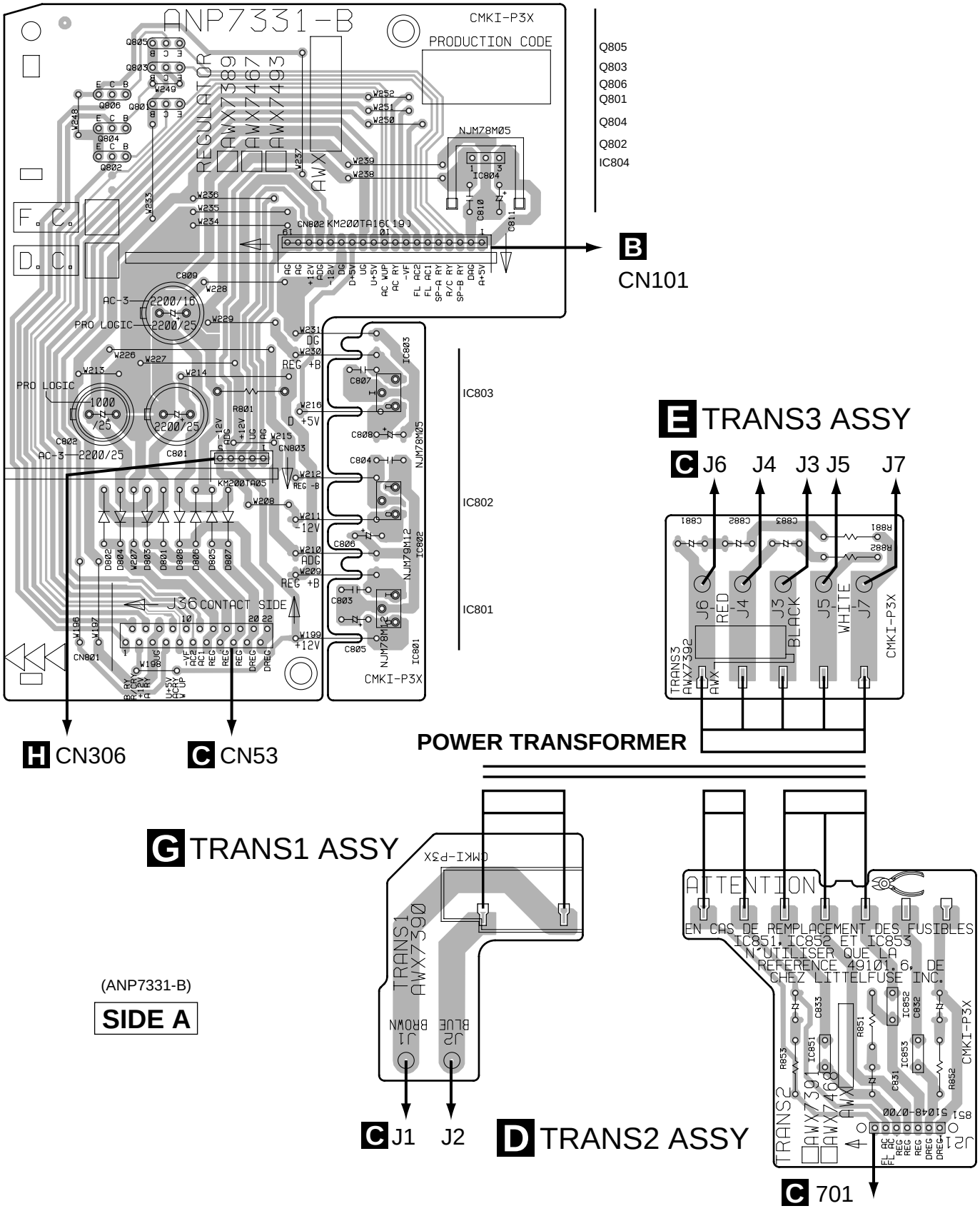

4.3 AMP INPUT and AMP&PRIMARY ASSYS

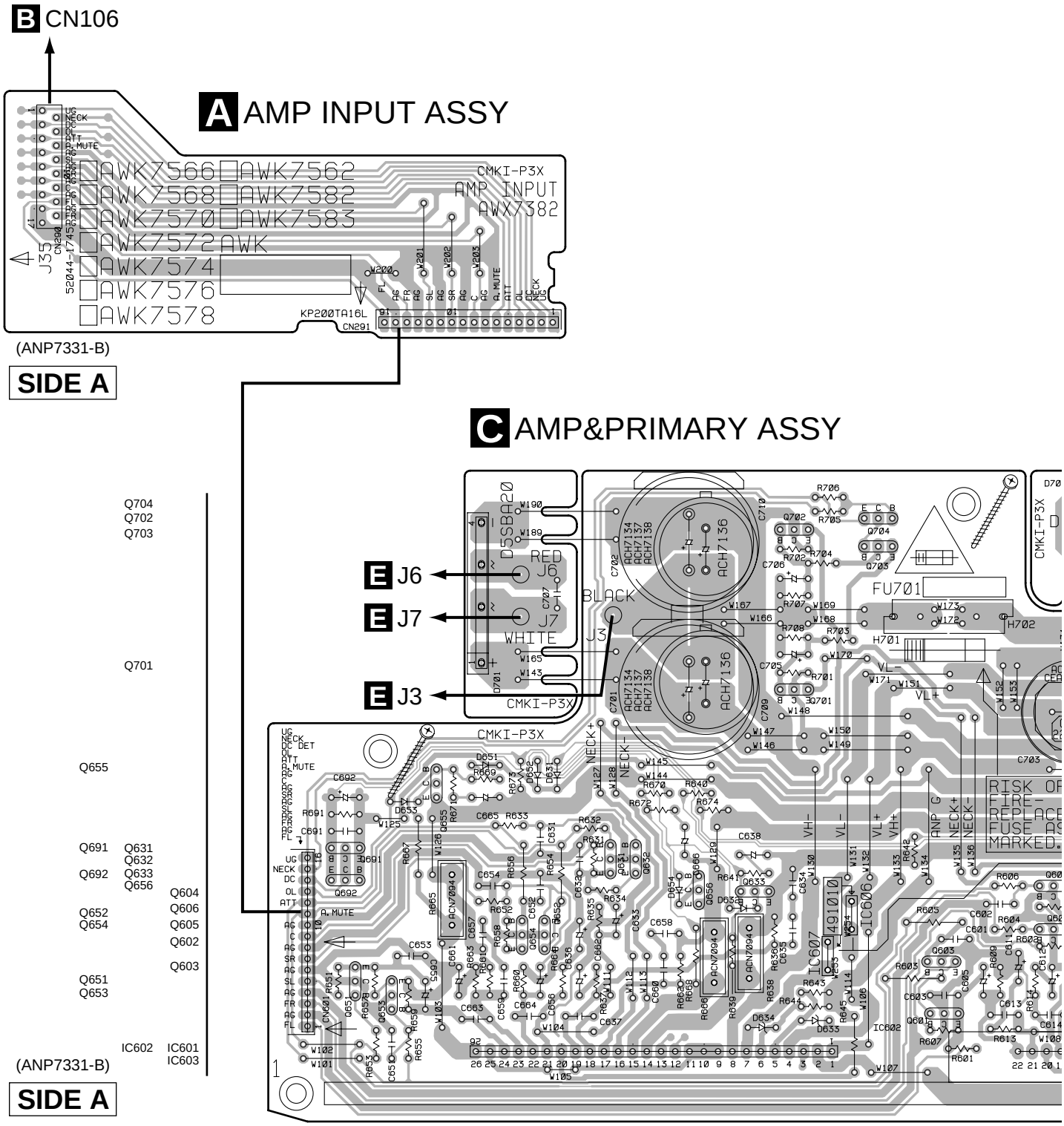

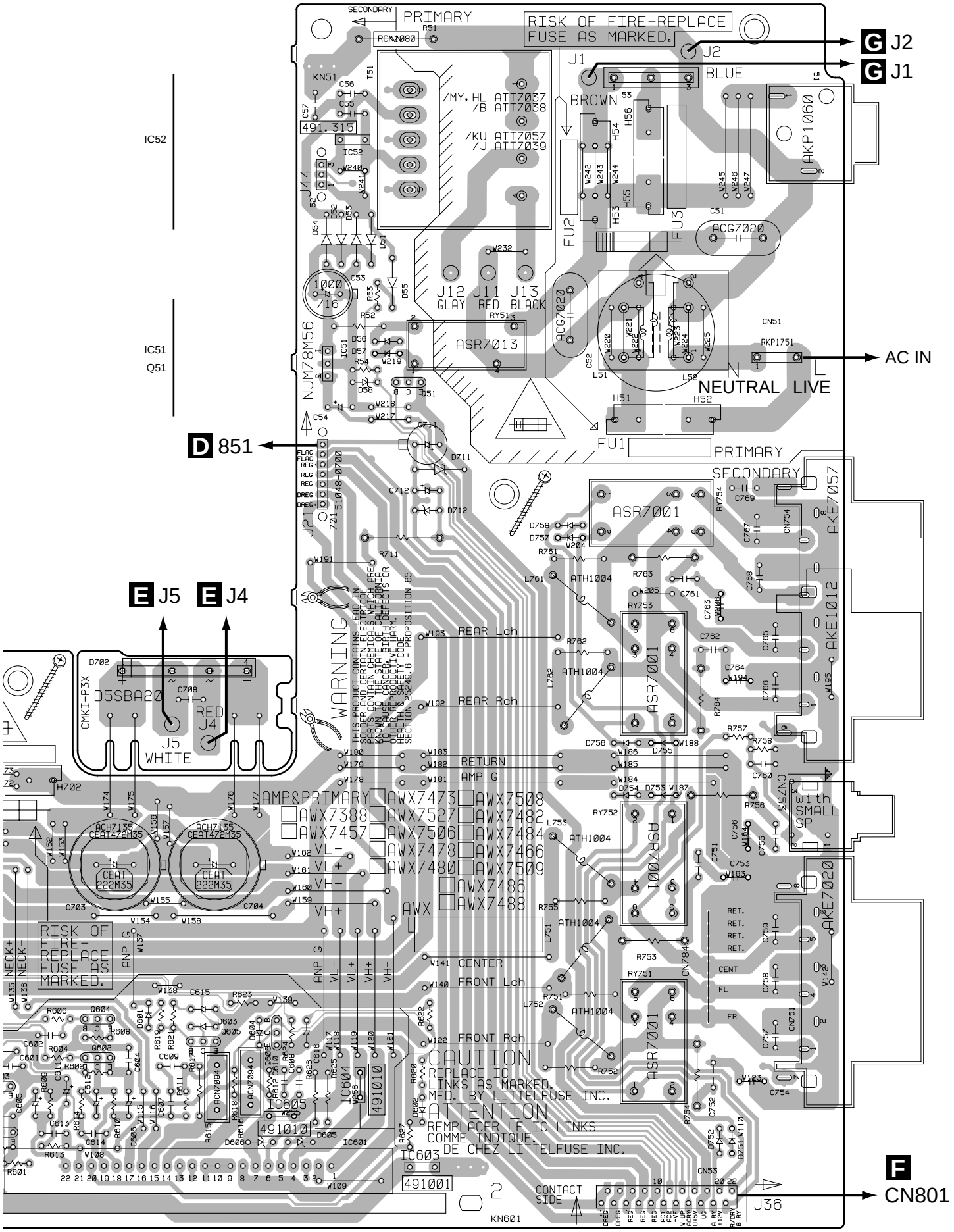
G J2
G J1
AC IN
NEUTRAL LIVE
D 851
E J5
E J4
F CN801
PRIMARY
SECONDARY
RISK OF FIRE-REPLACE FUSE AS MARKED.
WARNING
THIS PRODUCT CONTAINS LEAD IN SOLDER AND CERTAIN ELECTRICAL PARTS ARE KNOWN TO CONTAIN STATE OF CALIFORNIA TO CAUSE CANCER, BIRTH DEFECTS OR OTHER REPRODUCTIVE HARM. HEALTH & SAFETY CODE SECTION 25249.6 - PROPOSITION 65
REAR Lch
REAR Rch
RETURN
AMP G
CENTER
FRONT Lch
FRONT Rch
CAUTION
REPLACE IC LINKS AS MARKED. MFD. BY LITTELFUSE INC.
ATTENTION
REMPLACER LE IC LINKS COMME INDIQUE. DE CHEZ LITTELFUSE INC.
AMP&PRIMARY
AWX7473
AWX7508
AWX7388
AWX7527
AWX7482
AWX7457
AWX7506
AWX7484
AWX7478
AWX7466
AWX7480
AWX7509
AWX7486
AWX7488
VL-
VL+
VH-
VH+
CONTACT SIDE
J36
KN601
IC52
IC51
Q51
J44
J21
J12
J11
J13
GLAY
RED
BLACK
BROWN
BLUE
ASR7013
ASR7001
AKP1060
AKE7057
AKE1012
AKE7020
NJM78M56
D5SBA20
CMKI-P3X
J5
WHITE
J4
RED
CEAT 222M35
ACH7135 CEAT472M35
491.315
491010
491001
FU1
FU2
FU3
ACG7020
CN801

4.4 D.D & INPUT ASSY

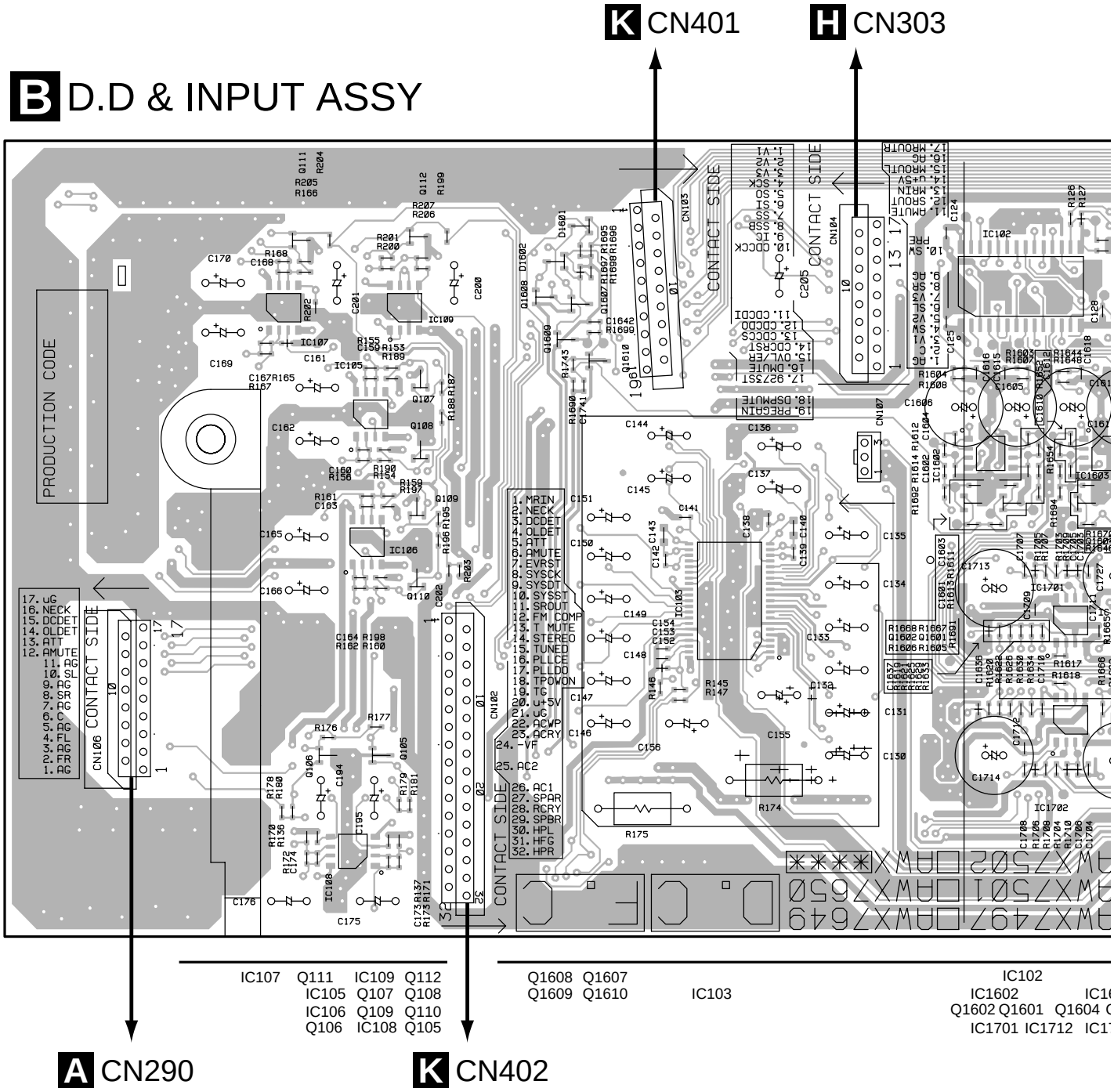

FM/AM TUNER UNIT **J** CN1901

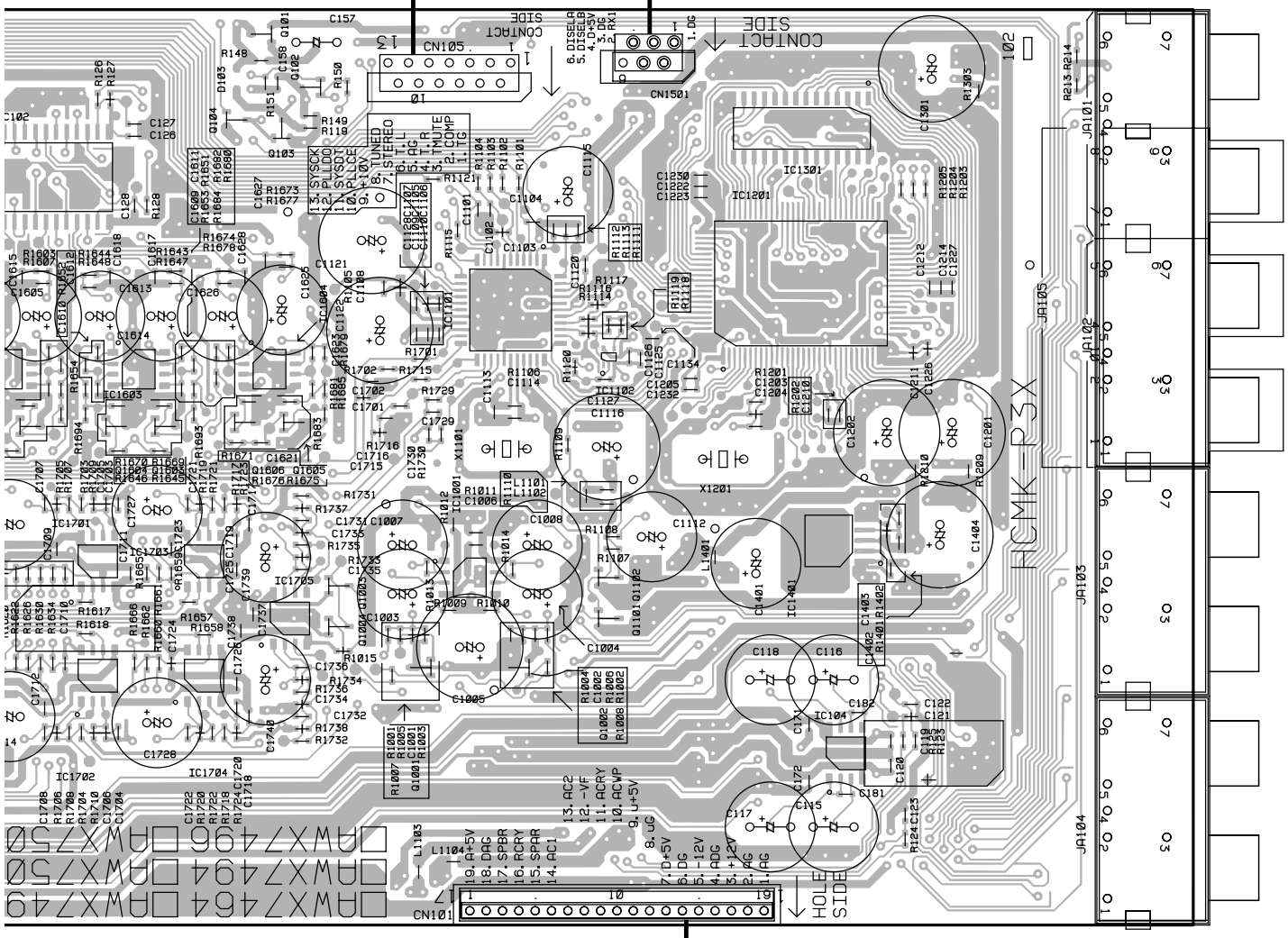

F CN802

B D.D & INPUT ASSY

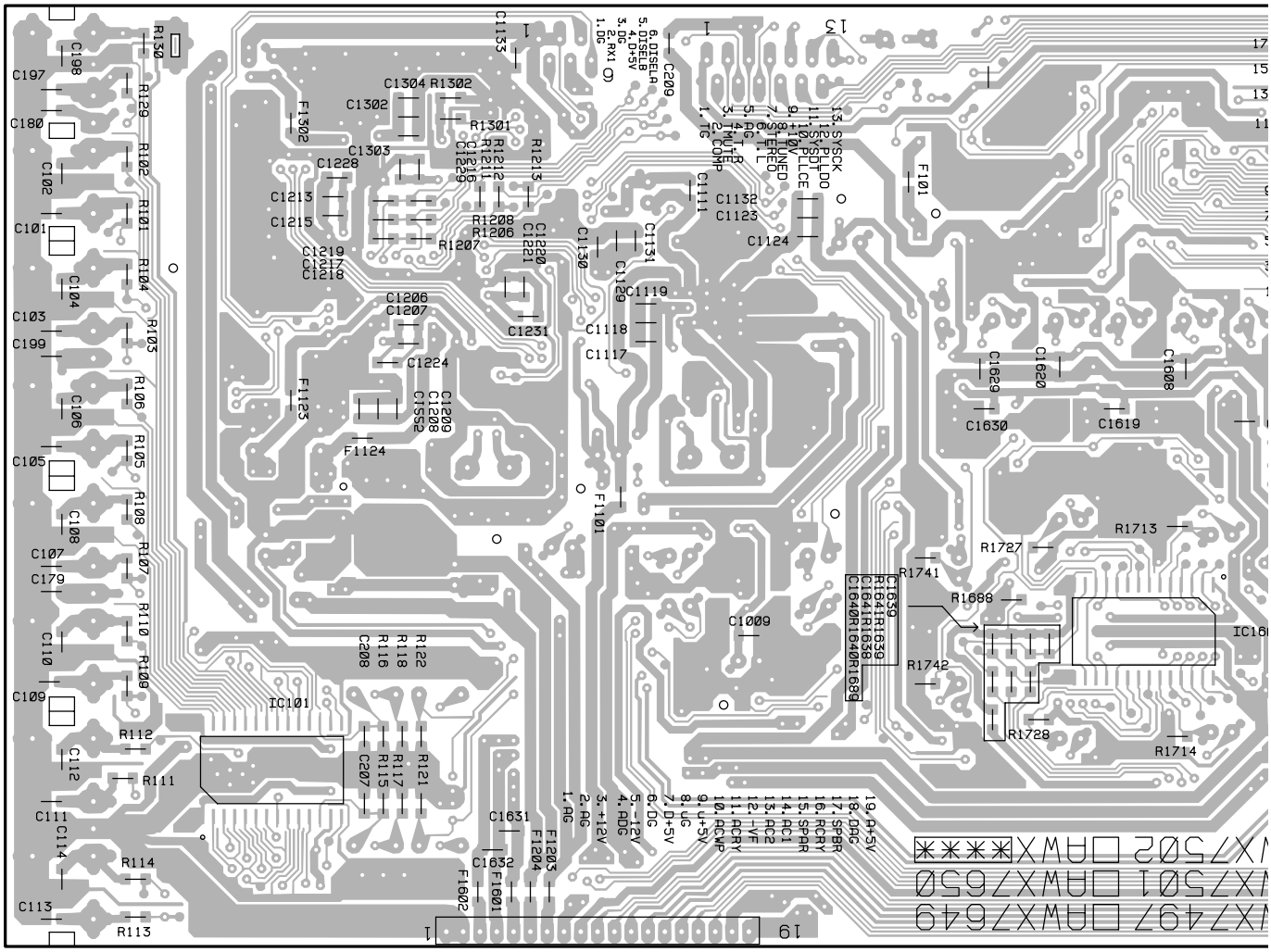

IC101 IC1801

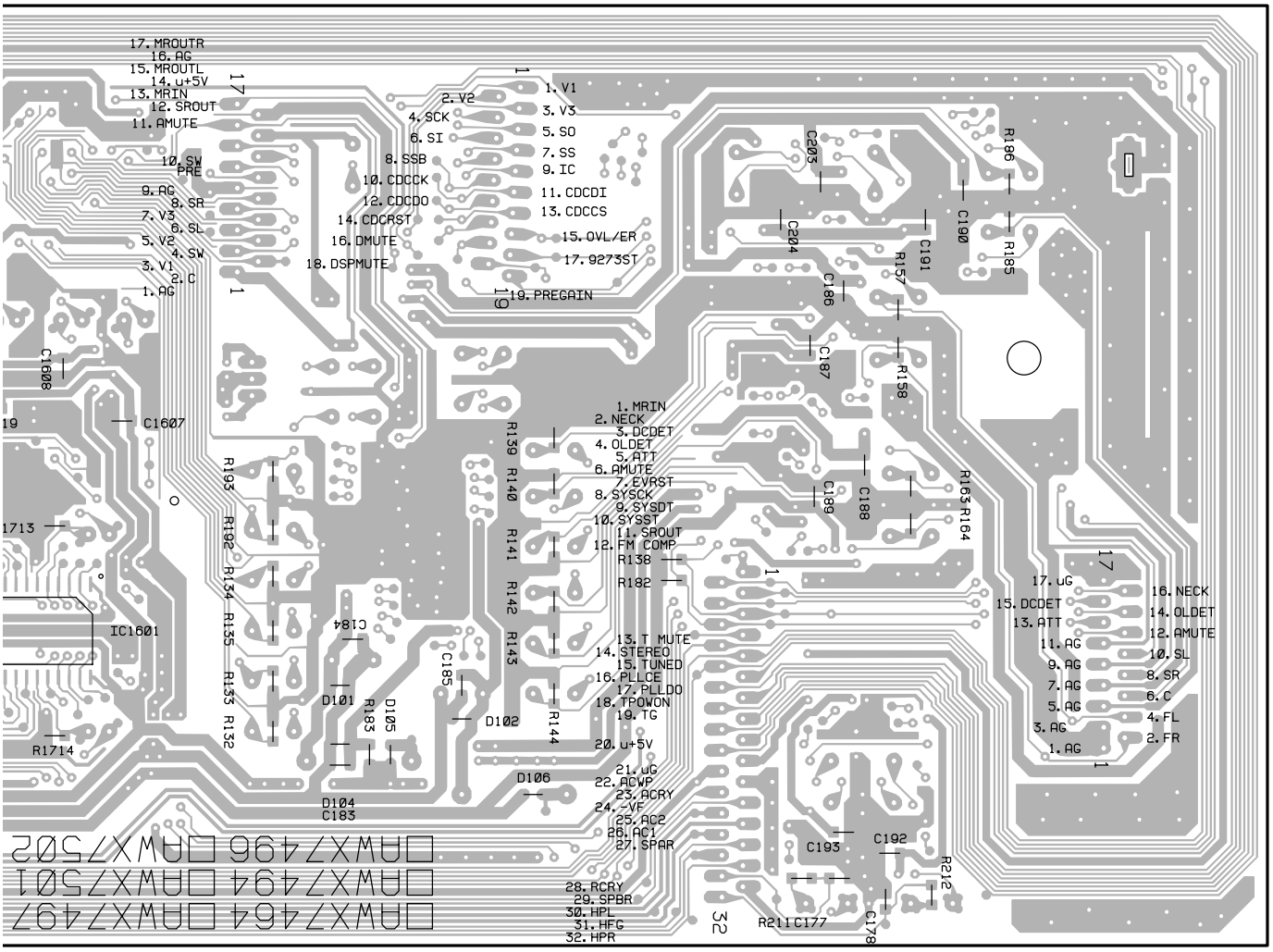
17. MROUTR
16. AG
15. MROUTL
14. u+5V
13. MRIN
12. SROUT
11. AMUTE
10. SW PRE
9. AG
8. SR
7. V3
6. SL
5. V2
4. SW
3. V1
2. C
1. AG
1. V1
2. V2
3. V3
4. SCK
5. SO
6. SI
7. SS
8. SSB
9. IC
10. CDCCK
11. CDCDI
12. CDCDO
13. CDCCS
14. CDCRST
15. OVL/ER
16. DMUTE
17. 9273ST
18. DSPMUTE
19. PREGAIN
1. MRIN
2. NECK
3. DCDET
4. OLDET
5. ATT
6. AMUTE
7. EVRST
8. SYSCK
9. SYSDT
10. SYSST
11. SROUT
12. FM COMP
R138
R182
13. T MUTE
14. STEREO
15. TUNED
16. PLLCE
17. PLLDO
18. TPOWON
19. TG
20. u+5V
21. uG
22. ACWP
23. ACRY
24. -VF
25. AC2
26. AC1
27. SPAR
28. RCRY
29. SPBR
30. HPL
31. HFG
32. HPR
17. uG
15. DCDET
13. ATT
11. AG
9. AG
7. AG
5. AG
3. AG
1. AG
16. NECK
14. OLDET
12. AMUTE
10. SL
8. SR
6. C
4. FL
2. FR
C1607
IC1601
R1714
R1713
C1808
C1801
(ANP7342-A)

SIDE B

4.5 H.P., FRONT, R.ENCODER and POWER SW ASSYS

K FRONT ASSY

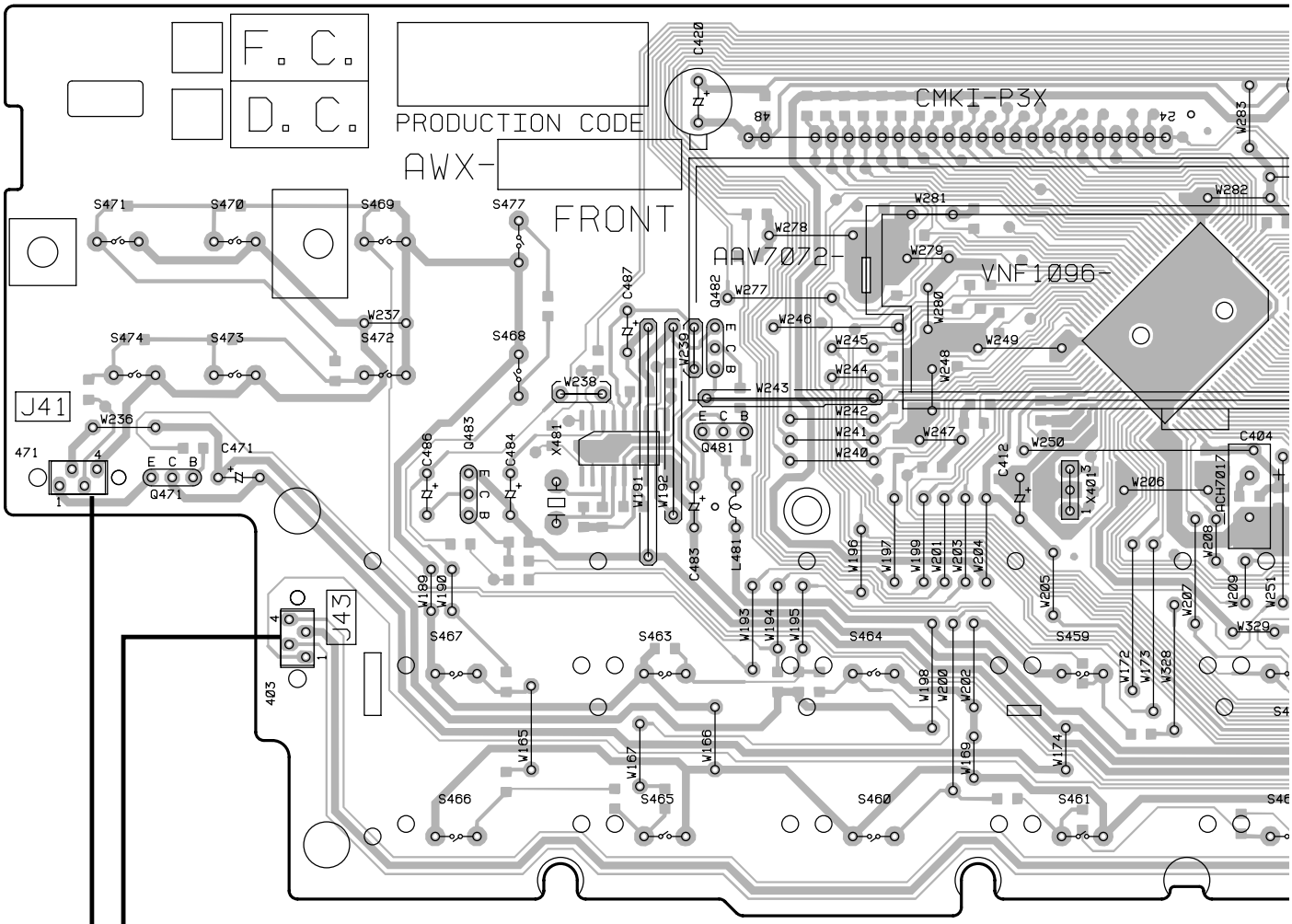

I H.P. ASSY

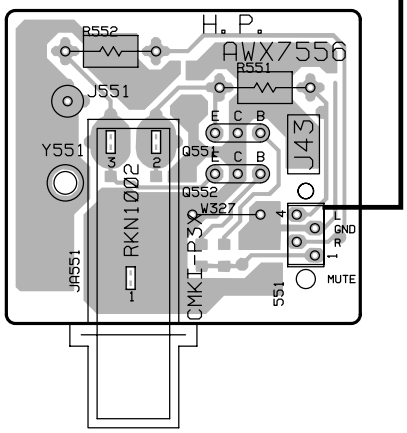

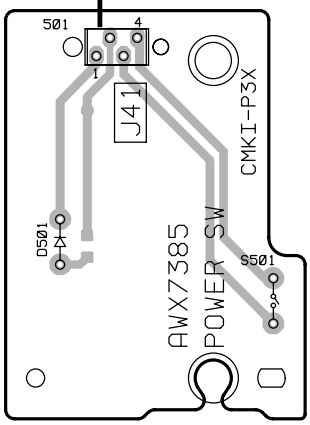

M POWER SW ASSY

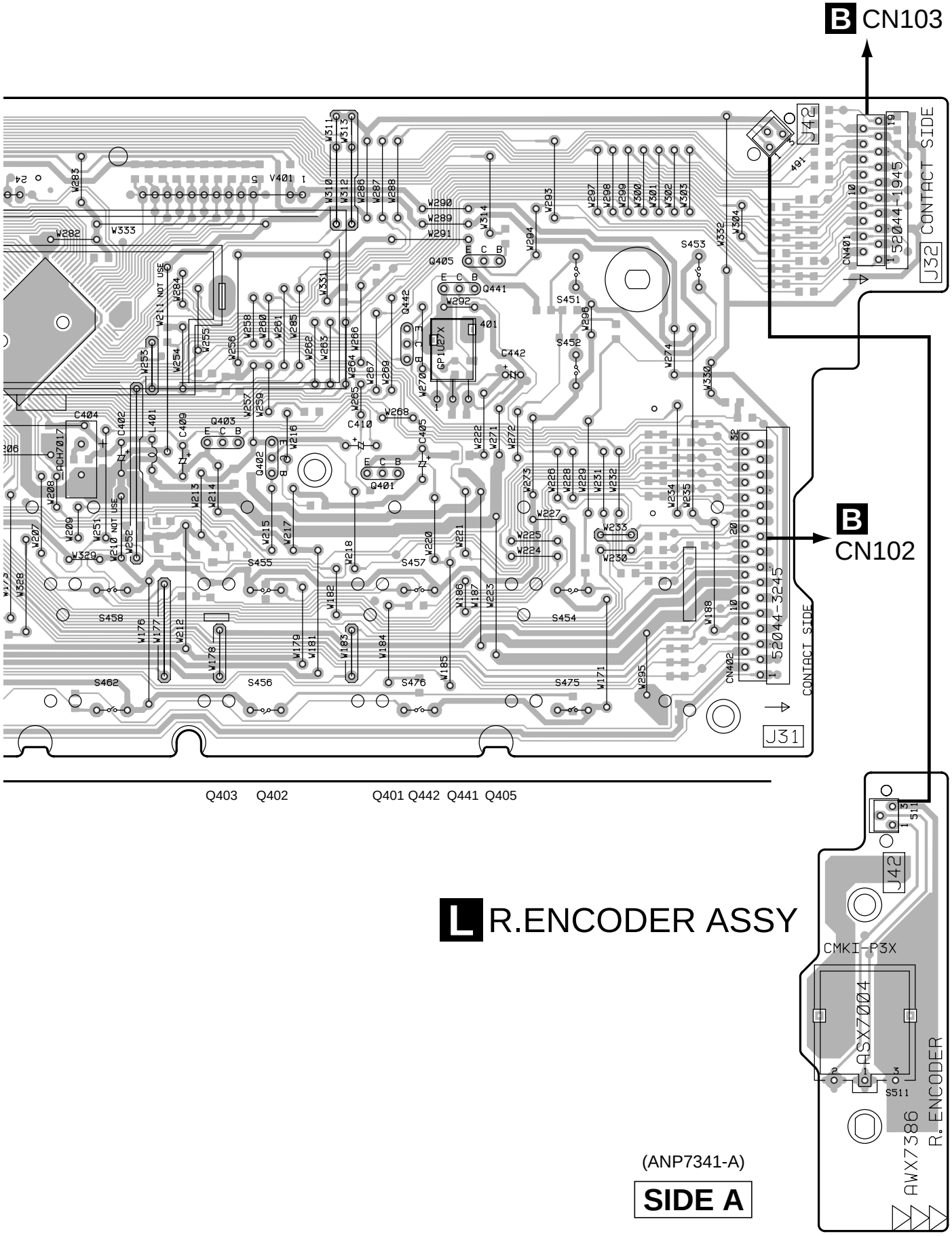
B CN103
B CN102
J32 CONTACT SIDE
J31 CONTACT SIDE
J42
CN401
CN402
Q403 Q402 Q401 Q442 Q441 Q405
L R.ENCODER ASSY
CMKI-P3X
ASX7004
S511
R.ENCODER
AWX7386
(ANP7341-A)
SIDE A

K FRONT ASSY

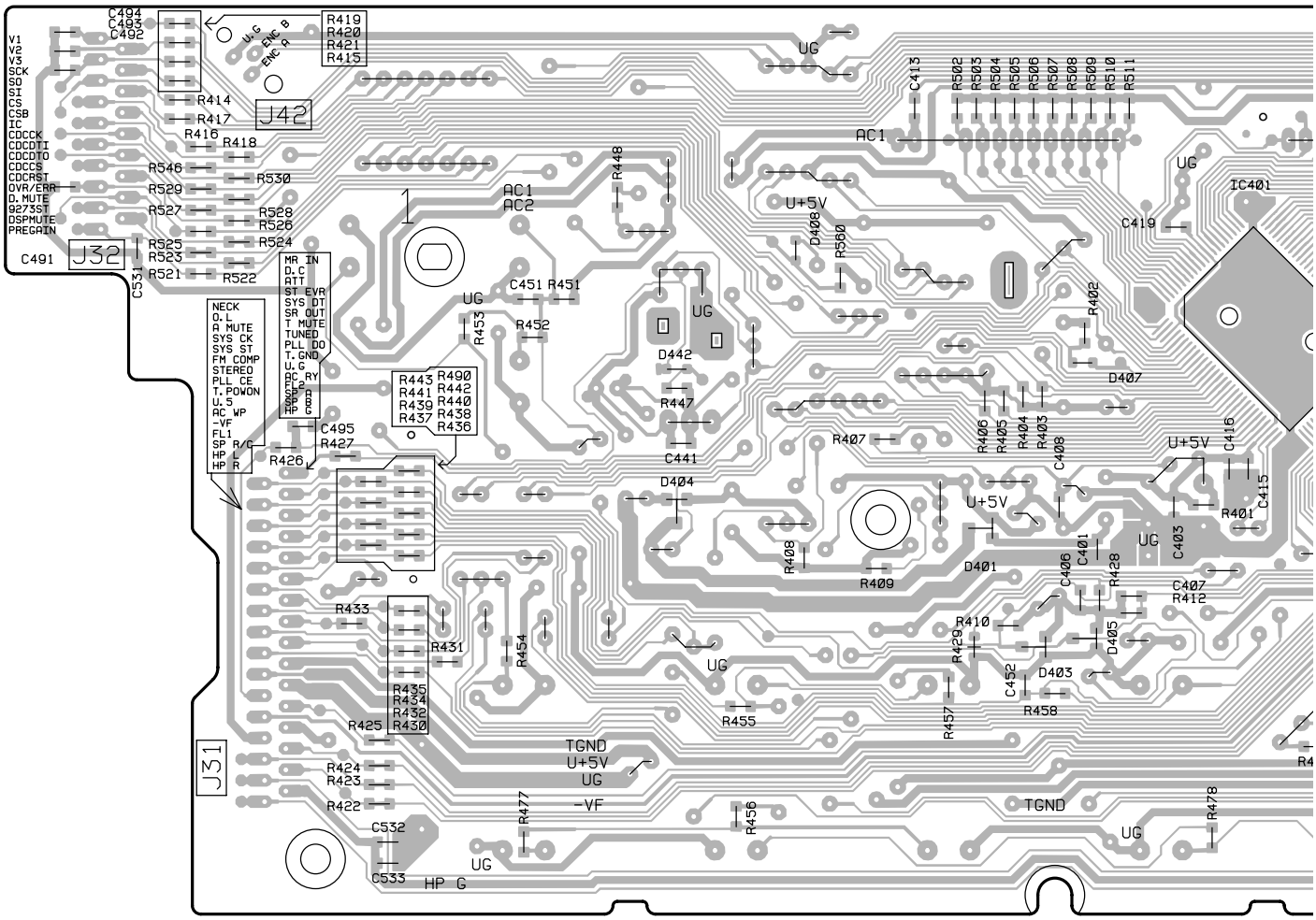

IC401

L R.ENCODER ASSY

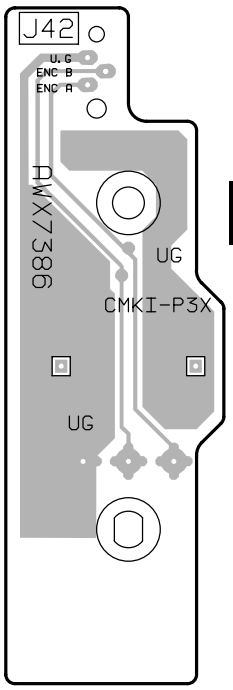

(ANP7341-A)

SIDE B

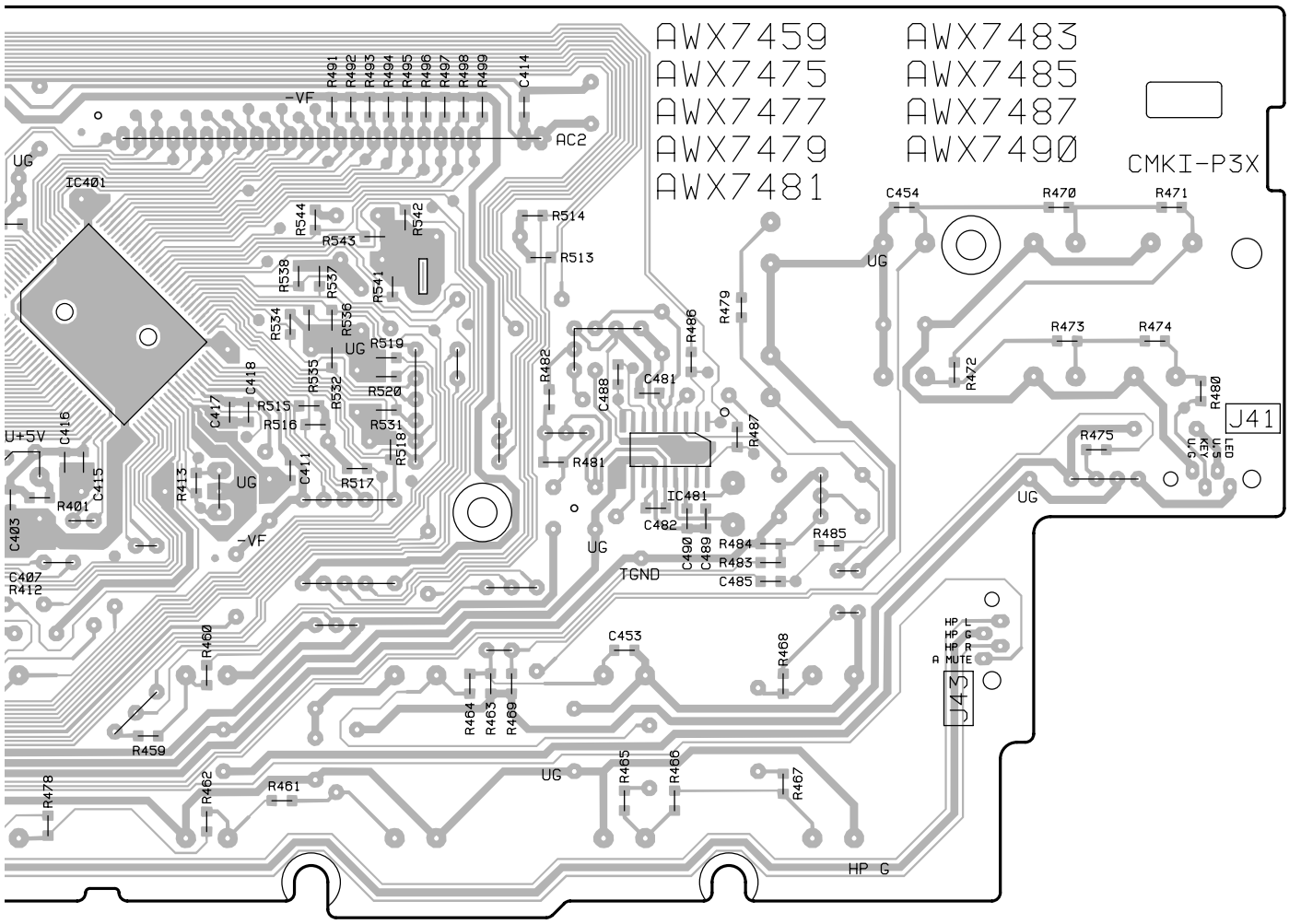

IC401 IC481

I H.P. ASSY

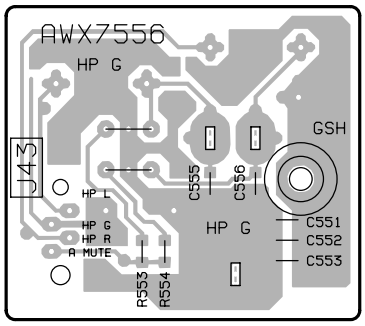

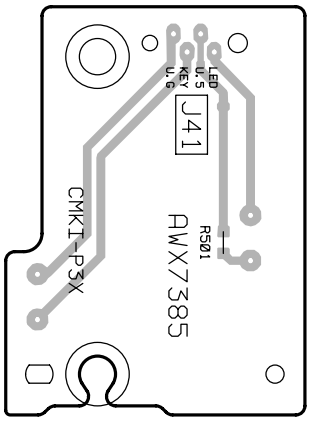

M POWER SW ASSY

4.6 VIDEO&6CH IN ASSY

H VIDEO&6CH IN ASSY

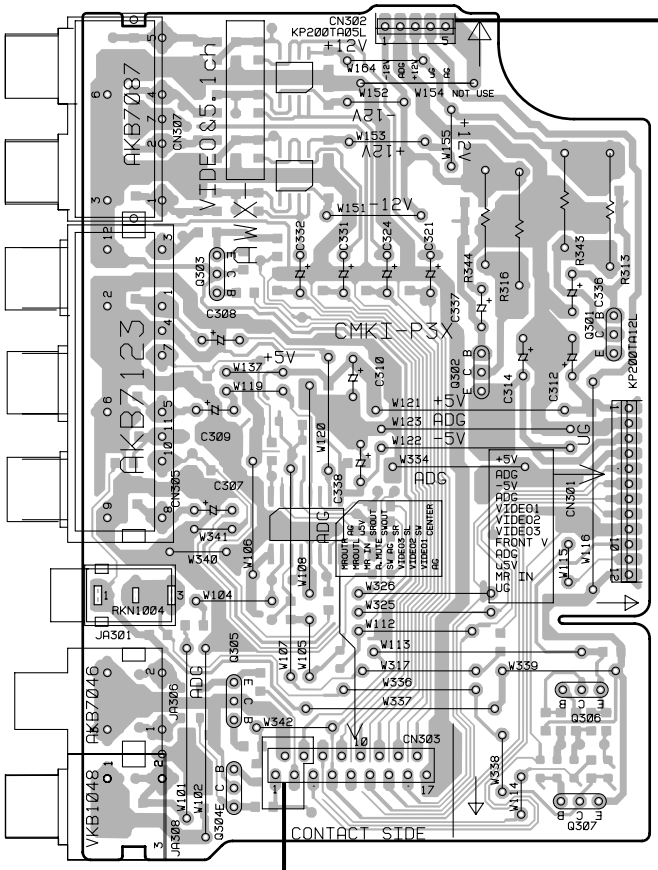

F
CN803

(ANP7341-A)
SIDE A

B
CN104

H VIDEO&6CH IN ASSY

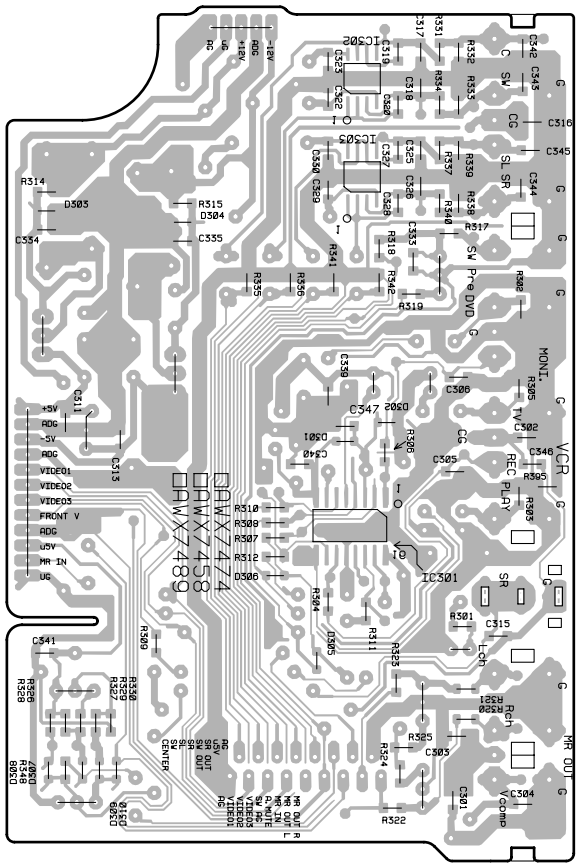

(ANP7341-A)
SIDE B

5. PCB PARTS LIST

NOTES: ●*The ⚠ mark found on some component parts indicates the importance of the safety factor of the part. Therefore, when replacing, be sure to use parts of identical designation.*

●*When ordering resistors, first convert resistance values into code form as shown in the following examples.*

Ex.1 When there are 2 effective digits (any digit apart from 0), such as 560 ohm and 47k ohm (tolerance is shown by J=5%, and K=10%).

560 Ω → 56 × 10¹ → 561 ..... RD1/4PU [5][6][1] J
47k Ω → 47 × 10³ → 473 ..... RD1/4PU [4][7][3] J
0.5 Ω → R50 ..... RN2H [R][5][0] K
1 Ω → 1R0 ..... RS1P [1][R][0] K

Ex.2 When there are 3 effective digits (such as in high precision metal film resistors).

5.62k Ω → 562 × 10¹ → 5621 ..... RN1/4PC [5][6][2][1] F

■ CONTRAST OF PCB ASSEMBLIES

Mark	Symbol and Description	Part No.		Remarks
		VSX-D409 /KUXJI, KCXJI	VSX-D309 /KUXJI, KCXJI	
NSP	COMPLEX ASSY	AWK7569	AWK7565	
	├─ POWER SW ASSY	AWX7385	AWX7385	
NSP	├─ R.ENCODER ASSY	AWX7386	AWX7386	
	├─ VIDEO&6CH IN ASSY	AWX7474	AWX7474	
	├─ FRONT ASSY	AWX7479	AWX7475	
	├─ DIGITAL IN ASSY	AWX7505	AWX7476	
NSP	└─ H.P. ASSY	AWX7556	AWX7556	
NSP	AMP&PS ASSY	AWK7570	AWK7566	
NSP	├─ AMP INPUT ASSY	AWX7382	AWX7382	
	├─ REGULATOR ASSY	AWX7467	AWX7493	
	├─ TRANS2 ASSY	AWX7468	AWX7468	
NSP	├─ TRANS1 ASSY	AWX7390	AWX7390	
NSP	├─ TRANS3 ASSY	AWX7392	AWX7392	
	└─ AMP&PRIMARY ASSY	AWX7480	AWX7506	
	D.D & INPUT ASSY	AWX7649	AWX7494	

■ CONTRAST OF PCB ASSEMBLIES

B D.D & INPUT ASSY

AWX7494 and AWX7649 are constructed the same except for the following :

Mark	Symbol and Description	Part No.		Remarks
		AWX7649	AWX7494	
	C197, C198	CCSQCH101J50	Not used	
	R129, R130	RS1/10S331J	RS1/10S0R0J	
	R153, R154, R159, R160	RS1/16S103J	RS1/16S132J	
	R165	RS1/16S182J	RS1/16S242J	
	R189, R190, R197, R198	RS1/16S242J	RS1/16S362J	
	R213, R214	Not used	RS1/16S0R0J	
	JA101 PIN JACK(4P)	AKB7048	AKB7050	
	JA102 PIN JACK(4P)	AKB7048	Not used	

F REGULATOR ASSY

AWX7493 and AWX7467 are constructed the same except for the following :

Mark	Symbol and Description	Part No.		Remarks
		AWX7467	AWX7493	
	Q805	KRA103M	Not used	
	Q806	KRC101M	Not used	

C AMP&PRIMARY ASSY

AWX7506 and AWX7480 are constructed the same except for the following :

Mark	Symbol and Description	Part No.		Remarks
		AWX7480	AWX7506	
⚠	IC601	PAC010A	PAC012A	
⚠	IC602	PAC011A	PAC013A	
⚠	IC604–IC607 PROTECTOR (10A)	AEK7022	Not used	
	D758	1SS133	Not used	
	RY754	ASR7001	Not used	
	C701, C702	ACH7137(4700µF/71V)	Not used	
	C703, C704	ACH7135 (3300µF/42V)	CEAT222M35	
	C709, C710	Not used	ACH7136 (3300µF/56V)	
⚠	R711	RS2LMF392J	RS2LMF272J	
	R757	RD1/4PU223J	Not used	
	R758	RD1/4PU202J	Not used	
	CN753 PIN JACK 1-P	AKB7042	Not used	
	CN754 SPEAKER TERMINAL 8-P	AKB7057	Not used	
	752 SPEAKER TERMINAL 4-P	Not used	AKE1012	

J DIGITAL IN ASSY

AWX7476 and AWX7505 are constructed the same except for the following :

Mark	Symbol and Description	Part No.		Remarks
		AWX7505	AWX7476	
	C1901	CKSQYB102K25	Not used	
	R1901	RS1/10S101J	Not used	
	JA1903 OPTICAL RECEIV MOD.	GP1F32R	Not used	

K FRONT ASSY

AWX7475 and AWX7479 are constructed the same except for the following :

Mark	Symbol and Description	Part No.		Remarks
		AWX7479	AWX7475	
	R429	RS1/10S751J	RS1/10S182J	

■ PCB PARTS LIST FOR VSX-D409 UNLESS OTHERWISE NOTED

Mark	No.	Description	Part No.
A	**AMP INPUT ASSY**		
OTHERS			
	CN290	17P CONNECTOR	52044-1745
	CN291	16P SOCKET	KP200TA16L
B	**D.D & INPUT ASSY**		
SEMICONDUCTORS			
	IC101	ANALOG SWITCH IC	TC9273F-007
	IC102	E-SW IC	TC9163AF
	IC103	E-VR IC	M62446FP
	IC104	OP-AMP IC	UPC4570G2
	IC105	OP-AMP IC	UPC4570G2
	IC106	OP-AMP IC	UPC4570G2
	IC107	OP-AMP IC	UPC4570G2
	IC108	OP-AMP IC	M5216FP
	IC1001	OP-AMP IC	NJM2100M
	IC1101	MULTI CH CODEC IC	CS4226-KQ(J)
	IC1201	DTS DECODER IC	YSS912C
	IC1301	SRAM(256K)	KM68257EJ-15
	IC1401	REGULATOR IC	PQ20WZ51
	IC1601	E-SW IC	TC9164AF
	IC1602	IC	NJM4558MD
	IC1603	IC	NJM4558MD
	IC1604	IC	NJM4558MD
	IC1701	IC	NJM4558MD
	IC1702	IC	NJM4558MD
	IC1703	IC	NJM4558MD
	IC1704	IC	NJM4558MD
	IC1705	IC	NJM4558MD
	Q101	CHIP TRANSISTOR	2SC2412K
	Q103	TRANSISTOR	DTA143EK
	Q104	DIGITAL TRANSISTOR	DTC124EK
	Q105	CHIP MUTING TR	2SC3326
	Q106	CHIP MUTING TR	2SC3326
	Q107	CHIP MUTING TR	2SC3326
	Q108	CHIP MUTING TR	2SC3326
	Q109	CHIP MUTING TR	2SC3326

Mark	No.	Description	Part No.
	Q110	CHIP MUTING TR	2SC3326
	Q111	CHIP MUTING TR	2SC3326
	Q112	CHIP MUTING TR	2SC3326
	Q1001	CHIP MUTING TR	2SC3326
	Q1002	CHIP MUTING TR	2SC3326
	Q1003	CHIP DIGITAL TRANS.	DTA124EK
	Q1004	DIGITAL TRANSISTOR	DTC124EK
	Q1101	CHIP DIGITAL TRANS.	DTA124EK
	Q1102	DIGITAL TRANSISTOR	DTC124EK
	Q1601	CHIP MUTING TR	2SC3326
	Q1602	CHIP MUTING TR	2SC3326
	Q1603	CHIP MUTING TR	2SC3326
	Q1604	CHIP MUTING TR	2SC3326
	Q1605	CHIP MUTING TR	2SC3326
	Q1606	CHIP MUTING TR	2SC3326
	Q1607	CHIP DIGITAL TRANS.	DTA124EK
	Q1608	CHIP DIGITAL TRANS.	DTA124EK
	Q1609	DIGITAL TRANSISTOR	DTC124EK
	Q1610	CHIP DIGITAL TRANS.	DTA124EK
	D101	CHIP ZENER DIODE	UDZS6.8B
	D102	CHIP ZENER DIODE	UDZS6.8B
	D103	DIODE	1SS355
	D104	CHIP ZENER DIODE	UDZS5.1B
	D105	DIODE	1SS355
	D106	DIODE	1SS355
	D1601	DIODE	1SS181
	D1602	DIODE	1SS181

COILS AND FILTERS

	F101	CHIP BEAD	DTF1067
	F1101	CHIP BEAD	DTF1064
	F1123	CHIP BEAD	DTF1064
	F1124	CHIP BEAD	DTF1064
	F1203	CHIP BEAD	DTF1064
	F1204	CHIP BEAD	DTF1064
	F1302	CHIP BEAD	DTF1064
	F1601	CHIP BEAD	DTF1064
	F1602	CHIP BEAD	DTF1064
	L1101	CHIP SOLID INDUCTOR	QTL1013
	L1102	CHIP SOLID INDUCTOR	QTL1013
	L1103	CHIP SOLID INDUCTOR	QTL1013
	L1104	CHIP SOLID INDUCTOR	QTL1013
	L1401	CHIP SOLID INDUCTOR	ATL7002

CAPACITORS

	C101	CHIP CAPACITOR	CCSQCH101J50
	C102	CHIP CAPACITOR	CCSQCH101J50
	C103	CHIP CAPACITOR	CCSQCH101J50
	C104	CHIP CAPACITOR	CCSQCH101J50
	C105	CHIP CAPACITOR	CCSQCH101J50
	C106	CHIP CAPACITOR	CCSQCH101J50
	C107	CHIP CAPACITOR	CCSQCH101J50
	C108	CHIP CAPACITOR	CCSQCH101J50
	C109	CHIP CAPACITOR	CCSQCH101J50
	C110	CHIP CAPACITOR	CCSQCH101J50
	C111	CHIP CAPACITOR	CCSQCH101J50
	C112	CHIP CAPACITOR	CCSQCH101J50
	C113	CHIP CAPACITOR	CCSQCH101J50
	C114	CHIP CAPACITOR	CCSQCH101J50
	C115	ELECT. CAPACITOR	CEAT4R7M50
	C116	ELECT. CAPACITOR	CEAT4R7M50
	C117	ELECT. CAPACITOR	CEAT470M25
	C118	ELECT. CAPACITOR	CEAT470M25
	C119	CHIP CERAMIC C.	CKSRYB103K50
	C120	CHIP CERAMIC C.	CKSRYB103K50
	C121	CERAMIC CAPACITOR	CCSRCH101J50
	C122	CERAMIC CAPACITOR	CCSRCH101J50
	C123	CERAMIC CAPACITOR	CCSRCH101J50
	C124	CHIP CERAMIC C.	CKSRYB103K50
	C125	CHIP CERAMIC C.	CKSRYB103K50
	C126	CERAMIC CAPACITOR	CCSRCH101J50
	C127	CERAMIC CAPACITOR	CCSRCH101J50
	C128	CERAMIC CAPACITOR	CCSRCH101J50
	C130	ELECT. CAPACITOR	CEAT100M50
	C131	ELECT. CAPACITOR	CEAT100M50
	C132	ELECT. CAPACITOR	CEAT100M50
	C133	ELECT. CAPACITOR	CEAT100M50
	C134	ELECT. CAPACITOR	CEAT100M50
	C135	ELECT. CAPACITOR	CEAT100M50
	C136	ELECT. CAPACITOR	CEAT100M50
	C137	ELECT. CAPACITOR	CEAT100M50
	C138	CHIP CERAMIC C.	CKSRYB822K50
	C139	CHIP CERAMIC C.	CKSRYB153K50
	C140	CERAMIC CAPACITOR	CKSQYB334K16
	C141	CHIP CERAMIC C.	CKSRYB822K50
	C142	CHIP CERAMIC C.	CKSRYB153K50
	C143	CERAMIC CAPACITOR	CKSQYB334K16
	C144	ELECT. CAPACITOR	CEAT3R3M50
	C145	ELECT. CAPACITOR	CEAT3R3M50
	C146	ELECT. CAPACITOR	CEAT100M50
	C147	ELECT. CAPACITOR	CEAT3R3M50
	C148	ELECT. CAPACITOR	CEAT3R3M50
	C149	ELECT. CAPACITOR	CEAT3R3M50
	C150	ELECT. CAPACITOR	CEAT3R3M50
	C151	ELECT. CAPACITOR	CEAT3R3M50
	C152	CERAMIC CAPACITOR	CCSRCH101J50
	C153	CERAMIC CAPACITOR	CCSRCH101J50
	C154	CERAMIC CAPACITOR	CCSRCH101J50
	C155	ELECT. CAPACITOR	CEAT471M10
	C156	ELECT. CAPACITOR	CEAT471M10
	C157	ELECT. CAPACITOR	CEAT101M16
	C159	CERAMIC CAPACITOR	CCSRCH101J50
	C160	CERAMIC CAPACITOR	CCSRCH101J50
	C161	ELECT. CAPACITOR	CEAT470M25
	C162	ELECT. CAPACITOR	CEAT470M25
	C163	CERAMIC CAPACITOR	CCSRCH101J50
	C164	CERAMIC CAPACITOR	CCSRCH101J50
	C165	ELECT. CAPACITOR	CEAT470M25
	C166	ELECT. CAPACITOR	CEAT470M25
	C167	CHIP CERAMIC C.	CCSRCH221J50
	C168	CERAMIC CAPACITOR	CKSRYB152K50
	C169	ELECT. CAPACITOR	CEAT470M25
	C170	ELECT. CAPACITOR	CEAT4R7M50
	C171	CHIP CERAMIC C.	CKSRYB103K50
	C172	CHIP CERAMIC C.	CKSRYB103K50
	C173	CHIP CERAMIC C.	CCSRCH151J50
	C174	CHIP CERAMIC C.	CCSRCH151J50
	C175	ELECT. CAPACITOR	CEAT101M16
	C176	ELECT. CAPACITOR	CEAT101M16
	C177	CERAMIC CAPACITOR	CKSQYB103K50
	C178	CERAMIC CAPACITOR	CKSQYB103K50
	C179	CERAMIC CAPACITOR	CKSQYB103K50
	C180	CERAMIC CAPACITOR	CKSQYB103K50
	C183	CERAMIC CAPACITOR	CKSQYB103K50
	C184	CERAMIC CAPACITOR	CKSQYF473Z50
	C185	CERAMIC CAPACITOR	CKSQYF473Z50
	C186	CERAMIC CAPACITOR	CKSQYB103K50
	C187	CERAMIC CAPACITOR	CKSQYB103K50
	C188	CERAMIC CAPACITOR	CKSQYB103K50
	C189	CERAMIC CAPACITOR	CKSQYB103K50

Mark	No.	Description	Part No.
	C190	CERAMIC CAPACITOR	CKSQYB103K50
	C191	CERAMIC CAPACITOR	CKSQYB103K50
	C192	CERAMIC CAPACITOR	CKSQYB103K50
	C193	CERAMIC CAPACITOR	CKSQYB103K50
	C194	ELECT. CAPACITOR	CEAT4R7M50
	C195	ELECT. CAPACITOR	CEAT4R7M50
	C197	CHIP CAPACITOR	CCSQCH101J50
	C198	CHIP CAPACITOR	CCSQCH101J50
	C199	CERAMIC CAPACITOR	CKSQYB103K50
	C201	ELECT. CAPACITOR	CEAT4R7M50
	C202	CERAMIC CAPACITOR	CKSRYF104Z16
	C205	ELECT. CAPACITOR	CEAT3R3M50
	C207	CHIP CAPACITOR	CCSQCH101J50
	C208	CHIP CAPACITOR	CCSQCH101J50
	C209	CERAMIC CAPACITOR	CKSQYF104Z25
	C1001	CERAMIC CAPACITOR	CCSRCH101J50
	C1002	CERAMIC CAPACITOR	CCSRCH101J50
	C1003	ELECT. CAPACITOR	CEAT4R7M50
	C1004	ELECT. CAPACITOR	CEAT4R7M50
	C1005	ELECT. CAPACITOR	CEAT221M6R3
	C1006	CHIP CERAMIC C.	CKSRYB103K50
	C1007	ELECT. CAPACITOR	CEJANP100M10
	C1008	ELECT. CAPACITOR	CEJANP100M10
	C1009	CERAMIC CAPACITOR	CKSQYF104Z25
	C1101	CHIP CERAMIC C.	CCSRCH471J50
	C1102	CERAMIC CAPACITOR	CCSRCH102J50
	C1103	CERAMIC CAPACITOR	CCSRCH390J50
	C1104	CERAMIC CAPACITOR	CCSRCH390J50
	C1105	CERAMIC CAPACITOR	CKSRYF104Z16
	C1106	CHIP CERAMIC C.	CCSRCH471J50
	C1107	CHIP CERAMIC C.	CKSRYB223K50
	C1108	CERAMIC CAPACITOR	CKSQYB224K16
	C1109	CERAMIC CAPACITOR	CKSRYF104Z16
	C1110	CHIP CERAMIC C.	CCSRCH471J50
	C1111	CERAMIC CAPACITOR	CKSQYF104Z25
	C1112	ELECT. CAPACITOR	CEAT1R0M50
	C1113	CERAMIC CAPACITOR	CCSRCH180J50
	C1114	CERAMIC CAPACITOR	CCSRCH180J50
	C1115	ELECT. CAPACITOR	CEATR47M50
	C1116	ELECT. CAPACITOR	CEAT101M10
	C1117	CERAMIC CAPACITOR	CKSQYF104Z25
	C1118	CHIP CERAMIC C.	CCSQCH471J50
	C1119	CHIP CERAMIC C.	CCSQCH271J50
	C1121	ELECT. CAPACITOR	CEAT101M10
	C1122	ELECT. CAPACITOR	CEAT101M10
	C1123	CHIP CAPACITOR	CCSQCH331J50
	C1124	CHIP CAPACITOR	CCSQCH331J50
	C1128	CHIP CERAMIC C.	CKSRYB103K50
	C1129	CERAMIC CAPACITOR	CKSQYB103K50
	C1130	CHIP CERAMIC C.	CCSQCH471J50
	C1132	CERAMIC CAPACITOR	CKSQYB103K50
	C1133	CERAMIC CAPACITOR	CKSQYF104Z25
	C1134	CHIP CERAMIC C.	CKSRYB103K50
	C1201	ELECT. CAPACITOR	CEAT101M10
	C1202	ELECT. CAPACITOR	CEAT221M6R3
	C1203	CHIP CERAMIC C.	CCSRCH200J50
	C1204	CHIP CERAMIC C.	CCSRCH200J50
	C1205	CHIP CERAMIC C.	CKSRYB103K50
	C1206	CERAMIC CAPACITOR	CKSQYB103K50
	C1207	CHIP CAPACITOR	CCSQCH101J50
	C1208	CERAMIC CAPACITOR	CKSQYB103K50
	C1209	CHIP CAPACITOR	CCSQCH101J50
	C1210	CHIP CERAMIC C.	CCSRCH471J50
	C1211	CHIP CERAMIC C.	CKSRYB103K50
	C1212	CERAMIC CAPACITOR	CCSRCH101J50

Mark	No.	Description	Part No.
	C1213	CHIP CAPACITOR	CCSQCH101J50
	C1214	CHIP CERAMIC C.	CKSRYB103K50
	C1215	CERAMIC CAPACITOR	CKSQYB103K50
	C1216	CERAMIC CAPACITOR	CKSQYB103K50
	C1217	CHIP CAPACITOR	CCSQCH101J50
	C1218	CHIP CAPACITOR	CCSQCH101J50
	C1219	CERAMIC CAPACITOR	CKSQYF104Z25
	C1220	CERAMIC CAPACITOR	CKSQYB103K50
	C1221	CHIP CAPACITOR	CCSQCH101J50
	C1222	CHIP CERAMIC C.	CKSRYB103K50
	C1223	CERAMIC CAPACITOR	CCSRCH101J50
	C1224	CERAMIC CAPACITOR	CKSQYF104Z25
	C1225	CERAMIC CAPACITOR	CKSQYF104Z25
	C1226	CERAMIC CAPACITOR	CKSRYF104Z16
	C1227	CERAMIC CAPACITOR	CKSRYF104Z16
	C1228	CERAMIC CAPACITOR	CKSQYF104Z25
	C1229	CERAMIC CAPACITOR	CKSQYF104Z25
	C1230	CERAMIC CAPACITOR	CKSRYF104Z16
	C1231	CERAMIC CAPACITOR	CKSQYF104Z25
	C1232	CERAMIC CAPACITOR	CKSRYF104Z16
	C1301	ELECT. CAPACITOR	CEJA101M10
	C1302	CERAMIC CAPACITOR	CKSQYB103K50
	C1303	CHIP CAPACITOR	CCSQCH101J50
	C1304	CERAMIC CAPACITOR	CKSQYF104Z25
	C1401	ELECT. CAPACITOR	CEAT4R7M50
	C1404	ELECT. CAPACITOR	CEAT101M10
	C1601	CHIP CERAMIC C.	CCSRCH221J50
	C1602	CHIP CERAMIC C.	CCSRCH221J50
	C1603	CHIP CERAMIC C.	CCSRCH471J50
	C1604	CHIP CERAMIC C.	CCSRCH471J50
	C1605	ELECT. CAPACITOR	CEAT4R7M50
	C1606	ELECT. CAPACITOR	CEAT4R7M50
	C1607	CERAMIC CAPACITOR	CKSQYB103K50
	C1608	CERAMIC CAPACITOR	CKSQYB103K50
	C1609	CHIP CERAMIC C.	CCSRCH221J50
	C1610	CHIP CERAMIC C.	CCSRCH221J50
	C1611	CHIP CERAMIC C.	CCSRCH471J50
	C1612	CHIP CERAMIC C.	CCSRCH471J50
	C1613	ELECT. CAPACITOR	CEAT4R7M50
	C1614	ELECT. CAPACITOR	CEAT4R7M50
	C1615	CHIP CERAMIC C.	CKSRYB222K50
	C1616	CHIP CERAMIC C.	CKSRYB222K50
	C1617	CHIP CERAMIC C.	CKSRYB222K50
	C1618	CHIP CERAMIC C.	CKSRYB222K50
	C1619	CERAMIC CAPACITOR	CKSQYB103K50
	C1620	CERAMIC CAPACITOR	CKSQYB103K50
	C1621	CHIP CERAMIC C.	CKSRYB122K50
	C1623	CHIP CERAMIC C.	CCSRCH271J50
	C1625	ELECT. CAPACITOR	CEAT4R7M50
	C1626	ELECT. CAPACITOR	CEAT4R7M50
	C1627	CHIP CERAMIC C.	CKSRYB222K50
	C1628	CERAMIC CAPACITOR	CKSRYF104Z50
	C1629	CERAMIC CAPACITOR	CKSQYB103K50
	C1630	CERAMIC CAPACITOR	CKSQYB103K50
	C1631	CERAMIC CAPACITOR	CKSQYF104Z25
	C1632	CERAMIC CAPACITOR	CKSQYF104Z25
	C1636	CHIP CERAMIC C.	CKSRYB103K50
	C1637	CHIP CERAMIC C.	CKSRYB103K50
	C1639	CHIP CERAMIC C.	CCSQCH471J50
	C1640	CHIP CAPACITOR	CCSQCH101J50
	C1641	CHIP CAPACITOR	CCSQCH101J50
	C1642	CHIP CERAMIC C.	CKSRYB103K50
	C1701	CERAMIC CAPACITOR	CKSRYB682K50
	C1702	CERAMIC CAPACITOR	CKSRYB682K50
	C1703	CHIP CERAMIC C.	CKSRYB222K50

Mark	No.	Description	Part No.
	C1704	CHIP CERAMIC C.	CKSRYB222K50
	C1705	CERAMIC CAPACITOR	CKSRYB104K16
	C1706	CERAMIC CAPACITOR	CKSRYB104K16
	C1707	CHIP CERAMIC C.	CCSRCH151J50
	C1708	CHIP CERAMIC C.	CCSRCH151J50
	C1709	CHIP CERAMIC C.	CKSRYB103K50
	C1710	CHIP CERAMIC C.	CKSRYB103K50
	C1711	CHIP CERAMIC C.	CKSRYB103K50
	C1712	CHIP CERAMIC C.	CKSRYB103K50
	C1713	ELECT. CAPACITOR	CEAT220M25
	C1714	ELECT. CAPACITOR	CEAT220M25
	C1715	CERAMIC CAPACITOR	CKSRYB682K50
	C1716	CERAMIC CAPACITOR	CKSRYB682K50
	C1717	CHIP CERAMIC C.	CKSRYB222K50
	C1718	CHIP CERAMIC C.	CKSRYB222K50
	C1719	CERAMIC CAPACITOR	CKSRYB104K16
	C1720	CERAMIC CAPACITOR	CKSRYB104K16
	C1721	CHIP CERAMIC C.	CCSRCH151J50
	C1722	CHIP CERAMIC C.	CCSRCH151J50
	C1723	CHIP CERAMIC C.	CKSRYB103K50
	C1724	CHIP CERAMIC C.	CKSRYB103K50
	C1725	CHIP CERAMIC C.	CKSRYB103K50
	C1726	CHIP CERAMIC C.	CKSRYB103K50
	C1727	ELECT. CAPACITOR	CEAT220M25
	C1728	ELECT. CAPACITOR	CEAT220M25
	C1729	CERAMIC CAPACITOR	CKSRYB682K50
	C1731	CHIP CERAMIC C.	CKSRYB222K50
	C1732	CERAMIC CAPACITOR	CKSRYB682K50
	C1733	CERAMIC CAPACITOR	CKSRYB104K16
	C1734	CERAMIC CAPACITOR	CKSRYB104K16
	C1735	CHIP CERAMIC C.	CCSRCH151J50
	C1736	CERAMIC CAPACITOR	CCSRCH102J50
	C1737	CHIP CERAMIC C.	CKSRYB103K50
	C1738	CHIP CERAMIC C.	CKSRYB103K50
	C1739	ELECT. CAPACITOR	CEAT220M25
	C1740	ELECT. CAPACITOR	CEAT220M25

RESISTORS

Mark	No.	Description	Part No.
	R101	CHIP RESISTOR	RS1/10S331J
	R102	CHIP RESISTOR	RS1/10S331J
	R103	CHIP RESISTOR	RS1/10S222J
	R104	CHIP RESISTOR	RS1/10S222J
	R105	CHIP RESISTOR	RS1/10S331J
	R106	CHIP RESISTOR	RS1/10S331J
	R107	CHIP RESISTOR	RS1/10S331J
	R108	CHIP RESISTOR	RS1/10S331J
	R109	CHIP RESISTOR	RS1/10S331J
	R110	CHIP RESISTOR	RS1/10S331J
	R111	CHIP RESISTOR	RS1/10S222J
	R112	CHIP RESISTOR	RS1/10S222J
	R113	CHIP RESISTOR	RS1/10S331J
	R114	CHIP RESISTOR	RS1/10S331J
	R115	CHIP RESISTOR	RS1/10S104J
	R116	CHIP RESISTOR	RS1/10S104J
	R117	CHIP RESISTOR	RS1/10S104J
	R118	CHIP RESISTOR	RS1/10S104J
	R121	CHIP RESISTOR	RS1/10S104J
	R122	CHIP RESISTOR	RS1/10S104J
	R129	CHIP RESISTOR	RS1/10S331J
	R130	CHIP RESISTOR	RS1/10S331J
	R132	CHIP RESISTOR	RS1/10S104J
	R133	CHIP RESISTOR	RS1/10S104J
	R134	CHIP RESISTOR	RS1/10S104J
	R135	CHIP RESISTOR	RS1/10S104J
	R138	CHIP RESISTOR	RS1/10S473J
	R139	CHIP RESISTOR	RS1/10S104J
	R140	CHIP RESISTOR	RS1/10S104J
	R141	CHIP RESISTOR	RS1/10S104J
	R142	CHIP RESISTOR	RS1/10S104J
	R143	CHIP RESISTOR	RS1/10S104J
	R144	CHIP RESISTOR	RS1/10S204J
	R157	CHIP RESISTOR	RS1/10S104J
	R158	CHIP RESISTOR	RS1/10S104J
	R163	CHIP RESISTOR	RS1/10S104J
	R164	CHIP RESISTOR	RS1/10S104J
⚠	R174	METAL OXIDE RESISTOR	RS1LMF101J
⚠	R175	METAL OXIDE RESISTOR	RS1LMF101J
	R182	CHIP RESISTOR	RS1/10S473J
	R183	CHIP RESISTOR	RS1/10S122J
	R185	CHIP RESISTOR	RS1/10S104J
	R186	CHIP RESISTOR	RS1/10S104J
	R192	CHIP RESISTOR	RS1/10S104J
	R193	CHIP RESISTOR	RS1/10S104J
	R211	CHIP RESISTOR	RS1/10S100J
	R212	CHIP RESISTOR	RS1/10S100J
	R1206	CHIP RESISTOR	RS1/10S102J
	R1207	CHIP RESISTOR	RS1/10S102J
	R1208	CHIP RESISTOR	RS1/10S102J
	R1211	CHIP RESISTOR	RS1/10S472J
	R1212	CHIP RESISTOR	RS1/10S472J
	R1213	CHIP RESISTOR	RS1/10S472J
	R1302	CHIP RESISTOR	RS1/10S0R0J
	R1638	CHIP RESISTOR	RS1/10S102J
	R1639	CHIP RESISTOR	RS1/10S102J
	R1640	CHIP RESISTOR	RS1/10S102J
	R1641	CHIP RESISTOR	RS1/10S473J
	R1689	CHIP RESISTOR	RS1/10S0R0J
	R1713	CHIP RESISTOR	RS1/10S473J
	R1714	CHIP RESISTOR	RS1/10S473J
	R1727	CHIP RESISTOR	RS1/10S473J
	R1728	CHIP RESISTOR	RS1/10S473J
	R1741	CHIP RESISTOR	RS1/10S473J
	R1742	CHIP RESISTOR	RS1/10S473J
	Other Resistors		RS1/16S□□□J

OTHERS

Mark	No.	Description	Part No.
	CN101	19P SOCKET	KP200TA19L
	CN102	32P CONNECTOR	52045-3245
	CN103	20P CONNECTOR	52045-1945
	CN104	CONNECTOR	52045-1345
	CN105	CONNECTOR	52045-1345
	CN106	CONNECTOR	52045-1745
	CN1501	CONNECTOR 6P	52045-0645
	JA101	PIN JACK(4P)	AKB7048
	JA102	PIN JACK(4P)	AKB7048
	JA103	PIN JACK(4P)	AKB7048
	JA104	PIN JACK(4P)	AKB7048
	X1101	CRYSTAL RESONATOR (18.432MHz)	RSS1052
	X1201	CRYSTAL RESONATOR (12.288MHz)	VSS1140

Mark	No.	Description	Part No.

C AMP&PRIMARY ASSY

SEMICONDUCTORS

Mark	No.	Description	Part No.
	IC51	REGULATOR IC	NJM78M56FA
⚠	IC601	AUDIO IC	PAC010A
⚠	IC602	AUDIO IC	PAC011A
⚠	IC603	PROTECTOR (1A)	AEK7009
⚠	IC604	PROTECTOR (10A)	AEK7022
⚠	IC605	PROTECTOR (10A)	AEK7022
⚠	IC606	PROTECTOR (10A)	AEK7022
⚠	IC607	PROTECTOR (10A)	AEK7022
	Q51	TRANSISTOR	KRC101M
	Q601	TRANSISTOR	2SC2878
	Q602	TRANSISTOR	2SC2878
	Q603	TRANSISTOR	2SC2878
	Q604	TRANSISTOR	2SC2878
	Q605	TRANSISTOR	2SC2240
	Q606	TRANSISTOR	2SC2240
	Q631	TRANSISTOR	2SC2878
	Q632	TRANSISTOR	2SC2878
	Q633	TRANSISTOR	2SC2240
	Q651	TRANSISTOR	2SC2878
	Q652	TRANSISTOR	2SC2878
	Q653	TRANSISTOR	2SC2878
	Q654	TRANSISTOR	2SC2878
	Q655	TRANSISTOR	2SC2240
	Q656	TRANSISTOR	2SC2240
	Q691	TRANSISTOR	2SC1740S
	Q692	TRANSISTOR	2SC1740S
	Q701	TRANSISTOR	2SD1859X
	Q702	TRANSISTOR	2SB1238X
	Q703	TRANSISTOR	2SA1145
	Q704	TRANSISTOR	2SC1845
⚠	D51	DIODE	S5688G
⚠	D52	DIODE	S5688G
⚠	D53	DIODE	S5688G
⚠	D54	DIODE	S5688G
⚠	D55	DIODE	S5688G
	D56	DIODE	1SS133
	D58	ZENER DIODE	MTZJ5.1A
	D601	DIODE	1SS133
	D602	DIODE	1SS133
	D603	DIODE	1SS133
	D604	DIODE	1SS133
	D605	ZENER DIODE	MTZJ8.2A
	D606	ZENER DIODE	MTZJ8.2A
	D631	DIODE	1SS133
	D632	DIODE	1SS133
	D633	ZENER DIODE	MTZJ8.2A
	D634	ZENER DIODE	MTZJ8.2A
	D651	DIODE	1SS133
	D652	DIODE	1SS133
	D653	DIODE	1SS133
	D654	DIODE	1SS133
⚠	D701	DIODE	D5SBA20(B)
⚠	D702	DIODE	D5SBA20(B)
	D711	ZENER DIODE	MTZJ22D
	D712	ZENER DIODE	MTZJ5.1B
	D752	DIODE	1SS133
	D754	DIODE	1SS133
	D756	DIODE	1SS133
	D758	DIODE	1SS133

COILS AND FILTERS

Mark	No.	Description	Part No.
⚠	L51	LINE FILTER	ATF7018
	L751	COIL	ATH1004
	L752	COIL	ATH1004
	L753	COIL	ATH1004
	L761	COIL	ATH1004
	L762	COIL	ATH1004

SWITCHES AND RELAYS

Mark	No.	Description	Part No.
⚠	RY51	JOE LOWPOWER RELAY	ASR7013
	RY751	RELAY	ASR7001
	RY752	RELAY	ASR7001
	RY753	RELAY	ASR7001
	RY754	RELAY	ASR7001

CAPACITORS

Mark	No.	Description	Part No.
⚠	C51	CKA (10000pF/AC250V)	ACG7020
⚠	C52	CKA (10000pF/AC250V)	ACG7020
	C53	ELECT. CAPACITOR	CEAT102M16
	C54	ELECT. CAPACITOR	CEAT470M25
	C55	CERAMIC CAPACITOR	CGCYX103M25
	C56	CERAMIC CAPACITOR	CGCYX103M25
	C57	CERAMIC CAPACITOR	CGCYX103M25
	C601	CERAMIC CAPACITOR	CKCYB102K50
	C602	CERAMIC CAPACITOR	CKCYB102K50
	C603	CERAMIC CAPACITOR	CKCYB331K50
	C604	CERAMIC CAPACITOR	CKCYB331K50
	C605	ELECT. CAPACITOR	CEAT4R7M50
	C606	ELECT. CAPACITOR	CEAT4R7M50
	C607	CERAMIC CAPACITOR	CCCSL6R0D50
	C608	CERAMIC CAPACITOR	CCCSL6R0D50
	C609	CERAMIC CAPACITOR	CCCSL6R0D50
	C610	CERAMIC CAPACITOR	CCCSL6R0D50
	C611	ELECT. CAPACITOR	CEAT101M16
	C612	ELECT. CAPACITOR	CEAT101M16
	C615	ELECT. CAPACITOR	CEANP2R2M50
	C616	ELECT. CAPACITOR	CEANP2R2M50
	C631	CERAMIC CAPACITOR	CKCYB102K50
	C632	CERAMIC CAPACITOR	CKCYB331K50
	C633	ELECT. CAPACITOR	CEAT4R7M50
	C634	CERAMIC CAPACITOR	CCCSL6R0D50
	C635	CERAMIC CAPACITOR	CCCSL6R0D50
	C636	ELECT. CAPACITOR	CEAT101M16
	C638	ELECT. CAPACITOR	CEANP2R2M50
	C651	CERAMIC CAPACITOR	CKCYB102K50
	C652	CERAMIC CAPACITOR	CKCYB102K50
	C653	CERAMIC CAPACITOR	CKCYB331K50
	C654	CERAMIC CAPACITOR	CKCYB331K50
	C655	ELECT. CAPACITOR	CEAT4R7M50
	C656	ELECT. CAPACITOR	CEAT4R7M50
	C657	CERAMIC CAPACITOR	CCCSL6R0D50
	C658	CERAMIC CAPACITOR	CCCSL6R0D50
	C659	CERAMIC CAPACITOR	CCCSL6R0D50
	C660	CERAMIC CAPACITOR	CCCSL6R0D50
	C661	ELECT. CAPACITOR	CEAT101M16
	C662	ELECT. CAPACITOR	CEAT101M16
	C665	ELECT. CAPACITOR	CEANP2R2M50
	C666	ELECT. CAPACITOR	CEANP2R2M50
	C691	CERAMIC CAPACITOR	CKCYB102K50
	C692	ELECT. CAPACITOR	CEAT221M10
	C701	ELECT.CAPACITOR (4700µF/71V)	ACH7137

Mark	No.	Description	Part No.
	C702	ELECT.CAPACITOR (4700µF/71V)	ACH7137
	C703	ELECT.CAPACITOR (3300µF/42V)	ACH7135
	C704	ELECT.CAPACITOR (3300µF/42V)	ACH7135
	C705	ELECT. CAPACITOR	CEAT100M2A
	C706	ELECT. CAPACITOR	CEAT100M2A
	C707	CKA (0.01µF/AC250V)	ACG1005
	C708	CKA (0.01µF/AC250V)	ACG1005
	C711	ELECT. CAPACITOR	CEAT101M35
	C712	ELECT. CAPACITOR	CEAT101M10
	C751	AUDIO FILM CAPACITOR	CFTYA104J50
	C752	AUDIO FILM CAPACITOR	CFTYA104J50
	C755	AUDIO FILM CAPACITOR	CFTYA104J50
	C761	AUDIO FILM CAPACITOR	CFTYA104J50
	C762	AUDIO FILM CAPACITOR	CFTYA104J50

RESISTORS

Mark	No.	Description	Part No.
⚠	R51	RESISTOR(2.2MΩ/ 1/2W)	RCN1080
⚠	R52	CARBON FILM RESISTOR	RD1/2PM270J
⚠	R615	RESISTOR (0.22Ω/5W)	ACN7094
⚠	R616	RESISTOR (0.22Ω/5W)	ACN7094
⚠	R638	RESISTOR (0.22Ω/5W)	ACN7094
⚠	R665	RESISTOR (0.22Ω/5W)	ACN7094
⚠	R666	RESISTOR (0.22Ω/5W)	ACN7094
⚠	R711	METAL OXIDE RESISTOR	RS2LMF392J
⚠	R751	CARBON FILM RESISTOR	RD1/4PMF101J
⚠	R752	CARBON FILM RESISTOR	RD1/4PMF101J
⚠	R753	METAL OXIDE RESISTOR	RS1LMF4R7J
⚠	R754	METAL OXIDE RESISTOR	RS1LMF4R7J
⚠	R755	CARBON FILM RESISTOR	RD1/4PMF101J
⚠	R756	METAL OXIDE RESISTOR	RS1LMF4R7J
⚠	R761	CARBON FILM RESISTOR	RD1/4PMF101J
⚠	R762	CARBON FILM RESISTOR	RD1/4PMF101J
⚠	R763	METAL OXIDE RESISTOR	RS1LMF4R7J
⚠	R764	METAL OXIDE RESISTOR	RS1LMF4R7J
	Other Resistors		RD1/4PU□□□J

OTHERS

Mark	No.	Description	Part No.
	51	AC SOCKET 1-P	AKP1060
	701	7P CABLE HOLDER	51048-0700
	CN51	AC CODE SOCKET	RKP1751
	CN53	22P CONNECTOR	52045-2245
	CN601	16P PLUG	KM200TA16
	CN751	SPEAKER TERMINAL 6-P	AKE7020
	CN753	PIN JACK 1-P	AKB7042
	CN754	SPEAKER TERMINAL 8-P	AKE7057
	H51	FUSE CLIP	AKR7001
	H52	FUSE CLIP	AKR7001
	H53	FUSE CLIP	AKR7001
	H54	FUSE CLIP	AKR7001
	H701	FUSE CLIP	AKR7001
	H702	FUSE CLIP	AKR7001
⚠	T51	STANDBY TRANSFORMER	ATT7057
	KN51	EARTH METAL FITTING	VNF1084
	KN601	EARTH METAL FITTING	VNF1084

D TRANS2 ASSY

SEMICONDUCTORS

Mark	No.	Description	Part No.
⚠	IC851	PROTECTOR (1.6A)	AEK7012
⚠	IC852	PROTECTOR (1.6A)	AEK7012
⚠	IC853	PROTECTOR (1.6A)	AEK7012

OTHERS

Mark	No.	Description	Part No.
	851	7P CABLE HOLDER	51048-0700

E TRANS3 ASSY

TRANS3 ASSY has no service part.

F REGULATOR ASSY

SEMICONDUCTORS

Mark	No.	Description	Part No.
	IC801	REGULATOR IC	NJM78M12FA
	IC802	REGULATOR IC	NJM79M12FA
	IC803	REGULATOR IC	NJM78M05FA
	IC804	REGULATOR IC	NJM78M05FA
	Q801	TRANSISTOR	KRA103M
	Q802	TRANSISTOR	KRC101M
	Q803	TRANSISTOR	KRA103M
	Q804	TRANSISTOR	KRC101M
	Q805	TRANSISTOR	KRA103M
	Q806	TRANSISTOR	KRC101M
⚠	D801	DIODE	S5688G
⚠	D802	DIODE	S5688G
⚠	D803	DIODE	S5688G
⚠	D804	DIODE	S5688G
⚠	D805	DIODE	S5688G
⚠	D806	DIODE	S5688G
⚠	D807	DIODE	S5688G
⚠	D808	DIODE	S5688G

CAPACITORS

Mark	No.	Description	Part No.
	C801	ELECT. CAPACITOR	CEAT222M25
	C802	ELECT. CAPACITOR	CEAT222M25
	C803	CERAMIC CAPACITOR	CGCYX103M25
	C804	CERAMIC CAPACITOR	CGCYX103M25
	C805	ELECT. CAPACITOR	CEAT101M16
	C806	ELECT. CAPACITOR	CEAT101M16
	C807	CERAMIC CAPACITOR	CGCYX103M25
	C808	ELECT. CAPACITOR	CEAT101M10
	C809	ELECT. CAPACITOR	CEAT222M16
	C810	CERAMIC CAPACITOR	CGCYX103M25
	C811	ELECT. CAPACITOR	CEAT101M10

OTHERS

Mark	No.	Description	Part No.
	CN801	22P CONNECTOR	52045-2245
	CN802	19P PLUG	KM200TA19
	CN803	5P PLUG	KM200TA5

G TRANS1 ASSY

TRANS1 ASSY has no service part.

H VIDEO&6CH IN ASSY

SEMICONDUCTORS

Mark	No.	Description	Part No.
	IC301	VIDEO SW IC	NJM2296M
	IC302	IC	NJM4558MD
	IC303	IC	NJM4558MD
	Q301	TRANSISTOR	2SC3377
	Q302	TRANSISTOR	2SA1515

Mark	No.	Description	Part No.
	Q303	TRANSISTOR	2SC2878
	D301	DIODE	1SS355
	D302	DIODE	1SS355
	D303	CHIP ZENER DIODE	UDZS6.2B
	D304	CHIP ZENER DIODE	UDZS6.2B
	D305	DIODE	1SS355
	D306	DIODE	1SS355

CAPACITORS

	C302	CERAMIC CAPACITOR	CKSQYB103K50
	C304	CERAMIC CAPACITOR	CKSQYB221K50
	C305	CERAMIC CAPACITOR	CKSQYB221K50
	C306	CERAMIC CAPACITOR	CKSQYB221K50
	C307	ELECT. CAPACITOR	CEAT470M25
	C308	ELECT. CAPACITOR	CEAT470M25
	C309	ELECT. CAPACITOR	CEAT470M25
	C310	ELECT. CAPACITOR	CEAT470M25
	C311	CERAMIC CAPACITOR	CKSQYB473K50
	C312	ELECT. CAPACITOR	CEAT470M25
	C313	CERAMIC CAPACITOR	CKSQYB473K50
	C314	ELECT. CAPACITOR	CEAT470M25
	C315	CERAMIC CAPACITOR	CKSQYB103K50
	C316	CERAMIC CAPACITOR	CKSQYB103K50
	C317	CERAMIC CAPACITOR	CKSQYB221K50
	C318	CERAMIC CAPACITOR	CKSQYB221K50
	C319	CHIP CAPACITOR	CCSQCH101J50
	C320	CHIP CAPACITOR	CCSQCH101J50
	C321	ELECT. CAPACITOR	CEAT4R7M50
	C322	CERAMIC CAPACITOR	CKSQYB103K50
	C323	CERAMIC CAPACITOR	CKSQYB103K50
	C324	ELECT. CAPACITOR	CEAT4R7M50
	C325	CERAMIC CAPACITOR	CKSQYB221K50
	C326	CERAMIC CAPACITOR	CKSQYB221K50
	C327	CHIP CAPACITOR	CCSQCH101J50
	C328	CHIP CAPACITOR	CCSQCH101J50
	C329	CERAMIC CAPACITOR	CKSQYB103K50
	C330	CERAMIC CAPACITOR	CKSQYB103K50
	C331	ELECT. CAPACITOR	CEAT4R7M50
	C332	ELECT. CAPACITOR	CEAT4R7M50
	C333	CERAMIC CAPACITOR	CKSQYB331K50
	C338	ELECT. CAPACITOR	CEAT470M25
	C342	CHIP CAPACITOR	CCSQCH101J50
	C343	CHIP CAPACITOR	CCSQCH101J50
	C344	CHIP CAPACITOR	CCSQCH101J50
	C345	CHIP CAPACITOR	CCSQCH101J50
	C346	CERAMIC CAPACITOR	CKSQYB104K16
	C347	CHIP CAPACITOR	CCSQCH470J50

RESISTORS

⚠	R343	METAL OXIDE RESISTOR	RS1LMF820J
⚠	R344	METAL OXIDE RESISTOR	RS1LMF820J
	Other Resistors		RS1/10S□□□J

OTHERS

	CN302	5P SOCKET	KP200TA5L
	CN303	13P CONNECTOR	52044-1345
	CN305	6P PIN JACK	AKB7123
	CN307	PIN JACK(4P)	AKB7087
	JA301	JACK	RKN1004

Mark	No.	Description	Part No.

I H.P. ASSY

SEMICONDUCTORS

	Q551	TRANSISTOR	2SC2878
	Q552	TRANSISTOR	2SC2878

CAPACITORS

	C551	CERAMIC CAPACITOR	CKSQYB104K16
	C552	CERAMIC CAPACITOR	CKSQYB103K50
	C553	CHIP CERAMIC C.	CCSQCH471J50
	C555	CHIP CAPACITOR	CKSQYB223K50
	C556	CHIP CAPACITOR	CKSQYB223K50

RESISTORS

⚠	R551	METAL OXIDE RESISTOR	RS1/2LMF121J
⚠	R552	METAL OXIDE RESISTOR	RS1/2LMF121J
	Other Resistors		RS1/10S□□□J

OTHERS

	551	CABLE HOLDER(4P)	51063-0405
	JA551	JACK	RKN1002

J DIGITAL IN ASSY

SEMICONDUCTORS

	IC1901	LOGIC IC	TC74ACT151F
	IC1902	LOGIC IC	TC74HCU04AF

COILS AND FILTERS

	F1901	CHIP BEAD	DTF1067
	F1902	CHIP BEAD	DTF1067
	F1903	CHIP BEAD	DTF1067
	F1904	CHIP BEAD	DTF1067

CAPACITORS

	C1901	CERAMIC CAPACITOR	CKSQYB104K25
	C1902	CERAMIC CAPACITOR	CKSQYB104K25
	C1904	ELECT. CAPACITOR	CEAT101M10
	C1905	ELECT. CAPACITOR	CEAT101M10
	C1906	CERAMIC CAPACITOR	CKSQYB103K50
	C1907	CHIP CERAMIC C.	CCSQCH271J50
	C1908	CERAMIC CAPACITOR	CKSQYB104K25
	C1909	CERAMIC CAPACITOR	CKSQYB104K25
	C1910	CERAMIC CAPACITOR	CKSQYB103K50
	C1911	CERAMIC CAPACITOR	CCSQCH560J50
	C1912	ELECT. CAPACITOR	CEAT101M10
	C1913	CERAMIC CAPACITOR	CKSQYB103K50
	C1914	CHIP CERAMIC C.	CCSQCH271J50
	C1915	CHIP CAPACITOR	CKSQYB102K50
	C1916	CHIP CERAMIC C.	CCSQCH471J50
	C1917	CHIP CERAMIC C.	CCSQCH220J50
	C1918	CHIP CERAMIC C.	CCSQCH221J50
	C1919	CERAMIC CAPACITOR	CKSQYB103K50
	C1920	CERAMIC CAPACITOR	CKSQYB103K50
	C1921	CERAMIC CAPACITOR	CKSQYB104K25
	C1922	CERAMIC CAPACITOR	CKSQYB103K50

RESISTORS

	All Resistors		RS1/10S□□□J

OTHERS

	CN1901	CONNECTOR 6P	52045-0645
	JA1901	JACK	VKB1077
	JA1902	OPTICAL RECEIV MOD.	GP1F32R
	JA1903	OPTICAL RECEIV MOD.	GP1F32R

Mark	No.	Description	Part No.

K FRONT ASSY

SEMICONDUCTORS

IC401	CONTROL MCU	PDG247A
Q401	TRANSISTOR	KRA103M
Q402	TRANSISTOR	KRA103M
Q403	TRANSISTOR	KRC101M
Q405	TRANSISTOR	2SA933S
Q441	TRANSISTOR	KRC101M
Q442	TRANSISTOR	KRA103M
Q471	TRANSISTOR	KRA103M
D401	CHIP DIODE ARRAY	DAP202K
D403	DIODE	DAN217
D404	CHIP DIODE ARRAY	DAP202K
D405	DIODE	DAN217
D407	DIODE	1SS355
D408	DIODE	1SS355
D442	DIODE	1SS355

COILS AND FILTERS

L401	RADIAL INDUCTOR	LFEA2R2J

SWITCHES AND RELAYS

S451	SWITCH	XSG3001
S452	SWITCH	XSG3001
S453	SWITCH	XSG3001
S454	SWITCH	XSG3001
S455	SWITCH	XSG3001
S456	SWITCH	XSG3001
S457	SWITCH	XSG3001
S458	SWITCH	XSG3001
S459	SWITCH	XSG3001
S460	SWITCH	XSG3001
S461	SWITCH	XSG3001
S462	SWITCH	XSG3001
S463	SWITCH	XSG3001
S464	SWITCH	XSG3001
S465	SWITCH	XSG3001
S466	SWITCH	XSG3001
S467	SWITCH	XSG3001
S469	SWITCH	XSG3001
S470	SWITCH	XSG3001
S471	SWITCH	XSG3001
S472	SWITCH	XSG3001
S473	SWITCH	XSG3001
S474	SWITCH	XSG3001
S475	SWITCH	XSG3001
S476	SWITCH	XSG3001

CAPACITORS

C401	CERAMIC CAPACITOR	CKSQYB103K50
C402	ELECT. CAPACITOR	CEAT221M6R3
C403	CERAMIC CAPACITOR	CKSQYB103K50
C404	EDL CAPACITOR (0.047F/5.5V)	ACH7017
C405	ELECT. CAPACITOR	CEAT221M6R3
C406	CERAMIC CAPACITOR	CKSQYB473K16
C407	CERAMIC CAPACITOR	CKSQYB473K16
C408	CERAMIC CAPACITOR	CKSQYB104K16
C409	ELECT. CAPACITOR	CEAT2R2M50
C410	ELECT. CAPACITOR	CEAT2R2M50
C411	CERAMIC CAPACITOR	CKSQYB103K50
C412	ELECT. CAPACITOR	CEAT470M50
C416	CERAMIC CAPACITOR	CKSQYB104K16
C418	CERAMIC CAPACITOR	CKSQYB104K16
C420	ELECTROLYTIC CAPACIT (220µF/35V)	ACH7101
C441	CERAMIC CAPACITOR	CKSQYB103K50
C442	ELECT. CAPACITOR	CEJA470M10
C451	CHIP CAPACITOR	CKSQYB102K50
C452	CHIP CAPACITOR	CKSQYB102K50
C453	CHIP CAPACITOR	CKSQYB102K50
C454	CHIP CAPACITOR	CKSQYB102K50
C491	CERAMIC CAPACITOR	CKSQYB104K16
C492	CERAMIC CAPACITOR	CKSQYB104K16
C493	CERAMIC CAPACITOR	CKSQYB104K16
C494	CERAMIC CAPACITOR	CKSQYB104K16
C495	CHIP CAPACITOR	CKSQYB102K50
C531	CERAMIC CAPACITOR	CKSQYB103K50
C532	CERAMIC CAPACITOR	CKSQYB223K25

RESISTORS

All Resistors		RS1/10S□□□J

OTHERS

401	REMOTE RECEIVER UNIT	GP1U27X
403	CABLE HOLDER(4P)	51063-0405
471	CABLE HOLDER(4P)	51063-0405
491	CABLE HOLDER(3P)	51063-0305
CN401	19P CONNECTOR	52044-1945
CN402	32P CONNECTOR	52044-3245
V401	FL TUBE	AAV7072
X401	CERAMIC RESONATOR (7.2MHz)	ASS7018

L R.ENCODER ASSY

SWITCHES AND RELAYS

S511	ROTARY ENCODER	ASX7004

OTHERS

511	CABLE HOLDER(3P)	51063-0305

M POWER SW ASSY

SEMICONDUCTORS

D501	LED	BR3371XJ30A

SWITCHES AND RELAYS

S501	SWITCH	XSG3001

RESISTORS

R501	CHIP RESISTOR	RS1/10S271J

OTHERS

501	CABLE HOLDER(4P)	51063-0405

6. ADJUSTMENT

There is no information to be shown in this chapter.

7. GENERAL INFORMATION

7.1 DISASSEMBLY

■ Diagnosis

Note : This photograph shows other models.
However, the work method is the same.

① Remove the Bonnet (seven screws).

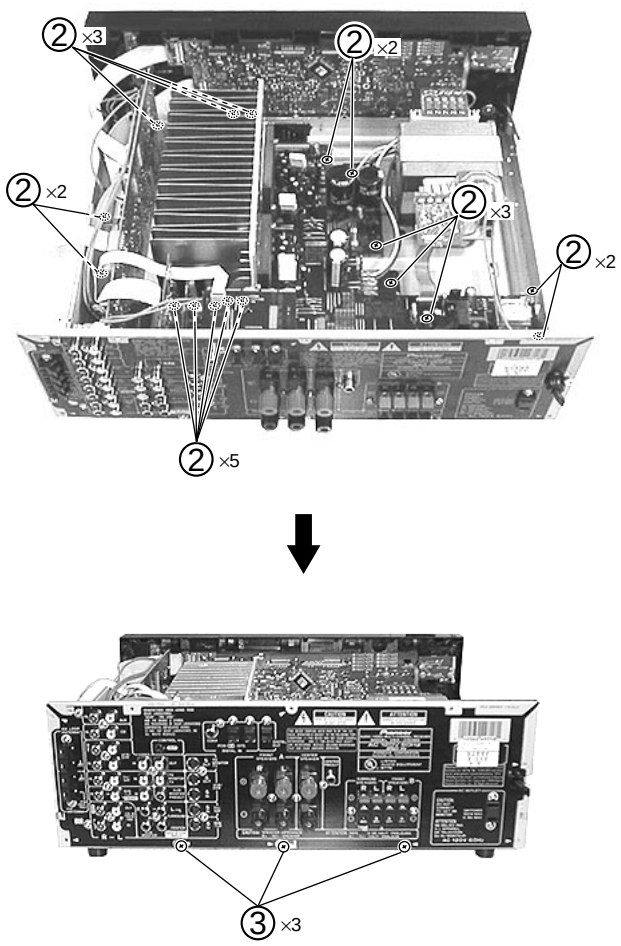

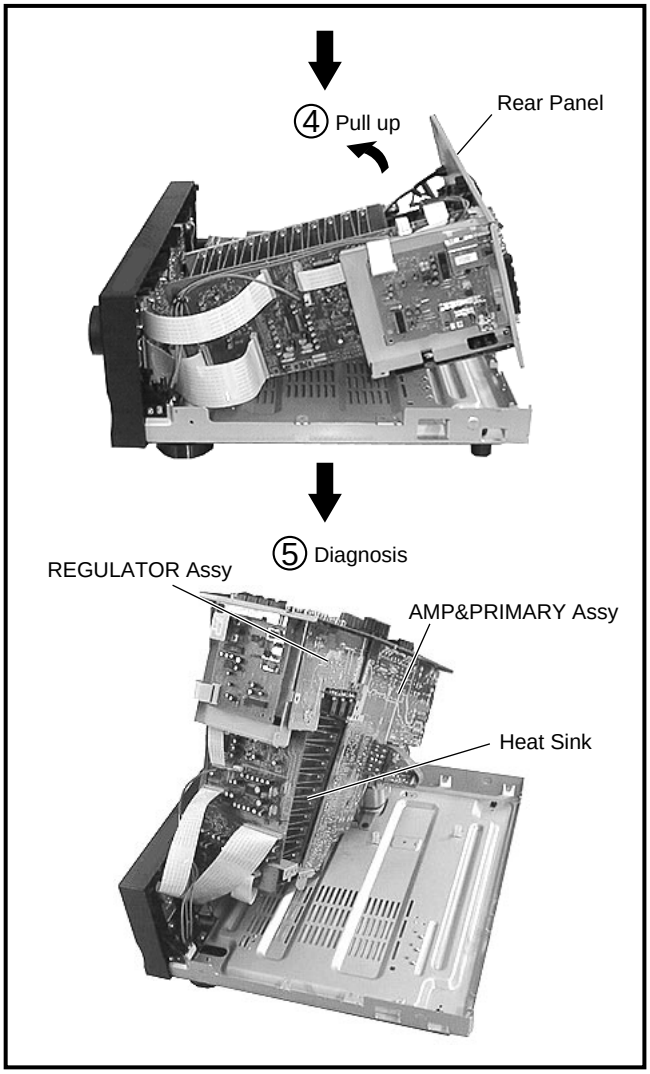

■ PCB Location

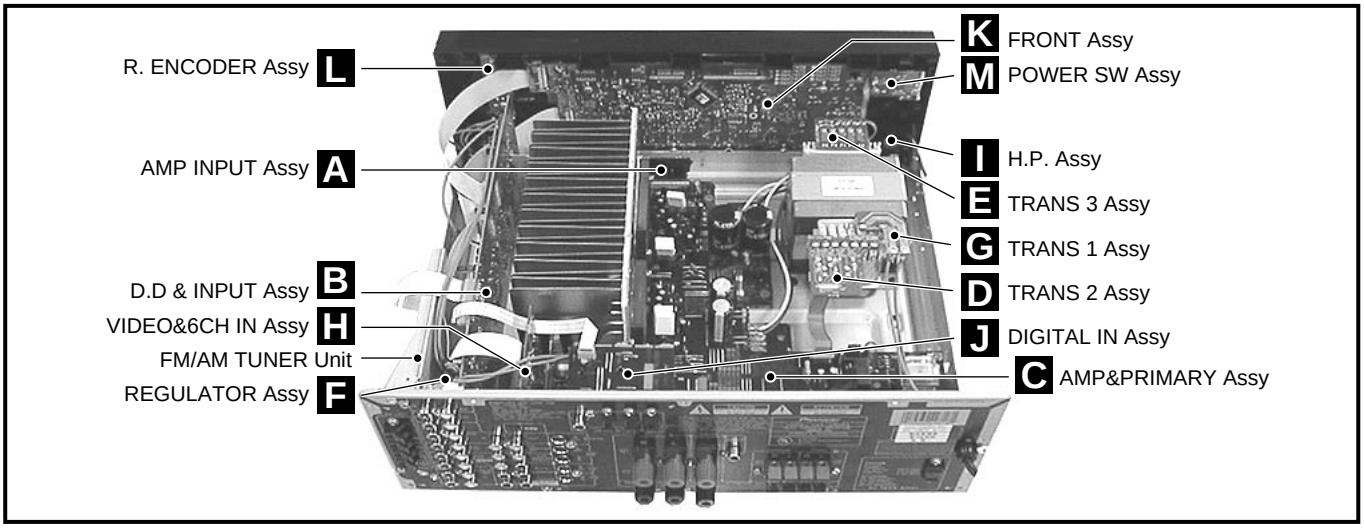

7.2 PARTS

7.2.1 IC

• The information shown in the list is basic information and may not correspond exactly to that shown in the schematic diagrams.

■ PDG247A (FRONT ASSY : IC401)

• System Control MCU

● Pin Arrangement (Top View)

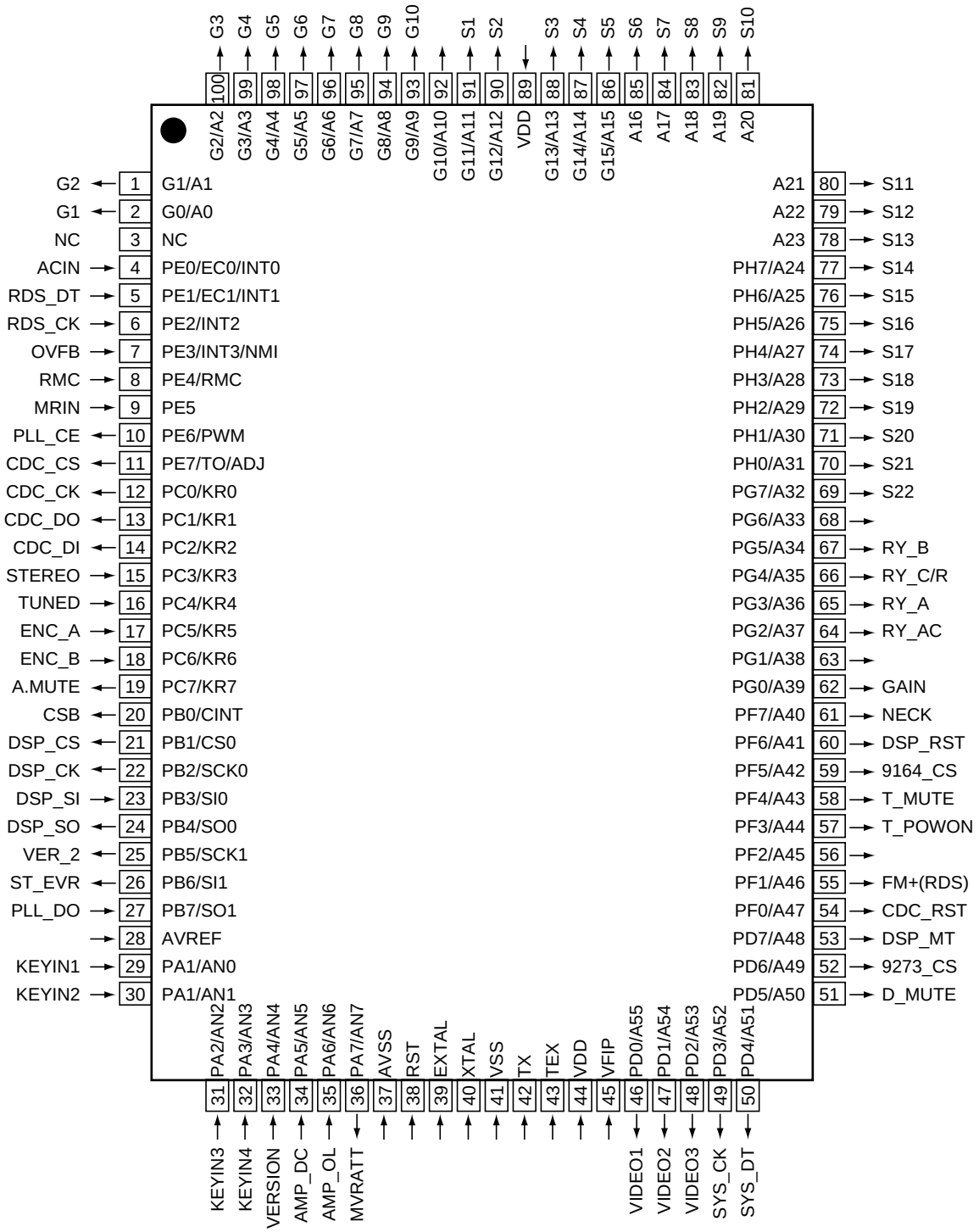

● Pin Function

No.	Pin Name	I/O	Pin Function	Active
1	G2	O	Grid output 2	H
2	G1	O	Grid output 1	H
3	NC	–	Connect to VDD	
4	ACIN	I	AC pulse input	
5	RDS_DT	I	Serial control DATA signal of RDS communication	
6	RDS_CK	I	Serial control CLOCK signal of RDS communication	
7	DIRLOCK	I	ERR/OVER input from CODEC	
8	RMC	I	Remote control signal input (no-carrier signal)	
9	MRIN	I	MULTI-ROOM input	
10	PLL_CE	O	Chip select signal for communication with LC72131 (tuner)	H
11	CDC_CS	O	CODEC chip serect	
12	CDC_CK	O	CODEC, TC9164 control clock	
13	CDC_DO	O	CODEC, TC9164 control data output	
14	CDC_DI	I	Data input from CODEC	
15	STEREO	I	Stereo/Monoral signal judgment signal	
16	TUNED	I	TUNED information	
17	ENC_A	I	Rotary encoder signal input A	
18	ENC_B	I	Rotary encoder signal input B	
19	AMUTE	O	Audio mute	L
20	CSB	O	Chip select for control of YSS912 sub DSP	L
21	DSP_CS	O	Chip select for control of YSS912 main DSP	L
22	DSP_CK	O	Clock signal for communication with YSS912	H
23	DSP_SI	I	DATA input for communication with YSS912	
24	DSP_SO	O	DATA output signal for communication with YSS912	H
25	VER_2	I	Destination switch 2	
26	ST_EVR	O	Strobe signal for communication with electric volume IC	H
27	PLL_DO	I	Data input signal for communication with LC72131 (tuner)	
28	AVref	–	Connect to VDD	
29	KEYIN1	I	Key input A/D conversion port 1	
30	KEYIN2	I	Key input A/D conversion port 2	
31	KEYIN3	I	Key input A/D conversion port 3	
32	KEYIN4	I	Key input A/D conversion port 4	
33	VER 1	I	Destination switch (A/D input)	
34	AMP_DC	I	DC abnormality detection of protection circuit (L : Abnormality detection)	L
35	AMP_OL	I	Over-load detection of protection circuit (L : Abnormality detection)	L
36	MVRATT	O	ATT control of master volume (L : Less than -15dB)	H
37	AVSS	–	Connect to VSS	
38	RST	–	Reset	
39	EXTAL	–	Connect to the oscillator (7.2MHz)	
40	XTAL	–		
41	VSS	–	Connect to VSS	
42	TX	–	Open	
43	TEX	–	Connect to VSS	
44	VDD	–	+5V	
45	VFDP	–	-30V	
46	VIDEO1	O	NJM2296D control	H
47	VIDEO2			
48	VIDEO3			
49	SYS_DT	O	Data signal for communication with M62446, TC9163, TC9164 and PLL	H
50	SYS_CK	O	Clock signal for communication with M62446, TC9163, TC9164 and PLL	H

No.	Pin Name	I/O	Pin Function	Active
51	D_MUTE	O	Digital mute (Not used)	H
52	9273_CS	O	TC9273 Chip select	H
53	DSP_MT	O	DSP mute (ASSY mute)	H
54	CDC_RST	O	CODEC reset	H
55	FM+(RDS)	O	Tr switch ON/OFF for power supply of RDS decoder (L : AM, power OFF , H : Other)	H
56		O	Not used	
57	T_POWON	O	Tuner module ON/OFF (North America model only)	H
58	T_MUTE	O	Tuner mute	H
59	9164 CS	O	TC9163, TC9164 Chip select	H
60	DSP_RST	O	YSS912 reset	
61	NECK_SEL	O	5.1ch, surround mode and A+B Stereo : H / Stereo : L	H/L
62	GAIN_SEL	O	Gain select (5.1ch and Stereo of analog input : H)	H
63		O	Not used	H
64	RY_AC	O	AC relay ON/OFF	H
65	RY_A	O	Speaker A relay ON/OFF	H
66	RY_C/R	O	Rear/Center Speaker relay ON/OFF	H
67		O	Not used	H
68		O	Not used	H
69	S22	O	Segment output 22	H
70	S21		Segment output 21	
71	S20		Segment output 20	
72	S19		Segment output 19	
73	S18		Segment output 18	
74	S17		Segment output 17	
75	S16		Segment output 16	
76	S15		Segment output 15	
77	S14		Segment output 14	
78	S13		Segment output 13	
79	S12		Segment output 12	
80	S11		Segment output 11	
81	S10		Segment output 10	
82	S9		Segment output 9	
83	S8		Segment output 8	
84	S7		Segment output 7	
85	S6		Segment output 6	
86	S5		Segment output 5	
87	S4		Segment output 4	
88	S3		Segment output 3	
89	VDD	–	5V	
90	S2	O	Segment output 2	H
91	S1		Segment output 1	
92			Not used (Fixed Vfdp)	
93	G10	O	Grid output 10	H
94	G9		Grid output 9	
95	G8		Grid output 8	
96	G7		Grid output 7	
97	G6		Grid output 6	
98	G5		Grid output 5	
99	G4		Grid output 4	
100	G3		Grid output 3	

■ M62446FP (D.D & INPUT ASSY : IC103)

• Sound Controller IC (Volume and Tone Control)

● Block Diagram

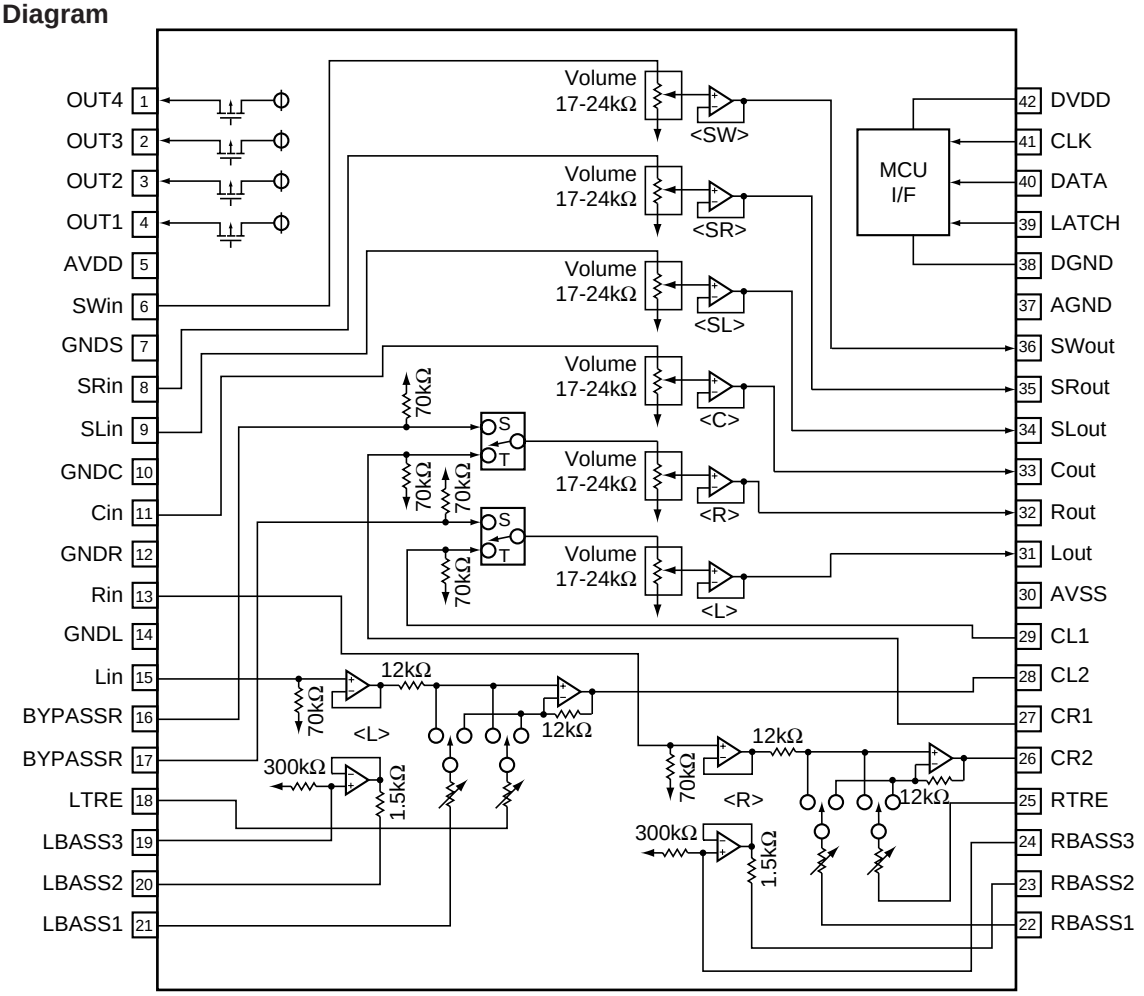

● Pin Function

No.	Pin Name	Function
1	OUT4	Output port (open drain of PchTr)
2	OUT3	
3	OUT2	
4	OUT1	
5	AVDD	Analog positive power supply port
7	GNDS	GND (connect to analog ground)
10	GNDC	
12	GNDR	
14	GNDL	
6	SWin	Volume input
8	SRin	
9	SLin	
11	Cin	
36	SWout	Volume output
35	SRout	
34	SLout	
33	Cout	
13	Rin	TONE input
15	Lin	
16	BYPASSR	L and R Volume input at bypass
17	BYPASSL	
31	Lout	L output
32	Rout	R output

No.	Pin Name	Function
18	LTRE	TONE TREBLE frequency control port
25	RTRE	
19	LBASS3	TONE BASS frequency control port
24	RBASS3	
20	LBASS2	
23	RBASS2	
21	LBASS1	
22	RBASS1	
26	CR2	TONE output port
28	CL2	
27	CR1	L and R volume input
29	CL1	
31	Lout	L output
32	Rout	R output
30	AVSS	Analog negative power supply port
37	AGND	Analog ground port
38	DGND	Digital ground port
39	LATCH	Latch input port
40	DATA	Data input port
41	CLK	Clock input port for data transmission
42	DVDD	Digital power supply port

■ W24257AJ-12 (D.D & INPUT ASSY : IC1301)

• **32K × 8 High-Speed CMOS Static RAM**

● Block Diagram

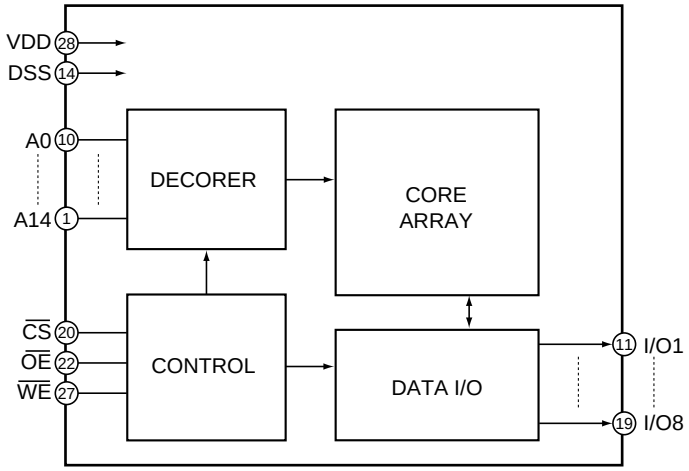

● Pin Function

No.	Pin Name	Function
1	A14	Addres Inputs
2	A12	
3	A7	
4	A6	
5	A5	
6	A4	
7	A3	
8	A2	
9	A1	
10	A0	
21	A10	
23	A11	
24	A9	
25	A8	
26	A13	
11	I/O1	Data Inputs/Outputs
12	I/O2	
13	I/O3	
15	I/O4	
16	I/O5	
17	I/O6	
18	I/O7	
19	I/O8	
14	Vss	Ground
20	CS	Chip Select Input
22	OE	Output Enable Input
27	WE	Write Enable Input
28	Vdd	Power Supply

■ TC9273F-007 (D.D & INPUT ASSY : IC101)

• **Analog Switch Array**

● Block Diagram

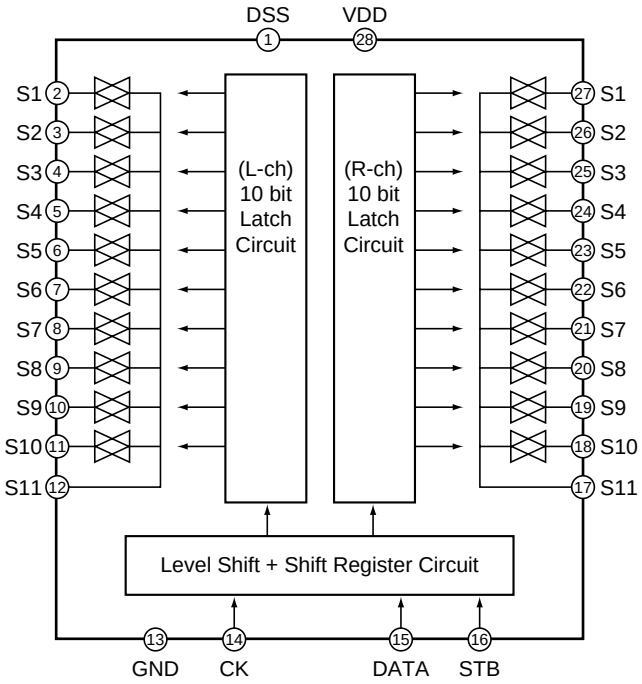

● Pin Function

No.	Pin Name	Function
1	VSS	Minus Power Supply
2, 27	S1	Input and Output
3, 26	S2	
4, 25	S3	
5, 24	S4	
6, 23	S5	
7, 22	S6	
8, 21	S7	
9, 20	S8	
10, 19	S9	
21, 18	S10	
26, 17	S11	
13	GND	Digital Ground
14	CK	Clock Input
15	DATA	Data Input
16	STB	Strobe Input
28	VDD	Plus Power Supply

7.2.2 DISPLAY

■ AAV7072 (FRONT ASSY : V401)

- **FL DISPLAY**

● **Pin Assignment**

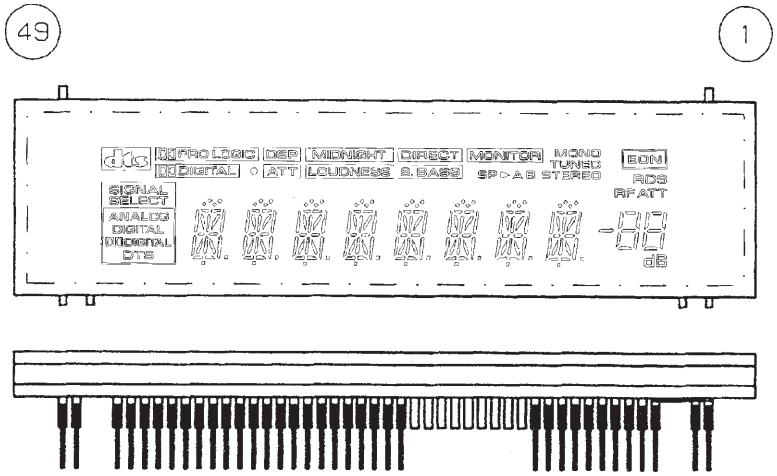

● **Pin Connection**

PIN NO.	49	48	47	46	45	44	43	42	41	40	39	38	37	36	35	34	33	32	31	30	29	28	27	26	25	24	23	22	21	20	19	18	17	16	15	14	13	12	11	10	9	8	7	6	5	4	3	2	1
CONNECTION	F2	F2	NP	NP	P21	P22	P20	P21	P19	P18	P17	P16	P15	P14	P13	P12	P11	P10	P9	P8	P7	P6	P5	P4	P3	P2	P1	NX	NX	NX	NX	NX	NX	NX	NX	NX	10G	9G	8G	7G	6G	5G	4G	3G	2G	1G	NP	NP	F1	F1

NOTE 1) F1,F2 --- Filament
2) NP ------ No pin
3) NX ------ No extend pin
4) DL ------ Datum Line
5) 1G~10G --- Grid

● **Grid Assignment**

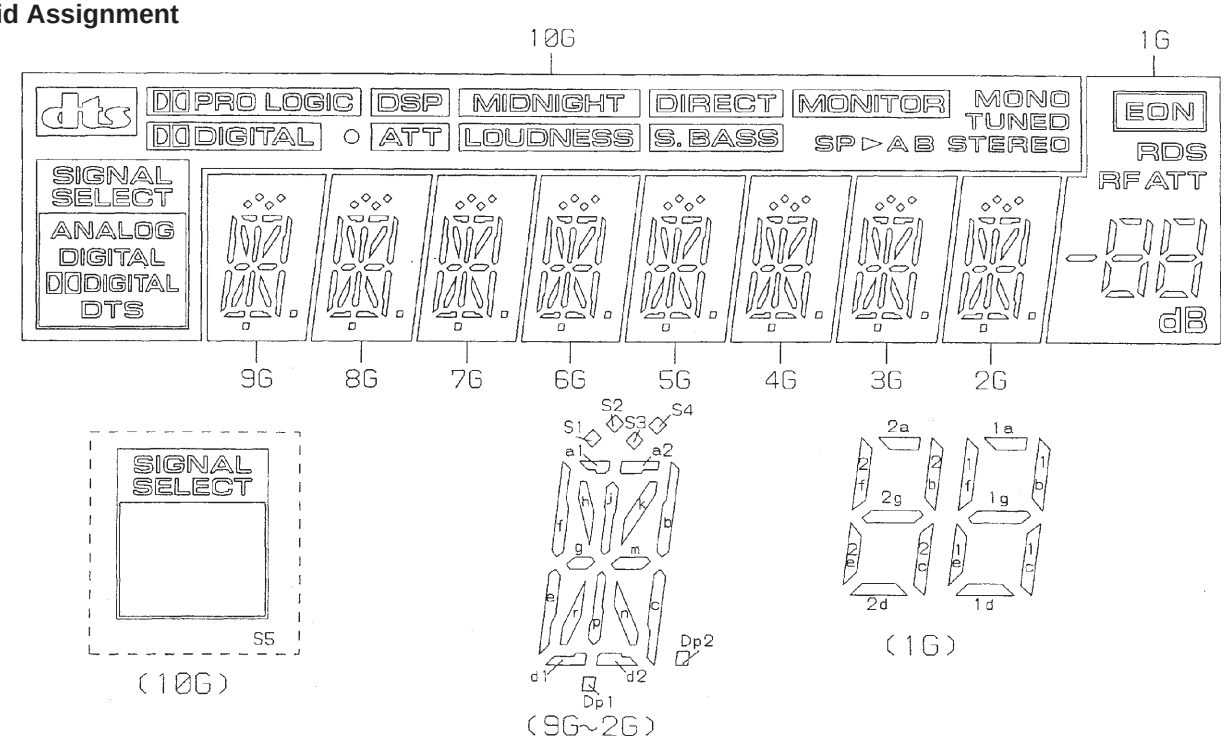

● Anode Connection

	10G	9G	8G	7G	6G	5G	4G	3G	2G	1G
P1	STEREO	a1	a1	a1	a1	a1	a1	a1	a1	dB
P2	TUNED	a2	a2	a2	a2	a2	a2	a2	a2	2a
P3	MONO	h	h	h	h	h	h	h	h	2b
P4	B	j	j	j	j	j	j	j	j	2f
P5	A	k	k	k	k	k	k	k	k	2g
P6	SP ▷	b	b	b	b	b	b	b	b	2c
P7	MONITOR	f	f	f	f	f	f	f	f	2e
P8	S. BASS	m	m	m	m	m	m	m	m	2d
P9	DIRECT	g	g	g	g	g	g	g	g	1a
P10	LOUDNESS	c	c	c	c	c	c	c	c	1b
P11	MIDNIGHT	e	e	e	e	e	e	e	e	1f
P12	ATT	r	r	r	r	r	r	r	r	1g
P13	DSP	p	p	p	p	p	p	p	p	1c
P14	○	n	n	n	n	n	n	n	n	1e
P15	DIGITAL	d1	d1	d1	d1	d1	d1	d1	d1	1d
P16	PRO LOGIC	d2	d2	d2	d2	d2	d2	d2	d2	⬭
P17	DTS	Dp2	Dp2	Dp2	Dp2	Dp2	Dp2	Dp2	Dp2	RDS
P18	DIGITAL	Dp1	Dp1	Dp1	Dp1	Dp1	Dp1	Dp1	Dp1	RF ATT
P19	DIGITAL	S1	S1	S1	S1	S1	S1	S1	S1	EON
P20	ANALOG	S4	S4	S4	S4	S4	S4	S4	S4	(EON)
P21	S5	S2	S2	S2	S2	S2	S2	S2	S2	–
P22	dts	S3	S3	S3	S3	S3	S3	S3	S3	–

8. PANEL FACILITIES AND SPECIFICATIONS

8.1 PANEL FACILITIES

Front Panel

The illustration shows VSX-D309.

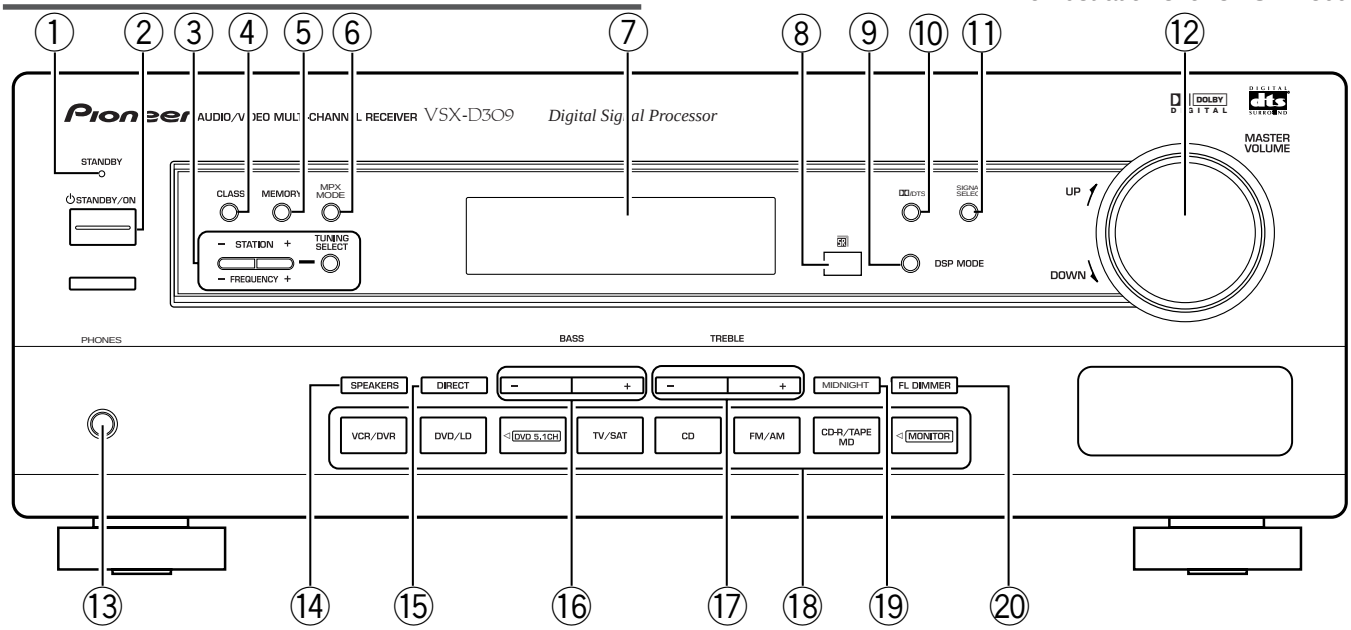

① **STANDBY indicator**

Lights when the receiver is in standby mode (note that the receiver consumes a small amount of power (1W) in standby mode).

② **⏻ STANDBY/ON button**

Switches the receiver between on and standby.(note that the receiver consumes a small amount of power (1W) in standby mode).

③ **STATION (+/–), FREQUENCY (+/–), TUNING SELECT buttons**

STATION (+/–)
Selects station memories when using the tuner.
FREQUENCY (+/–)
Selects the frequency when using the tuner.
TUNING SELECT
Switches between station memory and frequency select modes.

④ **CLASS button**

Switches between the three banks (classes) of station memories.

⑤ **MEMORY button**

Press to memorize a station for recall using the STATION **(+/–)** buttons.

⑥ **MPX button**

If the **TUNED** or **STEREO** indicators don't light when tuning to an FM station because the signal is weak, press the MPX button to switch the receiver into mono reception mode. This should improve the sound quality and allow you to enjoy the broadcast.

⑦ **Display**

⑧ **Remote sensor**

Receives the signals from the remote control.

⑨ **DSP MODE button**

Use to switch between the various DSP modes available (**HALL1, HALL 2, JAZZ, DANCE, THEATER1, THEATER 2**) and **DSP off**. Use to create different surround sound effects from any stereo source.

⑩ **DD /DTS button**

Use to switch between the various Dolby/DTS surround modes.

⑪ **SIGNAL SELECT button**

Use to select between an analog or digital signal.

⑫ **MASTER VOLUME**

Use to set the overall listening volume.

⑬ **PHONES jack**

Use to connect headphones but this does not switch the speakers off.

⑭ **SPEAKER button**

Use to switch the speaker system on or off.

⑮ **DIRECT button**

Use to switch DIRECT playback on or off. This mode bypasses the tone controls and channel levels for the most accurate reproduction of a program source.

⑯ **BASS (+/–) buttons**

Use to increase/decrease bass (within a range of -6dB to 6dB in 2dB steps).

⑰ **TREBLE (+/–) buttons**

Use to increase/decrease treble (within a range of -6dB to 6dB in 2dB steps).

⑱ **Function buttons**

Use to select a source for playback or recording.

⑲ **MIDNIGHT button**

Use when listening to movie soundtracks at low volume. This feature will enable you to hear quiet sounds and not get jolted by loud or sudden sound effects.

⑳ **FL DIMMER button (VSX-D309)**

Use this button to make the fluorescent display (FL) dimmer or brighter. There are three brightness settings as well as an off setting.

MONITOR button (VSX-D409)

Press to switch tape monitoring on/off.

Display

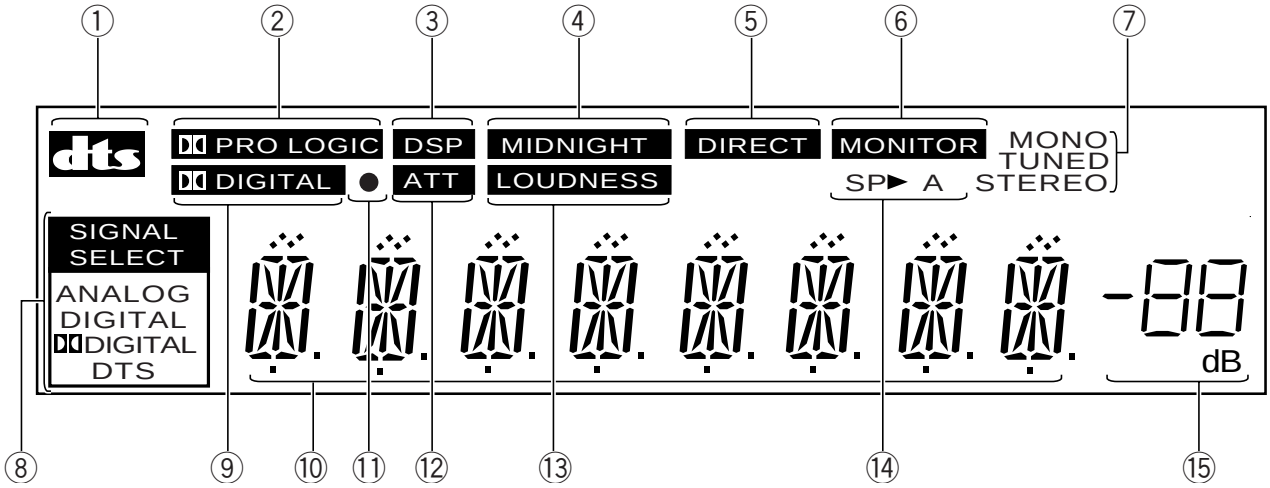

① **DTS indicator**
Lights when DTS mode is being used.

② **PRO LOGIC indicator**
When the Surround/DTS mode of the receiver is on, this lights to indicate playback of a two channel source.

③ **DSP indicator**
Lights when any Advanced Theater or DSP mode is selected.

④ **MIDNIGHT indicator**
Lights when MIDNIGHT listening mode is in use.

⑤ **DIRECT indicator**
Lights when source DIRECT is in use. This function bypasses all tone, balance, DSP and Dolby Surround effects.

⑥ **MONITOR indicator**
Lights when **MONITOR** is selected to hear a recording as it's being made.

⑦ **TUNER indicators**
MONO:
Lights when the mono mode is set using the MPX MODE button.
TUNED:
Lights when a broadcast is being received.
STEREO:
Lights when a stereo FM broadcast is being received in auto stereo mode.

⑧ **SIGNAL SELECT indicators**
Light to indicate the type of input signal assigned for the current component (see “Front Panel“, ⑪, SIGNAL SELECT).
ANALOG : Lights when an analog signal is selected.
DIGITAL : Lights when a digital audio signal is selected.
DIGITAL : Lights when a DOLBY DIGITAL signal is played.
DTS: Lights when a source with DTS audio signals is played.

⑨ **DIGITAL indicator**
When the Surround/DTS mode of the receiver is on, this lights to indicate playback of a Dolby Digital signal.

⑩ **CHARACTER display**
Shows the radio frequency or function (DVD/LD, CD, etc.) receiver is using .

⑪ **OVERLOAD indicator**
This lights when an analog signal is too strong (the SIGNAL SELECT needs to be on ANALOG). It indicates the sound is distorting and the signal should be reduced.

⑫ **ATT indicator**
Lights when ATT is used to attenuate (reduce) the level of the input signal (can only be used in ANALOG mode).

⑬ **LOUDNESS indicator**
Lights when the LOUDNESS, used to boost the bass and treble in quiet listening, is on.

⑭ **SPEAKER indicator**
Shows if the speaker system is on or not. SP ►A means speakers are switched on. SP ► means speakers are switched off.

⑮ **MASTER VOLUME LEVEL**
Shows the overall volume level. Volume level is maintained even when the power is off. ---dB indicates the minimum level, and 0dB indicates the maximum level.

- Depending on the level settings you make for individual channels, the MAX level can range between –10dB and 0dB.

Remote Control

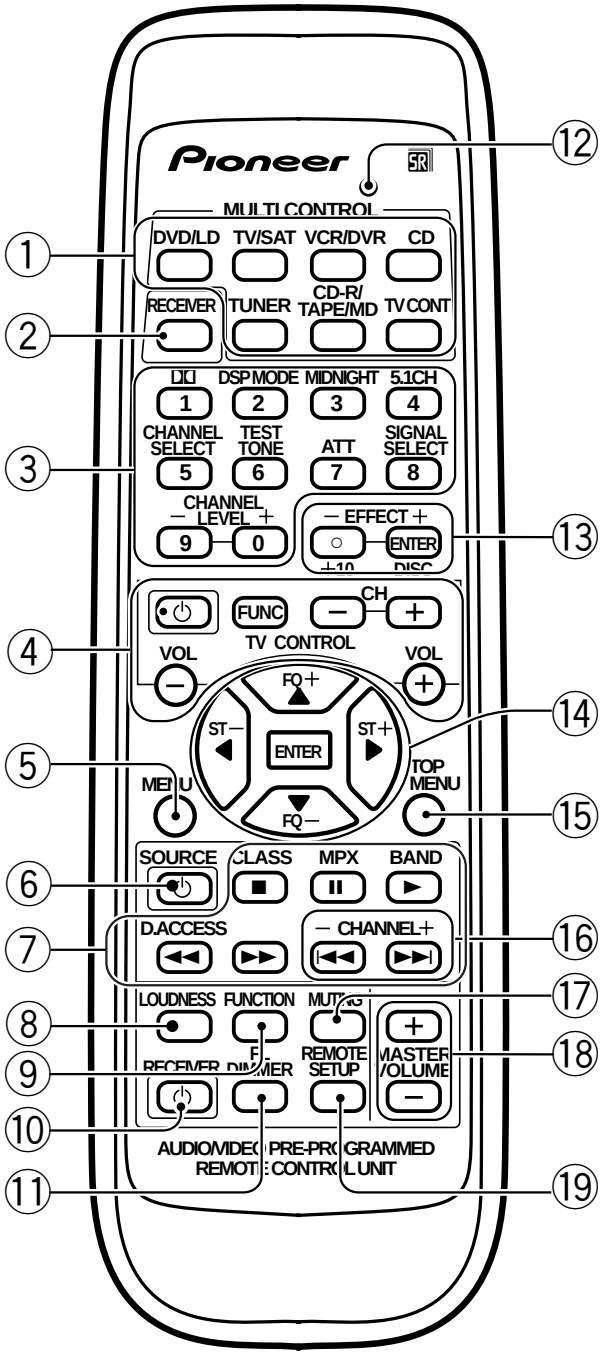

① **MULTI CONTROL buttons**

Use to put the receiver/remote control in the stated mode. For other equipment controls, see Controlling the Rest of Your System.

② **RECEIVER button**

Use this button when setting up the surround sound for the receiver.

③ **NUMBER/MODE buttons**

Use the number buttons to select the radio frequency in tuner DIRECT ACCESS mode or the tracks in CD, DVD mode etc.

Also, buttons marked with the following names have special functions. If you try to use one of these functions but he display flashes it means that function cannot be used int he current mode (for example DSP modes cannot be used when 5.1 CH setting is on).

DD

Use to put receiver in DOLBY DIGITAL and DTS modes. To use first press the RECEIVER button then operate this button.

DSP mode

Use to put receiver in one of the DSP modes. To use first press the RECEIVER button then operate this button.

MIDNIGHT

Use to put receiver in MIDNIGHT mode. To use first press the RECEIVER button then operate this button.

5.1 CH

When the DVD/LD or DVD 5.1 CH function is selected each press switches the DVD/LD input between DVD/LD and DVD 5.1 CH. To use first press the RECEIVER button then operate this button.

CHANNEL SELECT

Use to slect a speaker when setting up the surround sound of the receiver. To use first press the RECEIVER button then operate this button.

TEST TONE

Use to sound the TEST TONE when setting up the surround sound of the receiver. To use first press the RECEIVER button then operate this button.

ATT

Use to attenunate (lower) the level of an analog input signal and prevent distortion. To use first press the RECEIVER button then operate this button.

CHANNEL LEVEL +/–

Use to set up the levels of the surround sound of the receiver. To use first press the RECEIVER button then operate this button.

SIGNAL SELECT

Use to select the proper signal (analog, digital) for the source your are inputting. To use first press the RECEIVER button then operate this button.

④ **THE FOLLOWING FOUR SETS OF BUTTONS ARE DEDICATED TV CONTROL. THEY ARE ONLY USED FOR CONTROLLING YOUR TV.**

FUNC button
Use select the TV function.

TV POWER button
Use to turn on the power of the TV.

TV CHANNEL +/– buttons
Use to change channels on your TV.

TV VOLUME +/– buttons
Use to adjust the volume on your TV.

⑤ **MENU button**
Use to access different menus associated with your DVD player.

⑥ **SOURCE button**
Use to turn on/off other components coneccted to the receiver.

⑦ **THE FOLLOWING BUTTONS ARE BOTH CONTROLS FOR OTHER COMPONENTS (LIKE A DVD PLAYER) AND DEDICATED TUNER CONTROLS. THE TUNER CONTROLS ARE EXPLAINED HERE. YOU CAN USE THEM AFTER YOU HAVE PUSHED THE TUNER MULTI CONTROL BUTTON.**

CLASS button
Use to switch between the three banks (classes) of station memories.

MPX MODE button
Use to switch between auto stereo and mono reception of FM broadcasts. If the signal is weak then switching to MONO will improve the sound quality. Also, this is the pause button for CDs, tapes, DVDs, etc.

BAND button
Use to switch between the AM and FM band when in TUNER mode.

D. ACCESS button
Use to directly access a radio station by pressing the number of the station you want.

⑧ **LOUDNESS button**
Use to switch on the loudness. This feature is useful for getting good bass and treble sounds listening at low volumes.

⑨ **FUNCTION button**
Use select the playback or recording source. This button lets you cycle through the different functions of the receiver in the following order: CD, tuner, CDR/TAPE, VCDR/DVR, DVD/LD, DVD 5.1 CH., and TV/SAT.
etc.

⑩ **RECEIVER ⏻ (POWER) button**
This switches between STANDBY mode and power ON for this receiver.

⑪ **FL DIMMER button**
Use this button to make the fluorescent display (FL) dimmer or brighter. There are three brightness settings as well as an off setting.

⑫ **LED DISPLAY**
This display flashes when a command is sent from the remote control to the receiver. It also flashes at other times, for example when teaching the receiver preset codes, with specific meanings.

⑬ **EFFECT +/– buttons**
Use to add or subtract the amount of effect in different DSP sound modes or advanced listening modes.

⑭ **◄ ► ▲▼ (FQ +/–) & ENTER buttons**
Use these arrow buttons when setting up your surround sound system. These buttons are also used to control DVD menus/options and for deck 1 of a double cassette deck player. The FQ +/– buttons can be used to find radio frequencies.

⑮ **TOP MENU button**
In DVD mode this button brings you to the top or most fundamental menu.

⑯ **CHANNEL +/– buttons**
Use to select the stations of memorized radio frequencies. Also use to skip tracks backward or forward on CDs, DVDs, etc.

⑰ **MUTING button**
Use to mute the sound or restore the sound if it has been muted.

⑱ **MASTER VOLUME +/– buttons**
Use to set the overall listening volume.

⑲ **REMOTE SETUP button**
Use this button when setting up the remote control to control other components.

Connecting Audio Components

Connect your audio components as shown below. These are analog connections. When connecting equipment, always make sure the power switched off and the power cord is disconnected from the wall outlet.

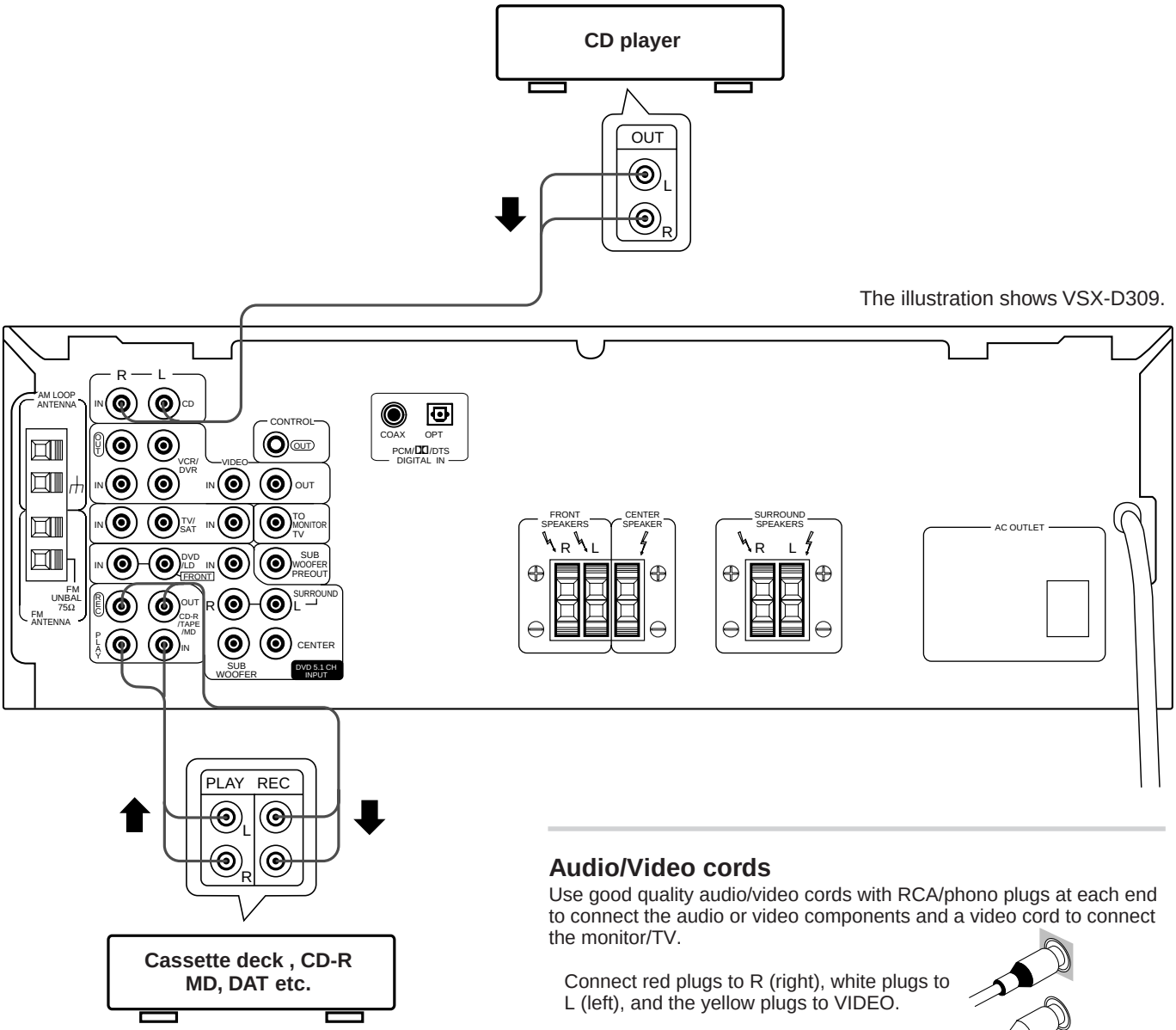

Audio/Video cords

Use good quality audio/video cords with RCA/phono plugs at each end to connect the audio or video components and a video cord to connect the monitor/TV.

Connect red plugs to R (right), white plugs to L (left), and the yellow plugs to VIDEO.

Be sure to push home the plugs into their sockets.

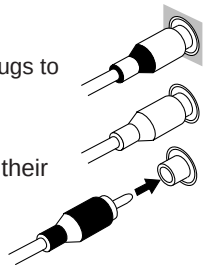

Cassette deck placement

Depending on where the cassette deck is placed, noise caused by leakage flux from the transformer in the receiver may occur during playback. If you experience noise, move the cassette deck farther away from the receiver.

8.2 SPECIFICATIONS

Amplifier Section

Continuous average power output of 60 watts* per channel, min., at 8 ohms, from 40 Hz to 20,000 Hz with no more than 0.2 % total harmonic distortion (front). (VSX-D309)**

Continuous average power output of 100 watts* per channel, min., at 8 ohms, from 20 Hz to 20,000 Hz with no more than 0.2 % total harmonic distortion (front). (VSX-D409)**

* Measured pursuant to the Federal Trade Commission's Trade Regulation rule on Power Output Claims for Amplifiers.
** Measured by Audio Spectrum Analyzer.

Continuous Power Output
Front ..... 60 W per channel (1kHz, 0.8 %, 8 Ω) (VSX-D309)
Center ..... 60 W (1kHz, 0.8 %, 8 Ω) (VSX-D309)
Surround ..... 60 W per channel (1kHz, 0.8 %, 8 Ω) (VSX-D309)

Front ..... 100 W per channel (1kHz, 0.8 %, 8 Ω) (VSX-D409)
Center ..... 100 W (1kHz, 0.8 %, 8 Ω) (VSX-D409)
Surround ..... 100 W per channel (1kHz, 0.8 %, 8 Ω) (VSX-D409)

Input (Sensitivity/Impedance)
CD, VCR/DVR, CD-R/TAPE/MD, DVD/LD, TV/SAT
..... 200 mV/47 kΩ
Frequency Response
CD, VCR/DVR, CD-R/TAPE/MD, DVD/LD, TV/SAT
..... 5 Hz to 100,000 Hz $^{+0}_{-3}$ dB
Output (Level/Impedance)
VCR/DVR REC, CD-R/TAPE/MD REC
..... 200 mV/2.2 kΩ
Tone Control
BASS ..... ± 6 dB (100 Hz)
TREBLE ..... ± 6 dB (10 kHz)
LOUDNESS ..... +9 dB/+9 dB (100 Hz/10 kHz)

Signal-to-Noise Ratio (IHF, short circuited, A network)
CD, VCR/DV-R, CD-R/TAPE/MD, DVD/LD, TV/SAT
..... 96 dB
Signal-to Noise Ratio [EIA, at 1 W (1 kHz)]
CD, VCR/DV-R, CD-R/TAPE/MD, DVD/LD, TV/SAT
..... 79 dB

Manufactured under license from Digital Theater Systems, Inc. US Pat. No. 5,451,942 and other worldwide patents issues and pending. "DTS" and "DTS Digital Surround" are trademarks of Digital Theater Systems, Inc. © 1996 Digital Theater Systems, Inc. All rights reserved.

Video Section

Input (Sensitivity/Impedance)
VCR/DVR, DVD/LD, TV/SAT ..... 1 Vp-p/75 Ω
Output (Level/Impedance)
VCR/DVR, MONITOR ..... 1 Vp-p/75 Ω
Frequency Response
VCR/DVR, MONITOR ..... 5 Hz to 7 MHz $^{+0}_{-3}$ dB
Signal-to-Noise Ratio ..... 55 dB
Cross Talk ..... 55 dB

FM Tuner Section

Frequency Range ..... 87.5 MHz to 108 MHz
Usable Sensitivity ..... Mono:13.2 dBf, IHF (1.3 µV/ 75 Ω)
50 dB Quieting Sensitivity ..... Mono: 20.2 dB
Stereo: 38.6 dBf
Signal-to-Noise Ratio ..... Mono: 73 dB (at 85 dBf)
Stereo: 70 dB (at 85 dBf)
Distortion ..... Stereo: 0.5 % (1 kHz)
Alternate Channel Selectivity ..... 60 dB (400 kHz)
Stereo Separation ..... 40 dB (1 kHz)
Frequency Response ..... 30 Hz to 15 kHz (±1) dB
Antenna Input (DIN) ..... 75 Ω unbalanced

AM Tuner Section

Frequency Range ..... 530 kHz to 1,700 kHz
Sensitivity (IHF, Loop antenna) ..... 350 µV/m
Selectivity ..... 25 dB
Signal-to-Noise Ratio ..... 50 dB
Antenna ..... Loop antenna

Miscellaneous

Power Requirements ..... AC 120 V, 60 Hz
Power Consumption ..... 180 W (VSX-D309)
Power Consumption ..... 250 W (VSX-D409)
In Standby ..... 1 W
Dimensions ..... 420 (W) x 158 (H) x 391 (D) mm
(16-9/16 (W) x 6-4/16 (H) x 15-6/16 (D) in.)
Weight (without package) ..... 8.4 kg
(18 lb 8 oz.)

Furnished Parts

FM Antenna 1
AM Loop Antenna 1
Dry Cell Batteries
size AA (IEC R6P) 2
Remote Control Unit 1
Operating Instructions 1

NOTE:
Specifications and the design are subject to possible modifications without notice, due to improvements.

Manufactured under license from Dolby Laboratories. "Dolby", "Pro Logic" and the double-D symbol are trademarks of Dolby Laboratories. Confidential Unpublished Works. © 1992-1997 Dolby Laboratories, Inc. All rights reserved.

Accessories

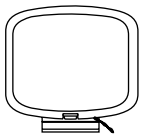
AM loop antenna
(ATB7009)

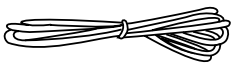
FM wire antenna
(ADH7004)

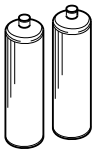
AA size IEC R6P
batteries (x2)

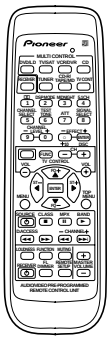
Remote control unit
(AXD7246)

Pioneer

Service Manual

ORDER NO.
RRV2318

AUDIO/VIDEO MULTI-CHANNEL RECEIVER

VSX-D409-G

THIS MANUAL IS APPLICABLE TO THE FOLLOWING MODEL(S) AND TYPE(S).

Type	Model	Power Requirement	The voltage can be converted by the following method.
	VSX-D409-G		
SAMXQ	○	AC110V/120-127V/220V/240V	With the voltage selector

● This service manual should be used together with the following manual(s):

Model No.	Order No.	Remarks
VSX-709RDS/MYXJIEW VSX-609RDS/MYXJIEW	RRV2274	

CONTENTS

1. CONTRAST OF MISCELLANEOUS PARTS ····· 2
2. SCHEMATIC DIAGRAM ····· 5
3. PCB CONNECTION DIAGRAM ····· 8

PIONEER CORPORATION 4-1, Meguro 1-chome, Meguro-ku, Tokyo 153-8654, Japan
PIONEER ELECTRONICS SERVICE, INC. P.O. Box 1760, Long Beach, CA 90801-1760, U.S.A.
PIONEER EUROPE NV Haven 1087, Keetberglaan 1, 9120 Melsele, Belgium
PIONEER ELECTRONICS ASIACENTRE PTE. LTD. 253 Alexandra Road, #04-01, Singapore 159936

©PIONEER CORPORATION 2000

T – ZZK JUNE 2000 Printed in Japan

1. CONTRAST OF MISCELLANEOUS PARTS

NOTES:
- *Parts marked by "NSP" are generally unavailable because they are not in our Master Spare Parts List.*
- *The ⚠ mark found on some component parts indicates the importance of the safety factor of the part. Therefore, when replacing, be sure to use parts of identical designation.*
- *Screws adjacent to ▼ mark on product are used for disassembly.*
- *Reference Nos. indicate the pages and Nos. in the service manual for the base model.*
- *When ordering resistors, first convert resistance values into code form as shown in the following examples.*

Ex.1 When there are 2 effective digits (any digit apart from 0), such as 560 ohm and 47k ohm (tolerance is shown by J=5%, and K=10%).

560 → 56 x 10^1 → 561 ..... RD1/4PU[5][6][1]J
47k → 47 x 10^3 → 473 ..... RD1/4PU[4][7][3]J
0.5 → R50 ..... RN2H[R][5][0]K
1 → 1R0 ..... RS1P[1][R][0]K

Ex.2 When there are 3 effective digits (such as in high precision metal film resistors).

5.62k → 562 x 10^1 → 5621 ..... RN1/4PC[5][6][2][1]F

■ CONTRAST TABLE

VSX-D409-G/SAMXQ and VSX-609RDS/MYXJIEW are constructed the same except for the following :

Ref. No.	Mark	Symbol and Description	Part No. VSX-609RDS /MYXJIEW	Part No. VSX-D409-G /SAMXQ	Remarks
		PCB ASSEMBLIES			
P5- 1		D.D & INPUT ASSY	AWX7497	AWX7650	
	NSP	AMP&PS ASSY	AWK7568	AWK7572	
P5- 4		├ AMP&PRIMARY ASSY	AWX7478	AWX7482	
P5- 8	NSP	├ TRANS 1 ASSY	AWX7390	Not used	
		└ VOLTAGE SELECT SW ASSY	Not used	AWX7442	No. 1
	NSP	COMPLEX ASSY	AWK7567	AWK7571	
P7- 1		└ FRONT ASSY	AWX7477	AWX7481	
		PACKING SECTION			
P3- 1		FM Wire Antenna	ADH7005	ADH7004	
P3- 3	NSP	Polyethylene Bag	Z21-038	Not used	
P3- 3		Polyethylene Bag	Not used	VHL1051	
P3- 4	NSP	Warranty Card	ARY7022	ARY7046	
P3- 5		Remote Control Unit	AXD7247	AXD7246	
P3- 6		Battery Cover	AZA7378	RZN1156	
P3- 7	NSP	Dry Cell Battery (R6P/AA)	VEM-013	VEM1010	
P3- 8		Left Pad	AHA7263	AHA7275	
P3- 9		Right Pad	AHA7264	AHA7276	
P3-10		Packing Sheet	AHG7069	AHG7010	
P3-11		Packing Case	AHD7831	AHD7878	
P3-12		Operating Instructions (English)	ARB7215	Not used	
P3-13		Operating Instructions (German)	ARC7273	Not used	
P3-14		Operating Instructions (Spanish/Portuguese)	ARC7274	Not used	
P3-15		Operating Instructions (Italian/French)	ARC7275	Not used	
P3-16		Operating Instructions (Dutch/Swedish)	ARC7276	Not used	
		Operating Instructions (English/Chinese)	Not used	ARE7258	
	NSP	Caution Card	Not used	XAX3130	
		EXTERIOR SECTION			
P5- 7		FM/AM TUNER Unit	AXX7048	AXX7047	
P5-10	⚠	Power Transformer (AC220-230V)	ATS7259	Not used	
P5-10	⚠	Power Transformer (AC110V/120-127V/220V/240V)	Not used	ATS7261	
P5-11	⚠	Fuse (FU1 : T2.5A/250V)	REK1026	Not used	
P5-11	⚠	Fuse (FU1 : T5A/250V)	Not used	REK1029	
P5-19	⚠	AC Power Cord	VDG1061	VDG1084	
P5-22		Top Cover	AME7375	AME7376	
P5-24		R Panel	ANC7896	ANC7918	
P5-25		Bonnet Case	AZN7779	AZN7819	

Ref. No.	Mark	Symbol and Description	Part No. VSX-609RDS /MYXJIEW	Part No. VSX-D409-G /SAMXQ	Remarks
P5-31		Insulator (Front side)	PNW2766	PNW2766	
P5-31		Insulator/Foot Assy (Rear side)	PNW2766	REC1263	
P5-33		Push Rivet	AEC7025	AEC7205	
P5-35	NSP	Fuse Card	AAX7277	AAX7098	
		Screw (Both sides of Bonnet Case)	FBT40P080FZK	FBT40P080FNI	
	⚠	Fuse (FU2, FU3 : T2.5A/250V)	Not used	REK1026	No. 2
	NSP	Fuse Card	Not used	AAX7277	No. 3
	⚠	Voltage Selector	Not used	AKX-507	No. 4
		Label (REAR)	Not used	VRW1739	
		FRONT PANEL SECTION			
P7- 6		Volume Knob	AAB7179	AAB7180	
P7- 7		Power Button	AAD7440	AAD7485	
P7- 8		Power Button M	AAD7442	AAD7491	
P7- 9		Window	AAK7721	AAK7720	
P7-10		F Button	AAD7562	AAD7563	
P7-12		F Panel	AMB7675	AMB7667	
P7-13		Name Plate	PAM1776	PAM1779	

Notes : ●The numbers in the remarks column correspond to the numbers on the " EXPLODED VIEWS ".
● For PCB ASSEMBLIES, Refer to "CONTRAST OF PCB ASSEMBLIES", "PCB PARTS LIST", "2. SCHEMATIC DIAGRAM" and "3. PCB CONNECTION DIAGRAM".

■ EXPLODED VIEWS

● EXTERIOR SECTION

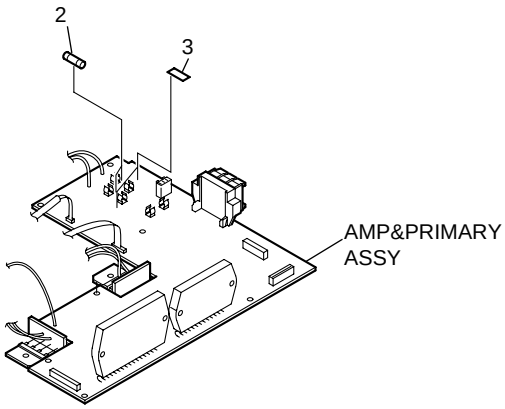

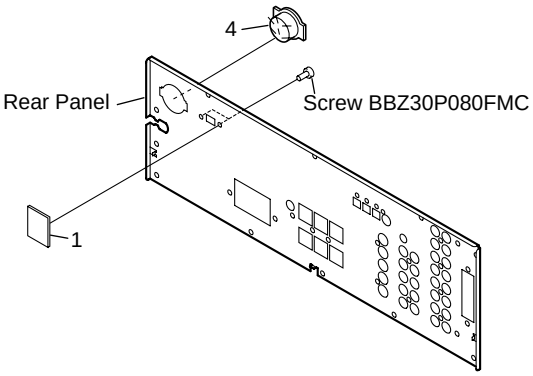

■ CONTRAST OF PCB ASSEMBLIES

CF AMP&PRIMARY ASSY

AWX7482 and AWX7478 are constructed the same except for the following :

Mark	Symbol and Description	Part No. AWX7478	Part No. AWX7482	Remarks
⚠	L51	Not used	ATF7018	
⚠	L52	ATF3001	Not used	
⚠	T51 STANDBY TRANSFORMER	ATT7037	ATT7038	
	C607–C610, C634, C635, C657–C660	CCCSL120J50	CCCSL6R0D50	
	C613, C614, C637, C663, C664	CCCSL221J50	Not used	
	C757–C759, C765–C768	CQMBA472J50	Not used	
	R758	RD1/4PU222J	RD1/4PU242J	
	H53–H56 FUSE CLIP	Not used	AKR7001	

BF D.D & INPUT ASSY

AWX7650 and AWX7497 are constructed the same except for the following :

Mark	Symbol and Description	Part No.		Remarks
		AWX7497	AWX7650	
	Q102	2SC2412K	Not used	
	Q103	Not used	DTA143EK	
	Q104	Not used	DTC124EK	
	F111, F112	DTF1067	Not used	
	C158	CKSRYB103K50	Not used	
	C211, C212	CCSQCH220J50	Not used	
	R119	RS1/16S0R0J	Not used	
	R149	RS1/16S101J	Not used	
	R150	RS1/16S221J	Not used	
	R151	RS1/16S472J	Not used	
	R215, R216	Not used	RS1/10S0R0J	

KF FRONT ASSY

AWX7481 and AWX7477 are constructed the same except for the following :

Mark	Symbol and Description	Part No.		Remarks
		AWX7477	AWX7481	
	IC481	BU1923F	Not used	
	Q481	2SA1515	Not used	
	Q482	KRC101M	Not used	
	Q483	2SC1740S	Not used	
	L481	LFEA2R2J	Not used	
	S468, S477	XSG3001	Not used	
	C481, C482	CKSQYB102K50	Not used	
	C483, C487	CEAT101M10	Not used	
	C484	CEAT2R2M50	Not used	
	C485	CKSQYB472K50	Not used	
	C486	CEAT1R0M50	Not used	
	C488	CKSQYB561K50	Not used	
	C489, C490	CCSQCH270J50	Not used	
	R407	RS1/10S472J	Not used	
	R409	Not used	RS1/10S0R0J	
	R429	RS1/10S751J	RS1/10S622J	
	R468	RS1/10S562J	Not used	
	R479	RS1/10S163J	Not used	
	R481	RS1/10S473J	Not used	
	R482	RS1/10S222J	Not used	
	R483	RS1/10S333J	Not used	
	R484	RS1/10S104J	Not used	
	R485–R487	RS1/10S102J	Not used	
	X481 CRYSTAL RESONATOR (4.332MHz)	ASS7004	Not used	

■ PCB PARTS LIST

Mark	No.	Description	Part No.

SF VOLTAGE SELECT SW ASSY

SWITCHES

⚠	S51	VOLTAGE SELECTOR	AKX1033

2. SCHEMATIC DIAGRAM

Note : When ordering service parts, be sure to refer to "EXPLODED VIEWS and PARTS LIST" or "PCB PARTS LIST"

2.1 D.D & INPUT (1/3) ASSY

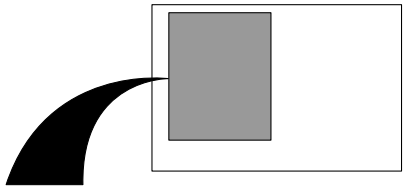

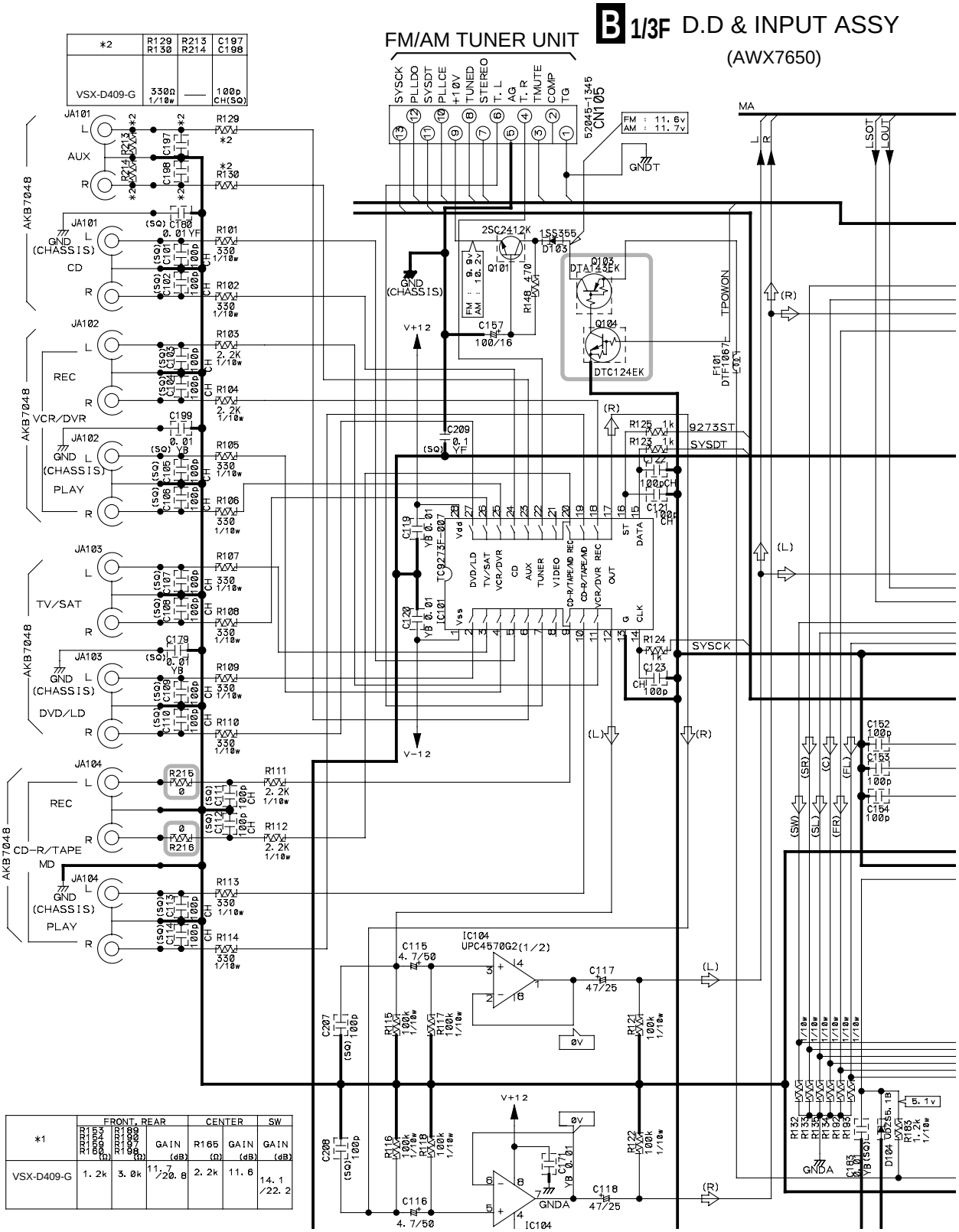

2.2 AMP&PRIMARY (2/2) and VOLTAGE SELECT SW ASSYS

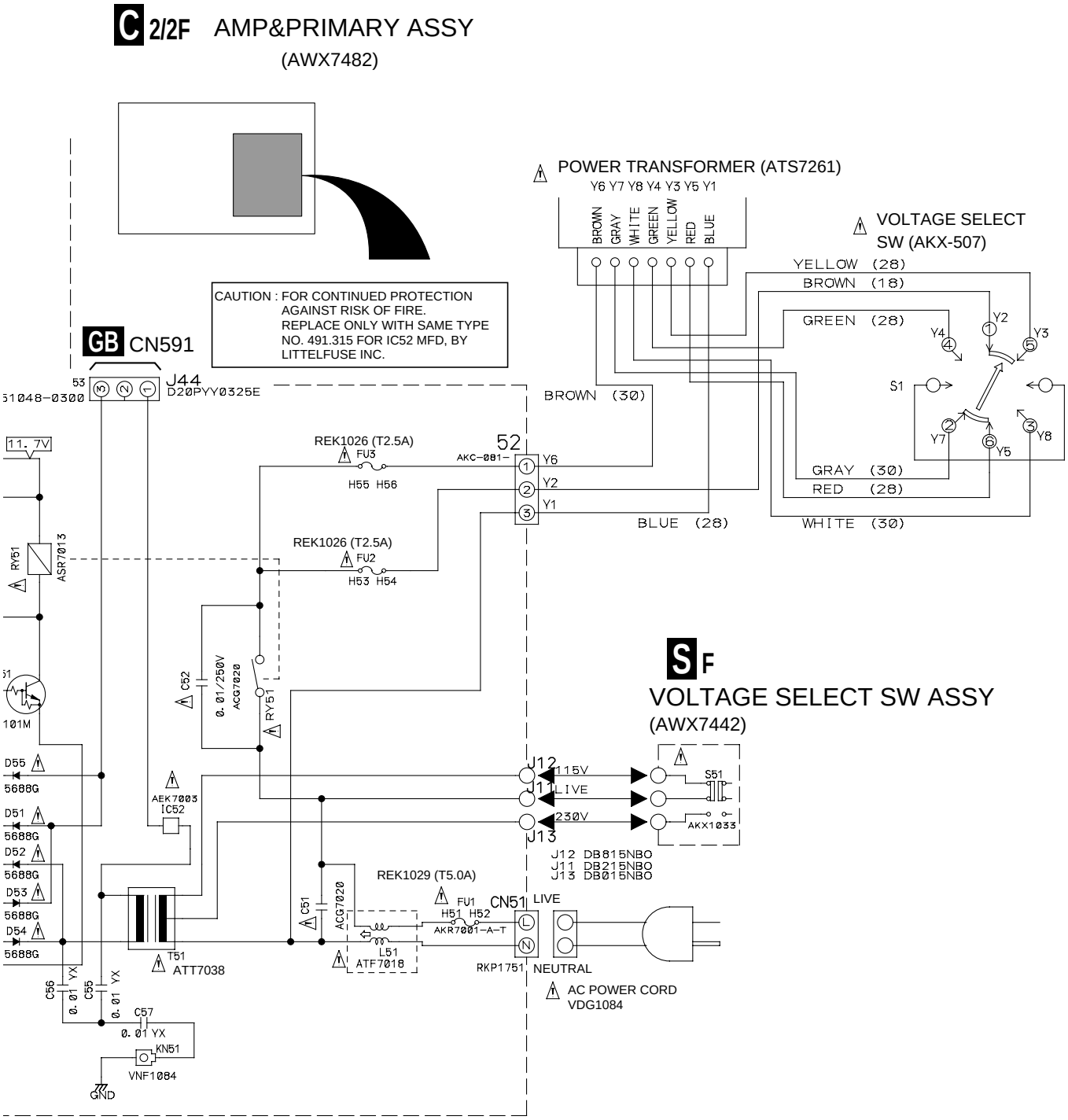

• NOTE FOR FUSE REPLACEMENT

CAUTION - FOR CONTINUED PROTECTION AGAINST RISK OF FIRE. REPLACE WITH SAME TYPE AND RATINGS ONLY.

2.3 FRONT ASSY

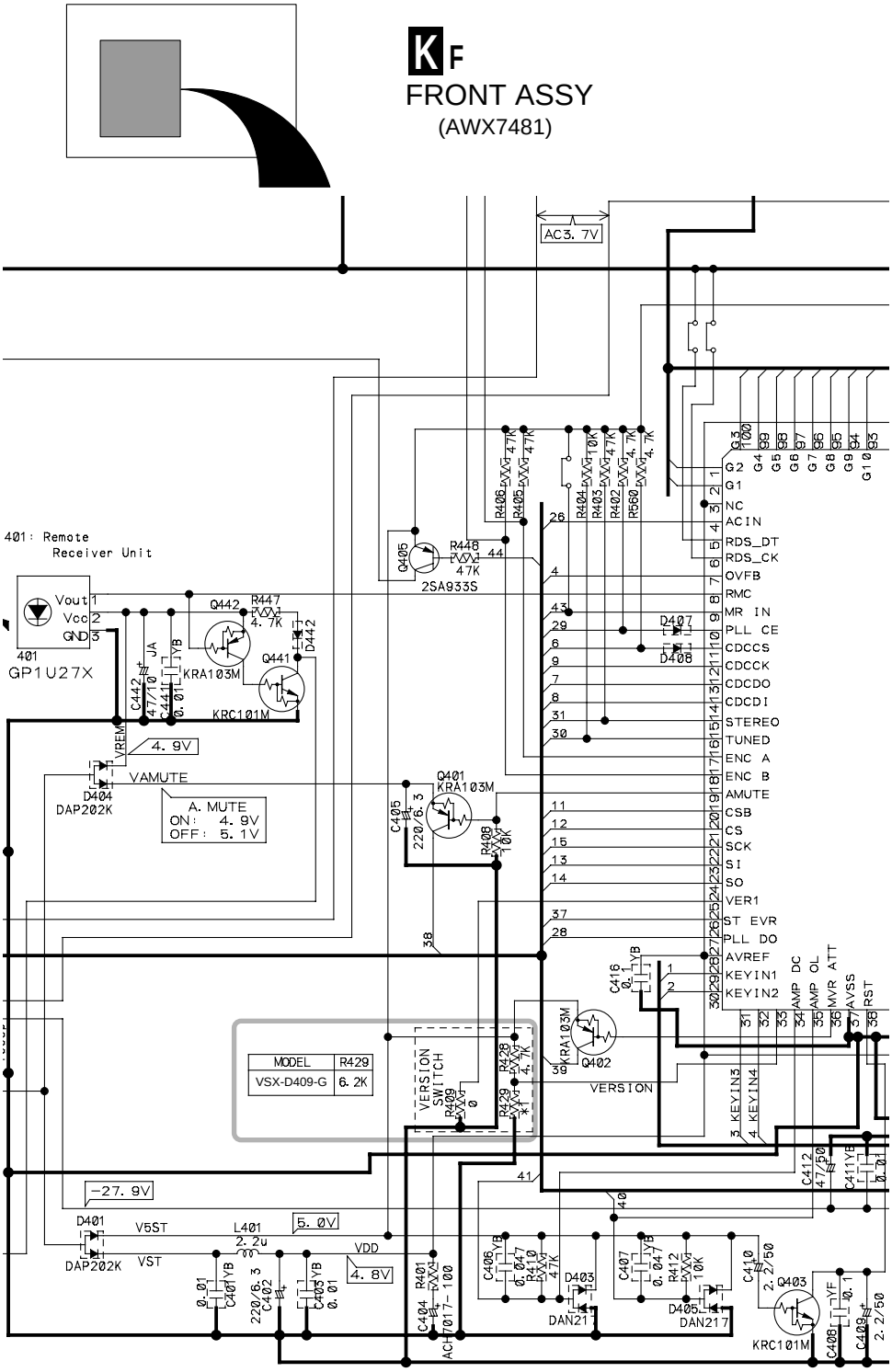

3. PCB CONNECTION DIAGRAM

3.1 VOLTAGE SELECT SW ASSY
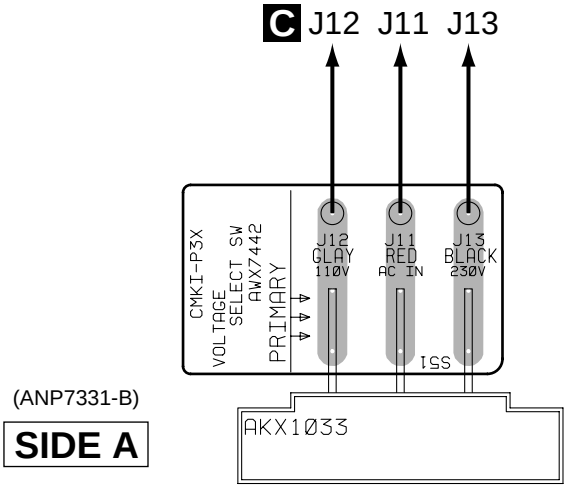
SF VOLTAGE
SELECT SW ASSY