Pioneer

Service Manual

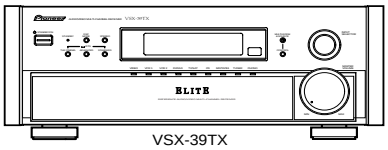

VSX-39TX

ORDER NO.
RRV2295

AUDIO/VIDEO MULTI-CHANNEL RECEIVER

VSX-39TX
VSX-37TX
VSX-36TX
VSX-D909S

THIS MANUAL IS APPLICABLE TO THE FOLLOWING MODEL(S) AND TYPE(S).

Type	Model				Power Requirement	Remarks
	VSX-39TX	VSX-37TX	VSX-36TX	VSX-D909S		
KU/CA	◯	◯	◯	◯	AC120V	

CONTENTS

1. SAFETY INFORMATION ····· 2
2. EXPLODED VIEWS AND PARTS LIST ····· 3
3. BLOCK DIAGRAM AND SCHEMATIC DIAGRAM ··· 10
4. PCB CONNECTION DIAGRAM ····· 52
5. PCB PARTS LIST ····· 74
6. ADJUSTMENT ····· 88
7. GENERAL INFORMATION ····· 89
7.1 DISASSEMBLY ····· 89
7.2 PARTS ····· 91
7.2.1 IC ····· 91
7.2.2 DISPLAY ····· 95
7.3 REMOTE CONTROL UNIT ····· 98
8. PANEL FACILITIES AND SPECIFICATIONS ····· 109

PIONEER ELECTRONIC CORPORATION 4-1, Meguro 1-chome, Meguro-ku, Tokyo 153-8654, Japan
PIONEER ELECTRONICS SERVICE, INC. P.O. Box 1760, Long Beach, CA 90801-1760, U.S.A.
PIONEER EUROPE N V Haven 1087, Keetberglaan 1, 9120 Melsele, Belgium
PIONEER ELECTRONICS ASIACENTRE PTE. LTD. 253 Alexandra Road, #04-01, Singapore 159936

©PIONEER ELECTRONIC CORPORATION 2000

T – ZZR MAY 2000 Printed in Japan

1. SAFETY INFORMATION

This service manual is intended for qualified service technicians ; it is not meant for the casual do-it-yourselfer. Qualified technicians have the necessary test equipment and tools, and have been trained to properly and safely repair complex products such as those covered by this manual.
Improperly performed repairs can adversely affect the safety and reliability of the product and may void the warranty. If you are not qualified to perform the repair of this product properly and safely, you should not risk trying to do so and refer the repair to a qualified service technician.

WARNING
This product contains lead in solder and certain electrical parts contain chemicals which are known to the state of California to cause cancer, birth defects or other reproductive harm.

Health & Safety Code Section 25249.6 – Proposition 65

NOTICE
(FOR CANADIAN MODEL ONLY)
Fuse symbols (fast operating fuse) and/or (slow operating fuse) on PCB indicate that replacement parts must be of identical designation.

REMARQUE
(POUR MODÈLE CANADIEN SEULEMENT)
Les symboles de fusible (fusible de type rapide) et/ou (fusible de type lent) sur CCI indiquent que les pièces de remplacement doivent avoir la même désignation.

(FOR USA MODEL ONLY)

1. SAFETY PRECAUTIONS

The following check should be performed for the continued protection of the customer and service technician.

LEAKAGE CURRENT CHECK

Measure leakage current to a known earth ground (water pipe, conduit, etc.) by connecting a leakage current tester such as Simpson Model 229-2 or equivalent between the earth ground and all exposed metal parts of the appliance (input/output terminals, screwheads, metal overlays, control shaft, etc.). Plug the AC line cord of the appliance directly into a 120V AC 60Hz outlet and turn the AC power switch on. Any current measured must not exceed 0.5mA.

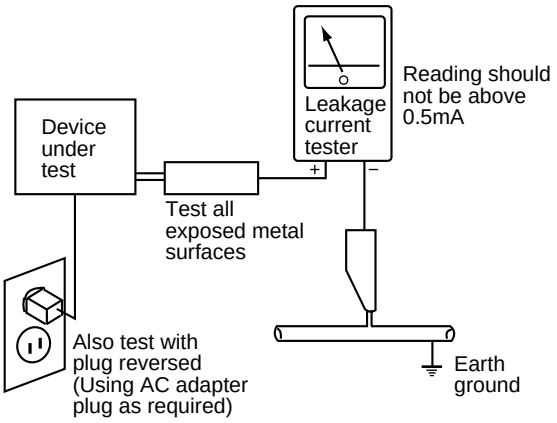

AC Leakage Test

ANY MEASUREMENTS NOT WITHIN THE LIMITS OUTLINED ABOVE ARE INDICATIVE OF A POTENTIAL SHOCK HAZARD AND MUST BE CORRECTED BEFORE RETURNING THE APPLIANCE TO THE CUSTOMER.

2. PRODUCT SAFETY NOTICE

Many electrical and mechanical parts in the appliance have special safety related characteristics. These are often not evident from visual inspection nor the protection afforded by them necessarily can be obtained by using replacement components rated for voltage, wattage, etc. Replacement parts which have these special safety characteristics are identified in this Service Manual.

Electrical components having such features are identified by marking with a ⚠ on the schematics and on the parts list in this Service Manual.
The use of a substitute replacement component which does not have the same safety characteristics as the PIONEER recommended replacement one, shown in the parts list in this Service Manual, may create shock, fire, or other hazards.

Product Safety is continuously under review and new instructions are issued from time to time. For the latest information, always consult the current PIONEER Service Manual. A subscription to, or additional copies of, PIONEER Service Manual may be obtained at a nominal charge from PIONEER.

2. EXPLODED VIEWS AND PARTS LIST

NOTES:
- *Parts marked by "NSP" are generally unavailable because they are not in our Master Spare Parts List.*
- *The ⚠ mark found on some component parts indicates the importance of the safety factor of the part. Therefore, when replacing, be sure to use parts of identical designation.*
- *Screws adjacent to ▼ mark on the product are used for disassembly.*

2.1 PACKING

● **VSX-39TX**

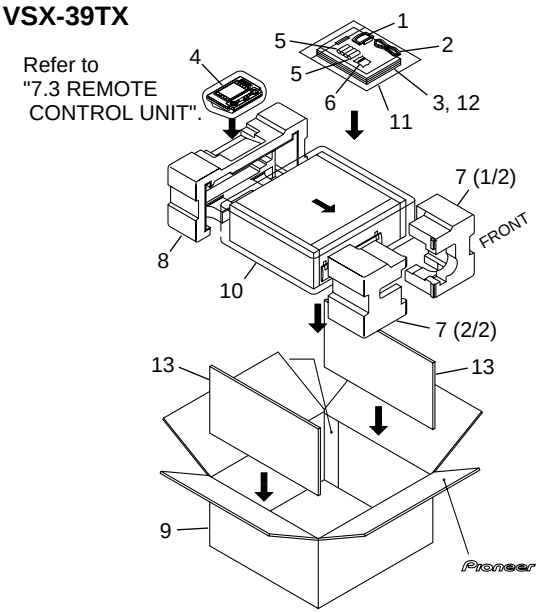

● **Other Models**

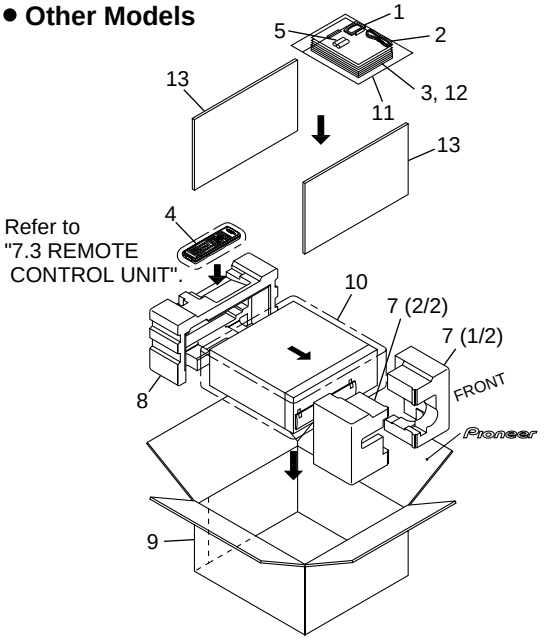

(1) PACKING PARTS LIST

Mark	No.	Description	Part No.
	1	AM Loop Antenna	ATB7009
	2	FM Wire Antenna	ADH7007
	3	Operating Instructions (English)	See Contrast table (2)
	4	Remote Control Unit	See Contrast table (2)
NSP	5	Alkaline Dry Cell Battery (LR6, AA)	VEM1021
	6	Cushion for Remote (for Remote Control Unit)	See Contrast table (2)
	7	Front Pad	See Contrast table (2)
	8	Rear Pad	See Contrast table (2)
	9	Packing Case	See Contrast table (2)
	10	Packing Sheet	RHC1023
NSP	11	Polyethylene Bag (0.03×230×340)	Z21-038
NSP	12	Warranty Card	See Contrast table (2)
	13	Spacer	See Contrast table (2)

(2) CONTRAST TABLE

VSX-39TX, VSX-37TX, VSX-36TX and VSX-D909S are constructed the same except for the following :

Mark	No.	Symbol and Description	Part No.				Remaks
			VSX-39TX	VSX-37TX	VSX-36TX	VSX-D909S	
	3	Operating Instructions (English)	ARB7230	ARB7231	ARB7231	ARB7232	
	4	Remote Control Unit (39)	AXD7254	Not used	Not used	Not used	
	4	Remote Control Unit (36)	Not used	AXD7257	AXD7257	Not used	
	4	Remote Control Unit (909S)	Not used	Not used	Not used	AXD7278	
	6	Cushion for Remote	AXG7080	Not used	Not used	Not used	
	7	Front Pad 29	AHA7255	Not used	Not used	Not used	
	7	Front Pad 26	Not used	AHA7253	AHA7253	AHA7253	
	8	Rear Pad 29	AHA7256	Not used	Not used	Not used	
	8	Rear Pad 26	Not used	AHA7254	AHA7254	AHA7254	
	9	Packing Case 39TX	AHD7882	Not used	Not used	Not used	
	9	Packing Case 37TX	Not used	AHD7881	Not used	Not used	
	9	Packing Case 36TX	Not used	Not used	AHD7880	Not used	
	9	Packing Case 909S	Not used	Not used	Not used	AHD7883	
NSP	12	Warranty Card EL	ARY1026	ARY1026	ARY1026	Not used	
NSP	12	Warranty Card PA	Not used	Not used	Not used	ARY7045	
	13	Spacer 29	AHB7033	Not used	Not used	Not used	
	13	Spacer 26	Not used	AHB7032	AHB7032	AHB7032	

2.2 EXTERIOR

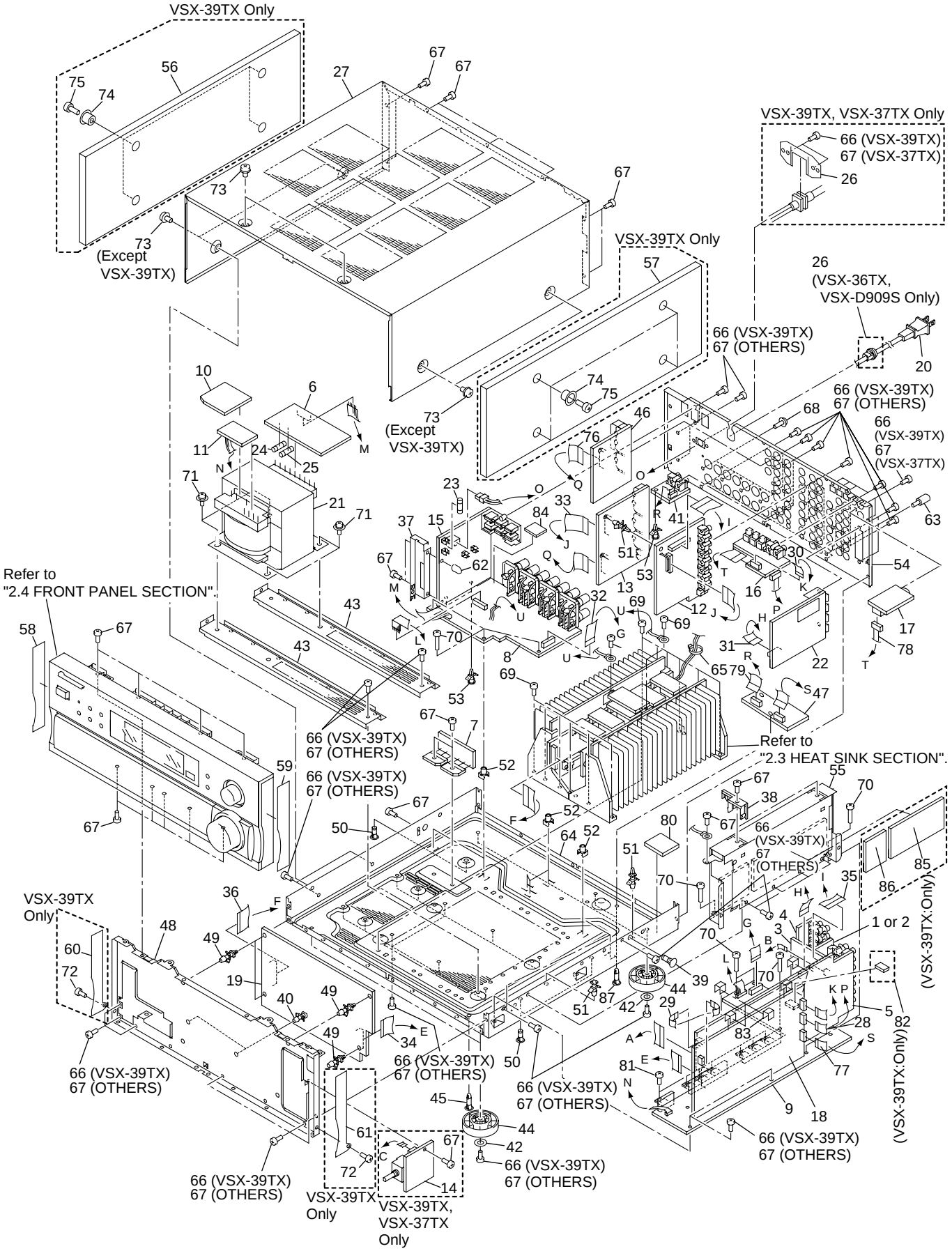
VSX-39TX Only
VSX-39TX, VSX-37TX Only
66 (VSX-39TX)
67 (VSX-37TX)
26
73
(Except
VSX-39TX)
VSX-39TX Only
26
(VSX-36TX,
VSX-D909S Only)
66 (VSX-39TX)
67 (OTHERS)
66 (VSX-39TX)
67 (OTHERS)
66
(VSX-39TX)
67
(VSX-37TX)
Refer to
"2.4 FRONT PANEL SECTION".
Refer to
"2.3 HEAT SINK SECTION".
66 (VSX-39TX)
67 (OTHERS)
VSX-39TX
Only
1 or 2
(VSX-39TX:Only)
VSX-39TX
Only
VSX-39TX,
VSX-37TX
Only

(1) EXTERIOR PARTS LIST

Mark	No.	Description	Part No.
NSP	1	EXTRA-5.1 Assy	See Contrast table (2)
NSP	2	EXTERNAL IN Assy	See Contrast table (2)
NSP	3	A-PINJACK Assy	See Contrast table (2)
	4	CONNECTION Assy	AWX7313
	5	MAIN CONTROL Assy	See Contrast table (2)
	6	TRANS 2-1 ASSY	See Contrast table (2)
	7	DIODE Assy	See Contrast table (2)
	8	SP/PS Assy	See Contrast table (2)
	9	REGULATOR Assy	AWX7310
	10	TRANS 1 Assy	AWX7316
	11	TRANS 2-2 Assy	AWX7366
	12	VIDEO Assy	See Contrast table (2)
	13	S-VIDEO Assy	See Contrast table (2)
	14	VOLUME Assy	See Contrast table (2)
	15	PRIMARY Assy	AWX7311
	16	RF/DIGITAL IN Assy	See Contrast table (2)
NSP	17	OPT OUT Assy	AWX7643
	18	DSP Assy	See Contrast table (2)
	19	V-AMP Assy	See Contrast table (2)
⚠	20	AC Power Cord	See Contrast table (2)
⚠	21	Power Transformer (T1)	ATS7252
	22	FM/AM TUNER Unit	AXX7046
⚠	23	Fuse (FU1 : 10A)	VEK1029
⚠	24	Fuse (FU4 : 2.5A)	REK1079
⚠	25	Fuse (FU5 : 2.5A)	REK1079
	26	AC Cord Spacer	See Contrast table (2)
	27	Bonnet Case	See Contrast table (2)
	28	2P Shield with Housing (J24)	ADX7250
	29	Lead Card 07P (J13)	ADD7161
	30	Lead Card 13P AD (J22)	ADD7250
	31	Lead Card 13P AD (J16)	ADD7169
	32	Lead Card 14P (J17)	ADD7165
	33	Lead Card 21P (J18)	ADD7164
	34	Lead Card 23P BD SLD (J12)	ADD7160
	35	Lead Card 26P (J15)	ADD7163
	36	Lead Card 28P (J23)	ADD7171
	37	Assy Holder	See Contrast table (2)
	38	Assy Holder B	AMR7267
	39	Card Spacer	AEC7133
	40	Card Spacer	DEC1772
	41	2CH I/O PJ Assy	AWX7634
	42	Cushion 55	PNM1316
NSP	43	Frame	See Contrast table (2)
	44	Insulator	PNW2766
	45	Locking Card Spacer	DEC1908
	46	COMPONENT Assy	AWX7635
	47	TRIM Assy	AWX7655
NSP	48	Panel Stay	See Contrast table (2)
	49	PC Support	VEC1549
NSP	50	PCB Holder	AEC7057
NSP	51	PCB Holder	PNW2100
NSP	52	PCB Mould	AMR1525
	53	PCB Spacer	AEC1372
	54	Rear Panel	See Contrast table (2)
	55	Shield Case	See Contrast table (2)
	56	Side Board 29 L	See Contrast table (2)
	57	Side Board 29 R	See Contrast table (2)
	58	Side Escutheon L	See Contrast table (2)
	59	Side Escutheon R	See Contrast table (2)
	60	Side Sash L 29	See Contrast table (2)
	61	Side Sash R 29	See Contrast table (2)
	62	Stud Cover	AEC7105
	63	Terminal Screw	AKE-031
NSP	64	Under Base 29	See Contrast table (2)
NSP	65	Binder (BK-1)	ZCA-BK1
	66	Screw	BBT30P080FCC
	67	Screw	BBZ30P080FZK
	68	Screw	ABA1193
	69	Screw	IBZ30P080FCC
	70	Screw	BBZ30P180FMC
	71	Screw	ABA1053
	72	Screw	BBT30P040FZK
	73	Screw	FBT40P080FZK
	74	Wood Collar	See Contrast table (2)
	75	Screw	See Contrast table (2)
	76	Lead Card 06P (J27)	ADD7248
	77	Lead Card 13P (J26)	ADD7251
	78	Lead Card 04P (J29)	ADD7247
	79	Lead Card 09P (J28)	ADD7249
	80	Cushion C	PNM1059
	81	Screw	IBZ30P100FCC
	82	Spacer	See Contrast table (2)
	83	Remo-con. Cushion	AEB7167
	84	Spacer	AEB7180
	85	S. Cushion	See Contrast table (2)
	86	Sheet	See Contrast table (2)
	87	Locking Card Spacer	VEC1596

(2) CONTRAST TABLE

VSX-39TX, VSX-37TX, VSX-36TX and VSX-D909S are constructed the same except for the following :

Mark	No.	Symbol and Description	Part No.				Remaks
			VSX-39TX	VSX-37TX	VSX-36TX	VSX-D909S	
NSP	1	EXTRA-5.1 Assy	AWX7314	Not used	Not used	Not used	
NSP	2	EXTERNAL IN Assy	Not used	AWX7398	AWX7398	AWX7398	
NSP	3	A-PINJACK Assy	AWX7312	AWX7397	AWX7397	AWX7397	
	5	MAIN CONTROL Assy	AWX7705	AWX7706	AWX7707	AWX7708	
	6	TRANS 2-1 Assy	AWX7659	AWX7694	AWX7695	AWX7695	
	7	DIODE Assy	AWX7660	AWX7697	AWX7697	AWX7697	
	8	SP/PS Assy	AWX7658	AWX7688	AWX7689	AWX7689	
	12	VIDEO Assy	AWX7307	AWX7394	AWX7394	AWX7394	
	13	S-VIDEO Assy	AWX7678	AWX7679	AWX7679	AWX7679	
	14	VOLUME Assy	AWX7367	AWX7367	Not used	Not used	
	16	RF / DIGITAL IN Assy	AWX7637	AWX7638	AWX7642	AWX7642	
	18	DSP Assy	AWX7632	AWX7632	AWX7633	AWX7633	
	19	V-AMP Assy	AWX7729	AWX7309	AWX7309	AWX7409	
⚠	20	AC Power Cord	ADG7028	ADG7028	ADG7024	ADG7024	
	26	AC Cord Spacer	ANG1153	ANG1153	Not used	Not used	
	26	Cord Stopper	Not used	Not used	CM-22C	CM-22C	
	27	Bonnet Case 29	AZN7790	Not used	Not used	Not used	
	27	Bonnet Case 26	Not used	AZN7789	AZN7789	AZN7789	
	37	Assy Holder	ANG7322	ANG7321	ANG7321	ANG7321	
	41	2CH I/O PJ Assy	AWX7634	AWX7646	AWX7646	AWX7646	
NSP	43	Frame 29	ANG7243	Not used	Not used	Not used	
NSP	43	Frame 26	Not used	ANG7238	ANG7238	ANG7238	
	46	COMPONENT Assy	AWX7635	AWX7636	AWX7636	AWX7636	
NSP	48	Panel Stay 29	AND7032	Not used	Not used	Not used	
NSP	48	Panel Stay 26	Not used	AND7031	AND7031	AND7031	
	54	Rear Panel 39	ANC7945	Not used	Not used	Not used	
	54	Rear Panel 37	Not used	ANC7944	Not used	Not used	
	54	Rear Panel 36	Not used	Not used	ANC7943	Not used	
	54	Rear Panel D909S	Not used	Not used	Not used	ANC7946	
	55	Shield Case 39	ANK7079	Not used	Not used	Not used	
	55	Shield Case 36	Not used	ANK7078	ANK7054	ANK7054	
	56	Side Board 29 L	AMS7013	Not used	Not used	Not used	
	57	Side Board 29 R	AMS7014	Not used	Not used	Not used	
	58	Side Escutheon L 29	AAK7635	Not used	Not used	Not used	
	58	Side Escutheon L 26	Not used	AAK7633	AAK7633	AAK7633	
	59	Side Escutheon R 29	AAK7636	Not used	Not used	Not used	
	59	Side Escutheon R 26	Not used	AAK7634	AAK7634	AAK7634	
	60	Side Sash L 29	AAH7019	Not used	Not used	Not used	
	61	Side Sash R 29	AAH7020	Not used	Not used	Not used	
NSP	64	Under Base 29	ANA7091	Not used	Not used	Not used	
NSP	64	Under Base 26	Not used	ANA7089	ANA7089	ANA7089	
	74	Wood Collar	AEC1165	Not used	Not used	Not used	
	75	Screw	ABA1086	Not used	Not used	Not used	
	82	Spacer	AEB7179	Not used	Not used	Not used	
	85	S. Cushion	AEB7178	Not used	Not used	Not used	
	86	Sheet	AED7035	Not used	Not used	Not used	

2.3 HEAT SINK SECTION

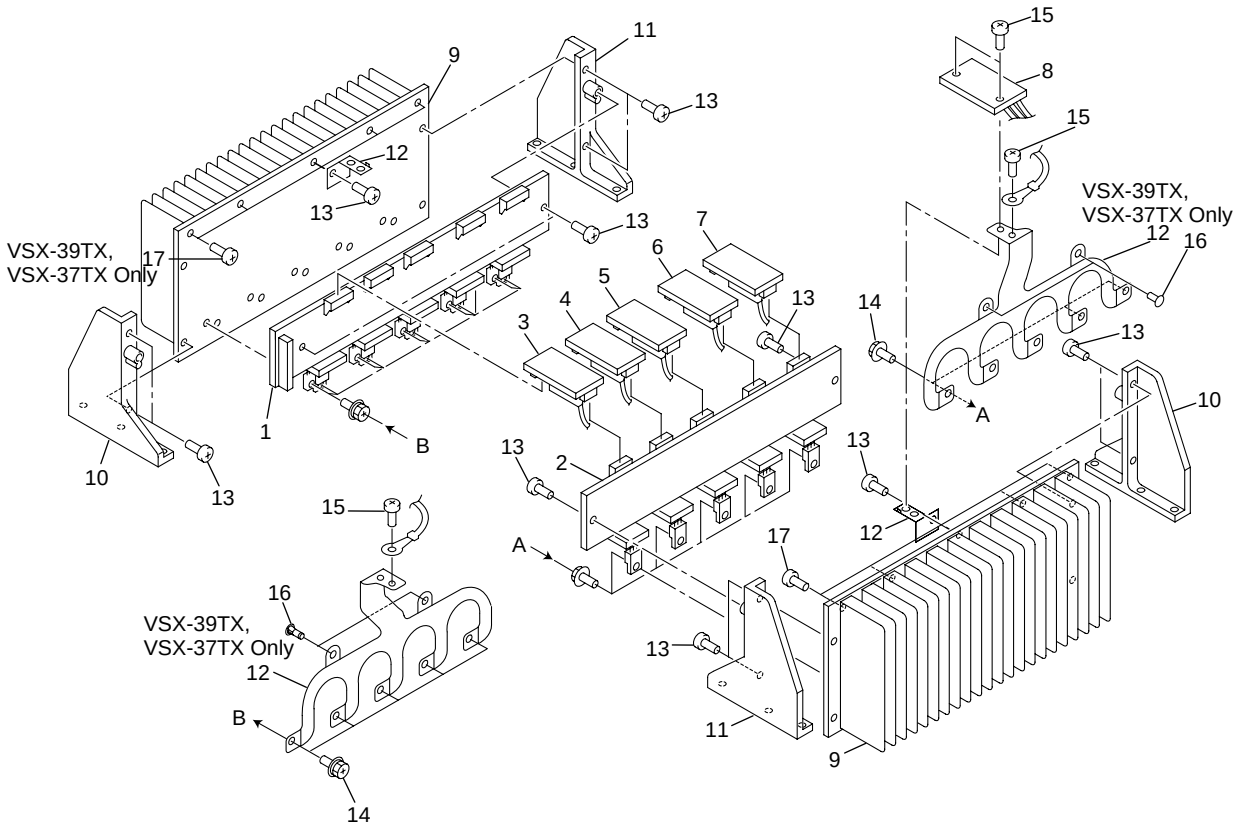

(1) HEAT SINK SECTION PARTS LIST

Mark	No.	Description	Part No.
	1	C-AMP N Assy	AWX7681
NSP	2	C-AMP-P Assy	AWX7680
NSP	3	OUTPUT-SL Assy	AWX7685
NSP	4	OUTPUT-FL Assy	AWX7682
	5	OUTPUT-C Assy	AWX7684
NSP	6	OUTPUT-FR Assy	AWX7683
NSP	7	OUTPUT-SR Assy	AWX7686
	8	VL-TERMINAL Assy	AWX7657
NSP	9	Heat Sink	See Contrast table (2)
	10	Heat Sink Holder A	AMR7255
	11	Heat Sink Holder B	AMR7256
NSP	12	Power Supply Plate	See Contrast table (2)
	13	Screw	See Contrast table (2)
	14	Screw	ABA1082
	15	Screw	IBZ30P080FCC
	16	Card Spacer	See Contrast table (2)
	17	Screw	See Contrast table (2)

(2) CONTRAST TABLE

VSX-39TX, VSX-37TX, VSX-36TX and VSX-D909S are constructed the same except for the following :

Mark	No.	Symbol and Description	Part No.				Remaks
			VSX-39TX	VSX-37TX	VSX-36TX	VSX-D909S	
NSP	9	Heat Sink D10	ANH7103	ANH7103	Not used	Not used	
NSP	9	Heat Sink 26	Not used	Not used	ANH7102	ANH7102	
NSP	12	Power Supply Plate	ANG7280	ANG7280	ANG7240	ANG7240	
	13	Screw	IBZ30P080FCC	IBZ30P080FCC	BBZ30P080FZK	BBZ30P080FZK	
NSP	16	Card Spacer	DNK2769	DNK2769	Not used	Not used	
	17	Screw	BBZ40P080FCC	BBZ40P080FCC	Not used	Not used	

2.4 FRONT PANEL SECTION

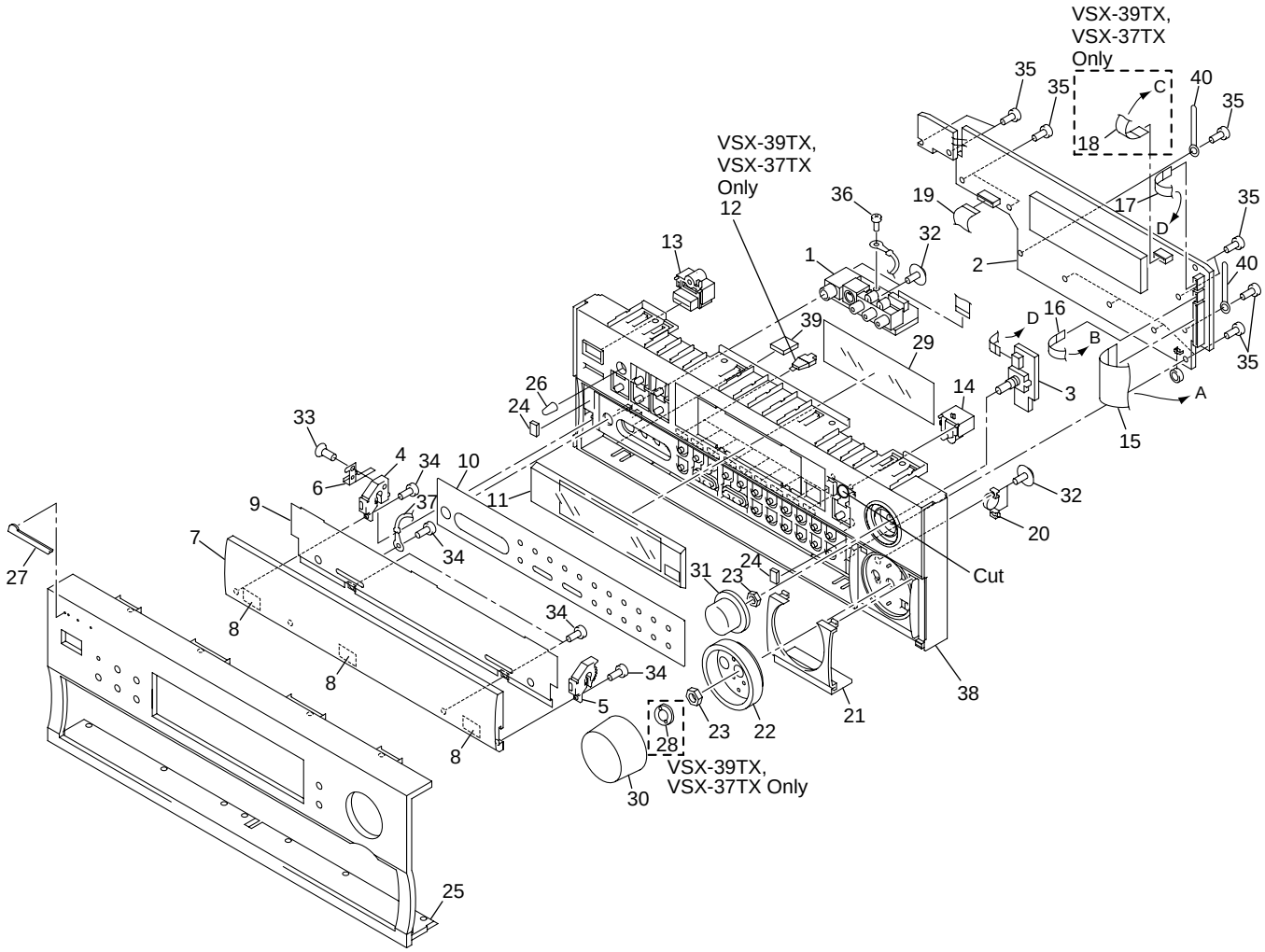

(1) FRONT PANEL SECTION PARTS LIST

Mark	No.	Description	Part No.
	1	H. PHONE/F. VIDEO Assy	AWX7342
	2	DISPLAY Assy	See Contrast table (2)
NSP	3	ROTARY ENCODER Assy	See Contrast table (2)
	4	Door Hinge 26 L	AMR7252
	5	Door Hinge 26 R	AMR7253
NSP	6	Magnet Angle	ANG7241
	7	Door Panel	See Contrast table (2)
NSP	8	Spacer	VEC-244
NSP	9	Door Plate 26	AAH7024
	10	Door Sheet	See Contrast table (2)
	11	Display Panel 26	AAK7625
	12	Function Lens 27	See Contrast table (2)
	13	Power Button (STANDBY/ON)	AAD7440
	14	MR Button (MULTIROOM)	AAD7514
	15	Lead Card 32P (J11)	ADD7159
	16	Lead Card 05P (J14)	ADD7254
	17	Lead Card 06P (J20)	ADD7167
	18	Lead Card 08P (J19)	See Contrast table (2)
	19	Lead Card 12P (J21)	ADD7166
	20	Damper Assy (60)	AXA7078
	21	Sub Panel	See Contrast table (2)
	22	Volume Ring	See Contrast table (2)
	23	Nut	NK90FUC
	24	Door Cusion B	AEB7152
	25	Front Panel	See Contrast table (2)
	26	LED Lens	PNW2019
	27	Name Plate B	PAN1376
	28	Ring Spacer D5	See Contrast table (2)
	29	FL Sheet 26	AAK7627
	30	Volume Knob (MASTER VOLUME)	See Contrast table (2)
	31	Rotary Knob (INPUT SELECTOR)	See Contrast table (2)
	32	Screw	ABA7053
	33	Screw	PBA1096
	34	Screw	BPZ30P060FMC
	35	Screw	BPZ30P080FMC
	36	Screw	BBZ30P080FZK
NSP	37	Cord with Plug	ADH7020
	38	Panel Base	See Contrast table (2)
	39	Magnet	AMF7002
	40	Cord Clamper	RNH-184

(2) CONTRAST TABLE

VSX-39TX, VSX-37TX, VSX-36TX and VSX-D909S are constructed the same except for the following :

Mark	No.	Symbol and Description	Part No.				Remaks
			VSX-39TX	VSX-37TX	VSX-36TX	VSX-D909S	
	1	H.PHONE/F.VIDEO Assy	AWX7342	AWX7342	AWX7528	AWX7528	
	2	DISPLAY Assy	AWX7698	AWX7698	AWX7699	AWX7700	
NSP	3	ROTARY ENCODER Assy	AWX7328	AWX7328	AWX7726	AWX7726	
	7	Door Panel 39	AMB7722	AMB7718	AMB7718	Not used	
	7	Door Panel 98SD	Not used	Not used	Not used	AMB7624	
	10	Door Sheet 39	AAK7789	AAK7789	AAK7789	Not used	
	10	Door Sheet D909S	Not used	Not used	Not used	AAK7790	
	12	Function Lens 27	AAK7628	AAK7628	Not used	Not used	
	18	Lead Card 08P (J19)	ADD7168	ADD7168	Not used	Not used	
	21	Sub Panel 29	AMB7622	AMB7622	Not used	Not used	
	21	Sub Panel 26	Not used	Not used	AMB7575	Not used	
	21	Sub Panel 908	Not used	Not used	Not used	AMB7617	
	22	Volume Ring D10	AAH7016	Not used	Not used	Not used	
	22	Volume Ring 26	Not used	AAK7623	AAK7623	AAK7623	
	25	Front Panel 39	AMB7718	Not used	Not used	Not used	
	25	Front Panel 37	Not used	AMB7717	Not used	Not used	
	25	Front Panel 36	Not used	Not used	AMB7716	Not used	
	25	Front Panel D909S	Not used	Not used	Not used	AMB771	
	28	Ring Spacer D5	AWL7038	AWL7038	Not used	Not used	
	30	Volume Knob 27	AAB7194	AAB7194	Not used	Not used	
	30	Volume Knob 26	Not used	Not used	AAB7193	AAB7193	
	31	Rotary Knob 29	AAB7221	AAB7221	Not used	Not used	
	31	Rotary Knob 26	Not used	Not used	AAB7196	AAB7196	
	38	Panel Base 27	AMB7570	AMB7570	Not used	Not used	
	38	Panel Base 26	Not used	Not used	AMB7569	AMB7569	

3. BLOCK DIAGRAM AND SCHEMATIC DIAGRAM

3.1 BLOCK DIAGRAM

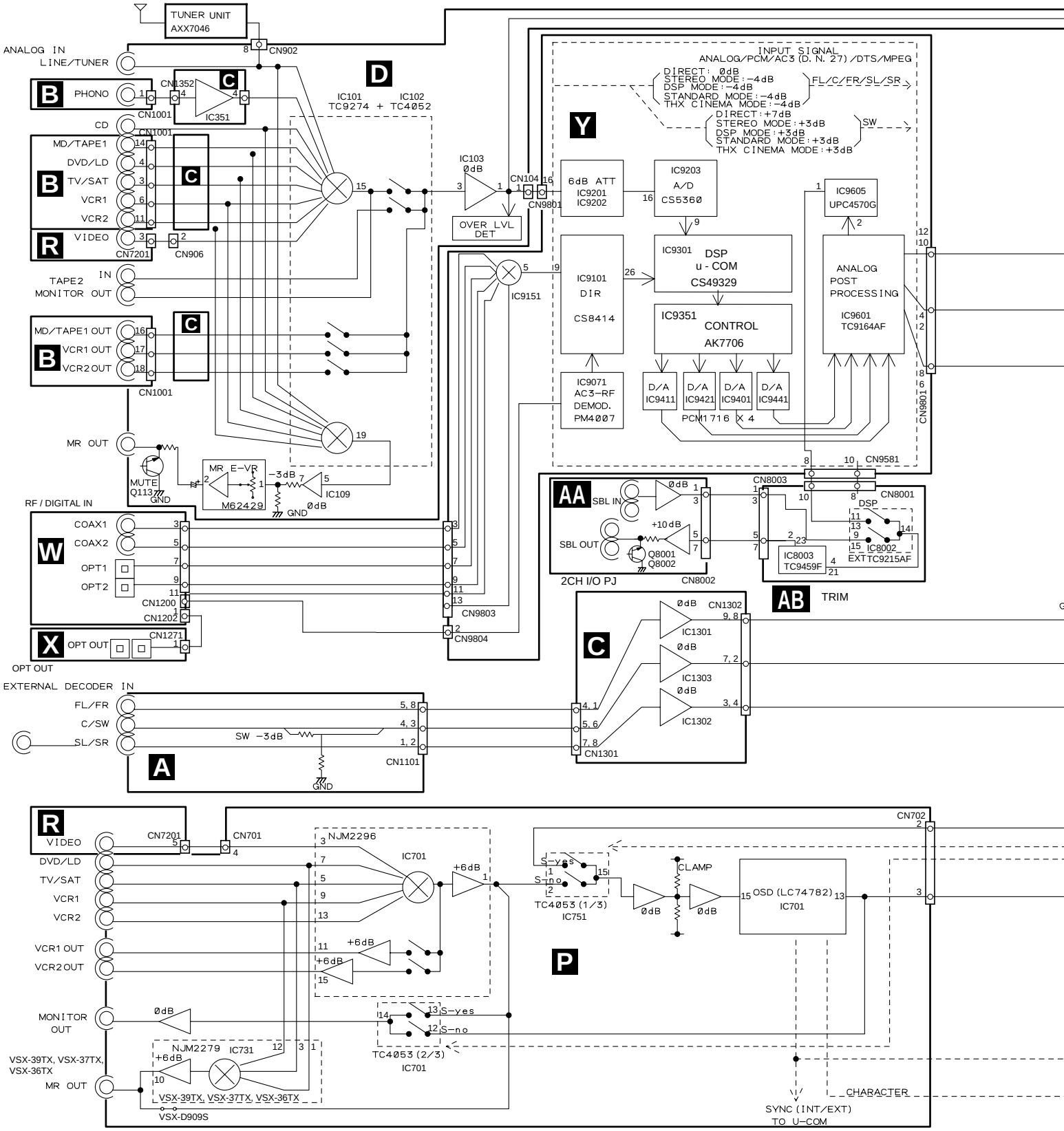

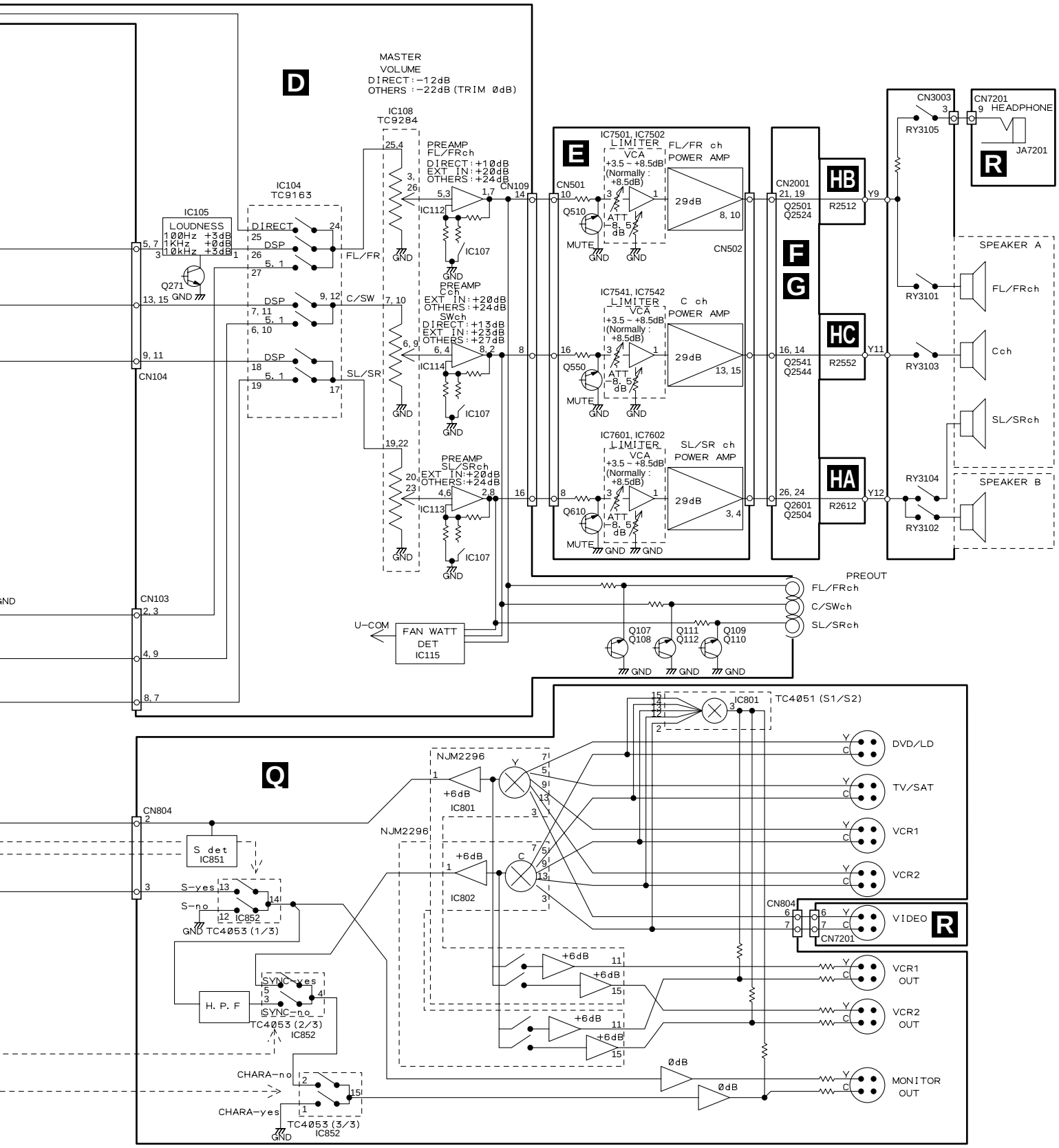
D
MASTER VOLUME
DIRECT:−12dB
OTHERS:−22dB (TRIM 0dB)
IC108 TC9284
IC104 TC9163
IC105
LOUDNESS
100Hz +3dB
1KHz +0dB
10kHz +3dB
Q271
CN104
CN103
DIRECT
DSP
5. 1
FL/FR
C/SW
SL/SR
PREAMP FL/FRch
DIRECT:+10dB
EXT IN:+20dB
OTHERS:+24dB
PREAMP Cch
EXT IN:+20dB
OTHERS:+24dB
SWch
DIRECT:+13dB
EXT IN:+23dB
OTHERS:+27dB
PREAMP SL/SRch
EXT IN:+20dB
OTHERS:+24dB
IC112
IC114
IC113
IC107
CN109
E
CN501
Q510
Q550
Q610
MUTE
IC7501, IC7502
IC7541, IC7542
IC7601, IC7602
LIMITER VCA
+3.5 ~ +8.5dB
(Normally : +8.5dB)
ATT −8.5 dB
FL/FR ch POWER AMP
C ch POWER AMP
SL/SR ch POWER AMP
29dB
CN502
F
G
CN2001
Q2501 Q2524
Q2541 Q2544
Q2601 Q2504
HB
HC
HA
R2512
R2552
R2612
CN3003
RY3105
RY3101
RY3103
RY3104
RY3102
CN7201
HEADPHONE
JA7201
R
SPEAKER A
FL/FRch
Cch
SL/SRch
SPEAKER B
PREOUT
FL/FRch
C/SWch
SL/SRch
U−COM
FAN WATT DET IC115
Q107 Q108
Q111 Q112
Q109 Q110
GND
Q
CN804
S det IC851
S−yes
S−no
IC852
TC4053 (1/3)
H. P. F
SYNC−yes
SYNC−no
TC4053 (2/3)
CHARA−no
CHARA−yes
TC4053 (3/3)
NJM2296
IC801
IC802
+6dB
IC801
TC4051 (S1/S2)
DVD/LD
TV/SAT
VCR1
VCR2
VIDEO
VCR1 OUT
VCR2 OUT
MONITOR OUT
0dB

3.2 OVERALL WIRING CONNECTION DIAGRAM

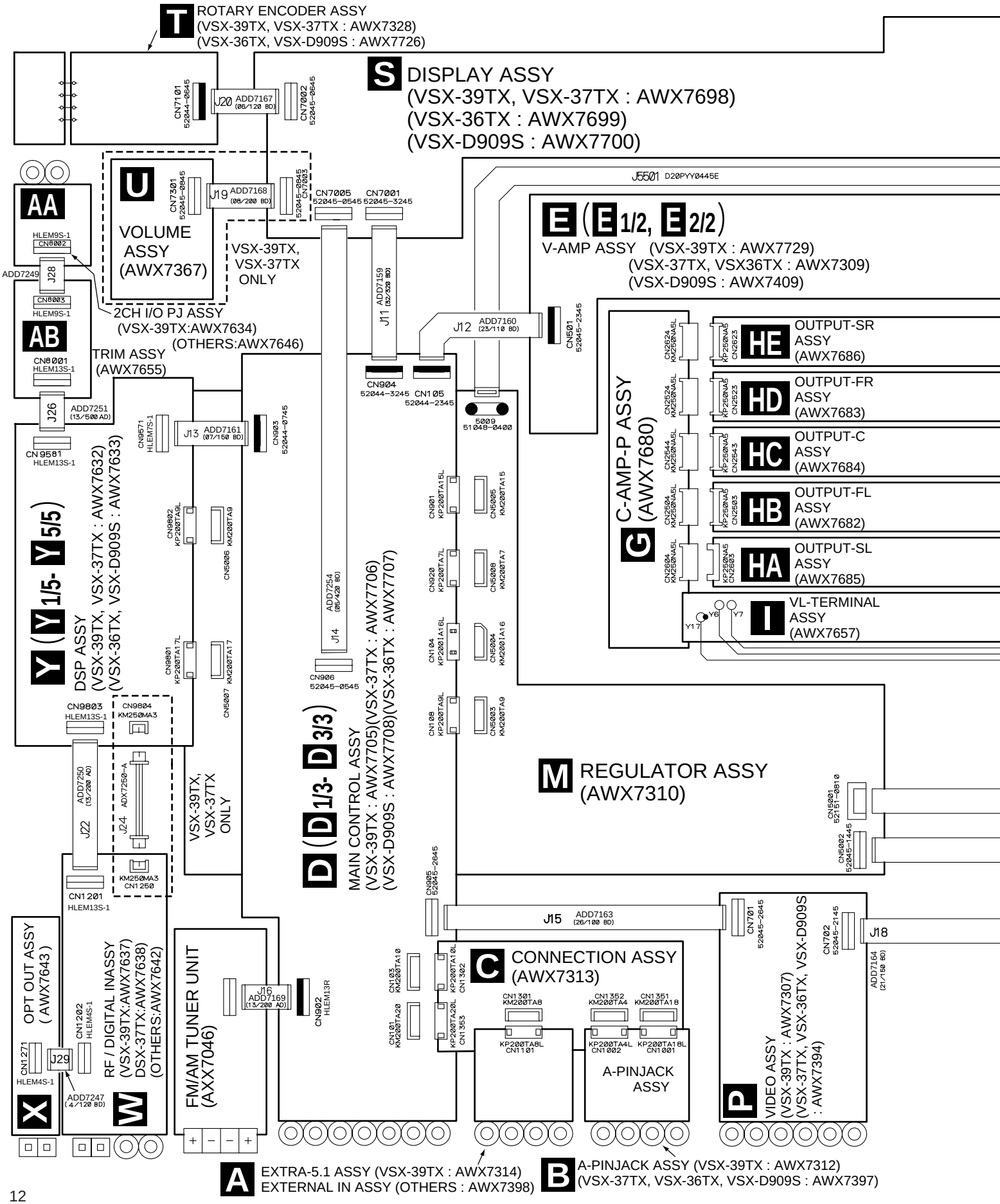

Note : When ordering service parts, be sure to refer to "EXPLODED VIEWS and PARTS LIST" or "PCB PARTS LIST".

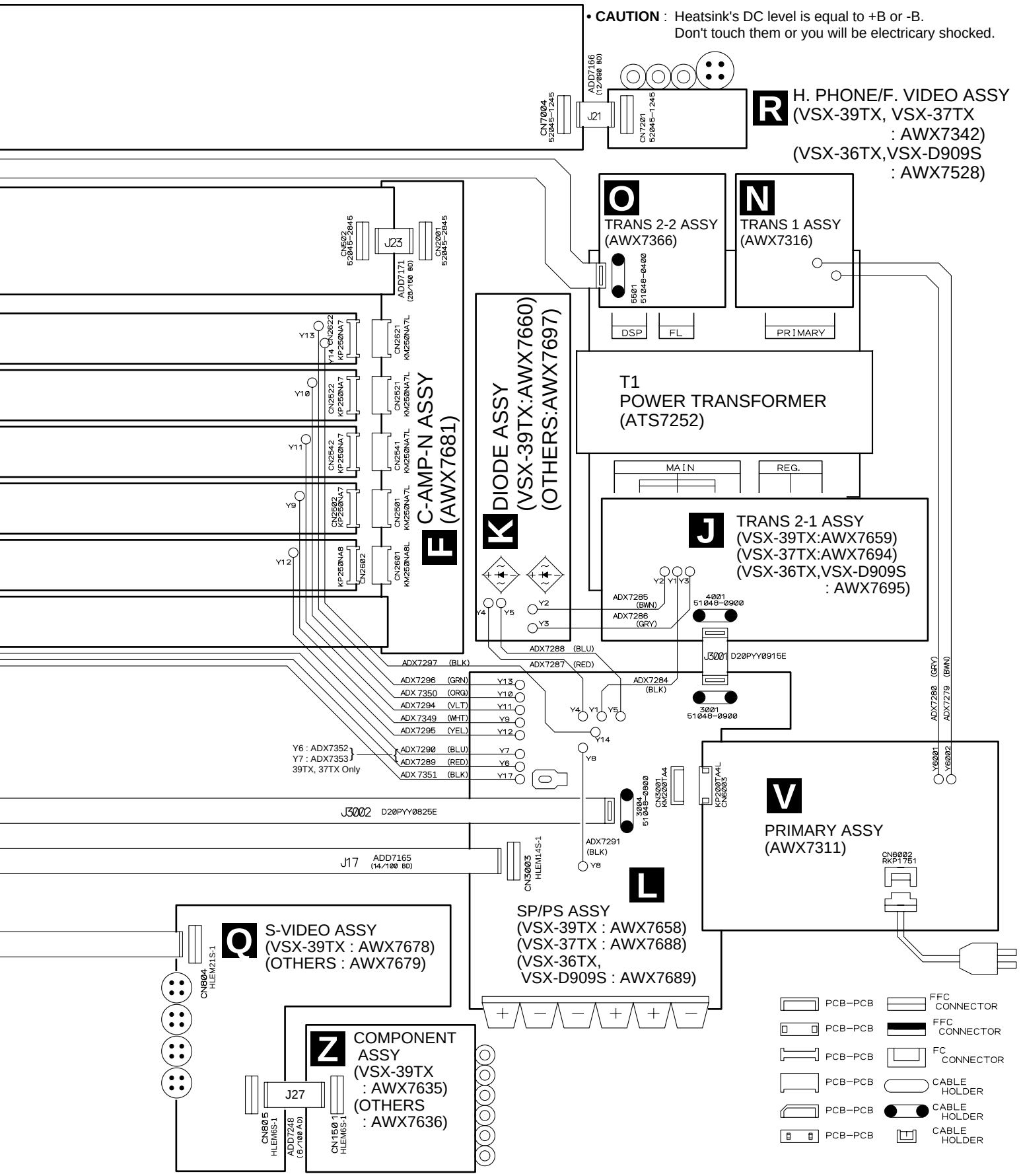

3.3 EXTRA-5.1 (EXTERNAL IN), A-PINJACK and CONNECTION ASSYS

A

EXTRA-5.1 ASSY
(VSX-39TX : AWX7314)
EXTERNAL IN ASSY
(OTHERS : AWX7398)

JA1101-JA1103 ;
VSX-39TX : AKB7121
OTHERS : AKB7095

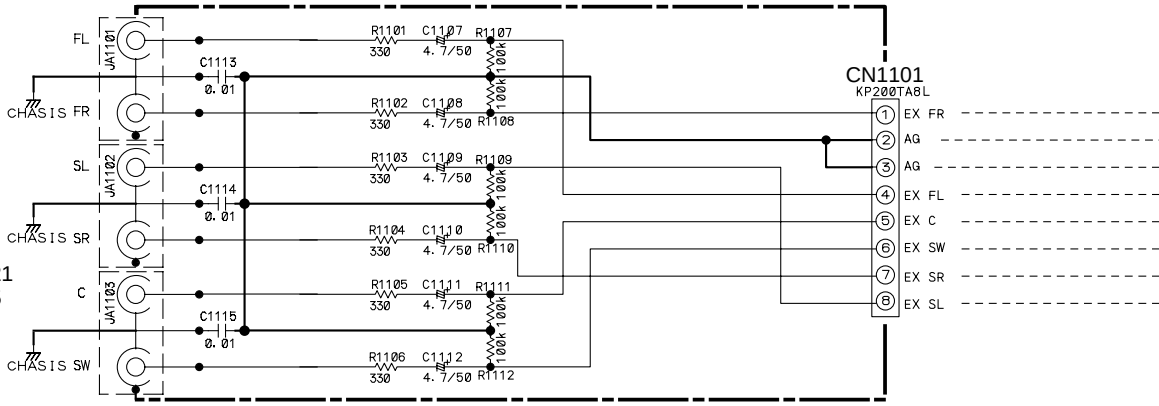

B

A-PINJACK ASSY
(VSX-39TX : AWX7312)
(VSX-37TX, VSX-36TX,
VSX-D909S : AWX7397)

JN1014: AKB7119
(VSX-39TX ONLY)

JA1015: AKB7048
JA1016: AKB7120
(VSX-37TX, VSX-36TX,
VSX-D909S ONLY)

JA1011-JA1013 ;
VSX-39TX : AKB7108
OTHERS : AKB7048

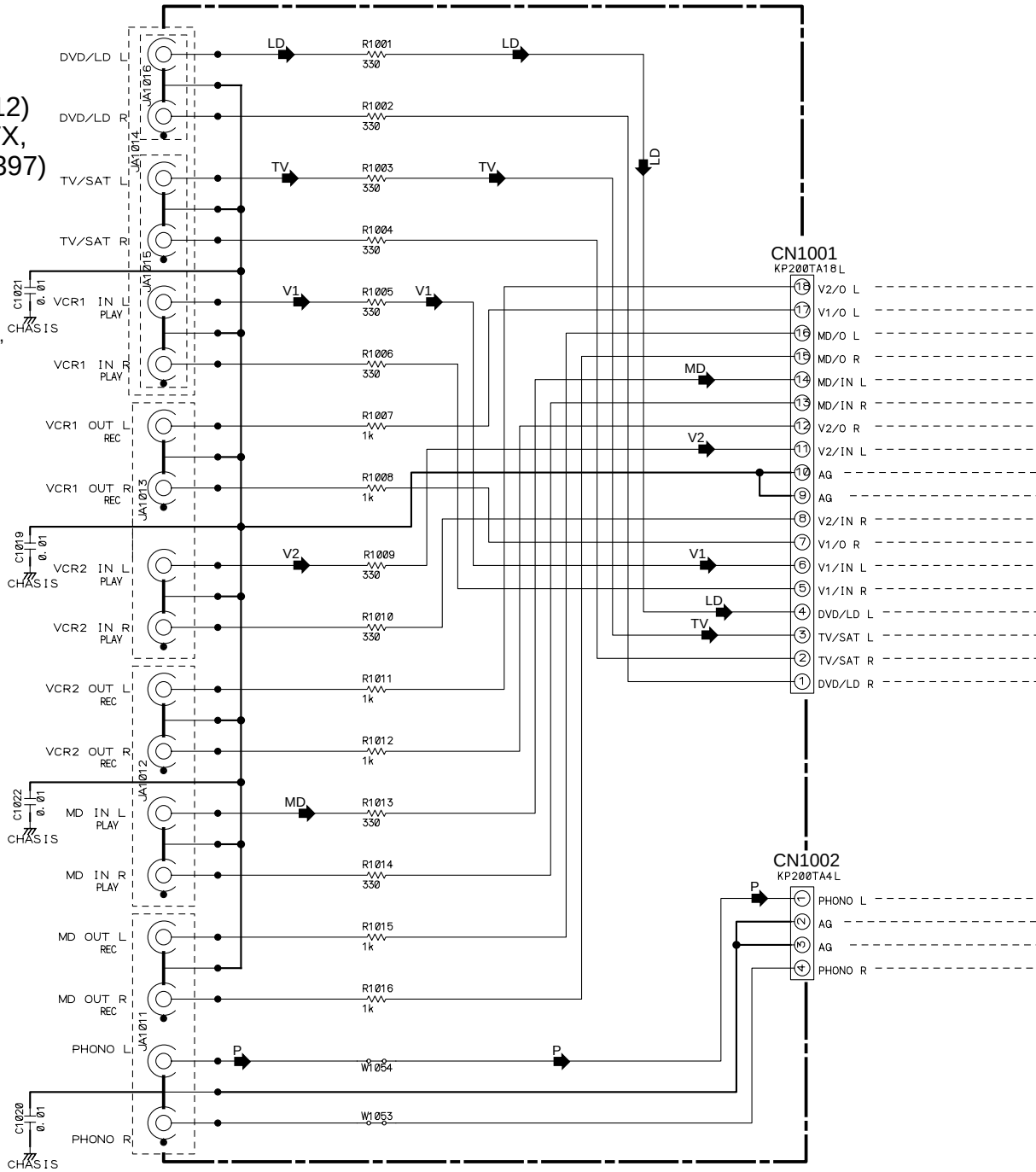

C CONNECTION ASSY (AWX7313)

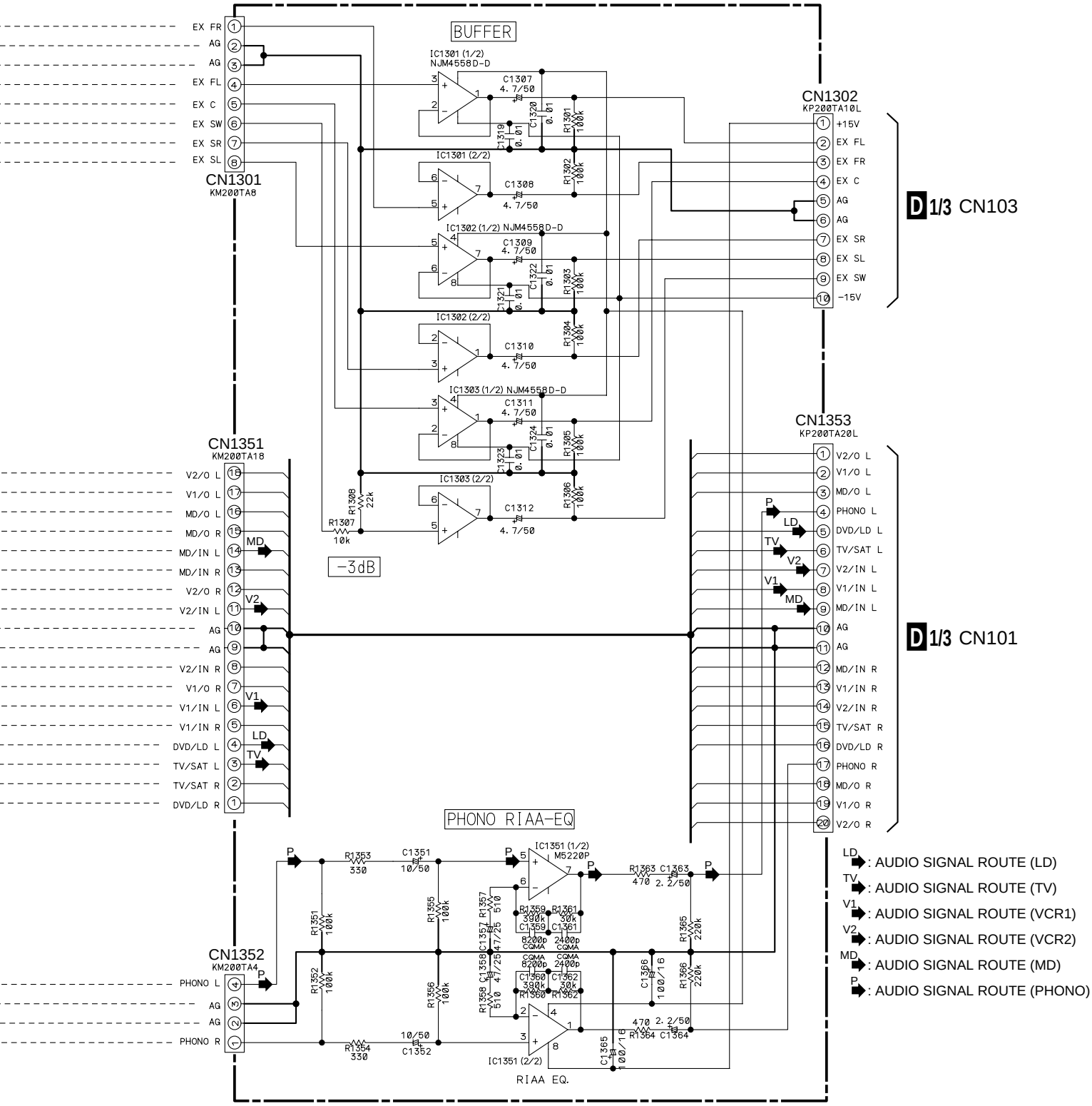

3.4 MAIN CONTROL ASSY (1/3)

: The power supply is shown with the marked box.

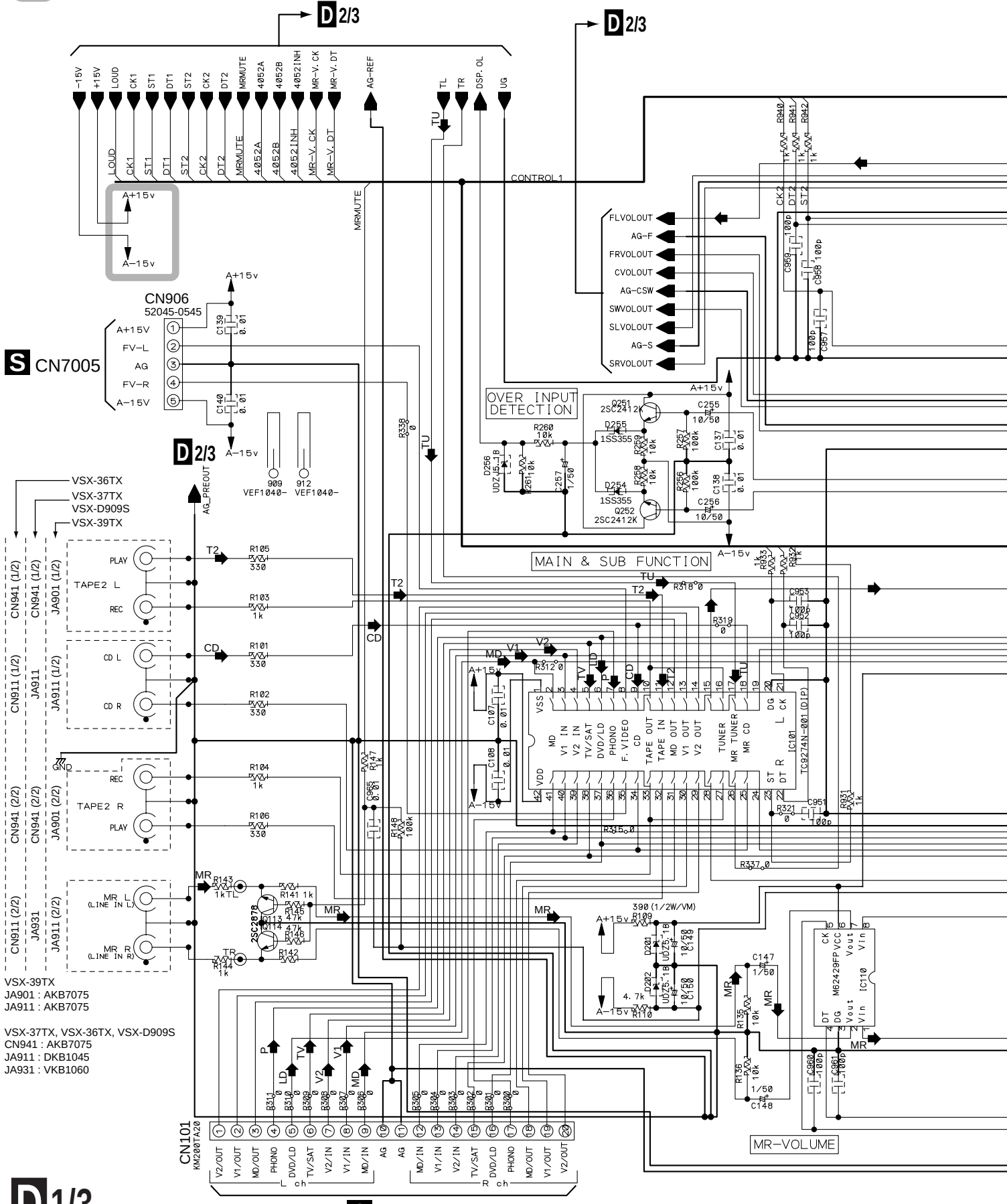

D 1/3

MAIN CONTROL ASSY
(VSX-39TX : AWX7705)
(VSX-37TX : AWX7706)(VSX-D909S : AWX7708)
(VSX-36TX : AWX7707)

➡: AUDIO SIGNAL ROUTE
LD ➡: AUDIO SIGNAL ROUTE (LD)
TV ➡: AUDIO SIGNAL ROUTE (TV)
V1 ➡: AUDIO SIGNAL ROUTE (VCR1)
V2 ➡: AUDIO SIGNAL ROUTE (VCR2)
MD ➡: AUDIO SIGNAL ROUTE (MD)
P ➡: AUDIO SIGNAL ROUTE (PHONO)
TU ➡: AUDIO SIGNAL ROUTE (TUNER)
CD ➡: AUDIO SIGNAL ROUTE (CD)
T2 ➡: AUDIO SIGNAL ROUTE (TAPE2)
MR ➡: AUDIO SIGNAL ROUTE (MR)

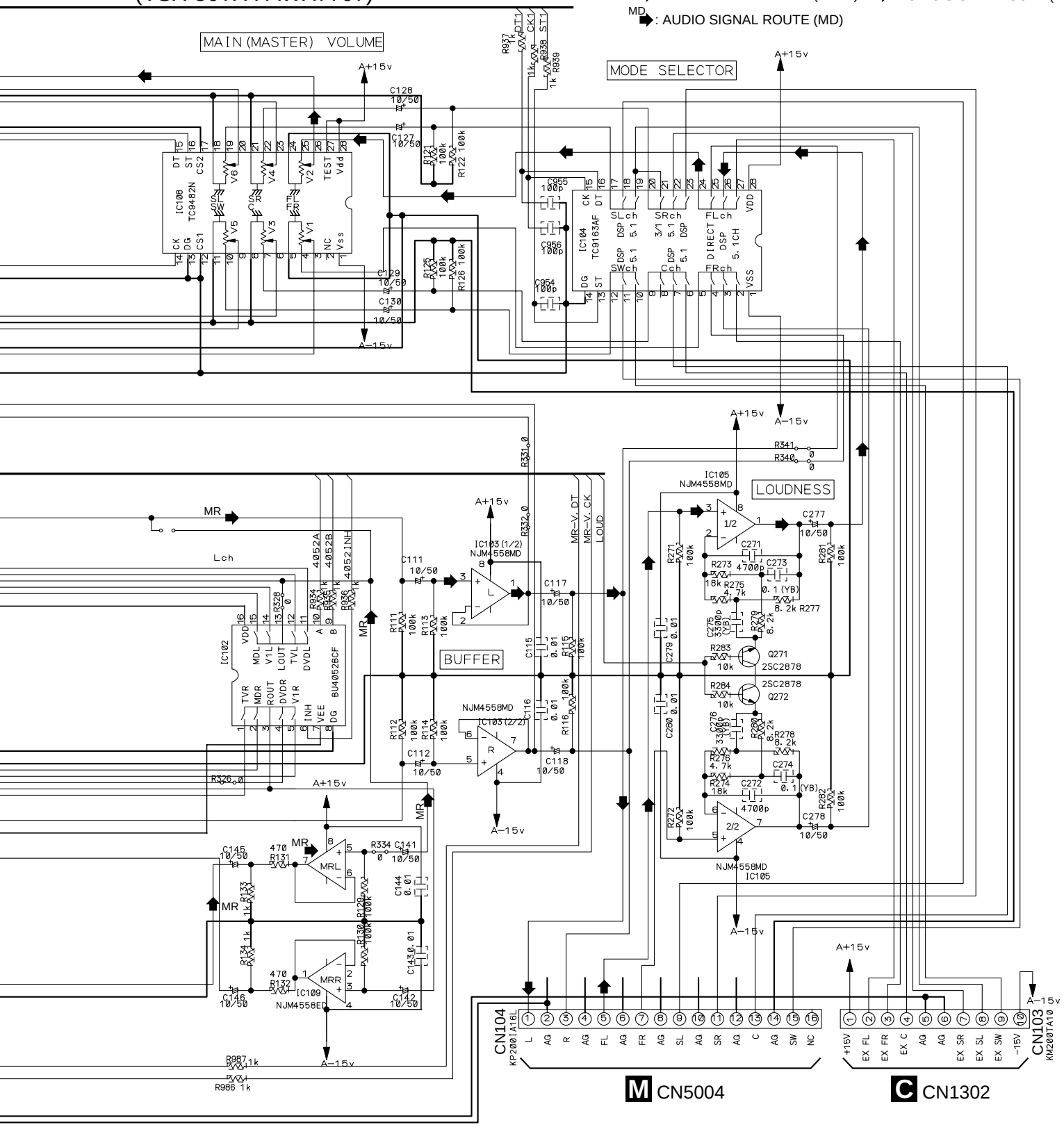

3.5 MAIN CONTROL ASSY (2/3)

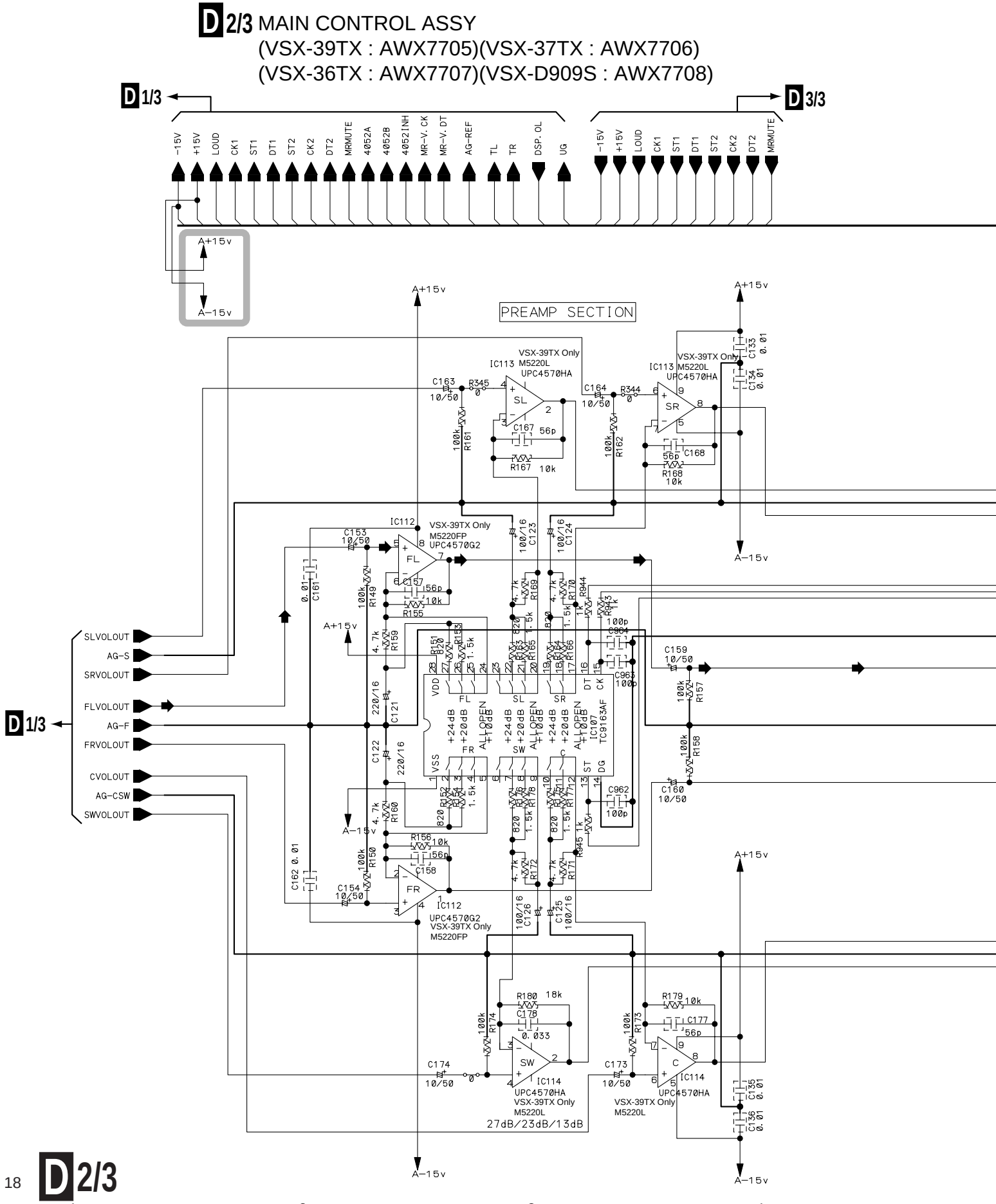

: The power supply is shown with the marked box.

: AUDIO SIGNAL ROUTE

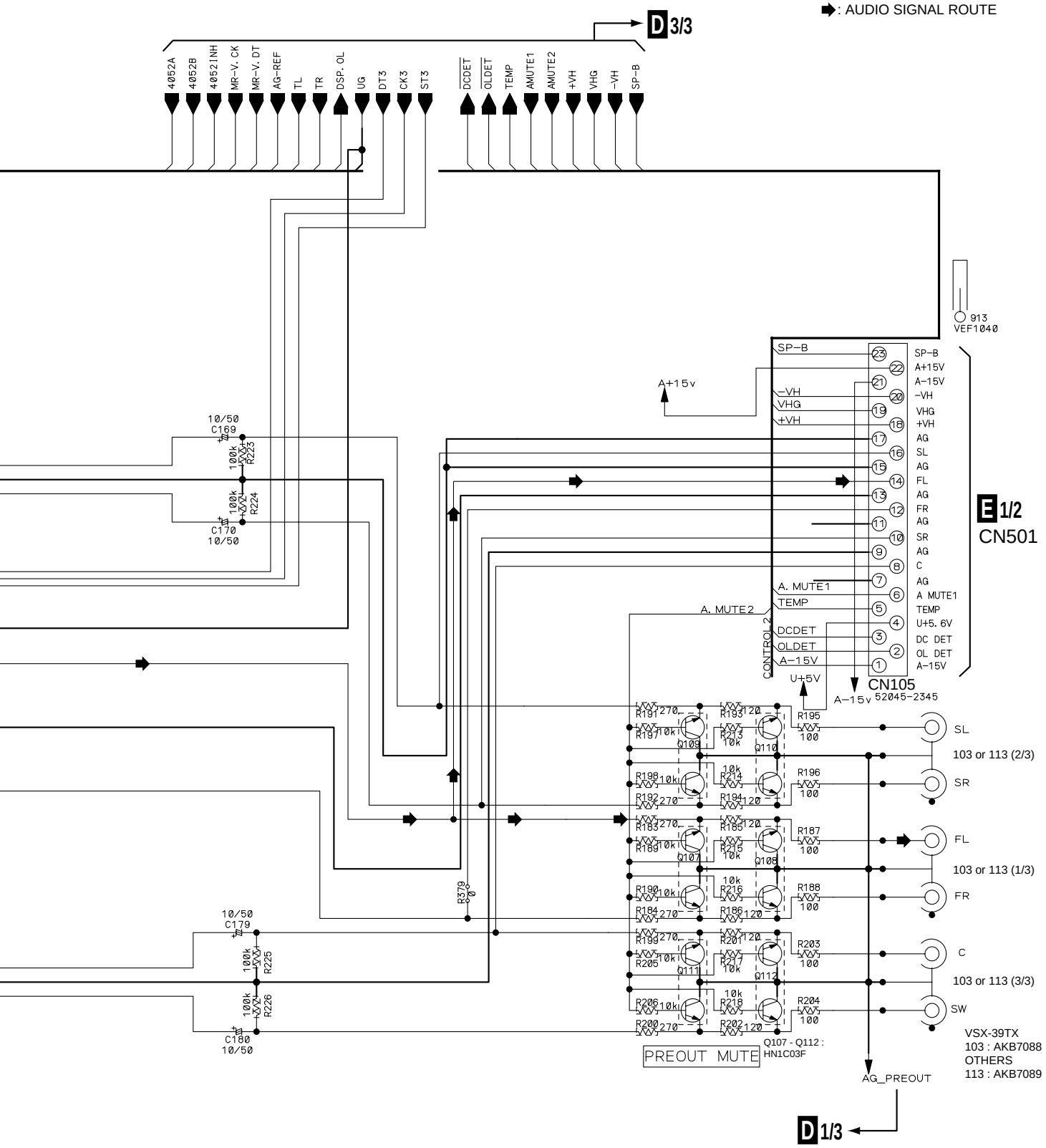

3.6 MAIN CONTROL ASSY (3/3)

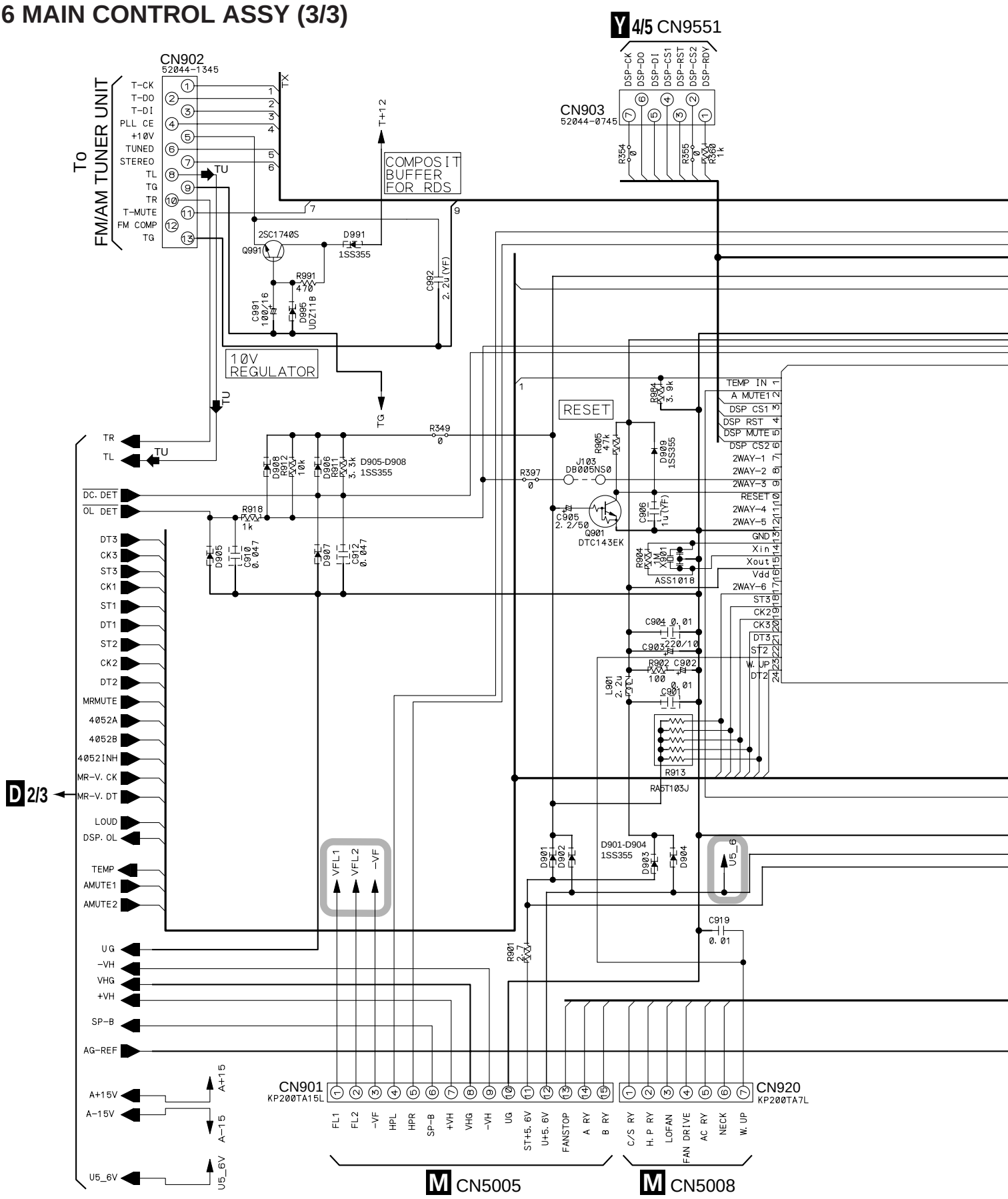

: The power supply is shown with the marked box.

TU : AUDIO SIGNAL ROUTE (TUNER)

D 3/3

MAIN CONTROL ASSY
(VSX-39TX : AWX7705)
(VSX-37TX : AWX7706)
(VSX-36TX : AWX7707)
(VSX-D909S : AWX7708)

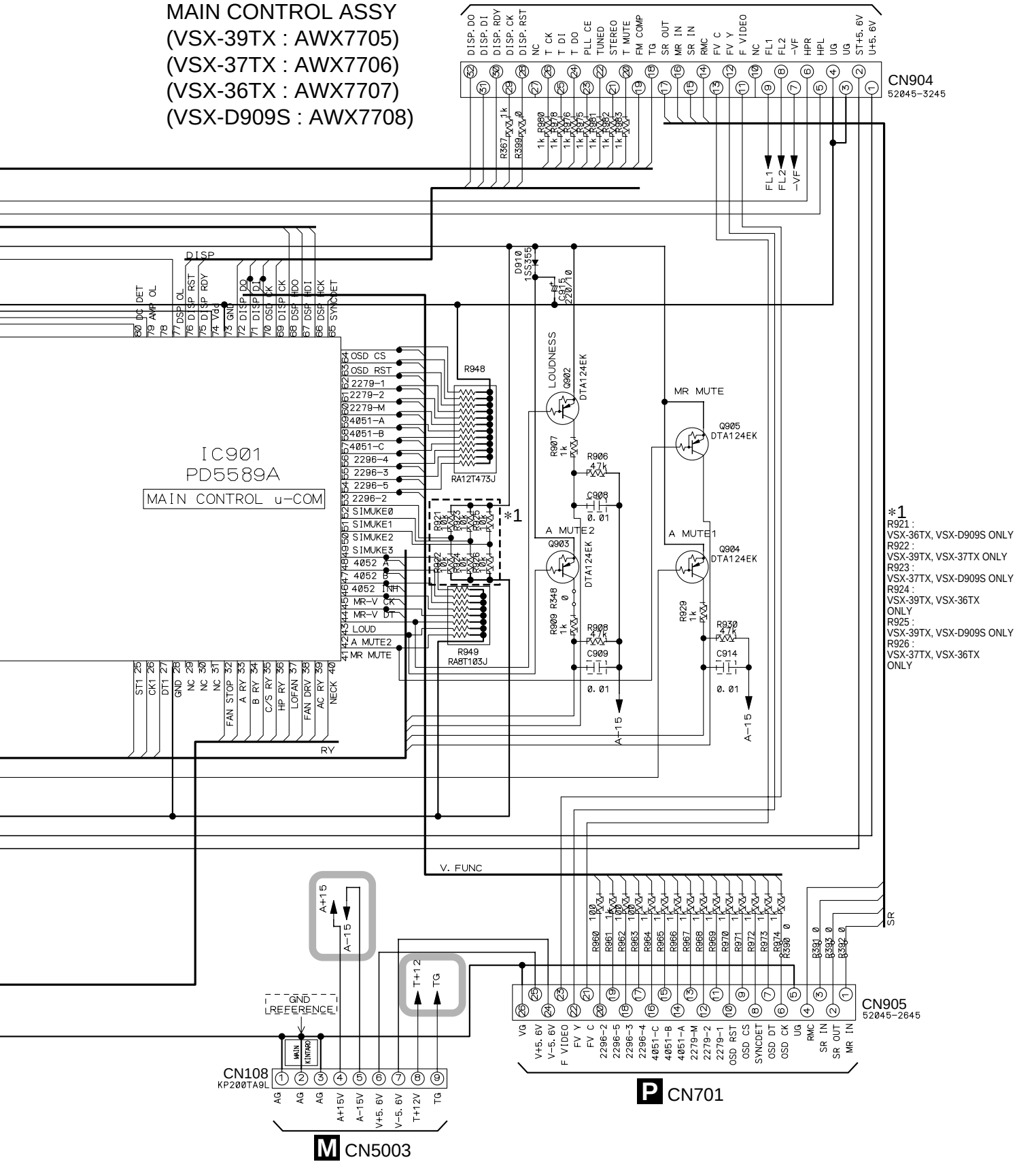

*1
R921 : VSX-36TX, VSX-D909S ONLY
R922 : VSX-39TX, VSX-37TX ONLY
R923 : VSX-37TX, VSX-D909S ONLY
R924 : VSX-39TX, VSX-36TX ONLY
R925 : VSX-39TX, VSX-D909S ONLY
R926 : VSX-37TX, VSX-36TX ONLY

3.7 V-AMP ASSY (1/2)

E 1/2 V-AMP ASSY
(VSX-39TX : AWX7729)(VSX-37TX, VSX-36TX : AWX7309)
(VSX-D909S : AWX7409)

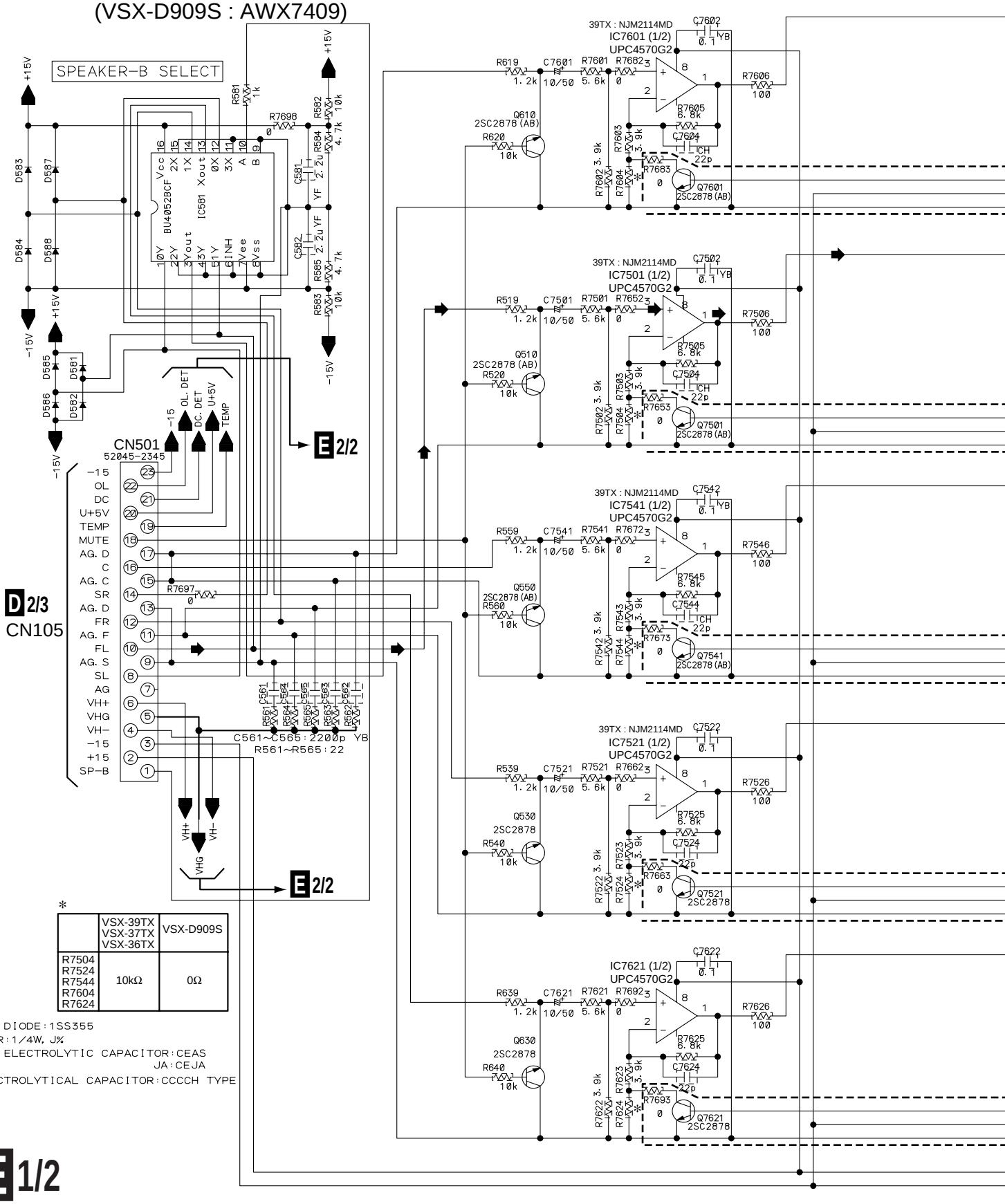

*

	VSX-39TX VSX-37TX VSX-36TX	VSX-D909S
R7504 R7524 R7544 R7604 R7624	10kΩ	0Ω

·NO MARK DIODE:1SS355
·RESISTOR:1/4W, J%
·NO MARK ELECTROLYTIC CAPACITOR:CEAS
JA:CEJA
·NON ELECTROLYTICAL CAPACITOR:CCCCH TYPE

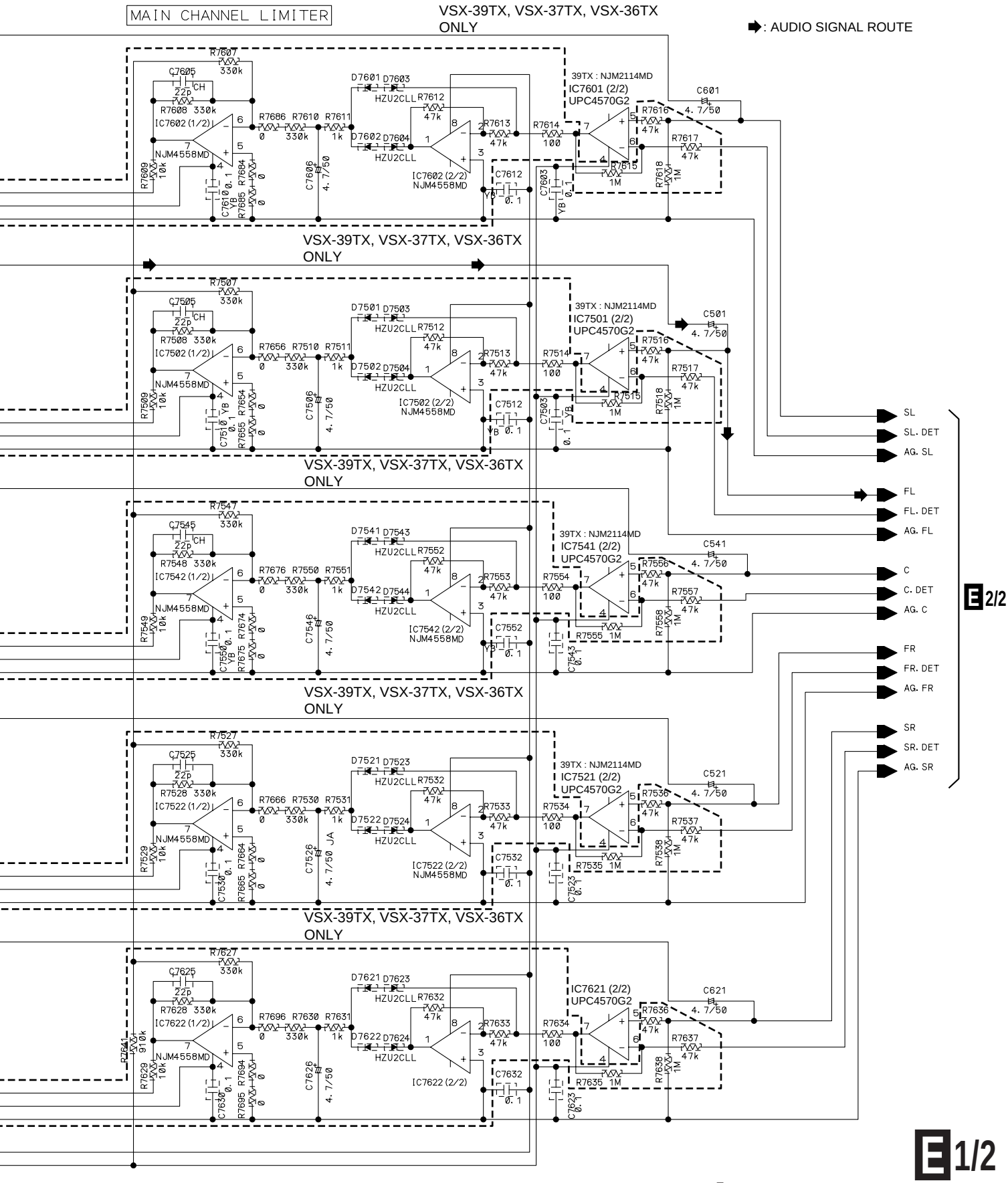
MAIN CHANNEL LIMITER
VSX-39TX, VSX-37TX, VSX-36TX ONLY
: AUDIO SIGNAL ROUTE
39TX : NJM2114MD
IC7601 (2/2)
UPC4570G2
IC7602 (1/2)
IC7602 (2/2)
NJM4558MD
IC7501 (2/2)
IC7502 (1/2)
IC7502 (2/2)
IC7541 (2/2)
IC7542 (1/2)
IC7542 (2/2)
IC7521 (2/2)
IC7522 (1/2)
IC7522 (2/2)
IC7621 (2/2)
IC7622 (1/2)
IC7622 (2/2)
SL
SL. DET
AG. SL
FL
FL. DET
AG. FL
C
C. DET
AG. C
FR
FR. DET
AG. FR
SR
SR. DET
AG. SR
E 2/2

E 1/2

3.8 V-AMP ASSY (2/2)

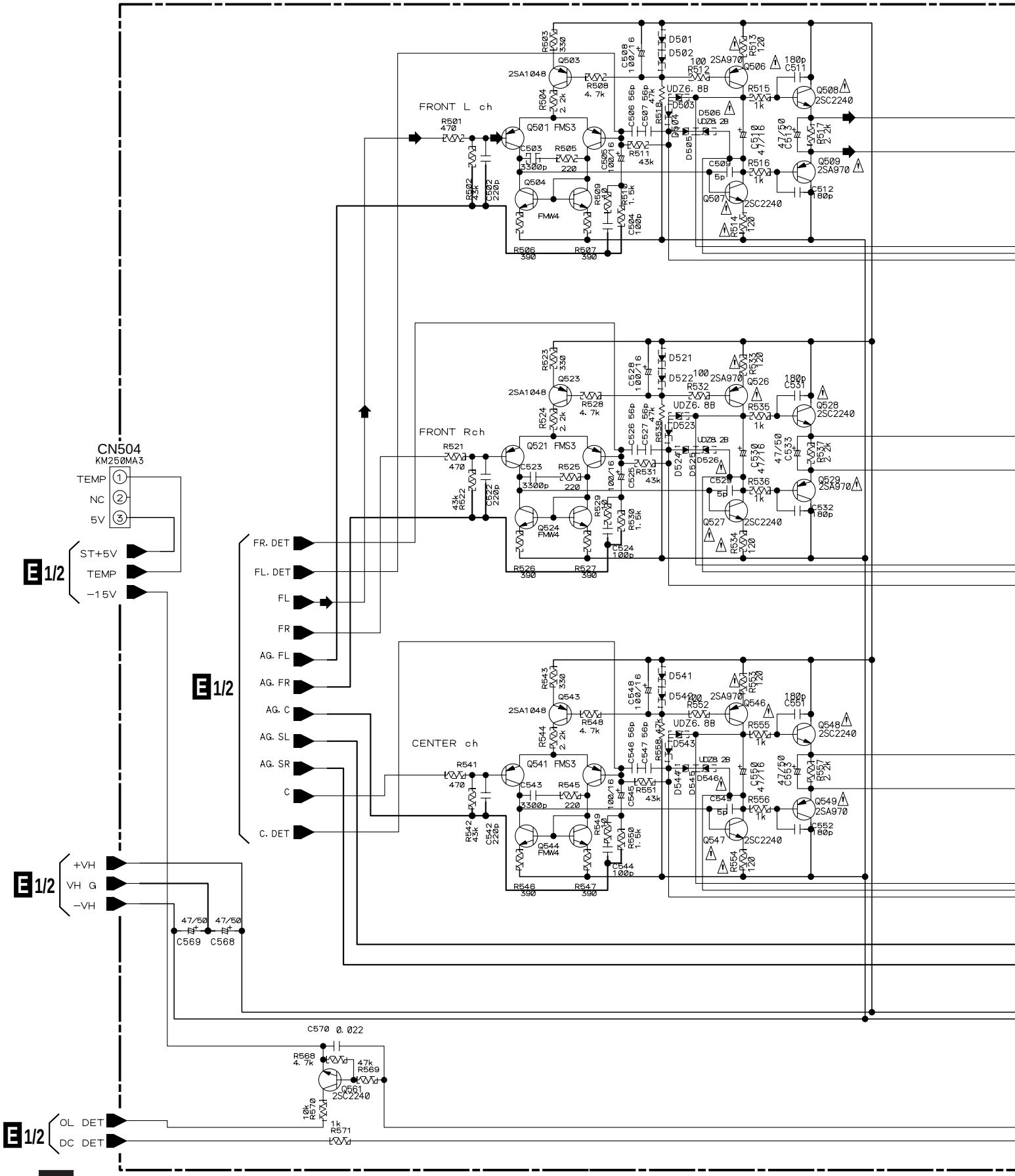

E 2/2 V-AMP ASSY

(VSX-39TX : AWX7729)(VSX-37TX, VSX-36TX : AWX7309)
(VSX-D909S : AWX7409)

POWER AMP VOLTAGE AMPLIFYING STAGE

➡: AUDIO SIGNAL ROUTE

·NO MARK DIODE:1SS355
·RESISTOR:1/4W, J%
·NO MARK ELECTROLYTIC CAPACITOR:CEAS
JA:CEJA
·NON ELECTROLYTICAL CAPACITOR:CCCCH TYPE

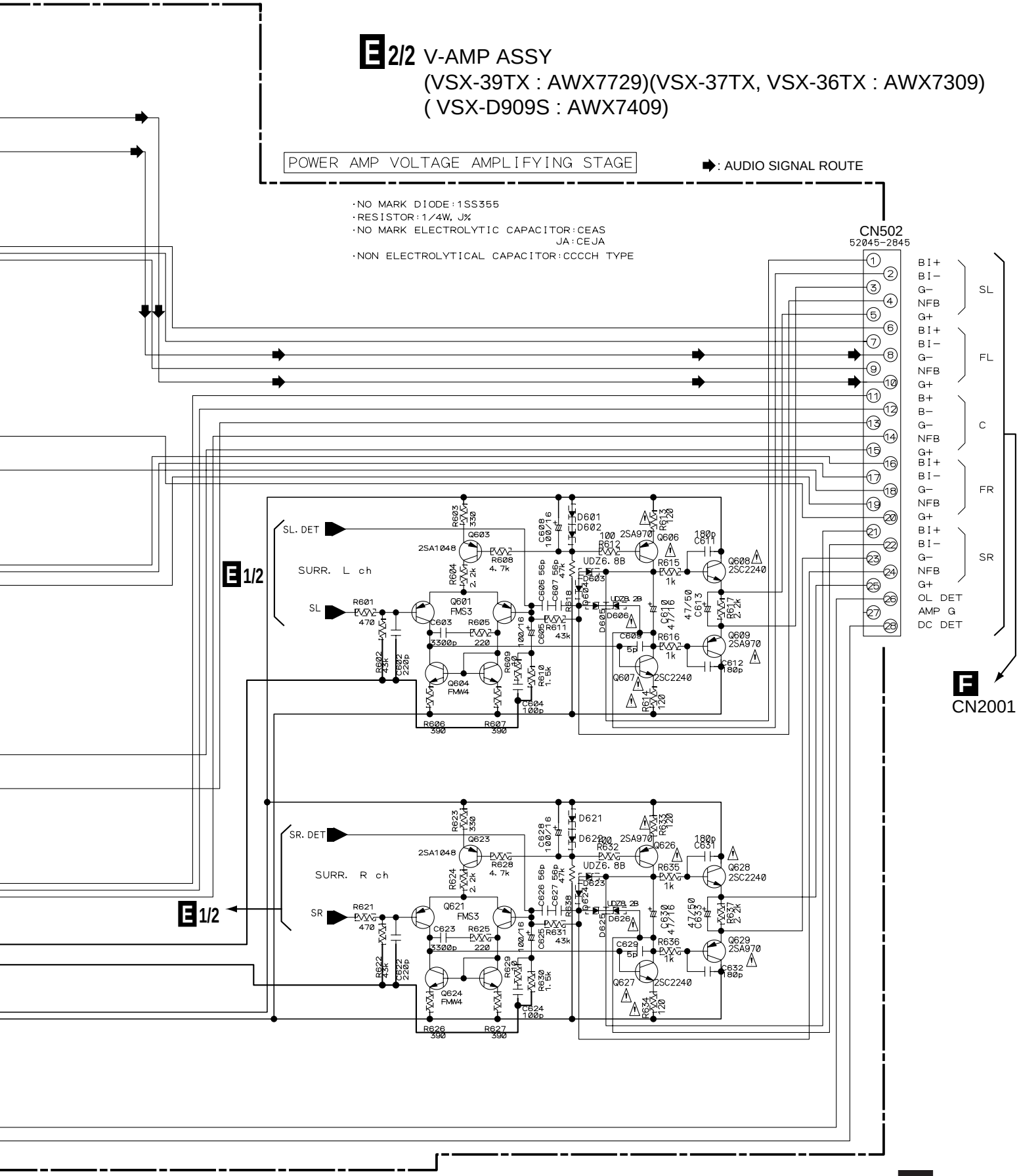

3.9 C-AMP-N, C-AMP-P, OUTPUT-SL, OUTPUT-FL, OUTPUT-C, OUTPUT-FR, OUTPUT-SR and VL-TERMINAL ASSYS

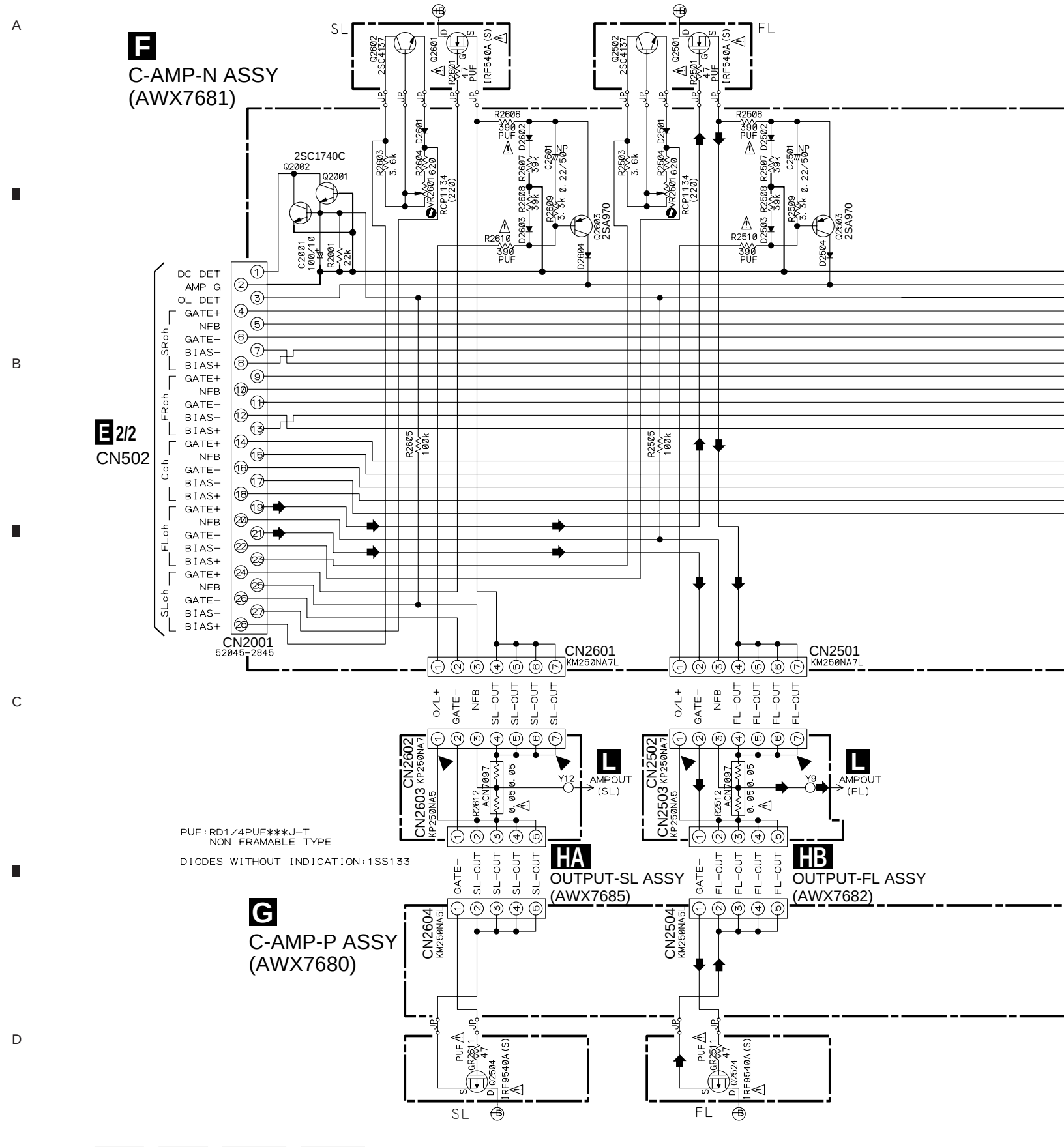

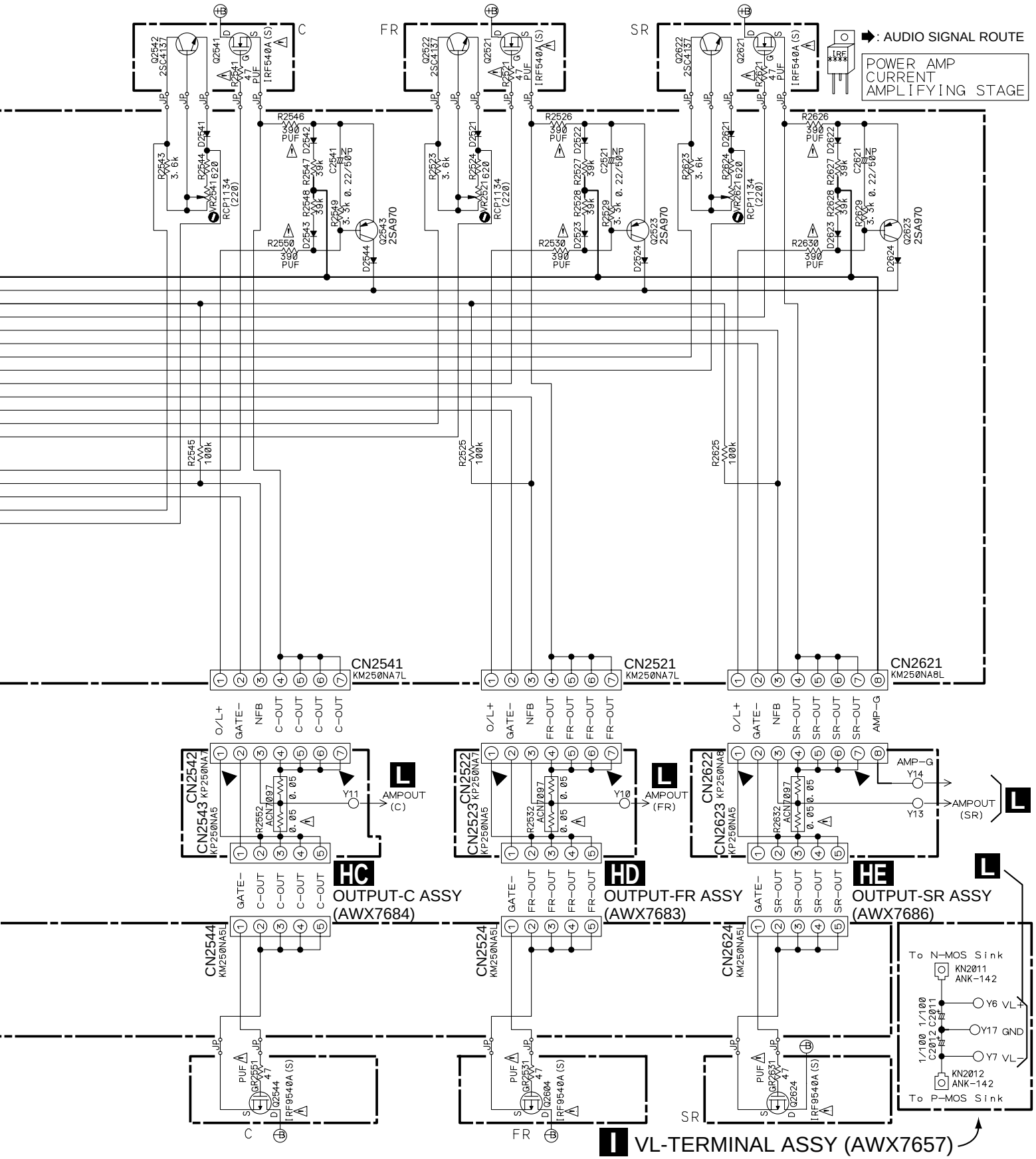
: AUDIO SIGNAL ROUTE
POWER AMP
CURRENT
AMPLIFYING STAGE
C
FR
SR
CN2541
KM250NA7L
CN2521
KM250NA7L
CN2621
KM250NA8L
CN2542
CN2543
CN2522
CN2523
CN2622
CN2623
AMPOUT (C)
AMPOUT (FR)
AMPOUT (SR)
HC
OUTPUT-C ASSY
(AWX7684)
HD
OUTPUT-FR ASSY
(AWX7683)
HE
OUTPUT-SR ASSY
(AWX7686)
CN2544
CN2524
CN2624
To N-MOS Sink
KN2011
ANK-142
Y6 VL+
Y17 GND
Y7 VL-
KN2012
ANK-142
To P-MOS Sink
I VL-TERMINAL ASSY (AWX7657)

3.10 TRANS 2-1, DIODE and SP/PS ASSYS

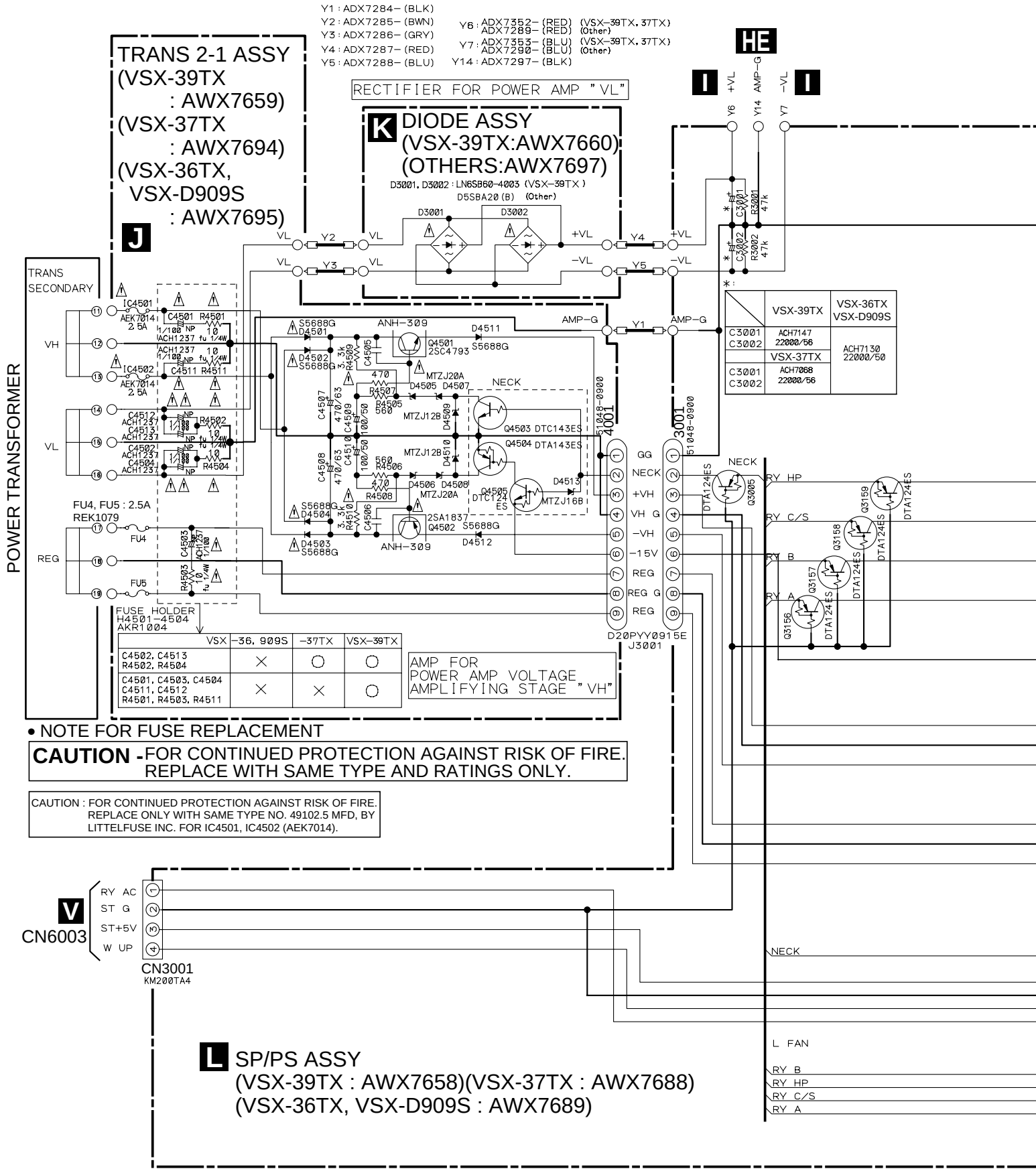

VSX	–36, 909S	–37TX	VSX–39TX
C4502, C4513 R4502, R4504	×	○	○
C4501, C4503, C4504 C4511, C4512 R4501, R4503, R4511	×	×	○

	VSX-39TX	VSX-36TX VSX-D909S
C3001 C3002	ACH7147 22000/56	ACH7130 22000/50
	VSX-37TX	
C3001 C3002	ACH7068 22000/56	

• NOTE FOR FUSE REPLACEMENT

CAUTION - FOR CONTINUED PROTECTION AGAINST RISK OF FIRE. REPLACE WITH SAME TYPE AND RATINGS ONLY.

CAUTION : FOR CONTINUED PROTECTION AGAINST RISK OF FIRE. REPLACE ONLY WITH SAME TYPE NO. 49102.5 MFD, BY LITTELFUSE INC. FOR IC4501, IC4502 (AEK7014).

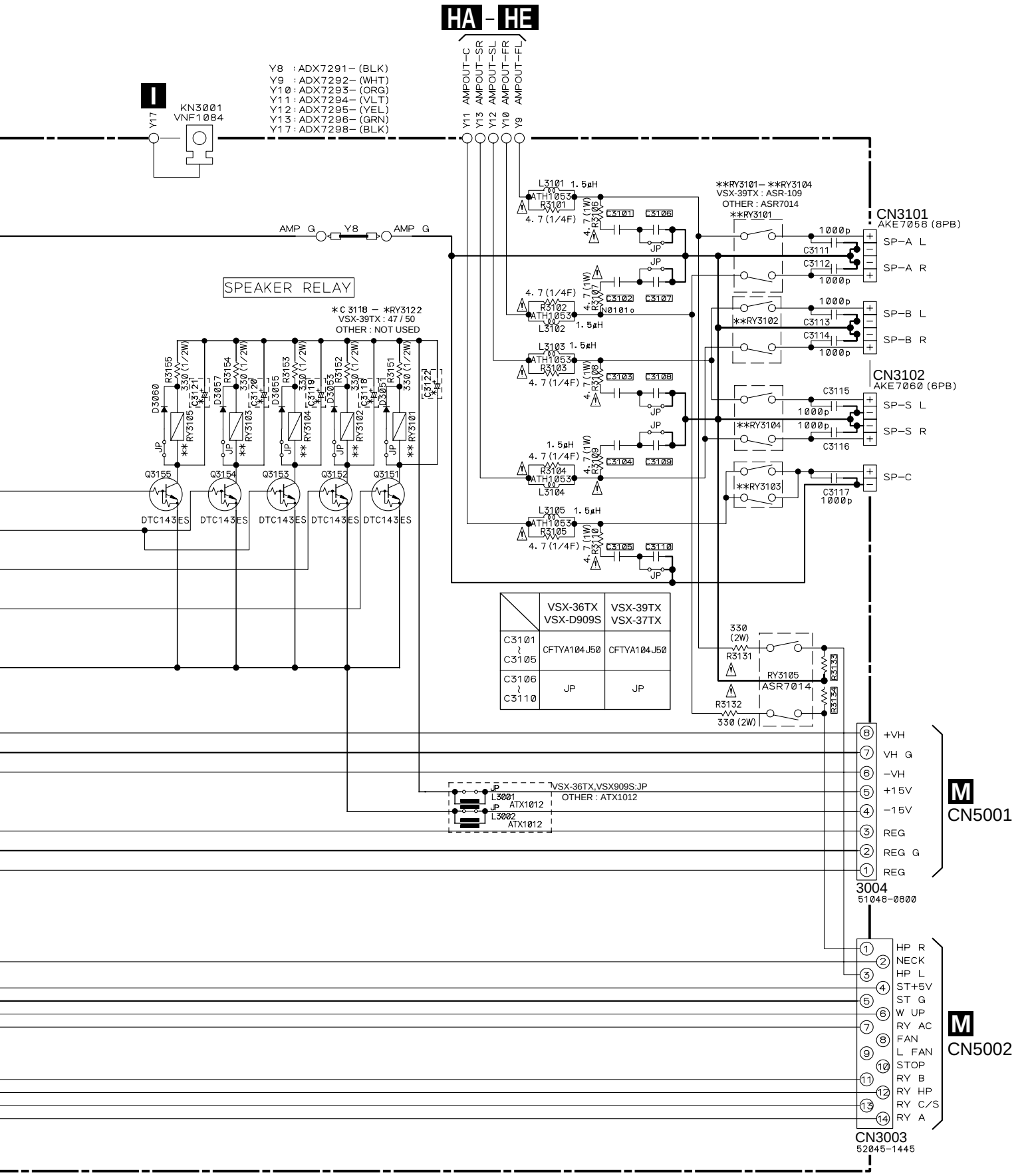

	VSX-36TX VSX-D909S	VSX-39TX VSX-37TX
C3101 ~ C3105	CFTYA104J50	CFTYA104J50
C3106 ~ C3110	JP	JP

3.11 REGULATOR, TRANS 1 and TRANS 2-2 ASSYS

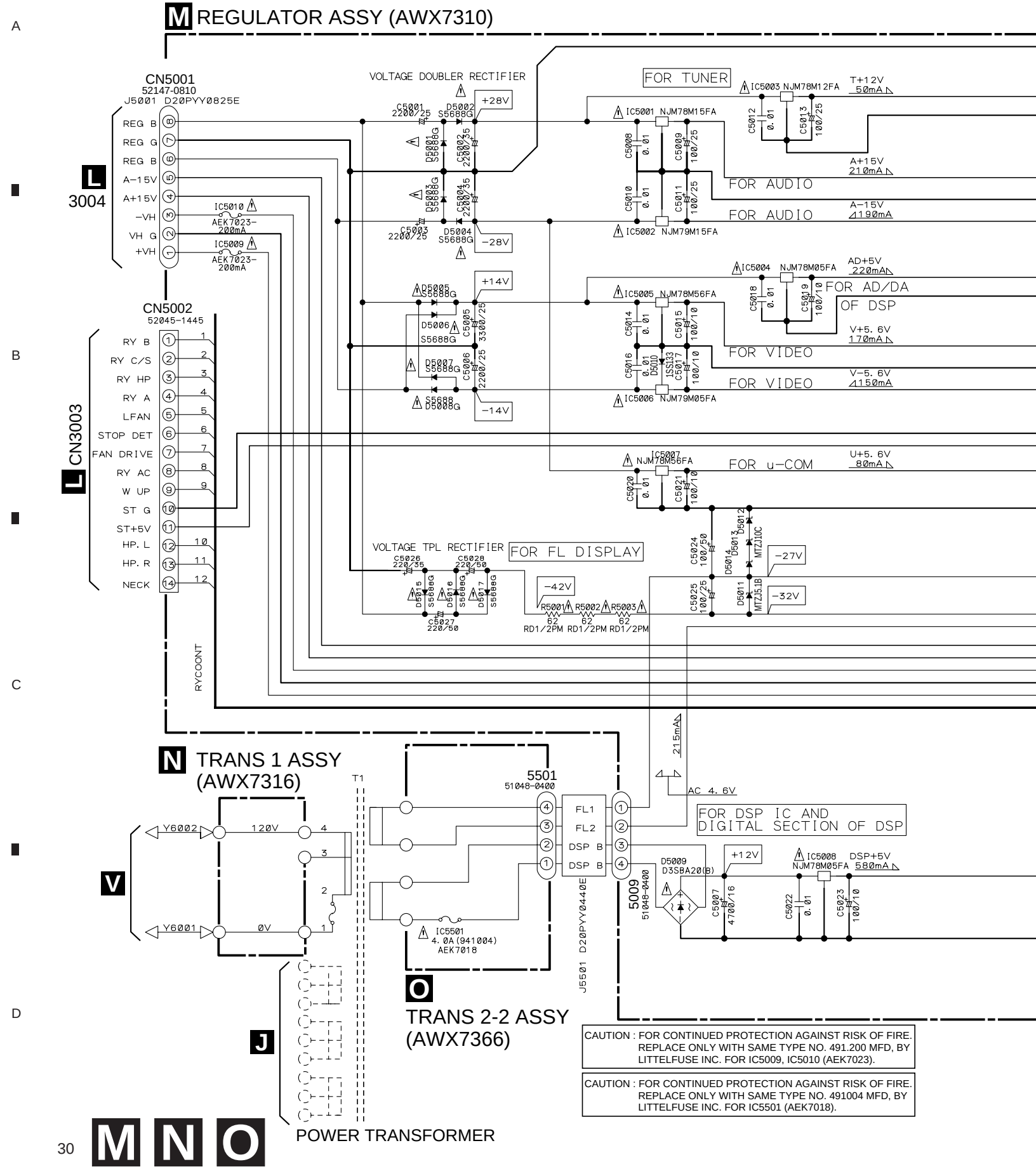

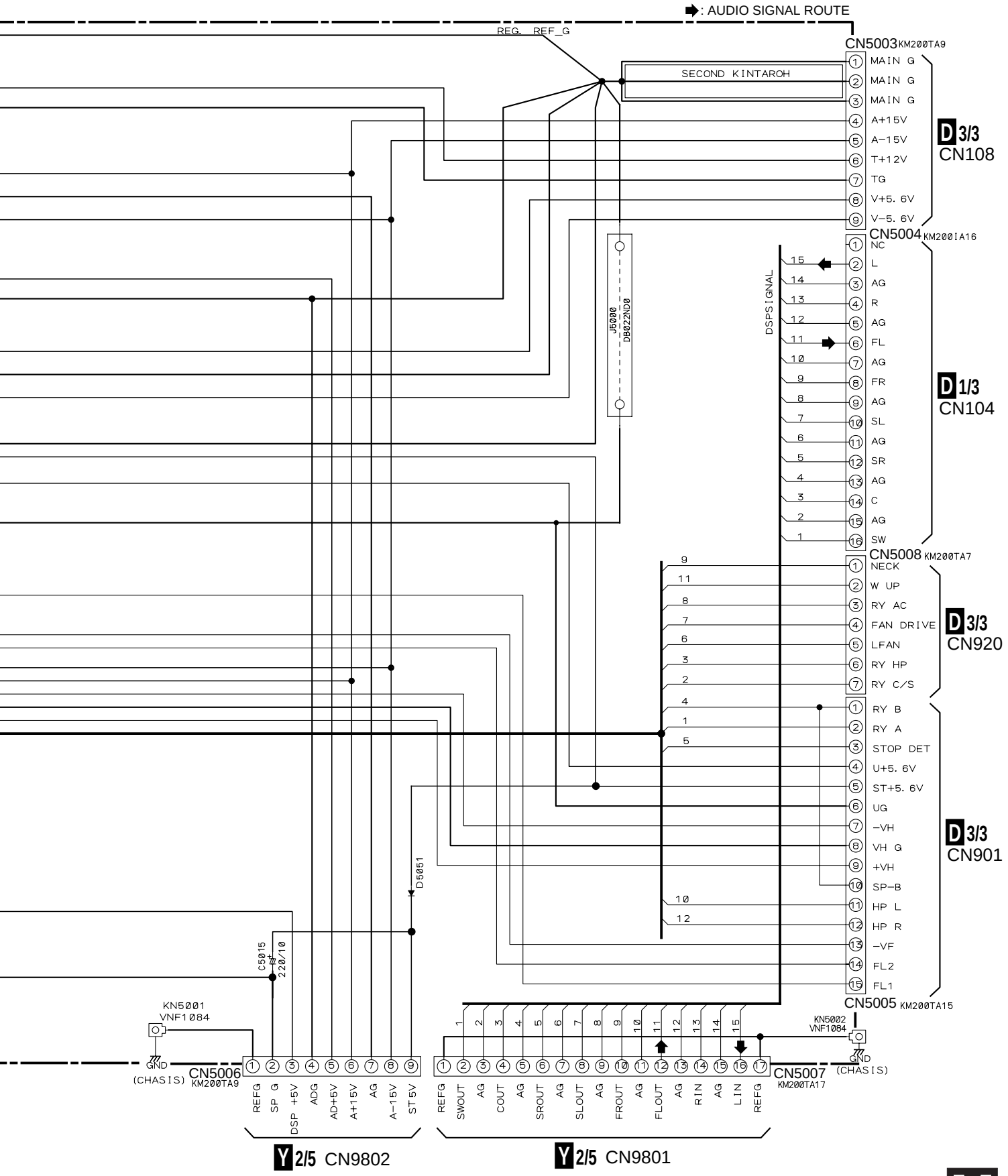
: AUDIO SIGNAL ROUTE
REG. REF_G
SECOND KINTAROH
CN5003 KM200TA9
MAIN G
MAIN G
MAIN G
A+15V
A−15V
T+12V
TG
V+5. 6V
V−5. 6V
D 3/3
CN108
CN5004 KM200IA16
NC
L
AG
R
AG
FL
AG
FR
AG
SL
AG
SR
AG
C
AG
SW
D 1/3
CN104
J5000
DB022ND0
DSPSIGNAL
CN5008 KM200TA7
NECK
W UP
RY AC
FAN DRIVE
LFAN
RY HP
RY C/S
D 3/3
CN920
RY B
RY A
STOP DET
U+5. 6V
ST+5. 6V
UG
−VH
VH G
+VH
SP−B
HP L
HP R
−VF
FL2
FL1
D 3/3
CN901
CN5005 KM200TA15
D5051
C5015
220/10
KN5001
VNF1084
KN5002
VNF1084
GND
(CHASIS)
CN5006 KM200TA9
REFG
SP G
DSP +5V
ADG
AD+5V
A+15V
AG
A−15V
ST 5V
CN5007 KM200TA17
REFG
SWOUT
AG
COUT
AG
SROUT
AG
SLOUT
AG
FROUT
AG
FLOUT
AG
RIN
AG
LIN
REFG
Y 2/5 CN9802
Y 2/5 CN9801

3.12 VIDEO and S-VIDEO ASSYS

P VIDEO ASSY
(VSX-39TX : AWX7307)
(VSX-37TX, VSX-36TX, VSX-D909S : AWX7394)

TRUTH TABLE OF IC751 (BU4053BCF)

CONDITION	A	B	C	INH	X OUT	Y OUT
S NOT USED	0	0	/	0	1X	1Y
S USED	1	1	/	0	0X	0Y

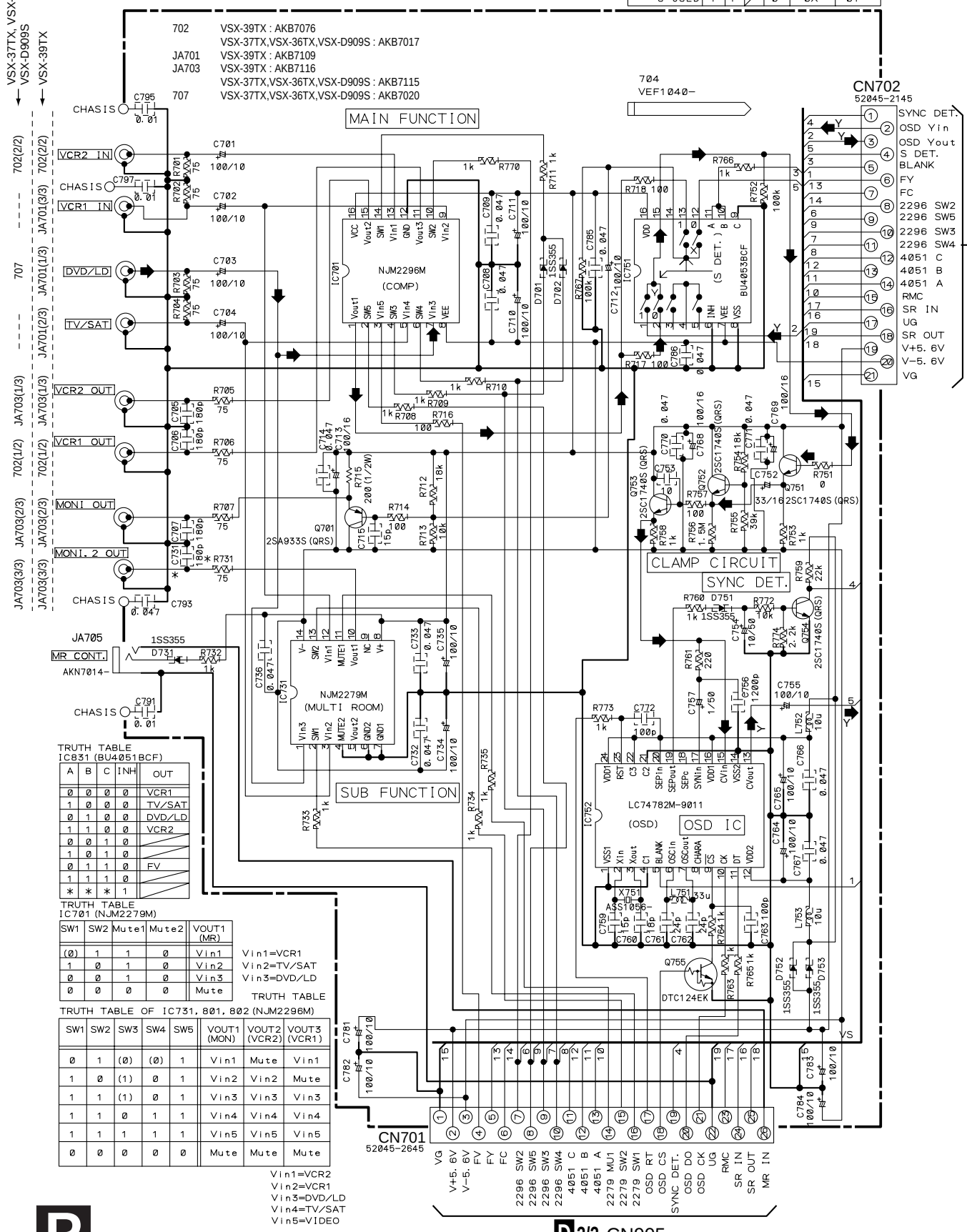

TRUTH TABLE IC831 (BU4051BCF)

A	B	C	INH	OUT
0	0	0	0	VCR1
1	0	0	0	TV/SAT
0	1	0	0	DVD/LD
1	1	0	0	VCR2
0	0	1	0	
1	0	1	0	
0	1	1	0	FV
1	1	1	0	
*	*	*	1	

TRUTH TABLE IC701 (NJM2279M)

SW1	SW2	Mute1	Mute2	VOUT1 (MR)
(0)	1	1	0	Vin1
1	0	1	0	Vin2
0	0	1	0	Vin3
0	0	0	0	Mute

Vin1=VCR1
Vin2=TV/SAT
Vin3=DVD/LD

TRUTH TABLE

TRUTH TABLE OF IC731, 801, 802 (NJM2296M)

SW1	SW2	SW3	SW4	SW5	VOUT1 (MON)	VOUT2 (VCR2)	VOUT3 (VCR1)
0	1	(0)	(0)	1	Vin1	Mute	Vin1
1	0	(1)	0	1	Vin2	Vin2	Mute
1	1	(1)	0	1	Vin3	Vin3	Vin3
1	1	0	1	1	Vin4	Vin4	Vin4
1	1	1	1	1	Vin5	Vin5	Vin5
0	0	0	0	0	Mute	Mute	Mute

Vin1=VCR2
Vin2=VCR1
Vin3=DVD/LD
Vin4=TV/SAT
Vin5=VIDEO

Q S-VIDEO ASSY
(VSX-39TX : AWX7678)
(OTHERS : AWX7679)

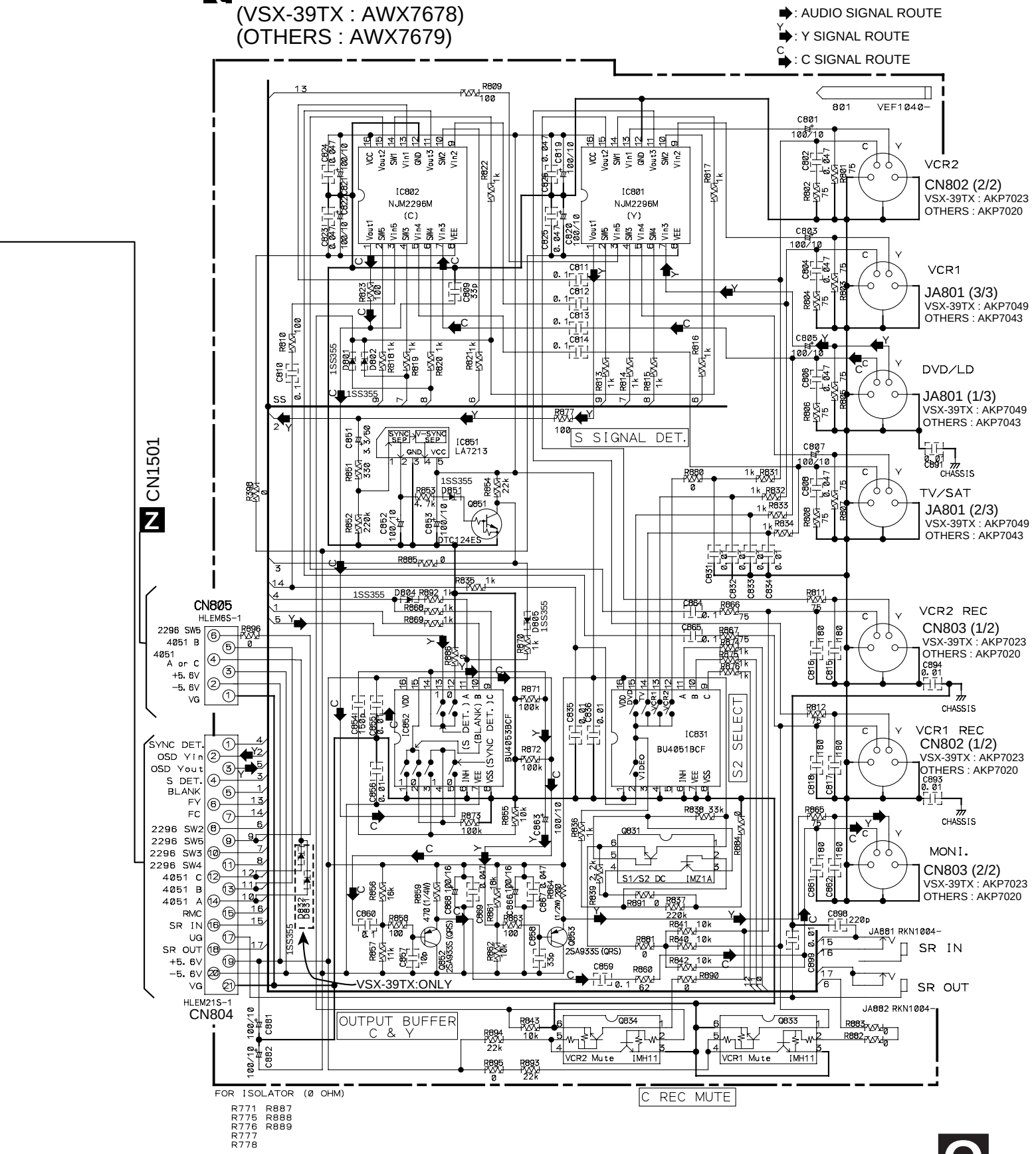

3.13 H. PHONE/F. VIDEO, DISPLAY, ROTARY ENCODER and VOLUME ASSYS

R H. PHONE/F. VIDEO ASSY
(VSX-39TX,VSX-37TX : AWX7342)
(OTHERS : AWX7528)

S DISPLAY ASSY
(VSX-39TX, VSX-37TX : AWX7698)
(VSX-36TX : AWX7699)
(VSX-D909S : AWX7700)

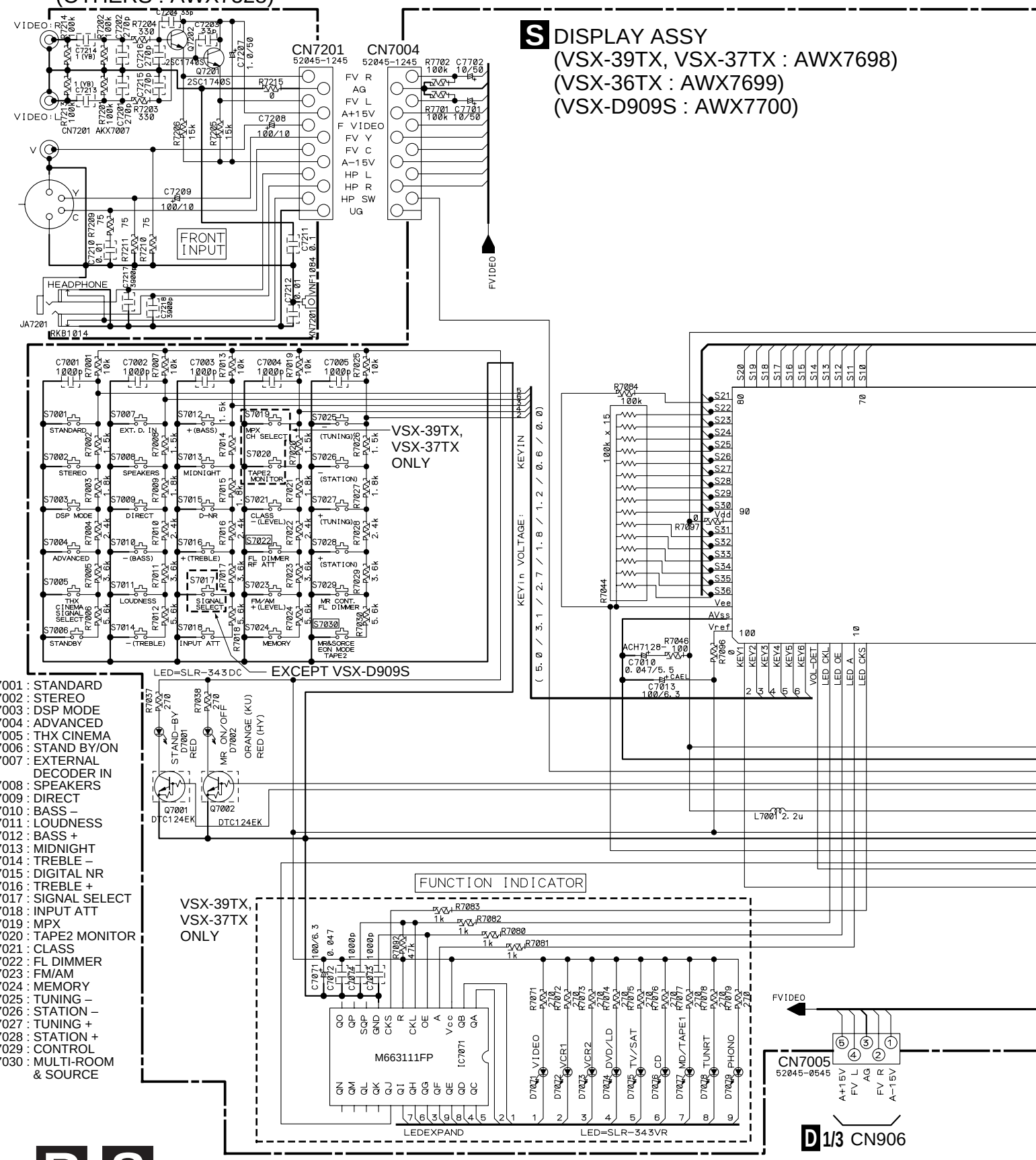

S7001 : STANDARD
S7002 : STEREO
S7003 : DSP MODE
S7004 : ADVANCED
S7005 : THX CINEMA
S7006 : STAND BY/ON
S7007 : EXTERNAL DECODER IN
S7008 : SPEAKERS
S7009 : DIRECT
S7010 : BASS –
S7011 : LOUDNESS
S7012 : BASS +
S7013 : MIDNIGHT
S7014 : TREBLE –
S7015 : DIGITAL NR
S7016 : TREBLE +
S7017 : SIGNAL SELECT
S7018 : INPUT ATT
S7019 : MPX
S7020 : TAPE2 MONITOR
S7021 : CLASS
S7022 : FL DIMMER
S7023 : FM/AM
S7024 : MEMORY
S7025 : TUNING –
S7026 : STATION –
S7027 : TUNING +
S7028 : STATION +
S7029 : CONTROL
S7030 : MULTI-ROOM & SOURCE

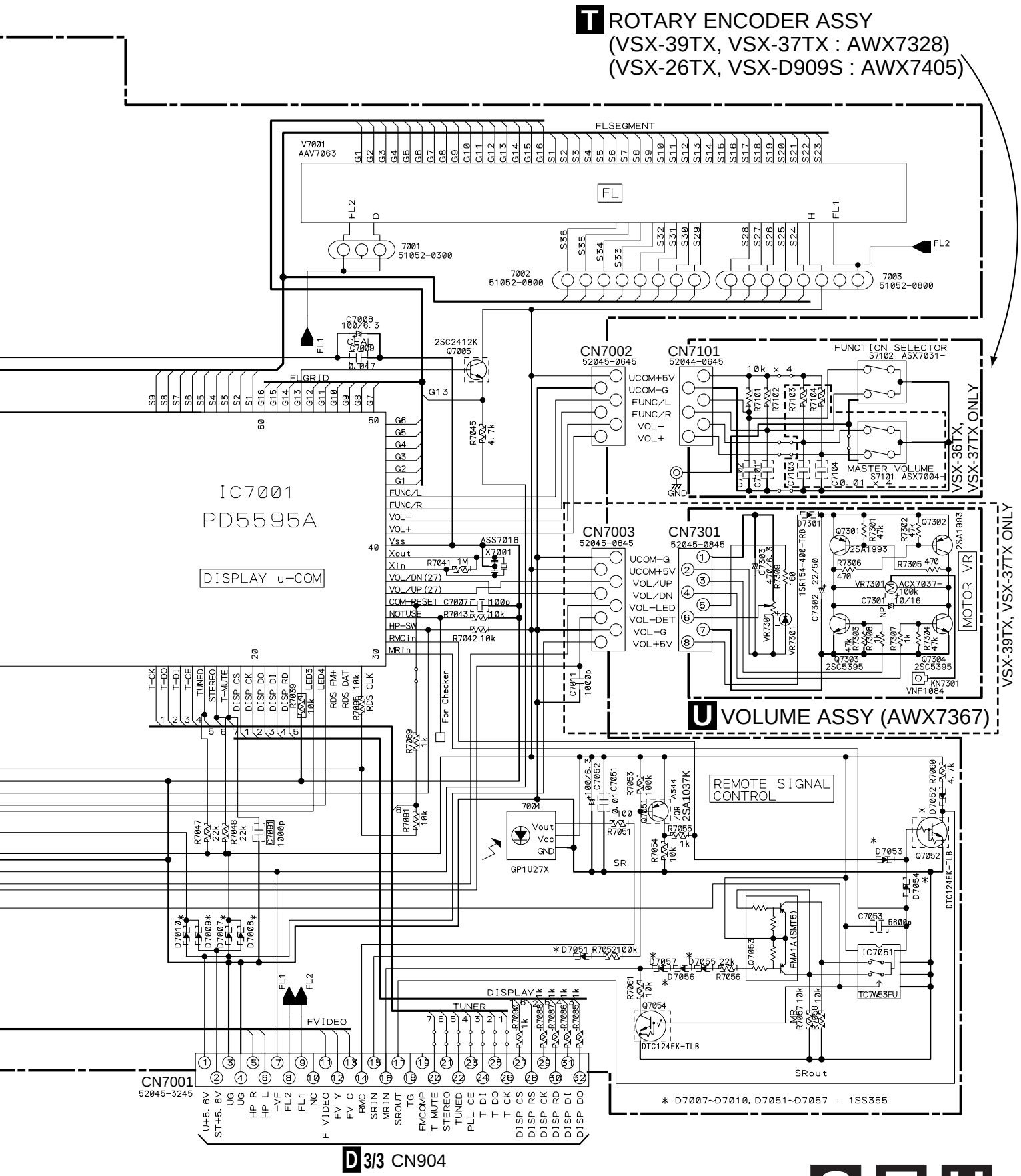
T ROTARY ENCODER ASSY
(VSX-39TX, VSX-37TX : AWX7328)
(VSX-26TX, VSX-D909S : AWX7405)
FLSEGMENT
V7001
AAV7063
FL
7001
51052-0300
7002
51052-0800
7003
51052-0800
CN7002
52045-0645
CN7101
52044-0645
FUNCTION SELECTOR
S7102 ASX7031-
MASTER VOLUME
S7101 ASX7004-
VSX-36TX, VSX-37TX ONLY
CN7003
52045-0845
CN7301
52045-0845
MOTOR VR
VSX-39TX, VSX-37TX ONLY
U VOLUME ASSY (AWX7367)
IC7001
PD5595A
DISPLAY u-COM
REMOTE SIGNAL CONTROL
GP1U27X
CN7001
52045-3245
D 3/3 CN904
* D7007~D7010, D7051~D7057 : 1SS355

3.14 PRIMARY ASSY

V PRIMARY ASSY (AWX7311)

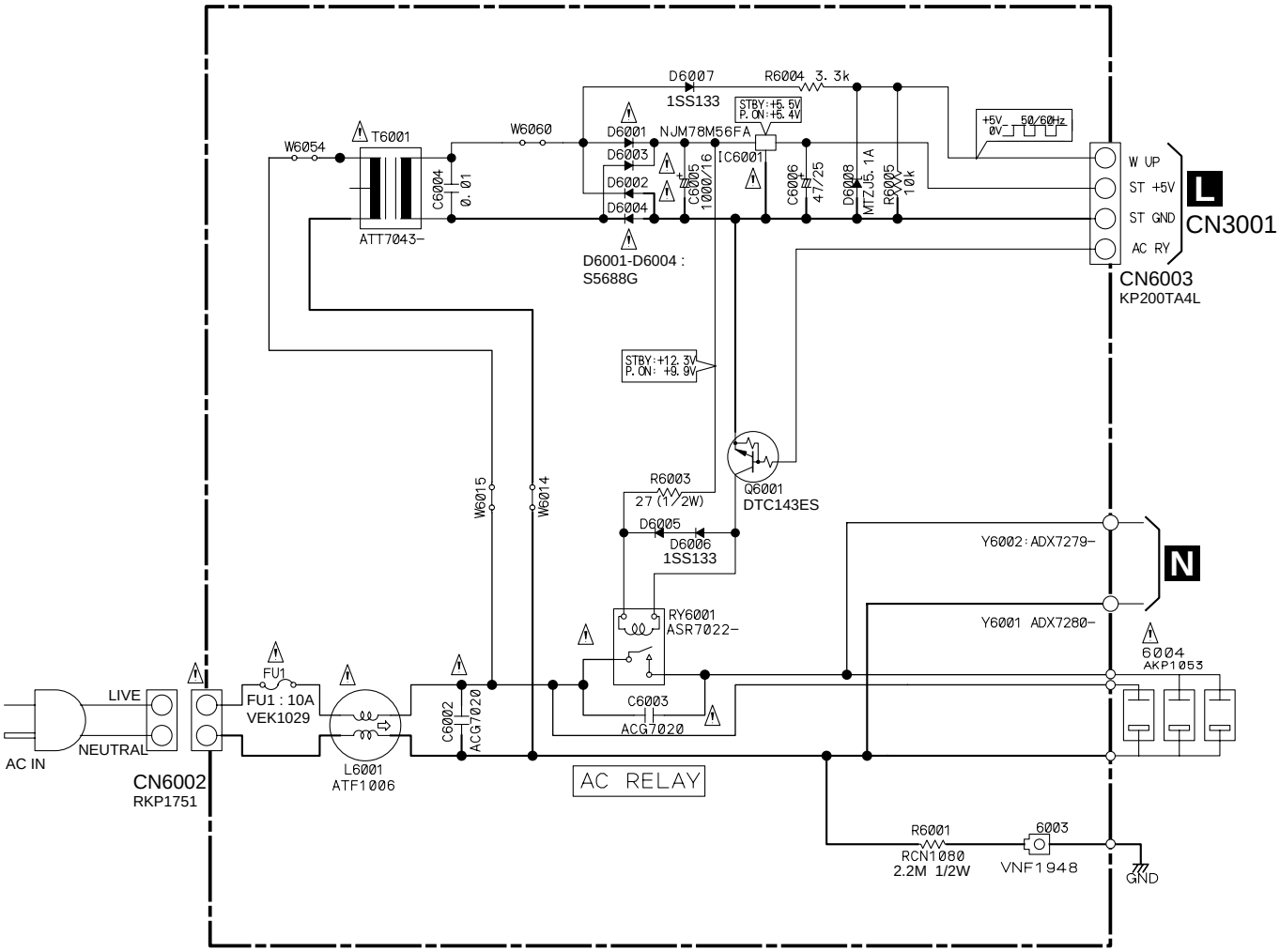

• NOTE FOR FUSE REPLACEMENT

CAUTION - FOR CONTINUED PROTECTION AGAINST RISK OF FIRE. REPLACE WITH SAME TYPE AND RATINGS ONLY.

3.15 RF/DIGITAL INPUT and OPT OUT ASSYS

W RF / DIGITAL INPUT ASSY
(VSX-39TX : AWX7637) (VSX-37TX : AWX7638)
(VSX-36TX, VSX-D909S : AWX7642)

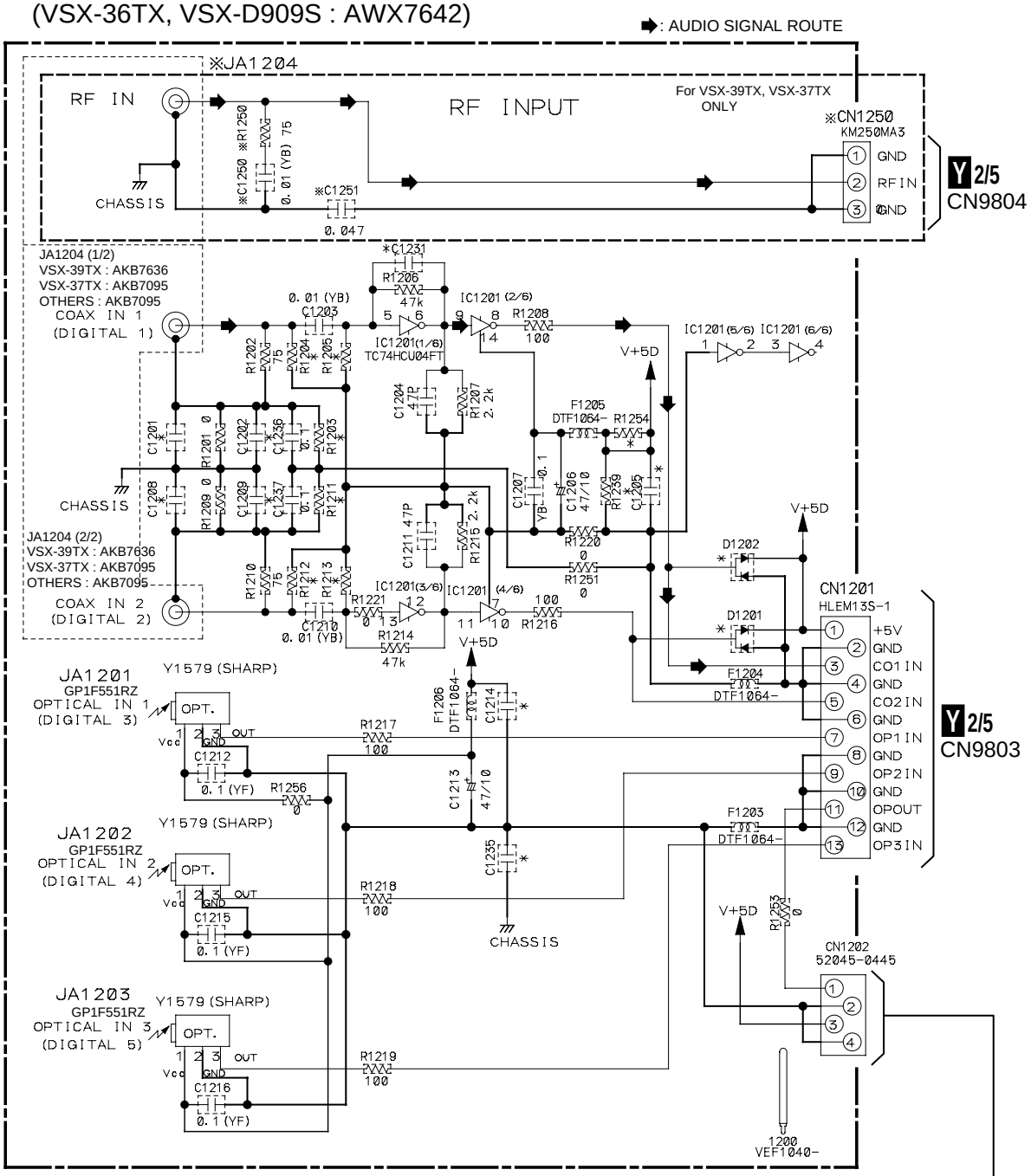

X OPT OUT ASSY (AWX7643)

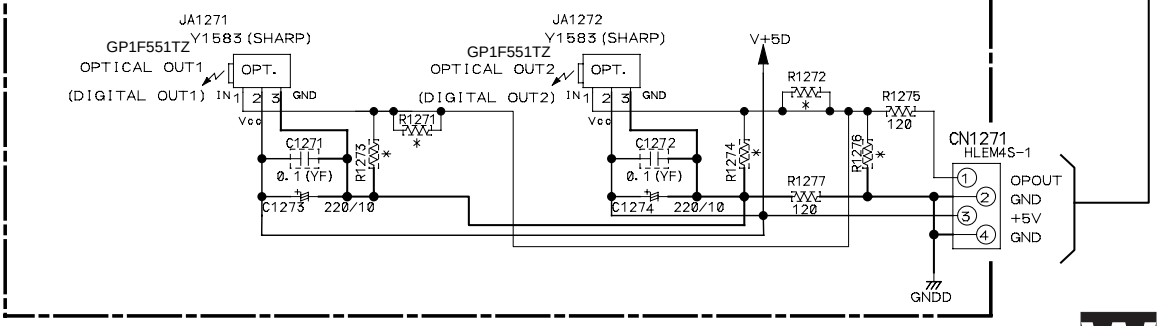

3.16 DSP ASSY (1/5)

Y 1/5 DSP ASSY
(VSX-39TX, VSX-37TX : AWX7632)
(VSX-36TX, VSX-D909S : AWX7633)

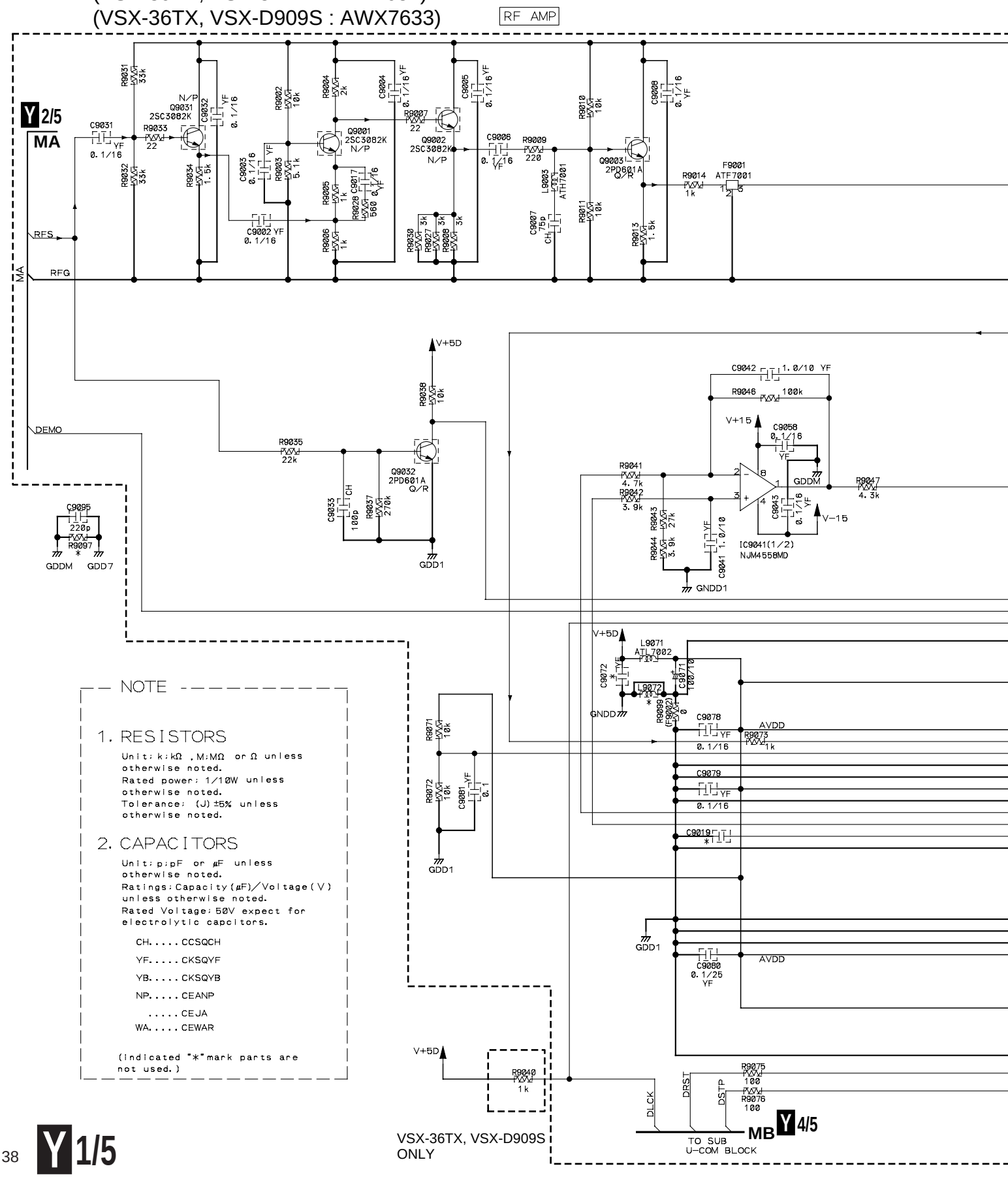

NOTE

1. RESISTORS
Unit: k:kΩ ,M:MΩ or Ω unless otherwise noted.
Rated power: 1/10W unless otherwise noted.
Tolerance: (J)±5% unless otherwise noted.

2. CAPACITORS
Unit: p:pF or μF unless otherwise noted.
Ratings: Capacity(μF)/Voltage(V) unless otherwise noted.
Rated Voltage: 50V expect for electrolytic capcitors.

CH..... CCSQCH
YF..... CKSQYF
YB..... CKSQYB
NP..... CEANP
..... CEJA
WA..... CEWAR

(indicated "*" mark parts are not used.)

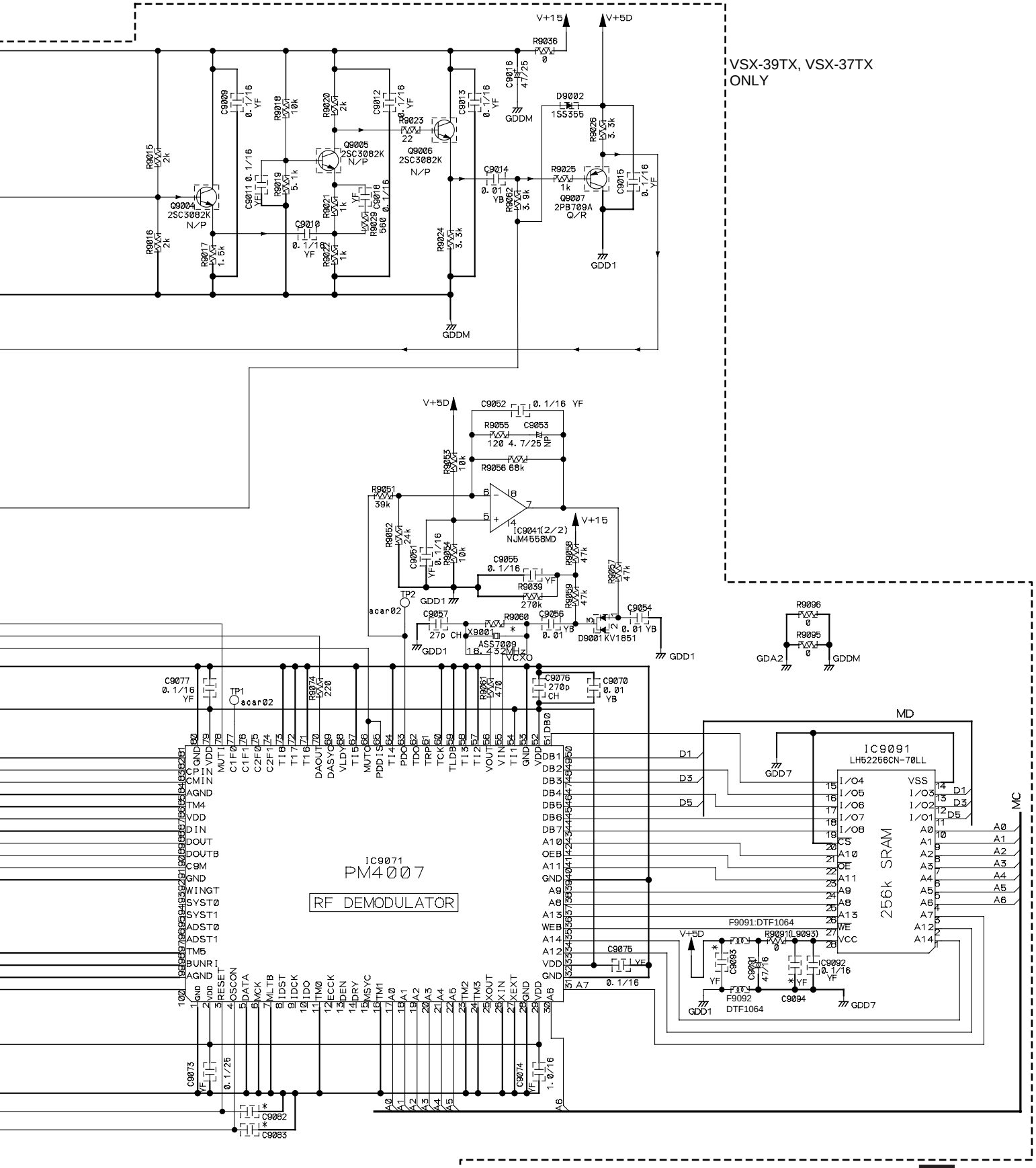
VSX-39TX, VSX-37TX
ONLY
IC9071
PM4007
RF DEMODULATOR
IC9091
LH52256CN-70LL
256k SRAM
IC9041(2/2)
NJM4558MD
MD
MC
V+15
V+5D
GDD1
GDDM
GDD7
GDA2
acar02
TP1
TP2
X9001
ASS7099
18.432MHz
VCXO
F9091:DTF1064
F9092
DTF1064

3.17 DSP ASSY (2/5)

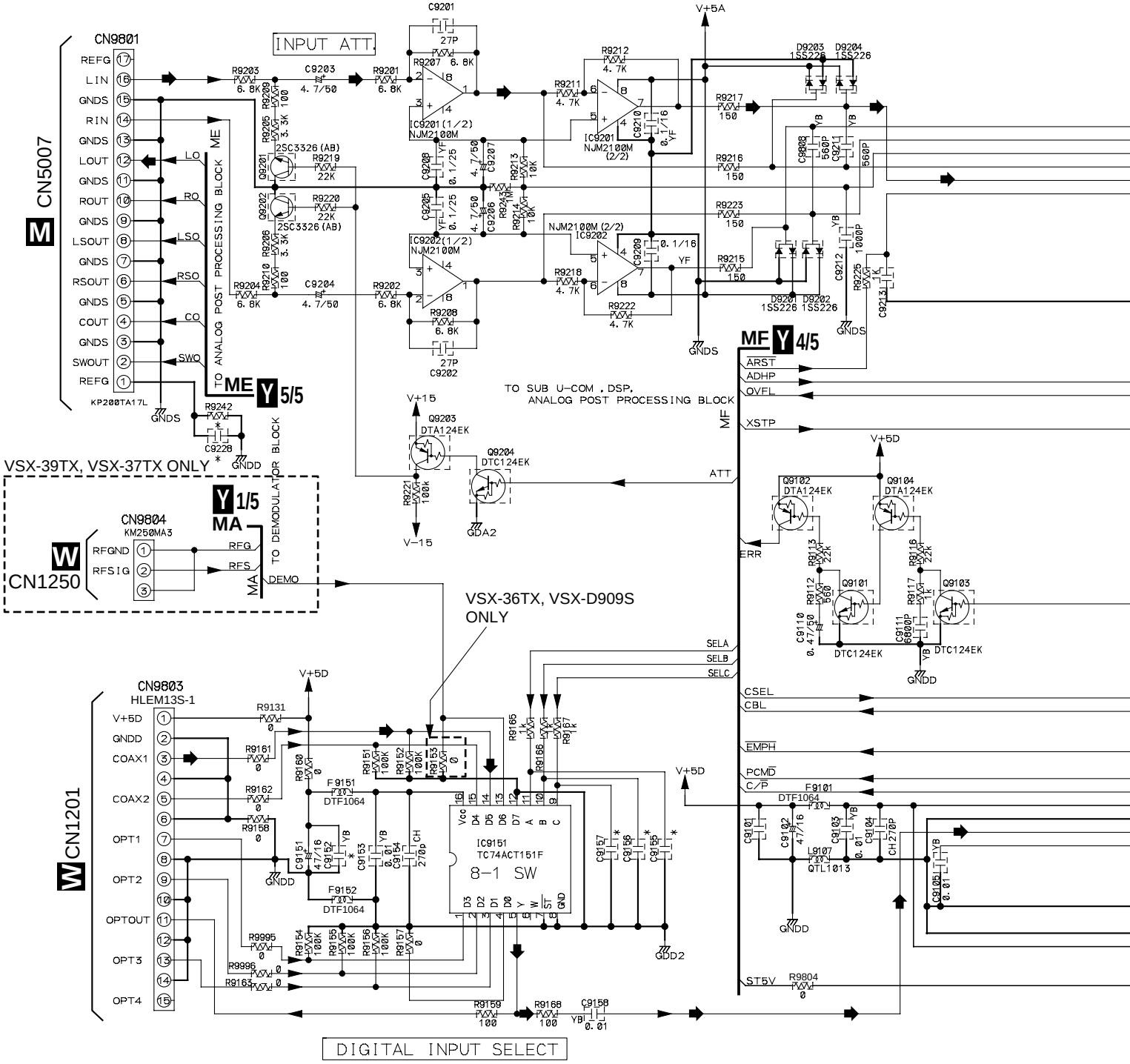

Y 2/5 DSP ASSY
(VSX-39TX, VSX-37TX : AWX7632)
(VSX-36TX, VSX-D909S : AWX7633)

: The power supply is shown with the marked box.

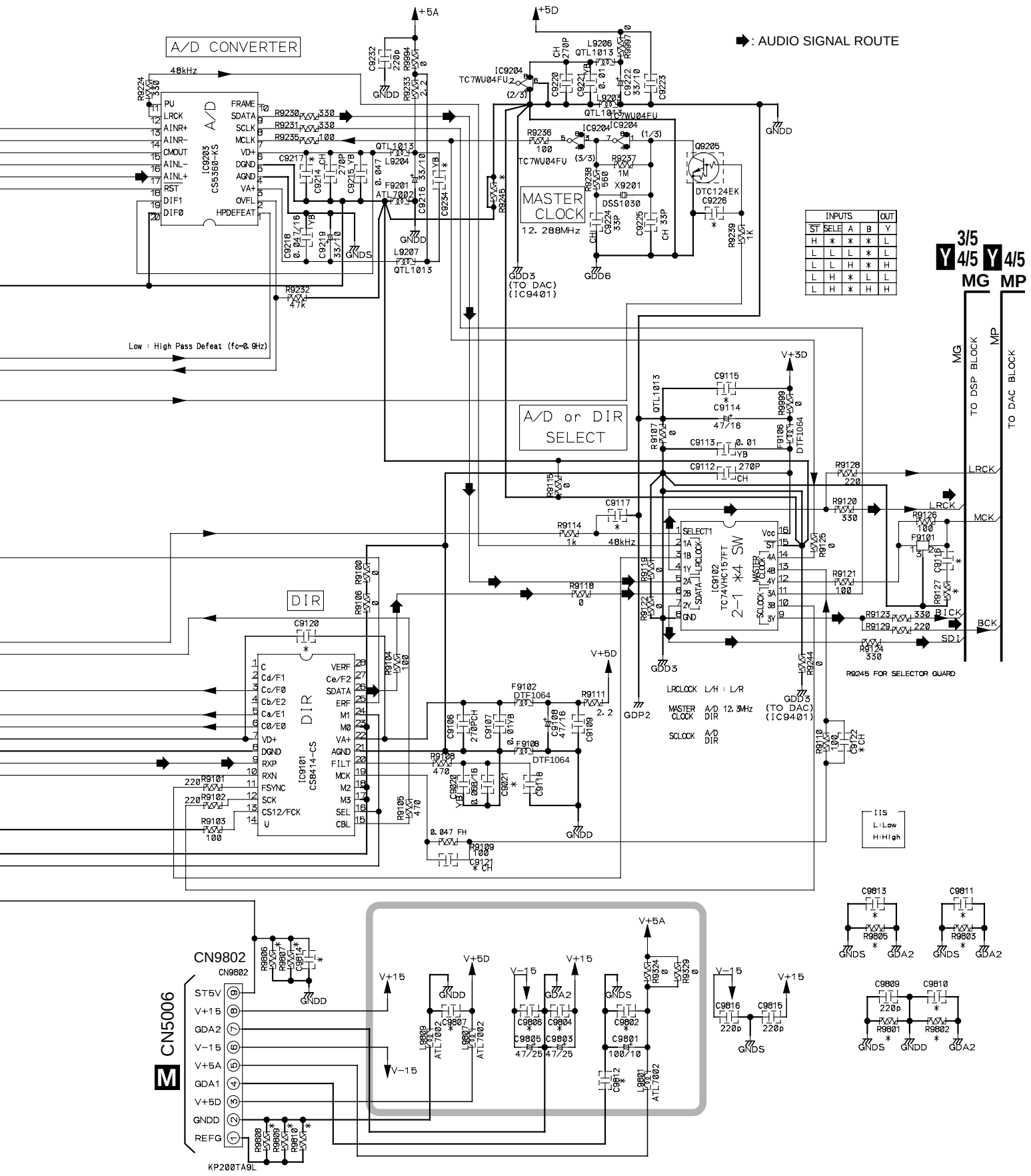

INPUTS				OUT
ST	SELE	A	B	Y
H	*	*	*	L
L	L	L	*	L
L	L	H	*	H
L	H	*	L	L
L	H	*	H	H

3.18 DSP ASSY (3/5)

Y 3/5 DSP ASSY
(VSX-39TX, VSX-37TX : AWX7632)
(VSX-36TX, VSX-D909S : AWX7633)

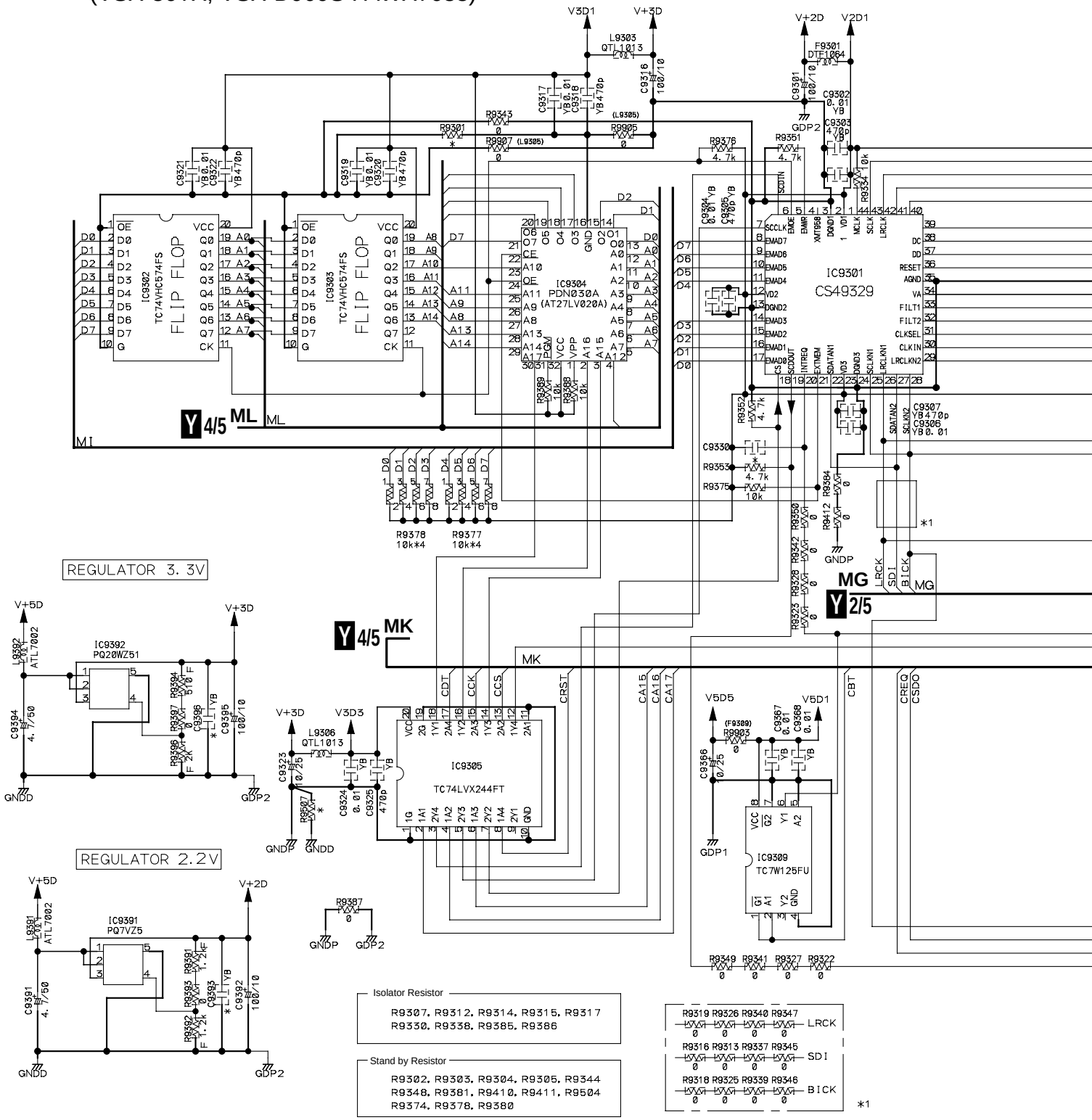

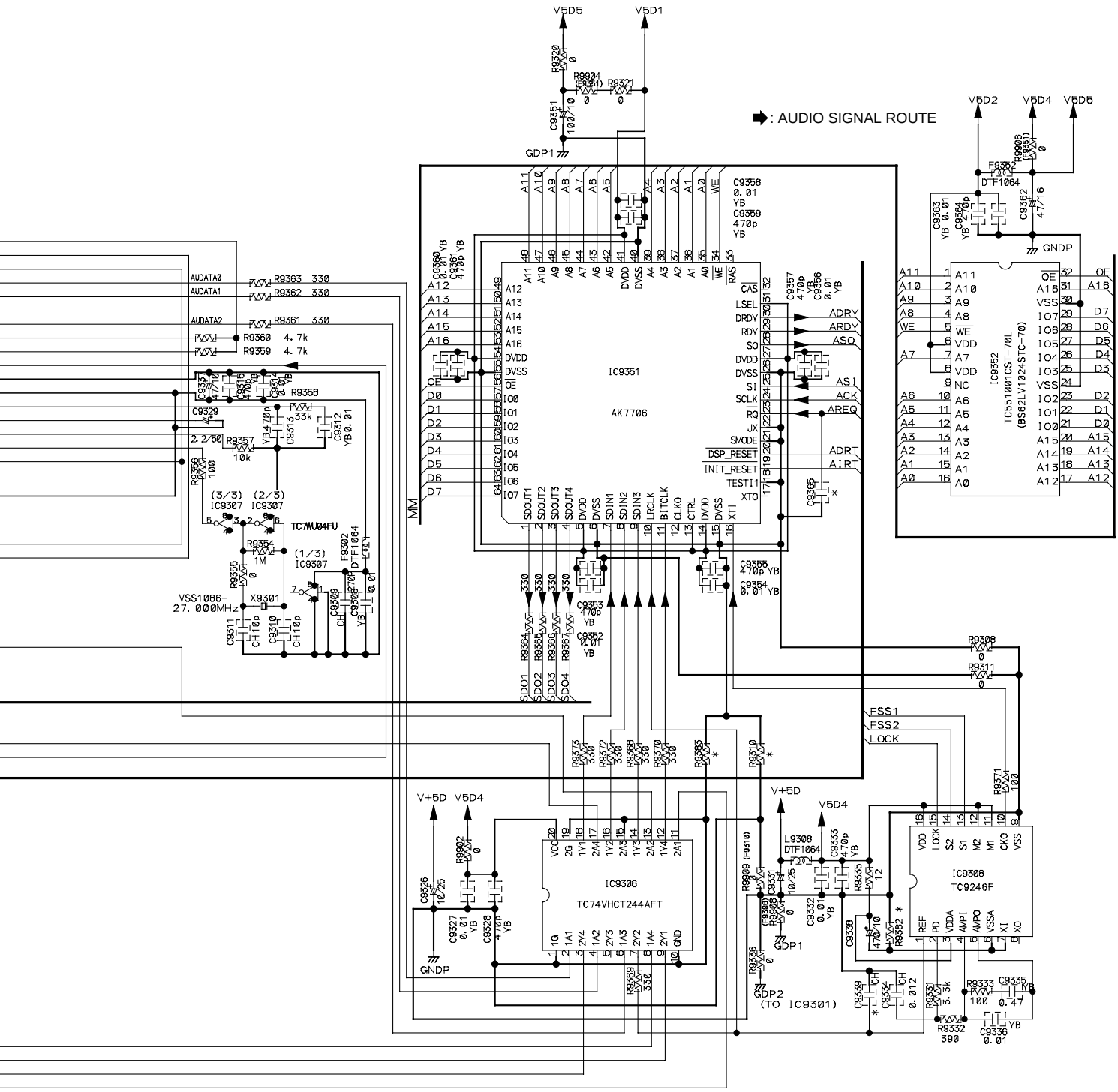
: AUDIO SIGNAL ROUTE
IC9351
AK7706
IC9352
TC551001CST-70L
(BS62LV1024STC-70)
IC9306
TC74VHCT244AFT
IC9308
TC9246F
TC7WU04FU
IC9307
X9301
VSS1066-
27.000MHz
V5D5
V5D1
V5D2
V5D4
V+5D
GDP1
GDP2
(TO IC9301)
GNDP
ADRY
ARDY
ASO
ASI
ACK
AREQ
ADRT
AIRT
FSS1
FSS2
LOCK
AUDATA0
AUDATA1
AUDATA2

3.19 DSP ASSY (4/5)

Y 4/5 DSP ASSY
(VSX-39TX, VSX-37TX : AWX7272)
(VSX-36TX, VSX-D909S : AWX7633)

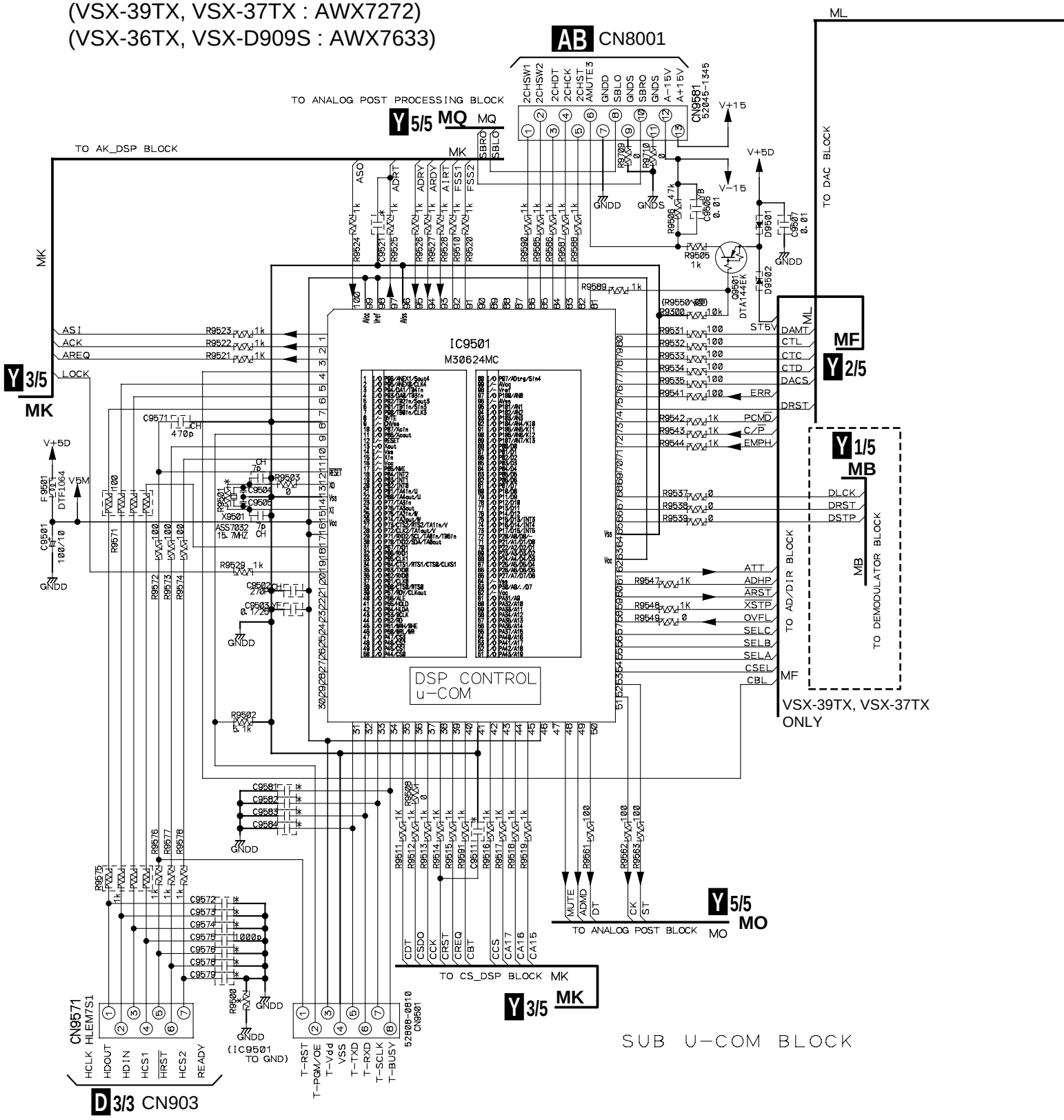

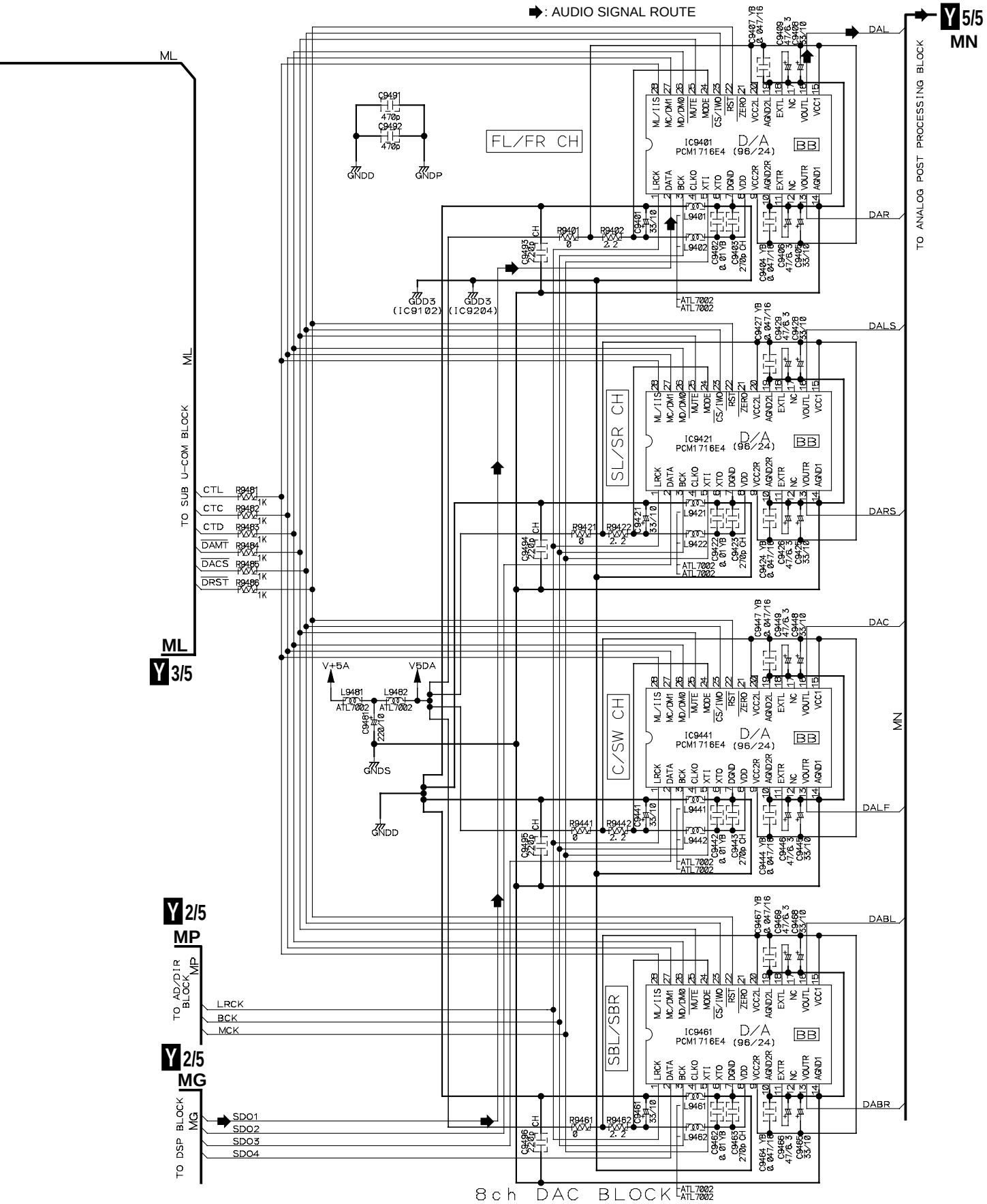
: AUDIO SIGNAL ROUTE
Y 5/5
MN
TO ANALOG POST PROCESSING BLOCK
DAL
DAR
DALS
DARS
DAC
DALF
DABL
DABR
FL/FR CH
SL/SR CH
C/SW CH
SBL/SBR
IC9401
IC9421
IC9441
IC9461
PCM1716E4
D/A
(96/24)
ML
TO SUB U-COM BLOCK
CTL
CTC
CTD
DAMT
DACS
DRST
Y 3/5
V+5A
V5DA
GNDS
GNDD
GNDP
GDD3
(IC9102)
(IC9204)
ATL7002
Y 2/5
MP
TO AD/DIR BLOCK
LRCK
BCK
MCK
Y 2/5
MG
TO DSP BLOCK
SDO1
SDO2
SDO3
SDO4
8ch DAC BLOCK

3.20 DSP ASSY (5/5)

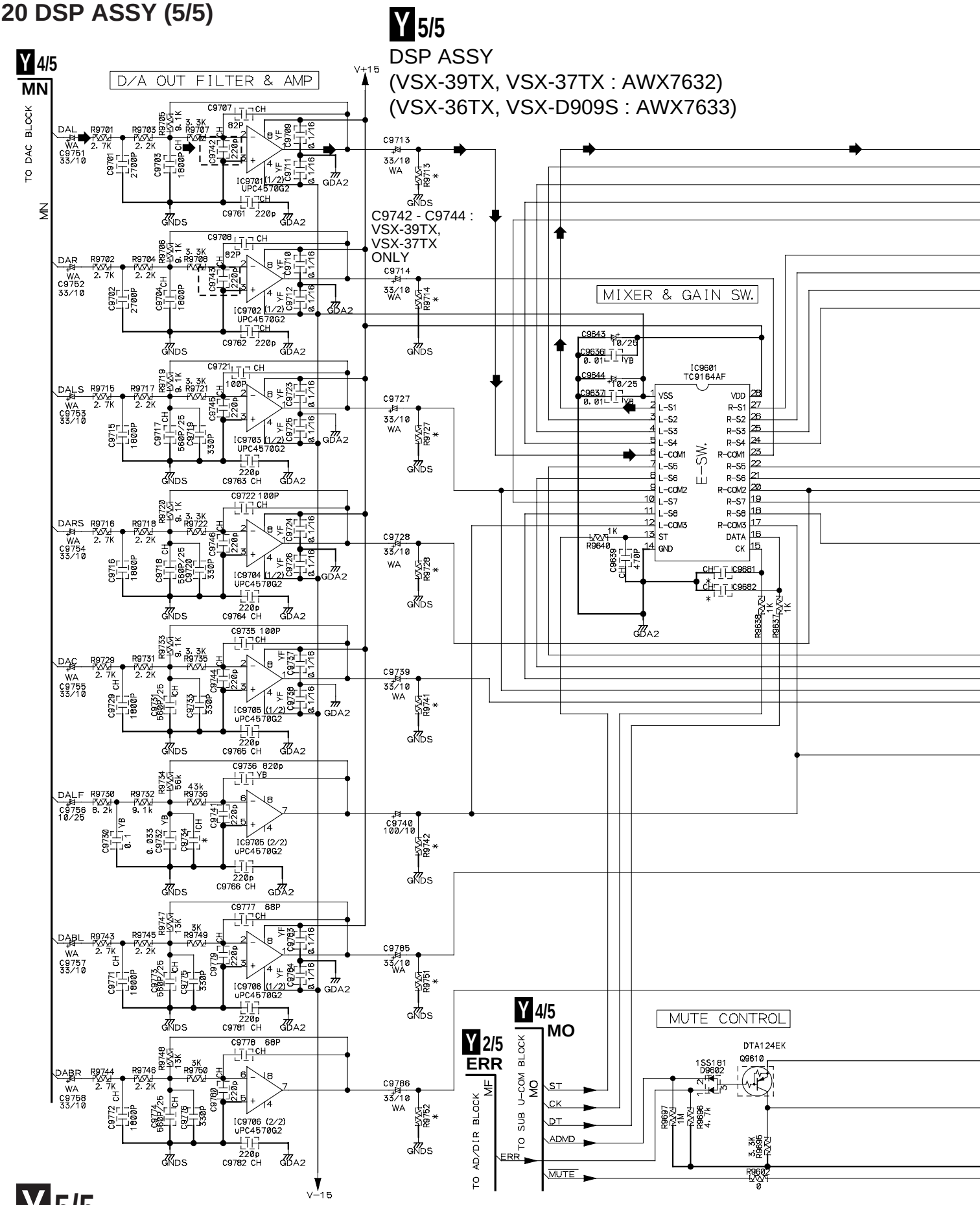

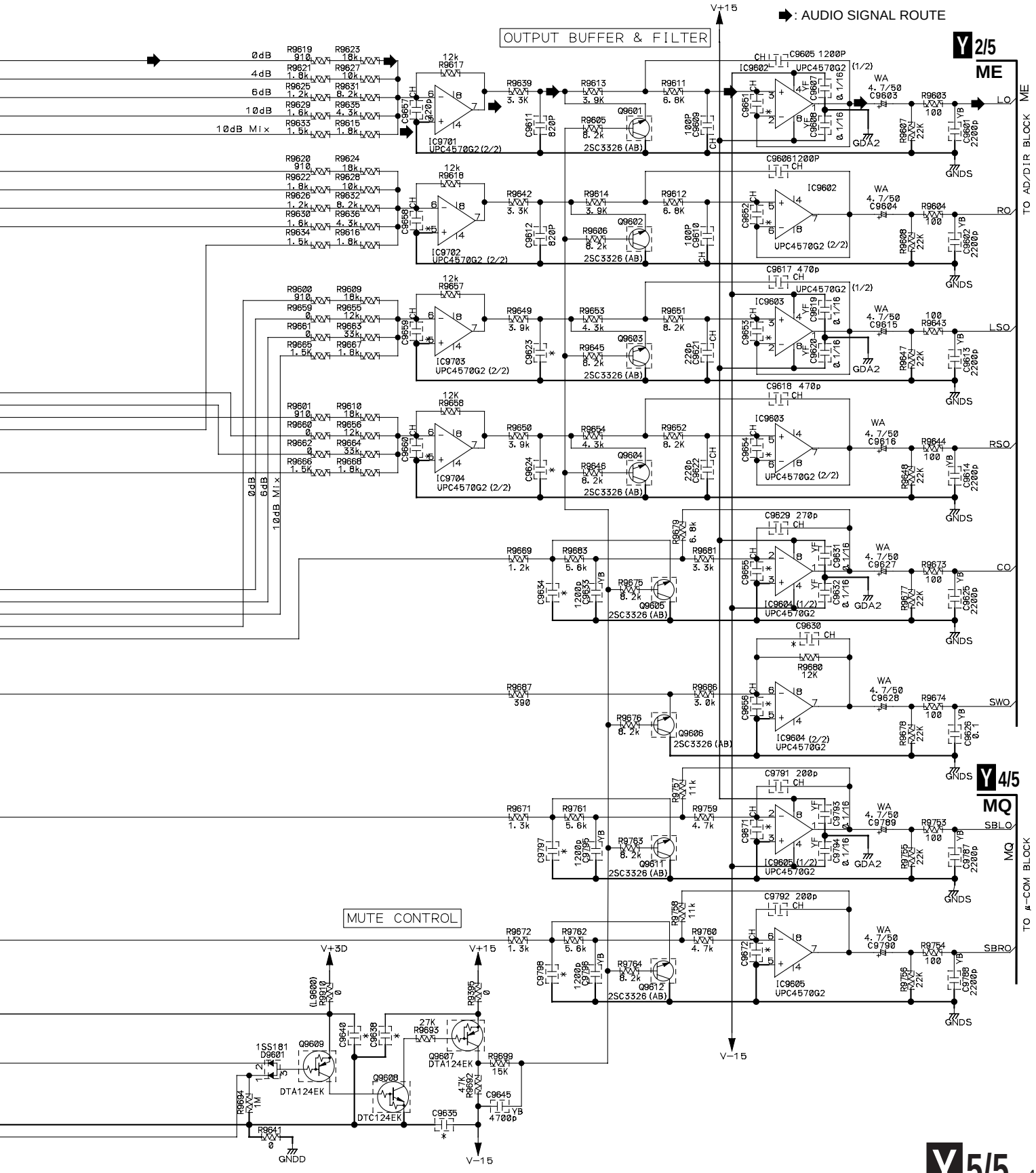
: AUDIO SIGNAL ROUTE
OUTPUT BUFFER & FILTER
Y 2/5
ME
TO AD/DIR BLOCK
Y 4/5
MQ
TO μ-COM BLOCK
MUTE CONTROL
V+15
V-15
V+3D
0dB
4dB
6dB
10dB
10dB Mix
LO
RO
LSO
RSO
CO
SWO
SBLO
SBRO
IC9701 UPC4570G2 (2/2)
IC9702 UPC4570G2 (2/2)
IC9703 UPC4570G2 (2/2)
IC9704 UPC4570G2 (2/2)
IC9602 UPC4570G2 (1/2)
IC9603 UPC4570G2 (1/2)
IC9604 (1/2) UPC4570G2
IC9604 (2/2) UPC4570G2
IC9605 (1/2) UPC4570G2
IC9605 UPC4570G2
2SC3326 (AB)
DTA124EK
DTC124EK
1SS181
GDA2
GNDS
GNDD

Y 5/5

3.21 2CH I/O PJ and TRIM ASSYS

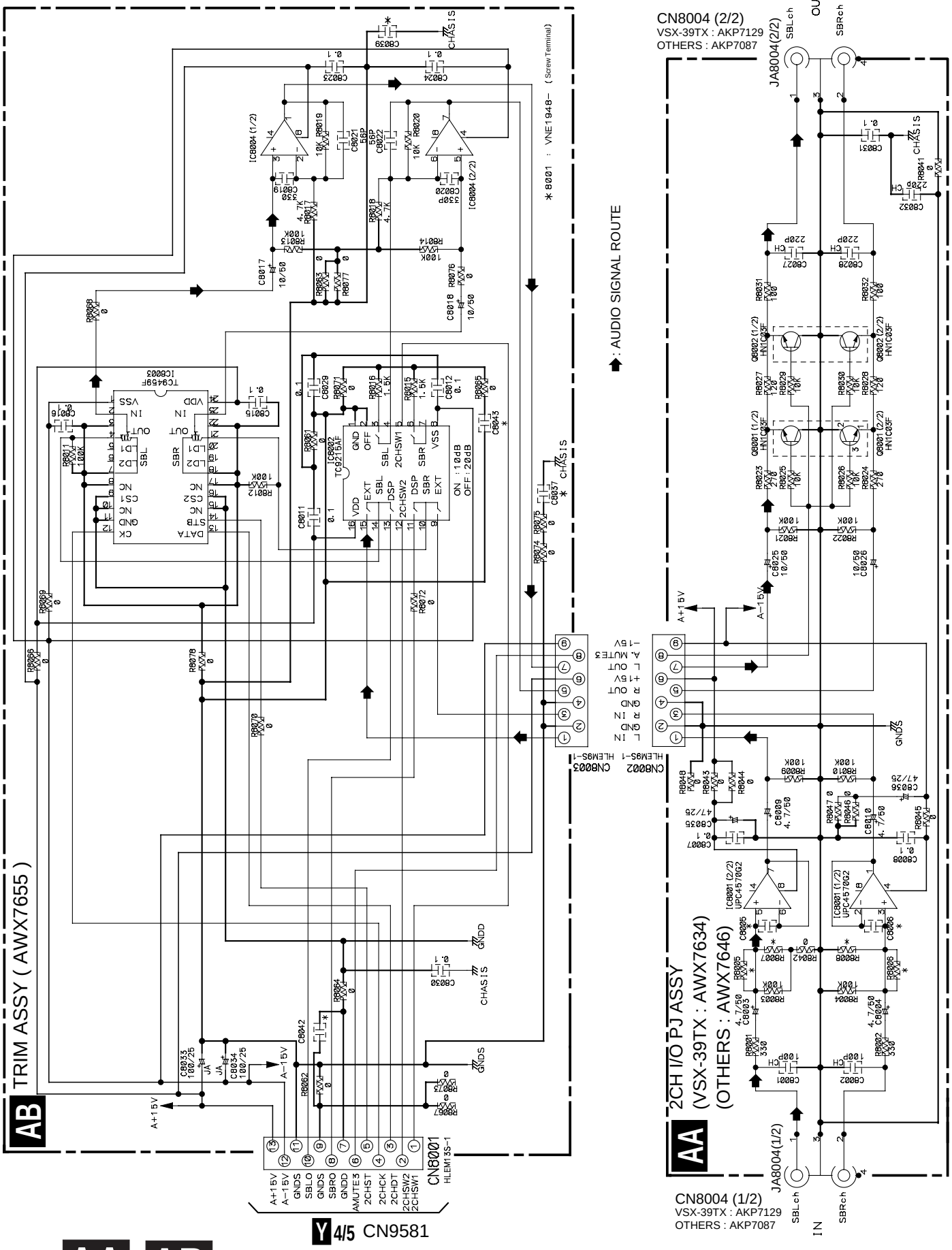

AA AB

3.22 COMPONENT ASSY

Z COMPONENT ASSY
(VSX-39TX : AWX7635)
(VSX-37TX, VSX-36TX, VSX-D909S : AWX7636)

Table of truth value

FUNC	① 4051 AorC →4053 ABC	② 4051 B	③ ①EX OR②	④ 2296 SW5	⑤ ③NAND④ →4053 INH	To ①,⑤ 4053 X, Y, Z OUT
DVD/LD	L	H	H	H	L	0
TV/SAT	H	L	H	H	L	1
VCR1	L	L	L	H	H	×
VCR2	H	H	L	H	H	×
VIDEO	H	H	L	H	H	×
Audio	*	*	*	L	H	×

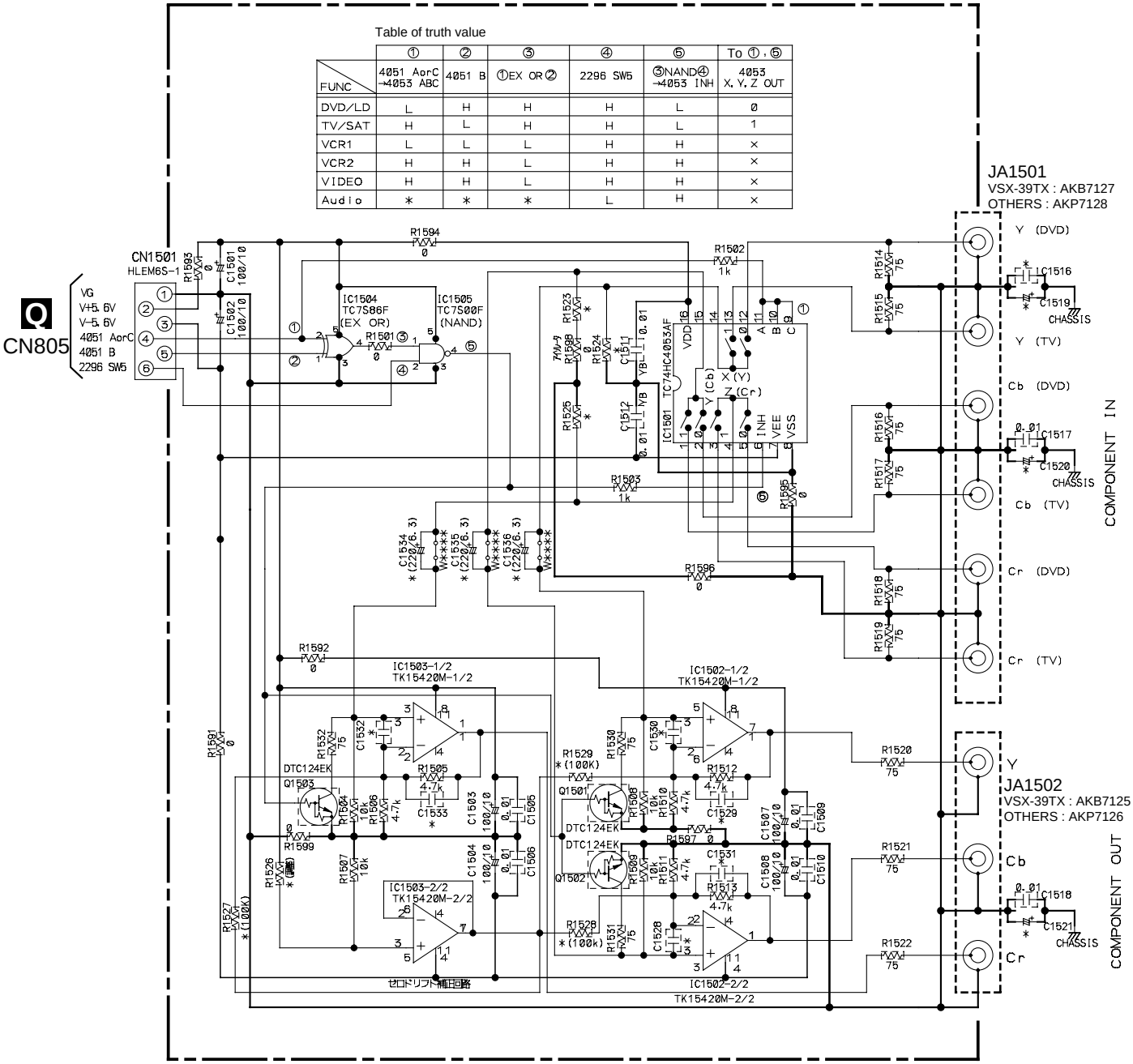

4. PCB CONNECTION DIAGRAM

NOTE FOR PCB DIAGRAMS :

1. Part numbers in PCB diagrams match those in the schematic diagrams.
2. A comparison between the main parts of PCB and schematic diagrams is shown below.

Symbol In PCB Diagrams	Symbol In Schematic Diagrams	Part Name
B C E	B C E B C E	Transistor
B C E	B C E B C E	Transistor with resistor
D G S	D G S D G S	Field effect transistor
		Resistor array
		3-terminal regulator

3. The parts mounted on this PCB include all necessary parts for several destinations.
   For further information for respective destinations, be sure to check with the schematic diagram.
4. View point of PCB diagrams.

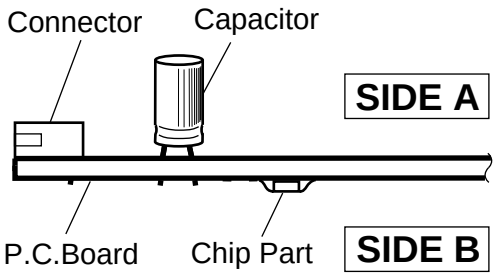

4.1 EXTRA-5.1 (EXTERNAL IN), A-PINJACK and CONNECTION ASSYS

B A-PINJACK ASSY

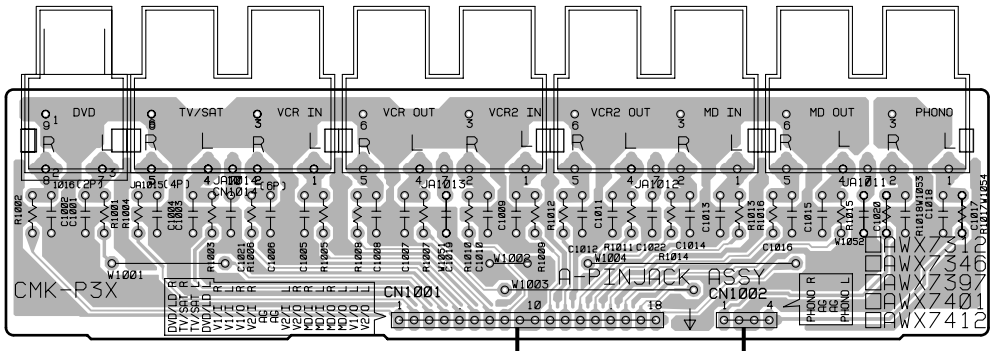

C CONNECTION ASSY

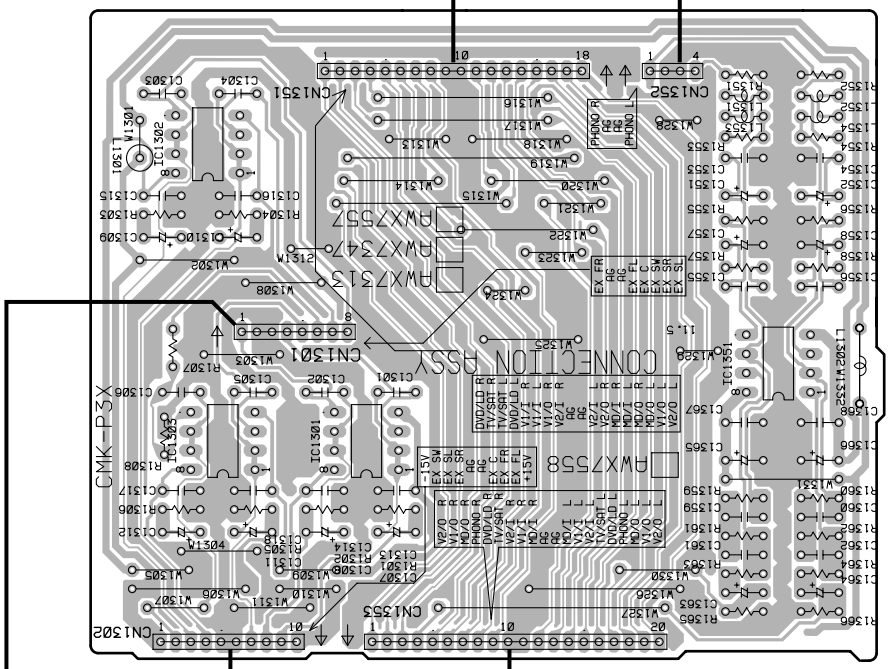

D CN103 **D** CN101

A EXTRA-5.1 (EXTERNAL IN) ASSY

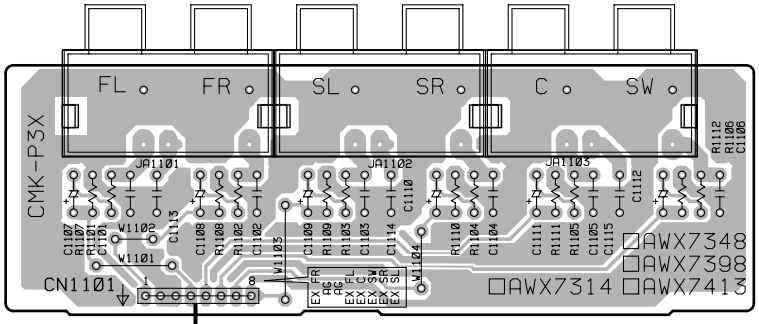

(ANP7308-F)

SIDE A

4.2 MAIN CONTROL ASSY

D MAIN CONTROL ASSY

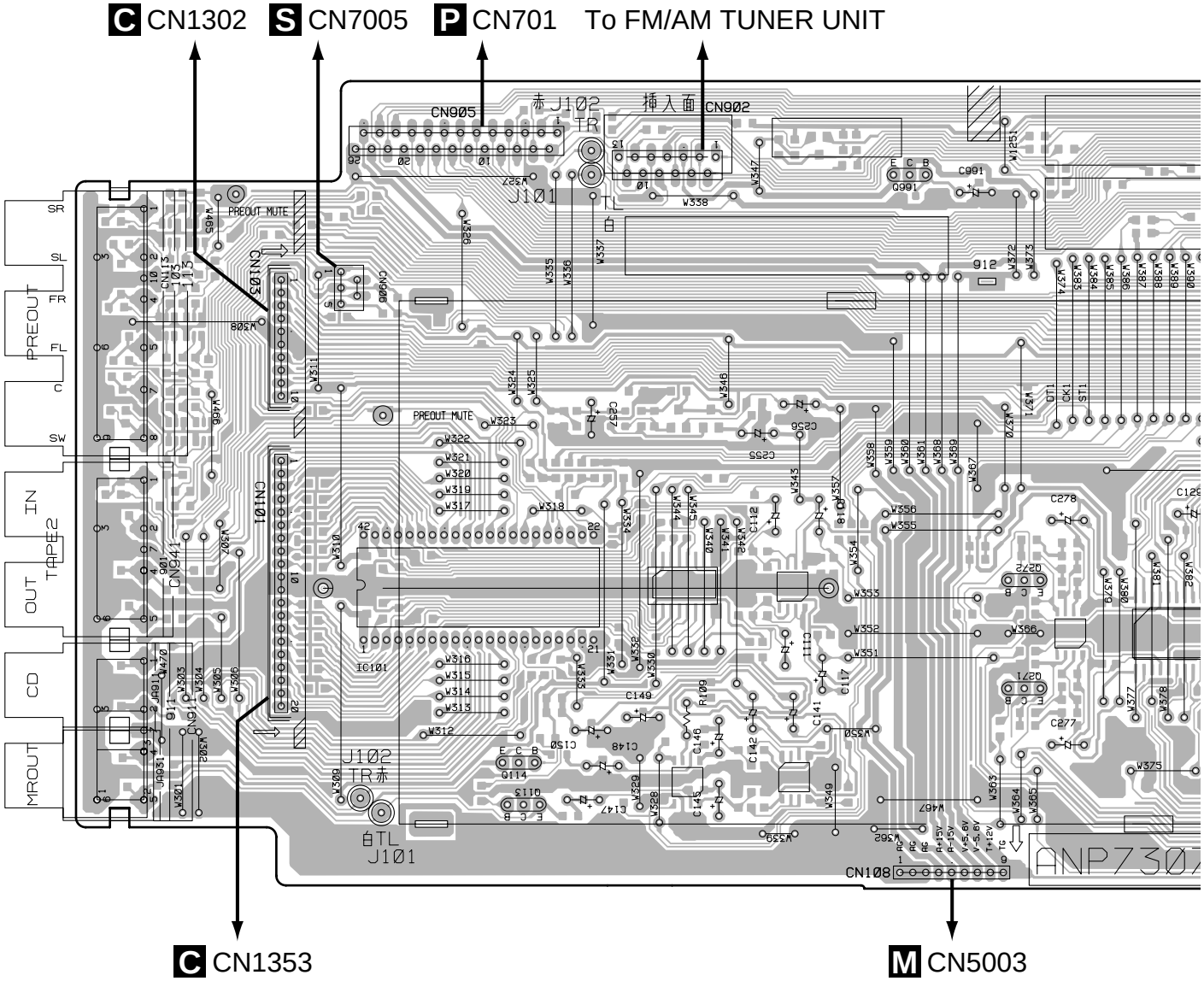

IC101
Q114
Q113
Q991
Q272
Q271

SIDE A

SIDE A

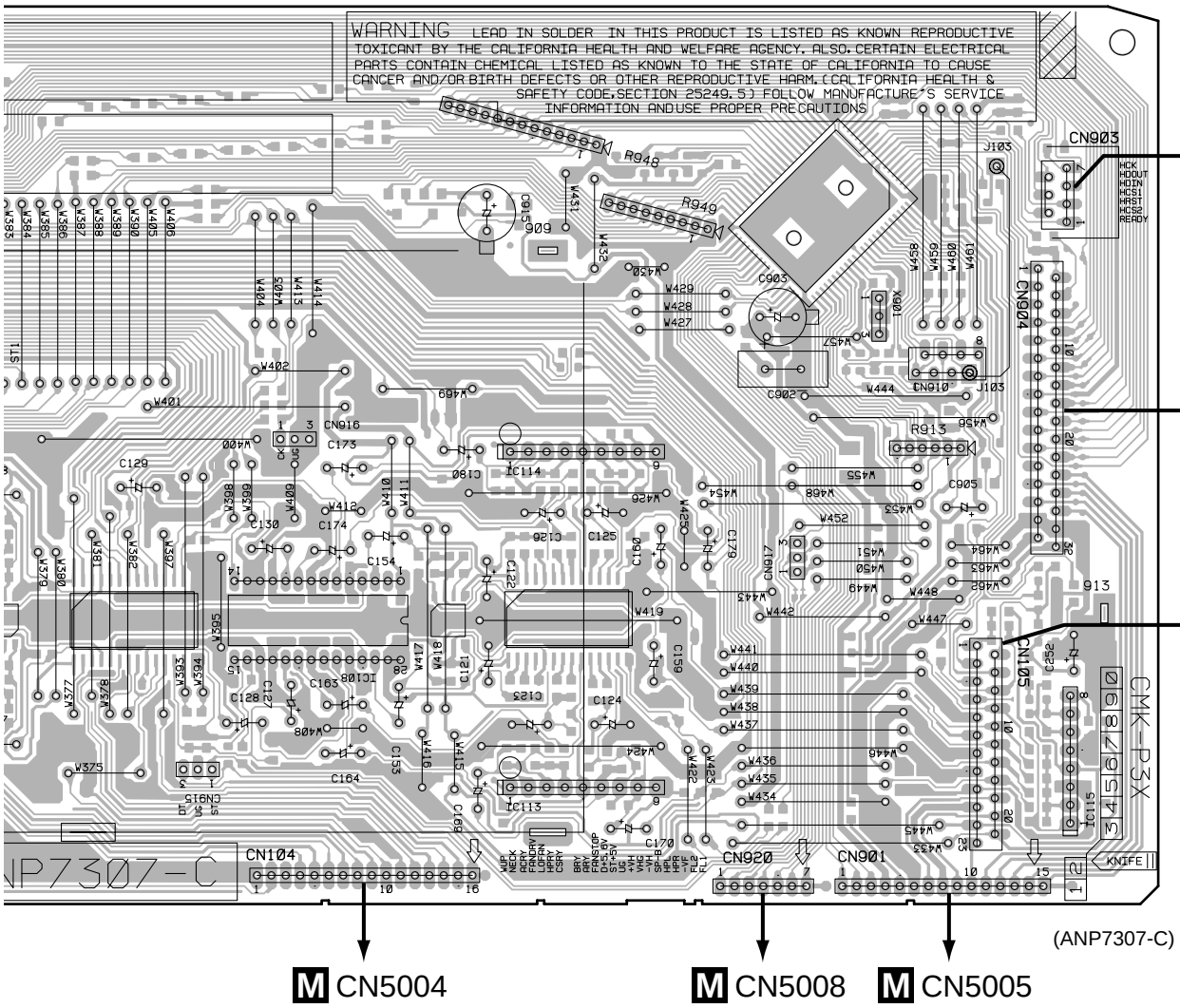

Y CN9571

S CN7001

E CN501

(ANP7307-C)

M CN5004 **M** CN5008 **M** CN5005

IC108 IC114 IC113 IC115

D MAIN CONTROL ASSY

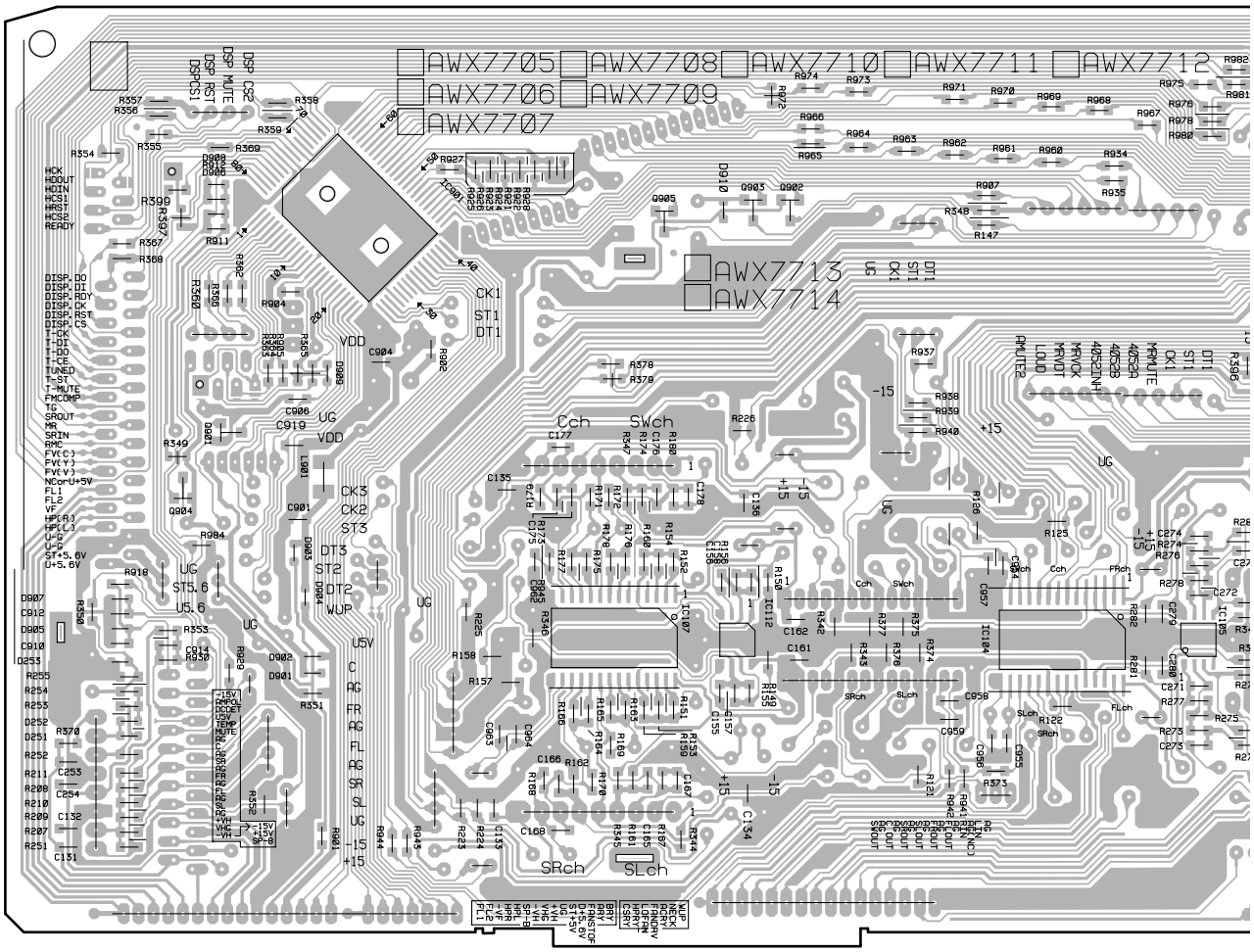

Q904 Q901 IC901 Q905 Q903 Q902 IC104 IC105
IC107 IC112

SIDE B

SIDE B

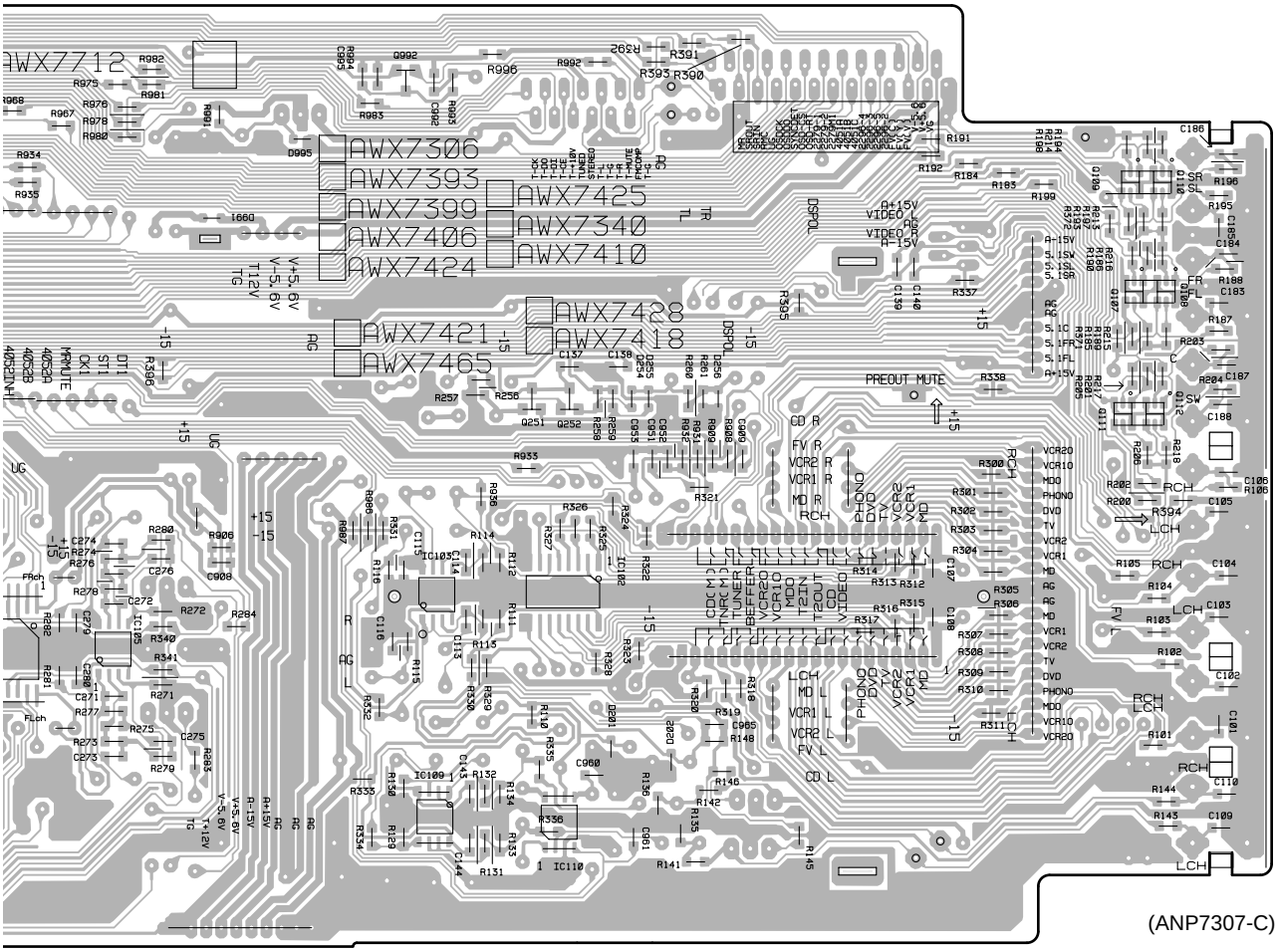

(ANP7307-C)

IC105	Q902	Q251	Q252	Q109	Q110
	IC103	IC102		Q107	Q108
	IC109	IC110		Q111	Q112

4.3 V-AMP ASSY

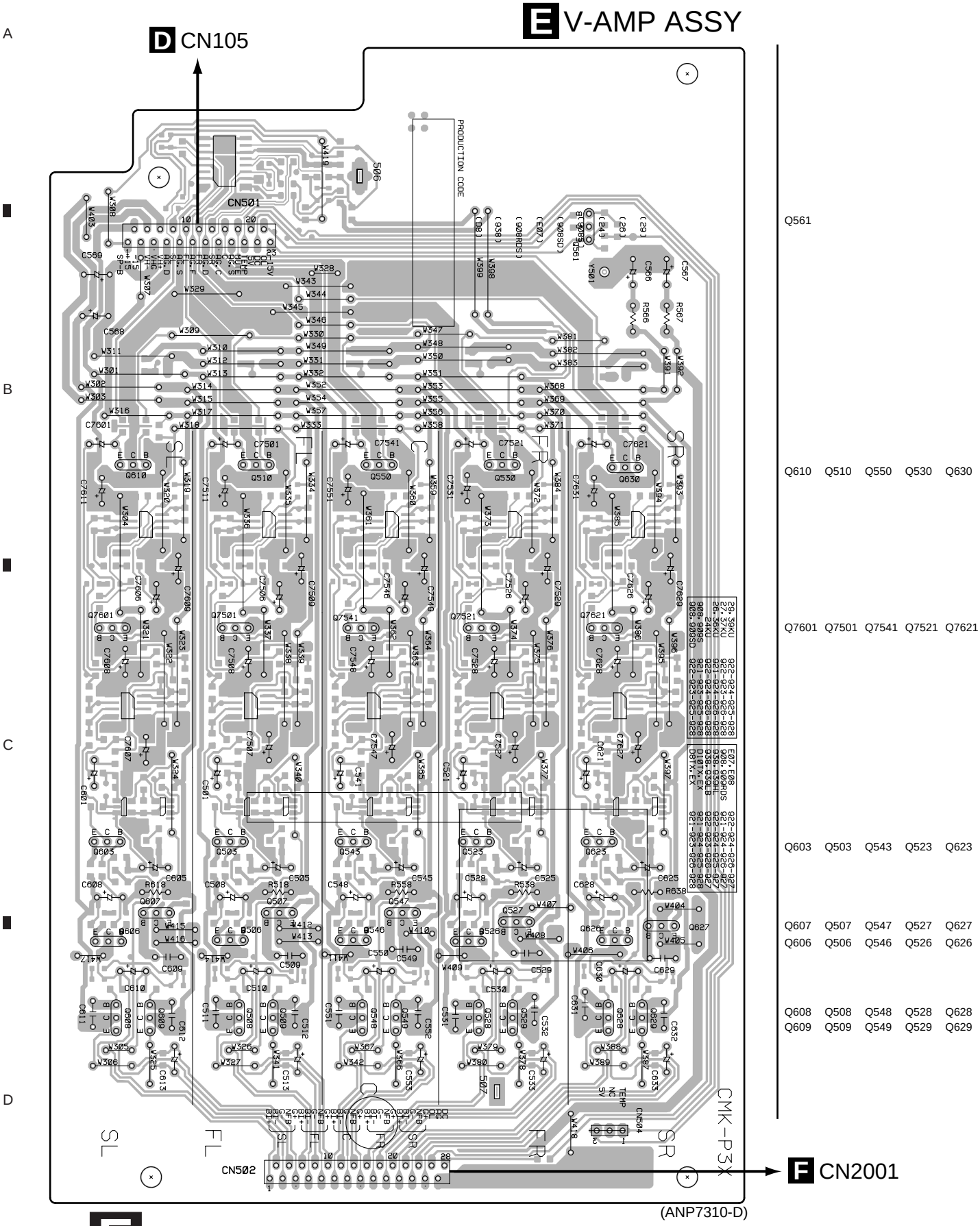

(ANP7310-D)

SIDE A

E V-AMP ASSY

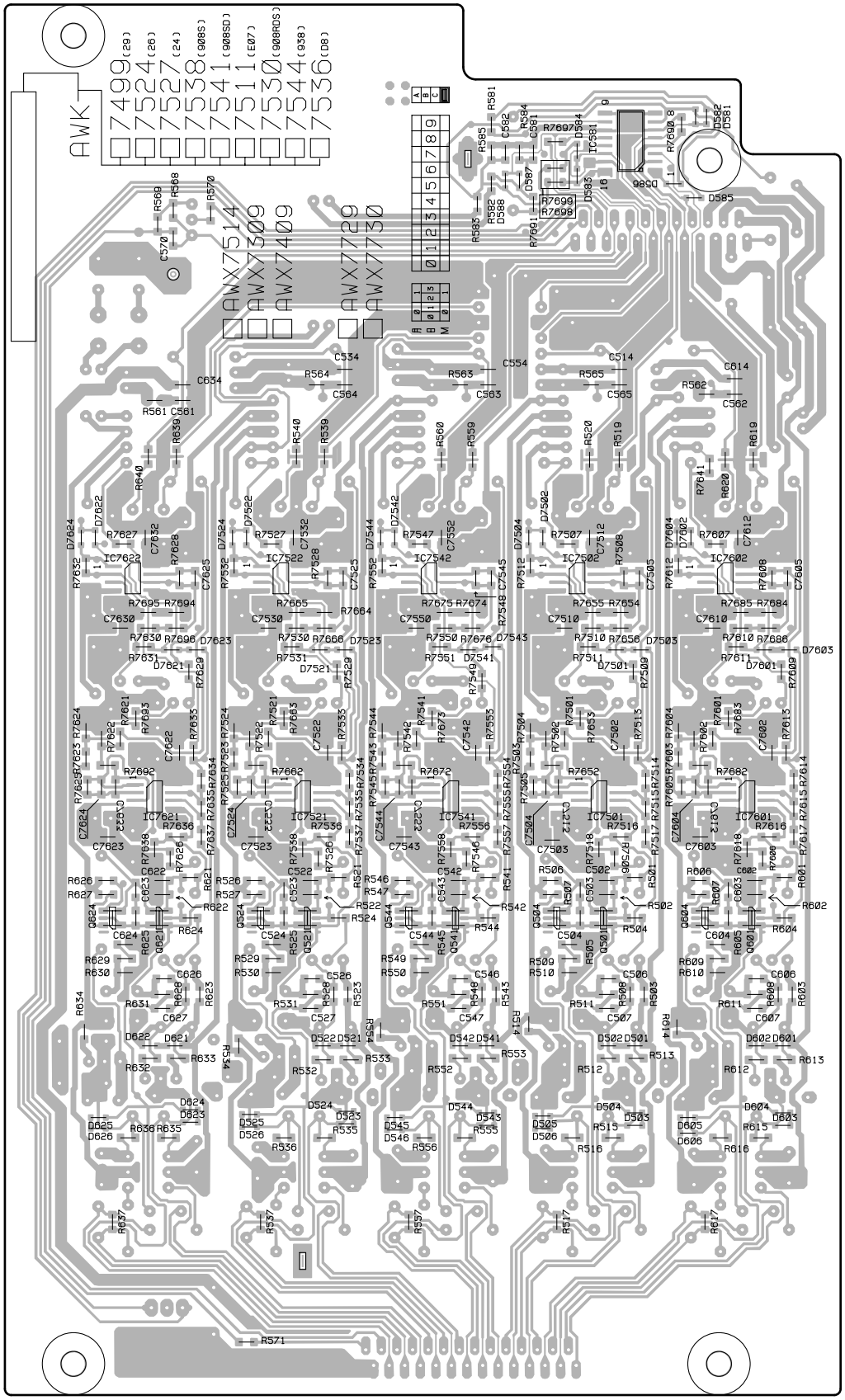

IC581

IC7622 IC7522 IC7542 IC7502 IC7602

IC7621 IC7521 IC7541 IC7501 IC7601

Q624 Q524 Q544 Q504 Q604
Q621 Q521 Q541 Q501 Q601

(ANP7310-F)

SIDE B

4.4 C-AMP-N, C-AMP-P, OUTPUT-SL, OUTPUT-FL, OUTPUT-C, OUTPUT-FR, OUTPUT-SR and VL-TERMINAL ASSYS

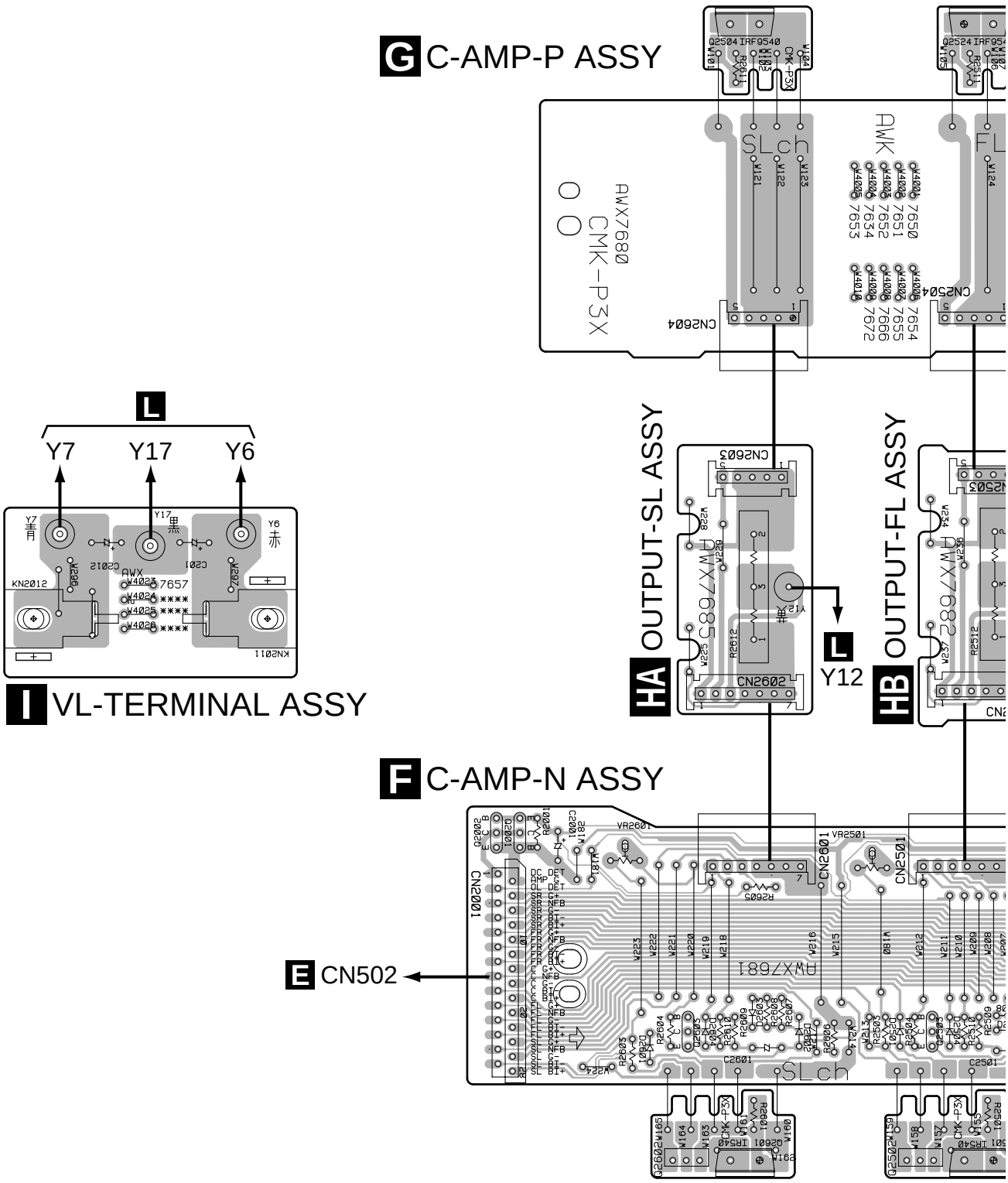

SIDE A

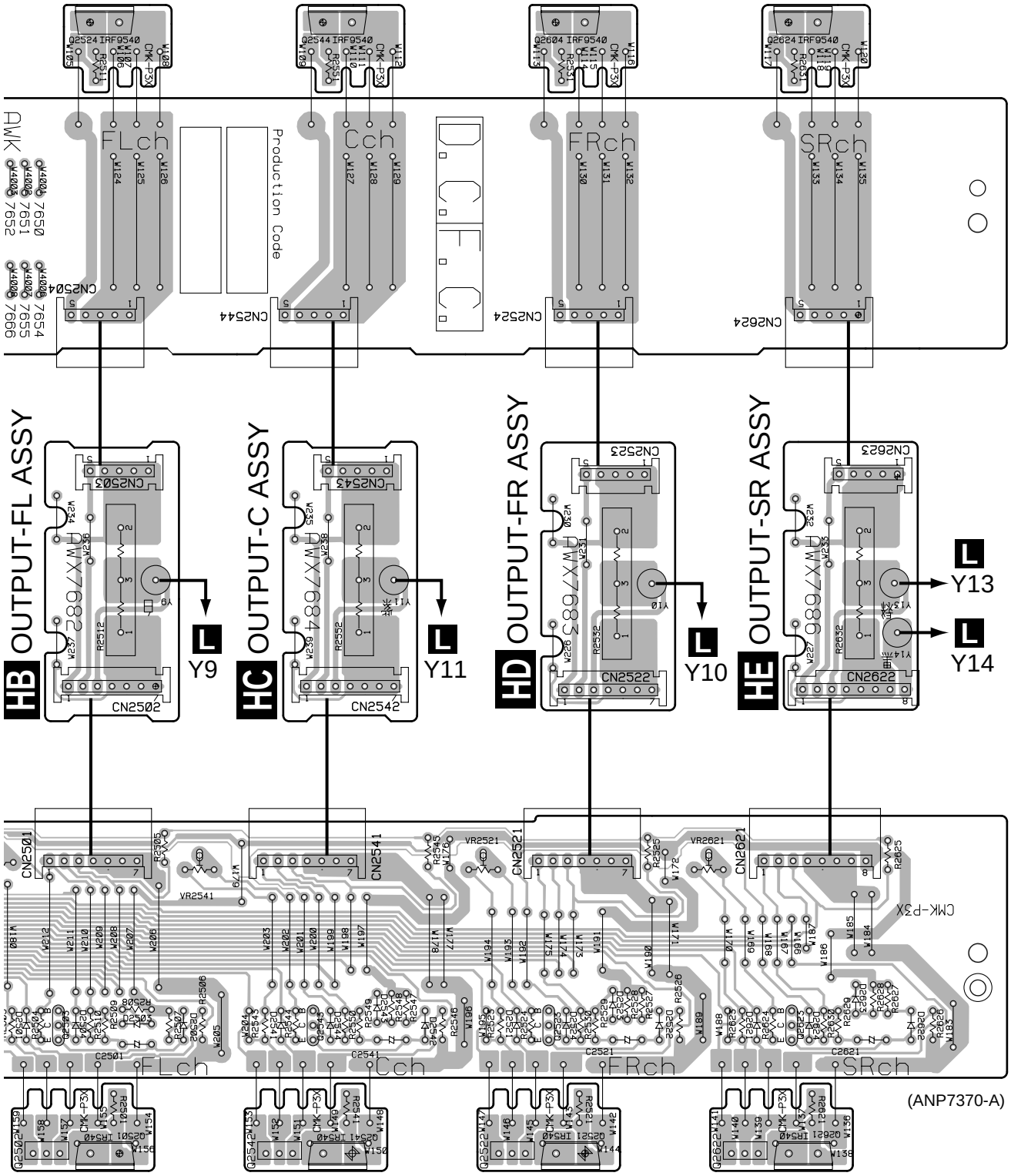

:501	VR2541	VR2521	VR2621
Q2503 Q2502	Q2543 Q2542	Q2523 Q2522	Q2623 Q2622

4.5 TRANS 2-1, DIODE, TRANS 1 and TRANS 2-2 ASSYS

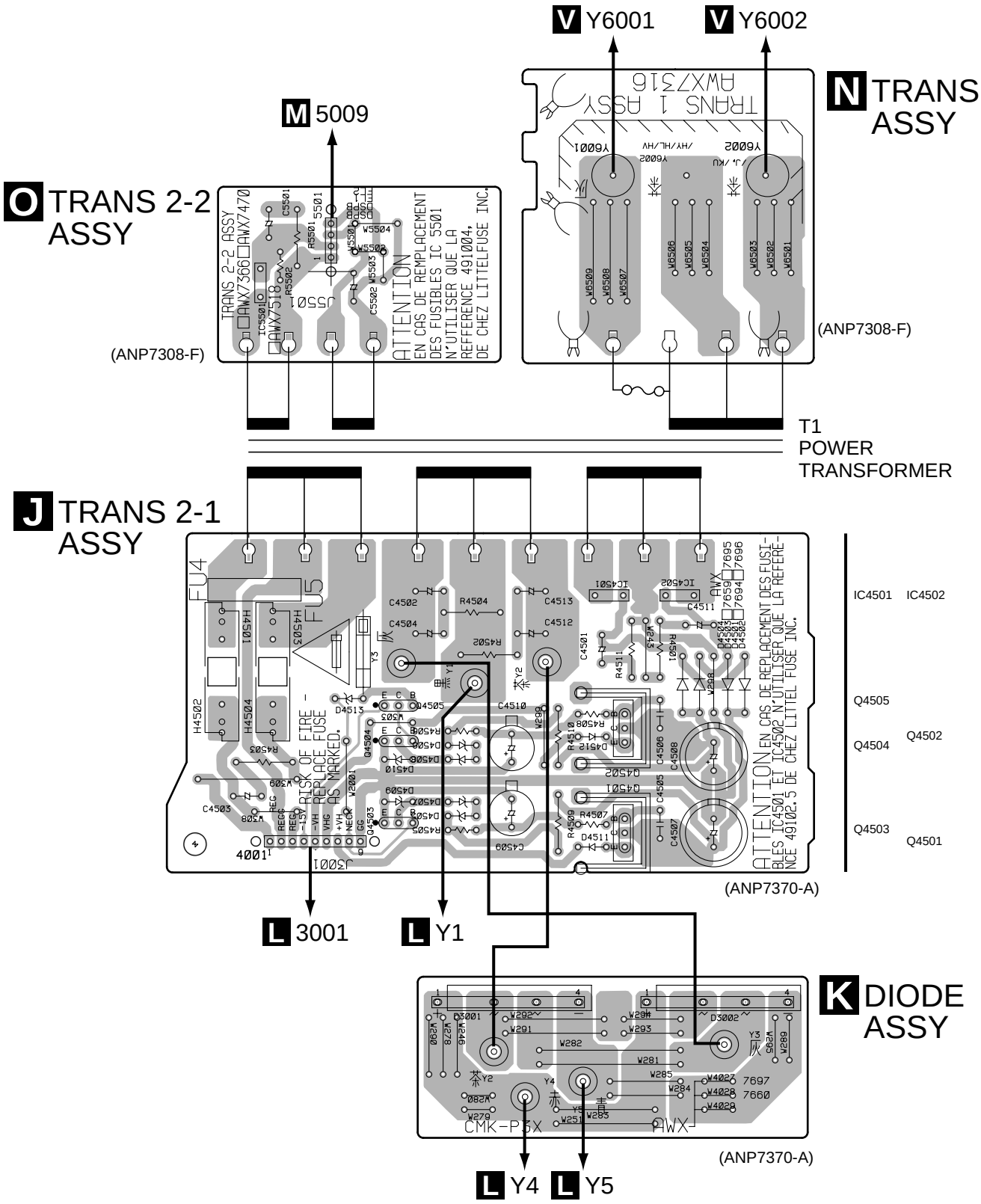

SIDE A

4.6 SP/PS ASSY

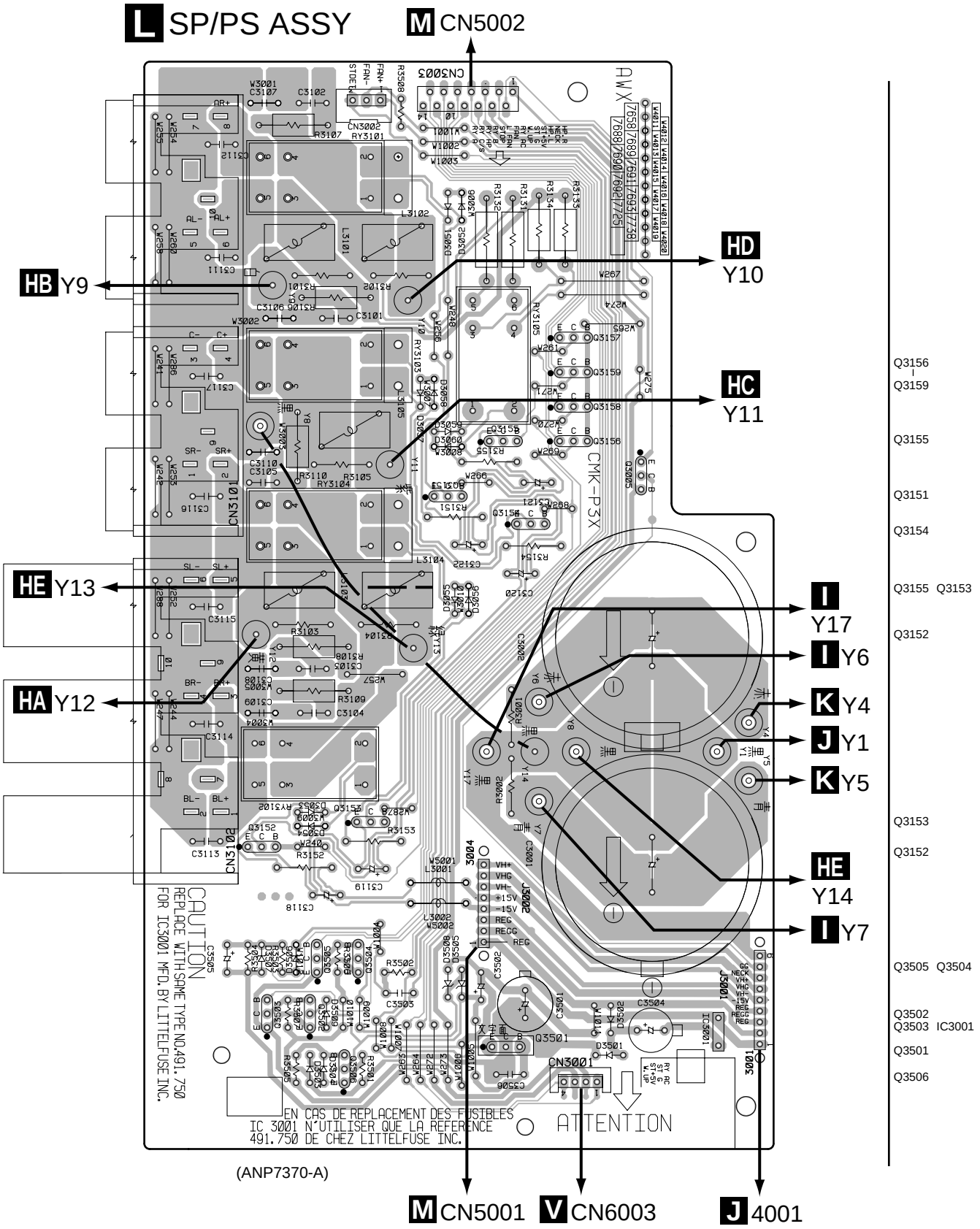

SIDE A

4.7 REGULATOR and PRIMARY ASSYS

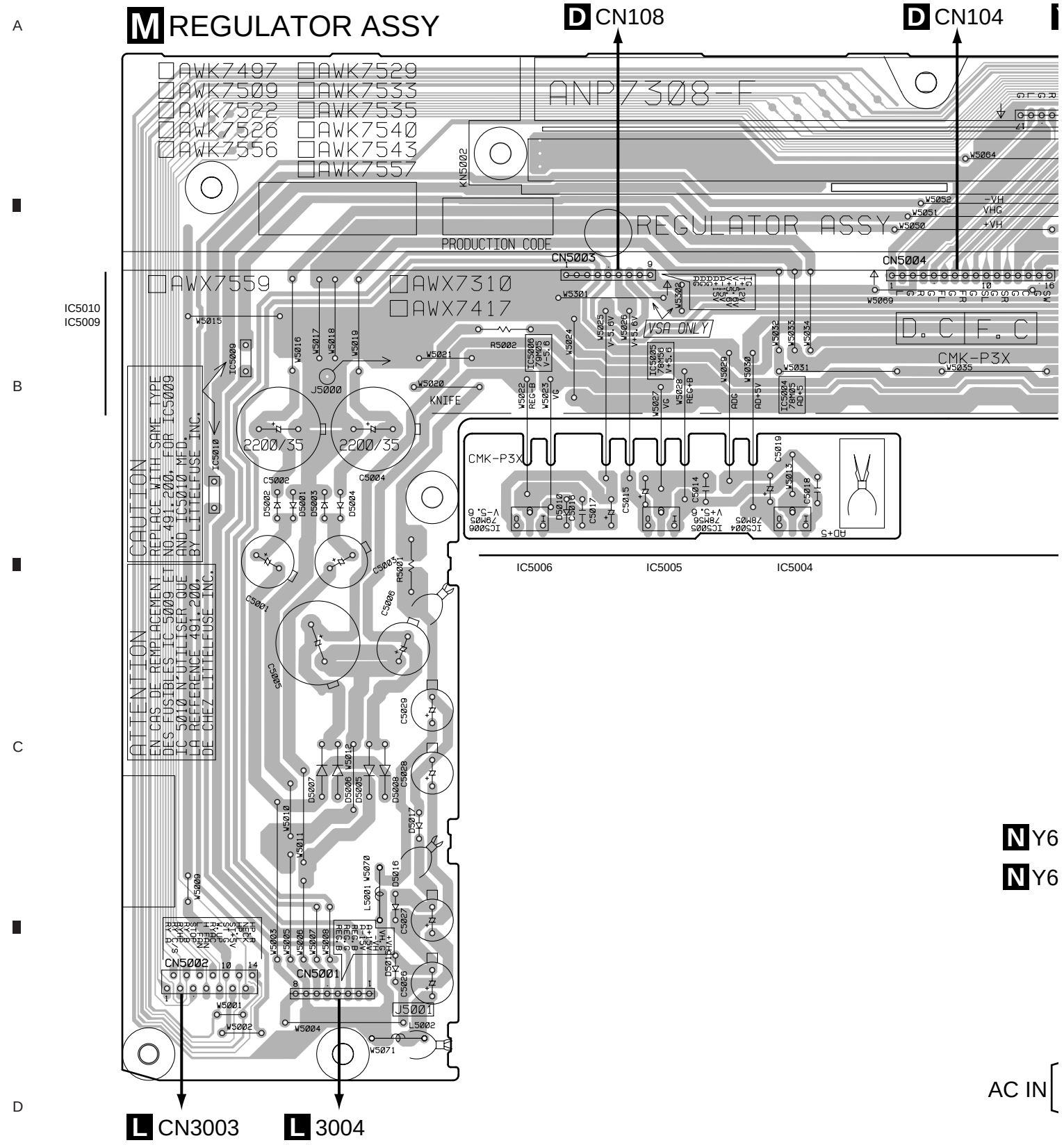

SIDE A

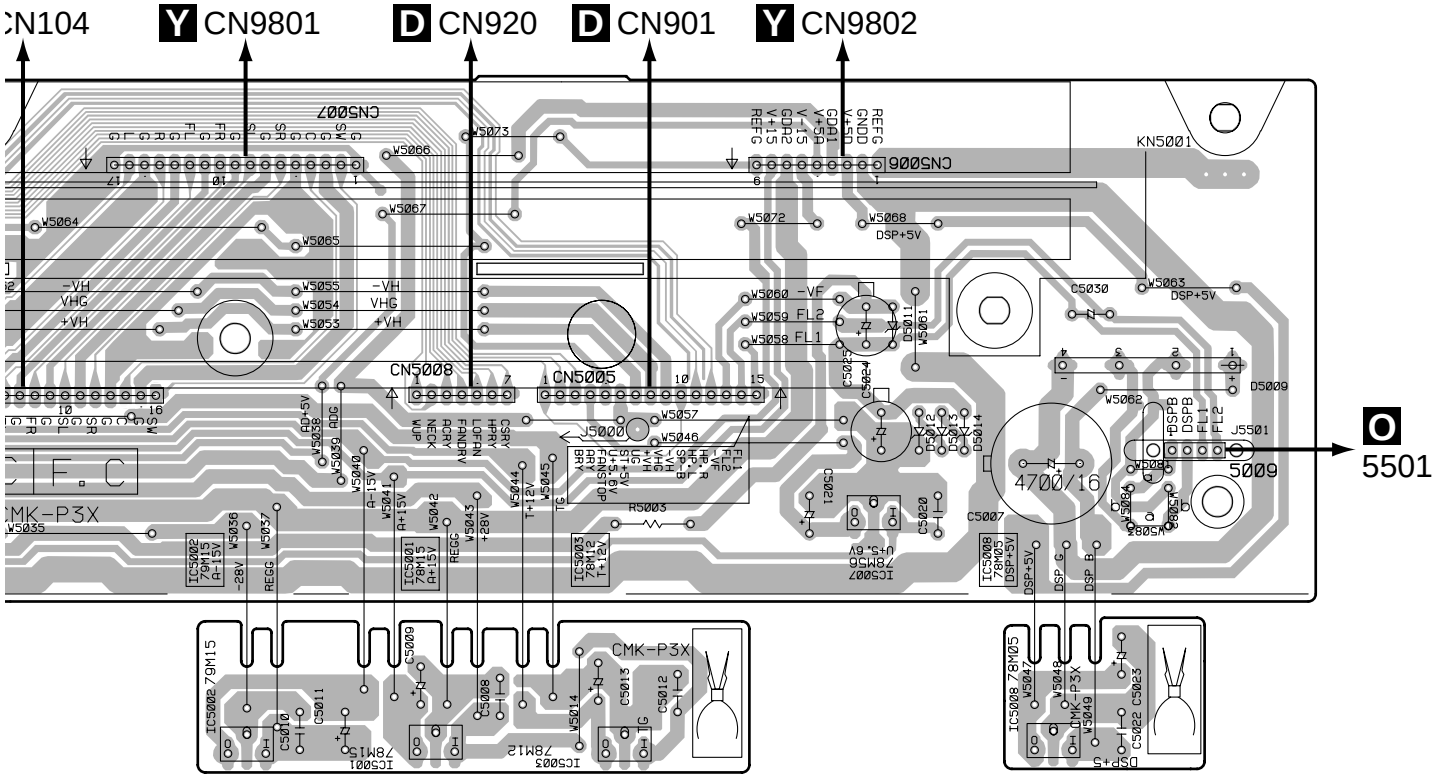
CN104
Y CN9801
D CN920
D CN901
Y CN9802
CN5007
CN5006
CN5008
CN5005
KN5001
J5000
J5501
O
5501
5009
4700/16
CMK-P3X
IC5002
IC5001
IC5003
IC5007
IC5008

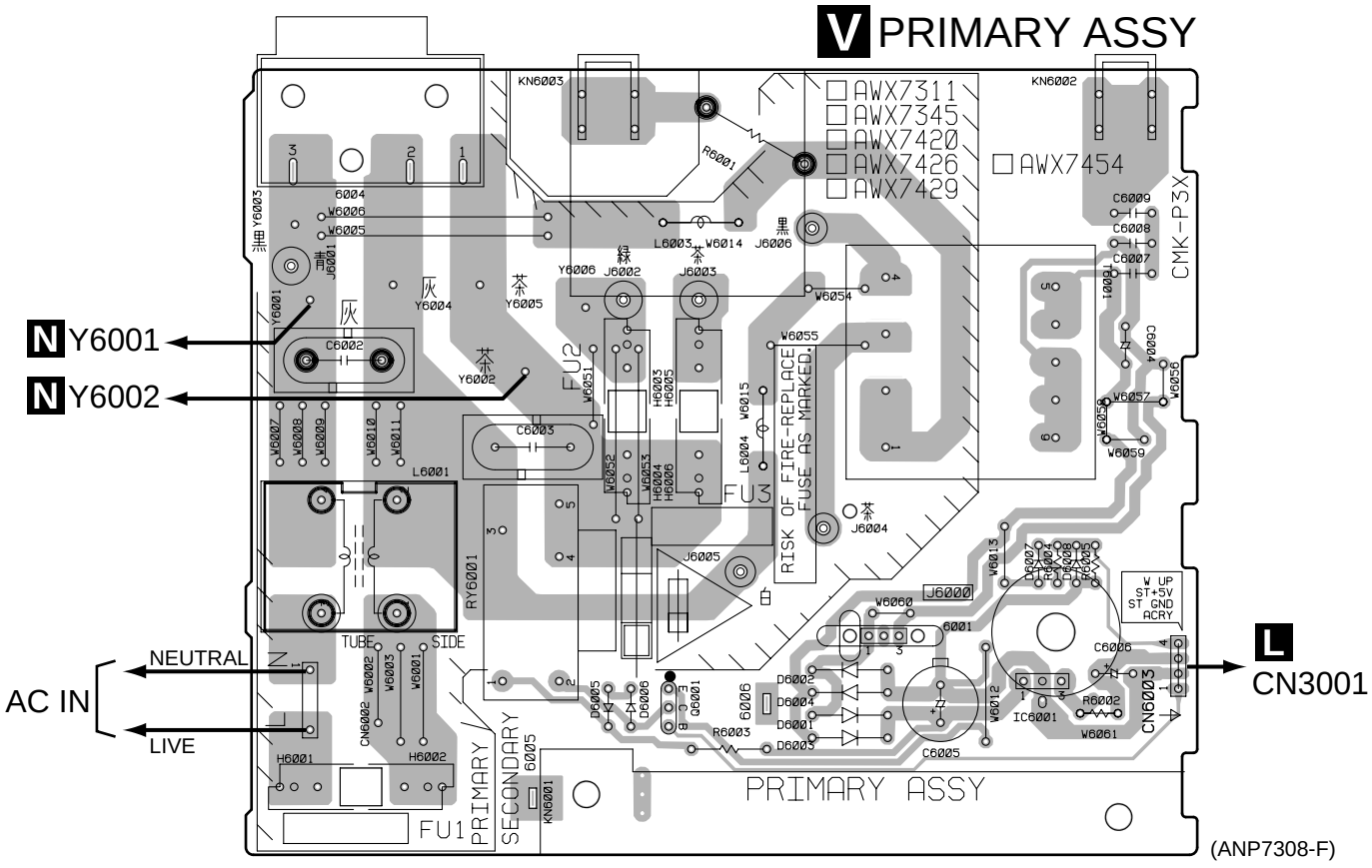
V PRIMARY ASSY
AWX7311
AWX7345
AWX7420
AWX7426
AWX7429
AWX7454
N Y6001
N Y6002
AC IN
NEUTRAL
LIVE
L
CN3001
RISK OF FIRE-REPLACE FUSE AS MARKED.
PRIMARY ASSY
(ANP7308-F)
Q6001
IC6001

4.8 VIDEO ASSY

P VIDEO ASSY

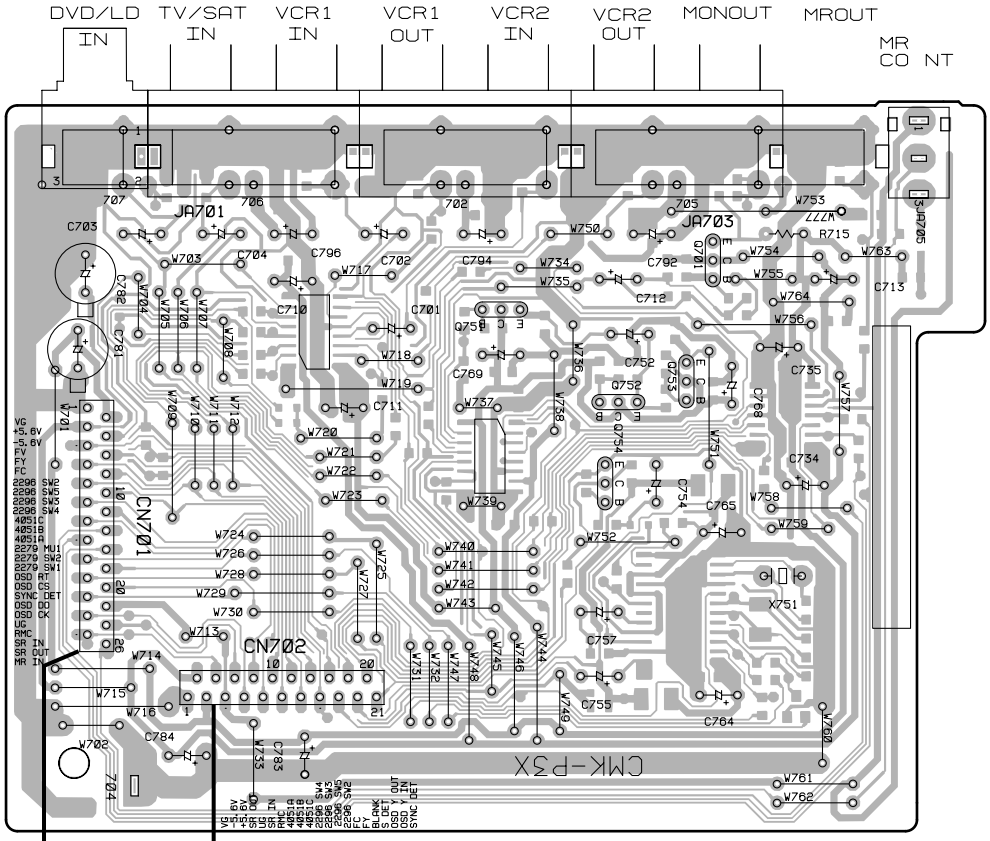

SIDE A

D CN905 Q CN804

P VIDEO ASSY

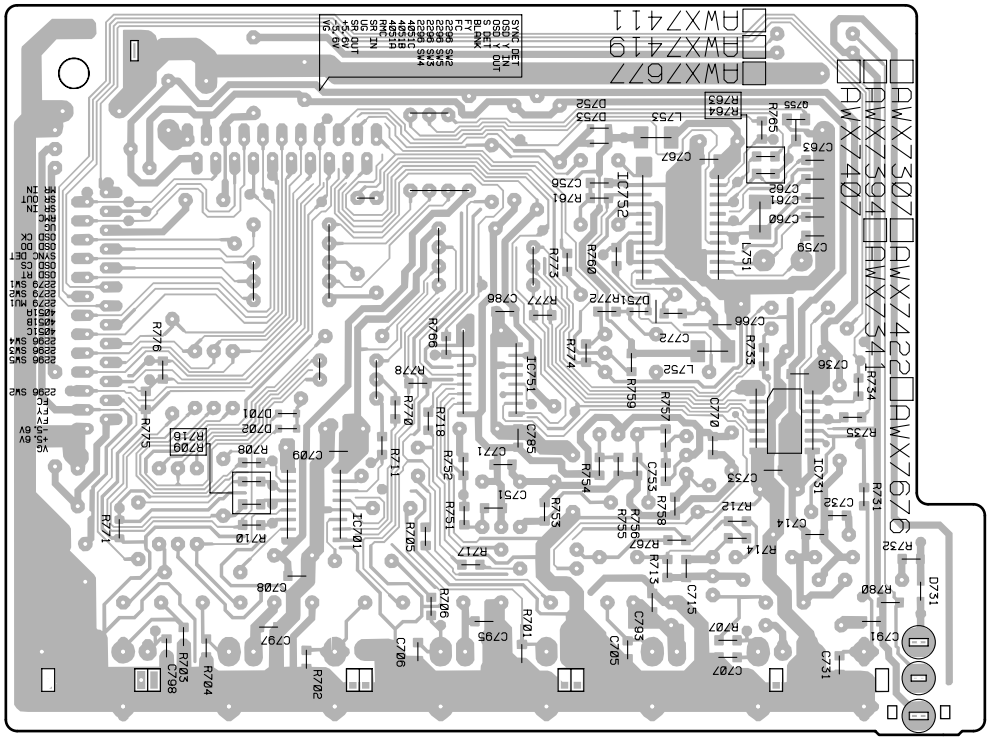

SIDE B

(ANP7307-C)

4.9 S-VIDEO ASSY

Q S-VIDEO ASSY

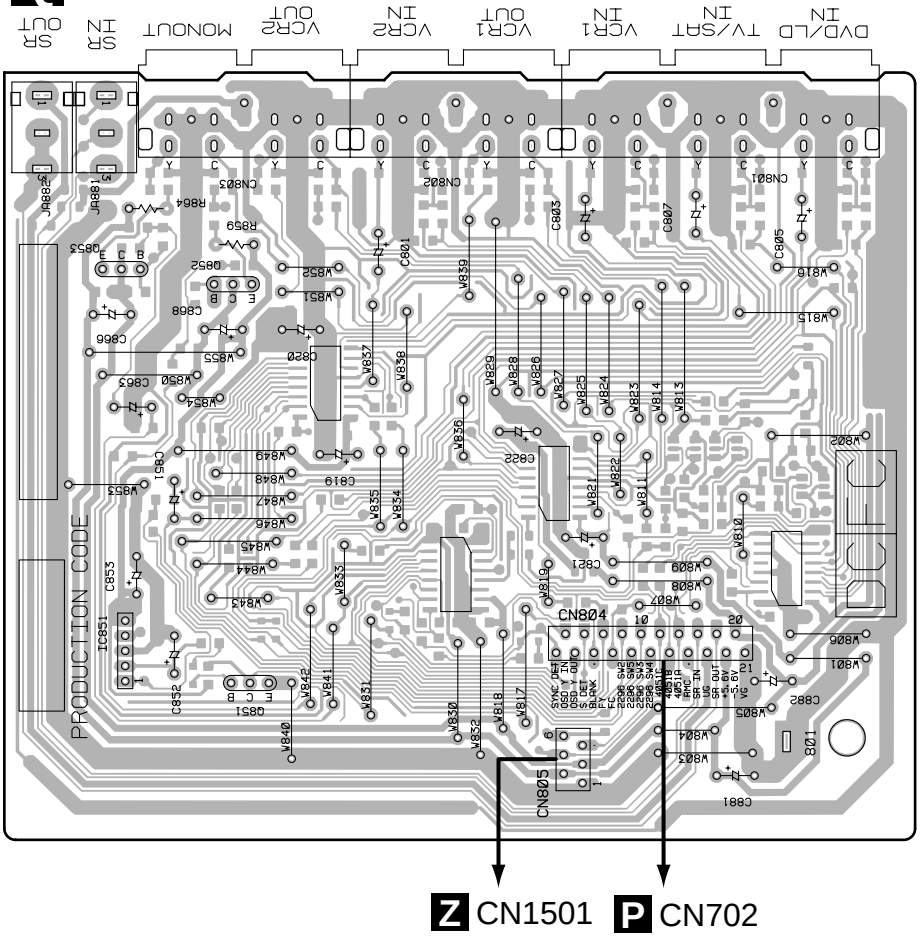

Q853 Q852

IC851 Q851

SIDE A

Q S-VIDEO ASSY

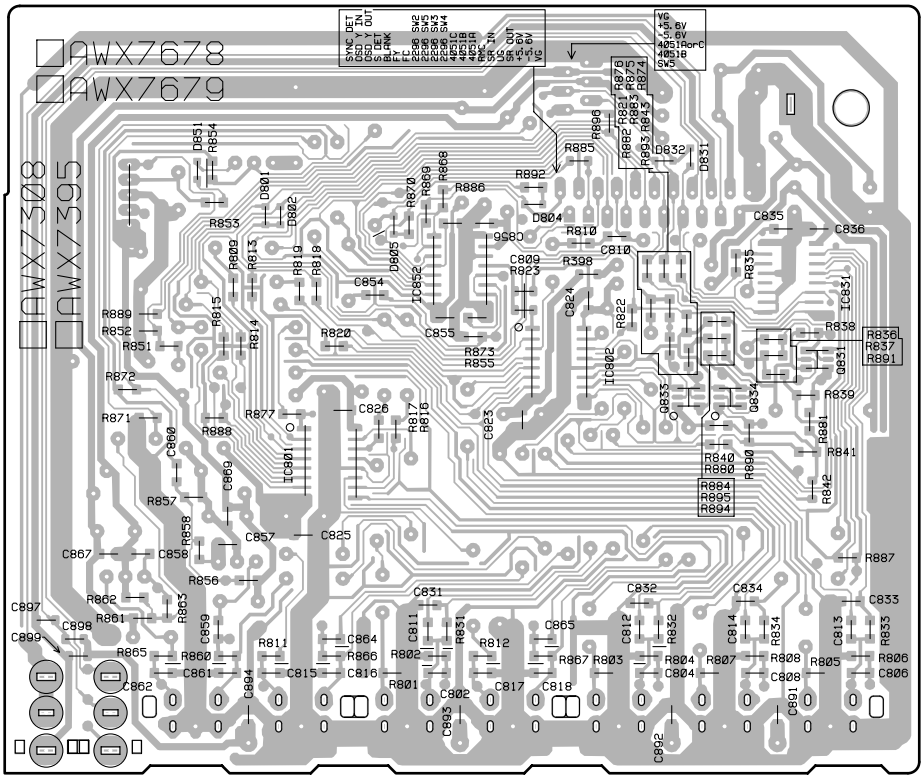

IC852 IC831

IC802 Q831

Q833 Q834

IC801

SIDE B

(ANP7307-C)

4.10 H. PHONE/F. VIDEO, DISPLAY, ROTARY ENCODER and VOLUME ASSYS

U VOLUME ASSY

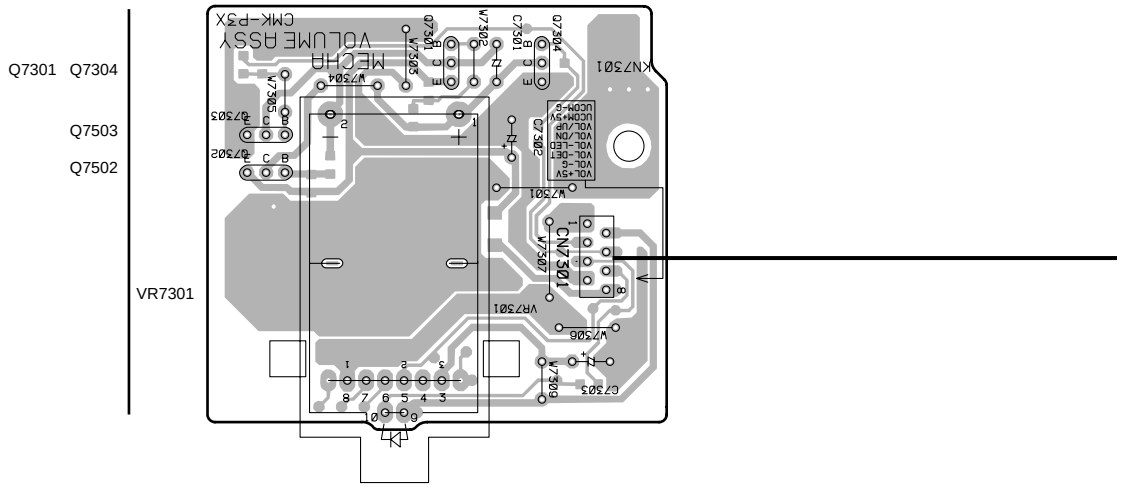

S DISPLAY ASSY

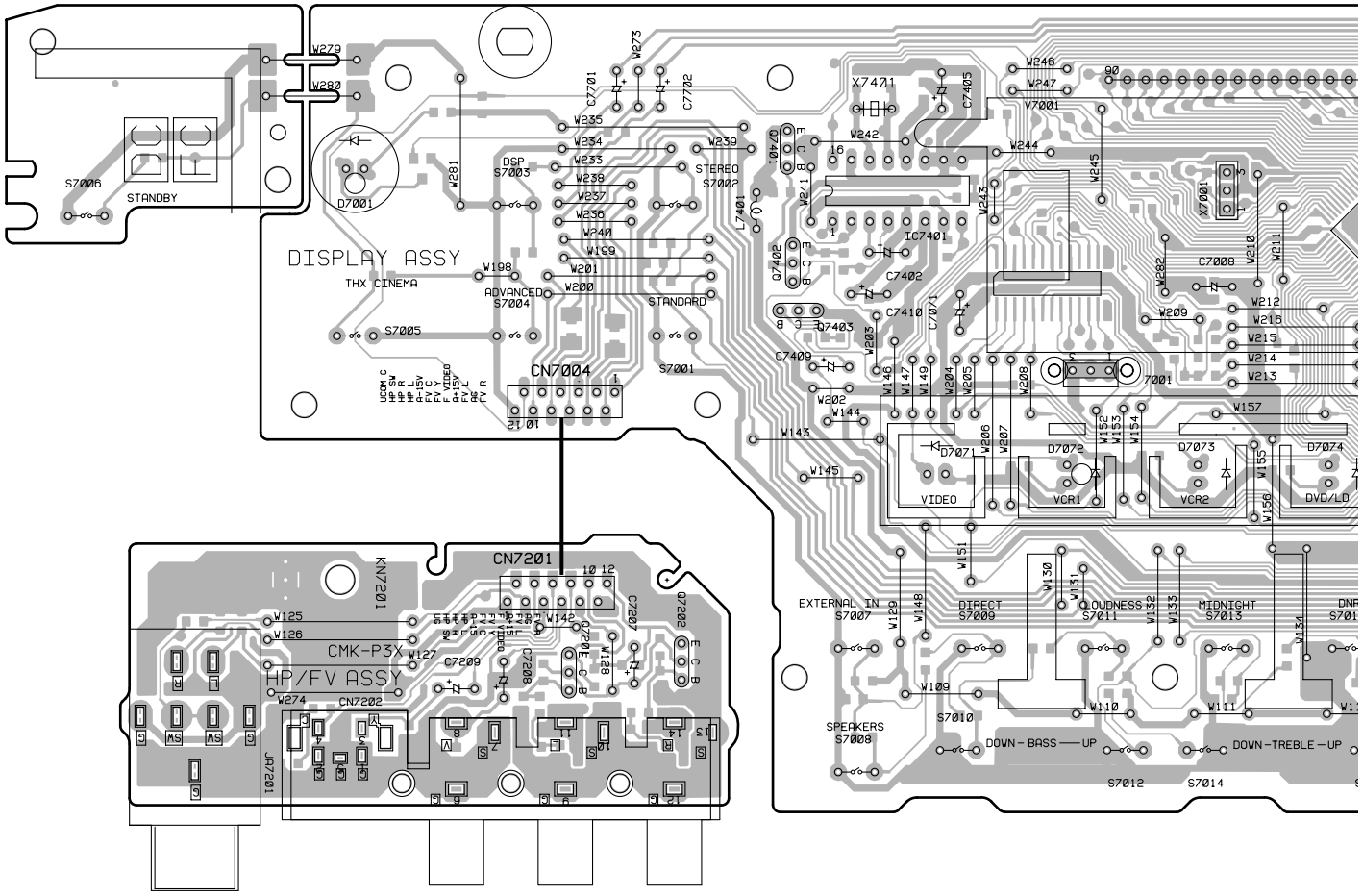

R H. PHONE/F. VIDEO ASSY

Q7201 Q7202

Q7401 IC7401
Q7403

T ROTARY ENCODER ASSY

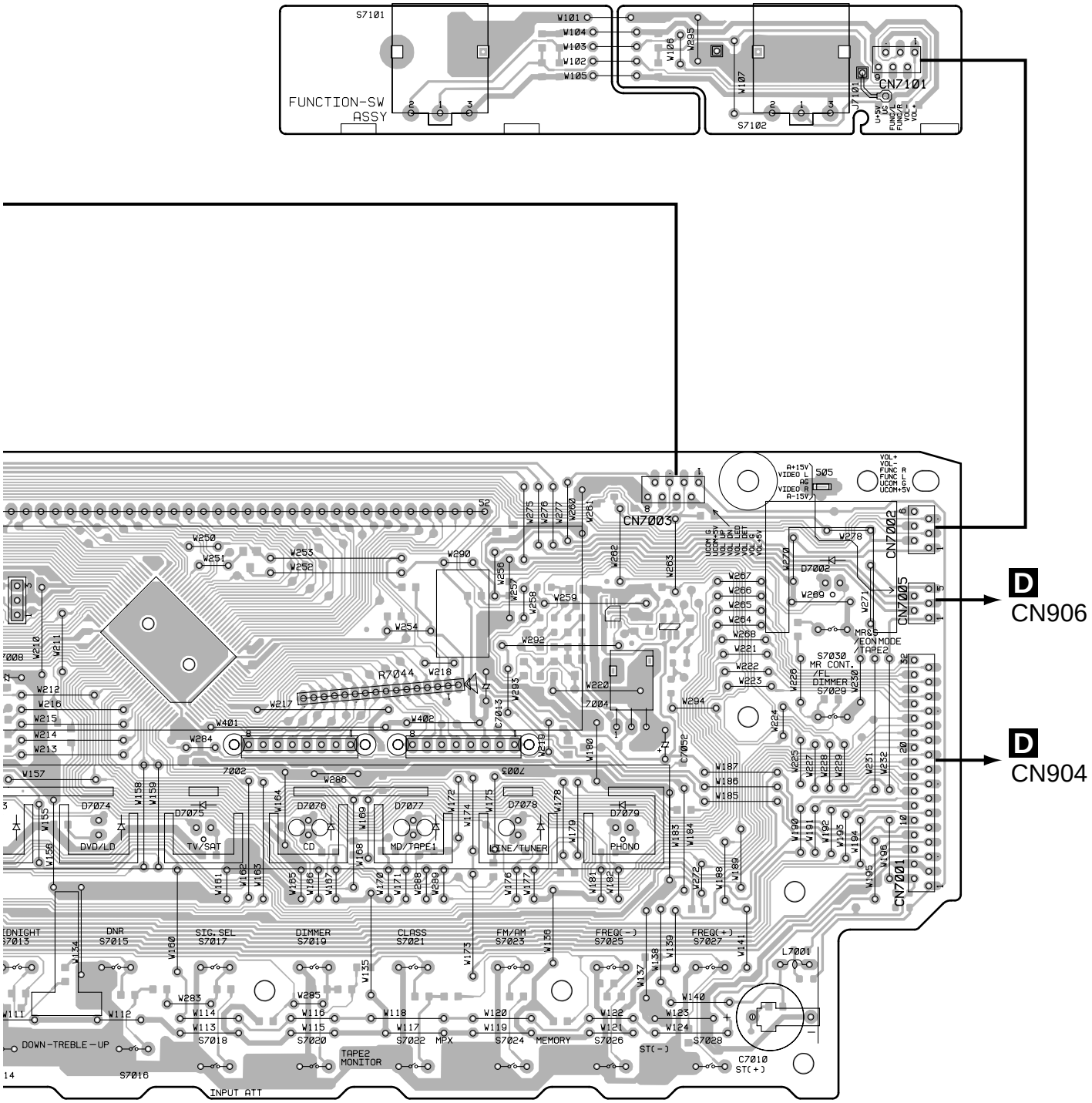

(ANP7310-D)

T ROTARY ENCODER ASSY

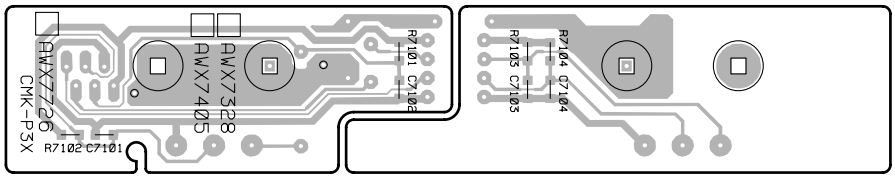

S DISPLAY ASSY

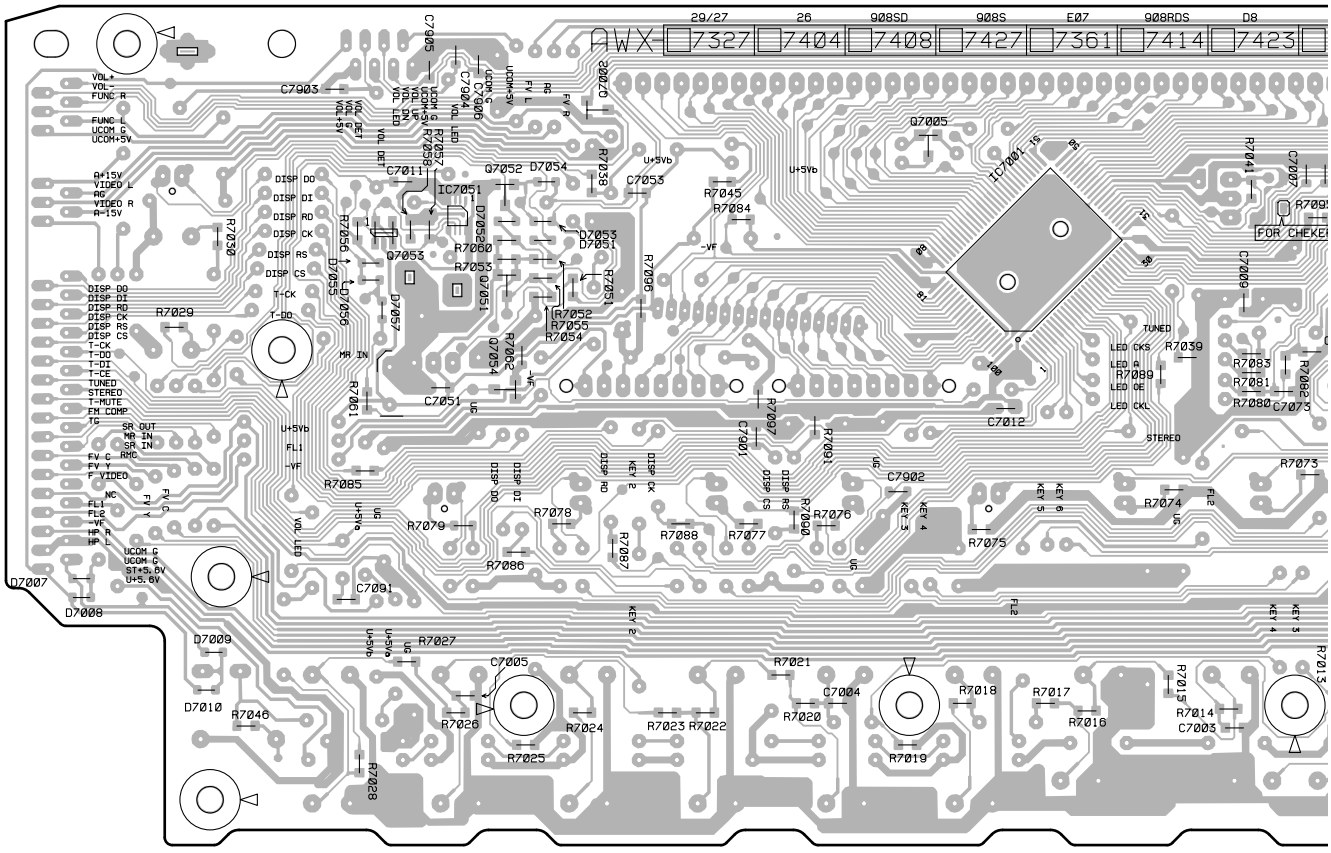

U VOLUME ASSY

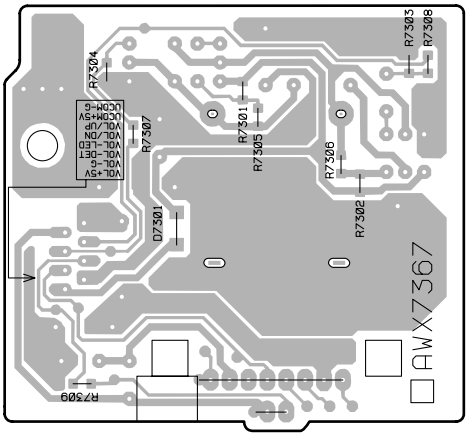

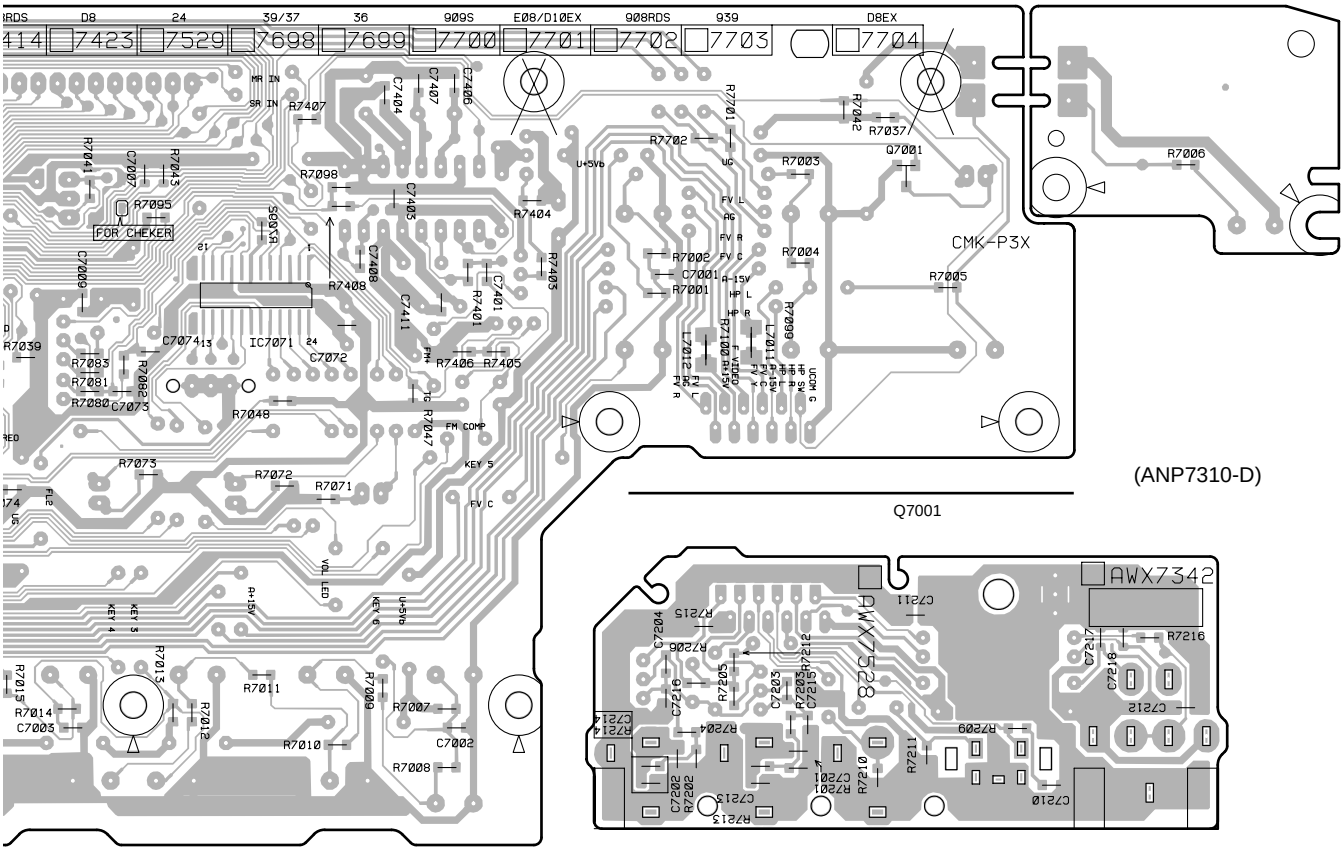

R H. PHONE/F. VIDEO ASSY

4.11 DSP ASSY

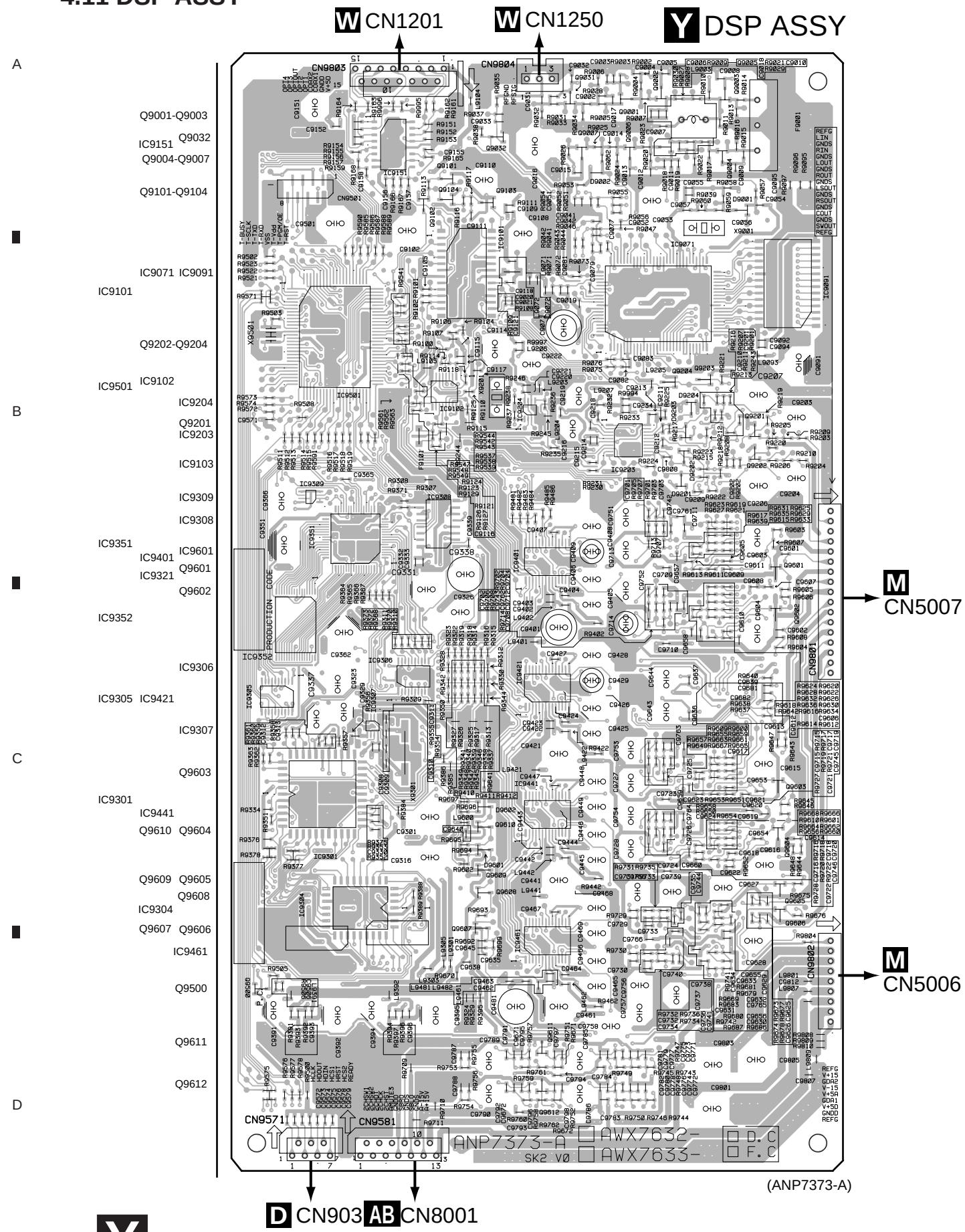
W CN1201
W CN1250
Y DSP ASSY
M CN5007
M CN5006
D CN903
AB CN8001
CN9803
CN9804
CN9801
CN9802
CN9571
CN9581
Q9001-Q9003
IC9151
Q9032
Q9004-Q9007
Q9101-Q9104
IC9071
IC9091
IC9101
Q9202-Q9204
IC9501
IC9102
IC9204
Q9201
IC9203
IC9103
IC9309
IC9308
IC9351
IC9401
IC9601
Q9601
IC9321
Q9602
IC9352
IC9306
IC9305
IC9421
IC9307
Q9603
IC9301
IC9441
Q9610
Q9604
Q9609
Q9605
Q9608
IC9304
Q9607
Q9606
IC9461
Q9500
Q9611
Q9612
ANP7373-A
AWX7632-
AWX7633-
D. C
F. C
SK2 V0
(ANP7373-A)
SIDE A

Y DSP ASSY

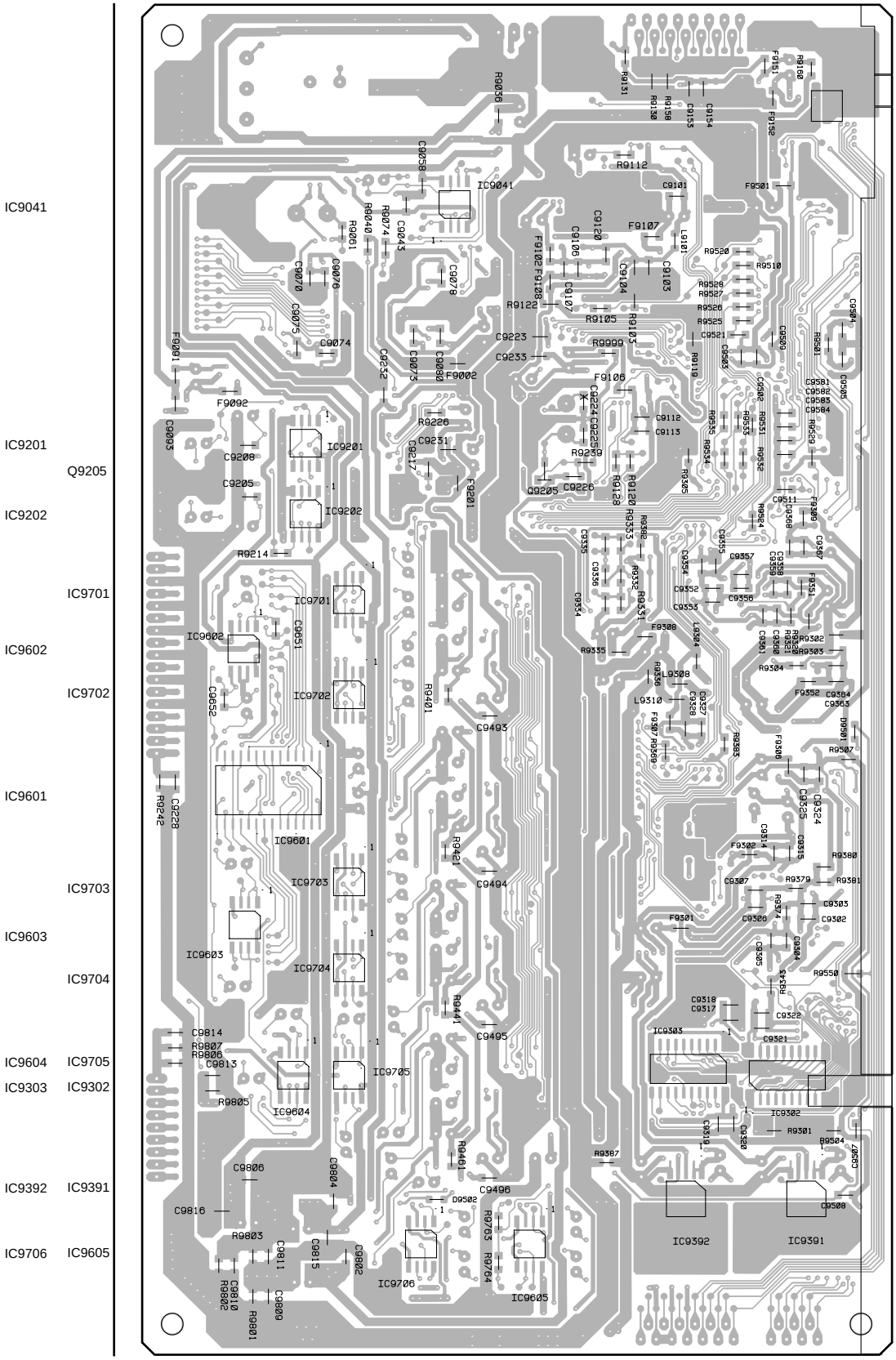

(ANP7373-A)

SIDE B

4.12 RF/DIGITAL IN, OPT OUT and COMPONENT ASSYS

X OPT OUT ASSY

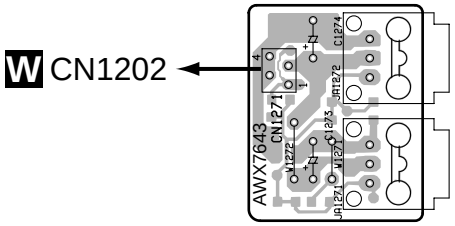

SIDE A

W RF / DIGITAL IN ASSY

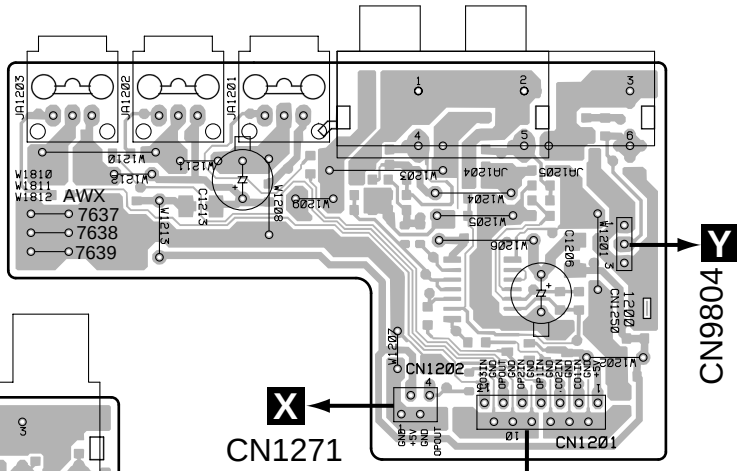

(ANP7371-A)

Z COMPONENT ASSY

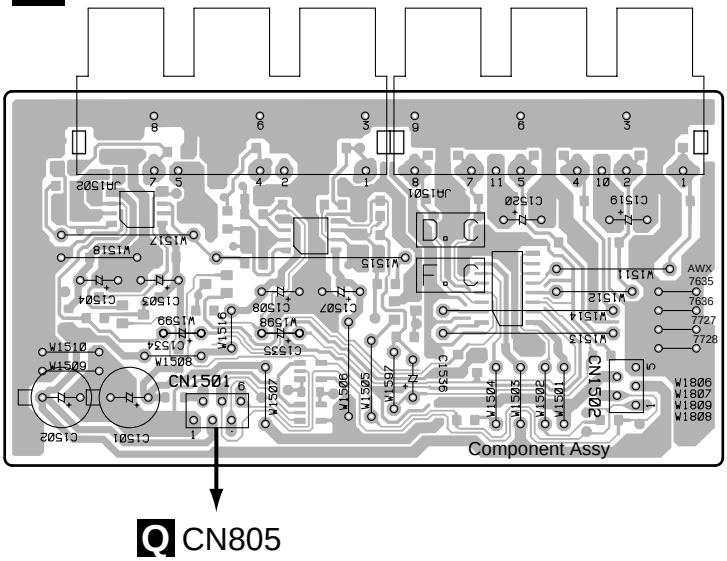

SIDE B

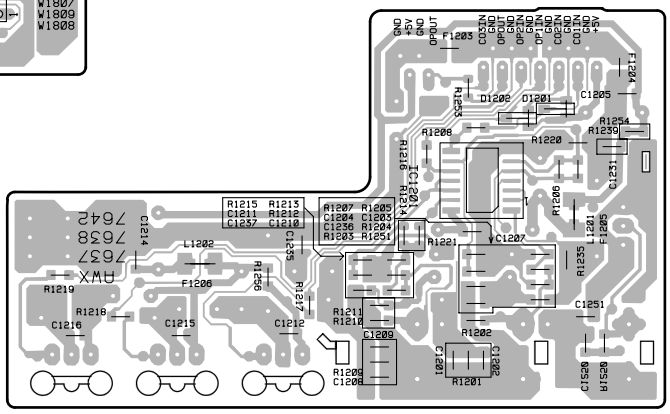

Z COMPONENT ASSY

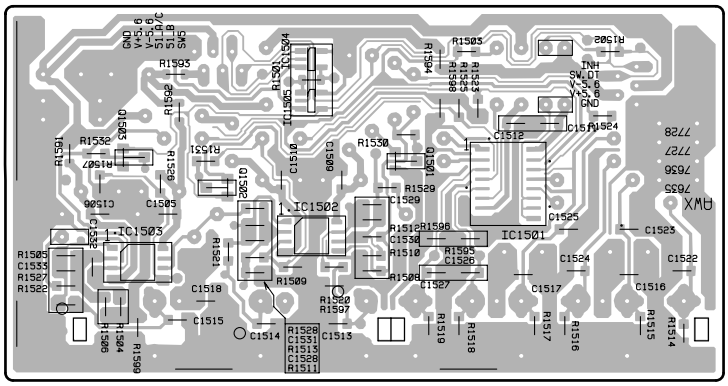

IC1503 Q1503 Q1502 IC1502 IC1504,IC1504 Q1501 IC1501

W RF / DIGITAL IN ASSY (ANP7371-A)

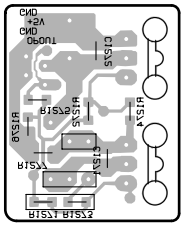

X OPT OUT ASSY

4.13 2CH I/O PJ and TRIM ASSYS

AB TRIM ASSY

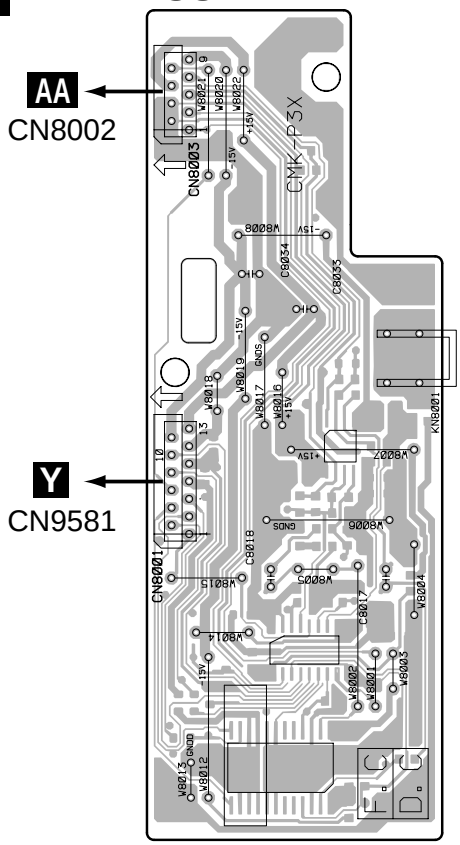

AA 2CH - I/O PJ ASSY

SIDE A

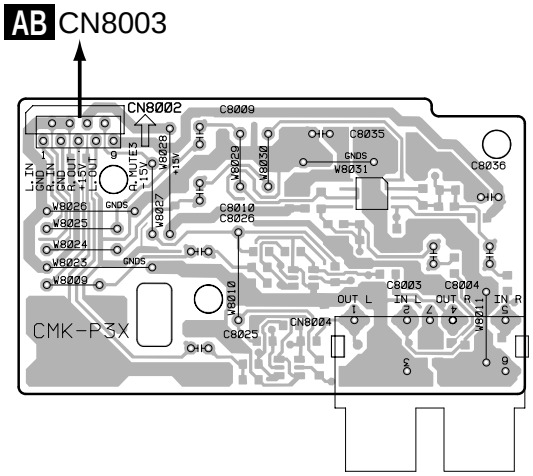

(ANP7372-A)

SIDE B

AB TRIM ASSY

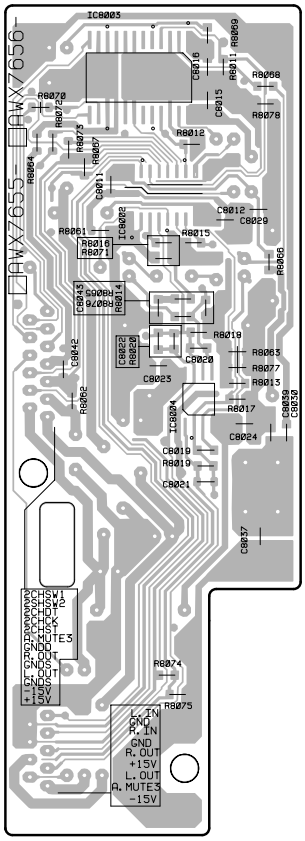

AA 2CH -I/O PJ ASSY

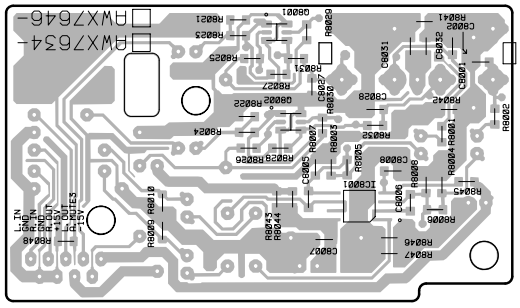

(ANP7372-A)

5. PCB PARTS LIST

NOTES: ● *The ⚠ mark found on some component parts indicates the importance of the safety factor of the part. Therefore, when replacing, be sure to use parts of identical designation.*

● *When ordering resistors, first convert resistance values into code form as shown in the following examples.*

Ex.1 When there are 2 effective digits (any digit apart from 0), such as 560 ohm and 47k ohm (tolerance is shown by J=5%, and K=10%).

560 Ω → 56×10^1 → 561 ..... RD1/4PU [5][6][1] J
47k Ω → 47×10^3 → 473 ..... RD1/4PU [4][7][3] J
0.5 Ω → R50 ..... RN2H [R][5][0] K
1 Ω → 1R0 ..... RS1P [1][R][0] K

Ex.2 When there are 3 effective digits (such as in high precision metal film resistors).

5.62k Ω → 562×10^1 → 5621 ..... RN1/4PC [5][6][2][1] F

■LIST OF WHOLE PCB ASSEMBLIES

Mark	Symbol and Desacription	Part No.				Remarks
		VSX-39TX	VSX-37TX	VSX-36TX	VSX-D909S	
NSP	MAIN ASSY	AWK7640	AWK7641	AWK7642	AWK7643	
	├─ MAIN CONTROL ASSY	AWX7705	AWX7706	AWX7707	AWX7708	
	├─ VIDEO ASSY	AWX7307	AWX7394	AWX7394	AWX7394	
	└─ S-VIDEO ASSY	AWX7678	AWX7679	AWX7679	AWX7679	
NSP	COMPLEX ASSY	AWK7497	AWK7522	AWK7522	AWK7522	
	├─ REGULATOR ASSY	AWX7310	AWX7310	AWX7310	AWX7310	
	├─ PRIMARY ASSY	AWX7311	AWX7311	AWX7311	AWX7311	
NSP	├─ A-PINJACK ASSY	AWX7312	AWX7397	AWX7397	AWX7397	
	├─ CONNECTION ASSY	AWX7313	AWX7313	AWX7313	AWX7313	
NSP	├─ EXTRA-5.1 ASSY	AWX7314	Not used	Not used	Not used	
	├─ EXTERNAL IN ASSY	Not used	AWX7398	AWX7398	AWX7398	
	├─ TRANS 2-2 ASSY	AWX7366	AWX7366	AWX7366	AWX7366	
NSP	└─ TRANS 1 ASSY	AWX7316	AWX7316	AWX7316	AWX7316	
NSP	COMPLEX 2 ASSY	AWK7626	AWK7627	AWK7628	AWK7628	
	├─ COMPONENT ASSY	AWX7635	AWX7636	AWX7636	AWX7636	
	├─ RF / DIGITAL IN ASSY	AWX7637	AWX7638	AWX7642	AWX7642	
NSP	└─ OPT OUT ASSY	AWX7643	AWX7643	AWX7643	AWX7643	
NSP	2CH I/O ASSY	AWK7636	AWX7637	AWX7637	AWX7637	
	├─ 2CH I/O PJ ASSY	AWX7634	AWX7646	AWX7646	AWX7646	
	└─ TRIM ASSY	AWX7655	AWX7655	AWX7655	AWX7655	
NSP	FRONT/VAMP ASSY	AWK7667	AWK7656	AWK7657	AWK7658	
	├─ V-AMP ASSY	AWX7729	AWX7309	AWX7309	AWX7409	
	├─ DISPLAY ASSY	AWX7698	AWX7698	AWX7699	AWX7700	
NSP	├─ ROTARY ENCODER ASSY	AWX7328	AWX7328	AWX7726	AWX7726	
	├─ H. PHONE/F. VIDEO ASSY	AWX7342	AWX7342	AWX7528	AWX7528	
	└─ VOLUME ASSY	AWX7367	AWX7367	Not used	Not used	
NSP	POWER/CURRENT ASSY	AWK7650	AWK7651	AWK7652	AWK7652	
NSP	├─ C-AMP-P ASSY	AWX7680	AWX7680	AWX7680	AWX7680	
	├─ C-AMP-N ASSY	AWX7681	AWX7681	AWX7681	AWX7681	
NSP	├─ OUTPUT-FL ASSY	AWX7682	AWX7682	AWX7682	AWX7682	
NSP	├─ OUTPUT-FR ASSY	AWX7683	AWX7683	AWX7683	AWX7683	
NSP	├─ OUTPUT-C ASSY	AWX7684	AWX7684	AWX7684	AWX7684	
NSP	├─ OUTPUT-SL ASSY	AWX7685	AWX7685	AWX7685	AWX7685	
NSP	├─ OUTPUT-SR ASSY	AWX7686	AWX7686	AWX7686	AWX7686	
NSP	├─ VL-TERMINAL ASSY	AWX7657	AWX7657	AWX7657	AWX7657	
	├─ TRANS 2-1 ASSY	AWX7659	AWX7694	AWX7695	AWX7695	
	├─ DIODE ASSY	AWX7660	AWX7697	AWX7697	AWX7697	
	└─ SP/PS ASSY	AWX7658	AWX7688	AWX7689	AWX7689	
	DSP ASSY	AWX7632	AWX7632	AWX7633	AWX7633	

■CONTRAST OF PCB ASSEMBLIES

D MAIN CONTROL ASSY

AWX7705, AWX7706, AWX7707 and AWX7708 are constructed the same except for the following :

Mark	Symbol and Desacription	Part No.				Remarks
		AWX7705	AWX7706	AWX7707	AWX7708	
	IC112	M5220FP	UPC4570G2	UPC4570G2	UPC4570G2	
	IC113	M5220L	UPC4570HA	UPC4570HA	UPC4570HA	
	IC114	M5220L	UPC4570HA	UPC4570HA	UPC4570HA	
	R921	Not used	Not used	RS1/10S103J	RS1/10S103J	
	R922	RS1/10S103J	RS1/10S103J	Not used	Not used	
	R923	Not used	RS1/10S103J	Not used	RS1/10S103J	
	R924	RS1/10S103J	Not used	RS1/10S103J	Not used	
	R925	RS1/10S103J	Not used	Not used	RS1/10S103J	
	R926	Not usd	RS1/10S103J	RS1/10S103J	Not used	
	CN902 13P CONNECTOR	HLEM13R	HLEM13R	HLEM13R	HLEM13S	
	CN941 4P PIN JACK	Not used	AKB7015	AKB7015	AKB7015	
	JA911 2P PIN JACK	Not used	DKB1045	DKB1045	DKB1045	
	JA931 2P PIN JACK	Not used	VKB1060	VKB1060	VKB1060	
	103 6P PIN JACK	AKB7088	Not used	Not used	Not used	
	113 6P PIN JACK	Not used	AKB7089	AKB7089	AKB7089	
	JA901, JA911 4P PIN JACK	AKB7075	Not used	Not used	Not used	

E V-AMP ASSY

AWX7729, AWX7309 and AWX7409 are constructed the same except for the following :

Mark	Symbol and Desacription	Part No.			Remarks
		AWX7729	AWX7309	AWX7409	
	IC7501, IC7521, IC7541, IC7601, IC7621	NJM2114MD	UPC4570G2	UPC4570G2	
	IC7502, IC7522, IC7542, IC7602, IC7622	NJM4558MD	NJM4558MD	Not used	
	Q7501, Q7521, Q7541, Q7601, Q7621	2SC2878	2SC2878	Not used	
	D7501, D7502, D7521, D7522, D7541, D7542	1SS355	1SS355	Not used	
	D7601, D7602, D7621, D7622	1SS355	1SS355	Not used	
	D7503, D7504, D7523, D7524, D7543, D7544	HZU2CLL	HZU2CLL	Not used	
	D7603, D7604, D7623, D7624	HZU2CLL	HZU2CLL	Not used	
	C7505, C7525, C7545, C7605, C7625	CCSQCH220J50	CCSQCH220J50	Not used	
	C7506, C7526, C7546, C7606, C7626	CEAT4R7M50	CEAT4R7M50	Not used	
	C7510, C7530, C7550, C7610, C7630	CKSQYB104K25	CKSQYB104K25	Not used	
	R7504, R7524, R7544, R7604, R7624	RS1/10S103J	RS1/10S103J	RS1/10S0R0J	
	R7509, R7529, R7549, R7609, R7629	RS1/10S103J	RS1/10S103J	Not used	
	R7507, R7508, R7510, R7527, R7528, R7530	RS1/10S334J	RS1/10S334J	Not used	
	R7547, R7548, R7550, R7607, R7608, R7610	RS1/10S334J	RS1/10S334J	Not used	
	R7627, R7628, R7630	RS1/10S334J	RS1/10S334J	Not used	
	R7511, R7531, R7551, R7611, R7631	RS1/10S102J	RS1/10S102J	Not used	
	R7512, R7513, R7516, R7517, R7532, R7533	RS1/10S473J	RS1/10S473J	Not used	
	R7536, R7537, R7552, R7553, R7556, R7557	RS1/10S473J	RS1/10S473J	Not used	
	R7612, R7613, R7616, R7617, R7632, R7633	RS1/10S473J	RS1/10S473J	Not used	
	R7636, R7637	RS1/10S473J	RS1/10S473J	Not used	
	R7514, R7534, R7554, R7614, R7634	RS1/10S101J	RS1/10S101J	Not used	
	R7515, R7518, R7535, R7538, R7555, R7558	RS1/10S105J	RS1/10S105J	Not used	
	R7615, R7618, R7635, R7638	RS1/10S105J	RS1/10S105J	Not used	
	R7641	RS1/10S914J	RS1/10S914J	Not used	
	R7653 - R7656, R7663 - R7666, R7673 - R7676	RS1/10S0R0J	RS1/10S0R0J	Not used	
	R7683 - R7686, R7693 - R7696	RS1/10S0R0J	RS1/10S0R0J	Not used	

B A-PINJACK ASSY

AWX7312 and AWX7397 are constructed the same except for the following :

Mark	Symbol and Desacription	Part No.		Remarks
		AWX7312	AWX7397	
	CN1014 6P PIN JACK	AKB7119	Not used	
	JA1011 - JA1013 4P PIN JACK	AKB7108	AKB7048	
	JA1015 4P PIN JACK	Not used	AKB7048	
	1016 2P PIN JACK	Not used	AKB7120	

P VIDEO ASSY

AWX7307 and AWX7394 are constructed the same except for the following :

Mark	Symbol and Desacription	Part No.		Remarks
		AWX7307	AWX7394	
	JA701 3P PIN JACK	AKB7109	Not used	
	JA703 3P PIN JACK	AKB7116	AKB7115	
	702 2P PIN JACK	AKB7076	Not used	
	707 1P PIN JACK	Not used	AKB7020	
	2P PIN JACK	Not used	AKB7017	

Q S-VIDEO ASSY

AWX7678 and AWX7679 are constructed the same except for the following :

Mark	Symbol and Desacription	Part No.		Remarks
		AWX7678	AWX7679	
	CN801 4P MINI DIN SOCKET	Not used	AKP7043	
	CN802, CN803 4P MINI DIN SOCKET	AKP7023	AKP7020	
	JA801 4P MINI DIN SOCKET	AKP7049	Not used	

S DISPLAY ASSY

AWX7698, AWX7699 and AWX7700 are constructed the same except for the following :

Mark	Symbol and Desacription	Part No.			Remarks
		AWX7698	AWX7699	AWX7700	
	IC7071	M66311FP	Not used	Not used	
	Q7002, Q7054	DTC124EK	DTC124EK	Not used	
	D7002	SLR-343DC(NPQ)	SLR-343DC(NPQ)	Not used	
	D7071 - D7079	SLR-343VR(MNP)	Not used	Not used	
	S7019, S7020	VSG1009	VSG1009	Not used	
	C7011, C7073, C7074	CKSQYB102K50	Not used	Not used	
	C7071	CEAL101M6R3	Not used	Not used	
	C7072	CKSQYB473K50	Not used	Not used	
	L7011, L7012	Not used	Not used	LCTA330J3225	
	R7038	RS1/10S271J	RS1/10S271J	Not used	
	R7042	RS1/10S103J	RS1/10S223J	RS1/10S223J	
	R7061	RS1/10S103J	RS1/10S103J	Not used	
	R7071 - R7079	RS1/10S271J	Not used	Not used	
	R7080 - R7083	RS1/10S102J	Not used	Not used	
	R7092	RS1/10S473J	Not used	Not used	
	R7099, R7100	RS1/10S0R0J	RS1/10S0R0J	Not used	
	CN7003 8P FFC CONNECTOR	52045-0845	Not used	Not used	
	505	VEF1040	Not used	Not used	

T ROTARY ENCODER ASSY

AWX7328 and AWX7726 are constructed the same except for the following :

Mark	Symbol and Desacription	Part No.		Remarks
		AWX7328	AWX7726	
	S7101	Not used	ASX7004	
	C7103, C7104	Not used	CKSQYB103K50	
	R7103, R7104	Not used	RS1/10S103J	

Y DSP ASSY

AWX7632 and AWX7633 are constructed the same except for the following :

Mark	Symbol and Desacription	Part No.		Remarks
		AWX7632	AWX7633	
	IC9041	NJM4558MD	Not used	
	IC9071	PM4007A	Not used	
	IC9091	LH52256CN-70LL	Not used	
	Q9001, Q9002, Q9004 - Q9006, Q9031	2SC3082K (NP)	Not used	
	Q9003, Q9032	2PD601A (QR)	Not used	
	Q9007	2PB709A (QR)	Not used	
	D9001	KV1851	Not used	
	D9002	1SS355	Not used	
	F9001	ATF7001	Not used	
	L9003	ATH7001	Not used	
	L9071	ATL7002	Not used	
	F9091, F9092	DTF1064	Not used	
	C9002 - C9006, C9008 - C9013, C9015, C9017	CKSRYF104Z16	Not used	
	C9018, C9031, C9032, C9051, C9052	CKSRYF104Z16	Not used	
	C9055, C9077, C9079, C9081, C9092	CKSRYF104Z16	Not used	
	C9043, C9058, C9073 - C9075, C9078, C9080	CKSQYF104Z25	Not used	
	C9007	CCSRCH750J50	Not used	
	C9014, C9054, C9056, C9070	CKSRYB103K50	Not used	
	C9016	CEJA470M25	Not used	
	C9033	CCSRCH101J50	Not used	
	C9041, C9042	CKSRYF105Z10	Not used	
	C9053	CEJQNP4R7M25	Not used	
	C9057	CCSRCH270J50	Not used	
	C9071	CEJQ101M10	Not used	
	C9076	CCSQCH271J50	Not used	
	C9091	CEJA470M16	Not used	
	C9095	CCSRCH221J50	Not used	
	R9002, R9010, R9011, R9018, R9038, R9053	RS1/16S103J	Not used	
	R9054, R9071, R9072	RS1/16S103J	Not used	
	R9003, R9019	RS1/16S512J	Not used	
	R9004, R9015, R9016, R9020	RS1/16S202J	Not used	
	R9005, R9006, R9014, R9021, R9022, R9025	RS1/16S102J	Not used	
	R9073	RS1/16S102J	Not used	
	R9007, R9023, R9033	RS1/16S220J	Not used	
	R9008, R9027, R9030	RS1/16S302J	Not used	
	R9009, R9074	RS1/16S221J	Not used	
	R9013, R9017, R9034	RS1/16S152J	Not used	
	R9024, R9026	RS1/16S332J	Not used	
	R9028, R9029	RS1/16S561J	Not used	
	R9031, R9032	RS1/16S333J	Not used	
	R9035	RS1/16S223J	Not used	
	R9036,R9091, R9095, R9096	RS1/16S0R0J	Not used	
	R9037, R9039	RS1/16S274J	Not used	
	R9041	RS1/16S472J	Not used	
	R9042, R9044, R9062	RS1/16S392J	Not used	
	R9043	RS1/16S273J	Not used	
	R9046	RS1/16S104J	Not used	
	R9047	RS1/16S432J	Not used	
	R9051	RS1/16S393J	Not used	
	R9052	RS1/16S243J	Not used	
	R9055	RS1/16S121J	Not used	
	R9056	RS1/16S683J	Not used	
	R9057 - R9059	RS1/16S473J	Not used	
	R9061	RS1/16S471J	Not used	
	R9075, R9076	RS1/16S101J	Not used	

Y DSP ASSY

Mark	Symbol and Desacription	Part No.		Remarks
		AWX7632	AWX7633	
	CN9804 3P PLUG	KM250MA3	Not used	
	X9001 CRYSTAL RESONATOR (18.432MHz)	ASS7009	Not used	

K DIODE ASSY

AWX7660 and AWX7697 are constructed the same except for the following :

Mark	Symbol and Desacription	Part No.		Remarks
		AWX7660	AWX7697	
	D3001, D3002	LN6SB60-4003	D5SBA20(B)	

W RF/DIGITAL IN ASSY

AWX7637, AWX7638 and AWX7642 are constructed the same except for the following :

Mark	Symbol and Desacription	Part No.			Remarks
		AWX7637	AWX7638	AWX7642	
	JA1204 2P PIN JACK	AKB7092	AKB7091	AKB7095	
	1200	VEF1040	VEF1040	Not used	

Z COMPONENT ASSY

AWX7635 and AWX7636 are constructed the same except for the following :

Mark	Symbol and Desacription	Part No.		Remarks
		AWX7635	AWX7636	
	JA1501 3P PIN JACK	AKB7127	AKB7128	
	JA1502 3P PIN JACK	AKB7125	AKB7126	

J TRANS 2-1 ASSY

AWX7659, AWX7694and AWX7695 are constructed the same except for the following :

Mark	Symbol and Desacription	Part No.			Remarks
		AWX7659	AWX7694	AWX7695	
	C4501, C4503, C4504	ACH1237-A	Not used	Not used	
	C4502	ACH1237-A	ACH1237-A	Not used	
	C4509, C4510	CECA101M50	CEAT101M50	CEAT101M50	
	C4511, C4512	ACH1237-A	Not used	Not used	
	C4513	ACH1237-A	ACH1237-A	Not used	
	D4513	Not used	Not used	MTZJ16B	
	Q4503	Not used	Not used	DTC143ES	
	Q4504	Not used	Not used	DTA143ES	
	Q4505	Not used	Not used	DTC124ES	
	R4501, R4503, R4511	RFA1/4PS100J	Not used	Not used	
	R4502, R4504	RFA1/4PS100J	RFA1/4PS100J	Not used	

R H. PHONE / F. VIDEO ASSY

Although AWX7343 and AWX7528 are different in part number, they consist of the same components.

A A 2CH I/O PJ ASSY

AWX7634 and AWX7646 are constructed the same except for the following :

Mark	Symbol and Desacription	Part No.		Remarks
		AWX7634	AWX7646	
	CN8004	AKB7129	AKB7087	

L SP / PS ASSY

AWX7658, AWX7688 and AWX7689 are constructed the same except for the following :

Mark	Symbol and Desacription	Part No.			Remarks
		AWX7658	AWX7688	AWX7689	
	C3001, C3002	ACH7147	ACH7068	ACH7130	
	C3119 - C3122	CEAT470M50	Not used	Not used	
	L3001, L3002	ATX1012	ATX1012	Not used	
	Q3005	Not used	Not used	DTA124ES	
	RY3101, RY3103, RY3104	ASR-109	ASR7014	ASR7014	

■ PCB PARTS LIST FOR VSX-39TX/KU/CA

Mark	No.	Description	Part No.
A		**EXTRA-5.1 ASSY**	
		CAPACITORS	
	C1107-C1112		CEAT4R7M50
	C1113-C1115		CKCYF103Z50
		RESISTORS	
	All Resistors		RD1/4PU□□□J
		OTHERS	
	JA1101-JA1103	2P PIN JACK	AKB7121
	CN1101	8P SOCKET	KP200TA8L
A		**EXTERNAL IN ASSY**	
		CAPACITORS	
	C1107-C1112		CEAT4R7M50
	C1113-C1115		CKCYF103Z50
		RESISTORS	
	All Resistors		RD1/4PU□□□J
		OTHERS	
	JA1101-JA1103		AKB7121
	CN1101	8P SOCKET	KP200TA8L

Mark	No.	Description	Part No.
B		**A-PINJACK ASSY**	
		CAPACITORS	
	C1019-C1022		CKCYF103Z50
		RESISTORS	
	All Resistors		RD1/4PU□□□J
		OTHERS	
	JA1011-JA1013	4P PIN JACK	AKB7108
	CN1014	6P PIN JACK	AKB7119
	CN1001	18P SOCKET	KP200TA18L
	CN1002	4P SOCKET	KP200TA4L
C		**CONNECTION ASSY**	
		SEMICONDUCTORS	
	IC1351		M5220P
	IC1301-IC1303		NJM4558D-D
		CAPACITORS	
	C1351,C1352		CEAT100M50
	C1365,C1366		CEAT101M16
	C1363,C1364		CEAT2R2M50

Mark	No.	Description	Part No.
	C1357,C1358		CEAT470M25
	C1307-C1312		CEAT4R7M50
	C1313-C1318		CKCYF103Z50
	C1361,C1362		CQMA242J50
	C1359,C1360		CQMBA822J50

RESISTORS

	All Resistors		RD1/4PU□□□J

OTHERS

	CN1351	18P PLUG	KM200TA18
	CN1352	4P PLUG	KM200TA4
	CN1301	8P PLUG	KM200TA8
	CN1302	10P SOCKET	KP200TA10L
	CN1353	20P SOCKET	KP200TA20L

D MAIN CONTROL ASSY

SEMICONDUCTORS

	IC102		BU4052BCF
	IC110		M62429FP
	IC103,IC105,IC109		NJM4558MD
	IC901		PD5589A
	IC104,IC107		TC9163AF
	IC101		TC9274N-001
	IC108		TC9482N
	IC112		M5220FP
	IC113,IC114		M5220L
	Q991		2SC1740S
	Q251,Q252		2SC2412K
	Q113,Q114,Q271,Q272		2SC2878
	Q902-Q905		DTA124EK
	Q901		DTC143EK
	Q107-Q112		HN1C03F
	D254,D255,D901-D910,D991		1SS355
	D995		UDZ11B
	D201,D202,D256		UDZS5.1B

COIL

	L901	CHIP COIL	LCTA2R2J3225

CAPACITORS

	C902		ACH7058
	C951-C964		CCSQCH101J50
	C157,C158,C167,C168,C177		CCSQCH560J50
	C111,C112,C117,C118		CEAT100M50
	C127-C130,C141,C142		CEAT100M50
	C145,C146,C149,C150		CEAT100M50
	C153,C154,C159,C160		CEAT100M50
	C163,C164,C169,C170		CEAT100M50
	C173,C174,C179,C180		CEAT100M50
	C255,C256,C277,C278		CEAT100M50
	C123-C126,C991		CEAT101M16
	C147,C148,C257		CEAT1R0M50
	C903		CEAT221M10
	C121,C122		CEAT221M16
	C905		CEAT2R2M50
	C915		CEAT331M10
	C107,C108,C115,C116		CKSQYB103K50
	C133-C140,C143,C144		CKSQYB103K50
	C161,C162,C279,C280,C901		CKSQYB103K50
	C904,C908,C909,C914,C919		CKSQYB103K50

Mark	No.	Description	Part No.
	C965		CKSQYB103K50
	C273,C274		CKSQYB104K25
	C275,C276		CKSQYB332K50
	C178		CKSQYB333K50
	C271,C272		CKSQYB472K50
	C910,C912		CKSQYB473K50
	C906		CKSQYF105Z16
	C992		CKSQYF225Z16

RESISTORS

	R948		RA12T473J
	R913		RA5T103J
	R949		RA8T103J
	R109		RD1/2VM391J
	Other Resistors		RS1/10S□□□J

OTHERS

	X901	CERAMIC RESONATOR (4.19MHz)	ASS1018
	CN903	7P FFC CONNECTOR	HLEM7R-1
	CN902	13P FFC CONNECTOR	HLEM13R-1
	CN906	5P FFC CONNECTOR	HLEM5S-1
	CN105	23P FFC CONNECTOR	HLEM23S-1
	CN905	26P FFC CONNECTOR	HLEM26S-1
	CN904	32P FFC CONNECTOR	HLEM32S-1
	CN901,CN911	4P PIN JACK	AKB7075
	103	6P PIN JACK	AKB7088
	CN103	10P PLUG	KM200TA10
	CN101	20P PLUG	KM200TA20
	CN104	16P SOCKET	KP200IA16L
	CN901	15P SOCKET	KP200TA15L
	CN920	7P SOCKET	KP200TA7L
	CN108	9P SOCKET	KP200TA9L
	909,912,913	PCB BINDER	VEF1040

E V-AMP ASSY

SEMICONDUCTORS

	IC581		BU4052BCF
	IC7502,IC7522,IC7542,IC7602,IC7622		NJM4558MD
	IC7501,IC7521,IC7541,IC7601,IC7621		NJM2114MD
	Q503,Q523,Q543,Q603,Q623		2SA1048
⚠	Q506,Q509,Q526,Q529,Q546		2SA970
⚠	Q549,Q606,Q609,Q626,Q629		2SA970
⚠	Q507,Q508,Q527,Q528		2SC2240
⚠	Q547,Q548,Q607,Q608		2SC2240
	Q561		2SC2240
⚠	Q627,Q628		2SC2240
	Q510,Q530,Q550,Q610,Q630		2SC2878
	Q7501,Q7521,Q7541,Q7601,Q7621		2SC2878
	Q501,Q521,Q541,Q601,Q621		FMS3
	Q504,Q524,Q544,Q604,Q624		FMW4
	D501,D502,D504,D505		1SS355
	D521,D522,D524,D525		1SS355
	D541,D542,D544,D545		1SS355
	D581-D588,D601,D602		1SS355
	D604,D605,D621,D622		1SS355
	D624,D625,D7501,D7502		1SS355
	D7521,D7522,D7541,D7542		1SS355
	D7601,D7602,D7621,D7622		1SS355
	D7503,D7504,D7523,D7524		HZU2CLL

Mark	No.	Description	Part No.
	D7543,D7544,D7603,D7604		HZU2CLL
	D7623,D7624		HZU2CLL
	D503,D523,D543,D603,D623		UDZS6.8B
⚠	D506,D526,D546,D606,D626		UDZS8.2B

CAPACITORS

	C511,C512,C531,C532		CCCSL181K2H
	C551,C552,C611,C612		CCCSL181K2H
	C631,C632		CCCSL181K2H
	C509,C529,C549,C609,C629		CCCSL5R0C2H
	C504,C524,C544,C604,C624		CCSQCH101J50
	C7504,C7505,C7524,C7525		CCSQCH220J50
	C7544,C7545,C7604,C7605		CCSQCH220J50
	C7624,C7625		CCSQCH220J50
	C502,C522,C542,C602,C622		CCSQCH221J50
	C506,C507,C526,C527		CCSQSL560J50
	C546,C547,C606,C607		CCSQSL560J50
	C626,C627		CCSQSL560J50
	C7501,C7521,C7541,C7601,C7621		CEAT100M50
	C505,C508,C525,C528,C545		CEAT101M16
	C548,C605,C608,C625,C628		CEAT101M16
	C510,C530,C550,C610,C630		CEAT470M16
	C513,C533,C553,C568,C569		CEAT470M50
	C613,C633		CEAT470M50
	C501,C521,C541,C601,C621		CEAT4R7M50
	C7506,C7526,C7546,C7606,C7626		CEAT4R7M50
	C7502,C7503,C7510,C7512		CKSQYB104K25
	C7522,C7523,C7530,C7532		CKSQYB104K25
	C7542,C7543,C7550,C7552		CKSQYB104K25
	C7602,C7603,C7610,C7612		CKSQYB104K25
	C7622,C7623,C7630,C7632		CKSQYB104K25
	C561-C565		CKSQYB222K50
	C503,C523,C543,C603,C623		CKSQYB332K50
	C570		CKSQYF223Z50
	C581,C582		CKSQYF225Z16

RESISTORS

	R518,R538,R558,R618,R638		RD1/4MUF473J
⚠	R513,R514,R533,R534		RS1/10S121J
⚠	R553,R554,R613,R614		RS1/10S121J
⚠	R633,R634		RS1/10S121J
	Other Resistors		RS1/10S□□□J

OTHERS

	CN501	23P FFC CONNECTOR	52045-2345
	CN502	28P FFC CONNECTOR	52045-2845
	CN504	3P PLUG	KM250MA3
	506	PCB BINDER	VEF1040

F C-AMP-N ASSY

SEMICONDUCTORS

	Q2503,Q2523,Q2543,Q2603,Q2623		2SA970
	Q2001,Q2002		2SC1740S
	Q2502,Q2522,Q2542,Q2602,Q2622		2SC4137
⚠	Q2501,Q2521,Q2541,Q2601,Q2621		IRF540A
	D2501-D2504,D2521-D2524		1SS133
	D2541-D2544,D2601-D2604		1SS133
	D2621-D2624		1SS133

CAPACITORS

	C2501,C2521,C2541,C2601,C2621		CEANPR22M50
	C2001		CEAT101M10

Mark	No.	Description	Part No.

RESISTORS

⚠	R2506,R2510,R2526,R2530,R2546		RD1/4PUF391J
⚠	R2550,R2606,R2610,R2626,R2630		RD1/4PUF391J
⚠	R2501,R2521,R2541,R2601,R2621		RD1/4PUF470J
	VR2501,VR2521,VR2541,VR2601 (22Ω)		RCP1134
	VR2621 (22Ω)		RCP1134
	Other Resistors		RD1/4PU□□□J

OTHERS

	CN2001	28P FFC CONNECTOR	HLEM28S-1
	CN2501,CN2521,CN2541,CN2601	7P PLUG	KM250NA7L
	CN2621	8P PLUG	KM250NA8L

G C-AMP-P ASSY

SEMICONDUCTORS

⚠	Q2504,Q2524,Q2544,Q2604,Q2624		IRF9540A

RESISTORS

⚠	R2511,R2531,R2551,R2611,R2631		RD1/4PUF470J

OTHERS

	CN2504,CN2524,CN2544,CN2604	5P PLUG	KM250NA5L
	CN2624	5P PLUG	KM250NA5L

HA OUTPUT-SL ASSY

RESISTOR

⚠	R2612 (0.05Ω/5W)		ACN7097

OTHERS

	CN2603	5P SOCKET	KP250NA5
	CN2602	7P SOCKET	KP250NA7

HB OUTPUT-FL ASSY

RESISTOR

⚠	R2512 (0.05Ω/5W)		ACN7097

OTHERS

	CN2503	5P SOCKET	KP250NA5
	CN2502	7P SOCKET	KP250NA7

HC OUTPUT-C ASSY

RESISTOR

⚠	R2552 (0.05Ω/5W)		ACN7097

OTHERS

	CN2543	5P SOCKET	KP250NA5
	CN2542	7P SOCKET	KP250NA7

Mark	No.	Description	Part No.

HD OUTPUT-FR ASSY

RESISTOR

⚠	R2532 (0.05Ω/5W)		ACN7097

OTHERS

	CN2523	5P SOCKET	KP250NA5
	CN2522	7P SOCKET	KP250NA7

HE OUTPUT-SR ASSY

RESISTOR

⚠	R2632 (0.05Ω/5W)		ACN7097

OTHERS

	CN2623	5P SOCKET	KP250NA5
	CN2622	8P SOCKET	KP250NA8

I VL-TERMINAL ASSY

CAPACITORS

	C2011,C2012		CEAT470M63

OTHERS

	KN2011,KN2012	GROUND PLATE	ANK-142

J TRANS 2-1 ASSY

SEMICONDUCTORS

⚠	IC4501,IC4502 (2.5A)		AEK7014
⚠	Q4502		2SA1837
⚠	Q4501		2SC4793
	D4509,D4510		MTZJ12B
	D4505-D4508		MTZJ20A
⚠	D4501-D4504		S5688G
	D4511,D4512		S5688G

CAPACITORS

	C4501-C4504,C4511-C4513		ACH1237
	C4509,C4510		CECA101M50
	C4507,C4508		CEAT471M63

RESISTORS

⚠	R4509,R4510		RD1/4PMF332J
	R4501-R4504,R4511		RFA1/4PS100J
	Other Resistors		RD1/4PU□□□J

OTHERS

	4001	9P CABLE HOLDER	51048-0900
	H4501-H4504	FUSE CLIP	AKR1004
	4501,4502	HEAT SINK	ANH-309
	4503,4504	SCREW	BPZ30P080FZK

K DIODE ASSY

SEMICONDUCTORS

⚠	D3001,D3002		LN6SB60-4003

L SP/PS ASSY

SEMICONDUCTORS

	Q3156-Q3159		DTA124ES
	Q3151-Q3155		DTC143ES
	D3051,D3053,D3055,D3057,D3059		1SS133

COILS AND FILTERS

	L3101-L3105	AF CHOKE COIL	ATH1053
	L3001,L3002	CHIP BEAD	ATX1012

RELAYS

	RY3101,RY3103,RY3104		ASR-109
	RY3102,RY3105		ASR7014

CAPACITORS

	C3001,C3002 (22000µF/56V)		ACH7147
	C3118-C3122		CEAT470M50
	C3101-C3105		CFTYA104J50
	C3111-C3117		CQHA102J2A

RESISTORS

	R3151-R3155		RD1/2PM331J
⚠	R3101-R3105		RD1/4PMF4R7J
	R3001,R3002		RD1/4PMF473J
⚠	R3106-R3110		RS1LMF4R7J
⚠	R3131,R3132		RS2LMF331J
	Other Resistors		RD1/4PM□□□J

OTHERS

	3004	8P CABLE HOLDER	51048-0800
	3001	9P CABLE HOLDER	51048-0900
	CN3003	14P FFC CONNECTOR	HLEM14S-1
	CN3101	8P SPEAKER TERMINAL	AKE7058
	CN3102	6P SPEAKER TERMINAL	AKE7060
	J3002	JUMPER WIRE 8P	D20PYY0825E
	J3001	JUMPER WIRE 9P	D20PYY0915E
	CN3001	4P PLUG	KM200TA4

M REGULATOR ASSY

SEMICONDUCTORS

⚠	IC5009,IC5010 (200mA)		AEK7023
⚠	IC5004,IC5008		NJM78M05FA
⚠	IC5003		NJM78M12FA
⚠	IC5001		NJM78M15FA
⚠	IC5005,IC5007		NJM78M56FA
⚠	IC5006		NJM79M05FA
⚠	IC5002		NJM79M15FA
	D5010,D5051		1SS133
⚠	D5009		D3SBA20(B)
	D5012-D5014		MTZJ10C
	D5011		MTZJ5.1B
⚠	D5001-D5008,D5015-D5017		S5688G

Mark	No.	Description	Part No.
CAPACITORS			
	C5015,C5017,C5019,C5021,C5023		CEAT101M10
	C5009,C5011,C5013,C5025		CEAT101M25
	C5024		CEAT101M50
	C5051		CEAT221M10
	C5026		CEAT221M35
	C5027,C5028		CEAT221M50
	C5001,C5003,C5006		CEAT222M25
	C5002,C5004		CEAT222M35
	C5005		CEAT332M25
	C5007		CEAT472M16
	C5008,C5010,C5012,C5014,C5016		CKCYF103Z50
	C5018,C5020,C5022		CKCYF103Z50
RESISTORS			
	R5001-R5003		RD1/2PM620J
OTHERS			
	5009	4P CABLE HOLDER	51048-0400
	CN5002	14P FFC CONNECTOR	52045-1445
	CN5001	8P JUMPER CONNECTOR	52147-0810
	J5000	BOARD IN WIRE	DB022ND0
	CN5004	16P PLUG	KM200IA16
	CN5005	15P PLUG	KM200TA15
	CN5007	17P PLUG	KM200TA17
	CN5008	7P PLUG	KM200TA7
	CN5003,CN5006	9P PLUG	KM200TA9
	KN5001,KN5002		VNF1084
		EARTH METAL FITTING	

N TRANS 1 ASSY

TRANS 1 Assy has no service parts.

O TRANS 2-2 ASSY

Mark	No.	Description	Part No.
SEMICONDUCTOR			
⚠	IC5501 (4A)		AEK7018
OTHERS			
	5501	4P CABLE HOLDER	51048-0400

P VIDEO ASSY

Mark	No.	Description	Part No.
SEMICONDUCTORS			
	IC751		BU4053BCF
	IC752		LC74782M-9011
	IC731		NJM2279M
	IC701		NJM2296M
	Q701		2SA933S
	Q751-Q754		2SC1740S
	Q755		DTC124EK
	D701,D702,D731,D751-D753		1SS355
COILS			
	L752,L753	CHIP COIL	LCTA100J3225
	L751	CHIP COIL	LCTA330J3225
CAPACITORS			
	C753		CCSQCH100D50
	C763,C772		CCSQCH101J50
	C715,C759		CCSQCH150J50
	C760		CCSQCH180J50
	C705-C707,C731		CCSQCH181J50
	C761,C762		CCSQCH240J50
	C754		CEAT100M50
	C701-C704,C710-C712		CEAT101M10
	C734,C735,C755,C764,C765		CEAT101M10
	C781-C784		CEAT101M10
	C713,C768,C769		CEAT101M16
	C757		CEAT1R0M50
	C752		CEAT330M16
	C791,C795,C797		CKSQYB103K50
	C756		CKSQYB122K50
	C708,C709,C714,C732,C733		CKSQYB473K50
	C736,C766,C767,C770,C771		CKSQYB473K50
	C785,C786,C793		CKSQYB473K50
RESISTORS			
	R715		RD1/2VM201J
	Other Resistors		RS1/10S□□□J
OTHERS			
	X751	CRYSTAL RESONATOR (14.31818MHz)	ASS1056
	CN702	21P FFC CONNECTOR	52045-2145
	CN701	26P FFC CONNECTOR	52045-2645
	702	2P PIN JACK	AKB7076
	JA701	3P PIN JACK	AKB7109
	JA703	3P PIN AJCK	AKB7116
	JA705	MULTI HOME JACK	AKN7014
	704	PCB BINDER	VEF1040

Q S-VIDEO ASSY

Mark	No.	Description	Part No.
SEMICONDUCTORS			
	IC831		BU4051BCF
	IC852		BU4053BCF
	IC851		LA7213
	IC801,IC802		NJM2296M
	Q852,Q853		2SA933S
	Q851		DTC124ES
	Q833,Q834		IMH11
	Q831		IMZ1A
	D801,D802,D804,D805,D831		1SS355
	D832,D851		1SS355
CAPACITORS			
	C857		CCSQCH100D50
	C854		CCSQCH151J50
	C815-C818,C861,C862		CCSQCH181J50
	C898		CCSQCH221J50
	C809,C858		CCSQCH330J50
	C801,C803,C805,C807		CEAT101M10
	C819-C822,C852,C853,C863		CEAT101M10
	C881,C882		CEAT101M10
	C866,C868		CEAT101M16
	C851		CEAT3R3M50
	C831-C836,C855,C856,C891		CKSQYB103K50

Mark	No.	Description	Part No.
	C893,C894,C899		CKSQYB103K50
	C810-C814,C859,C860		CKSQYB104K25
	C864,C865		CKSQYB104K25
	C802,C804,C806,C808		CKSQYB473K50
	C823-C826,C867,C869		CKSQYB473K50
RESISTORS			
	R864		RD1/2VM201J
	R859		RD1/4VM471J
	Other Resistors		RS1/10S□□□J
OTHERS			
	CN804	21P FFC CONNECTOR	HLEM21S-1
	CN802,CN803		AKP7023
		4P MINI DIN SOCKET	
	CN805	6P FFC CONNECTOR	HLEM6S-1
	JA801	4P MINI DIN SOCKET	AKP7049
	JA881,JA882		RKN1004
		REMOTE CONTROL JACK	
	801	PCB BINDER	VEF1040

R H. PHONE/F. VIDEO ASSY

Mark	No.	Description	Part No.
SEMICONDUCTORS			
	Q7201,Q7202		2SC1740S
CAPACITORS			
	C7201,C7202,C7215,C7216		CCSQCH271J50
	C7203,C7204		CCSQCH330J50
	C7208,C7209		CEAT101M10
	C7207		CEAT470M35
	C7210,C7212		CKSQYB103K50
	C7211		CKSQYB104K25
	C7213,C7214		CKSQYB105K10
	C7217,C7218		CKSQYB392K50
RESISTORS			
	All Resistors		RS1/10S□□□J
OTHERS			
	CN7201	12P FFC CONNECTOR	52045-1245
	CN7202	FRONT PIN JACK 4P	AKX7007
	JA7201	HEADPHONE JACK	RKB1014
	KN7201	EARTH METAL FITTING	VNF1084

S DISPLAY ASSY

Mark	No.	Description	Part No.
SEMICONDUCTORS			
	IC7071		M66311FP
	IC7001		PD5595A
	IC7051		TC7W53FU
	Q7051		2SA1037K
	Q7005		2SC2412K
	Q7001,Q7002,Q7052,Q7054		DTC124EK
	Q7053		FMA1A
	D7007-D7010,D7051-D7057		1SS355
	D7002		SLR-343DC(NPQ)
	D7001,D7071-D7079		SLR-343VR(MNP)
COIL			
	L7001		LFA2R2J
	L7011,L7012		LCTA330J3225
SWITCHES			
	S7001-S7030		VSG1009
CAPACITORS			
	C7010 (0.047µF/5.5V)		ACH7132
	C7007		CCSQCH101J50
	C7008,C7013,C7071		CEAL101M6R3
	C7701,C7702		CEAT100M50
	C7052		CEAT101M6R3
	C7001-C7005,C7011,C7073,C7074		CKSQYB102K50
	C7091		CKSQYB102K50
	C7051		CKSQYB103K50
	C7009,C7072		CKSQYB473K50
	C7053		CKSQYB153K50
RESISTORS			
	R7044		RA15T104J
	Other Resistors		RS1/10S□□□J
OTHERS			
	X7001	CERAMIC RESONATOR (7.2MHz)	ASS7018
	7001	3P CABLE HOLDER	51052-0300
	7002,7003	8P CABLE HOLDER	51052-0800
	CN7005	5P FFC CONNECTOR	52045-0545
	CN7002	6P FFC CONNECTOR	52045-0645
	CN7003	8P FFC CONNECTOR	52045-0845
	CN7004	12P FFC CONNECTOR	52045-1245
	CN7001	32P FFC CONNECTOR	52045-3245
	V7001	FL TUBE	AAV7063
	505	PCB BINDER	VEF1040

T ROTARY ENCODER ASSY

Mark	No.	Description	Part No.
SWITCH			
	S7102		ASX7031
CAPACITORS			
	C7101,C7102		CKSQYB103K50
RESISTORS			
	All Resistors		RS1/10S□□□J
OTHERS			
	CN7101	6P FFC CONNECTOR	52044-0645

U VOLUME ASSY

Mark	No.	Description	Part No.
SEMICONDUCTORS			
	Q7301,Q7302		2SA1993
	Q7303,Q7304		2SC5395
	D7301		1SR154-400
CAPACITORS			
	C7301		CEANP100M16
	C7302		CEAT220M50
	C7303		CEAT471M6R3

Mark	No.	Description	Part No.
RESISTORS			
	VR7301	(VARIABLE WITH MOTOR)	ACX7037
	Other Resistors		RS1/10S□□□J
OTHERS			
	CN7301	8P FFC CONNECTOR	52045-0845
	KN7301	EARTH METAL FITTING	VNF1084

V PRIMARY ASSY

Mark	No.	Description	Part No.
SEMICONDUCTORS			
⚠	IC6001		NJM78M56FA
	Q6001		DTC143ES
	D6005-D6007		1SS133
	D6008		MTZJ5.1A
⚠	D6001-D6004		S5688G
COIL			
⚠	L6001	LINE FILTER	ATF1006
TRANSFORMER			
⚠	T6001	STANDBY TRANS.	ATT7043
RELAY			
⚠	RY6001	POWER RELAY	ASR7022
CAPACITORS			
⚠	C6002,C6003	(10000pF/AC250V)	ACG7020
	C6005		CEAT102M16
	C6006		CEAT470M25
	C6004		CKCYF103Z50
RESISTORS			
	R6001	(2.2MΩ, 1/2W)	RCN1080
	R6003		RD1/2PM270J
	Other Resistors		RD1/4PU□□□J
OTHERS			
⚠	6004	3P AC OUTLET	AKP1053
	H6001,H6002	FUSE CLIP	AKR1004
	CN6003	4P SOCKET	KP200TA4L
⚠	CN6002	AC CORD SOCKET	RKP1751
	6005	PCB BINDER	VEF1040
	6002,6003	SCREW TERMINAL	VNE1948

W RF/DIGITAL IN ASSY

Mark	No.	Description	Part No.
SEMICONDUCTORS			
	IC1201		TC74HCU04AF
COILS AND FILTERS			
	F1203-F1206	CHIP BEAD	DTF1064
CAPACITORS			
	C1204,C1211		CCSQCH470J50
	C1206,C1213		CEAT470M10
	C1203,C1210,C1250		CKSQYB103K50
	C1207,C1212,C1215,C1216		CKSQYF104Z25
	C1236,C1237		CKSQYF104Z25
	C1251		CKSQYF473Z25
RESISTORS			
	All Resistors		RS1/10S□□□J
OTHERS			
	CN1201	13P FFC CONNECTOR	HLEM13S-1
	CN1202	4P FFC CONNECTOR	HLEM4S-1
	JA1204	3P PIN JACK	AKB7092
	JA1201,JA1202,JA1203	OPTICAL RECEIVE MOD.	GP1FA551RZ
	CN1250	3P PLUG	KM250MA3
	1200	PCB BINDER	VEF1040

X OPT OUT ASSY

Mark	No.	Description	Part No.
CAPACITORS			
	C1271,C1272		CKSQYF104Z50
	C1273,C1274		CEAT221M10
RESISTORS			
	All Resistors		RS1/10S□□□J
OTHERS			
	CN1271	4P FFC CONNECTOR	HLEM4S-1
	JA1271,JA1272	OPTICAL LINK MOD.	GP1FA551TZ

Y DSP ASSY

Mark	No.	Description	Part No.
SEMICONDUCTORS			
	IC9351		AK7706VT
	IC9301		CS493292
	IC9203		CS5360-KS
	IC9101		CS8414-CS
	IC9201,IC9202		NJM2100M
	IC9041		NJM4558MD
	IC9401,IC9421,IC9441,IC9461		PCM1716E4
	IC9501		PD5590A
	IC9304		PDN030A
	IC9071		PM4007A
	IC9391		PQ7VZ5
	IC9392		PQ20WZ51
	IC9091		LH52256CN-70LL
	IC9305		TC74LVX244FT
	IC9352		TC551001CST-70L
	IC9151		TC74ACT151F
	IC9102		TC74VHC157FT
	IC9302,IC9303		TC74VHC574F
	IC9306		TC74VHCT244AFT
	IC9309		TC7W125FU
	IC9204,IC9307		TC7WU04FU
	IC9601		TC9164AF
	IC9308		TC9246F
	IC9602-IC9705,IC9701-IC9706		UPC4570G2
	Q9007		2PB709A
	Q9003,Q9032		2PD601A
	Q9001,Q9002,Q9004-Q9006,Q9031		2SC3082K
	Q9201,Q9202,Q9601-Q9606		2SC3326
	Q9611,Q9612		2SC3326
	Q9102,Q9104,Q9203,Q9607		DTA124EK
	Q9609,Q9610		DTA124EK
	Q9101,Q9103,Q9204,Q9205,Q9608		DTC124EK

Mark	No.	Description	Part No.
	Q9500		DTA144EK
	D9601,D9602		1SS181
	D9201-D9204		1SS226
	D9002,D9501,D9502		1SS355
	D9001		KV1851

COILS AND FILTERS

	F9001	BPF	ATF7001
	L9003	INDUCTOR	ATH7001
	L9071,L9391,L9392,L9401,L9402	CHIP FERRITE BEAD	ATL7002
	L9421,L9422,L9441,L9442	CHIP FERRITE BEAD	ATL7002
	L9461,L9462,L9481,L9482,L9801	CHIP FERRITE BEAD	ATL7002
	L9807,L9809	CHIP FERRITE BEAD	ATL7002
	F9091,F9092,F9102,F9106-F9108		DTF1064
	F9111,F9151,F9152,F9201,F9301		DTF1064
	F9302,F9306,F9308,F9352,F9501	CHIP BEAD	DTF1064
	L9105,L9203,L9204,L9206,L9207	CHIP SOLID INDUCTOR	QTL1013
	L9303	CHIP SOLID INDUCTOR	QTL1013

CAPACITORS

	C9231,C9232,C9493-C9496,C9809		CCSQCH221J50
	C9815,C9816		CCSQCH221J50
	C9076,C9104,C9106,C9112,C9154		CCSQCH271J50
	C9502		CCSQCH271J50
	C9224,C9225		CCSQCH330J50
	C9303,C9305,C9307,C9315,C9318		CCSQCH471J50
	C9320,C9322,C9325,C9328,C9353		CCSQCH471J50
	C9355,C9357,C9359,C9361,C9364		CCSQCH471J50
	C9368		CCSQCH471J50
	C9504,C9505		CCSQCH7R0D50
	C9033,C9313,C9609,C9610		CCSRCH101J50
	C9721,C9722,C9735		CCSRCH101J50
	C9310		CCSRCH180J50
	C9791,C9792		CCSRCH201J50
	C9311		CCSRCH220J50
	C9095,C9621,C9622,C9742-C9746		CCSRCH221J50
	C9761-C9766,C9779-C9782		CCSRCH221J50
	C9057,C9201,C9202		CCSRCH270J50
	C9214,C9220,C9309,C9403,C9423		CCSRCH271J50
	C9443,C9463,C9629		CCSRCH271J50
	C9719,C9720,C9733,C9775,C9776		CCSRCH331J50
	C9741		CCSRCH470J50
	C9333,C9571,C9617,C9618,C9639		CCSRCH471J50
	C9211,C9717,C9718,C9731,C9808		CCSRCH561J25
	C9773,C9774		CCSRCH561J25
	C9777,C9778		CCSRCH680J50
	C9007		CCSRCH750J50
	C9707,C9708		CCSRCH820J50
	C9611,C9612		CCSRCH821J25
	C9481		CEAT221M10
	C9338		CEAT471M10
	C9091,C9102,C9108,C9114,C9151		CEJA470M16
	C9362		CEJA470M16
	C9016		CEJA470M25
	C9323,C9326,C9331,C9366		CEJQ100M25
	C9643,C9644,C9756		CEJQ100M25
	C9071,C9301,C9316,C9351,C9392		CEJQ101M10
	C9395,C9501,C9740,C9801		CEJQ101M10
	C9329		CEJQ2R2M50
	C9216,C9219,C9222,C9401,C9405		CEJQ330M10
	C9408,C9421,C9425,C9428,C9441		CEJQ330M10
	C9337		CEJQ470M10
	C9803,C9805		CEJQ470M25
	C9406,C9409,C9426,C9429,C9446		CEJQ470M6R3
	C9449,C9466,C9469		CEJQ470M6R3
	C9206,C9207,C9391,C9394		CEJQ4R7M50
	C9053		CEJQNP4R7M25
	C9110		CEJQR47M50
	C9713,C9714,C9727,C9728,C9739		CEWAR330M10
	C9751-C9755,C9757,C9758		CEWAR330M10
	C9785,C9786		CEWAR330M10
	C9203,C9204,C9603,C9604		CEWAR4R7M50
	C9615,C9616,C9627,C9628		CEWAR4R7M50
	C9789,C9790		CEWAR4R7M50
	C9070,C9103,C9107,C9113,C9153		CKSQYB103K50
	C9217,C9223,C9302,C9304,C9306		CKSQYB103K50
	C9314,C9317,C9319,C9321,C9324		CKSQYB103K50
	C9327,C9336,C9352,C9354,C9356		CKSQYB103K50
	C9358,C9360,C9363,C9367		CKSQYB103K50
	C9507,C9508		CKSQYB103K50
	C9334		CKSQYB123K50
	C9335		CKSQYB474K16
	C9509		CKSQYF103Z50
	C9043,C9058,C9073-C9075,C9078		CKSQYF104Z25
	C9080,C9205,C9208,C9503		CKSQYF104Z25
	C9212,C9575		CKSRYB102K50
	C9014,C9054,C9056,C9105,C9158		CKSRYB103K50
	C9221,C9308,C9332,C9402,C9422		CKSRYB103K50
	C9442,C9462,C9506,C9636,C9637		CKSRYB103K50
	C9626,C9730		CKSRYB104K16
	C9605,C9606,C9633,C9795,C9796		CKSRYB122K50
	C9703,C9704,C9715,C9716,C9729		CKSRYB182K50
	C9771,C9772		CKSRYB182K50
	C9601,C9602,C9613,C9614,C9625		CKSRYB222K50
	C9787,C9788		CKSRYB222K50
	C9701,C9702		CKSRYB272K50
	C9732		CKSRYB333K16
	C9645		CKSRYB472K50
	C9215,C9218,C9404,C9407,C9424		CKSRYB473K16
	C9427,C944,C9447,C9464,C9467		CKSRYB473K16
	C9111		CKSRYB682K50
	C9020		CKSRYB683K16
	C9736		CKSRYB821K50
	C9002-C9006,C9008-C9013,C9015		CKSRYF104Z16
	C9017,C9018,C9031,C9032		CKSRYF104Z16
	C9051,C9052,C9055,C9077,C9079		CKSRYF104Z16
	C9081,C9092,C9209,C9210		CKSRYF104Z16
	C9607,C9608,C9619,C9620		CKSRYF104Z16
	C9631,C9632,C9709-C9712		CKSRYF104Z16
	C9723-C9726,C9737,C9738		CKSRYF104Z16
	C9783,C9784,C9793,C9794		CKSRYF104Z16
	C9041,C9042		CKSRYF105Z10
	C9312		CKSRYF224Z16

RESISTORS

	R9575		ACN7060
	R9571		DCN1092
	R9377,R9378		DCN1094
	R9036,R9099,R9119,R9130,R9131		RS1/10S0R0J

Mark	No.	Description	Part No.
	R9158,R9160,R9320,R9321,R9336		RS1/10S0R0J
	R9343,R9387,R9401,R9421,R9441		RS1/10S0R0J
	R9461,R9902-R9904,R9906		RS1/10S0R0J
	R9908,R9909,R9999		RS1/10S0R0J
	R9103,R9333,R9531-R9535		RS1/10S101J
	R9226,R9239,R9510,R9520		RS1/10S102J
	R9524-R9529		RS1/10S102J
	R9214,R9550		RS1/10S103J
	R9335		RS1/10S120J
	R9074,R9128		RS1/10S221J
	R9120,R9369		RS1/10S331J
	R9331		RS1/10S332J
	R9332		RS1/10S391J
	R9061,R9105		RS1/10S471J
	R9112		RS1/10S561J
	R9763,R9764		RS1/10S822J
	R9391,R9392		RS1/16S1201F
	R9396		RS1/16S2001F
	Other Resistors		RS1/16S□□□J

OTHERS

	X9001	CRYSTAL RESONATOR (18.432MHz)	ASS7009
	X9501	CRYSTAL RESONATOR (20MHz)	ASS7032
	X9201	CRYSTAL RESONATOR (12.288MHz)	DSS1030
	X9301	CHIP RESONATOR (27.0MHz)	VSS1086
	CN9571	7P FFC CONNECTOR	HLEM7S-1
	CN9581,CN9803	13P FFC CONNECTOR	HLEM13S-1
	CN9804	3P PLUG	KM250MA3
	CN9801	17P SOCKET	KP200TA17L
	CN9802	9P SOCKET	KP200TA9L
	CN9501	8P FFC CONNECTOR	VKN1598

Z COMPONENT ASSY

SEMICONDUCTORS

	IC1501		TC74HC4053AF
	IC1502,IC1503		TK15420M
	IC1504		TC7S86F
	IC1505		TC7S00F
	Q1501-Q1503		DTC124EK

CAPACITORS

	C1505,C1506,C1509-C1512		CKSQYB103K50
	C1516-C1518		CKSQYB103K50
	C1501-C1504,C1507,C1508		CEAT101M10

RESISTORS

	All Resistors		RS1/10S□□□J

OTHERS

	CN1501	6P FFC CONNECTOR	HLEM6S-1
	JA1502	3P PIN JACK	AKB7125
	JA1501	6P PIN JACK	AKB7127

AA 2CH I/O PJ ASSY

SEMICONDUCTORS

	IC8001		UPC4570G2
	Q8001,Q8002		HN1C03F

CAPACITORS

	C8001,C8002		CCSQCH101J50
	C8027,C8028,C8032		CCSQCH221J50
	C8007,C8008,C8031		CKSQYF104Z25
	C8025,C8026		CEAL100M50
	C8003,C8004,C8009,C8010		CEAL4R7M50
	C8035,C8036		CEJA470M25

RESISTORS

	All Resistors		RS1/10S□□□J

OTHERS

	CN8002	9P FFC CONNECTOR	HLEM9S-1
	JA8004	4P PIN JACK	AKB7129

AB TRIM ASSY

SEMICONDUCTORS

	IC8002		TC9215AF
	IC8003		TC9459F
	IC8004		UPC4570G2

CAPACITORS

	C8019,C8020		CCSQCH331J50
	C8021,C8022		CCSQCH560J50
	C8011,C8012,C8015,C8016,C8023		CKSQYF104Z25
	C8024,C8039		CKSQYF104Z25
	C8017,C8018		CEAL100M50
	C8033,C8034		CEJA470M25

RESISTORS

	All Resistors		RS1/10S□□□J

OTHERS

	CN8001	13P FFC CONNECTOR	HLEM13S-1
	CN8003	9P FFC CONNECTOR	HLEM9S-1
	8001	SCREW TERMINAL	VNE1948

6. ADJUSTMENT

6.1 IDLE CURRENT ADJUSTMENT

• **CAUTION** : Heatsink's DC level is equal to +B or -B.
Don't touch them or you will be electricary shocked.

1. Decrease the level of the Adjustment Variable resistors (VR) for the channel to be adjusted. (Turn counterclockwise.)
2. Set the power switch to ON.
3. Connect the DC voltmeter as shown below and adjust VRs in step No. order so that voltages become 16mV $^{+4mV}_{-0mV}$.
4. Ages for seven minutes.
5. Readjust in step No. order so that the voltages become 11.5mV ± 1mV (10.5 to 12.5mV). Adjustment is completed.

Step No.	Adjustment VR	Adjustment ch
1	VR2601	SL ch
2	VR2501	FL ch
3	VR2541	C ch
4	VR2521	FR ch
5	VR2621	SR ch

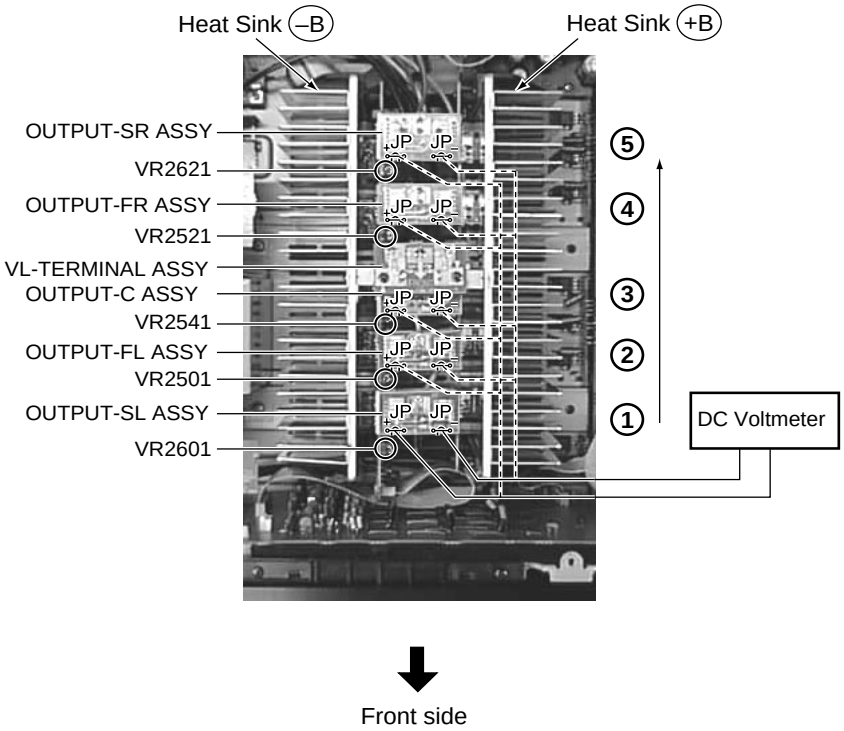

7. GENERAL INFORMATION

7.1 DISASSEMBLY

■Bonnet

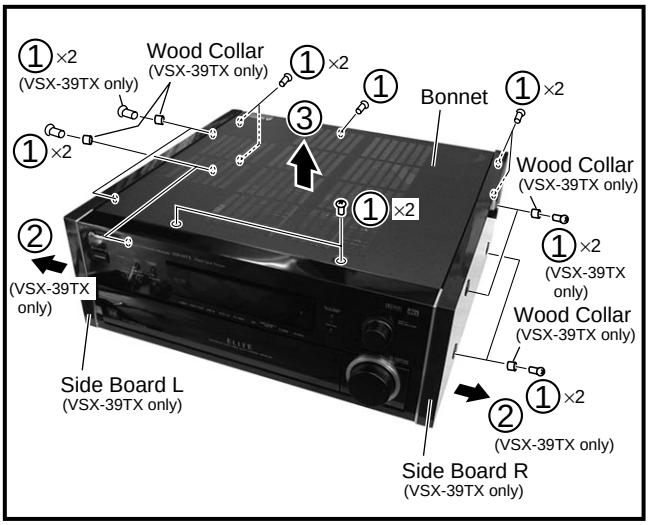

■Front Panel Section

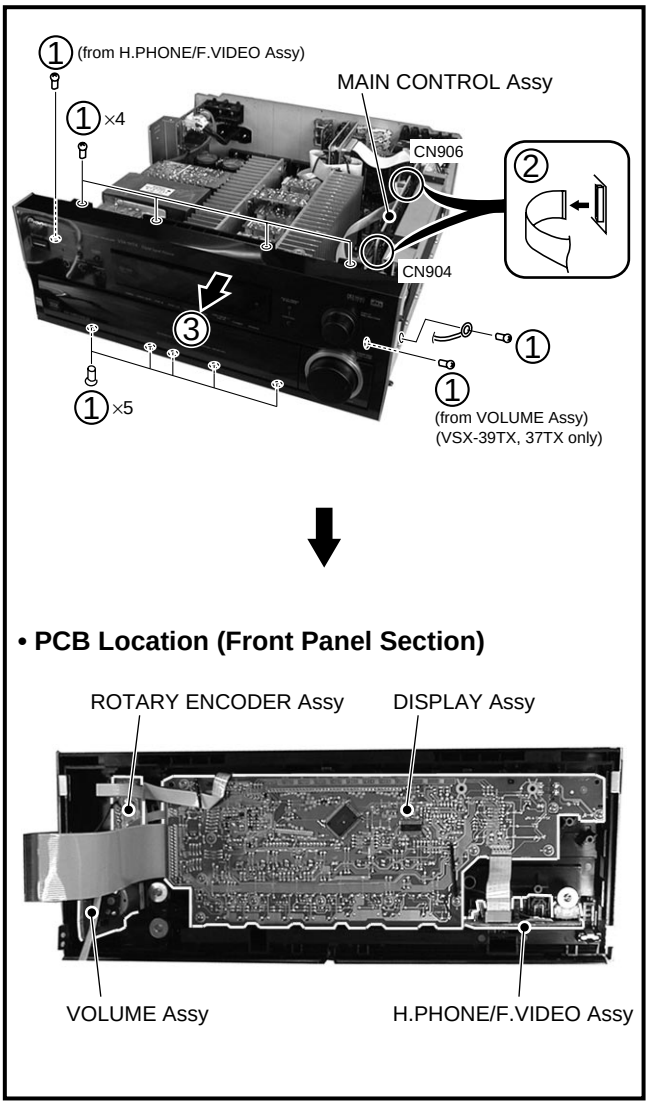

■Heat Sink Section

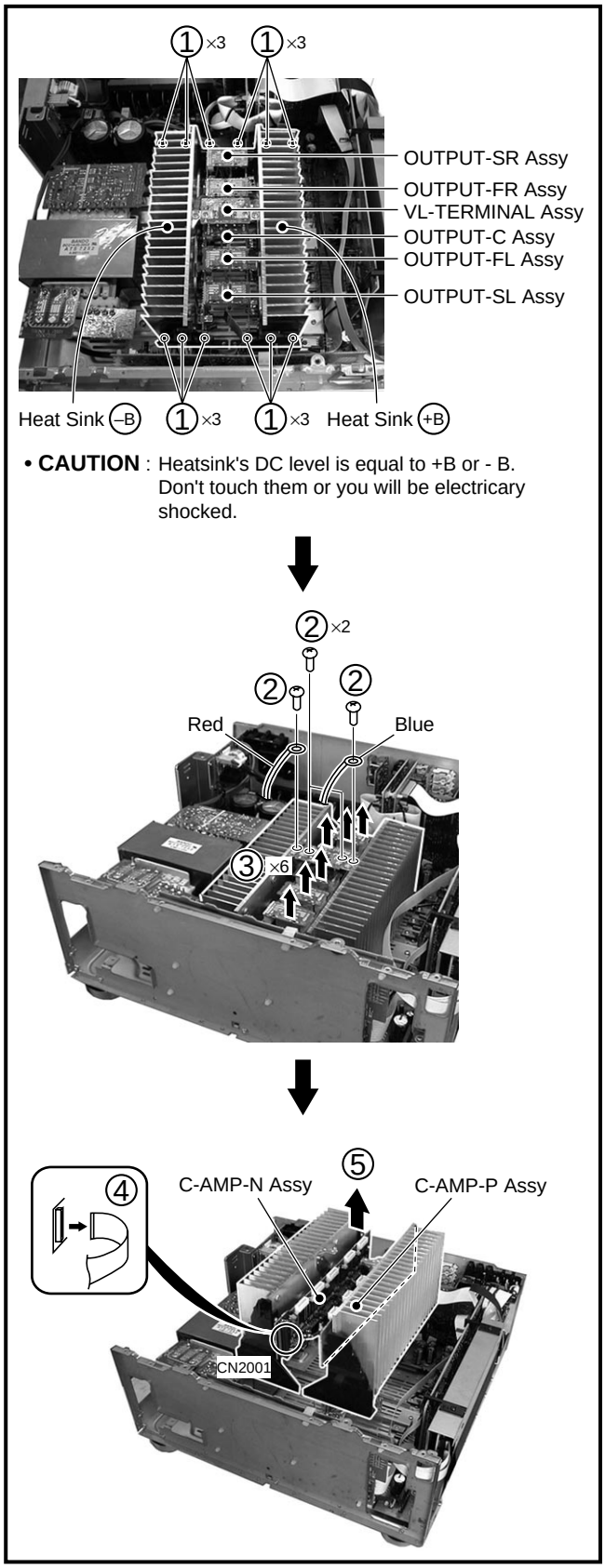

■DIODE and REGULATOR Assemblies

• DIODE Assy

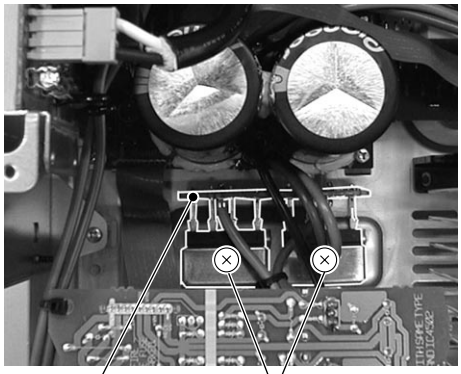

Replace the diode.

• REGULATOR Assy

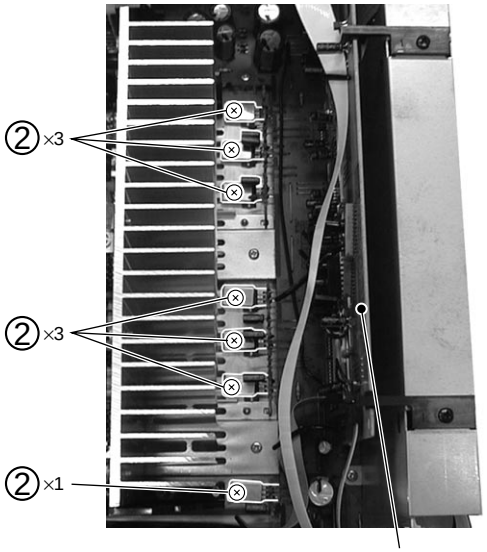

Replace the Regulator IC.

• PCB Location

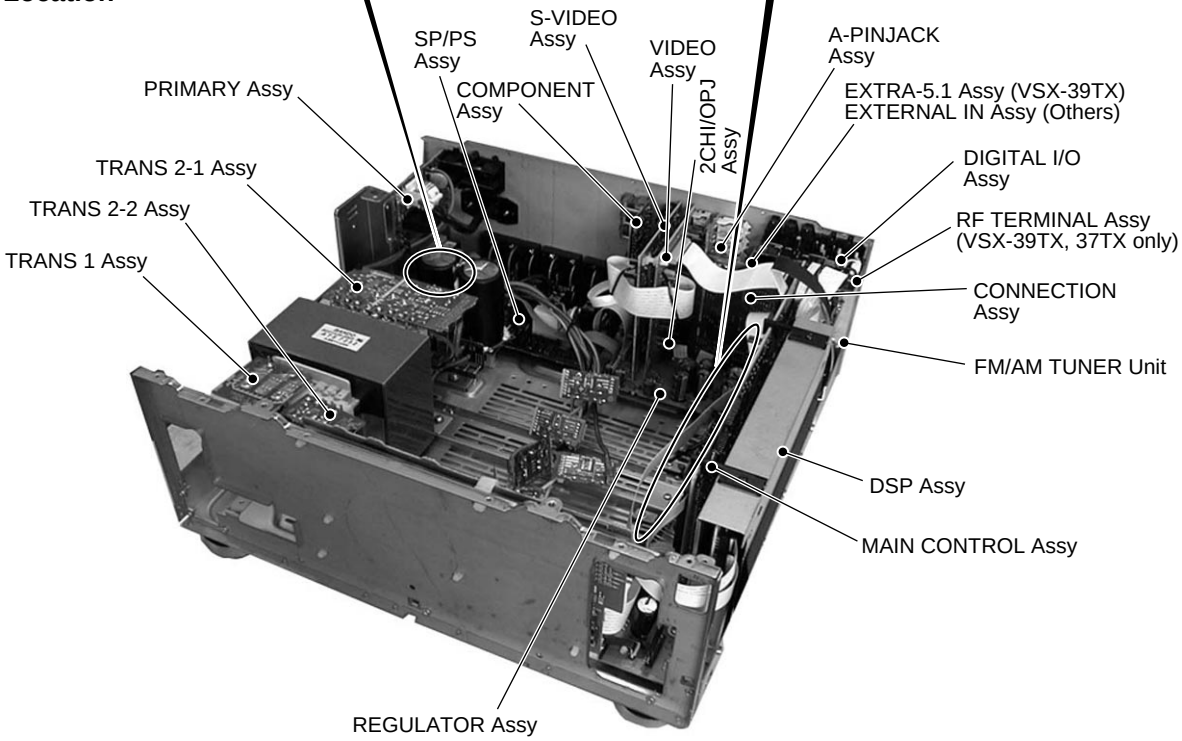

7.2 PARTS

7.2.1 IC

• The information shown in the list is basic information and may not correspond exactly to that shown in the schematic diagrams.

●List of IC

PD5595A, PD5589A

■ PD5595A (DISPLAY ASSY : IC7001)

• Display Control IC

● Pin Assignment (Top View)

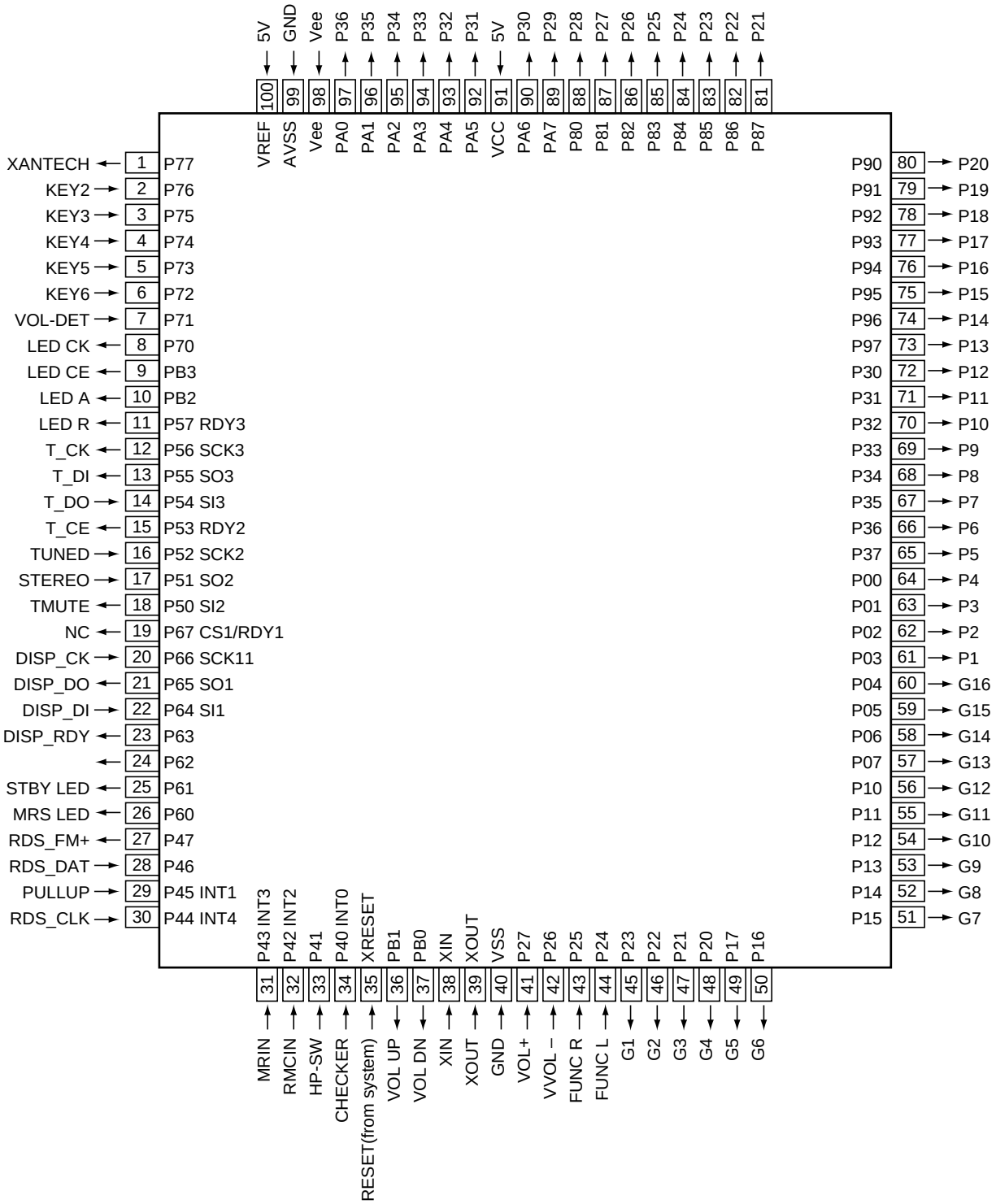

● Pin Function

No.	Pin Name	I/O	Function	No.	Pin Name	I/O	Function
1	XANTECH	O	XANTECH ON/OFF	51	G7	O	Grid output 7
2	KEY 2	I	Key scan input 2	52	G8	O	Grid output 8
3	KEY 3	I	Key scan input 3	53	G9	O	Grid output 9
4	KEY 4	I	Key scan input 4	54	G10	O	Grid output 10
5	KEY 5	I	Key scan input 5	55	G11	O	Grid output 11
6	KEY 6	I	Key scan input 6	56	G12	O	Grid output 12
7	VOL-DET	I	Detection of volume position	57	G13	O	Grid output 13
8	LED CKL	O	Clock for IC7071 M66311	58	G14	O	Grid output 14
9	LED OE	O	Output enable for IC7071 M66311	59	G15	O	Grid output 15
10	LED A	O	Data for IC7071 M66311	60	G16	O	Grid output 16
11	LED R	O	Reset for IC7071 M66311	61	S1	O	Segment output 1
12	T-CK	O	Clock for tuner module	62	S2	O	Segment output 2
13	T-DI	O	Data for tuner module	63	S3	O	Segment output 3
14	T-DO	I	Data from tuner module	64	S4	O	Segment output 4
15	T-CE	O	Chip enable for tuner module	65	S5	O	Segment output 5
16	TUNED	I	Tuned data from tuner module	66	S6	O	Segment output 6
17	STEREO	I	Stereo tuned data from tuner module	67	S7	O	Segment output 7
18	T-MUTE	O	Tuner mute ON/OFF	68	S8	O	Segment output 8
19	NC	O	Open	69	S9	O	Segment output 9
20	DISP CK	I	Clock from IC901 MAIN U-COM	70	S10	O	Segment output 10
21	DISP DO	O	Data for IC901 MAIN U-COM	71	S11	O	Segment output 11
22	DISP DI	I	Data from IC901 MAIN U-COM	72	S12	O	Segment output 12
23	DISP RDY	O	Data request for IC901 MAIN U-COM	73	S13	O	Segment output 13
24	NC	–	Open	74	S14	O	Segment output 14
25	STBY LED	O	Standby LED	75	S15	O	Segment output 15
26	MRS LED	O	Sub room LED (MR&S model), EON LED (RDS model)	76	S16	O	Segment output 16
27	RDS FM+	–	VDD for IC7401 BU1923 (RDS model only)	77	S17	O	Segment output 17
28	RDS DAT	O	Data for IC7401 BU1923 (RDS model only)	78	S18	O	Segment output 18
29	NC	I	(pull-up)	79	S19	O	Segment output 19
30	RDS CLK	I	Clock for IC7401 BU1923 (RDS model only)	80	S20	O	Segment output 20
31	MR IN	I	Sub room remote control (MR&S, MR model only)	81	S21	O	Segment output 21
32	RMC IN	I	Remote control	82	S22	O	Segment output 22
33	HP-SW	I	Headphone connect detect	83	S23	O	Segment output 23
34	NC	I	For unit check test mode detection	84	S24	O	Segment output 24
35	RESET	I	Reset	85	S25	O	Segment output 25
36	VOL/UP	O	Control for VOIL UP	86	S26	O	Segment output 26
37	VOL/DN	O	Control for VOL DOWN	87	S27	O	Segment output 27
38	XIN	–	Connect a 7.2MHz oscillator	88	S28	O	Segment output 28
39	XOUT	–		89	S29	O	Segment output 29
40	VSS	–	GND	90	S30	O	Segment output 30
41	VOL+	I	Rotary encoder signal +	91	VCC	–	Power supply +5V
42	VOL-	I	Rotary encoder signal -	92	S31	O	Segment output 31
43	FUNC/R	I	Rotary encoder signal R	93	S32	O	Segment output 32
44	FUNC/L	I	Rotary encoder signal L	94	S33	O	Segment output 33
45	G1	O	Grid output 1	95	S34	O	Segment output 34
46	G2	O	Grid output 2	96	S35	O	Segment output 35
47	G3	O	Grid output 3	97	S36	O	Segment output 36
48	G4	O	Grid output 4	98	VEE	–	Power supply 5V
49	G5	O	Grid output 5	99	AVSS	–	GND
50	G6	O	Grid output 6	100	VREF	–	Reference voltage 5V

■ PD5589A (MAIN CONTROL ASSY : IC901)

• Main Control IC

● Pin Assignment (Top View)

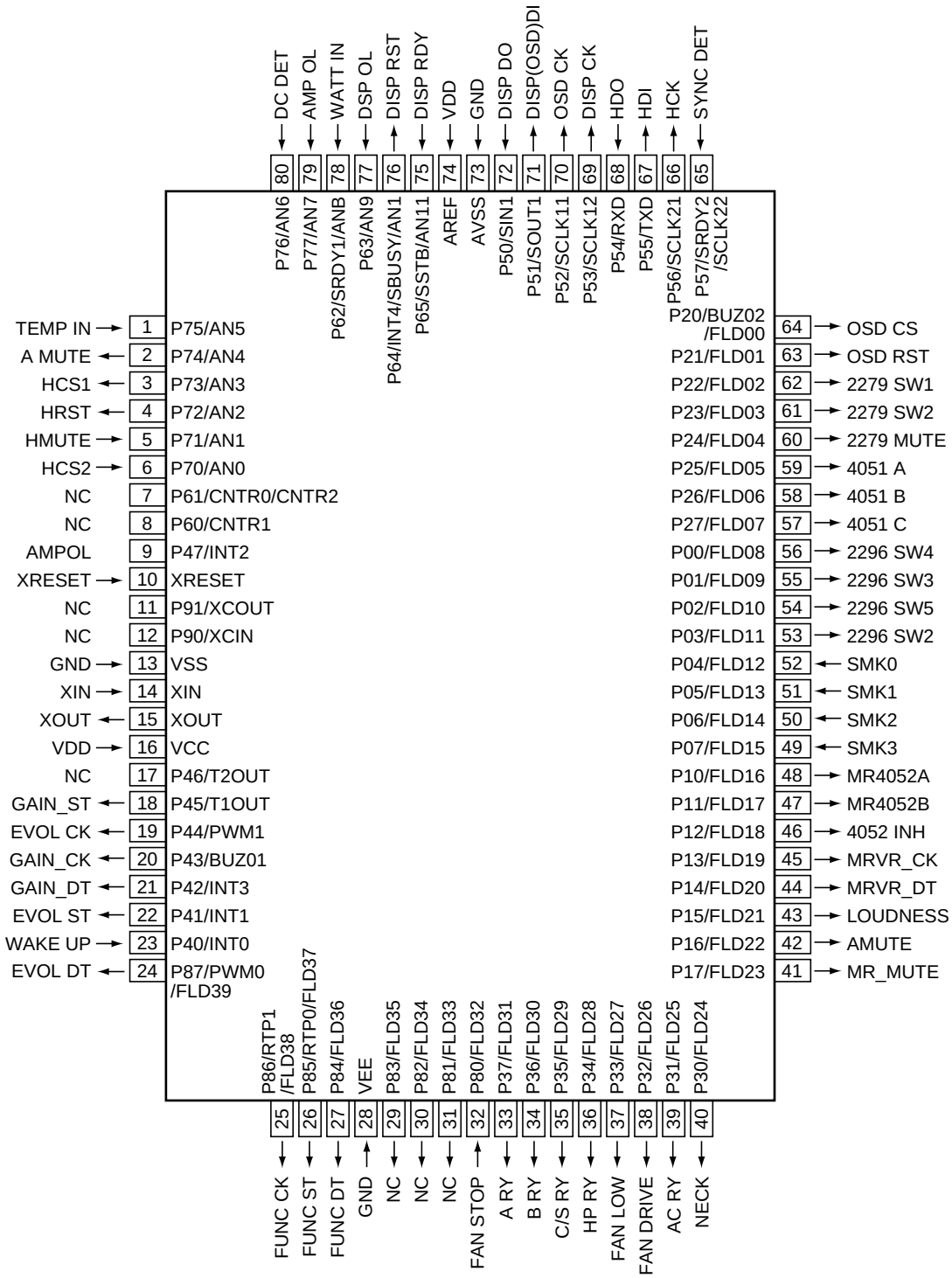

● Pin Function

No.	Pin Name	I/O	Function	No.	Pin Name	I/O	Function
1	TEMP IN	I/O	O/open (KU,J,SD), I/Fan temperature A/D input (other)	41	MR MUTE	O	Audio mute ON/OFF for sub room (MR&S, MR model only)
2	A MUTE	O	Audio mute ON/OFF	42	A MUTE2	O	Audio preout mute ON/OFF
3	DSP CS1	O	Chip select for IC9501 DSP U-COM	43	LOUD	O	Loudness ON/OFF
4	DSP RST	O	Reset for IC9501 DSP U-COM	44	MR-V DT	O	Data for IC110 M62429FP control (MR&S model only)
5	DSP MUTE	I	Mute request from IC9501 DSP U-COM	45	MR-V CK	O	Clock for IC110 M62429FP control (MR&S model only)
6	DSP CS2	I	Chip select from IC9501 DSP U-COM	46	4052 INH	O	Inhibit for IC102 BU4052BCF control (MR&S model only)
7	NC	O	Open	47	4052 B	O	Control for IC102 BU4052BCF (MR&S model only)
8	NC	O	Open	48	4052 A		
9	AMPOL	I	Amp Overload detect	49	SIMUKE 3	I	SIMUKE (pull-up or down)
10	RESET	I	Reset	50	SIMUKE 2		
11	NC	O	Open	51	SIMUKE 1		
12	NC	O	Open	52	SIMUKE 0		
13	GND	–	GND	53	2296-2	O	Control for IC701, 801, 802 NJM2296M
14	XIN	I	Connect a 4.19MHz oscillator	54	2296-5		
15	XOUT	O		55	2296-3		
16	VDD	–	Power supply +5V	56	2296-4		
17	NC	O	Open	57	4051-C	O	Control for IC831 BU4051BCF
18	ST3	O	Strobe for IC107 TC9163F control	58	4051-B		
19	CK2	O	Clock for IC108 TC9482N control	59	4051-A		
20	CK3	O	Clock for IC107 TC9163F control	60	2279-M	O	Control for IC731 NJM2279M (MR&S model only)
21	DT3	O	Data for IC107 TC9163F control	61	2279-2		
22	ST2	O	Strobe for IC108 TC9482N control	62	2279-1		
23	W.UP	I	AC pulse input	63	OSD RST	O	Reset for IC752 LC74782M-9011
24	DT2	O	Data for IC108 TC9482N control	64	OSD CS	O	Chip select for IC752 LC74782M-9011
25	CK1	O	Clock for IC101 TC9274N and IC104 TC9163F control	65	SYNC DET	I	Detection of synchronizing signal
26	ST1	O	Strobe for IC101 TC9274N and IC104 TC9163F control	66	DSP HCK	O	Clock for IC9501 DSP U-COM
27	DT1	O	Data for IC101 TC9274N and IC104 TC9163F control	67	DSP HDI	O	Data for IC9501 DSP U-COM
28	GND	–	GND	68	DSP HDO	I	Data from IC9501 DSP U-COM
29	NC	O	Open	69	DISP CK	O	Clock for IC7001 DISP U-COM
30	NC	O	Open	70	OSD CK	O	Clock for IC752 LC74782M-9011
31	NC	O	Open	71	DISP DI	O	Data for IC7001 DISP U-COM
32	FAN STOP	I/O	O/Open (KU,J,SD), I/Fan stop detecter (other)	72	DISP DO	I	Data from IC7001 DISP U-COM
33	A RY	O	SP A relay ON/OFF	73	GND	–	GND
34	B RY	O	SP B relay ON/OFF	74	VDD	–	Power supply +5V
35	C/S RY	O	SP C/S relay ON/OFF	75	DISP RDY	I	Data request from IC7001 DISP U-COM
36	HP RY	O	Headphone relay ON/OFF	76	DISP RST	O	Reset for IC7001 DISP U-COM
37	FAN LOW	O	Open (KU,J,SD), Fan low (other)	77	DSP OL	I	DSP overload detect, A/D input
38	FAN DRIVE	O	Open (KU,J,SD), Fan drive (other)	78	WATT IN	I/O	O/Open (KU,J,SD), I/Fan wattage input, A/D input (other)
39	AC RY	O	AC relay ON/OFF	79	AMP OL	I	Amp overload detect, A/D input
40	NECK	O	Neck ON/OFF (24,26,908,938 only)	80	DC DET	I	Detection of amp power error, A/D input

7.2.2 DISPLAY

■ AAV7063 (DISPLAY ASSY :V7001)

- **FL Indicator Tube**

● Pin Assignment

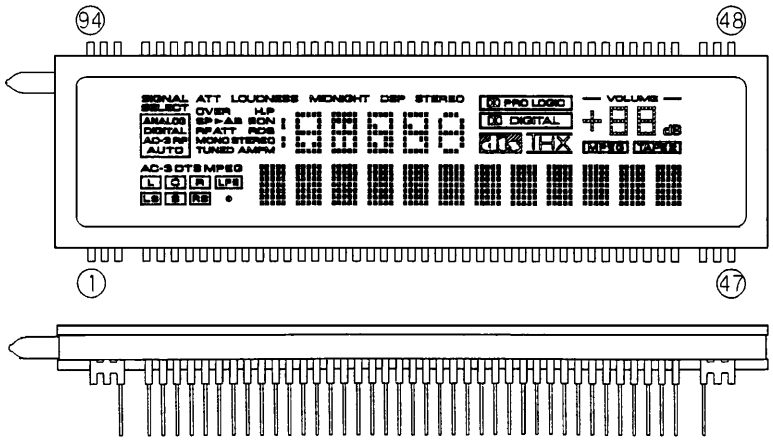

● Grid Assignment

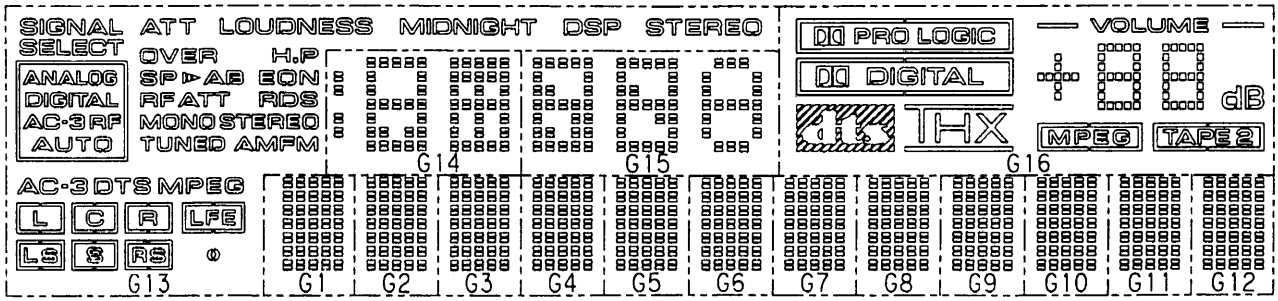

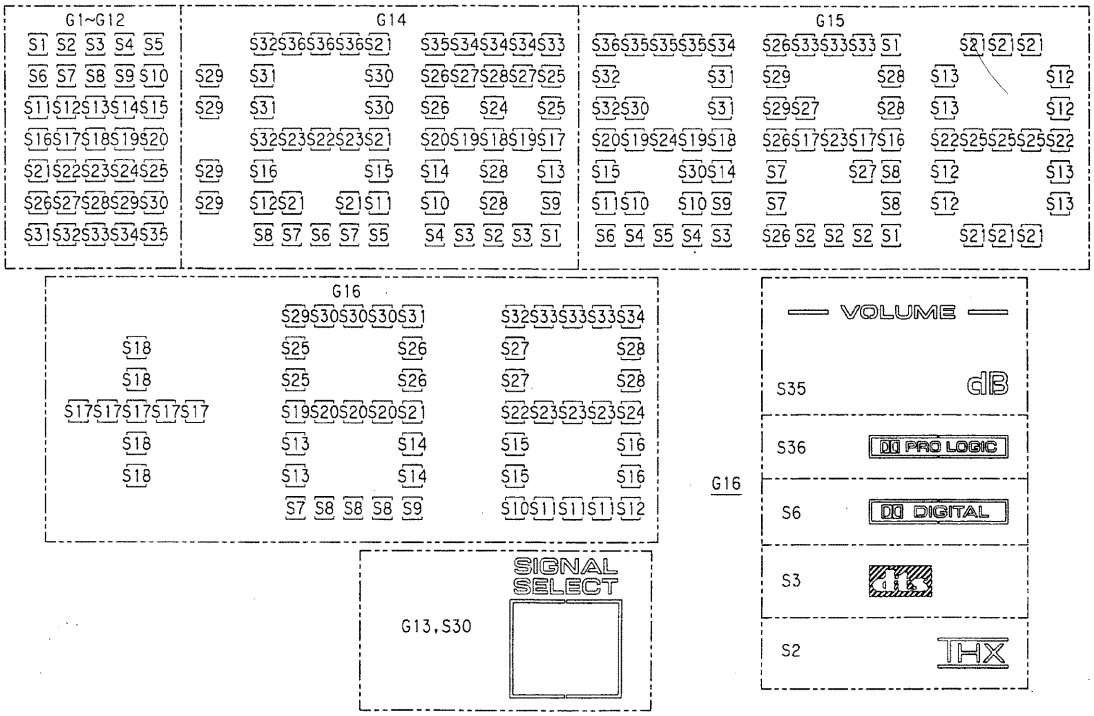

● Anode and Grid Connection

	G1~G12	G13	G14	G15	G16
S1	S1		S1	S1	
S2	S2	FM	S2	S2	S2
S3	S3	AM	S3	S3	S3
S4	S4	MPEG	S4	S4	TAPE2
S5	S5	LFE	S5	S5	MPEG
S6	S6	STEREO	S6	S6	S6
S7	S7	TUNED	S7	S7	S7
S8	S8	MONO	S8	S8	S8
S9	S9	R	S9	S9	S9
S10	S10	C	S10	S10	S10
S11	S11	L	S11	S11	S11
S12	S12	RDS	S12	S12	S12

	G1~G12	G13	G14	G15	G16
S13	S13	DTS	S13	S13	S13
S14	S14	AC-3 (DTS)	S14	S14	S14
S15	S15	RFATT	S15	S15	S15
S16	S16	EON	S16	S16	S16
S17	S17	(▶▶A)B	S17	S17	S17
S18	S18	(▶▶)A(B)	S18	S18	S18
S19	S19	⏻	S19	S19	S19
S20	S20	Ls	S20	S20	S20
S21	S21	S	S21	S21	S21
S22	S22	Rs	S22	S22	S22
S23	S23	SP▶▶	S23	S23	S23
S24	S24	OVER	S24	S24	S24

	G1~G12	G13	G14	G15	G16
S25	S25	H.P	S25	S25	S25
S26	S26	AUTO	S26	S26	S26
S27	S27	AC-3RF	S27	S27	S27
S28	S28	DIGITAL	S28	S28	S28
S29	S29	ANALOG	S29	S29	S29
S30	S30	S30	S30	S30	S30
S31	S31	ATT	S31	S31	S31
S32	S32	LOUDNESS	S32	S32	S32
S33	S33	MIDNIGHT	S33	S33	S33
S34	S34	DSP	S34	S34	S34
S35	S35	(DSP) STEREO	S35	S35	S35
S36			S36	S36	S36

Pin No.	1	2	3	4	5	6	7	8	9	10	11	12	13	14	15	16	17	18	19	20	21	22	23	24
Assignment	NL	NL	F1	NP	D	IC	NL	NL	NL	NL	NL	NL	NL	NL	NL	NL	NL	NL	NL	NL	NL	NL	NL	NL

Pin No.	25	26	27	28	29	30	31	32	33	34	35	36	37	38	39	40	41	42	43	44	45	46	47
Assignment	NL	NL	S36	S35	S34	S33	S32	S31	S30	S29	NL	NL	NL	S28	S27	S26	S25	S24	H	NP	F2	NL	NL

Pin No.	48	49	50	51	52	53	54	55	56	57	58	59	60	61	62	63	64	65	66	67	68	69	70	71
Assignment	NL	NL	NL	NP	S23	S22	S21	S20	S19	S18	S17	S16	S15	S14	S13	S12	S11	S10	S9	S8	S7	S6	S5	S4

Pin.No.	72	73	74	75	76	77	78	79	80	81	82	83	84	85	86	87	88	89	90	91	92	93	94
Assignment	S3	S2	S1	G16	G15	G14	G13	G12	G11	G10	G9	G8	G7	G6	G5	G4	G3	G2	G1	NP	NL	NL	NL

F1, F2 : Filament G1 to G16 : Grid S1 to S36 : Anode D : External connect to F1 NP: No Pin NL : Lead
H : Power supply grid usually (ec level = Apply Typ 35.0 VDC) IC : Internal connection

7.3 REMOTE CONTROL UNIT

7.3.1 AXD7254 (for VSX-39TX)

7.3.1.1 EXPLODED VIEWS AND PARTS LIST

NOTES:
- *Parts marked by "NSP" are generally unavailable because they are not in our Master Spare Parts List.*
- *The ⚠ mark found on some component parts indicates the importance of the safety factor of the part. Therefore, when replacing, be sure to use parts of identical designation.*
- *Screws adjacent to ▼ mark on the product are used for disassembly.*

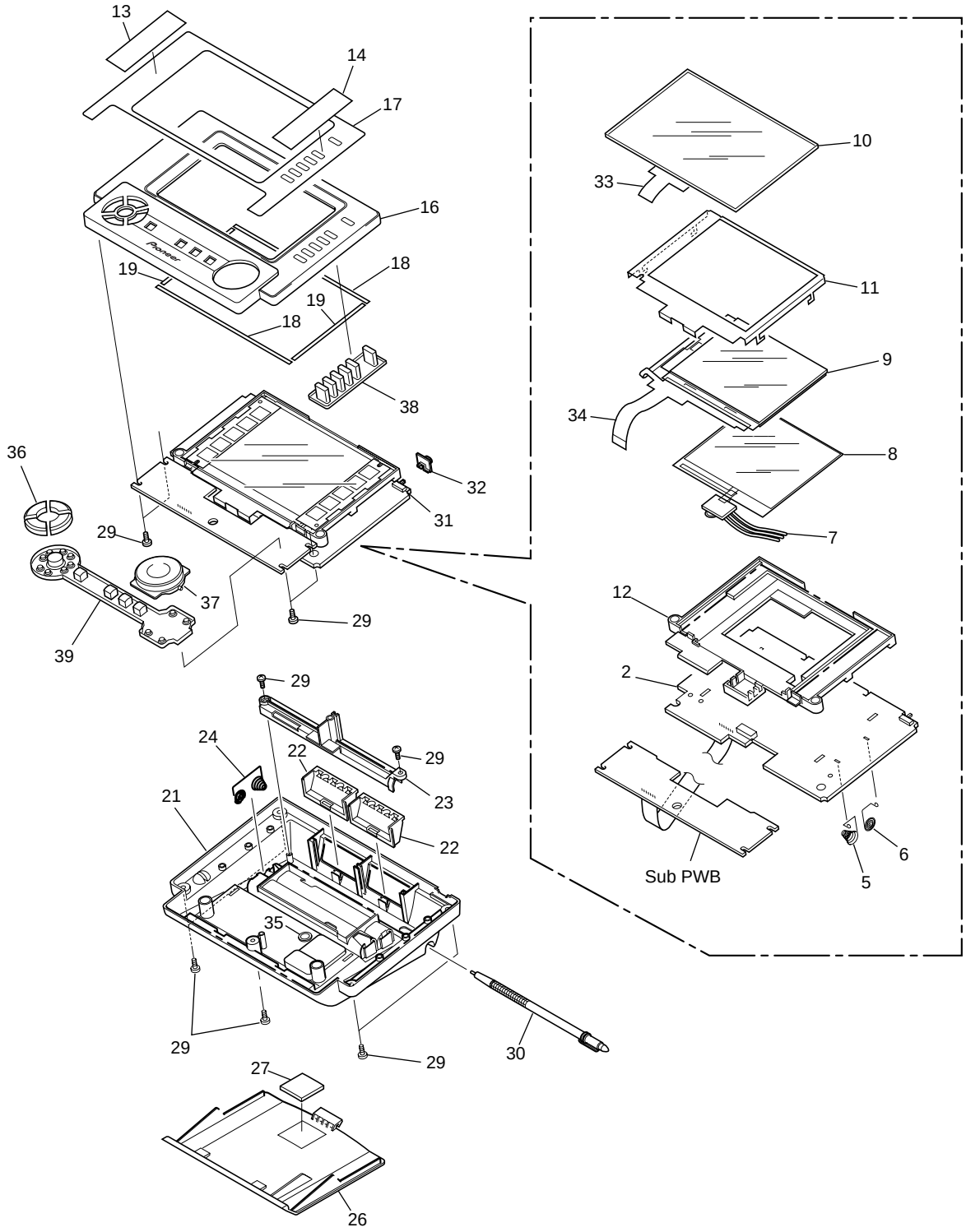

● PARTS LIST

Mark	No.	Description	Part No.
	1	• • • • •	
	2	PCB Assy	AZC7298
	3	• • • • •	
	4	• • • • •	
	5	Terminal A	411RRC15801R
	6	Terminal B	411RRC15901R
	7	Jumper Cable	E–AA1446–001
	8	EL Module	AZC7294
	9	LCD Module	AZC7295
	10	Touch Panel	NTX01005701R
	11	Frame	501RRC01901R
	12	LCD Holder	AZN7787
	13	Seal A	AZA7367
	14	Seal B	AZA7368
	15	• • • • •	
	16	Case A	AZN7840
	17	Name Plate	AZA7393
	18	Cushion A	701RRC04801R
	19	Cushion B	701RRC04901R
	20	• • • • •	
	21	Case B	AZN7784
	22	Filter	AZA7343
	23	Pen Holder	AZN7786
	24	Terminal	413RRC11201R
	25	• • • • •	
	26	Battery Cover	AZN7785
	27	Cushion C	701RRC03501R
	28	• • • • •	
	29	Screw	AZB7144
	30	Touch Pen	E–AA1445–001
	31	Slide Switch	JSB1220–0111
	32	Slide Knob	AZA7347
	33	FPC Connector	CFP5519–0101
	34	FPC Connector	E-CP0535–008
	35	MT Switch	JPM1030–0801
	36	Key Top A	AZA7345
	37	Key Top B	AZA7346
	38	Rubber Sheet A	AZA7348
	39	Rubber Sheet B	AZA7349

7.3.1.2 SCHEMATIC DIAGRAM

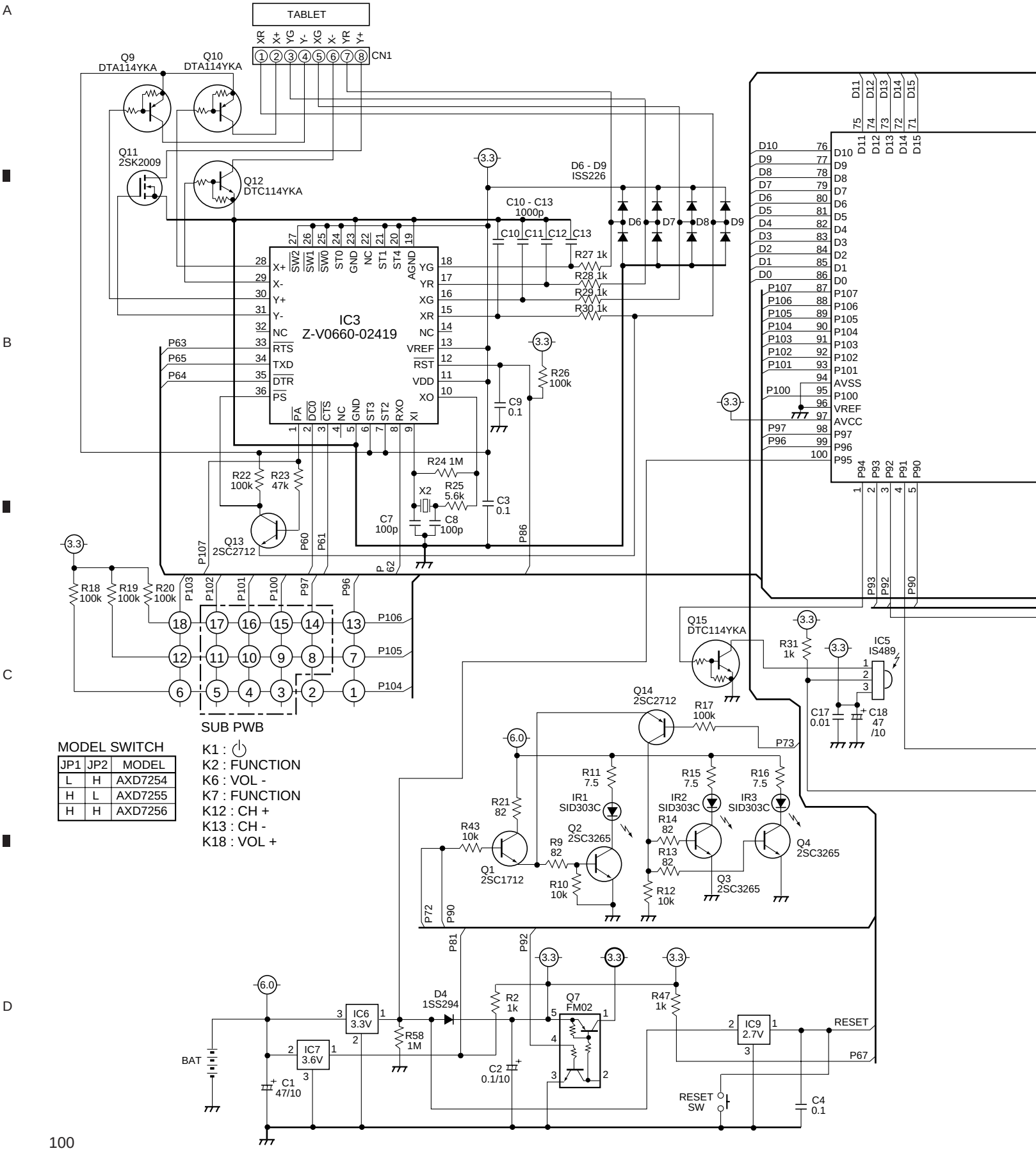

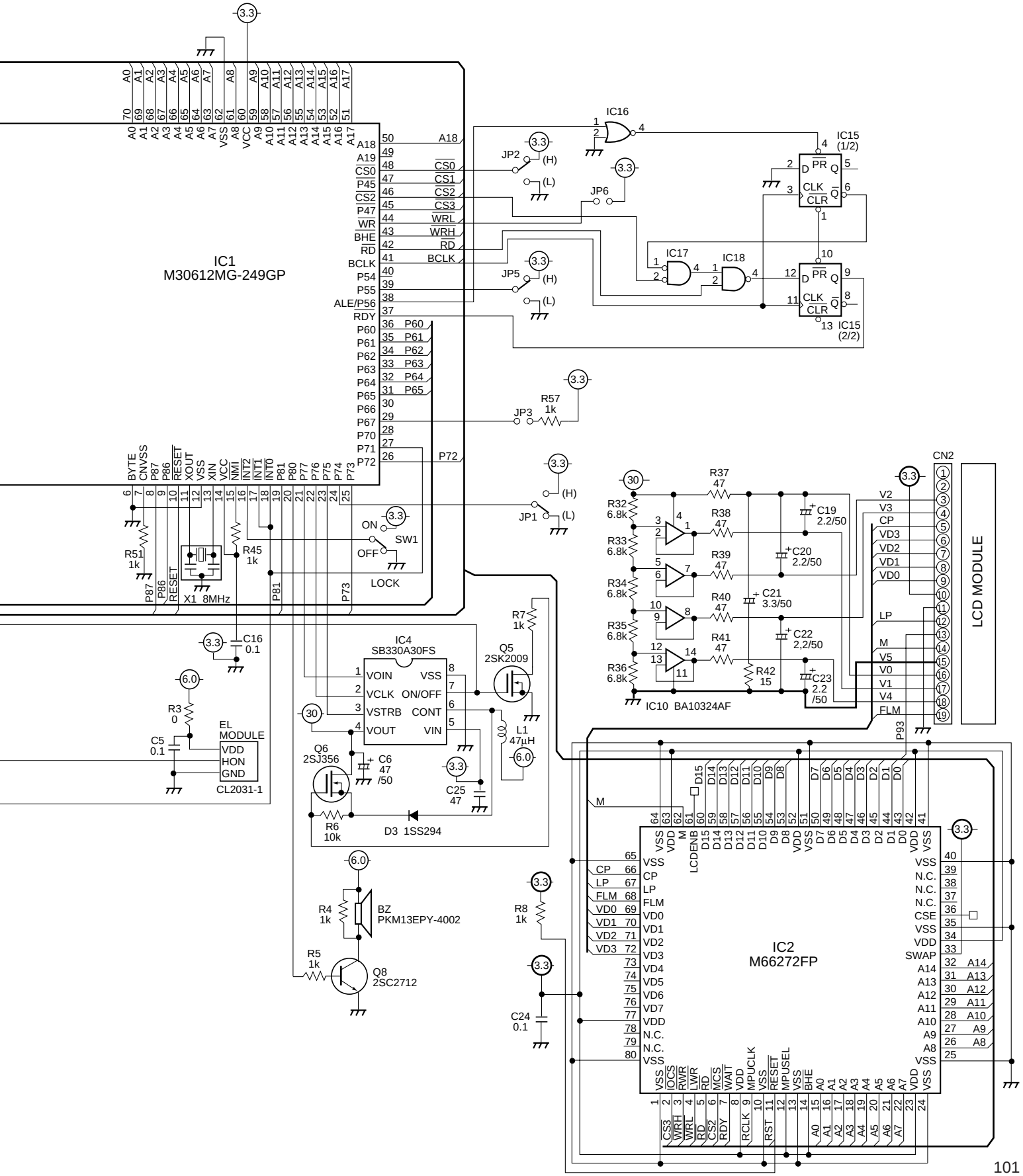
IC1
M30612MG-249GP
IC2
M66272FP
IC4
SB330A30FS
IC10 BA10324AF
IC15 (1/2)
IC15 (2/2)
IC16
IC17
IC18
LCD MODULE
CN2
EL MODULE
CL2031-1
BZ
PKM13EPY-4002
Q5
2SK2009
Q6
2SJ356
Q8
2SC2712
D3 1SS294
X1 8MHz
SW1
LOCK
JP1
JP2
JP3
JP5
JP6
L1
47µH

7.3.1.3 PCB DIAGRAM

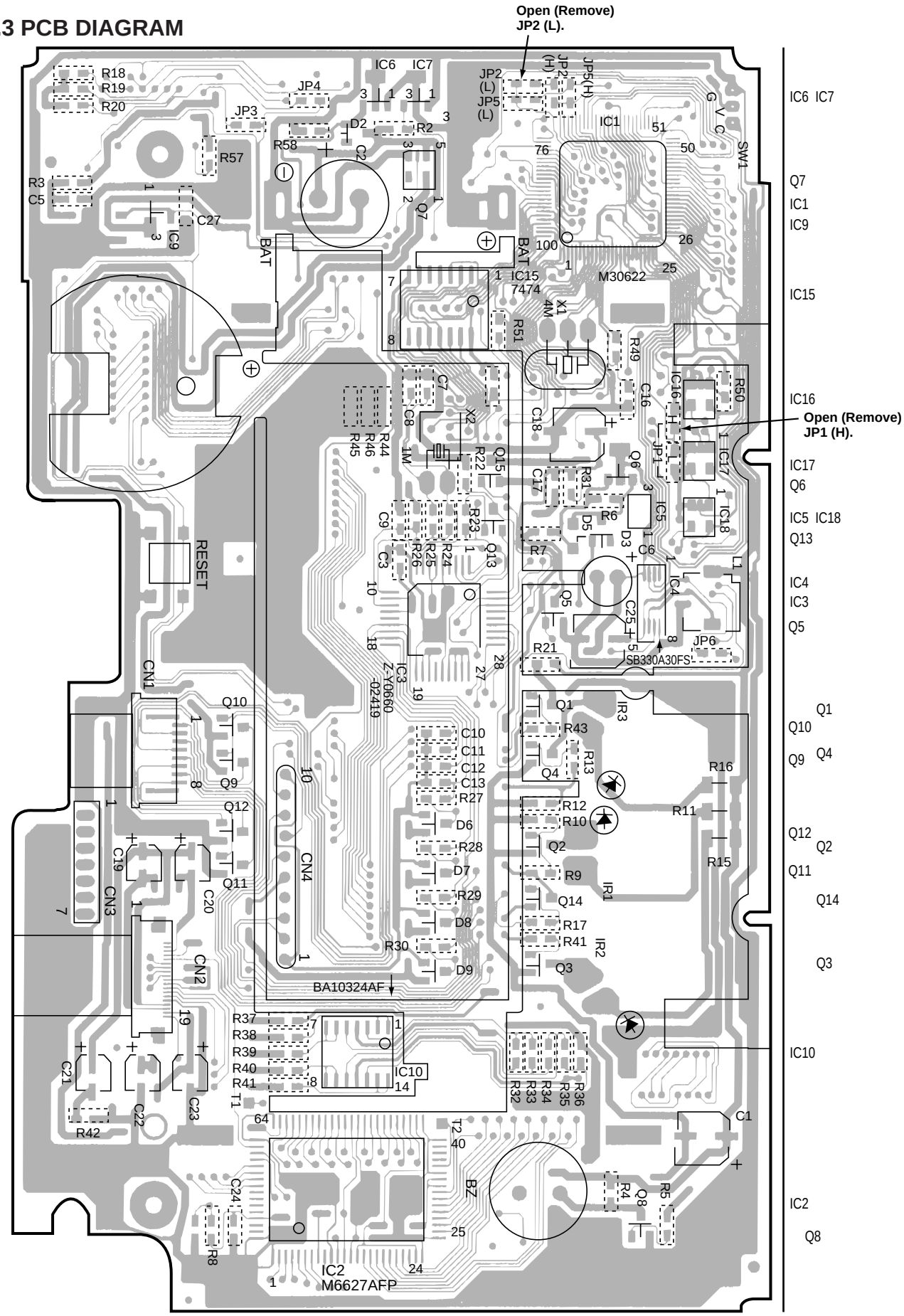

SIDE A

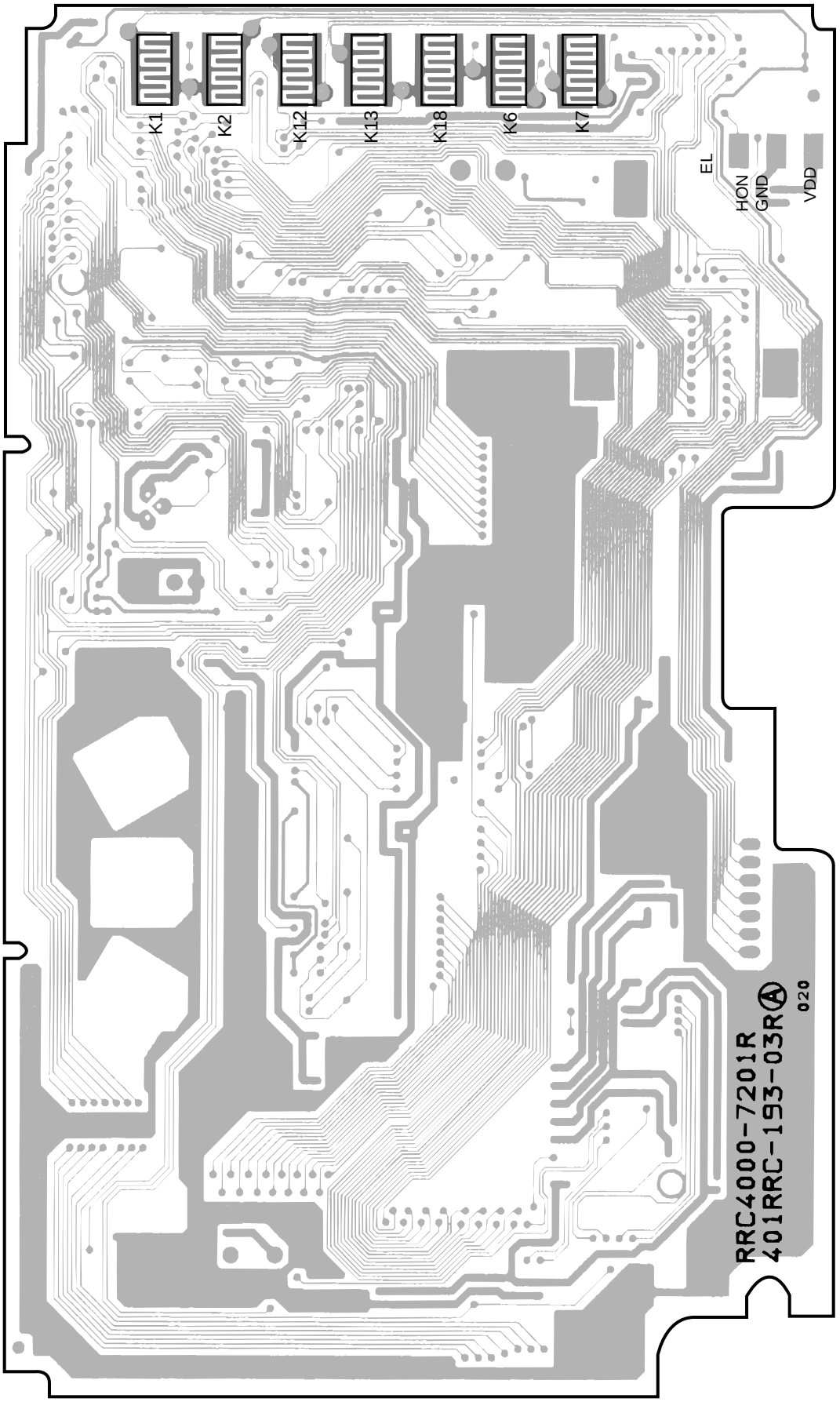
K1
K2
K12
K13
K18
K6
K7
EL
HON
GND
VDD
RRC4000-7201R
401RRC-193-03R
020

SIDE B

7.3.2 AXD7257 (Remote Control 37) and AXD7278 (Remote Control 909S)

7.3.2.1 EXPLODED VIEWS AND PARTS LIST

NOTES:
- *Parts marked by "NSP" are generally unavailable because they are not in our Master Spare Parts List.*
- *The ⚠ mark found on some component parts indicates the importance of the safety factor of the part. Therefore, when replacing, be sure to use parts of identical designation.*
- *Screws adjacent to ▼ mark on the product are used for disassembly.*

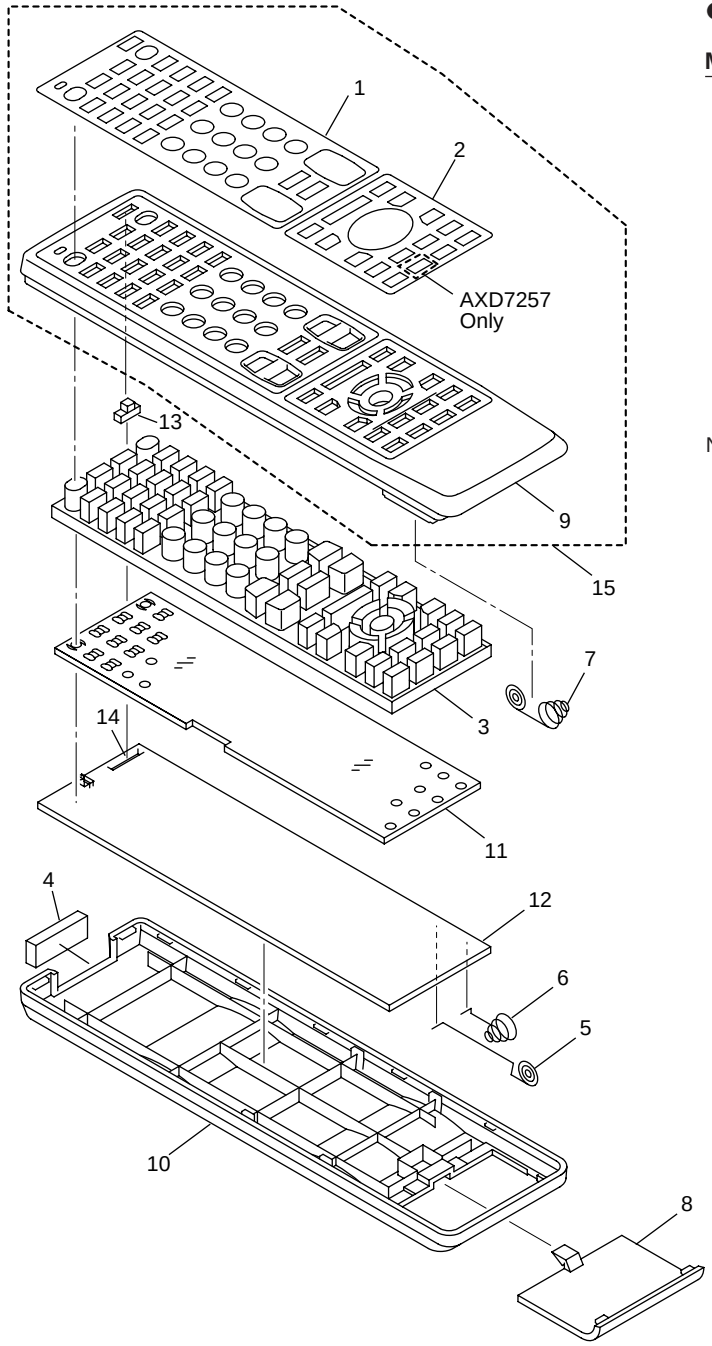

● PARTS LIST

Mark	No.	Description	Part No.
	1	Name Plate A	AZA7380
	2	Name Plate B (AXD7257)	AZA7381
	2	Name Plate B (AXD7278)	AZA7386
	3	Rubber Sheet (AXD7257)	AZA7382
	3	Rubber Sheet (AXD7278)	AZA7387
	4	Filter	AZA7340
	5	Terminal A (+)	AZB7141
	6	Terminal B (-)	AZB7142
	7	Spring	AZB7143
	8	Battery Cover	AZN7841
	9	Case (A)	AZN7832
	10	Case (B)	AZN7781
NSP	11	Illumi Plate	AZN7782
	12	PCB	AZW7260
	13	Knob	AZA7398
	14	Slide Switch	AZS7036
	15	Case A assy : 7257	AZN7846
	15	Case A assy : 7278	AZN7847

7.3.2.2 PCB DIAGRAM

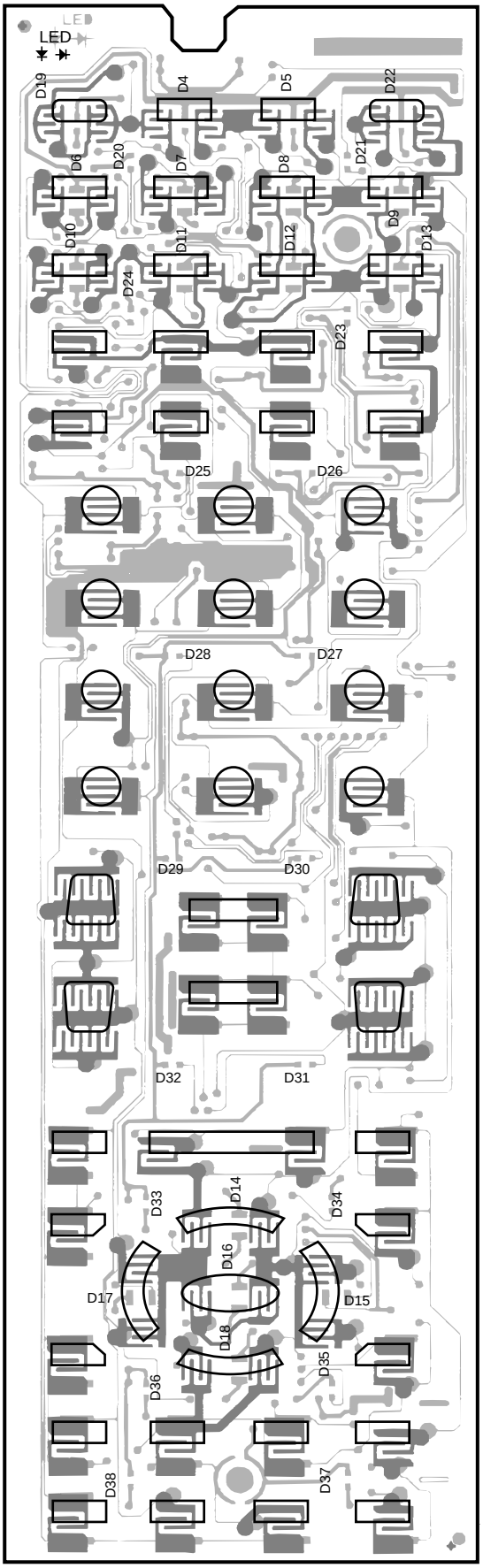

SIDE A

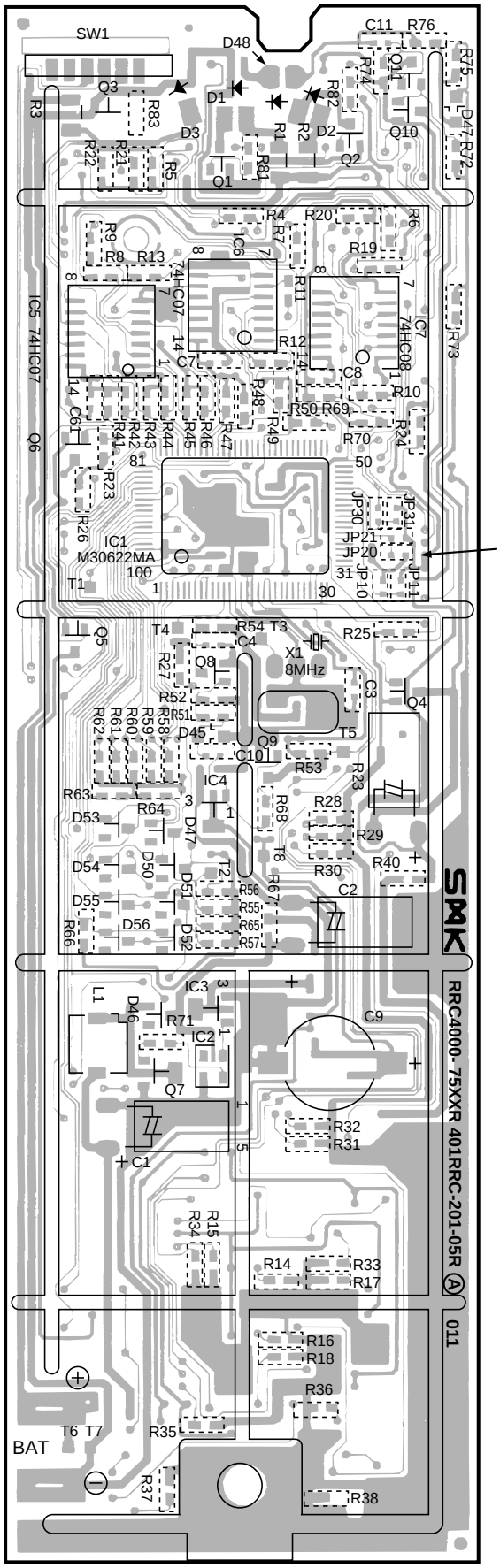

SIDE B

7.3.2.3 SCHEMATIC DIAGRAM

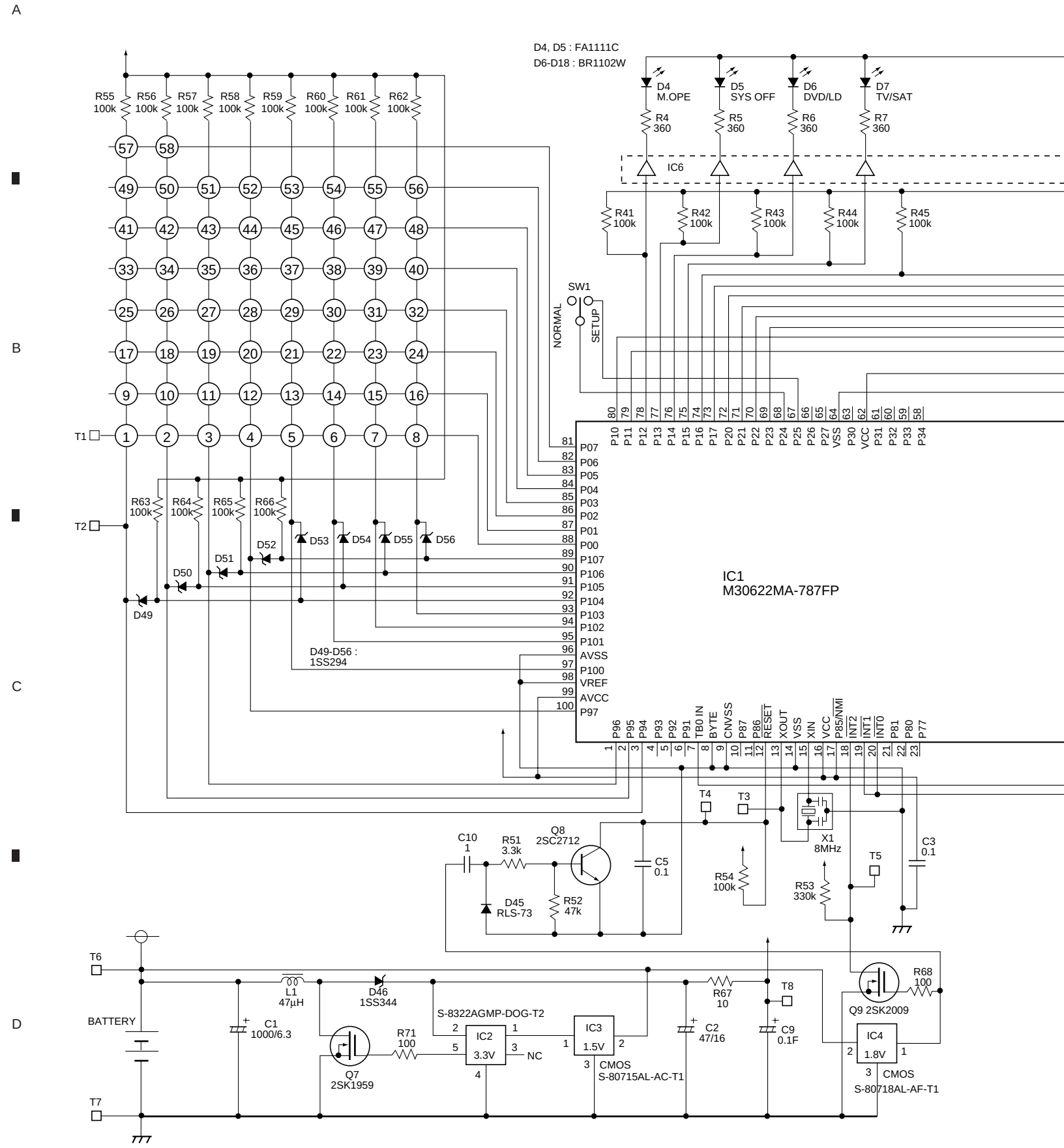

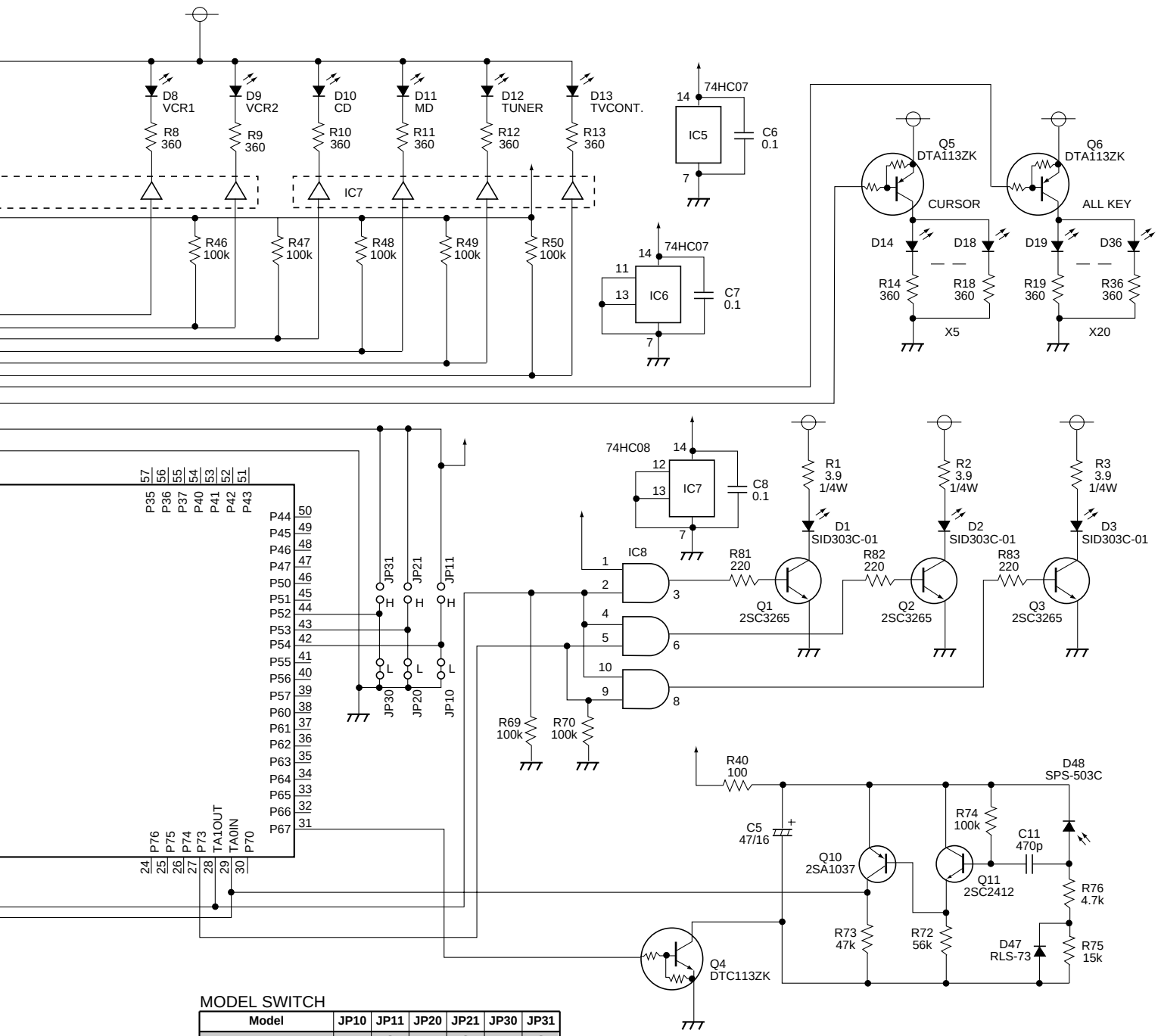

MODEL SWITCH

Model	JP10	JP11	JP20	JP21	JP30	JP31
AXD7257, AXD7278	–	○	–	○	–	○
AXD7258, AXD7279	–	○	–	○	○	–
AXD7259	–	○	○	–	–	○
AXD7266	–	○	○	–	○	–
AXD7273	○	–	–	○	–	○
AXD7275	○	–	–	○	○	–

7.3.2.4 PCB PARTS LIST

NOTES: ● *The ⚠ mark found on some component parts indicates the importance of the safety factor of the part. Therefore, when replacing, be sure to use parts of identical designation.*

● *When ordering resistors, first convert resistance values into code form as shown in the following examples.*

Ex.1 When there are 2 effective digits (any digit apart from 0), such as 560 ohm and 47k ohm (tolerance is shown by J=5%, and K=10%).

560 Ω → 56 × 10^1 → 561 ..... RD1/4PU [5][6][1] J
47k Ω → 47 × 10^3 → 473 ..... RD1/4PU [4][7][3] J
0.5 Ω → R50 ..... RN2H [R][5][0] K
1 Ω → 1R0 ..... RS1P [1][R][0] K

Ex.2 When there are 3 effective digits (such as in high precision metal film resistors).

5.62k Ω → 562 × 10^1 → 5621 ..... RN1/4PC [5][6][2][1] F

Mark	No.	Description	Part No.
	IC1		M30622MA-787FP
	IC2		S-8322AGMP-DOG-T2
	IC3		S-80715AL-AC-T1
	IC4		S-80718AL-AF-T1
	IC5,IC6		74HC07
	IC7		74HC08
	Q1-Q3		2SC3265
	Q4		DTC113ZK
	Q5,Q6		DTA113ZK
	Q7		2SK1959
	Q8		2SC2712
	Q9		2SK2009
	Q10		2SA1037
	Q11		2SC2412
	D1-D3		SID303C-01
	D6-D18		BR1102W
	D23-D36		CL190TD-CD
	D45,D47		RLS-73
	D46		1SS344
	D48		SPS-503C
	D49-D56		1SS294

8. PANEL FACILITIES AND SPECIFICATIONS

8.1 PANEL FACILITIES

■ Front Section (VSX-39TX,VSX-37TX,VSX-36TX)

All the controls on the front panel are explained and/or referenced here. To open the front panel push gently on the lower third of the panel.

VSX-39TX

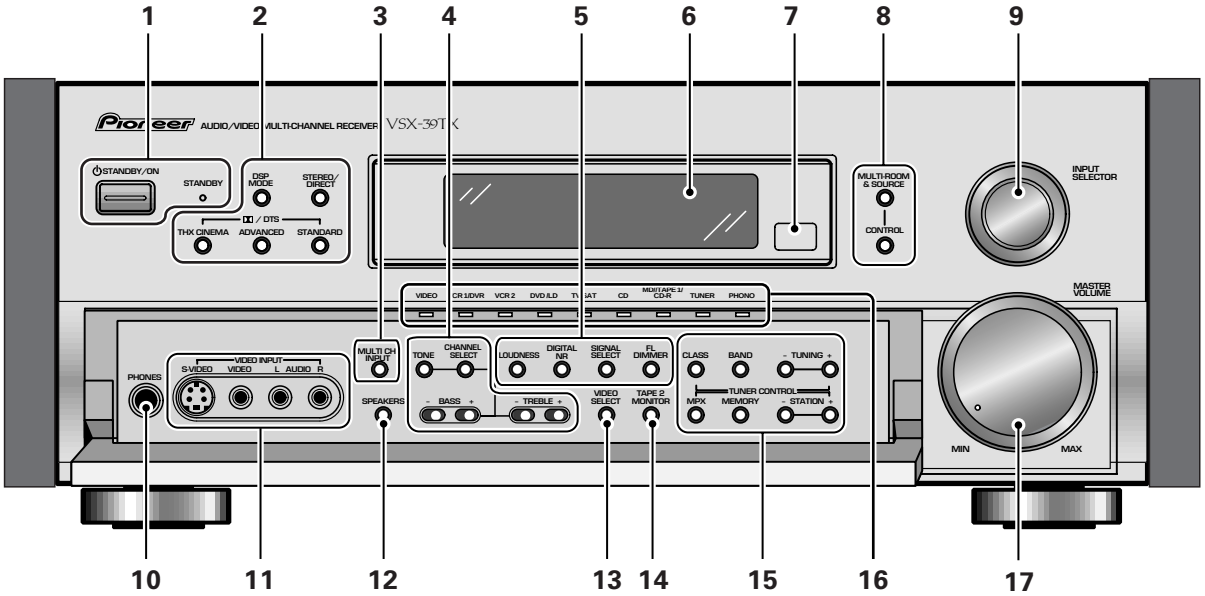

VSX-37TX
VSX-36TX

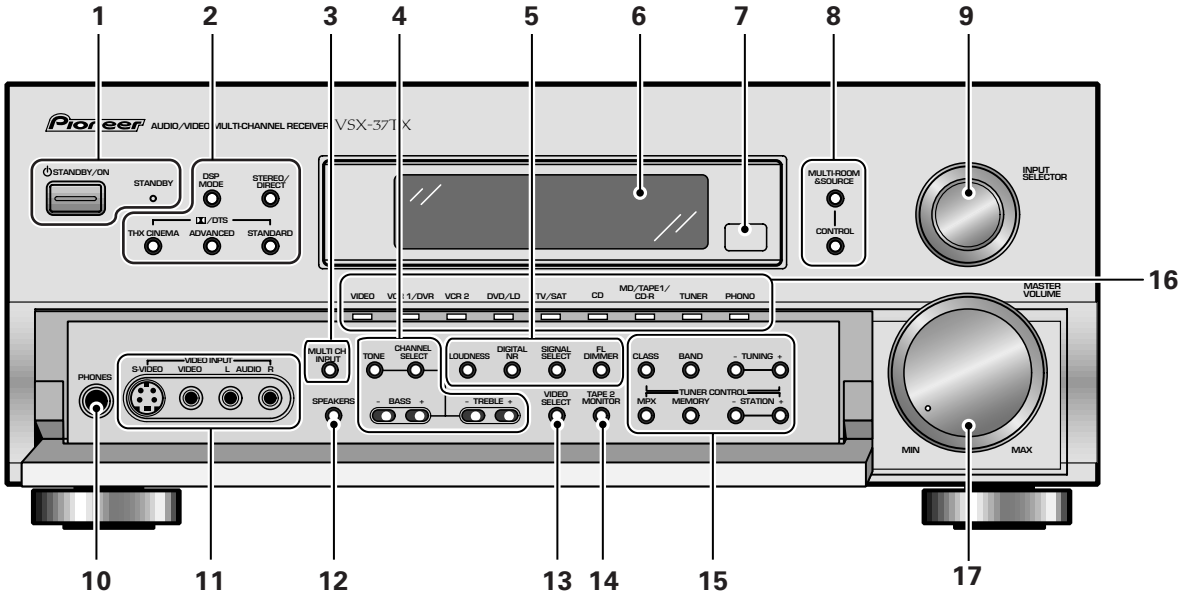

Front Section (VSX-D909S)

VSX-D909S

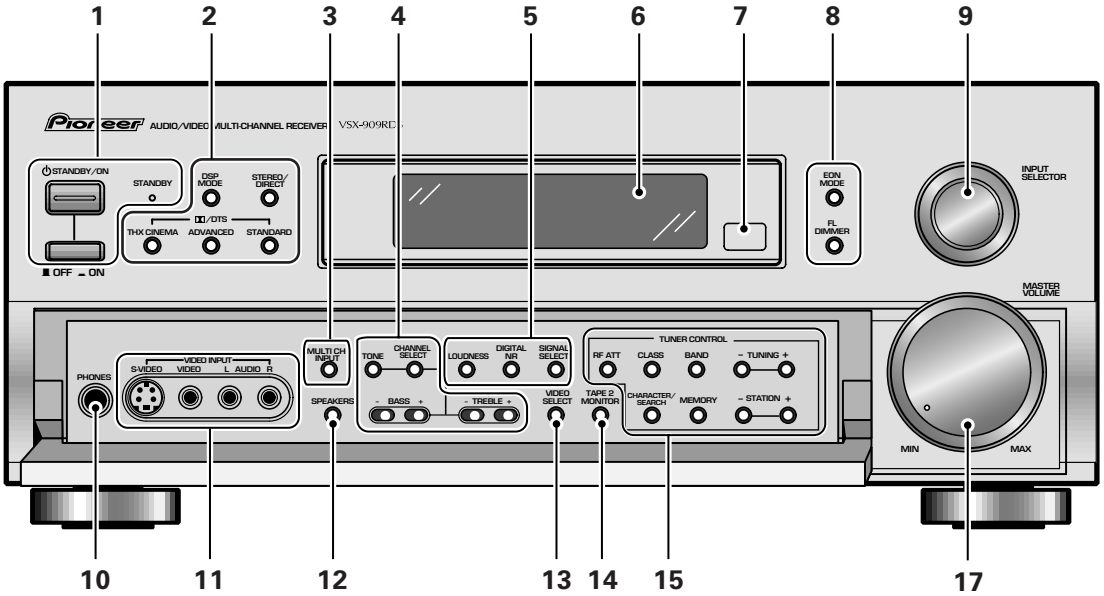

1 ⏻ STANDBY/ON button

Press to switch the receiver ON or into STANDBY mode.

STANDBY indicator

Lights when the receiver is in STANDBY mode. (Please note that this receiver consumes a small amount of power [1.0 W] in the standby mode.)

2 DSP MODE button

Press repeatedly to select a DSP sound mode. (HALL 1, HALL 2, JAZZ, DANCE, THEATER 1, or THEATER 2, 5/7 CH STEREO). Use these modes to produce surround sound from standard (two channel) stereo sources and create different listening environments.

STEREO/DIRECT button

Switches the receiver into STEREO mode if it was in a different sound mode (like DSP mode) or toggles between DIRECT and STEREO mode. For more on STEREO mode .

DIRECT playback bypasses the tone controls, DIGITAL NR, LOUDNESS, MIDNIGHT and channel level for the most accurate reproduction of a program source.

DD / DTS buttons

THX CINEMA – Cycles through the THX CINEMA, THX SURROUND EX or THX AUTO sound modes. If you have THX-certified speaker setup or want to re-create a THX-style sound environment. It is also appropriate for Dolby Digital, Dolby Pro Logic, DTS sources. Those with surround back speakers can use all three THX modes, those without can only use the THX CINEMA mode.

ADVANCED – Use to select one of the four Advanced Theater modes. Use to create certain types of sound environments when listening to Dolby Digital, Dolby Pro Logic, DTS sources.

STANDARD – Use for pure decoding of multi channel sources, especially Dolby Digital, Dolby Pro Logic, DTS sources. Each press toggles between STANDARD and STANDARD 7.1 mode (for use with SURROUND BACK speakers) and STANDARD auto (the receiver chooses the appropriate STANDARD mode). Those with surround back speakers can use all three STANDARD modes, those without can only use the STANDARD mode.

3 MULTI CH INPUT

Use to hook up an external component that can decode other types of signals and input them into the VSX-39TX.

4 TONE control buttons

TONE button

This button has two functions. Firstly, it switches between TONE ON and TONE BYPASS, which bypasses the tone circuitry. Secondly, you need to press the button before using the CHANNEL SELECT buttons to adjust the BASS & TREBLE (cannot be used in THX or MULTI CH IN modes).

CHANNEL SELECT button

Switches the tone adjust controls between the FRONT, CENTER, SURROUND and SURROUND BACK speakers. You can then use the BASS and TREBLE controls to adjust the sound.

BASS (–/+) button

Use to adjust low frequencies.

TREBLE (–/+) button

Use to adjust the high frequencies.

5 LOUDNESS button

Switches the LOUDNESS mode on or off (cannot be used in THX or MULTI CH IN modes).

DIGITAL NR button
Switches the DIGITAL NR on or off (cannot be used in THX or MULTI CH IN modes).

SIGNAL SELECT button
Use to select the type of signal being input into the receiver. Press SIGNAL SELECT repeatedly to select one of the following:

ANALOG – To select an analog signal.

DIGITAL – To select a optical or coaxial digital signal.

AC-3 RF – To select an DD RF signal.

AUTO – This is the default. If there are analog, digital and DD RF signals input, the receiver automatically selects the DD RF signal. If there are analog and digital signals input the digital will be selected.

FL DIMMER button
Use to adjust the brightness of the main display.

6 Display

7 Remote sensor
Point the remote control toward the remote sensor to operate the receiver .

8 MULTI-ROOM & SOURCE button
Press to use the multi room feature (requires an optional PIONEER Multi-Room Remote Sensor Unit MR-100 or another IR receiver).

CONTROL button : Used together with the INPUT SELECTOR to select the function or use with the MASTER VOLUME to select the volume of the MULTI ROOM system.

9 INPUT SELECTOR dial
Turn to select a source component. (You can also use to select a function in the MULTI-ROOM & SOURCE mode). The source indicators show the current component:

DVD/LD – DVD player or Laser Disc player.

TV/SAT– TV or satellite tuner.

CD – Compact Disc player.

MD/TAPE1/CD-R – Tape deck, Mini Disc recorder or CD recorder connected to MD/TAPE 1/CD-R inputs/outputs.

TUNER – The receiver's built-in tuner.
PHONO – Turntable.

VIDEO – Video camera (etc.) connected to the VIDEO INPUT on the front panel.
VCR1/DVR – Video cassette recorder connected to VCR1/DVR inputs.
VCR 2 – Video cassette recorder or other component connected to VCR 2 inputs.

10 PHONES jack
Connect headphones for private listening (no sound will be heard through the speakers)

11 VIDEO INPUT jacks
S-VIDEO : Video input for connecting a video camera (etc.), that has an S-Video out.

VIDEO / AUDIO (L/R) : Video input for connecting a video camera, etc. that has standard video/audio outputs.

12 SPEAKERS (A/B) button
Use to select the speaker system. A is the primary setting. It plays all speakers hooked up to the A system. A & B setting only plays the front speakers of both the A & B systems and the subwoofer. Multi channel sources will be down-mixed to these Speakers so no sound will be lost. B setting only plays the front speakers connected to the B system and multi channel sources will be down-mixed to these two speakers. The button cycles through the speaker systems as follows: A⇨B⇨A&B⇨off.

13 VIDEO SELECT button
Switches the receiver between the various types of video input.

14 TAPE 2 MONITOR button
Selects the tape deck (MD recorder, etc.) connected to the TAPE 2 MONITOR inputs/outputs. Allows monitoring of a recording as it's being made.

15 TUNER CONTROL buttons
CLASS – Press repeatedly to switch the preset station classes.

BAND – Press to select the AM or FM band.

TUNING –/+ – Use to manually tune to radio stations.

MPX – Press to switch between auto stereo and MONO reception of FM broadcasts. When the broadcast signal is weak, selecting MONO will improve the sound quality.

MEMORY – Press to start the memorization of a preset station.

STATION –/+ – Use to choose programmed radio stations.

16 Source indicators
Shows the source currently selected.

17 MASTER VOLUME
Adjusts the overall receiver volume.

■ Display

All the display information is explained and /or referenced here.

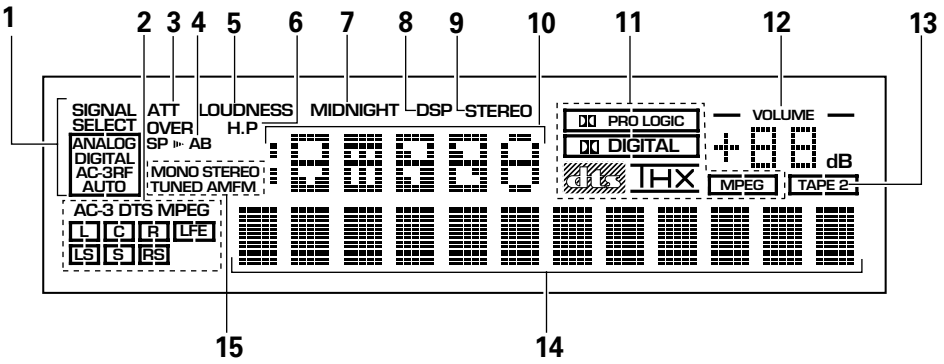

1 SIGNAL SELECT indicators
Light to indicate the input signal you selected.

ANALOG : Lights when analog signals are assigned.
DIGITAL : Lights when digital audio signals are selected.
AC-3 RF : Lights when AC-3 RF signals are assigned.
AUTO : Lights when the receiver is set to select the input signal automatically.

2 Program Format indicators
AC-3 : Lights when a source with Dolby Digital signals is played.
DTS : Lights when a source with DTS audio signals is played.

For Dolby Digital or DTS sources : These indicators change according to which channels are active in the source. When all three LS (left surround), S (surround) and RS (right surround) light at the same time it means a source with Surround EX or DTS-ES flag is being used.

L – Left front channel.
C – Center channel.
R – Right front channel.
LS – Left surround channel.
S – Surround channel (mono).
RS – Right surround channel.
LFE – Low Frequency Effects channel.

3 Analog level indicators
OVER – When the source signal is analog, this lights if the signal is in danger of distorting. Press INPUT ATT on the front panel to lower the signal level.

ATT – Lights when INPUT ATT is used to reduce the level of the analog source signal.

4 Speaker indicators
Light to indicate the current speaker system, A and/or B.

5 LOUDNESS indicator
Lights when the LOUDNESS mode is on.

6 H.P (headphones)
Lights when headphones are connected to the PHONES jack (speakers systems A and B both turn off automatically).

7 MIDNIGHT indicator
Lights when the MIDNIGHT LISTENING mode is on.

8 DSP indicator
Light when a DSP or Advanced Theater modes are selected.

9 STEREO indicator
Lights when a STEREO modes are selected.

10 Radio Frequency/Function indicator
Displays the function or the frequency of the current radio station.

11 DD / dts mode indicators
DD DIGITAL : When the DD /dts mode on the receiver is on, this indicator lights to indicate playback of a Dolby Digital signal. However, DD PRO LOGIC lights during 2 channel playback of Dolby Digital.
DD PRO LOGIC : When the DD/dts mode on the receiver is on, this indicator lights during 2 channel playback.
DTS : When the DD/dts mode on the receiver is on, this indicator lights to indicate playback of a DTS signal.
THX: Lights when the HOME THX CINEMA mode is selected.

12 MASTER VOLUME indication
Displays current volume level.

13 TAPE 2 indicator
Lights when the TAPE 2 monitor is on.

14 Character display
Shows current mode, status, etc.

15 TUNER indicators
MONO : Lights when the tuner is set to receive FM broadcasts and when selected MPX mode.

STEREO : Lights when a FM stereo broadcast is received in the auto stereo mode.

TUNED : Lights when a broadcast is received.

AM/FM : Light to indicate the current band (FM or AM).

■ Remote Control Unit (VSX-39TX)

These pages describe the buttons on the remote control used to operate the receiver. Since the screen on this LCD remote control changes when you select a different function, explanations of buttons for controlling other components/functions can be found in the sections for those components/functions.

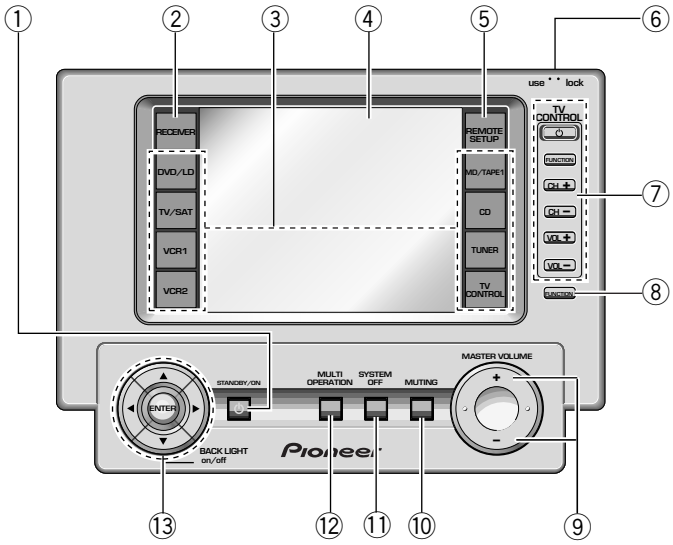

memo

To turn on the remote control touch it anywhere on the screen.

① **⏻ STANDBY/ON button**
Press to turn power of the receiver on or to STANDBY (off).

② **RECEIVER button**
Press to switch the remote control into receiver mode or to get receiver screens.

③ **Function buttons**
These buttons are the basic controls that switch the mode of the receiver and allow you to control your other components.
DVD/LD: Press to switch the remote control into DVD/LD mode.
TV/SAT: Press to switch the remote control into TV/SAT (satellite tuner) mode.
VCR 1: Press to switch the remote control into VCR 1 mode.
VCR 2: Press to switch the remote control into VCR 2 mode.
MD/TAPE 1: Press to switch the remote control into MD/TAPE 1 mode.
CD: Press to switch the remote control into CD mode.
TUNER: Press to switch the remote control into TUNER mode.
TV CONTROL: Press so that the remote control can operate the TV CONTROL commands.

④ **REMOTE CONTROL screen**

⑤ **REMOTE SETUP button.**
Use to customize the remote control functions and the remote control itself. (See "Setting Up Remote Control of Other Components" starting on)

⑥ **LOCK switch**
Use to lock the remote control so it doesn't turn on by accident. For normal use keep it set in USE.

⑦ **TV CONTROL buttons**
The following buttons are used to control the TV only and can be used once they are preset to control your TV.
⏻ STANDBY/ON : Press to turn the power of the TV on/off.
FUNCTION : Press TV FUNC to select the TV for remote control operation.
CH +/– : Use these buttons to change the channel of the TV.
VOL +/– : Press to control the volume of the TV.

⑧ **FUNCTION button**
Press to select a source. The button will cycle through all the possible sources.

⑨ **MASTER VOLUME button**
Use to raise or lower the volume of the receiver.

⑩ **MUTING button**
Press to mute or restore the volume.

⑪ **SYSTEM OFF button**
This button turns off components in two ways. First, when pressed it will turn off all PIONEER components. Secondly, any component that has programmed into the SYSTEM OFF settings will be turned off.
For example : If you programmed power off in the SYSTEM OFF settings for your TV and VCR, pressing the SYSTEM OFF button will turn off these components even if they are not PIONEER products.

⑫ **MULTI OPERATION button**
Use this button to start the MULTI OPERATION mode. for how to program and use the MULTI OPERATION mode.

⑬ **▲/▼(BACK LIGHT on/off)/◄/►/ENTER buttons**
These buttons can be used for a variety of operations. In the SYSTEM SETUP menu, the ▲/▼ buttons can be used to adjust CHANNEL DELAY or CHANNEL LEVEL.
The ▲/▼ buttons, pressed simultaneously, can be use to lock or unlock a setting .
These buttons are also used to control the DVD menu for the DVD remote control screen. If the remote control is in the REMOTE SETUP mode you can use the ▼ button to adjust the BACKLIGHT.

Basic Receiver LCD Screens

Receiver MAIN Screen

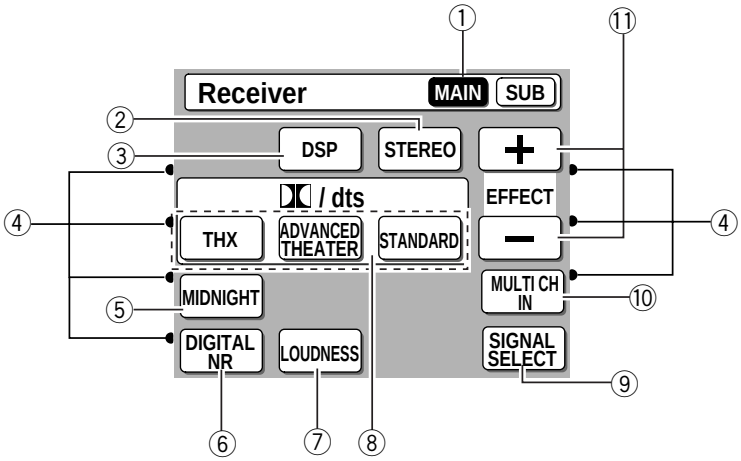

① **Receiver MAIN button**
Press this button to select the main receiver screen (above) when the remote control is on the sub receiver screen.

② **STEREO button**
Switches the receiver into STEREO mode if it was in a different sound mode (like ADVANCED THEATER or THX CINEMA) or toggles between DIRECT and STEREO mode.

③ **DSP button**
Press repeatedly to select a DSP sound mode.

④ **DIRECT FUNCTION on/off indicator**

These dots indicate weather the DIRECT FUNCTION is on or off for the function (DVD/LD, CD, etc.) they point to.

⑤ **MIDNIGHT button**
Switches the MIDNIGHT LISTENING mode on or off (for all modes except THX and MULTI CH IN).

⑥ **DIGITAL NR button**
Switches the DIGITAL NR on or off (for all modes except THX and MULTI CH IN).

⑦ **LOUDNESS button**
Switches the LOUDNESS mode on or off (for all modes except THX and MULTI CH IN).

⑧ **DD/dts buttons**
Press these buttons to put the receiver in the selected surround sound mode. For more information on the modes.

⑨ **SIGNAL SELECT button**
Press SIGNAL SELECT repeatedly to select one of the following:
ANALOG : To select an analog signal.
DIGITAL : To select a digital signal (DVD/LD, TV/SAT, CD, MD/TAPE 1, VCR 1, VCR 2).
AC-3 RF : To select an DD RF signal (DVD/LD, TV/SAT, VCR 1, VCR 2).
AUTO : This is the default. If there are analog, digital and DD RF signals input, the receiver automatically selects the DD RF signal. If there are analog and digital signals input the digital will be selected.

⑩ **MULTI CH IN button**
Use to hook up an external component that can decode other types of signals and input them into the VSX-39TX.

⑪ **EFFECT +/– button**
Use these buttons to increase or decrease the amount of effect applied in a DSP or Advanced Theater mode. When the amount of effect is increased in a DSP/Advanced Theater mode the characteristics of that mode become stronger and more noticeable. The scale ranges from 10-90 with 70 as the default setting. First turn on the DSP/ Advanced Theater mode you want (by pressing the DSP/ Advanced Theater button until you get the mode) and then increase or decrease the amount of effect.

Receiver SUB Screen

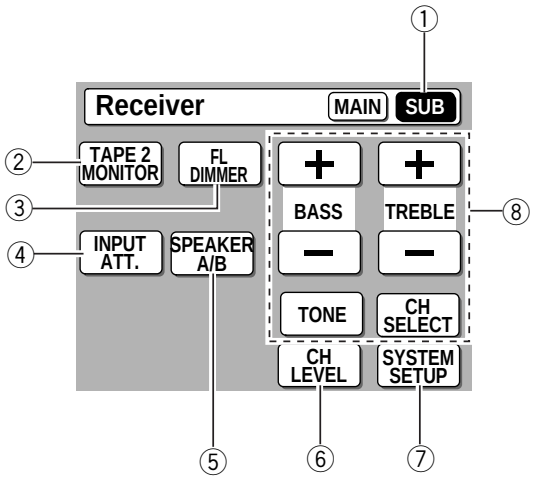

① **Receiver MAIN button**
Press this button to select the main receiver screen (above) when the remote control is on the sub receiver screen.

② **STEREO button**
Switches the receiver into STEREO mode if it was in a different sound mode (like ADVANCED THEATER or THX CINEMA) or toggles between DIRECT and STEREO mode.

③ **DSP button**
Press repeatedly to select a DSP sound mode.

④ **DIRECT FUNCTION on/off indicator**

These dots indicate weather the DIRECT FUNCTION is on or off for the function (DVD/LD, CD, etc.) they point to.

⑤ **MIDNIGHT button**
Switches the MIDNIGHT LISTENING mode on or off (for all modes except THX and MULTI CH IN).

⑥ **DIGITAL NR button**
Switches the DIGITAL NR on or off (for all modes except THX and MULTI CH IN).

⑦ **LOUDNESS button**
Switches the LOUDNESS mode on or off (for all modes except THX and MULTI CH IN).

⑧ **DD/dts buttons**
Press these buttons to put the receiver in the selected surround sound mode. For more information on the modes .

⑨ **SIGNAL SELECT button**
Press SIGNAL SELECT repeatedly to select one of the following:
ANALOG : To select an analog signal.
DIGITAL : To select a digital signal (DVD/LD, TV/SAT, CD, MD/TAPE 1, VCR 1, VCR 2).
AC-3 RF : To select an DD RF signal (DVD/LD, TV/SAT, VCR 1, VCR 2).
AUTO : This is the default. If there are analog, digital and DD RF signals input, the receiver automatically selects the DD RF signal. If there are analog and digital signals input the digital will be selected.

⑩ **MULTI CH IN button**
Use to hook up an external component that can decode other types of signals and input them into the VSX-39TX.

⑪ **EFFECT +/– button**
Use these buttons to increase or decrease the amount of effect applied in a DSP or Advanced Theater mode. When the amount of effect is increased in a DSP/Advanced Theater mode the characteristics of that mode become stronger and more noticeable. The scale ranges from 10-90 with 70 as the default setting. First turn on the DSP/Advanced Theater mode you want (by pressing the DSP/Advanced Theater button until you get the mode) and then increase or decrease the amount of effect.

■ Remote Control Unit (VSX-37TX/VSX-36TX/VSX-D909S)

These pages describe the buttons on the remote control used to operate the receiver.

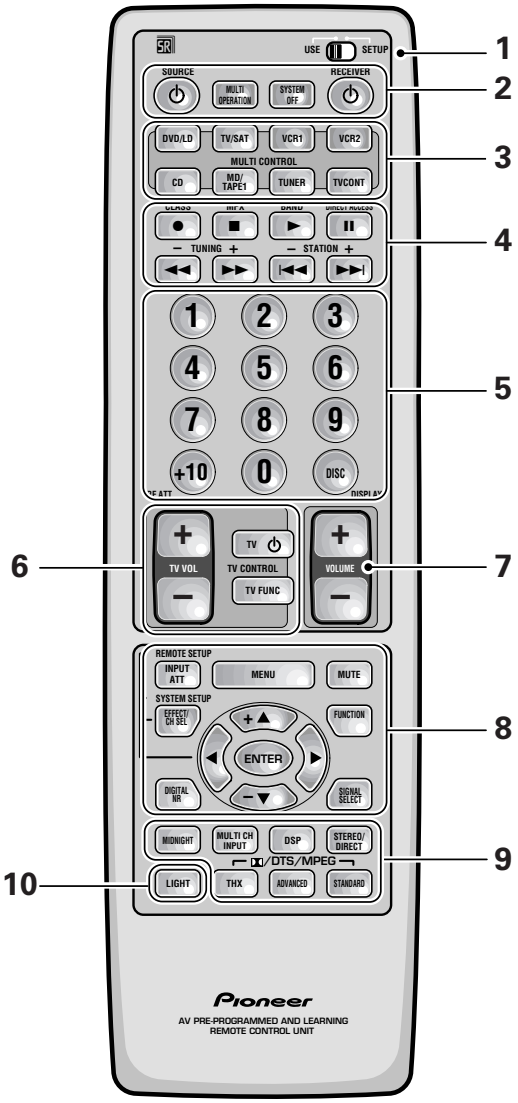

1 USE/SETUP slide switch
Use to put the remote into receiver SETUP, or receiver USE mode.

2 ⏻ SOURCE button
Use to turn on the power of your other components after you have recalled or taught the signals to this remote control.

MULTI OPERATION button
Use this button to start the MULTI OPERATION mode. for how to program and use the MULTI OPERATION mode.

SYSTEM OFF button
This button turns off components in two ways. First, when pressed it will turn off all PIONEER components. Secondly, any component that has programmed into the SYSTEM OFF settings will also be turned off .

For example : If you programmed power on for your TV and VCR, pressing the SYSTEM OFF button will turn off these components even if they are not PIONEER products.

⏻ RECEIVER button
Press to turn power of the receiver on or to STANDBY (off).

3 MULTI CONTROL buttons
Use these to select a source and the corresponding remote operation mode.

For example, pressing TUNER selects the built in tuner and sets the remote operation to the tuner functions.

4 Component Control buttons
Use to control specific components, like a CD player or DVD player, after you have programmed the remote control to do these operations and the remote is put in that operation mode.

5 Number buttons
These buttons can perform a variety of different functions depending on the remote operation mode. They are most useful for CD and tuner operations.

6 TV CONTROL buttons
The following buttons are used to control the TV only and can be used no matter what function the remote control is set to.

TV ⏻ button – Press to turn the power of the TV on/off.

TV FUNC button – Press TV FUNC to select the TV for remote control operation.

TV VOL +/- button – Use to adjust the TV volume.

7 MASTER VOLUME buttons
Use to raise or lower the volume of the receiver.

8 INPUT ATT button (when USE mode is selected)
Use to lower the input level of an analog signal that is too powerful, thus causing the sound to distort (the OVERLOAD indicator will light).

REMOTE SETUP button (when SETUP mode is selected)
Use to customize the remote control functions and the remote control itself. (See "Setting Up the Remote Control to Control Other Components" starting on , "Multi Operation" starting on)

MENU button
Use to get the various menus for your TV or DTV.

MUTING button
Press to mute or restore the volume.

EFFECT/CH SEL (when USE mode is selected) button
EFFECT – Use these buttons to increase or decrease the amount of effect applied in a DSP or Advanced Theater mode. When the amount of effect is increased in a DSP/Advanced Theater mode the characteristics of that mode become stronger and more noticeable. The scale ranges from 10-90 with 70 as the default setting. First turn on the DSP/Advanced Theater you want (by pressing the DSP/Advanced Theater button until you get the mode) and then increase or decrease the amount of effect.

CH SEL – You may want to adjust the channels when listening to some sound sources. Use this button to select the channel you want to adjust.

SYSTEM SET UP button (when SETUP mode is selected)
Use to set up the speaker and sound systems. For more information see "Setting up for Surround Sound" starting on .

FUNCTION button
Press to select a source. The button will cycle through all the possible sources.

▲(+)/▼(–)/◄/►/ENTER buttons
Use to operate the on-screen menu on your TV screen and enter commands when setting up surround sound, speakers levels & settings, and other set up features . Specific use of these buttons is described in conjunction with the operations they perform. For more information see each individual section.

DIGITAL NR button
Press to switch Digital NR on or off.

SIGNAL SELECT button
Press SIGNAL SELECT repeatedly to select one of the following:

ANALOG – Analog signal.

DIGITAL – Digital signal (DVD/LD, TV/SAT, CD, MD/TAPE 1/CD-R, VCR 1/DVR, VCR 2).

AC-3 RF (VSX-37TX only) **–** DD RF signal (DVD/LD, TV/SAT, VCR 1, VCR 2).

AUTO – This is the default. If there are both analog, digital, DD RF input signals, the receiver automatically selects the best possible signal.

9 MIDNIGHT button
Switches the MIDNIGHT mode on or off.

MULTI CH INPUT button
Press to switch to MULTI CH IN mode.

DSP button
Press repeatedly to select a DSP sound mode.

STEREO/DIRECT button
Switches the receiver into STEREO mode if it was in a different sound mode (like ADVANCED THEATER) or toggles between DIRECT and STEREO mode. For more on STEREO mode .

DIRECT playback bypasses the tone controls and channel level for the most accurate reproduction of a program source.

LIGHT button
Press to light the remote control buttons.

DD /DTS buttons
Press these buttons to put the receiver in the selected sound mode. For more information on the sound modes.

8.2 SPECIFICATIONS

VSX-39TX :

Continuous average power output of 120 watts* per channel, min., at 6 ohms, from 20 Hz to 20,000 Hz with no more than 0.09 % total harmonic distortion (front).**

Audio Section

Continuous Power Output
- Front ..... 120 W + 120 W (20 Hz-20 kHz, 0.09 %, 6 Ω)
- Center ..... 120 W (20 Hz-20 kHz, 0.09 %, 6 Ω)
- Rear ..... 120 W + 120 W (20 Hz-20 kHz, 0.09 %, 6 Ω)

Input (Sensitivity/Impedance)
- PHONO MM ..... 4.7 mV/47 kΩ
- VCR 1/DVR, VCR 2, DVD/LD, TV/SAT, VIDEO, CD
- MD/TAPE 1/CD-R, TAPE 2 ..... 335 mV/47 kΩ

Phono Overload level (T.H.D.0.1 %, 1kHz)
- PHONO MM ..... 120 mV

Frequency Response
- PHONO MM ..... 20 Hz to 20,000 Hz ± 0.3 dB
- VCR 1/DVR, VCR 2, DVD/LD, TV/SAT, VIDEO, CD
- MD/TAPE 1/CD-R, TAPE 2 ..... 5 Hz to 100,000 Hz dB

Output (Level/Impedance)
- VCR 1/DVR REC, VCR 2 REC, MD/TAPE 1/CD-R REC
- TAPE 2 REC ..... 335 mV/2.2 kΩ

Tone Control
- BASS ..... ± 6 dB (100 Hz)
- TREBLE ..... ± 6 dB (10 kHz)
- LOUDNESS ..... +10 dB (100 Hz/10 kHz)

Signal-to-Noise Ratio (IHF, short circuited, A network)
- PHONO MM ..... 80 dB
- VCR 1/DVR, VCR 2, DVD/LD, TV/SAT, VIDEO, CD
- MD/TAPE 1, TAPE 2 ..... 101 dB
- MULTI CHANNEL IN ..... 105 dB(Channel Level:Bypass)

Signal-to-Noise Ratio [EIA, at 1 W (1 kHz)]
- PHONO MM ..... 80 dB
- VCR 1/DVR, VCR 2, DVD/LD, TV/SAT, VIDEO, CD
- MD/TAPE 1/CD-R, TAPE 2 ..... 83 dB

* *Measured pursuant to the Federal Trade Commission's Trade Regulation rule on Power Output Claims for Amplifiers.*

** *Measured by Audio Spectrum Analyzer.*

Maintenance of External Surfaces

- Use a polishing cloth or dry cloth to wipe off dust and dirt.
- When the surfaces are dirty, wipe with a soft cloth dipped in some neutral cleanser diluted five or six times with water, and wrung out well, and then wipe again with a dry cloth. Do not use furniture wax or cleaners.
- Never use thinners, benzine, insecticide sprays or other chemicals on or near this unit, since these will corrode the surfaces.

Video Section

Input (Sensitivity) ..... 1 Vp-p/75 Ω
Output (Level/Impedance) ..... 1 Vp-p/75 Ω
Signal-to-Noise Ratio ..... 65 dB
Frequency Response ..... 5 Hz to 10 MHz dB

Component Video Section

Input (Sensitivity) ..... 1 Vp-p/75 Ω
Output (Level/Impedance) ..... 1 Vp-p/75 Ω
Signal-to-Noise Ratio ..... 65 dB

FM Tuner Section

Frequency Range ..... 87.5 MHz to 108 MHz
Usable Sensitivity ..... Mono: 13.2 dBf, IHF (1.3 μV/75 Ω)
50 dB Quieting Sensitivity ..... Mono: 20.2 dBf
Stereo: 38.6 dBf
Signal-to-Noise Ratio ..... Mono: 73 dB (at 85 dBf)
Stereo: 70 dB (at 85 dBf)
Distortion ..... Stereo: 0.5 % (1 kHz)
Alternate Channel Selectivity ..... 60 dB (400 kHz)
Stereo Separation ..... 40 dB (1 kHz)
Frequency Response ..... 30 Hz to 15 kHz (± 1) dB
Antenna Input ..... 75 Ω unbalanced

AM Tuner Section

Frequency Range ..... 530 kHz to 1,700 kHz
Sensitivity (IHF, Loop antenna) ..... 350 μV/m
Selectivity ..... 25 dB
Signal-to-Noise Ratio ..... 50 dB
Antenna ..... Loop antenna

Miscellaneous

Power Requirements ..... AC 120 V, 60 Hz
Power Consumption ..... 460 W, 630 VA
Power Consumption in Standby mode ..... 1.0 W
AC Outlet
- SWITCHED (×2) ..... Total 100 W (0.8 A) MAX
- UNSWITCHED ..... 100 W (0.8 A) MAX

Dimensions ..... 457 (W) × 174 (H) × 470 (D) mm
(17-15/16 (W) × 6-13/16 (H) × 18-1/2 (D) in.)
Weight (without package) ..... 17.2 kg (37 lb 15 oz)

Furnished Parts

FM wire Antenna 1
AM Loop Antenna 1
"AA" IEC LR6 batteries 4
Remote Control Unit 1
Touch Pen 1
Cushion for Remote 4
Operating Instructions 1

NOTE:
Specifications and the design are subject to possible modifications without notice, due to improvements.

Amplifier Section

VSX-37TX :

Continuous average power output of 120 watts* per channel, min., at 6 ohms, from 20 Hz to 20,000 Hz with no more than 0.09 % total harmonic distortion (front).**

VSX-36TX:

Continuous average power output of 100 watts* per channel, min., at 8 ohms, from 20 Hz to 20,000 Hz with no more than 0.09 % total harmonic distortion (front).**

VSX-37TX :

Continuous Power Output
- Front ..... 120 W + 120 W (20 Hz-20 kHz, 0.09 %, 6 Ω)
- Center ..... 120 W (20 Hz-20 kHz, 0.09 %, 6 Ω)
- Rear ..... 120 W + 120 W (20 Hz-20 kHz, 0.09 %, 6 Ω)

VSX-36TX :

Continuous Power Output
- Front ..... 100 W + 100 W (20 Hz-20 kHz, 0.09 %, 8 Ω)
- Center ..... 100 W (20 Hz-20 kHz, 0.09 %, 8 Ω)
- Rear ..... 100 W + 100 W (20 Hz-20 kHz, 0.09 %, 8 Ω)

Audio Section

Input (Sensitivity/Impedance)
- PHONO MM ..... 4.7 mV/47 kΩ
- VCR 1/DVR, VCR 2, DVD/LD, TV/SAT, VIDEO, CD
- MD/TAPE 1/CD-R, TAPE 2 ..... 335 mV/47 kΩ

Phono Overload level (T.H.D.0.1 %, 1kHz)
- PHONO MM ..... 120 mV

Frequency Response
- PHONO MM ..... 20 Hz to 20,000 Hz ± 0.3 dB
- VCR 1/DVR, VCR 2, DVD/LD, TV/SAT, VIDEO, CD
- MD/TAPE 1/CD-R, TAPE 2 ..... 5 Hz to 100,000 Hz dB

Output (Level/Impedance)
- VCR 1/DVR REC, VCR 2 REC, MD/TAPE 1/CD-R REC
- TAPE 2 REC ..... 335 mV/2.2 kΩ

Tone Control
- BASS ..... ± 6 dB (100 Hz)
- TREBLE ..... ± 6 dB (10 kHz)
- LOUDNESS ..... +10 dB (100 Hz/10 kHz)

Signal-to-Noise Ratio (IHF, short circuited, A network)
- PHONO MM ..... 80 dB
- VCR 1/DVR, VCR 2, DVD/LD, TV/SAT, VIDEO, CD
- MD/TAPE 1CD-R, TAPE 2 ..... 101 dB
- MULTI CHANNEL IN ..... 105 dB(Channel Level:Bypass)

Signal-to-Noise Ratio [EIA, at 1 W (1 kHz)]
- PHONO MM ..... 80 dB
- VCR 1/DVR, VCR 2, DVD/LD, TV/SAT, VIDEO, CD
- MD/TAPE 1/CD-R, TAPE 2 ..... 83 dB

* *Measured pursuant to the Federal Trade Commission's Trade Regulation rule on Power Output Claims for Amplifiers.*

** *Measured by Audio Spectrum Analyzer.*

Video Section

Input (Sensitivity) ..... 1 Vp-p/75 Ω
Output (Level/Impedance) ..... 1 Vp-p/75 Ω
Signal-to-Noise Ratio ..... 65 dB
Frequency Response ..... 5 Hz to 10 MHz dB

Component Video Section

Input (Sensitivity) ..... 1 Vp-p/75 Ω
Output (Level/Impedance) ..... 1 Vp-p/75 Ω
Signal-to-Noise Ratio ..... 65 dB

FM Tuner Section

Frequency Range ..... 87.5 MHz to 108 MHz
Usable Sensitivity ..... Mono: 13.2 dBf, IHF (1.3 μV/75 Ω)
50 dB Quieting Sensitivity ..... Mono: 20.2 dBf
Stereo: 38.6 dBf
Signal-to-Noise Ratio ..... Mono: 73 dB (at 85 dBf)
Stereo: 70 dB (at 85 dBf)
Distortion ..... Stereo: 0.5 % (1 kHz)
Alternate Channel Selectivity ..... 60 dB (400 kHz)
Stereo Separation ..... 40 dB (1 kHz)
Frequency Response ..... 30 Hz to 15 kHz (± 1) dB
Antenna Input ..... 75 Ω unbalanced

AM Tuner Section

Frequency Range ..... 530 kHz to 1,700 kHz
Sensitivity (IHF, Loop antenna) ..... 350 μV/m
Selectivity ..... 25 dB
Signal-to-Noise Ratio ..... 50 dB
Antenna ..... Loop antenna

Miscellaneous

Power Requirements ..... AC 120 V, 60 Hz

VSX-37TX :

Power Consumption ..... 460 W, 630 VA
Power Consumption in Standby mode ..... 1.0 W
AC Outlet
- SWITCHED (×2) ..... Total 100 W (0.8 A) MAX
- UNSWITCHED ..... 100 W (0.8 A) MAX

Dimensions ..... 420 (W) × 173 (H) × 470 (D) mm
(16-9/16 (W) × 6-13/16 (H) × 18-1/2 (D) in.)
Weight (without package) ..... 15.2 kg (33 lb 9 oz)

VSX-36TX :

Power Consumption ..... 400 W, 550 VA
Power Consumption in Standby mode ..... 1.0 W
AC Outlet
- SWITCHED (×2) ..... Total 100 W (0.8 A) MAX
- UNSWITCHED ..... 100 W (0.8 A) MAX

Dimensions ..... 420 (W) × 173 (H) × 470 (D) mm
(16-9/16 (W) × 6-13/16 (H) × 18-1/2 (D) in.)
Weight (without package) ..... 14.4 kg (31 lb 13 oz)

Furnished Parts

FM wire Antenna 1
AM loop Antenna 1
"AA" IEC LR6 batteries 2
Remote Control Unit 1
Operating Instructions 1

NOTE:

Specifications and the design are subject to possible modifications without notice, due to improvements.

Accessories (VSX-39TX)

FM wire antenna
(ADH7007)

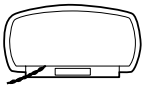

AM loop antenna
(ATB7009)

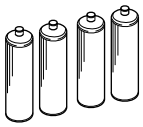

“AA” IEC LR6
batteries x 4

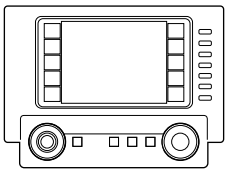

Remote control unit
(Remocon39 : AXD7254)

Touch pen
(E-AA1445-001)

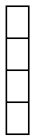

Cushion for
Remote x 4
(AXG7080)

Accessories (VSX-37TX/VSX-36TX/VSX-D909S)

FM wire antenna
(ADH7007)

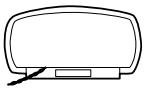

AM loop antenna
(ATB7009)

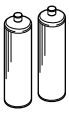

“AA” IEC LR6 batteries x 2

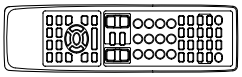

Remote control unit
(Remocon37 : AXD7257)
VSX-37TX/VSX-36TX
(Remocon909S : AXD7278)
VSX-D909S