Pioneer DJ

Service Manual

XDJ-XZ

ORDER NO.
RRV4699

All-In-One DJ System

XDJ-XZ

THIS MANUAL IS APPLICABLE TO THE FOLLOWING MODEL(S) AND TYPE(S).

Model	Type	Power Requirement	Remarks
XDJ-XZ	AXJ	AC 220 V	
XDJ-XZ	LWSYXJ	AC 110 V to 240 V	
XDJ-XZ	UXJCB	AC 120 V	
XDJ-XZ	JXJ	AC 100 V	

THIS SERVICE MANUAL SHOULD BE USED TOGETHER WITH THE FOLLOWING MANUAL(S).

Model	Order No.	Remarks
XDJ-XZ	RRV4698	BLOCK DIAGRAM, EXPLODED VIEWS AND PARTS LIST etc.

Pioneer DJ Corporation
6F, Yokohama i-Mark Place, 4-4-5 Minatomirai, Nishi-ku, Yokohama, Kanagawa 220-0012 JAPAN

K-ZZZ OCT. 2019

SAFETY INFORMATION

This service manual is intended for qualified service technicians; it is not meant for the casual do-it-yourselfer. Qualified technicians have the necessary test equipment and tools, and have been trained to properly and safely repair complex products such as those covered by this manual.
Improperly performed repairs can adversely affect the safety and reliability of the product and may void the warranty. If you are not qualified to perform the repair of this product properly and safely, you should not risk trying to do so and refer the repair to a qualified service technician.

Caution
Since the fuse may be neutral of the mains supply, disconnect the mains to de-energize the phase conductors.

CONTENTS

10. SCHEMATIC DIAGRAM

10.1 OVERALL WIRING DIAGRAM (1/2)

Note:
The 1 and 2 Assys of JLCD, PLAY, SER, TMP and JOG Assys have the same circuitry, parts, and board shapes.
Only printed information is different, because their part numbers and wiring numbers are different.
They are handled similarly in their production management.
Therefore, either 1 or 2 Assy of the respective Assys is assembled in the respective place.

注意：
JLCD、PLAY、SER、TMP、JOG の１と２は回路そのもの、使用部品、基板形状は同じです。
生産上は １と４の ASSY を管理していません。
このためそれぞれの場所には １と２のどちらかの ASSY が配置されています。

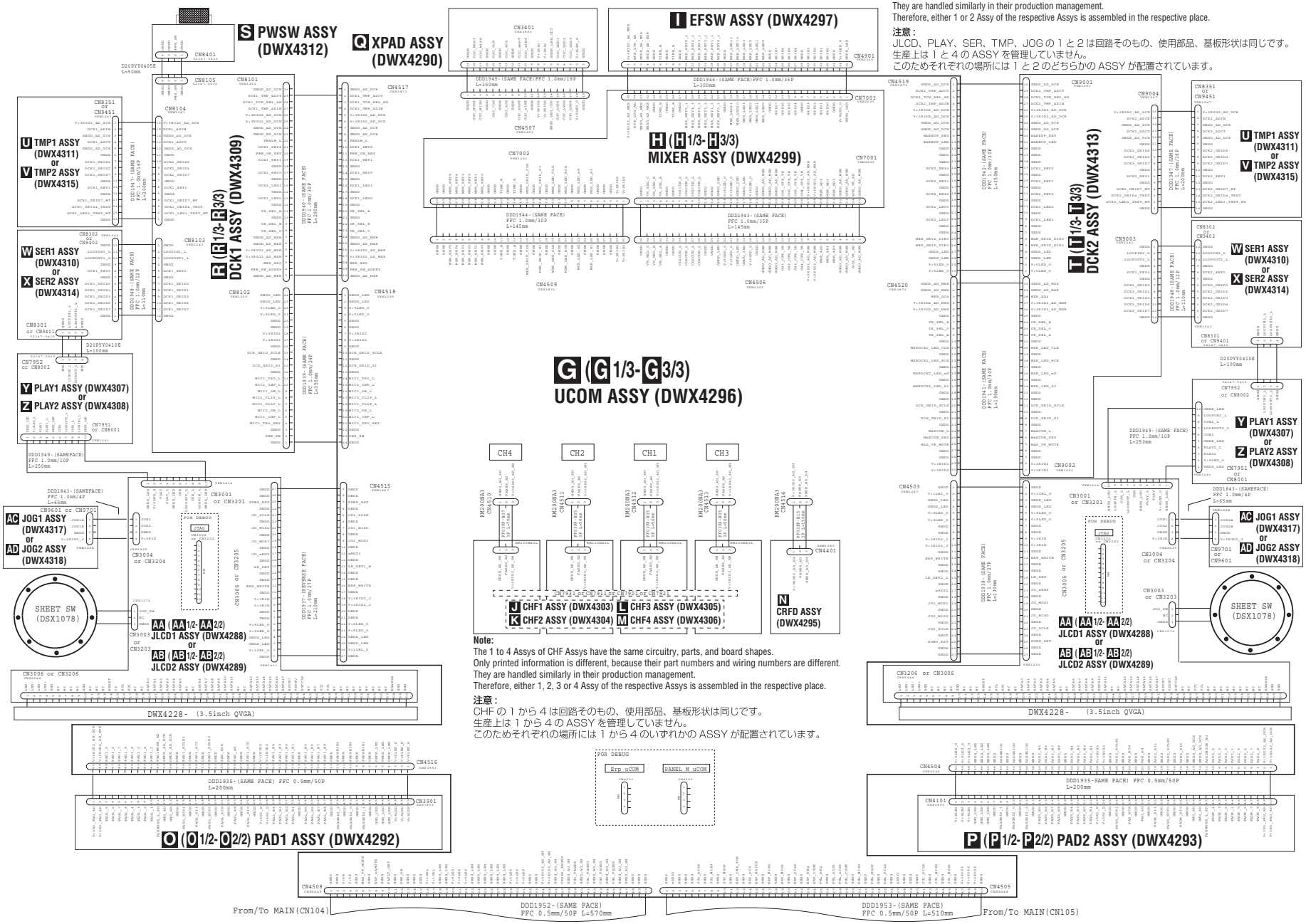

Note:
The 1 to 4 Assys of CHF Assys have the same circuitry, parts, and board shapes.
Only printed information is different, because their part numbers and wiring numbers are different.
They are handled similarly in their production management.
Therefore, either 1, 2, 3 or 4 Assy of the respective Assys is assembled in the respective place.

注意：
CHF の１から４は回路そのもの、使用部品、基板形状は同じです。
生産上は １から４の ASSY を管理していません。
このためそれぞれの場所には １から４のいずれかの ASSY が配置されています。

10.2 OVERALL WIRING DIAGRAM (2/2)

- When ordering service parts, be sure to refer to "EXPLODED VIEWS and PARTS LIST" or "PCB PARTS LIST".
- The ⚠ mark found on some component parts indicates the importance of the safety factor of the part. Therefore, when replacing, be sure to use parts of identical designation.
- : The power supply is shown with the marked box.

- 部品を発注する場合は、必ず「分解図と部品表」または「電気部品表」を参照してください。
- ⚠ 印の部品は、安全上重要な部品です。
  交換するときは、安全および性能維持のため必ず指定の部品をご使用ください。
- 印は電源の供給源を示しています。

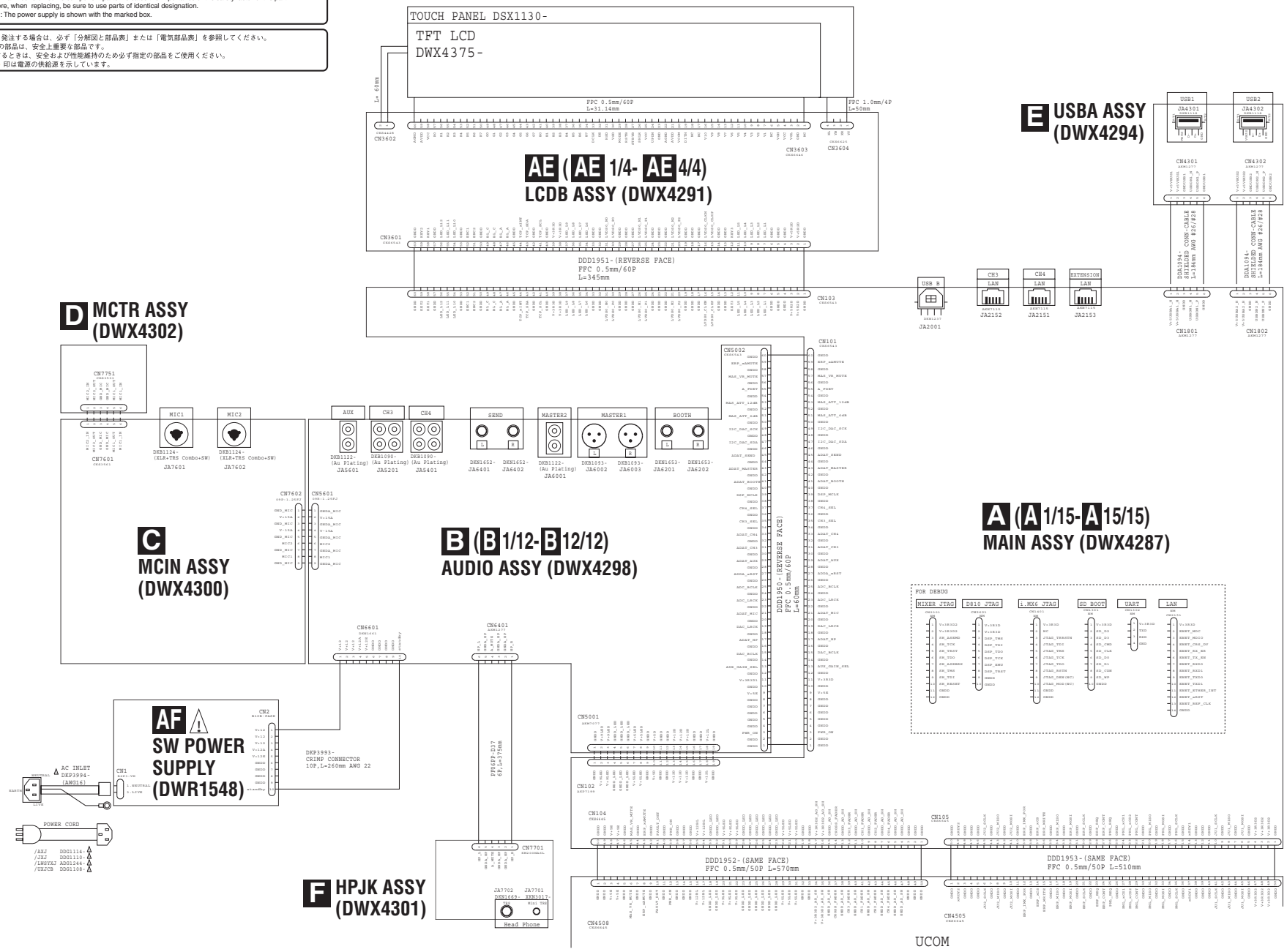

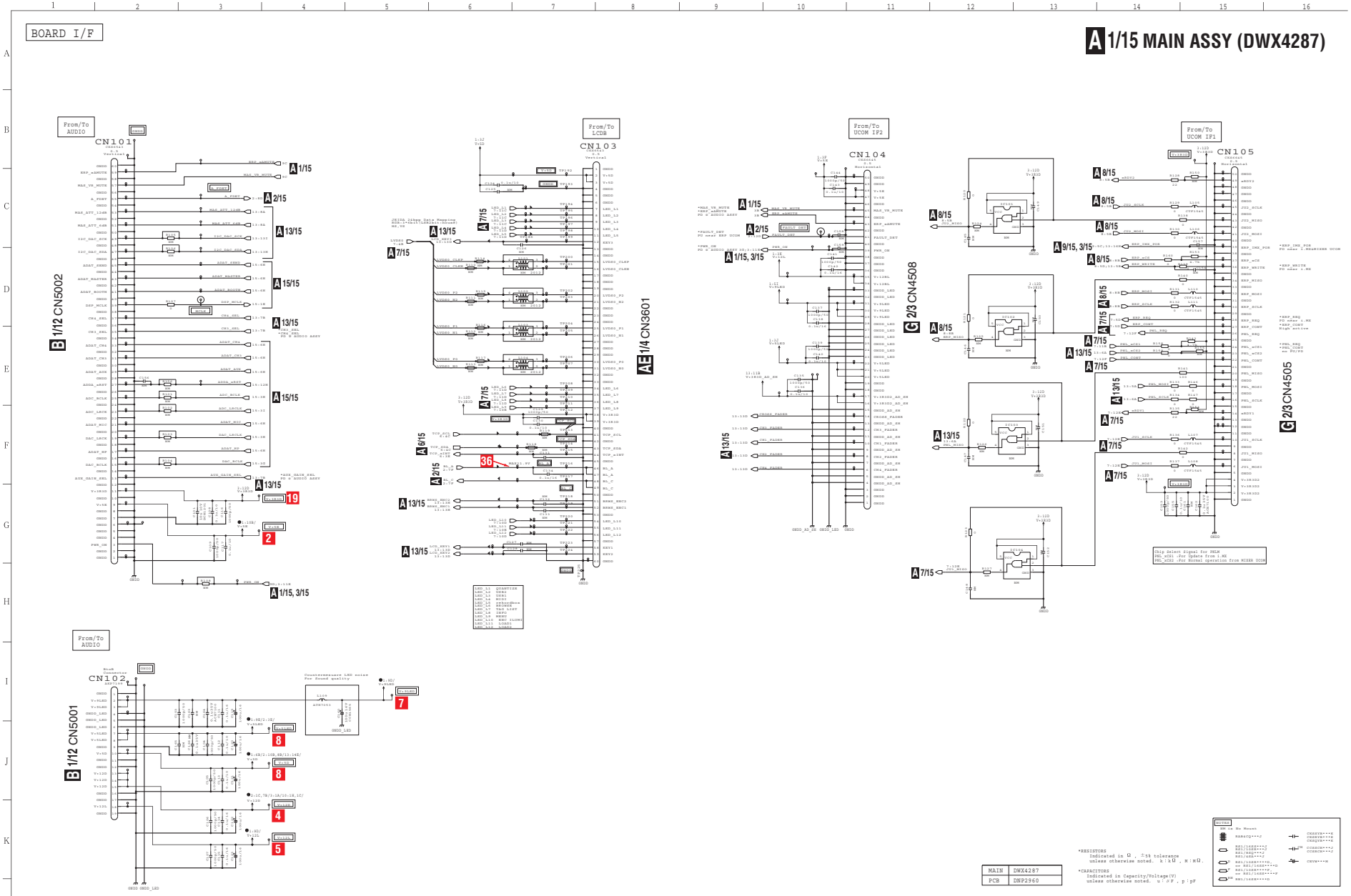
BOARD I/F
A 1/15 MAIN ASSY (DWX4287)
From/To AUDIO
CN101
B 1/12 CN5002
From/To LCDB
CN103
AE 1/4 CN3601
From/To UCOM IP2
CN104
G 2/3 CN4508
From/To UCOM IP1
CN105
G 2/3 CN4505
From/To AUDIO
CN102
B 1/12 CN5001
Chip Select Signal for PMLM
PEL_ACS1 :For Update from 1.MX
PEL_ACS2 :For Normal operation from MIXER UCOM
MAIN DWX4287
PCB DNP2960
*RESISTORS
Indicated in Ω , ±5% tolerance
unless otherwise noted. k : kΩ , M : MΩ.
*CAPACITORS
Indicated in Capacity/Voltage(V)
unless otherwise noted. u : μF , p : pF
NOTES
BA6ACQ***J
RS1/16SS***J
RS1/16SS***J
RS1/8SS***J
RS1/16SS***D
RS1/16SS***F
RS1/16SS***J
or RS1/16SS***F
RS1/16SS***G
CKEXYB***K
CKEXYB***K
CKEQYB***K
CCSRCH***J
CCSRCH***J
CKYW***M
A 1/15

PWR1

A 2/15 MAIN ASSY (DWX4287)

REGULATOR 3.3V=>1.1V(D)

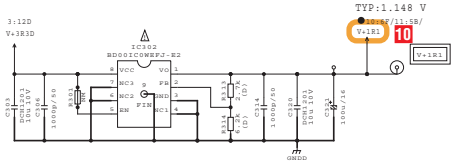

DC/DC Converter 12V=>1.25V(D)

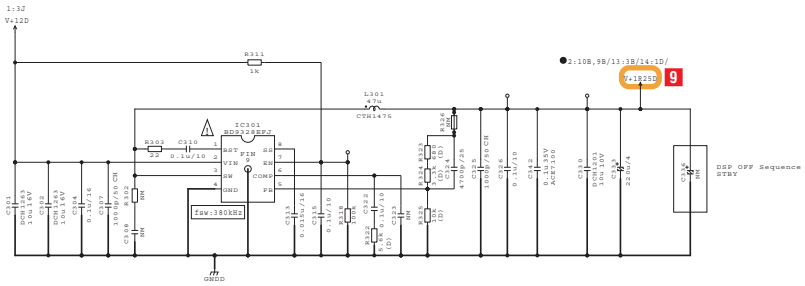

LED BL Driver

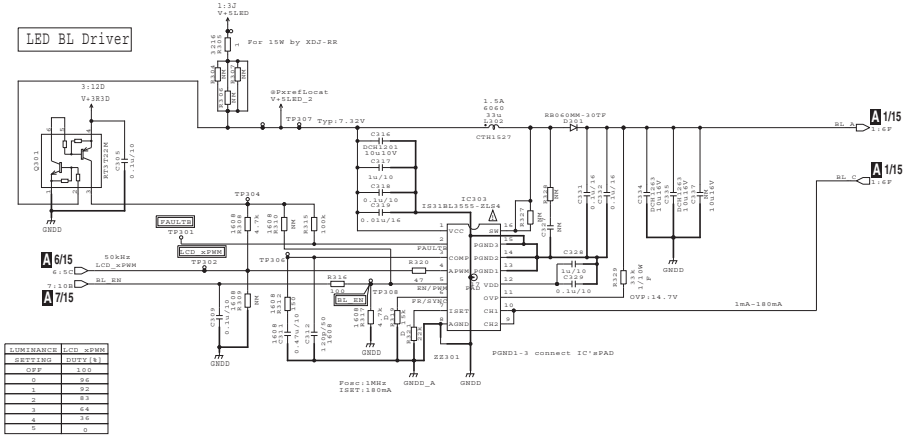

LUMINANCE SETTING	LCD xPWM DUTY(%)
OFF	100
0	96
1	92
2	83
3	64
4	36
5	0

VOLTAGE DETECTION CIRCUIT

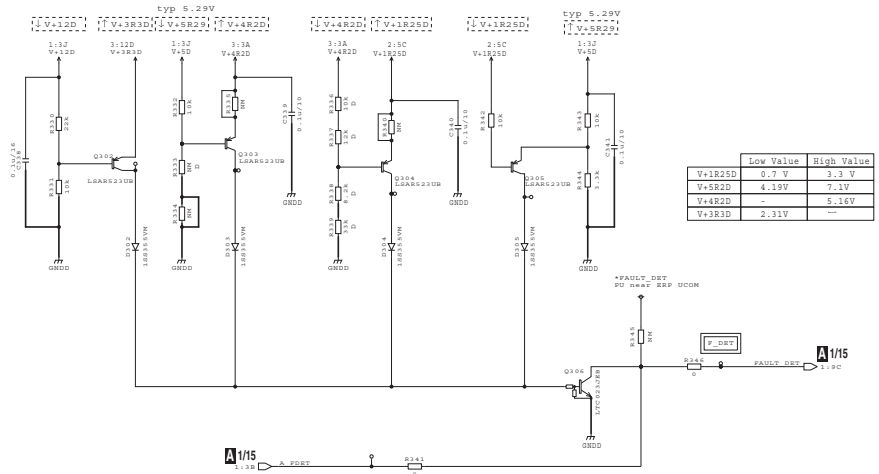

	Low Value	High Value
V+1R25D	0.7 V	3.3 V
V+5R2D	4.19V	7.1V
V+4R2D	-	5.16V
V+3R3D	2.31V	—

F_DET	
H	Normal
L	Power failure

NOTES
NM is No Mount
RAB4CQ***J
RS1/16SS***J
RS1/10SS***J
RS1/8SS***J
RS1/4SS***J
D RS1/10SS***D, or RS1/16SS***D
F RS1/10SS***F, or RS1/16SS***F
NM RN1/16SS***D
CKSSYB***K
CKSSYE***K
CKSQYB***K
CH CCSSCH***J
CCSSRCH***J
CEVM***M

*RESISTORS
Indicated in Ω , ±5% tolerance
unless otherwise noted. k : kΩ , M : MΩ .

*CAPACITORS
Indicated in Capacity/Voltage(V)
unless otherwise noted. u : μF , p : pF

- The ⚠ mark found on some component parts indicates the importance of the safety factor of the part.
  Therefore, when replacing, be sure to use parts of identical designation.
- ⚠ 印の部品は、安全上重要な部品です。
  交換するときは、安全および性能維持のため必ず指定の部品をご使用ください。

MAIN	DWX4287
PCB	DNP2960

A 2/15

A 3/15 MAIN ASSY (DWX4287)

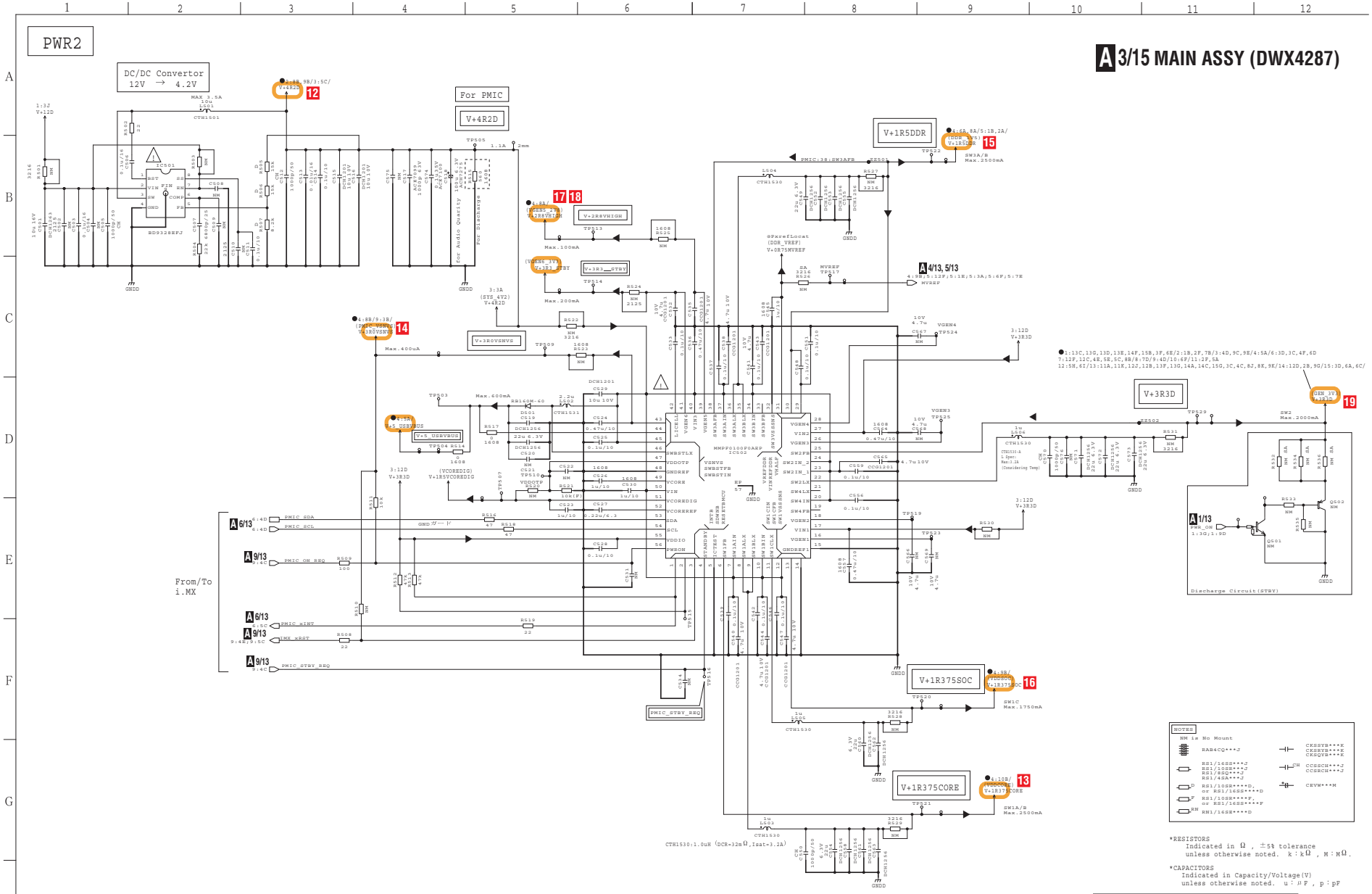

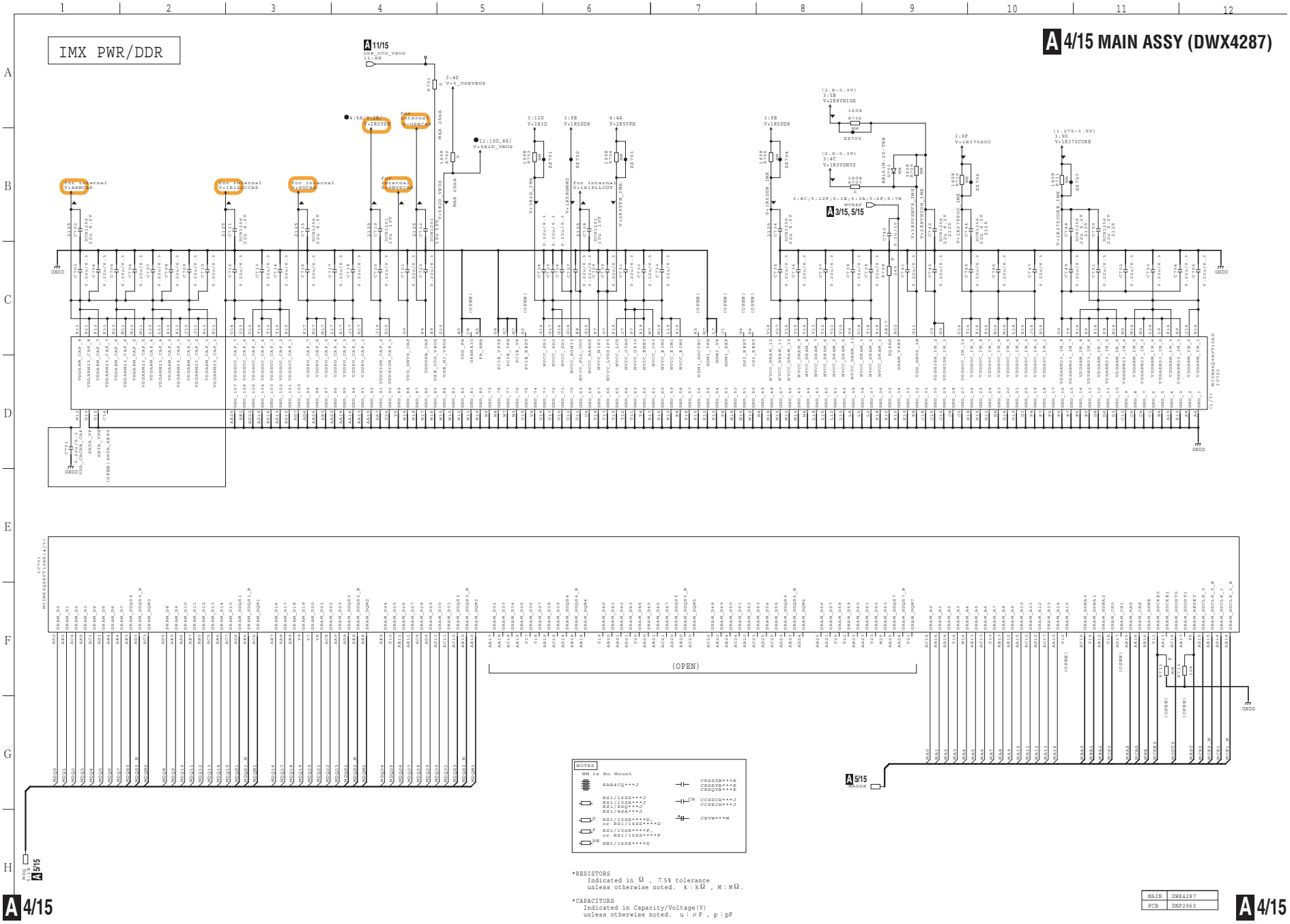

MAIN	DWX4287
PCB	DNP2960

A 5/15 MAIN ASSY (DWX4287)

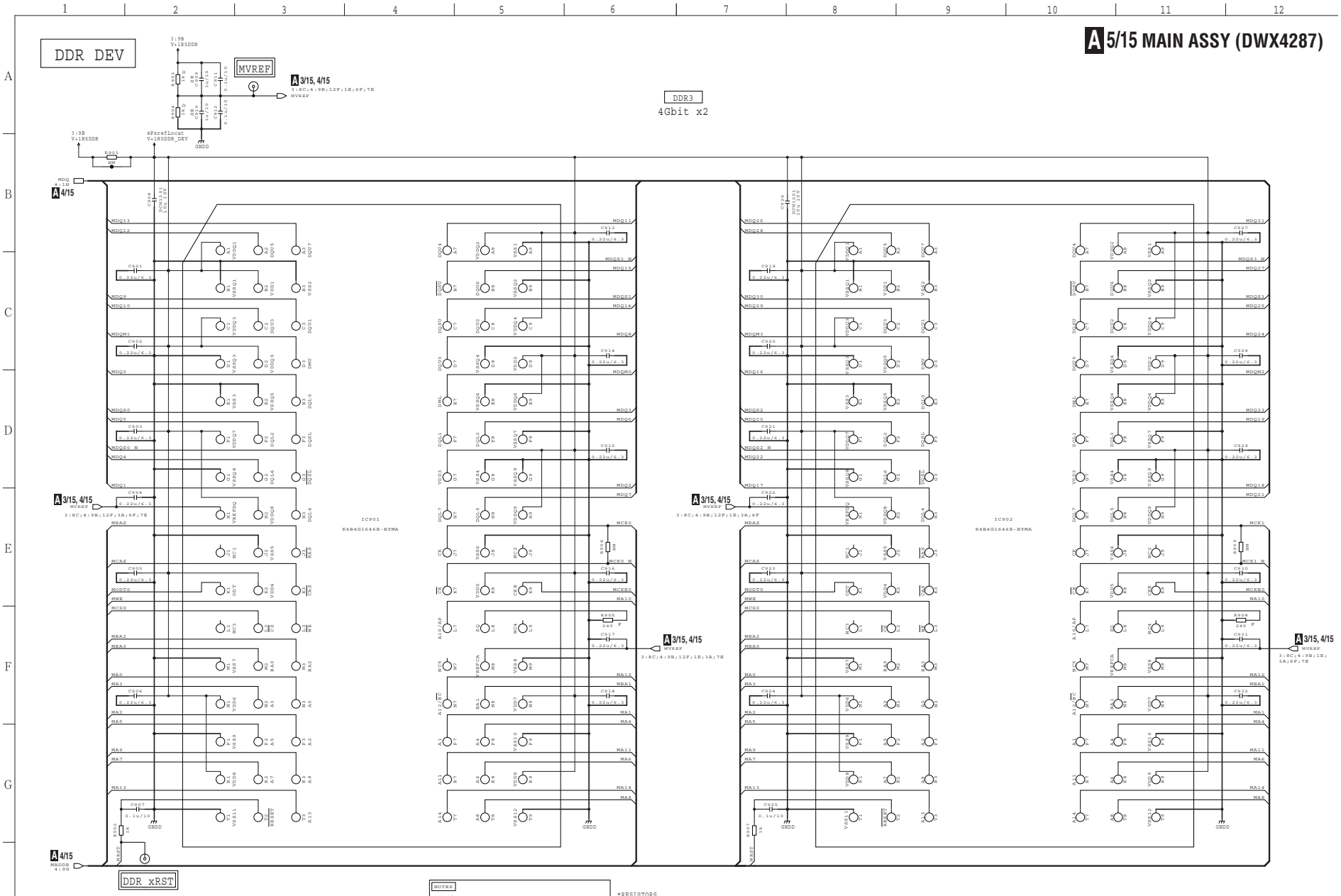

NOTES

NM is No Mount

RS1/16SS***J
RS1/10SS***J
RS1/8SS***J
RS1/4SA***J

RS1/10SS***D,
or RS1/16SS***D

RS1/10SS***F,
or RS1/16SS***F

CKSSYB***K
CKSSYB***K
CKSQYB***K

CCSSCH***J
CCSSCH***J

CEVM***M

*RESISTORS
Indicated in Ω , ±5% tolerance
unless otherwise noted. k : kΩ , M : MΩ.

*CAPACITORS
Indicated in Capacity/Voltage(V)
unless otherwise noted. u : μF , p : pF

MAIN	DWX4287
PCB	DNP2960

A 5/15

IMX ENET/NAND/AUTH

A 6/15 MAIN ASSY (DWX4287)

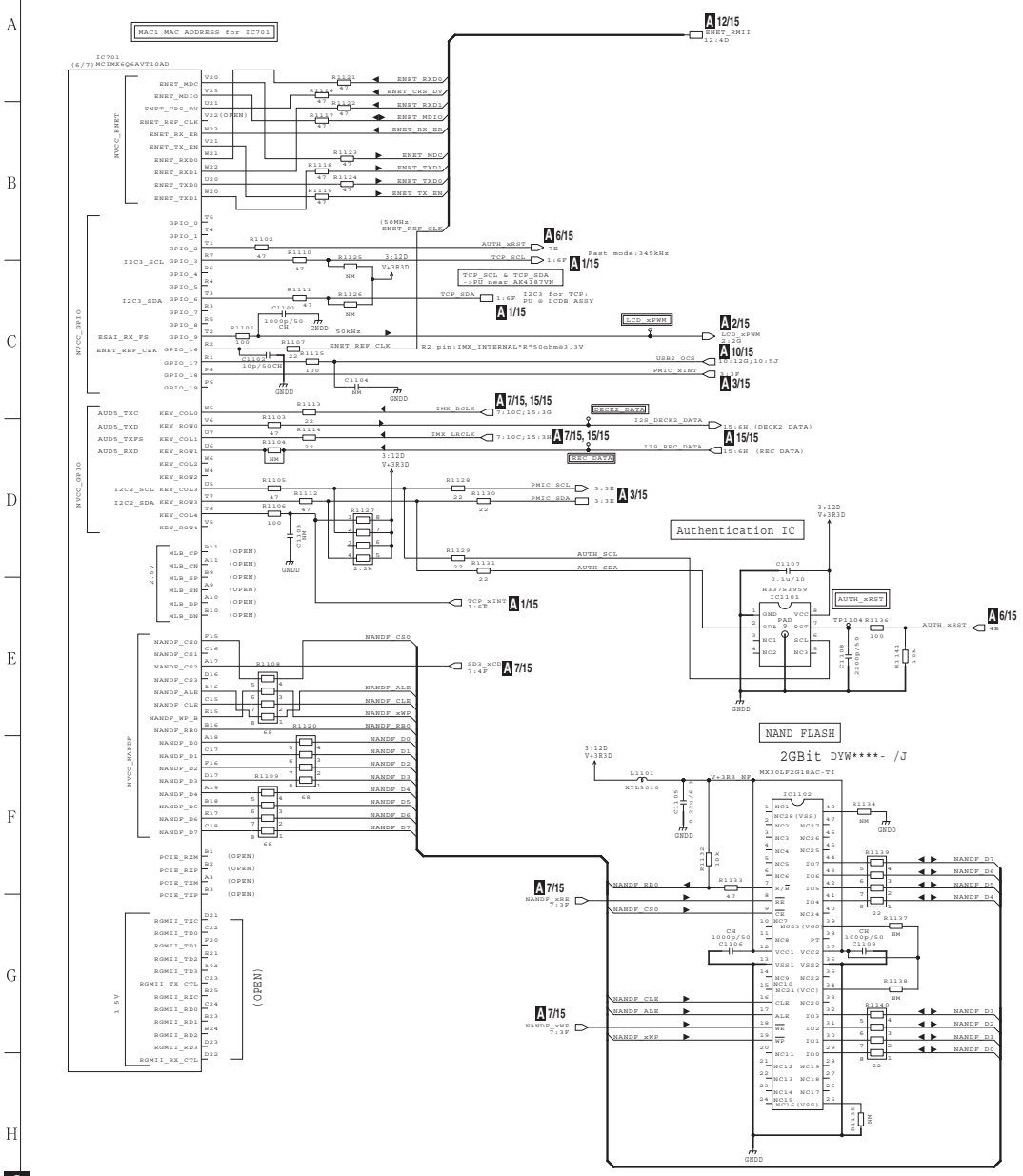

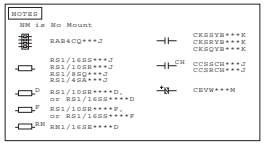

*RESISTORS
Indicated in Ω , ±5% tolerance
unless otherwise noted. k : kΩ , M : MΩ.

*CAPACITORS
Indicated in Capacity/Voltage(V)
unless otherwise noted. u : μF , p : pF

MAIN	DWX4287
PCB	DNP2960

A 7/15 MAIN ASSY (DWX4287)

IMX LCD/KEY/USBB/CLK/JIG

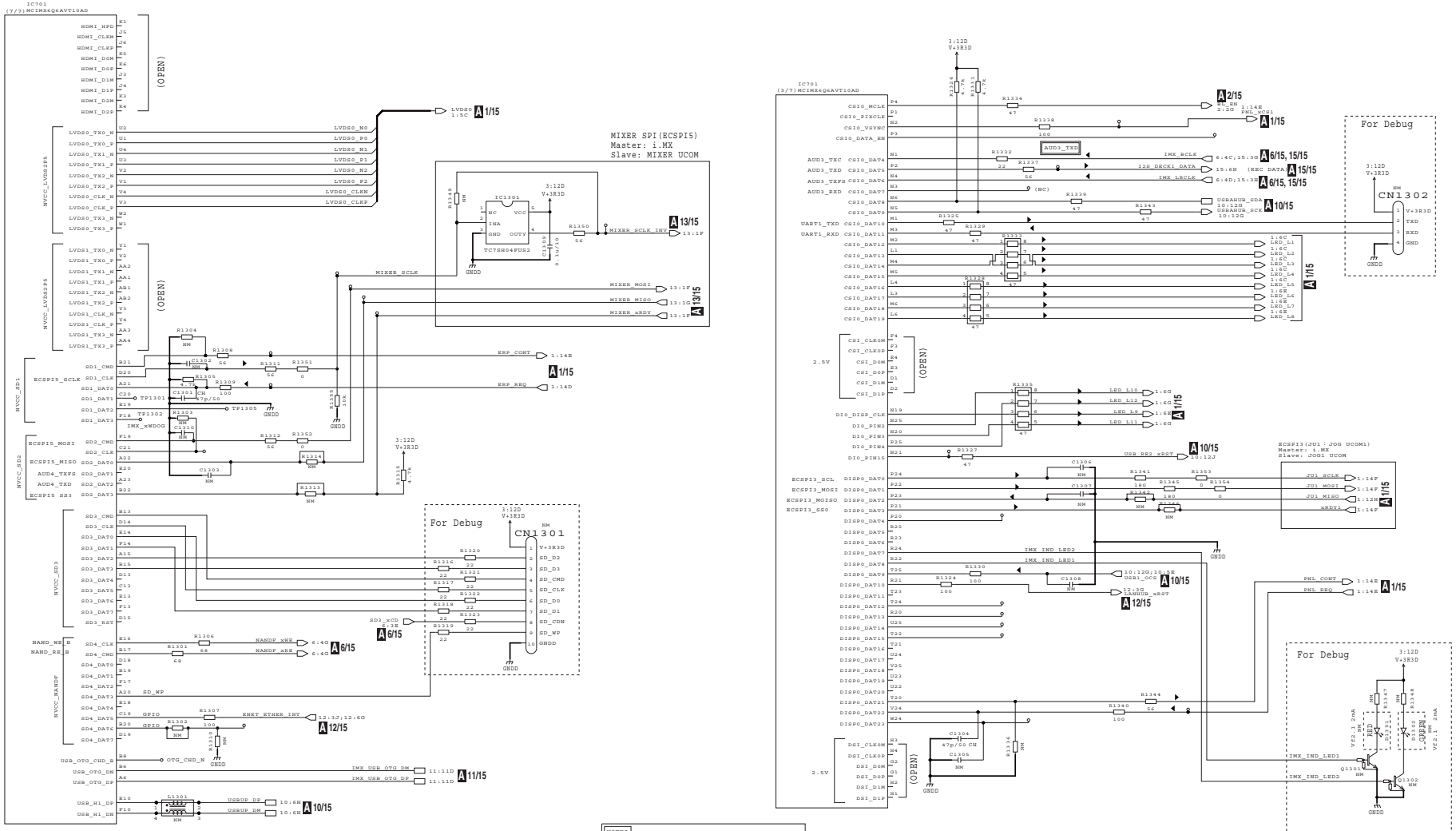

MAIN	DWX4287
PCB	DNP2960

IMX GPIO/BOOT

A 8/15 MAIN ASSY (DWX4287)

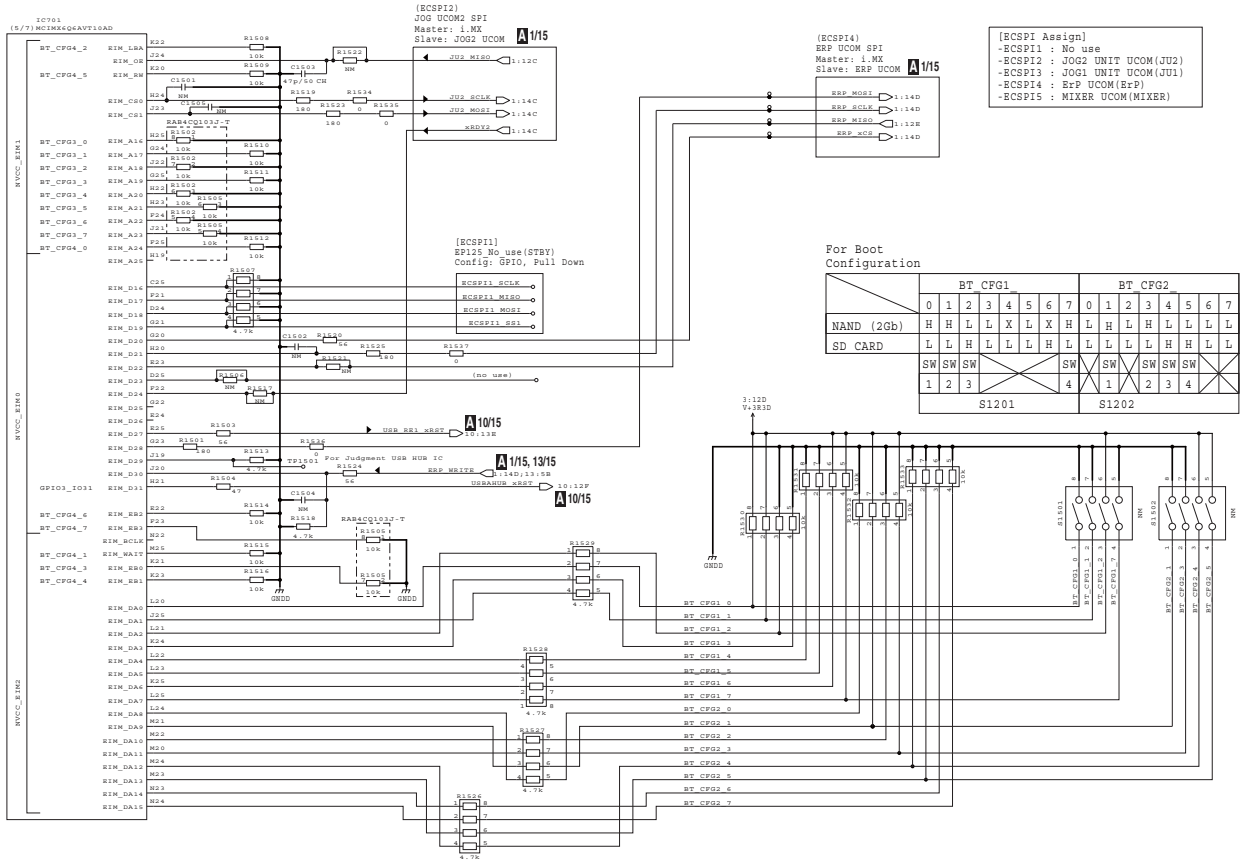

For Boot Configuration

	BT_CFG1								BT_CFG2							
	0	1	2	3	4	5	6	7	0	1	2	3	4	5	6	7
NAND (2Gb)	H	H	L	L	X	L	X	H	L	H	L	H	L	L	L	L
SD CARD	L	L	H	L	L	L	H	L	L	L	L	L	H	H	L	L
	SW	SW	SW					SW		SW		SW	SW	SW		
	1	2	3					4		1		2	3	4		
	S1201								S1202							

NOTES
NM is No Mount

	RAB4CQ***J		CKSSYB***K CKSRYB***K CKSQYB***K
	RS1/16SS***J RS1/10SS***J RS1/8SQ***J RS1/4SS***J	CH	CCSSCH***J CCSRCH***J
D	RS1/10SS****D, or RS1/16SS****D		CEVW***M
F	RS1/10SS****F, or RS1/16SS****F		
RN	RN1/16SS****D		

*RESISTORS
Indicated in Ω , ±5% tolerance
unless otherwise noted. k : kΩ , M : MΩ.

*CAPACITORS
Indicated in Capacity/Voltage(V)
unless otherwise noted. u : μF , p : pF

MAIN	DWX4287
PCB	DNP2960

A 9/15 MAIN ASSY (DWX4287)

IMX CLK/JTAG

BOOT MODE[10]	※0 : OPEN
00	Boot from fuses
01	Serial downloader
10	Boot from board settings (Board Default)
11	Reserved

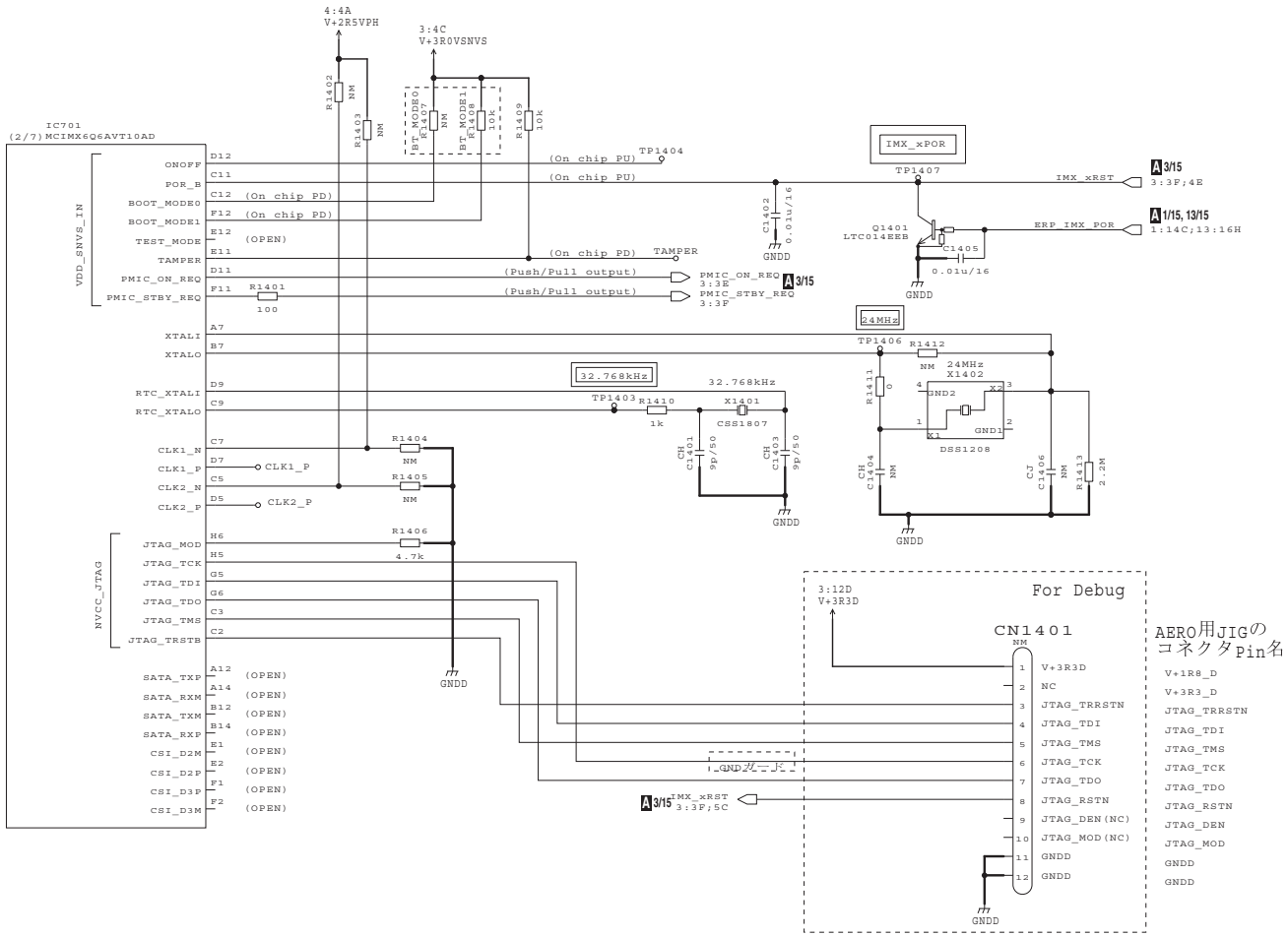

NOTES

NM is No Mount

RAB4CQ***J	CKSSYB***K CKSRYB***K CKSQYB***K
RS1/16SS***J RS1/10SR***J RS1/8SQ***J RS1/4SA***J	CCSSCH***J CCSRCH***J
RS1/10SR****D, or RS1/16SS****D	CEVW***M
RS1/10SR****F, or RS1/16SS****F	
RN1/16SE****D	

*RESISTORS
Indicated in Ω , ±5% tolerance
unless otherwise noted. k : kΩ , M : MΩ.

*CAPACITORS
Indicated in Capacity/Voltage(V)
unless otherwise noted. u : μF , p : pF

MAIN	DWX4287
PCB	DNP2960

10.12 MAIN ASSY (10/15)

A 10/15MAIN ASSY (DWX4287)

USBA HUB

for USBA1

5V DCDC for BUS_POWER

for USBA2

5V DCDC for BUS_POWER

*Connection Between [USBA HUB] and [Output Connector]

TUSB4020 Pin	Connection of PERIPHERAL CIRCUIT
USB_DP DM USB_DM DPO	USBA1 Output Connector V+USBA1
USB_DP DM1 USB_DM DM1	USBA2 Output Connector V+USBA2
OVERCUR1	USB2_OCE Net
OVERCUR2	USB1_OCE Net
PWRCTL1(EN1)	USB2_EN Net
PWRCTL2(EN2)	USB1_EN Net

USB EYE HEIGHT Control

Default:8.32Ω
Max:10.80Ω
Min:6.25Ω

2ports@HighSpeed
OVERCUR1/2s
(Low:Overcurrent Sense)

USB PORT Abnormal detection

USBA1
From/To USBA
CN1801
CN4301

USBA2
From/To USBA
CN1802
CN4302

Z(Differential)=90ohm

Symbol
NM is No Mount
RS01/16SS***J
RS01/16SS***J
RS01/16SS***J
RS01/16SS***J
RS01/16SS***D,
or RS01/16SS***D
RS01/16SS***F,
or RS01/16SS***F
RS01/16SS***D
CK05V***K
CK05V***K
CK05V***K
CC05CH***J
CC05CH***J
CC05V***K

*RESISTORS
Indicated in Ω , ±5% tolerance
unless otherwise noted. k : kΩ , M : MΩ.

*CAPACITORS
Indicated in Capacity/Voltage(V)
unless otherwise noted. u : μF , p : pF

- The ⚠ mark found on some component parts indicates the importance of the safety factor of the part.
  Therefore, when replacing, be sure to use parts of identical designation.
- ⚠ 印の部品は、安全上重要な部品です。
  交換するときは、安全および性能維持のため必ず指定の部品をご使用ください。

MAIN	DWX4287
PCB	DNP2960

A 10/15

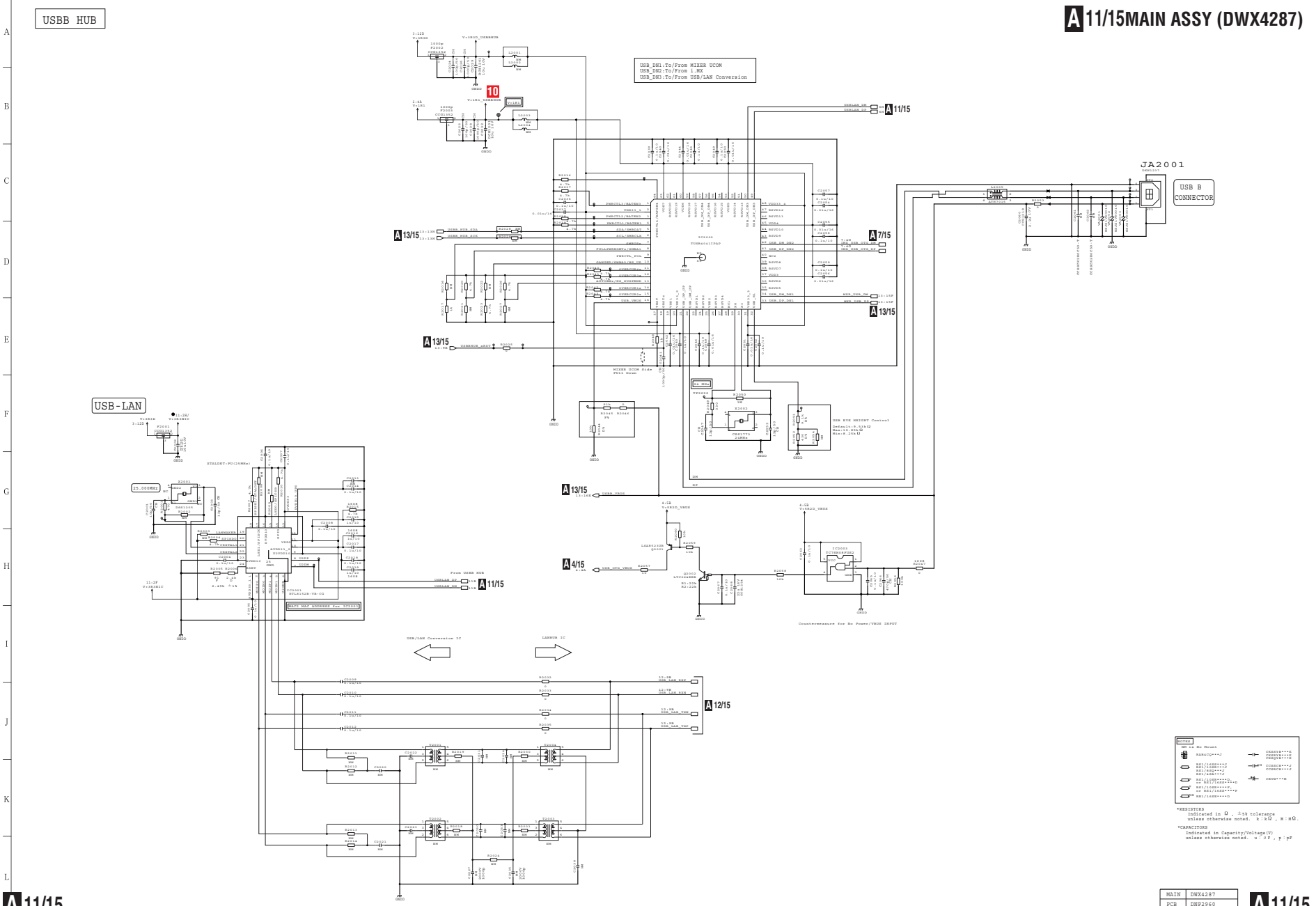
USBB HUB
A 11/15MAIN ASSY (DWX4287)
USB_DN1:To/From MIXER UCOM
USB_DN2:To/From i.MX
USB_DN3:To/From USB/LAN Conversion
JA2001
USB B CONNECTOR
USB-LAN
A 11/15
A 13/15
A 7/15
A 4/15
A 12/15
USB/LAN Conversion IC
LANNUR IC
From USBB HUB
Countermeasure for No Power/VBUS INPUT
USB EYE HEIGHT Control
MIXER UCOM Side PU11 Down
NOTES
*RESISTORS
Indicated in Ω , ±5% tolerance unless otherwise noted. k:kΩ , M:MΩ.
*CAPACITORS
Indicated in Capacity/Voltage(V) unless otherwise noted. u:μF , p:pF
MAIN DWX4287
PCB DNP2960

10.14 MAIN ASSY (12/15)

LAN HUB

A 12/15MAIN ASSY (DWX4287)

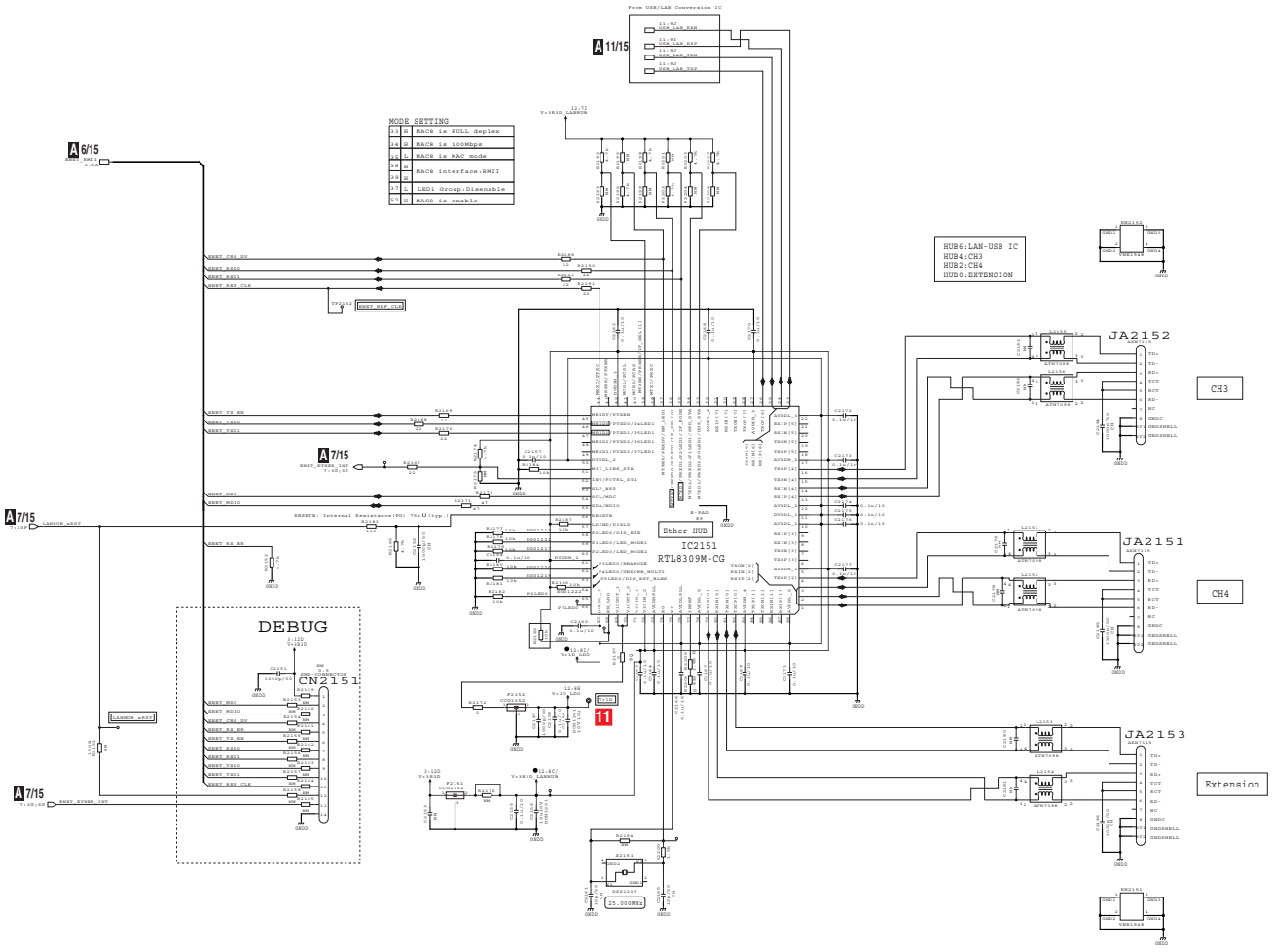

MAIN	DWX4287
PCB	DNP2960

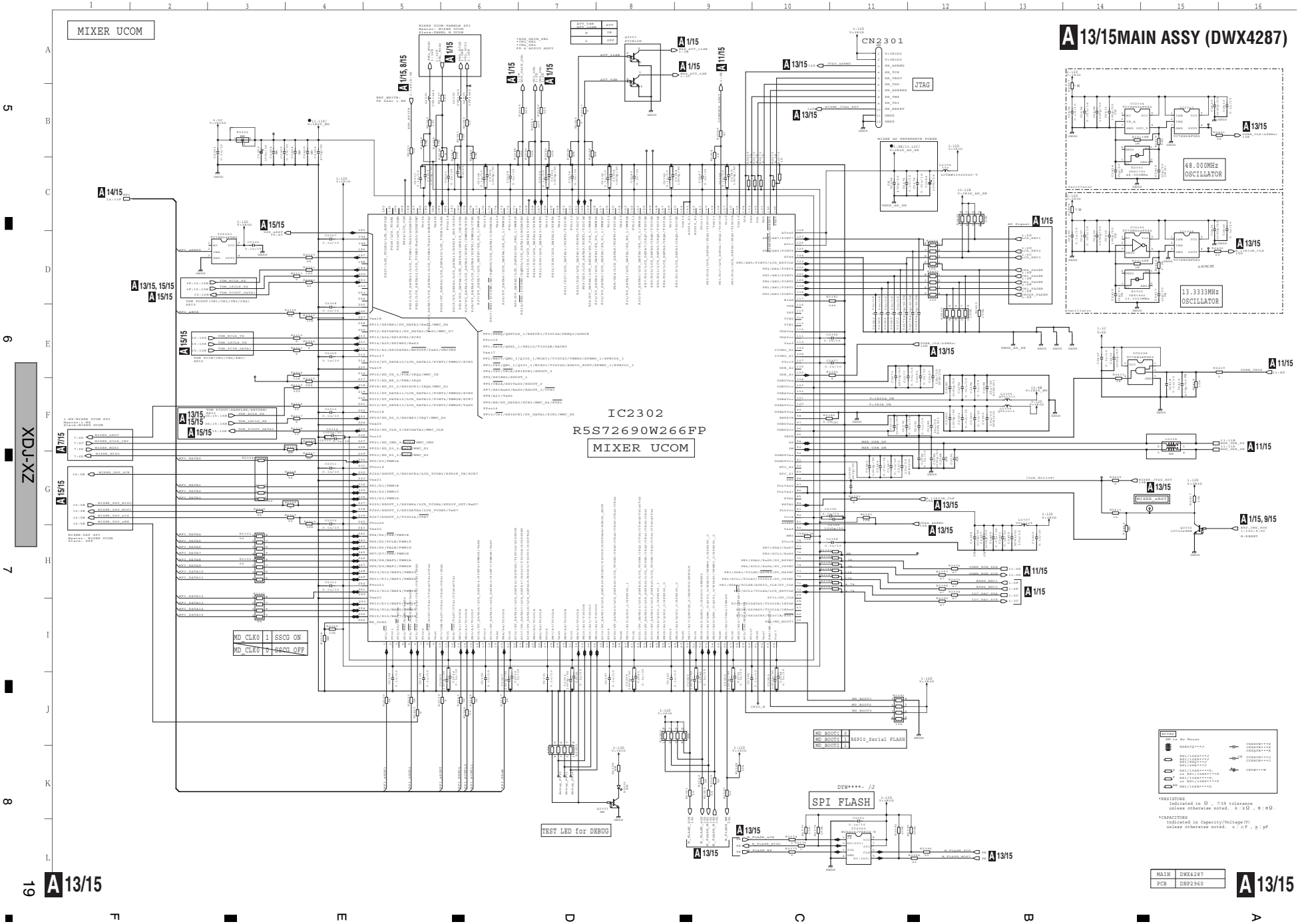
MIXER UCOM
A 13/15MAIN ASSY (DWX4287)
CN2301
JTAG
48.000MHz OSCILLATOR
13.3333MHz OSCILLATOR
IC2302
R5S72690W266FP
MIXER UCOM
MD_CLK0 1 SSCG ON
MD_CLK0 0 SSCG OFF
MD_BOOT1 0
MD_BOOT0 1 RSPI0_Serial FLASH
MD_BOOT2 1
SPI FLASH
TEST LED for DEBUG
MAIN DWX4287
PCB DNP2960
A 13/15

10.16 MAIN ASSY (14/15)

A 14/15MAIN ASSY (DWX4287)

DSP 1/2

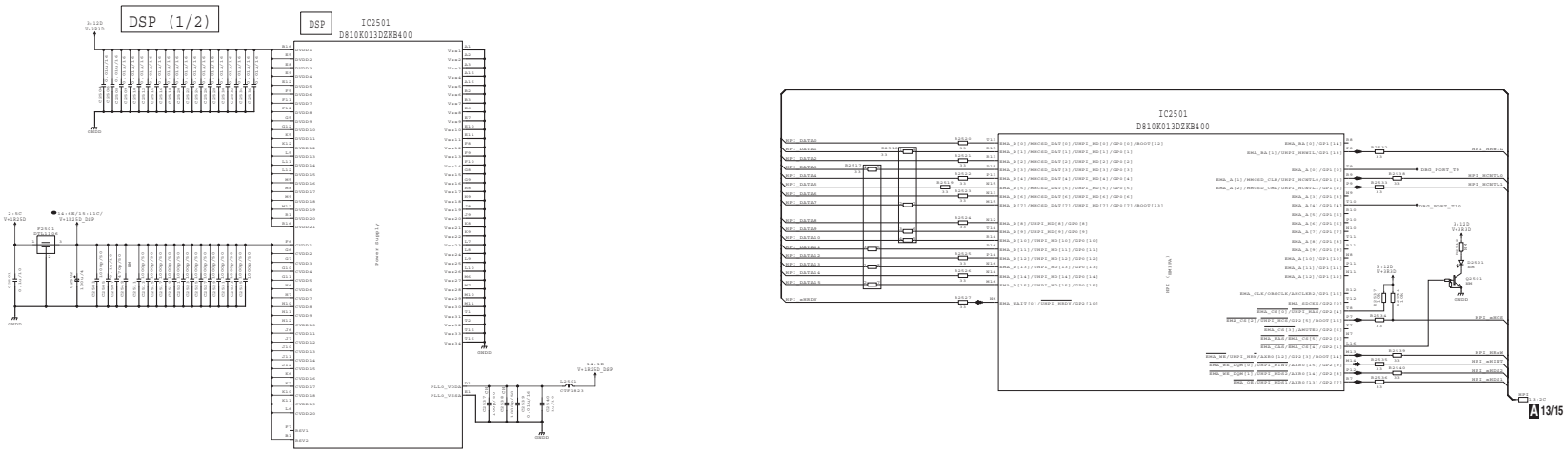

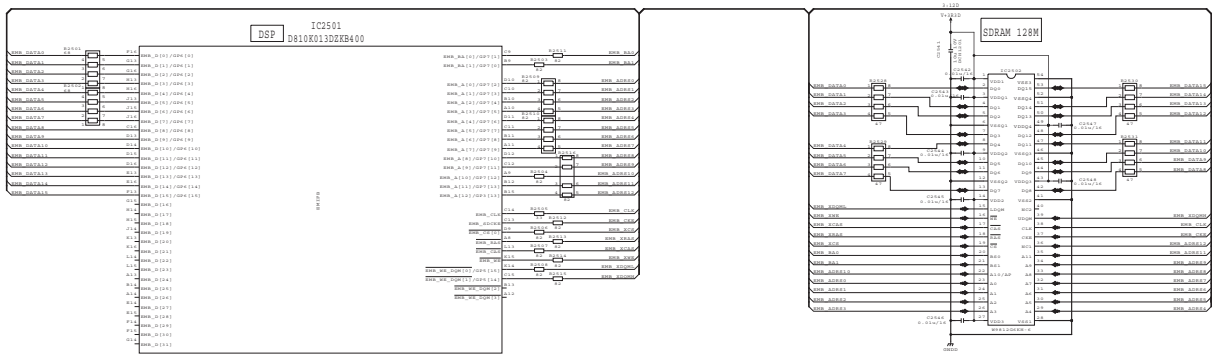

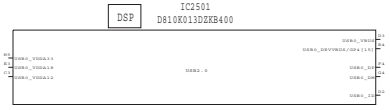

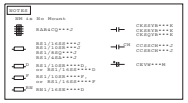

MAIN	DWX4287
PCB	DNP2960

DSP2/2

A 15/15MAIN ASSY (DWX4287)

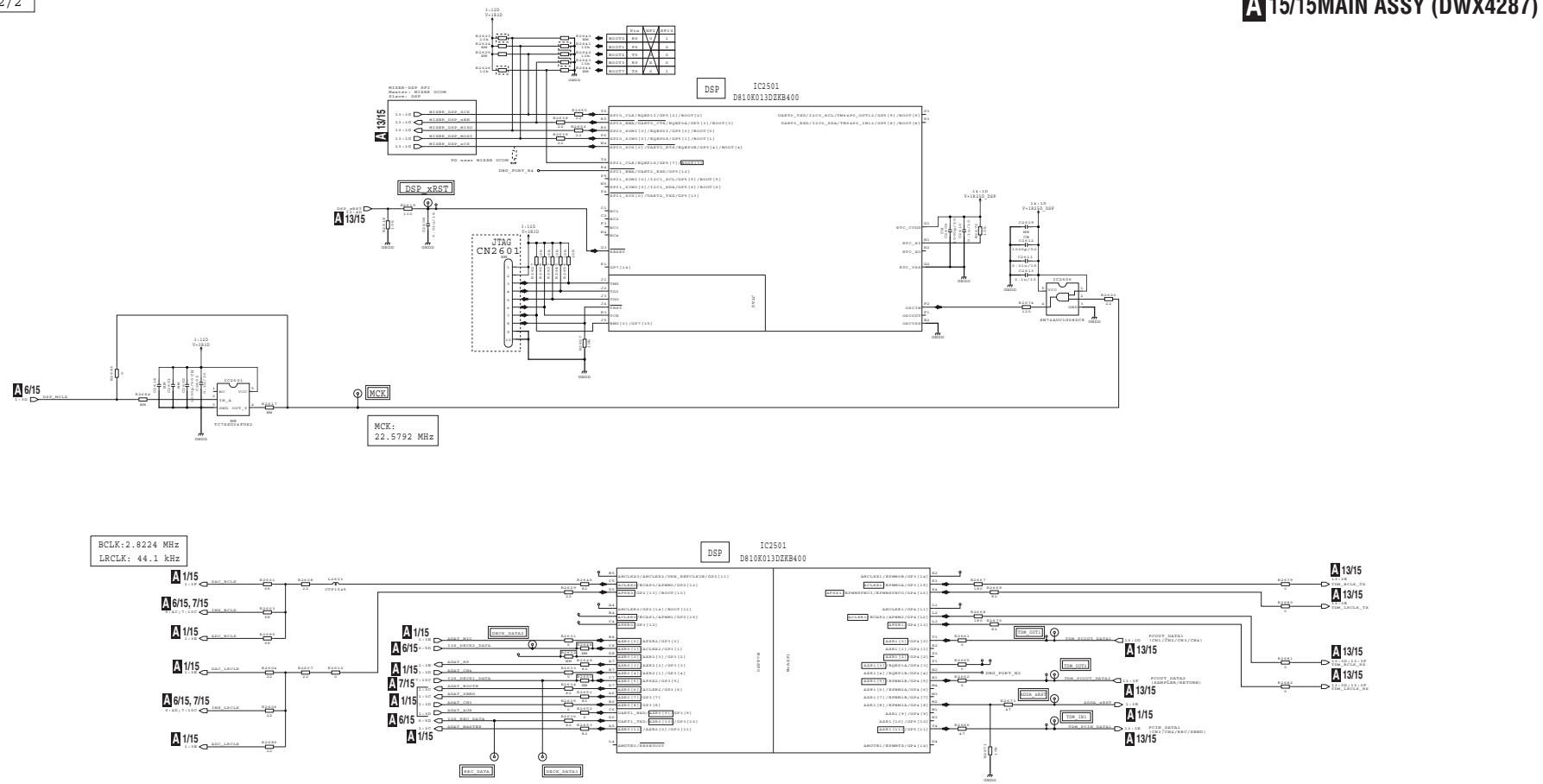

NOTES

NM is No Mount

RARCCG***J
RER/1SZ****J
RER/1SZS***J
RER/RSZ***J
RER/ARA***J
RER/1SZS****D
RER/1SZS****D,F
RER/1SZS****F
or RER/1SZS****F
RER/1SZ****D
CKZ22V***K
CKZ22V***K
CKZ22V***K
CCSZCH***J
CCSZCH***J
CKVH***M

*RESISTORS
Indicated in Ω , ±5% tolerance
unless otherwise noted. k : kΩ , M : MΩ.

*CAPACITORS
Indicated in Capacity/Voltage(V)
unless otherwise noted. u : μF , p : pF

MAIN	DWX4287
PCB	DNP2960

A 15/15

10.18 AUDIO ASSY (1/12)

B 1/12 AUDIO ASSY (DWX4298)

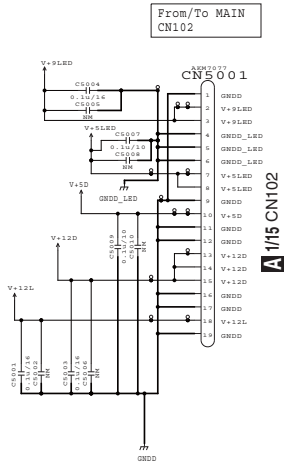

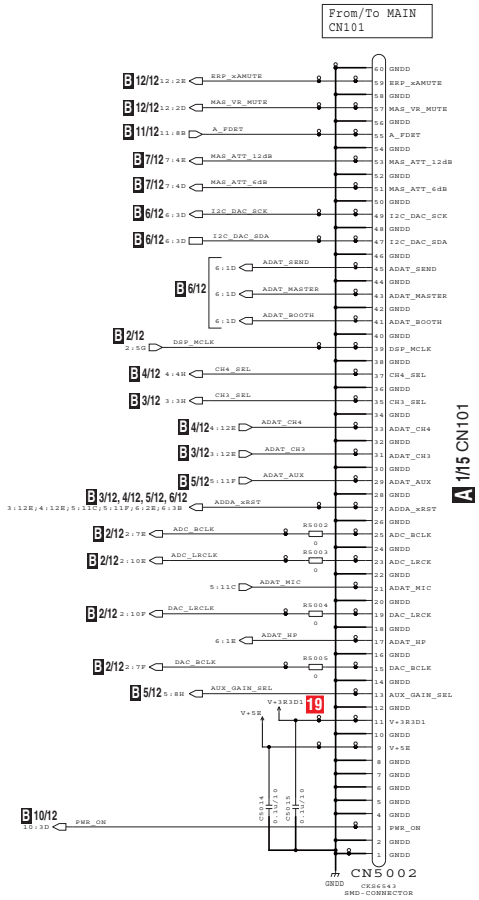

NOTES
NM means STANDBY
RS1/16SS***J
CKSSYB***K

*CAPACITORS
Indicated in Capacity/Voltage(V)
unless otherwise noted. u : μF , p : pF
*RESISTORS
Indicated in Ω , ±5% tolerance
unless otherwise noted. k : kΩ , M : MΩ.

AUDIO	DWX4298
PCB	DNP2964

B 1/12

B 2/12 AUDIO ASSY (DWX4298)

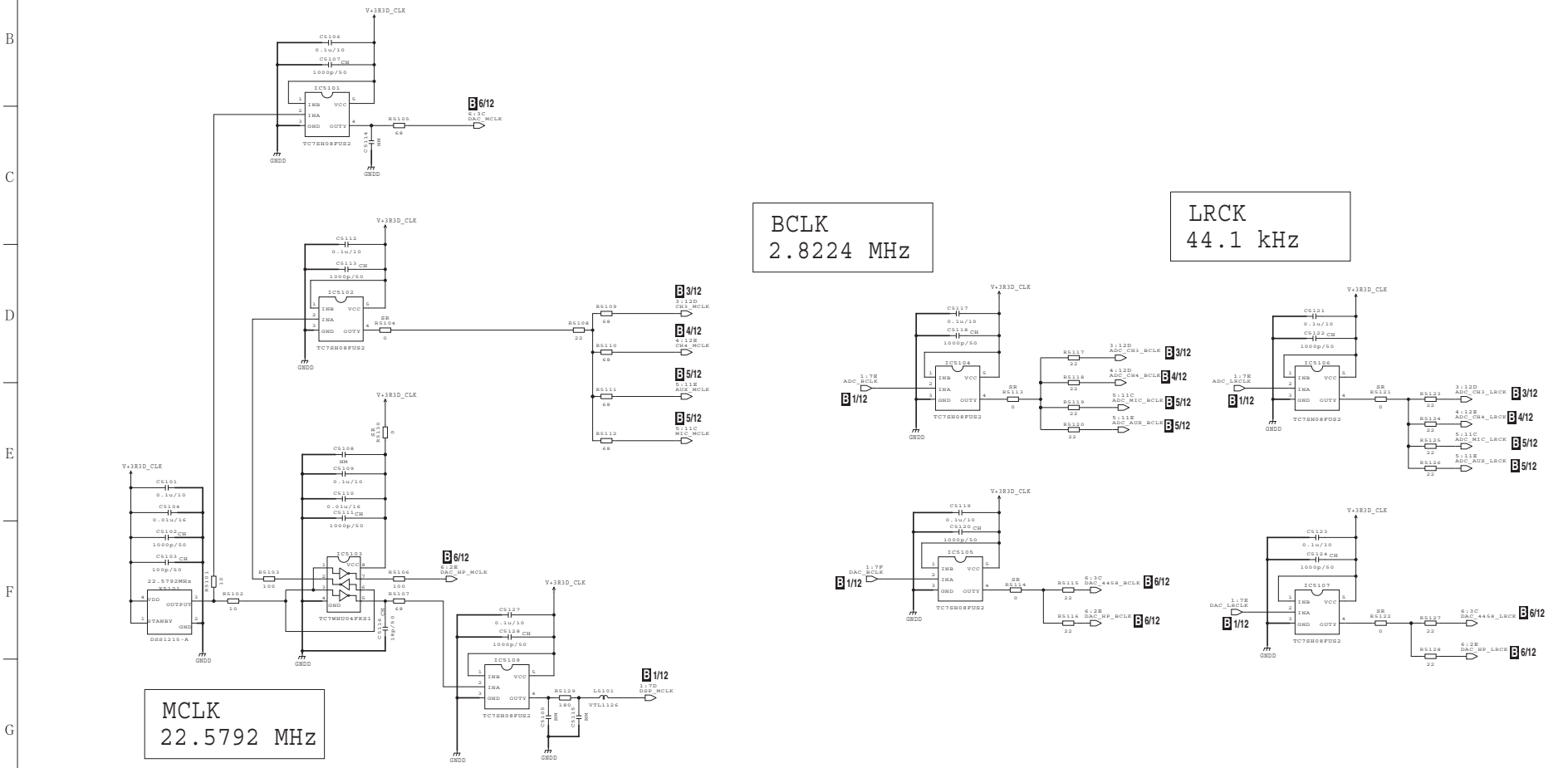

NOTES

NM means STANDBY

RS1/16SS***J

RS1/10SR***J

CKSSYR***K

CCSSCH***J

*CAPACITORS
Indicated in Capacity/Voltage(V)
unless otherwise noted. u : μF , p : pF
*RESISTORS
Indicated in Ω , ±5% tolerance
unless otherwise noted. k : kΩ , M : MΩ .

AUDIO	DWX4298
PCB	DNP2964

10.20 AUDIO ASSY (3/12)

CH3

B 3/12 AUDIO ASSY (DWX4298)

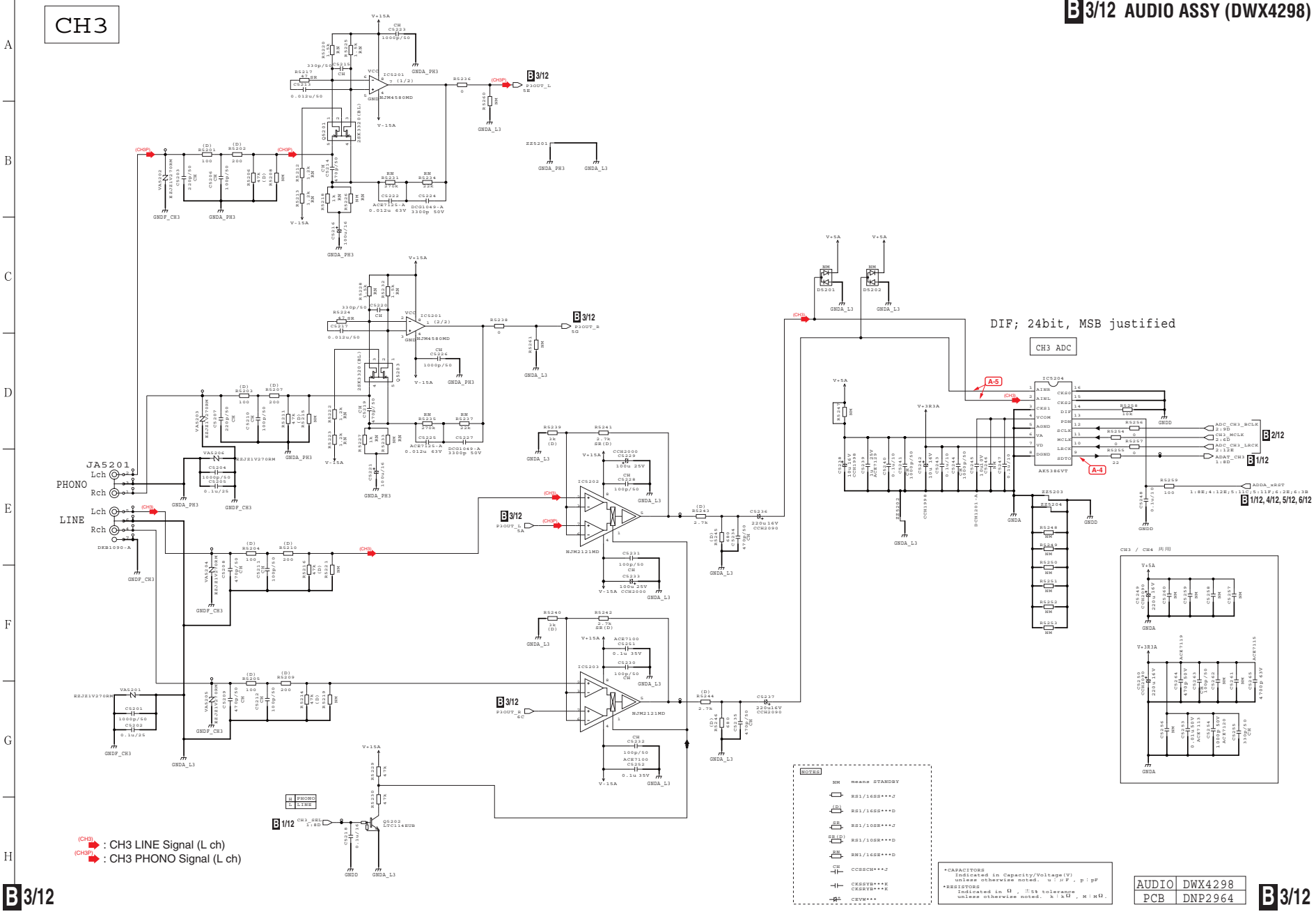

AUDIO	DWX4298
PCB	DNP2964

B 4/12 AUDIO ASSY (DWX4298)

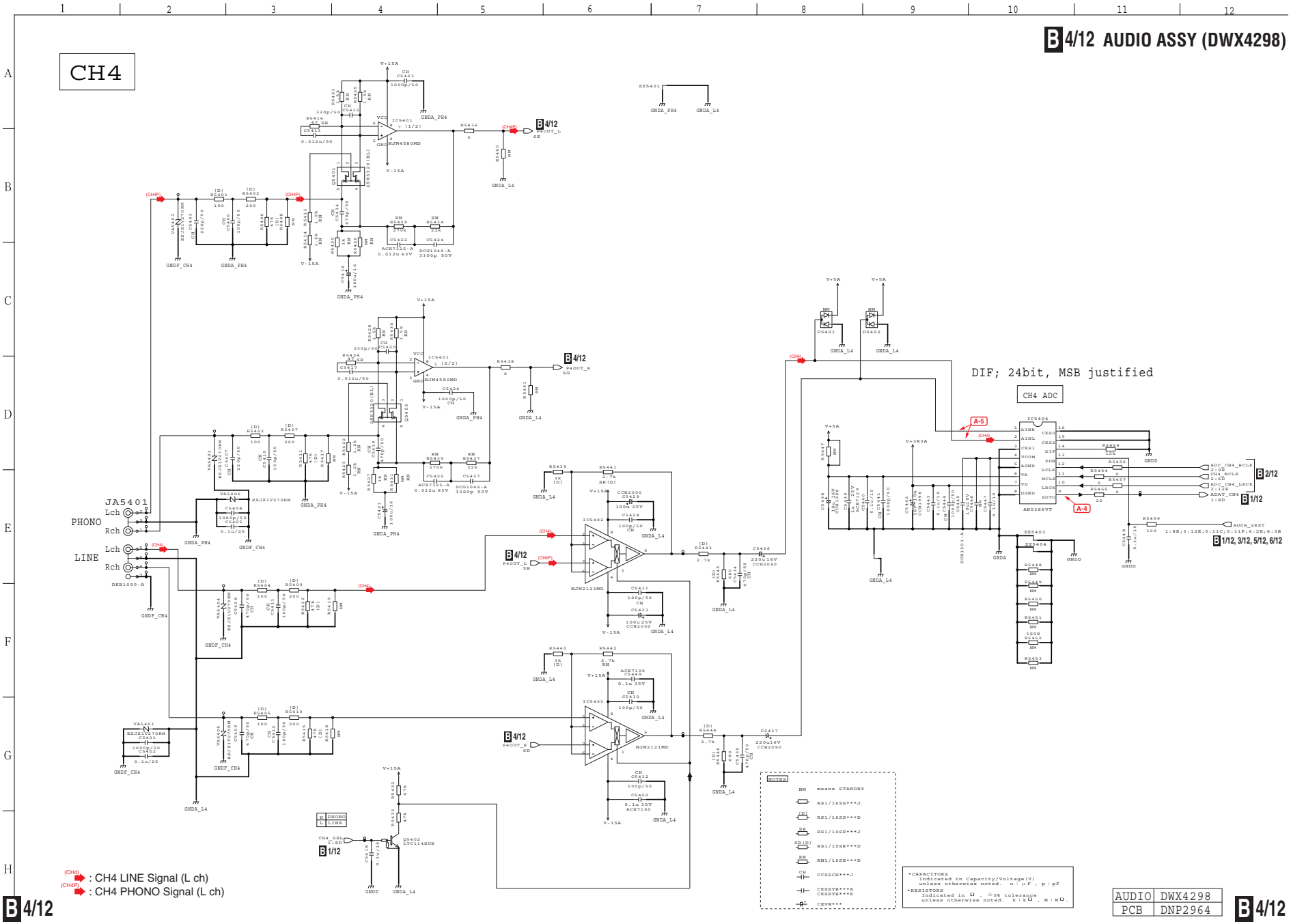

AUDIO	DWX4298
PCB	DNP2964

B 5/12 AUDIO ASSY (DWX4298)

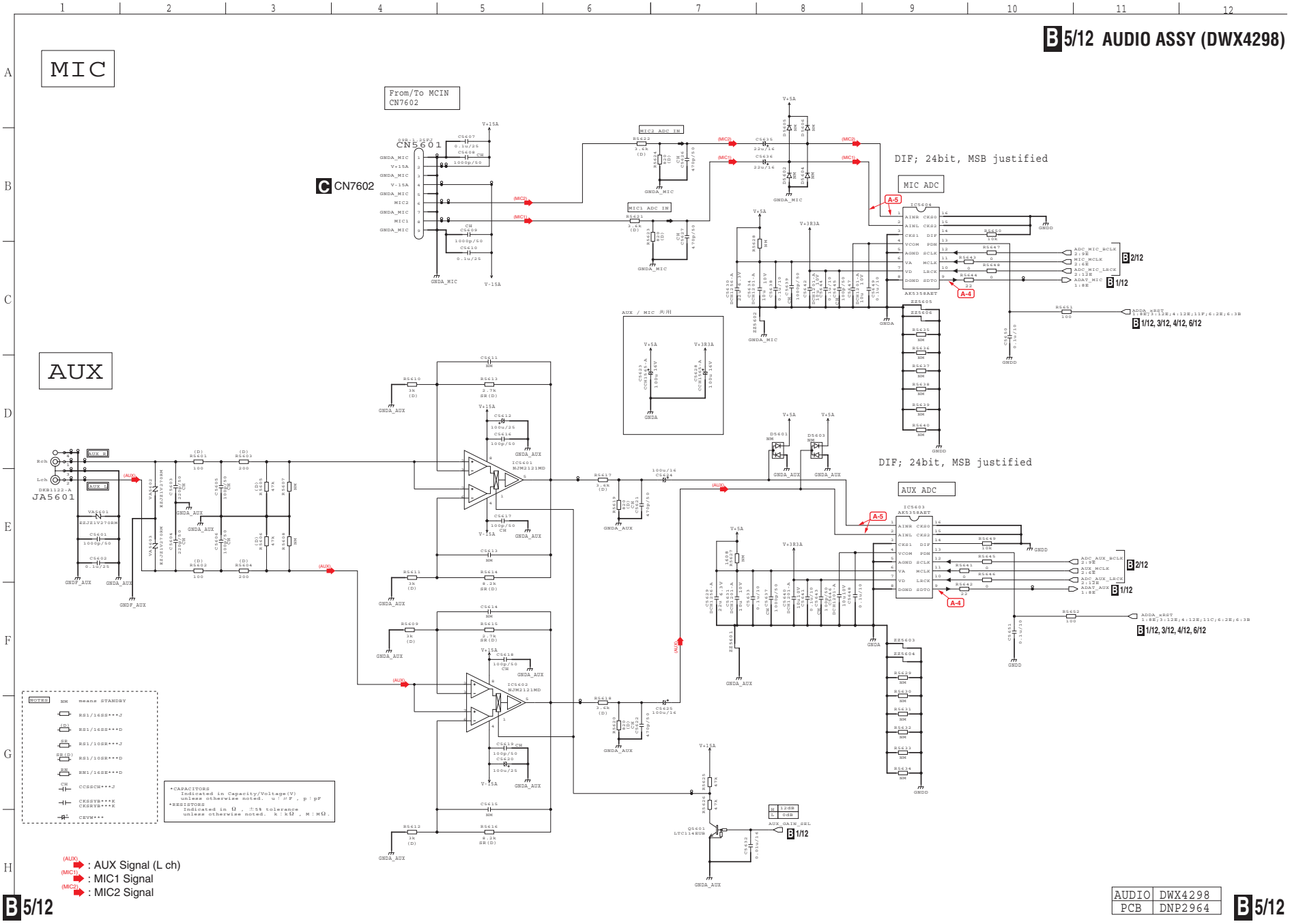

AUDIO	DWX4298
PCB	DNP2964

B 5/12

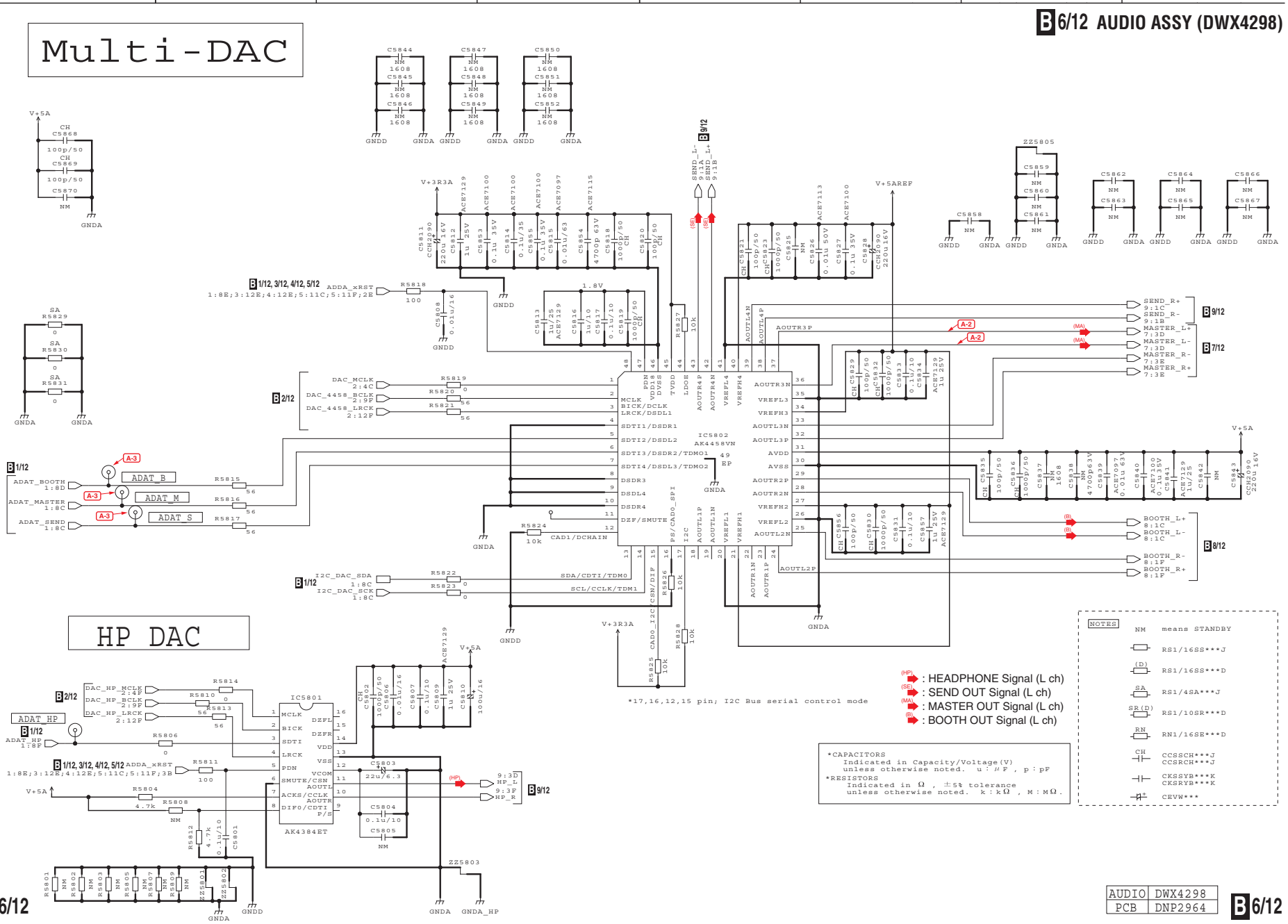
B 6/12 AUDIO ASSY (DWX4298)
Multi-DAC
HP DAC
IC5802 AK4458VN
IC5801 AK4384ET
*17,16,12,15 pin; I2C Bus serial control mode
(HP) : HEADPHONE Signal (L ch)
(SE) : SEND OUT Signal (L ch)
(MA) : MASTER OUT Signal (L ch)
(B) : BOOTH OUT Signal (L ch)
NOTES
NM means STANDBY
RS1/16SS***J
RS1/16SS***D
RS1/4SA***J
RS1/10SR***D
RN1/16SE***D
CCSSCH***J
CCSRCH***J
CKSSYB***K
CKSRYB***K
CEVW***
*CAPACITORS
Indicated in Capacity/Voltage(V)
unless otherwise noted. u : μF , p : pF
*RESISTORS
Indicated in Ω , ±5% tolerance
unless otherwise noted. k : kΩ , M : MΩ.
AUDIO DWX4298
PCB DNP2964
B 6/12

10.24 AUDIO ASSY (7/12)

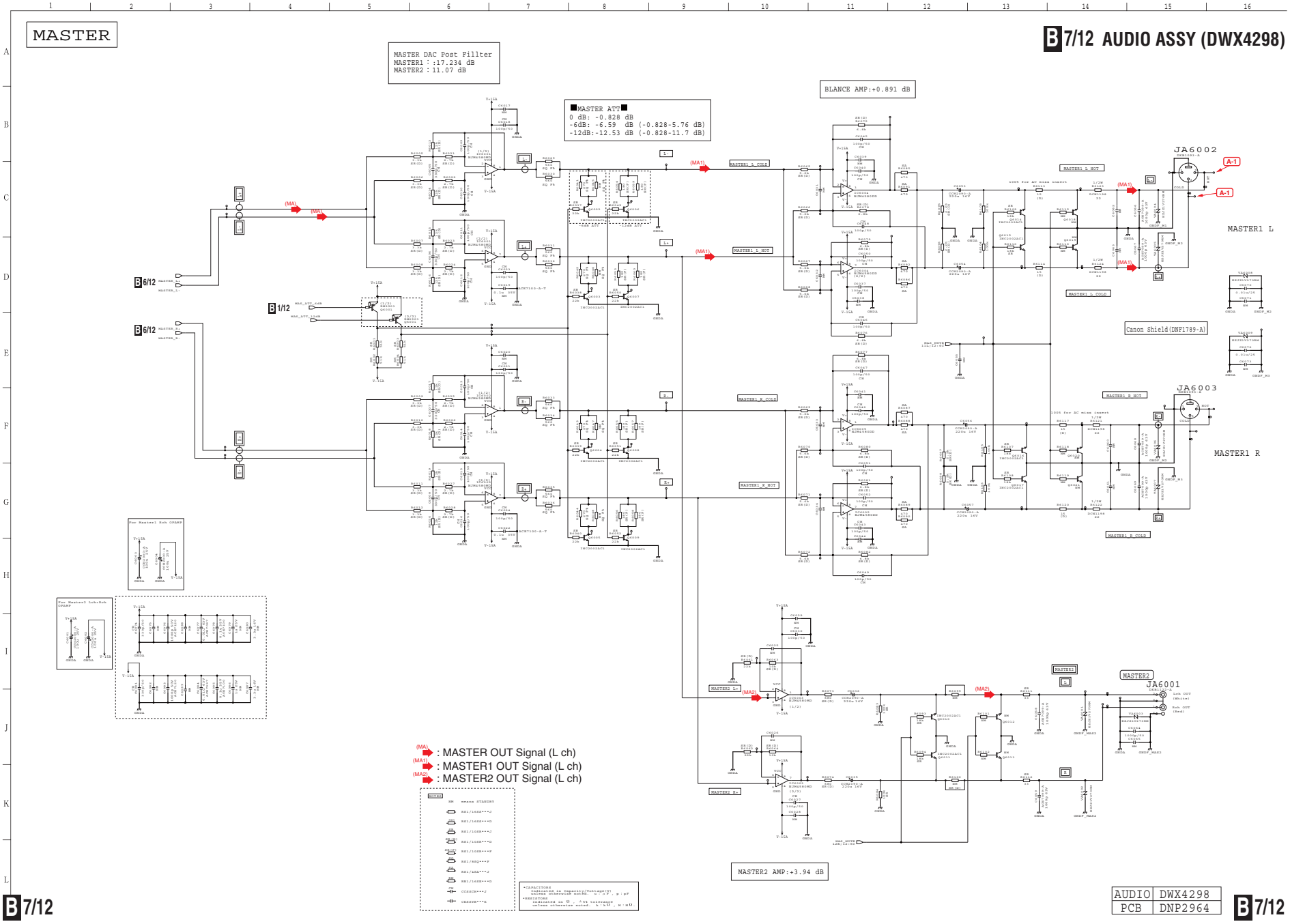

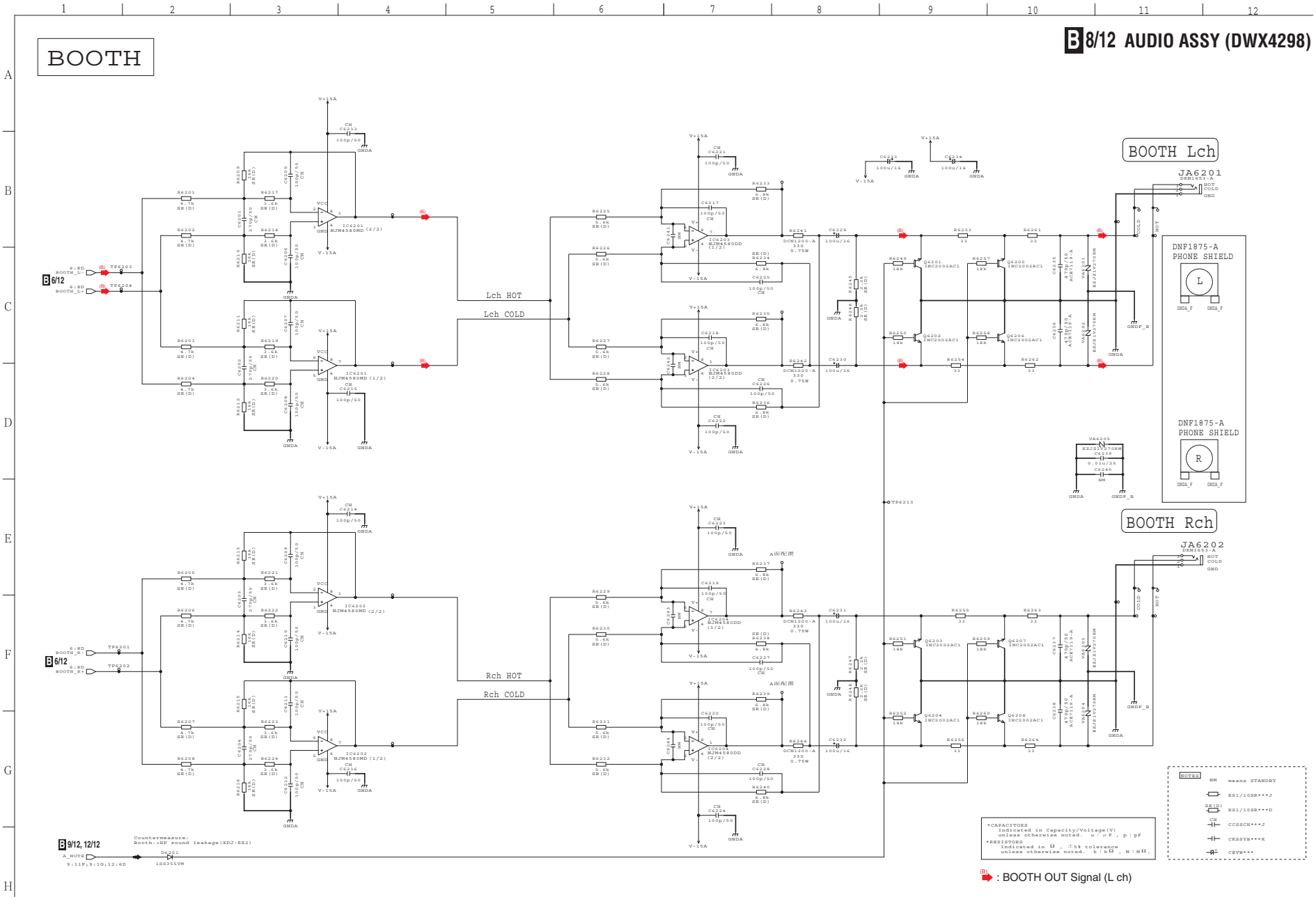

AUDIO	DWX4298
PCB	DNP2964

10.26 AUDIO ASSY (9/12)

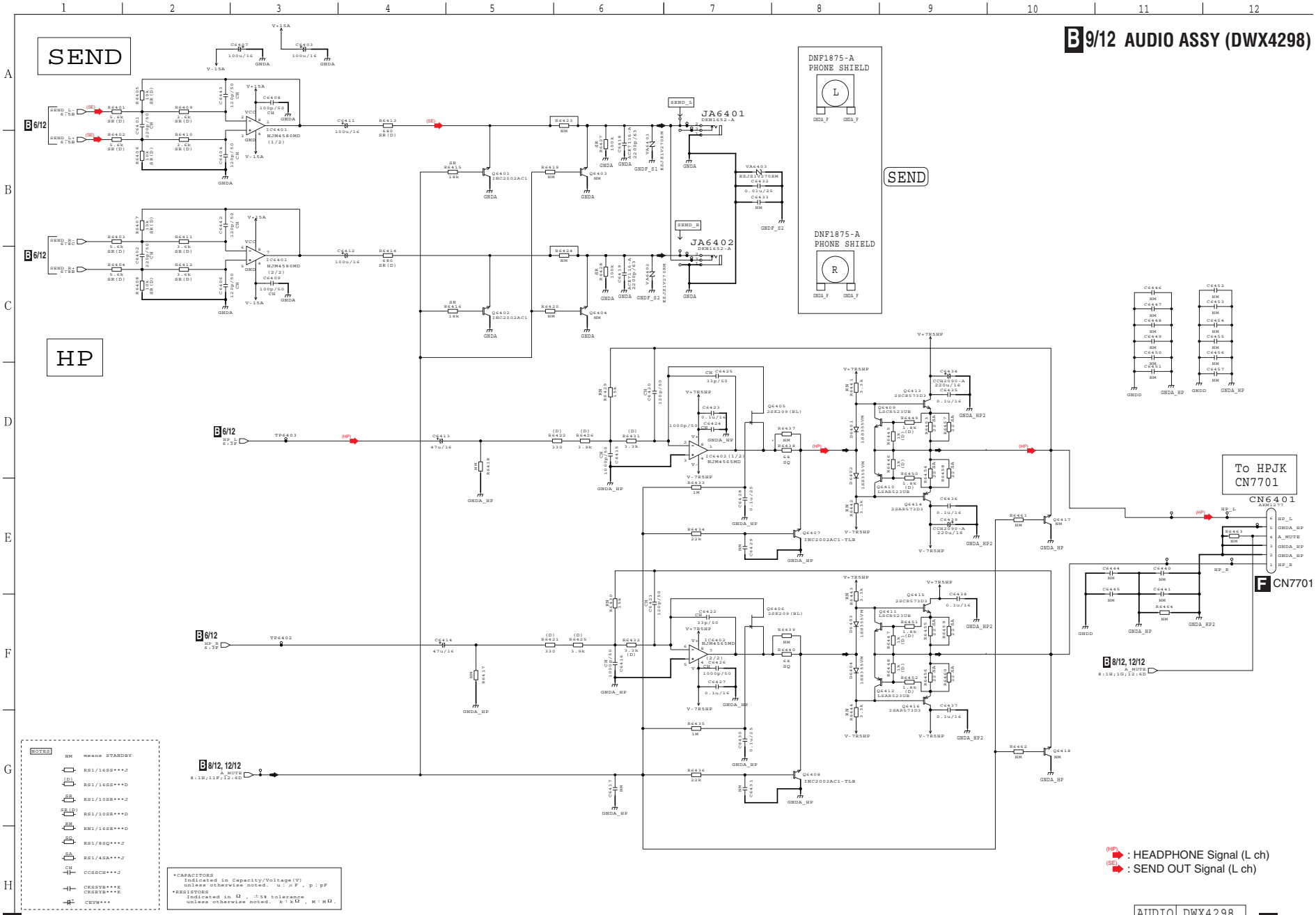

AUDIO	DWX4298
PCB	DNP2964

B 9/12

POWER

B 10/12 AUDIO ASSY (DWX4298)

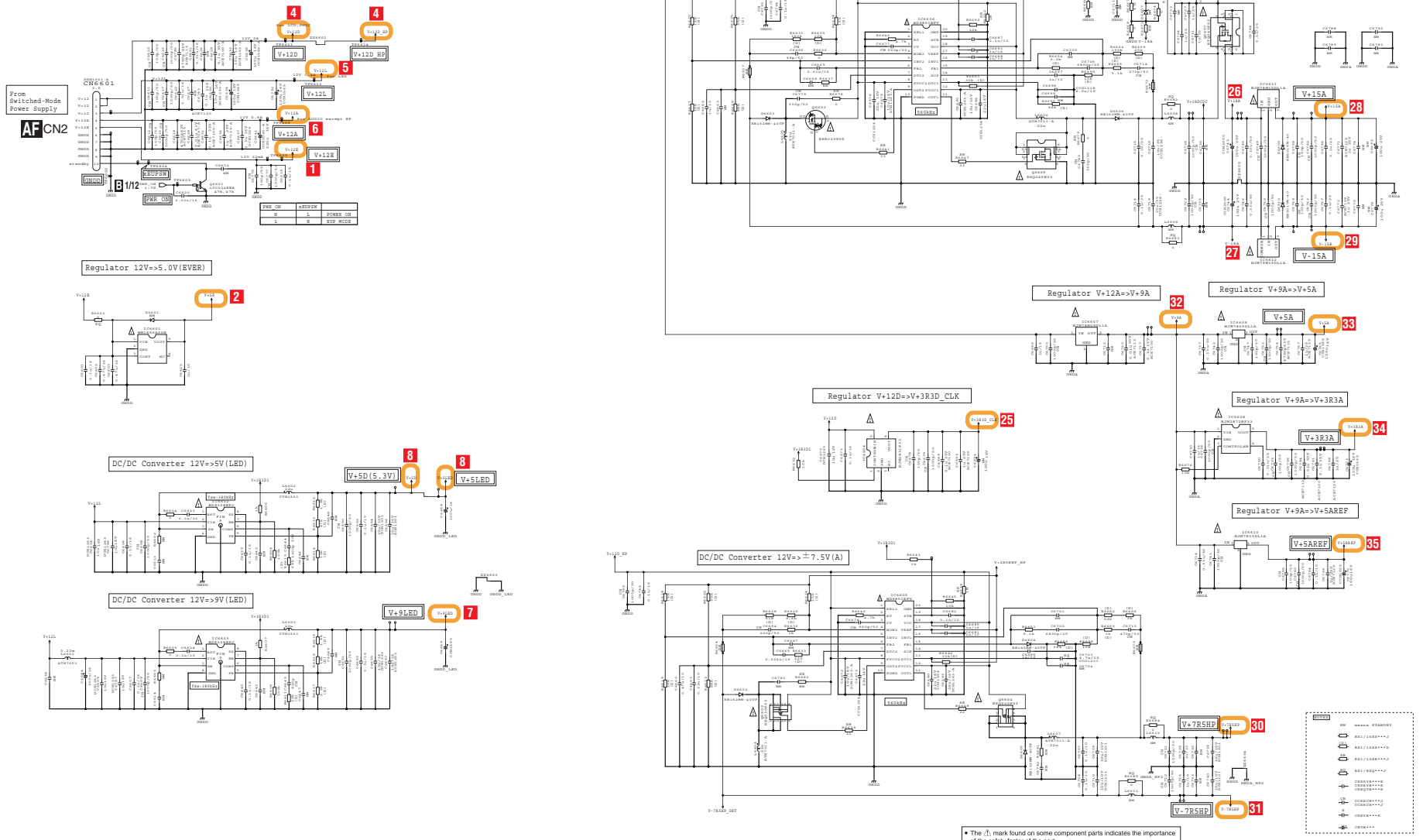

PWR_ON	xSUPSW	
H	L	POWER ON
L	H	SUP MODE

* The ⚠ mark found on some component parts indicates the importance of the safety factor of the part.
Therefore, when replacing, be sure to use parts of identical designation.
* ⚠ 印の部品は、安全上重要な部品です。
交換するときは、安全および性能維持のため必ず指定の部品をご使用ください。

*CAPACITORS:
Indicated in Capacity(Voltage(V)
unless otherwise noted. u : μF , p : pF
*RESISTORS:
Indicated in M , ±5% tolerance
unless otherwise noted. k : kΩ , m : mΩ

AUDIO	DWX4298
PCB	DNP2964

B 10/12

VOLTAGE DETECTION CIRCUIT

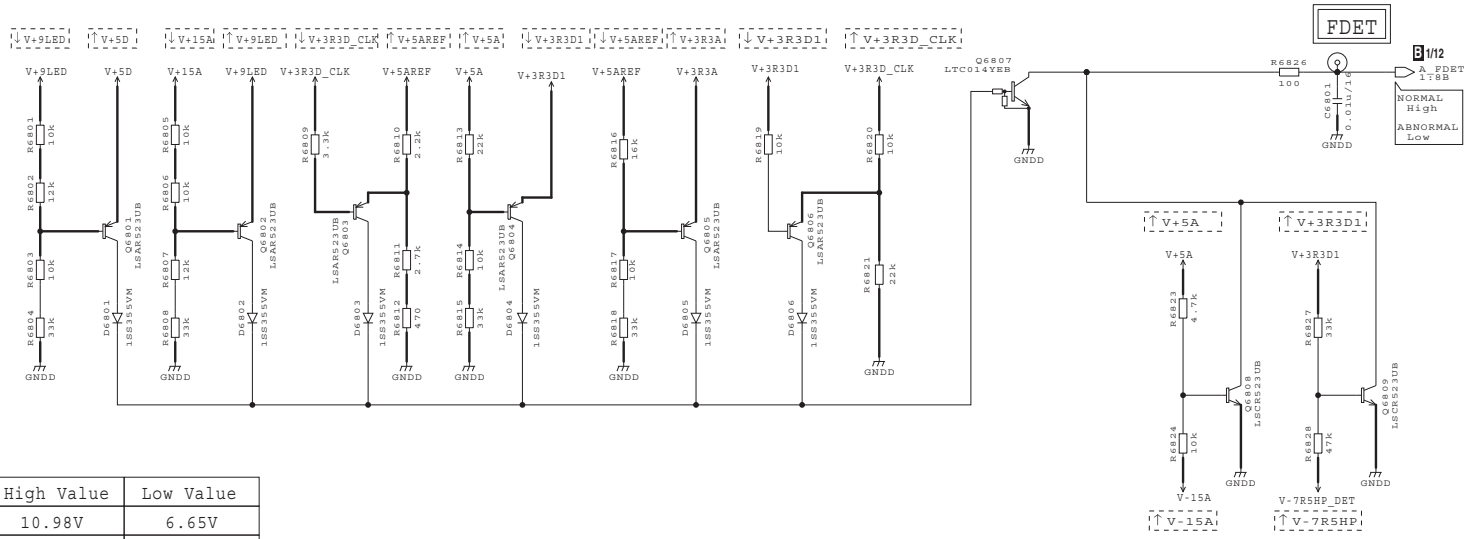

FAULT DET	High Value	Low Value
V+9LED	10.98V	6.65V
V+5D	6.55V	-
V+15A	-	12.13V
V+3R3D_CLK	5.67V	2.35V
V+5AREF	7.76V	3.70V
V+5A	7.93V	4.08V
V+3R3D1	3.91V	1.67V
V+3R3A	4.24V	-
V-15A	-8.76V	-
V-7R5HP	-3.25V	-

NOTES
NM means STANDBY
RS1/16SS***J
CKSSYB***K

*CAPACITORS
Indicated in Capacity/Voltage(V)
unless otherwise noted. u : μF , p : pF
*RESISTORS
Indicated in Ω , ±5% tolerance
unless otherwise noted. k : kΩ , M : MΩ.

AUDIO	DWX4298
PCB	DNP2964

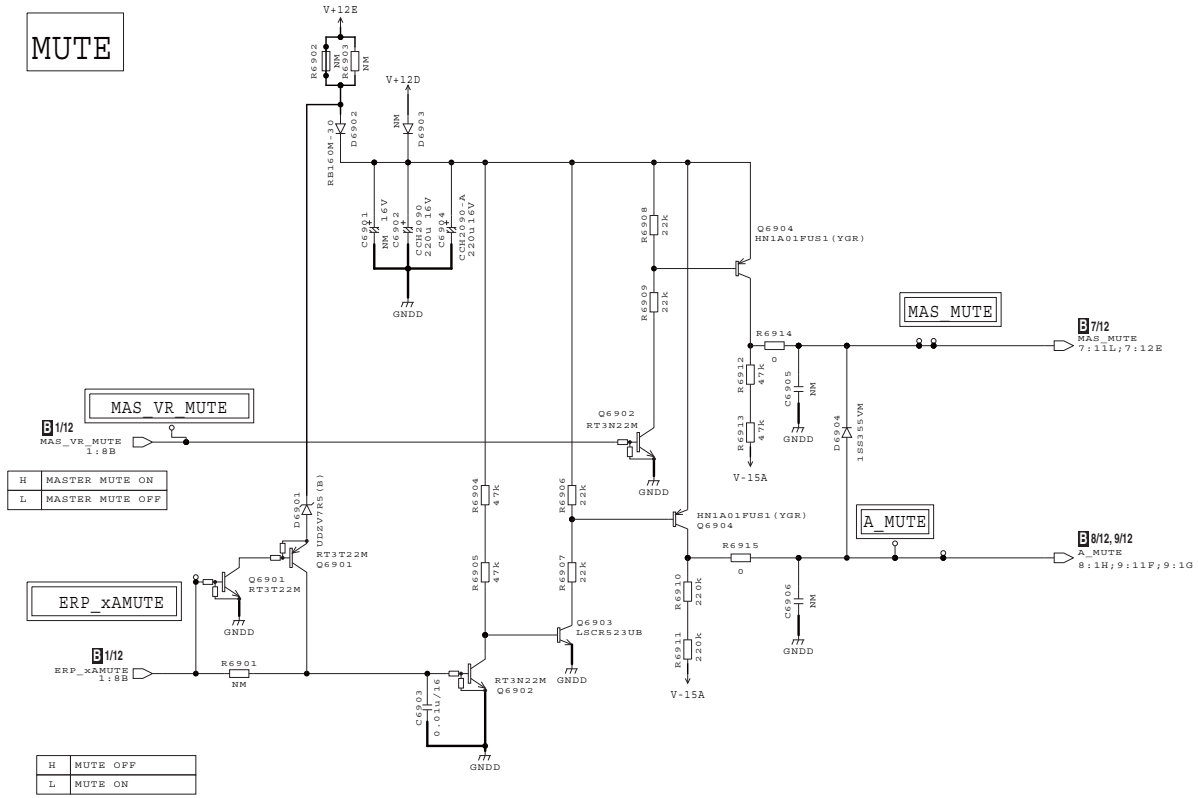

NOTES

NM means STANDBY

RS1/16SS***J

CKSSYB***K

*CAPACITORS
Indicated in Capacity/Voltage(V)
unless otherwise noted. u : μF , p : pF
*RESISTORS
Indicated in Ω , ±5% tolerance
unless otherwise noted. k : kΩ , M : MΩ.

AUDIO	DWX4298
PCB	DNP2964

B 12/12

10.30 MCIN ASSY

C MCIN ASSY (DWX4300)

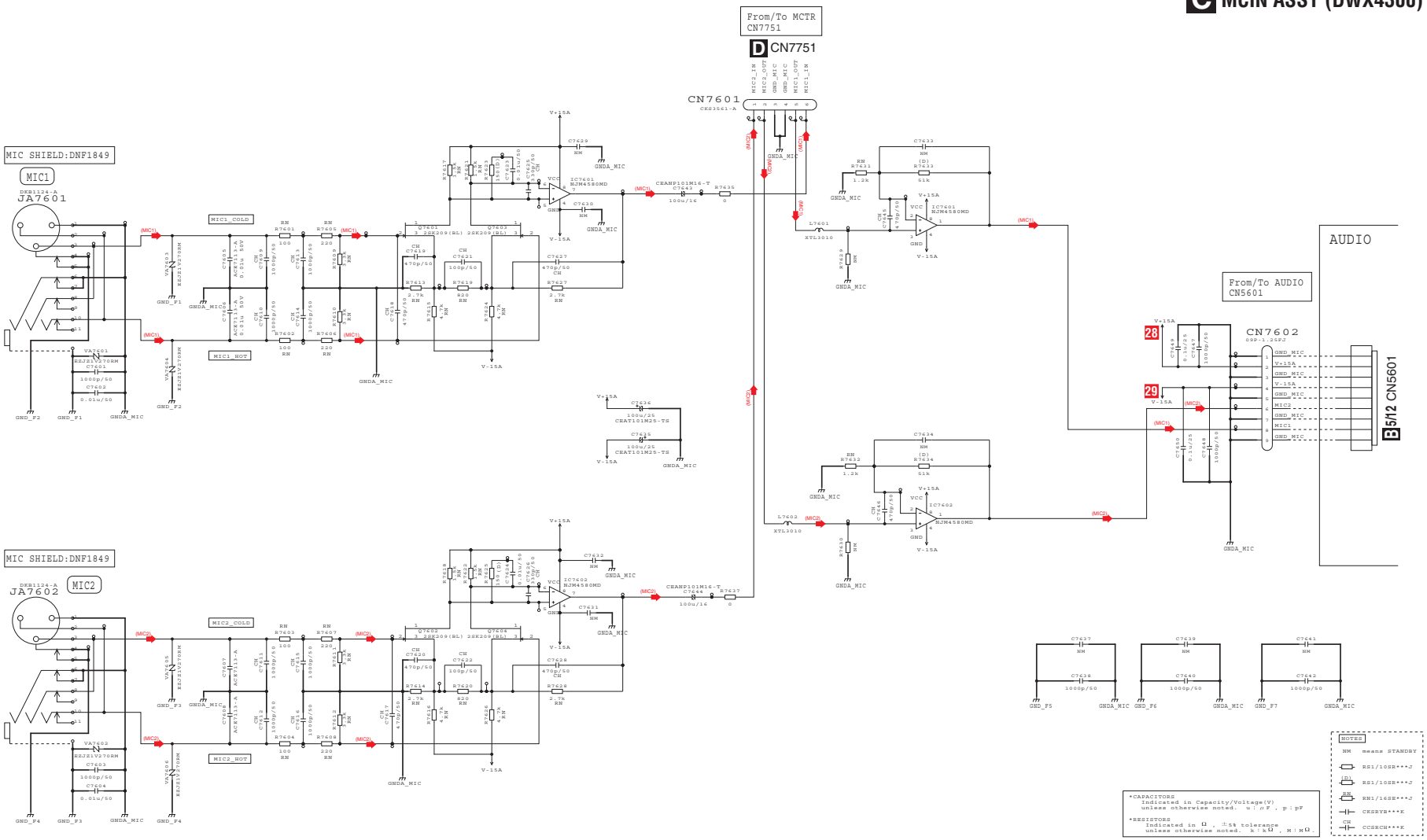

SUBA	DWM2724 /J
MCIN	DWX4300 /J
PCB	DNP2966

10.31 MCTR ASSY

D MCTR ASSY (DWX4302)

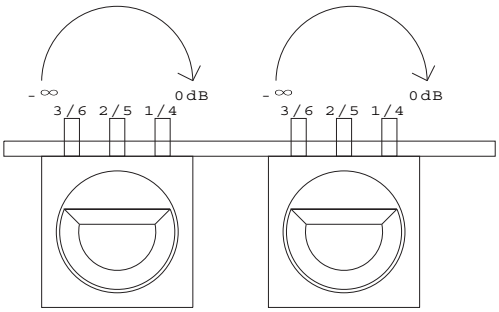

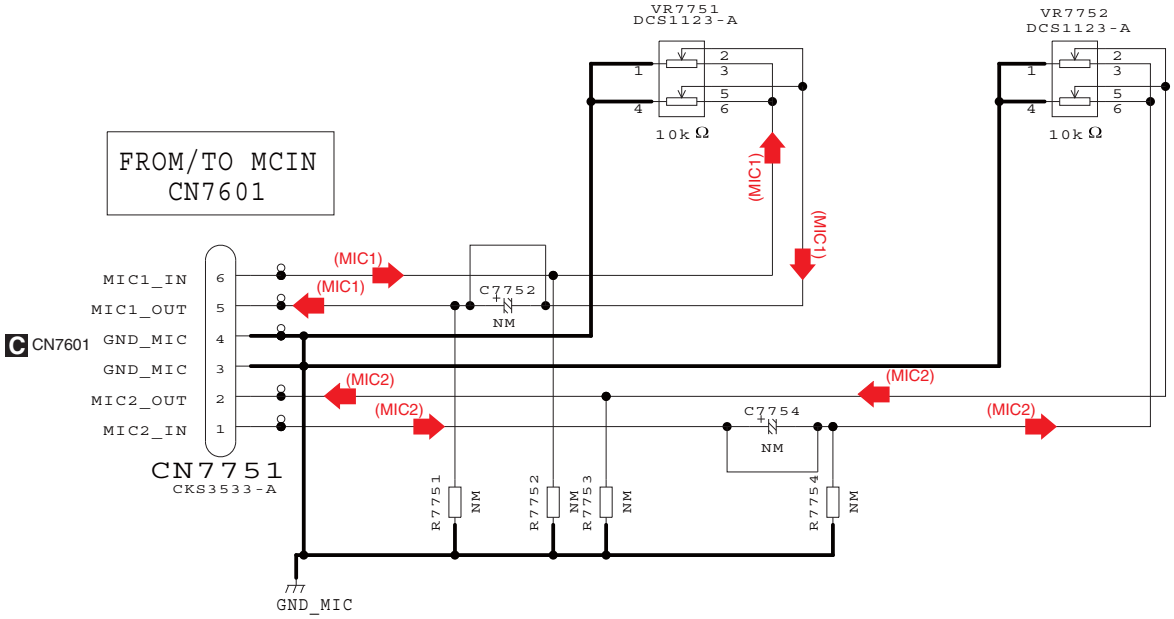

(MIC1) : MIC1 Signal
(MIC2) : MIC2 Signal

NOTES

NM means STANDBY

RS1/10SR***J

*CAPACITORS
Indicated in Capacity/Voltage(V)
unless otherwise noted. u : μF , p : pF

*RESISTORS
Indicated in Ω , ±5% tolerance
unless otherwise noted. k : kΩ , M : MΩ .

SUBA	DWM2724 /J
MCTR	DWX4302 /J
PCB	DNP2966

10.32 USBA ASSY

USBA

E USBA ASSY (DWX4294)

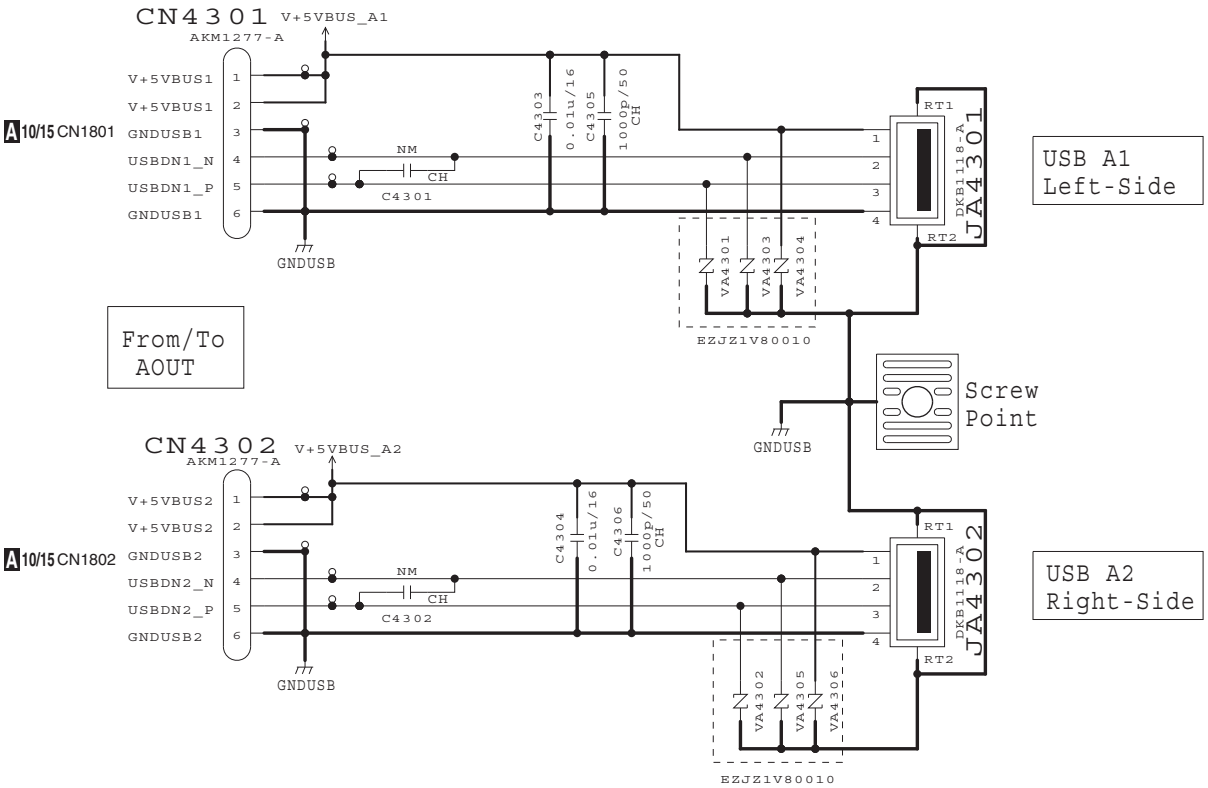

*CAPACITORS
Indicated in Capacity/Voltage(V)
unless otherwise noted. u : μF , p : pF

NOTES

NM is No Mount

CKSSYB***K

CH CCSSCH***J

PADA		DWM2719 /J
	USBA	DWX4294 /J
PCB		DNP2962

10.33 HPJK ASSY

F HPJK ASSY (DWX4301)

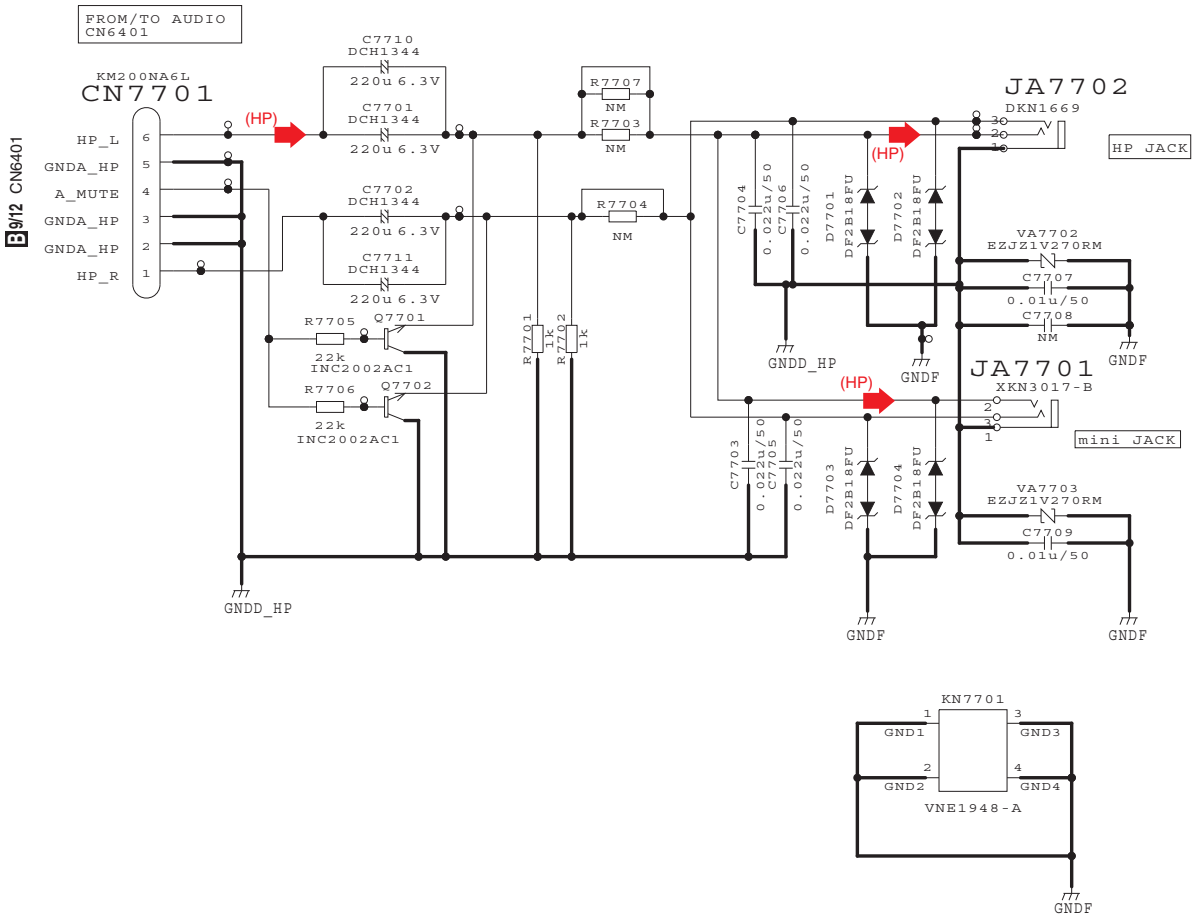

(HP) : HEADPHONE Signal (L ch)

SUBA	DWM2724 /J
HPJK	DWX4301 /J
PCB	DNP2966

*CAPACITORS
Indicated in Capacity/Voltage(V)
unless otherwise noted. u : μF , p : pF

*RESISTORS
Indicated in Ω , ±5% tolerance
unless otherwise noted. k : kΩ , M : MΩ .

NOTES

NM means STANDBY

RS1/10SR***J

CKSRYB***K

10.34 UCOM ASSY (1/3)

UCOM(ERP_UCOM,PNLM_UCOM)

G 1/3 UCOM ASSY (DWX4296)

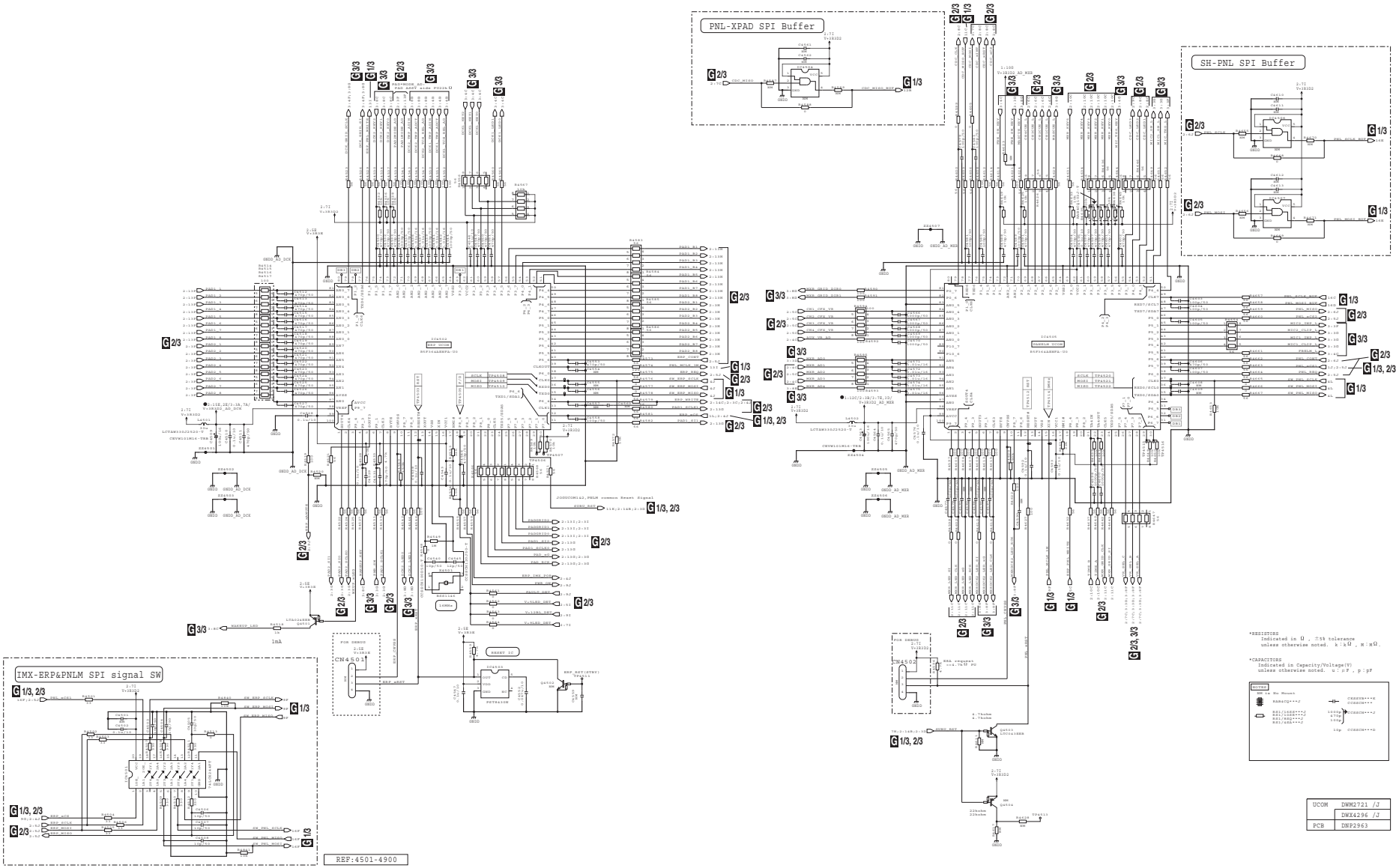

UCOM	DWM2721 /J
	DWX4296 /J
PCB	DNP2963

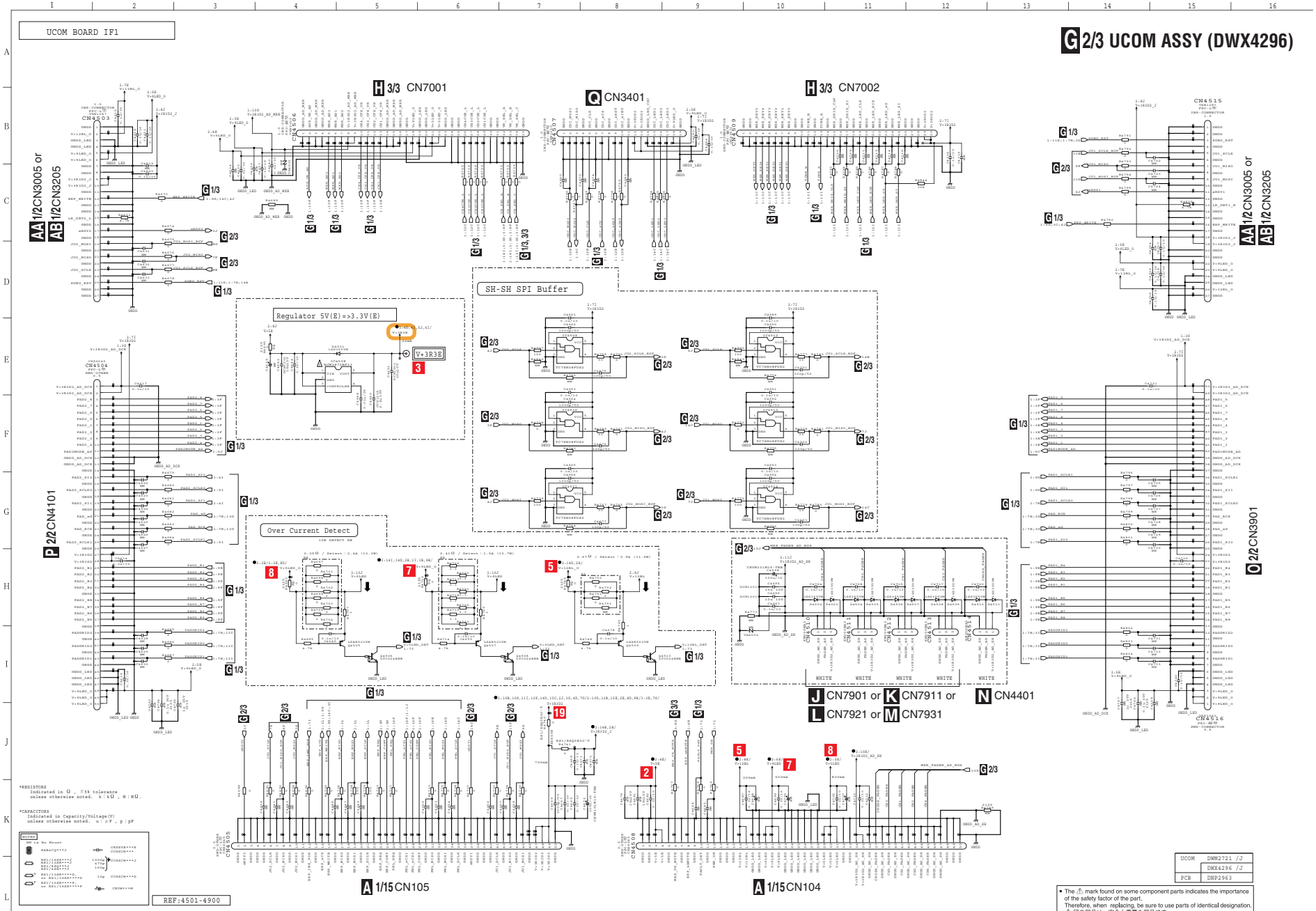
UCOM BOARD IF1
G 2/3 UCOM ASSY (DWX4296)
H 3/3 CN7001
Q CN3401
H 3/3 CN7002
AA 1/2 CN3005 or
AB 1/2 CN3205
P 2/2 CN4101
O 2/2 CN3901
Regulator 5V(E)=>3.3V(E)
V+3R3E
SH-SH SPI Buffer
Over Current Detect
J CN7901 or K CN7911 or
L CN7921 or M CN7931
N CN4401
A 1/15 CN105
A 1/15 CN104
*RESISTORS
Indicated in Ω , ±5% tolerance
unless otherwise noted. k : kΩ , M : MΩ.
*CAPACITORS
Indicated in Capacity/Voltage(V)
unless otherwise noted. u : μF , p : pF
NOTES
REF:4501-4900
UCOM DWM2721 /J
DWX4296 /J
PCB DNP2963
The ⚠ mark found on some component parts indicates the importance of the safety factor of the part.
Therefore, when replacing, be sure to use parts of identical designation.
⚠ 印の部品は、安全上重要な部品です。
交換するときは、安全および性能維持のため必ず指定の部品をご使用ください。
G 2/3

10.36 UCOM ASSY (3/3)

UCOM BOARD IF2

G 3/3 UCOM ASSY (DWX4296)

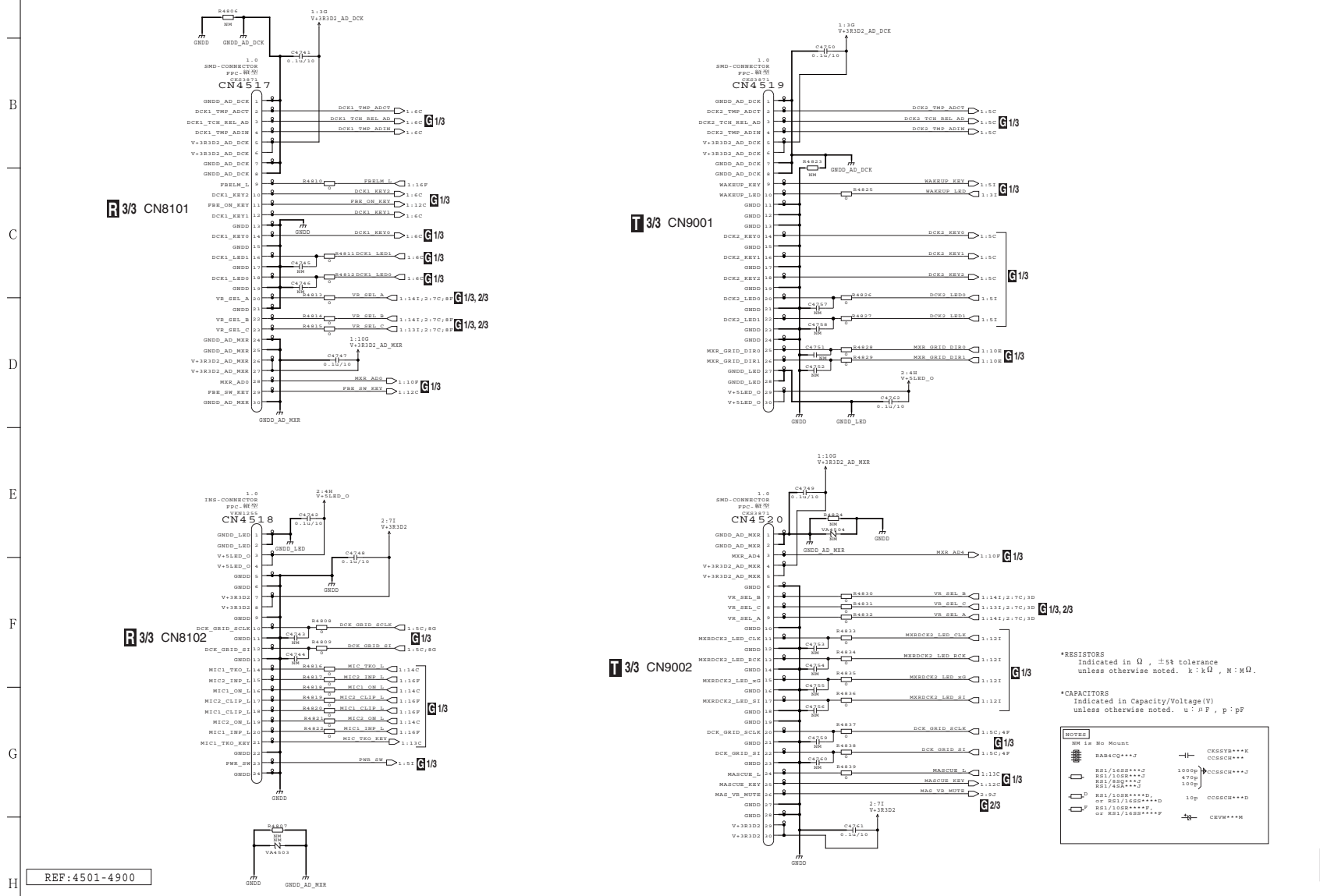

REF:4501-4900

UCOM	DWM2721 /J
	DWX4296 /J
PCB	DNP2963

H 1/3 MIXER ASSY (DWX4299)

MIXER LED

CFX LED Position····WHITE

CFX1 (SPACE)	CFX2 (DUB ECHO)	CFX3 (SWEEP)
CFX4 (NOISE)	CFX5 (CRUSH)	CFX6 (FILTER)

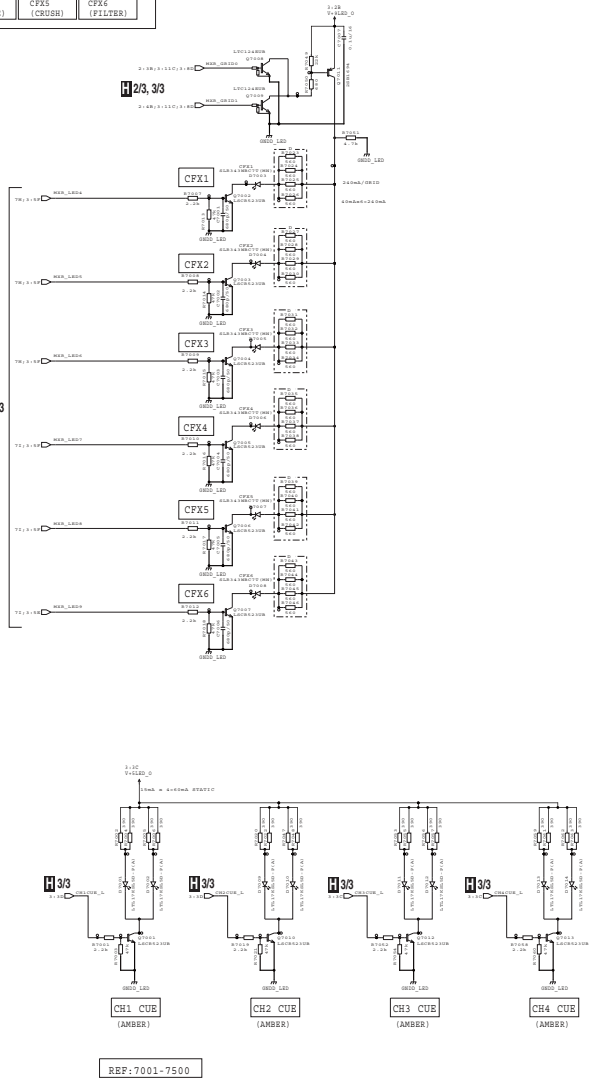

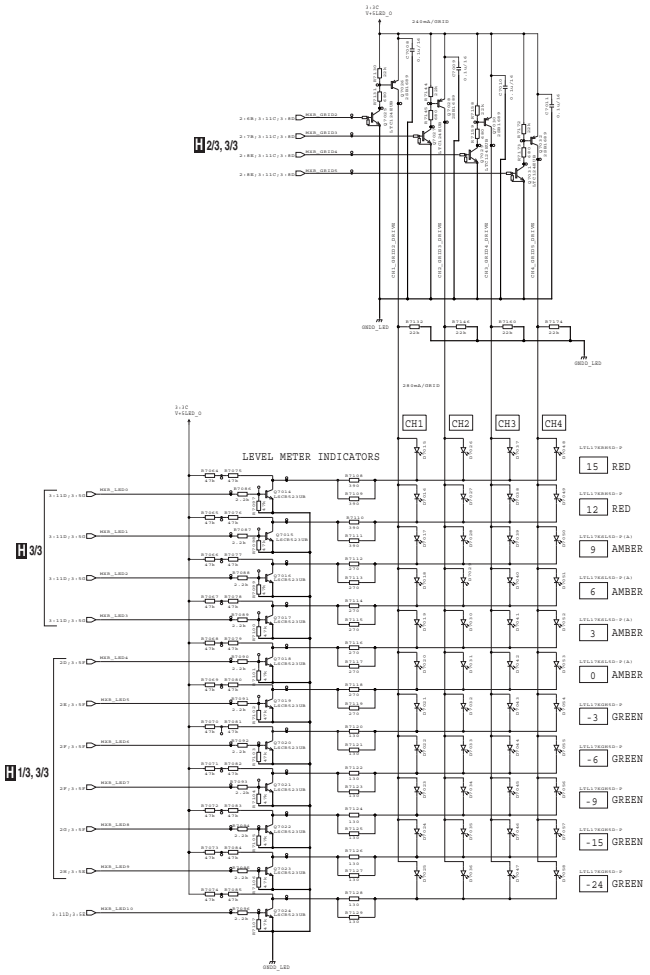

*RESISTORS
Indicated in Ω , ±5% tolerance
unless otherwise noted. k : kΩ , M : MΩ.

*CAPACITORS
Indicated in Capacity/Voltage(V)
unless otherwise noted. u : μF , p : pF

NOTES
SMD i.e No Mount
RS1/10SS····J
CE5KYA····K
RS1/10SS····D
RS1/10SS····F

MIXER	DWX4299 /J
PCB	DNP2965

10.38 MIXER ASSY (2/3)

MIXER KEY/VR

H 2/3 MIXER ASSY (DWX4299)

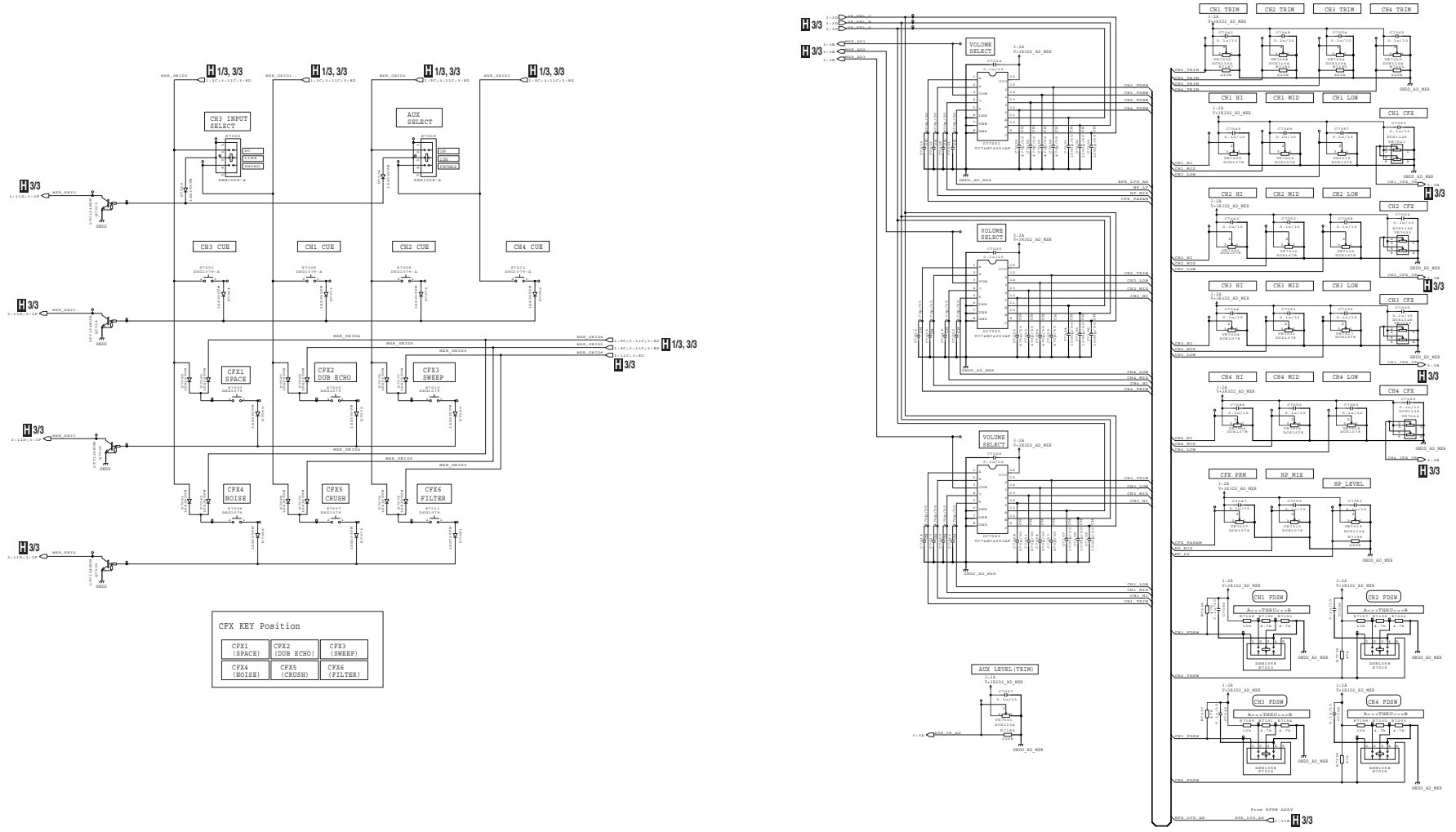

CFX KEY Position

CFX1 (SPACE)	CFX2 (DUB ECHO)	CFX3 (SWEEP)
CFX4 (NOISE)	CFX5 (CRUSH)	CFX6 (FILTER)

REF:7001-7500

*RESISTORS
Indicated in Ω , ±5% tolerance
unless otherwise noted. k : kΩ , M : MΩ.

*CAPACITORS
Indicated in Capacity/Voltage(V)
unless otherwise noted. u : μF , p : pF

NOTES

SW is No Mount

RS1/10SR***J
RS1/10SR****D
RS1/10SR****F
CE3SV3***K
CC3SC0***J
CC3SC0***J

MIXER	DWX4299 /J
PCB	DNP2965

H 3/3 MIXER ASSY (DWX4299)

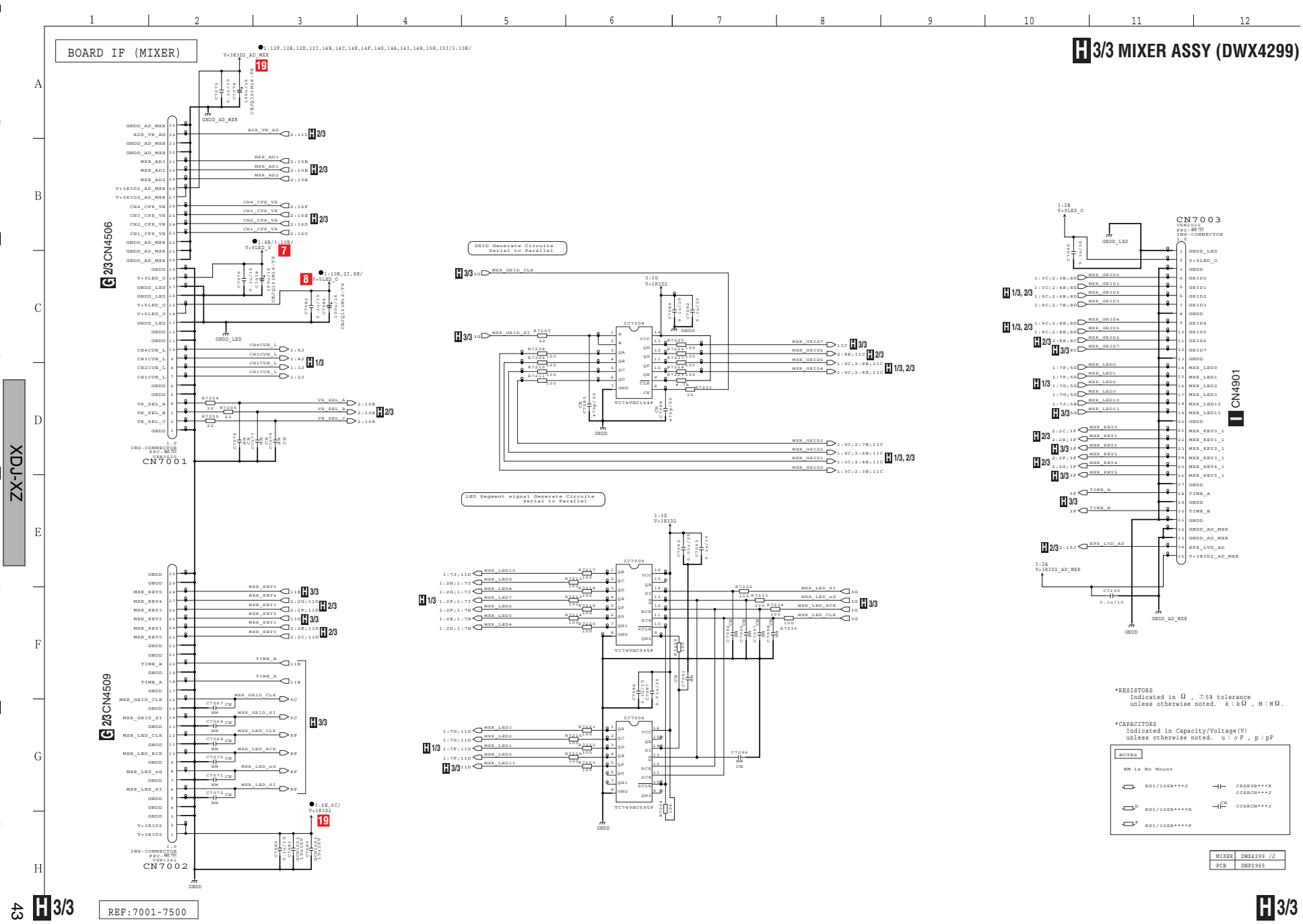

EFSW

10.40 EFSW ASSY

EFSW ASSY (DWX4297)

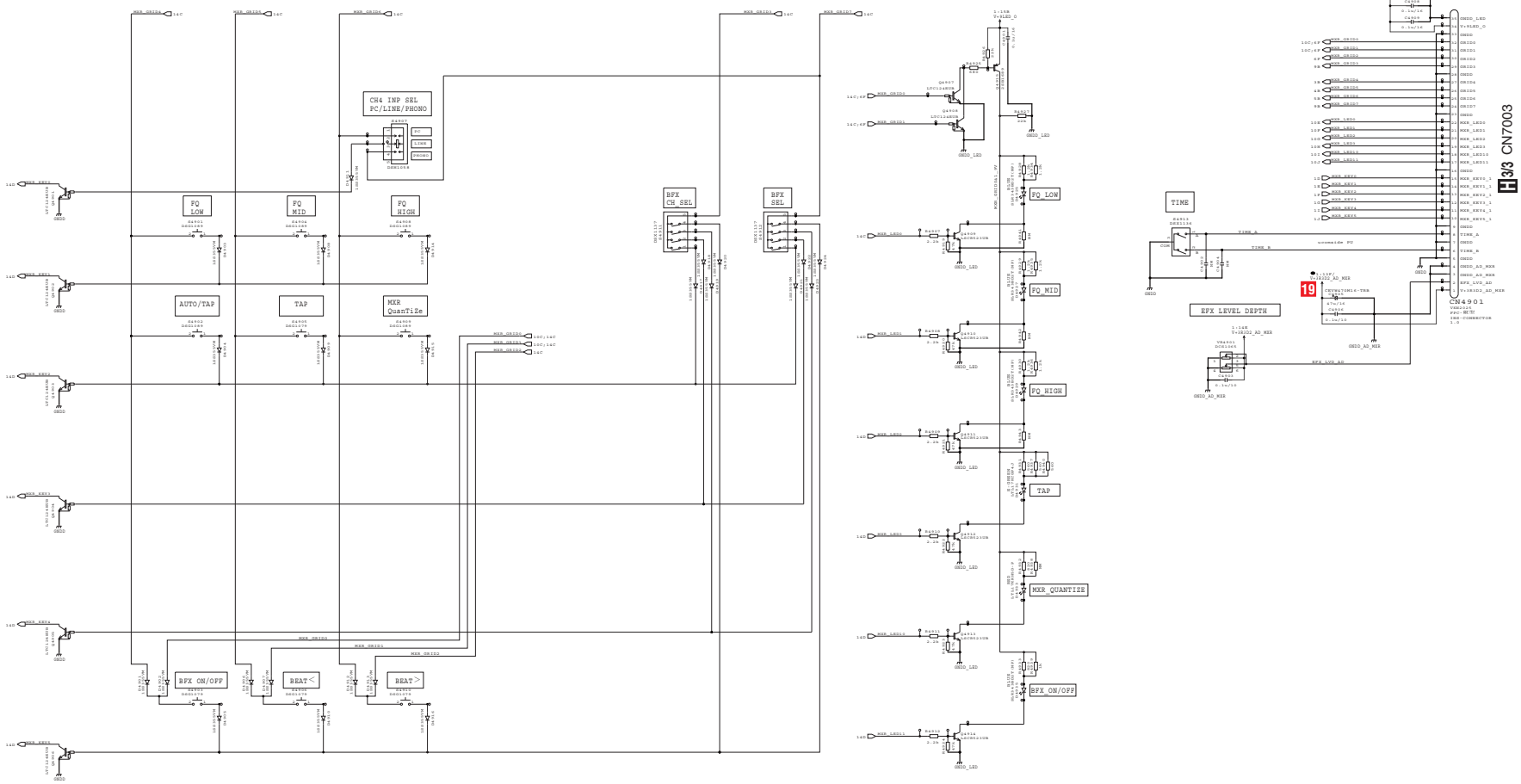

*RESISTORS
Indicated in Ω , ±5% tolerance
unless otherwise noted. k : kΩ , M : MΩ.

*CAPACITORS
Indicated in Capacity/Voltage(V)
unless otherwise noted. u : μF , p : pF

NOTES
SM in Sw Mount
RS1/10SS***J
CKS5YB***K

REF:4901-5000

UCOM	DWM2721 /J
	DWX4297 /J
PCB	DNP2963

10.41 CHF1 to CHF4 and CRFD ASSYS

J CHF1 ASSY (DWX4303)

CHF1

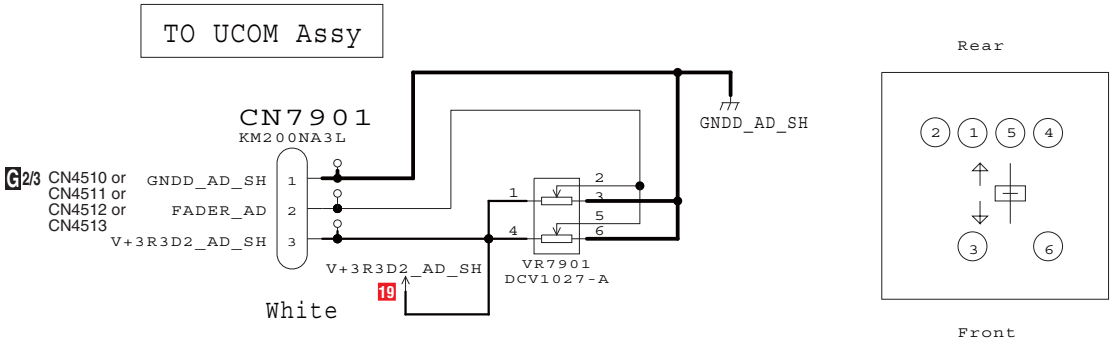

Note:
The 1 to 4 Assys of CHF Assys have the same circuitry, parts, and board shapes.
Only printed information is different, because their part numbers and wiring numbers are different.
They are handled similarly in their production management.
Therefore, either 1, 2, 3 or 4 Assy of the respective Assys is assembled in the respective place.

注意：
CHF の 1 から 4 は回路そのもの、使用部品、基板形状は同じです。
生産上は 1 から 4 の ASSY を管理していません。
このためそれぞれの場所には 1 から 4 のいずれかの ASSY が配置されています。

SUBA	DWM2724 /J
CHF1	DWX4303 /J
PCB	DNP2966

K CHF2 ASSY (DWX4304)

CHF2

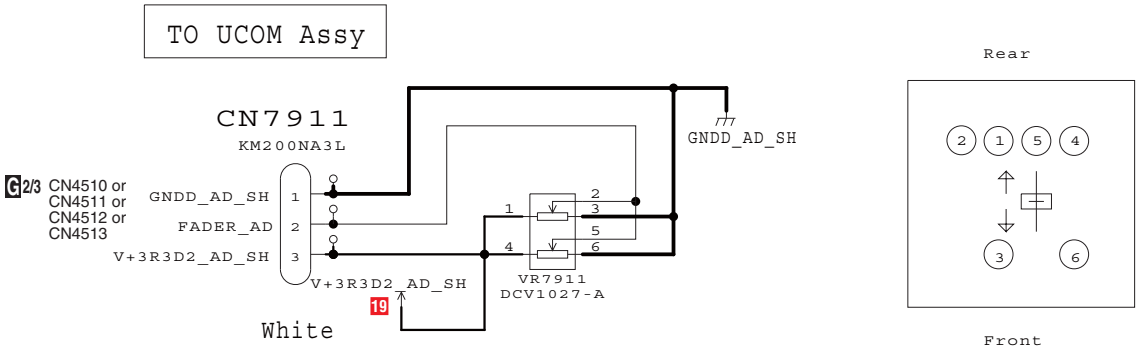

SUBA	DWM2724 /J
CHF2	DWX4304 /J
PCB	DNP2966

L CHF3 ASSY (DWX4305)

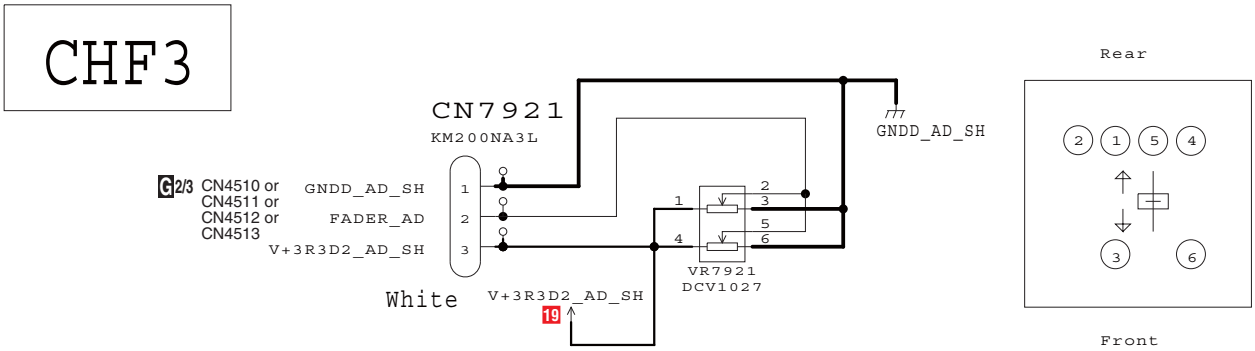

PNL1	DWM2725 /J
CHF3	DWX4305 /J
PCB	DNP2967

M CHF4 ASSY (DWX4306)

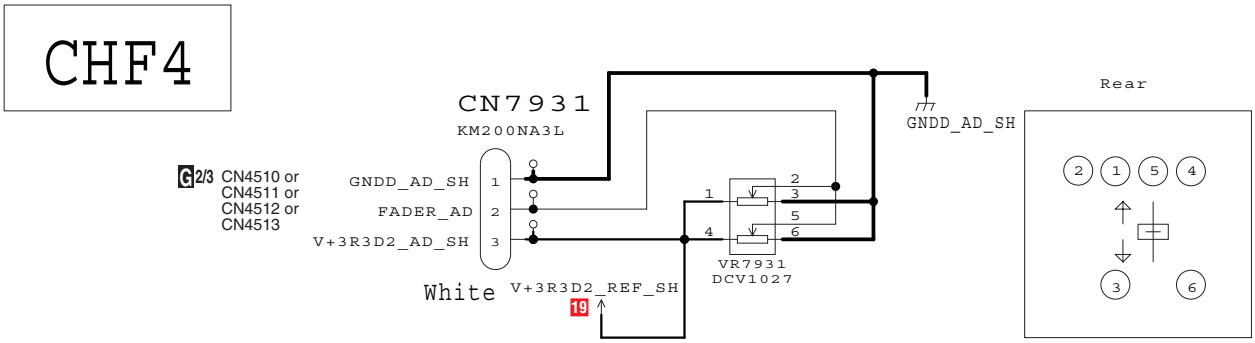

PNL2	DWM2726 /J
CHF4	DWX4306 /J
PCB	DNP2968

N CRFD ASSY (DWX4295)

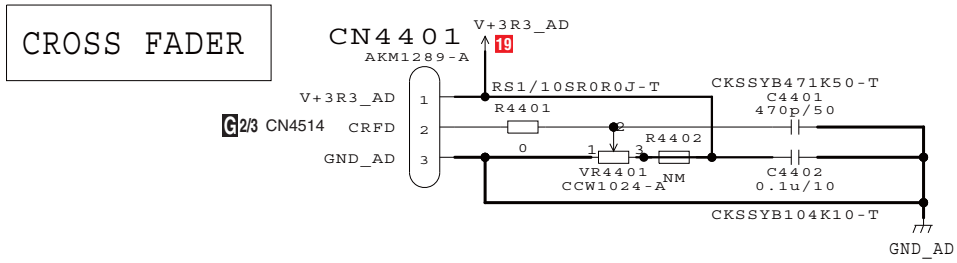

*CAPACITORS
Indicated in Capacity/Voltage(V)
unless otherwise noted. u : μF , p : pF

*RESISTORS
Indicated in Ω , ±5% tolerance
unless otherwise noted. k : kΩ , M : MΩ.

PADA	DWM2719 /J
CRFD	DWX4295 /J
PCB	DNP2962

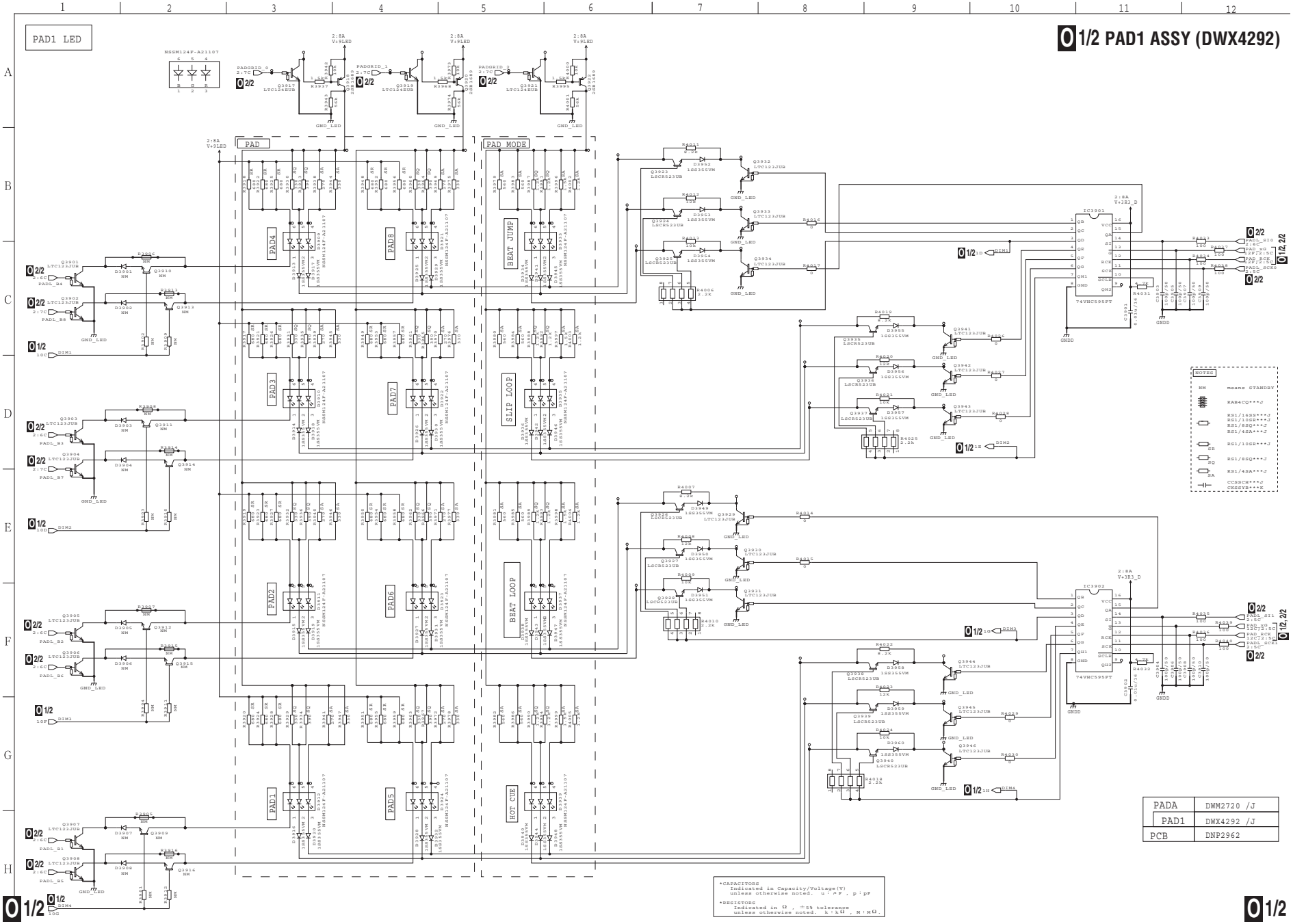

PADA	DWM2720 /J
PAD1	DWX4292 /J
PCB	DNP2962

10.43 PAD1 ASSY (2/2)

2/2 PAD1 ASSY (DWX4292)

PAD1 KEY

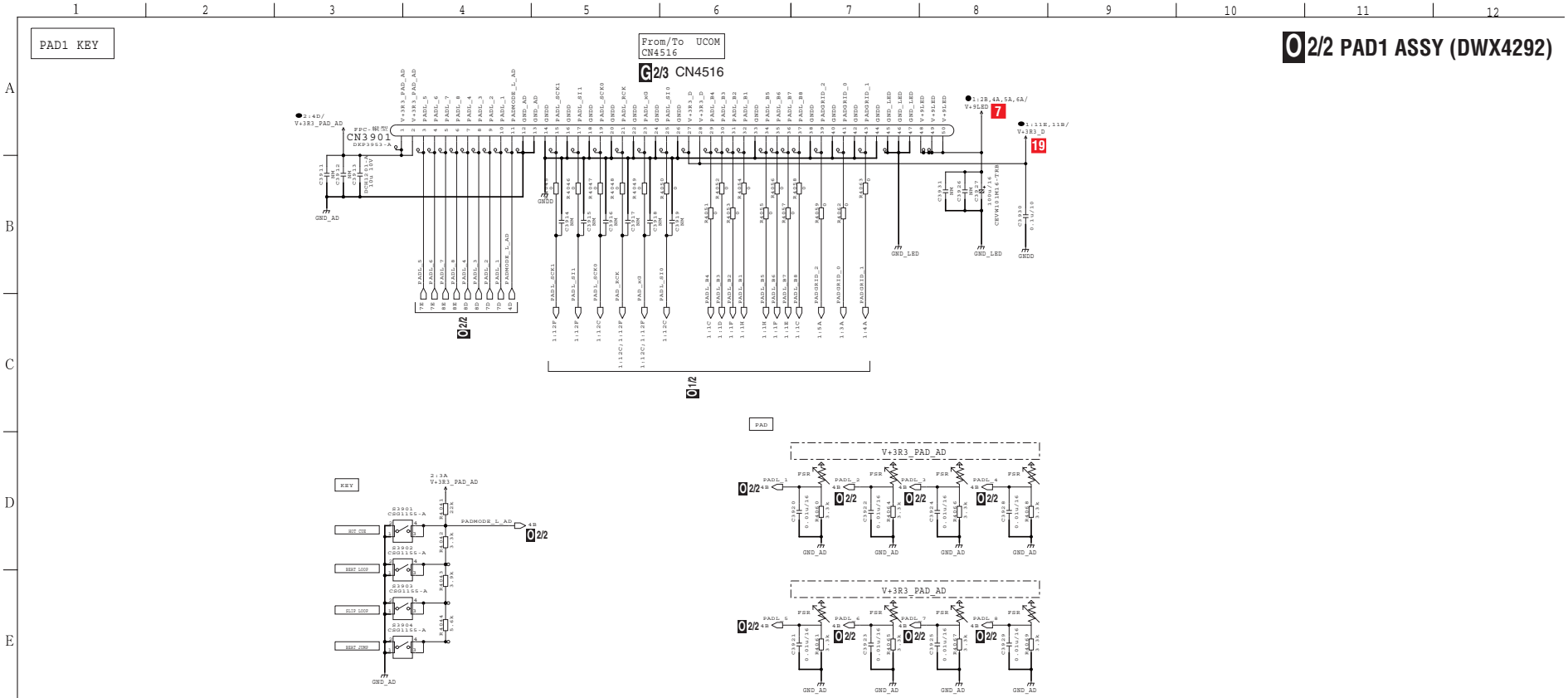

*CAPACITORS
Indicated in Capacity/Voltage(V)
unless otherwise noted. u : μF , p : pF

*RESISTORS
Indicated in Ω , ±5% tolerance
unless otherwise noted. k : kΩ , M : MΩ .

NOTES
NM means STANDBY
RS1/16SS***J
CCSSYS***K

PADA	DWM2720 /J
PAD1	DWX4292 /J
PCB	DNP2962

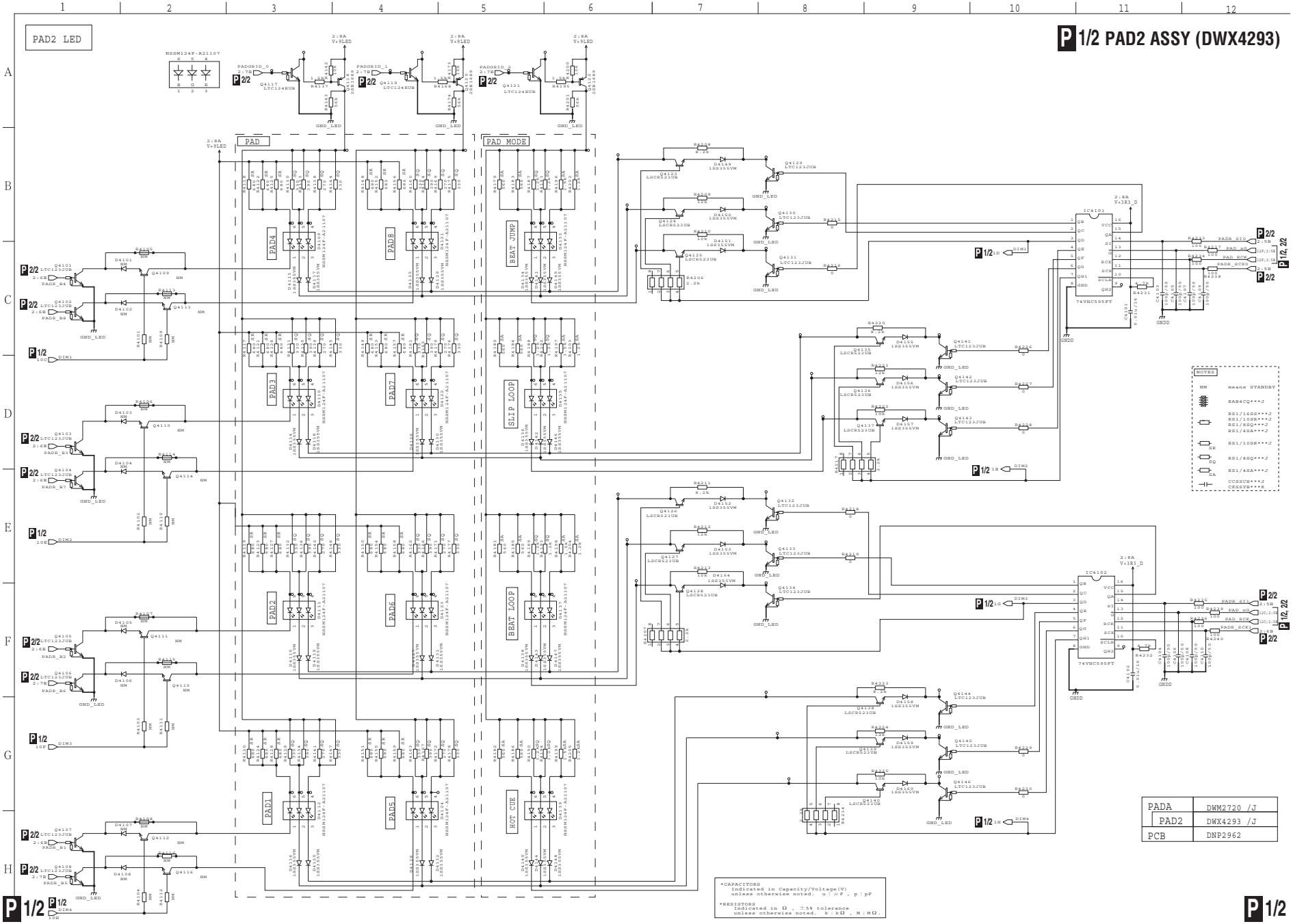

PADA	DWM2720 /J
PAD2	DWX4293 /J
PCB	DNP2962

10.45 PAD2 ASSY (2/2)

P 2/2 PAD2 ASSY (DWX4293)

PAD2 KEY

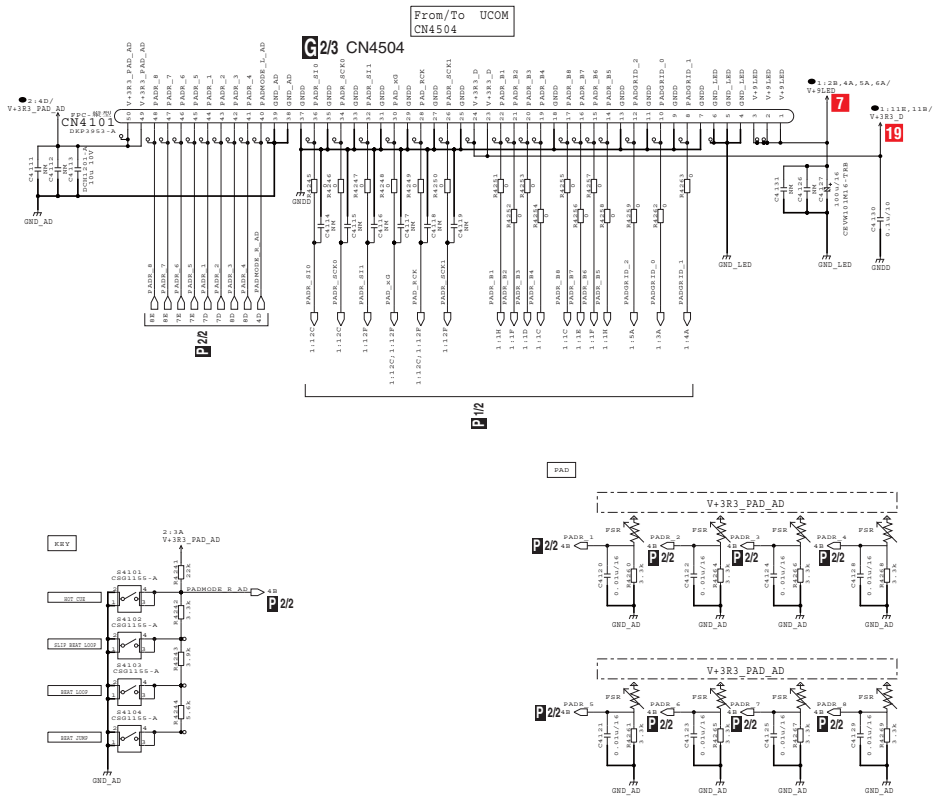

PADA	DWM2720 /J
PAD2	DWX4293 /J
PCB	DNP2962

Q XPAD ASSY (DWX4290)

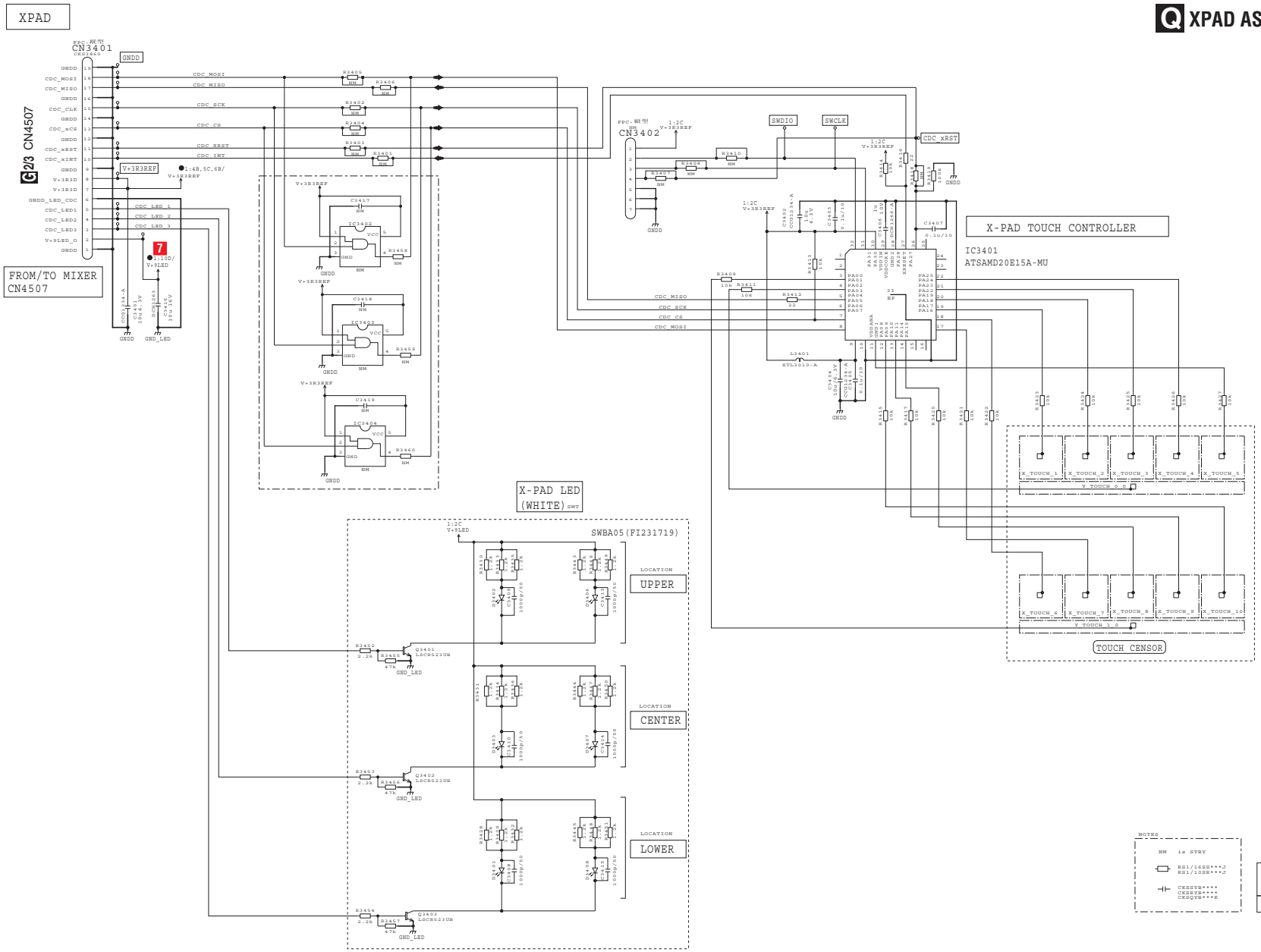

NOTES

NM is STBY

RS1/16SS****Z
RS1/10SS****J

CKSSYB****
CKSRYB****
CKSQYB***R

JOGA	DWM2719 /J
XPAD	DWX4290 /J
PCB	DNP2961

10.47 DCK1 ASSY (1/3)

DCK1 KEY/VR

R 1/3 DCK1 ASSY (DWX4309)

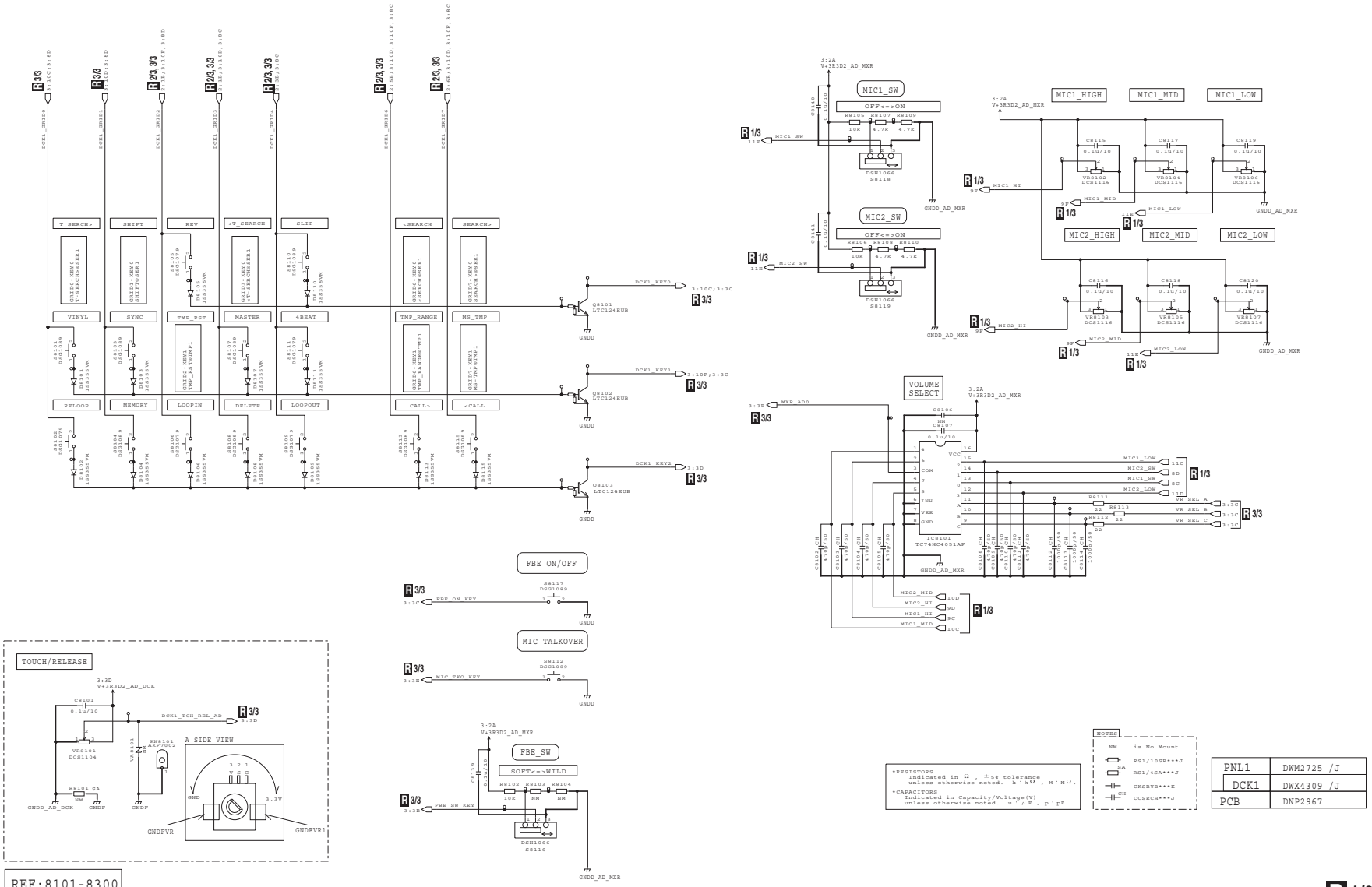

REF:8101-8300

*RESISTORS
Indicated in Ω , ±5% tolerance
unless otherwise noted. k : kΩ , M : MΩ .

*CAPACITORS
Indicated in Capacity/Voltage(V)
unless otherwise noted. u : μF , p : pF

NOTES

NM	is No Mount
SA	RS1/10SR***J
	RS1/4SA***J
	CKSRYB***K
CH	CCSRCH***J

PNL1	DWM2725 /J
DCK1	DWX4309 /J
PCB	DNP2967

R 1/3

R 2/3 DCK1 ASSY (DWX4309)

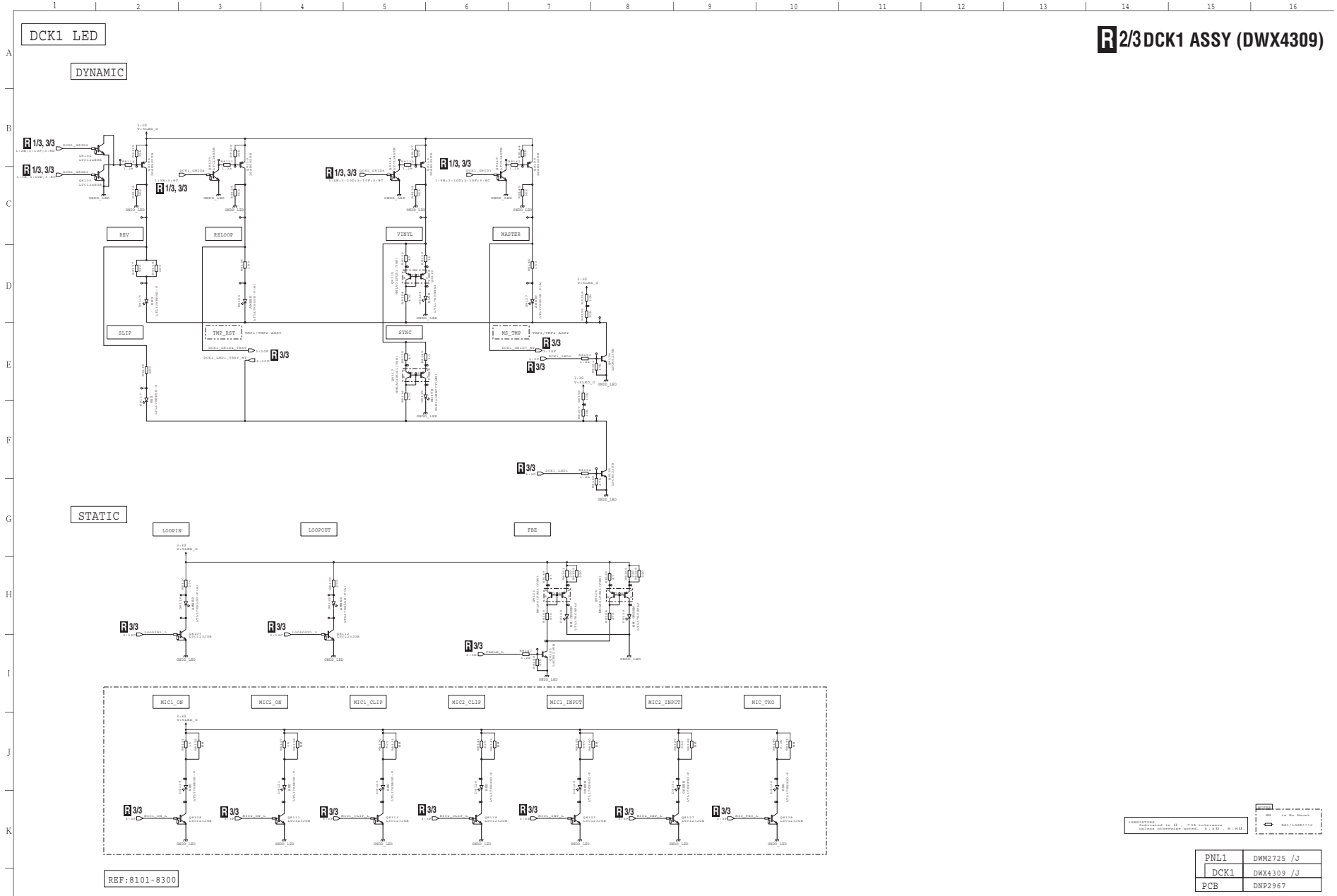

PNL1	DWM2725 /J
DCK1	DWX4309 /J
PCB	DNP2967

10.49 DCK1 (3/3) and PWSW ASSYS

DCK1 IF

R 3/3 DCK1 ASSY (DWX4309)

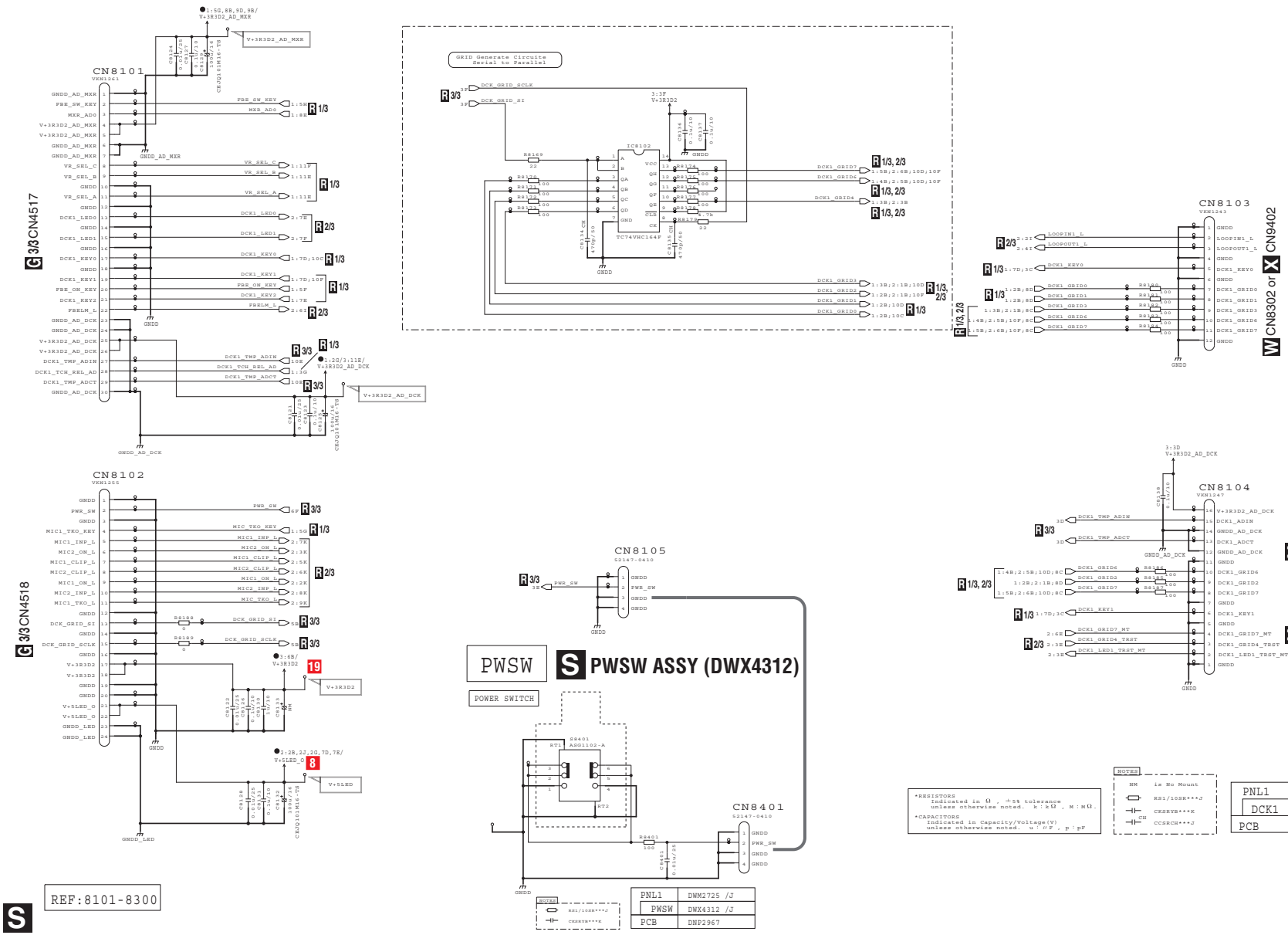

*RESISTORS
Indicated in Ω , ±5% tolerance
unless otherwise noted. k : kΩ , M : MΩ.
*CAPACITORS
Indicated in Capacity/Voltage(V)
unless otherwise noted. u : μF , p : pF

NOTES
NM is No Mount
RS1/10SR***J
CKSRYB***K
CCSRCH***J

PNL1	DWM2725 /J
DCK1	DWX4309 /J
PCB	DNP2967

PNL1	DWM2725 /J
PWSW	DWX4312 /J
PCB	DNP2967

R 3/3 S

DCK2 KEY/VR

T 1/3 DCK2 ASSY (DWX4313)

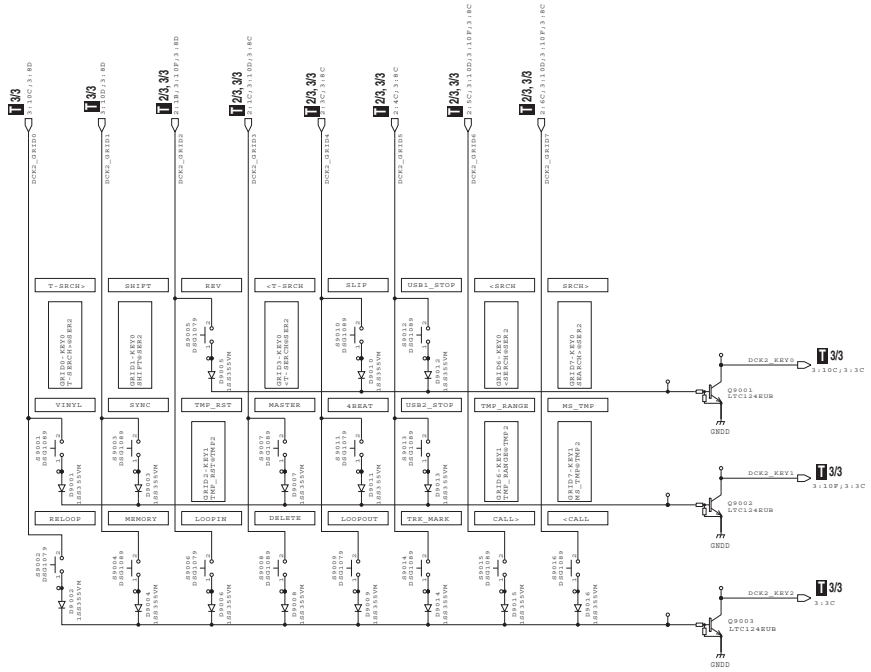

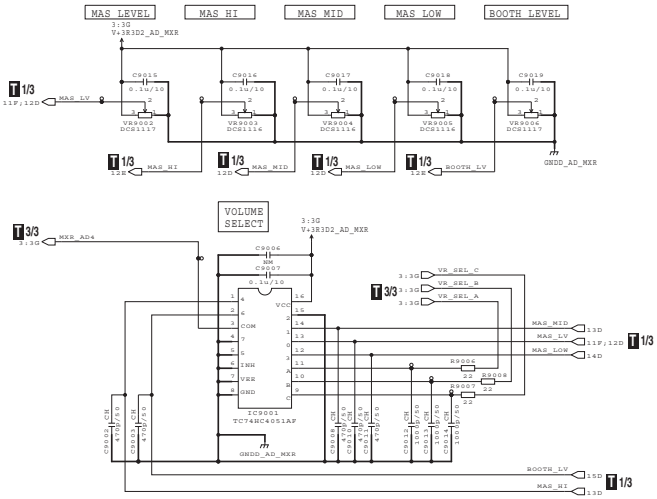

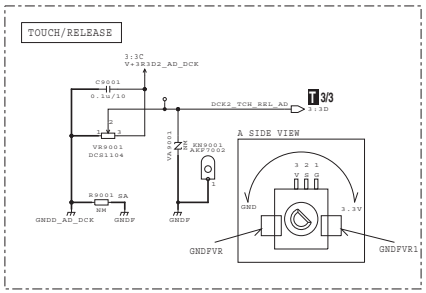

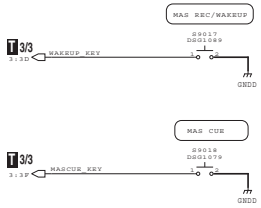

REF:9001-9300

*RESISTORS
Indicated in Ω, ±5% tolerance unless otherwise noted. k : kΩ, M : MΩ.
*CAPACITORS
Indicated in Capacity/Voltage(V) unless otherwise noted. u : μF, p : pF

NOTES
NM is No Mount
RS1/10SR***J
RS1/4SA***J
CKSRYB***K
CCSRCH***J

PNL2	DWM2726 /J
DCK2	DWX4313 /J
PCB	DNP2968

10.51 DCK2 ASSY (2/3)

T 2/3 DCK2 ASSY (DWX4313)

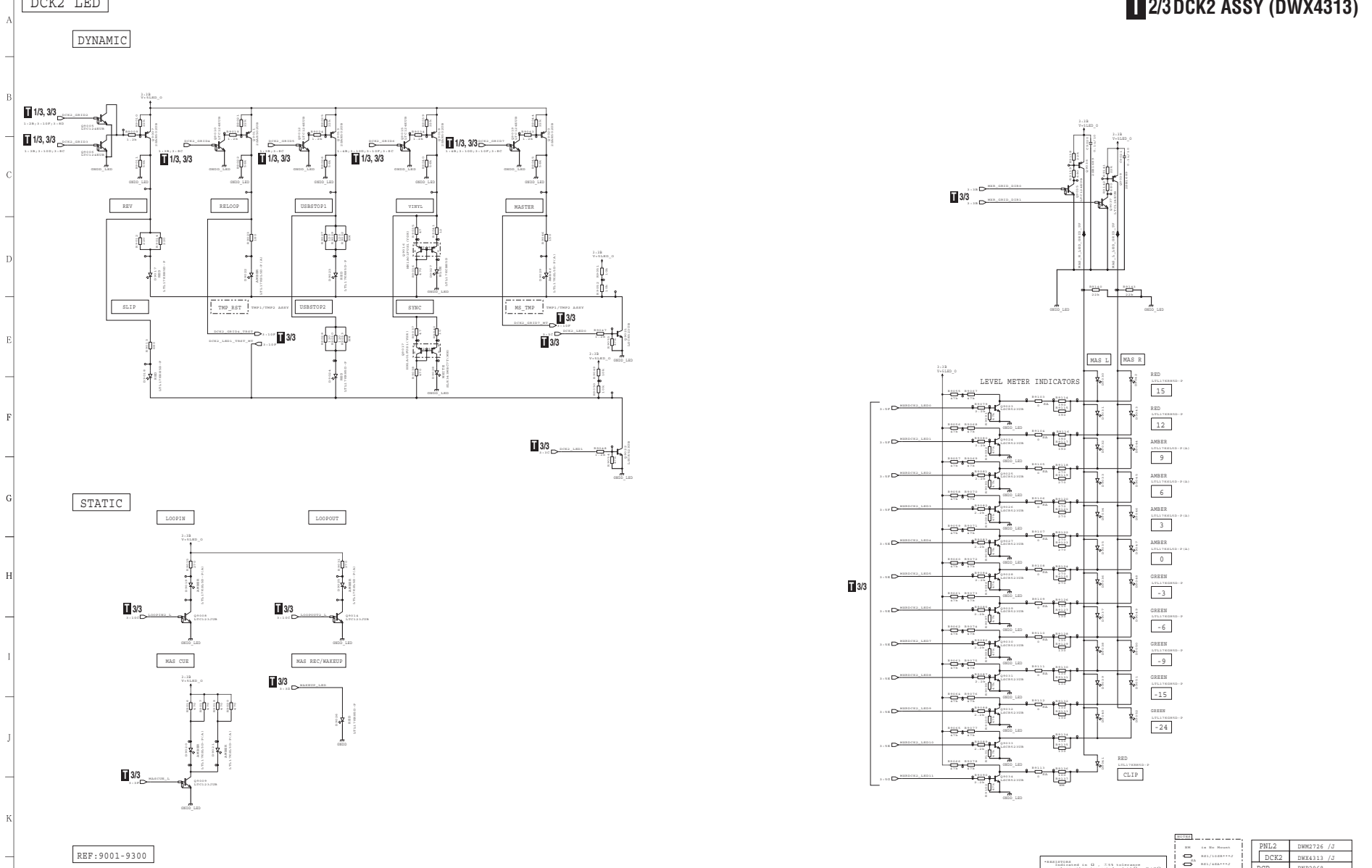

PNL2	DWM2726 /J
DCK2	DWX4313 /J
PCB	DNP2968

DCK2 IF

T 3/3 DCK2 ASSY (DWX4313)

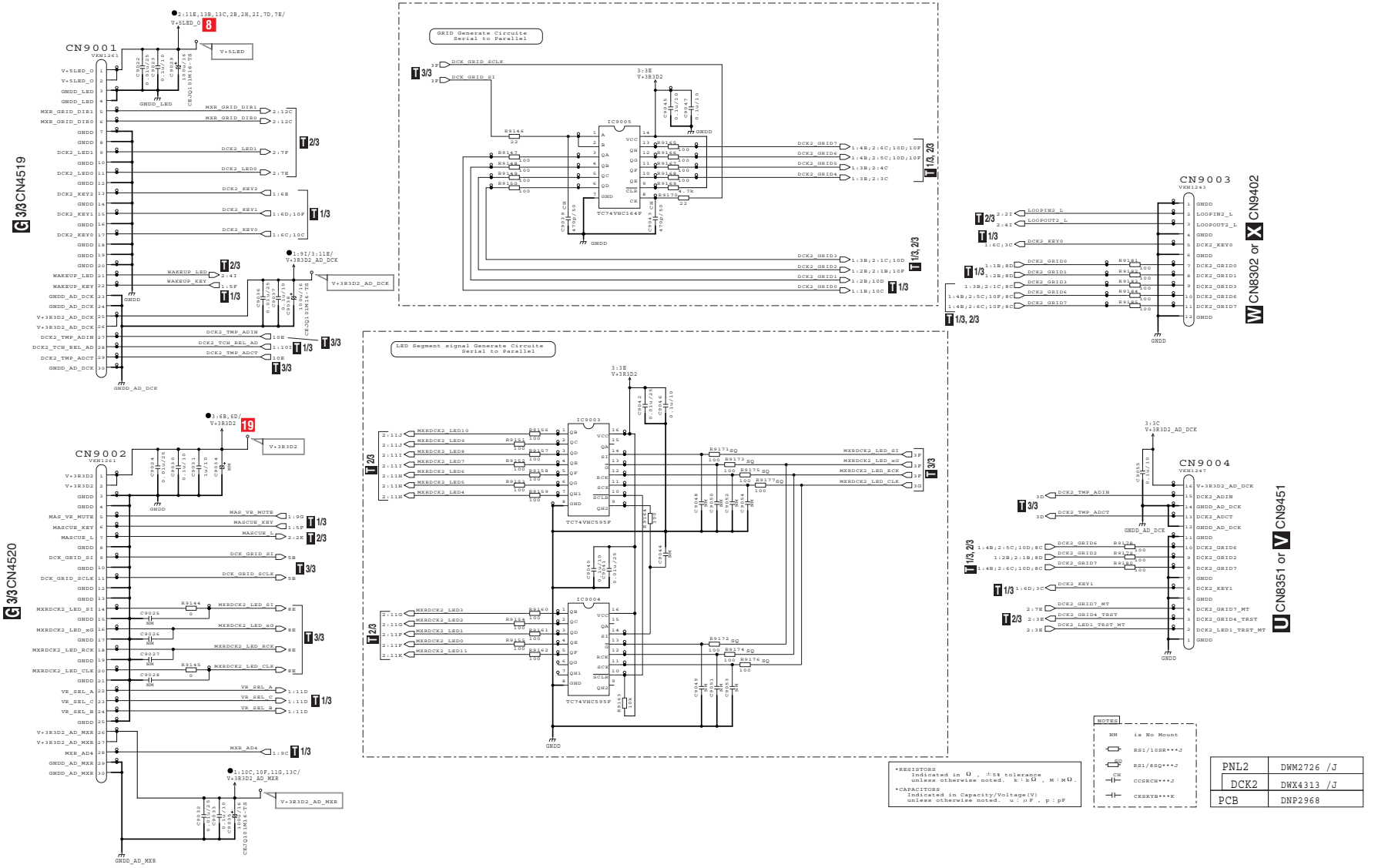

*RESISTORS
Indicated in Ω , ±5% tolerance
unless otherwise noted. k : kΩ , M : MΩ.

*CAPACITORS
Indicated in Capacity/Voltage(V)
unless otherwise noted. u : μF , p : pF

NOTES

NM	is No Mount
SQ	RS1/10SR***J
SQ	RS1/8SQ***J
CH	CCSRCH***J
CH	CKSRYB***K

PNL2	DWM2726 /J
DCK2	DWX4313 /J
PCB	DNP2968

10.53 TMP1 ASSY

TMP1

U TMP1 ASSY (DWX4311)

Note:
The 1 and 2 Assys of TMP Assy have the same circuitry, parts, and board shapes.
Only printed information is different, because their part numbers and wiring numbers are different.
They are handled similarly in their production management.
Therefore, either 1 or 2 Assy of the respective Assys is assembled in the respective place.

注意：
TMP の１と２は回路そのもの、使用部品、基板形状は同じです。
生産上は１と２の ASSY を管理していません。
このためそれぞれの場所には１と２のどちらかの ASSY が配置されています。

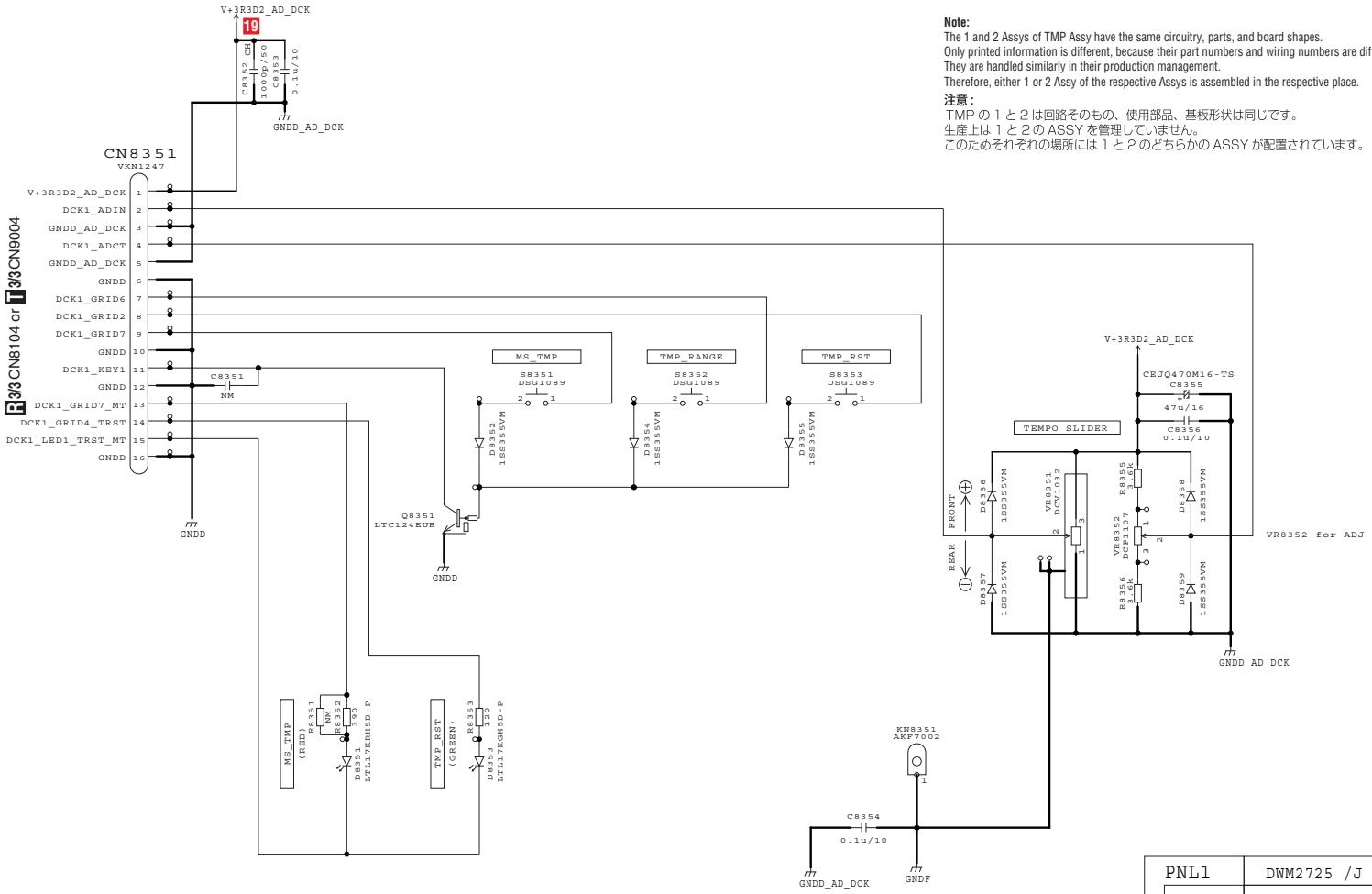

PNL1	DWM2725 /J
TMP1	DWX4311 /J
PCB	DNP2967

*RESISTORS
Indicated in Ω , ±5% tolerance
unless otherwise noted. k : kΩ , M : MΩ .

*CAPACITORS
Indicated in Capacity/Voltage(V)
unless otherwise noted. u : μF , p : pF

NOTES

NM	is No Mount
	RS1/10SR***J
	CKSRYB***K
CH	CCSRCH***J

REF:8351-8400

U

U

TMP2

V TMP2 ASSY (DWX4315)

Note:
The 1 and 2 Assys of TMP Assy have the same circuitry, parts, and board shapes.
Only printed information is different, because their part numbers and wiring numbers are different.
They are handled similarly in their production management.
Therefore, either 1 or 2 Assy of the respective Assys is assembled in the respective place.

注意：
TMP の１と２は回路そのもの、使用部品、基板形状は同じです。
生産上は１と２の ASSY を管理していません。
このためそれぞれの場所には１と２のどちらかの ASSY が配置されています。

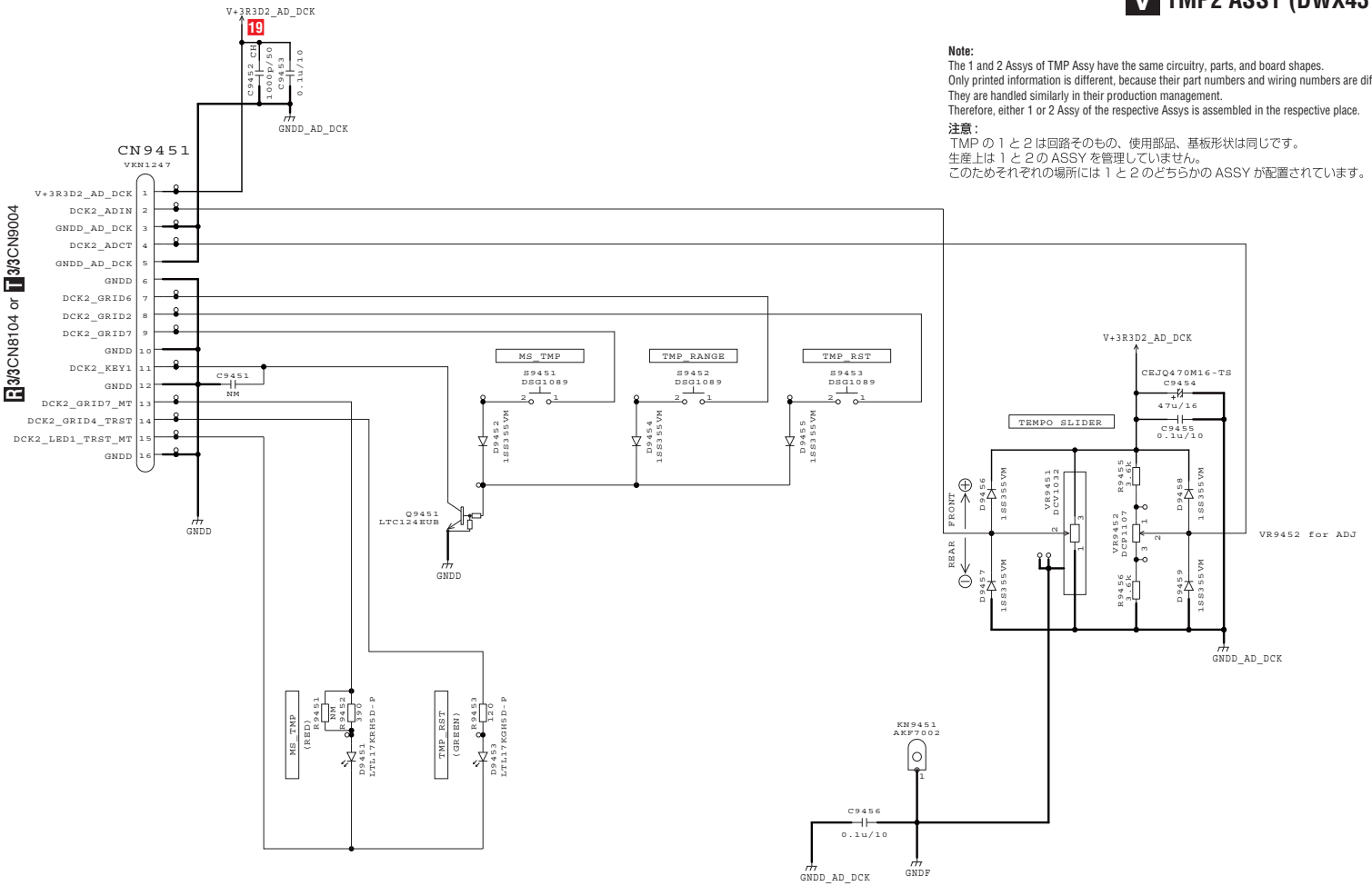

PNL2	DWM2726 /J
TMP2	DWX4315 /J
PCB	DNP2968

*RESISTORS
Indicated in Ω , ±5% tolerance
unless otherwise noted. k : kΩ , M : MΩ .

*CAPACITORS
Indicated in Capacity/Voltage(V)
unless otherwise noted. u : μF , p : pF

NOTES

NM	is No Mount
	RS1/10SR***J
	CKSRYB***K
CH	CCSRCH***J

REF:9451-9500

XDJ-XZ

10.55 SER1 ASSY

W SER1 ASSY (DWX4310)

Note:
The 1 and 2 Assys of SER Assy have the same circuitry, parts, and board shapes.
Only printed information is different, because their part numbers and wiring numbers are different.
They are handled similarly in their production management.
Therefore, either 1 or 2 Assy of the respective Assys is assembled in the respective place.

注意：
SER の１と２は回路そのもの、使用部品、基板形状は同じです。
生産上は１と２の ASSY を管理していません。
このためそれぞれの場所には１と２のどちらかの ASSY が配置されています。

SER1 ASSY

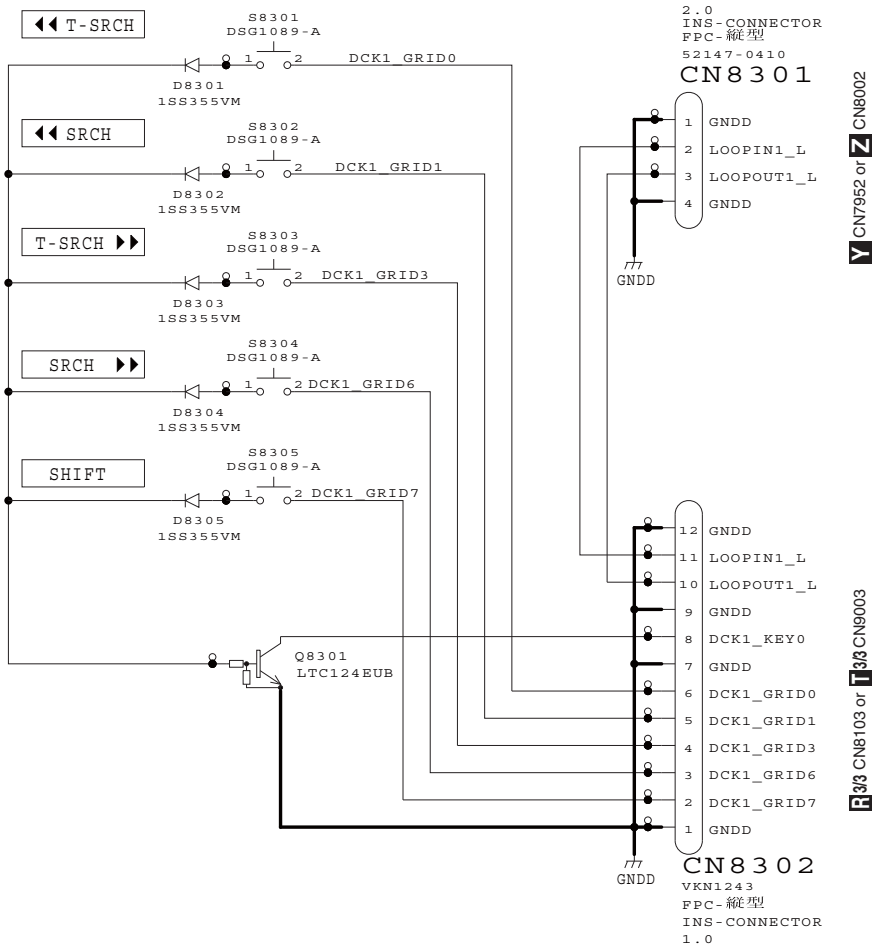

SUBA	DWM2724 /J
SER1	DWX4310 /J
PCB	DNP2966

10.56 SER2 ASSY

X SER2 ASSY (DWX4314)

Note:
The 1 and 2 Assys of SER Assy have the same circuitry, parts, and board shapes.
Only printed information is different, because their part numbers and wiring numbers are different.
They are handled similarly in their production management.
Therefore, either 1 or 2 Assy of the respective Assys is assembled in the respective place.

注意：
SER の１と２は回路そのもの、使用部品、基板形状は同じです。
生産上は１と２の ASSY を管理していません。
このためそれぞれの場所には１と２のどちらかの ASSY が配置されています。

SER2 ASSY

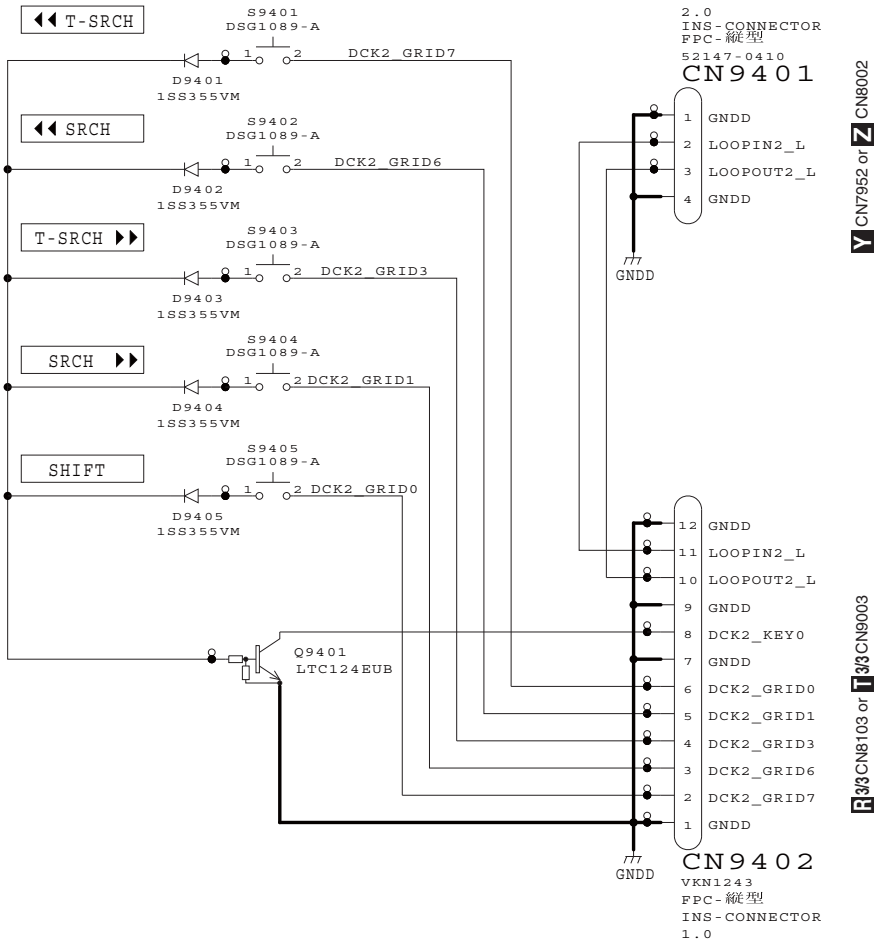

SUBA	DWM2724 /J
SER2	DWX4314 /J
PCB	DNP2966

10.57 PLAY1 ASSY

Y PLAY1 ASSY (DWX4307)

Note:
The 1 and 2 Assys of PLAY Assy have the same circuitry, parts, and board shapes.
Only printed information is different, because their part numbers and wiring numbers are different.
They are handled similarly in their production management.
Therefore, either 1 or 2 Assy of the respective Assys is assembled in the respective place.

注意：
PLAYの１と２は回路そのもの、使用部品、基板形状は同じです。
生産上は１と２のASSYを管理していません。
このためそれぞれの場所には１と２のどちらかのASSYが配置されています。

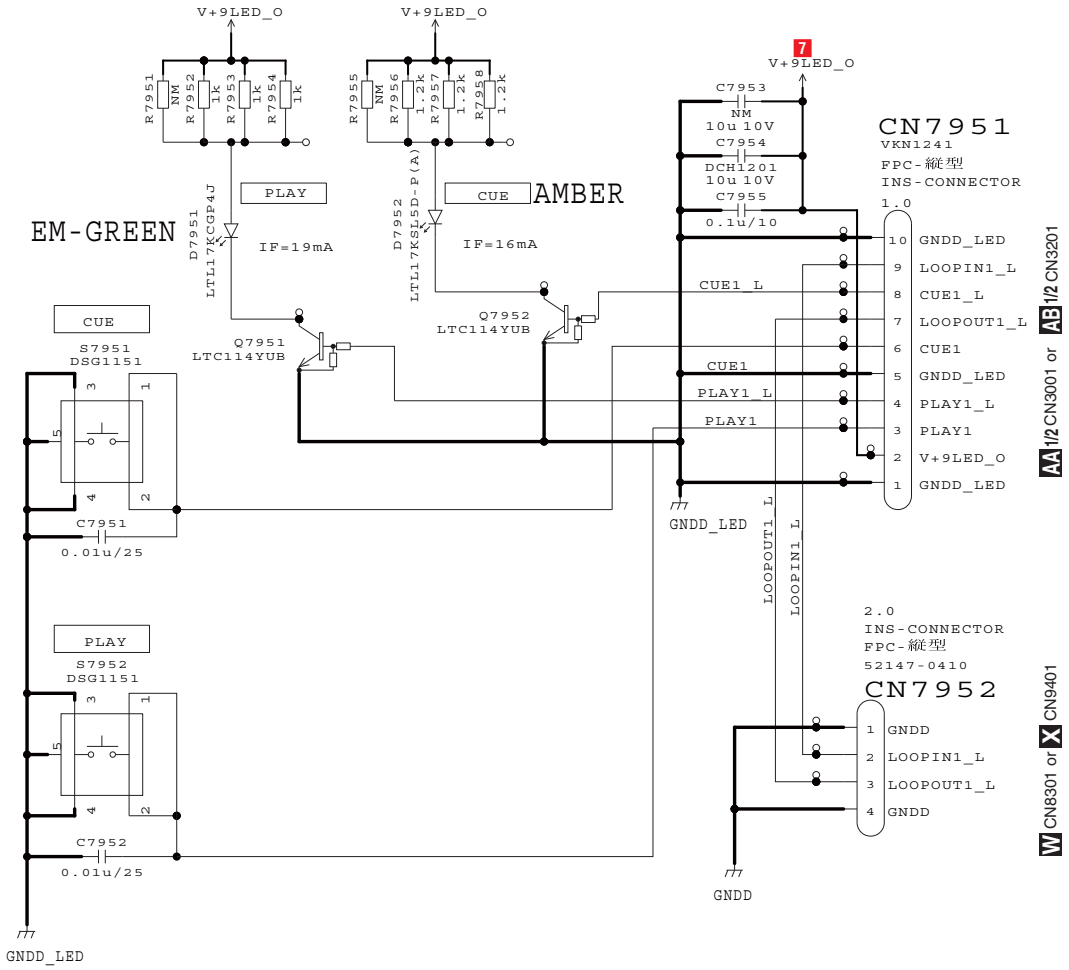

NOTES

NM	means STANDBY
-▭-	RS1/10SR***J
-⊣⊢-	CKSRYB***K

*CAPACITORS
Indicated in Capacity/Voltage(V)
unless otherwise noted. u : μF , p : pF

*RESISTORS
Indicated in Ω , ±5% tolerance
unless otherwise noted. k : kΩ , M : MΩ.

SUBA	DWM2724 /J
PLAY1	DWX4307 /J
PCB	DNP2966

Y Y

10.58 PLAY2 ASSY

Z PLAY2 ASSY (DWX4308)

Note:
The 1 and 2 Assys of PLAY Assy have the same circuitry, parts, and board shapes.
Only printed information is different, because their part numbers and wiring numbers are different.
They are handled similarly in their production management.
Therefore, either 1 or 2 Assy of the respective Assys is assembled in the respective place.

注意：
PLAYの１と２は回路そのもの、使用部品、基板形状は同じです。
生産上は１と２のASSYを管理していません。
このためそれぞれの場所には１と２のどちらかのASSYが配置されています。

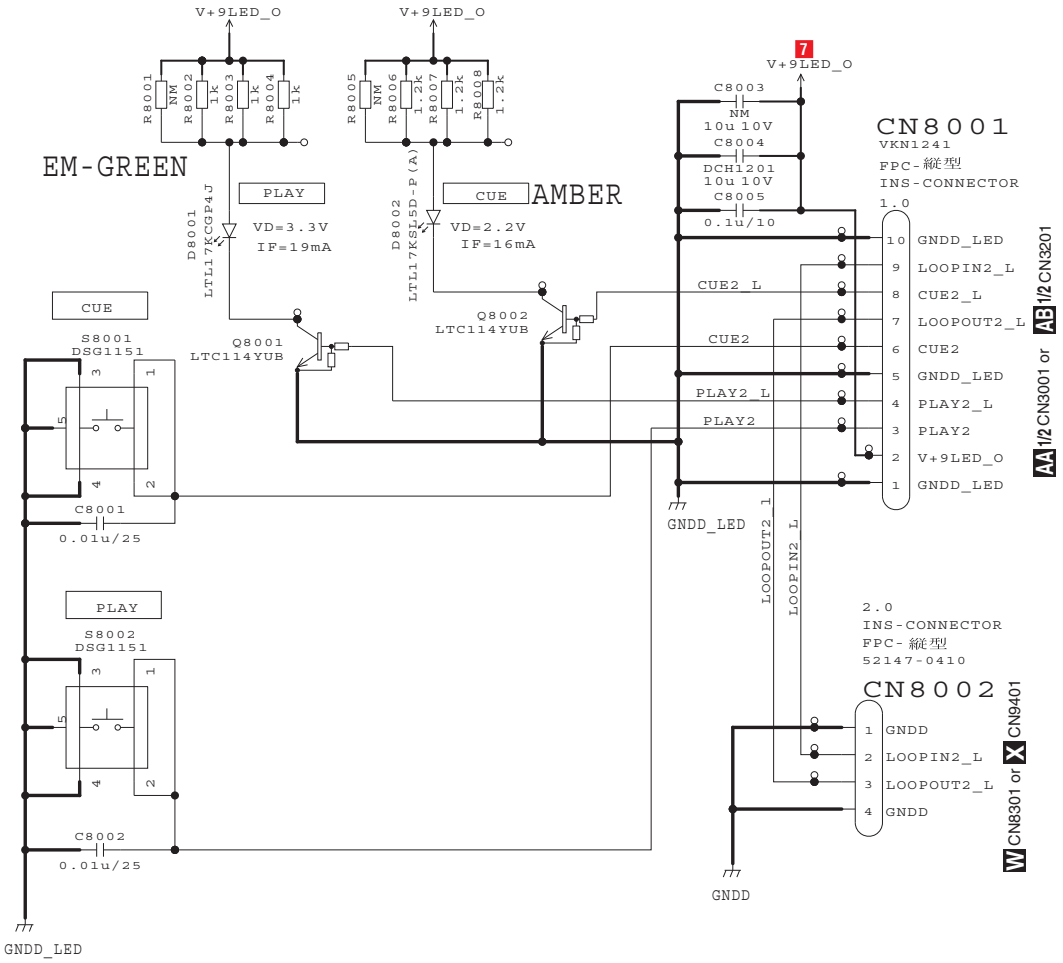

NOTES
NM means STANDBY
RS1/10SR***J
CKSRYB***K

*CAPACITORS
Indicated in Capacity/Voltage(V)
unless otherwise noted. u : μF , p : pF

*RESISTORS
Indicated in Ω , ±5% tolerance
unless otherwise noted. k : kΩ , M : MΩ.

SUBA	DWM2724 /J
PLAY2	DWX4308 /J
PCB	DNP2966

10.59 JLCD1 ASSY (1/2)

Note:
The 1 and 2 Assys of JLCD Assy have the same circuitry, parts, and board shapes.
Only printed information is different, because their part numbers and wiring numbers are different.
They are handled similarly in their production management.
Therefore, either 1 or 2 Assy of the respective Assys is assembled in the respective place.

注意：
JLCDの１と２は回路そのもの、使用部品、基板形状は同じです。
生産上は１と２のASSYを管理していません。
このためそれぞれの場所には１と２のどちらかのASSYが配置されています。

AA 1/2 JLCD1 ASSY (DWX4288)

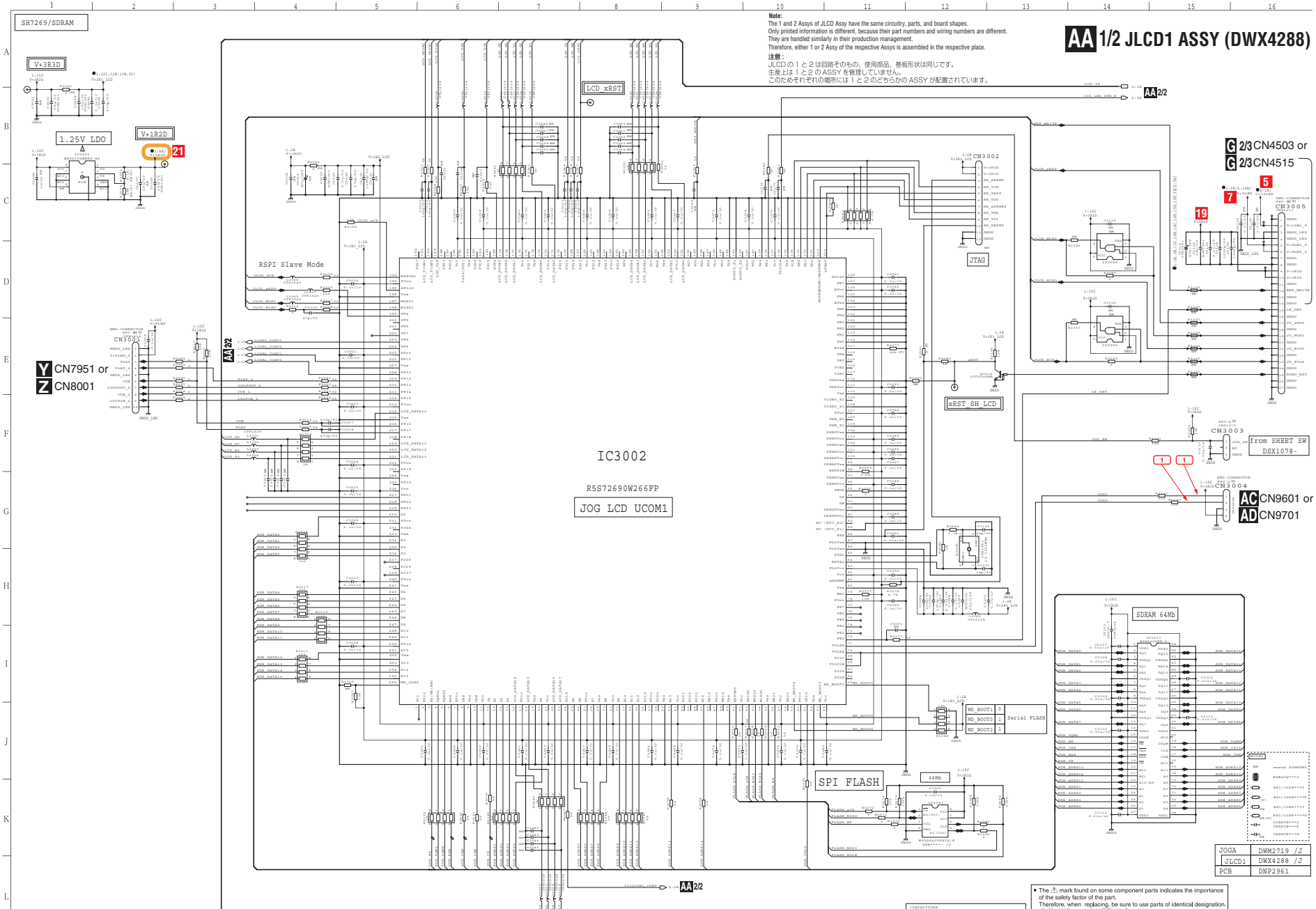

JOGA	DWM2719 /J
JLCD1	DWX4288 /J
PCB	DNP2961

*CAPACITORS
Indicated in Capacity/Voltage(V)
unless otherwise noted. n :PF, p :pF

*RESISTORS
Indicated in Ω , %% tolerance
unless otherwise noted. k :kΩ , M :MΩ

● The ⚠ mark found on some component parts indicates the importance of the safety factor of the part.
Therefore, when replacing, be sure to use parts of identical designation.
● ⚠ 印の部品は、安全上重要な部品です。
交換するときは、安全および性能維持のため必ず指定の部品をご使用ください。

AA 2/2 JLCD1 ASSY (DWX4288)

Note:
The 1 and 2 Assys of JLCD Assy have the same circuitry, parts, and board shapes.
Only printed information is different, because their part numbers and wiring numbers are different.
They are handled similarly in their production management.
Therefore, either 1 or 2 Assy of the respective Assys is assembled in the respective place.

注意：
JLCD の１と２は回路そのもの、使用部品、基板形状は同じです。
生産上は１と２の ASSY を管理していません。
このためそれぞれの場所には１と２のどちらかの ASSY が配置されています。

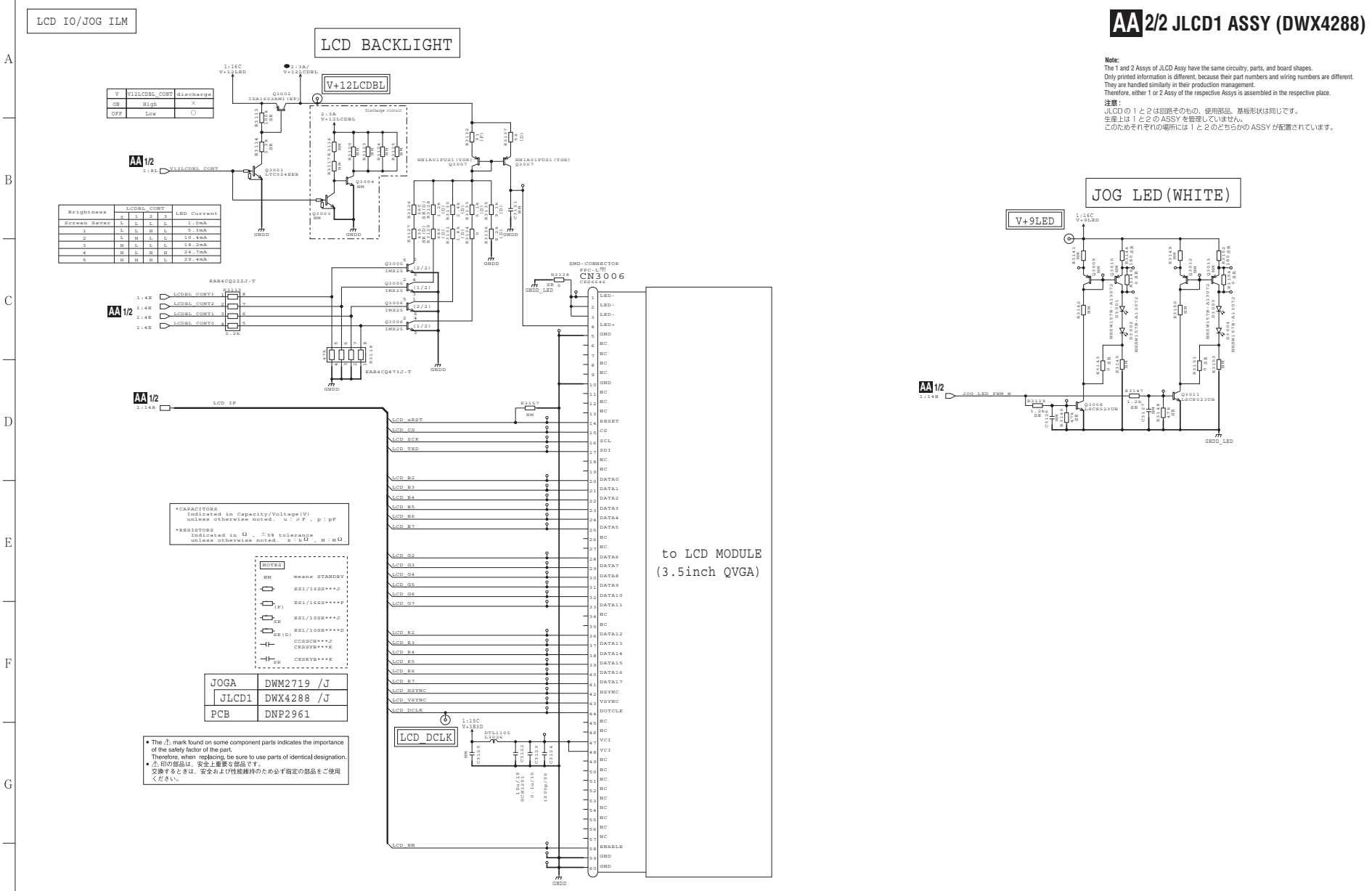

V	V12LCDBL_CONT	discharge
ON	High	×
OFF	Low	○

Brightness	LCDBL_CONT				LED Current
	0	1	2	3	
Screen Saver	L	L	L	L	1.0mA
1	L	L	H	L	5.3mA
2	L	H	L	L	10.4mA
3	H	L	L	L	18.2mA
4	H	L	H	H	24.7mA
5	H	H	H	L	29.4mA

*CAPACITORS
Indicated in Capacity/Voltage(V)
unless otherwise noted. u : μF , p : pF

*RESISTORS
Indicated in Ω , ±5% tolerance
unless otherwise noted. k : kΩ , M : MΩ

NOTES	
NM	means STANDBY
	RS1/16SS***J
(F)	RS1/16SS****F
SR	RS1/10SR***J
SR(D)	RS1/10SR****D
	CCSSCH***J CKSSYB***K
SR	CKSRYB***K

JOGA	DWM2719 /J
JLCD1	DWX4288 /J
PCB	DNP2961

- The ⚠ mark found on some component parts indicates the importance of the safety factor of the part.
  Therefore, when replacing, be sure to use parts of identical designation.
- ⚠ 印の部品は、安全上重要な部品です。
  交換するときは、安全および性能維持のため必ず指定の部品をご使用ください。

10.61 JLCD2 ASSY (1/2)

AB 1/2 JLCD2 ASSY (DWX4289)

Note:
The 1 and 2 Assys of JLCD Assy have the same circuitry, parts, and board shapes.
Only printed information is different, because their part numbers and wiring numbers are different.
They are handled similarly in their production management.
Therefore, either 1 or 2 Assy of the respective Assys is assembled in the respective place.

注意：
JLCDの１と２は回路そのもの、使用部品、基板形状は同じです。
生産上は１と２のASSYを管理していません。
このためそれぞれの場所には１と２のどちらかのASSYが配置されています。

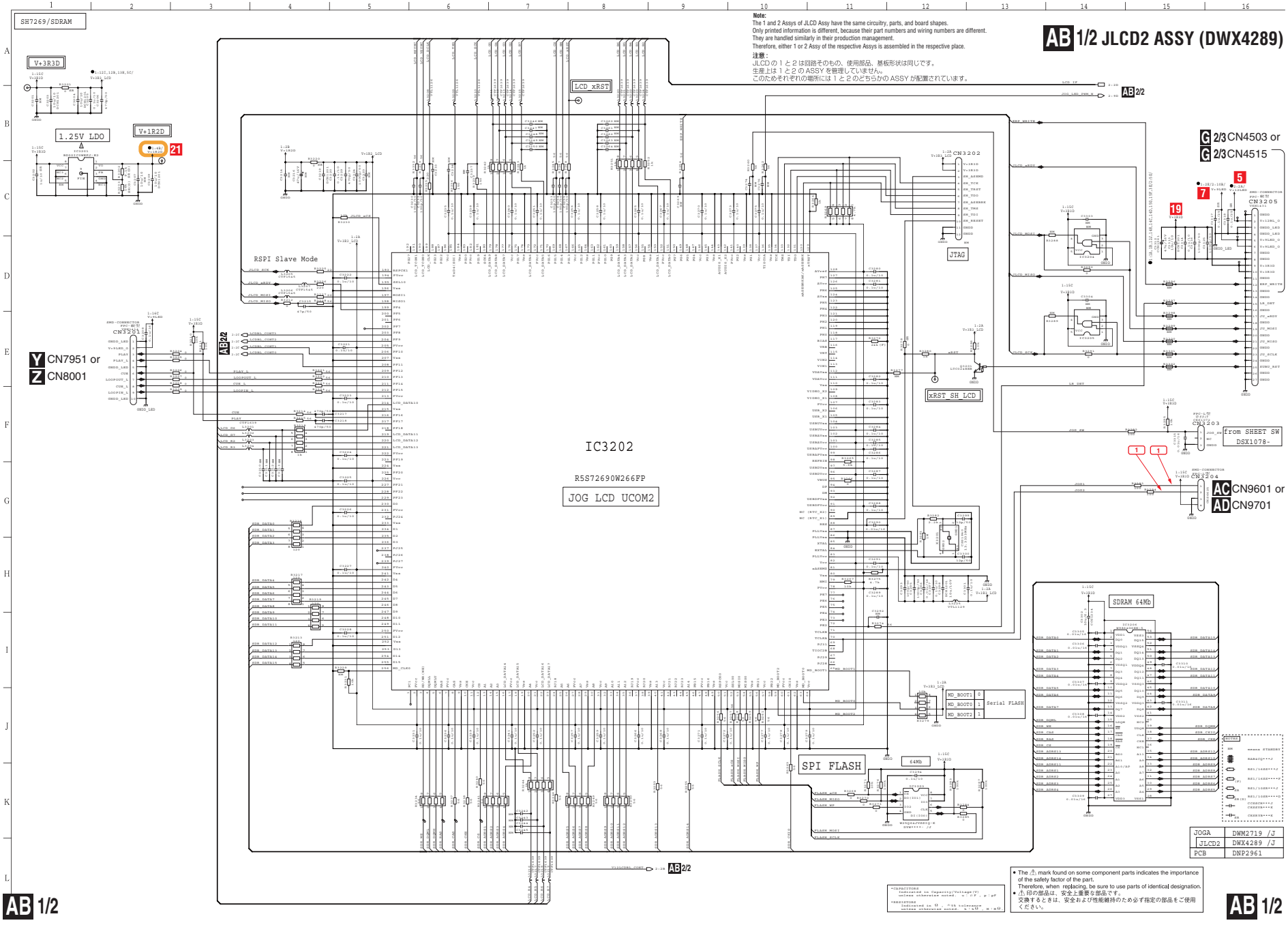

JOGA	DWM2719 /J
JLCD2	DWX4289 /J
PCB	DNP2961

*CAPACITORS
Indicated in Capacity/Voltage (V)
unless otherwise noted. n : PF, p : pF

*RESISTORS
Indicated in Ω , ±5% tolerance
unless otherwise noted. k : kΩ , M : MΩ

- The ⚠ mark found on some component parts indicates the importance of the safety factor of the part.
  Therefore, when replacing, be sure to use parts of identical designation.
- ⚠ 印の部品は、安全上重要な部品です。
  交換するときは、安全および性能維持のため必ず指定の部品をご使用ください。

AB 2/2 JLCD1 ASSY (DWX4289)

Note:
The 1 and 2 Assys of JLCD Assy have the same circuitry, parts, and board shapes.
Only printed information is different, because their part numbers and wiring numbers are different.
They are handled similarly in their production management.
Therefore, either 1 or 2 Assy of the respective Assys is assembled in the respective place.

注意：
JLCD の１と２は回路そのもの、使用部品、基板形状は同じです。
生産上は１と２の ASSY を管理していません。
このためそれぞれの場所には１と２のどちらかの ASSY が配置されています。

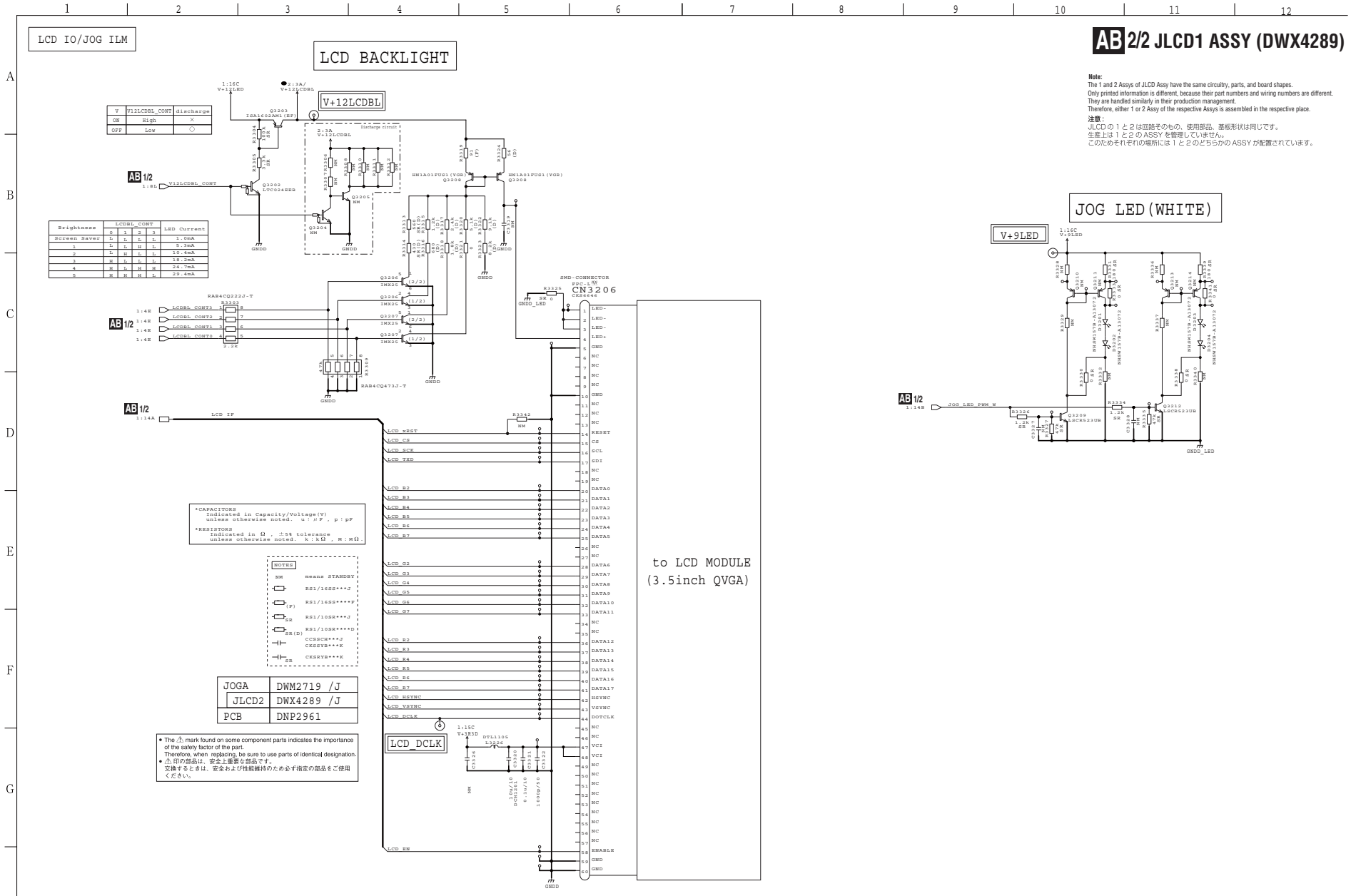

V	V12LCDBL_CONT	discharge
ON	High	×
OFF	Low	○

Brightness	LCDBL_CONT				LED Current
	0	1	2	3	
Screen Saver	L	L	L	L	1.0mA
1	L	L	H	L	5.3mA
2	L	H	L	L	10.4mA
3	H	L	L	L	18.2mA
4	H	L	H	H	24.7mA
5	H	H	H	L	29.4mA

*CAPACITORS
Indicated in Capacity/Voltage(V)
unless otherwise noted. u : μF , p : pF

*RESISTORS
Indicated in Ω , ±5% tolerance
unless otherwise noted. k : kΩ , M : MΩ

NOTES

NM	means STANDBY
	RS1/16SS***J
(F)	RS1/16SS****F
SR	RS1/10SR***J
SR(D)	RS1/10SR****D
	CCSSCH***J
	CKSSYB***K
SR	CKSRYB***K

JOGA	DWM2719 /J
JLCD2	DWX4289 /J
PCB	DNP2961

● The ⚠ mark found on some component parts indicates the importance of the safety factor of the part.
Therefore, when replacing, be sure to use parts of identical designation.
● ⚠ 印の部品は、安全上重要な部品です。
交換するときは、安全および性能維持のため必ず指定の部品をご使用ください。

10.63 JOG1 and JOG2 ASSYS

Note:
The 1 and 2 Assys of JOG Assy have the same circuitry, parts, and board shapes.
Only printed information is different, because their part numbers and wiring numbers are different.
They are handled similarly in their production management.
Therefore, either 1 or 2 Assy of the respective Assys is assembled in the respective place.

注意：
JOG の 1 と 2 は回路そのもの、使用部品、基板形状は同じです。
生産上は 1 と 2 の ASSY を管理していません。
このためそれぞれの場所には 1 と 2 のどちらかの ASSY が配置されています。

JOG1

AC JOG1 ASSY (DWX4317)

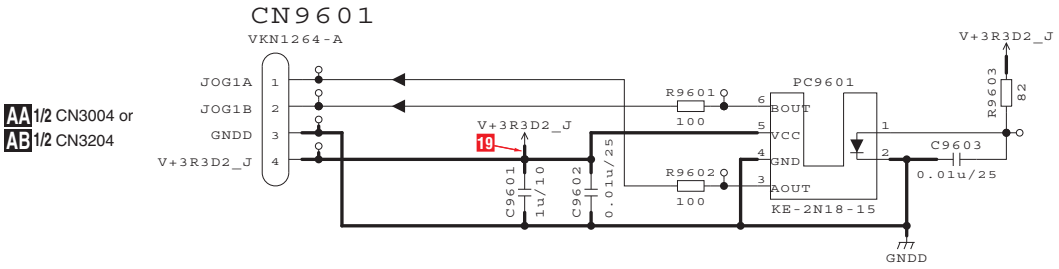

NOTES
RS1/10SR***J
CKSRYB***K

PNL2	DWM2726 /J
JOG1	DWX4317 /J
PCB	DNP2968

JOG2

AD JOG2 ASSY (DWX4318)

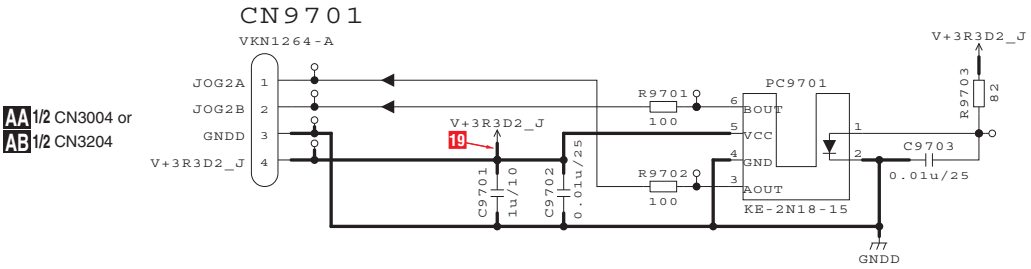

NOTES
RS1/10SR***J
CKSRYB***K

PNL2	DWM2726 /J
JOG2	DWX4318 /J
PCB	DNP2968

AC AD

AC AD

IO/LVDS

AE 1/4 LCDB ASSY (DWX4291)

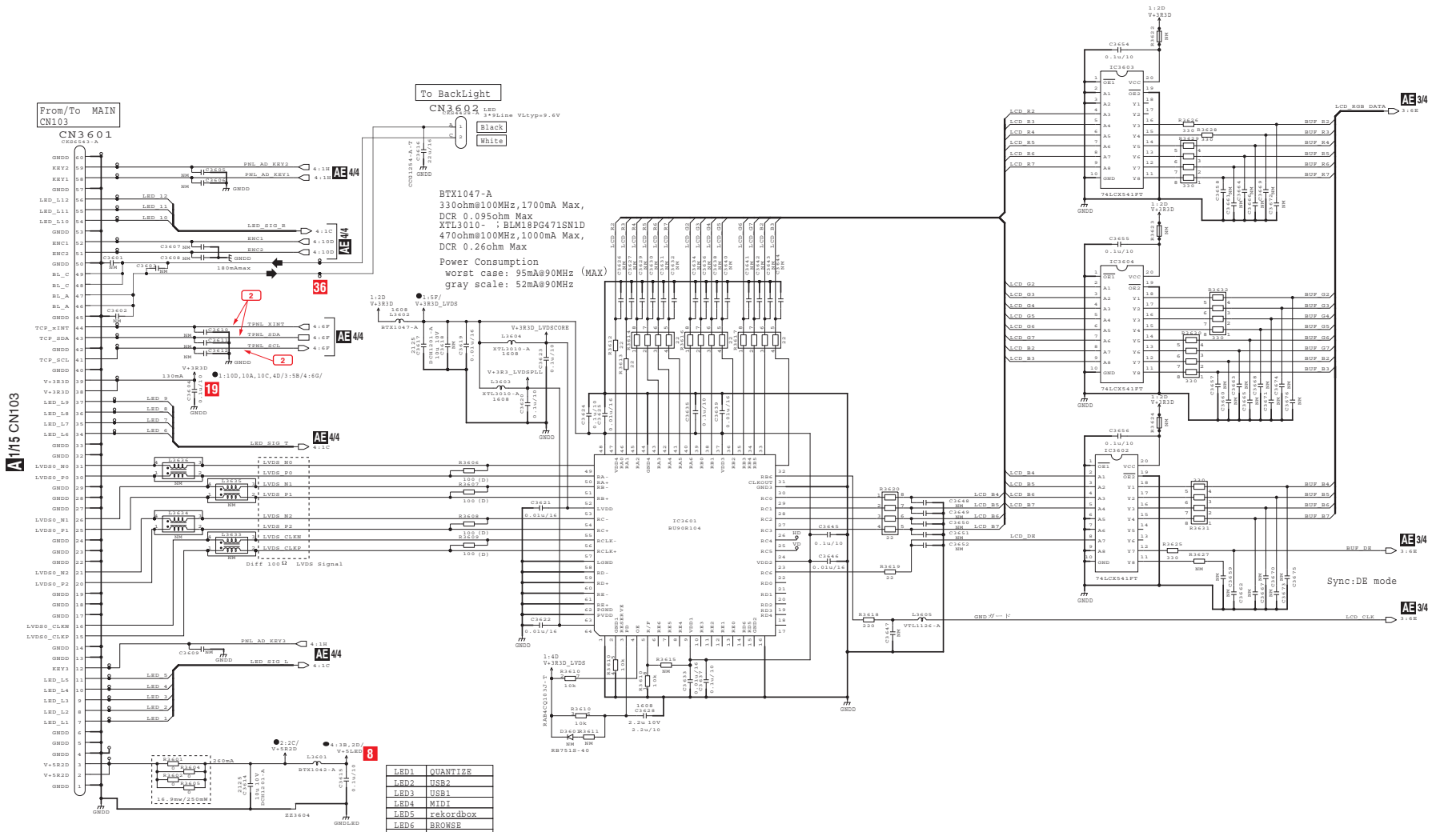

LED1	QUANTIZE
LED2	USB2
LED3	USB1
LED4	MIDI
LED5	rekordbox
LED6	BROWSE
LED7	TAG LIST
LED8	INFO
LED9	MENU
LED10	ROTALY
LED11	LOAD1
LED12	LOAD2

*RESISTORS
Indicated in Ω , ±5% tolerance
unless otherwise noted. K : kΩ , M : MΩ.
*CAPACITORS
Indicated in Capacity/Voltage(V)
unless otherwise noted. u : μF , p : pF

NOTES
NM is No Mount
RS1/16SS***J
RS1/10SS***J
RS1/8SS***J
RS1/4SS***J
RS1/10SS****D,
or RS1/16SS****D
RS1/10SS****F,
or RS1/16SS****F
CKSSYB***K
CKSRYB***K
CKSQYB***K
CCSSCH***J
CCSRCH***J
CEVW****M

PADA	DWM2720 /J
	DWX4291 /J
PCB	DNP2962

AE 2/4 LCDB ASSY (DWX4291)

LCD POWER

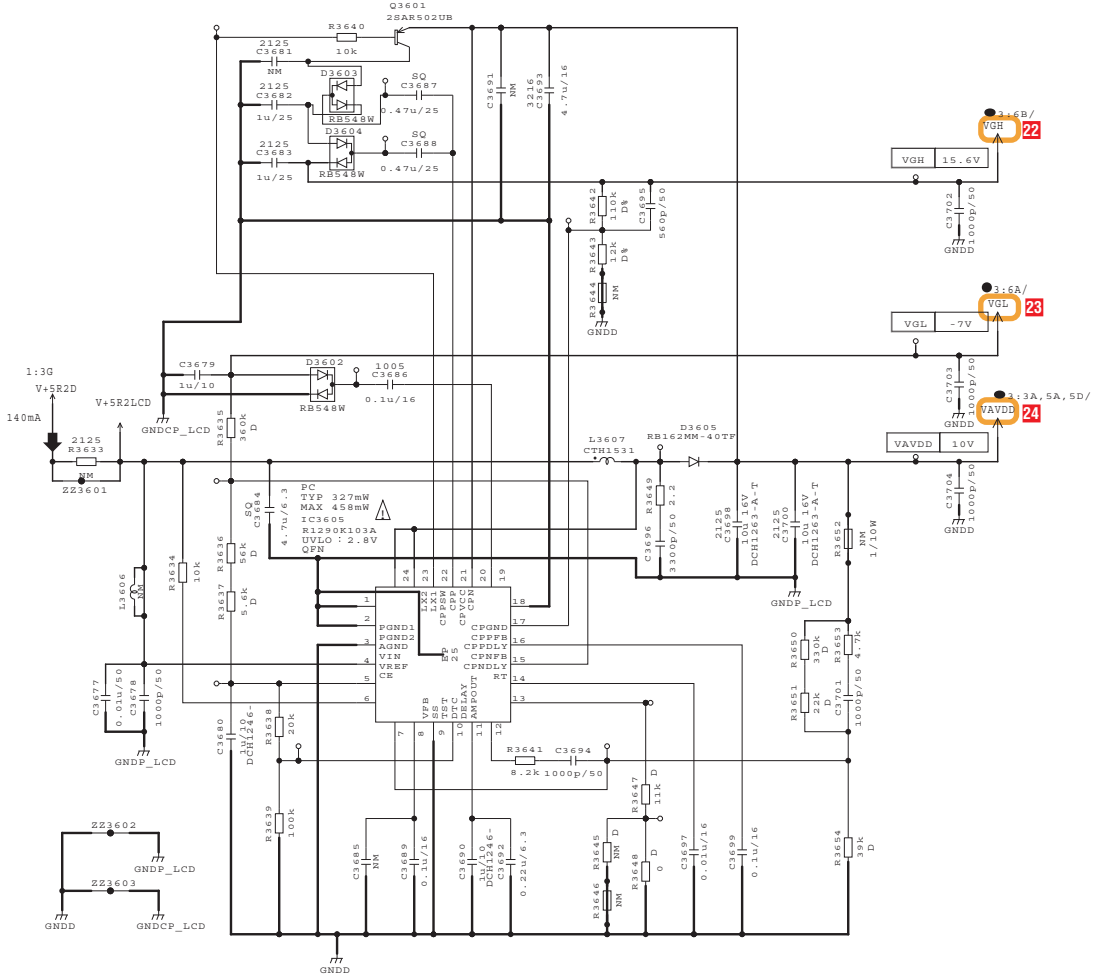

NOTES

NM is No Mount

RS1/16SS***J
RS1/10SR***J
RS1/8SQ***J
RS1/4SA***J

D RS1/10SR****D,
or RS1/16SS****D

F RS1/10SR****F,
or RS1/16SS****F

CKSSYB***K
CKSRYB***K
CKSQYB***K

CH CCSSCH***J
CCSRCH***J

CEVW***M

*RESISTORS
Indicated in Ω , ±5% tolerance
unless otherwise noted. k : kΩ , M : MΩ.

*CAPACITORS
Indicated in Capacity/Voltage(V)
unless otherwise noted. u : μF , p : pF

• The ⚠ mark found on some component parts indicates the importance of the safety factor of the part.
Therefore, when replacing, be sure to use parts of identical designation.
• ⚠ 印の部品は、安全上重要な部品です。
交換するときは、安全および性能維持のため必ず指定の部品をご使用ください。

PADA	DWM2720 /J	
	DWX4291 /J	
PCB	DNP2962	

AE 3/4 LCDB ASSY (DWX4291)

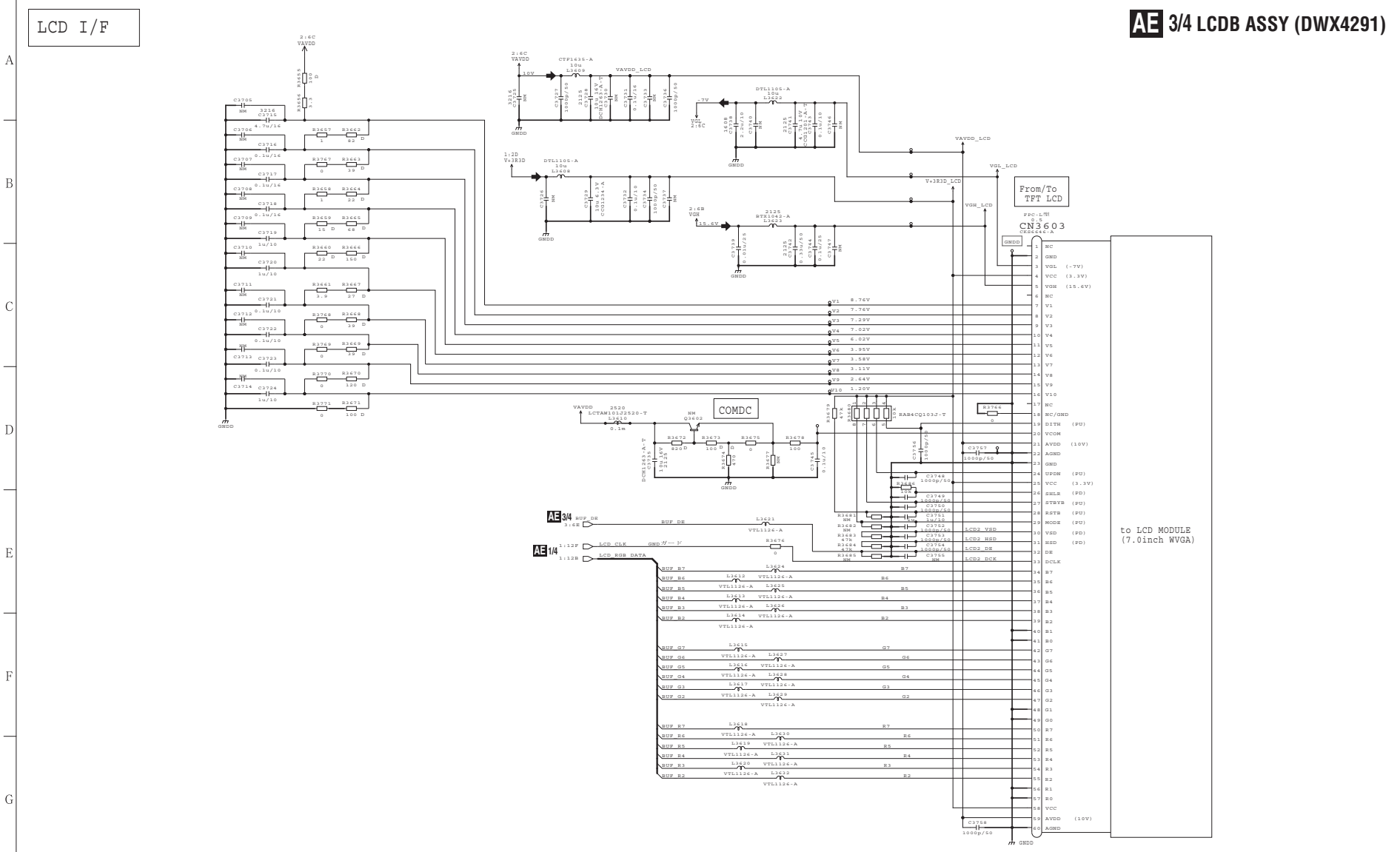

NOTES

NM is No Mount

RS1/16SS***J
RS1/10SR***J
RS1/8SQ***J
RS1/4SA***J

RS1/10SR***D,
or RS1/16SS***D

RS1/10SR***F,
or RS1/16SS***F

CKSSYB***K
CKSRYB***K
CKSQYB***K

CCSSCH***J
CCSRCH***J

CSVW***M

*RESISTORS
Indicated in Ω , ±5% tolerance
unless otherwise noted. k : kΩ , M : MΩ.

*CAPACITORS
Indicated in Capacity/Voltage(V)
unless otherwise noted. u : μF , p : pF

PADA	DWM2720 /J
	DWX4291 /J
PCB	DNP2962

SW/ENC/TPL

AE 4/4 LCDB ASSY (DWX4291)

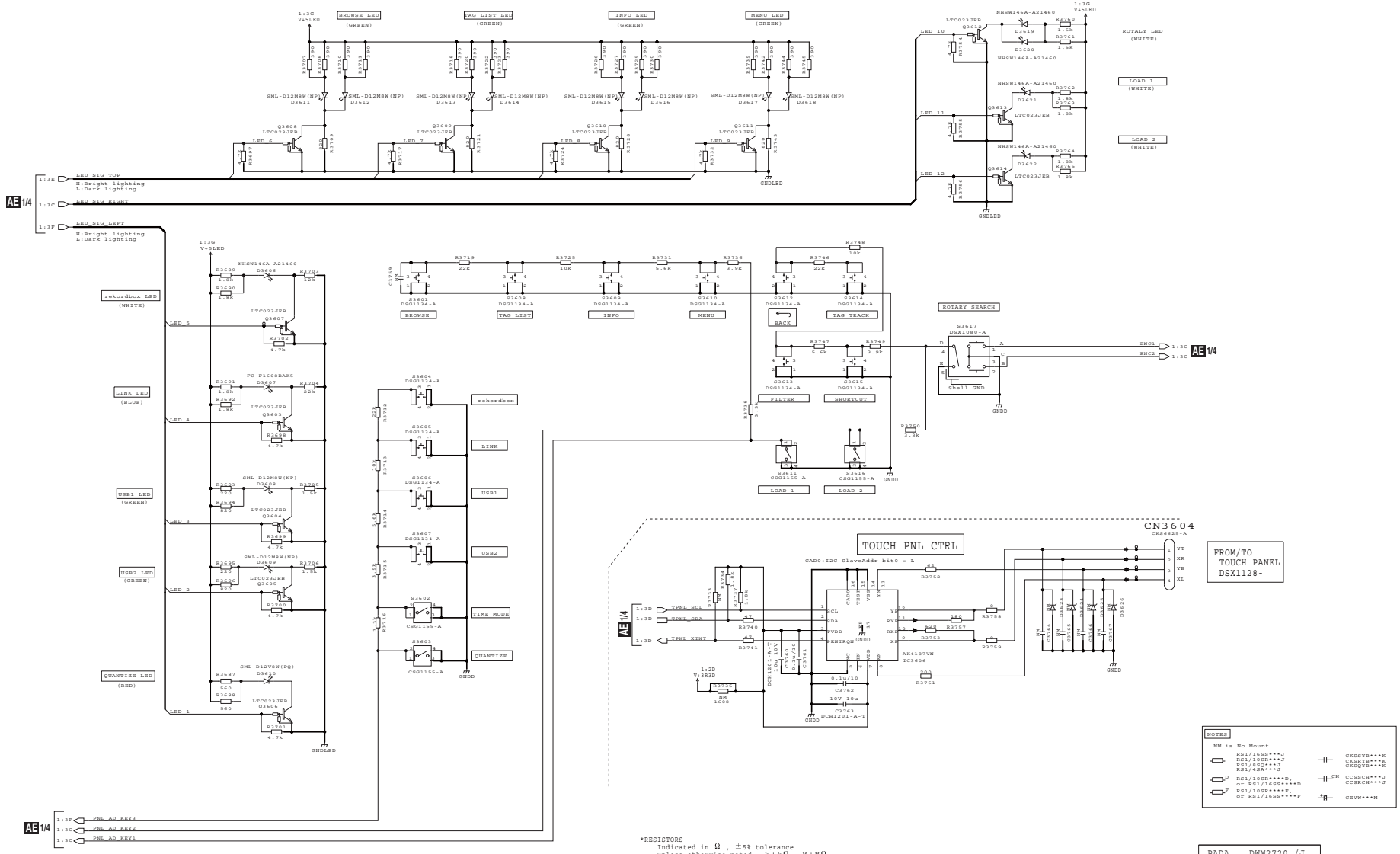

*RESISTORS
Indicated in Ω , ±5% tolerance
unless otherwise noted. k : kΩ , M : MΩ.

*CAPACITORS
Indicated in Capacity/Voltage(V)
unless otherwise noted. u : μF , p : pF

NOTES
NM is No Mount
RS1/16SS***J
RS1/10SR***J
RS1/8SQ***J
RS1/4SA***J
RS1/10SR***D,
or RS1/16SS***D
RS1/10SR***F,
or RS1/16SS***F
CKSSYB***K
CKSRYB***K
CKSQYB***K
CCSSCH***J
CCSRCH***J
CEVW***M

PADA	DWM2720 /J	
	DWX4291 /J	
PCB	DNP2962	

AF SW POWER SUPPLY (DWR1548)

CAUTION - FOR CONTINUED PROTECTION AGAINST RISK OF FIRE, REPLACE WITH SAME TYPE NO. S505-4A-R MFD. BY COOPER BUSSMANN INC. FOR F1.

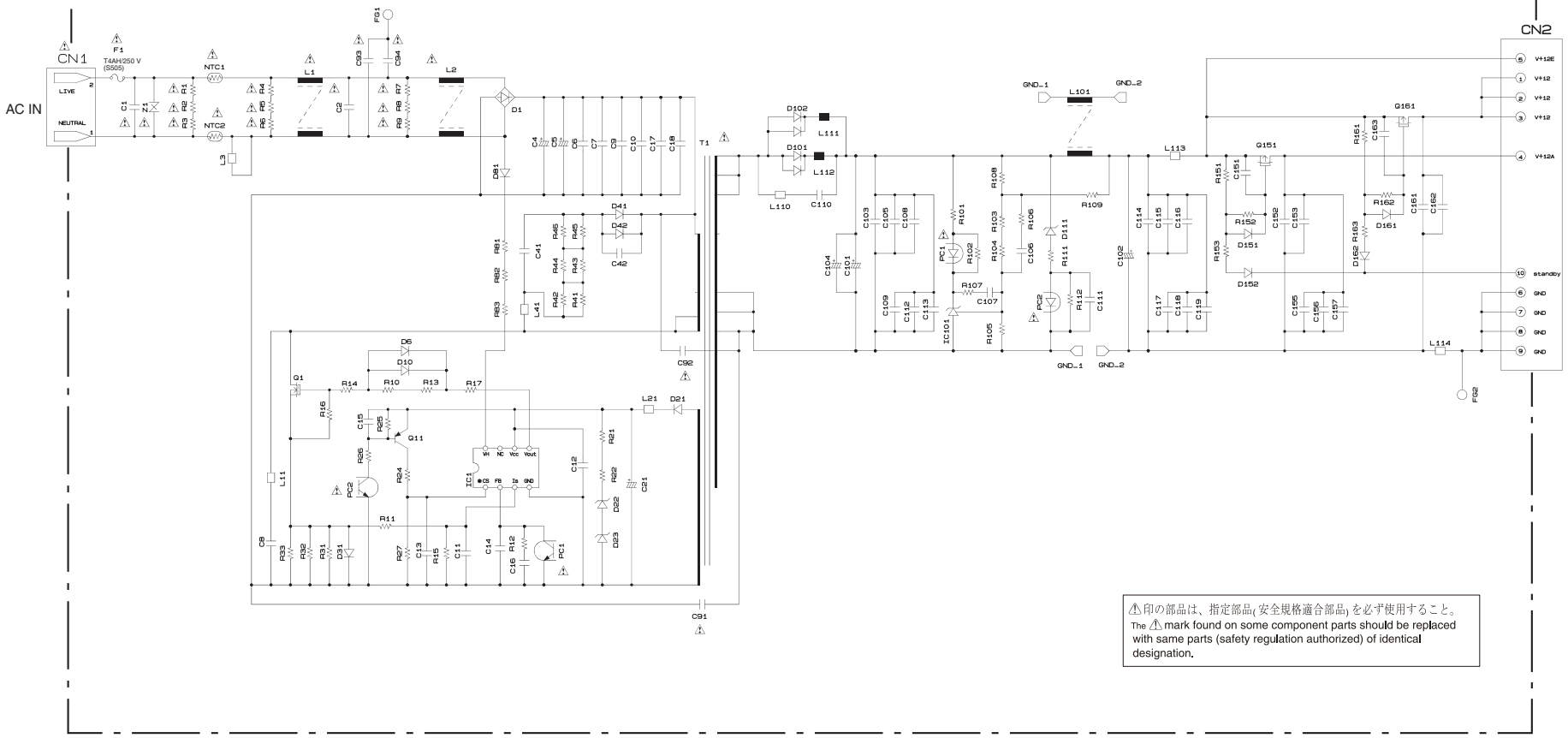

⚠印の部品は、指定部品(安全規格適合部品)を必ず使用すること。
The ⚠ mark found on some component parts should be replaced with same parts (safety regulation authorized) of identical designation.

10.69 VOLTAGES

Voltage name	Min	Typ.	Max	Associated Assy	Measurement point	Power Supply at standby (Power SW OFF)
V+12E	11.40 V	12.00 V	12.60 V	AUDIO Assy	1	ON
V+5E	4.90 V	5.00 V	5.10 V	AUDIO Assy, MAIN Assy, UCOM Assy	2	ON
V+3R3E	3.20 V	3.30 V	3.40 V	UCOM Assy	3	ON
V+12D V+12D_HP	11.40 V	12.00 V	12.60 V	AUDIO Assy, MAIN Assy	4	OFF
V+12L V+12BL V+12BL_O V+12LED	11.40 V	12.00 V	12.60 V	AUDIO Assy, MAIN Assy, JLCD1 Assy, JCLD2 Assy, UCOM Assy	5	OFF
V+12A	11.40 V	12.00 V	12.60 V	AUDIO Assy	6	OFF
V+9LED	8.58 V	9.00 V	9.43 V	AUDIO Assy, MAIN Assy, UCOM Assy, MIXER Assy, XPAD Assy, PAD1 Assy, PAD2 Assy, PLAY1 Assy, PLAY2 Assy, EFSW Assy, JLCD1 Assy, JLCD2 Assy	7	OFF
V+5D V+5LED V+5LED_O V+5R2D	5.06 V	5.29 V	5.53 V	AUDIO Assy, MAIN Assy, LCDB Assy, UCOM Assy, MIXER Assy, DCK1 Assy, DCK2 Assy	8	OFF
V+1R25D	1.20 V	1.26 V	1.32 V	MAIN Assy	9	OFF
V+1R1 V+1R1_USBAHUB V+1R1_USBBHUB	1.09 V	1.15 V	1.21 V	MAIN Assy	10	OFF
V+1D	0.95 V	1.00 V	1.05 V	MAIN Assy	11	OFF
V+4R2D	3.95 V	4.19 V	4.45 V	MAIN Assy	12	OFF
V+1R375CORE	1.334 V	1.375 V	1.416 V	MAIN Assy	13	OFF
	1.261 V	1.300 V	1.339 V	MAIN Assy		
V+3R0VSNVS	2.85 V	3.00 V	3.15 V	MAIN Assy	14	OFF
V+1R5DDR	1.455 V	1.50 V	1.545 V	MAIN Assy	15	OFF
V+1R375SOC	1.334 V	1.375 V	1.416 V	MAIN Assy	16	OFF
	1.261 V	1.300 V	1.339 V	MAIN Assy		
V+2R8VHIGH	2.716 V	2.80 V	2.884 V	MAIN Assy	17	OFF
	2.910 V	3.00 V	3.090 V	MAIN Assy	18	
V+3R3D V+3R3D1 V+3R3D2 V+3R3D2_AD V+3R3D2_AD_MXR V+3R3D_AD_SH V+3R3D2_J V+3R3D2_AD_DCK	3.201 V	3.300 V	3.399 V	AUDIO Assy, MAIN Assy, UCOM Assy, LCDB Assy, JLCD1 Assy, JLCD2 Assy, PAD1 Assy, PAD2 Assy, EFSW Assy, MIXER Assy, CHF1 Assy, CHF2 Assy, CHF3 Assy, CHF4 Assy, DCK1 Assy, DCK2 Assy, JOG1 Assy, JOG2 Assy, TMP1 Assy, TMP2 Assy, CRF Assy	19	OFF
V+5USBA1 V+5USBA2	4.92 V	5.14 V	5.36 V	MAIN Assy	20	OFF
V+1R2D	1.24 V	1.26 V	1.27 V	JLCD1 Assy, JLCD2 Assy	21	OFF
VGH	14.82 V	15.60 V	16.38 V	LCDB Assy	22	OFF
VGL	-7.35 V	-7.00 V	-6.65 V	LCDB Assy	23	OFF
VAVDD	9.50 V	10.00 V	10.50 V	LCDB Assy	24	OFF
V+3R3D_CLK	3.20 V	3.30 V	3.40 V	AUDIO Assy	25	OFF
V+18A	17.47 V	18.00 V	18.53 V	AUDIO Assy	26	OFF
V-18A	-18.86 V	-18.00 V	-17.16 V	AUDIO Assy	27	OFF
V+15A	14.25 V	15.00 V	15.75 V	AUDIO Assy, MCIN Assy	28	OFF
V-15A	-15.75 V	-15.00 V	-14.25 V	AUDIO Assy, MCIN Assy	29	OFF
V+7R5HP	7.29 V	7.50 V	7.72 V	AUDIO Assy	30	OFF
V-7R5HP	-7.88 V	-7.50 V	-7.11 V	AUDIO Assy	31	OFF
V+9A	8.65 V	9.00 V	9.35 V	AUDIO Assy	32	OFF
V+5A	4.80 V	5.00 V	5.20 V	AUDIO Assy	33	OFF
V+3R3A	3.20 V	3.30 V	3.40 V	AUDIO Assy	34	OFF
V+5AREF	4.80 V	5.00 V	5.20 V	AUDIO Assy	35	OFF
BL_A	9.12 V	10.02 V	10.92 V	MAIN Assy, LCDB Assy	36	OFF

10.70 WAVEFORMS

NOTE: The following waveforms were measured at the point of the corresponding balloon number in the schematic diagram and PCB diagram.

注意: ◯で囲まれた数字は回路図及びPCB図の各測定ポイントの番号を示します.

AA JLCD1 ASSY **AB** JLCD2 ASSY **AE** LCDB ASSY

1 JOG rotate signal
CH1: **CN3004/CN3204 - pin 1 (JOG1)**
V: 2 V/div. H: 2 ms/div.
CH2: **CN3004/CN3204 - pin 2 (JOG2)**
V: 2 V/div. H: 2 ms/div.

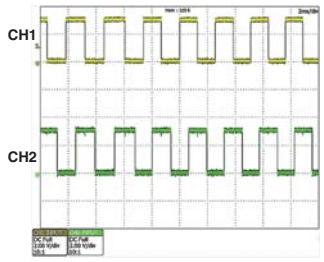

2 Touch panel control signal
CH1: **CN3601 - pin 44 (TPNL_XINT)**
V: 2 V/div. H: 20 µs/div.
CH2: **CN3601 - pin 41 (TPNL_SCL)**
V: 2 V/div. H: 20 µs/div.
CH3: **CN3601 - pin 43 (TPNL_SDA)**
V: 2 V/div. H: 20 µs/div.

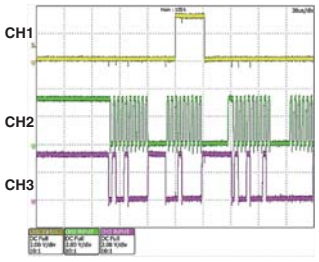

■ AUDIO SECTION

Measurement Condition

IN or OUT	Measured CH	IN CH	IN Level	IN Frequency	RL	Remarks
OUT	MASTER1	CH2	0 dBfs	1kHz	10 kΩ	MASTER2: same conditions
OUT	BOOTH	CH2	0 dB	1kHz	10 kΩ	
OUT	HP	CH2	0 dB	1kHz	32 Ω	
IN	LINE	CH2	0 dB	1kHz		CH1: same conditions
IN	PHONO	CH2	-40 dB	1kHz		CH1: same conditions
IN	AUX	AUX	-30 dB	1kHz		
IN	MIC	MIC2	-40 dB	1kHz		MIC1: same conditions, TS JACK

Each SW/VR Position

Name	Position	Name	Position
TRIM	CENTER	TEMPO SLIDER	CENTER
EQ	CENTER	FX PARAMETER	CENTER
CH FADER	MAX	COLOR	CENTER
MIC SW	ON	MASTER LEVEL	CENTER
MIC LEVEL	CENTER	BOOTH MONITOR	CENTER
MIC EQ	CENTER	HP LEVEL	CENTER
CROSS FADER	CENTER	BALANCE	CENTER
CROSS FADER CURVE	CENTER	Master EQ	CENTER
CROSS FADER ASSIGN	THRU		

B AUDIO ASSY

A-1 MASTER1 OUTPUT
Input: 0 dB 1 kHz Sine wave (USB memory playback)
CH1: **JA6002 - pin 2 (Lch HOT)**
V: 1 V/div. H: 500 µs/div.
CH2: **JA6002 - pin 3 (Lch COLD)**
V: 1 V/div. H: 500 µs/div.

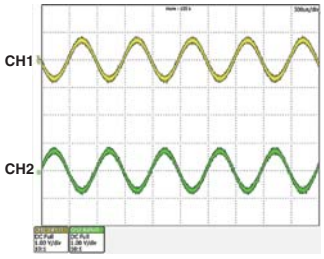

A-2 Master DAC OUTPUT
CH1: **IC5802 - pin 37 (MASTER_L+)**
V: 2 V/div. H: 500 µs/div.
CH2: **IC5802 - pin 36 (MASTER_L-)**
V: 2 V/div. H: 500 µs/div.

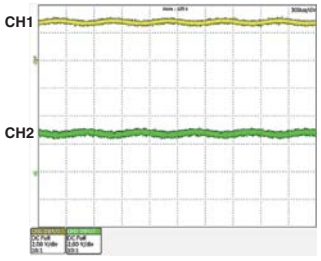

A-3 Master DAC INPUT(ADAT_M, ADAT_B, ADAT_S)
Input: 0 dB Sine wave
IC5802 - pin 6 (ADAT_M)
IC5802 - pin 5 (ADAT_B)
IC5802 - pin 7 (ADAT_S)
V: 1 V/div. H: 5 µs/div.

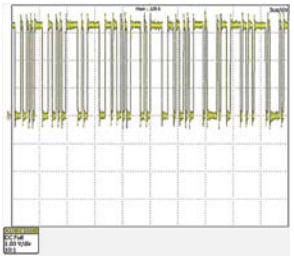

A-4 CH3/CH4/AUX/MIC ADC AUDIO DATA OUTPUT
IC5204 - pin 9 (ADAT_CH3)
IC5404 - pin 9 (ADAT_CH4)
IC5603 - pin 9 (ADAT_AUX)
IC5604 - pin 9 (ADAT_MIC)
V: 1 V/div. H: 5 µs/div.

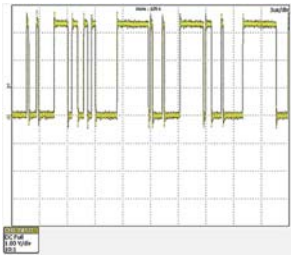

A-5 CH3/CH4/AUX/MIC ADC AUDIO SIGNAL INPUT
IC5204 - pin 1, 2 (AINR, AINL)
IC5404 - pin 1, 2 (AINR, AINL)
IC5603 - pin 1, 2 (AINR, AINL)
IC5604 - pin 1, 2 (AINR, AINL)
V: 1 V/div. H: 200 µs/div.

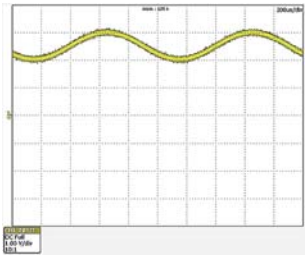

11. PCB CONNECTION DIAGRAM

11.1 MAIN ASSY

SIDE A

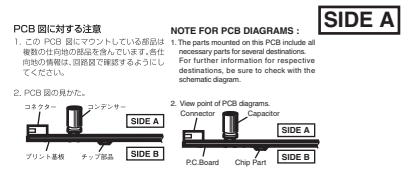

SIDE A

A MAIN ASSY

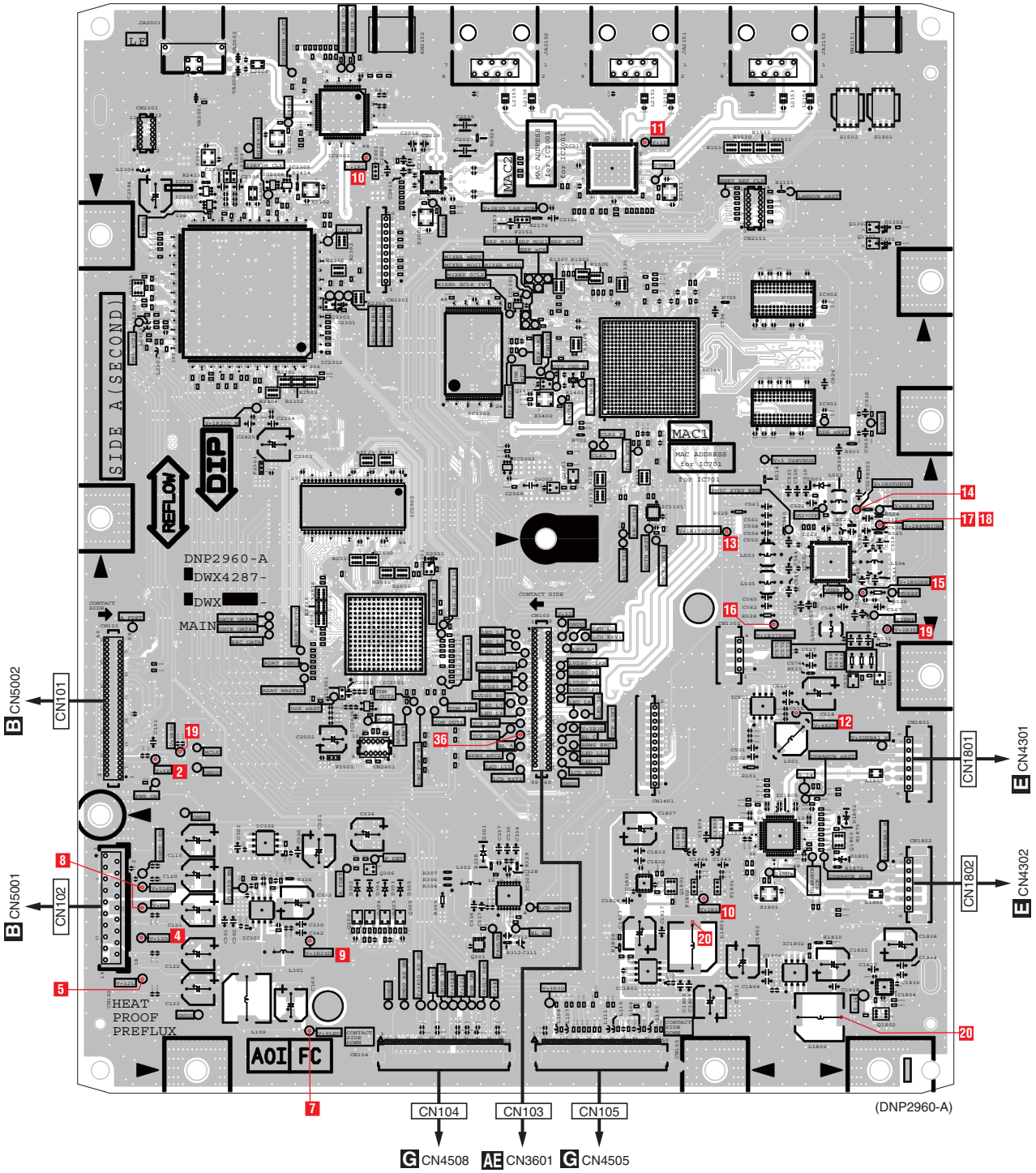

SIDE B

SIDE B

A

B

C

D

E

F

A MAIN ASSY

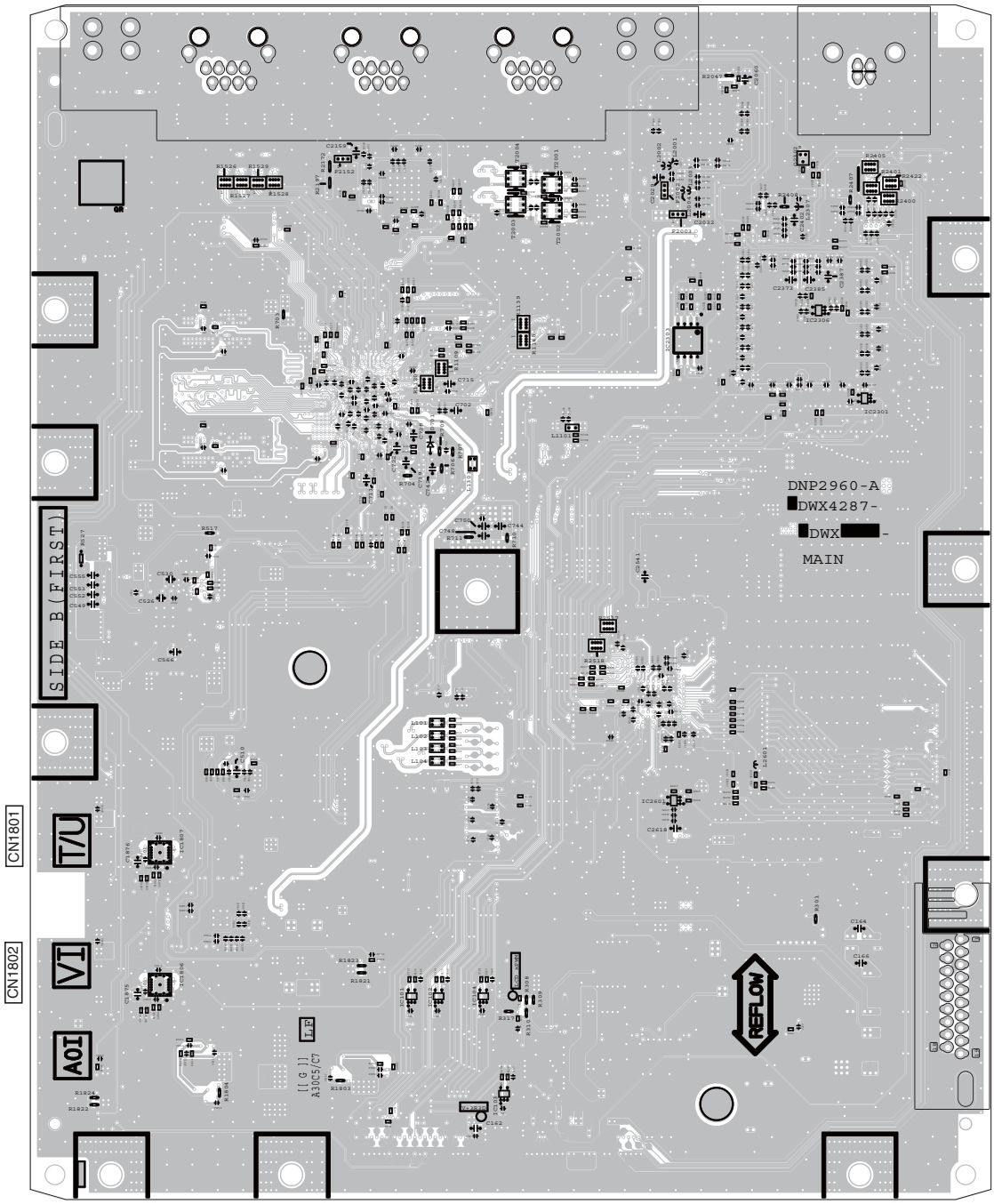

(DNP2960-A)

11.2 AUDIO ASSY

SIDE A

SIDE A

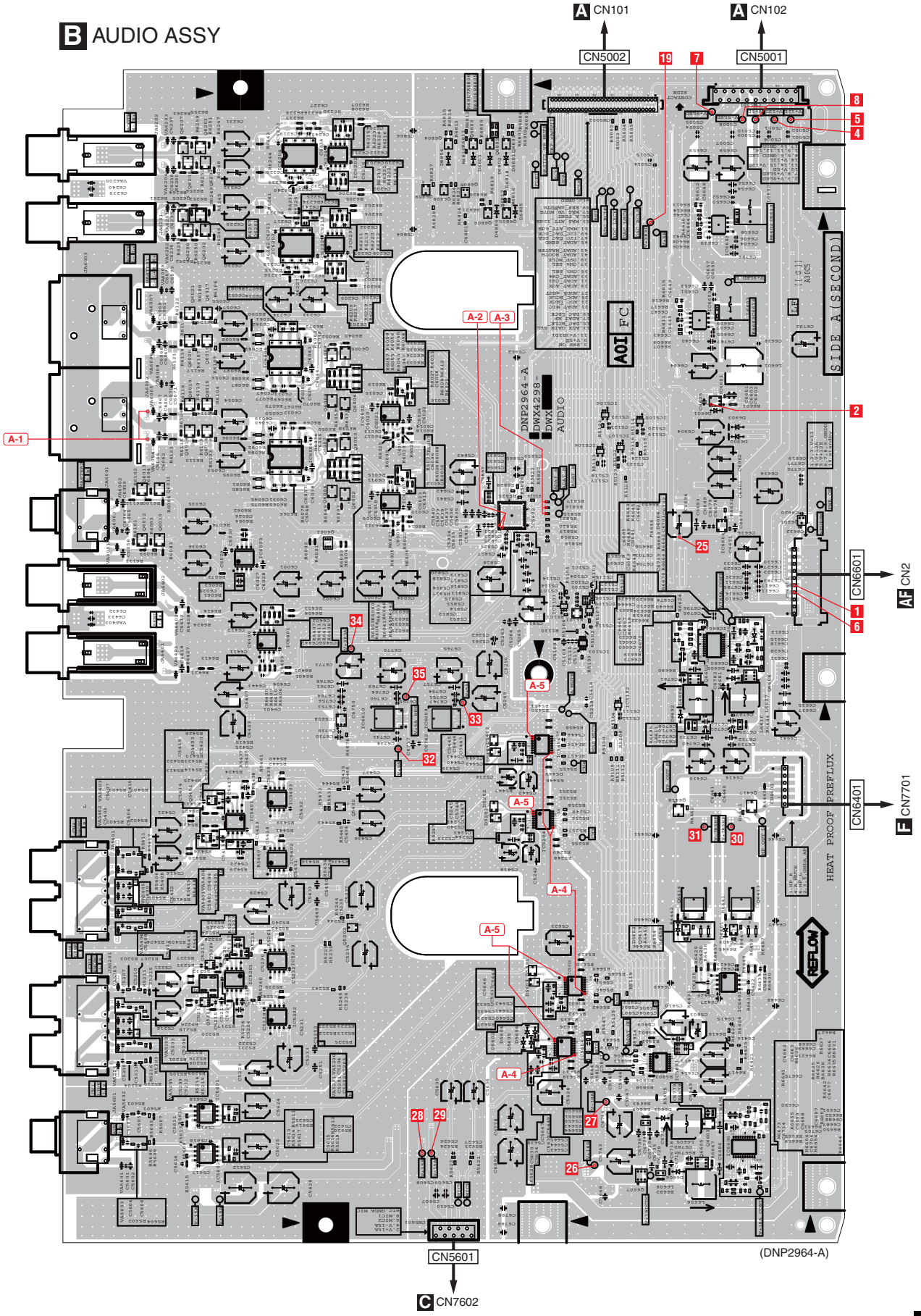

B

B

SIDE B

SIDE B

B AUDIO ASSY

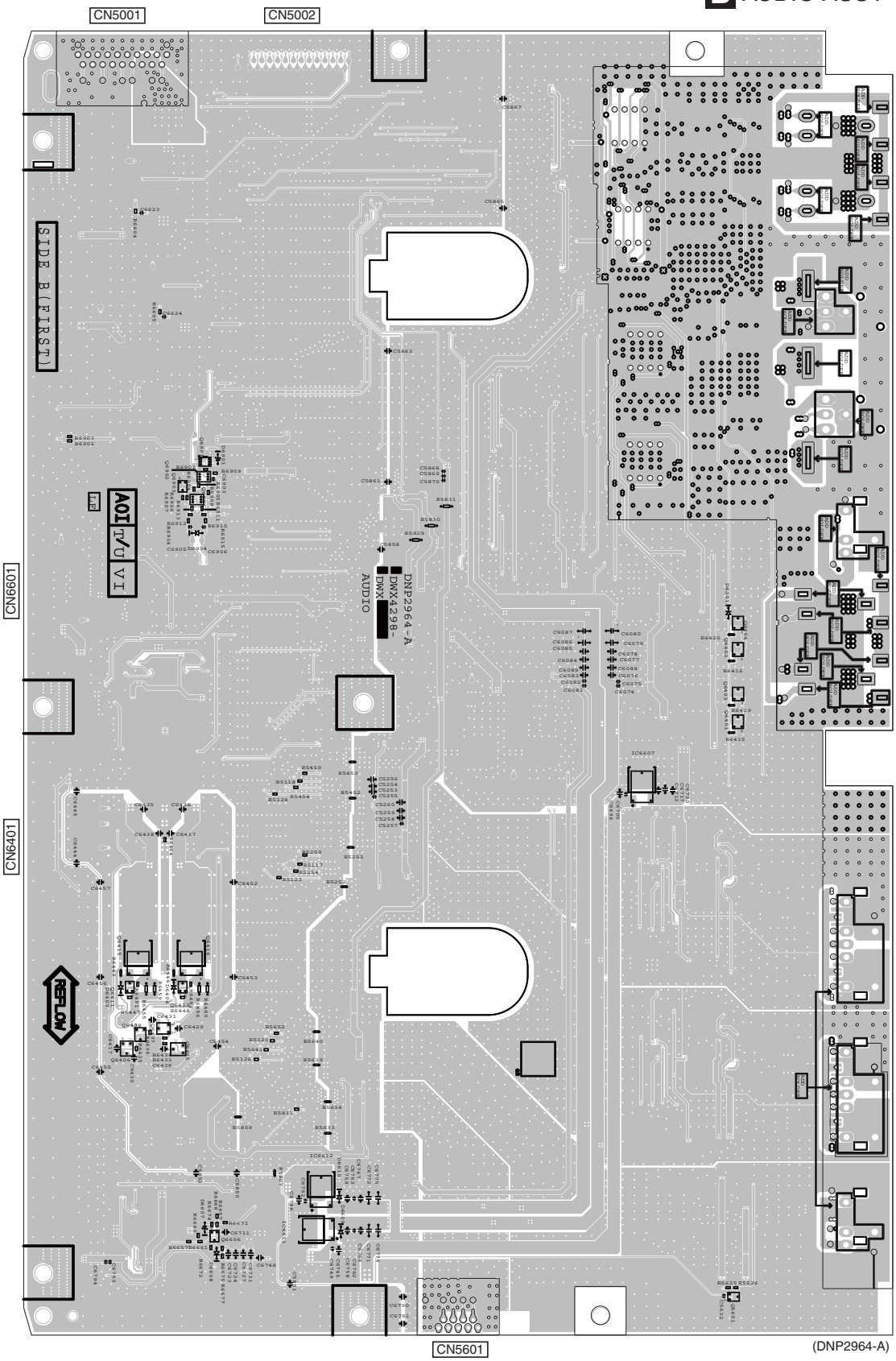

11.3 MCIN and MCTR ASSYS

SIDE A

SIDE A

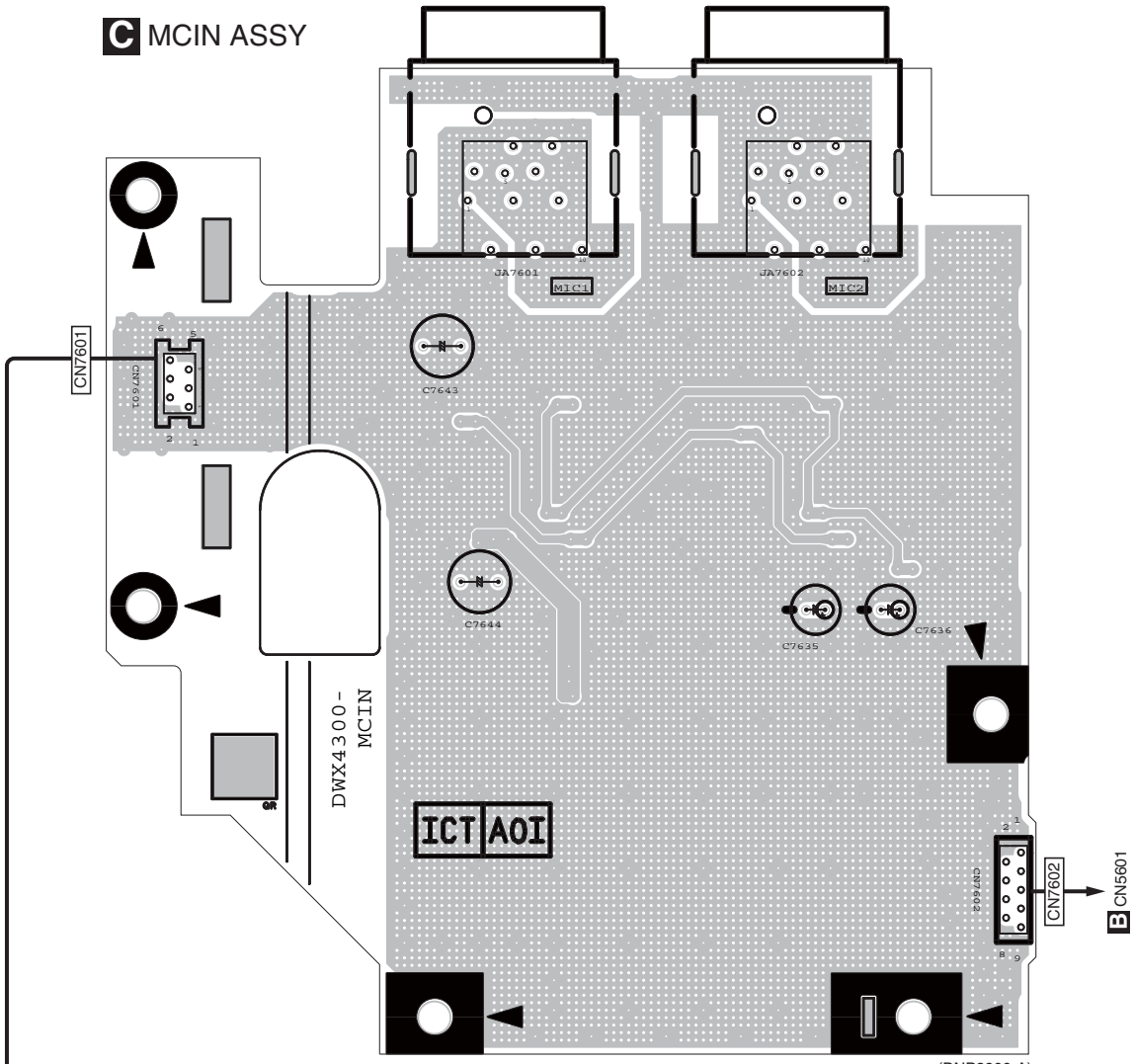

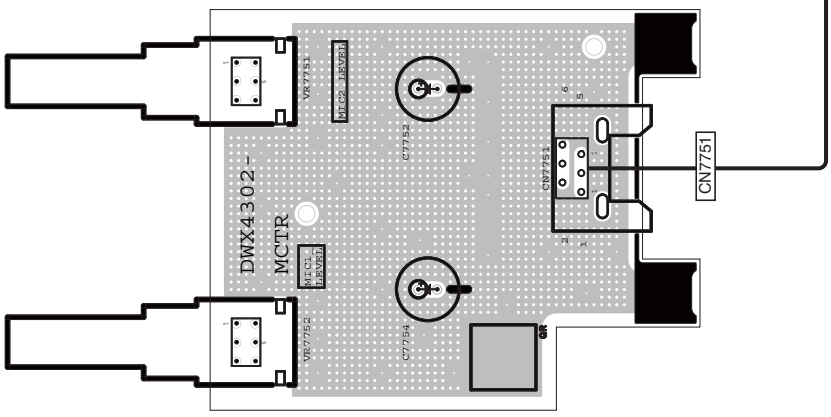

C D

C D

SIDE B

SIDE B

C MCIN ASSY

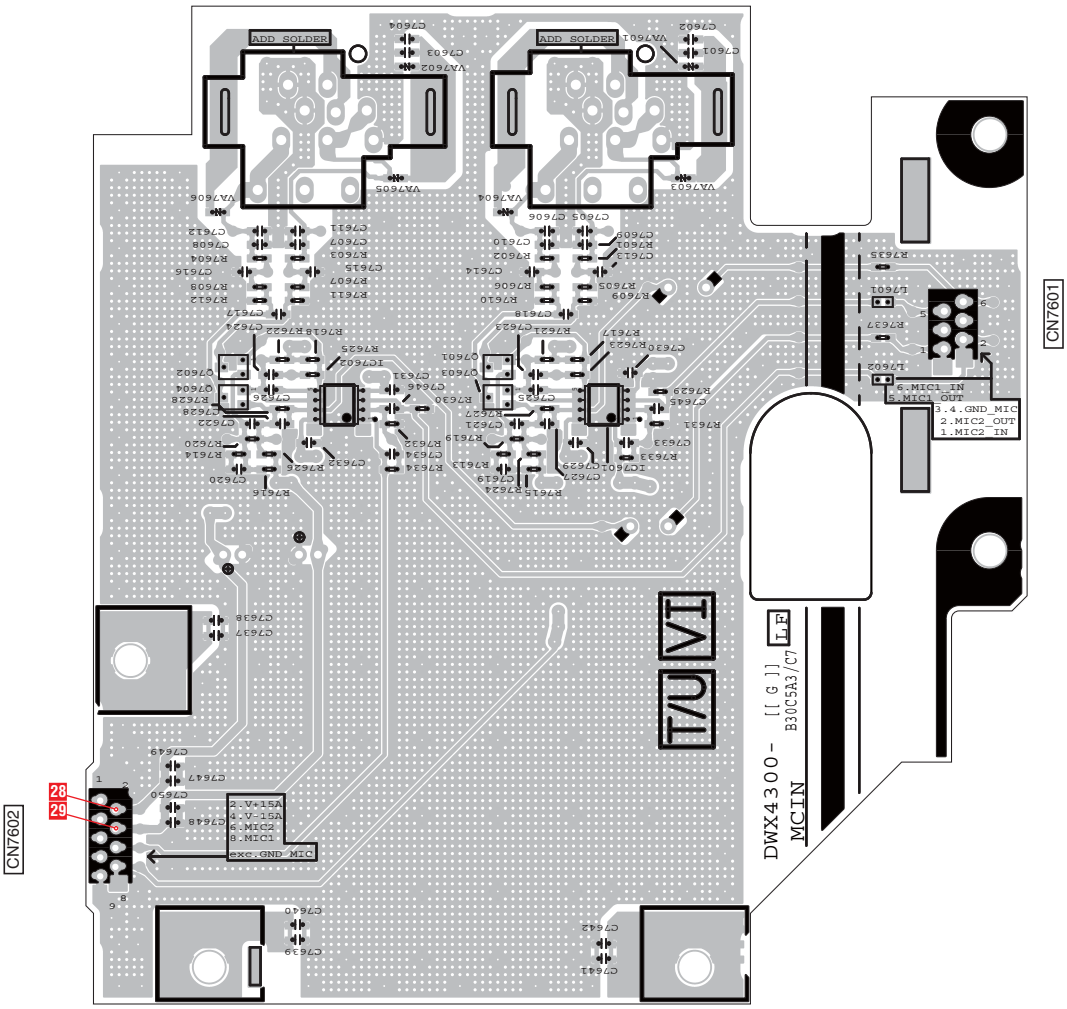

(DNP2966-A)

D MCTR ASSY

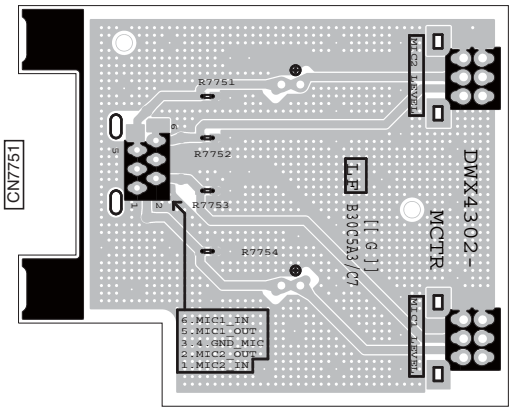

(DNP2966-A)

11.4 USBA ASSY

SIDE A

SIDE A

E USBA ASSY

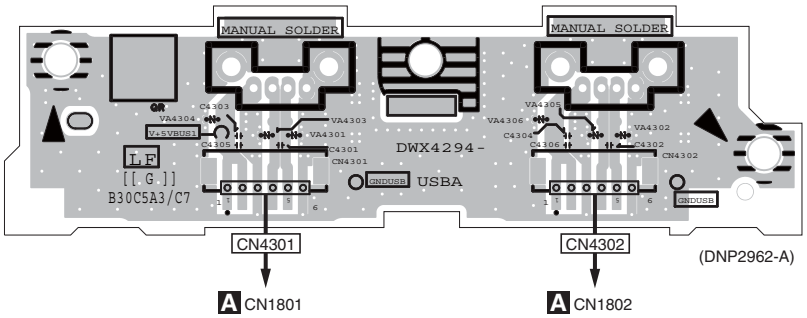

SIDE B

SIDE B

E USBA ASSY

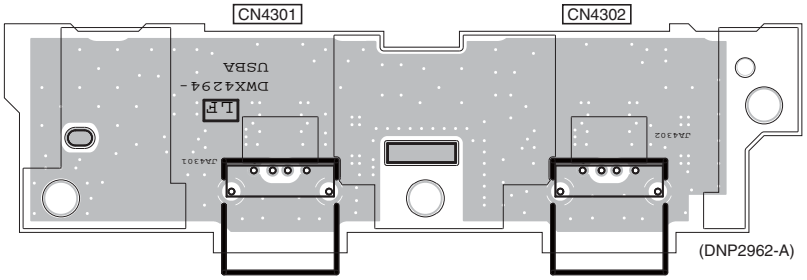

11.5 HPJK ASSY

SIDE A

SIDE A

F HPJK ASSY

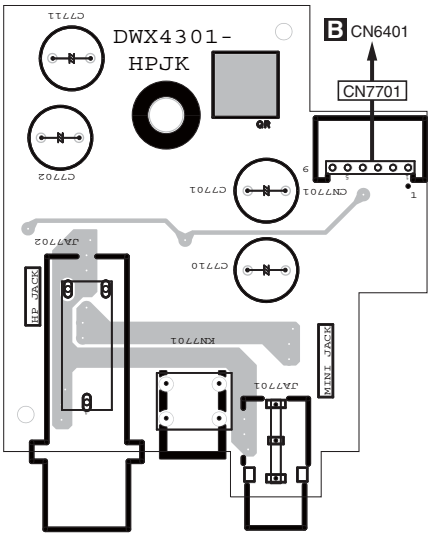

(DNP2966-A)

SIDE B

SIDE B

F HPJK ASSY

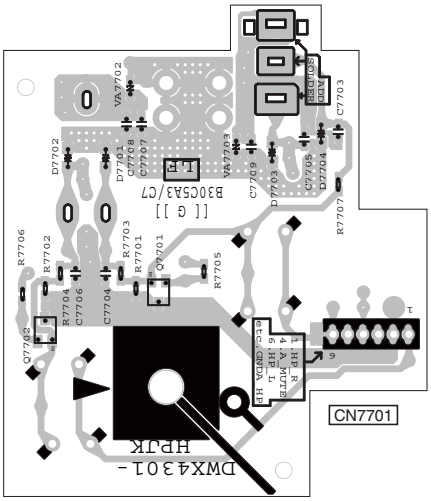

(DNP2966-A)

11.6 UCOM ASSY

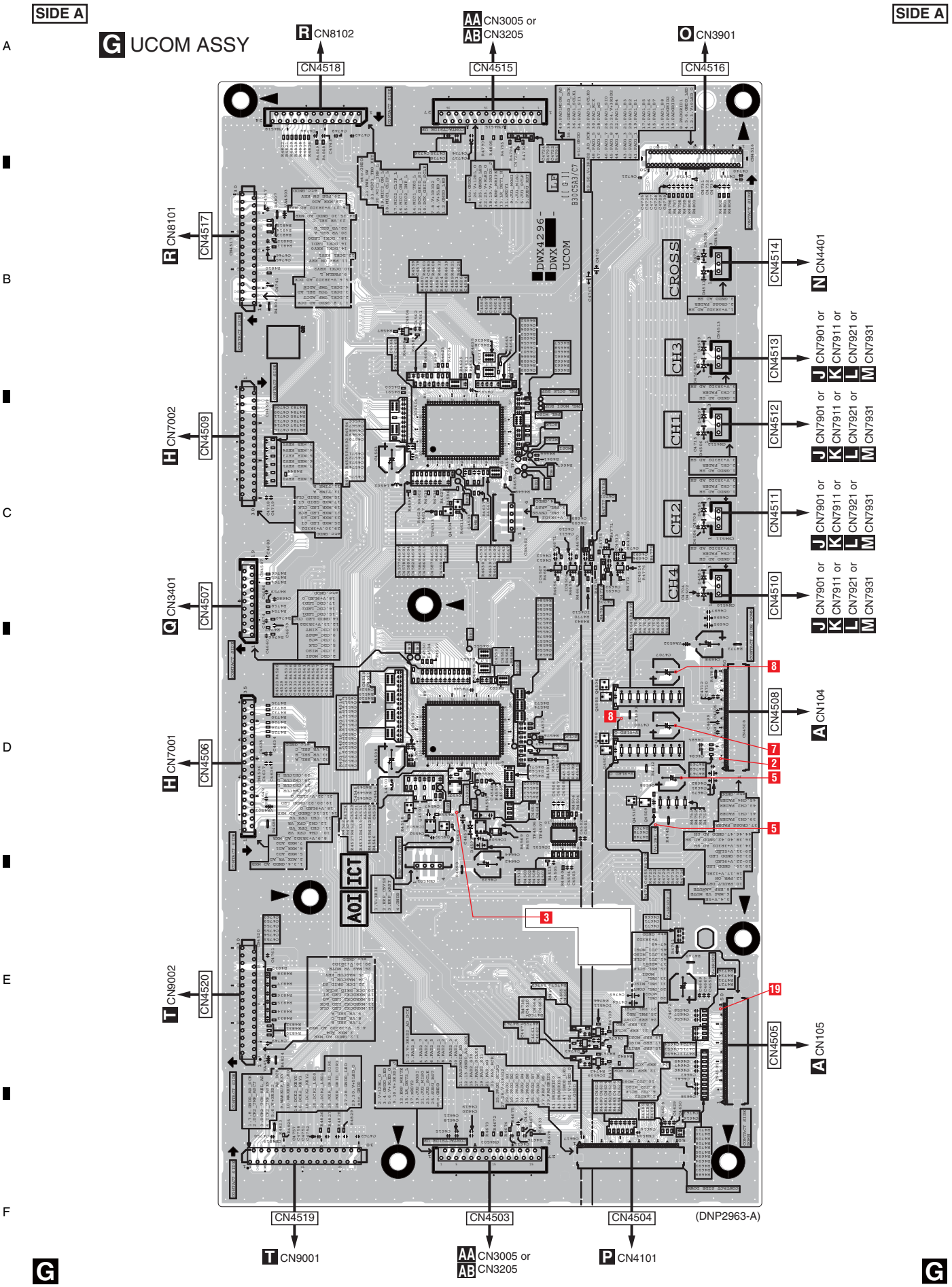

SIDE B

SIDE B

G UCOM ASSY

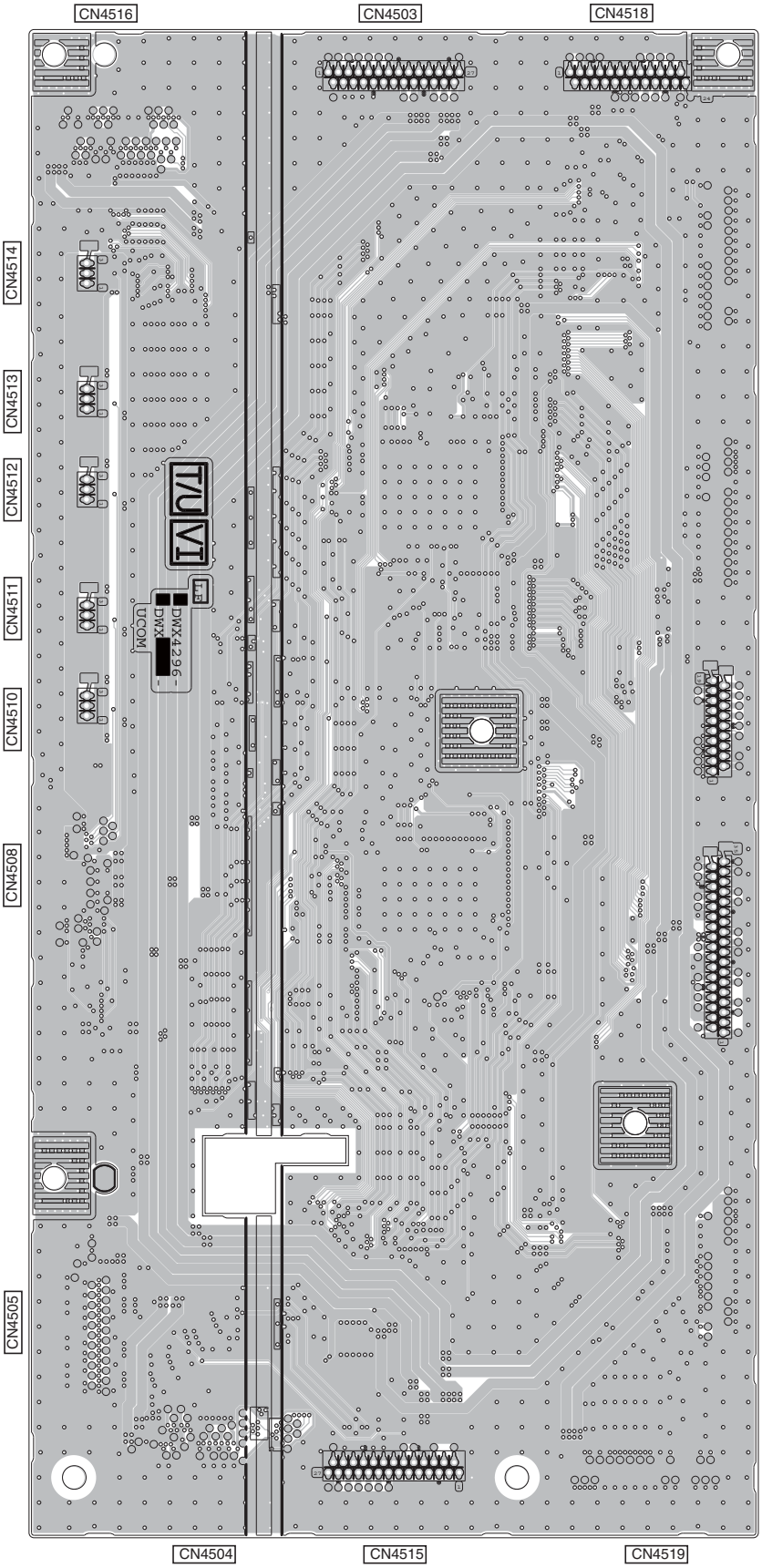

11.7 MIXER ASSY

SIDE A

SIDE A

H MIXER ASSY

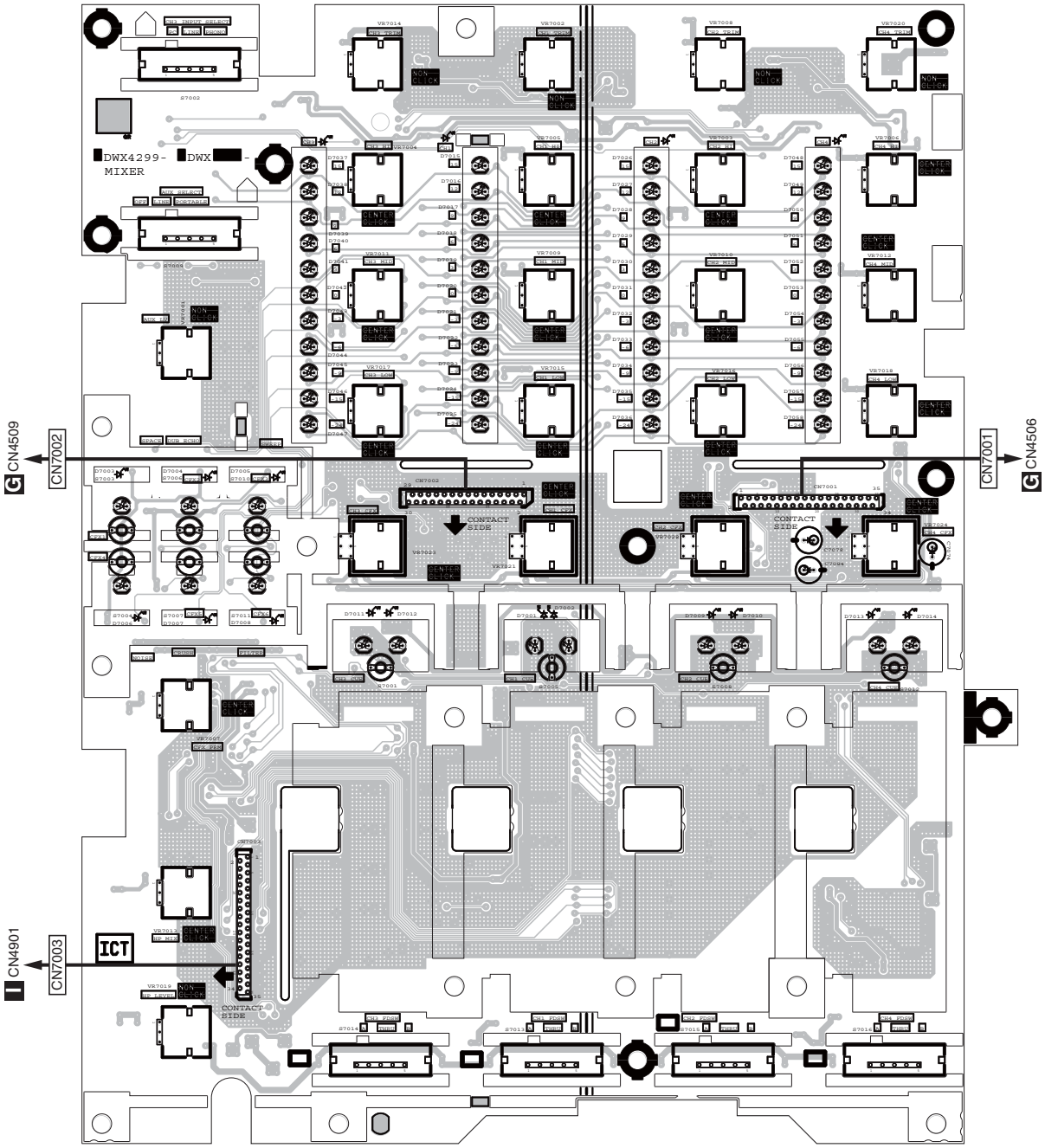

(DNP2965-A)

SIDE B

SIDE B

A

H MIXER ASSY

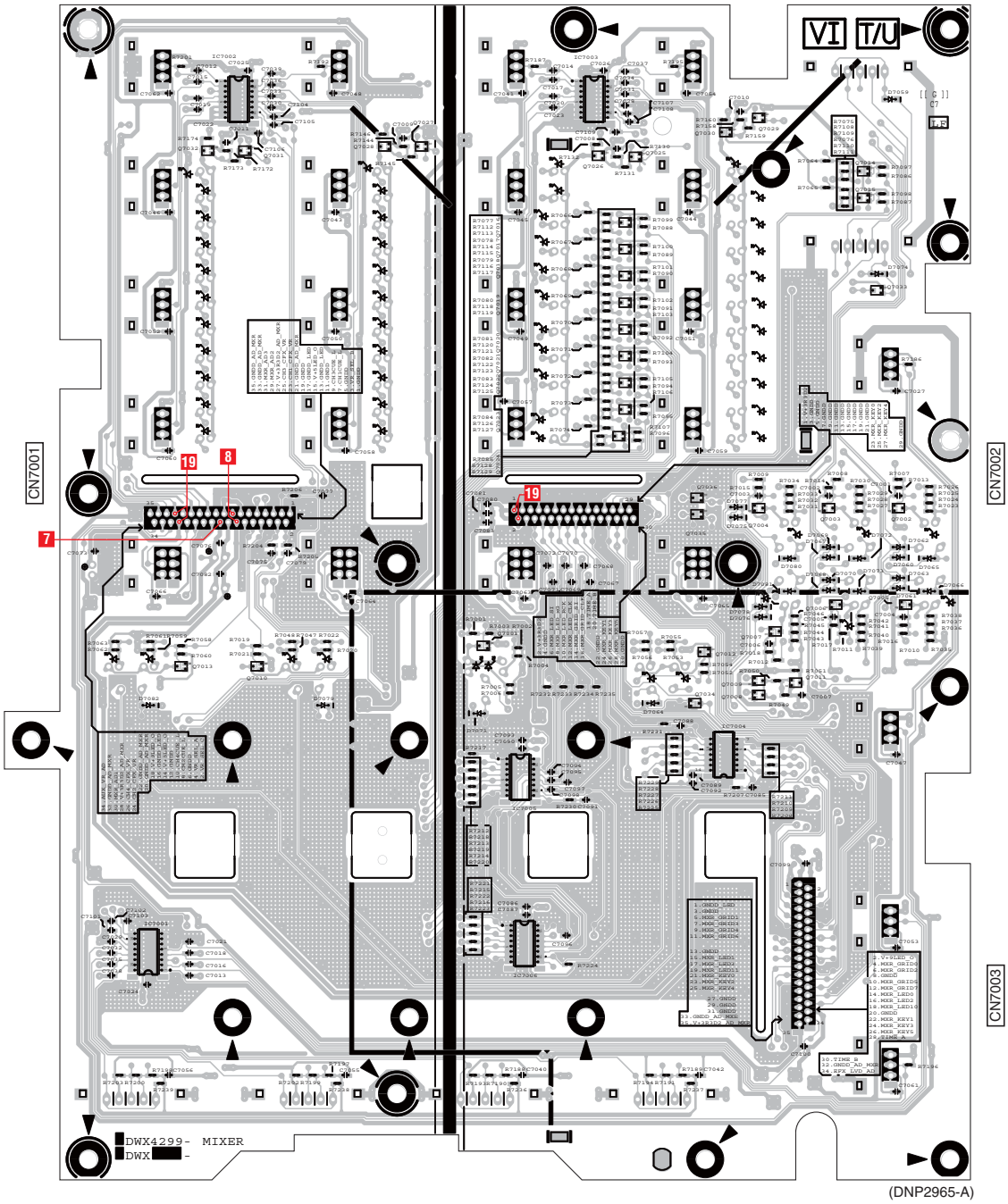

(DNP2965-A)

B

C

D

E

F

11.8 EFSW ASSY

SIDE A

SIDE B

EFSW ASSY

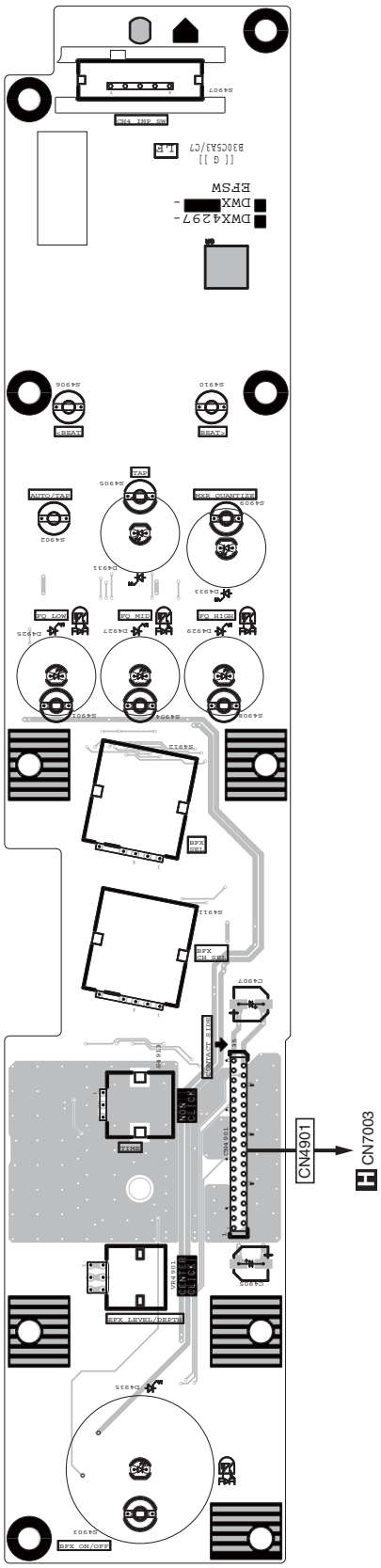

(DNP2963-A)

EFSW ASSY

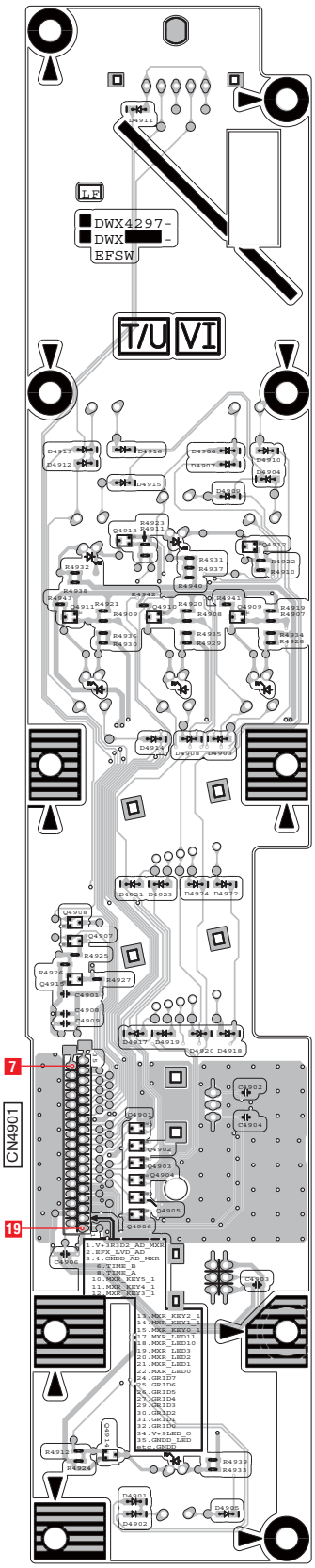

(DNP2963-A)

11.9 CHF1 to CHF4 and CRFD ASSYS

SIDE A

J CHF1 ASSY

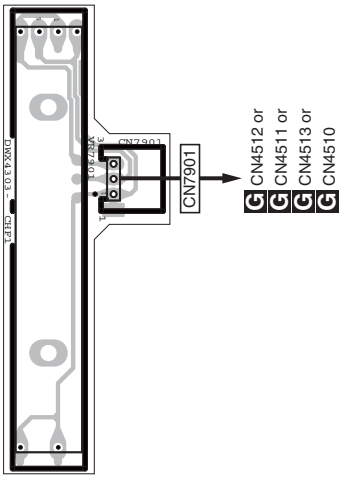

(DNP2966-A)

K CHF2 ASSY

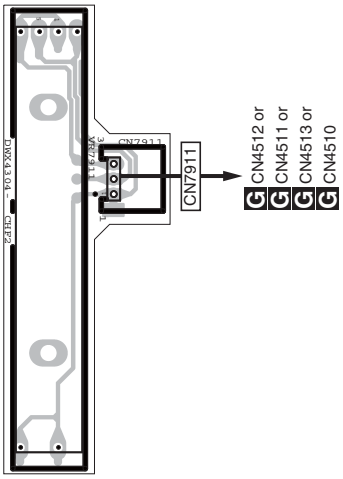

(DNP2966-A)

L CHF3 ASSY

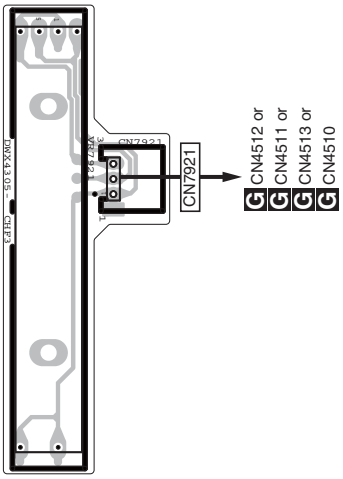

(DNP2967-A)

Note:
The 1 to 4 Assys of CHF Assys have the same circuitry, parts, and board shapes.
Only printed information is different, because their part numbers and wiring numbers are different.
They are handled similarly in their production management.
Therefore, either 1, 2, 3 or 4 Assy of the respective Assys is assembled in the respective place.

注意：
CHF の 1 から 4 は回路そのもの、使用部品、基板形状は同じです。
生産上は 1 から 4 の ASSY を管理していません。
このためそれぞれの場所には 1 から 4 のいずれかの ASSY が配置されています。

SIDE B

J CHF1 ASSY

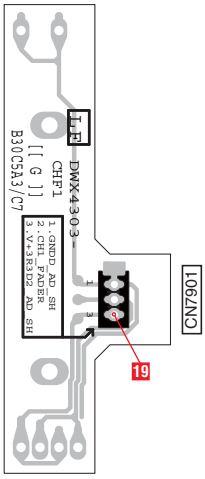

(DNP2966-A)

K CHF2 ASSY

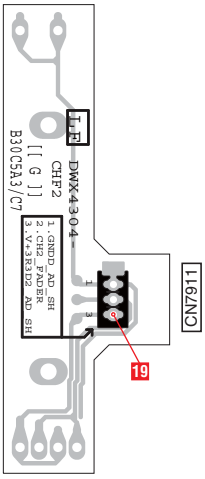

(DNP2966-A)

L CHF3 ASSY

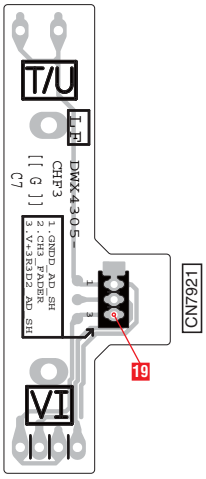

(DNP2967-A)

SIDE A

M CHF4 ASSY

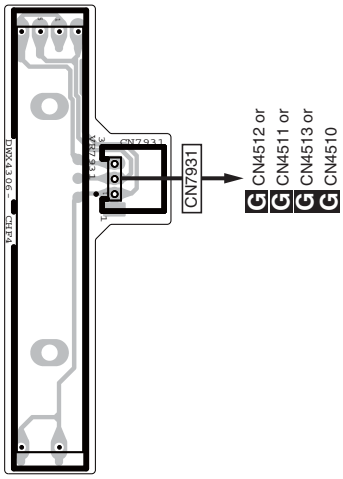

(DNP2968-A)

N CRFD ASSY

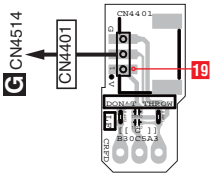

(DNP2962-A)

Note:
The 1 to 4 Assys of CHF Assys have the same circuitry, parts, and board shapes.
Only printed information is different, because their part numbers and wiring numbers are different.
They are handled similarly in their production management.
Therefore, either 1, 2, 3 or 4 Assy of the respective Assys is assembled in the respective place.

注意：
CHF の 1 から 4 は回路そのもの、使用部品、基板形状は同じです。
生産上は 1 から 4 の ASSY を管理していません。
このためそれぞれの場所には 1 から 4 のいずれかの ASSY が配置されています。

SIDE B

M CHF4 ASSY

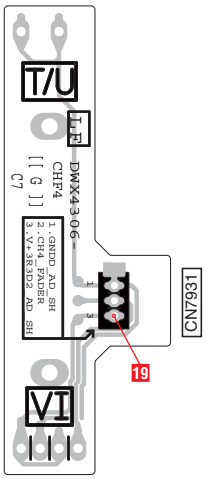

(DNP2968-A)

N CRFD ASSY

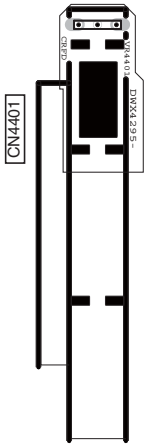

(DNP2962-A)

11.10 PAD1 ASSY

SIDE A

SIDE A

O PAD1 ASSY

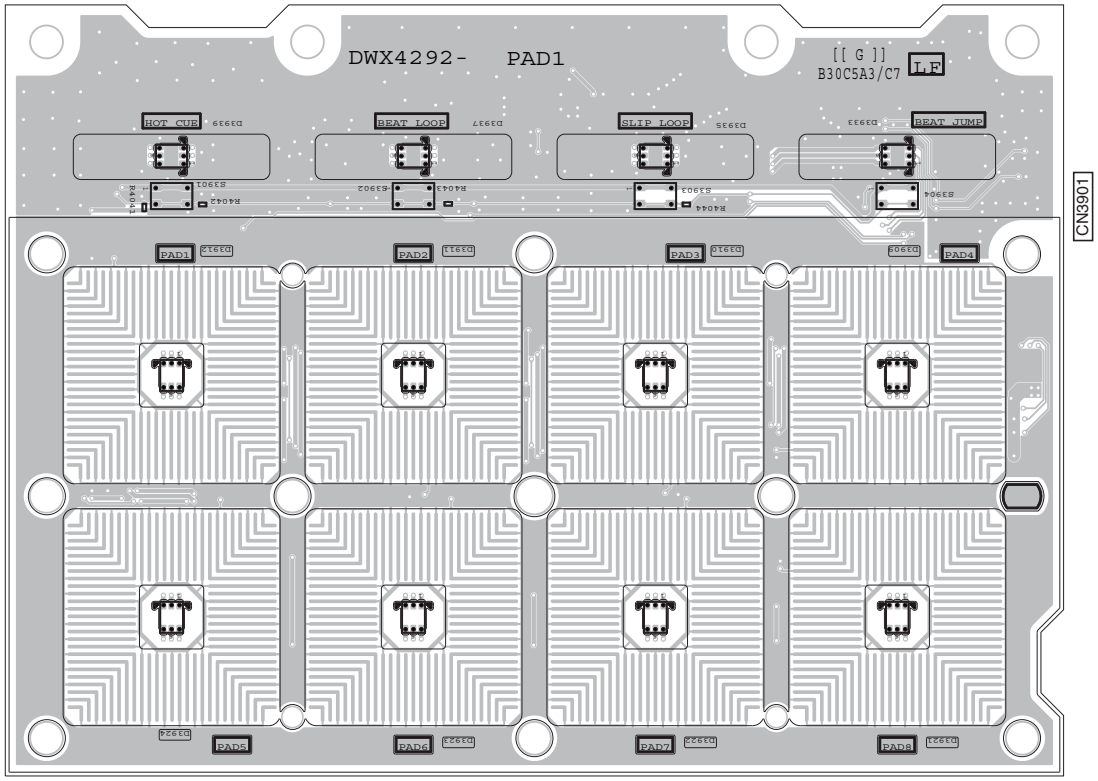

(DNP2962-A)

SIDE B

SIDE B

O PAD1 ASSY

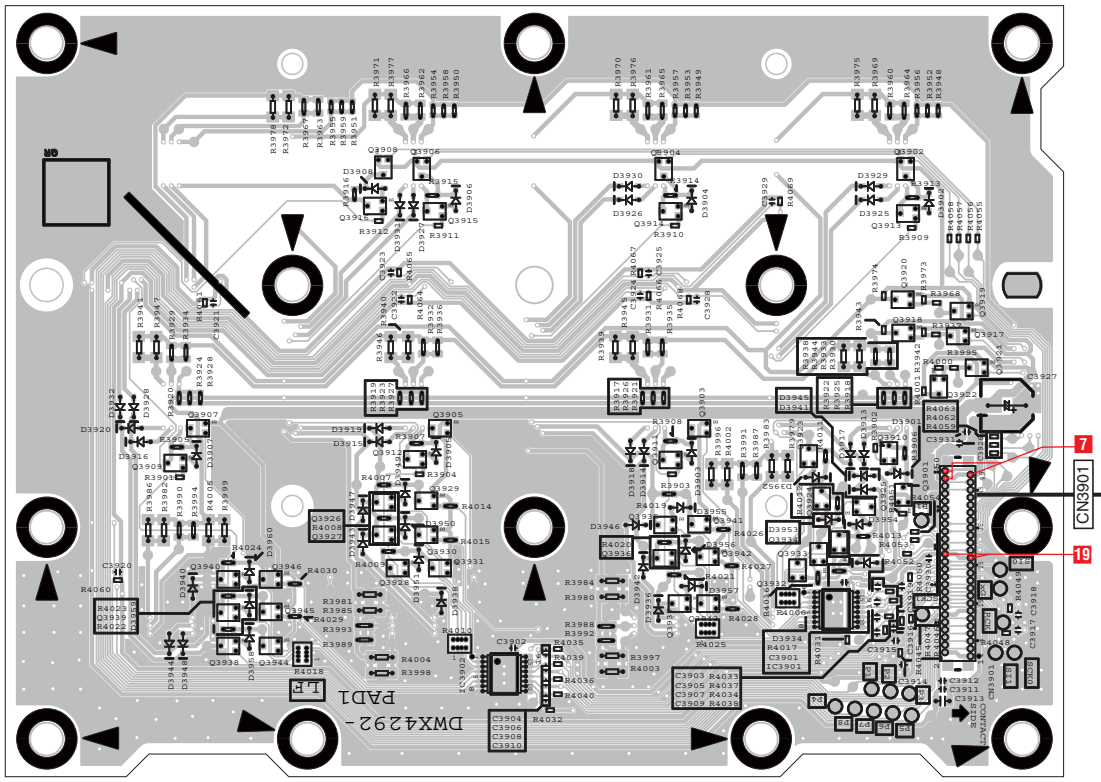

(DNP2962-A)

11.11 PAD2 ASSY

SIDE A

SIDE A

P PAD2 ASSY

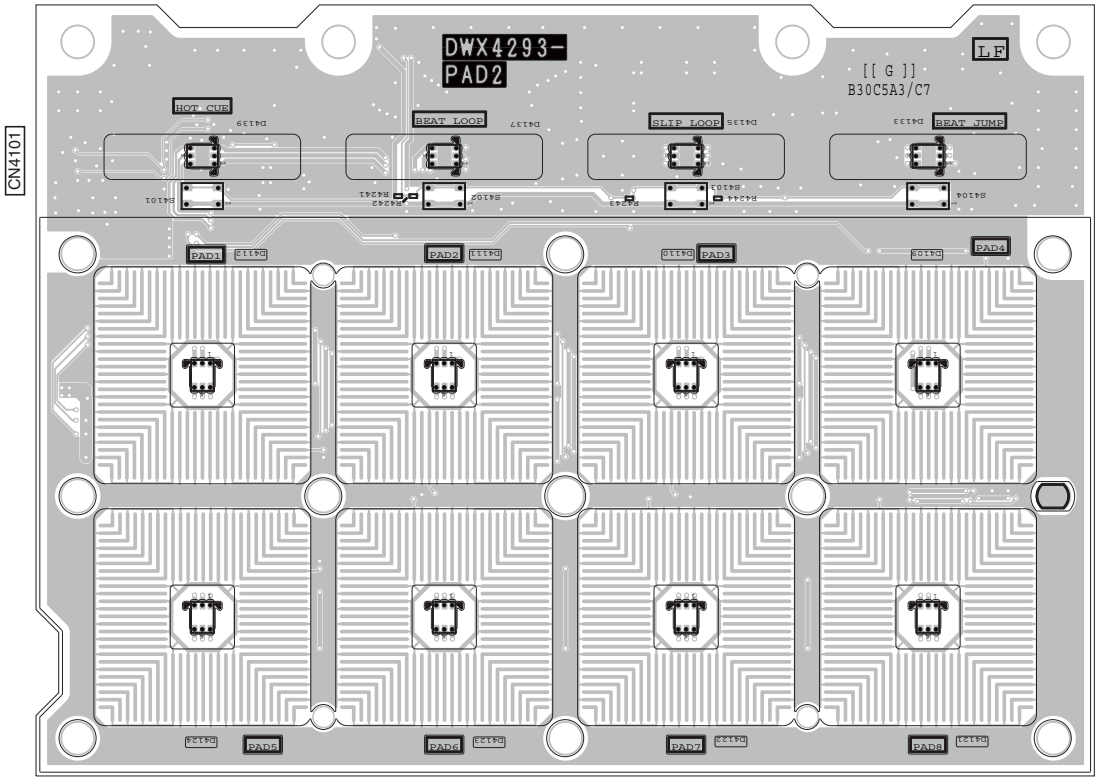

(DNP2962-A)

SIDE B

SIDE B

P PAD2 ASSY

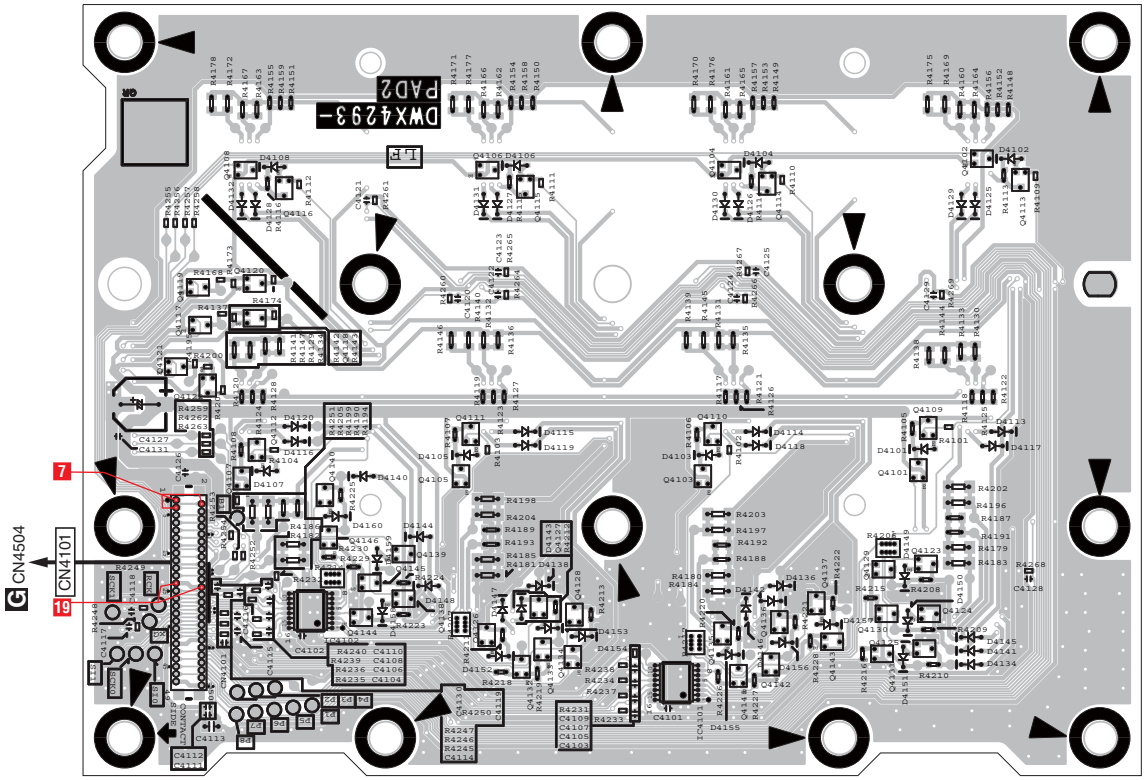

(DNP2962-A)

11.12 XPAD ASSY

SIDE A

SIDE A

Q XPAD ASSY

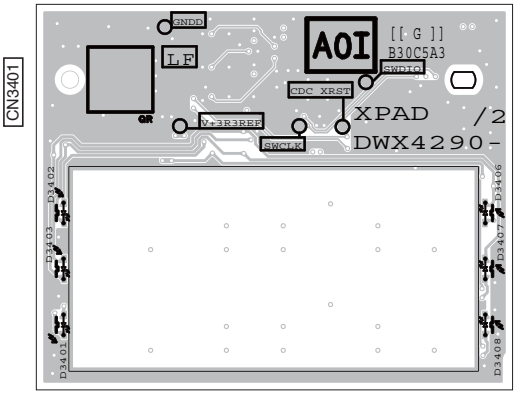

(DNP2961-A)

SIDE B

SIDE B

Q XPAD ASSY

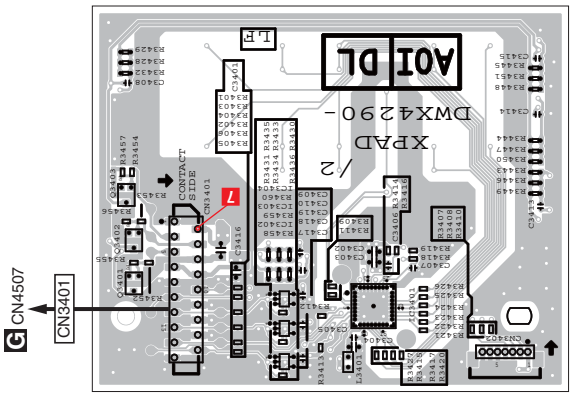

(DNP2961-A)

11.13 DCK1 and PWSW ASSYS

SIDE A

SIDE A

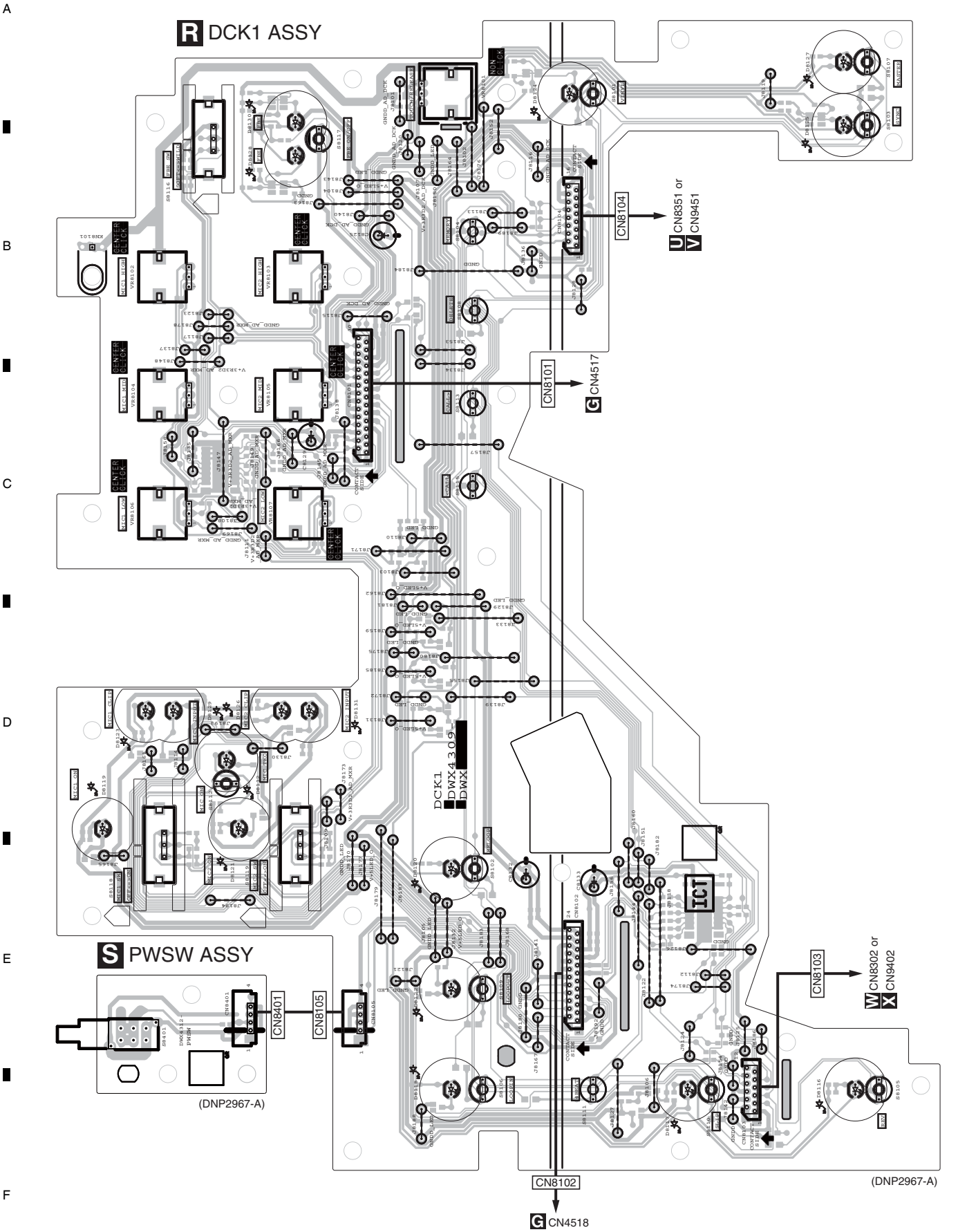

R S

R S

SIDE B

SIDE B

R DCK1 ASSY

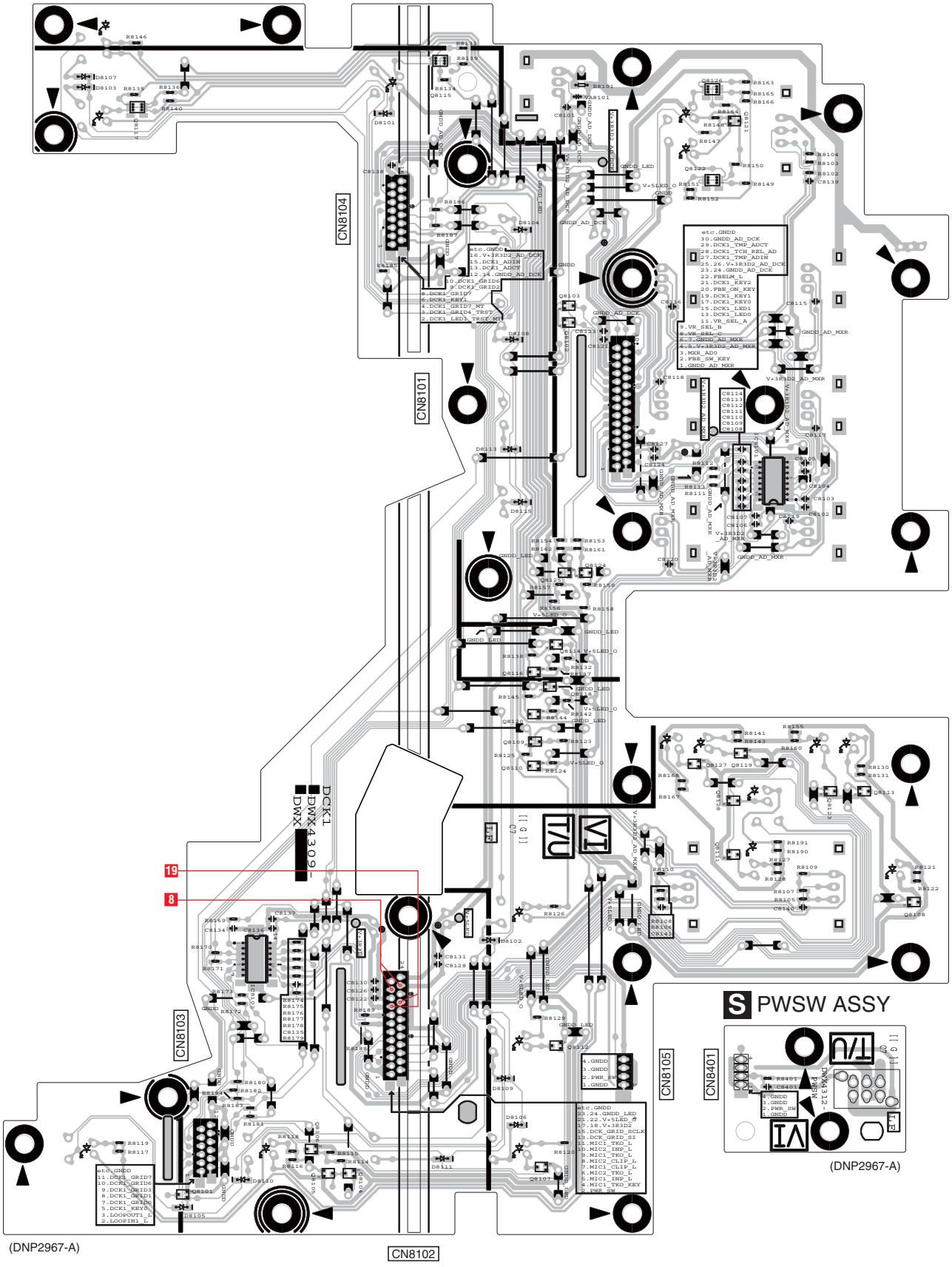

11.14 DCK2 ASSY

SIDE A

SIDE A

T DCK2 ASSY

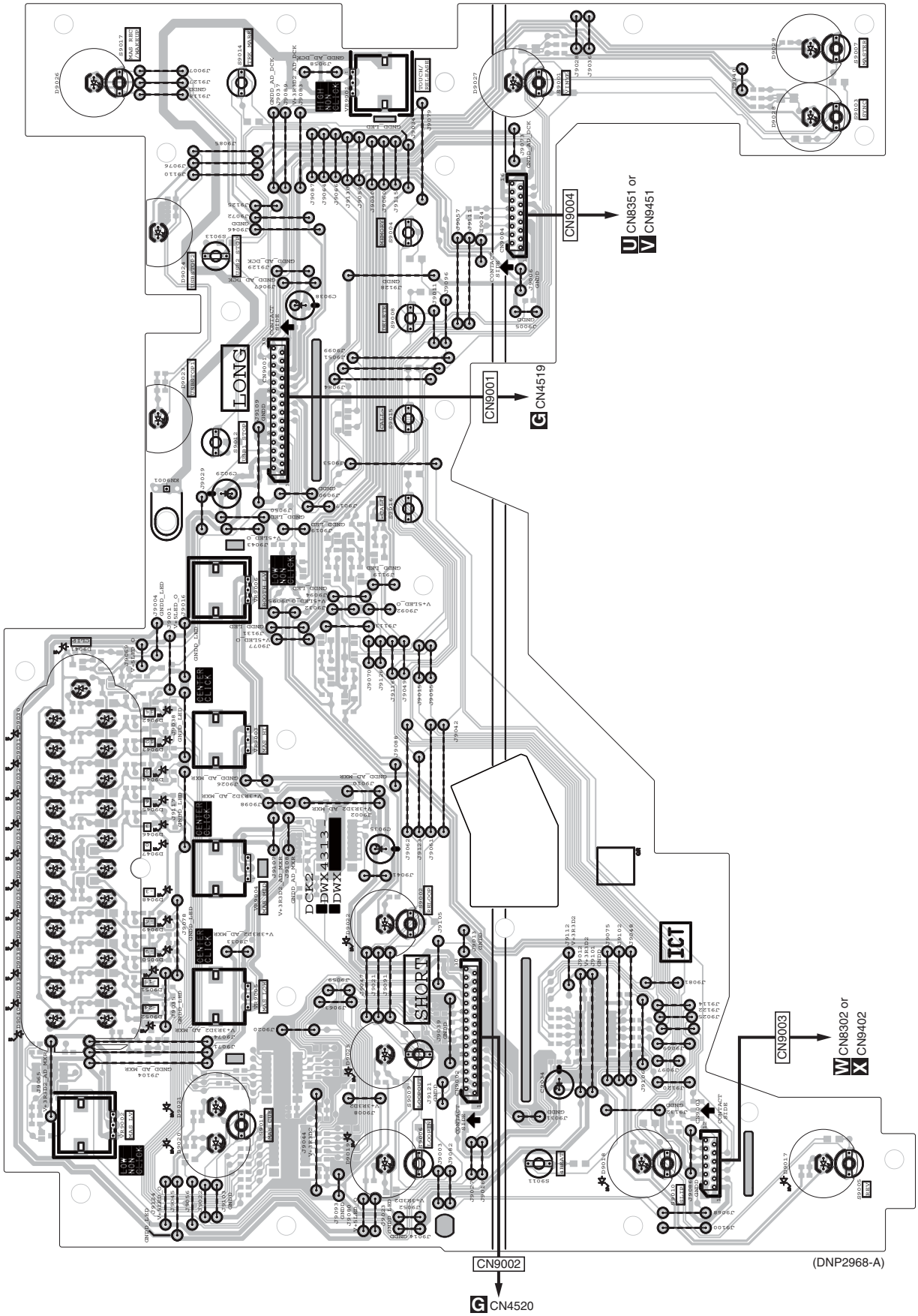

T

T

SIDE B

SIDE B

T DCK2 ASSY

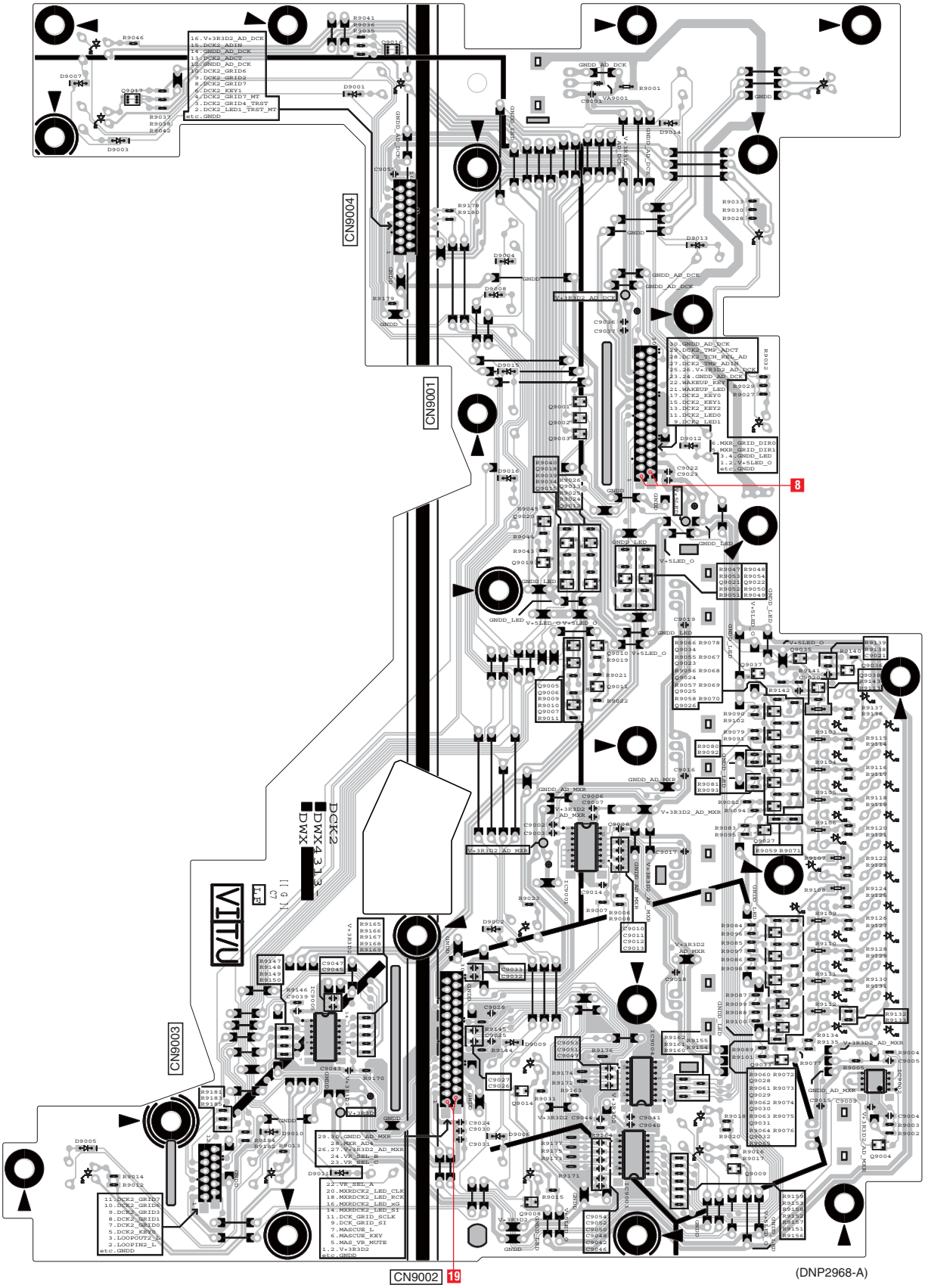

11.15 TMP1 and TMP2 ASSYS

SIDE A

SIDE B

Note:
The 1 and 2 Assys of TMP Assy have the same circuitry, parts, and board shapes.
Only printed information is different, because their part numbers and wiring numbers are different.
They are handled similarly in their production management.
Therefore, either 1 or 2 Assy of the respective Assys is assembled in the respective place.

注意：
TMP の 1 と 2 は回路そのもの、使用部品、基板形状は同じです。
生産上は 1 と 2 の ASSY を管理していません。
このためそれぞれの場所には 1 と 2 のどちらかの ASSY が配置されています。

U TMP1 ASSY

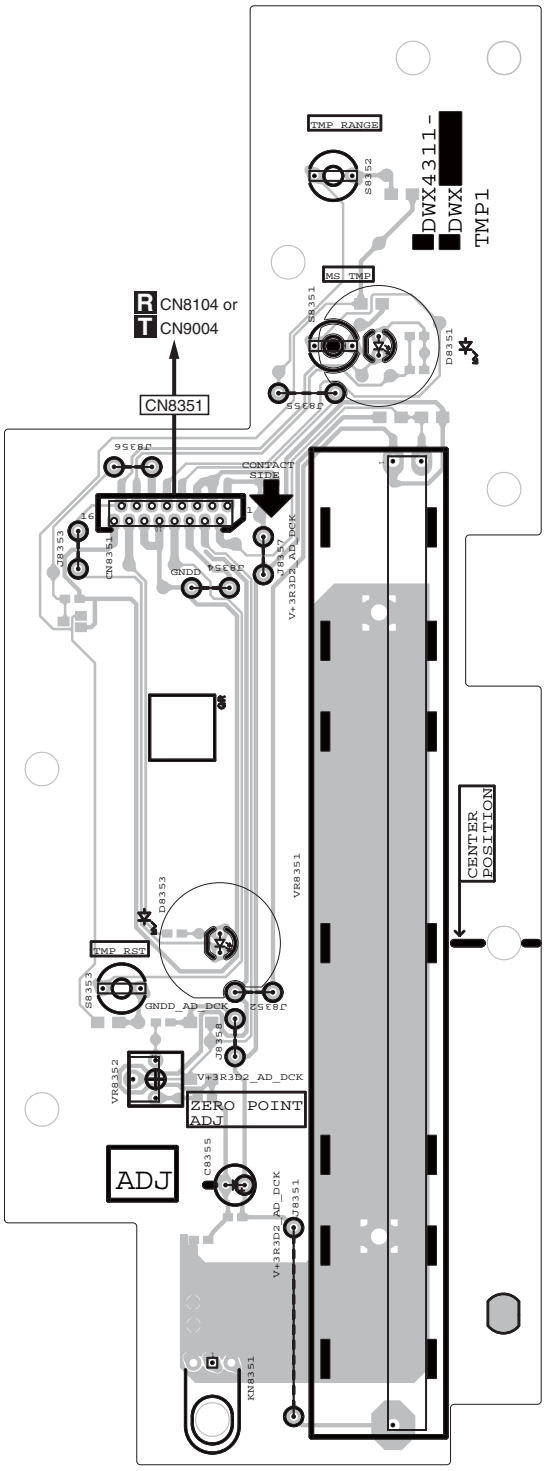

(DNP2967-A)

U TMP1 ASSY

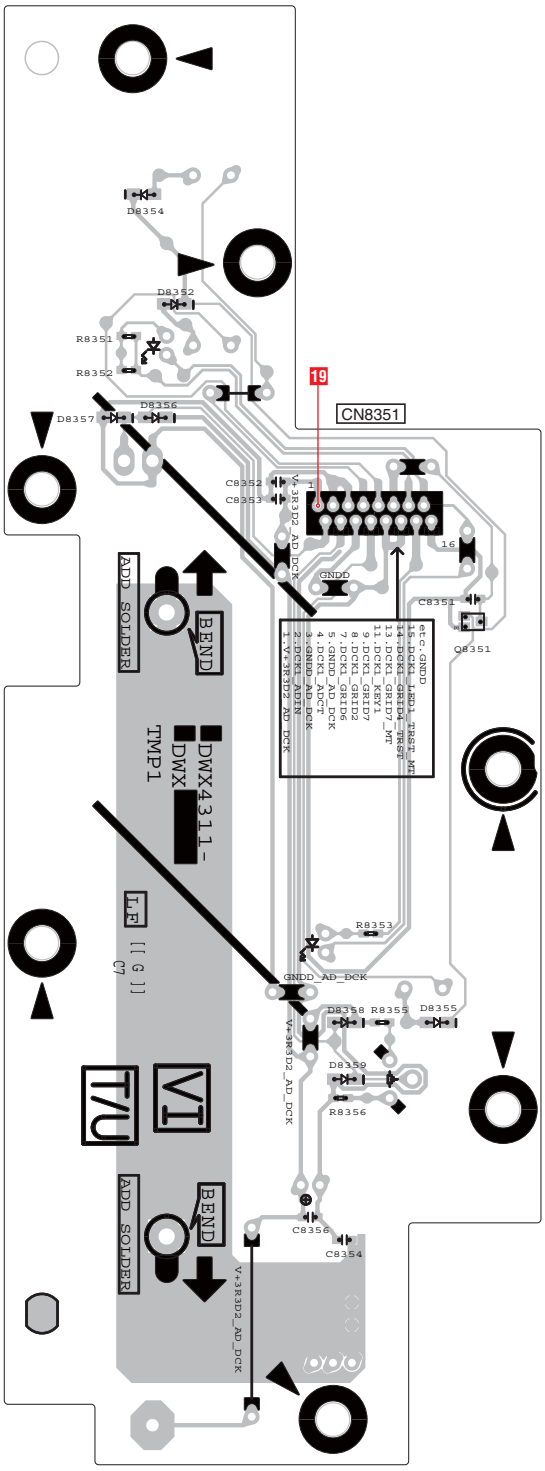

(DNP2967-A)

SIDE A

SIDE B

Note:
The 1 and 2 Assys of TMP Assy have the same circuitry, parts, and board shapes.
Only printed information is different, because their part numbers and wiring numbers are different.
They are handled similarly in their production management.
Therefore, either 1 or 2 Assy of the respective Assys is assembled in the respective place.

注意：
TMP の 1 と 2 は回路そのもの、使用部品、基板形状は同じです。
生産上は 1 と 2 の ASSY を管理していません。
このためそれぞれの場所には 1 と 2 のどちらかの ASSY が配置されています。

V TMP2 ASSY

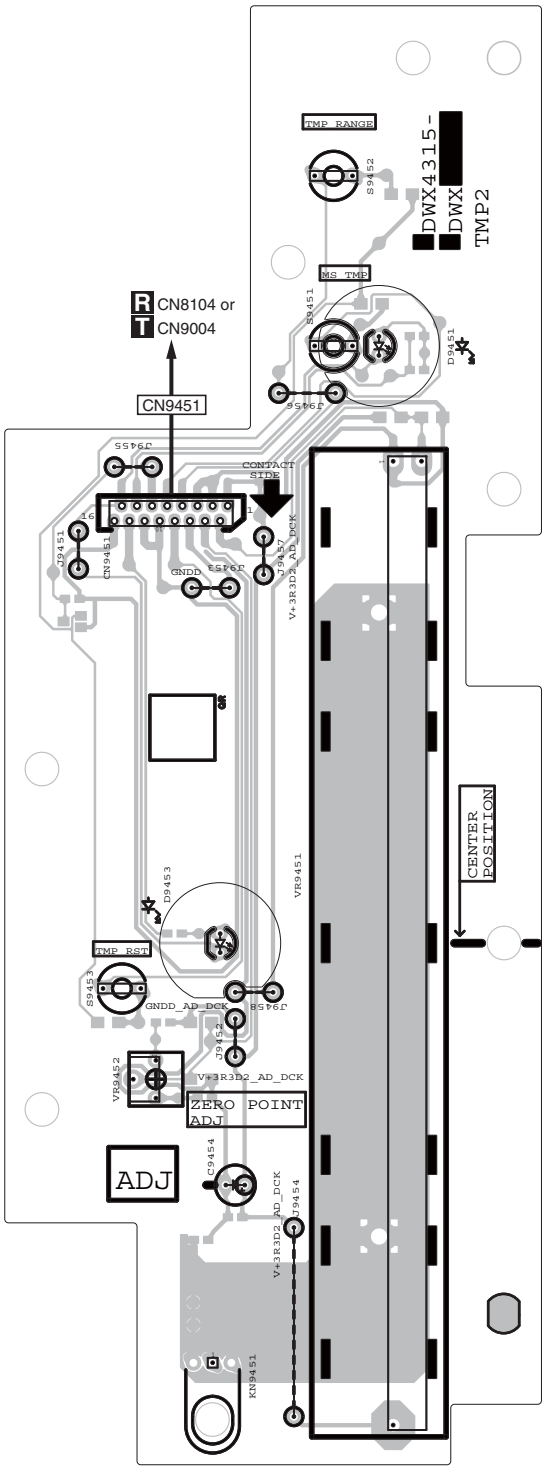

(DNP2968-A)

V TMP2 ASSY

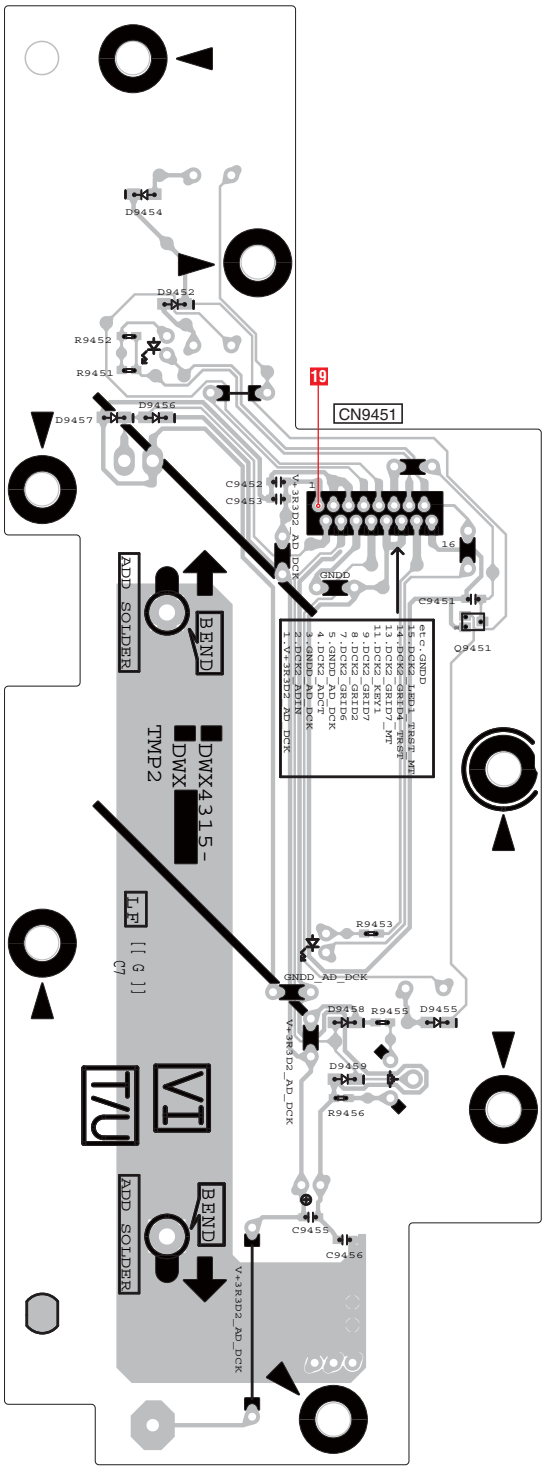

(DNP2968-A)

11.16 SER1 and SER2 ASSYS

Note:
The 1 and 2 Assys of SER Assy have the same circuitry, parts, and board shapes.
Only printed information is different, because their part numbers and wiring numbers are different.
They are handled similarly in their production management.
Therefore, either 1 or 2 Assy of the respective Assys is assembled in the respective place.

注意：
SER の１と２は回路そのもの、使用部品、基板形状は同じです。
生産上は１と２の ASSY を管理していません。
このためそれぞれの場所には１と２のどちらかの ASSY が配置されています。

SIDE A

W SER1 ASSY

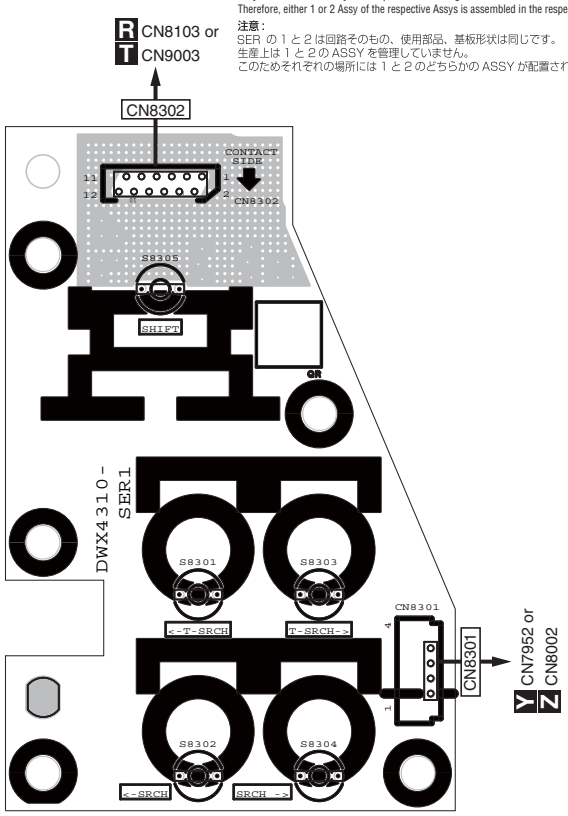

X SER2 ASSY

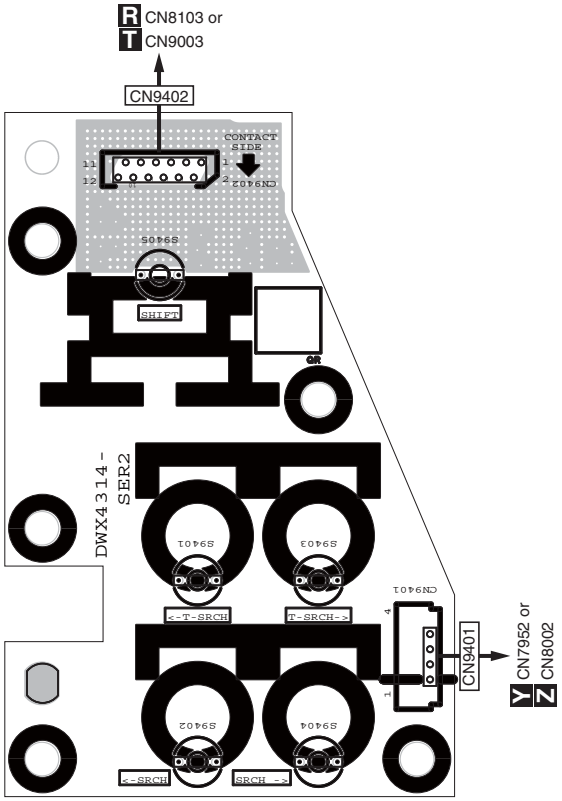

SIDE B

W SER1 ASSY

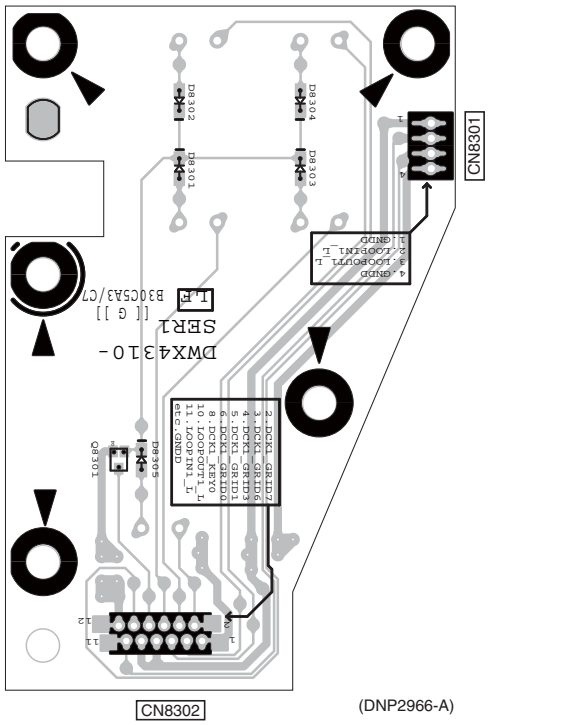

X SER2 ASSY

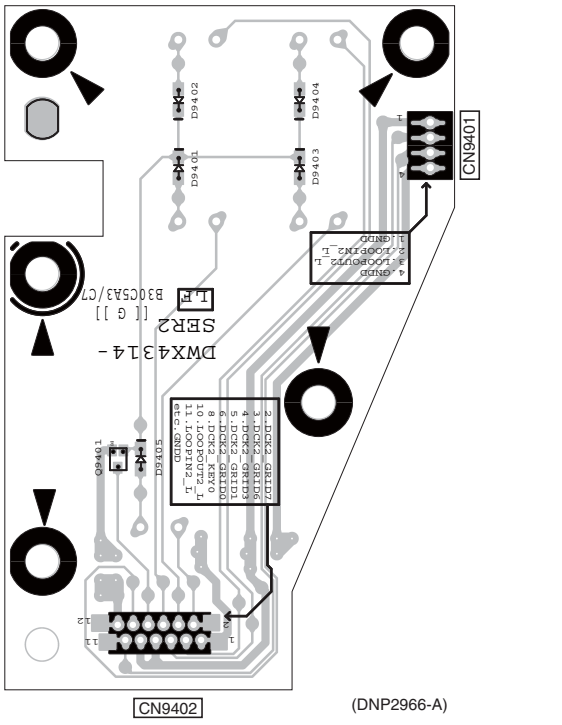

11.17 PLAY1 anbd PLAY2 ASSYS

SIDE A

Note:
The 1 and 2 Assys of PLAY Assy have the same circuitry, parts, and board shapes.
Only printed information is different, because their part numbers and wiring numbers are different.
They are handled similarly in their production management.
Therefore, either 1 or 2 Assy of the respective Assys is assembled in the respective place.

注意：
PLAY の１と２は回路そのもの、使用部品、基板形状は同じです。
生産上は１と２の ASSY を管理していません。
このためそれぞれの場所には１と２のどちらかの ASSY が配置されています。

SIDE A

Y PLAY1 ASSY

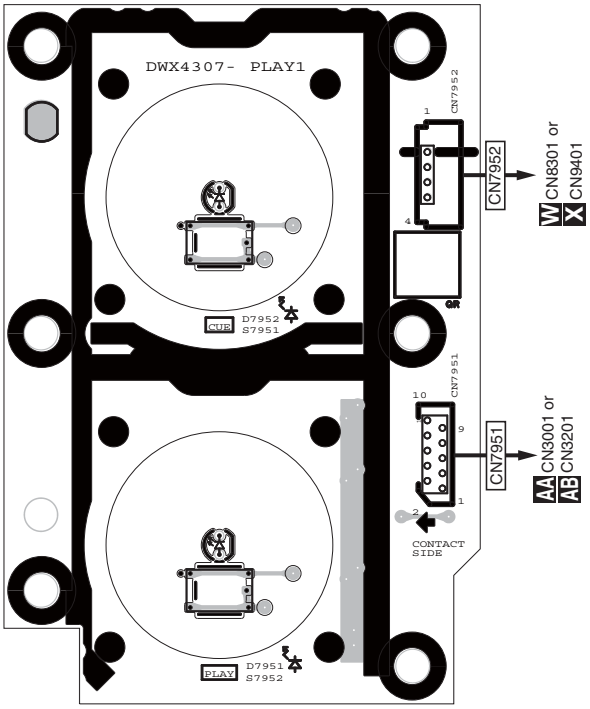

(DNP2966-A)

Z PLAY2 ASSY

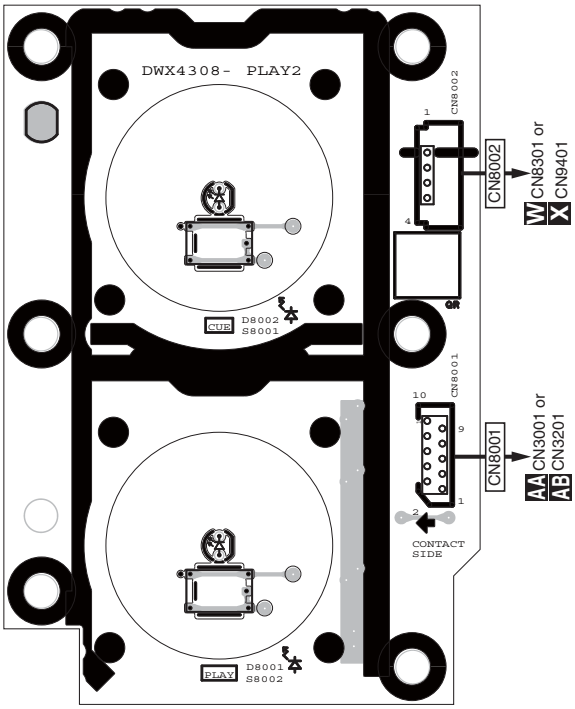

(DNP2966-A)

SIDE B

SIDE B

Y PLAY1 ASSY

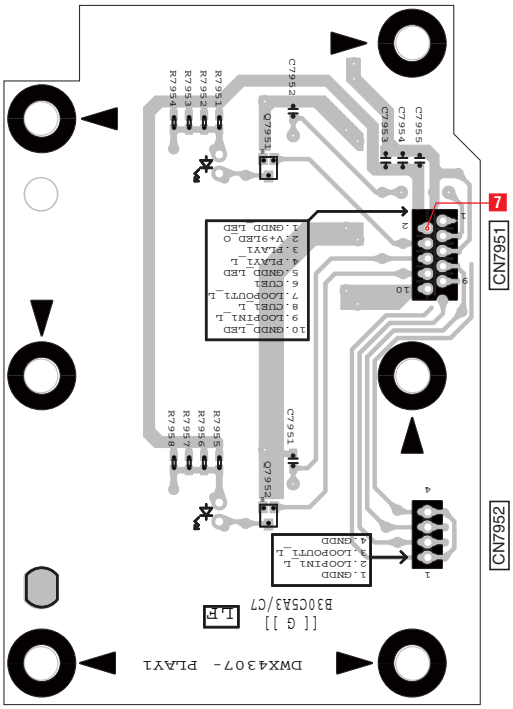

(DNP2966-A)

Z PLAY2 ASSY

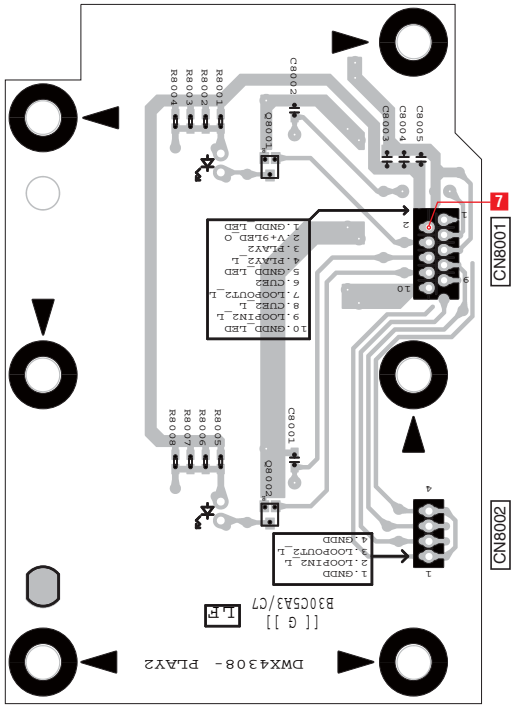

(DNP2966-A)

Y Z

Y Z

11.18 JLCD1, JLCD2, JOG1 and JOG2 ASSYS

SIDE A

SIDE A

Note:
The 1 and 2 Assys of JLCD Assy have the same circuitry, parts, and board shapes.
Only printed information is different, because their part numbers and wiring numbers are different.
They are handled similarly in their production management.
Therefore, either 1 or 2 Assy of the respective Assys is assembled in the respective place.

注意：
JLCD の１と２は回路そのもの、使用部品、基板形状は同じです。
生産上は１と２の ASSY を管理していません。
このためそれぞれの場所には１と２のどちらかの ASSY が配置されています。

AA JLCD1 ASSY

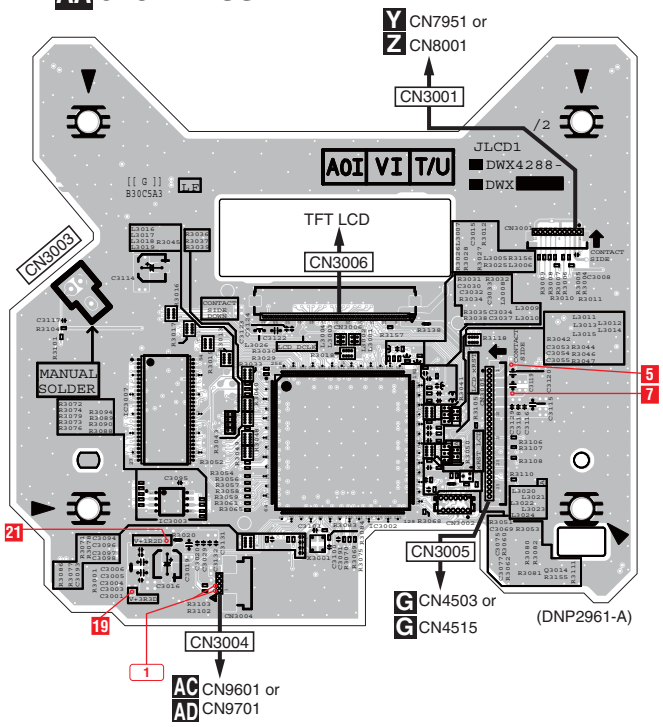

AC JOG1 ASSY

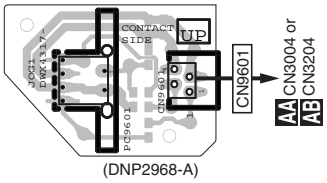

SIDE B

SIDE B

AA JLCD1 ASSY

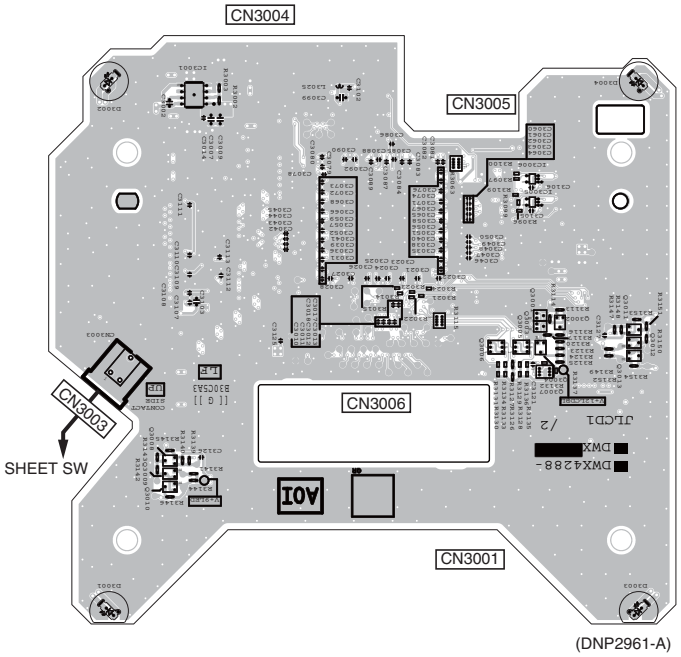

AC JOG1 ASSY

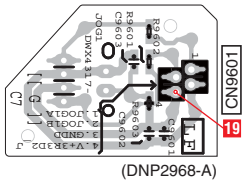

AA AC

AA AC

SIDE A

AB JLCD2 ASSY

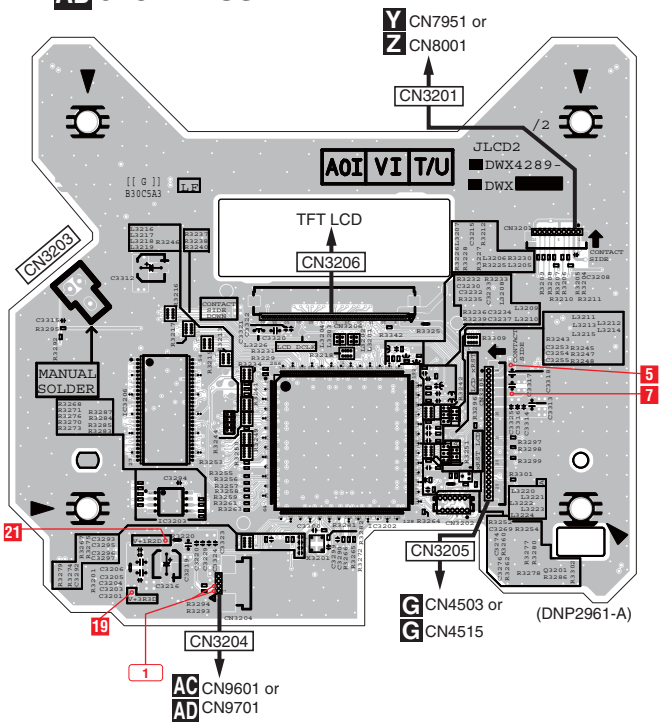

SIDE A

Note:
The 1 and 2 Assys of JOG Assy have the same circuitry, parts, and board shapes.
Only printed information is different, because their part numbers and wiring numbers are different.
They are handled similarly in their production management.
Therefore, either 1 or 2 Assy of the respective Assys is assembled in the respective place.

注意：
JOG の 1 と 2 は回路そのもの、使用部品、基板形状は同じです。
生産上は 1 と 2 の ASSY を管理していません。
このためそれぞれの場所には 1 と 2 のどちらかの ASSY が配置されています。

AD JOG2 ASSY

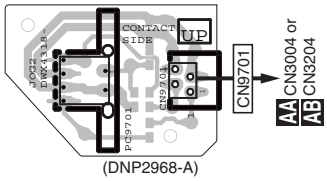

SIDE B

AB JLCD2 ASSY

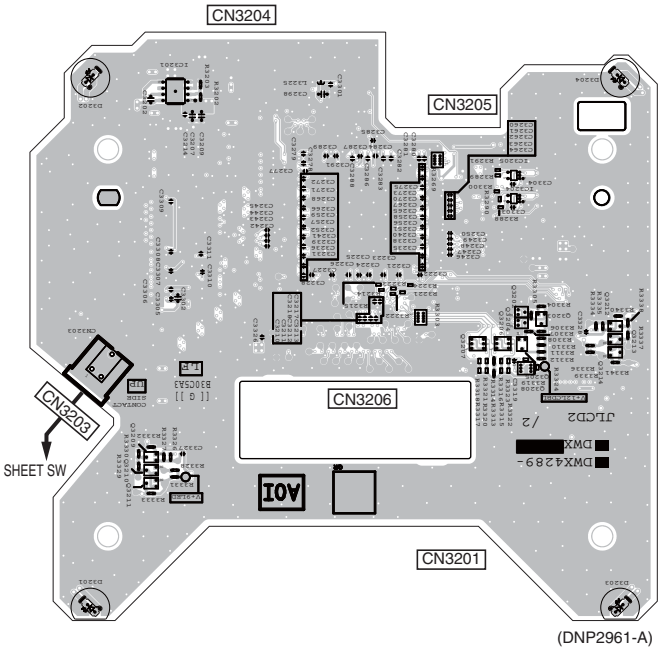

SIDE B

AD JOG2 ASSY

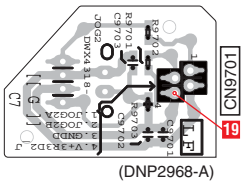

AB AD

AB AD

11.19 LCDB ASSY

SIDE A

SIDE A

AE LCDB ASSY

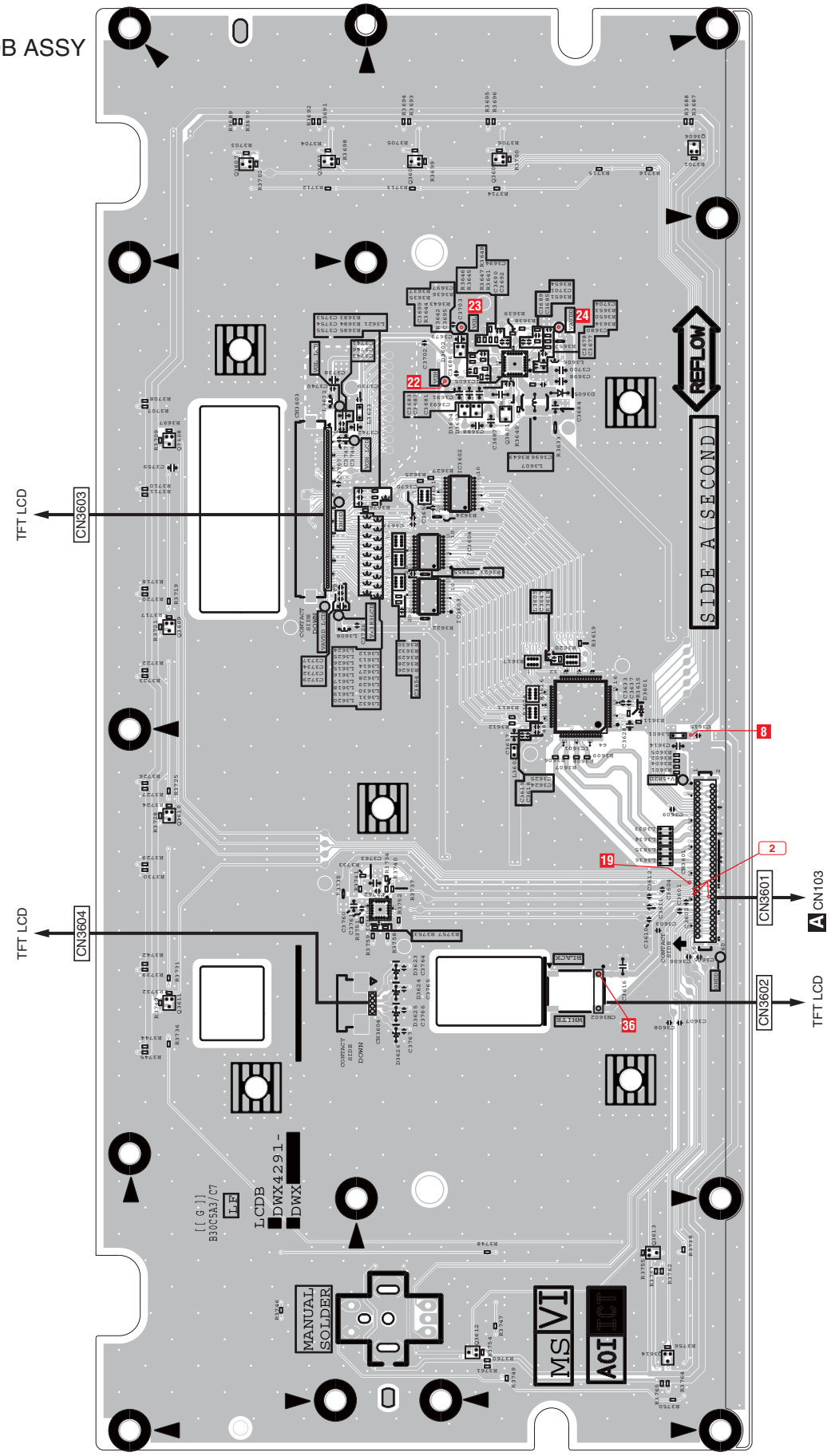

(DNP2962-A)

AE

AE

SIDE B **SIDE B**

AE LCDB ASSY

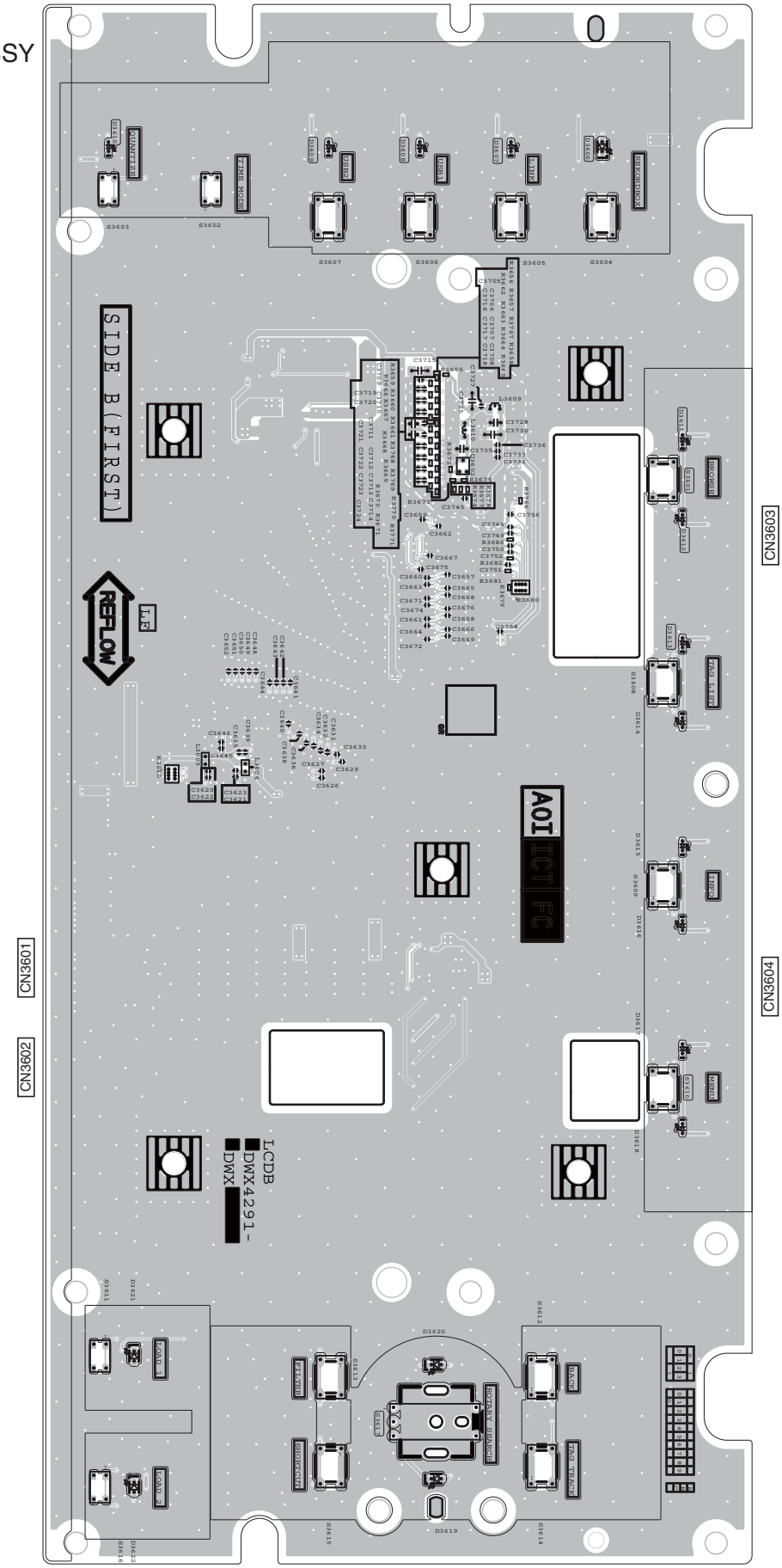

(DNP2962-A)

11.20 SW POWER SUPPLY

SIDE A

SIDE B

AF SW POWER SUPPLY

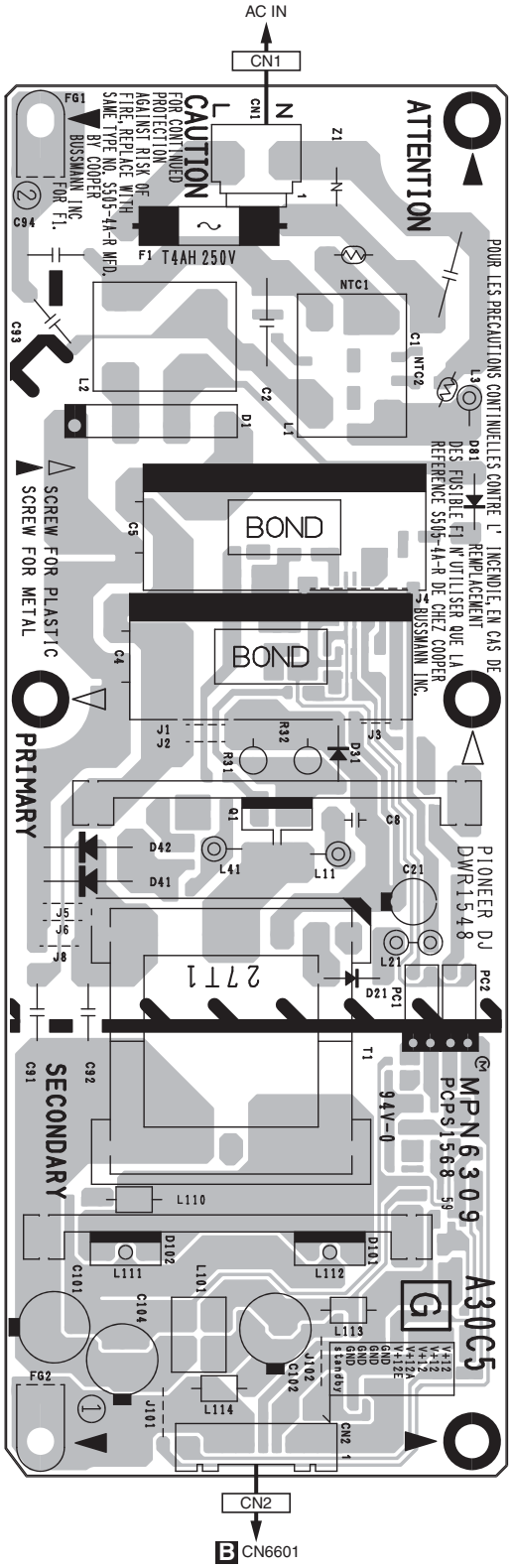

AF SW POWER SUPPLY

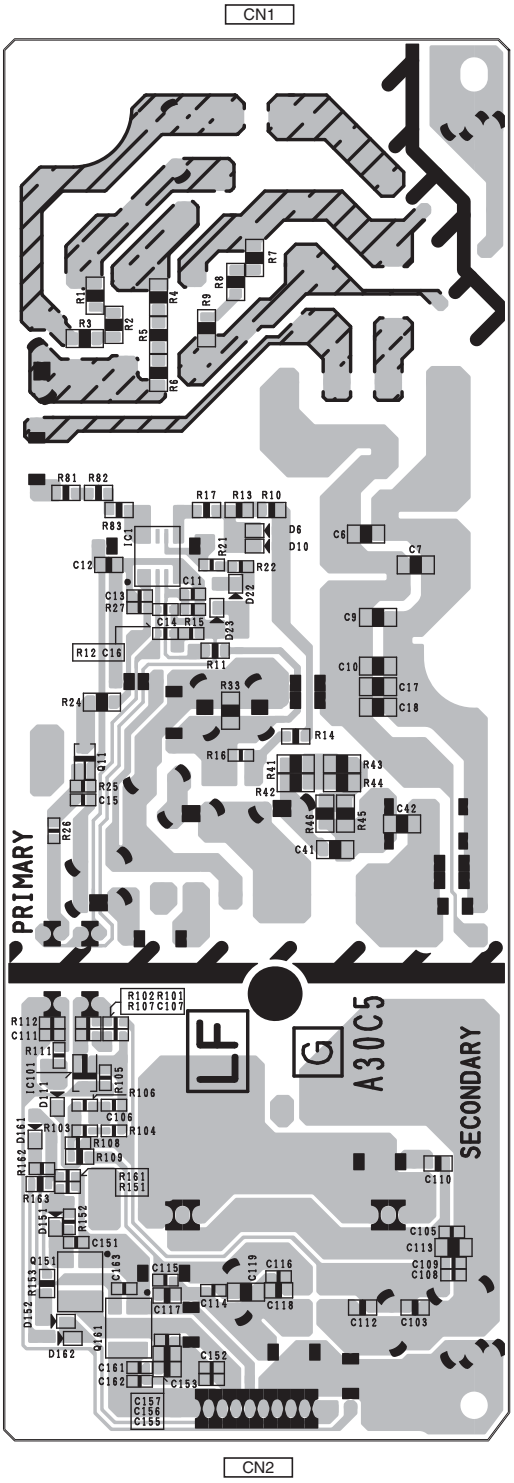

12. PCB PARTS LIST

NOTES:
- *Parts marked by "NSP" are generally unavailable because they are not in our Master Spare Parts List.*
- *The ⚠ mark found on some component parts indicates the importance of the safety factor of the part. Therefore, when replacing, be sure to use parts of identical designation.*
- *When ordering resistors, first convert resistance values into code form as shown in the following examples.*

Ex.1 When there are 2 effective digits (any digit apart from 0), such as 560 ohm and 47 k ohm (tolerance is shown by J = 5%, and K = 10%).

560 Ω	→	56×10^1	→	561 ····· RD1/4PU 5 6 1 J
47 kΩ	→	47×10^3	→	473 ····· RD1/4PU 4 7 3 J
0.5 Ω	→	R50 ····· RN2H R 5 0 K		
1 Ω	→	1R0 ····· RS1P 1 R 0 K		

Ex.2 When there are 3 effective digits (such as in high precision metal film resistors).

5.62 kΩ	→	562×10^1	→	5621 ····· RN1/4PC 5 6 2 1 F

LIST OF ASSEMBLIES

Mark	No. Description	Part No.
	1..MAIN ASSY	DWX4287
	1..AUDIO ASSY	DWX4298
NSP	1..SUBA ASSY	DWM2724
	2..MCIN ASSY	DWX4300
	2..HPJK ASSY	DWX4301
	2..MCTR ASSY	DWX4302
	2..CHF1 ASSY	DWX4303
	2..CHF2 ASSY	DWX4304
	2..PLAY1 ASSY	DWX4307
	2..PLAY2 ASSY	DWX4308
	2..SER1 ASSY	DWX4310
	2..SER2 ASSY	DWX4314
NSP	1..PADA ASSY	DWM2720
	2..LCDB ASSY	DWX4291
	2..PAD1 ASSY	DWX4292
	2..PAD2 ASSY	DWX4293
	2..USBA ASSY	DWX4294
	2..CRFD ASSY	DWX4295
NSP	1..UCOMA ASSY	DWM2721
	2..UCOM ASSY	DWX4296
	2..EFSW ASSY	DWX4297
	1..MIXER ASSY	DWX4299
NSP	1..PNL1 ASSY	DWM2725
	2..DCK1 ASSY	DWX4309
	2..TMP1 ASSY	DWX4311
	2..PWSW ASSY	DWX4312
	2..CHF3 ASSY	DWX4305
	2..STL1 ASSY	DWX4319
	2..STL2 ASSY	DWX4320
	2..STL3 ASSY	DWX4321
NSP	1..PNL2 ASSY	DWM2726
	2..DCK2 ASSY	DWX4313
	2..TMP2 ASSY	DWX4315
	2..CHF4 ASSY	DWX4306
	2..JOG1 ASSY	DWX4317
	2..JOG2 ASSY	DWX4318
	2..STL4 ASSY	DWX4322
NSP	1..JOGA ASSY	DWM2719
	2..JLCD1 ASSY	DWX4288
	2..JLCD2 ASSY	DWX4289
	2..XPAD ASSY	DWX4290
⚠	1..SW POWER SUPPLY	DWR1548

A MAIN ASSY

SEMICONDUCTORS

Mark	No. Description	Part No.
⚠	IC 301,501,1801,1802	BD9328EFJ
⚠	IC 302	BD00IC0WEFJ
⚠	IC 303	IS31BL3555-ZLS4
⚠	IC 502	MMPF0100F0AEP
	IC 701	MCIMX6Q6AVT10AD
	IC 901,902	K4B4G1646E-BYMA
	IC 1101	H337S3959
NSP	IC 1102	DYW2156*
	*Part number of the initial firmware equipped	
	IC 1301,2301	TC7SH04FUS2
⚠	IC 1803,1804	TPS2557DRB
	IC 1805	TUSB4020BIPHP
NSP	IC 2001	RTL8152B-VB-CG
	IC 2002	TUSB4041IPAP
	IC 2003,2306-2308	TC7SH08FUS2
	IC 2151	RTL8309M-CG
NSP	IC 2302	R5S72690W266FP
NSP	IC 2303	DYW2157*
	*Part number of the initial firmware equipped	
	IC 2304	TC7SZU04FUS2
	IC 2305	TC7SHU04FUS2
	IC 2501	D810K013DZKB400
	IC 2502	W9812G6KH-6
	IC 2606	SN74AUC1G08DCK
	Q 301	RT3T22M
	Q 302-305,2001	2SA1576A
	Q 306	LTC023JEB
	Q 1401	LTC014EEB
	Q 1801,1802,2303	RT3N22M
	Q 1803	HN1C01FUS1
	Q 2002,2302	LTC024EEB
	D 301	RB060MM-30TF
	D 302-305	1SS355VM
	D 501	RB160M-60
	D 1801,1802	UDZV5R1

MISCELLANEOUS

Mark	No. Description	Part No.
	L 105-108,110,111 INDUCTOR	CTF1545
	L 109 POWER INDUCTOR	ATH7053
	L 301 COIL (47 uH)	CTH1475
	L 302 SMD SPL INDUCTOR	CTH1527
	L 501 SMD SPL INDUCTOR	CTH1501
	L 502 SMD SPL INDUCTOR	CTH1531
	L 503-506 SMD SPL INDUCTOR	CTH1530
	L 1101 CHIP SOLID INDUCTOR	XTL3010
	L 1801,1802 INDUCTOR	CTH1253
	L 1803,1808,1809,2005 COIL	ATH7015
	L 2151-2156 CHOKE COIL	ATH7098
	L 2301-2303,2601 INDUCTOR	CTF1545
	L 2304 CHIP COIL (33 uH)	LCTAW330J2520

Mark	No.	Description	Part No.
	L 2305,2306	CHIP SOLID INDUCTOR	QTL1013
	L 2307	CHIP BEADS	VTL1129
	L 2501	SMD FERRITE BEADS	CTF1823
	F 1801,1802,2001-2003	EMI FILTER	CCG1352
	F 2151,2152	EMI FILTER	CCG1352
	F 2501	EMI FILTER	DTL1106
	JA 2001	USB CONNECTOR	DKN1237
	JA 2151-2153	RJ45 CONNECTOR	AKN7115
	KN 2151,2152	SCREW PLATE	VNE1948
	X 1401	RESONATOR (32.768 kHz)	CSS1807
	X 1402	CRYSTAL TRANSDUCER (24 MHz)	DSS1208
	X 1801,2002	RESONATOR (24 MHz)	CSS1773
	X 2001,2151	CRYSTAL (25.000 MHz)	DSS1205
	X 2301	RESONATOR (48.000 MHz)	CSS1760
	X 2302	CRYSTAL RESONATOR (13.333 3 MHz)	CSS1840
	CN 101,103	FFC/FPC CONNECTOR	CKS6543
	CN 102	19P RECEPTACLE	AKP7199
	CN 104,105	FFC/FPC CONNECTOR	CKS6645
	CN 1801,1802	CONNECTOR	AKM1277
	VA 2001-2003	SMD VARISTOR	EZJZ1V80010

RESISTORS

Mark	No.	Description	Part No.
	R 305		RS1/4SA1R0J
	R 308,317		RS1/10SR472J
	R 312		RS1/10SR151J
	R 313		RS1/16SS2701D
	R 314		RS1/16SS6201D
	R 319,505,506		RS1/16SS1502D
	R 321		RS1/16SS2202D
	R 322,2380		RS1/16SS5601D
	R 323,2206		RS1/16SS6800D
	R 324		RS1/16SS3301D
	R 325,336,1808,1812		RS1/16SS1002D
	R 329		RS1/10SR3302F
	R 337		RS1/16SS1202D
	R 338,507		RS1/16SS8201D
	R 339		RS1/16SS3302D
	R 514,517,702,707		RS1/10SR0R0J
	R 515		RS1/10SR561J
	R 521		RS1/16SS1002F
	R 708,905,908		RS1/16SS2400F
	R 903,904		RS1/16SS1001D
	R 1108,1109,1120,2501		RAB4CQ680J
	R 1127		RAB4CQ222J
	R 1139,1140		RAB4CQ220J
	R 1328,1333,1335		RAB4CQ470J
	R 1502,1505,1530-1533		RAB4CQ103J
	R 1507,1526-1529		RAB4CQ472J
	R 1803,1804		RS1/10SR220J
	R 1806,1810		RS1/10SR1100D
	R 1807,1811		RS1/16SS4702D
	R 1821,1822		RS1/10SR2702F
	R 1823,1824		RS1/10SR5602F
	R 1839,2052		RS1/16SS4300D
	R 1840,2051		RS1/16SS9101D
	R 1847		RS1/16SS1201F
	R 1848		RS1/16SS6801D
	R 1872,1873		RS1/10SR102J
	R 2005		RS1/16SS91R0F
	R 2006		RS1/16SS2401D
	R 2044		RS1/16SS1002D
	R 2045		RS1/16SS9102F
	R 2047,2407,2408		RS1/10SR0R0J
	R 2172,2197		RS1/8SQ0R0J
	R 2205		RS1/16SS1801D
	R 2301-2304		RAB4CQ560J
	R 2355,2392		RAB4CQ103J
	R 2400,2401		RAB4CQ101J
	R 2405		RAB4CQ104J
	R 2413,2414		RS1/10SR105J
	R 2422		RAB4CQ223J
	R 2502		RAB4CQ680J
	R 2509,2510,2516		RAB4CQ820J
	R 2517,2518		RAB4CQ330J
	R 2528-2531		RAB4CQ470J
	Other Resistors		RS1/16SS###J

CAPACITORS

Mark	No.	Description	Part No.
	C 101,303,316,320	(10 uF/10 V)	DCH1201
	C 103-107,109,116		CKSSYB102K50
	C 108,112,113,117		CKSSYB104K10
	C 111,114,115,134		CKSSYB104K16
	C 119-123,321,2303		CEVW101M16
	C 124,130,136,140		CKSSYB104K10
	C 129,135,137,139		CKSSYB102K50
	C 138,142,304,331		CKSSYB104K16
	C 141,144,153,306		CKSSYB102K50
	C 143,155,305,309		CKSSYB104K10
	C 160,1837,1838	(100 uF/16 V)	CCH1565
	C 162,164,342,574	(0.1 uF/35 V)	ACE7100
	C 301,302,334,335	(10 uF/16 V)	DCH1263
	C 307,325,505,512		CCSSCH102J50
	C 310,315,318,322		CKSSYB104K10
	C 311,524,536,557		CKSRYB474K10
	C 312		CCSRCH121J50
	C 313		CKSSYB153K16
	C 314,1809,1810,2151		CKSSYB102K50
	C 317,328,523,526		CKSRYB105K10
	C 319,513,1402,1405		CKSSYB103K16
	C 324		CKSSYB472K25
	C 326,329,339-341		CKSSYB104K10
	C 330,515,516,529	(10 uF/10 V)	DCH1201
	C 332,338,503,506		CKSSYB104K16
	C 333		CEVW221M4
	C 501,1803-1806	(10 uF/16 V)	DCH1263
	C 507		CKSSYB682K25
	C 511,514,525,528		CKSSYB104K10
	C 517	(1000 pF/63 V)	ACE7099
	C 518	(100 uF/6.3 V)	ACH7275
	C 519,520,549	(22 uF/6.3 V)	DCH1256
	C 527,701,703-710		CKSSYB224K6R3
	C 530,545,909,910		CKSRYB105K10
	C 532,535,538,540	(4.7 uF/10 V)	CCG1201
	C 533,537,539,541		CKSSYB104K10
	C 542,546,548,551		CKSSYB104K10
	C 543,544,547,565	(4.7 uF/10 V)	CCG1201
	C 550		CCSRCH102J50
	C 552-555,558	(22 uF/6.3 V)	DCH1256
	C 556,559,740,907		CKSSYB104K10
	C 560-563,571-573	(22 uF/6.3 V)	DCH1256
	C 564		CKSRYB474K10
	C 570,1101,1106,1109		CCSSCH102J50
	C 702,711,715,734	(22 uF/6.3 V)	DCH1256
	C 712-714,716-718		CKSSYB224K6R3
	C 719,722,728,908	(4.7 uF/10 V)	DCH1201
	C 720,721,723-727		CKSSYB224K6R3
	C 729-733,735-739		CKSSYB224K6R3
	C 741,743,745-747		CKSSYB224K6R3
	C 742,744,748,750	(22 uF/6.3 V)	DCH1256
	C 749,751-755		CKSSYB224K6R3
	C 901-906,913-924		CKSSYB224K6R3
	C 911,912,925,1107		CKSSYB104K10
	C 926,1817,1818,1826	(4.7 uF/10 V)	DCH1201
	C 927-932,1105		CKSSYB224K6R3
	C 1102,2001,2416		CCSSCH100D50
	C 1108		CKSSYB222K50
	C 1301,1304,1503		CCSSCH470J50
	C 1309,1828,1829,1846		CKSSYB104K10
	C 1401,1403		CCSSCH9R0D50
	C 1807,1808,1811-1814		CKSSYB104K16
	C 1815,1816,1823,1824		CKSSYB103K16
	C 1821,1822		CEHVAW101M6R3

Mark	No.	Description	Part No.
	C 1827,1833-1836,1843 (4.7 uF/10 V)		DCH1201
	C 1831,1832,1845,1847		CKSSYB103K16
	C 1839,1840,2024,2025		CCSSCH101J50
	C 1844,1874-1876,2002 (4.7 uF/10 V)		DCH1201
	C 1848,1849,1851		CKSSYB104K10
	C 1850,1852,1854,1856		CKSSYB103K16
	C 1853,1855,2003,2047		CCSSCH120J50
	C 1857-1860,1863,1865		CKSSYB104K10
	C 1861,1862,1864		CKSSYB103K16
	C 1866-1869,2037,2040		CKSSYB103K16
	C 1870-1872,1877,1878		CKSSYB104K10
	C 1873,1883,1884,2026		CCSSCH102J50
	C 1879,1880,2166		CKSSYB104K16
	C 2004-2012,2014,2017		CKSSYB104K10
	C 2015,2016,2019,2540		CKSRYB105K10
	C 2018,2036,2039,2043		CKSSYB104K10
	C 2028,2041,2152		CCSSCH102J50
	C 2029,2032,2156,2159 (4.7 uF/10 V)		DCH1201
	C 2042,2044,2048,2050		CKSSYB103K16
	C 2045,2046,2049,2052		CKSSYB104K10
	C 2051,2054-2056		CKSSYB103K16
	C 2053,2165,2415,2417		CCSSCH120J50
	C 2057-2059,2063,2065		CKSSYB104K10
	C 2060 (2.2 uF/10 V)		CCG1218
	C 2066,2368,2375,2378		CCSSCH471J50
	C 2067,2154,2155,2157		CKSSYB104K10
	C 2068 (22 uF/16 V)		CCG1254
	C 2158,2160,2162-2164		CKSSYB104K10
	C 2161,2414		CCSSCH150J50
	C 2167-2177,2301,2302		CKSSYB104K10
	C 2184-2186,2397,2538		CCSSCH102J50
	C 2187,2314,2319,2320		CKSSYB102K50
	C 2305,2307-2313		CKSSYB104K10
	C 2306,2507		CKSSYB471K50
	C 2315-2318,2321,2322		CKSSYB104K10
	C 2324,2325,2328-2331		CKSSYB104K10
	C 2326,2327,2332,2333		CKSSYB102K50
	C 2334-2337,2340-2343		CKSSYB104K10
	C 2338,2339,2344,2345		CKSSYB102K50
	C 2346-2348,2351,2352		CKSSYB104K10
	C 2349,2350,2353,2359		CKSSYB102K50
	C 2354-2358,2361,2367		CKSSYB104K10
	C 2360		CKSSYB221K50
	C 2362,2370,2371,2386		CKSSYB102K50
	C 2363-2366,2369,2372		CKSSYB103K16
	C 2373,2385,2387,2398 (4.7 uF/10 V)		DCH1201
	C 2374,2381-2383,2394		CKSSYB104K10
	C 2376,2377,2379,2392		CKSSYB103K16
	C 2380,2419		CCSSCH471J50
	C 2384		CEVW101M16
	C 2389,2390,2408,2409		CKSSYB102K50
	C 2393,2400,2406,2407		CKSSYB103K16
	C 2395,2401,2403-2405		CKSSYB104K10
	C 2396,2411,2412,2537		CCSSCH101J50
	C 2399,2402,2541 (4.7 uF/10 V)		DCH1201
	C 2410,2418,2422,2423		CKSSYB104K10
	C 2413,2420,2421,2503		CKSSYB102K50
	C 2501,2505,2603,2610		CKSSYB104K10
	C 2502		CEVW101M4
	C 2504,2506,2508-2510		CKSSYB103K16
	C 2511,2513,2515,2517		CKSSYB102K50
	C 2512,2514,2516,2518		CKSSYB103K16
	C 2519,2521,2523,2525		CKSSYB102K50
	C 2520,2522,2524,2526		CKSSYB103K16
	C 2527,2529,2531,2533		CKSSYB102K50
	C 2528,2530,2532,2534		CKSSYB103K16
	C 2535		CKSSYB102K50
	C 2536,2539,2542-2548		CKSSYB103K16
	C 2602,2609,2612		CCSSCH102J50
	C 2608,2611		CKSSYB103K16

Mark	No.	Description	Part No.
	C 2613		CKSSYB104K10

B
AUDIO ASSY

SEMICONDUCTORS

	IC 5101,5102,5104-5107		TC7SH08FUS2
	IC 5103		TC7WHU04FKS1
	IC 5109		TC7SH08FUS2
	IC 5201,5401,6001-6003		NJM4580MD
	IC 5202,5203,5402,5403		NJM2121MD
	IC 5204,5404		AK5386VT
	IC 5601,5602		NJM2121MD
	IC 5603,5604		AK5358AET
	IC 5801		AK4384ET
	IC 5802		AK4458VN
	IC 6004,6005,6203,6204		NJM4580DD
	IC 6201,6202,6401		NJM4580MD
	IC 6402		NJM4565MD
⚠	IC 6601		MM1856A50N
⚠	IC 6602,6603		BD9328EFJ
⚠	IC 6604		NJM2831F33
⚠	IC 6605,6606		BD9851EFV
⚠	IC 6607		NJM78M09DL1A
⚠	IC 6608		NJM2872BF33
⚠	IC 6609,6610		NJM7805DL1A
⚠	IC 6611		NJM78M15DL1A
⚠	IC 6612		NJM79M15DL1A
	Q 5201,5203,5401,5403		2SK3320
	Q 5202,5402,5601		LTC114EUB
	Q 6001		RN2903
	Q 6002-6011,6014-6017		INC2002AC1
	Q 6201-6208,6401,6402		INC2002AC1
	Q 6405,6406		2SK209
	Q 6407,6408		INC2002AC1
	Q 6409,6411,6606,6808		2SC4081
	Q 6410,6412,6801-6806		2SA1576A
	Q 6413,6415		2SCR573D3
	Q 6414,6416		2SAR573D3
	Q 6601		LTC024EEB
⚠	Q 6602,6604		RSQ030P03
⚠	Q 6603		RSR020P05
⚠	Q 6605		RSQ045N03
⚠	Q 6607		RTQ040P02
	Q 6807		LTC014YEB
	Q 6809,6903		LSCR523UB
	Q 6901		RT3T22M
	Q 6902		RT3N22M
	Q 6904		HN1A01FUS1
	D 6201,6401-6404,6608		1SS355VM
	D 6602-6606		RB162MM-40TF
	D 6609,6610		RB501V-40
	D 6801-6806,6904		1SS355VM
	D 6901		UDZV7R5
	D 6902		RB160M-30

MISCELLANEOUS

	L 5101	CHIP BEADS	VTL1126
	L 6601	POWER INDUCTOR (0.22 uH)	ATH7053
	L 6602,6603	CHOKE COIL (22 uH)	CTH1561
	L 6604-6607	POWER INDUCTOR (22 uH)	ATH7011
	JA 5201,5401	4P PIN JACK	DKB1090
	JA 5601,6001	RCA JACK	DKB1122
	JA 6002,6003	CANON CONNECTOR	DKB1093
	JA 6201,6202	6.5 DIA JACK	DKN1653
	JA 6401,6402	6.5 DIA JACK	DKN1652
	X 5101	CRYSTAL OSCILLATOR (22.579 2 MHz)	DSS1215
	CN 5001	19P PLUG	AKM7077
	CN 5002	FFC/FPC CONNECTOR	CKS6543
	CN 5601	9P CONNECTOR	09R-1.25FJ

Mark	No.	Description	Part No.
	CN 6401	CONNECTOR	AKM1277
	CN 6601	CONNECTOR	DKN1661
	VA 5201-5206,5401-5406	VARISTORS	EZJZ1V270RM
	VA 5601-5603,6001-6009	VARISTORS	EZJZ1V270RM
	VA 6201-6205,6401-6403	VARISTORS	EZJZ1V270RM

RESISTORS

Mark	No.	Description	Part No.
	R 5130,6678,6679		RS1/10SR0R0J
	R 5201,5203-5205,5401		RS1/16SS1000D
	R 5202,5207,5209,5210		RS1/16SS2000D
	R 5206,5211,5214,5216		RS1/16SS4702D
	R 5212,5213,5222,5223		RN1/16SE1201D
	R 5217,5224,5416,5424		RS1/10SR470J
	R 5218,5227,5420,5427		RN1/16SE1001D
	R 5220,5225,5228,5232		RN1/16SE1501D
	R 5231,5235,5429,5435		RN1/16SE2703D
	R 5234,5237,5434,5437		RN1/16SE2202D
	R 5239,5240,5439,5440		RS1/16SS3001D
	R 5241,5242,5441,5613		RS1/10SR2701D
	R 5243,5244,5443,5444		RS1/16SS2701D
	R 5245,5246,5445,5446		RS1/16SS6800D
	R 5402,5407,5409,5410		RS1/16SS2000D
	R 5403-5405,5601,5602		RS1/16SS1000D
	R 5406,5411,5412,5415		RS1/16SS4702D
	R 5413,5414,5422,5423		RN1/16SE1201D
	R 5421,5425,5428,5430		RN1/16SE1501D
	R 5442		RN1/16SE2701D
	R 5603,5604		RS1/16SS2000D
	R 5605,5606,6613		RS1/16SS4702D
	R 5609-5612,6666		RS1/16SS3001D
	R 5614,5616		RS1/10SR8201D
	R 5615,6021-6028		RS1/10SR2701D
	R 5617,5618,5621,5622		RS1/16SS3601D
	R 5619,5620,5623,5624		RS1/16SS8200D
	R 5829-5831		RS1/4SA0R0J
	R 6001-6004		RS1/10SR513J
	R 6005-6012		RS1/10SR3301D
	R 6013-6020		RS1/10SR1202D
	R 6029-6036		RS1/8SQ5600F
	R 6037-6040,6049-6052		RS1/10SR223J
	R 6041-6044		RS1/8SQ2700F
	R 6053-6060		RS1/10SR1800F
	R 6061,6062		RS1/10SR2202D
	R 6063,6064,6405-6408		RS1/10SR1002D
	R 6065-6072,6225-6232		RS1/10SR5601D
	R 6073,6074,6413,6414		RS1/10SR6800D
	R 6075-6082,6233-6240		RS1/10SR6801D
	R 6083,6084,6427,6428		RS1/10SR104J
	R 6085-6092		RS1/4SA471J
	R 6093,6094,6107-6110		RS1/10SR183J
	R 6095-6098,6245-6248		RS1/10SR2201D
	R 6111,6112,6253-6256		RS1/10SR330J
	R 6113,6114,6117,6120		RS1/16SS15R0D
	R 6121-6124 (22 ohm)		DCN1198
	R 6201-6208		RS1/10SR4701D
	R 6209-6216		RS1/10SR1602D
	R 6217-6224,6409-6412		RS1/10SR3601D
	R 6241-6244 (330 ohm)		DCN1200
	R 6249-6252,6257-6260		RS1/10SR183J
	R 6261-6264,6641,6647		RS1/10SR330J
	R 6401-6404		RS1/10SR5601D
	R 6415,6416		RS1/10SR183J
	R 6421,6422		RS1/16SS3300D
	R 6425,6426		RS1/16SS3901D
	R 6429,6430		RN1/16SE1502D
	R 6431,6432		RS1/16SS3301D
	R 6438,6440		RS1/8SQ680J
	R 6441-6444		RN1/16SE3301D
	R 6445-6448,6663		RS1/16SS1001D
	R 6449-6452,6612,6615		RS1/16SS1801D
	R 6453-6460		RS1/4SA220J
	R 6601,6682-6685		RS1/8SQ0R0J
	R 6610,6623,6626,6655		RS1/16SS6802D
	R 6611		RS1/16SS3302D
	R 6614,6619,6621,6634		RS1/16SS1002D
	R 6616		RS1/16SS1802D
	R 6617		RS1/16SS2201D
	R 6618,6620,6638		RS1/16SS1502D
	R 6622,6625,6646,6651		RS1/16SS3002D
	R 6628		RS1/16SS5102D
	R 6629		RS1/16SS5601D
	R 6631		RS1/16SS1803D
	R 6633		RS1/16SS2200D
	R 6635,6658,6659		RS1/16SS1002D
	R 6639,6648		RS1/10SR220J
	R 6649,6652		RS1/10SR105J
	R 6654		RS1/16SS6201D
	R 6656		RS1/16SS6802D
	R 6662		RS1/16SS6202D
	R 6664		RS1/16SS1503D
	R 6665		RS1/16SS5101D
	R 6669		RS1/16SS2002D
	Other Resistors		RS1/16SS###J

CAPACITORS

Mark	No.	Description	Part No.
	C 5001,5003,5004,5218		CKSSYB104K16
	C 5007,5009,5014,5015		CKSSYB104K10
	C 5101,5106,5109,5112		CKSSYB104K10
	C 5102,5107,5111,5113		CCSSCH102J50
	C 5103,5206,5210-5212		CCSSCH101J50
	C 5104,5110,5632,5806		CKSSYB103K16
	C 5116		CCSSCH180J50
	C 5117,5119,5121,5123		CKSSYB104K10
	C 5118,5120,5122,5124		CCSSCH102J50
	C 5127,5240,5243,5247		CKSSYB104K10
	C 5128,5223,5226,5241		CCSSCH102J50
	C 5201,5204,5401,5404		CKSSYB102K50
	C 5202,5205,5402,5405		CKSRYB104K25
	C 5203,5207,5403,5407		CCSSCH221J50
	C 5208,5209,5214,5219		CCSSCH471J50
	C 5213,5217,5413,5417		CKSRYB123K50
	C 5215,5220,5255,5415		CCSSCH331J50
	C 5216,5221,5416,5421		CEVW101M16
	C 5222,5225,5422,5425 (0.012 uF/63 V)		ACE7125
	C 5224,5227,5424,5427 (3 300 pF/50 V)		DCG1049
	C 5228,5230-5232,5263		CCSSCH101J50
	C 5229,5233,5429,5433 (100 uF/25 V)		CCH2000
	C 5234,5235,5408,5409		CCSSCH471J50
	C 5236,5237,5249,5250 (220 uF/16 V)		CCH2090
	C 5238,5242,5438,5442 (10 uF/16 V)		CCH1998
	C 5239,5439,5809,5812 (1 uF/25 V)		ACE7129
	C 5244,5423,5426,5441		CCSSCH102J50
	C 5245,5445,5631,5634 (10 uF/10 V)		DCH1201
	C 5248,5440,5443,5447		CKSSYB104K10
	C 5251,5252,5449,5450 (0.1 uF/35 V)		ACE7100
	C 5253,5826,6720,6784 (0.01 uF/50 V)		ACE7113
	C 5254,6076,6083 (1 000 pF/50 V)		ACE7120
	C 5264,6235-6238 (470 pF/50 V)		ACE7119
	C 5265,5854,6618,6754		ACE7115
	C 5406,5410-5412,5428		CCSSCH101J50
	C 5414,5419,5434,5435		CCSSCH471J50
	C 5418,6423,6601,6606		CKSSYB104K16
	C 5420,6005-6008,6074		CCSSCH331J50
	C 5430-5432,5605,5606		CCSSCH101J50
	C 5436,5437,5811,5828 (220 uF/16 V)		CCH2090
	C 5444,5608,5609,5637		CCSSCH102J50
	C 5448,5633,5638,5641		CKSSYB104K10
	C 5601,6064		CKSSYB102K50
	C 5602,5607,5610,6428		CKSRYB104K25
	C 5603,5604,6401,6402		CCSSCH221J50
	C 5612,5620		CEVW101M25

Mark	No.	Description	Part No.
	C	5616-5619,5643,5645	CCSSCH101J50
	C	5621,5622,5626,5627	CCSSCH471J50
	C	5623,5628,6634,6636 (100 uF/16 V)	CCH1565
	C	5624,5625,5810	CEVW101M16
	C	5629,5630 (22 uF/6.3 V)	DCH1256
	C	5635,5636	CEVW220M16
	C	5639,5802,5818,5819	CCSSCH102J50
	C	5640,5642,5646,5647 (10 uF/10 V)	DCH1201
	C	5644,5648-5651,5801	CKSSYB104K10
	C	5803	CEVW220M6R3
	C	5804,5807,5817,5831	CKSSYB104K10
	C	5808,6620-6622,6669	CKSSYB103K16
	C	5813,5834,5841,5857 (1 uF/25 V)	ACE7129
	C	5814,5827,5840,5853 (0.1 uF/35 V)	ACE7100
	C	5815,5839,6077,6084 (0.01 uF/63 V)	ACE7097
	C	5816,6625,6662,6681	CKSRYB105K10
	C	5820,5821,5829,5835	CCSSCH101J50
	C	5823,5830,5832,5836	CCSSCH102J50
	C	5833,6623,6624,6652	CKSSYB104K10
	C	5843,6035,6036,6053 (220 uF/16 V)	CCH2090
	C	5855,6078,6085,6629 (0.1 uF/35 V)	ACE7100
	C	5856,5868,5869	CCSSCH101J50
	C	6001-6004,6743,6744 (100 uF/25 V)	CCH2000
	C	6009-6016,6018,6021	CCSSCH101J50
	C	6023,6024,6027,6030	CCSSCH101J50
	C	6037,6040,6042,6043	CCSSCH101J50
	C	6045-6052,6205-6228	CCSSCH101J50
	C	6054,6056,6057,6434 (220 uF/16 V)	CCH2090
	C	6058,6059,6066-6069 (1 000 pF/63 V)	ACE7099
	C	6070,6072,6239,6432	CKSSYB103K25
	C	6081	CCSSCH331J50
	C	6201-6204,6714	CCSSCH271J50
	C	6229-6234,6403,6407	CEVW101M16
	C	6404,6406,6420,6421	CCSSCH121J50
	C	6408,6409,6610-6612	CCSSCH101J50
	C	6411,6412,6658,6684	CEVW101M16
	C	6413,6414	CEVW470M16
	C	6415,6416,6424,6426	CCSSCH102J50
	C	6418,6419 (2 200 pF/63 V)	ACE7116
	C	6422,6425	CCSSCH330J50
	C	6427,6435-6438	CKSRYB104K16
	C	6430,6715,6716,6748	CKSRYB104K25
	C	6439,6641,6902,6904 (220 uF/16 V)	CCH2090
	C	6442,6443	CCSSCH121J50
	C	6602,6603	CKSRYB474K16
	C	6604,6605,6630,6633 (10 uF/16 V)	DCH1263
	C	6607,6619,6639,6640	CKSSYB104K16
	C	6608,6609,6615-6617	CCSSCH102J50
	C	6628 (0.01 uF/63 V)	ACE7097
	C	6631,6689,6717,6761 (0.1 uF/35 V)	ACE7100
	C	6635,6693,6757,6768 (1 uF/25 V)	ACE7129
	C	6637 (3.3 uF/16 V)	DCE1029
	C	6644	CKSSYB332K50
	C	6645	CCSSCH821J50
	C	6650,6651,6679,6700	CCSSCH102J50
	C	6653,6671,6794,6796	CKSSYB104K16
	C	6654,6656,6709,6710 (10 uF/10 V)	DCH1201
	C	6655,6657,6670,6672 (10 uF/16 V)	DCH1263
	C	6659,6765,6770,6773 (100 uF/16 V)	CCH1565
	C	6660	CKSRYB474K10
	C	6661	CKSRYB334K10
	C	6664	CCSSCH221J50
	C	6665	CKSSYB223K16
	C	6666	CCSSCH680J50
	C	6673,6676,6680,6686 (22 uF/16 V)	CCG1254
	C	6674,6677	CCSSCH561J50
	C	6675,6683,6690,6786 (10 uF/16 V)	DCH1263
	C	6678,6747,6753,6755	CCSSCH101J50
	C	6682,6687,6707,6708	CKSSYB104K10
	C	6685,6691	CKSYB105K16

Mark	No.	Description	Part No.
	C	6688,6695,6697,6725	CKSRYB105K10
	C	6696,6730	CKSQYB105K16
	C	6698 (2.2 uF/10 V)	CCG1218
	C	6702,6706	CKSSYB682K25
	C	6703 (4.7 uF/10 V)	CCG1201
	C	6713	CCSSCH471J50
	C	6718,6719 (10 uF/35 V)	CCG1236
	C	6721,6722,6728,6729	CCSSCH102J50
	C	6724,6727,6731	CKSQYB105K25
	C	6726	CKSRYB105K10
	C	6734,6737,6745,6746	CKSQYB334K50
	C	6738,6741,6742,6749	CCSSCH102J50
	C	6739,6740 (10 uF/10 V)	DCH1201
	C	6750	CKSSYB103K25
	C	6751,6756,6760	CCSRCH102J50
	C	6752,6762,6763,6777	CCSSCH102J50
	C	6758,6759	CCSRCH101J50
	C	6764	CKSRYB104K10
	C	6766,6767	CKSRYB104K25
	C	6769,6771,6772 (1 uF/25 V)	ACE7129
	C	6776	CCSSCH101J50
	C	6779,6780	CCSRCH331J50
	C	6783 (0.1 uF/35 V)	ACE7100
	C	6785 (4 700 pF/63 V)	ACE7115
	C	6787 (10 uF/16 V)	DCH1263
	C	6792 (100 uF/16 V)	CCH1565
	C	6793,6795	CCSSCH102J50
	C	6801,6903	CKSSYB103K16

SUBA ASSY
Consists of
MCIN ASSY
HPJK ASSY
MCTR ASSY
CHF1 ASSY
CHF2 ASSY
PLAY1 ASSY
PLAY2 ASSY
SER1 ASSY
SER2 ASSY

C D F J K W X Y Z

SUBA ASSY

SEMICONDUCTORS

IC	7601,7602		NJM4580MD
Q	7601-7604		2SK209
Q	7701,7702		INC2002AC1
Q	7951,7952,8001,8002		LTC114YUB
Q	8301,9401		LTC124EUB
D	7701-7704		DF2B18FU
D	7951,8001		LTL17KCGP4J
D	7952,8002		LTL17KSL5D-P
D	8301-8305,9401-9405		1SS355VM

MISCELLANEOUS

L	7601,7602	CHIP SOLID INDUCTOR	XTL3010
JA	7601,7602	XLR SOCKET	DKB1124
JA	7701	STEREO MINI JACK	XKN3017
JA	7702	6.5 DIA JACK	DKN1669
KN	7701	SCREW PLATE	VNE1948
S	7951,7952,8001	TACTILE SWITCH	DSG1151
S	8002	TACTILE SWITCH	DSG1151
S	8301-8305,9401-9405	TACT SWITCH	DSG1089
CN	7601	CONNECTOR	CKS3561
CN	7602	9P CONNECTOR	09P-1.25FJ
CN	7701	L-PLUG(6P)	KM200NA6L
CN	7751	PLUG	CKS3533
CN	7901,7911	L-PLUG(3P)	KM200NA3L
CN	7951,8001	10P CONNECTOR	VKN1241
CN	7952,8002	4P JUMPER CONNECTOR	52147-0410

Mark	No.	Description	Part No.
	CN 8301,9401	4P JUMPER CONNECTOR	52147-0410
	CN 8302,9402	12P CONNECTOR	VKN1243
	VA 7601-7606,7702,7703	VARISTORS	EZJZ1V270RM

RESISTORS

	R	7601-7604	RN1/16SE1000D
	R	7605-7608	RN1/16SE2200D
	R	7609-7612	RN1/16SE3301D
	R	7613,7614,7627,7628	RN1/16SE2701D
	R	7615,7616,7624,7626	RN1/16SE4701D
	R	7617,7618,7621,7622	RN1/16SE1501D
	R	7619,7620	RN1/16SE8200D
	R	7623,7625	RS1/10SR1500D
	R	7631,7632	RN1/16SE1201D
	R	7633,7634	RS1/10SR5102D
	VR	7751,7752	ROTARY VR DCS1123
	VR	7901,7911	SLIDE VR DCV1027
	Other Resistors		RS1/10SR###J

CAPACITORS

	C	7601,7603,7609-7616	CCSRCH102J50
	C	7602,7604,7623,7624	CKSRYB103K50
	C	7605-7608 (0.01 uF/50 V)	ACE7113
	C	7617-7620,7627,7628	CCSRCH471J50
	C	7621,7622	CCSRCH101J50
	C	7625,7626	CCSRCH331J50
	C	7635,7636	CEAT101M25
	C	7638,7640,7642	CCSRCH102J50
	C	7643,7644	CEANP101M16
	C	7645,7646	CCSRCH471J50
	C	7647,7648	CKSRYB102K50
	C	7649,7650	CKSRYB104K25
	C	7701,7702,7710,7711 (220 uF/6.3 V)	DCH1344
	C	7703-7706	CKSRYB223K50
	C	7707,7709	CKSRYB103K50
	C	7951,7952,8001,8002	CKSRYB103K25
	C	7954,8004 (10 uF/10 V)	DCH1201
	C	7955,8005	CKSRYB104K10

PADA ASSY
Consists of
LCDB ASSY
PAD1 ASSY
PAD2 ASSY
USBA ASSY
CRFD ASSY

E N O P AE

PADA ASSY

SEMICONDUCTORS

	IC	3601	BU90R104
	IC	3602-3604	74LCX541FT
⚠	IC	3605	R1290K103A
	IC	3606	AK4187VN
	IC	3901,3902,4101,4102	74VHC595FT
	Q	3601	2SAR502UB
	Q	3603-3614	LTC023JEB
	Q	3901-3908,3929-3934	LTC123JUB
	Q	3917,3919,3921,4117	LTC124EUB
	Q	3918,3920,3922,4118	2SB1689
	Q	3923-3928,3935-3940	LSCR523UB
	Q	3941-3946,4101-4108	LTC123JUB
	Q	4119,4121	LTC124EUB
	Q	4120,4122	2SB1689
	Q	4123-4128,4135-4140	LSCR523UB
	Q	4129-4134,4141-4146	LTC123JUB
	D	3602-3604	RB548W
	D	3605	RB162MM-40TF
	D	3606,3619-3622	NHSW146A-A21460
	D	3607	FC-F1608BAK5
	D	3608,3609,3611-3618	SML-D12M8W(NP)
	D	3610	SML-D12V8W
	D	3909-3912,3921-3924	NSSM124F-A21107
	D	3913-3920,3925-3932	1SS355VM
	D	3933,3935,3937,3939	NSSM124F-A21107
	D	3934,3936,3938	1SS355VM
	D	3940-3960,4113-4120	1SS355VM
	D	4109-4112,4121-4124	NSSM124F-A21107
	D	4125-4132,4134,4136	1SS355VM
	D	4133,4135,4137,4139	NSSM124F-A21107
	D	4138,4140-4160	1SS355VM

MISCELLANEOUS

	L	3601,3623	CHIP BEEDS FILTER BTX1042
	L	3602	CHIP BEEDS FILTER BTX1047
	L	3603,3604	CHIP SOLID INDUCTOR XTL3010
	L	3605,3612-3621	CHIP BEADS VTL1126
	L	3607	SMD SPL INDUCTOR CTH1531
	L	3608,3622	CHIP INDUCTOR (10 uH) DTL1105
	L	3609	INDUCTOR (10 uH) CTF1635
	L	3624-3632	CHIP BEADS VTL1126
	JA	4301,4302	USB JACK DKB1118
	S	3601,3604-3610	TACT SWITCH DSG1134
	S	3602,3603,3611,3616	PUSH SWITCH CSG1155
	S	3612-3615	TACT SWITCH DSG1134
	S	3617	ENCODER SW DSX1080
	S	3901-3904,4101-4104	PUSH SWITCH CSG1155
	CN	3601	FFC/FPC CONNECTOR CKS6543
	CN	3602	CONNECTOR CKS4428
	CN	3603	FFC/FPC CONNECTOR CKS6646
	CN	3604	FFC/FPC CONNECTOR CKS6625
	CN	3901,4101	FFC/FPC CONNECTOR DKP3953
	CN	4301,4302	CONNECTOR AKM1277
	CN	4401	CONNECTOR AKM1289
	VA	4301-4306	SMD VARISTOR EZJZ1V80010

RESISTORS

	R	3606-3609,3655,3671	RS1/16SS1000D
	R	3610,3680	RAB4CQ103J
	R	3614,3616,3617,3620	RAB4CQ220J
	R	3629-3632	RAB4CQ331J
	R	3635	RS1/16SS3603D
	R	3636	RS1/16SS5602D
	R	3637	RS1/16SS5601D
	R	3642	RS1/16SS1103D
	R	3643	RS1/16SS1202D
	R	3647	RS1/16SS1102D
	R	3650	RS1/16SS3303D
	R	3651	RS1/16SS2202D
	R	3654	RS1/16SS3902D
	R	3659	RS1/16SS15R0D
	R	3660,3664	RS1/16SS22R0D
	R	3662	RS1/16SS82R0D
	R	3663,3668,3669	RS1/16SS39R0D
	R	3665	RS1/16SS68R0D
	R	3666	RS1/16SS1500D
	R	3667	RS1/16SS27R0D
	R	3670	RS1/16SS1200D
	R	3672	RS1/16SS8200D
	R	3673	RS1/16SS1000D
	R	3674	RS1/16SS4700D
	R	3917-3928,3948-3959	RS1/10SR681J
	R	3929-3932,3960-3963	RS1/8SQ331J
	R	3933-3936,3964-3967	RS1/8SQ391J
	R	3938-3941,3969-3972	RS1/4SA271J
	R	3944-3947,3975-3978	RS1/4SA331J
	R	3979-3986,4179-4186	RS1/4SA561J
	R	3987-3994,4187-4194	RS1/8SQ122J
	R	3996-3999,4196-4199	RS1/4SA152J
	R	4002-4005,4202-4205	RS1/4SA122J
	R	4006,4010,4018,4025	RAB4CQ222J
	R	4007,4011,4019,4022	RS1/10SR822J

Mark	No. Description	Part No.
	R 4008,4012,4020,4023	RS1/10SR123J
	R 4009,4013,4021,4024	RS1/10SR103J
	R 4014-4017,4026-4030	RS1/10SR0R0J
	R 4117-4128,4148-4159	RS1/10SR681J
	R 4129-4132,4144-4147	RS1/8SQ331J
	R 4133-4136,4164-4167	RS1/8SQ391J
	R 4138-4141,4169-4172	RS1/8SQ271J
	R 4160-4163,4175-4178	RS1/8SQ331J
	R 4206,4207,4214,4217	RAB4CQ222J
	R 4208,4211,4220,4223	RS1/10SR822J
	R 4209,4212,4221,4224	RS1/10SR123J
	R 4210,4213,4222,4225	RS1/10SR103J
	R 4215,4216,4218,4219	RS1/10SR0R0J
	R 4226-4230,4401	RS1/10SR0R0J
	VR 4401 VARIABLE RESISTOR	CCW1024
	Other Resistors	RS1/16SS###J
CAPACITORS		
	C 3604,3615,3620,3623	CKSSYB104K10
	C 3614,3617,3760,3763 (10 uF/10 V)	DCH1201
	C 3616 (22 uF/16 V)	CCG1254
	C 3619,3621,3622,3625	CKSSYB103K16
	C 3624,3635,3637,3645	CKSSYB104K10
	C 3628,3738 (2.2 uF/10 V)	CCG1218
	C 3633,3639,3646,3697	CKSSYB103K16
	C 3654-3656,3721-3723	CKSSYB104K10
	C 3677	CKSRYB103K50
	C 3678,3694,3701-3704	CKSSYB102K50
	C 3679,3719,3720	CKSRYB105K10
	C 3680,3690,3724,3751 (1 uF/10 V)	DCH1246
	C 3682,3683	CKSQYB105K25
	C 3684	CKSQYB475K6R3
	C 3686,3689,3699	CKSSYB104K16
	C 3687,3688	CKSQYB474K25
	C 3692	CKSSYB224K6R3
	C 3693,3715	CKSYB475K16
	C 3695	CKSSYB561K50
	C 3696	CKSSYB332K50
	C 3698,3700,3728,3735 (10 uF/16 V)	DCH1263
	C 3716-3718,3731	CKSSYB104K16
	C 3727,3734,3736	CKSSYB102K50
	C 3729 (10 uF/6.3 V)	CCG1234
	C 3732,3743,3745,3761	CKSSYB104K10
	C 3739	CKSSYB103K25
	C 3741 (4.7 uF/10 V)	CCG1201
	C 3742	CKSQYB334K50
	C 3744	CKSRYB104K25
	C 3748-3750,3752-3754	CCSSCH102J50
	C 3756-3758,4305,4306	CCSSCH102J50
	C 3762,3930,4130,4402	CKSSYB104K10
	C 3901,3902,3920-3925	CKSSYB103K16
	C 3903-3910,4103-4110	CCSSCH101J50
	C 3913,4113 (10 uF/10 V)	DCH1201
	C 3927,4127	CEVW101M16
	C 3928,3929,4101,4102	CKSSYB103K16
	C 4120-4125,4128,4129	CKSSYB103K16
	C 4303,4304	CKSSYB103K16
	C 4401	CKSSYB471K50

UCOMA ASSY
Consists of
UCOM ASSY
EFSW ASSY

G I

UCOMA ASSY

SEMICONDUCTORS

Mark	No. Description	Part No.
	IC 4501	74LCX244FT
NSP	IC 4502	DYW2159*
	*Part number of the initial firmware equipped	
	IC 4503	PST8430N
NSP	IC 4505	DYW2160*
	*Part number of the initial firmware equipped	
⚠	IC 4508	NJM2872BF33
	IC 4509-4514	TC7SH08FUS2
	Q 4501	LTA024EEB
	Q 4503	LTC043EEB
	Q 4505,4507,4509	LSAR523UB
	Q 4506,4508,4510	LTC024EEB
	Q 4901-4908	LTC124EUB
	Q 4909-4914	2SC4081
	Q 4915	KTA1532U
	D 4501-4511,4901-4924	1SS355
	D 4925,4927,4929,4935	SLR343BD2T
	D 4931	LTL17KCGP4J
	D 4933	LTL17KRH5D-P
MISCELLANEOUS		
	L 4501,4502 CHIP COIL (33 uH)	LCTAW330J2520
	S 4901,4902,4904,4908 TACT SWITCH	DSG1089
	S 4903,4905,4906,4910 TACT SWITCH	DSG1079
	S 4907 SLIDE SWITCH	DSH1058
	S 4909 TACT SWITCH	DSG1089
	S 4911,4912 ROTARY ENCODER	DSX1137
	S 4913 ROTARY ENCODER	DSX1136
	X 4501 CRYSTAL RESONATOR (16 MHz)	BSS1146
	CN 4503,4515 27P CONNECTOR	VKN1287
	CN 4504,4505 FFC/FPC CONNECTOR	CKS6645
	CN 4506,4901 35P CONNECTOR	VKN2025
	CN 4507 19P CONNECTOR	VKN1250
	CN 4508 FFC/FPC CONNECTOR	CKS6645
	CN 4509,4517,4519,4520 CONNECTOR	CKS3871
	CN 4510-4514 PLUG(3P)	KM200NA3
	CN 4516 FFC/FPC CONNECTOR	DKP3953
	CN 4518 24P CONNECTOR	VKN1255
RESISTORS		
	R 4514-4517,4594,4595	RAB4CQ101J
	R 4556,4566,4568	RAB4CQ560J
	R 4567,4638	RAB4CQ103J
	R 4583-4586,4626,4636	RAB4CQ560J
	R 4646,4647,4654	RAB4CQ560J
	R 4690,4693,4712,4740	RS1/8SQ0R0J
	R 4697-4704,4750-4752	RS1/4SA2R0J
	R 4716-4723	RS1/4SA3R3J
	R 4741,4745	RS1/8SQ0R0J
	R 4907-4912	RS1/10SR222J
	R 4919-4924	RS1/10SR473J
	R 4925	RS1/10SR681J
	R 4926,4927	RS1/10SR223J
	R 4928-4930,4934-4936	RS1/10SR122J
	R 4931,4937,4940	RS1/10SR561J
	R 4932,4933	RS1/10SR821J
	R 4939	RS1/10SR102J
	VR 4901 POTENTIONETER	DCS1065
	Other Resistors	RS1/16SS###J
CAPACITORS		
	C 4502,4510,4528,4529	CKSSYB104K10
	C 4503-4508,4540	CCSSCH100D50
	C 4509,4563,4672,4698	CEVW101M16
	C 4511-4527,4530-4533	CCSSCH471J50
	C 4534,4535,4539,4544	CCSSCH102J50
	C 4536,4537,4541,4542	CKSSYB103K16
	C 4538,4543,4547,4548	CKSSYB104K10
	C 4545	CCSSCH120J50
	C 4546,4549-4551,4553	CCSSCH471J50
	C 4552	CKSSYB473K10
	C 4558,4577-4579,4581	CCSSCH101J50
	C 4564,4576,4592,4593	CKSSYB104K10
	C 4565,4588,4591,4594	CCSSCH471J50
	C 4566-4570,4589,4598	CCSSCH102J50

Mark	No.	Description	Part No.
	C	4571-4575	CKSSYB103K16
	C	4583-4585,4587	CCSSCH101J50
	C	4595,4614,4617,4620	CKSSYB104K10
	C	4596,4597,4599,4601	CCSSCH471J50
	C	4600,4659	CCSSCH102J50
	C	4602,4606	CCSSCH471J50
	C	4603-4605,4607	CCSSCH101J50
	C	4615,4616,4618,4621	CKSSYB104K16
	C	4635,4640,4644,4645	CKSSYB104K10
	C	4637,4683,4687,4699	CKSSYB104K16
	C	4642,4651,4695,4696 (10 uF/10 V)	DCH1201
	C	4648	CKSSYB103K25
	C	4650 (2.2 uF/10 V)	CCG1218
	C	4655,4661,4663,4665	CKSSYB104K10
	C	4662,4664,4666,4690	CKSSYB102K50
	C	4667-4669,4678,4682	CKSSYB104K10
	C	4675-4677,4701-4703	CCSSCH101J50
	C	4686,4689,4691,4693	CKSSYB104K10
	C	4692,4694	CKSSYB102K50
	C	4697,4704,4705,4708	CKSSYB104K10
	C	4710,4715,4717,4718	CKSSYB104K10
	C	4720,4721,4737,4739	CKSSYB104K10
	C	4735,4736,4738,4740	CKSSYB104K16
	C	4741,4742,4747-4750	CKSSYB104K10
	C	4761,4762	CKSSYB104K10
	C	4901,4908,4909	CKSRYB104K16
	C	4903,4906	CKSRYB104K10
	C	4905,4907	CEVW470M16

H

MIXER ASSY

SEMICONDUCTORS

	IC	7001-7003	TC74HC4051AF
	IC	7004	TC74VHC164F
	IC	7005,7006	TC74VHC595F
	Q	7001-7007,7010	LSCR523UB
	Q	7008,7009,7025,7027	LTC124EUB
NSP	Q	7011	2SB1694
	Q	7012-7024	LSCR523UB
	Q	7026,7028,7030,7032	KTA1532U
	Q	7029,7031,7033-7036	LTC124EUB
	D	7001,7002,7009-7014	LTL17KSL5D-P
	D	7003-7008	SLR343WBC7T
	D	7015,7016,7026,7027	LTL17KRH5D-P
	D	7017-7020,7028-7031	LTL17KSL5D-P
	D	7021-7025,7032-7036	LTL17KGH5D-P
	D	7037,7038,7048,7049	LTL17KRH5D-P
	D	7039-7042,7050-7053	LTL17KSL5D-P
	D	7043-7047,7054-7058	LTL17KGH5D-P
	D	7059-7082	1SS355VM

MISCELLANEOUS

	S	7001,7003-7008 TACT SWITCH	DSG1079
	S	7002,7009 SLIDE SWITCH	DSH1058
	S	7010-7012 TACT SWITCH	DSG1079
	S	7013-7016 SLIDE SWITCH	DSH1058
	CN	7001,7003 35P CONNECTOR	VKN2025
	CN	7002 30P CONNECTOR	VKN1261

RESISTORS

	R	7023-7046	RS1/10SR5600D
	VR	7001,7002,7008,7014 ROTARY VR	DCS1104
	VR	7003-7007,7009-7013 ROTARY VR	DCS1078
	VR	7015-7018 ROTARY VR	DCS1078
	VR	7019,7020 ROTARY VR	DCS1104
	VR	7021-7024 ROTARY VR	DCS1126
		Other Resistors	RS1/10SR###J

CAPACITORS

	C	7001-7006	CCSRCH681J50
	C	7007-7011,7076,7099	CKSRYB104K16
	C	7012-7023,7028-7039	CCSRCH471J50
	C	7024-7027,7040-7066	CKSRYB104K10
	C	7073,7080,7082,7086	CKSRYB104K10
	C	7074,7078,7084	CEJQ101M16
	C	7081,7083 (10 uF/10 V)	DCH1201
	C	7085,7088	CCSRCH471J50
	C	7087,7090	CKSRYB103K25
	C	7089,7092,7093,7100	CKSRYB104K10
	C	7101-7109	CCSRCH102J50

PNL1 ASSY
Consists of
DCK1 ASSY
TMP1 ASSY
PWSW ASSY
CHF3 ASSY
STL1 ASSY
STL2 ASSY
STL3 ASSY

L R S U

PNL1 ASSY

SEMICONDUCTORS

	IC	8101	TC74HC4051AF
	IC	8102	TC74VHC164F
	Q	8101-8105,8109,8114	LTC124EUB
	Q	8106,8110,8116,8120	2SAR502UB
	Q	8107,8108,8111-8113	LTC123JUB
	Q	8115,8117,8122,8126	HN1A01FUS1
	Q	8118,8351	LTC124EUB
	Q	8119,8123,8127,8128	LTC123JUB
	Q	8121,8124,8125	LSCR523UB
	D	8101-8111,8113,8115	1SS355VM
	D	8112,8116,8117,8119	LTL17KRH5D-P
	D	8118,8120,8122,8127	LTL17KSL5D-P
	D	8121,8123,8126,8351	LTL17KRH5D-P
	D	8124	LTL17KCBH5D
	D	8125	SLR343WBC7T
	D	8128,8130	LTL17KCGP4J
	D	8129,8131,8353	LTL17KGH5D-P
	D	8352,8354-8359	1SS355VM

MISCELLANEOUS

	KN	8101,8351 EARTH TERMINAL	AKF7002
	S	8101,8103,8104,8107 TACT SWITCH	DSG1089
	S	8102,8105,8106,8109 TACT SWITCH	DSG1079
	S	8108,8110,8112,8113 TACT SWITCH	DSG1089
	S	8111 TACT SWITCH	DSG1079
	S	8115,8117,8351-8353 TACT SWITCH	DSG1089
	S	8116,8118,8119 SLIDE SWITCH	DSH1066
	S	8401 PUSH SW	ASG1102
	CN	7921 L-PLUG(3P)	KM200NA3L
	CN	8101 30P CONNECTOR	VKN1261
	CN	8102 24P CONNECTOR	VKN1255
	CN	8103 12P CONNECTOR	VKN1243
	CN	8104,8351 16P CONNECTOR	VKN1247
	CN	8105,8401 4P JUMPER CONNECTOR	52147-0410

RESISTORS

	VR	7921 SLIDE VR	DCV1027
	VR	8101 ROTARY VR	DCS1104
	VR	8102-8107 ROTARY VR	DCS1116
	VR	8351 SLIDE VR	DCV1032
	VR	8352 VARIABLE RESISTOR	DCP1107
		Other Resistors	RS1/10SR###J

CAPACITORS

	C	8101,8107,8115-8120	CKSRYB104K10

Mark	No.	Description	Part No.
	C 8102-8105,8108-8111		CCSRCH471J50
	C 8112-8114,8352		CCSRCH102J50
	C 8121,8122,8124,8128		CKSRYB103K25
	C 8123,8126,8127,8131		CKSRYB104K10
	C 8125,8129,8132		CEJQ101M16
	C 8130		CKSRYB105K10
	C 8134,8135		CCSRCH471J50
	C 8136-8141,8353,8354		CKSRYB104K10
	C 8355		CEJQ470M16
	C 8356		CKSRYB104K10
	C 8401		CKSRYB103K25

PNL2 ASSY
Consists of
DCK2 ASSY
TMP2 ASSY
CHF4 ASSY
JOG1 ASSY
JOG2 ASSY
STL4 ASSY

M T V AC AD

PNL2 ASSY

SEMICONDUCTORS

	IC 9001		TC74HC4051AF
	IC 9002		NJM2903M
	IC 9003,9004		TC74VHC595F
	IC 9005		TC74VHC164F
	Q 9001-9003,9005,9006		LTC124EUB
	Q 9004		LTA143EUB
	Q 9007,9011,9013,9018		2SA1577
	Q 9008,9009,9014		LTC123JUB
	Q 9010,9012,9015,9019		LTC124EUB
	Q 9016,9017		HN1A01FUS1
	Q 9020		2SAR502UB
	Q 9021-9034		LSCR523UB
	Q 9035,9037,9451		LTC124EUB
	Q 9036,9038		2SB1689
	D 9001-9016,9452		1SS355VM
	D 9017,9018,9023,9024		LTL17KRH5D-P
	D 9019-9022,9025,9029		LTL17KSL5D-P
	D 9026,9030,9031		LTL17KRH5D-P
	D 9027		LTL17KCBH5D
	D 9028		SLR343WBC7T
	D 9032-9035,9044-9047		LTL17KSL5D-P
	D 9036-9040,9048-9052		LTL17KGH5D-P
	D 9041-9043,9451		LTL17KRH5D-P
	D 9453		LTL17KGH5D-P
	D 9454-9459		1SS355VM

MISCELLANEOUS

	KN 9001,9451 EARTH TERMINAL		AKF7002
	S 9001,9003,9004,9007 TACT SWITCH		DSG1089
	S 9002,9005,9006,9009 TACT SWITCH		DSG1079
	S 9008,9010,9012-9017 TACT SWITCH		DSG1089
	S 9011,9018 TACT SWITCH		DSG1079
	S 9451-9453 TACT SWITCH		DSG1089
	CN 7931 L-PLUG(3P)		KM200NA3L
	CN 9001,9002 30P CONNECTOR		VKN1261
	CN 9003 12P CONNECTOR		VKN1243
	CN 9004,9451 16P CONNECTOR		VKN1247
	CN 9601,9701 4P CONNECTOR		VKN1264
	PC 9601,9701 PHOTO INTERRUPTER		KE-2N18-15

RESISTORS

	R 9103-9113		RS1/4SA0R0J
	R 9171-9177		RS1/8SQ101J
	VR 7931 SLIDE VR		DCV1027
	VR 9001 ROTARY VR		DCS1104
	VR 9002,9006 ROTARY VR		DCS1117
	VR 9003-9005 ROTARY VR		DCS1116
	VR 9451 SLIDE VR		DCV1032
	VR 9452 VARIABLE RESISTOR		DCP1107
	Other Resistors		RS1/10SR###J

CAPACITORS

	C 9001,9004,9005,9007		CKSRYB104K10
	C 9002,9003,9008,9010		CCSRCH471J50
	C 9009,9015-9021,9023		CKSRYB104K10
	C 9011,9039,9043		CCSRCH471J50
	C 9012-9014,9452		CCSRCH102J50
	C 9022,9024,9032,9036		CKSRYB103K25
	C 9029,9035,9038		CEJQ101M16
	C 9030,9033,9037,9040		CKSRYB104K10
	C 9031,9601,9701		CKSRYB105K10
	C 9041,9042,9602,9603		CKSRYB103K25
	C 9045-9047,9055,9453		CKSRYB104K10
	C 9454		CEJQ470M16
	C 9455,9456		CKSRYB104K10
	C 9702,9703		CKSRYB103K25

JOGA ASSY
Consists of
JLCD1 ASSY
JLCD2 ASSY
XPAD ASSY

Q AA AB

JOGA ASSY

SEMICONDUCTORS

⚠	IC 3001,3201		BD00IC0WEFJ
NSP	IC 3002,3202		R5S72690W266FP
NSP	IC 3003,3203		DYW2158*
	*Part number of the initial firmware equipped		
	IC 3007,3206		W9864G6KH-5
	IC 3401		ATSAMD20E15A-MU
	Q 3001,3014,3201,3202		LTC024EEB
	Q 3002,3203		ISA1602AM1
	Q 3005,3006,3206,3207		IMX25
	Q 3007,3208		HN1A01FUS1
	Q 3008,3011,3209,3212		LSCR523UB
	Q 3401-3403		2SC4081
	D 3001-3004,3201-3204		NHSW157B-A13072
	D 3401-3403,3406-3408		SWBA05

MISCELLANEOUS

	L 3001-3004,3011-3024 INDUCTOR		CTF1639
	L 3005-3007,3205-3207 INDUCTOR		CTF1545
	L 3008-3010,3208-3210 CHIP BEADS		VTL1126
	L 3025,3225 CHIP BEADS		VTL1129
	L 3026,3226 CHIP INDUCTOR (10 uH)		DTL1105
	L 3201-3204,3211-3224 INDUCTOR		CTF1639
	L 3401 CHIP SOLID INDUCTOR		XTL3010
	X 3001,3201 CRYSTAL RESONATOR (13.333 3 MHz)		CSS1840
	CN 3001,3201 10P CONNECTOR		VKN1414
	CN 3003,3203 CONNECTOR		CKS1072
	CN 3004,3204 FFC/FPC CONNECTOR		CKS6625
	CN 3005,3205 27P CONNECTOR		VKN1431
	CN 3006,3206 FFC/FPC CONNECTOR		CKS6646
NSP	CN 3401 CONNECTOR		CKS3860

RESISTORS

	R 3001,3020,3081,3138		RS1/10SR0R0J
	R 3002,3202		RS1/10SR9101D
	R 3003,3203		RS1/10SR1602D
	R 3013,3016,3017,3019		RAB4CQ121J
	R 3018,3041,3043,3050		RAB4CQ102J
	R 3033,3040,3048,3049		RAB4CQ560J
	R 3063,3269		RAB4CQ472J
	R 3075,3272		RS1/16SS2402F
	R 3086,3279		RAB4CQ103J
	R 3113,3304		RS1/10SR104J

Mark	No.	Description	Part No.
	R 3114,3305		RS1/10SR332J
	R 3115,3303		RAB4CQ222J
	R 3118,3309		RAB4CQ473J
	R 3126,3313		RS1/10SR5600D
	R 3127,3314		RS1/10SR4300D
	R 3128,3315		RS1/16SS1201D
	R 3129,3316		RS1/16SS6800D
	R 3130,3317		RS1/16SS2401D
	R 3131,3318		RS1/16SS1801D
	R 3132,3319		RS1/16SS91R0F
	R 3133,3320		RS1/16SS5101D
	R 3135,3322		RS1/16SS9101D
	R 3136,3323		RS1/16SS8201D
	R 3137,3324		RS1/16SS56R0D
	R 3139,3147,3326,3334		RS1/10SR122J
	R 3140,3148,3327,3335		RS1/10SR473J
	R 3143,3146,3151,3154		RS1/10SR0R0J
	R 3144,3152,3331,3339		RS1/10SR181J
	R 3201,3220,3278,3325		RS1/10SR0R0J
	R 3213,3216,3217,3219		RAB4CQ121J
	R 3218,3242,3244,3251		RAB4CQ102J
	R 3234,3241,3249,3250		RAB4CQ560J
	R 3330,3333,3338,3341		RS1/10SR0R0J
	R 3428-3436,3443-3451		RS1/10SR122J
	Other Resistors		RS1/16SS###J
CAPACITORS			
	C 3002,3202		CKSRYB105K10
	C 3003,3004,3009,3019 (10 uF/10 V)		DCH1201
	C 3005,3020-3028,3031		CKSSYB104K10
	C 3006,3017,3018,3029		CCSSCH471J50
	C 3008,3208		CKSSYB104K16
	C 3015,3215		CCSSCH470J50
	C 3030,3032,3053-3055		CCSSCH101J50
	C 3035,3036,3038-3041		CKSSYB104K10
	C 3051,3052,3056-3059		CKSSYB104K10
	C 3065-3068,3071-3074		CKSSYB104K10
	C 3076,3078-3090,3092		CKSSYB104K10
	C 3091,3097,3107-3113		CKSSYB103K16
	C 3094,3230,3232		CCSSCH101J50
	C 3095,3098,3102,3116		CKSSYB104K10
	C 3096,3118,3124,3129		CCSSCH102J50
	C 3099,3115,3122,3203 (10 uF/10 V)		DCH1201
	C 3100,3101,3299,3300		CCSSCH120J50
	C 3103,3302,3401,3402 (10 uF/6.3 V)		CCG1234
	C 3114,3312 (47 uF/16 V)		CCH1961
	C 3117,3290,3296		CKSSYB103K16
	C 3119,3120,3317,3318		CKSRYB104K25
	C 3123,3205,3220-3228		CKSSYB104K10
	C 3132,3295,3316,3322		CCSSCH102J50
	C 3204,3209,3219,3298 (10 uF/10 V)		DCH1201
	C 3206,3217,3218,3229		CCSSCH471J50
	C 3231,3235,3236		CKSSYB104K10
	C 3238-3241,3251,3252		CKSSYB104K10
	C 3253-3255,3293		CCSSCH101J50
	C 3256-3259,3265-3268		CKSSYB104K10
	C 3270-3273,3275		CKSSYB104K10
	C 3277-3289,3291,3294		CKSSYB104K10
	C 3297,3301,3314,3321		CKSSYB104K10
	C 3305-3311,3315		CKSSYB103K16
	C 3313,3320 (10 uF/10 V)		DCH1201
	C 3324,3325		CCSSCH102J50
	C 3403		CKSRYB104K10
	C 3404 (10 uF/6.3 V)		CCG1234
	C 3405,3407		CKSSYB104K10
	C 3406 (1 uF/10 V)		DCH1266
	C 3408-3410,3413-3415		CKSSYB102K50
	C 3416 (10 uF/16 V)		DCH1263

Mark	No.	Description	Part No.

AF

SW POWER SUPPLY

There is no service parts.