Service Manual

PIONEER®
The Art of Entertainment

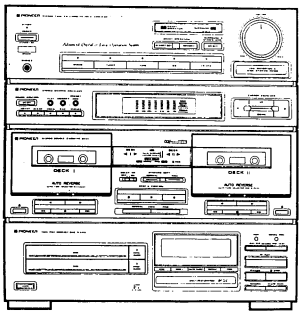

ORDER NO.
ARP2407

STEREO TWIN CD CASSETTE DECK AMPLIFIER

XD-Z55T

XD – Z55T HAS THE FOLLOWING :

Type	Power Requirement	Remarks
HE	AC220V – 230V, 240V (Switchable) *	
HB	AC220V – 230V, 240V (Switchable) *	
HEWZIW	AC220V – 230V, 240V (Switchable) *	

* Change the jumper wires of assembly board.

- **This manual is applicable to the HE, HB and HEWZIW types.**
- **As to the HB and HEWZIW types, refer to page 82.**
- **This product is a component of a system.**
- **As to the MECHANISM DESCRIPTION, refer to the PD – Z74T service guide (ARP2144).**
- **The adjustment for XD – Z55T is the same with that for XD – Z54T.**
- **For adjustment refer to "ADJUSTMENTS FOR XD – Z54T, XD – Z84T, DC – Z94, DC – Z84 and DC – Z74" (ARP2140).**

CONTENTS

PIONEER ELECTRONIC CORPORATION 4-1, Meguro 1-Chome, Meguro-ku, Tokyo 153, Japan
PIONEER ELECTRONICS SERVICE INC. P.O. Box 1760, Long Beach, California 90801 U.S.A.
PIONEER ELECTRONICS OF CANADA, INC. 505 Cochrane Drive, Markham, Ontario L3R 8E3 Canada
PIONEER ELECTRONIC [EUROPE] N.V. Haven 1087 Keetberglaan 1, 9120 Melsele, Belgium
PIONEER ELECTRONICS AUSTRALIA PTY. LTD. 178-184 Boundary Road, Braeside, Victoria 3195, Australia TEL: [03] 580-9911

DFG JAN. 1992

1. SAFETY INFORMATION

(FOR EUROPEAN MODEL ONLY)

VARO!
AVATTAESSA JA SUOJALUKITUS OHITETTAESSA OLET ALTTIINA NÄKYMÄTTÖMÄLLE LASERSÄTEILYLLE. ÄLÄ KATSO SÄTEESEEN.

ADVERSEL:
USYNLIG LASERSTRÅLING VED ÅBNING NÅR SIKKERHEDSAFBRYDERE ER UDE AF FUNKTION UNDGÅ UDSAETTELSE FOR STRÅLING.

VARNING!
OSYNLIG LASERSTRÅLNING NÄR DENNA DEL ÄR ÖPPNAD OCH SPÄRREN ÄR URKOPPLAD. BETRAKTA EJ STRÅLEN.

LASER
Kuva 1
Lasersateilyn varoitusmerkki

WARNING!
DEVICE INCLUDES LASER DIODE WHICH EMITS INVISIBLE INFRARED RADIATION WHICH IS DANGEROUS TO EYES. THERE IS A WARNING SIGN ACCORDING TO PICTURE 1 INSIDE THE DEVICE CLOSE TO THE LASER DIODE.

IMPORTANT
THIS PIONEER APPARATUS CONTAINS LASER OF CLASS 1.
SERVICING OPERATION OF THE APPARATUS SHOULD BE DONE BY A SPECIALLY INSTRUCTED PERSON.

LASER DIODE CHARACTERISTICS
MAXIMUM OUTPUT POWER: 5 mw
WAVELENGTH: 780-785 nm

LASER
Picture 1
Warning sign for laser radiation

LABEL CHECK (TWIN type)

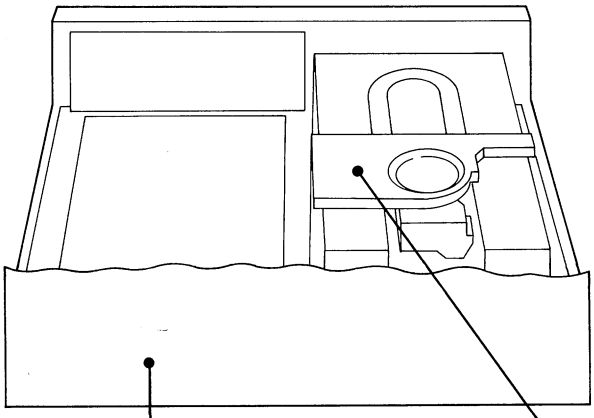

Additional Laser Caution

1. Laser Interlock Mechanism
   The ON/OFF status of the U (S601) and L (S603) switches for detecting the disc clamp state is detected by the system microprocessor, and the design prevents laser diode oscillation when both switches U and L are OFF (high level).
   Thus, the interlock will no longer function if switches U (S601) and L (S603) are deliberately shorted.
   Laser diode oscillation will continue if pins 2 and 3 of CXA1471S (IC101) are connected to ground or pin 20 is connected to high level (ON) or the terminals of Q101 are shorted to each other (fault condition).
2. When the cover is opened, close viewing of the objective lens with the naked eye will cause exposure to a Class 1 laser beam.

HE, HEWZIW and HB types

ADVARSEL
USYNLIG LASERTRÅLING VED ÅBNING NÅR SIKKERHED SAFBRYDERE ER UDE AF FUNKTION. UNDGÅ UDSÆTTELSE FOR STRÅLING.

VARO!
Avattaessa ja suojalukitus ohitettaessa olet alttiina näkymättömälle lasersäteilylle. Älä katso säteeseen.

VORSICHT!
UNSICHTBARE LASER-STRAHLUNG TRITT AUS, WENN DECKEL(ODER KLAPPE)GEÖFFNET IST! NICHT DEM STRAHL AUSSETZEN!

VARNING!
Osynlig laserstrålning när denna del är öppnad och spärren är urkopplad. Betrakta ej strålen.

ARW1030-A

HE and HEWZIW types

CAUTION
INVISIBLE LASER RADIATION WHEN OPEN, AVOID EXPOSURE TO BEAM
ARW1023

HB type

CLASS 1
LASER PRODUCT
ARW1021

HE, HB and HEWZIW types

2. EXPLODED VIEWS, PACKING AND PARTS LIST

2.1 GENERAL BLOCK

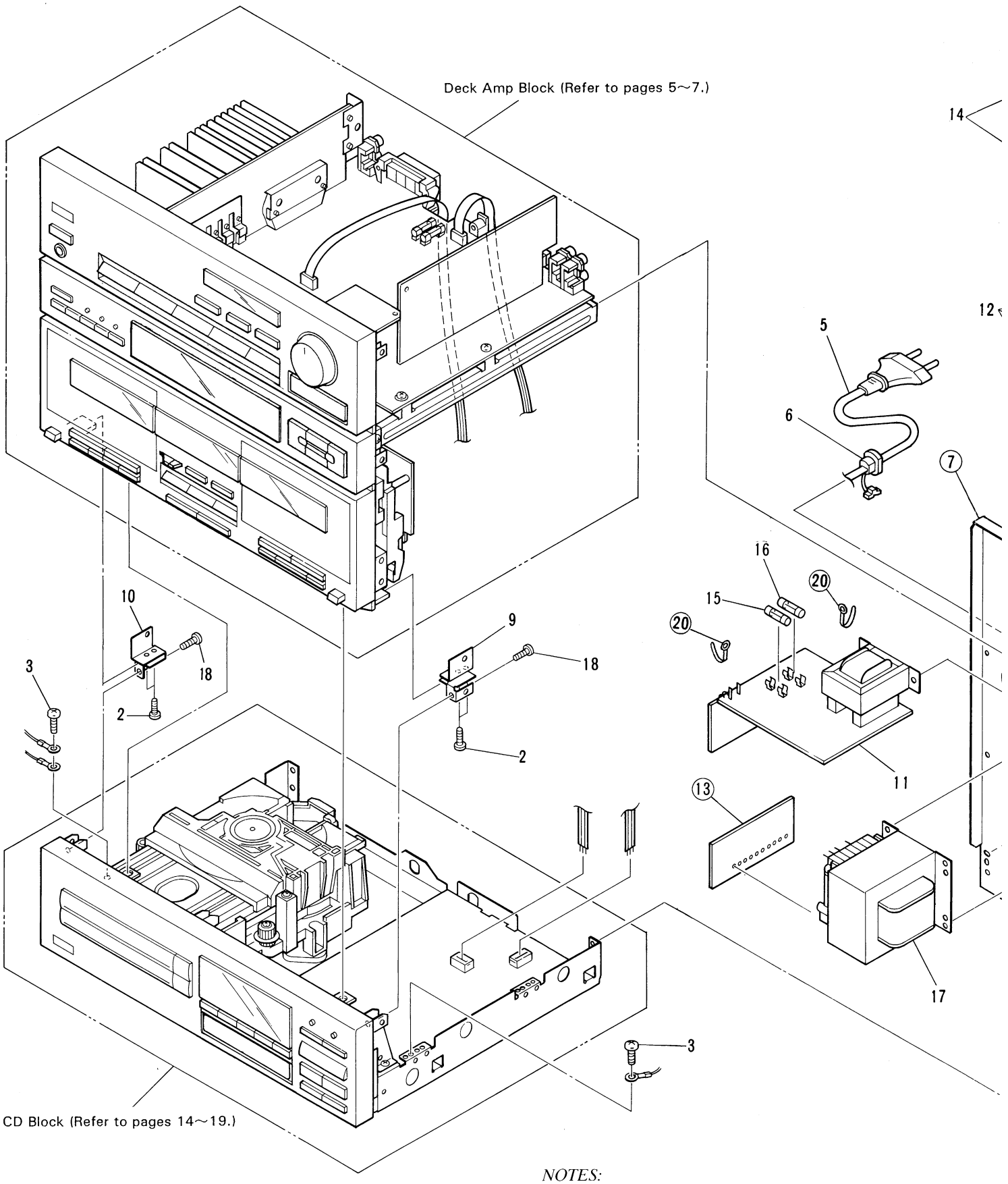

NOTES:

- *The parts with an encircled number are generally unavailable be*
- *The ⚠ mark found on some component parts indicates the imp be sure to use parts of identical designation.*
- *Parts marked by "◉" are not always kept in stock. Their delivery*

XD-Z55T

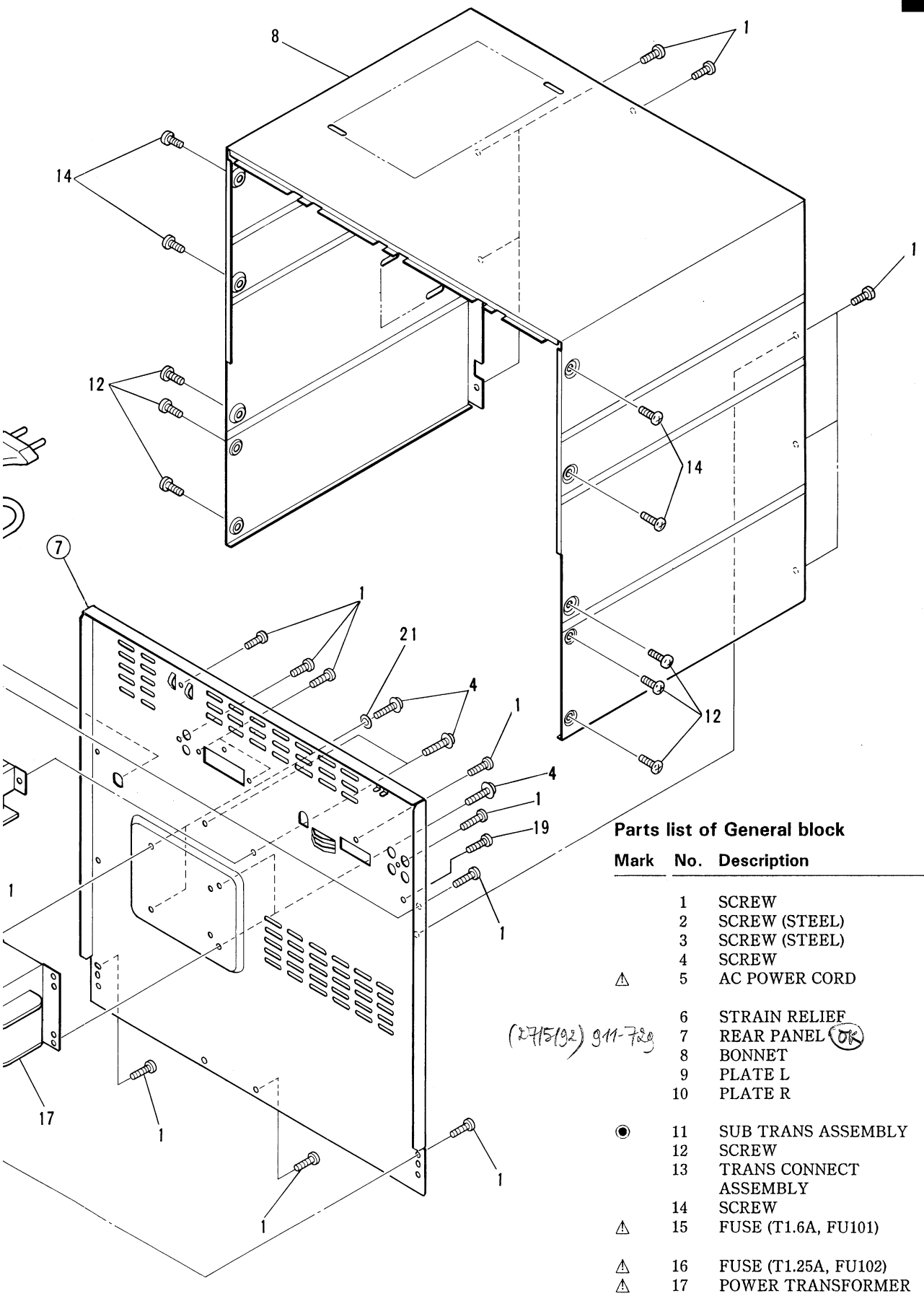

(2715/92) 911-729

Parts list of General block

Mark	No.	Description	Parts No.
	1	SCREW	ABA−298
	2	SCREW (STEEL)	ABA1007
	3	SCREW (STEEL)	ABA1009
	4	SCREW	ABA1082
⚠	5	AC POWER CORD	ADG1049
	6	STRAIN RELIEF	AEC−882
	7	REAR PANEL (OK)	ANC1825
	8	BONNET	ANE1275
	9	PLATE L	ANG1536
	10	PLATE R	ANG1537
◉	11	SUB TRANS ASSEMBLY	AWR1056
	12	SCREW	BBZ30P080FZK
	13	TRANS CONNECT ASSEMBLY	AWZ3349
	14	SCREW	VPZ30P080FZK
⚠	15	FUSE (T1.6A, FU101)	AEK−510
⚠	16	FUSE (T1.25A, FU102)	AEK−509
⚠	17	POWER TRANSFORMER (T102)	ATS1399
	18	SCREW	VPZ30P080FMC
	19	SCREW	ABA−222
	20	NYLON BINDER	AEC−093
	21	WASHER	ABE−052

unavailable because they are not in our Master Spare Parts List.
dicates the importance of the safety factor of the part. Therefore, when replacing,

. Their delivery time may be longer than usual or they may be unavailable.

Plastic Plate (Screened) AEP-054

2.2 DECK AMP BLOCK

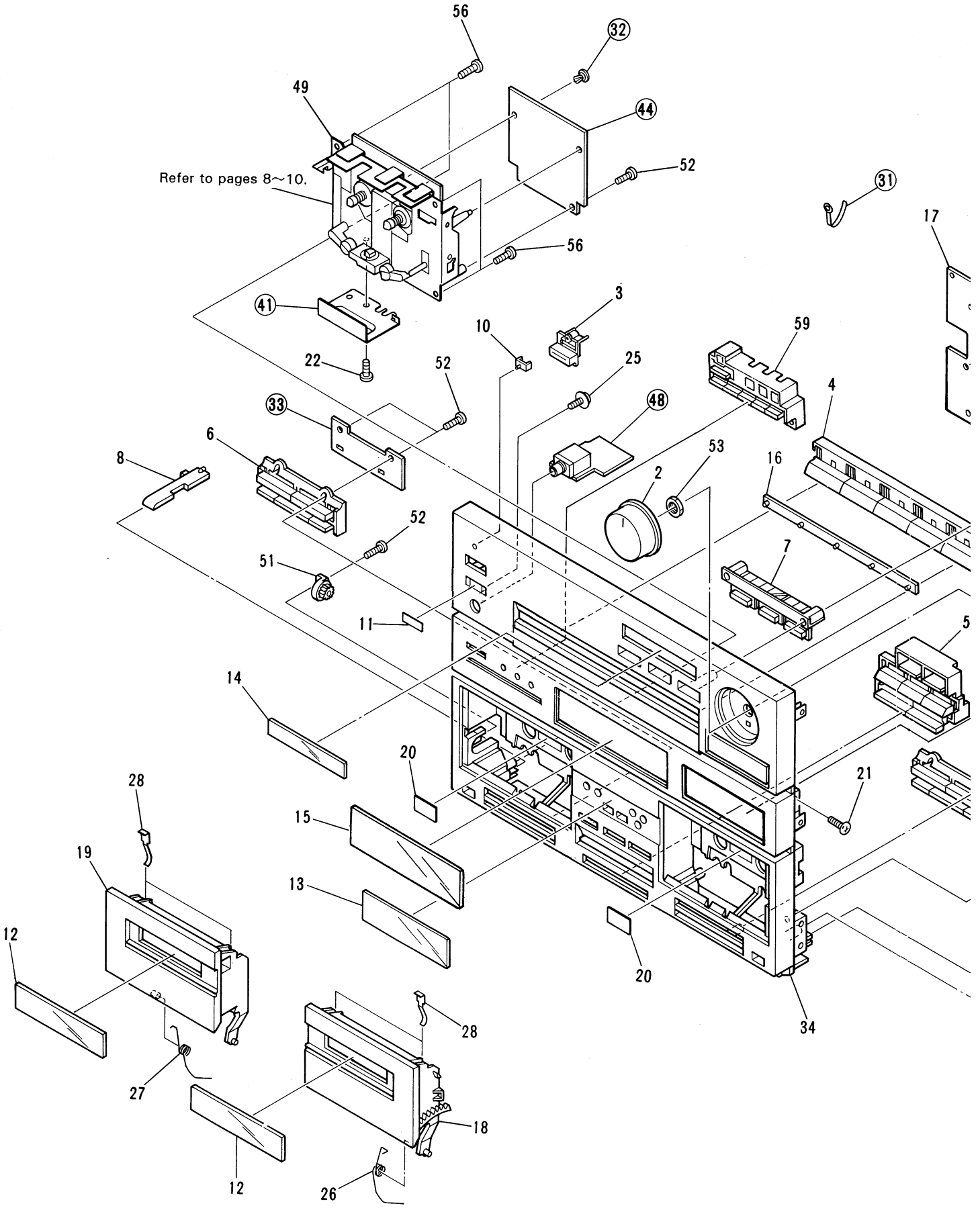

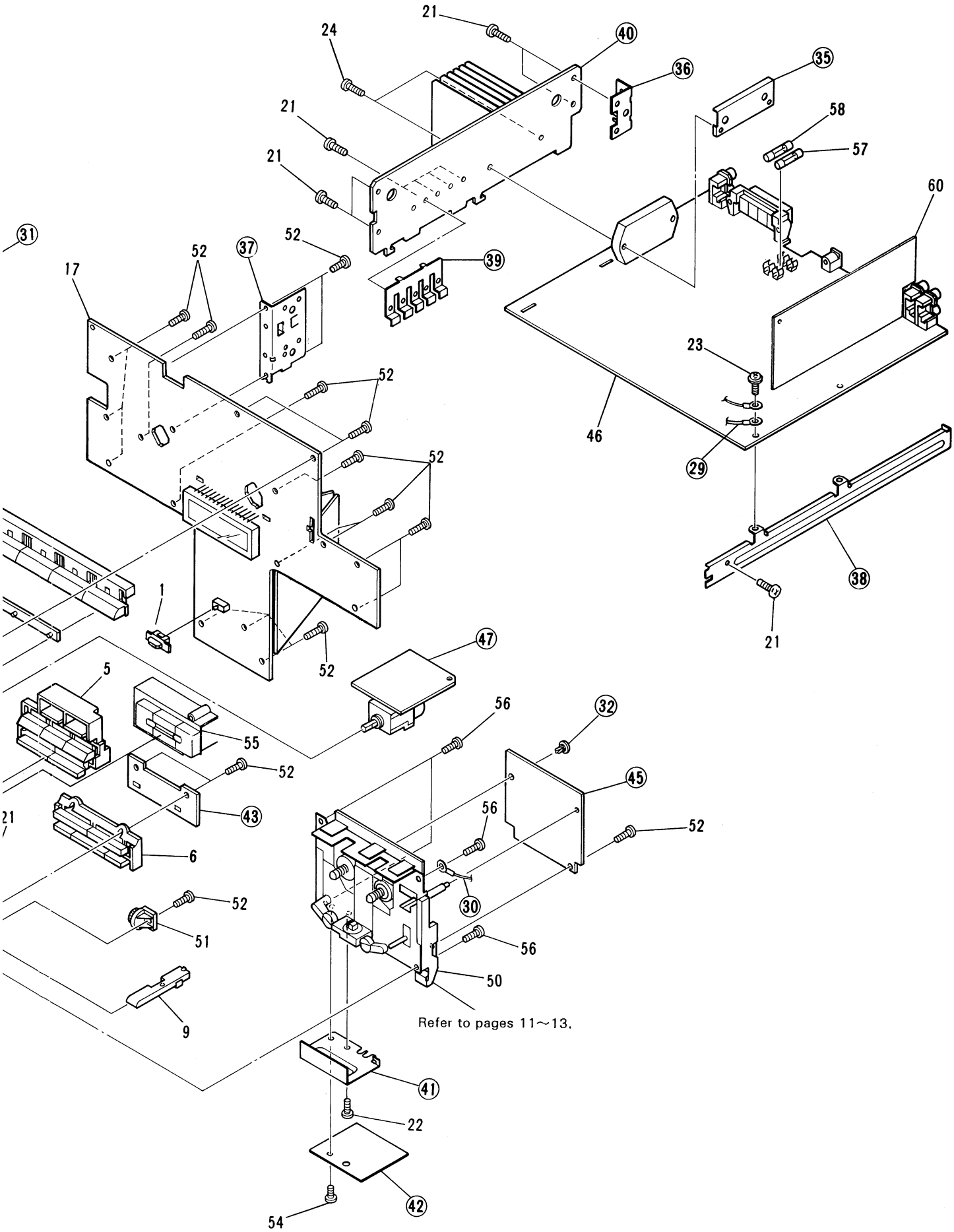
4
5
6
A
B
C
D
21
24
40
36
35
58
57
60
21
21
31
52
37
52
39
17
23
52
46
29
52
38
1
21
47
52
5
56
32
55
52
45
43
56
52
21
6
30
52
51
56
50
9
Refer to pages 11～13.
41
22
42
54

Parts list of Deck amp block

Mark	No.	Description	Parts No.
	1	SLIDE KNOB (DOLBY NR)	AAE1157
	2	VOL KNOB (VOLUME)	AAB1274
	3	POWER BUTTON	AAD1595
	4	FUNCTION BUTTON	AAD2197
	5	REC COPY BUTTON	AAD2198
	6	DECK PLAY BUTTON (PLS)	AAD2199
	7	AI BUTTON (PLS)	AAD2200
	8	EJECT BUTTON L (PLS)	AAD2201
	9	EJECT BUTTON R (PLS)	AAD2202
	10	LENS (POWER IND)	AAK1800
	11	FILTER (REMOTE SENSOR)	AAK1812
	12	DECORATIVE PLATE (DOOR)	AAK2065
	13	DECORATIVE PLATE A (DECK)	AAK2271
	14	AI DECORATIVE PLATE	AAK2272
	15	DECORATIVE PLATE (GEQ)	AAK2262
	16	INDICATOR LENS	AAK2075
	17	DISPLAY ASSEMBLY	AWZ3909
	18	CASSETTE DOOR (R)	AAN1329
	19	CASSETTE DOOR (L)	AAN1330
	20	SHEET (PAPER)	AAX1301
	21	SCREW	ABA−298
	22	SCREW (STEEL)	ABA1009
	23	SCREW (STEEL)	ABA1011
	24	SCREW	ABA1018
	25	SCREW (STEEL)	ABA1095
	26	DOOR SPRING L	ABH1068
	27	DOOR SPRING R	ABH1069
	28	KEEP PLATE	ABK1016
	29	GROUND LEAD	ADB1017
	30	GROUND LEAD	ADB1002
	31	NYLON BINDER	AEC−093
	32	NYLON RIVET	AEC1160
	33	1 MECHA SW ASSEMBLY	AWZ3911
	34	FRONT PANEL	AMB2001
	35	PACK HOLDER	ANG1335
	36	HEAT SINK HOLDER B	ANG1338
	37	HEAT SINK HOLDER A	ANG1418
	38	PLATE	ANG1535
	39	PLATE	ANG1561
	40	HEAT SINK	ANH1313
	41	SHIELD PLATE (MECHA)	ANK1157
	42	SHIELD PLATE	ANK1159
	43	2 MECHA SW ASSEMBLY	AWZ3912
911-867	44	1 MECHA ASSEMBLY NSP	AWZ3324
	45	2 MECHA ASSEMBLY	AWZ3325
◉	46	AF ASSEMBLY	AWZ4103
931-067	47	VR ASSEMBLY NSP	AWZ3342
	48	HEADPHONE ASSEMBLY	AWZ3549
◉	49	1 MECHA UNIT (PB)	EXK2025
◉	50	2 MECHA UNIT (RP)	EXK2017
	51	DAMPER ASSEMBLY	AXA1008
	52	SCREW	BPZ26P080FMC
	53	NUT	NK90FUC
	54	SCREW	PCZ30P040FMC
	55	CURSOR BUTTON	AAD2284
	56	SCREW	VPZ30P080FMC
⚠	57	FUSE (T1.6A, FU151)	AEK−510
⚠	58	FUSE (T1.6A, FU152)	AEK−510
	59	GEQ BUTTON	AAD2286
	60	GEQ ASSEMBLY	AWX1048

2.3 1 MECHA UNIT (EXK2025)

Parts list of 1 Mecha unit

Mark	No.	Description	Parts No.
	1	FLYWHEEL UNIT (FWD)	EXA1222
	2	FLYWHEEL UNIT (RVS)	EXA1223
	3	ROLLER UNIT (FWD)	EXA1224
	4	ROLLER UNIT (RVS)	EXA1225
	5	LIMITER UNIT	EXA1226
	6	LEVER UNIT	EXA1227
	7	EJECT LEVER L2	AZN2063
	8	LEVER	ENV1155
	9	BRAKE	ENV1317
	10	CAM GEAR	ENV1158
	11	LOCK ARM	ENV1159
	12	NR ARM	ENV1163
	13	.....	
	14	REEL	ENV1335
	15	REEL BUSH	ENV1338
	16	ARM	ENV1330
	17	EJECT LEVER L1	AZN2108
	18	BUSH	ENV1184
	19	MAGNET	ENV1336
	20	BELT	ENT1023
	21	SPRING	EBH1424
	22	SPRING	EBH1401
	23	SPRING	EBH1203
	24	SPRING	EBH1402
	25	SPRING	EBH1405
	26	SPRING	EBH1406
	27	SPRING	EBH1407
	28	SPRING	EBH1408
	29	SPRING	EBH1413
	30	SPRING	EBH1409
	31	SPRING	EBH1410
	32	SPRING	EBH1256
	33	SPRING	EBL1013
	34	SPRING	EBL1014
	35	MOTOR UNIT	EXA1241
	36	SWITCH (Detect)	ESN1003
	37	SWITCH (Mode)	ESN1004
	38	SOLENOID	EXP1005
	39	HALL IC	DN6847SE
	40	COMPLEX PCB	ENX1007
	41	CONNECTOR (10P)	EKS1013
	42	LEAD WIRE (4P)	EDD1003
	43	CONNECTOR (3P)	EDE1009
	44	SCREW (AZIMUTH)	EBA1020
	45	.....	
	46	SCREW (M2×8)	ATZ20P080FMC
	47	SCREW	BSZ20P050FMC
	48	SCREW	PMS26P025FUC
	49	WASHER	EBF1008
	50	WASHER	EBF1009
	51	WASHER	EBF1010
	52	WASHER	EBF1011
	53	.....	
	54	ARM UNIT	EXX1006
	55	ARM UNIT	EXX1003
	56	P HEAD ASSEMBLY	EXX1008
	101	HEAD BASE	ENC1281
	102	BRACKET	ENC1194
	103	PLATE	ENC1285
	104	BRACKET	ENC1199
	105	ARM	ENC1188
	106	HOLDER	ENV1161
	107	HOLDER	ENV1301
	108	GEAR	ENV1177
	109	P HEAD UNIT	EXA1110
	110	SCREW	JGZ14P085FNI
	111	SCREW	JGZ14P040FNI
	112	CHASSIS UNIT	

Note :
When removing the chassis unit to replace the arm unit (EXX1003), the chassis unit can be easily removed by cutting the Ⓐ part of No.55 (1/2) with a nippers, etc. (see following illustration).

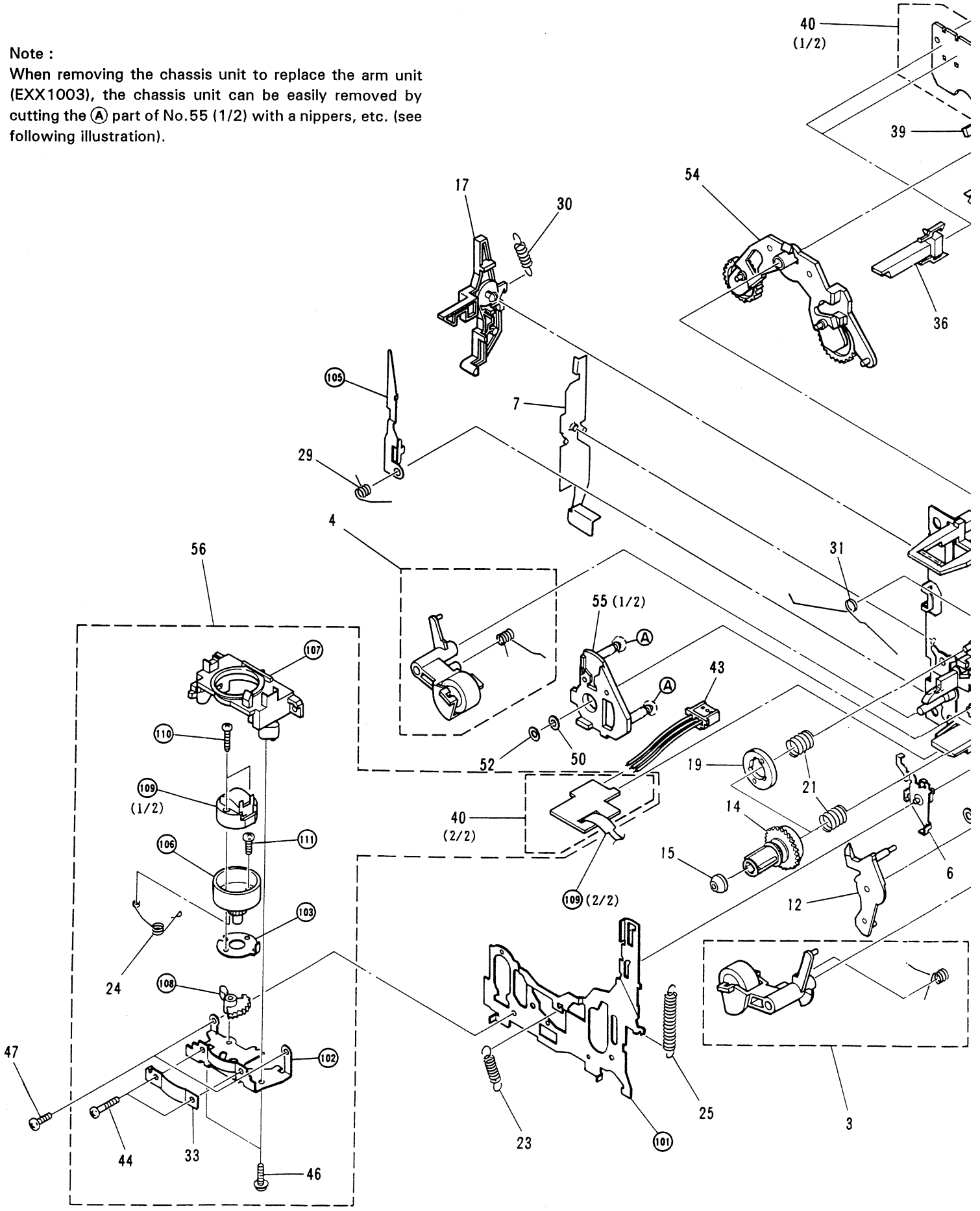

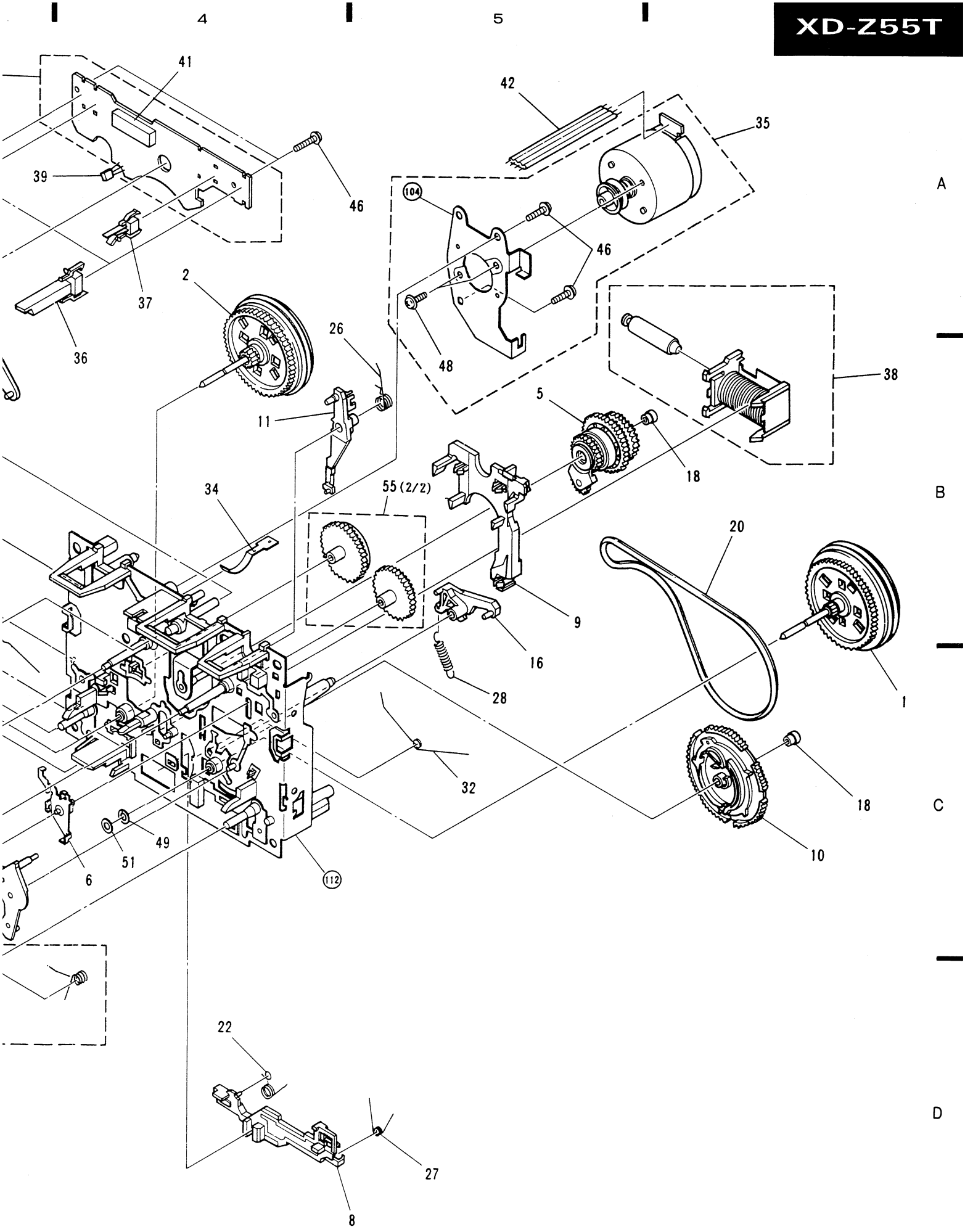
4
5
6
A
B
C
D
41
42
35
39
46
104
46
37
2
36
26
48
38
11
5
18
34
55 (2/2)
20
9
16
1
28
32
18
10
49
51
6
112
22
27
8

2.4 2 MECHA UNIT (EXK2017)

Note :
When removing the chassis unit to replace the arm unit (EXX1003), the chassis unit can be easily removed by cutting the Ⓐ part of No.55 (1/2) with a nippers, etc. (see following illustration).

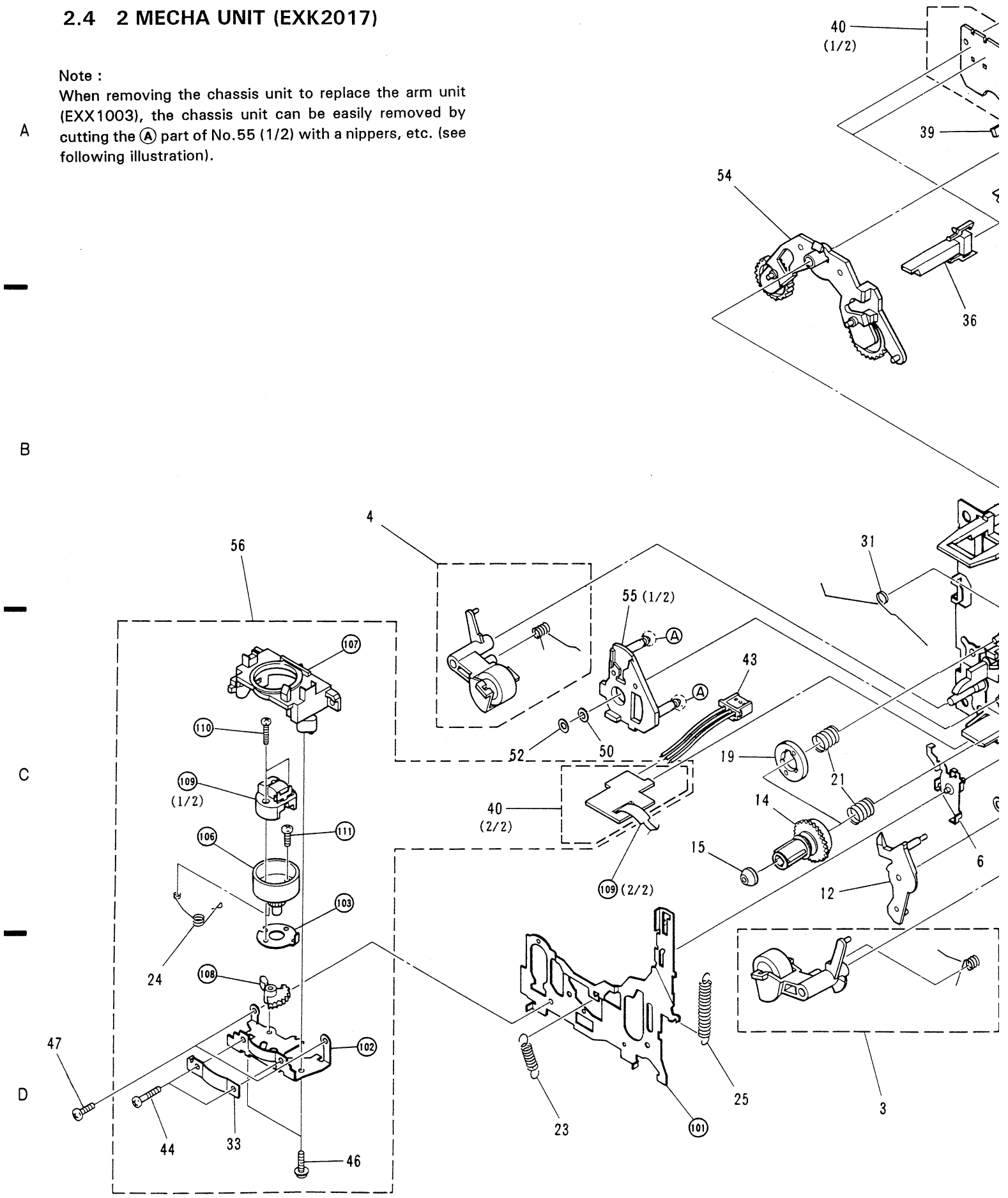

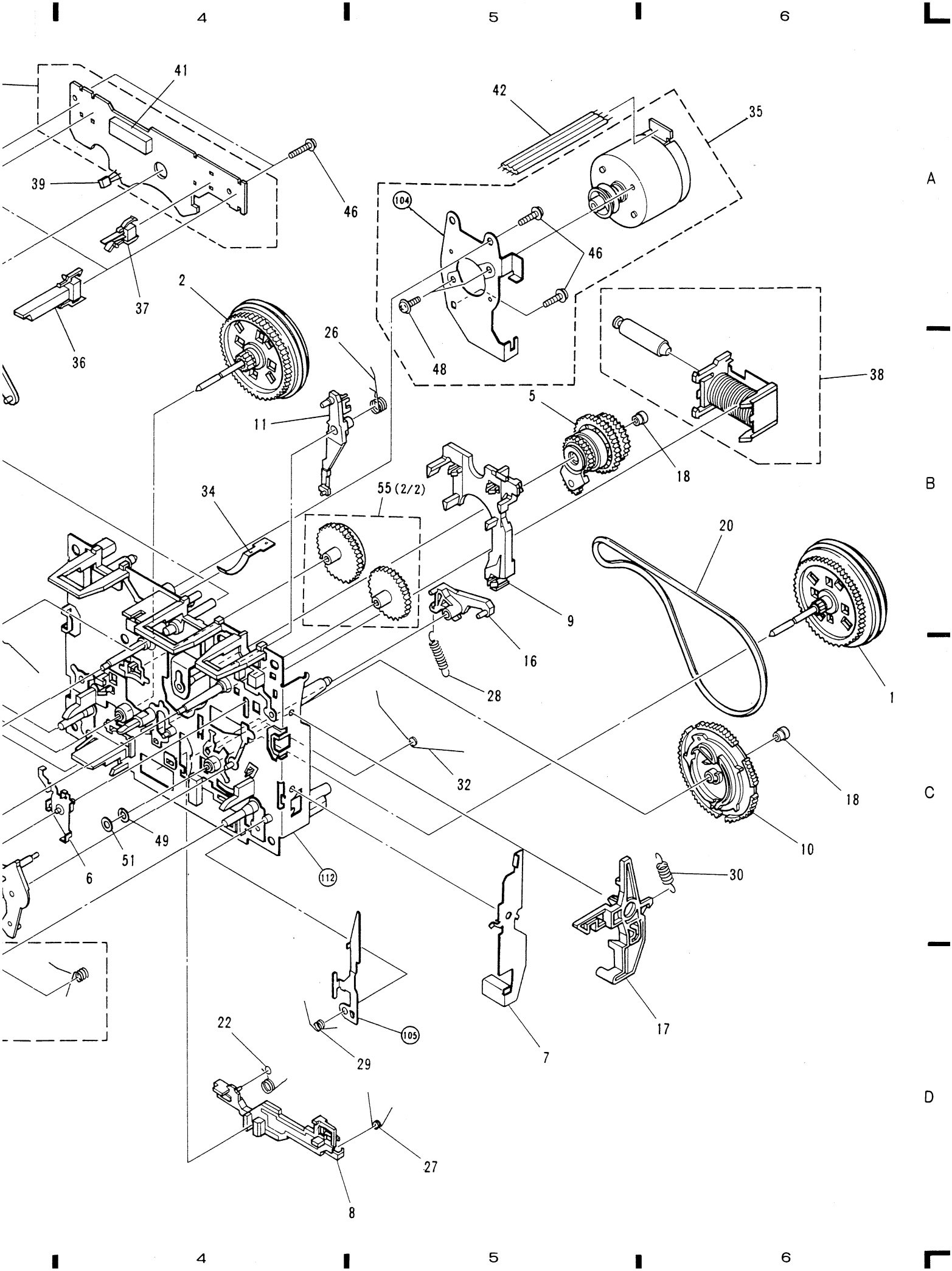
4
5
6
A
B
C
D
41
42
35
39
46
104
46
37
2
36
48
26
38
11
5
18
34
55 (2/2)
20
9
16
1
28
32
18
10
49
51
6
112
30
17
105
22
29
7
27
8

Parts list of 2 Mecha unit

Mark	No.	Description	Parts No.
	1	FLYWHEEL UNIT (FWD)	EXA1222
	2	FLYWHEEL UNIT (RVS)	EXA1223
	3	ROLLER UNIT (FWD)	EXA1224
	4	ROLLER UNIT (RVS)	EXA1225
	5	LIMITER UNIT	EXA1226
	6	LEVER UNIT	EXA1227
	7	EJECT LEVER R2	AZN2064
	8	NR LEVER	ENV1155
	9	BRAKE	ENV1317
	10	CAM GEAR	ENV1158
	11	LOCK ARM	ENV1159
	12	NR ARM	ENV1163
	13	.....	
	14	REEL	ENV1335
	15	REEL BUSH	ENV1338
	16	ARM	ENV1330
	17	EJECT LEVER R1	AZN2109
	18	BUSH	ENV1184
	19	MAGNET	ENV1336
	20	BELT	ENT1023
	21	SPRING	EBH1424
	22	SPRING	EBH1401
	23	SPRING	EBH1203
	24	SPRING	EBH1402
	25	SPRING	EBH1405
	26	SPRING	EBH1406
	27	SPRING	EBH1407
	28	SPRING	EBH1408
	29	SPRING	EBH1412
	30	SPRING	EBH1409
	31	SPRING	EBH1410
	32	SPRING	EBH1256
	33	SPRING	EBL1013
	34	SPRING	EBL1014
	35	MOTOR UNIT	EXA1241
	36	SWITCH (Detect)	ESN1003
	37	SWITCH (Mode)	ESN1004
	38	SOLENOID	EXP1005
	39	HALL IC	DN6847SE
	40	COMPLEX PCB	ENX1012
	41	CONNECTOR (15P)	EKS1012
	42	LEAD WIRE (4P)	EDD1003
	43	CONNECTOR (5P)	EDE1008
	44	SCREW (AZIMUTH)	EBA1020
	45	.....	
	46	SCREW (M2×8)	ATZ20P080FMC
	47	SCREW	BSZ20P050FMC
	48	SCREW	PMS26P025FUC
	49	WASHER	EBF1008
	50	WASHER	EBF1009
	51	WASHER	EBF1010
	52	WASHER	EBF1011
	53	.....	
	54	ARM UNIT	EXX1006
	55	ARM UNIT	EXX1003
	56	R/P HEAD ASSEMBLY	EXX1013
931-125	101	HEAD BASE	ENC1281=N.P
	102	BRACKET	ENC1194
	103	PLATE	ENC1285
	104	BRACKET	ENC1199
	105	ARM	ENC1189
	106	HOLDER	ENV1161
	107	HOLDER	ENV1301
	108	GEAR	ENV1177
	109	R/P HEAD UNIT	EXA1234
	110	SCREW	JGZ14P085FNI
	111	SCREW	JGZ14P040FNI
	112	CHASSIS UNIT	

2.5 CD BLOCK

Parts list of CD block

Mark	No.	Description	Parts No.
	1	SCREW	BBZ30P060FMC
	2	SCREW	BBZ30P080FZK
	3	SCREW	BBZ30P100FMC
	4	SCREW	PPZ30P120FMC
	5	SCREW	IBZ30P150FMC
	6	DISC BUTTON	PAC1665
	7	PLAY BUTTON	PAC1666
	8	WINDOW	PAM1560
	9	30P F•F•C/30V	PDD1049
	10	SCREW	PDZ30P050FMC
94-041	11	SPACER	PEB1114
	12	.....	
	13	UNDER BASE	PNA1533
	14	ANGLE	PNB1022
	15	NAME PLATE 1	PNW1874
	16	NAME PLATE 2	PNW1875
	17	FUNCTION PANEL	PNW2155
	18	PCB SPACER	PNY-404
⚠ ◉	19	MOTHER PCB ASSEMBLY	PWM1349
⚠ ◉	20	SUB PCB ASSEMBLY	PWX1143
	21	FOOT ASSEMBLY	PXA1201
	22	INSULATOR ASSEMBLY	PXA1343
	23	TWIN TORAY MECHA ASSEMBLY	PXA1344
	24	HOLD RUBBER	PEB1220
	25	T ANGLE	PNB1403

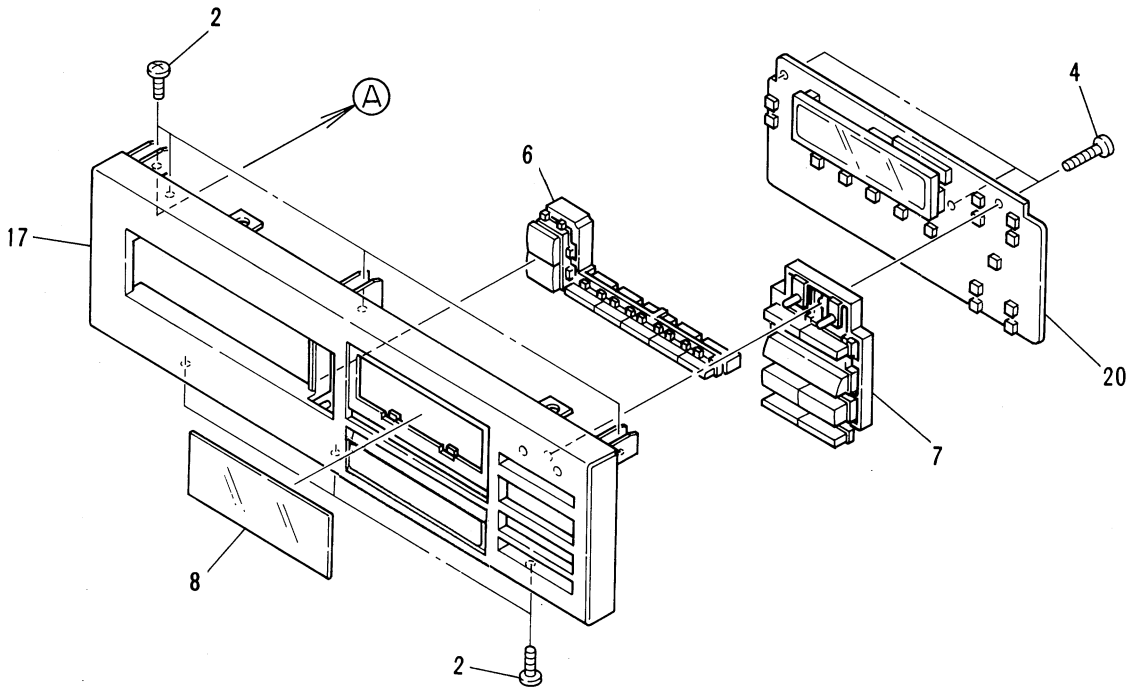

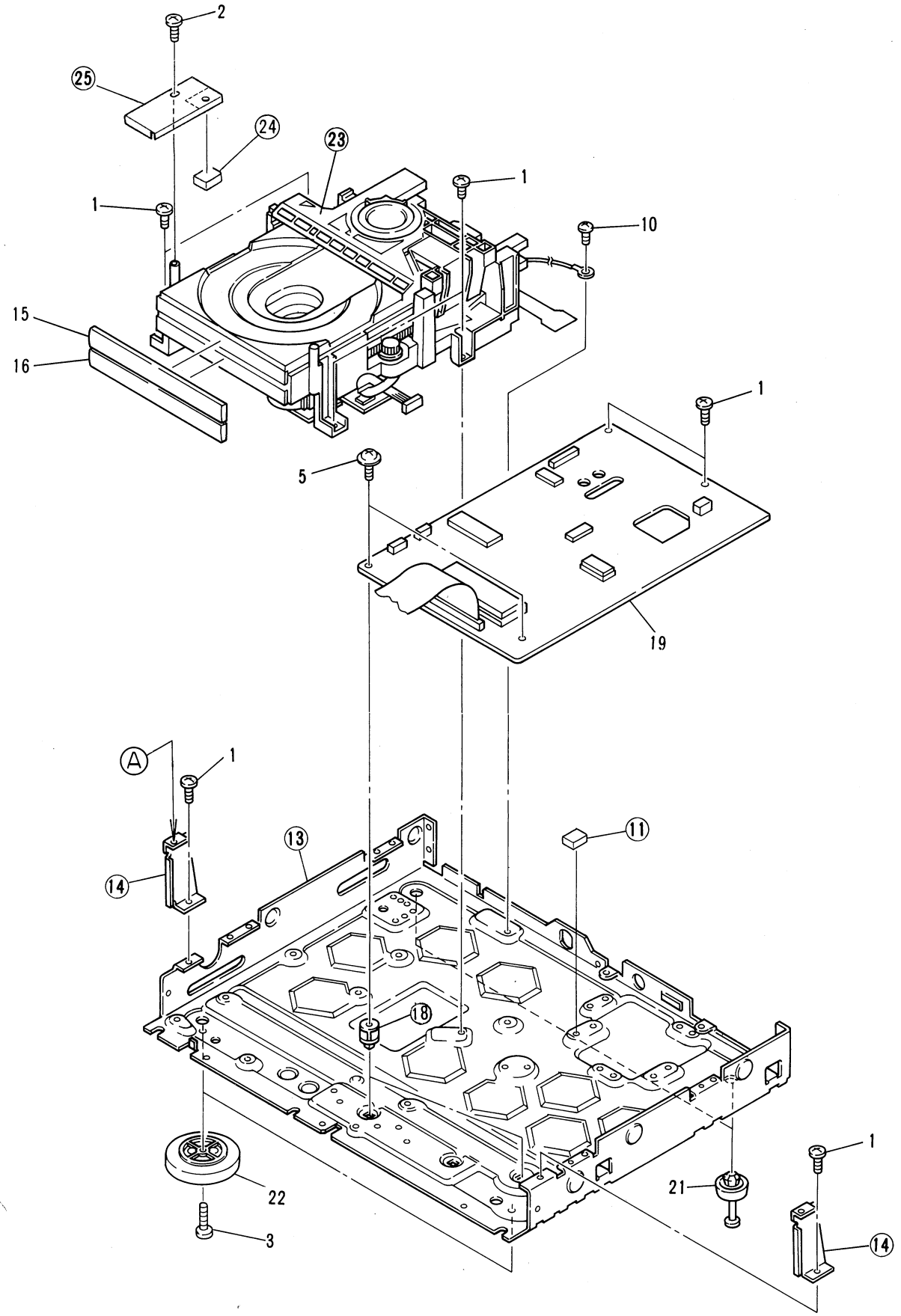
2
25
24
23
1
1
10
15
16
1
5
19
A
1
13
11
14
18
1
22
21
3
14

2.6 CD MECHANISM UNIT

Parts list of CD mechanism unit

Mark	No.	Description	Parts No.
	1	CLAMP SPRING	PBH1103
	2	LEVER SPRING	PBH1104
	3	BELT	PEB1106
	4	MOTOR PULLEY	PNW1634
	5	TRAY 1	PNW1839
	6	TRAY 2	PNW1840
	7	SUB TRAY	PNW1841
	8	LOADING BASE	PNW1842
	9	MAIN CAM	PNW1843
	10	FOLLOW GEAR	PNW1844
	11	GEAR 1	PNW1845
	12	GEAR 2	PNW1846
	13	IDLER GEAR	PNW1847
	14	CLAMPER ARM U	PNW1850
	15	CLAMPER ARM B	PNW1851
	16	CLAMP CAM	PNW1852
	17	FLOAT BASE	PNW2041
	18	LOCK LEVER	PNW1854
	19	MOTOR	PXM1010
	20	FLOATING RUBBER	PEB1014
	21	FLOATING RUBBER	PEB1132
	22	SCREW	PBA1048
	23	SCREW	IPZ30P080FMC
	24	SCREW	IPZ20P080FMC
	25	SCREW	PMZ26P040FMC
	26	GEAR PULLEY	PNW1848
	27	PUSH SPRING	PBH1105
	28	SCREW	IPZ30P200FMC
	29	SCREW	IPZ30P100FMC
	101	YOKE	PNB1216
	102	CLAMPER MAGNET	PMF1014
	103	CLAMPER HOLDER	PNW1849
	104	CLAMPER S	PNW1609
	105	MECHANISM PCB ASSEMBLY	PWX1162
911-870	106	SERVO MECHANISM ASSEMBLY T NSP	PXA1349
	107	SUB PANEL PLATE	PNB1287

- **How to install the disc table**

1 Use nippers or other tool to cut the two sections marked Ⓐ in figure 1. Then remove the spacer.

2 While supporting the spindle motor shaft with the stopper, put spacer on top of the motor base (angled so it doesn't touch section Ⓑ), and stick the disc table on top (takes about 9kg pressure). Take off the spacer.

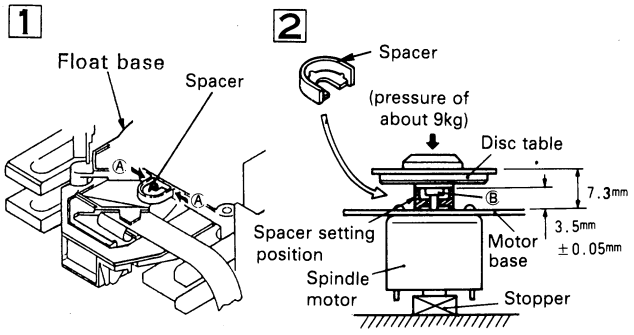

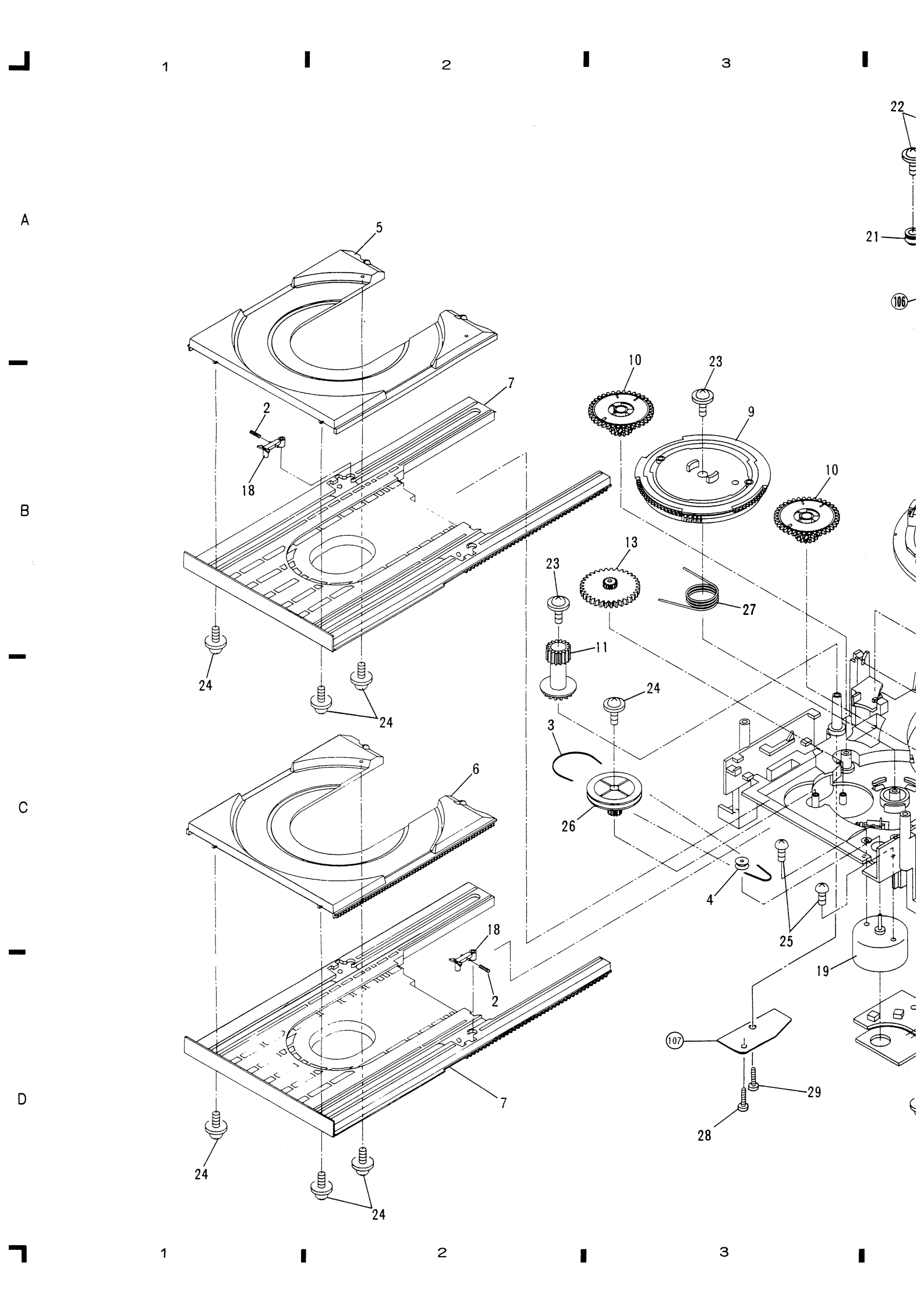
1
2
3
A
B
C
D
5
7
2
18
24
24
10
23
9
10
13
23
27
11
24
3
26
6
4
25
18
2
19
107
29
28
7
24
24
22
21
106

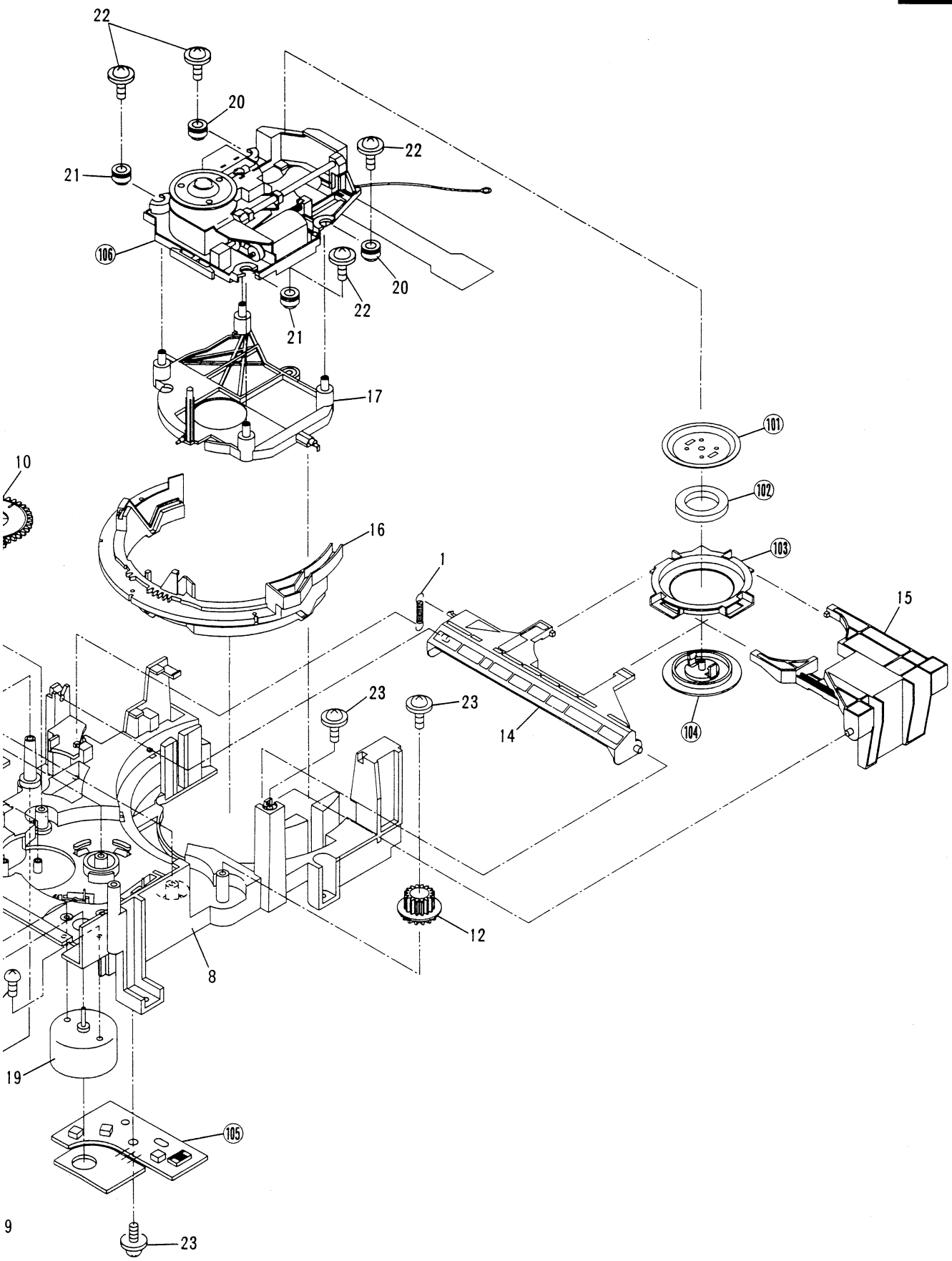
22
20
21
106
22
20
22
21
17
101
10
102
16
103
1
15
23
23
14
104
12
8
19
105
9
23

2.7 SERVO MECHANISM ASSEMBLY T

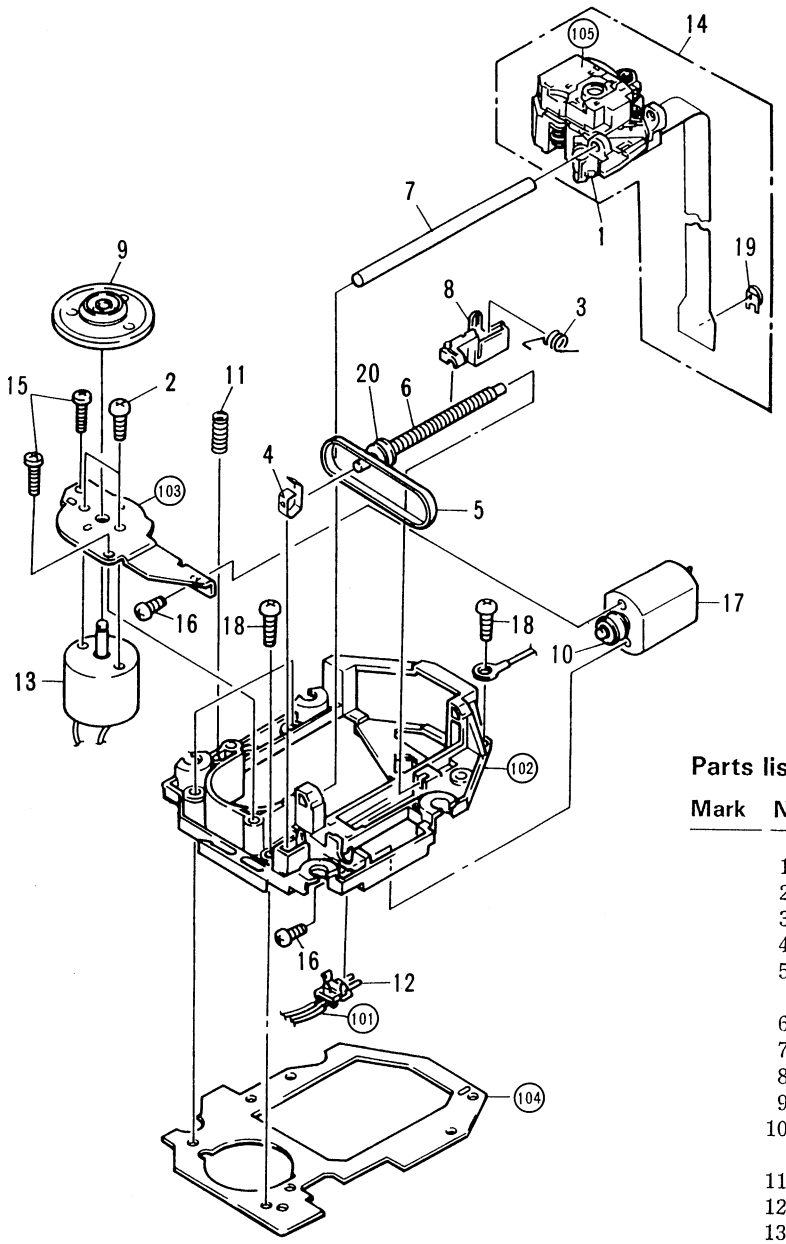

Parts list of Servo mechanism assembly T

Mark	No.	Description	Parts No.
	1	CHIP CAPACITOR (C1001)	CKSYF105Z16
	2	SCREW	JFZ20P025FMC
	3	DRIVE SPRING	PBH1084
	4	PLATE SPRING	PBK1057
	5	BELT	PEB1072
	6	DRIVE SCREW	PLA1003
	7	GUIDE BAR	PLA1071
	8	HALF NUT	PNW1605
	9	DISC TABLE	PNW1608
	10	PULLEY	PNW1634
	11	EARTH SPRING	PBH1009
	12	PUSH SWITCH	DSG1014
	13	SPINDLE MOTOR ASSEMBLY (with OIL)	PEA1028
	14	PICK-UP ASSEMBLY	PEA1030
	15	SCREW	BPZ20P080FZK
	16	SCREW	PMZ20P030FMC
	17	MOTOR (CARRIAGE)	PXM1013
	18	SCREW	PBZ30P080FMC
	19	SEMI-FIXED RESISTOR	PCP1008
	20	PULLEY	PNW1066
	101	CONNECTOR ASSEMBLY (6P)	PDE1089
	102	MECHANISM CHASSIS	PNW1604
	103	MOTOR BASE	PNB1211
	104	MECHANISM BASE	PXA1294
	105	ACTUATER COVER	PNW1591

2.8 REMOVING AND MOUNTING EACH BLOCK

● REMOVAL OF TRAY I AND TRAY II

1. Open the tray I.
2. Insert the flat blade screwdriver into the slit in the left of tray I. Pull out the tray I by pushing the screwdriver.

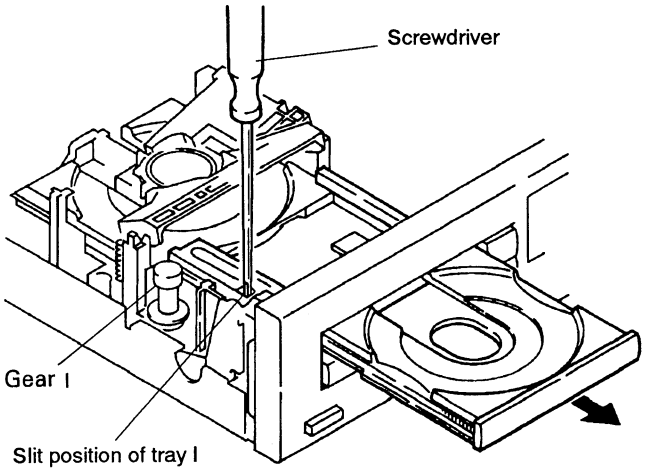

* When remove the tray II, open it first, insert the flat blade screwdriver into the slit in the right of tray II, and pull out the tray by pushing the screwdriver.

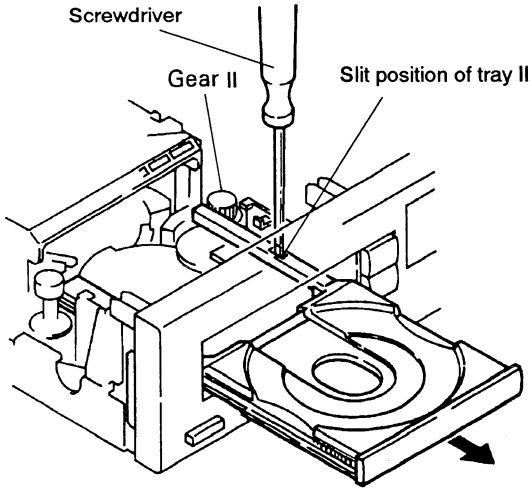

Fig. 1

● MOUNTING OF TRAY I

1. Set the disc II to the clamp position and open the tray I.
2. Align the 1st tooth of tray I to ungrooved portion of gear I, and insert the tray I.

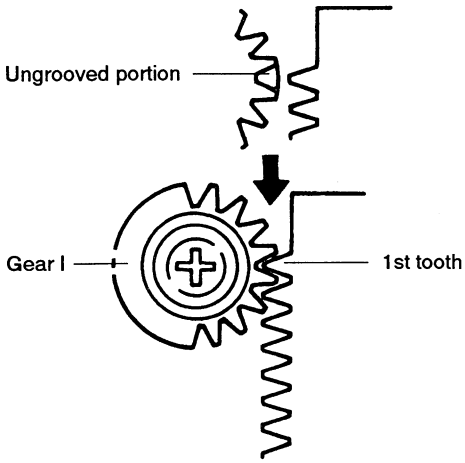

Fig. 2

● MOUNTING OF TRAY II

1. Set the disc I to the clamp position and open the tray II.
2. Align the 1st tooth of tray II to □ marked position of gear II, and insert the tray II.

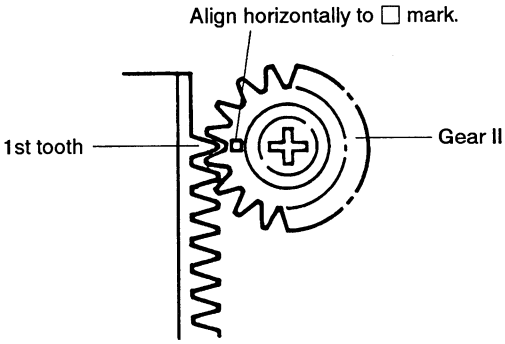

Fig. 3

● MOUNTING AND POSITIONING OF MAIN CAM, FOLLOW GEAR, GEAR I AND GEAR II

Set the following gears to the position as shown by arrows.

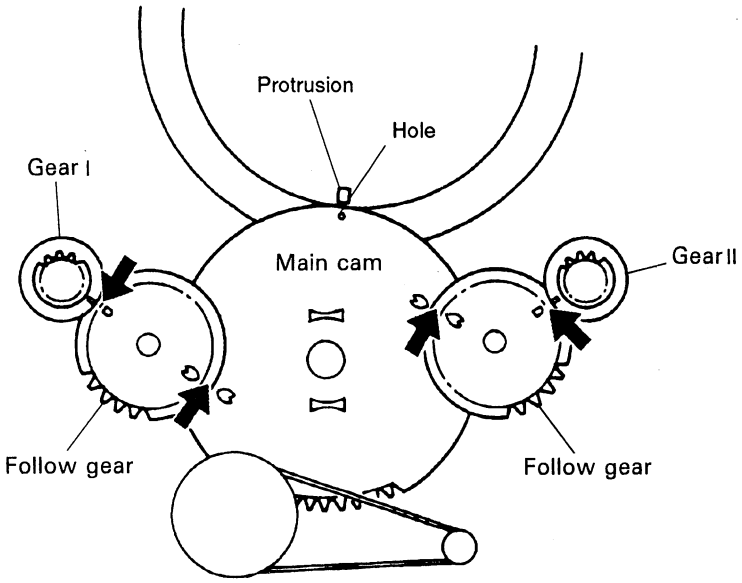

Fig. 4

● MOUNTING OF CLAMPER ASSEMBLY

Mount the clamper assembly by aligning the protrusion portion as shown in the figure.

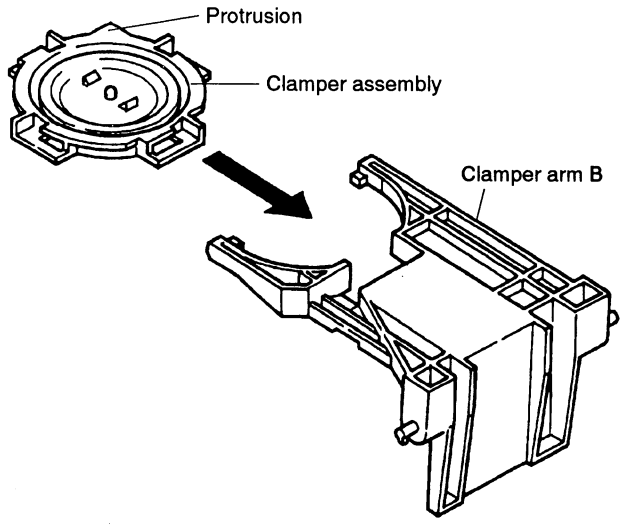

Fig. 5

2.9 PACKING

Parts list of Packing

Mark	No.	Description	Parts No.
	1	FRONT PAD L, R	AHA1479
	2	REAR PAD L, R	AHA1495
	3	PACKING CASE	AHD2216
	4	OPERATING INSTRUCTIONS (Dutch/Swedish/Spanish/ Portuguese)	ARE1219
	5	OPERATING INSTRUCTIONS (English/French/German/Italian)	ARE1218
	6	.....	
	7	REMOTE CONTROL UNIT (CU-DC021)	AXD1184
	8	BATTERY COVER	AZA1297
	101	DRY CELL BATTERY (R03, AAA)	AEX-021
	102	SHEET	AHG1151

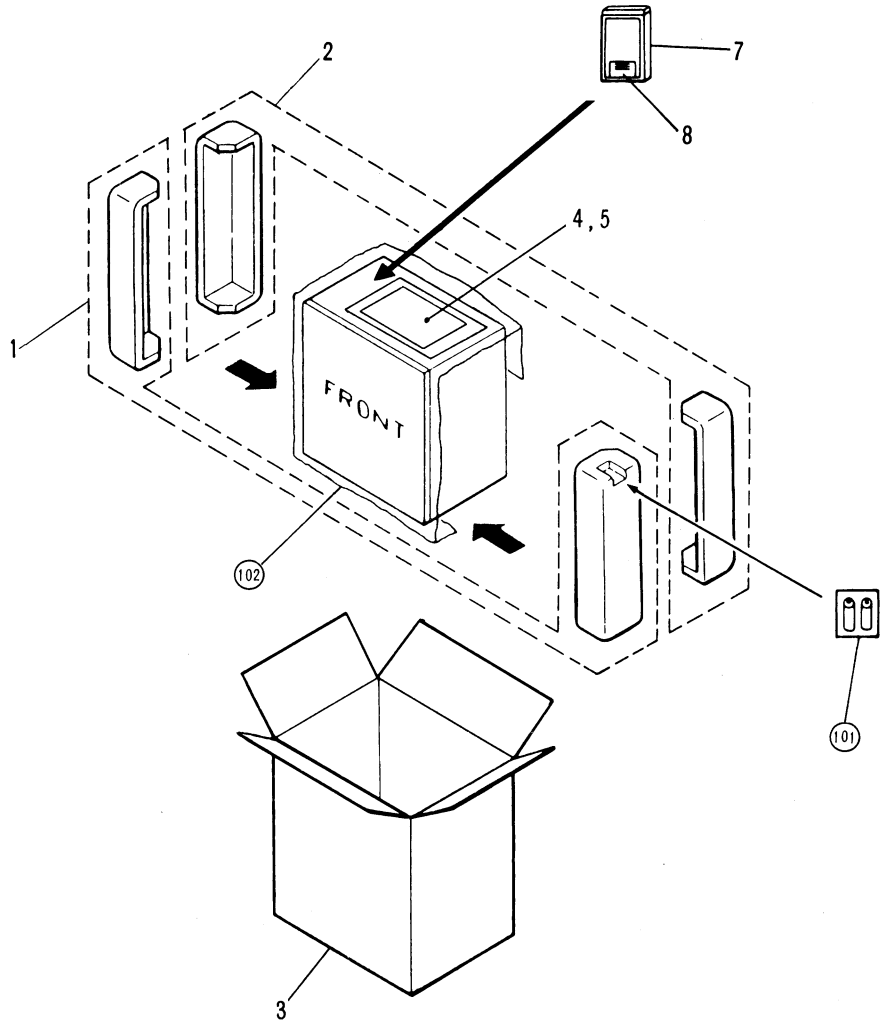

3. SCHEMATIC DIAGRAMS AND PCB CONNECTION DIAGRAMS

3.1 OVER ALL SCHEMATIC DIAGRAM

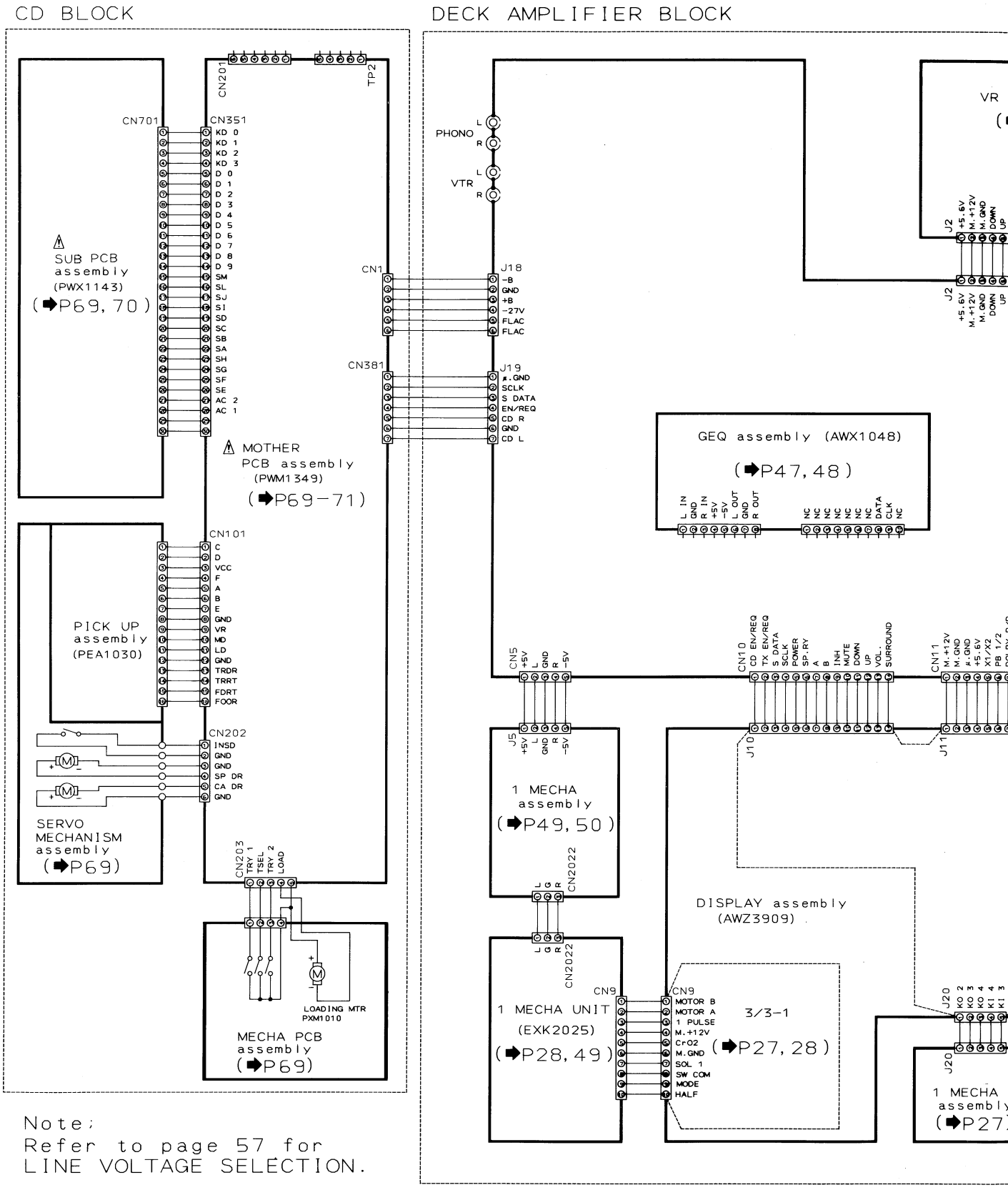

Note:
Refer to page 57 for
LINE VOLTAGE SELECTION.

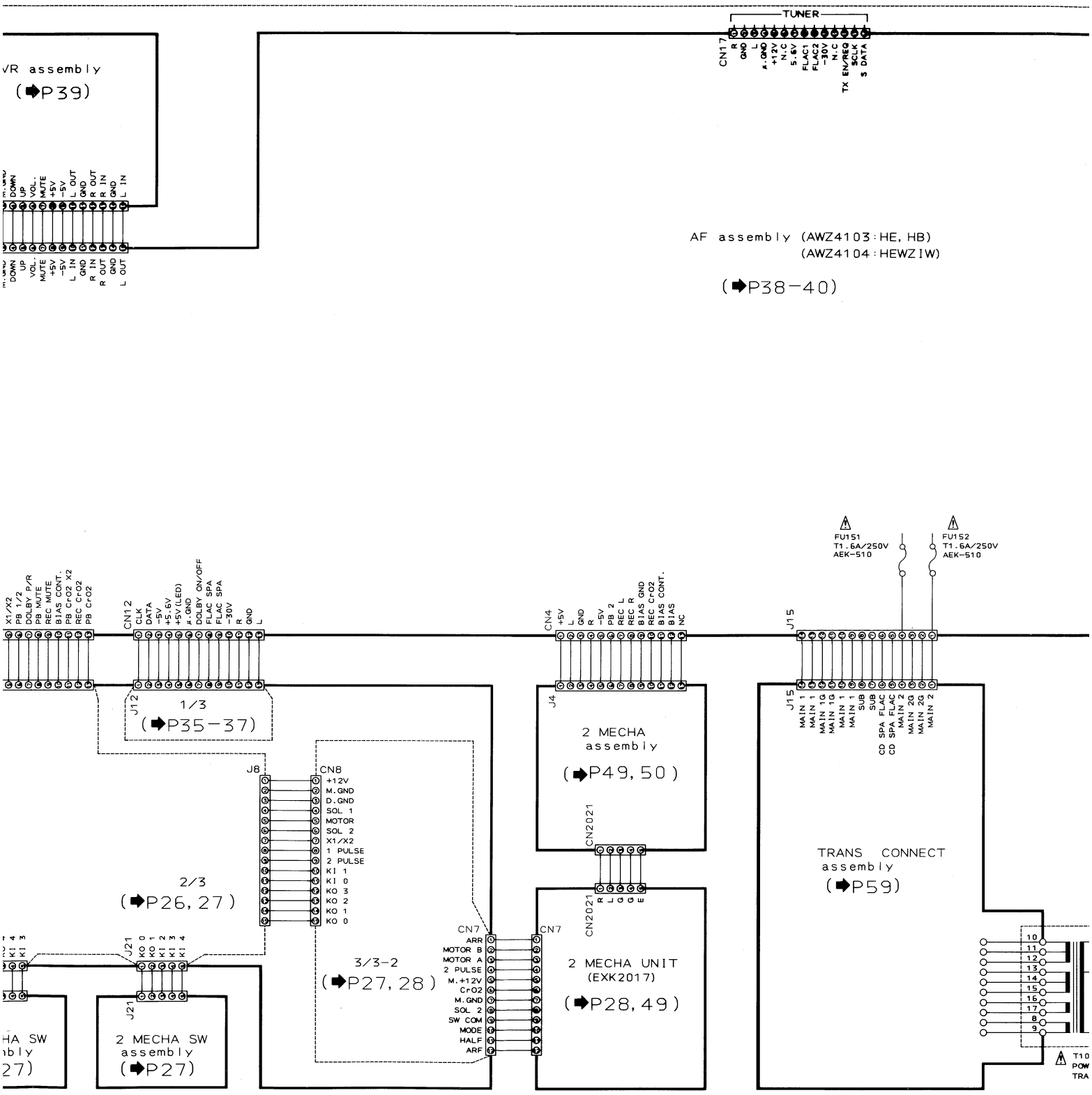
TUNER
CN17
R
GND
L
A.GND
+12V
N.C
5.6V
FLAC1
FLAC2
-30V
N.C
TX EN/REQ
SCLK
S DATA
VR assembly
(➡P39)
DOWN
UP
VOL.
MUTE
+5V
-5V
L OUT
GND
R OUT
R IN
GND
L IN
AF assembly (AWZ4103:HE, HB)
(AWZ4104:HEWZIW)
(➡P38-40)
FU151
T1.6A/250V
AEK-510
FU152
T1.6A/250V
AEK-510
X1/X2
PB 1/2
DOLBY P/R
PB MUTE
REC MUTE
BIAS CONT.
PB CrO2 X2
REC CrO2
PB CrO2
CN12
CLK
DATA
-5V
+5.6V
+5V(LED)
A.GND
DOLBY ON/OFF
FLAC SPA
FLAC SPA
-30V
R
GND
L
J12
1/3
(➡P35-37)
CN4
+5V
L
GND
R
-5V
PB 2
REC L
REC R
BIAS GND
REC CrO2
BIAS CONT.
BIAS
NC
J4
2 MECHA
assembly
(➡P49, 50)
J15
MAIN 1
MAIN 1
MAIN 1G
MAIN 1G
MAIN 1
MAIN 1
SUB
SUB
CD SPA FLAC
CD SPA FLAC
MAIN 2
MAIN 2G
MAIN 2G
MAIN 2
J8
CN8
+12V
M.GND
D.GND
SOL 1
MOTOR
SOL 2
X1/X2
1 PULSE
2 PULSE
KI 1
KI 0
KO 3
KO 2
KO 1
KO 0
2/3
(➡P26, 27)
CN2021
R L G G G E
TRANS CONNECT
assembly
(➡P59)
CN7
ARR
MOTOR B
MOTOR A
2 PULSE
M.+12V
CrO2
M.GND
SOL 2
SW COM
MODE
HALF
ARF
3/3-2
(➡P27, 28)
2 MECHA UNIT
(EXK2017)
(➡P28, 49)
J21
KO 0
KO 1
KI 2
KI 3
KI 4
2 MECHA SW
assembly
(➡P27)
10
11
12
13
14
15
16
17
8
9

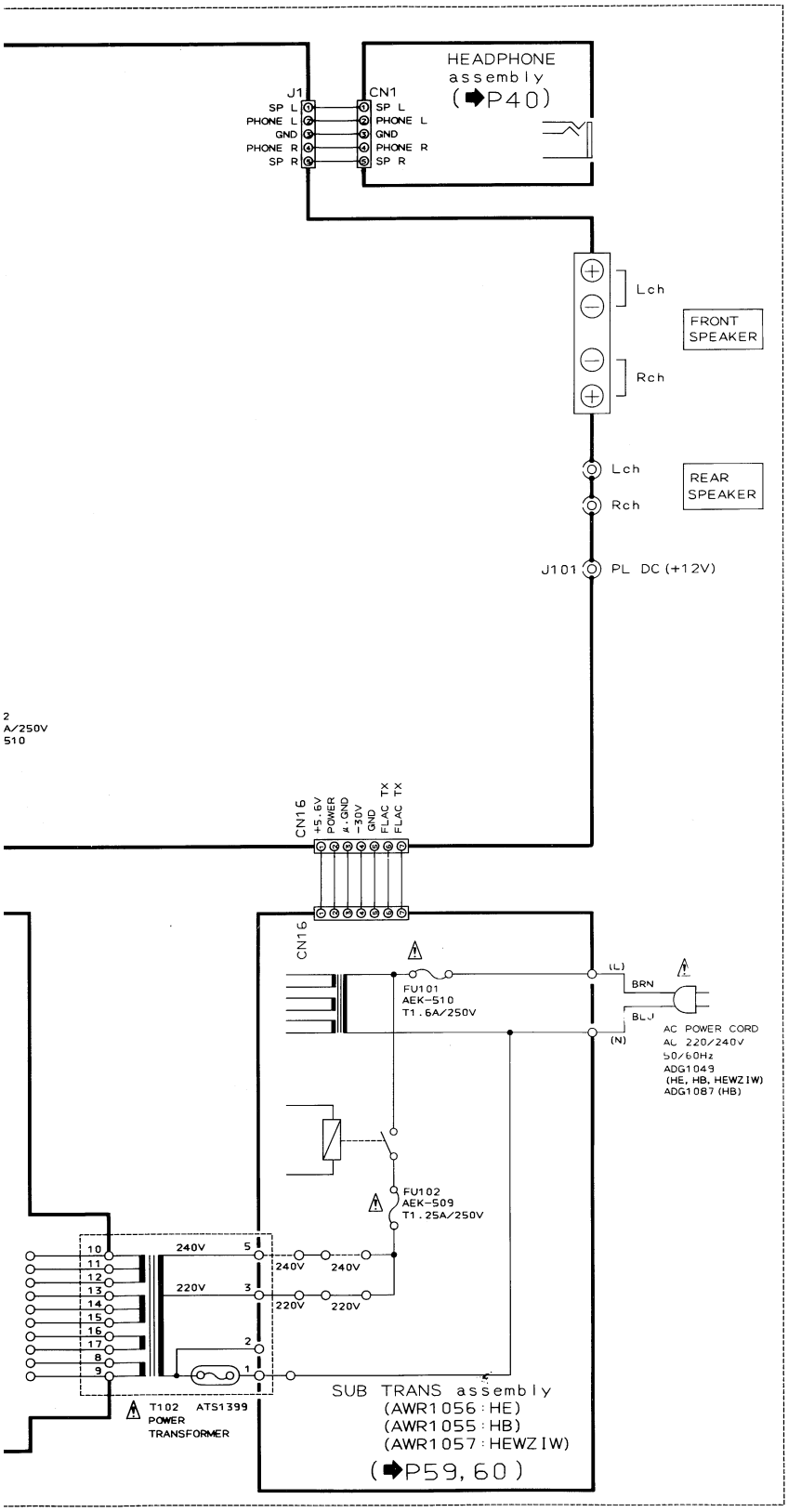

1. RESISTORS:
Indicated in Ω, ¼W, ⅛W, ±5% tolerance unless otherwise noted k : kΩ, M : MΩ, (F) : ±1%, (G) : ±2%, (K) : ±10% (M); ±20% tolerance

2. CAPACITORS:
Indicated in capacity (μF)/voltage (V) unless otherwise noted p : pF
Indication without voltage is 50V except electrolytic capacitor.

3. VOLTAGE, CURRENT:
: Signal voltage at (33 W + 33 W 8Ω)output (1kHz)
: DC voltage (V) at no input signal
Value in ( ) is DC voltage at rated power.
⇦ mA : DC current at no input signal

4. OTHERS:
➡ : Signal route.
⊘ : Adjusting point.
The ⚠ mark found on some component parts indicates the importance of the safety factor of the part. Therefore, when replacing, be sure to use parts of identical designation.
※ marked capacitors and resistors have parts numbers.
▼ (RED) : TEST POINT
This is the basic schematic diagram, but the actual circuit may vary due to improvements in design.

5. SWITCHES (The underline indicates the switch position)

DISPLAY assembly

S1504	POWER
S1505	VIDEO
S1507	FINE
S1510	AI MEMO
S1511	AI BGM
S1512	PHONO
S1513	2 REC MUTE
S1514	NORMAL
S1516	SURR.
S1517	TAPE
S1518	2 REC
S1519	×2 COPY
S1522	CD
S1523	TX
S1524	2 PAUSE
S1525	×1 COPY
S1528	DOLBY NR ON/OFF
S1532	FLAT
S1533	D (CAR)
S1534	B (CLEAR)
S1535	MEMORY
S1537	EQ ON/OFF
S1538	LEVEL UP (▶)
S1539	F DOWN
S1542	E (PHONES)
S1543	C (VOCAL)
S1544	A (HEAVY)
S1546	PGM PRESET
S1547	F UP
S1548	LEVEL DOWN (◀)

1 MECHA SW assembly

S1551	1 REV
S1552	1 PLAY
S1553	1 STOP
S1554	1 REW
S1555	1 FF

2 MECHA SW assembly

S1556	2 STOP
S1557	2 REV
S1558	2 PLAY
S1559	2 REW
S1560	2 FF

3.2 DISPLAY assembly, 1 MECHA SW assembly, 2 MECHA SW assembly, 1 MECHA UNIT (1/2) and 2 MECHA UNIT (1/2)

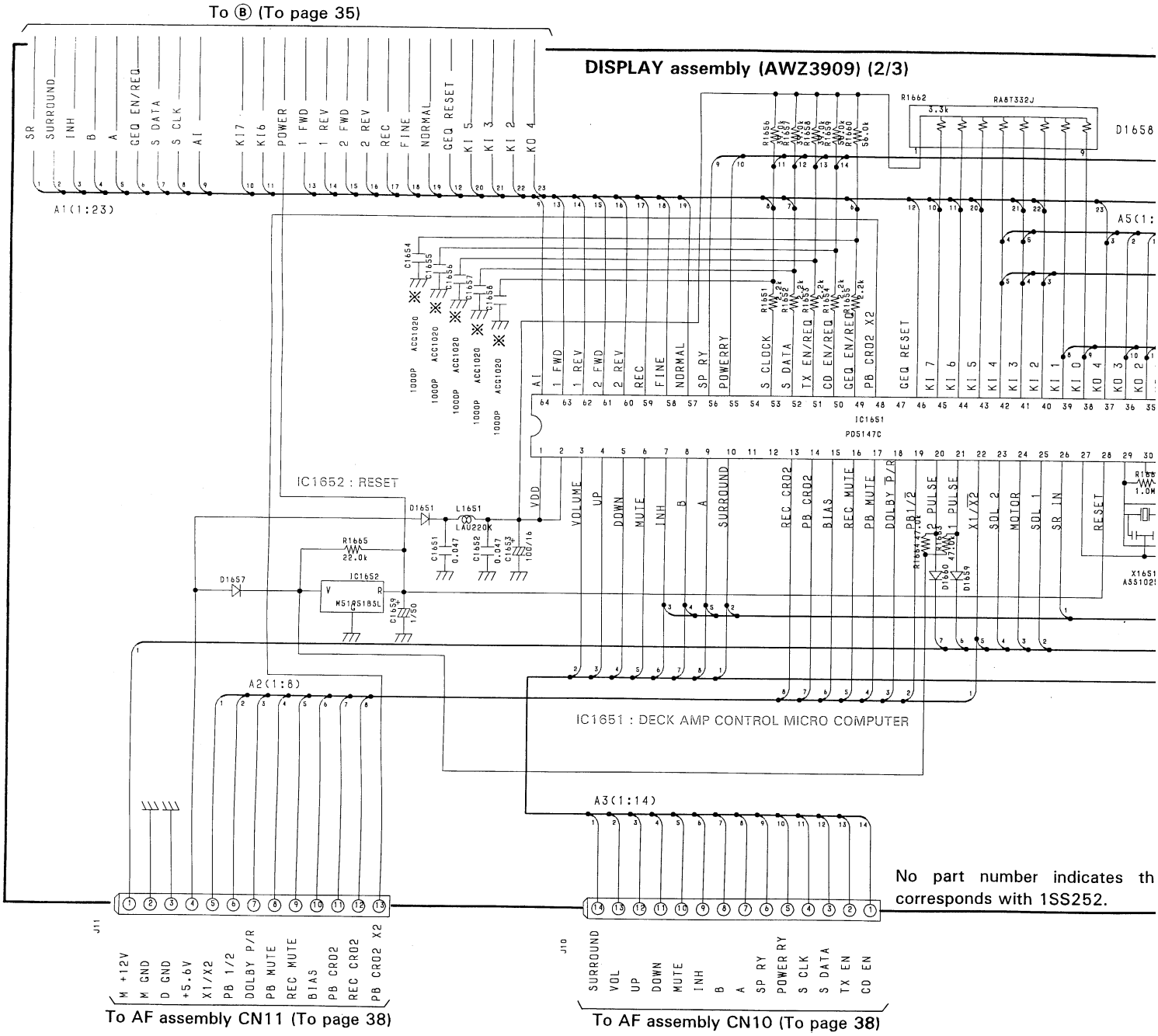

INIT

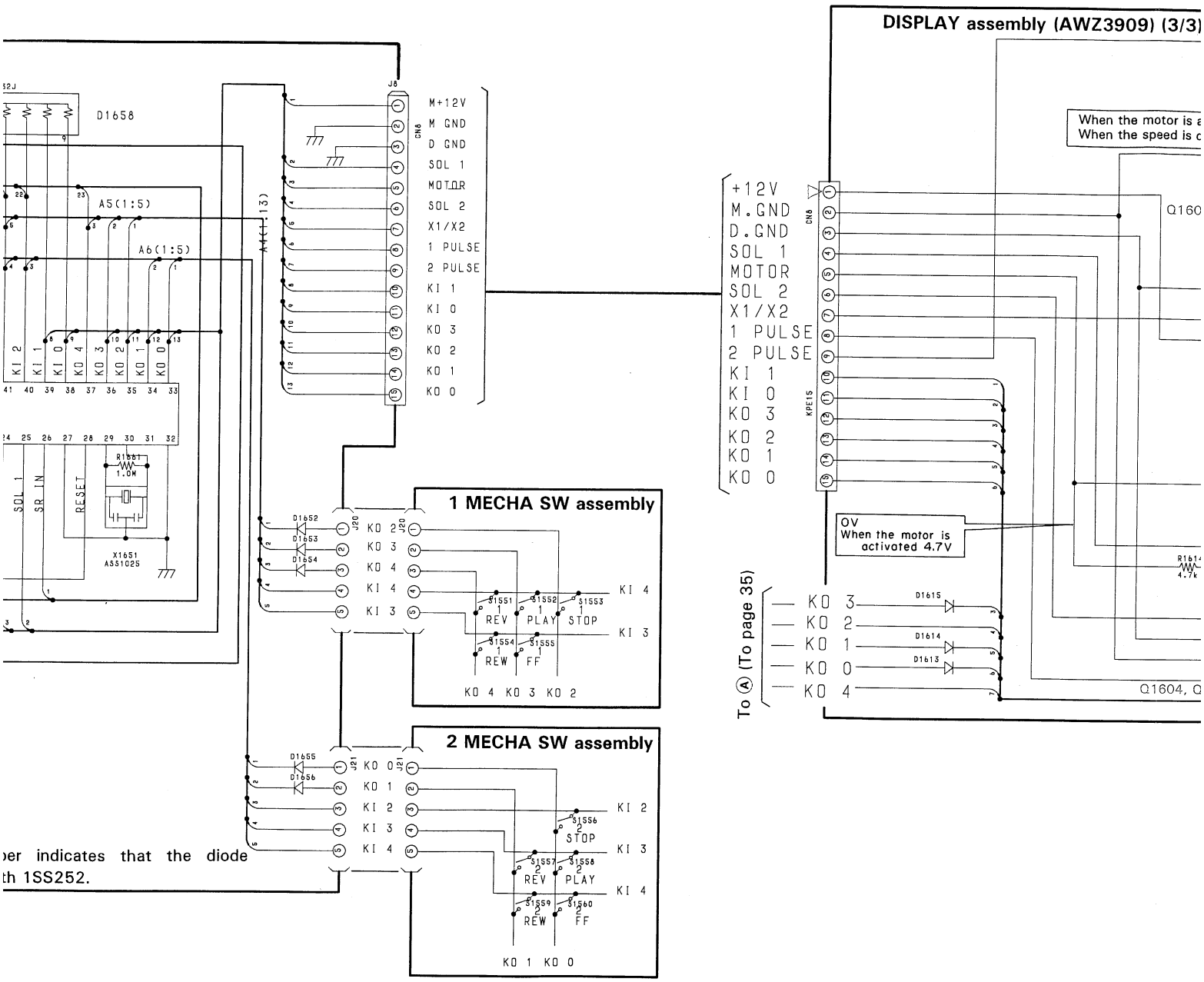

ber indicates that the diode
th 1SS252.

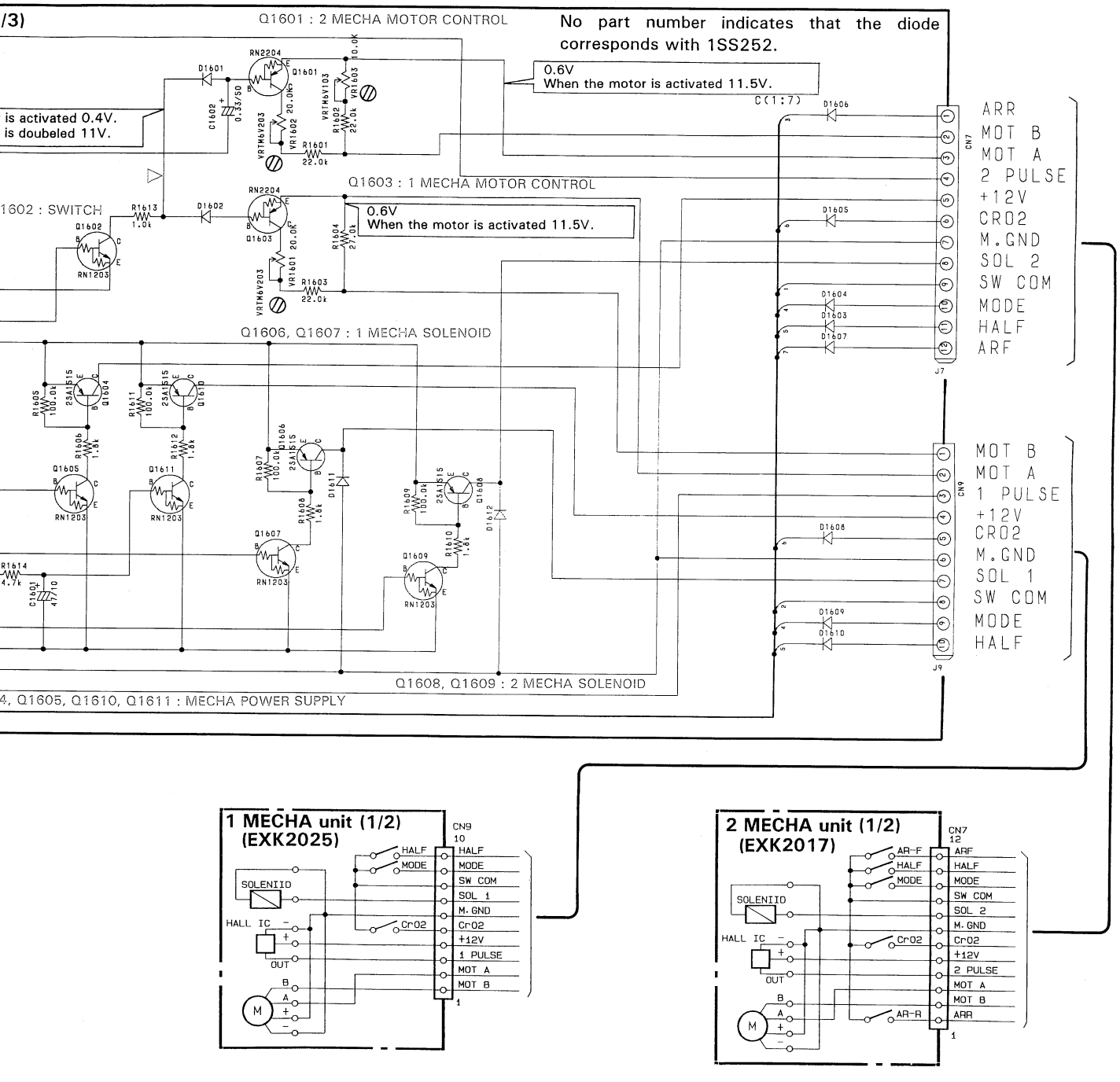
/3)
Q1601 : 2 MECHA MOTOR CONTROL
No part number indicates that the diode corresponds with 1SS252.
0.6V
When the motor is activated 11.5V.
is activated 0.4V.
is doubeled 11V.
1602 : SWITCH
Q1603 : 1 MECHA MOTOR CONTROL
0.6V
When the motor is activated 11.5V.
Q1606, Q1607 : 1 MECHA SOLENOID
Q1608, Q1609 : 2 MECHA SOLENOID
4, Q1605, Q1610, Q1611 : MECHA POWER SUPPLY
ARR
MOT B
MOT A
2 PULSE
+12V
CR02
M.GND
SOL 2
SW COM
MODE
HALF
ARF
MOT B
MOT A
1 PULSE
+12V
CR02
M.GND
SOL 1
SW COM
MODE
HALF

1 MECHA unit (1/2)
(EXK2025)
CN9
10
HALF
MODE
SW COM
SOL 1
M. GND
Cr02
+12V
1 PULSE
MOT A
MOT B
1
SOLENIID
HALL IC
OUT
M

2 MECHA unit (1/2)
(EXK2017)
CN7
12
ARF
HALF
MODE
SW COM
SOL 2
M. GND
Cr02
+12V
2 PULSE
MOT A
MOT B
ARR
1
AR-F
AR-R
SOLENIID
HALL IC
OUT
M

NOTE

1. This P.C.B connection diagram is viewed from the parts mounted side.
2. The parts which have been mounted on the board can be replaced with those shown with the corresponding wiring symbols listed in the following Table.

P.C.B. pattern diagram indication	Corresponding part symbol	Part Name
Q504 E	E or E	Transistor
Q215	or	Radiator type transistor
D203	D203	Diode
R237	R237	Resistor
C513	+	Capacitor (Polarized)
C518		Capacitor (Non-polarized)

Others

P.C.B. pattern diagram indication	Part Name
IC	IC
S	Switch
RY	Relay
L	Coil
F	Filter
VR	Variable resistor or Semi-fixed resistor

3. The capactor terminal marked with ◎(double circles) shows negatine terminal.
4. The diode terminal marked with ◎(double circles) shows cathode side.
5. The transistor terminal to which E is affixed shows the emitter.

Q1503-Q1507 IC1502 Q1514 Q1513
IC1652 IC1651

DISPLAY assembly (AWZ3909)

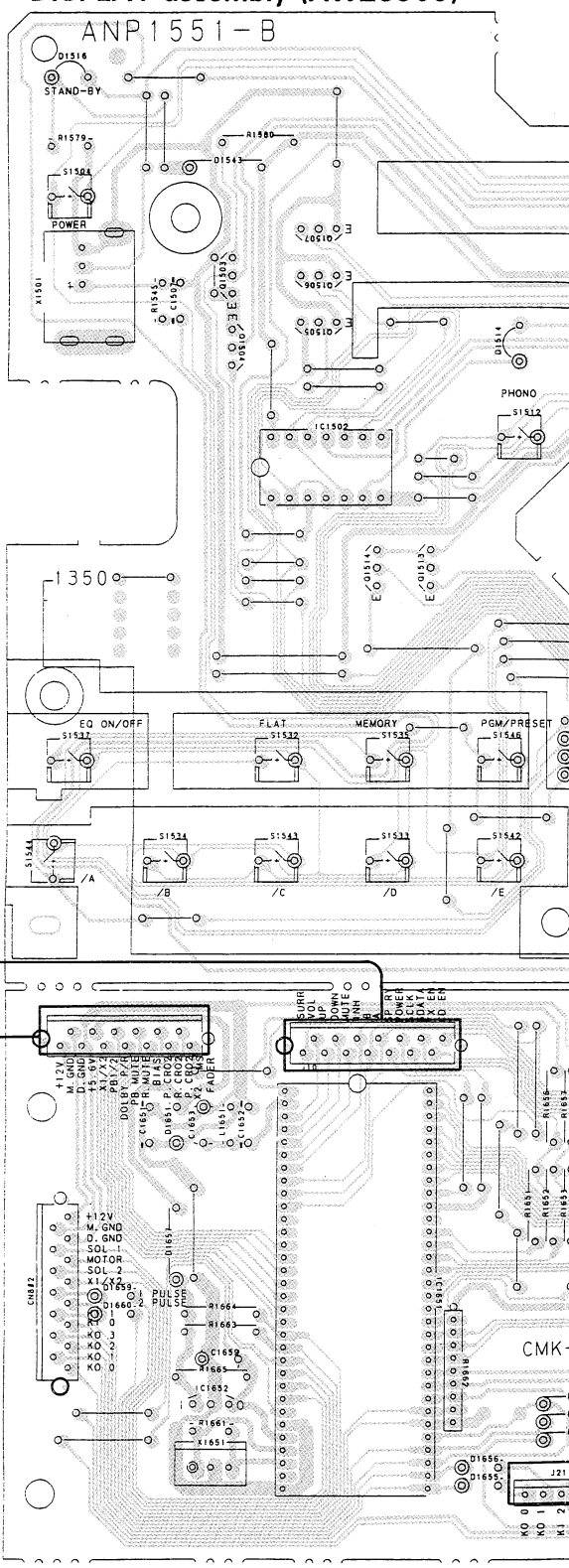

To AF assembly CN10 (To page 42)

2 MECHA SW assembly

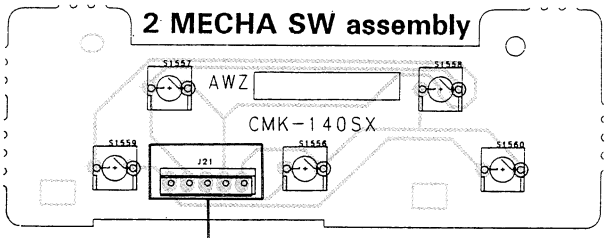

1 MECHA SW assembly

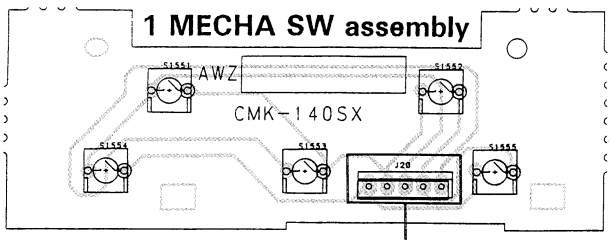

To AF assembly CN11 (To page 41)

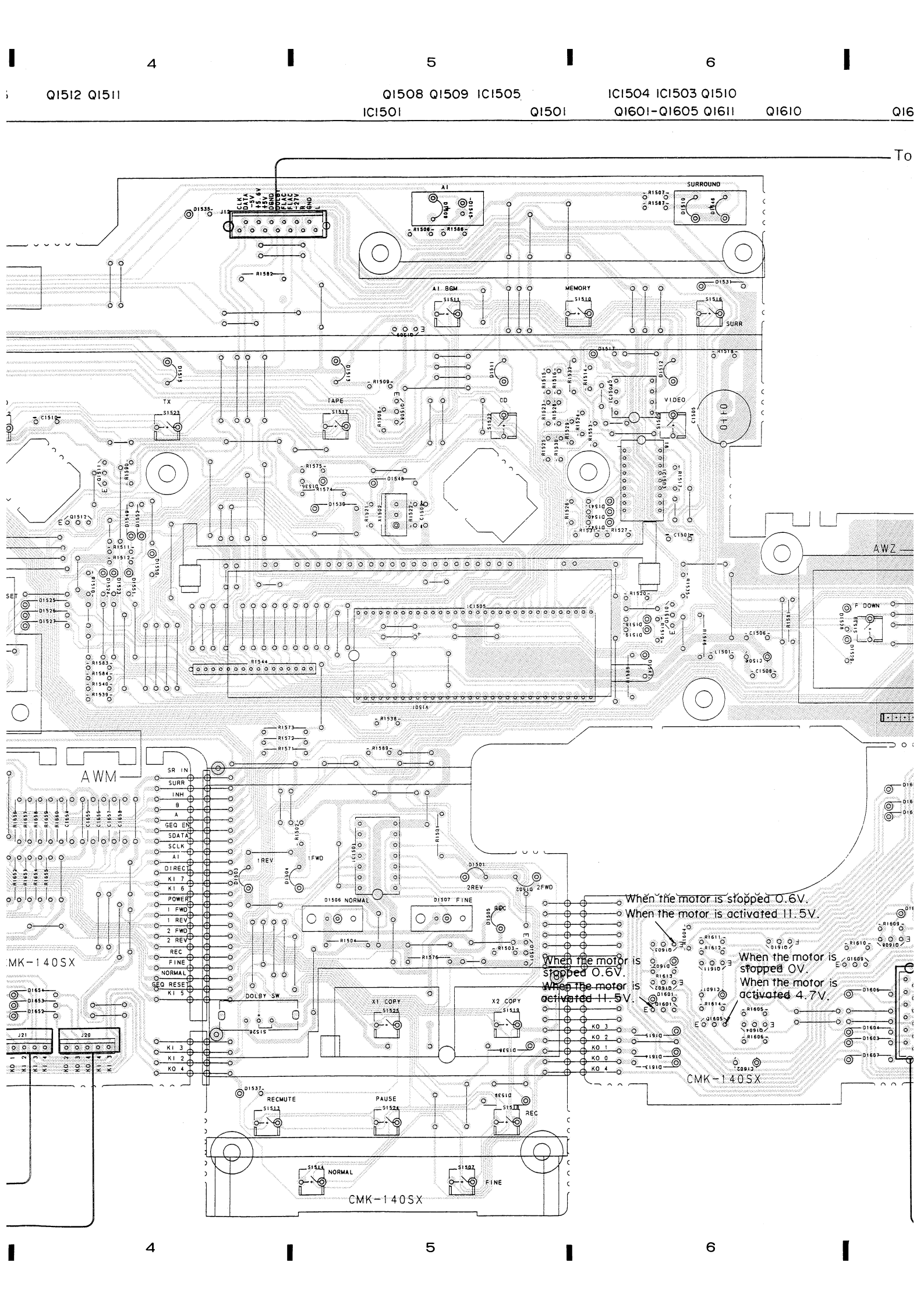
4
5
6
Q1512 Q1511
Q1508 Q1509 IC1505
IC1501
Q1501
IC1504 IC1503 Q1510
Q1601-Q1605 Q1611
Q1610
To
SURROUND
AI
AI BGM
MEMORY
SURR
TAPE
CD
VIDEO
TX
AWZ
AWM
P DOWN
SR IN
SURR
INH
B
A
GEQ EN
SDATA
SCLK
AI
DIREC
KI 7
KI 6
POWER
1 FWD
1 REV
2 FWD
2 REV
REC
FINE
NORMAL
GEQ RESET
KI 5
KI 3
KI 2
KO 4
1REV
1FWD
2REV
2FWD
D1506 NORMAL
D1507 FINE
DOLBY SW
X1 COPY
X2 COPY
KO 3
KO 2
KO 1
KO 0
KO 4
When the motor is stopped 0.6V.
When the motor is activated 11.5V.
When the motor is stopped 0.6V.
When the motor is activated 11.5V.
When the motor is stopped 0V.
When the motor is activated 4.7V.
CMK-140SX
RECMUTE
PAUSE
REC
NORMAL
FINE
CMK-140SX
4
5
6

Q1606-Q1609

VR1601-VR1603

To AF assembly CN12 (To page 41)

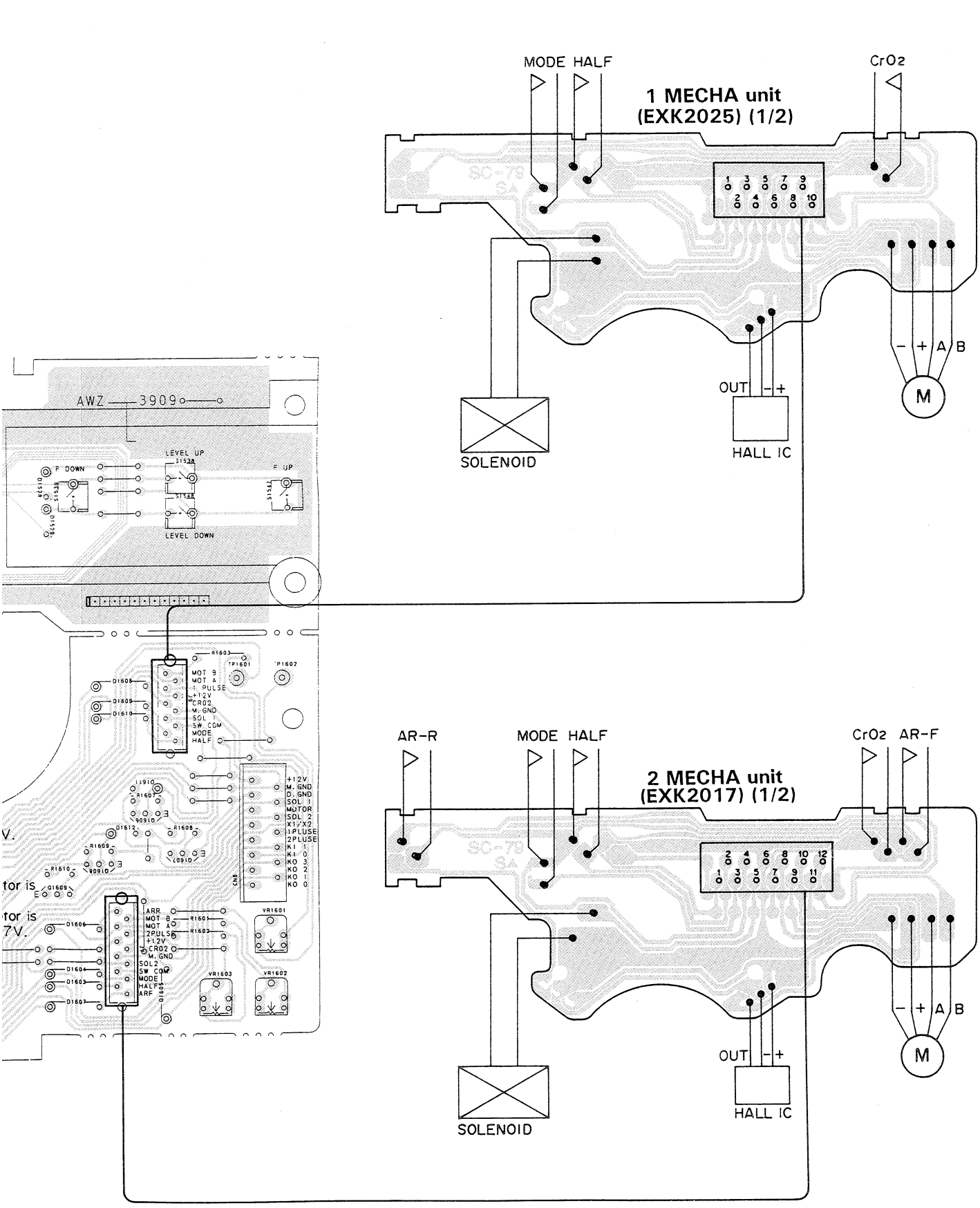

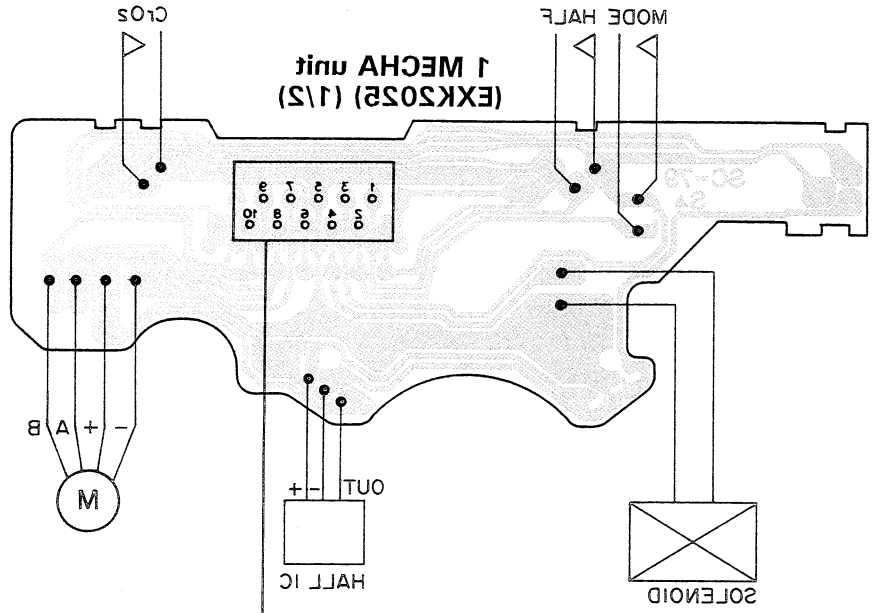
1 MECHA unit
(EXK2025) (1/2)
MODE HALF
CF02
M
B A + −
OUT
HALL IC
SOLENOID

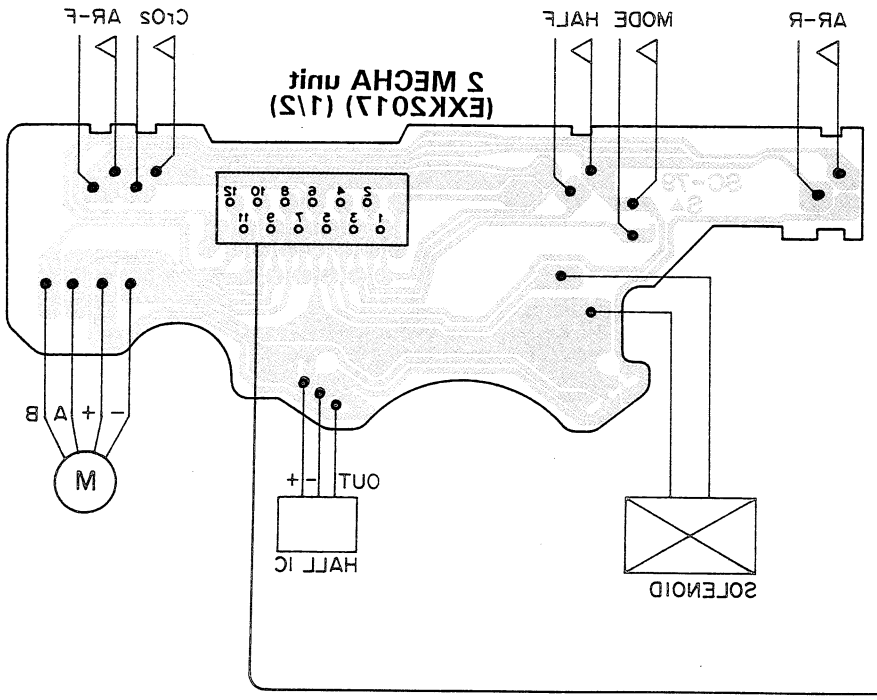
2 MECHA unit
(EXK2017) (1/2)
AR-R
MODE HALF
CF02 AR-F
M
B A + −
OUT
HALL IC
SOLENOID

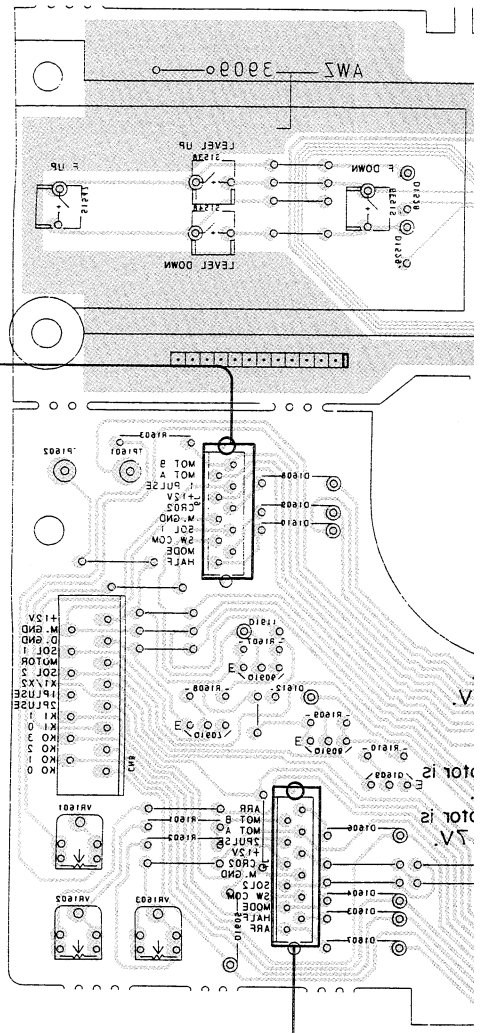
AW2
3909
LEVEL UP
LEVEL DOWN
F. UP
F. DOWN

When the motor is stopped 0.6V.
When the motor is activated 11.5V.
When the motor is stopped 0V.
When the motor is activated 4.7V.
When the motor is stopped 0.6V.
When the motor is activated 11.5V.
CMK-1405X
CMK-1405X
CMK-1405X
AWZ
AWM

This P. C. B. connection diagram is viewed from the foil side.

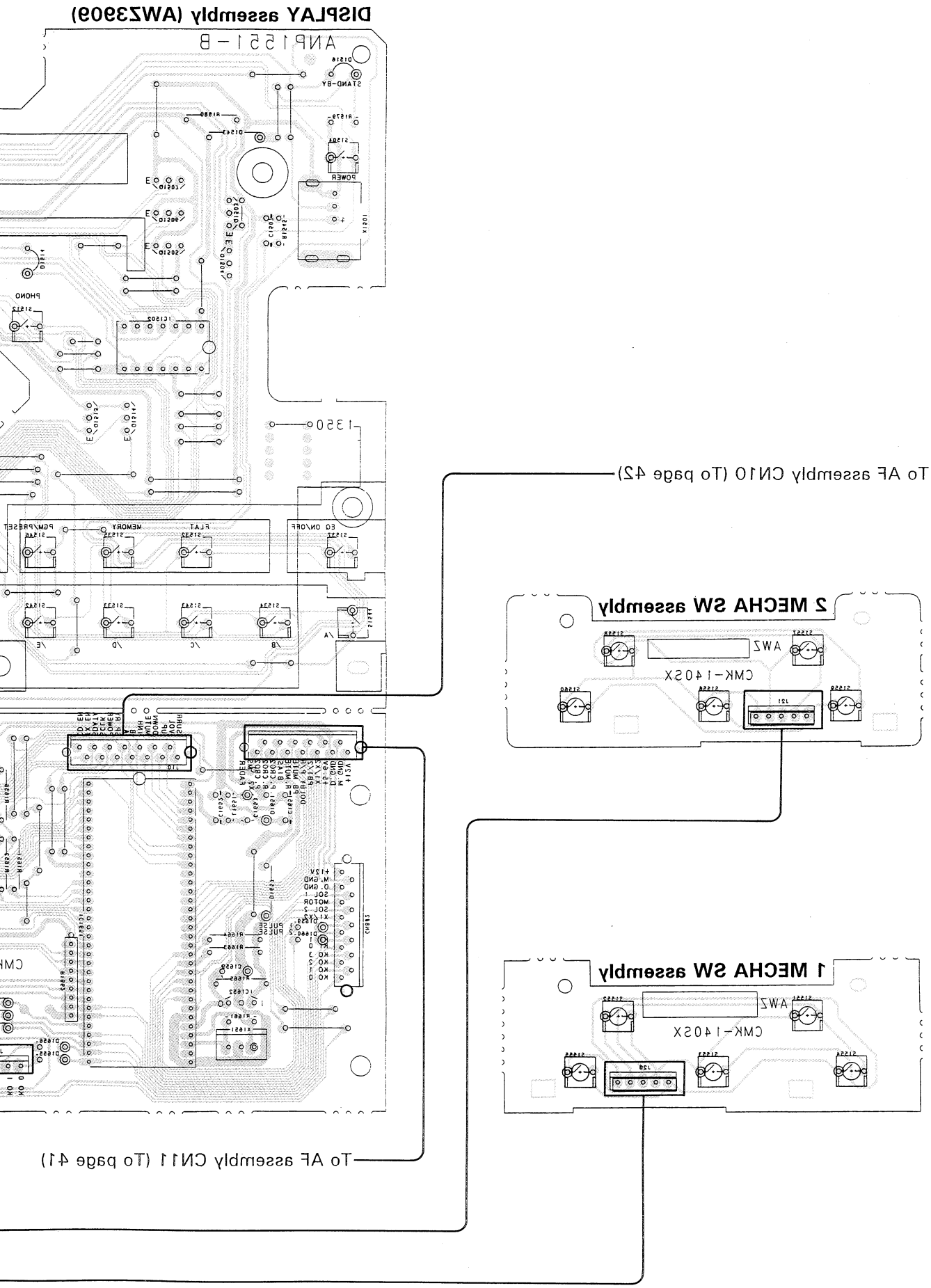

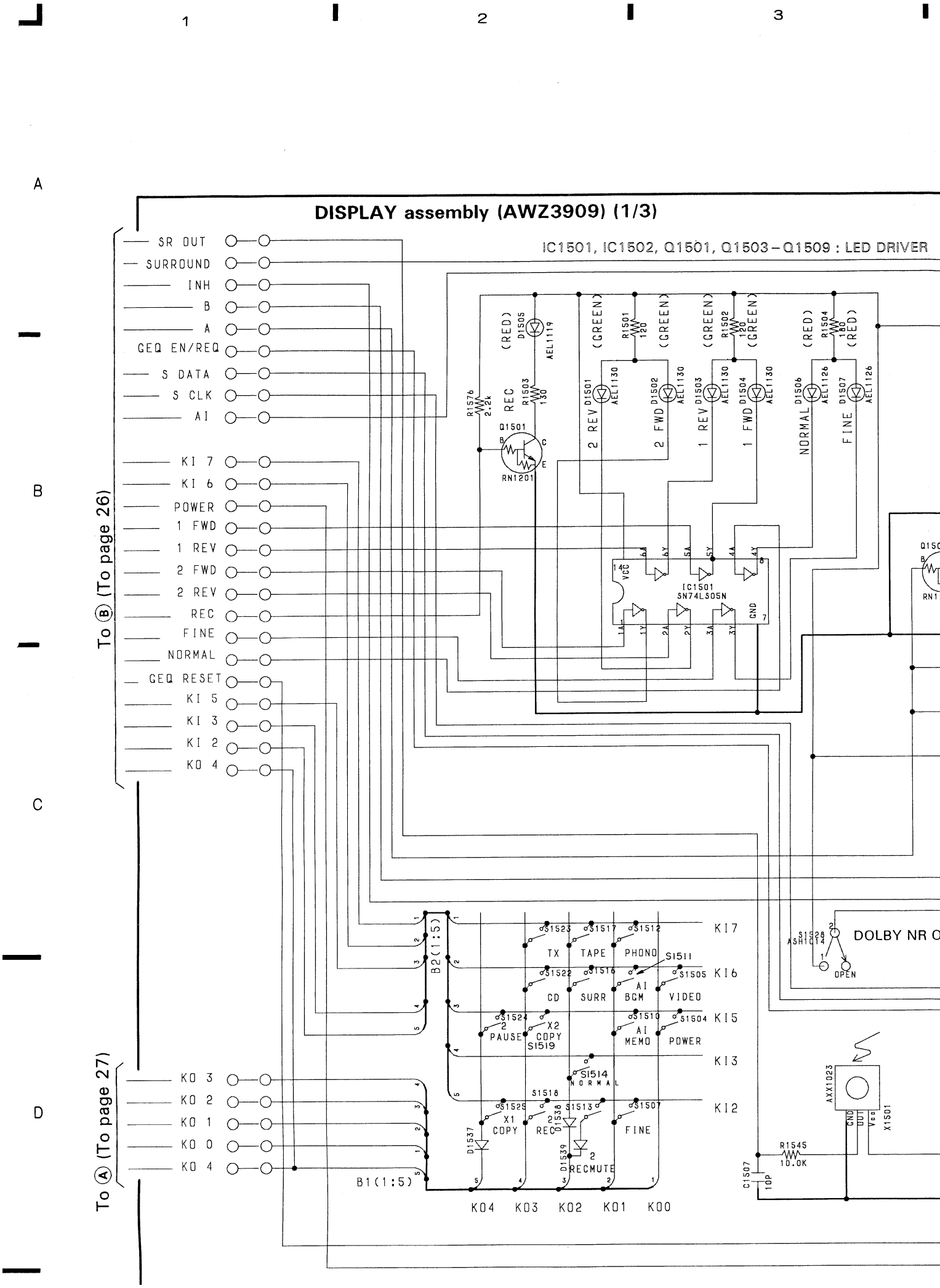
DISPLAY assembly (AWZ3909) (1/3)
IC1501, IC1502, Q1501, Q1503 – Q1509 : LED DRIVER
SR OUT
SURROUND
INH
B
A
GEQ EN/REQ
S DATA
S CLK
AI
KI 7
KI 6
POWER
1 FWD
1 REV
2 FWD
2 REV
REC
FINE
NORMAL
GEQ RESET
KI 5
KI 3
KI 2
KO 4
KO 3
KO 2
KO 1
KO 0
KO 4
To Ⓑ (To page 26)
To Ⓐ (To page 27)
REC (RED)
2 REV (GREEN)
2 FWD (GREEN)
1 REV (GREEN)
1 FWD (GREEN)
NORMAL (RED)
FINE (RED)
Q1501
RN1201
IC1501
SN74LS05N
VCC
GND
DOLBY NR O
OPEN
TX
TAPE
PHONO
CD
SURR
AI BGM
VIDEO
PAUSE
COPY
AI MEMO
POWER
NORMAL
COPY
REC
FINE
RECMUTE
B1(1:5)
B2(1:5)
KI7
KI6
KI5
KI3
KI2
KO4
KO3
KO2
KO1
KO0
AXX1023
X1501
R1545
10.0K
C1507
10P

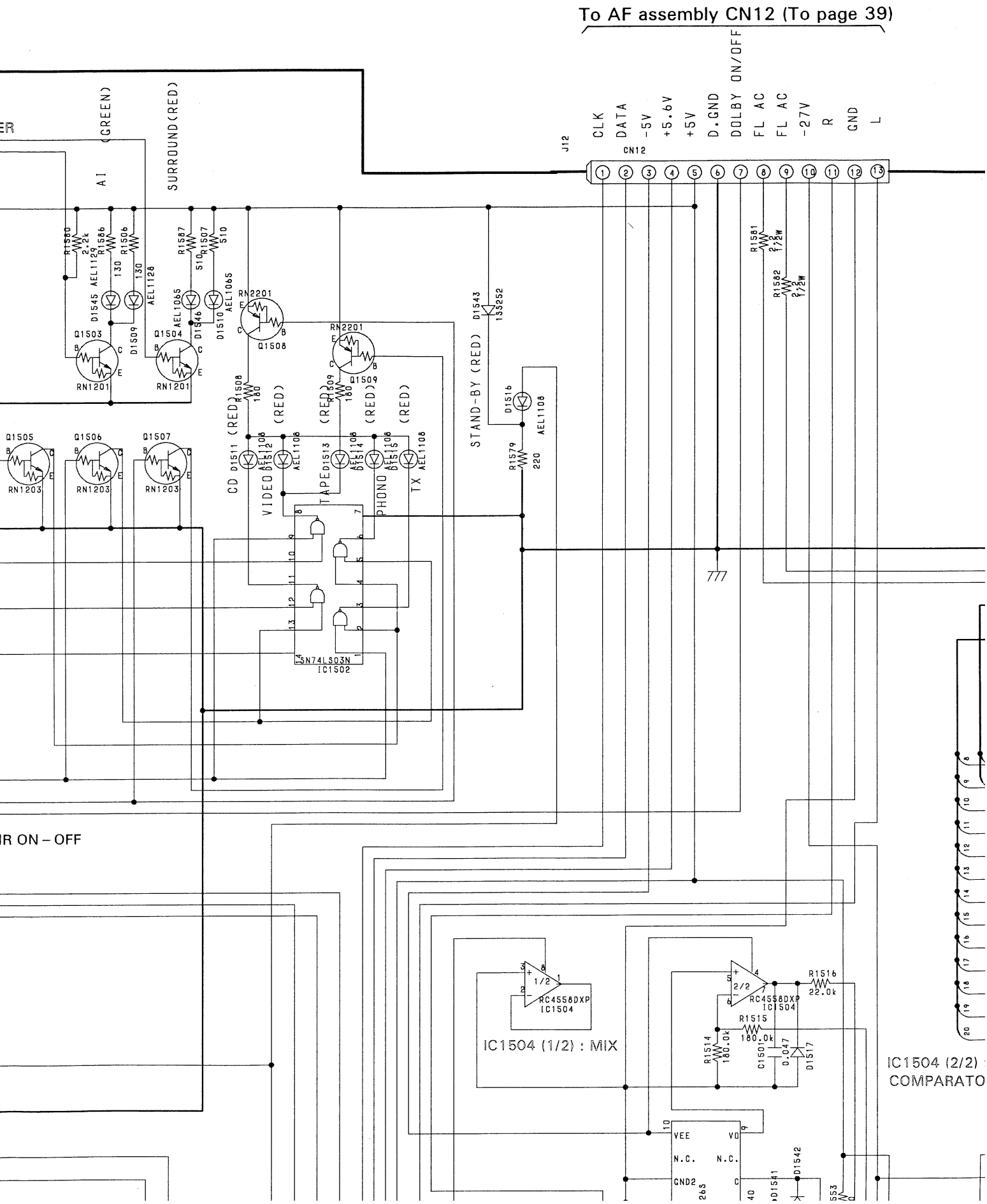
To AF assembly CN12 (To page 39)
CLK
DATA
-5V
+5.6V
+5V
D.GND
DOLBY ON/OFF
FL AC
FL AC
-27V
R
GND
L
J12
CN12
AI (GREEN)
SURROUND(RED)
CD (RED)
VIDEO (RED)
TAPE (RED)
PHONO (RED)
TX (RED)
STAND-BY (RED)
Q1503
Q1504
Q1505
Q1506
Q1507
Q1508
Q1509
RN1201
RN1203
RN2201
IC1502
SN74LS03N
IC1504 (1/2) : MIX
RC4558DXP
IC1504
IC1504 (2/2) :
COMPARATO
IR ON – OFF

IC1505 : SPEANA CONTROL MICRO COMPUTER

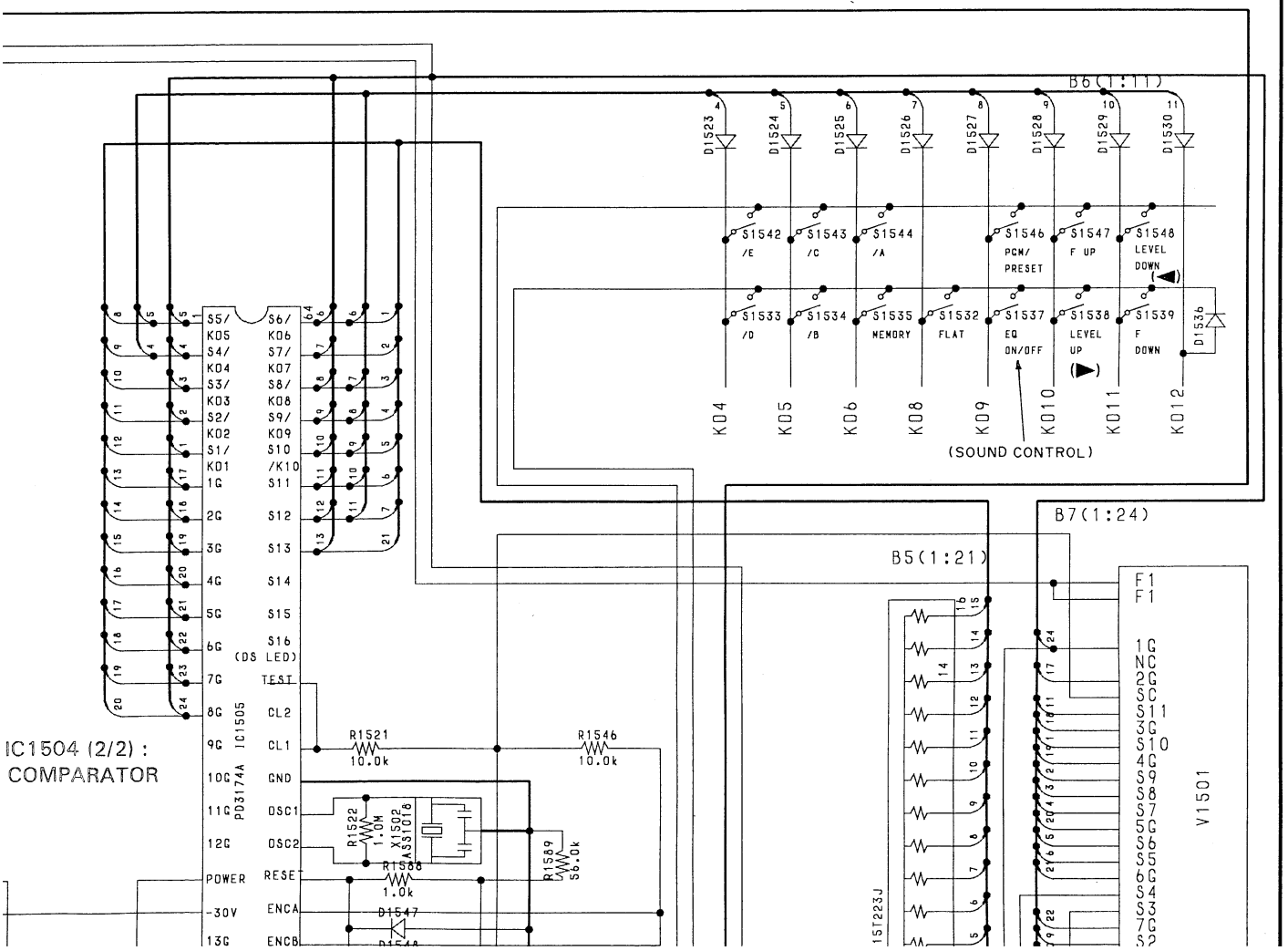

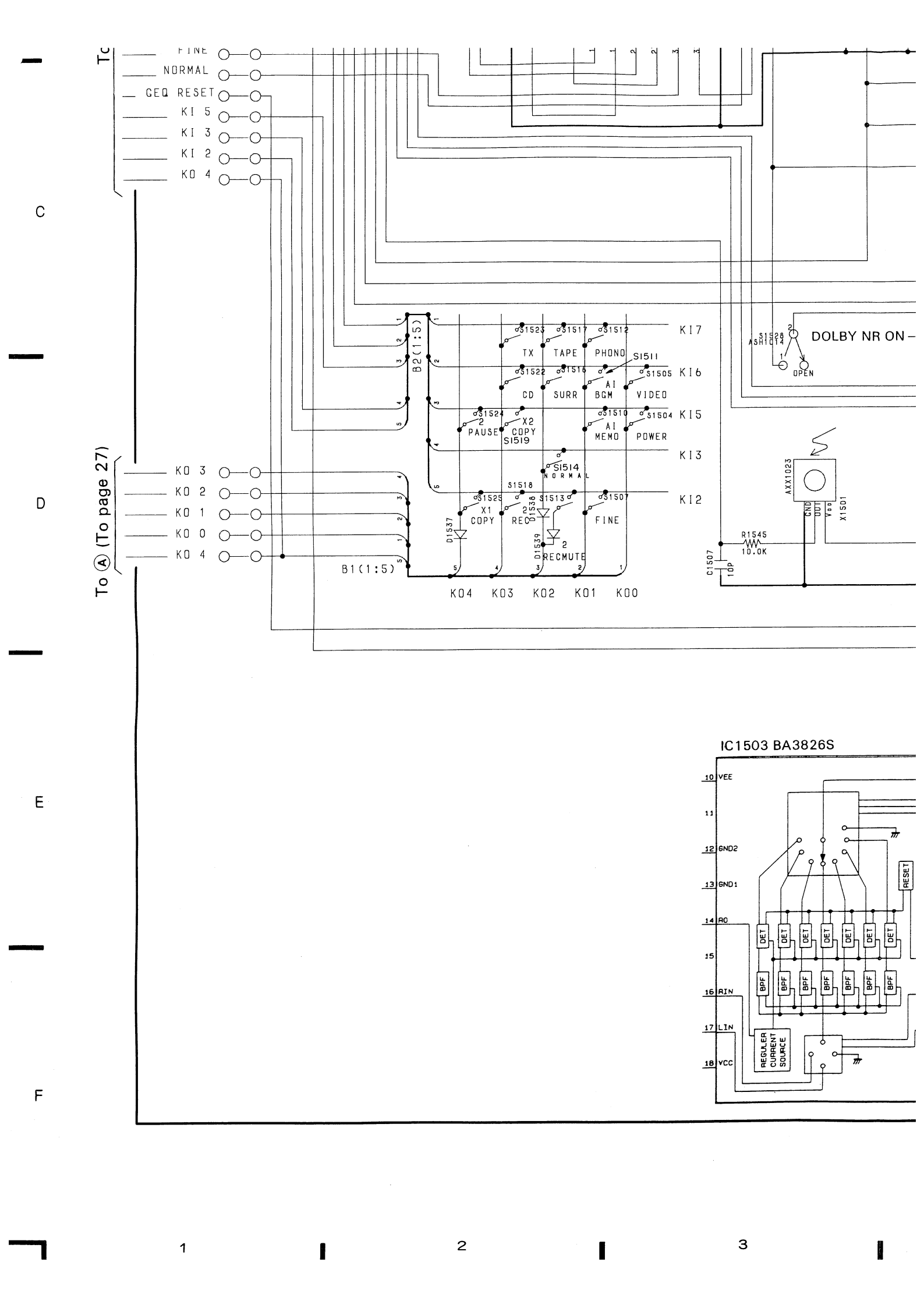
To
FINE
NORMAL
GEQ RESET
KI 5
KI 3
KI 2
KO 4
KO 3
KO 2
KO 1
KO 0
KO 4
To Ⓐ (To page 27)
B2(1:5)
B1(1:5)
S1523
S1517
S1512
TX
TAPE
PHONO
S1511
S1522
S1516
S1505
CD
SURR
AI BGM
VIDEO
S1524
2
PAUSE
X2
COPY
S1519
S1510
AI MEMO
S1504
POWER
S1514
NORMAL
S1518
S1525
X1
COPY
2
REC
D1538
S1513
S1507
FINE
D1537
D1539
2
RECMUTE
KI7
KI6
KI5
KI3
KI2
KO4
KO3
KO2
KO1
KO0
S1528
ASH1014
DOLBY NR ON
OPEN
AXX1023
GND
OUT
Vop
X1501
R1545
10.0K
C1507
10P
IC1503 BA3826S
10 VEE
11
12 GND2
13 GND1
14 AO
15
16 AIN
17 LIN
18 VCC
DET
BPF
REGULER CURRENT SOURCE
RESET

1 2 3

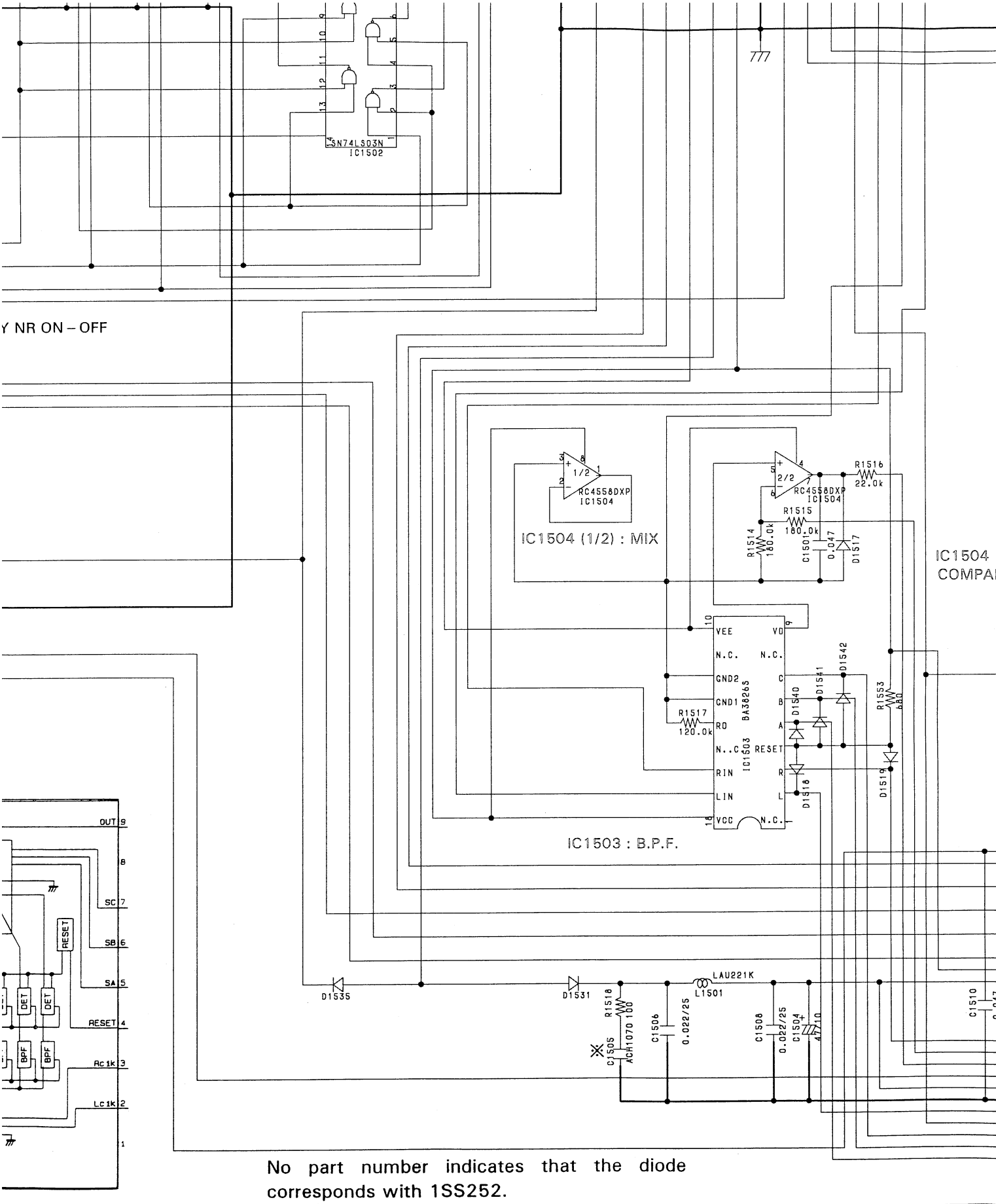

No part number indicates that the diode corresponds with 1SS252.

IC1505 : SPEANA CONTROL MICRO COMPUTER

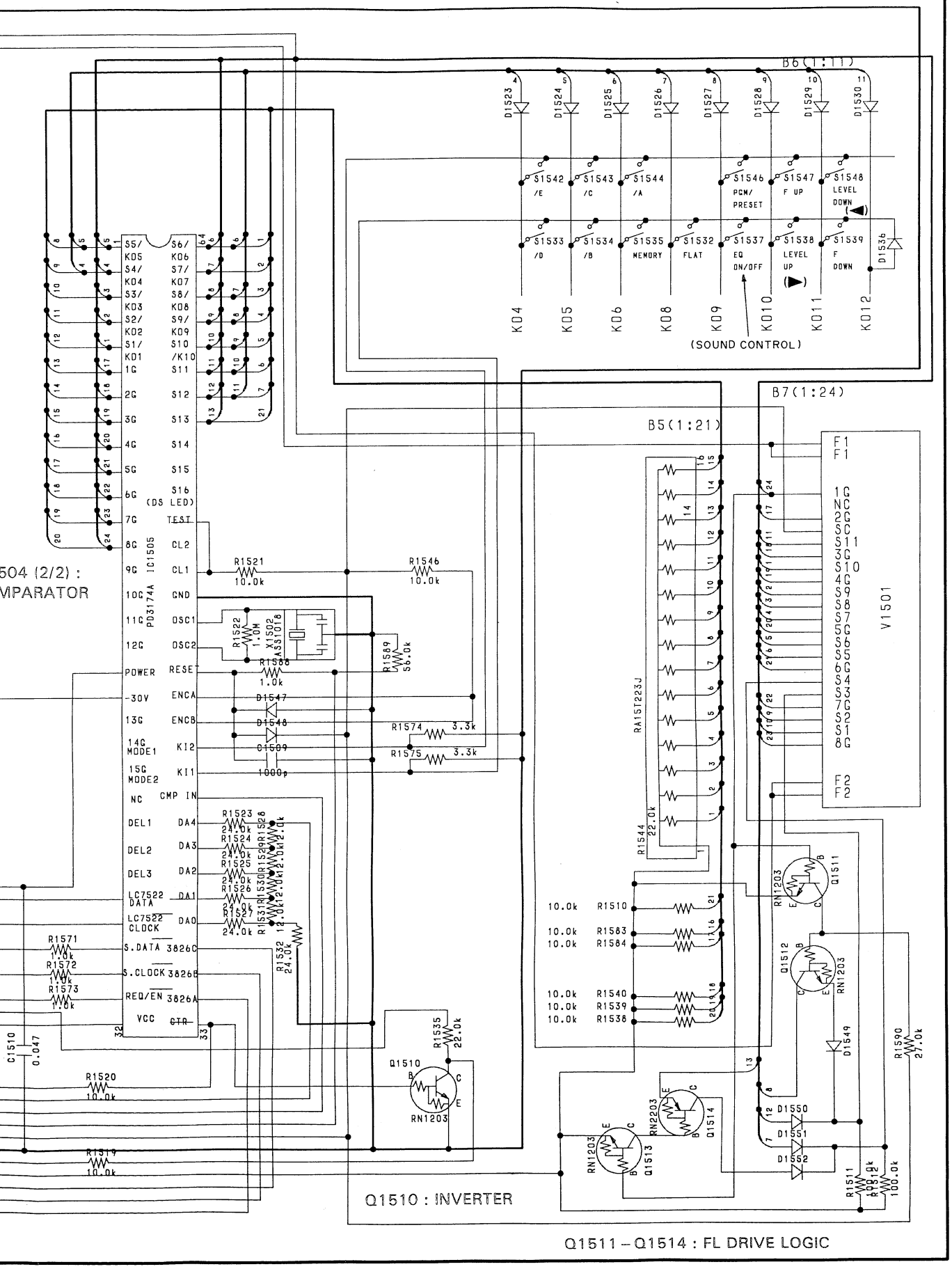

3.3 AF assembly, HEAD PHONE assembly, VR assembly and GEQ assembly

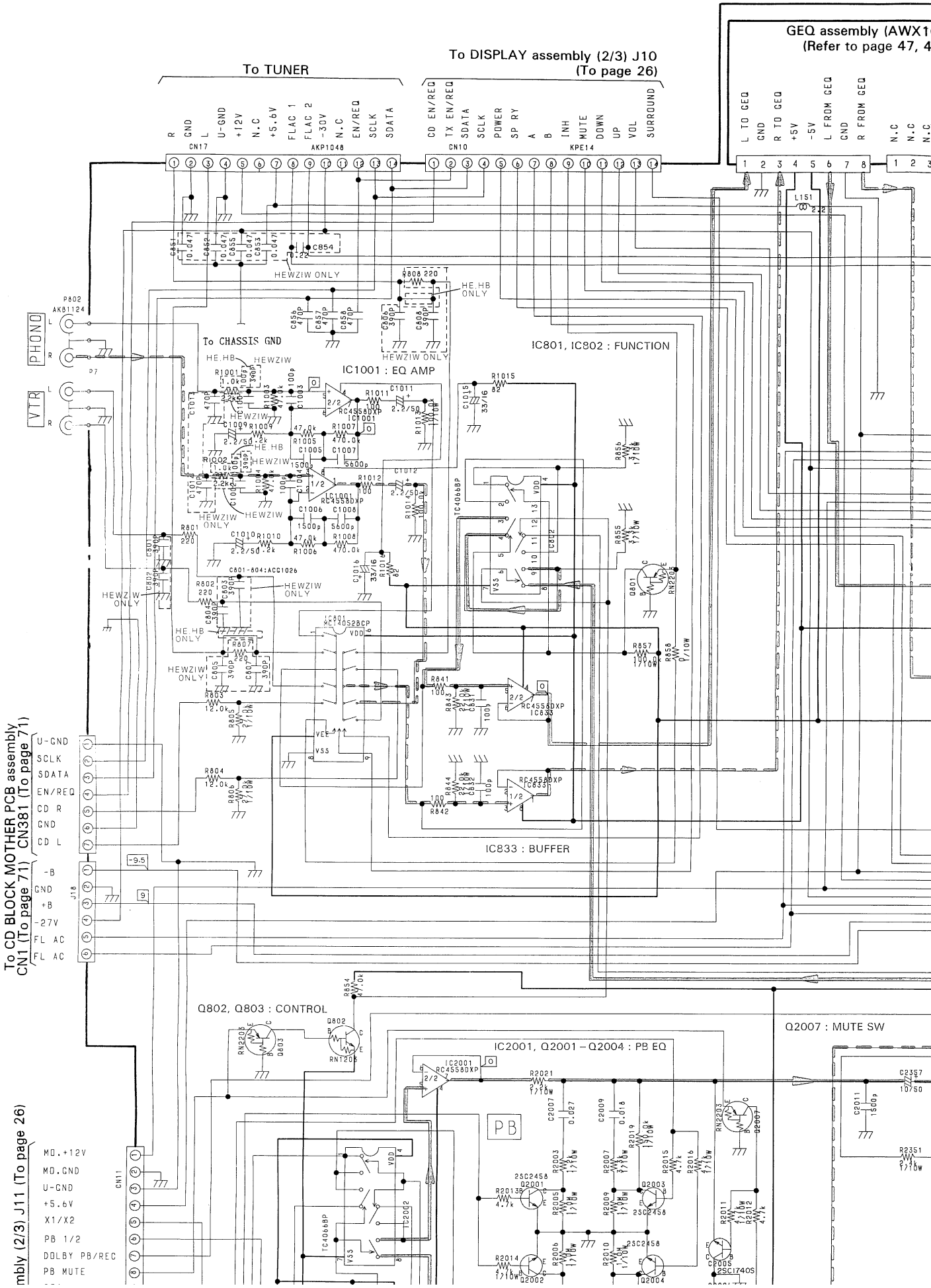

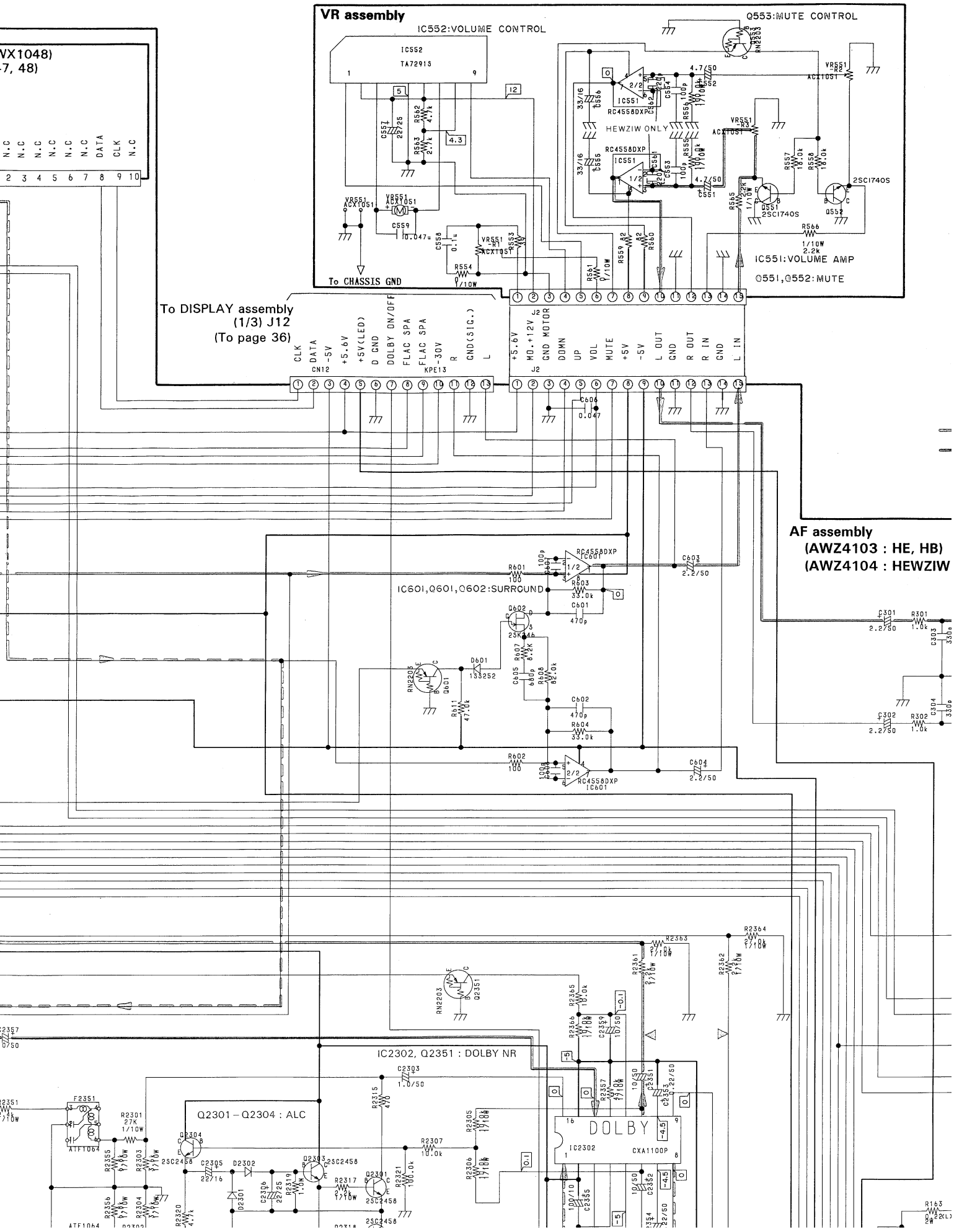
VR assembly
IC552:VOLUME CONTROL
Q553:MUTE CONTROL
IC551:VOLUME AMP
Q551,Q552:MUTE
HEWZIW ONLY
To CHASSIS GND
To DISPLAY assembly
(1/3) J12
(To page 36)
CN12
KPE13
J2
AF assembly
(AWZ4103 : HE, HB)
(AWZ4104 : HEWZIW
IC601,Q601,Q602:SURROUND
IC2302, Q2351 : DOLBY NR
Q2301 – Q2304 : ALC
DOLBY
IC2302
CXA1100P

IC552

Pin No.	Volts
Pin 1	0V When the VOLUME on the REMOTE CONTROL UNIT is up, the voltage becames 4.7V.
Pin 3	0V When the VOLUME on the REMOTE CONTROL UNIT is up, the voltage becames 5V.
Pin 7	0V When the VOLUME on the REMOTE CONTROL UNIT is down, the voltage becames 5V.
Pin 9	0V When the VOLUME on the REMOTE CONTROL UNIT is down, the voltage becames 4.7V.

IC552 TA7291S

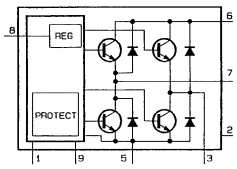

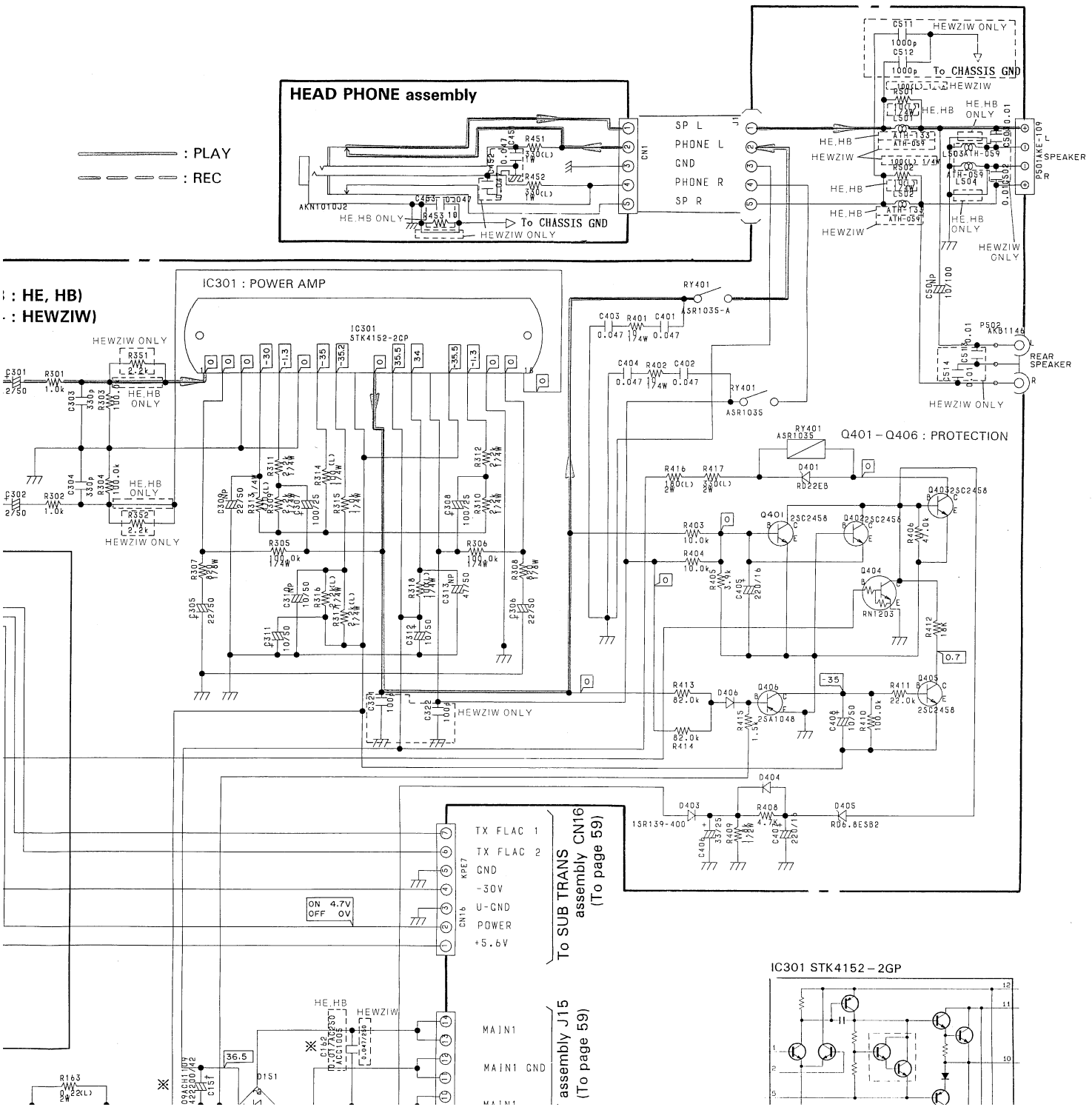

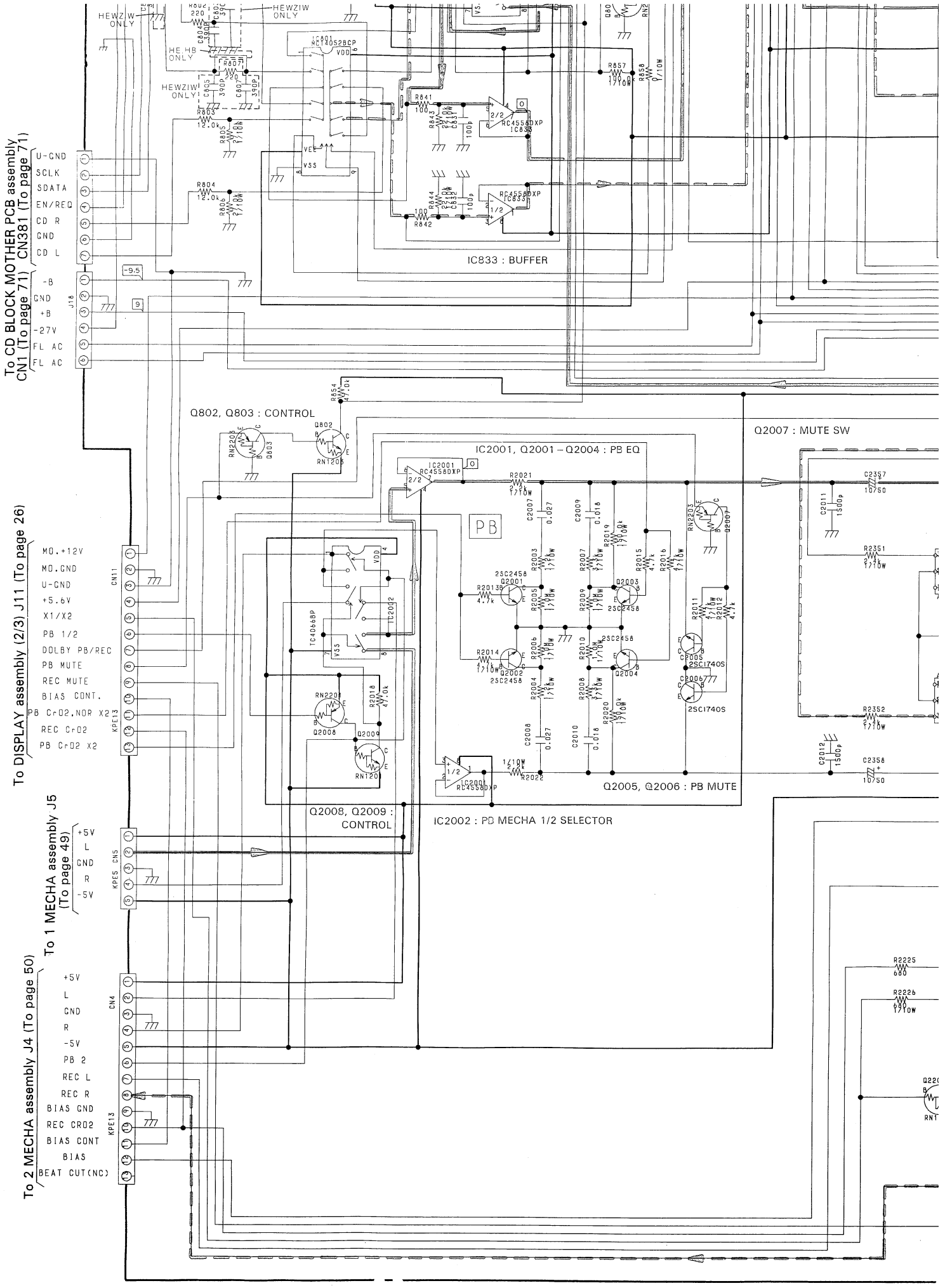
To CD BLOCK MOTHER PCB assembly CN1 (To page 71) CN381 (To page 71)
U-GND
SCLK
SDATA
EN/REQ
CD R
GND
CD L
-B
GND
+B
-27V
FL AC
FL AC
IC833 : BUFFER
Q802, Q803 : CONTROL
Q2007 : MUTE SW
IC2001, Q2001 – Q2004 : PB EQ
PB
To DISPLAY assembly (2/3) J11 (To page 26)
MO.+12V
MO.GND
U-GND
+5.6V
X1/X2
PB 1/2
DOLBY PB/REC
PB MUTE
REC MUTE
BIAS CONT.
PB CrO2.NOR X2
REC CrO2
PB CrO2 X2
Q2005, Q2006 : PB MUTE
Q2008, Q2009 : CONTROL
IC2002 : PB MECHA 1/2 SELECTOR
To 1 MECHA assembly J5 (To page 49)
+5V
L
GND
R
-5V
To 2 MECHA assembly J4 (To page 50)
+5V
L
GND
R
-5V
PB 2
REC L
REC R
BIAS GND
REC CRO2
BIAS CONT
BIAS
BEAT CUT(NC)

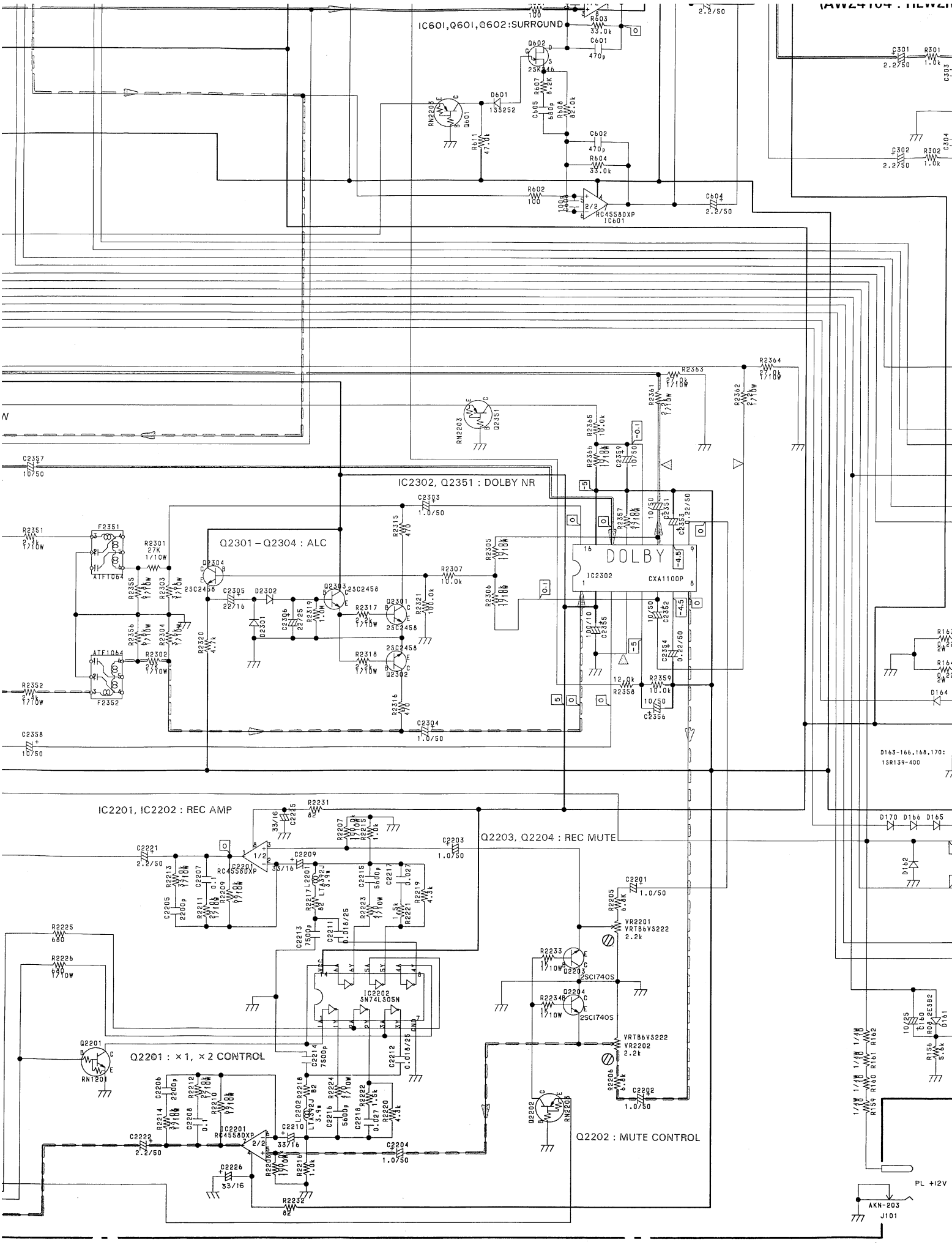
IC601,Q601,Q602:SURROUND
IC2302, Q2351 : DOLBY NR
Q2301 – Q2304 : ALC
DOLBY
IC2302
CXA1100P
IC2201, IC2202 : REC AMP
Q2203, Q2204 : REC MUTE
Q2201 : ×1, ×2 CONTROL
Q2202 : MUTE CONTROL
IC2202
SN74LS05N
RC4558DXP
IC601
F2351
F2352
ATF1064
2SC2458
2SC1740S
RN2203
RN1201
VR2201
VR2202
VRT86VS222
D163-166,168,170:
1SR139-400
PL +12V
AKN-203
J101
4
5
6

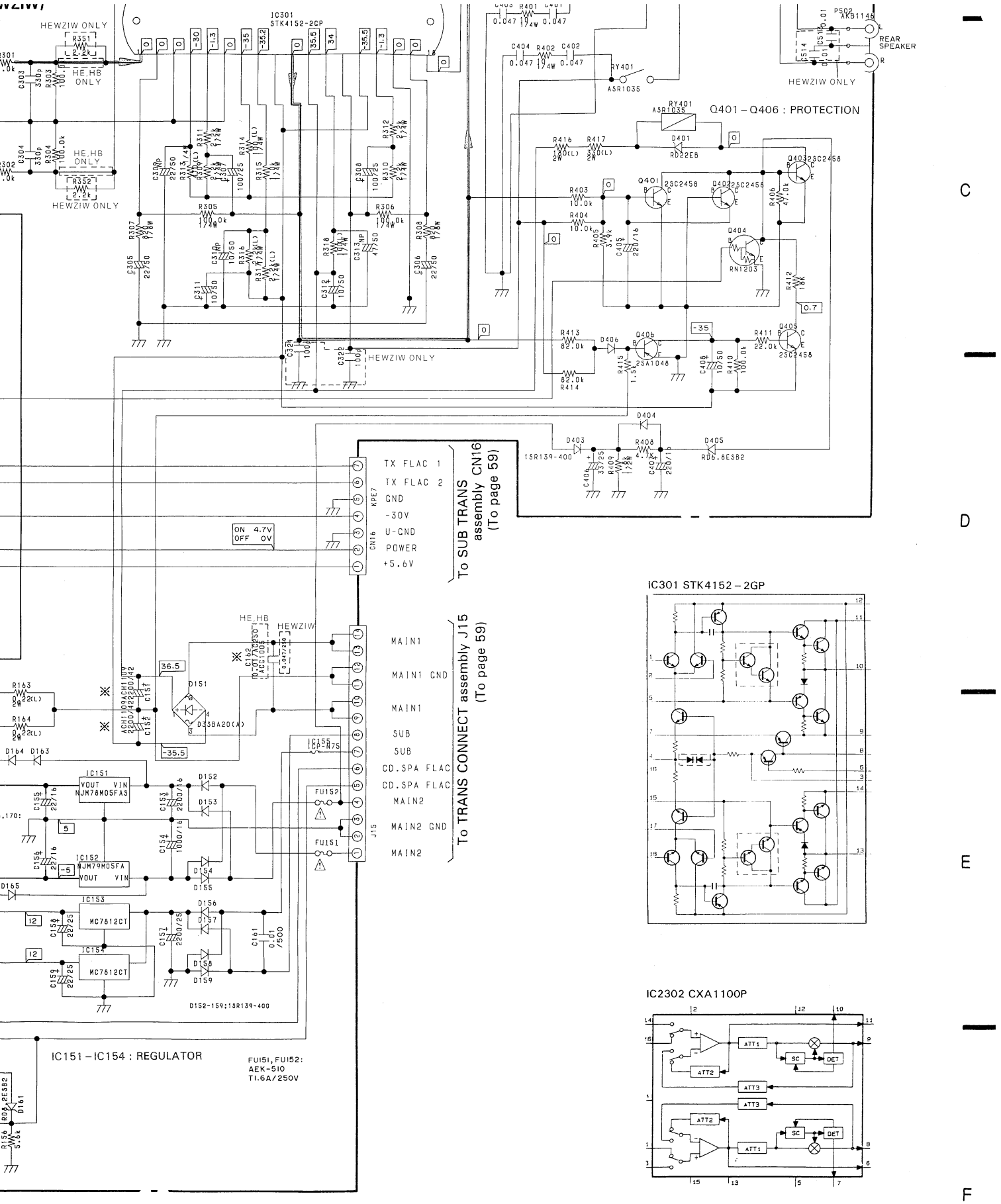
IC301
STK4152-2GP
HEWZIW ONLY
HE.HB ONLY
Q401 – Q406 : PROTECTION
REAR SPEAKER
TX FLAC 1
TX FLAC 2
GND
-30V
U-GND
POWER
+5.6V
To SUB TRANS assembly CN16 (To page 59)
MAIN1
MAIN1 GND
MAIN1
SUB
SUB
CD.SPA FLAC
CD.SPA FLAC
MAIN2
MAIN2 GND
MAIN2
To TRANS CONNECT assembly J15 (To page 59)
ON 4.7V
OFF 0V
IC151 – IC154 : REGULATOR
FU151, FU152:
AEK-510
T1.6A/250V
D152-159:1SR139-400
IC301 STK4152 – 2GP
IC2302 CXA1100P
ATT1
ATT2
ATT3
SC
DET

+12V

7 8 9

Q401-Q406
IC301
IC153 IC154
IC152 IC151

2

IC155

3

IC2202 IC2201 Q2203 Q2204
Q2201 Q2202 Q2351 Q2007 Q2001-Q

VR2201 VR22

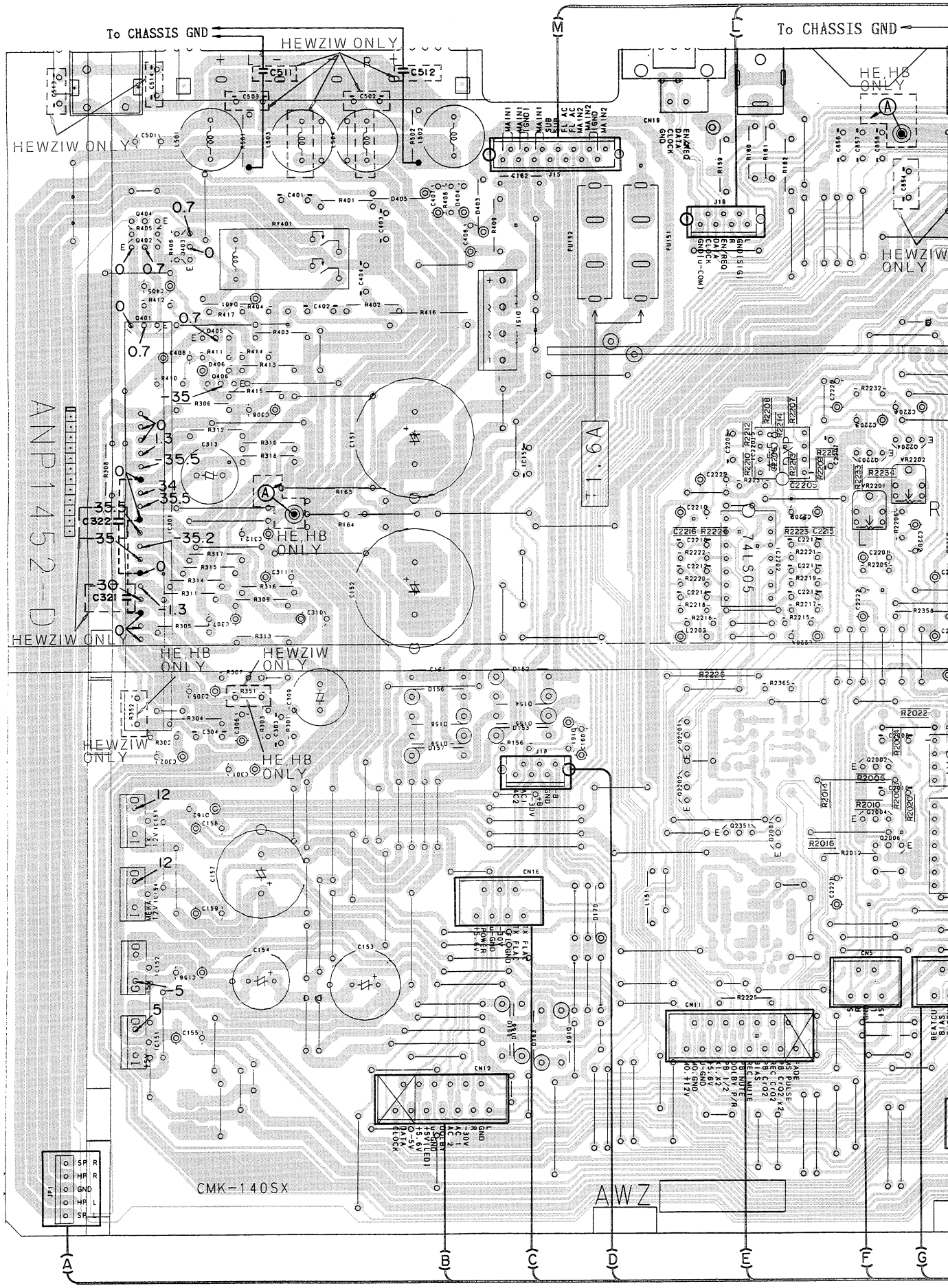

4 Q801 IC1001 5 6

4 IC2302 IC802 IC833 IC801

-Q2009 IC2001 Q2301-Q2304 Q601 Q602

IC2002 Q803 Q802 IC601

2202 To TUNER

AF assembly (AWZ4103 : HE, HB) (AWZ4104 : HEWZIW)

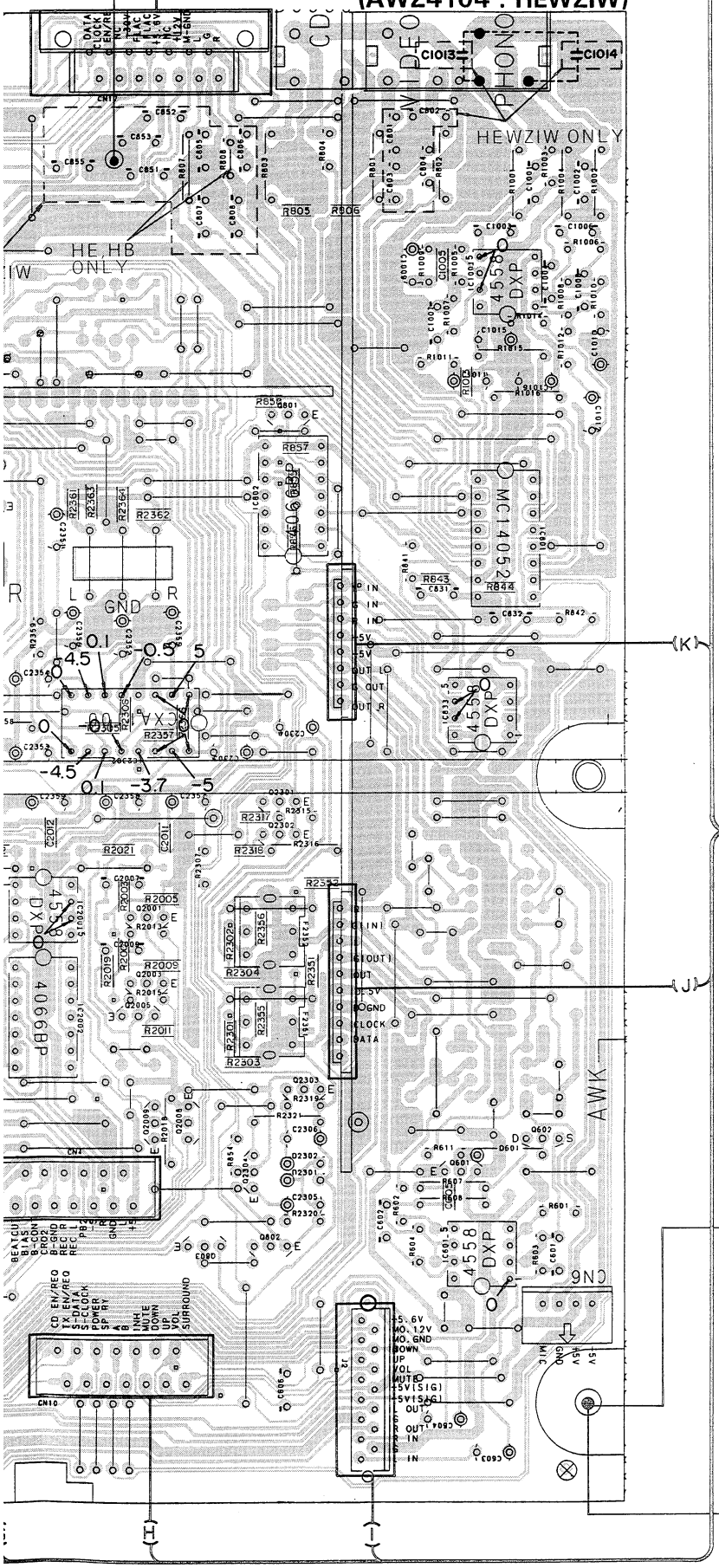

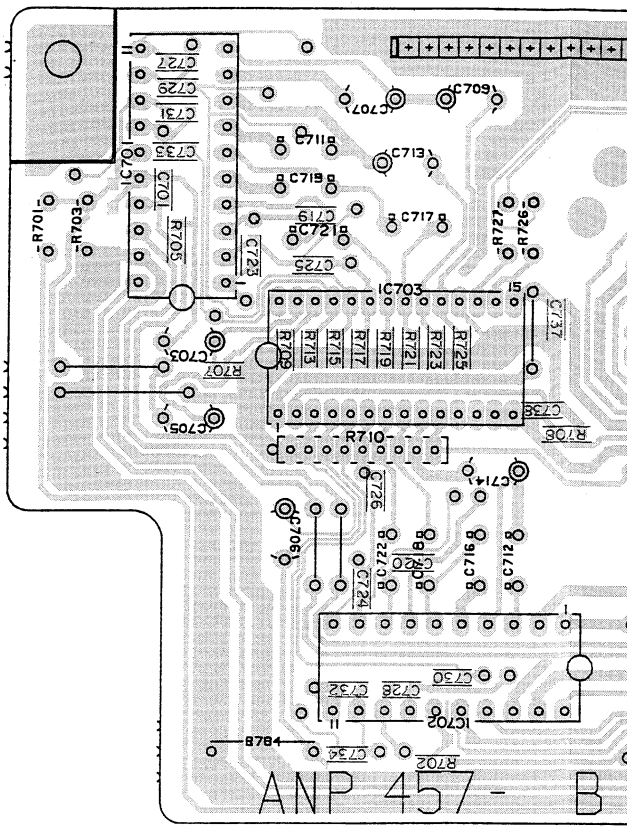

GEQ assembly (AWX1048)

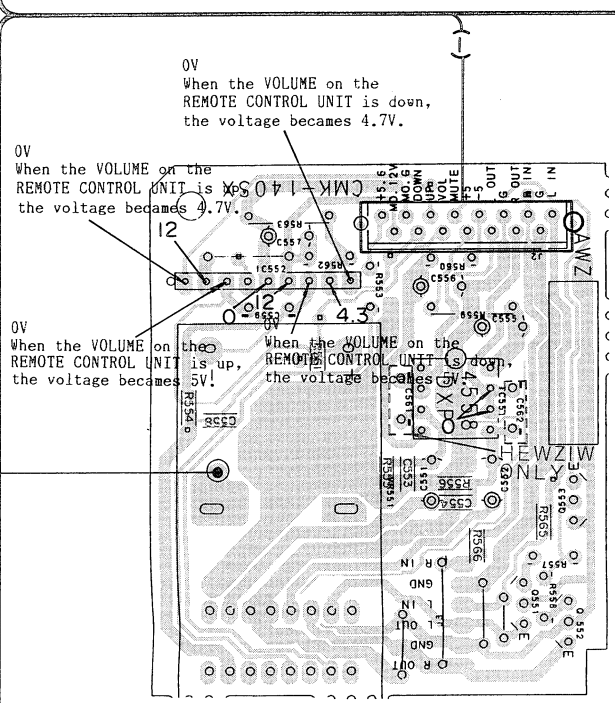

VR assembly

4 5 6

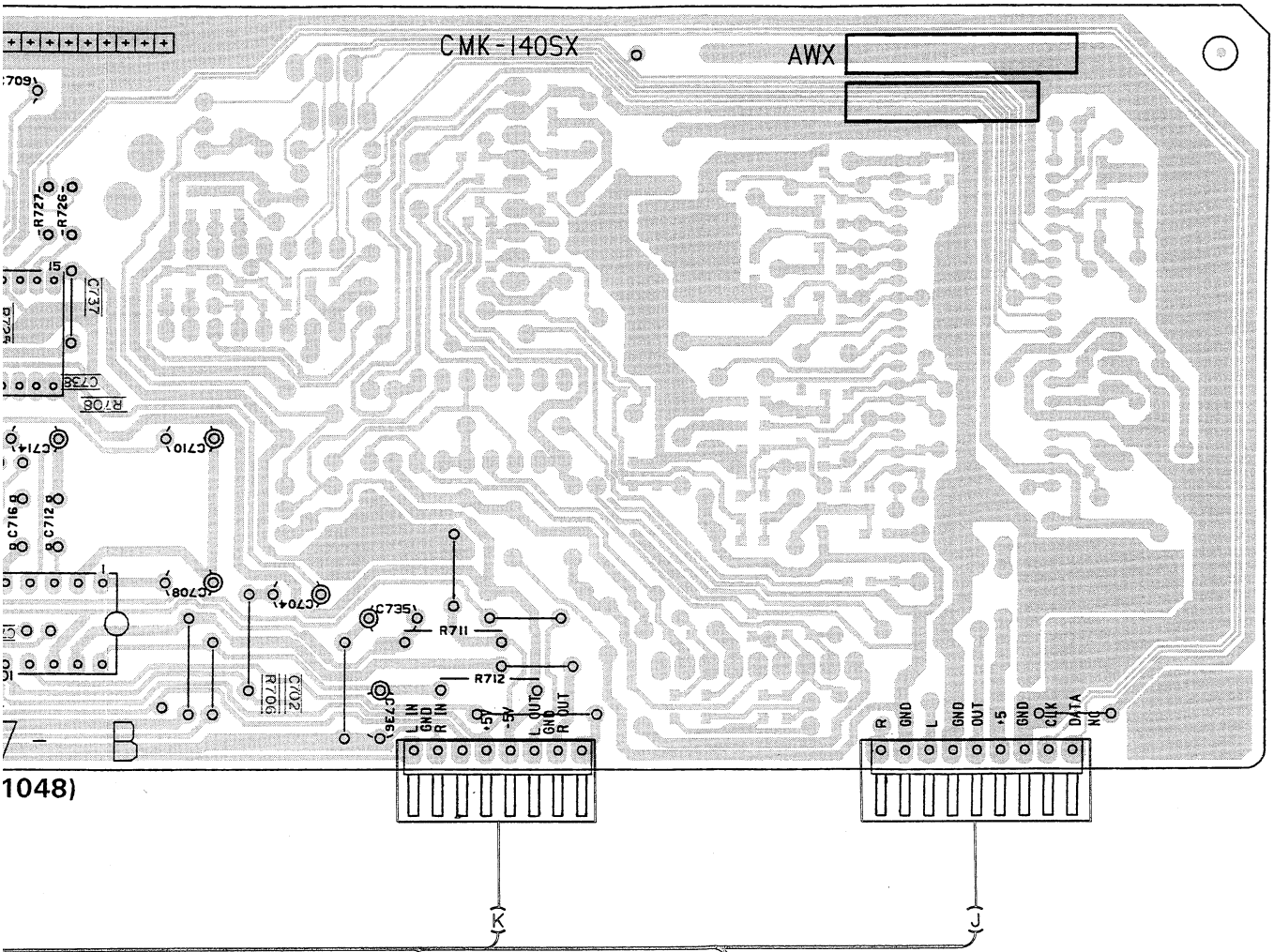

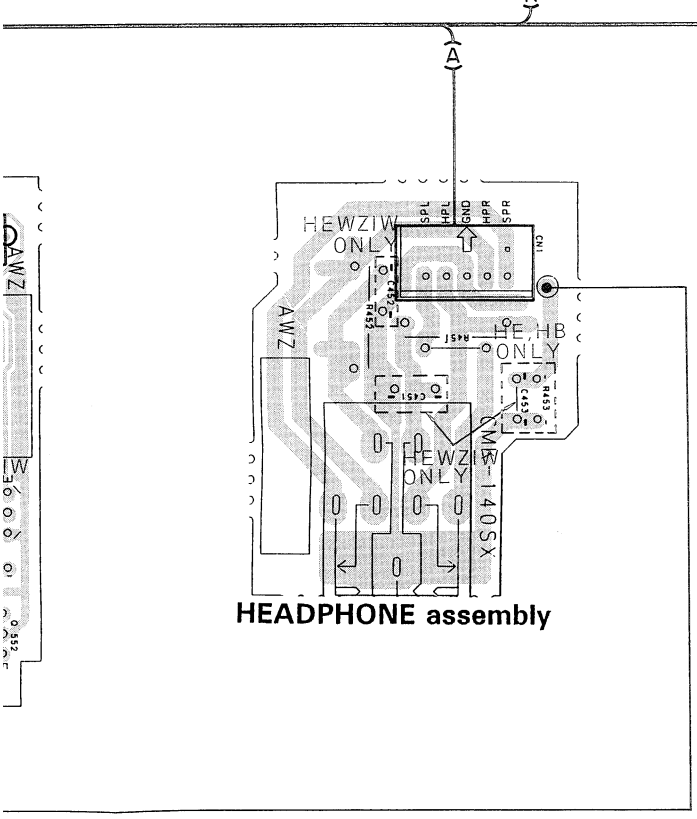

HEADPHONE assembly

(B)——To DISPLAY assembly J12 (To page 30)

(C)——To SUB TRANS assembly CN16 (To page 58)

(D)——To CD Block MOTHER PCB assembly CN1 (To page 67)

(E)——To DISPLAY assembly J11 (To page 29)

(F)——To 1 MECHA assembly J5 (To page 51)

(G)——To 2 MECHA assembly J4 (To page 52)

(H)——To DISPLAY assembly J10 (To page 29)

(L)——To CD Block MOTHER PCB assembly CN381 (To page 68)

(M)——To TRANS CONNECT assembly J15 (To page 57)

This P. C. B. connection diagram is v

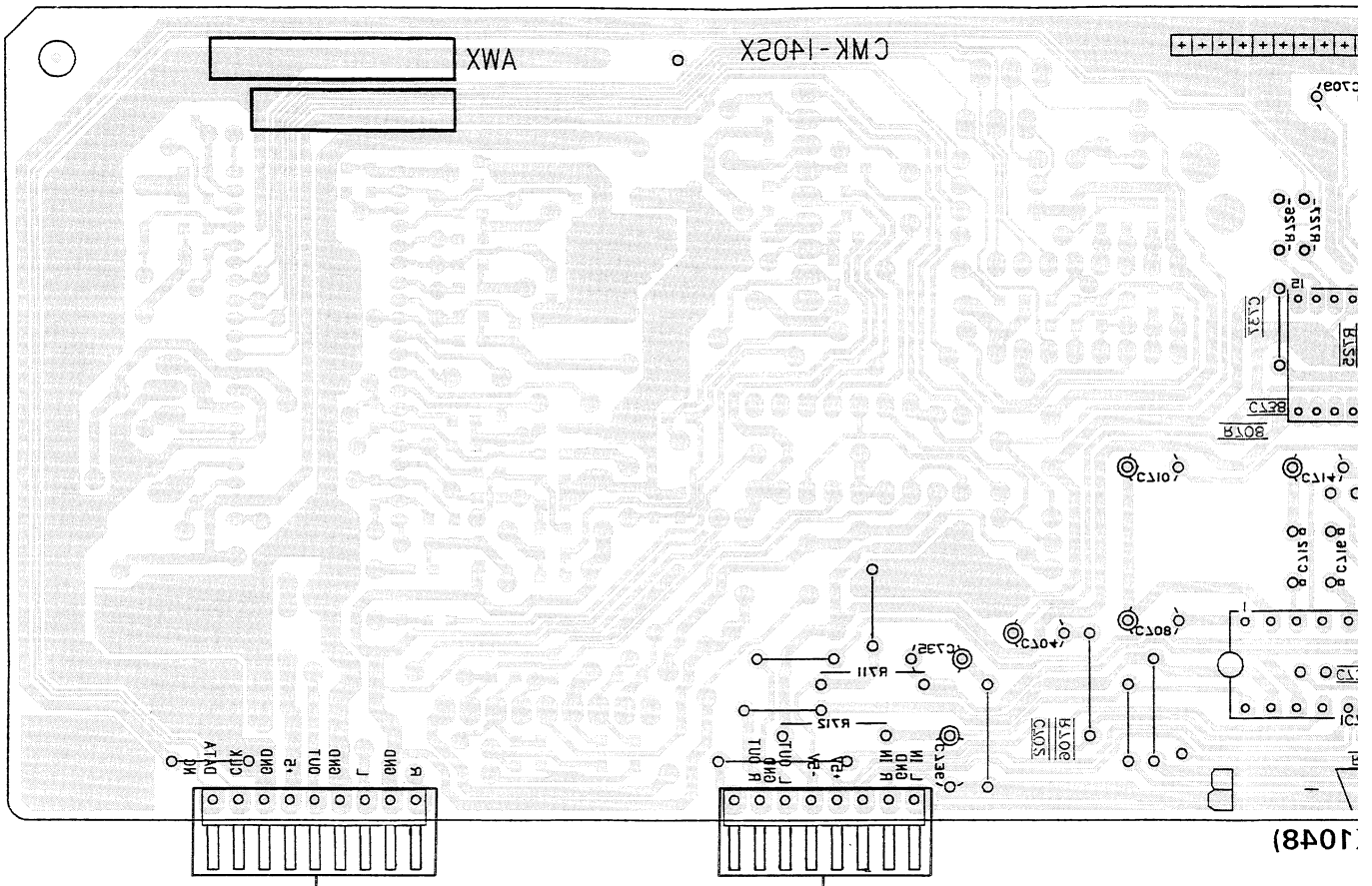

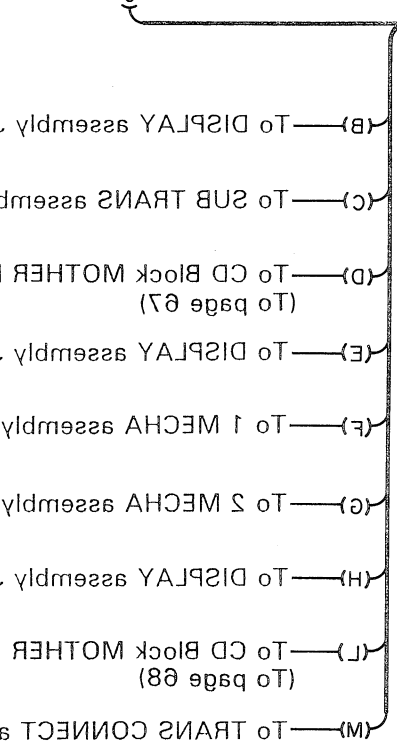

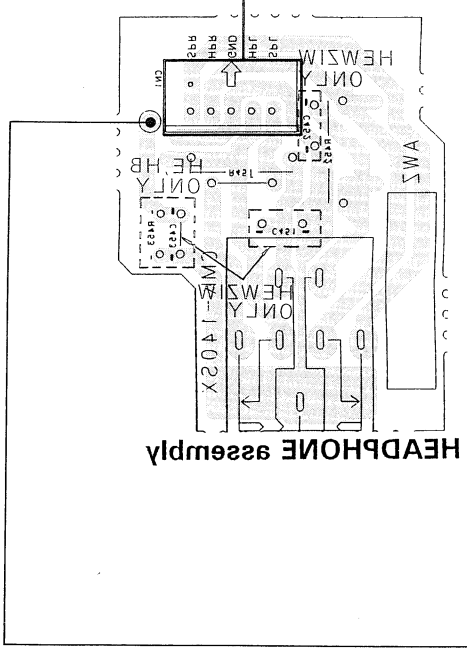

diagram is viewed from the foil side.

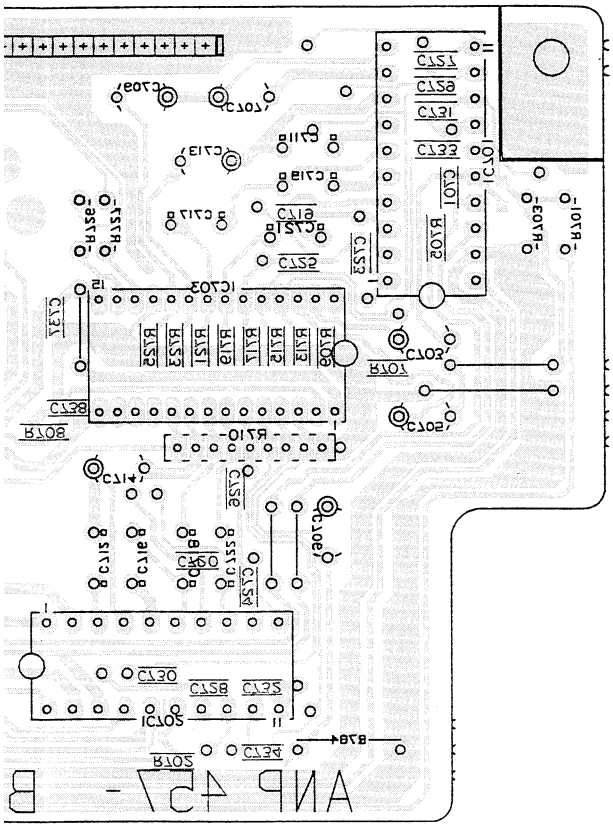

GEQ assembly (AWX1048)

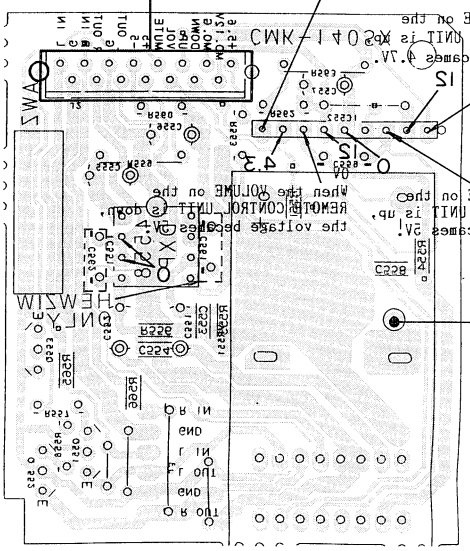

VR assembly

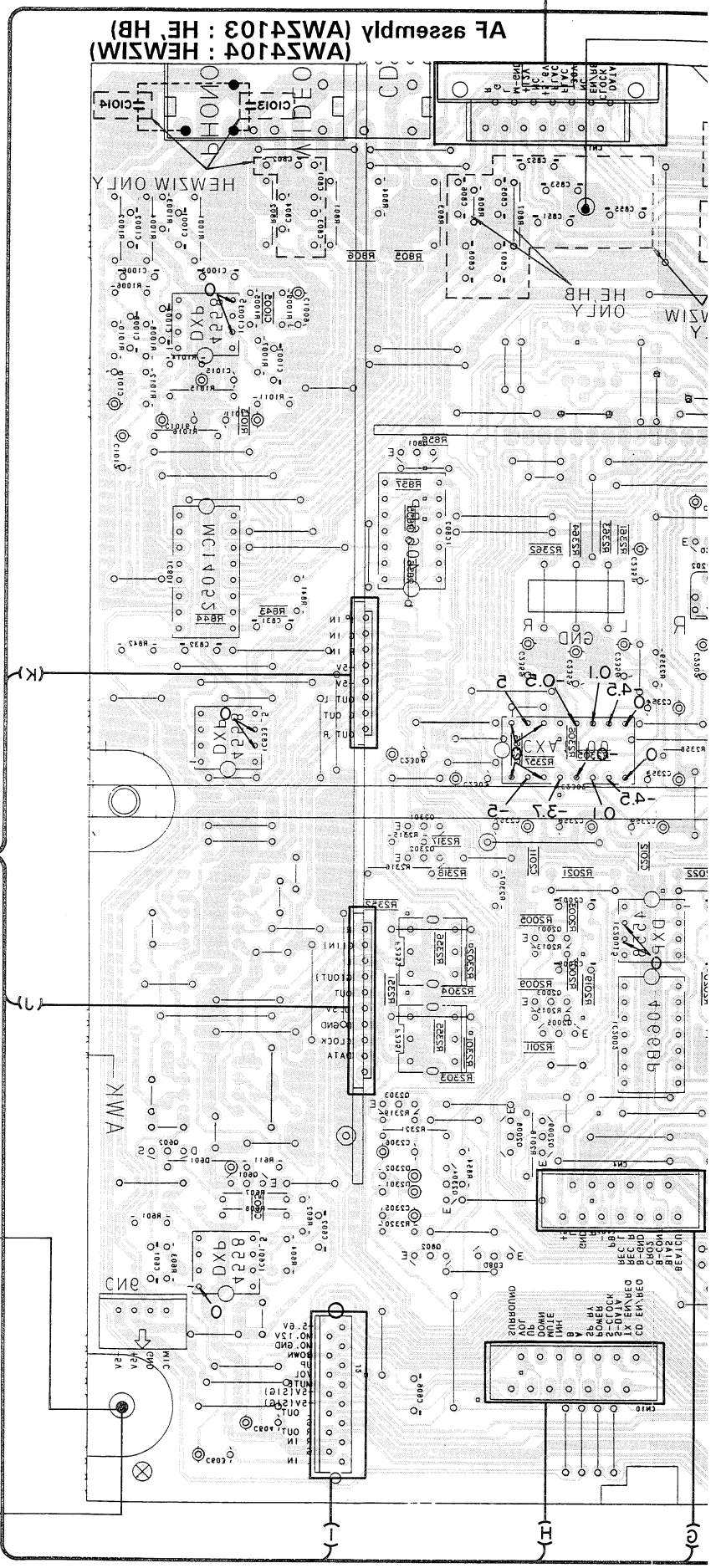

Q401-Q406
IC301
IC153 IC154
IC152 IC151

IC155

Q201 Q202 Q231 Q207 Q201-Q
IC202 IC201 Q203 Q204

VR201 VR2

PLAY
REC

GEQ assembly (AWX1048)

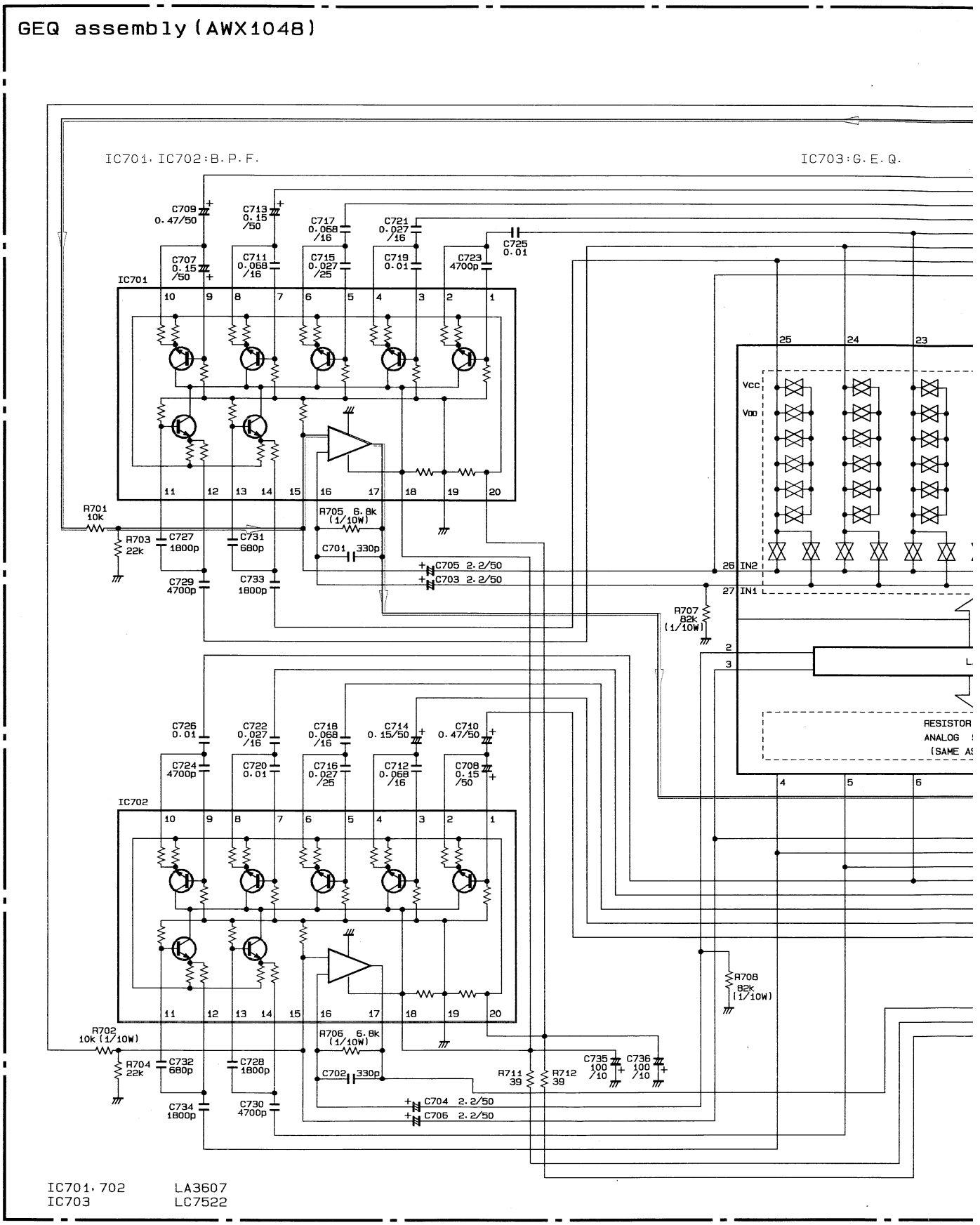

IC701, 702 LA3607
IC703 LC7522

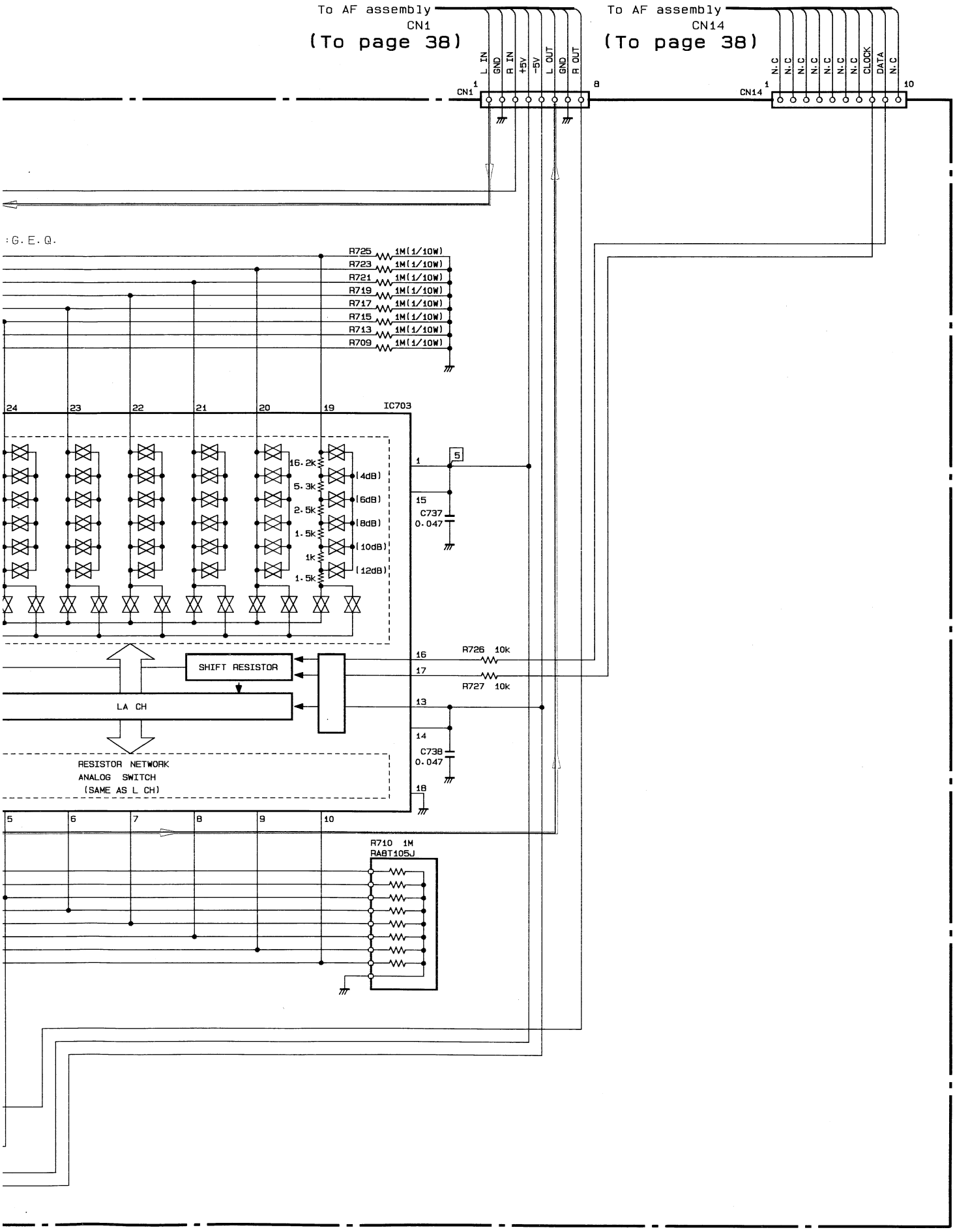
To AF assembly
CN1
(To page 38)
L IN
GND
R IN
+5V
-5V
L OUT
GND
R OUT
CN1
To AF assembly
CN14
(To page 38)
N.C
N.C
N.C
N.C
N.C
N.C
CLOCK
DATA
N.C
CN14
:G.E.Q.
R725 1M(1/10W)
R723 1M(1/10W)
R721 1M(1/10W)
R719 1M(1/10W)
R717 1M(1/10W)
R715 1M(1/10W)
R713 1M(1/10W)
R709 1M(1/10W)
IC703
16.2k
5.3k
2.5k
1.5k
1k
1.5k
(4dB)
(6dB)
(8dB)
(10dB)
(12dB)
C737
0.047
SHIFT RESISTOR
LA CH
R726 10k
R727 10k
C738
0.047
RESISTOR NETWORK
ANALOG SWITCH
(SAME AS L CH)
R710 1M
RA8T105J

3.4 1 MECHA assembly and 2 MECHA assembly

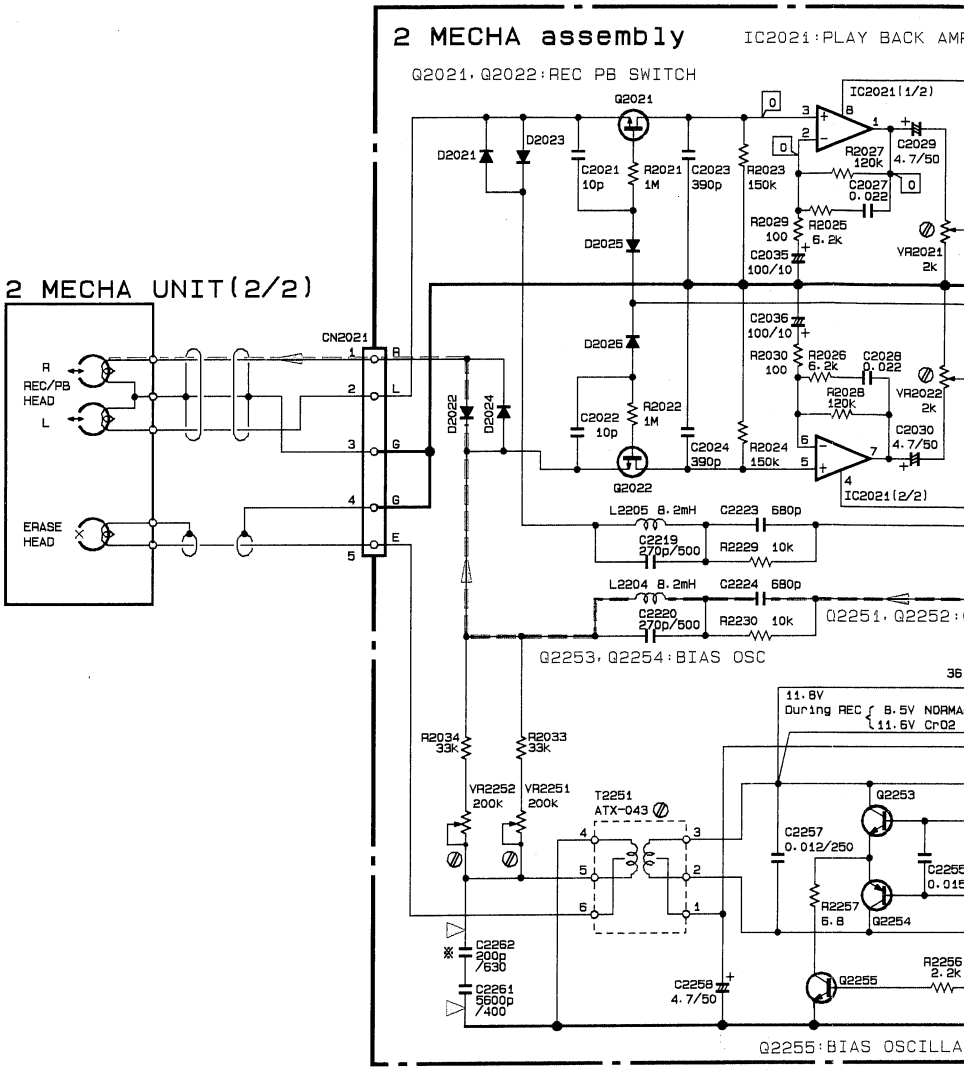

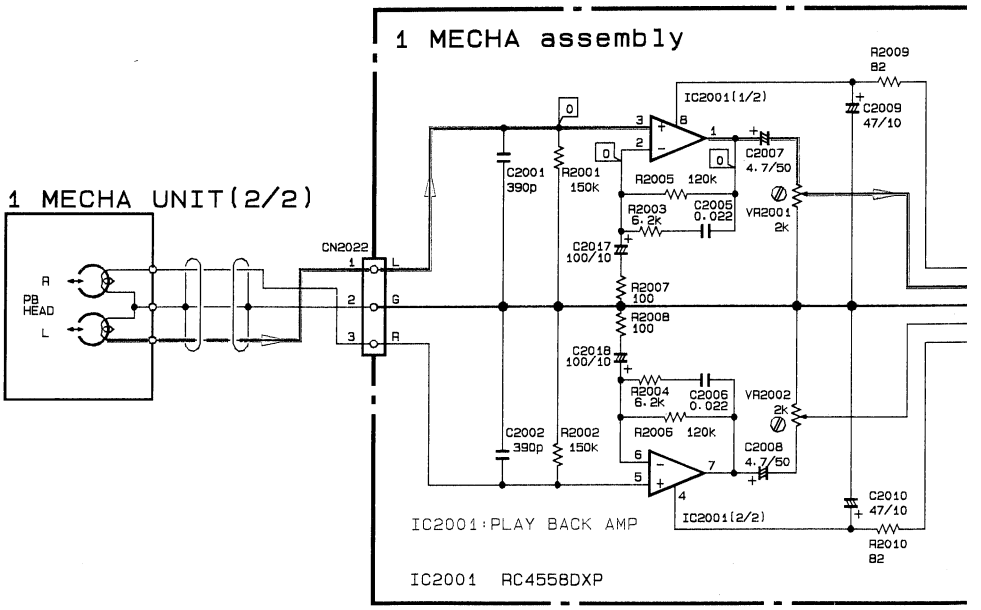

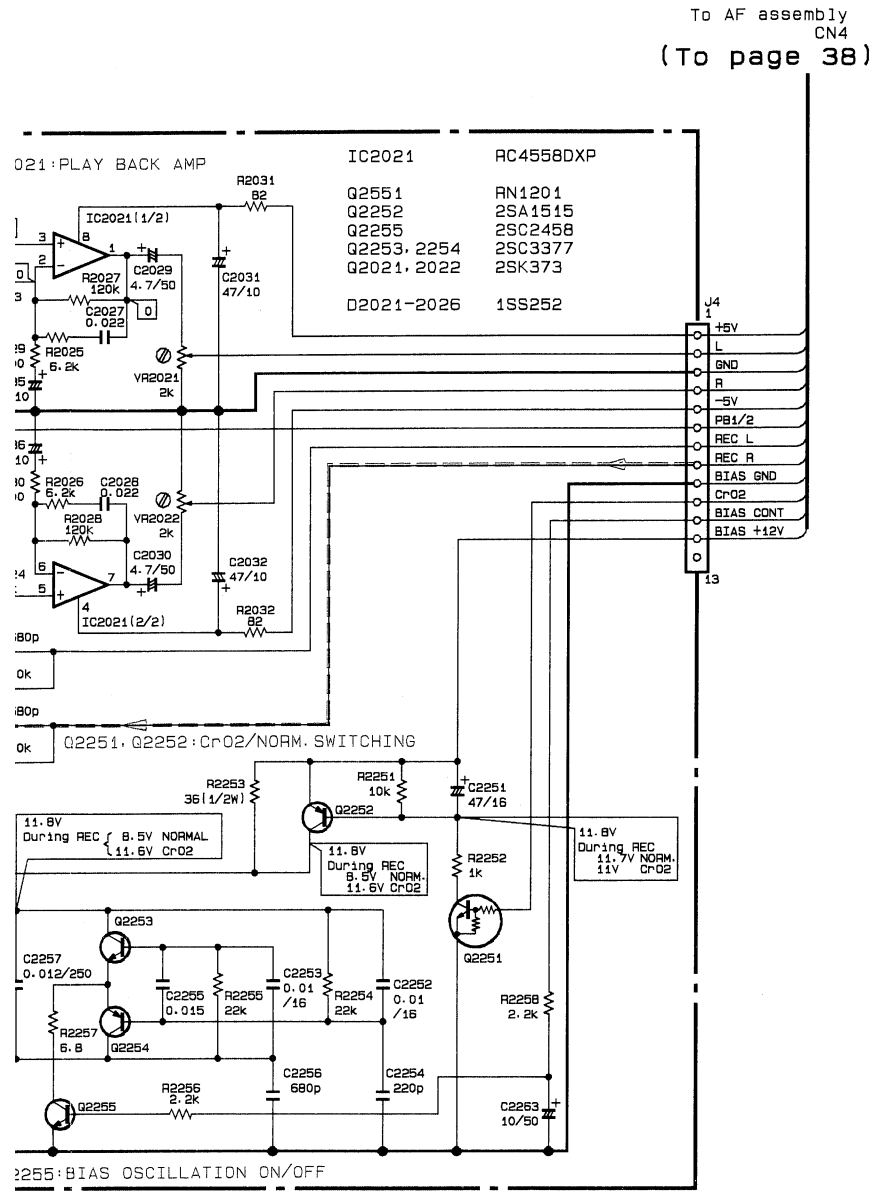
To AF assembly
CN4
(To page 38)
021:PLAY BACK AMP
IC2021 RC4558DXP
Q2551 RN1201
Q2252 2SA1515
Q2255 2SC2458
Q2253, 2254 2SC3377
Q2021, 2022 2SK373
D2021-2026 1SS252
R2031 82
IC2021(1/2)
R2027 120k
C2029 4.7/50
C2031 47/10
C2027 0.022
R2025 6.2k
VR2021 2k
R2026 6.2k
C2028 0.022
R2028 120k
VR2022 2k
C2030 4.7/50
C2032 47/10
IC2021(2/2)
R2032 82
J4
+5V
L
GND
R
-5V
PB1/2
REC L
REC R
BIAS GND
CrO2
BIAS CONT
BIAS +12V
Q2251, Q2252:CrO2/NORM. SWITCHING
R2253 36(1/2W)
R2251 10k
C2251 47/16
Q2252
11.8V During REC 8.5V NORMAL 11.6V CrO2
11.8V During REC 8.5V NORM. 11.6V CrO2
11.8V During REC 11.7V NORM. 11V CrO2
R2252 1k
Q2251
Q2253
C2257 0.012/250
C2255 0.015
R2255 22k
C2253 0.01 /16
R2254 22k
C2252 0.01 /16
R2258 2.2k
R2257 6.8
Q2254
C2256 680p
C2254 220p
Q2255
R2256 2.2k
C2253 10/50
2255:BIAS OSCILLATION ON/OFF

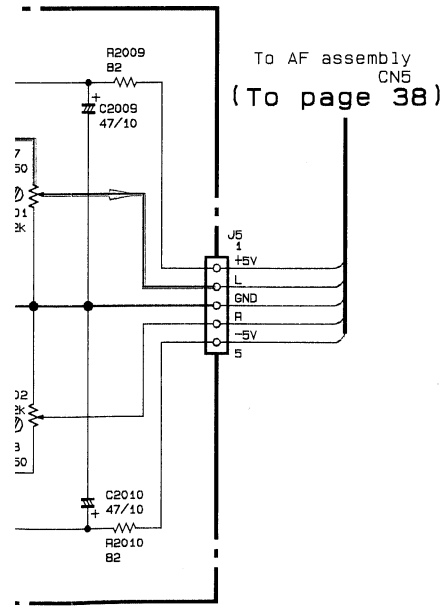
R2009 82
C2009 47/10
To AF assembly
CN5
(To page 38)
J5
+5V
L
GND
R
-5V
C2010 47/10
R2010 82

NOTE

1. This P.C.B connection diagram is viewed from the parts mounted side.
2. The parts which have been mounted on the board can be replaced with those shown with the corresponding wiring symbols listed in the following Table.

P.C.B. pattern diagram indication	Corresponding part symbol	Part Name
Q504 (E)	E or E	Transistor
Q215	or	Radiator type transistor
D203	D203	Diode
R237	R237	Resistor
C513	+	Capacitor (Polarized)
C518		Capacitor (Non-polarized)

Others

P.C.B. pattern diagram indication	Part Name
IC	IC
S	Switch
RY	Relay
L	Coil
F	Filter
VR	Variable resistor or Semi-fixed resistor

3. The capactor terminal marked with ◎(double circles) shows negatine terminal.
4. The diode terminal marked with ◎(double circles) shows cathode side.
5. The transistor terminal to which E is affixed shows the emitter.

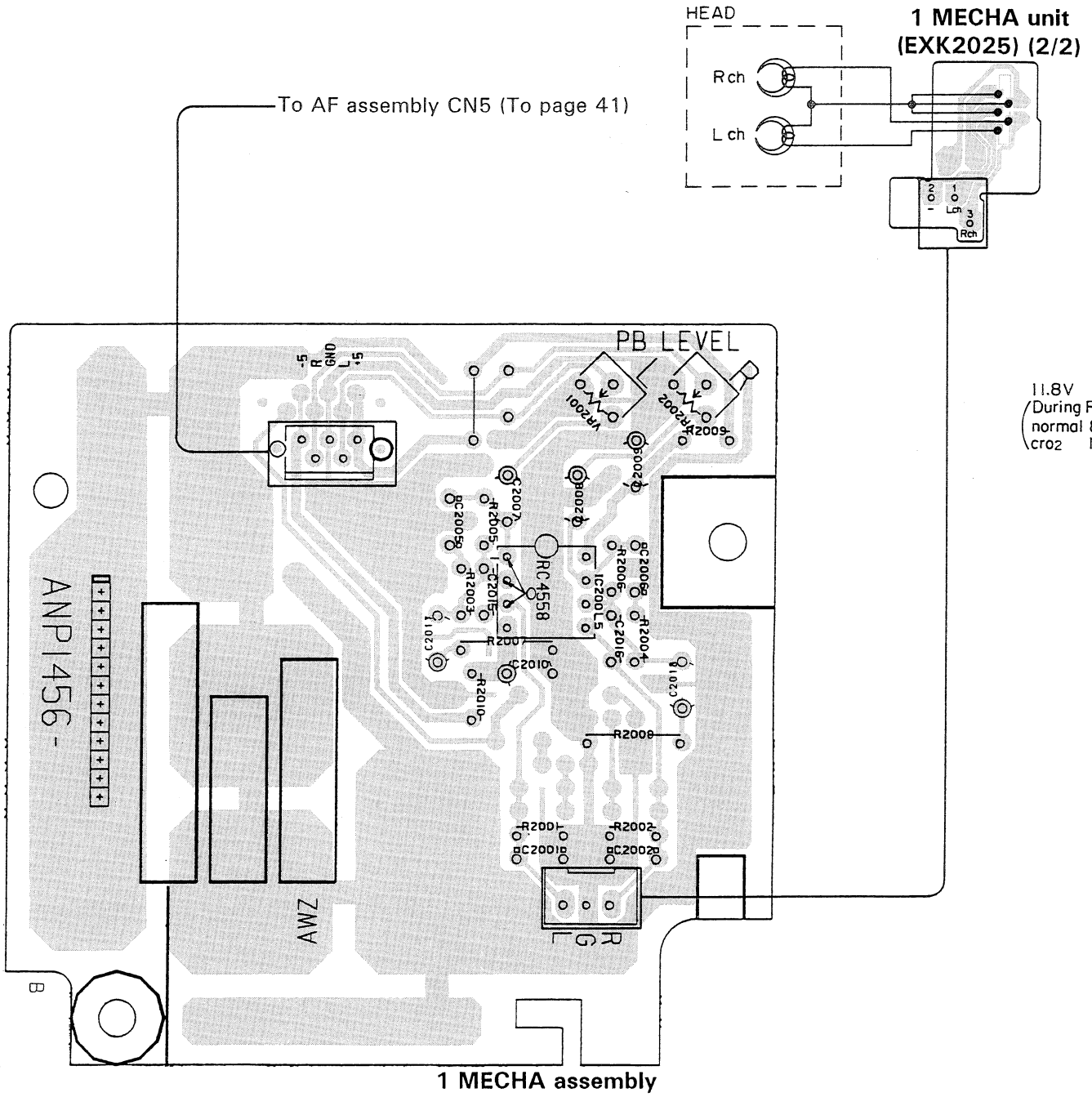

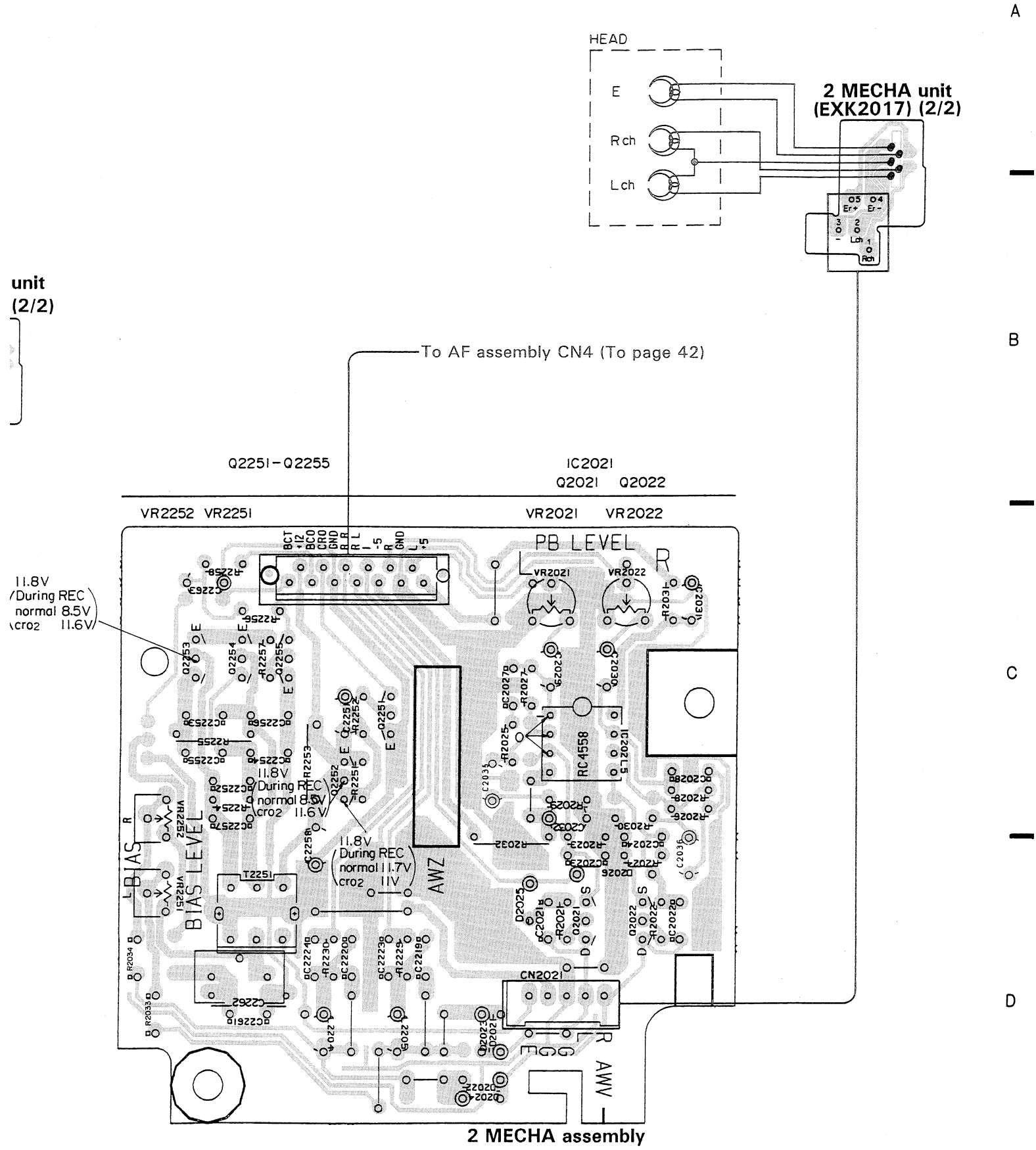
HEAD
E
Rch
Lch
2 MECHA unit
(EXK2017) (2/2)
unit
(2/2)
To AF assembly CN4 (To page 42)
Q2251-Q2255
IC2021
Q2021 Q2022
VR2252 VR2251
VR2021 VR2022
PB LEVEL
BIAS LEVEL
11.8V
During REC
normal 8.5V
cro2 11.6V
11.8V
During REC
normal 11.7V
cro2 11V
RC4558
CN2021
AWZ
AWV
2 MECHA assembly

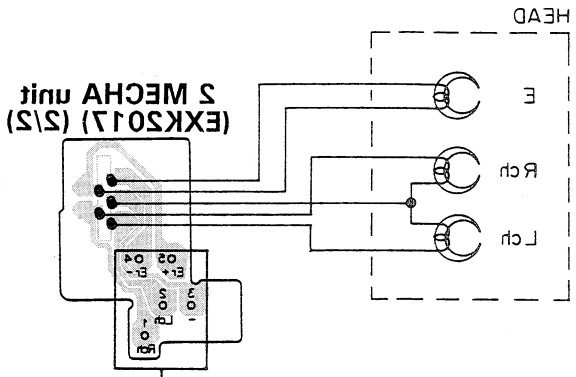

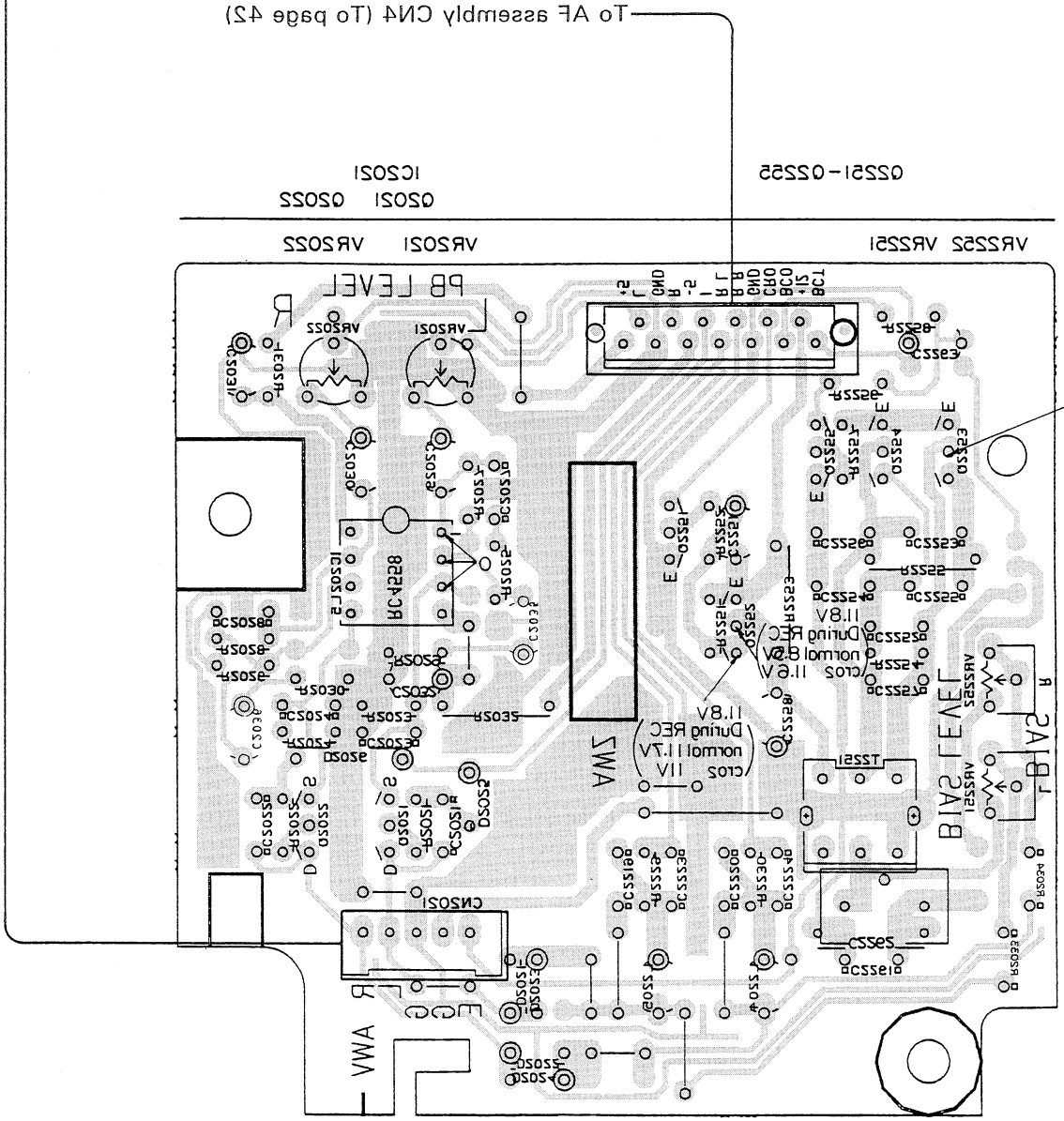

2 MECHA assembly

This P. C. B. connection diagram is viewed from the foil side.

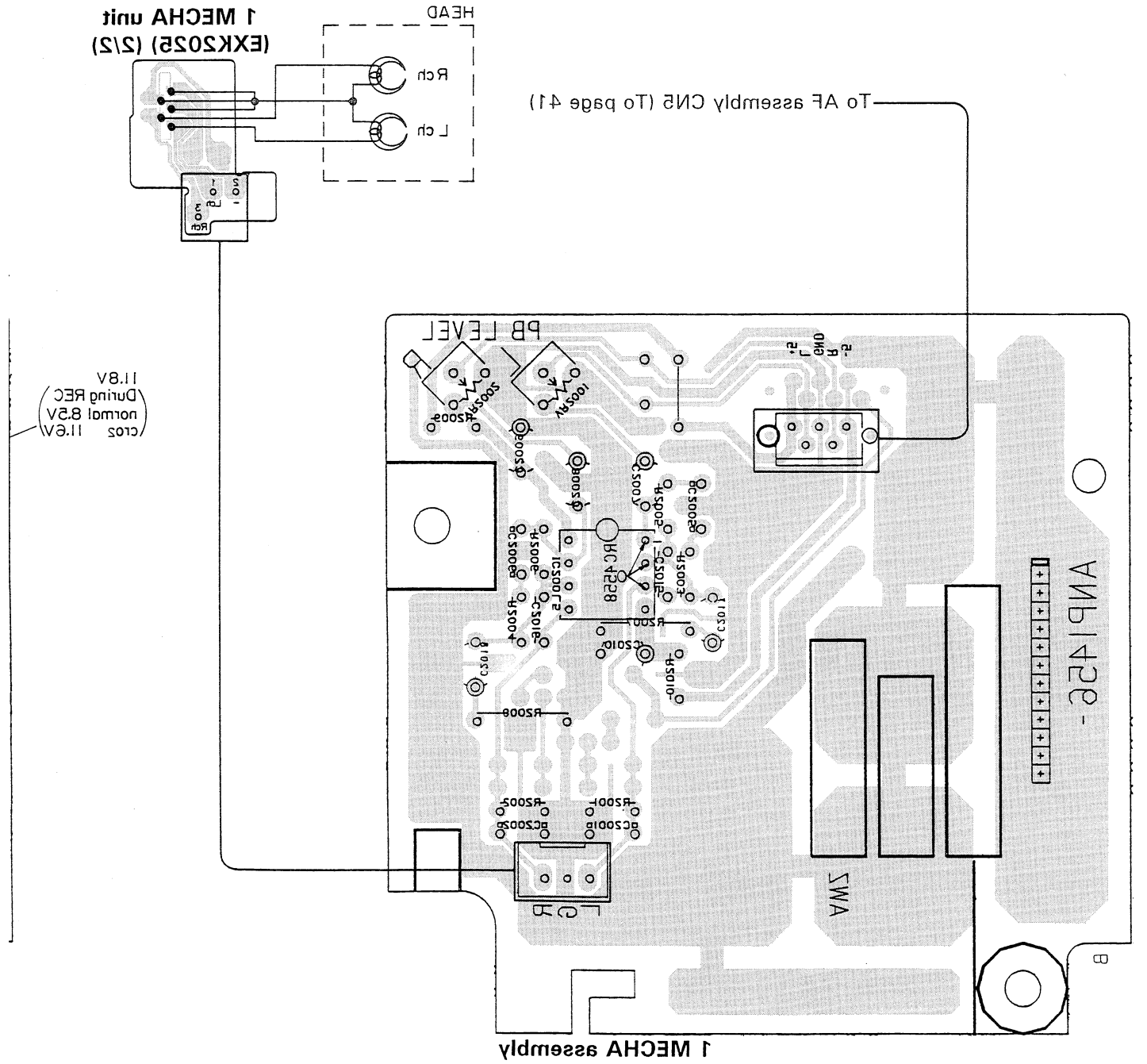

3.5 SUB TRANS assembly and TRANS CONNECT assembly

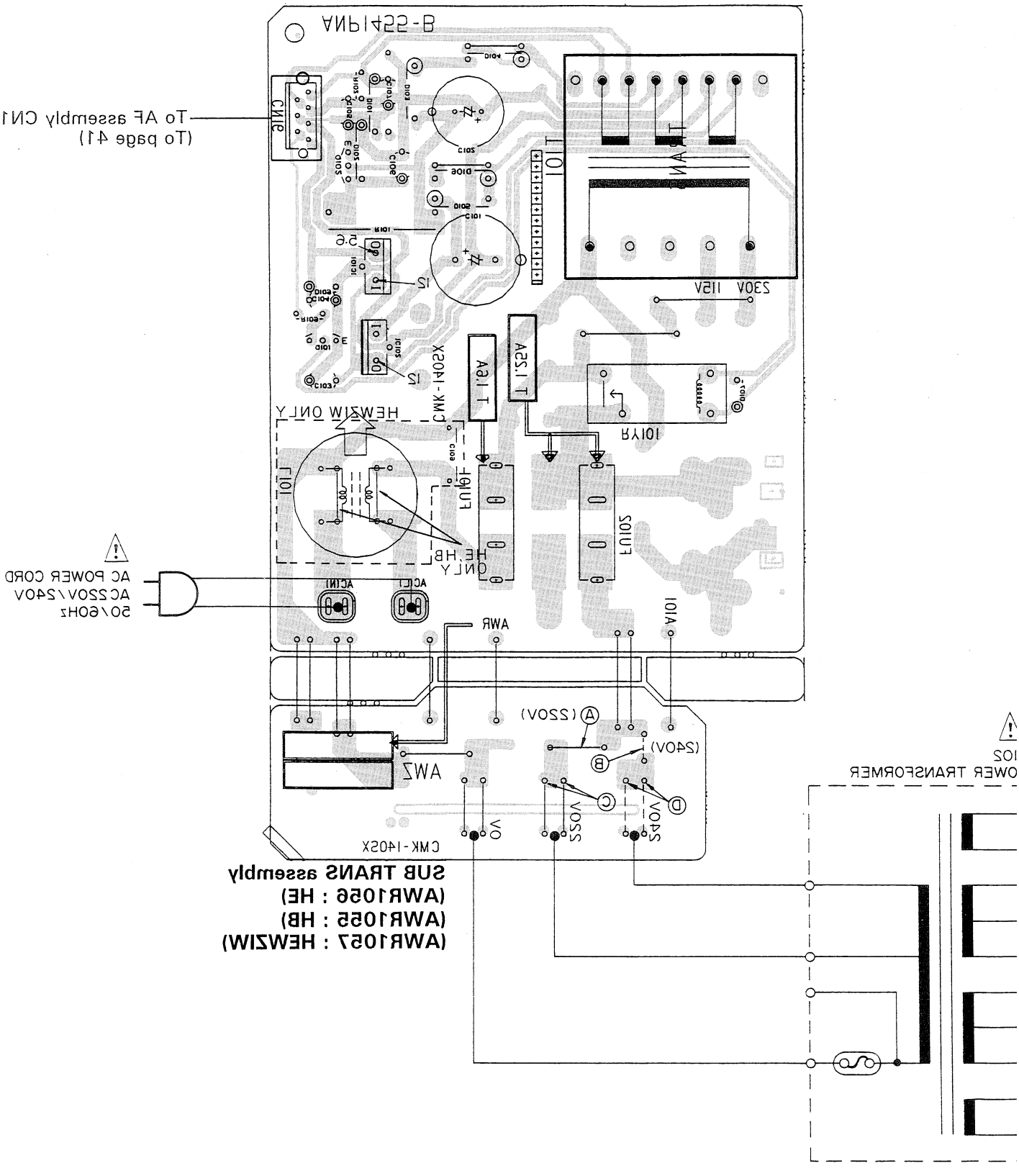

This P. C. B. connection diagram is viewed from the foil side.

Line Voltage Selection

(For HE, HB and HEWZIW types)

Line voltage can be changed with the following steps.

1. Disconnect the AC Power cord.
2. Remove the top cover.
3. Change the position of the jumper wires A – D as follows ;

Jumper wire	Voltage 220V	240V
A	○	×
B	×	○
C	○	×
D	×	○

○ : Be needed
× : Be needless

4. Stick the line voltage label on the rear panel.

Description	Part No.
220V label	AAX-193
240V label	AAX-192

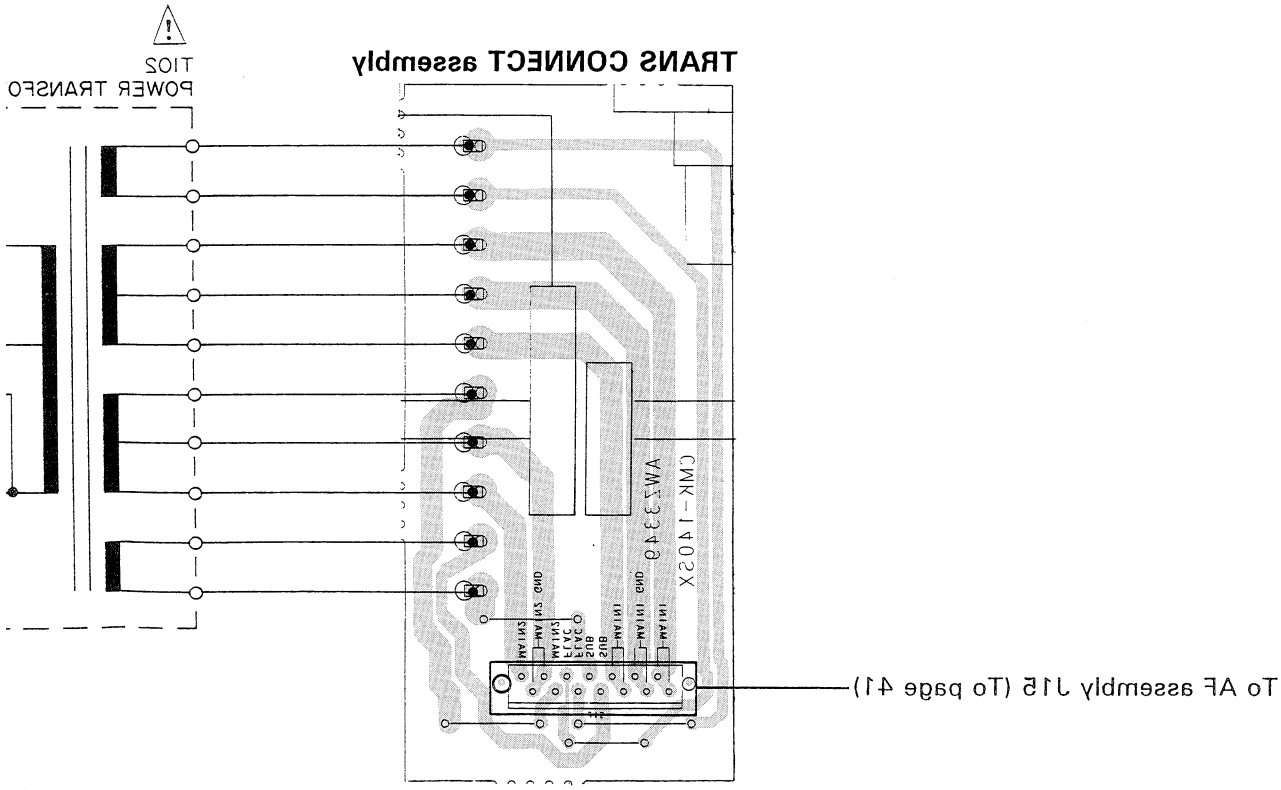

Line Voltage Selection
(For HE, HB and HEWZIW types)

Line voltage can be changed with the following steps.

1. Disconnect the AC Power cord.
2. Remove the top cover.
3. Change the position of the jumper wires A – D as follows ;

Jumper wire Voltage	220V	240V
A	○	×
B	×	○
C	○	×
D	×	○

○ : Be needed
× : Be needless

4. Stick the line voltage label on the rear panel.

Description	Part No.
220V label	AAX–193
240V label	AAX–192

NOTE

1. This P.C.B connection diagram is viewed from the parts mounted side.
2. The parts which have been mounted on the board can be replaced with those shown with the corresponding wiring symbols listed in the following Table.

P.C.B. pattern diagram indication	Corresponding part symbol	Part Name
Q504 E	E or E	Transistor
Q215	or	Radiator type transistor
D203	D203	Diode
R237	R237	Resistor
C513	+	Capacitor (Polarized)
C518		Capacitor (Non-polarized)

Others

P.C.B. pattern diagram indication	Part Name
IC	IC
S	Switch
RY	Relay
L	Coil
F	Filter
VR	Variable resistor or Semi-fixed resistor

3. The capactor terminal marked with ◎(double circles) shows negatine terminal.
4. The diode terminal marked with ◎(double circles) shows cathode side.
5. The transistor terminal to which E is affixed shows the emitter.

TRANS CONNECT assembly

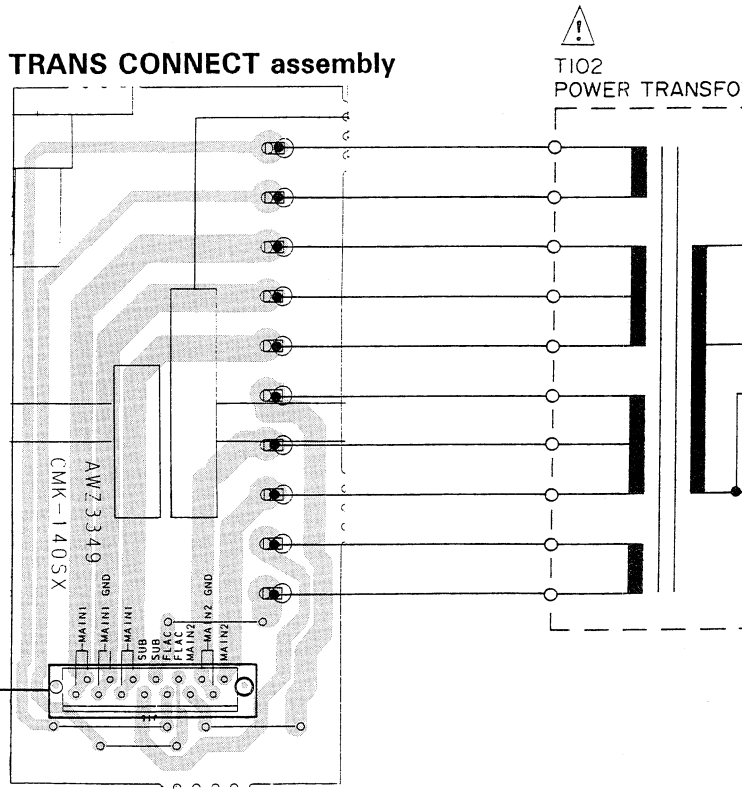

To AF assembly J15 (To page 41)

nted side.
e replaced with those shown
ng Table.

ol	Part Name
	Transistor
	Radiator type transistor
	Diode
	Resistor
	Capacitor (Polarized)
	Capacitor (Non-polarized)

s negatine terminal.
nthode side.
ter.

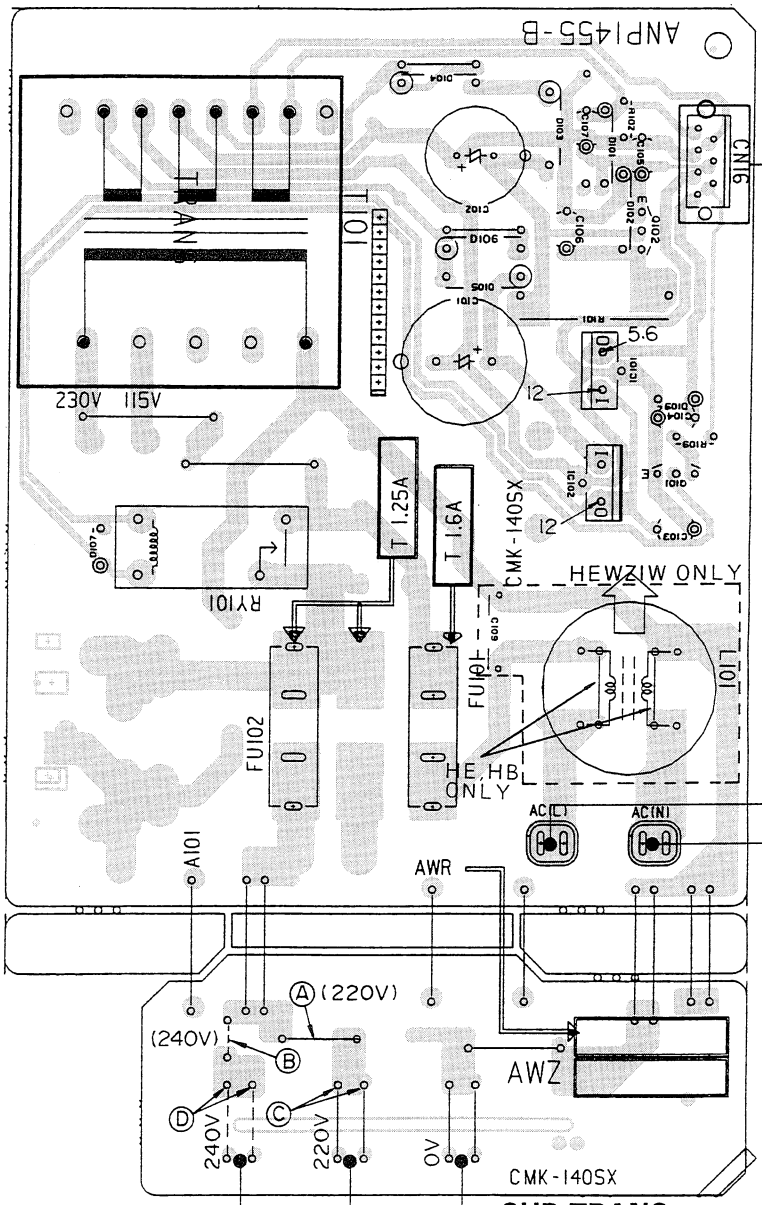

SUB TRANS assembly
(AWR1056 : HE)
(AWR1055 : HB)
(AWR1057 : HEWZIW)

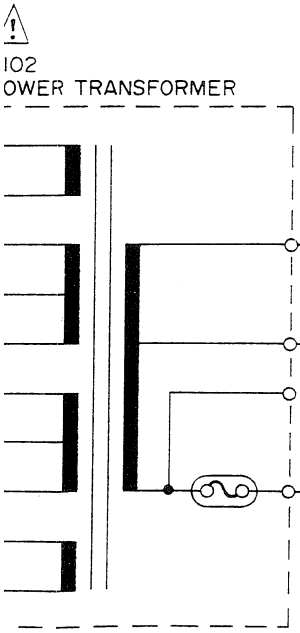

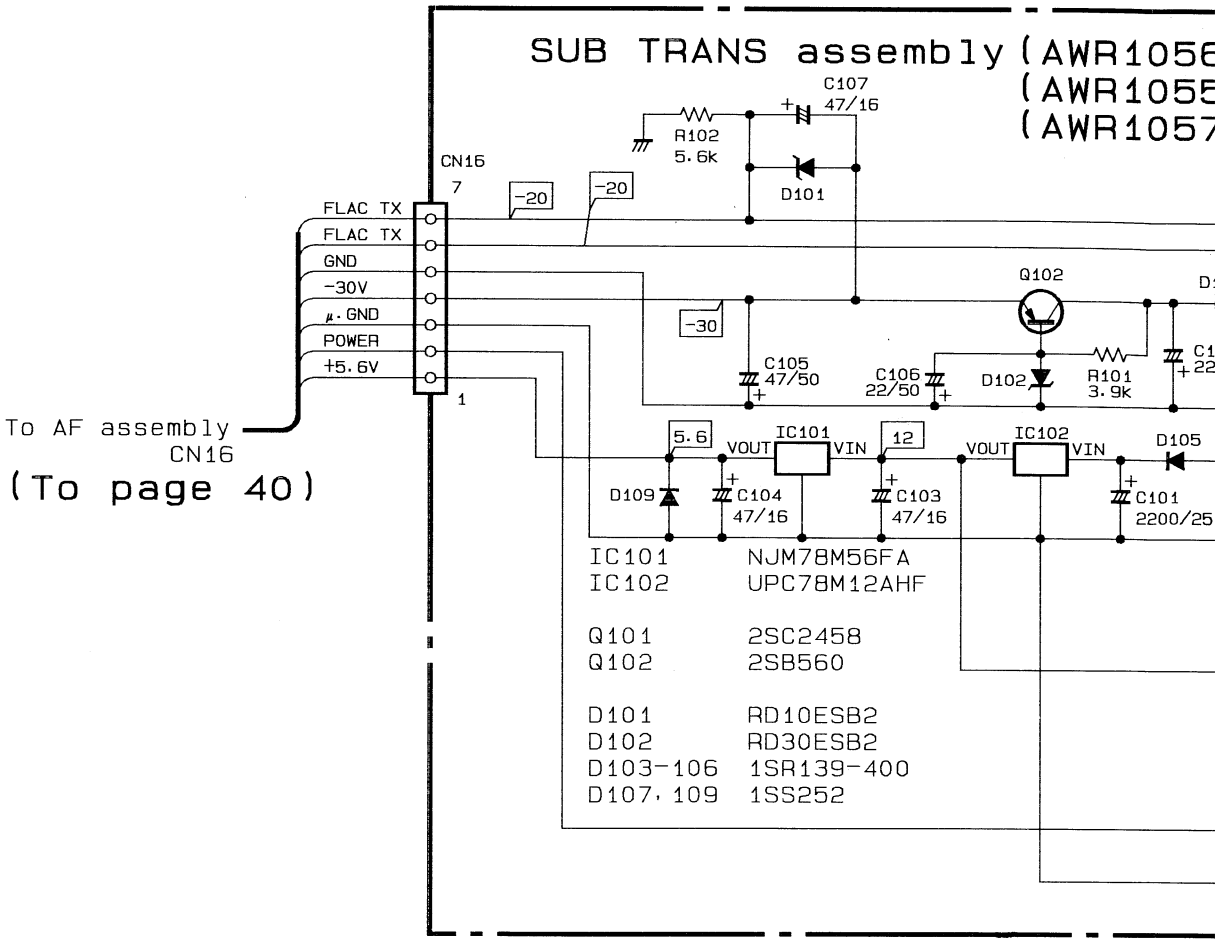
SUB TRANS assembly (AWR1056
(AWR1055
(AWR1057
C107
47/16
R102
5.6k
D101
CN16
7
1
FLAC TX
FLAC TX
GND
-30V
μ.GND
POWER
+5.6V
-20
-20
-30
Q102
C105
47/50
C106
22/50
D102
R101
3.9k
To AF assembly
CN16
(To page 40)
5.6
VOUT
IC101
VIN
12
VOUT
IC102
VIN
D105
D109
C104
47/16
C103
47/16
C101
2200/25
IC101 NJM78M56FA
IC102 UPC78M12AHF
Q101 2SC2458
Q102 2SB560
D101 RD10ESB2
D102 RD30ESB2
D103-106 1SR139-400
D107, 109 1SS252

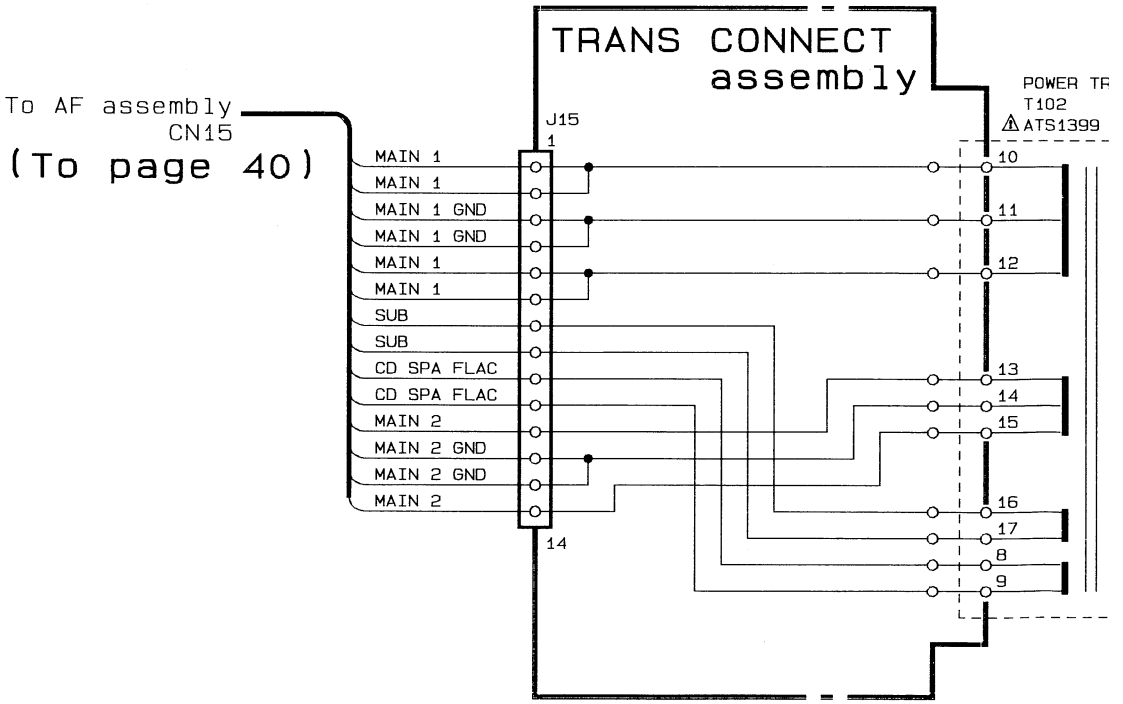
TRANS CONNECT
assembly
To AF assembly
CN15
(To page 40)
J15
1
14
MAIN 1
MAIN 1
MAIN 1 GND
MAIN 1 GND
MAIN 1
MAIN 1
SUB
SUB
CD SPA FLAC
CD SPA FLAC
MAIN 2
MAIN 2 GND
MAIN 2 GND
MAIN 2
POWER TR
T102
ATS1399
10
11
12
13
14
15
16
17
8
9

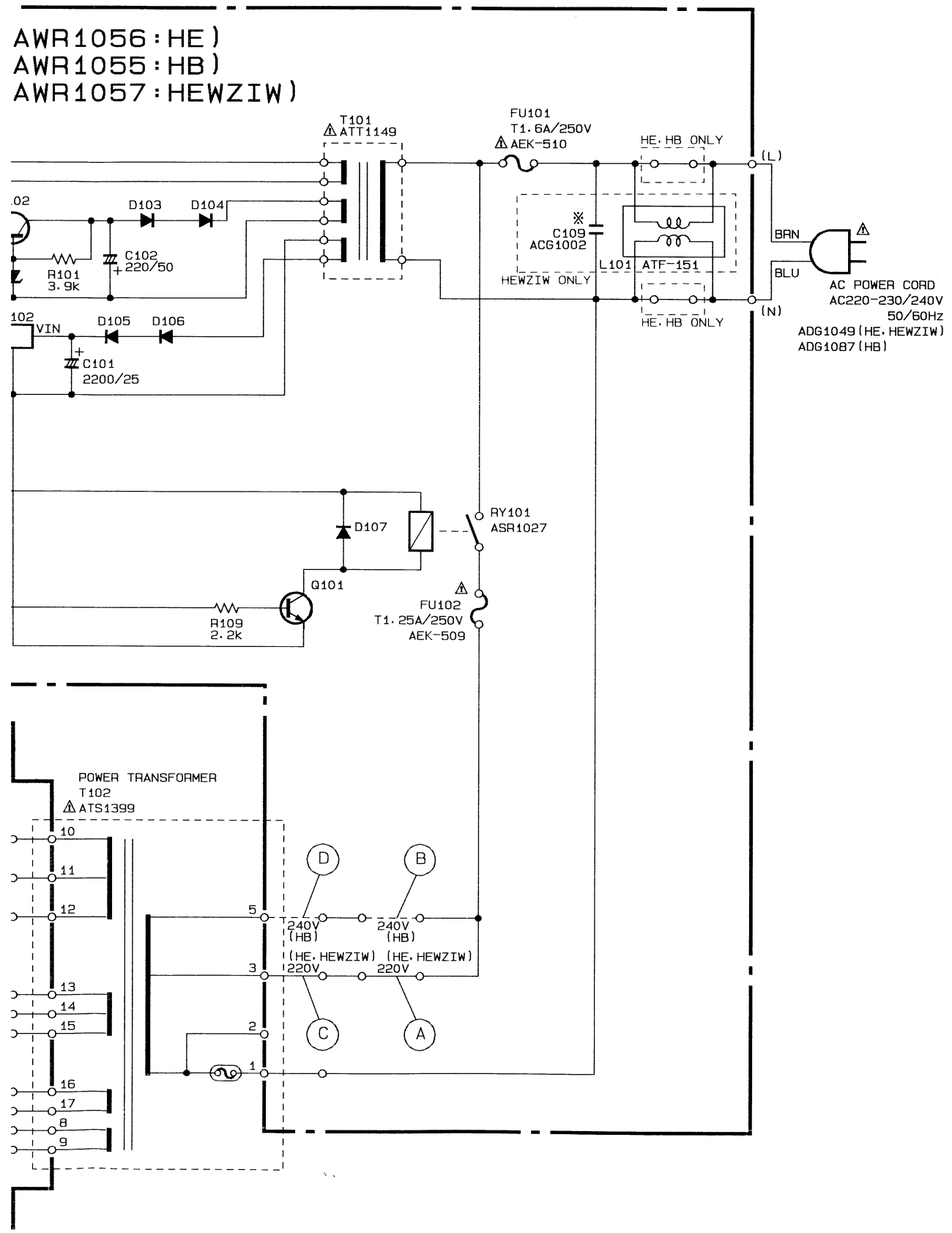
AWR1056:HE)
AWR1055:HB)
AWR1057:HEWZIW)
T101
ATT1149
FU101
T1.6A/250V
AEK-510
HE.HB ONLY
(L)
D103
D104
C102
220/50
R101
3.9k
C109
ACG1002
L101 ATF-151
HEWZIW ONLY
BRN
BLU
(N)
AC POWER CORD
AC220-230/240V
50/60Hz
ADG1049(HE.HEWZIW)
ADG1087(HB)
VIN
D105
D106
C101
2200/25
D107
RY101
ASR1027
Q101
R109
2.2k
FU102
T1.25A/250V
AEK-509
POWER TRANSFORMER
T102
ATS1399
240V
(HB)
(HE.HEWZIW)
220V
D
B
C
A

3.6 SCHEMATIC AND PCB CONNECTION DIAGRAM (CD BLOCK)

1. RESISTORS:
   Indicated in Ω, ¼W, ⅛W, ±5% tolerance unless otherwise noted k : kΩ, M : MΩ, (F) : ±1%, (G) : ±2%, (K) : ±10% (M); ±20% tolerance

2. CAPACITORS:
   Indicated in capacity (μF)/voltage (V) unless otherwise noted p : pF
   Indication without voltage is 50V except electrolytic capacitor.

3. VOLTAGE, CURRENT:
   ⊤ : DC voltage (V) at play state.
   Value in ( ) is DC voltage at rated power.
   ⇦ mA : DC current at no input signal

4. OTHERS:
   ➡ : Signal route.
   ⊘ : Adjusting point.
   The ⚠ mark found on some component parts indicates the importance of the safety factor of the part. Therefore, when replacing, be sure to use parts of identical designation.
   ※ marked capacitors and resistors have parts numbers.

   This is the basic schematic diagram, but the actual circuit may vary due to improvements in design.

5.SWITCH

MECHA PCB Assembly

S601 U
S602 S
S603 L

SUB PCB Assembly

S701 O/C D1
S702 O/C D2
S703 D1
S704 D2
S705 ▶▶ (▶▶I)
S706 COMPU
S707 PGM
S708 ◀◀ (I◀◀)
S709 ▶
S710 TIME/CALENDER
S711 REP
S712 AUTO EJECT
S713 HI LITE
S714 RND
S715 STOP
S716 PAUSE

List of semiconductor terminal voltage

Note: All terminal voltages are measured in the PLAY mode.

IC151
CXA1372S

Pin No.	Volts	Pin No.	Volts
1	0	25	−5
2	0	26	5
3	0	27	5
4	0	28	5
5	0	29	5
6	0	30	5
7	0	31	5
8	0	32	0
9	0	33	5
10	0	34	0
11	−1	35	0
12	0	36	N. C
13	0. 2	37	2. 5
14	0	38	2. 5
15	0	39	5
16	5	40	−1. 5
17	0	41	−1. 7
18	0	42	5
19	0	43	−0. 7
20	0.2~0.8	44	−1. 6
21	0	45	0
22	−4	46	0. 8
23	1. 3	47	−5
24	0	48	0

IC101
CXA1471S

Pin No.	Volts	Pin No.	Volts
1	N. C	16	0
2	2. 9	17	0
3	−4. 7	18	0. 8
4	0	19	0
5	0	20	5
6	−5	21	5
7	0	22	N. C
8	0		
9	N. C		
10	0		
11	N. C		
12	N. C		
13	−0. 9		
14	−0. 7		
15	0		

IC20
M5298P

Pin No.	Volts
1	−8. 2
2	N. C
3	−5
4	0
5	−8. 2
6	N. C
7	N. C
8	N. C
9	5
10	N. C
11	0. 7
12	5
13	8
14	5
15	1. 2
16	8

IC201
LA6520

Pin No.	Volts
1	0
2	0
3	−0. 7
4	0
5	0
6	0
7	1. 7
8	1. 7
9	0. 7
10	0
11	0
12	8
FIN	−8. 2

IC351
PD4305B

Pin No.	Volts	Pin No.	Volts	Pin No.	Volts	Pin No.	Volts
1	−10	17	1. 8	33	0	49	−22
2	−13. 5	18	0	34	5	50	0
3	−5. 5	19	5	35	0	51	5
4	−10. 5	20	0. 5	36	0	52	0
5	2. 1	21	5	37	0	53	0
6	4. 8	22	0	38	0	54	−26
7	4. 5	23	0	39	5	55	−26
8	3. 9	24	0	40	−22	56	−26
9	2. 3	25	5	41	−22	57	−5
10	0	26	5	42	−22	58	−9
11	5	27	5	43	−22	59	−11
12	2. 5	28	5	44	−22	60	5
13	5	29	5	45	−22	61	−2. 5
14	5	30	2. 5	46	−22	62	2
15	5	31	2. 5	47	−22	63	−2. 5
16	0	32	0	48	−22	64	5

IC404
NJM4558D−D

Pin No.	Volts
1	−0. 2
2	1
3	1
4	−5
5	1
6	1
7	−0. 2
8	5

IC401
TC9237N

Pin No.	Volts
1	5
2	0
3	5
4	5. 5
5	2. 5
6	2. 5
7	0
8	0
9	2. 5
10	2. 5
11	5
12	0
13	N. C
14	0
15	0
16	1. 9
17	1. 9
18	5
19	2
20	0
21	0
22	0
23	0
24	5
25	2. 5
26	2. 5
27	2. 5
28	5

IC301
CXD2500AQ

Pin No.	Volts	Pin No.	Volts	Pin No.	Volts
1	5	31	N. C	61	N. C
2	N. C	32	2. 5	62	N. C
3	5	33	5	63	0
4	2. 6	34	2. 5	64	N. C
5	N. C	35	2. 5	65	0
6	5	36	N. C	66	3.3～4.6
7	N. C	37	N. C	67	5
8	N. C	38	N. C	68	0
9	0	39	N. C	69	2.1～3
10	0	40	N. C	70	5
11	N. C	41	N. C	71	5
12	0	42	5	72	5
13	N. C	43	N. C	73	5
14	N. C	44	N. C	74	5
15	N. C	45	N. C	75	5
16	N. C	46	4. 4	76	0
17	0	47	0	77	5
18	2. 5	48	0	78	5
19	2. 4	49	0～0.3	79	5
20	2. 4	50	N. C	80	0
21	0	51	N. C		
22	2. 5	52	0		
23	5	53	2. 5		
24	2. 5	54	N. C		
25	N. C	55	0		
26	0	56	N. C		
27	2. 5	57	N. C		
28	0	58	N. C		
29	N. C	59	0		
30	0	60	N. C		

To Deck Amplifier Block AF assembly 119 (To page 41)

To Deck Amplifier Block AF assembly 118 (To page 41)

MOTHER PCB assembly (PWM1349)

MECHA PCB assembly

This P. C. B. connection diagram is viewed from the foil side.

Note :
See pages 61,62 for the semiconductors without voltage indication.

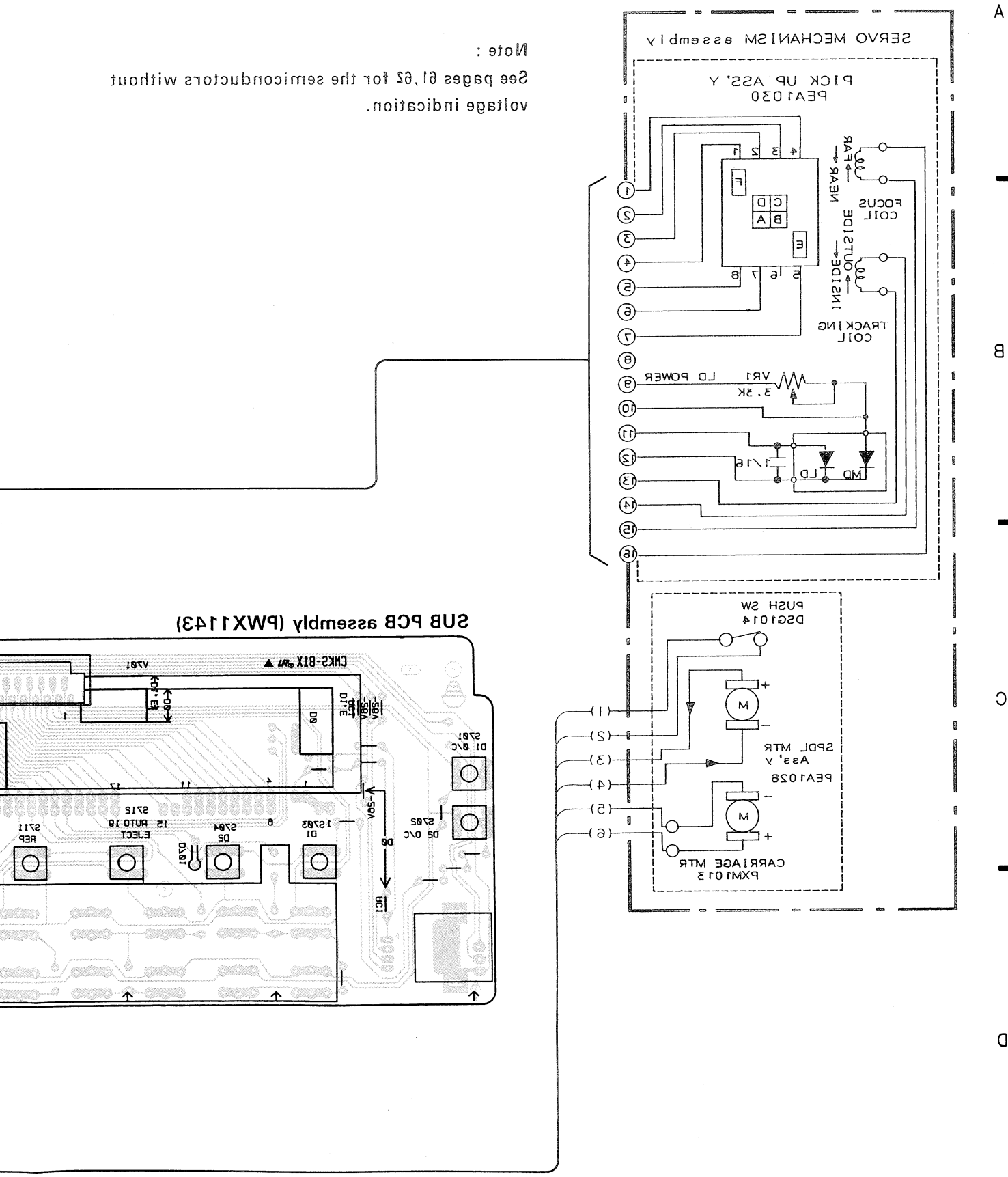

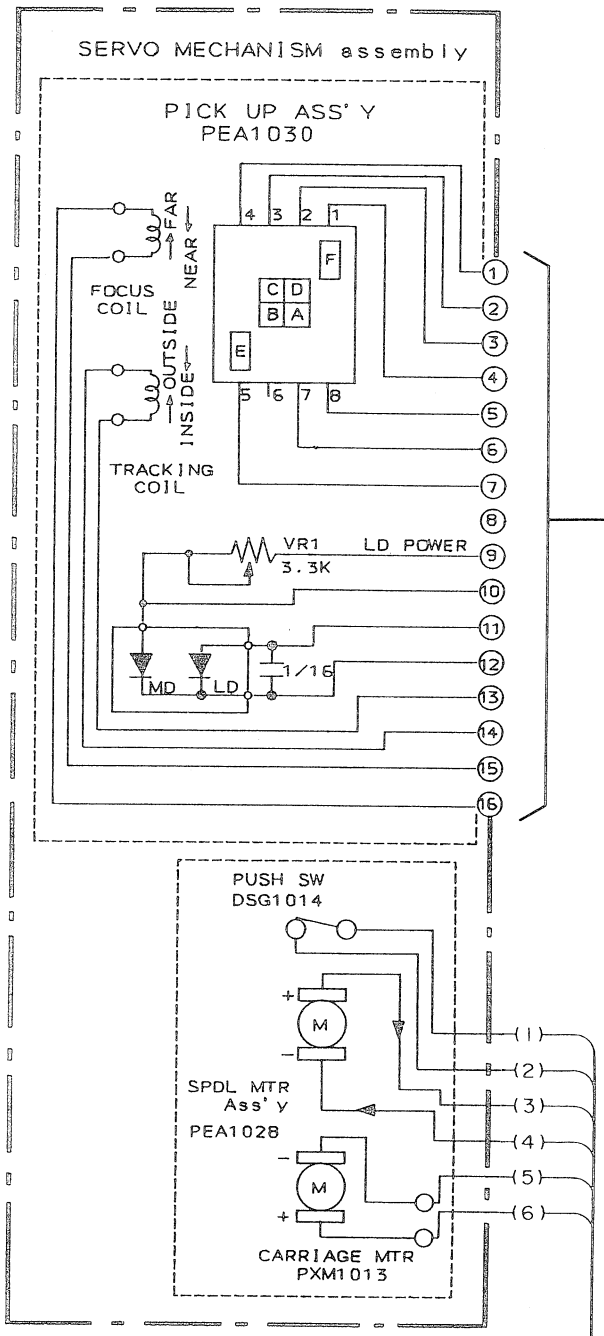

Note :
See pages 61,62 for the semiconductors without voltage indication.

SUB PCB assembly (PWX1143)

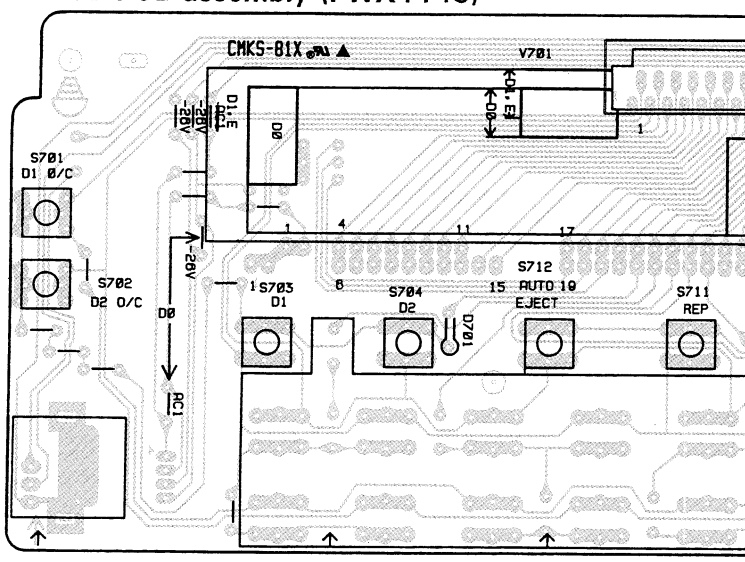

To Deck Amplifier Block AF assembly J18 (To page 41)

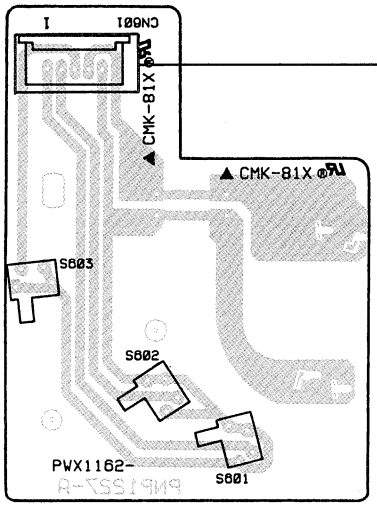

MECHA PCB assembly

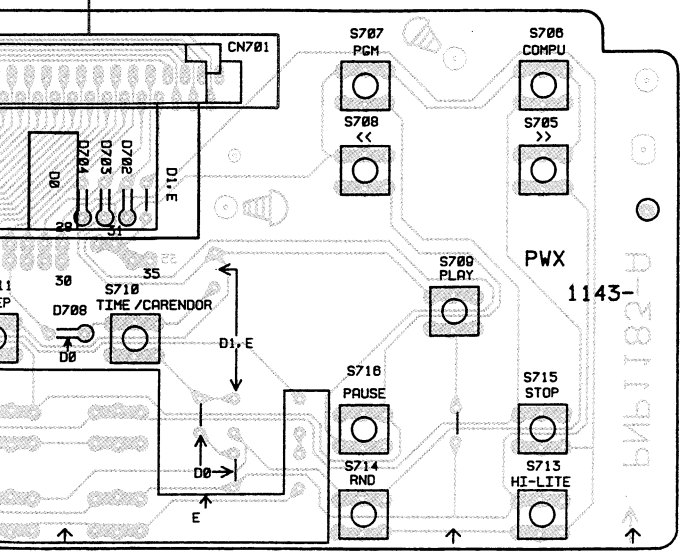

MOTHER PCB assembly (PWM1349)

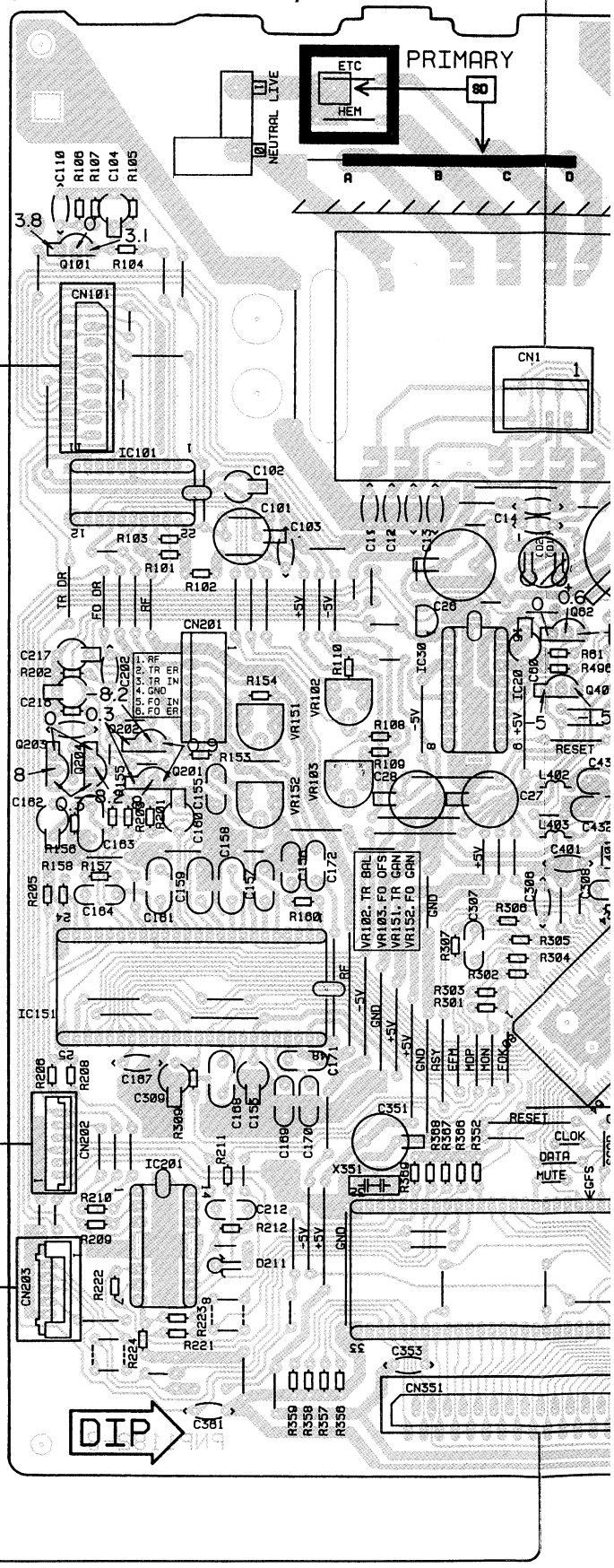

To Deck Amplifier Block AF assembly J19 (To page 41)

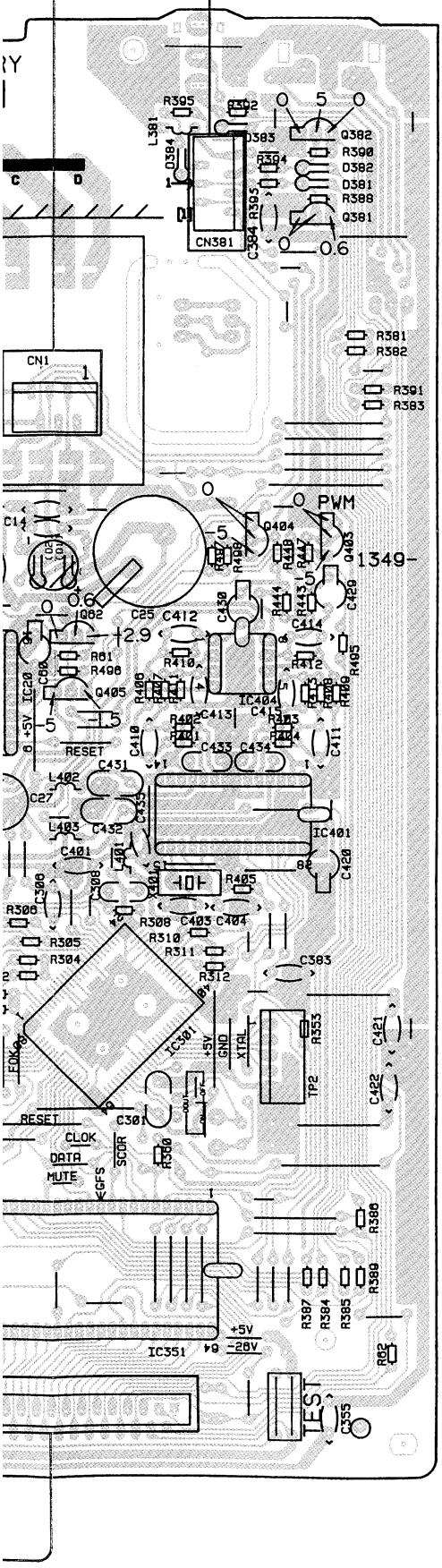

Q382
Q381
Q101
IC101
Q404
Q403
Q062
IC404
IC30
VR102
IC20
Q405
VR151
Q201
VR103
Q204
VR152
IC401
IC151
IC301
IC201
IC351

P.C.B. pattern diagram indication	Corresponding part symbol	Part name
	C E B or C E B	Transistor
D S G	D S G or D S G	FET
		Diode
		Zenner diode
		LED
		Varactor
		Tact switch
		Inductor
		Coil
		Transformer
		Filter
		Ceramic capacitor
		Mylar capacitor
SA		Styrol capacitor
NF		Electrolytic capacitor (Non polarized)
		Electrolytic capacitor (Noiseless)
	+	Electrolytic capacitor (Polarized)
		Electrolytic capacitor (Polarized)
		Power capacitor
		Semi-fixed resistor
		Resistor array
		Resistor
		Resonator
		Thermistor

1. This P.C.B. connection diagram is viewed from the parts mounted side.
2. The parts which have been mounted on the board can be replaced with those shown with the corresponding wiring symbols listed in the above Table.
3. The capacitor terminal marked with ▭ shows negative terminal.
4. The diode marked with O shows cathode side.
5. The transistor terminal marked with ▭ shows emitter.

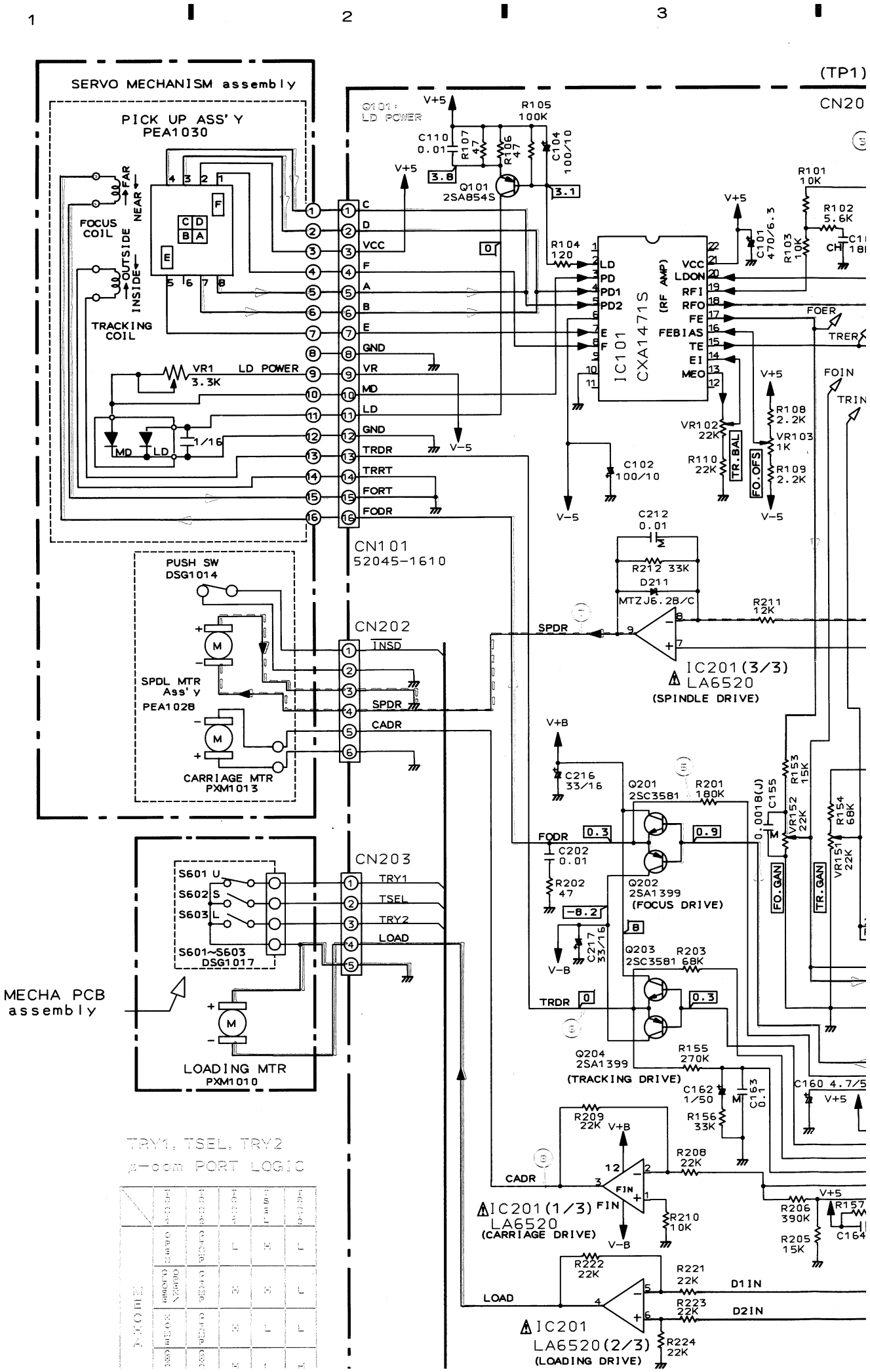
SERVO MECHANISM assembly
PICK UP ASS'Y
PEA1030
FOCUS COIL
FAR
NEAR
OUTSIDE
INSIDE
TRACKING COIL
VR1 3.3K
LD POWER
MD
LD
1/16
CN101
52045-1610
PUSH SW
DSG1014
SPDL MTR
Ass'y
PEA1028
CARRIAGE MTR
PXM1013
CN202
INSD
SPDR
CADR
CN203
TRY1
TSEL
TRY2
LOAD
S601 U
S602 S
S603 L
S601~S603
DSG1017
MECHA PCB
assembly
LOADING MTR
PXM1010
Q101:
LD POWER
Q101
2SA854S
IC101
CXA1471S
(RF AMP)
IC201(3/3)
LA6520
(SPINDLE DRIVE)
Q201
2SC3581
Q202
2SA1399
(FOCUS DRIVE)
Q203
2SC3581
Q204
2SA1399
(TRACKING DRIVE)
IC201(1/3)
LA6520
(CARRIAGE DRIVE)
IC201
LA6520(2/3)
(LOADING DRIVE)
TR.BAL
FO.OFS
FO.GAN
TR.GAN
FOER
FOIN
TRER
TRIN
D1IN
D2IN
TRY1, TSEL, TRY2
μ-com PORT LOGIC

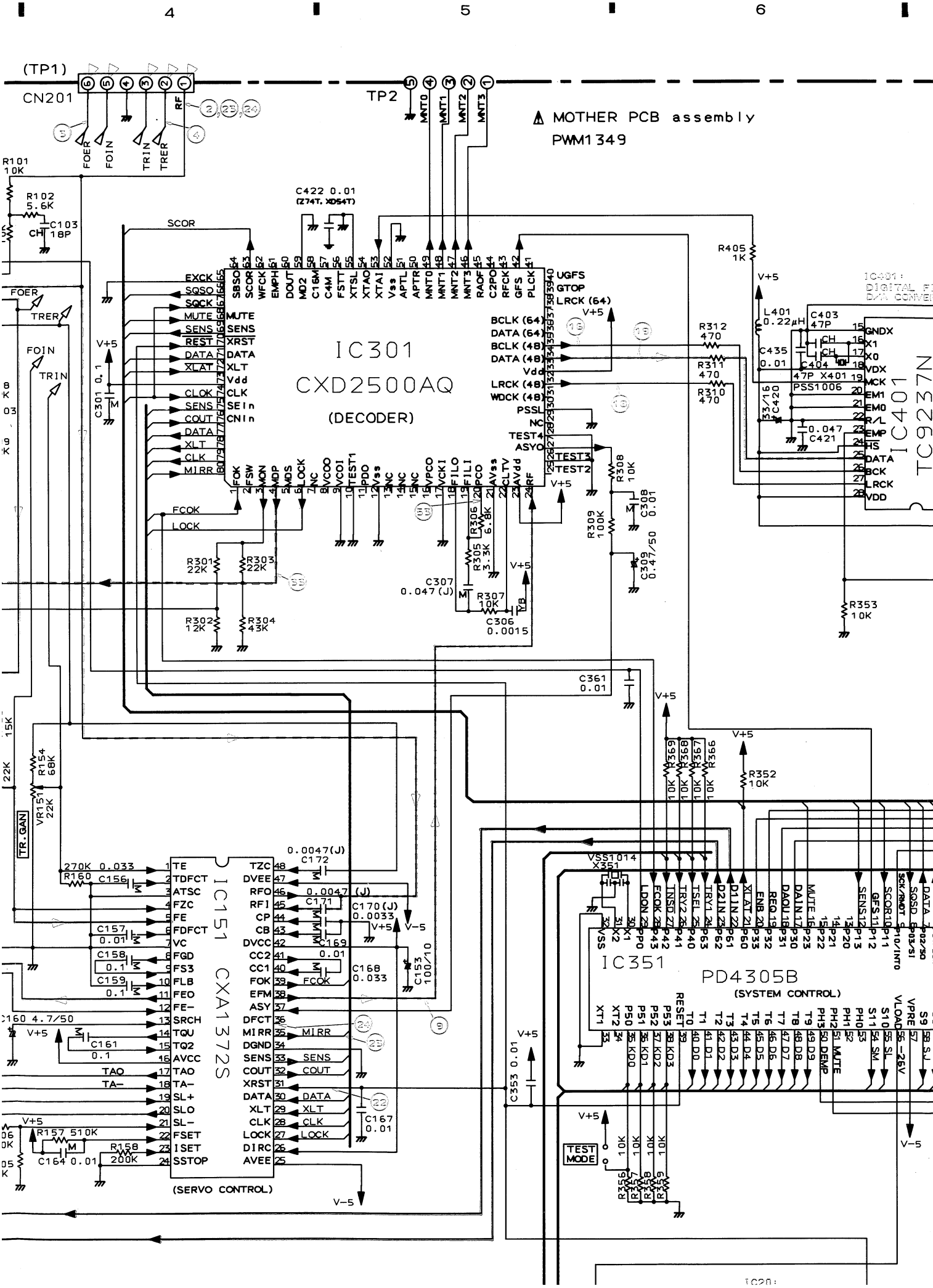
4
5
6
(TP1)
CN201
TP2
MOTHER PCB assembly
PWM1349
IC301
CXD2500AQ
(DECODER)
IC401
TC9237N
IC151
CXA1372S
(SERVO CONTROL)
IC351
PD4305B
(SYSTEM CONTROL)
TR.GAN
TEST MODE

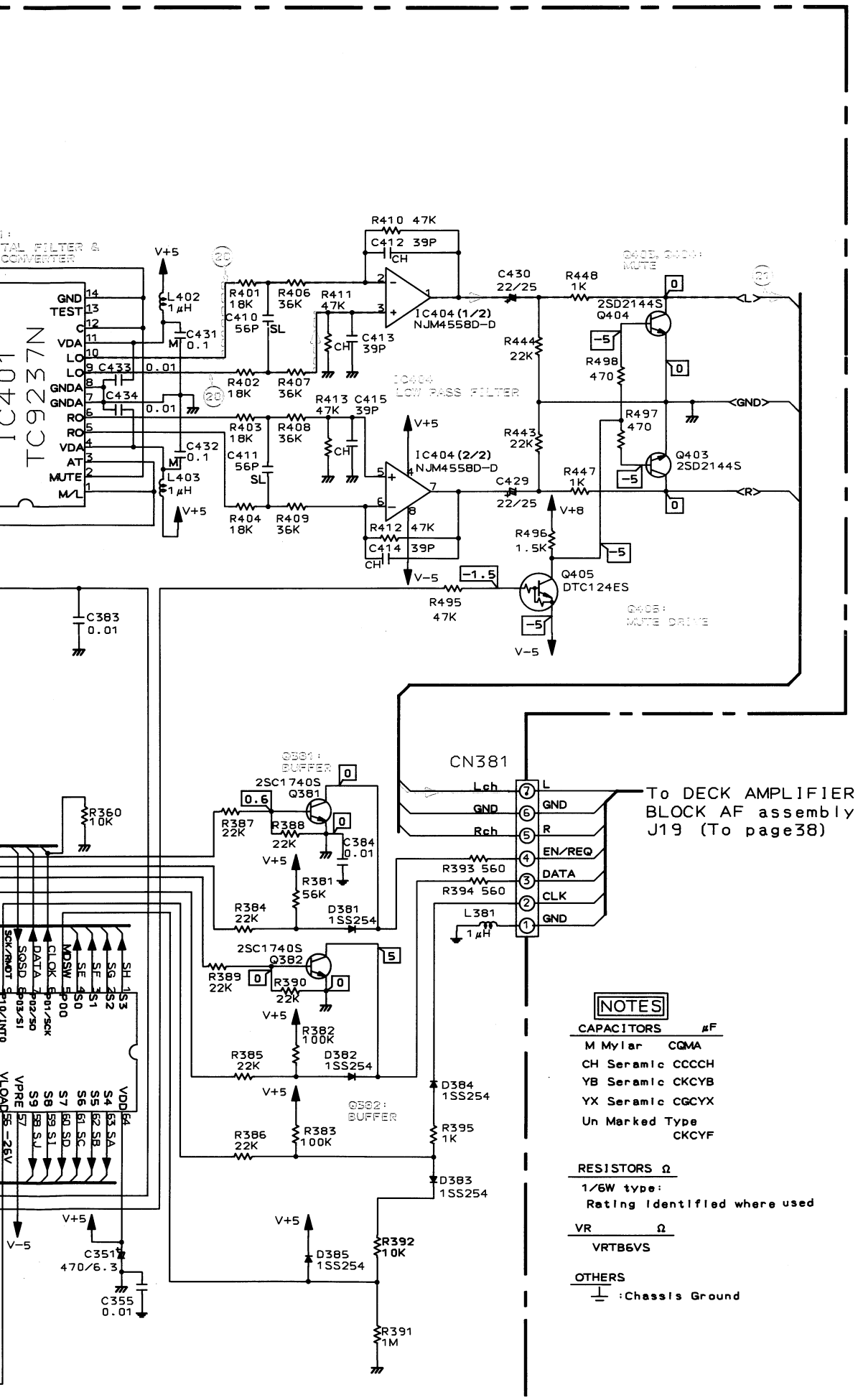
TC9237N
IC401
GND
TEST
VDA
LO
GNDA
RO
VDA
AT
MUTE
M/L
L402 1μH
L403 1μH
C431 0.1
C432 0.1
C433 0.01
C434 0.01
V+5
R401 18K
R402 18K
R403 18K
R404 18K
R406 36K
R407 36K
R408 36K
R409 36K
C410 56P
C411 56P
R411 47K
R413 47K
C413 39P
C415 39P
R410 47K
C412 39P
IC404(1/2) NJM4558D-D
IC404(2/2) NJM4558D-D
IC404 LOW PASS FILTER
R412 47K
C414 39P
V-5
C430 22/25
C429 22/25
R444 22K
R443 22K
R448 1K
R447 1K
R498 470
R497 470
R496 1.5K
R495 47K
Q404 2SD2144S
Q403 2SD2144S
Q405 DTC124ES
Q405: MUTE DRIVE
V+8
-1.5
-5
0
GND
L
R
C383 0.01
R360 10K
Q381 2SC1740S
Q382 2SC1740S
Q381: BUFFER
Q382: BUFFER
R387 22K
R388 22K
R389 22K
R390 22K
R384 22K
R385 22K
R386 22K
R381 56K
R382 100K
R383 100K
C384 0.01
D381 1SS254
D382 1SS254
D383 1SS254
D384 1SS254
D385 1SS254
R393 560
R394 560
L381 1μH
R395 1K
R392 10K
R391 1M
C351 470/6.3
C355 0.01
CN381
Lch
GND
Rch
EN/REQ
DATA
CLK
GND
To DECK AMPLIFIER BLOCK AF assembly J19 (To page38)
SCK/RMOT
SQSD
DATA
CLOK
MDSW
SH 1 S3
SG 2 S2
SF 3 S1
SE 4 S0
P00
P01/SCK
P02/SO
P03/SI
P10/INT0
VDD 64
S4 63 SA
S5 62 SB
S6 61 SC
S7 60 SD
S8 59 S1
S9 58 SJ
VPRE 57
VLOAD 56 -26V
NOTES
CAPACITORS μF
M Mylar CQMA
CH Seramic CCCCH
YB Seramic CKCYB
YX Seramic CGCYX
Un Marked Type CKCYF
RESISTORS Ω
1/6W type:
Rating identified where used
VR Ω
VRTB6VS
OTHERS
:Chassis Ground

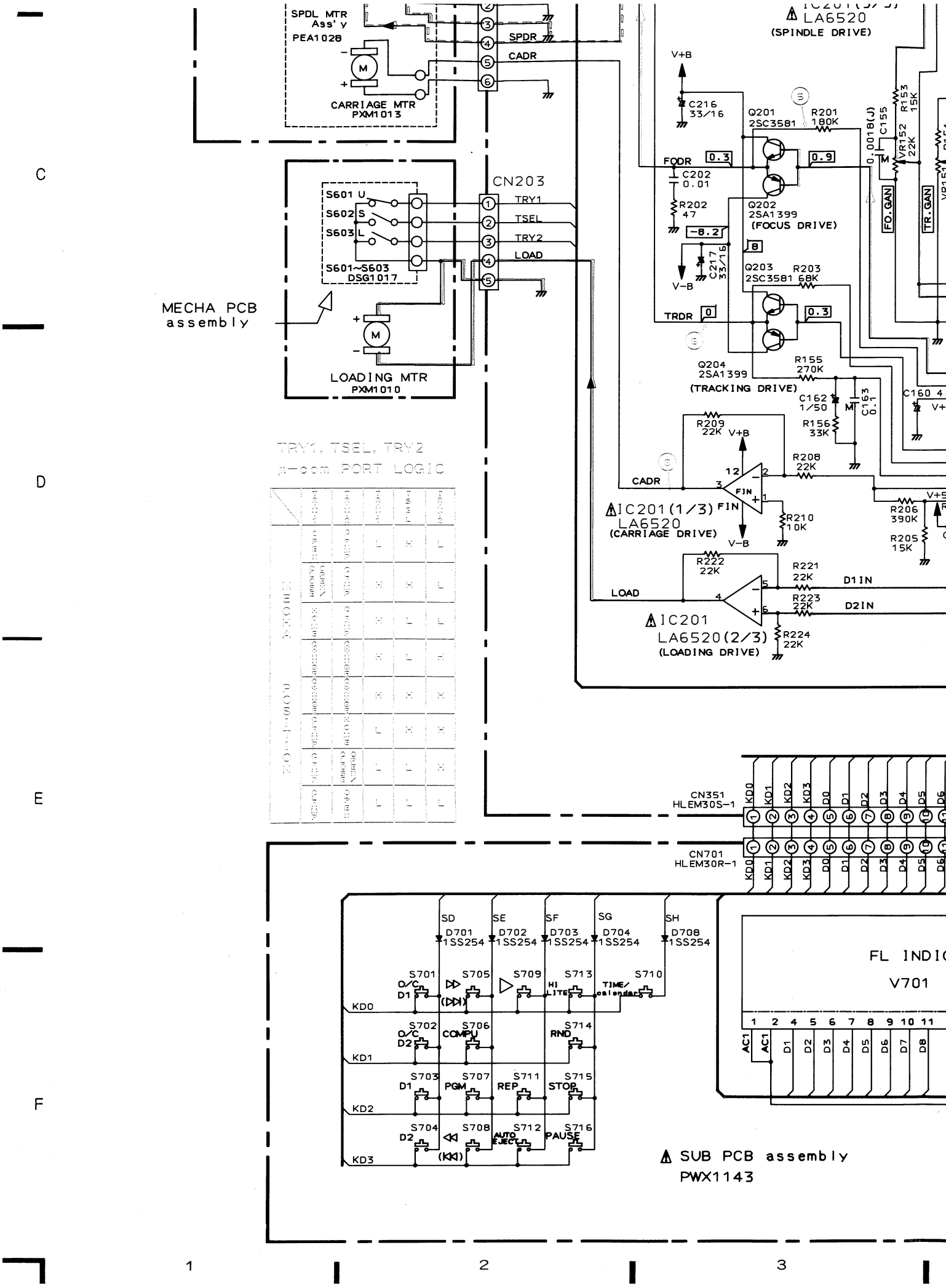
SPDL MTR Ass'y
PEA1028
CARRIAGE MTR
PXM1013
SPDR
CADR
IC201(3/3)
LA6520
(SPINDLE DRIVE)
V+B
C216
33/16
Q201
2SC3581
R201
180K
R153
15K
C155
0.0018(J)
VR152
22K
FODR
0.3
0.9
C202
0.01
R202
47
Q202
2SA1399
(FOCUS DRIVE)
FO.GAN
TR.GAN
-8.2
8
C217
33/16
V-B
Q203
2SC3581
R203
68K
TRDR
0
0.3
Q204
2SA1399
(TRACKING DRIVE)
R155
270K
C162
1/50
C163
0.1
C160
R156
33K
CN203
TRY1
TSEL
TRY2
LOAD
S601 U
S602 S
S603 L
S601~S603
DSG1017
MECHA PCB
assembly
LOADING MTR
PXM1010
TRY1, TSEL, TRY2
μ-com PORT LOGIC
R209
22K
R208
22K
CADR
IC201(1/3)
LA6520
(CARRIAGE DRIVE)
FIN
R210
10K
R206
390K
R205
15K
R222
22K
R221
22K
D1IN
LOAD
R223
22K
D2IN
IC201
LA6520(2/3)
(LOADING DRIVE)
R224
22K
CN351
HLEM30S-1
CN701
HLEM30R-1
KD0
KD1
KD2
KD3
D0
D1
D2
D3
D4
D5
D6
SD
SE
SF
SG
SH
D701
1SS254
D702
1SS254
D703
1SS254
D704
1SS254
D708
1SS254
S701
O/C
D1
S705
S709
S713
HI LITE
S710
TIME/calendar
S702
O/C
D2
S706
COMPU
S714
RND
S703
D1
S707
PGM
S711
REP
S715
STOP
S704
D2
S708
AUTO EJECT
S712
S716
PAUSE
FL INDIC
V701
AC1
SUB PCB assembly
PWX1143

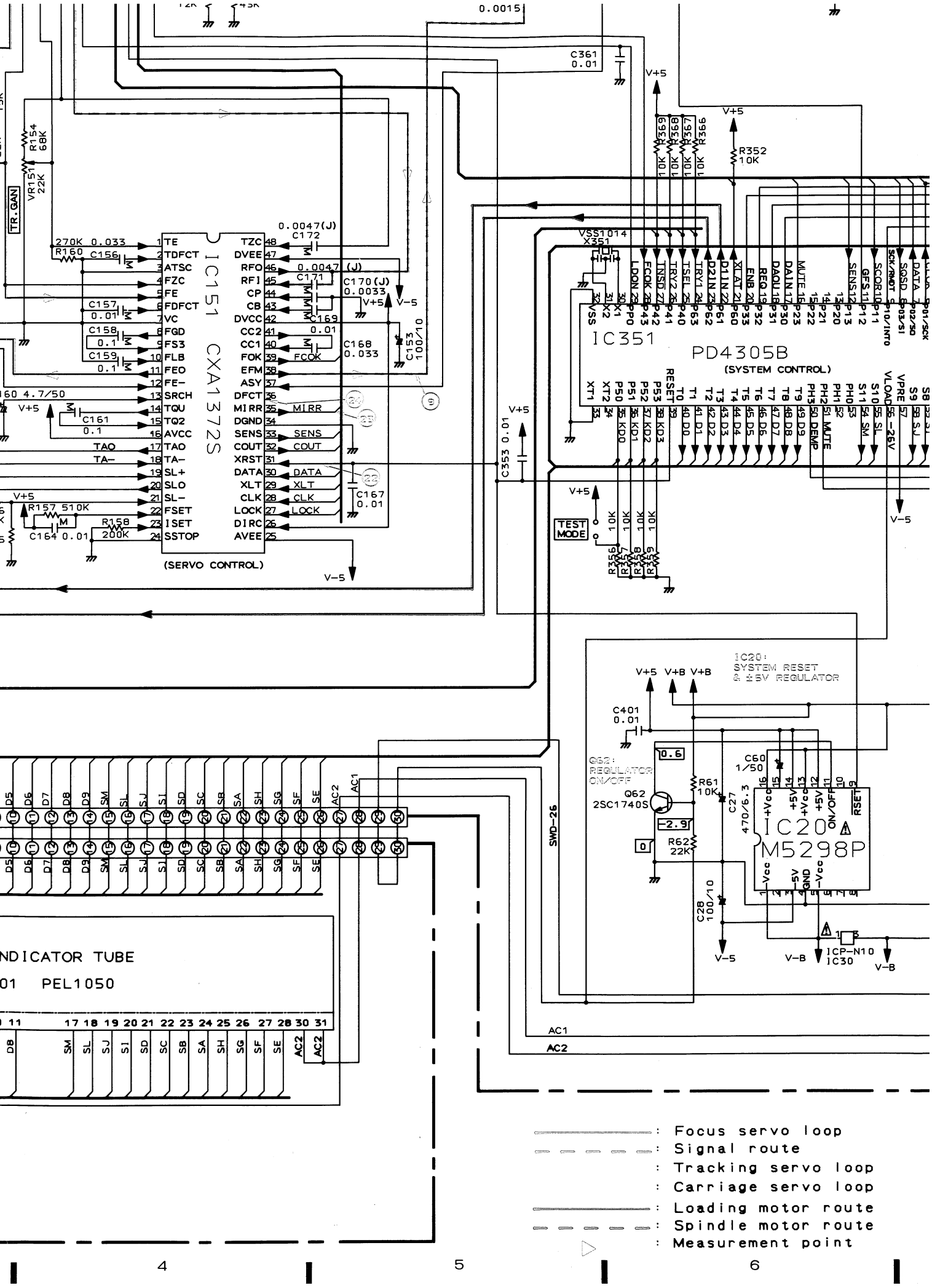
IC151 CXA1372S
(SERVO CONTROL)
IC351 PD4305B
(SYSTEM CONTROL)
IC20 M5298P
IC20: SYSTEM RESET & ±5V REGULATOR
Q62 2SC1740S
Q62: REGULATOR ON/OFF
TR.GAIN
TEST MODE
SWD-26
NDICATOR TUBE
01 PEL1050
: Focus servo loop
: Signal route
: Tracking servo loop
: Carriage servo loop
: Loading motor route
: Spindle motor route
: Measurement point

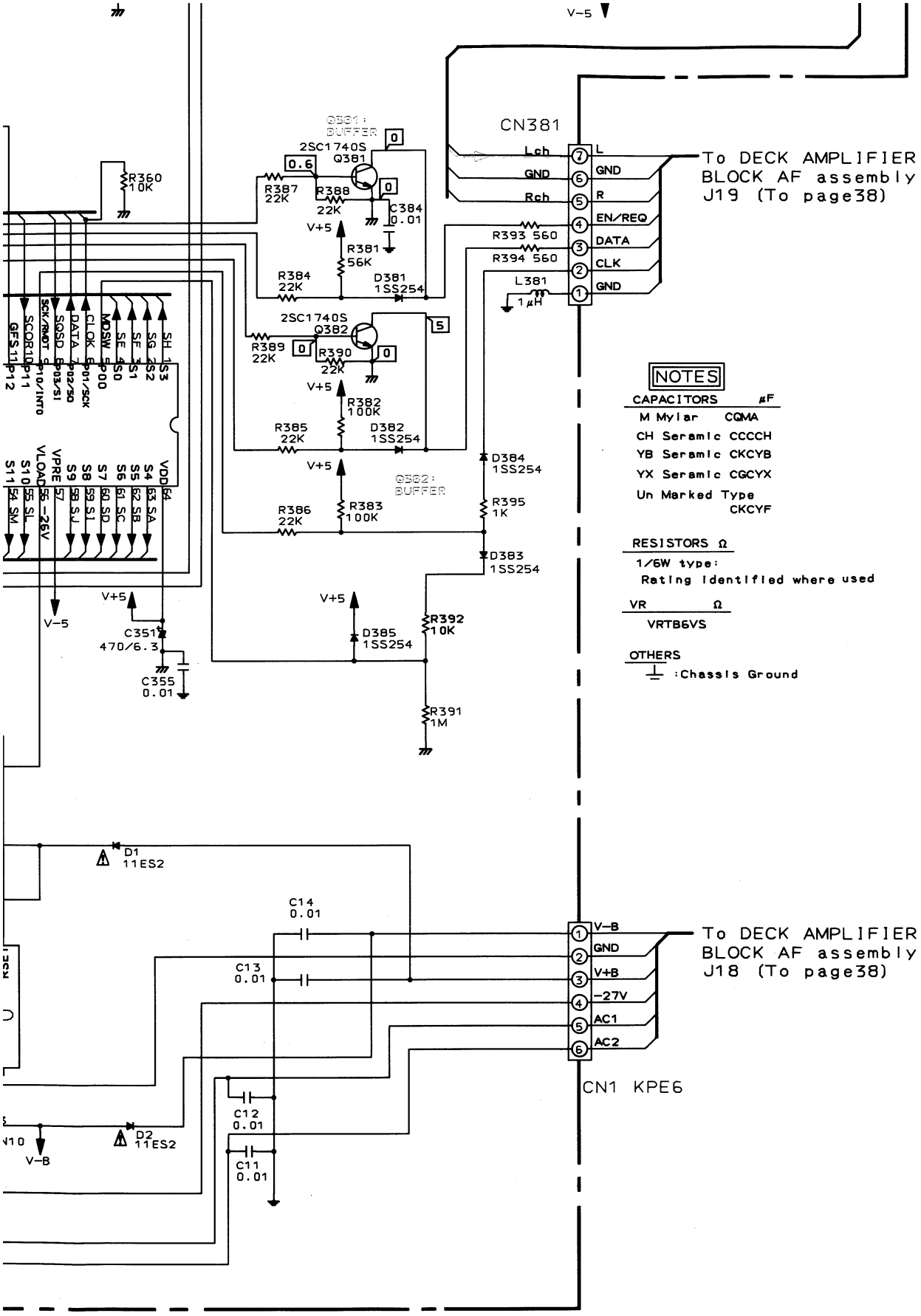
V-5
CN381
Lch
GND
Rch
L
GND
R
EN/REQ
DATA
CLK
GND
To DECK AMPLIFIER BLOCK AF assembly J19 (To page38)
Q381: BUFFER
2SC1740S
Q381
R387 22K
R388 22K
C384 0.01
R360 10K
V+5
R381 56K
R384 22K
D381 1SS254
R393 560
R394 560
L381 1μH
2SC1740S
Q382
R389 22K
R390 22K
R382 100K
R385 22K
D382 1SS254
D384 1SS254
Q382: BUFFER
R386 22K
R383 100K
R395 1K
D383 1SS254
R392 10K
D385 1SS254
C351 470/6.3
C355 0.01
R391 1M
V-5
D1 11ES2
C14 0.01
C13 0.01
V-B
GND
V+B
-27V
AC1
AC2
To DECK AMPLIFIER BLOCK AF assembly J18 (To page38)
CN1 KPE6
C12 0.01
C11 0.01
D2 11ES2
V-B
NOTES
CAPACITORS μF
M Mylar CQMA
CH Seramic CCCCH
YB Seramic CKCYB
YX Seramic CGCYX
Un Marked Type CKCYF
RESISTORS Ω
1/6W type:
Rating identified where used
VR Ω
VRTB6VS
OTHERS
:Chassis Ground

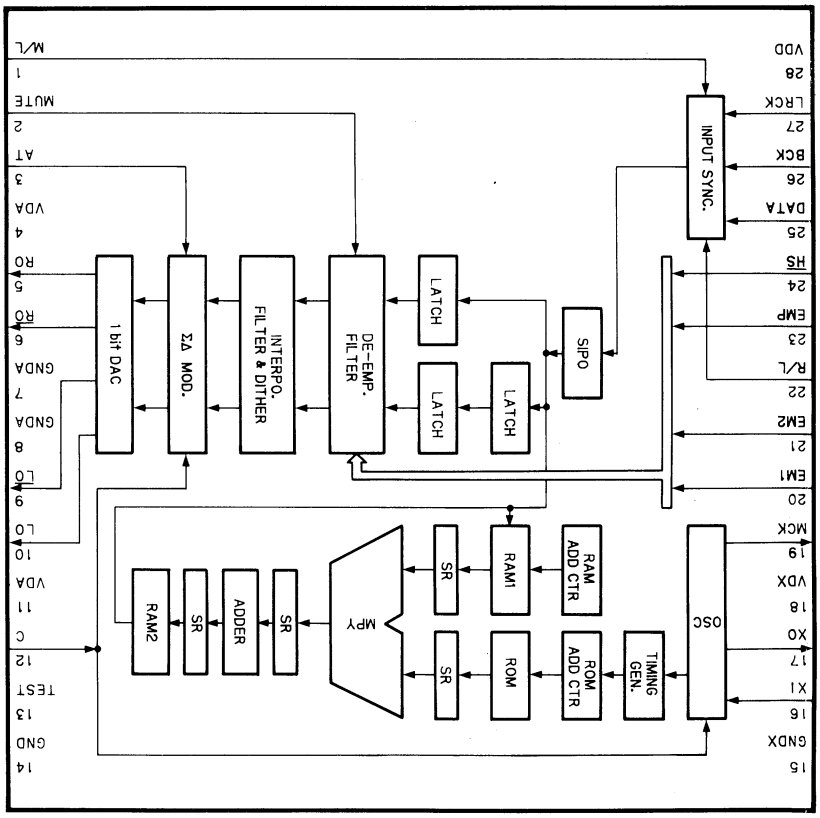

IC401 TC9237N

IC101 CXA1471S

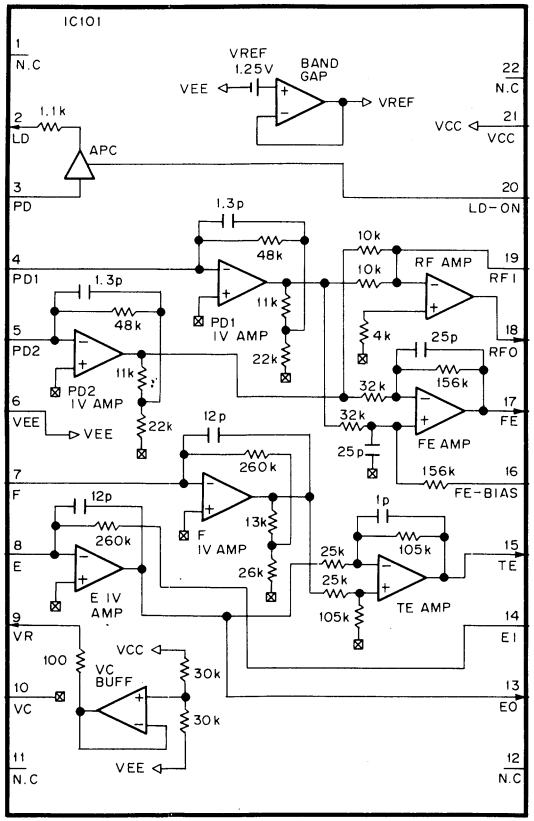

IC301 CXD2500AQ

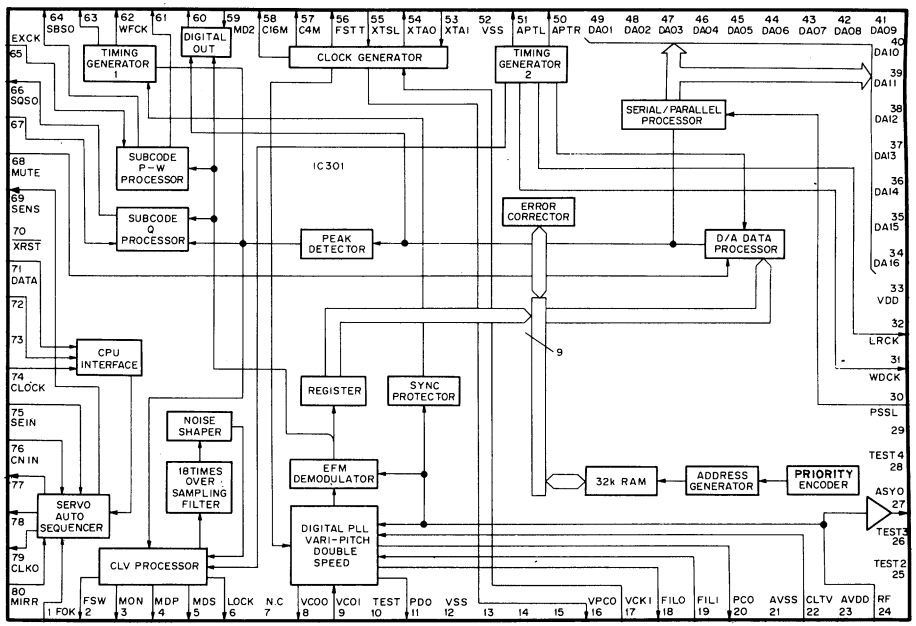

IC151 CXA1372S

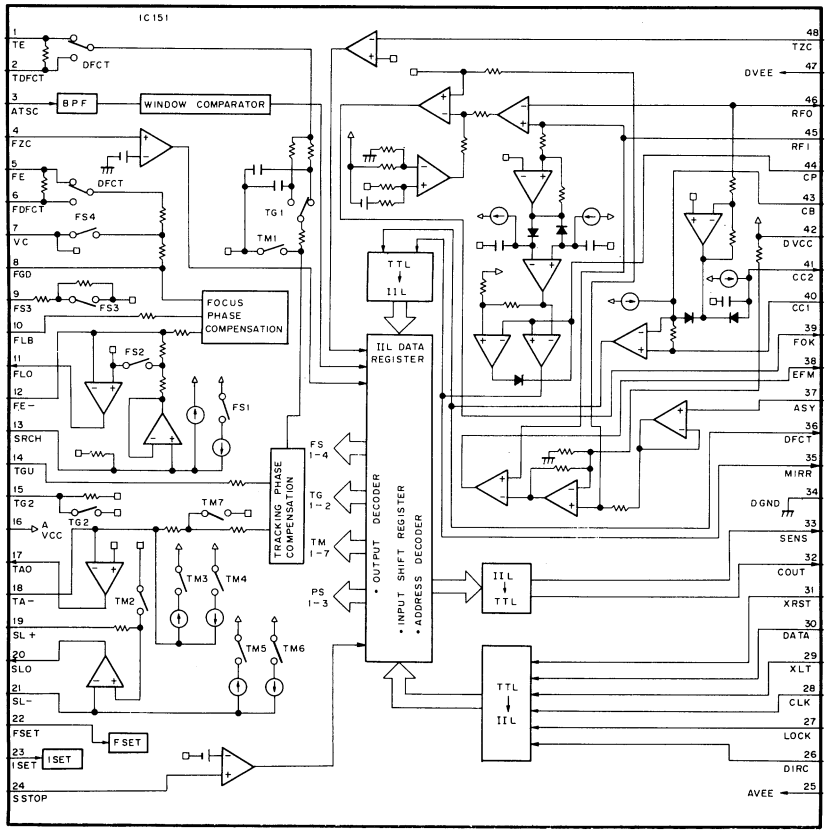

IC101 CXA1471S

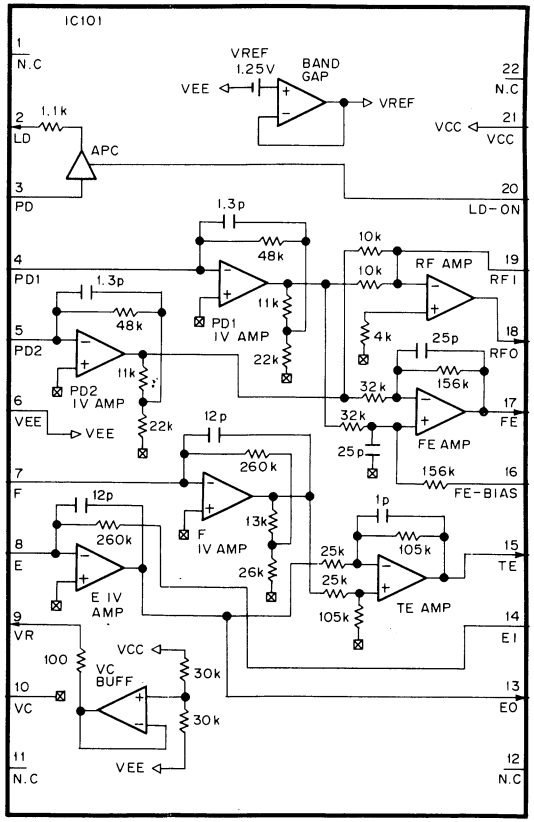

Wave Forms

Note: The encircled numbers denote measuring points in the schematic diagram.

*1 50T-JUMP: After switching to the pause mode, press the manual search key.

*2 FOCUS-IN: Press the key without loading a disc.

② TP1-Pin 1: PLAY MODE
(RF)
500mV/div 500nsec/div

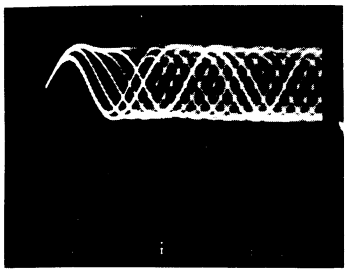

– GND

⑤ Q201 Emitter: FOCUS-IN (*2) MODE
(FODR)
1V/div 200msec/div

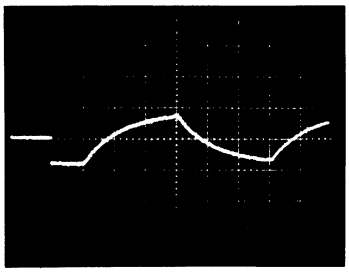

– GND

⑦ IC201-Pin 9: TRACK SEARCH MODE
(SPDR)
2V/div 50msec/div

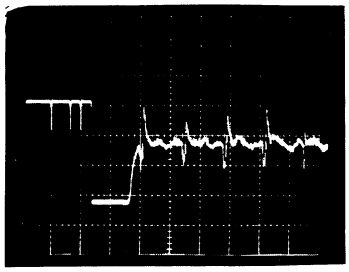

– GND

② TP1-Pin 1: TRACK SEARCH MODE
(RF)
500mV/div 200μsec/div

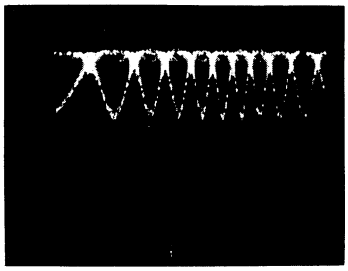

– GND

⑤ Q201 Emitter: PLAY MODE
(FODR)
1V/div 1msec/div

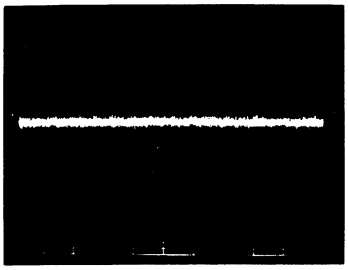

– GND

⑧ IC201-Pin 3: PLAY MODE
(CADR)
1V/div 2S/div

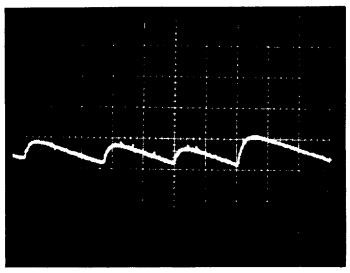

– GND

③ TP1-Pin 6: PLAY MODE
(FOER)
100mV/div 10msec/div

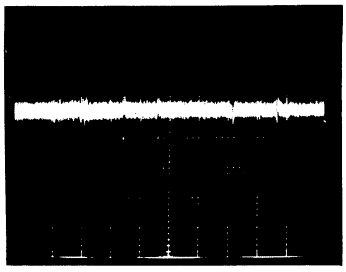

– GND

⑥ Q203 Emitter: PLAY MODE
(TRDR)
500mV/div 1msec/div

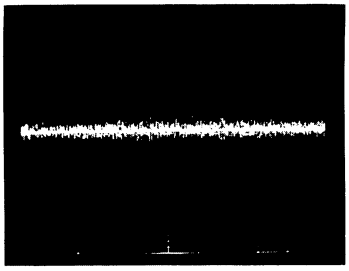

– GND

⑧ IC201-Pin 3: TRACK SEARCH MODE
(CADR)
2V/div 200msec/div

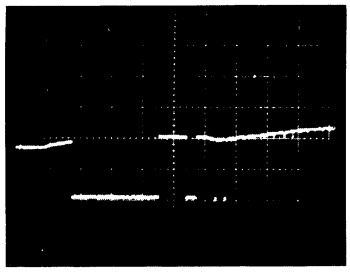

– GND

④ TP1-Pin 2: PLAY MODE
(TRER)
1V/div 10msec/div

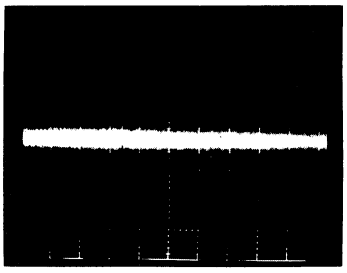

– GND

⑥ Q203 Emitter: 50T-JUMP (*1) MODE
(TRDR)
500mV/div 1msec/div

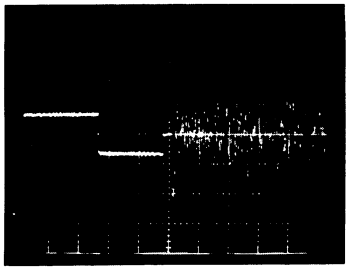

– GND

⑨ IC151-Pin 38: PLAY MODE
(EFM)
2V/div 500nsec/div

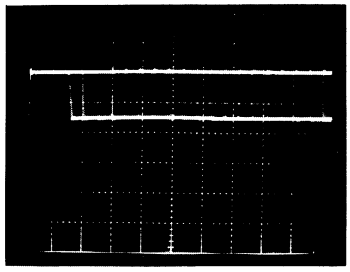

– GND

④ TP1-Pin 2: 50T-JUMP (*1) MODE
(TRER)
1V/div 1msec/div

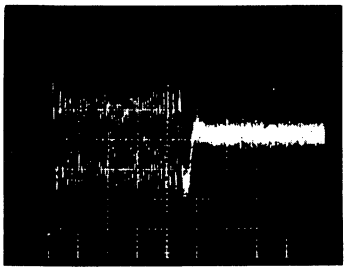

– GND

⑦ IC201-Pin 9: PLAY MODE
(SPDR)
1V/div 50msec/div

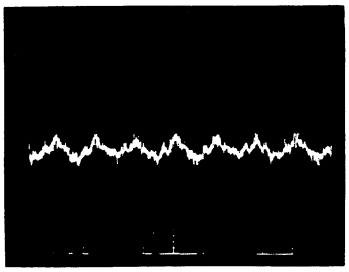

– GND

(16) IC301-Pin 35: PLAY MODE (1kHz)
(BCLK)
2V/div 500nsec/div

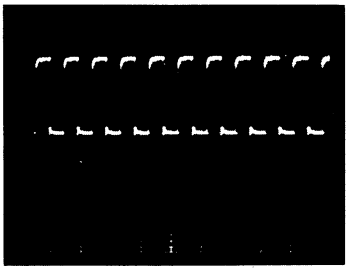

– GND

(22) IC20-Pin 9: POWER SWITCH-ON
(RST)
2V/div 100msec/div

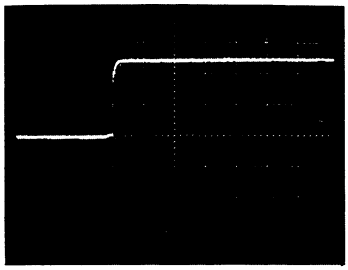

– GND

(26)

(18) IC301-Pin 32: PLAY MODE (1kHz)
(LRCK)
2V/div 10μsec/div

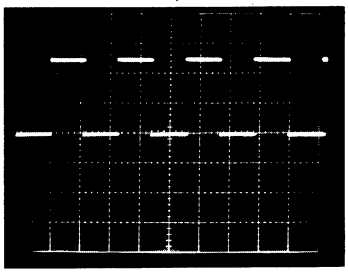

– GND

(22) IC20-Pin 9: POWER SWITCH-OFF
(RST)
2V/div 100msec/div

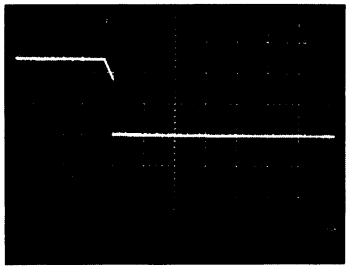

– GND

(27)

(19) IC301-Pin 34: PLAY MODE (1kHz)
(DATA)
2V/div 500nsec/div

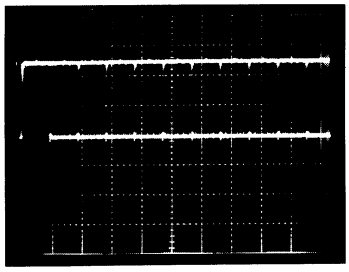

– GND

(23) : TRACK SEARCH MODE
Upper: TP1-Pin 1 (RF) 1V/div
Lower: IC151-Pin 35 (MIRR)
2V/div 200μsec/div

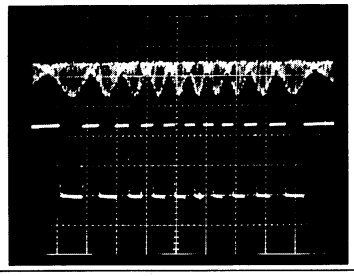

– GND

– GND

(28)

(20) IC401-Pin 9, Pin 10
(D/A OUT) : PLAY MODE (1kHz)
2V/div 0.1μsec/div

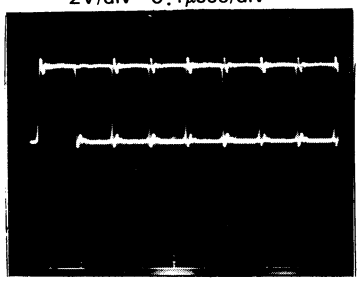

– GND

(24) : PLAY MODE
Upper: TP1-Pin 1 (RF) 1V/div
Lower: IC151-Pin 36 (DFCT)
5V/div 200μsec/div

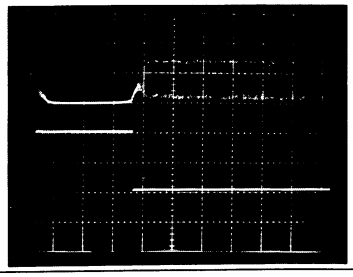

– GND

– GND

(33) IC301-Pin 4: PLAY MODE
(MDP)
2V/div 2μsec/div

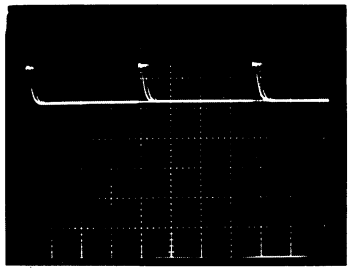

– GND

(21) Pin -OUTPUT: PLAY MODE (1kHz)
1V/div 200μsec/div

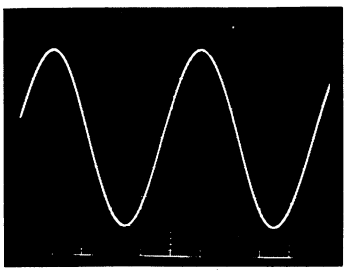

– GND

(25)

(53) IC301-Pin 20: PLAY MODE
(PCO)
2V/div 10μsec/div

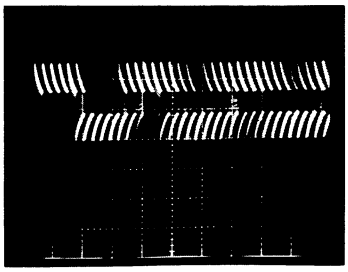

– GND

4. PCB PARTS LIST

NOTES:

- *Part without part number cannot be supplied.*
- *Parts marked by "◉" are not always kept in stock. Their delivery time may be longer than usual or they may be unavailable.*
- *The ⚠ mark found on some component parts indicates the importance of the safety factor of the part. Therefore, when replacing, be sure to use parts of identical designation.*
- *When ordering resistors, first convert resistance values into code form as shown in the following examples.*

Ex. 1 When there are 2 effective digits (any digit apart from 0), such as 560 ohm and 47k ohm (tolerance is shown by J = 5%, and K = 10%).

560Ω	*56 × 10¹*	*561*	*RD1/8PM 5 6 1 J*
47kΩ	*47 × 10³*	*473*	*RD1/4PS 4 7 3 J*
0.5Ω	*0R5*		*RN2H 0 R 5 K*
1Ω	*010*		*RS1P 0 1 0 K*

Ex. 2 When there are 3 effective digits (such as in high precision metal film resistors).

5.62kΩ	*562 × 10¹*	*5621*	*RN1/4SR 5 6 2 1 F*

Mark	No.	Description	Parts No.
LIST OF ASSEMBLIES			
		DECK AMP BLOCK	
		VR ASSEMBLY	
		TRANS CONNECT ASSEMBLY	
		HEADPHONE ASSEMBLY	
◉		AF ASSEMBLY	AWZ4103
		└— GEQ ASSEMBLY	AWX1048
		DISPLAY ASSEMBLY	AWZ3909
		1 MECHA SW ASSEMBLY	
		2 MECHA SW ASSEMBLY	
◉		SUB TRANS ASSEMBLY	AWR1056
		1 MECHA ASSEMBLY	
		2 MECHA ASSEMBLY	
		CD BLOCK	
◉		MOTHER PCB ASSEMBLY	PWM1349
◉		SUB PCB ASSEMBLY	PWX1143
		MECHA PCB ASSEMBLY	
VR ASSEMBLY			
		SEMICONDUCTORS	
	IC551	OP−AMP IC	RC4558DXP
	IC552	MECHANISM DRIVER IC	TA7291S
	Q551, 552	TRANSISTOR	2SC1740S
	Q553	TRANSISTOR	RN2203
		CAPACITORS	
	C551, 552	ELECTR. CAPACITOR	CEAS4R7M50
	C553, 554	CHIP CAPACITOR	CCSQCH101J50
	C555, 556	ELECTR. CAPACITOR	CEAS330M16
	C557	ELECTR. CAPACITOR	CEAS220M25
	C558	CERAMIC CAPACITOR	CKSQYF104Z50
	C559	CERAMIC CAPACITOR	CKCYF473Z50
		RESISTORS	
	VR551	VARIABLE RESISTOR	ACX1064
	R554	CHIP RESISTOR	RS1/10S000J
	R555, 556	CHIP RESISTOR	RS1/10S104J
	R561	CHIP RESISTOR	RS1/10S000J
	R565, 566	CHIP RESISTOR	RS1/10S102J
		Other resistors	RD1/8PM□□□J
TRANS CONNECT ASSEMBLY			
		TRANS CONNECT assembly has no service part.	
HEADPHONE ASSEMBLY			
		CAPACITORS	
	C453	CERAMIC CAPACITOR	CKCYF473Z50
		RESISTORS	
	R451, 452	METAL OXIDE RESISTOR	RS1LMF331J
	R453	CARBON FILM RESISTOR	RD1/8PM100J
		OTHERS	
		JACK (HEADPHONE)	AKN1010
◉ AF ASSEMBLY (AWZ4103)			
		SEMICONDUCTORS	
	IC1001	OP−AMP IC	RC4558DXP
	IC151	REGULATOR IC	NJM78M05FAS
	IC152	REGULATOR IC	NJM79M05FA
	IC153, 154	REGULATOR IC	MC7812CT
	IC155	IC PROTECTOR	ICP−N75

Mark No.	Description	Parts No.
IC2001	OP−AMP IC	RC4558DXP
IC2002	LOGIC IC	TC4066BP
IC2201	OP−AMP IC	RC4558DXP
IC2202	LOGIC IC	SN74LS05N
IC2302	DOLBY−B IC	CXA1100P
IC301	AUDIO IC	STK4152−2GP
IC601	OP−AMP IC	RC4558DXP
IC801	LOGIC IC	MC14052BCP
IC802	LOGIC IC	TC4066BP
IC833	OP−AMP IC	RC4558DXP
Q2001−2004	TRANSISTOR	2SC2458
Q2005, 2006	TRANSISTOR	2SC1740S
Q2007	TRANSISTOR	RN2203
Q2008	TRANSISTOR	RN2201
Q2009, 2201	TRANSISTOR	RN1201
Q2202	TRANSISTOR	RN2203
Q2203, 2204	TRANSISTOR	2SC1740S
Q2301−2304	TRANSISTOR	2SC2458
Q2351	TRANSISTOR	RN2203
Q401−403	TRANSISTOR	2SC2458
Q404	TRANSISTOR	RN1203
Q405	TRANSISTOR	2SC2458
Q406	TRANSISTOR	2SA1048
Q601	TRANSISTOR	RN2203
Q602	N−FET	2SK246
Q801	TRANSISTOR	RN2203
Q802	TRANSISTOR	RN1203
Q803	TRANSISTOR	RN2203
D151	DIODE	D3SBA20
D152−159	DIODE	1SR139−400
D161	ZENER DIODE	RD8. 2ESB2
D162	DIODE	1SS252
D163−166	DIODE	1SR139−400
D170	DIODE	1SR139−400
D2301, 2302	DIODE	1SS252
D401	ZENER DIODE	RD22EB
D403	DIODE	1SR139−400
D404	DIODE	1SS252
D405	ZENER DIODE	RD6. 8ESB2
D406, 601	DIODE	1SS252
RELAY		
RY401	RELAY	ASR1035
COILS		
F2351, 2352	DOLBY FILTER	ATF1064
L151	AXIAL INDUCTOR	LAU2R2K
L2201, 2202	INDUCTOR	LTA392J
L501, 502	COIL	ATH−133
CAPACITORS		
C1001−1004	CERAMIC CAPACITOR	CCMSL101J50
C1005	CERAMIC CAPACITOR	CKSQYB152K50
C1006	CERAMIC CAPACITOR	CKCYB152K50

Mark No.	Description	Parts No.
C1007, 1008	CERAMIC CAPACITOR	CKCYB562K50
C1009−1012	ELECTR. CAPACITOR	CEAS2R2M50
C1015, 1016	ELECTR. CAPACITOR	CEAS330M16
C151, 152	ELECTROLYTIC CAPACITOR (2200/42V)	ACH1109
C153	ELECTR. CAPACITOR	CEAS222M16
C154	ELECTR. CAPACITOR	CEAS102M16
C155, 156	ELECTR. CAPACITOR	CEAS220M16
C157	ELECTR. CAPACITOR	CEAS222M25
C158, 159	ELECTR. CAPACITOR	CEAS220M25
C160	ELECTR. CAPACITOR	CEAS100M25
C161	CERAMIC CAPACITOR	CKDYB103K500
C162	(0.01/AC250V)	ACG1005
C2007, 2008	MYLAR FILM CAPACITOR	CQMA273J50
C2009, 2010	MYLAR FILM CAPACITOR	CQMA183J50
C2011, 2012	CERAMIC CAPACITOR	CKSQYB152K50
C2201−2204	ELECTR. CAPACITOR	CEAS010M50
C2205, 2206	CHIP CAPACITOR	CKSQYB222K50
C2207, 2208	AUDIO FILM CAPACITOR	CFTXA104J50
C2209, 2210	ELECTR. CAPACITOR	CEAS330M16
C2211, 2212	CERAMIC CAPACITOR	CKCYX183M25
C2213, 2214	MYLAR FILM CAPACITOR	CQMA752J50
C2215, 2216	CERAMIC CAPACITOR	CKSQYB562K50
C2217, 2218	MYLAR FILM CAPACITOR	CQMA273J50
C2221, 2222	ELECTR. CAPACITOR	CEAS2R2M50
C2225, 2226	ELECTR. CAPACITOR	CEAS370M16
C2303, 2304	ELECTR. CAPACITOR	CEAS010M50
C2305	ELECTR. CAPACITOR	CEAS220M16
C2306	ELECTR. CAPACITOR	CEAS220M25
C2351, 2352	ELECTR. CAPACITOR	CEAS100M50
C2353, 2354	ELECTR. CAPACITOR	CEASR22M50
C2355	ELECTR. CAPACITOR	CEAS101M10
C2356−2359	ELECTR. CAPACITOR	CEAS100M50
C301, 302	ELECTR. CAPACITOR	CEAS2R2M50
C303, 304	CERAMIC CAPACITOR	CKMYB331K50
C305, 306	ELECTR. CAPACITOR	CEAS220M50
C307, 308	ELECTR. CAPACITOR	CEAS101M25
C309	ELECTR. CAPACITOR	CEANP220M50
C310	ELECTR. CAPACITOR	CEAS100M50
C311, 312	ELECTR. CAPACITOR	CEAS100M50
C313	ELECTROLYTIC CAPACITOR (47/50)	ACH1143
C401−404	CERAMIC CAPACITOR	CKCYF473Z50
C405	ELECTR. CAPACITOR	CEAS221M16
C406	ELECTR. CAPACITOR	CEAS330M25
C407	ELECTR. CAPACITOR	CEAS221M16
C408	ELECTR. CAPACITOR	CEAS100M50
C501	ELECTR. CAPACITOR (10/100)	ACH1144
C601, 602	CERAMIC CAPACITOR	CKMYB471K50

Mark No.	Description	Parts No.
C603, 604	ELECTR. CAPACITOR	CEAS2R2M50
C605	CERAMIC CAPACITOR	CKSQYB681K50
C606	CERAMIC CAPACITOR	CKCYF473Z50
C831, 832	CERAMIC CAPACITOR	CCMSL101J50
C856–858	CERAMIC CAPACITOR	CKCYB471K50
RESISTORS		
VR2201, 2202	VR	VRTB6VS222
R1013	CHIP RESISTOR	RS1/10S104J
R159–162	CARBON FILM RESISTOR	RD1/4PM100J
R163, 164	METAL OXIDE RESISTOR	RS2LMFR22J
R2003, 2004	CHIP RESISTOR	RS1/10S122J
R2005, 2006	CHIP RESISTOR	RS1/10S105J
R2007, 2008	CHIP RESISTOR	RS1/10S332J
R2009, 2010	CHIP RESISTOR	RS1/10S105J
R2011, 2014	CHIP RESISTOR	RS1/10S472J
R2016	CHIP RESISTOR	RS1/10S472J
R2019, 2020	CHIP RESISTOR	RS1/10S154J
R2021, 2022	CHIP RESISTOR	RS1/10S222J
R2207, 2208	CHIP RESISTOR	RS1/10S104J
R2209, 2210	CHIP RESISTOR	RS1/10S683J
R2211, 2212	CHIP RESISTOR	RS1/10S223J
R2213, 2214	CHIP RESISTOR	RS1/10S333J
R2223, 2224	CHIP RESISTOR	RS1/10S471J
R2226	CHIP RESISTOR	RS1/10S681J
R2233, 2234	CHIP RESISTOR	RS1/10S102J
R2301, 2302	CHIP RESISTOR	RS1/10S273J
R2303, 2304	CHIP RESISTOR	RS1/10S362J
R2305, 2306	CHIP RESISTOR	RS1/10S103J
R2317, 2318	CHIP RESISTOR	RS1/10S222J
R2351, 2352	CHIP RESISTOR	RS1/10S242J
R2355, 2356	CHIP RESISTOR	RS1/10S682J
R2357	CHIP RESISTOR	RS1/10S433J
R2361, 2362	CHIP RESISTOR	RS1/10S222J
R2363, 2364	CHIP RESISTOR	RS1/10S273J
R2366	CHIP RESISTOR	RS1/10S103J
R305, 306	CARBON FILM RESISTOR	RD1/4PM104J
R309–312	CARBON FILM RESISTOR	RD1/4PM222J
R313	CARBON FILM RESISTOR	RD1/4PMFL471J
R314	CARBON FILM RESISTOR	RD1/4PMFL101J
R315	CARBON FILM RESISTOR	RD1/4PM102J
R316, 317	CARBON FILM RESISTOR	RD1/4PMFL222J
R318	CARBON FILM RESISTOR	RD1/4PMFL101J
R401, 402	CARBON FILM RESISTOR	RD1/4PM100J
R409	CARBON FILM RESISTOR	RD1/2PM182J
R416	METAL OXIDE RESISTOR	RS2LMF181J
R417	METAL OXIDE RESISTOR	RS2LMF331J
R501, 502	CARBON FILM RESISTOR	RD1/4PMFL100J
R805, 806	CHIP RESISTOR	RS1/10S273J
R843, 844	CHIP RESISTOR	RS1/10S223J
R855, 856	CHIP RESISTOR	RS1/10S332J
R857	CHIP RESISTOR	RS1/10S104J
R858	CHIP RESISTOR	RS1/10S000J
	Other resistors	RD1/8PM□□□J
OTHERS		
CN10	CONNECTOR (14P)	KPE14
CN11, 12	CONNECTOR (13P)	KPE13
CN16	CONNECTOR (7P)	KPE7
CN4	CONNECTOR (13P)	KPE13
CN5	CONNECTOR (5P)	KPE5
	PIN JACK 4P (PHONO, LD/VCR)	AKB1124
	PIN JACK 2P (SURROUND)	AKB1146
	SPEAKER TERMINAL 4–P	AKE–109
	DC JACK (12V)	AKN–203
	SOCKET (14P)	AKP1048
	GEQ ASSEMBLY	AWX1048

GEQ ASSEMBLY (AWX1048)

GEQ assembly is a part of AF assembly.

SEMICONDUCTORS		
IC701, 702	GEQ IC	LA3607
IC703	GEQ EVR IC	LC7522
CAPACITORS		
C701, 702	CERAMIC CAPACITOR	CCSQSL331J50
C703–706	ELECTR. CAPACITOR	CEAS2R2M50
C707, 708	ELECTROLYTIC CAPACITOR	CEASR15M50
C709, 710	ELECTR. CAPACITOR	CEASR47M50
C711, 712	CERAMIC CAPACITOR	CKCYX683M16
C713, 714	ELECTROLYTIC CAPACITOR	CEASR15M50
C715, 716	CERAMIC CAPACITOR	CKCYX273M16
C717, 718	CERAMIC CAPACITOR	CKCYX683M16
C719, 720	CERAMIC CAPACITOR	CKSQYB103K50
C721, 722	CERAMIC CAPACITOR	CKCYX273M16
C723, 724	CERAMIC CAPACITOR	CKSQYB472K50
C725, 726	CERAMIC CAPACITOR	CKSQYB103K50
C727, 728	CERAMIC CAPACITOR	CKSQYB182K50
C729, 730	CERAMIC CAPACITOR	CKSQYB472K50
C731, 732	CERAMIC CAPACITOR	CKSQYB681K50

Mark No.	Description	Parts No.
C733, 734	CERAMIC CAPACITOR	CKSQYB182K50
C735, 736	ELECTR. CAPACITOR	CEAS101M10
C737, 738	CERAMIC CAPACITOR	CKSQYB473K50
RESISTORS		
R701	CARBON FILM RESISTOR	RD1/8PM103J
R703, 704	CARBON FILM RESISTOR	RD1/8PM223J
R710	RESISTOR ARRAY (1M)	RA8T105J
R711, 712	CARBON FILM RESISTOR	RD1/4PM390J
R726, 727	CARBON FILM RESISTOR	RD1/8PM103J
	Other resistors	RS1/10S□□□J

DISPLAY ASSY (AWZ3909)

Mark No.	Description	Parts No.
SEMICONDUCTORS		
IC1501	LOGIC IC	SN74LS05N
IC1502	LOGIC IC	SN74LS03N
IC1503	GEQ−BPF IC	XRA3826S
IC1504	OP−AMP IC	RC4558DXP
IC1505	SPECTRUM ANALYZER CONTROL MICROCOMPUTER	PD3174A
IC1651	SYSTEM CONTROL MICROCOMPUTER	PD5147C
IC1652	RESET IC	M51951BSL
Q1501	TRANSISTOR	RN1201
Q1503, 1504	TRANSISTOR	RN1201
Q1505−1507	TRANSISTOR	RN1203
Q1508, 1509	TRANSISTOR	RN2201
Q1510−1513	TRANSISTOR	RN1203
Q1514	TRANSISTOR	RN2203
Q1601	TRANSISTOR	RN2204
Q1602	TRANSISTOR	RN1203
Q1603	TRANSISTOR	RN2204
Q1604	TRANSISTOR	2SA1515
Q1605	TRANSISTOR	RN1203
Q1606	TRANSISTOR	2SA1515
Q1607	TRANSISTOR	RN1203
Q1608	TRANSISTOR	2SA1515
Q1609	TRANSISTOR	RN1203
Q1610	TRANSISTOR	2SA1515
Q1611	TRANSISTOR	RN1203
D1501−1504	LED (GREEN)	AEL1130
D1505	LED (RED)	AEL1119
D1506, 1507	LED (RED)	AEL1126
D1509	LED	AEL1128
D1510	LED (RED)	AEL1065
D1511−1516	LED (RED)	AEL1108
D1517−1519	DIODE	1SS252
D1523−1531	DIODE	1SS252
D1535−1543	DIODE	1SS252
D1545	LED (GREEN)	AEL1129
D1546	LED (RED)	AEL1065
D1547−1552	DIODE	1SS252
D1601−1615	DIODE	1SS252
D1651−1657	DIODE	1SS252
D1659, 1660	DIODE	1SS252
SWITCHES		
S1504, 1505	SWITCH	ASG1034
S1507	SWITCH	ASG1034
S1510−1514	SWITCH	ASG1034
S1516−1519	SWITCH	ASG1034
S1522−1525	SWITCH	ASG1034
S1528	SWITCH	ASH1014
S1532−1535	SWITCH	ASG1034
S1537−1539	SWITCH	ASG1034
S1542−1544	SWITCH	ASG1034
S1546−1548	SWITCH	ASG1034
COILS		
L1501	AXIAL INDUCTOR	LAU221K
L1651	AXIAL INDUCTOR	LAU220K
CAPACITORS		
C1501	CERAMIC CAPACITOR	CKCYF473Z50
C1504	ELECTR. CAPACITOR	CEJA470M10
C1505	(47000/5.5V)	ACH1070
C1506	AXIAL CERAMIC CAPACITOR	CKPUYF223Z25
C1507	CERAMIC CAPACITOR	CCCSL100D50
C1508	AXIAL CERAMIC CAPACITOR	CKPUYF223Z25
C1509	CERAMIC CAPACITOR	CKMYB102K50
C1510	CERAMIC CAPACITOR	CKCYF473Z50
C1601	ELECTR. CAPACITOR	CEAS470M10
C1602	ELECTR. CAPACITOR	CEASR33M50
C1651, 1652	CERAMIC CAPACITOR	CKCYF473Z50
C1653	ELECTR. CAPACITOR	CEAS101M16
C1654−1658	CERAMIC CAPACITOR	CKPUYB102K50
C1659	ELECTR. CAPACITOR	CEAS010M50
RESISTORS		
VR1601, 1602	VR	VRTM6V203
VR1603	VR	VRTM6V103
R1544	RESISTOR ARRAY (22k)	RA15T223J
R1581, 1582	CARBON FILM RESISTOR	RD1/2PM2R2J
R1662	RESISTOR ARRAY (3.3k)	RA8T332J
	Other resistors	RD1/8PM□□□J

Mark No.	Description	Parts No.
OTHERS		
V1501	FL TUBE	AAV1143
X1502	CERAMIC RESONATOR	ASS1018
X1651	CERAMIC RESONATOR	ASS1025
CN8	CONNECTOR (15P)	KPE15
	REMOTE RECEIVER UNIT	AXX1023

1 MECHA SW ASSEMBLY

Mark No.	Description	Parts No.
SWITCHES		
S1551–1555	SWITCH	ASG1034

2 MECHA SW ASSEMBLY

Mark No.	Description	Parts No.
SWITCHES		
S1556–1560	SWITCH	ASG1034

◉ SUB TRANS ASSEMBLY (AWR1056)

Mark No.	Description	Parts No.
SEMICONDUCTORS		
IC101	REGULATOR IC	NJM78M56FA
IC102	REGULATOR IC	UPC78M12AHF
Q101	TRANSISTOR	2SC2458
Q102	TRANSISTOR	2SB560
D101	ZENER DIODE	RD10ESB2
D102	ZENER DIODE	RD30ESB2
D103–106	DIODE	1SR139–400
D107, 109	DIODE	1SS252
RELAY		
RY101	RELAY	ASR1027
TRANSFORMER		
T101	POWER TRANSFORMER	ATT1149
CAPACITORS		
C101	ELECTR. CAPACITOR	CEAS222M25
C102	ELECTR. CAPACITOR	CEAS221M50
C103, 104	ELECTR. CAPACITOR	CEAS470M16
C105	ELECTR. CAPACITOR	CEAS470M50
C106	ELECTR. CAPACITOR	CEAS220M50
C107	ELECTR. CAPACITOR	CEAS470M16
RESISTORS		
R101	CARBON FILM RESISTOR	RD1/4PMF392J
	Other resistors	RD1/8PM□□□J

1 MECHA ASSEMBLY

Mark No.	Description	Parts No.
CAPACITORS		
C2001, 2002	CERAMIC CAPACITOR	CKMYB391K50
C2005, 2006	AUDIO FILM CAPACITOR	CFTXA223J50
C2007, 2008	ELECTR. CAPACITOR	CEAS4R7M50
C2009, 2010	ELECTR. CAPACITOR	CEAS470M10
C2017, 2018	ELECTR. CAPACITOR	CEAS101M10
RESISTORS		
VR2001, 2002	VR	VRTM6H202
	Other resistors	RD1/8PM□□□J

2 MECHA ASSEMBLY

Mark No.	Description	Parts No.
SEMICONDUCTORS		
IC2001, 2021	OP–AMP IC	RC4558DXP
Q2021, 2022	N–FET	2SK373
Q2251	TRANSISTOR	RN1201
Q2252	TRANSISTOR	2SA1515
Q2253, 2254	TRANSISTOR	2SC3377
Q2255	TRANSISTOR	2SC2458
D2021–2026	DIODE	1SS252
COILS & TRANSFORMER		
L2204, 2205	INDUCTOR	LTA822J
T2251	OSC TRANSFORMER	ATX–043
CAPACITORS		
C2021, 2022	CERAMIC CAPACITOR	CCMSL100D50
C2023, 2024	CERAMIC CAPACITOR	CKMYB391K50
C2027, 2028	AUDIO FILM CAPACITOR	CFTXA223J50
C2029, 2030	ELECTR. CAPACITOR	CEAS4R7M50
C2031, 2032	ELECTR. CAPACITOR	CEAS470M10
C2035, 2036	ELECTR. CAPACITOR	CEAS101M10
C2219, 2220	CERAMIC CAPACITOR	CCCSL271K500
C2223, 2224	CERAMIC CAPACITOR	CKDYB681K50
C2251	ELECTR. CAPACITOR	CEAS470M16
C2252, 2253	CERAMIC CAPACITOR	CGMYX103M16
C2254	CERAMIC CAPACITOR	CKMYB221K50
C2255	MYLAR FILM CAPACITOR	CQMA153K50
C2256	CERAMIC CAPACITOR	CKMYB681K50
C2257	MYLAR FILM CAPACITOR	CQMA123K250
C2258	ELECTR. CAPACITOR	CEAS4R7M50
C2261	MYLAR FILM CAPACITOR	CQMA562K400
C2262	(2000P/630V)	ACE1020
C2263	ELECTR. CAPACITOR	CEAS100M50

Mark	No.	Description	Parts No.
RESISTORS			
	VR2021, 2022	VR	VRTM6V202
	VR2251, 2252	VR	VRTM6H204
	R2253	CARBON FILM RESISTOR	RD1/2PM360J
		Other resistors	RD1/8PM□□□J

◉ MOTHER PCB ASSEMBLY (PWM1349)

Mark	No.	Description	Parts No.
SEMICONDUCTORS			
	IC101	PRE AMP IC	CXA1471S
	IC151	SERVO IC	CXA1372S
⚠	IC20	REGULATOR IC	M5298P
⚠	IC201	POWER OP−AMP, IC	LA6520
⚠	IC30	IC PROTECTOR	ICP−N10
	IC301	EFM DEMODULATION IC	CXD2500AQ
	IC351	MICROCOMPUTER	PD4305B
	IC401	8FS DF DA CONVERTER IC	TC9237N
	IC404	OP−AMP IC	NJM4558D−D
	Q101	TRANSISTOR	2SA854S
	Q201	TRANSISTOR	2SC3581
	Q202	TRANSISTOR	2SA1399
	Q203	TRANSISTOR	2SC3581
	Q204	TRANSISTOR	2SA1399
	Q381, 382	TRANSISTOR	2SC1740S
	Q403, 404	TRANSISTOR	2SD2144S
	Q405	TRANSISTOR	DTC124ES
	Q62	TRANSISTOR	2SC1740S
	D211	ZENER DIODE	MTZJ6.2B
	D381−385	DIODE	1SS254
COILS			
	L381	AXIAL INDUCTOR	LAU010K
	L401	AXIAL COIL	LAUR22K
	L402, 403	AXIAL INDUCTOR	LAU010K
CAPACITORS			
	C101	ELECTROLYTIC CAPACITOR	CEAS471M6R3
	C102	ELECTR. CAPACITOR	CEAS101M10
	C103	CERAMIC CAPACITOR	CCCCH180J50
	C104	ELECTR. CAPACITOR	CEAS101M10
	C11, 110	CERAMIC CAPACITOR	CKCYF103Z50
	C12−14	CERAMIC CAPACITOR	CKCYF103Z50
	C153	ELECTR. CAPACITOR	CEAS101M10
	C155	MYLAR FILM CAPACITOR	CQMA182J50
	C156	MYLAR FILM CAPACITOR	CQMA333K50
	C157	MYLAR FILM CAPACITOR	CQMA103K50
	C158, 159	MYLAR FILM CAPACITOR	CQMA104K50
	C160	ELECTR. CAPACITOR	CEAS4R7M50
	C161	MYLAR FILM CAPACITOR	CQMA104K50
	C162	ELECTR. CAPACITOR	CEAS010M50
	C163	MYLAR FILM CAPACITOR	CQMA104K50
	C164	MYLAR FILM CAPACITOR	CQMA103K50
	C167	CERAMIC CAPACITOR	CKCYF103Z50
	C168	MYLAR FILM CAPACITOR	CQMA333K50
	C169	MYLAR FILM CAPACITOR	CQMA103K50
	C170	MYLAR FILM CAPACITOR	CQMA332J50
	C171	MYLAR FILM CAPACITOR	CQMA472J50
	C172	MYLAR FILM CAPACITOR	CQMA472K50
	C202	CERAMIC CAPACITOR	CKCYF103Z50
	C212	MYLAR FILM CAPACITOR	CQMA103K50
	C216, 217	ELECTR. CAPACITOR	CEAS330M16
	C27	ELECTROLYTIC CAPACITOR	CEAS471M6R3
	C28	ELECTR. CAPACITOR	CEAS101M10
	C301	MYLAR FILM CAPACITOR	CQMA104K50
	C306	CERAMIC CAPACITOR	CKCYB152K50
	C307	MYLAR FILM CAPACITOR	CQMA473J50
	C308	MYLAR FILM CAPACITOR	CQMA103K50
	C309	ELECTR. CAPACITOR	CEASR47M50
	C351	ELECTROLYTIC CAPACITOR	CEAS471M6R3
	C353, 355	CERAMIC CAPACITOR	CKCYF103Z50
	C361	CERAMIC CAPACITOR	CKCYF103Z50
	C383, 384	CERAMIC CAPACITOR	CKCYF103Z50
	C401	CERAMIC CAPACITOR	CKCYF103Z50
	C403, 404	CERAMIC CAPACITOR	CCCCH470J50
	C410, 411	CERAMIC CAPACITOR	CCCSL560J50
	C412−415	CERAMIC CAPACITOR	CCCCH390J50
	C420	ELECTR. CAPACITOR	CEAS330M16
	C421	CERAMIC CAPACITOR	CKCYF473Z50
	C422	CERAMIC CAPACITOR	CKCYF103Z50
	C429, 430	ELECTR. CAPACITOR	CEAS220M25
	C431, 432	MYLAR FILM CAPACITOR	CQMA104K50
	C433, 434	MYLAR FILM CAPACITOR	CQMA103K50
	C435	CERAMIC CAPACITOR	CKCYF103Z50
	C60	ELECTR. CAPACITOR	CEAS010M50

Mark No.	Description	Parts No.
RESISTORS		
VR102	VR	VRTB6VS223
VR103	VR	VRTB6VS102
VR151, 152	VR	VRTB6VS223
	Other resistors	RD1/6PM□□□J
OTHERS		
CN1	CONNECTOR (6P)	KPE6
CN101	CONNECTOR	52045−1610
CN351	CONNECTOR	HLEM30S−1
CN381	CONNECTOR (7P)	KPE7
X351	CERAMIC RESONATOR	VSS1014
X401	XTAL RES (OSC)	PSS1006
[illegible]	[illegible]	[illegible]

◉ SUB PCB ASSEMBLY (PWX1143)

SEMICONDUCTORS		
D701−704	DIODE	1SS254
D708	DIODE	1SS254
SWITCHES		
S701−716	SWITCH	PSG1006
OTHERS		
CN701	CONNECTOR	HLEM30R−1
V701	FL INDICATOR TUBE	PEL1050

MECHA PCB ASSEMBLY

SWITCHES		
S601−603	SWITCH	DSG1017

5. FOR HB AND HEWZIW TYPES

NOTES:

- *Part without part number cannot be supplied.*
- *The ⚠ mark found on some component parts indicates the importance of the safety factor of the part. Therefore, when replacing, be sure to use parts of identical designation.*
- *Parts marked by "◉" are not always kept in stock. Their delivery time may be longer than usual or they may be unavailable.*

CONTRAST OF MISCELLANEOUS PARTS

XD – Z55T/HB, HEWZIW and XD – Z55T/HE have the same construction except for the following :

Mark	Symbol & Description	Part No.			Remarks
		XD – Z55T/ HE type	XD – Z55T/ HB type	XD – Z55T/ HEWZIW type	
	VR assembly	Non supply	Non supply	Non supply	*1
	HEADPHONE assembly	Non supply	Non supply	Non supply	*2
◉	AF assembly	AWZ4103	AWZ4103	AWZ4104	
◉	SUB TRANS assembly	AWR1056	AWR1055	AWR1057	*3
⚠	AC Power cord	ADG1049	ADG1087	ADG1049	
	Barrier (PVC)	.....	AEC1391	.....	
	Screw (EARTH)	.....	.....	ABA1047	
	Operating instructions (English/French/German/Italian)	ARE1218	.....	.....	
	Operating instructions (Dutch/Swedish/Spanish/Portuguese)	ARE1219	.....	.....	
	Operating instructions (English)	.....	ARB1352	.....	
	Operating instructions (German, Italian)	.....	.....	ARC1321	

*1 : VR assemblies of HE and HB types are the same.
*2 : HEADPHONE assemblies of HE and HB types are the same.
*3 : Although SUB TRANS assembly (AWR1056) and SUB TRANS assembly (AWR1055) are different in part number, they consist of the same components.
For detailes, refer to Line voltage selection. (See page 57)

HEADPHONE ASSEMBLY (HEWZIW TYPE)

HEADPHONE assembly (HEWZIW type) and HEADPHONE assembly (HE type) have the same construction except for the following :

Mark	Symbol & Description	Part No.		Remarks
		HE type	HEWZIW type	
	C451, C452	.....	CKCYF473Z50	
	C453	CKCYF473Z50	.....	
	R453	RD1/8PM100J	.....	

VR ASSEMBLY (HEWZIW TYPE)

VR assembly (HEWZIW type) and VR assembly (HE type) have the same construction except for the following :

Mark	Symbol & Description	Part No.		Remarks
		HE type	HEWZIW type	
	C561, C562	.....	CKMYB221K50	

◉ AF ASSEMBLY (AWZ4104)

AF assembly (AWZ4104) and AF assembly (AWZ4103) have the same construction except for the following :

Mark	Symbol & Description	Part No.		Remarks
		AWZ4103	AWZ4104	
	L501, L502	ATH-133	ATH-059	
	L503, L504	.....	ATH-059	
	C162 (0.01μF/AC250V)	ACG1005	.....	
	C162	.....	CQMA473K250	
	C321, C322	.....	CCDCH101J50	
	C502, C503, C513, C514	.....	CKCYB103K50	
	C511, C512	.....	CKCYB102K50	
	C801-C804	.....	CKPUYB391K50	
	C805-C808	.....	CKMYB391K50	
	C851-C853, C855	.....	CKCYF473Z50	
	C854	.....	CQMA224K50	
	C856-C858	CKCYB471K50	CKMYB471K50	
	C1001, C1002	CCMSL101J50	CKMYB391K50	
	C1013, C1014	.....	CKDYB471K50	
	R351, R352	.....	RD1/8PM222J	
	R501, R502	RD1/4PMFL100J	RD1/4PMFL101J	
	R807, R808	.....	RD1/8PM221J	
	R1001, R1002	RD1/8PM102J	RD1/8PM222J	

◉ SUB TRANS ASSEMBLY (AWR1057)

SUB TRANS assembly (AWR1057) and SUB TRANS assembly (AWR1056) have the same construction except for the following :

Mark	Symbol & Description	Part No.		Remarks
		AWR1056	AWR1057	
	L101 Line filter	.....	ATF-151	
	C109 (0.01μF/AC400V)	.....	ACG1002	

6. PANEL FACILITIES

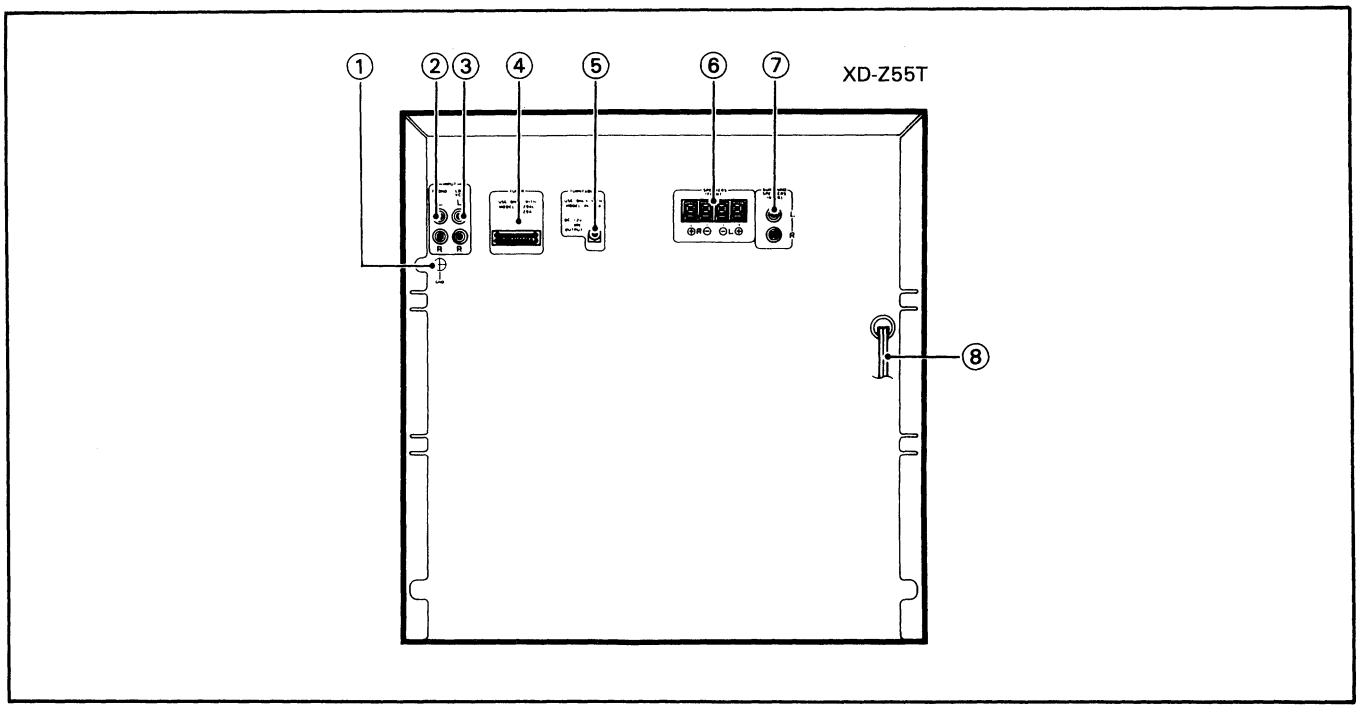

REAR PANEL FACILITIES

Twin-CD cassette deck amplifier: XD-Z55T

① Ground terminal (GND)

Connect this to the ground terminal on the turntable (except for PL-Z95).

② PHONO input jacks

Connect the audio cord of the turntable to these jacks.

③ LD/VCR jacks

Connect to audio output jacks of LD player or VCR, etc.

④ TUNER jacks

Connect the tuner input/output cord here.

⑤ TURNTABLE (DC 12 V OUTPUT) jack

This jack supplies power to the turntable PL-Z95.
Connect the power supply cord of the turntable to this jack.

⑥ SPEAKERS terminals

L : Connect the left speaker system as seen from the listening position.
R : Connect the right speaker system as seen from the listening position.

NOTE:
Connect a speaker system having a nominal impedance ranging from 8 Ω to 16 Ω.

⑦ SURROUND SPEAKERS jacks

Connect the surround speaker systems.

NOTE:
Connect a speaker system having a nominal impedance of 16 Ω or more.

⑧ Power cord

Connect this to the household electrical outlet.

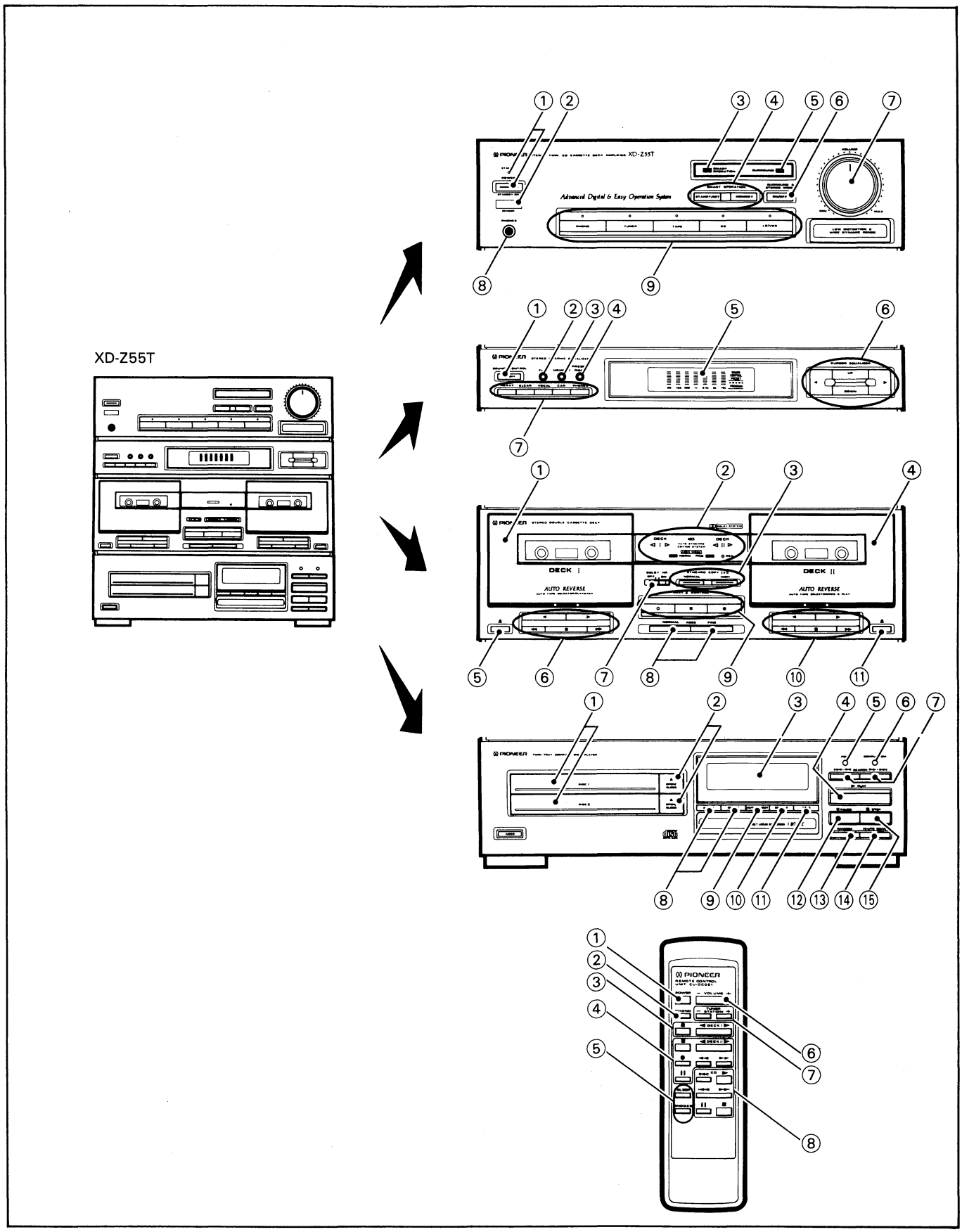
XD-Z55T
Advanced Digital & Easy Operation System
DECK I
DECK II
AUTO REVERSE
PIONEER

Twin-CD cassette deck amplifier: XD-Z55T

- This unit has an automatic tape type selector.
- Tapes can be played back on deck I; tapes can be played back and recorded on deck II.
- Sound can be recorded as adjusted by the graphic equalizer (excluding synchro copy).

Amplifier section

① POWER STANDBY/ON switch /STANDBY indicator

This is the switch for electric power.

ON: When set to the ON position, power is supplied and the unit becomes operational.

STANDBY: When set to the STANDBY position, the main power flow is cut and the unit is no longer fully operational. A minute flow of power feeds the unit to maintain operation readiness. The unit is in STANDBY when only the STANDBY indicator above the POWER switch is lit.

② REMOTE SENSOR window

③ SMART OPERATION indicator

This lights when smart operation is on. It goes out after about 30 seconds.

④ SMART OPERATION buttons

[START/SET]

Use when programming memory and operating SMART OPERATION.

[MEMORY]

Use when programming SMART OPERATION into memory.

⑤ SURROUND indicator

This lights when SURROUND & STEREO WIDE is on.

⑥ SURROUND & STEREO WIDE button

By turning this switch ON, you can enjoy surround reproduction when rear speakers are used.

By turning this switch ON, you can enjoy STEREO WIDE reproduction with greater left-right spread when rear speakers are not used.

NOTE:

In the case of monaural source, SURROUND & STEREO WIDE effects cannot be obtained.

⑦ VOLUME control

⑧ PHONES (Headphones) jack

For stereo headphones.

NOTE:

There is no output from the speakers when headphones are plugged into PHONES jack.

⑨ Input selector buttons

[PHONO]

Press to play records on a turntable connected to the PHONO jacks.

[TUNER]

Press to listen to radio broadcast.

[TAPE]

Press to listen to cassette tape.

[CD]

Press to listen to a CD.

[LD/VCR]

Press for playback on an LD player or VCR connected to the LD/VCR jacks.

Graphic equalizer section

① SOUND CONTROL ON/OFF button

This switches the graphic equalizer on/off. When it's on, the SOUND CONTROL indicator in the display section lights.

NOTE:

Sound comes from the rear speakers regardless of whether this button is on or off.

② FLAT button

Press to reset the equalizer to flat response (no equalization).

③ MEMORY button

Use this to program your desired equalization setting into the memory recall buttons (A to E).

④ PRESET/PGM (PROGRAM) button

Use to switch between recall of PRESET memory settings and your own original memory settings (PROGRAM) with the memory recall buttons. The memory being recalled is indicated by the lit indicator in the display section.

⑤ Display section

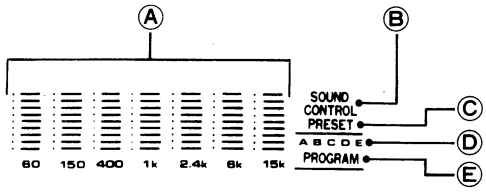

Ⓐ Visual display of spectrum analyzer and graphic equalizer.
Ⓑ This lights when the sound control is on.
Ⓒ When recalling PRESET memory with the memory recall buttons, the line under PRESET lights.
Ⓓ Display of the memory being recalled with the memory recall buttons.
Ⓔ When recalling PROGRAM memory with the memory recall buttons, the line under PROGRAM lights.

⑥ CURSOR EQUALIZER buttons

Use to adjust graphic equalizer settings.

[◄, ►]: Use these to change the frequency range to be adjusted.

[UP, DOWN]: Use these to adjust the degree of equalization.

⑦ Memory recall buttons

Use to recall preset equalization settings. Also use to program into memory and recall desired sound settings.

Cassette Deck Section

① Deck I cassette door

② Operation indicators

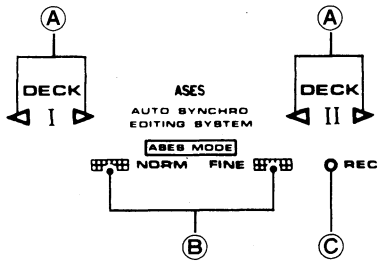

Ⓐ **Direction (◁ , ▷):** Indicates direction of tape travel during recording or playback.
Ⓑ **ASES MODE**
NORM: Normal edit in progress.
FINE: Fine edit in progress.
Ⓒ **REC:** Lights when recording. It flashes during tape copying.
Slow flashing: Normal copy.
Fast flashing: High speed copy.

③ SYNCHRO COPY I ► II buttons

Used for tape copying.

NORMAL: Copying from the Deck I tape to the Deck II tape at normal recording/playback speed.

HIGH: Copying at about twice normal tape speed. (Copies can be made in about half the NORMAL time.)

④ Deck II cassette door

⑤ Deck I EJECT button

⑥ Deck I operation buttons

► **(PLAY: FWD)**.. For playing back a tape in the forward mode.
◄ **(PLAY: REV)**... For playing back a tape in the reverse mode.
■ **(STOP)**..... For stopping the tape.
►► **(FAST)** ..... Fast forward in forward mode, rewind in reverse mode.
◄◄ **(FAST)** ..... Rewind in forward mode, fast forward in reverse mode.

⑦ DOLBY* NR switch

Set this switch to ON for recording with the built-in Dolby Noise Reduction system and for playback of tapes which have been recorded using the Dolby Noise Reduction system. For other tapes, set the Dolby NR switch to OFF.

NOTE:
When playing back Dolby B-type NR-encoded tapes, always set this switch to the ON position.

*

Dolby noise reduction manufactured under license from Dolby Laboratories Licensing Corporation.
"DOLBY" and the double-D symbol DD are trademarks of Dolby Laboratories Licensing Corporation.

⑧ A.S.E.S. buttons

Used for automatically recording a CD on cassette tape.

NOTE:
- *FINE is the mode when performing CD player COMPU PGM EDIT (Computer Allocated Program Editing).*
- *The NORMAL mode provide a blank space of about five seconds between songs.*

⑨ DECK II CONTROL buttons

● **(REC)**..... To set to recording standby mode. The REC indicator lights and the direction indicators (◄ and ►) flash. Recording begins when you press the PLAY button (◄ or ►).
II (PAUSE) ..... Temporarily stops tape travel. Cancels pause mode when pressed again or press the PLAY button.
O (REC MUTE)..... Used for creating a blank space between songs. Pressing this button once creates an unrecorded 4-second space.
Continuing to press the button creates an unrecorded space as long as the time the button is pressed.

⑩ Deck II operation buttons

Same as Deck I operation buttons ⑥.

⑪ Deck II EJECT button

CD player section

① DISC (I, II)

This is where the disc is set. When power is switched ON and the OPEN/CLOSE button is pressed, the tray is ejected forward.
To insert the tray, press the OPEN/CLOSE button, or lightly push the tray in with your finger. With the disc tray open, press the PLAY button to close the disc tray and start playback.

② OPEN/CLOSE button (I, II)

Press when you wish to eject or load a disc. Each time the buttons is pressed, the tray is alternately pushed out or pulled in.
I : Opens and closes DISC I.
II: Opens and closes DISC II.

③ Indicators

COMPU PGM: Display when COMPU PGM editing is set or used.
AUTO EJECT: Lights during auto eject playback.
PGM: Lights after programming (after program has been memorized).
RND: Lights during random playback.
SCAN: Lights during HI-LITE scan playback.
I, II: Displays the disc number (I or II) of the disc to be played.
►: Lights during playback.
II: Lights during temporarily interrupted playback.
1 ► REP: Lights during repeat playback of one track.
REP: Lights during repeat play.
TRACK (figure): Displays the current track number (during normal playback and programmed playback) or the track being programmed (during programmed operation).
MINUTES (figure): Displays the minutes of the elapsed time, total playback time, and remaining time.
SECOND (figure): Displays the seconds of the elapsed time, total playback time, and remaining time.

= = **Display change** = =

Changes each time the TIME (CALENDAR) button is pressed.

- **TIME:** Displays the track number of the track being played (TRACK) and the elapsed time (minutes and seconds).
- **REM:** Displays the remaining time on the track being played.
  When the TIME (CALENDAR) button is pressed again, the remaining time on the disc being played will be displayed.
- **TOTAL:** Displays the total number of tracks on the disc (TRACK) and the overall playback time of disc II will be displayed.
  During playback, the display goes on for about 5 seconds before changing to the TIME display.
- **I/II (music calendar):** Only the numbers of the track recorded on DISC I (DISC II) will light.
  When inputting a program and when playing, only the programmed track number will light. The track number will go out one by one after the tracks are played.
  Music calendar changes DISC I to DISC II (DISC II to DISC I) by holding down TIME (CALENDAR) button.
- **A/B (music calendar):** TAPE SIDE A/TAPE SIDE B
  After editing, the track numbers that can be recorded on the A (B) side of the tape will light.
  Music calendar changes A to B (B to A) by holding down TIME (CALENDAR) button.
- **DISC I:** Displays Disc I
- **DISC II:** Displays Disc II

NOTE:

- *The music calendar section only indicates the tracks on a single disc, but manual switching between Disc I and Disc II is possible. Switching is not automatic.*
- *When power is turned on, the CD player section indicators show different indications depending on the condition (disc loaded or not, etc.) prior to when the power was turned off. This is not a malfunction.*

④ PLAY button (►)

Press to begin playback, and to cancel the pause mode.

⑤ PGM button (PROGRAM)

Use to program a sequence of tracks.

- Press this button after selecting a desired disc and track with DISC SELECT and track search button. Tunes will be added to the program in the order in which they are specified.

⑥ COMPU PGM button

Press this button, and with the MANUAL/TRACK SEARCH buttons (|◄◄ • ◄◄, ►► • ►►|) specify the length of tape you want to use for recording. Before recording, the CD player automatically programs the order of tracks to minimize the amount of unused tape at the end of a selected tape length.

⑦ MANUAL/TRACK SEARCH buttons (|◄◄ • ◄◄, ►► • ►►|)

Use these buttons to perform track search and manual search during regular playback, programmed playback, or during pause.
Press a button to skip to the previous or the next track. You will continue moving to the next track in the direction of the button you pressed as long as you continue pressing the button.
Keep the button depressed until you come to the part you want to listen to.

⑧ DISC SELECT buttons

DISC I: Use to select DISC I for playback or programming.
DISC II: Use to select DISC II for playback or programming.

- During playback, when the disc select button for the disc not being played is pressed, the current playback will stop and playback of that disc will begin.

⑨ AUTO EJECT button

Press to perform auto eject playback.
When a disc is finished playing, the disc's disc tray will automatically eject. The other disc tray will close and playback will start. By replacing discs, continuous playback can be maintained.

⑩ REPEAT button

Press this button for repeat playback. Pressing the button once, twice, or three times will change the repeat mode from single track repeat, all tracks repeat, and repeat playback cancellation.

⑪ TIME (CALENDAR) button

This button selects the display mode. Each time the button is pressed, the indication changes from Time, Remain, to Total in that order. Calendar display can be switched by keeping this button depressed a bit longer.

⑫ PAUSE button (II)

Press to temporarily interrupt playback. When pressed again, the pause mode is canceled and playback resumes.

⑬ RANDOM PLAY button

Press to begin random playback.

⑭ HI-LITE SCAN button

10 second passages are played starting from the first minute of each track on the CD, in sequence, beginning with the first track.
To set the point in the tracks you want to scan, press this button during playback. The elapsed time is memorized, and then ten second passages of all the remaining tracks are played at the memorized time.

⑮ STOP button (■)

Press to stop playback. When pressed, the player goes into stop mode and all operations stop.
Press to clear a program. When pressed during stop mode, the program stored in memory is cleared.

Remote control unit

① POWER button

② PHONO button

Sets function to PHONO.

③ Deck I operation buttons

► .... Forward play
◄ .... Reverse play
■..... Stop

④ DECK II operation buttons

Same as Deck II operation buttons and DECK II CONTROL buttons on the CD.cassette deck amplifier (Except for REC MUTE) (page 13).

⑤ Timer operation buttons

SLEEP: Sets the sleep timer.
SNOOZE: Turns off power if pressed after timer playback begins. Timer playback begins again approx. 5 minutes later.

⑥ VOLUME + (UP)/ – (DOWN) buttons

When pressed, VOLUME on the amplifier is actually moved by a motor.

⑦ TUNER STATION buttons

- Before operation, memorize broadcast stations in the STATION CALL buttons.

+ ..... Stations change in order in the upward direction.
– ..... Stations change in order in the downward direction.

⑧ CD operation buttons

► ..... Play
DISC..... DISC selection
■ ..... Stop
II..... Pause
|◄◄, ►►|..... Track search

The amplifier input selector automatically switches to the music source being operated when you press the CD playback (►) cassette deck playback (◄, ►), or tuner station controls.

Range of remote control

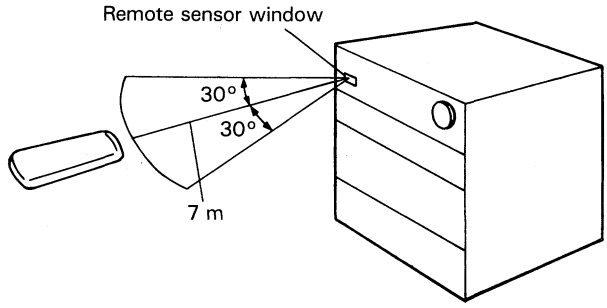

When the remote control unit is pointed at the remote sensor window on the amplifier section and any of its buttons is pressed, the tuner and other components can be operated by remote control.
Distance: Within a range of approx. 7 meters from the remote sensor window.
Angle: Within approx. 30 degrees from the center of the remote sensor window.
Remote control will not be possible if there is an obstacle between the remote control unit itself and the remote sensor window.
Performance of the remote control unit is adversely affected in the presence of strong fluorescent light. Keep such lights away, especially from the sensor window.

7. SPECIFICATIONS

Twin CD cassette deck amplifier: XD-Z55T

Amplifier Section

Music power (DIN) ..... 60 W + 60 W (1 kHz, T.H.D. 1 %, 8 Ω)
Continuous Power Output (DIN) ..... 34 W + 34 W (1 kHz, T.H.D. 1 %, 8 Ω)
Graphic equalizer frequency band..... 60 Hz, 150 Hz, 400 Hz, 1 kHz, 2.4 kHz, 6 kHz, 15 kHz, ±5.5 dB
S/N (DIN, continuous power/50 mW)
PHONO ..... 68 dB/60 dB
Total Harmonic Distortion (40 Hz to 20,000 Hz, 22.5 W, 8 Ω)**
..... No more than 0.2 %
Input sensitivity/impedance
PHONO (MM) ..... 2.5 mV/47 kΩ
LD/VCR ..... 150 mV/22 kΩ

Cassette Deck Section

Systems..... 4 track, 2-channel stereo
Heads..... Recording/playback head x 1
Erasing head x 1
Playback head x 1
Motor..... DC servo 2 speed motor x 2
Wow and Flutter..... No more than 0.09 % (WRMS)
Fast Winding Time ..... Approximately 105 seconds (C-60 tape)
Frequency Response (−20 dB recording):
Type I (Normal) tape ..... 35 Hz to 14,000 Hz ±6 dB (EIAJ)
Type II (HIGH/CrO_2) tape ..... 35 Hz to 15,000 Hz ±6 dB (EIAJ)
Signal-to-Noise ratio
Dolby NR OFF..... 56 dB
Noise Reduction Effect
Dolby B type NR ON ..... More than 10 dB (at 5 kHz)

CD Section

Type ..... Compact disc digital audio system
Operating temperature..... +5°C − +35°C
Frequency response ..... 2 Hz − 20 kHz
S/N ..... 100 dB or more (EIAJ)
Wow and flutter..... Limit of measurement (±0.001 % W.PEAK) or less (EIAJ)
Number of channels ..... 2 channels (stereo)

Furnished Parts

Operating Instructions 1
Remote Control Unit 1
Dry Cell Batteries..... 2

Miscellaneous

Power requirements ..... a.c. 240 Volts~, 50/60 Hz
Power Consumption ..... 240 W
Dimensions ..... 360 (W) x 375.5 (H) x 309 (D) mm
Weight (without package) ..... 10 kg

- *Specifications and design subject to possible modification without notice due to improvement.*

** *Measured By Audio Spectrum Analyzer.*