PIONEER®
The Art of Entertainment

Service Manual

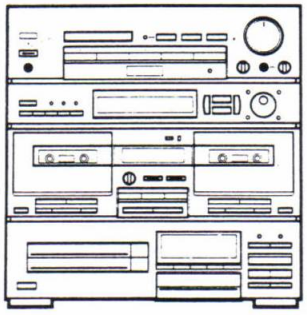

ORDER NO.
ARP2139

STEREO TWIN CD CASSETTE DECK AMPLIFIER

XD-Z84T

MODEL XD−Z84T HAS FOLLOWING VERSIONS :

Type	Power requirement	Export destination
HE	AC220V, 240V (Switchable) *	European continent
HEWZIW	AC220V, 240V (Switchable) *	Germany and Italy

* Change the jumper wires of assembly board.

- **This manual is applicable to the XD−Z84T/HE and HEWZIW types.**
- **As to the HEWZIW type, refer to pages 80 and 81.**
- **This product is a component of a system. As to the system composition, refer to the system manual.**
- **As to the MECHANISM DESCRIPTION, refer to the PD−Z74T service guide (ARP2144).**
- **For adjustment refer to ADJUSTMENTS FOR XD−Z54T, XD−Z84T,DC−Z94,DC−Z84 and DC−Z74 (ARP2140).**

CONTENTS

1. SAFETY INFORMATION 2
2. EXPLODED VIEWS, PACKING AND PARTS LIST 3
3. SCHEMATIC DIAGRAM AND P.C.BOARDS CONNECTION DIAGRAM 23
4. P.C.B 's PARTS LIST 71
5. IC INFORMATION 78
6. FOR HEWZIW TYPE 80
7. PANEL FACILITIES 82
8. SPECIFICATIONS 88

PIONEER ELECTRONIC CORPORATION 4-1, Meguro 1-Chome, Meguro-ku, Tokyo 153, Japan
PIONEER ELECTRONICS SERVICE INC. P.O. Box 1760, Long Beach, California 90801 U.S.A.
PIONEER ELECTRONICS OF CANADA, INC. 505 Cochrane Drive, Markham, Ontario L3R 8E3 Canada
PIONEER ELECTRONIC [EUROPE] N.V. Keetberglaan 1, 2740 Beveren, Belgium
PIONEER ELECTRONICS AUSTRALIA PTY. LTD. 178-184 Boundary Road, Braeside, Victoria 3195, Australia TEL: [03] 580-9911

YV JAN. 1991 Printed in Japan.

1. SAFETY INFORMATION

(FOR EUROPEAN MODEL ONLY)

VARO!
AVATTAESSA JA SUOJALUKITUS OHITETTAESSA OLET ALTTIINA NÄKYMÄTTÖMÄLLE LASERSÄTEILYLLE. ÄLÄ KATSO SÄTEESEEN.

ADVERSEL:
USYNLIG LASERSTRÅLING VED ÅBNING NÅR SIKKERHEDSAFBRYDERE ER UDE AF FUNKTION UNDGÅ UDSAETTELSE FOR STRÅLING.

VARNING!
OSYNLIG LASERSTRÅLNING NÄR DENNA DEL ÄR ÖPPNAD OCH SPÄRREN ÄR URKOPPLAD. BETRAKTA EJ STRÅLEN.

LASER
Kuva 1
Lasersateilyn varoitusmerkki

WARNING!
DEVICE INCLUDES LASER DIODE WHICH EMITS INVISIBLE INFRARED RADIATION WHICH IS DANGEROUS TO EYES. THERE IS A WARNING SIGN ACCORDING TO PICTURE 1 INSIDE THE DEVICE CLOSE TO THE LASER DIODE.

IMPORTANT
THIS PIONEER APPARATUS CONTAINS LASER OF HIGHER CLASS THAN 1. SERVICING OPERATION OF THE APPARATUS SHOULD BE DONE BY A SPECIALLY INSTRUCTED PERSON.

LASER DIODE CHARACTERISTICS
MAXIMUM OUTPUT POWER: 5 mw
WAVELENGTH: 780-785 nm

LASER
Picture 1
Warning sign for laser radiation

LABEL CHECK (TWIN type)

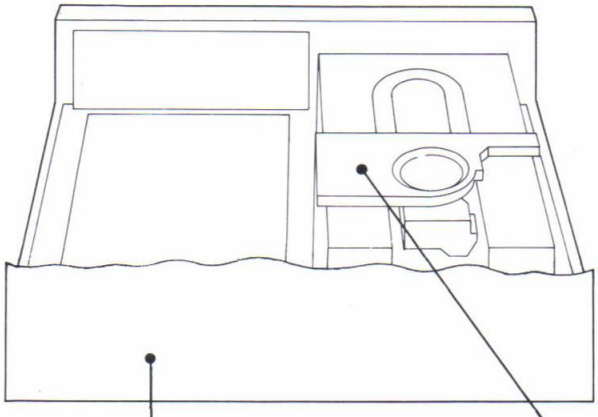

HE, HEWZIW and HB types

Additional Laser Caution

1. Laser Interlock Mechanism
   The ON/OFF (ON : low level/OFF : high level) status of the U (S601) and L (S603) switches for detecting the disc clamp state is detected by the system microprocessor, and the design prevents laser diode oscillation when both switches U and L are OFF (high level).
   Thus, the interlock will no longer function if switches U (S601) and L (S603) are deliberately shorted.
   Laser diode oscillation will continue if pins 2 and 3 of CXA1471S (IC101) are connected to ground or pin 20 is connected to high level (ON) or the terminals of Q101 are shorted to each other (fault condition).
2. When the cover is opened, close viewing of the objective lens with the naked eye will cause exposure to a Class 1 or higher laser beam.

HE and HEWZIW types

HB type

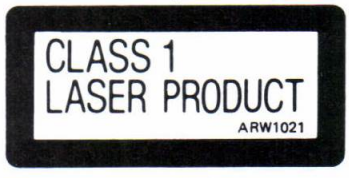

HE, HB and HEWZIW types

2. EXPLODED VIEWS, PACKING AND PARTS LIST

NOTES:

- *Parts without part number cannot be supplied.*
- *The ⚠ mark found on some component parts indicates the importance of the safety factor of the part. Therefore, when replacing, be sure to use parts of identical designation.*
- *Parts marked by "◉" are not always kept in stock. Their delivery time may be longer than usual or they may be unavailable.*

2.1 PACKING

Parts list of Packing

Mark	No.	Description	Parts No.
	1	FRONT PAD L, R	AHA1406
	2	REAR PAD L, R	AHA1407
	3	PACKING CASE	AHD1968
	4	OPERATING INSTRUCTIONS (Duch, Swedish, Spanish, Portuguese)	ARC1242
	5	OPERATING INSTRUCTIONS (English, German, French, Italian)	ARE1173
	6	CAUTION CARD	ARM1003
	7	REMOTE CONTROL UNIT (CU-DC022)	AXD1183
	8	BATTERY COVER	AZN1846
	101	BATTERY (R03, AAA)	
	102	PACKING SHEET	

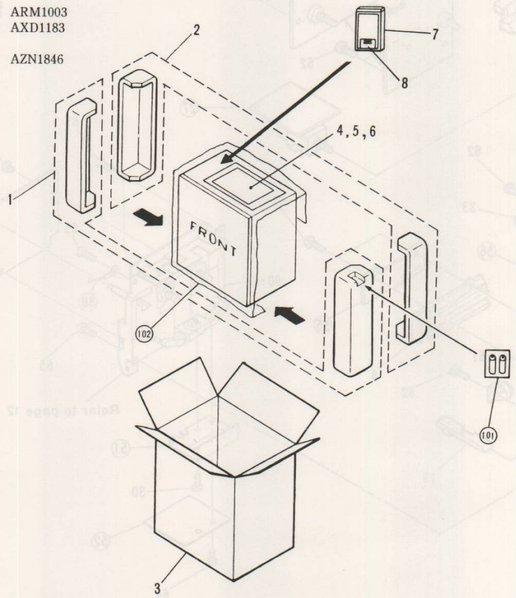

2.2 GENERAL BLOCK

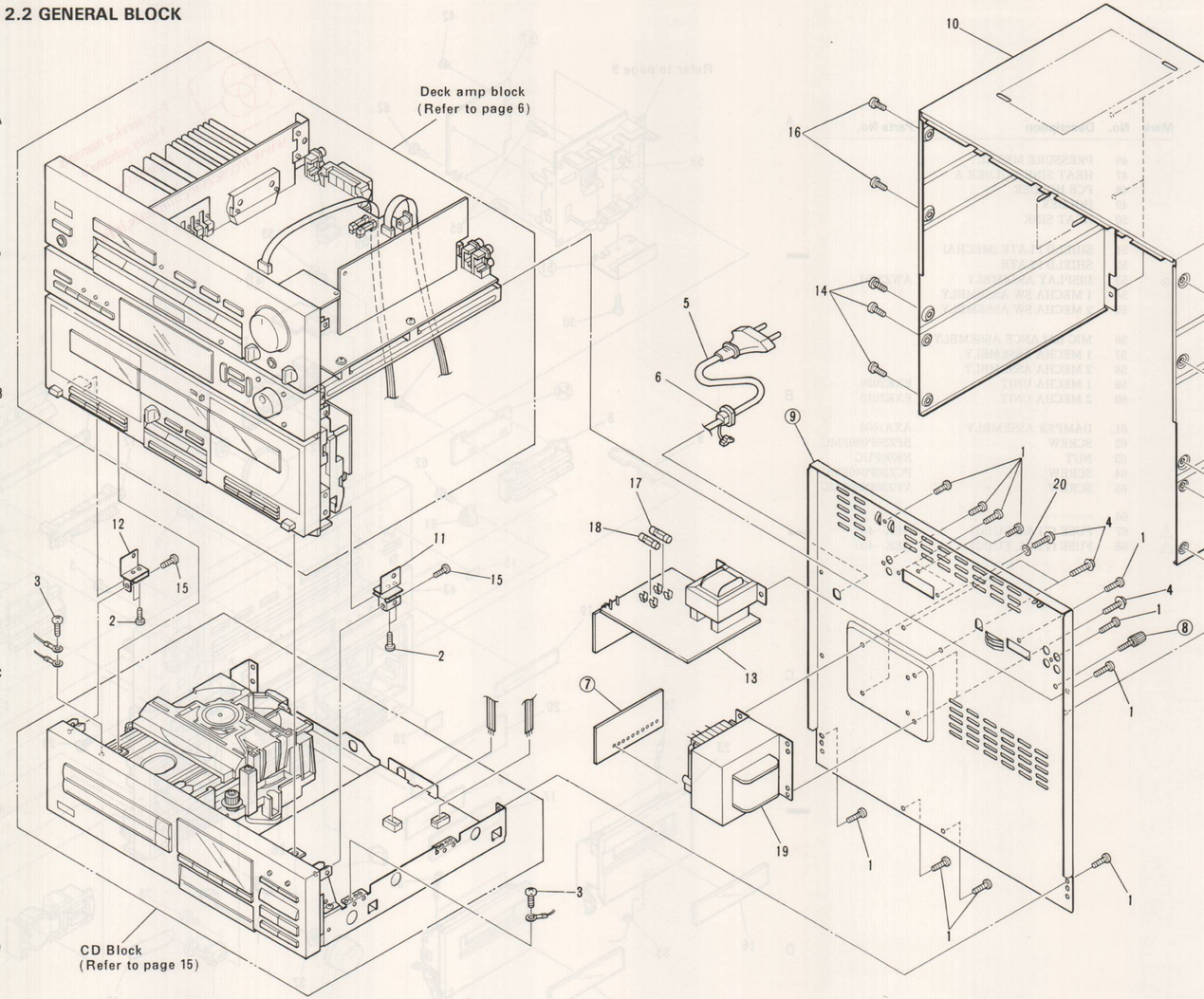

Parts list of General block

Mark	No.	Description	Parts No.
	1	SCREW	ABA-298
	2	SCREW (STEEL)	ABA1007
	3	SCREW (STEEL)	ABA1009
	4	SCREW	ABA1082
⚠	5	AC POWER CORD	ADG1049
	6	STRAIN RELIEF	AEC-882
	7	TRANS CONNECT ASSEMBLY	
	8	TERMINAL SCREW	
	9	REAR PANEL	
	10	BONNET	ANE1275
	11	PLATE L	ANG1536
	12	PLATE R	ANG1537
⊙	13	SUB TRANS ASSEMBLY	AWR1056
	14	SCREW	BBZ30P080FZK
	15	SCREW	VPZ30P080FMC
	16	SCREW	VPZ30P080FZK
⚠	17	FUSE (T2A, FU101)	AEK-017
⚠	18	FUSE (T1.6A, FU102)	AEK-405
⚠	19	POWER TRANSFORMER (T2001)	ATS1321
	20	WASHER	ABE-052
	21	CUSHION RUBBER M	

2.3 DECK AMP BLOCK

Parts list of Deck amp block

Mark	No.	Description	Parts No.
	1	ROTARY KNOB	AAB1136
	2	VOL KNOB	AAB1200
	3	ROTARY KNOB	AAB1202
	4	POWER BUTTON	AAD1674
	5	KIN BUTTON	AAD1682
	6	FUNCTION BUTTON	AAD1894
	7	REC. COPY BUTTON	AAD1895
	8	DECK PLAY BUTTON	AAD1896
	9	EJECT BUTTON L	AAD1898
	10	GEQ BUTTON	AAD1899
	11	CURSOR BUTTON	AAD1900
	12	AI BUTTON	AAD1901
	13	EJECT BUTTON R	AAD1922
	14	LENS (POWER IND)	AAK1800
	15	FILTER (REC)	AAK1812
	16	DECORATIVE PLATE (DOOR)	AAK2065
	17	DECORATIVE PLATE A (DECK)	AAK2071
	18	DECORATIVE PLATE B (DECK)	AAK2072
	19	AI DECORATIVE PLATE	AAK2073
	20	DECORATIVE PLATE (GEQ)	AAK2074
	21	INDICATOR LENS	AAK2075
⊙	22	AF ASSEMBLY	AWZ3336
	23	CASSETTE DOOR (R)	AAN1250
	24	CASSETTE DOOR (L)	AAN1251
	25	COUNTER	AAW1009
⊙	26	GEQ ASSEMBLY	AWX1048
	27	VR ASSEMBLY	
	28	FABEL (PAPER)	AAX1301
	29	SCREW	ABA−298
	30	SCREW (STEEL)	ABA1009
	31	SCREW (STEEL)	ABA1011
	32	SCREW	ABA1018
	33	SCREW (STEEL)	ABA1095
	34	DOOR SPRING L	ABH1068
	35	DOOR SPRING R	ABH1069
	36	KEEP PLATE	ABK1016
	37	NUT	ABN1016
	38	GROUND LEAD	
	39	GROUND LEAD	
	40	COUNTER BELT	AEB1161
	41	HEAD PHONE ASSEMBLY	
	42	NYLON RIVET	AEC1160
	43	FRONT PANEL	AMB1745
	44	PACK HOLDER	
	45	HEAT SINK HOLDER B	
	46	PRESSURE METAL	
	47	HEAT SINK HOLDER A	
	48	PCB HOLDER	
	49	HOLDER	
	50	HEAT SINK	
	51	SHIELD PLATE (MECHA)	
	52	SHIELD PLATE	
⊙	53	DISPLAY ASSEMBLY	AWZ3351
	54	1 MECHA SW ASSEMBLY	
	55	2 MECHA SW ASSEMBLY	
	56	MIC BALANCE ASSEMBLY	
	57	1 MECHA ASSEMBLY	
	58	2 MECHA ASSEMBLY	
	59	1 MECHA UNIT	EXK2020
	60	2 MECHA UNIT	EXK2010
	61	DAMPER ASSEMBLY	AXA1008
	62	SCREW	BPZ26P080FMC
	63	NUT	NK90FUC
	64	SCREW	PCZ30P040FMC
	65	SCREW	VPZ30P080FMC
	66	.....	
⚠	67	FUSE (T1.6A, FU151)	AEK−405
⚠	68	FUSE (T1.6A, FU152)	AEK−405

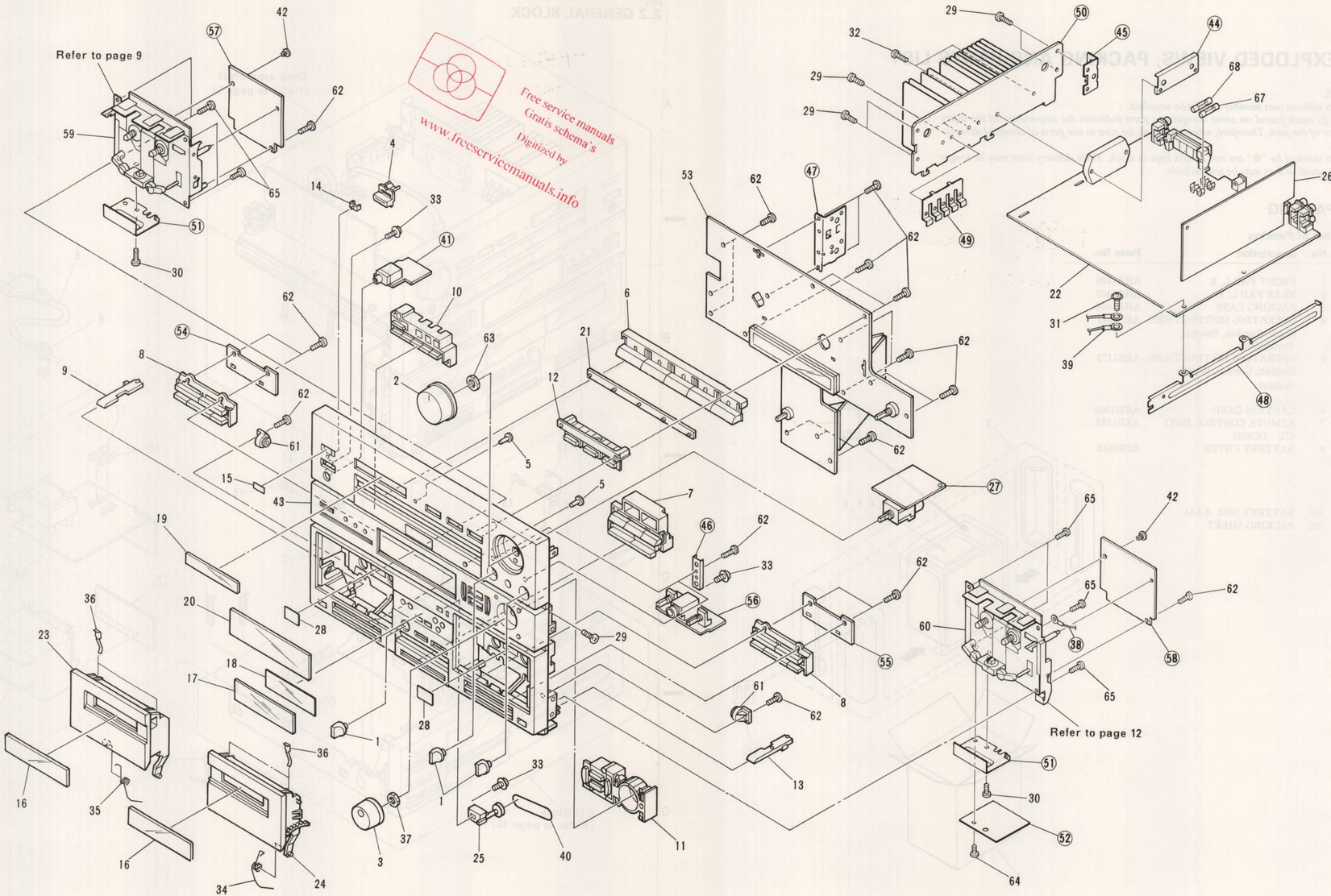

2.4 1 MECHA UNIT (EXK2020)

Parts list of 1 Mecha unit

Mark	No.	Description	Parts No.
	1	FLYWHEEL UNIT (FWD)	EXA1102
	2	FLYWHEEL UNIT (RVS)	EXA1103
	3	ROLLER UNIT (FWD)	EXA1104
	4	ROLLER UNIT (RVS)	EXA1105
	5	LIMITER UNIT	EXA1106
	6	LEVER UNIT	EXA1107
	7	ARM	AZN2063
	8	NR LEVER	ENV1155
	9	BRAKE	ENV1157
	10	CAM GEAR	ENV1158
	11	LOCK ARM	ENV1159
	12	NR ARM	ENV1163
	13	REEL COLLAR	ENV1164
	14	REEL	ENV1170
	15	REEL BUSH	ENV1178
	16	ARM	ENV1181
	17	ARM	AZN2069
	18	BUSH	ENV1184
	19	MAGNET	ENV1185
	20	BELT	ENT1015
	21	SPRING	EBH1201
	22	SPRING	EBH1202
	23	SPRING	EBH1203
	24	SPRING	EBH1204
	25	SPRING	EBH1208
	26	SPRING	EBH1209
	27	SPRING	EBH1210
	28	SPRING	EBH1211
	29	SPRING	EBH1255
	30	SPRING	EBH1213
	31	SPRING	EBH1220
	32	SPRING	EBH1256
	33	SPRING	EBL1013
	34	SPRING	EBL1014
	35	MOTOR UNIT	EXA1108
	36	SWITCH (Detect)	ESN1003
	37	SWITCH (Mode)	ESN1004
	38	SOLENOID	EXP1005
	39	HALL IC	DN6847SE
	40	P.C.BOARD	ENX1002
	41	CONNECTOR	EKS1013
	42	LEAD WIRE	EDD1003
	43	CONNECTOR	EDE1009
	44	SCREW	EBA1020
	45	SCREW	EBA1021
	46	SCREW (M2×8)	ATZ20P080FMC
	47	SCREW	BSZ20P050FMC
	48	SCREW	PMS26P025FUC
	49	WASHER	EBF1008
	50	WASHER	EBF1009
	51	WASHER	EBF1010
	52	WASHER	EBF1011
	53	.....	
	54	ARM UNIT	EXX1002
	55	ARM UNIT	EXX1003
	56	P HEAD ASSEMBLY	EXX1005
	101	HEAD BASE	
	102	BRACKET	
	103	PLATE	
	104	BRACKET	
	105	ARM	
	106	HOLDER	
	107	HOLDER	
	108	GEAR	
	109	P HEAD UNIT	
	110	SCREW	
	111	SCREW	
	112	CHASSIS UNIT	

Note :
When removing the chassis unit to replace the arm unit (EXX1003), the chassis unit can be easily removed by cutting the Ⓐ part of No.55 (1/2) with a nippers, etc. (see following illustration).

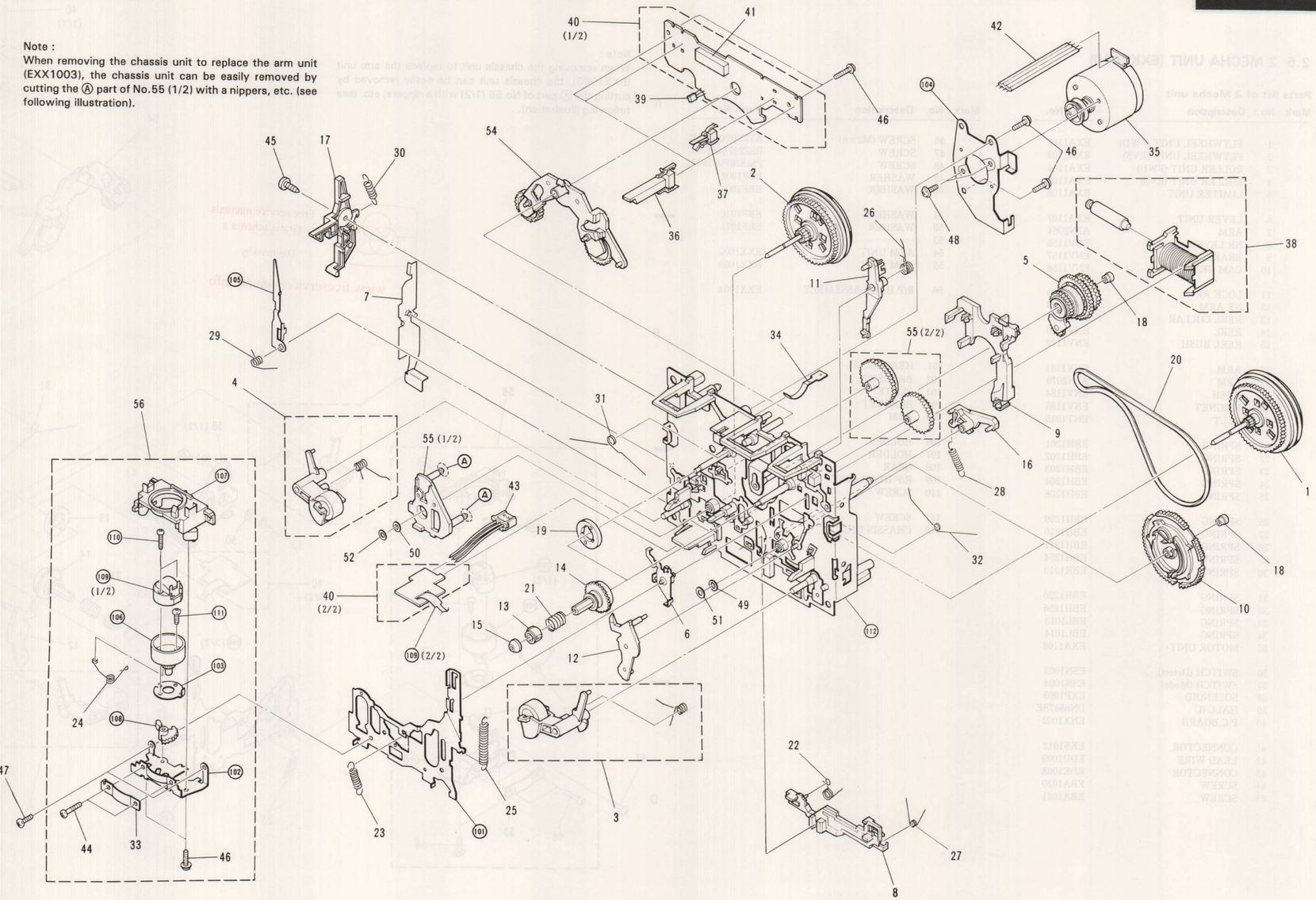

2.5 2 MECHA UNIT (EXK2010)

Parts list of 2 Mecha unit

Mark	No.	Description	Parts No.
	1	FLYWHEEL UNIT (FWD)	EXA1102
	2	FLYWHEEL UNIT (RVS)	EXA1103
	3	ROLLER UNIT (FWD)	EXA1104
	4	ROLLER UNIT (RVS)	EXA1105
	5	LIMITER UNIT	EXA1106
	6	LEVER UNIT	EXA1107
	7	ARM	AZN2064
	8	NR LEVER	ENV1155
	9	BRAKE	ENV1157
	10	CAM GEAR	ENV1158
	11	LOCK ARM	ENV1159
	12	NR ARM	ENV1163
	13	REEL COLLAR	ENV1164
	14	REEL	ENV1170
	15	REEL BUSH	ENV1178
	16	ARM	ENV1181
	17	ARM	AZN2070
	18	BUSH	ENV1184
	19	MAGNET	ENV1185
	20	BELT	ENT1015
	21	SPRING	EBH1201
	22	SPRING	EBH1202
	23	SPRING	EBH1203
	24	SPRING	EBH1204
	25	SPRING	EBH1208
	26	SPRING	EBH1209
	27	SPRING	EBH1210
	28	SPRING	EBH1211
	29	SPRING	EBH1254
	30	SPRING	EBH1213
	31	SPRING	EBH1220
	32	SPRING	EBH1256
	33	SPRING	EBL1013
	34	SPRING	EBL1014
	35	MOTOR UNIT	EXA1108
	36	SWITCH (Detect)	ESN1003
	37	SWITCH (Mode)	ESN1004
	38	SOLENOID	EXP1005
	39	HALL IC	DN6847SE
	40	P.C.BOARD	ENX1002
	41	CONNECTOR	EKS1012
	42	LEAD WIRE	EDD1003
	43	CONNECTOR	EDE1008
	44	SCREW	EBA1020
	45	SCREW	EBA1021
	46	SCREW (M2×8)	ATZ20P080FMC
	47	SCREW	BSZ20P050FMC
	48	SCREW	PMS26P025FUC
	49	WASHER	EBF1008
	50	WASHER	EBF1009
	51	WASHER	EBF1010
	52	WASHER	EBF1011
	53	.....	
	54	ARM UNIT	EXX1002
	55	ARM UNIT	EXX1003
	56	R/P HEAD ASSEMBLY	EXX1004
	101	HEAD BASE	
	102	BRACKET	
	103	PLATE	
	104	BRACKET	
	105	ARM	
	106	HOLDER	
	107	HOLDER	
	108	GEAR	
	109	R/P HEAD UNIT	
	110	SCREW	
	111	SCREW	
	112	CHASSIS UNIT	

Note :
When removing the chassis unit to replace the arm unit (EXX1003), the chassis unit can be easily removed by cutting the Ⓐ part of No.55 (1/2) with a nippers, etc. (see following illustration).

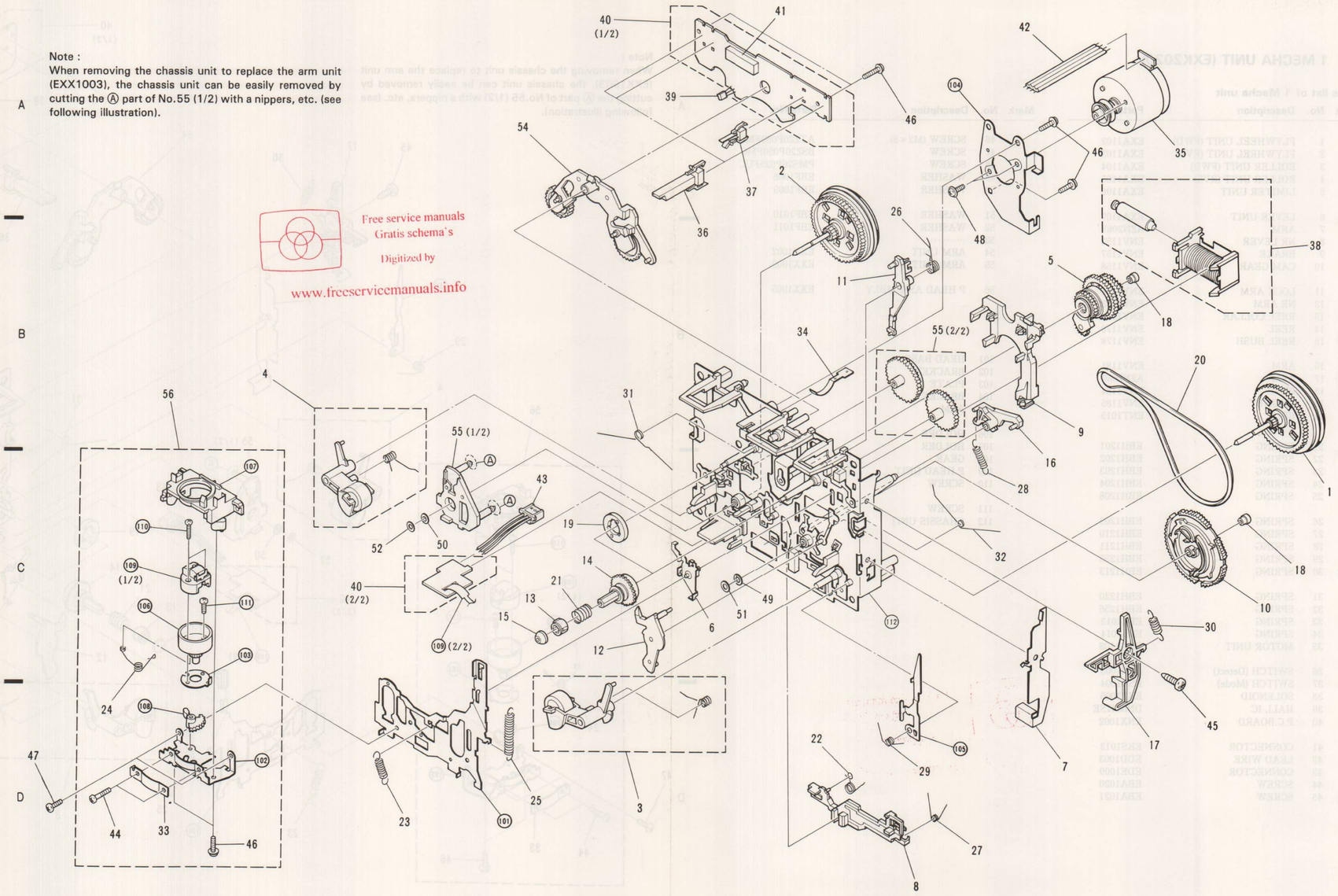

2.6 CD BLOCK

Parts list of CD block

Mark	No.	Description	Parts No.
	1	SCREW	BBZ30P060FMC
	2	SCREW	BBZ30P080FZK
	3	SCREW	BBZ30P100FMC
	4	SCREW	BBZ30P120FMC
	5	SCREW	IBZ30P150FMC
	6	DISC BUTTON	PAC1522
	7	PLAY BUTTON	PAC1524
	8	WINDOW	PAM1454
	9	30P F•F•C/30V	PDD1049
	10	SCREW	PDZ30P050FMC
	11	SPACER	
	12	.....	
	13	UNDER BASE	
	14	ANGLE	
	15	NAME PLATE 1	PNW1866
	16	NAME PLATE 2	PNW1867
	17	FUNCTION PANEL	
	18	PCB SPACER	
⚠ ⊙	19	MOTHER BOARD ASSEMBLY	PWM1349
⚠ ⊙	20	SUB BOARD ASSEMBLY	PWX1143
	21	FOOT ASSEMBLY	PXA1201
	22	INSULATOR ASSEMBLY	PXA1343
	23	TWIN TORAY MECHA ASSEMBLY	

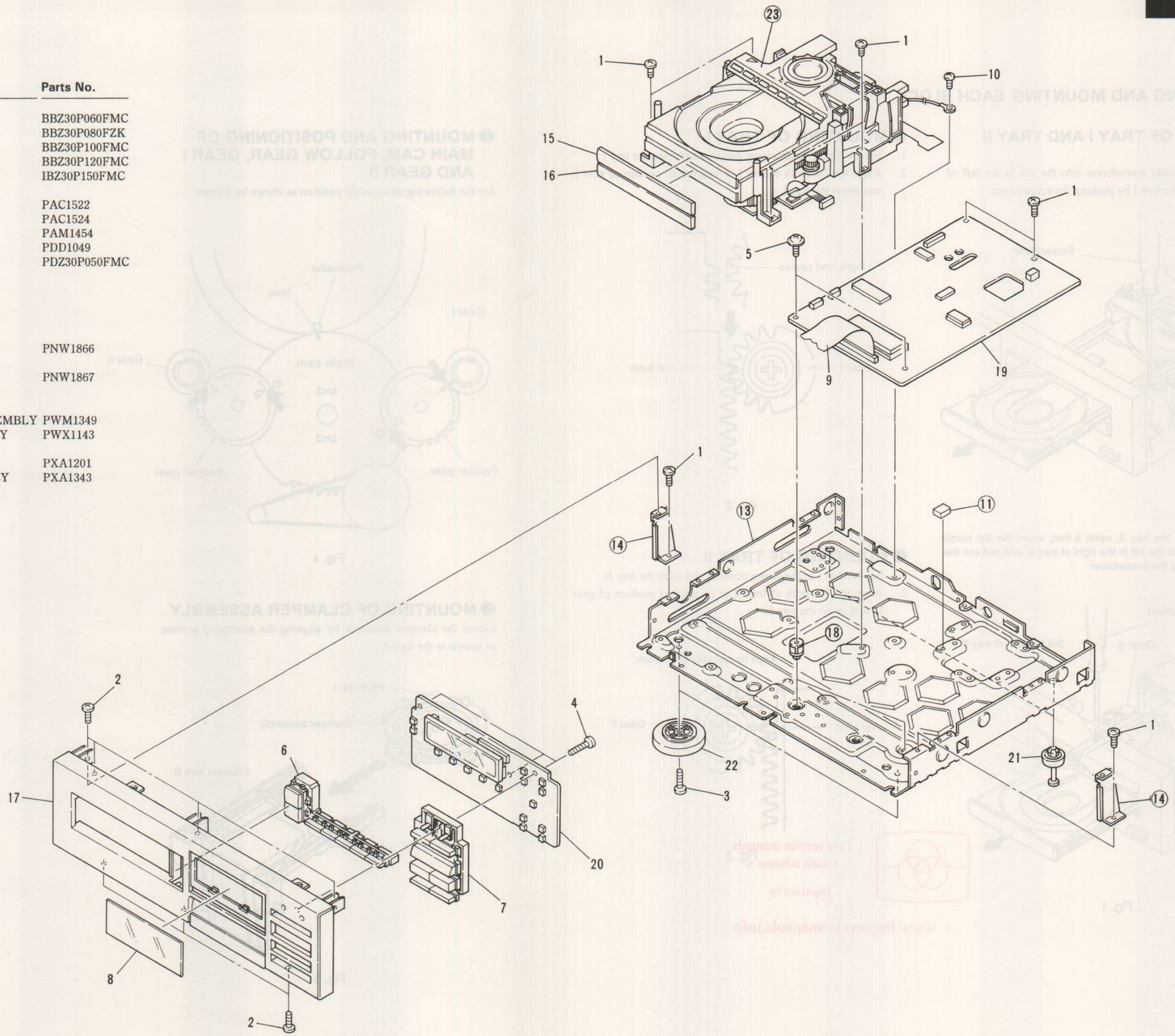

2.7 REMOVING AND MOUNTING EACH BLOCK

● REMOVAL OF TRAY I AND TRAY II

1. Open the tray I.
2. Insert the flat blade screwdriver into the slit in the left of tray I. Pull out the tray I by pushing the screwdriver.

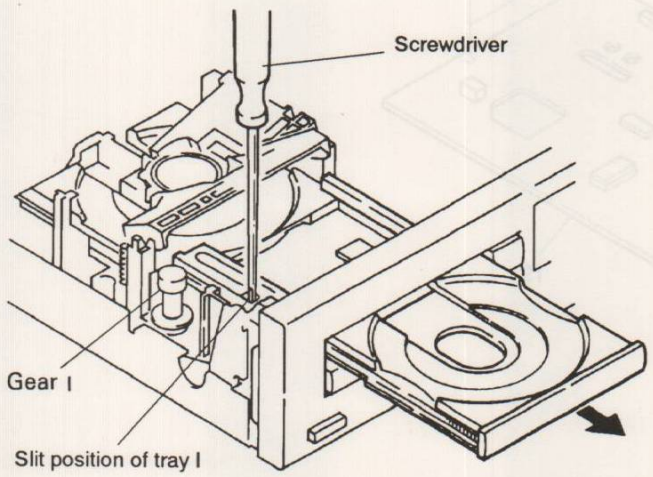

* When remove the tray II, open it first, insert the flat blade screwdriver into the slit in the right of tray II, and pull out the tray by pushing the screwdriver.

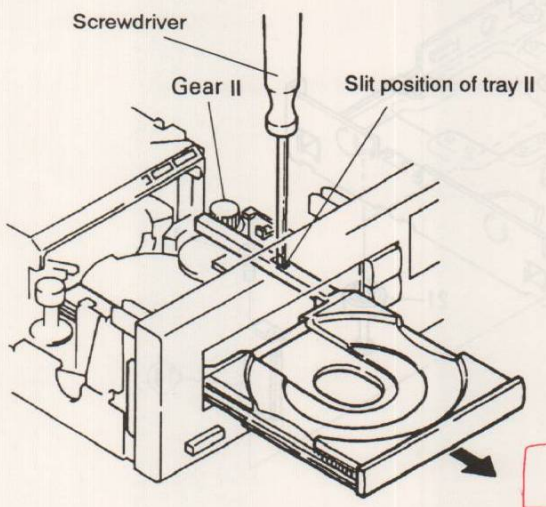

Fig. 1

● MOUNTING OF TRAY I

1. Set the disc II to the clamp position and open the tray I.
2. Align the 1st tooth of tray I to ungrooved portion of gear I, and insert the tray I.

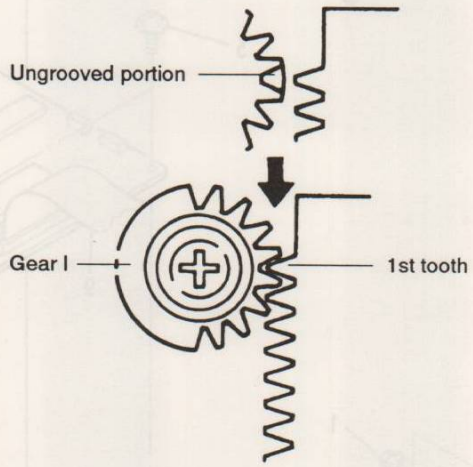

Fig. 2

● MOUNTING OF TRAY II

1. Set the disc I to the clamp position and open the tray II.
2. Align the 1st tooth of tray II to □ marked position of gear II, and insert the tray II.

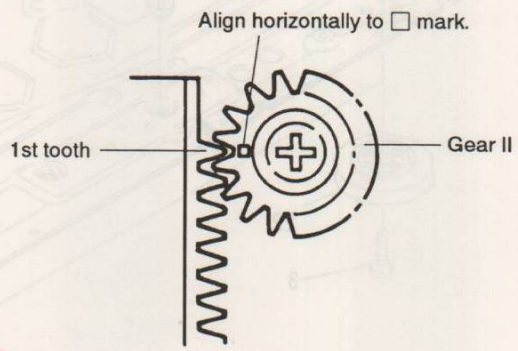

Fig. 3

● MOUNTING AND POSITIONING OF MAIN CAM, FOLLOW GEAR, GEAR I AND GEAR II

Set the following gears to the position as shown by arrows.

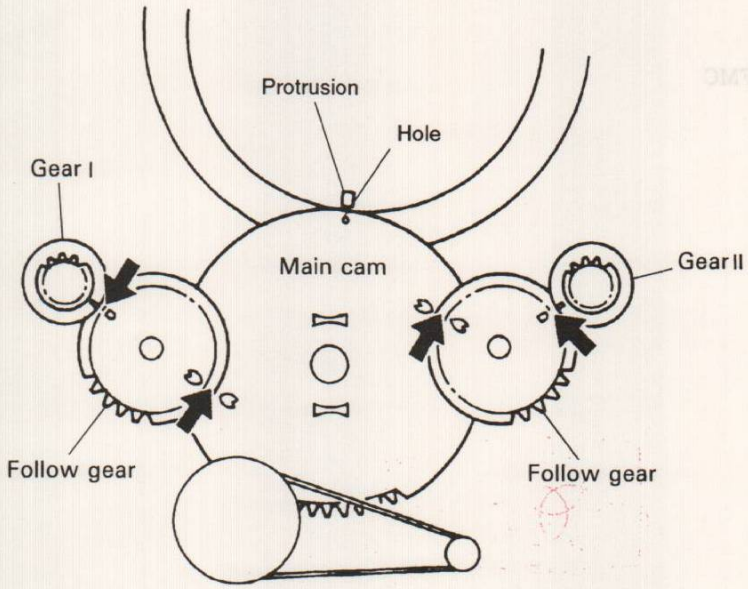

Fig. 4

● MOUNTING OF CLAMPER ASSEMBLY

Mount the clamper assembly by aligning the protrusion portion as shown in the figure.

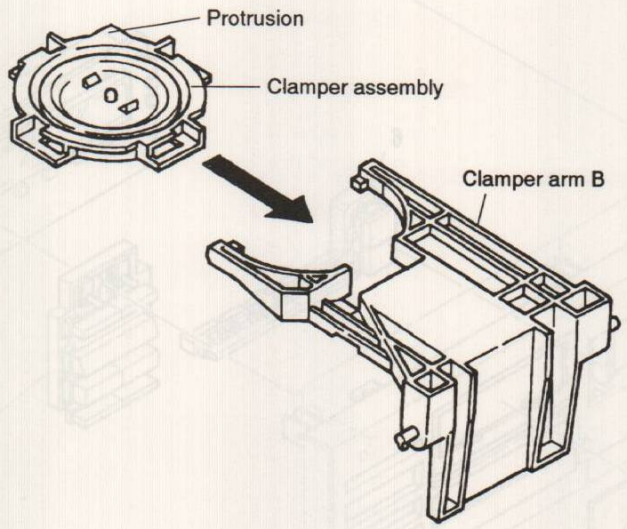

Fig. 5

2.8 CD MECHA UNIT

Parts List of Mechanism Section

Mark	No.	Symbol & Description	Part No.
	1	Clamp spring	PBH1103
	2	Lever spring	PBH1104
	3	Belt	PEB1106
	4	Motor pulley	PNW1634
	5	Tray 1	PNW1839
	6	Tray 2	PNW1840
	7	Sub tray	PNW1841
	8	Loading base	PNW1842
	9	Main cam	PNW1843
	10	Follow gear	PNW1844
	11	Gear 1	PNW1845
	12	Gear 2	PNW1846
	13	Idler gear	PNW1847
	14	Clamper arm U	PNW1850
	15	Clamper arm B	PNW1851
	16	Clamp cam	PNW1852
	17	Float base	PNW1853
	18	Lock lever	PNW1854
	19	Motor	PXM1010
	20	Floating rubber	PEB1014
	21	Floating rubber	PEB1132
	22	Screw	PBA1048
	23	Screw	IPZ30P080FMC
	24	Screw	IPZ20P080FMC
	25	Chip capacitor	CKSYF105Z16
	26	Screw	JFZ20P025FMC
	27	Drive spring	PBH1084
	28	Plate spring	PBK1057
	29	Belt	PEB1072
	30	Drive screw	PLA1003
	31	Guide bar	PLA1071
	32	Half nut	PNW1605
	33	Disc table	PNW1608
	34	Pulley	PNW1634
	35	Earth spring	PBH1009
	36	Push switch	DSG1014
	37	Spindle motor assembly (with oil)	PEA1028
	38	Pick – up assembly	PEA1030
	39	Screw	BPZ20P080FZK
	40	Screw	PMZ20P030FMC
	41	Motor (CARRIAGE)	PXM1013
	42	Screw	PBZ30P080FMC
	43	Semi – fixed resistor	PCP1008
	44	Screw	PMZ26P040FMC
	45	Gear pulley	PNW1848
	46	Push spring	PBH1105
	47	Screw	IBZ30P200FMC
	48	Pulley	PNW1066
	49	Screw	IPZ30P120FMC

Mark	No.	Symbol & Description	Part No.
	101	Yoke	
	102	Magnet	
	103	Clamper holder	
	104	Clamper S	
	105	Mechanism P.C.B assembly	
	106	Servo mechanism assembly	
	107	Connector assembly (6P)	
	108	Mechanism chassis	
	109	Motor base	
	110	Mechanism base	
	111	Actuater cover	
	112	Sub panel plate	

• How to install the disc table

1 Use nippers or other tool to cut the two sections marked Ⓐ in figure 1. Then remove the spacer.

2 While supporting the spindle motor shaft with the stopper, put spacer on top of the motor base (angled so it doesn't touch section Ⓑ), and stick the disc table on top (takes about 9kg pressure). Take off the spacer.

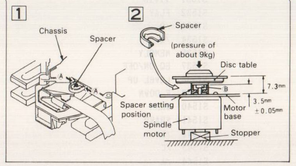

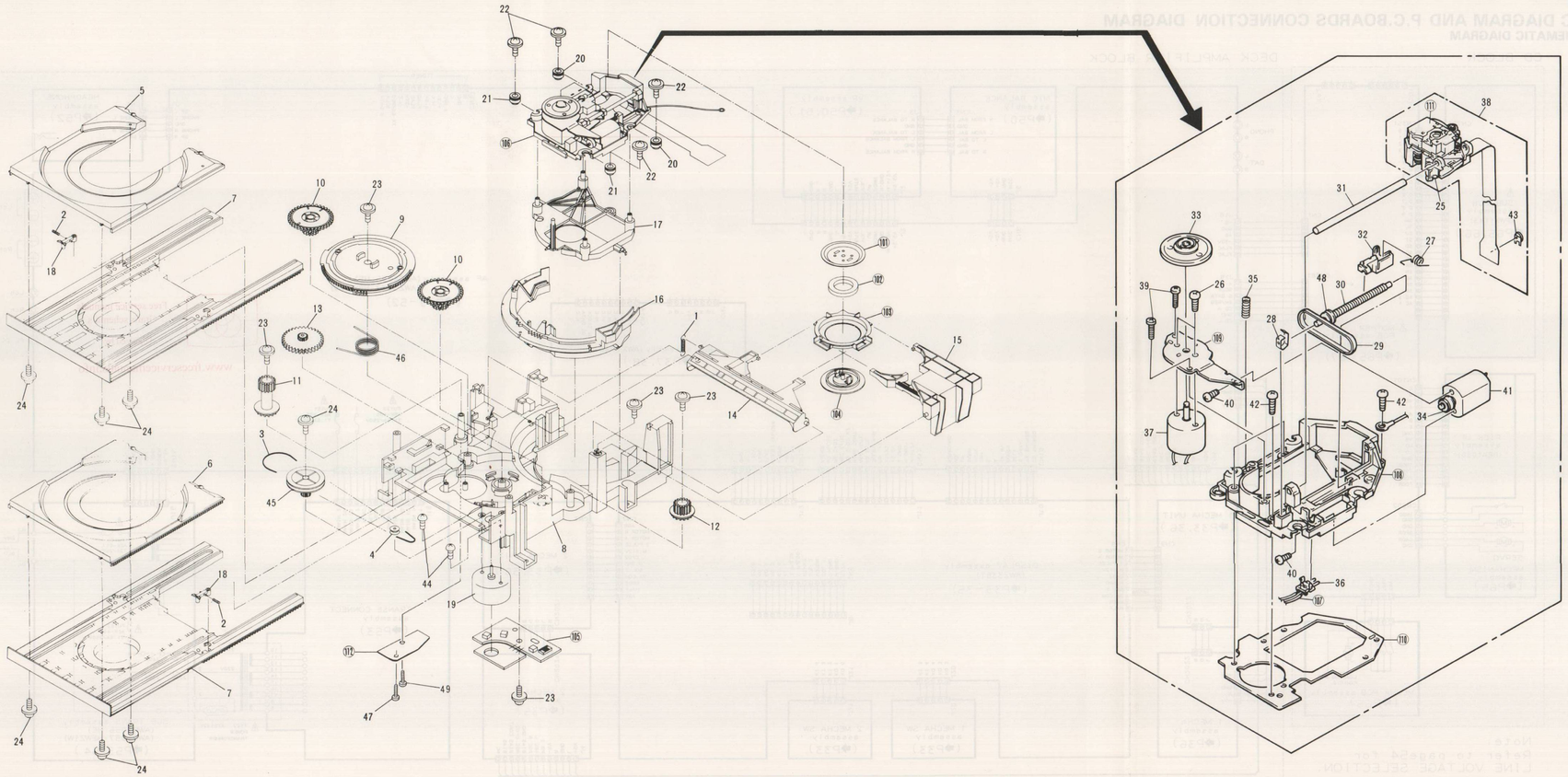

3. SCHEMATIC DIAGRAM AND P.C.BOARDS CONNECTION DIAGRAM

3.1 OVER ALL SCHEMATIC DIAGRAM

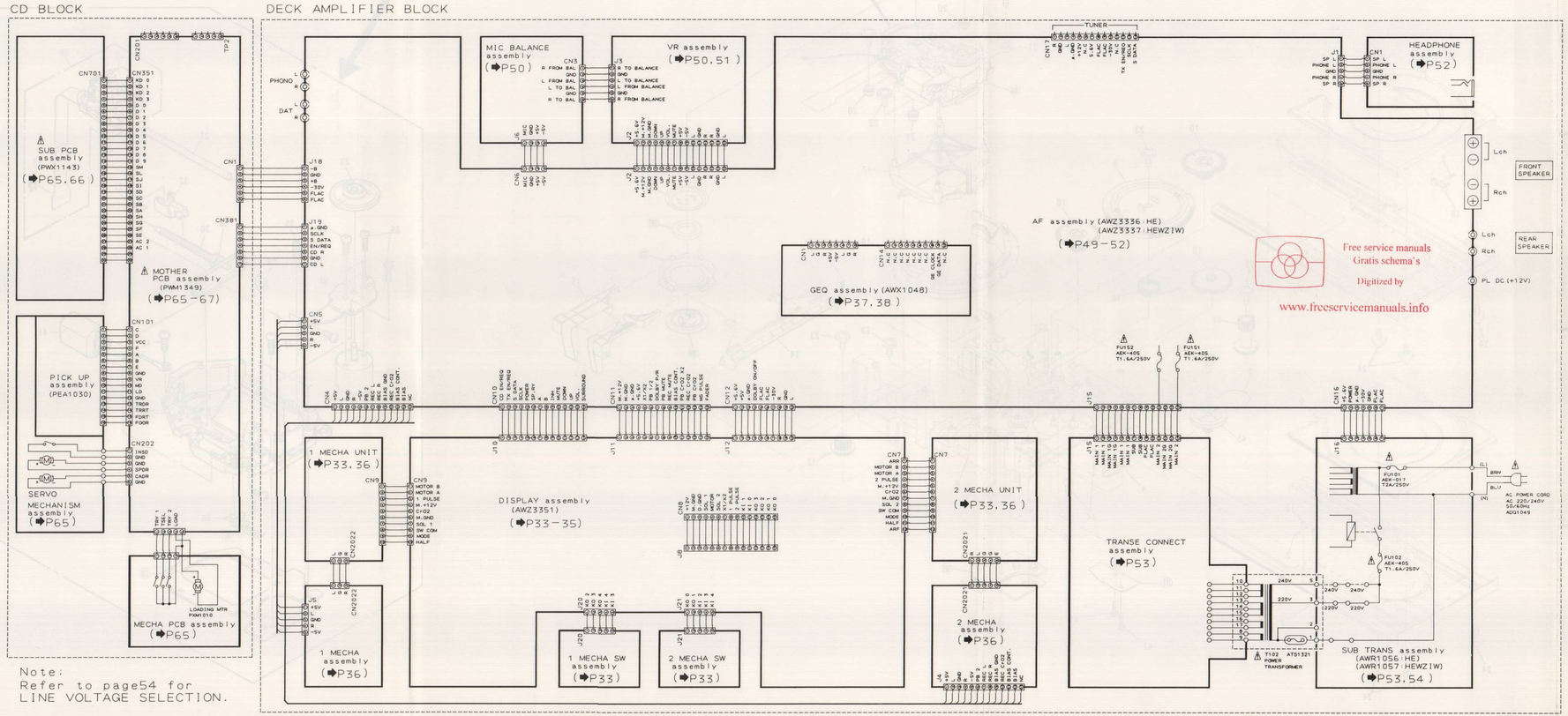

Note:
Refer to page54 for LINE VOLTAGE SELECTION.

1. RESISTORS:
Indicated in Ω, ¼W, ⅙W, ±5% tolerance unless otherwise noted k : kΩ, M : MΩ, (F) : ±1%, (G) : ±2%, (K) : ±10% (M); ±20% tolerance

2. CAPACITORS:
Indicated in capacity (μF)/voltage (V) unless otherwise noted p : pF
Indication without voltage is 50V except electrolytic capacitor.

3. VOLTAGE, CURRENT:
: Signal voltage at (45 W + 45 W 8Ω)output (1kHz)
: DC voltage (V) at no input signal
Value in ( ) is DC voltage at rated power.
⇦ mA : DC current at no input signal

4. OTHERS:
➡ : Signal route.
⊘ : Adjusting point.
The ⚠ mark found on some component parts indicates the importance of the safety factor of the part. Therefore, when replacing, be sure to use parts of identical designation.
⚠ marked capacitors and resistors have parts numbers.

This is the basic schematic diagram, but the actual circuit may vary due to improvements in design.

SWITCHES:

DISPLAY assembly
S1504 POWER
S1505 VIDEO
S1506 CD DIRECT
S1507 FADE/FINE
S1510 AI MEMO
S1511 AI BGM
S1512 PHONO
S1513 2 REC MUTE
S1514 DISCO
S1516 SURR
S1517 TAPE
S1518 2 REC
S1519 X2 COPY
S1522 CD
S1523 TX
S1524 2 PAUSE
S1525 X1 COPY
S1528 DOLBY NR ON/OFF
S1529 COM-A-B
S1530 MILD
S1531 VIVID
S1532 FLAY
S1533 /D
S1534 /B
S1535 MEMOLY
S1537 EQ ON/OFF
S1538 LEVEL UP
S1539 F DOWN
S1540 WARM
S1541 SHARP
S1542 /E
S1543 /C
S1544 /A
S1546 PGM/PRESET
S1547 F UP
S1548 LEVEL DOWN
S1549 ACTIVE LOUNDNESS

1 MECHA SW assembly
S1551 1 REV
S1552 1 PLAY
S1553 1 STOP
S1554 1 REW
S1555 1 FF

2 MECHA SW assembly
S1556 2 STOP
S1557 2 REV
S1558 2 PLAY
S1559 2 REW
S1560 2 FF

This P.C.B. connection diagram is viewed from the foil side.

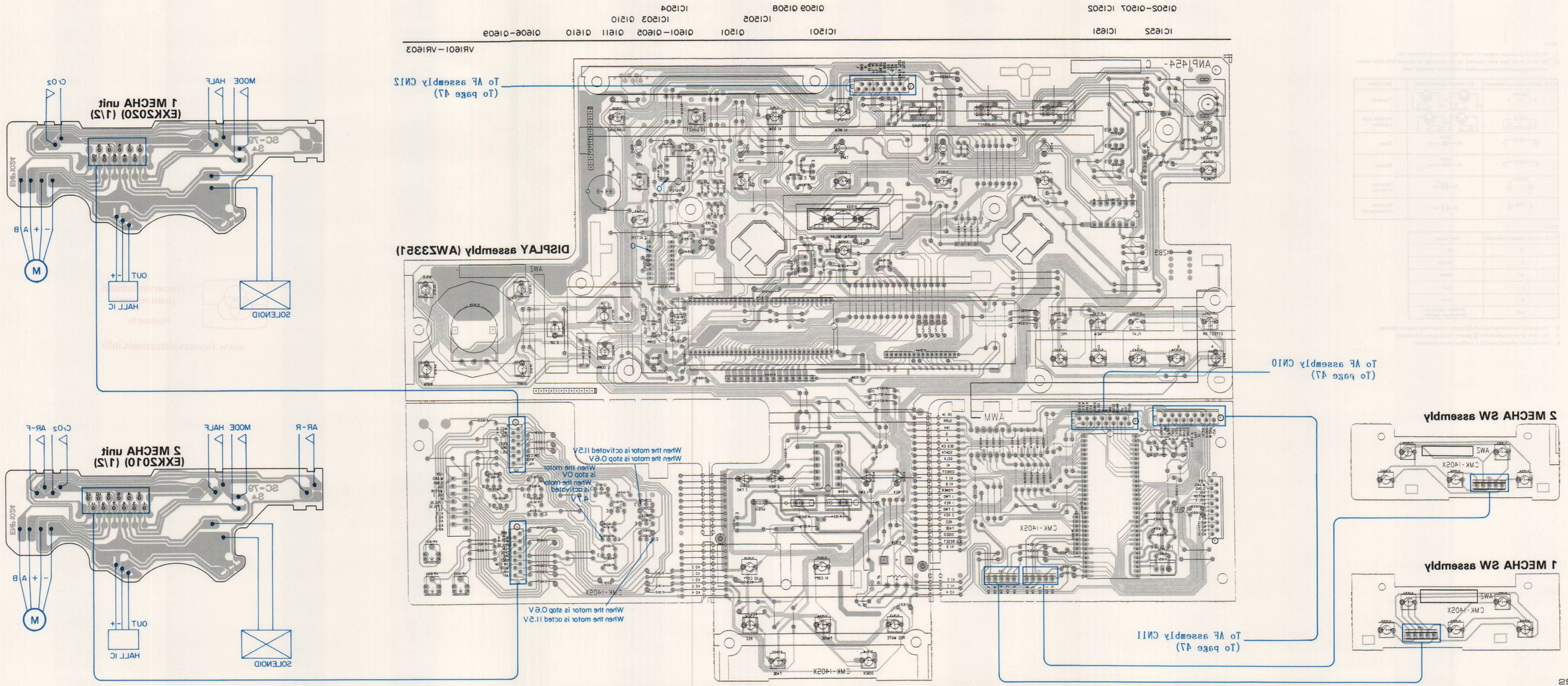

3.2 DISPLAY (AWZ3351), 1 MECHA SW, 2 MECHA SW assembly, 1 MECHA UNIT (EXK2020) and 2 MECHA UNIT (EXK2010)

NOTE

1. This P.C.B connection diagram is viewed from the parts mounted side.
2. The parts which have been mounted on the board can be replaced with those shown with the corresponding wiring symbols listed in the following Table.

P.C.B. pattern diagram indication	Corresponding part symbol	Part Name
Q504 (E C B)	E C B or E C B	Transistor
Q215	E C B	Radiator type transistor
D203	D203	Diode
R237	R237	Resistor
C513	+	Capacitor (Polarity)
C518		Capacitor (Non-polarity)

Others

P.C.B. pattern diagram indication	Part Name
IC	IC
S	Switch
RY	Relay
L	Coil
F	Filter
VR	Variable resistor or Semi-fixed resistor

3. The capactor terminal marked with ◎ (double circles) shows negatine termianl.
4. The diode terminal marked with ◎ (double circles) shows cathode side.
6. The transistor terminal to which E is affixed shown the emitter.

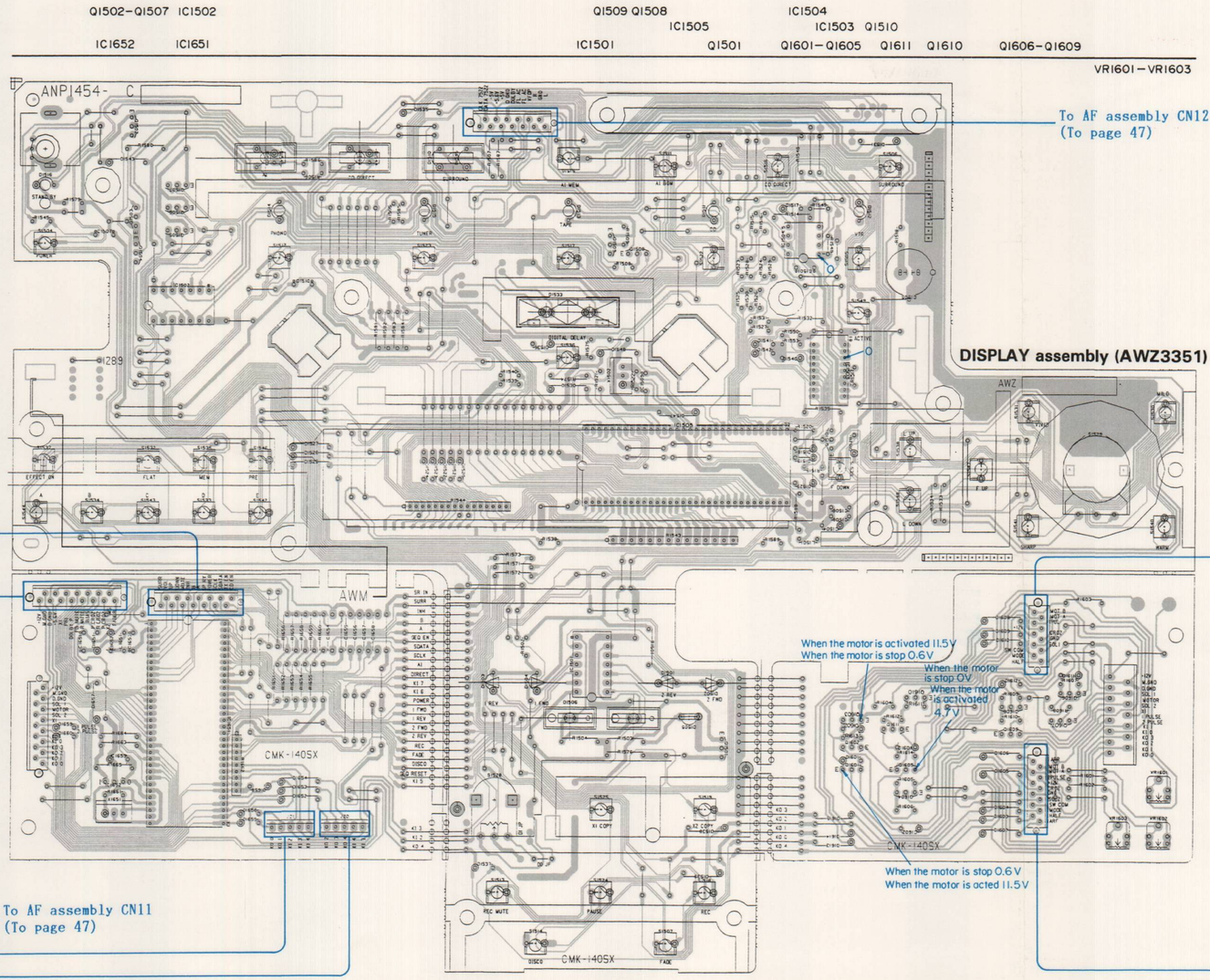

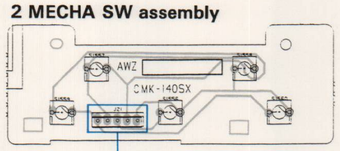

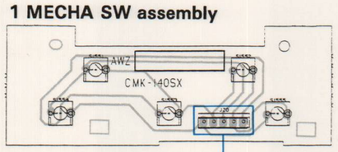

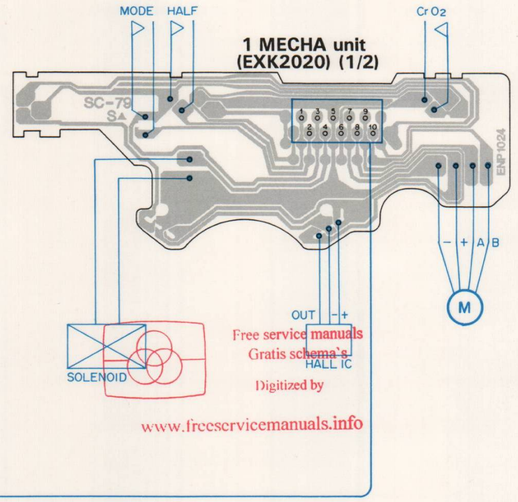

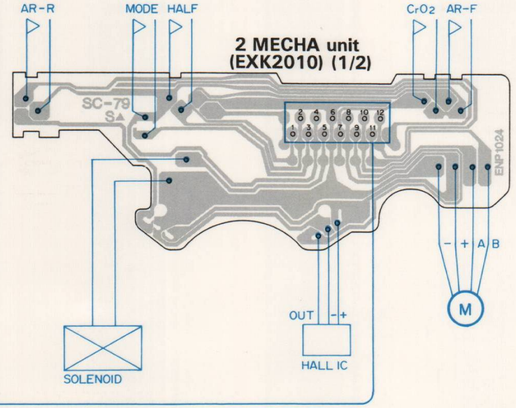

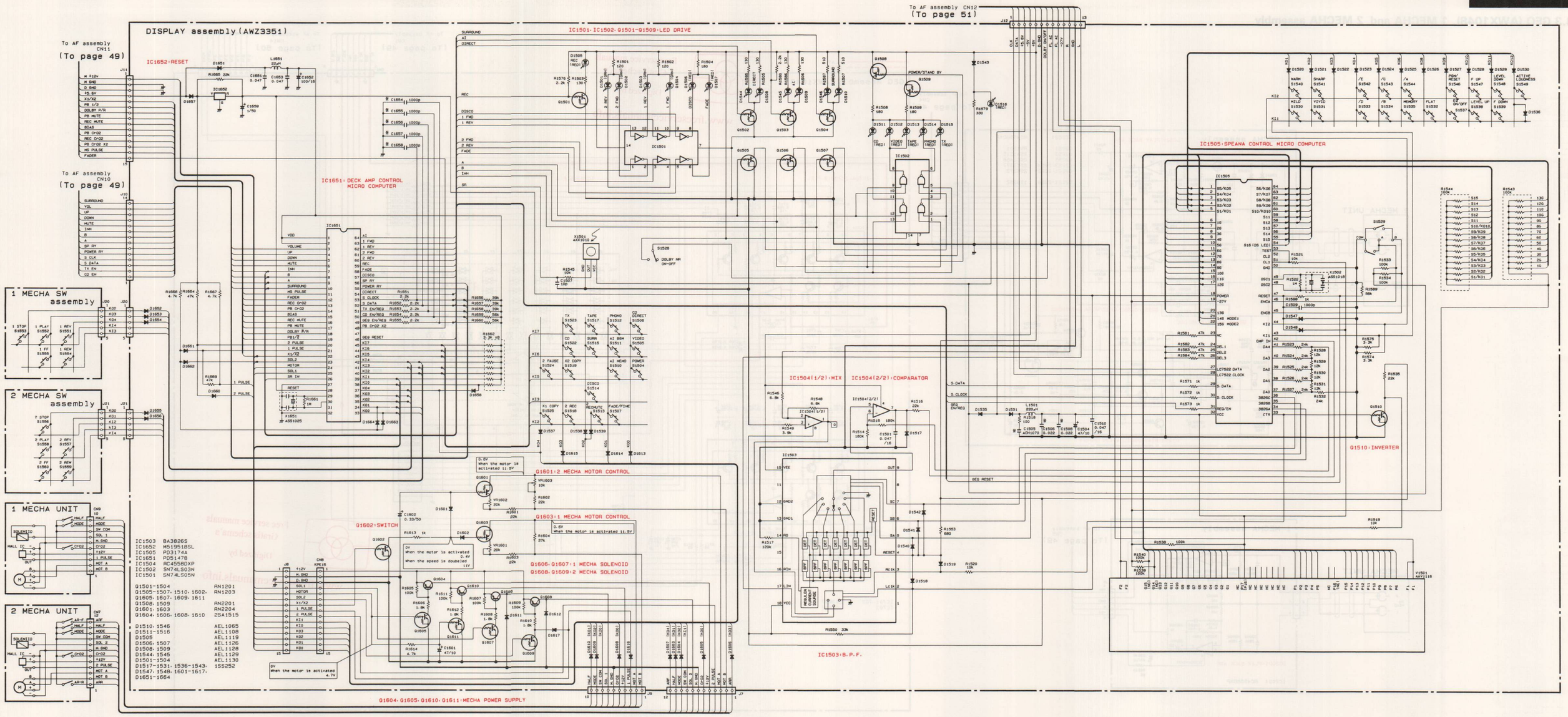

3.3 GEQ (AWX1048), 1 MECHA and 2 MECHA assembly

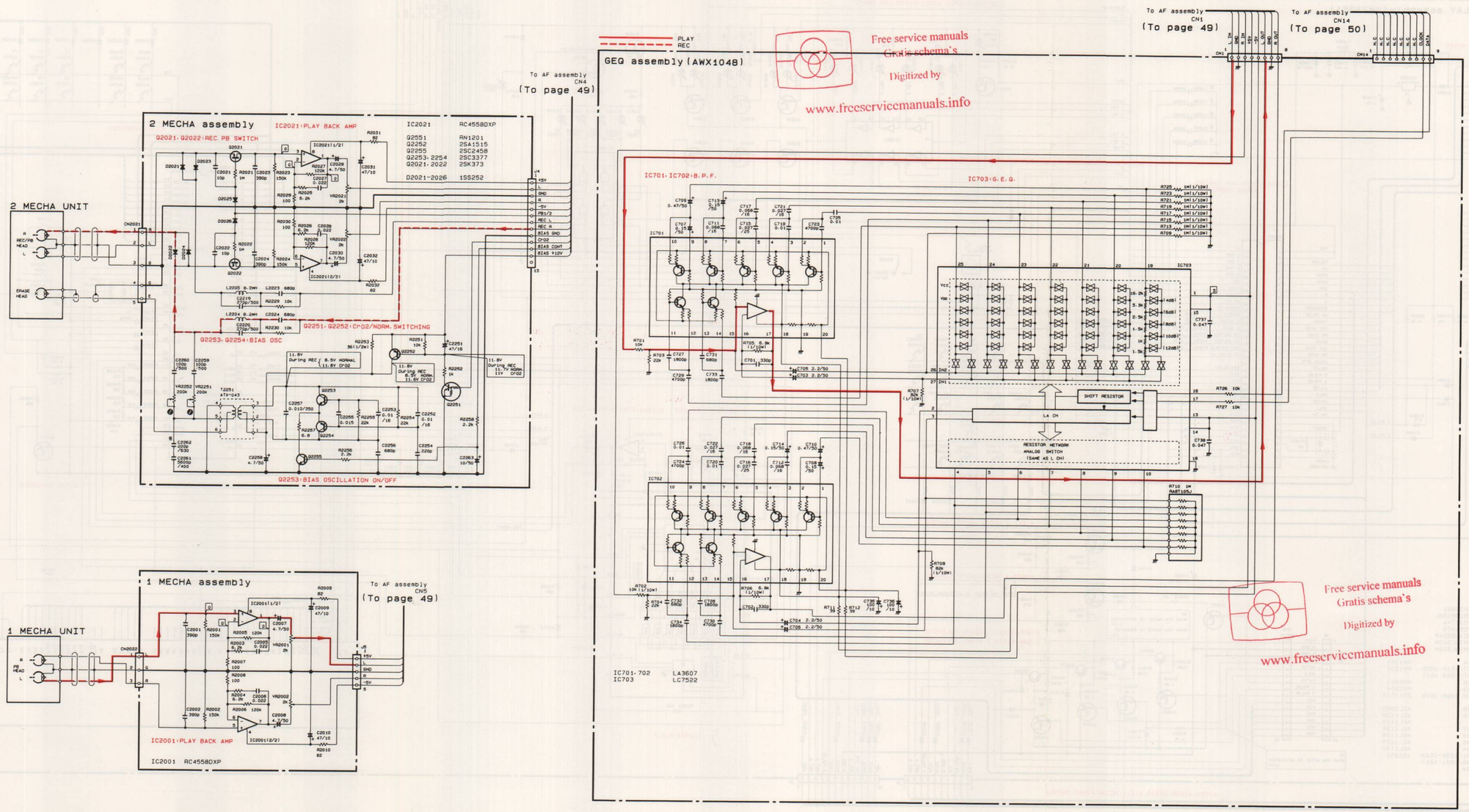

NOTE

1. This P.C.B connection diagram is viewed from the parts mounted side.
2. The parts which have been mounted on the board can be replaced with those shown with the corresponding wiring symbols listed in the following Table.

P.C.B. pattern diagram indication	Corresponding part symbol	Part Name
Q504 (E)	E or E	Transistor
Q215	or	Radiator type transistor
D203	D203	Diode
R237	R237	Resistor
C513		Capacitor (Polarity)
C518		Capacitor (Non-polarity)

Others

P.C.B. pattern diagram indication	Part Name
IC	IC
S	Switch
RY	Relay
L	Coil
F	Filter
VR	Variable resistor or Semi-fixed resistor

3. The capacitor terminal marked with ◎ (double circles) shows negatine termianl.
4. The diode terminal marked with ◎ (double circles) shows cathode side.
5. The transistor terminal to which E is affixed shows the emitter.

GEQ assembly (AWX1048)

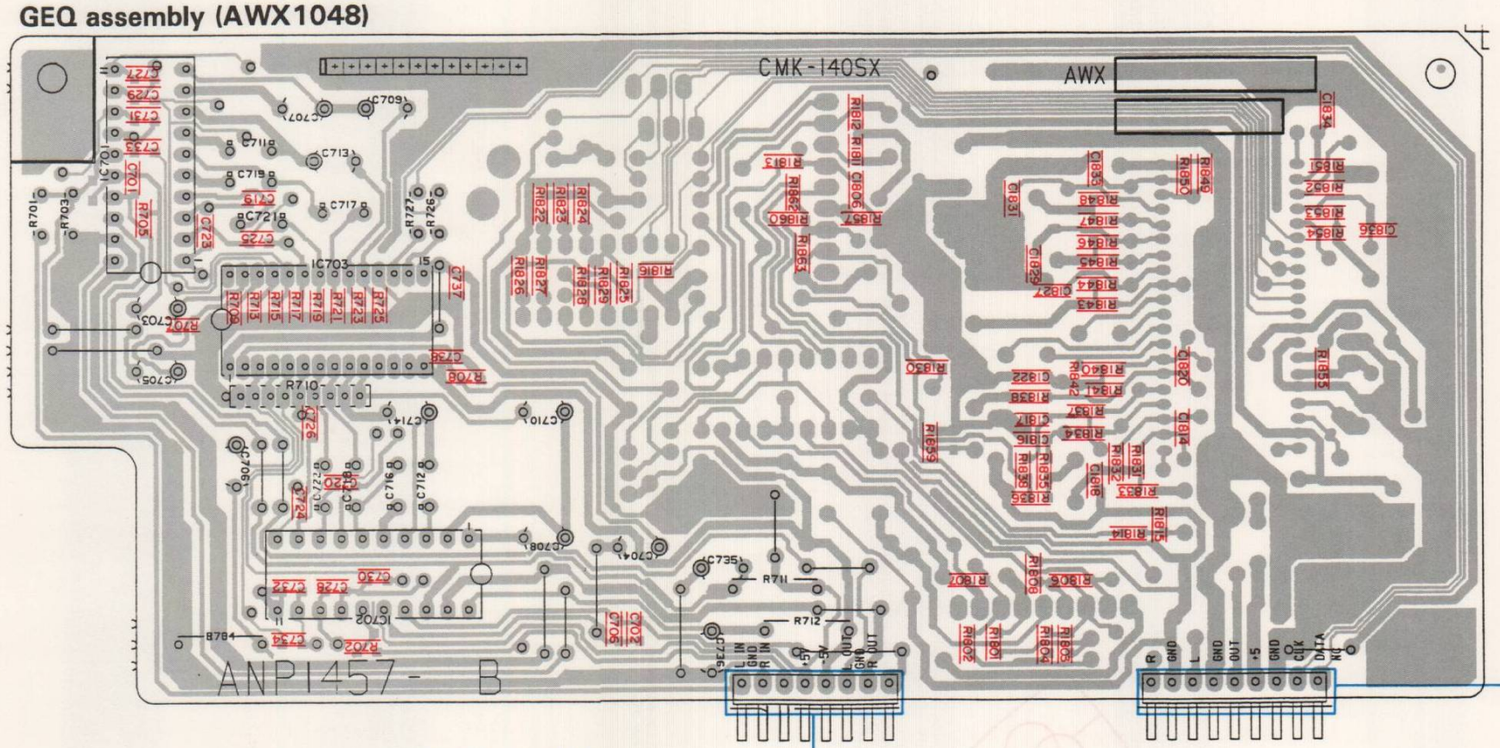

To AF assembly (To page 48)

To AF assembly (To page 48)

To AF assembly CN5 (To page 47)

To AF assembly CN4 (To page 47)

1 MECHA assembly

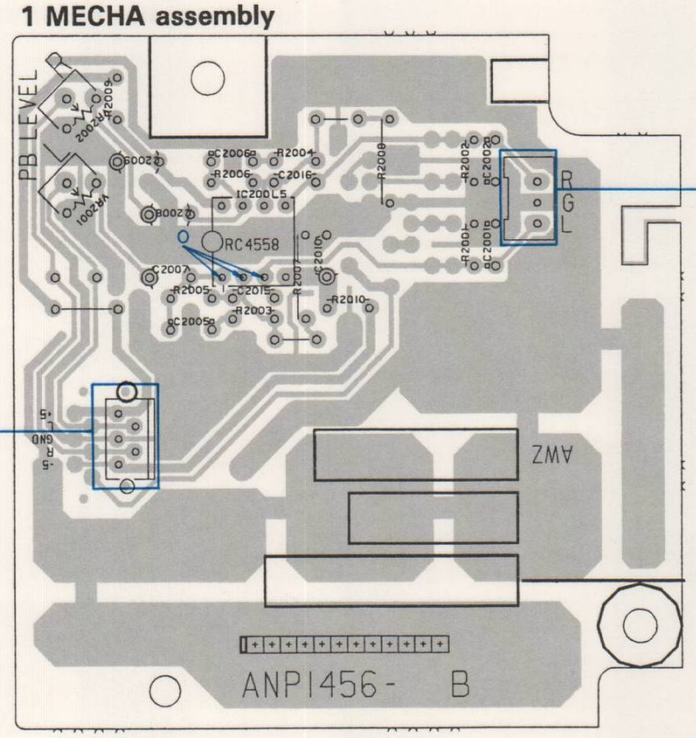

1 MECHA unit (EXK2020) (2/2)

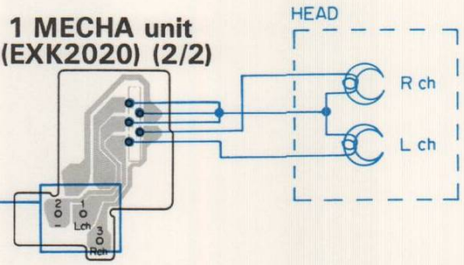

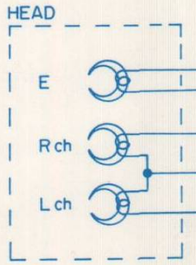

2 MECHA unit (EXK2010) (2/2)

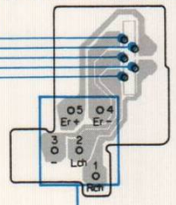

2 MECHA assembly

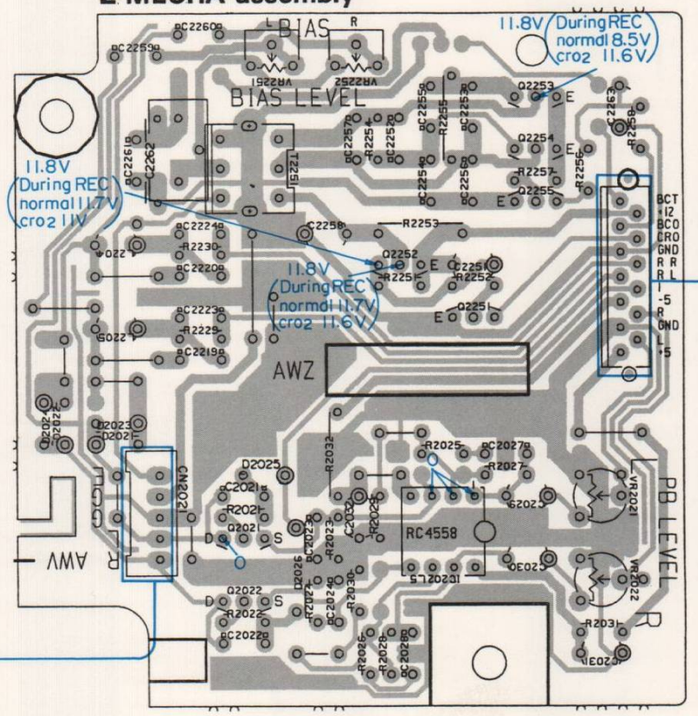

GEO assembly (AWX1048)

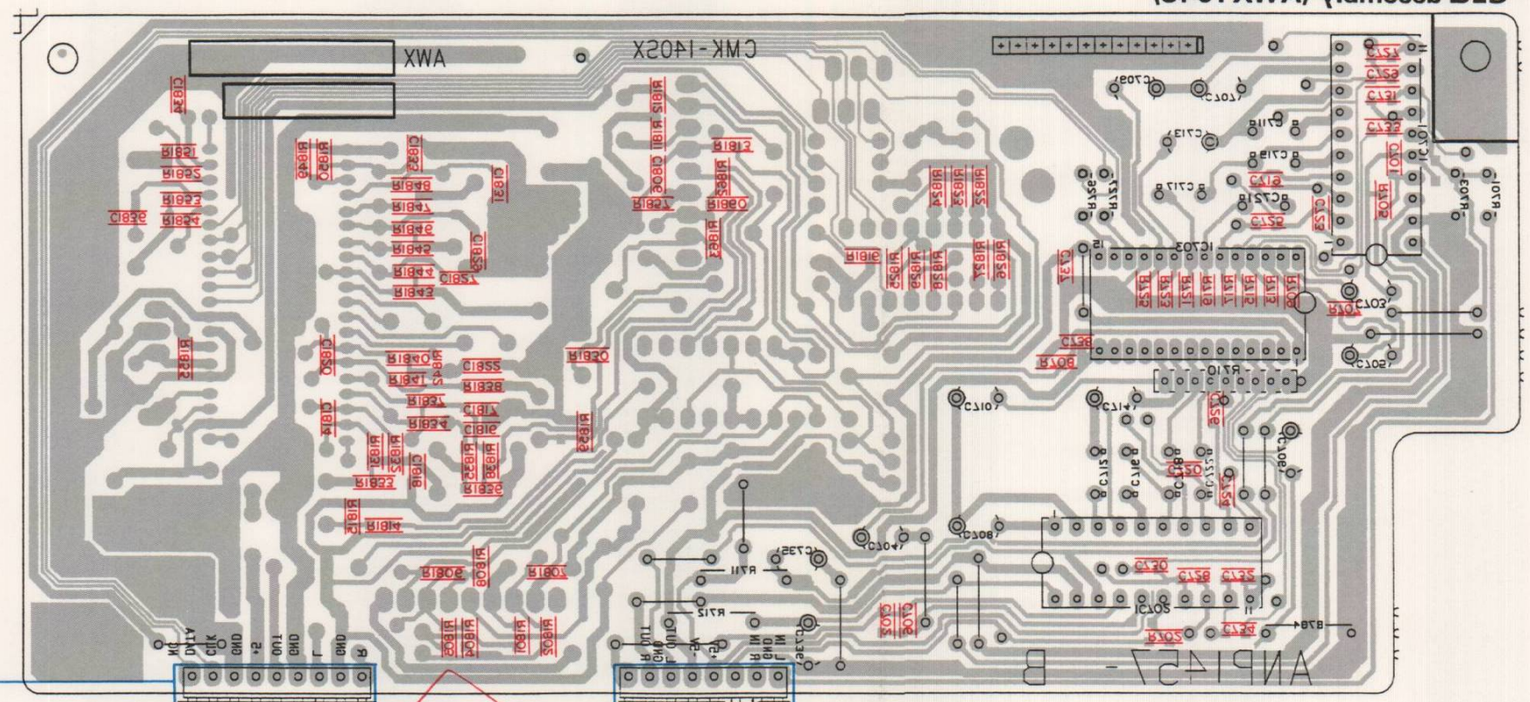

To AF assembly
(To page 48)

To AF assembly
(To page 48)

To AF assembly CN4
(To page 47)

To AF assembly CN5
(To page 47)

2 MECHA assembly

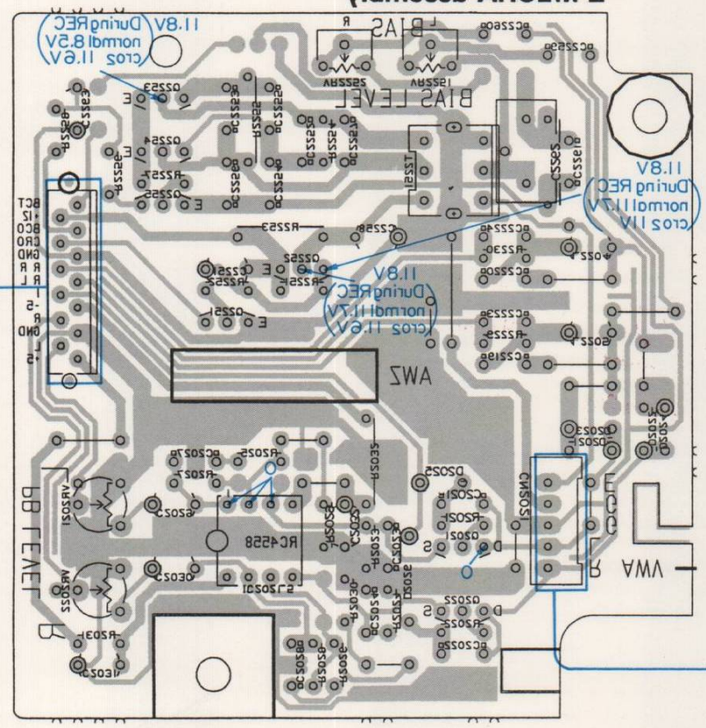

1 MECHA unit (EXK2020) (2/2)

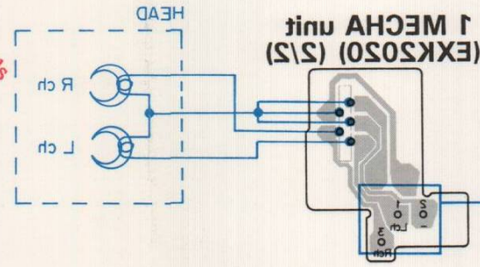

2 MECHA unit (EXK2010) (2/2)

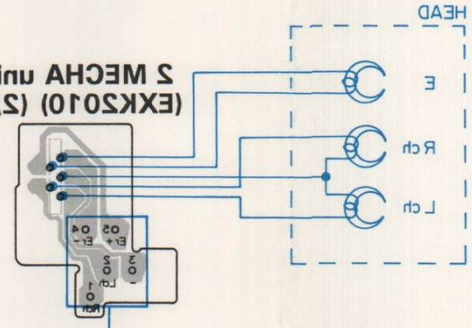

1 MECHA assembly

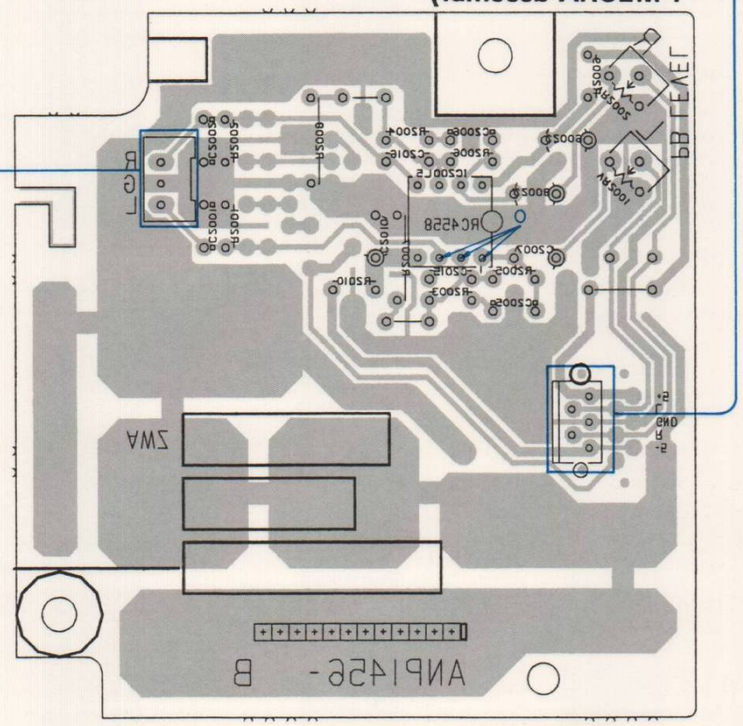

3.4 AF (AWZ3336), HEAD PHONE, VR and MIC BALANCE assembly

NOTE

1. This P.C.B connection diagram is viewed from the parts mounted side.
2. The parts which have been mounted on the board can be replaced with those shown with the corresponding wiring symbols listed in the following Table.

P.C.B. pattern diagram indication	Corresponding part symbol	Part Name
Q504 E C B	E C B or E C B	Transistor
Q215	E C B or E C B	Radiator type transistor
D203	D203	Diode
R237	R237	Resistor
C513	+	Capacitor (Polarity)
C518		Capacitor (Non-polarity)

Others

P.C.B. pattern diagram indication	Part Name
IC	IC
S	Switch
RY	Relay
L	Coil
F	Filter
VR	Variable resistor or Semi-fixed resistor

3. The capactor terminal marked with ◎ (double circles) shows negatine termianl.
4. The diode terminal marked with ◎ (double circles) shows cathode side.
5. The transistor terminal to which E is affixed shows the emitter.

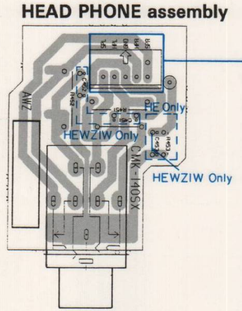

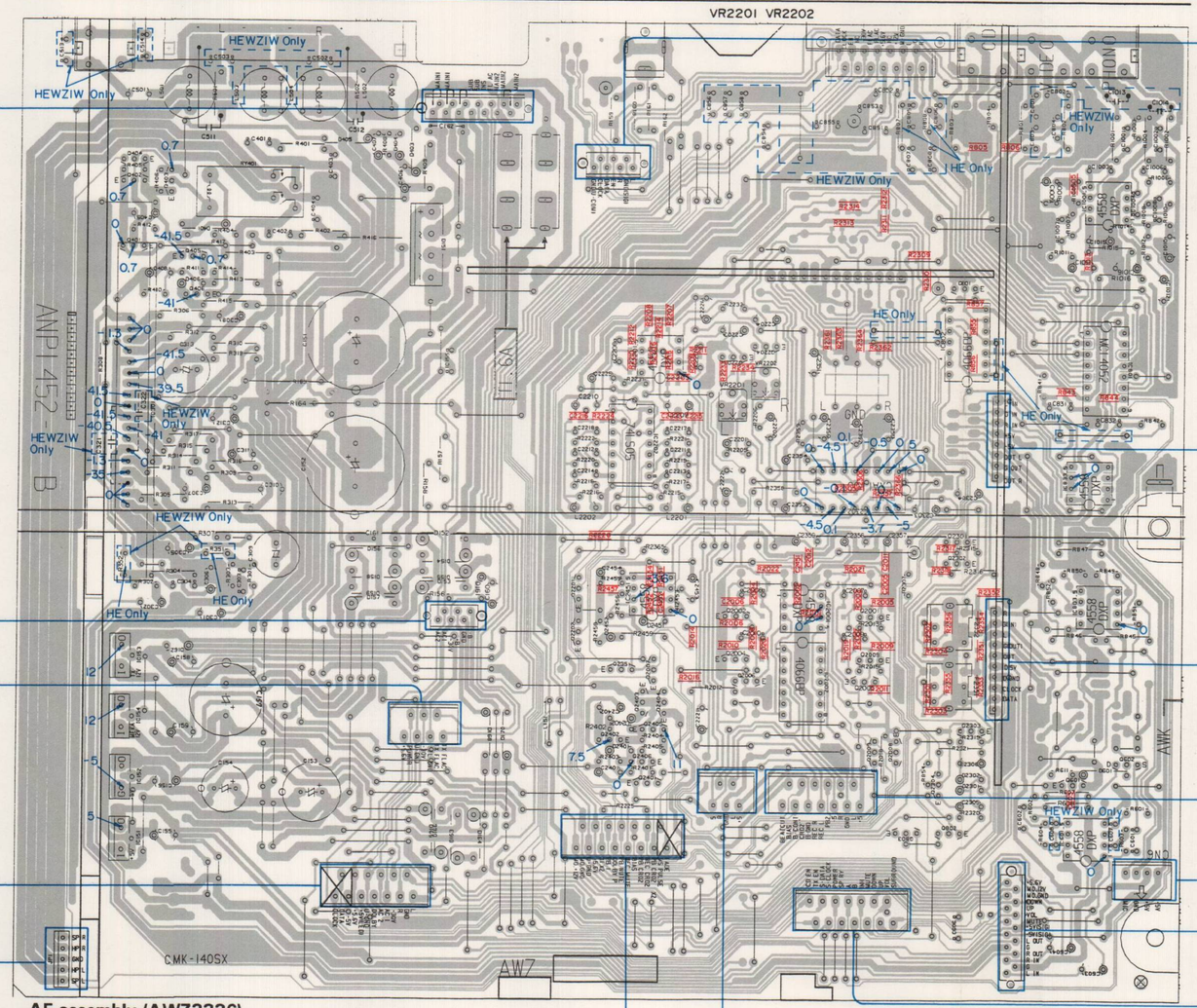

AF assembly (AWZ3336)

To TRANS CONNECT assembly J15 (To page 54)

To MOTHER P.C.B assembly CN381 (To page 62)

To DELAY & GEQ assembly (To page 40)

To DELAY & GEQ assembly (To page 40)

To 2MECHA assembly J4 (To page 40)

To MOTHER P.C.B assembly CN1 (To page 62)

To SUB TRANS assembly J16 (To page 55)

To DISPLAY assembly J12 (To page 31)

To DISPLAY assembly J11 (To page 30)

To 1MECHA assembly J5 (To page 39)

To DISPLAY assembly J10 (To page 30)

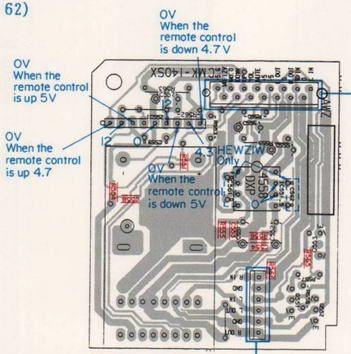

VR assembly

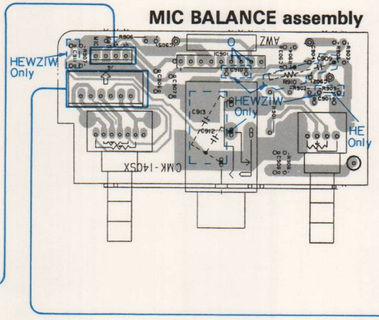

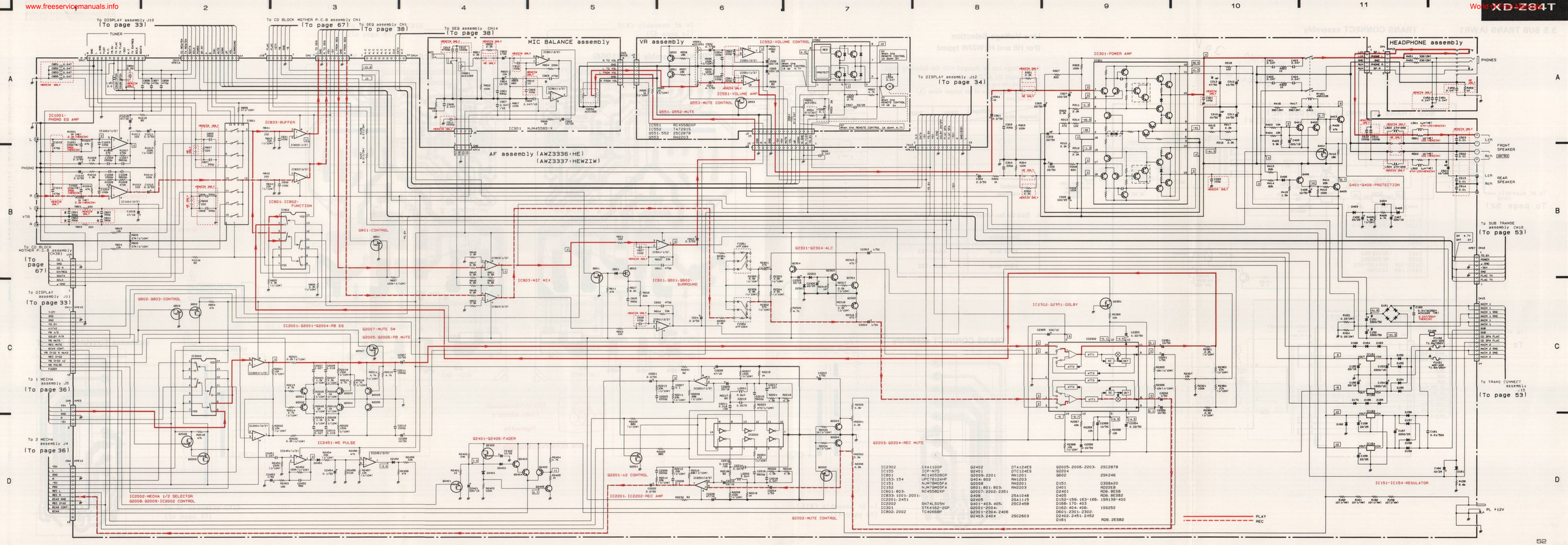

3.5 SUB TRANS (AWR1

TRANS CONNECT assembly

Zener 30V. clipping.

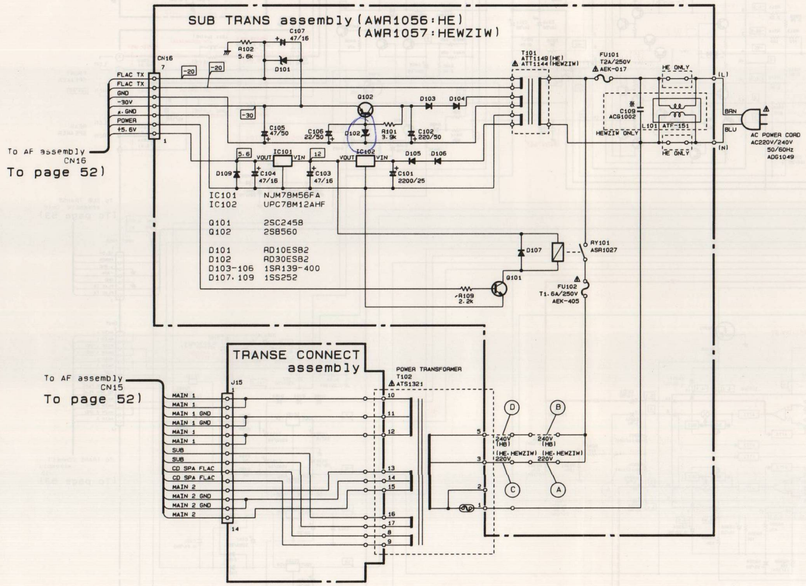

Line Voltage Selection
(For HE and HEWZIW types)

Line voltage can be changed with the following steps.

1. Disconnect the AC Power cord.
2. Remove the top cover.
3. Change the position of the jumper wires Ⓐ – Ⓓ as follows ;

Jumper wire \ Voltage	220V	240V
Ⓐ	○	×
Ⓑ	×	○
Ⓒ	○	×
Ⓓ	×	○

○ : Be needed
× : Be needless

4. Stick the line voltage label on the rear panel.

Description	Part No.
220V level	AAX-193
240V label	AAX-192

NOTE
1. This P.C.B connection diagram is viewed from the parts mounted side.
2. The parts which have been mounted on the board can be replaced with those shown with the corresponding wiring symbols listed in the following Table.

P.C.B. pattern diagram indication	Corresponding part symbol	Part Name
Q504	Q504	Transistor
Q515	Q515	Radiator type transistor
D203	D203	Diode
R237	R237	Resistor
C313	C313	Capacitor (Polarity)
C318	C318	Capacitor (Non-polarity)

Others

P.C.B. pattern diagram indication	Part Name
IC	IC
S	Switch
RY	Relay
L	Coil
F	Filter
VR	Variable resistor or Semi-fixed resistor

3. The capacitor terminal marked with ⊖(double circles) shows negative terminal.
4. The diode terminal marked with ◎(double circles) shows cathode side.
5. The transistor terminal to which E is affixed shows the emitter.

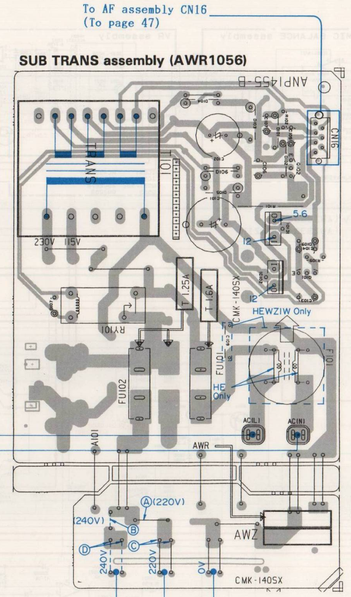

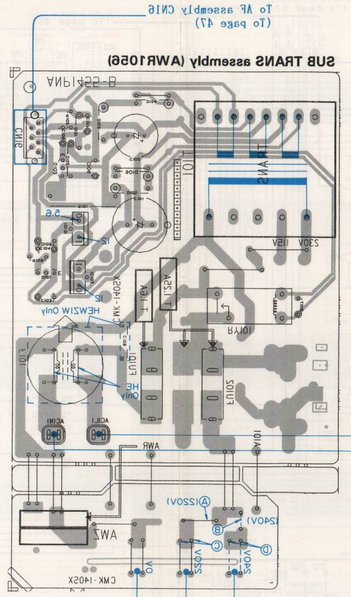

3.6 SCHEMATIC AND P.C.BOARDS CONNECTION DIAGRAM (CD BLOCK)

Note :
See pages 63,64 for the semiconductors without voltage indication.

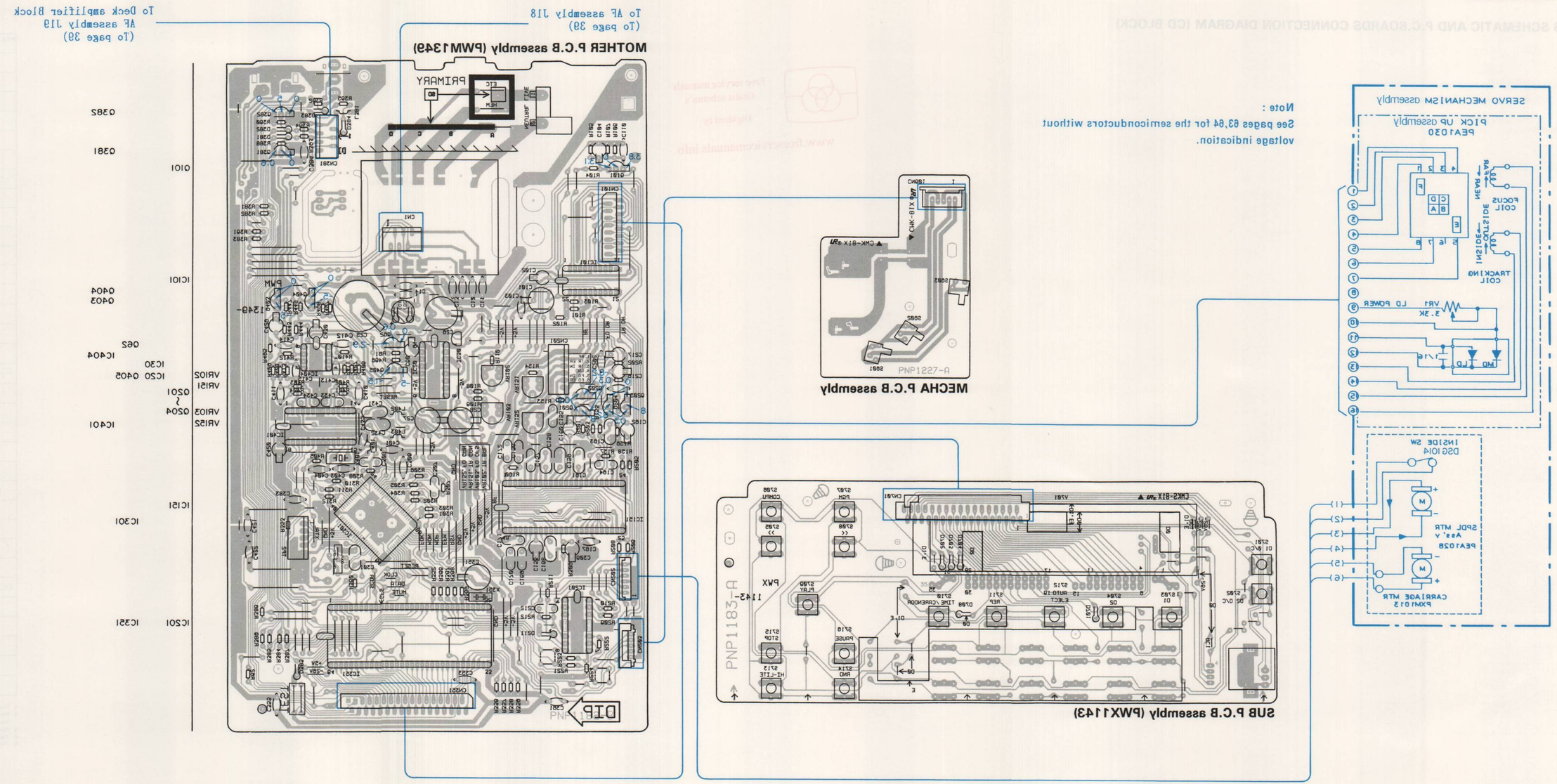

3.6 SCHEMATIC AND P.C.BOARDS CONNECTION DIAGRAM (CD BLOCK)

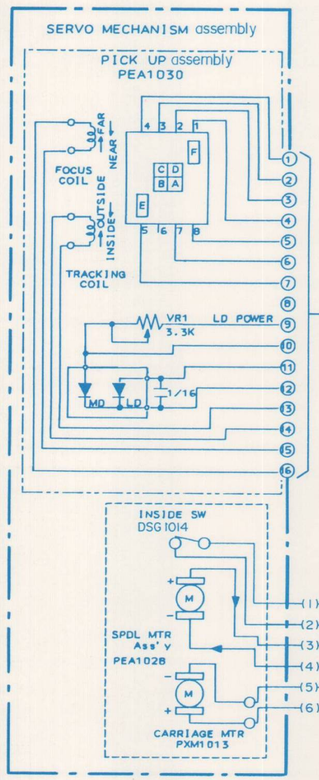

Note :
See pages 63,64 for the semiconductors without voltage indication.

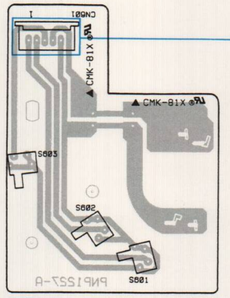

MECHA P.C.B assembly

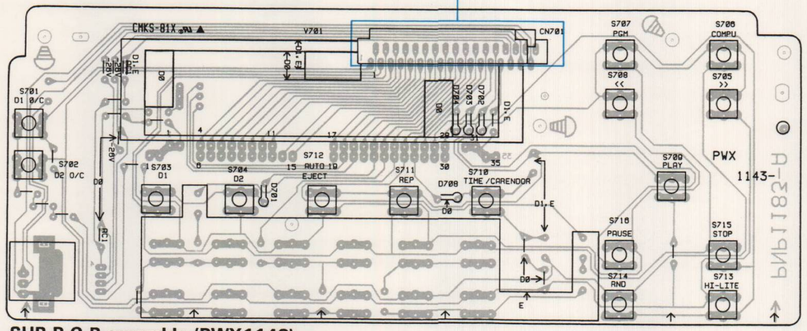

SUB P.C.B assembly (PWX1143)

To AF assembly J18
(To page 39)

To Deck amplifier Block
AF assembly J19
(To page 39)

MOTHER P.C.B assembly (PWM1349)

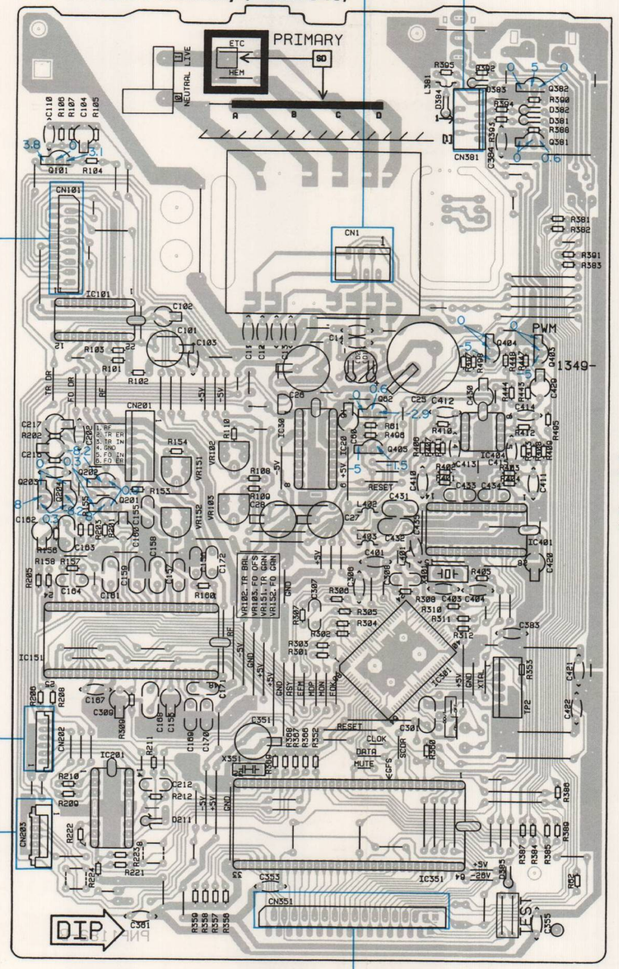

Q382
Q381
Q101
IC101
Q404
Q403
Q62
IC404
IC30
IC20 Q405
VR102
VR151
Q201
Q204
VR103
VR152
IC401
IC151
IC301
IC201
IC351

P.C.B. pattern diagram indication	Corresponding part symbol	Part name
		Transistor
		FET
		Diode
		Zenner diode
		LED
		Varactor
		Tact switch
		Inductor
		Coil
		Transformer
		Filter
		Ceramic capacitor
		Mylar capacitor
		Styrol capacitor
		Electrolytic capacitor (Non polarized)
		Electrolytic capacitor (Noiseless)
		Electrolytic capacitor (Polarized)
		Electrolytic capacitor (Polarized)
		Power capacitor
		Semi-fixed resistor
		Resistor array
		Resistor
		Resonator
		Thermistor

1. This P.C.B. connection diagram is viewed from the parts mounted side.
2. The parts which have been mounted on the board can be replaced with those shown with the corresponding wiring symbols listed in the above Table.
3. The capacitor terminal marked with ▭ shows negative terminal.
4. The diode marked with O shows cathode side.
5. The transistor terminal marked with ▭ shows emitter.

1. RESISTORS:
Indicated in Ω, ¼W, ⅛W, ±5% tolerance unless otherwise noted k : kΩ, M : MΩ, (F) : ±1%, (G) : ±2%, (K) : ±10% (M); ±20% tolerance

2. CAPACITORS:
Indicated in capacity (μF)/voltage (V) unless otherwise noted p : pF
Indication without voltage is 50V except electrolytic capacitor.

3. VOLTAGE, CURRENT:
▭ : DC voltage (V) at play state.
Value in ( ) is DC voltage at rated power.
⇦ mA : DC current at no input signal

4. OTHERS:
➡ : Signal route.
⊘ : Adjusting point.
The ⚠ mark found on some component parts indicates the importance of the safety factor of the part. Therefore, when replacing, be sure to use parts of identical designation.
※ marked capacitors and resistors have parts numbers.

This is the basic schematic diagram, but the actual circuit may vary due to improvements in design.

5.SWITCH

MECHA PCB Assembly

S601 U
S602 S
S603 L

SUB PCB Assembly

S701 O/C D1
S702 O/C D2
S703 D1
S704 D2
S705 ▶▶ (▶▶I)
S706 COMPU
S707 PGM
S708 ◀◀ (I◀◀)
S709 ▶
S710 TIME/CALENDER
S711 REP
S712 AUTO EJECT
S713 HI LITE
S714 RND
S715 STOP
S716 PAUSE

List of semiconductor terminal voltage

Note: All terminal voltages are measured in the PLAY mode.

IC151
CXA1372S

Pin No.	Volts	Pin No.	Volts
1	0	25	−5
2	0	26	5
3	0	27	5
4	0	28	5
5	0	29	5
6	0	30	5
7	0	31	5
8	0	32	0
9	0	33	5
10	0	34	0
11	−1	35	0
12	0	36	N. C
13	0. 2	37	2. 5
14	0	38	2. 5
15	0	39	5
16	5	40	−1. 5
17	0	41	−1. 7
18	0	42	5
19	0	43	−0. 7
20	0.2~0.8	44	−1. 6
21	0	45	0
22	−4	46	0. 8
23	1. 3	47	−5
24	0	48	0

IC101
CXA1471S

Pin No.	Volts	Pin No.	Volts
1	N. C	16	0
2	2. 9	17	0
3	−4. 7	18	0. 8
4	0	19	0
5	0	20	5
6	−5	21	5
7	0	22	N. C
8	0		
9	N. C		
10	0		
11	N. C		
12	N. C		
13	−0. 9		
14	−0. 7		
15	0		

IC20
M5298P

Pin No.	Volts
1	−8. 2
2	N. C
3	−5
4	0
5	−8. 2
6	N. C
7	N. C
8	N. C
9	5
10	N. C
11	0. 7
12	5
13	8
14	5
15	1. 2
16	8

IC201
LA6520

Pin No.	Volts
1	0
2	0
3	−0. 7
4	0
5	0
6	0
7	1. 7
8	1. 7
9	0. 7
10	0
11	0
12	8
FIN	−8. 2

IC351
PD4305A

Pin No.	Volts	Pin No.	Volts	Pin No.	Volts	Pin No.	Volts
1	−10	17	1. 8	33	0	49	−22
2	−13. 5	18	0	34	5	50	0
3	−5. 5	19	5	35	0	51	5
4	−10. 5	20	0. 5	36	0	52	0
5	2. 1	21	5	37	0	53	0
6	4. 8	22	0	38	0	54	−26
7	4. 5	23	0	39	5	55	−26
8	3. 9	24	0	40	−22	56	−26
9	2. 3	25	5	41	−22	57	−5
10	0	26	5	42	−22	58	−9
11	5	27	5	43	−22	59	−11
12	2. 5	28	5	44	−22	60	5
13	5	29	5	45	−22	61	−2. 5
14	5	30	2. 5	46	−22	62	2
15	5	31	2. 5	47	−22	63	−2. 5
16	0	32	0	48	−22	64	5

IC404
NJM4558D−D

Pin No.	Volts
1	−0. 2
2	1
3	1
4	−5
5	1
6	1
7	−0. 2
8	5

IC401
TC9237N

Pin No.	Volts
1	5
2	0
3	5
4	5. 5
5	2. 5
6	2. 5
7	0
8	0
9	2. 5
10	2. 5
11	5
12	0
13	N. C
14	0
15	0
16	1. 9
17	1. 9
18	5
19	2
20	0
21	0
22	0
23	0
24	5
25	2. 5
26	2. 5
27	2. 5
28	5

IC301
CXD2500Q

Pin No.	Volts	Pin No.	Volts	Pin No.	Volts
1	5	31	N. C	61	N. C
2	N. C	32	2. 5	62	N. C
3	5	33	5	63	0
4	2. 6	34	2. 5	64	N. C
5	N. C	35	2. 5	65	0
6	5	36	N. C	66	3.3~4.6
7	N. C	37	N. C	67	5
8	N. C	38	N. C	68	0
9	0	39	N. C	69	2.1~3
10	0	40	N. C	70	5
11	N. C	41	N. C	71	5
12	0	42	5	72	5
13	N. C	43	N. C	73	5
14	N. C	44	N. C	74	5
15	N. C	45	N. C	75	5
16	N. C	46	4. 4	76	0
17	0	47	0	77	5
18	2. 5	48	0	78	5
19	2. 4	49	0~0.3	79	5
20	2. 4	50	N. C	80	0
21	0	51	N. C		
22	2. 5	52	0		
23	5	53	2. 5		
24	2. 5	54	N. C		
25	N. C	55	0		
26	0	56	N. C		
27	2. 5	57	N. C		
28	0	58	N. C		
29	N. C	59	0		
30	0	60	N. C		

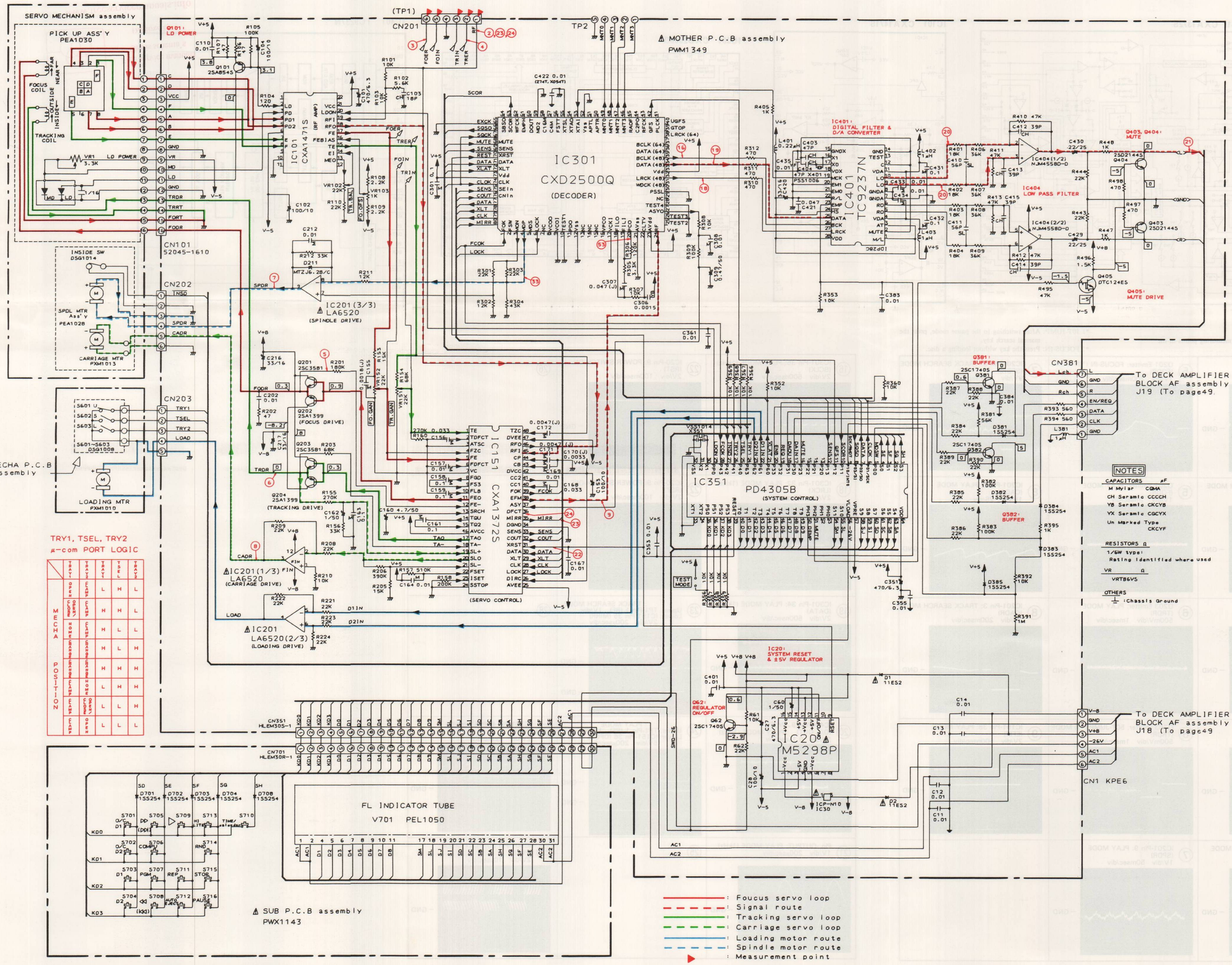

• IC BLOCK

IC151 CXA1372S

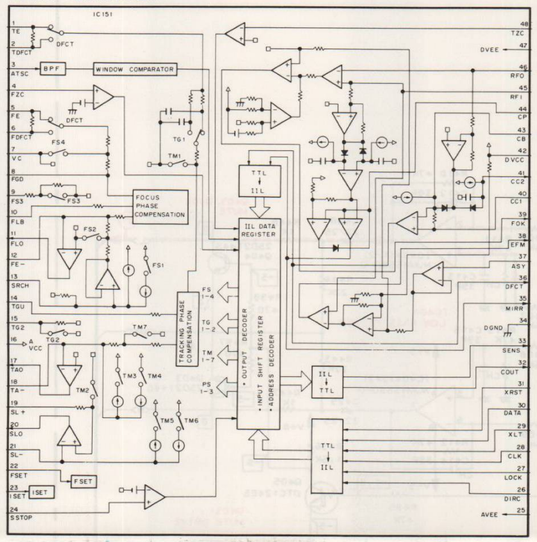

IC101 CXA1471S

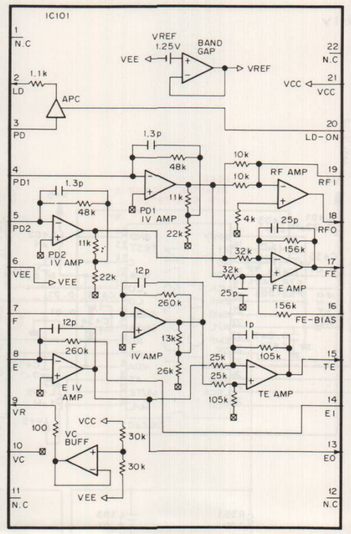

IC301 CXD2500Q

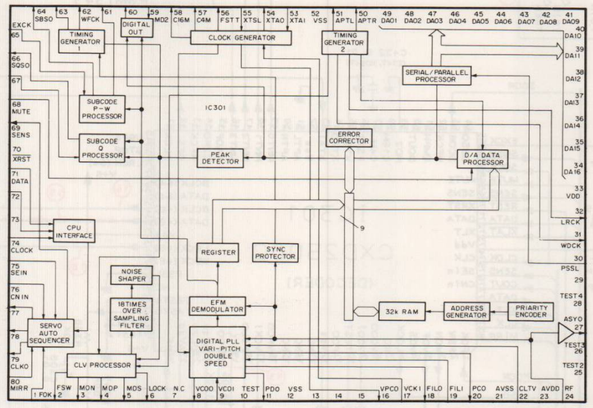

IC401 TC9237N

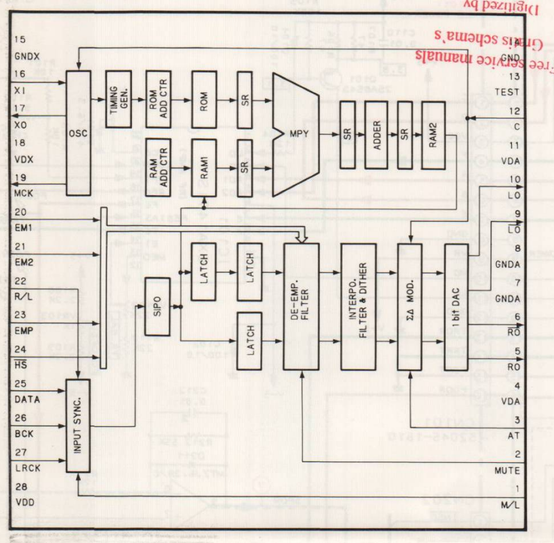

Wave Forms

Note: The encircled numbers denote measuring points in the schematic diagram.

*1 50T-JUMP: After switching to the pause mode, press the manual search key.
*2 FOCUS-IN: Press the key without loading a disc.

② TP1-Pin 1: PLAY MODE (RF) 500mV/div 500nsec/div 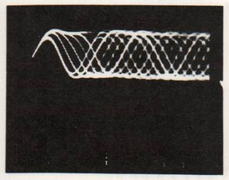 – GND	⑤ Q201 Emitter: FOCUS-IN (*2) MODE (FODR) 1V/div 200msec/div 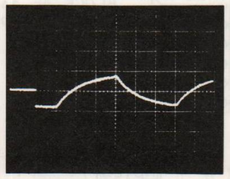 – GND	⑦ IC201-Pin 9: TRACK SEARCH MODE (SPDR) 2V/div 50msec/div 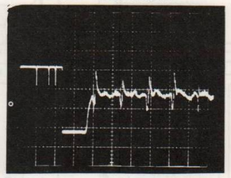 – GND
② TP1-Pin 1: TRACK SEARCH MODE (RF) 500mV/div 200μsec/div 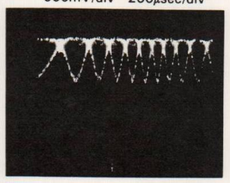 – GND	⑤ Q201 Emitter: PLAY MODE (FODR) 1V/div 1msec/div 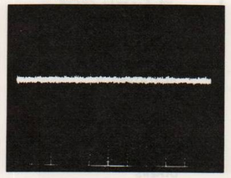 – GND	⑧ IC201-Pin 3: PLAY MODE (CADR) 1V/div 2S/div 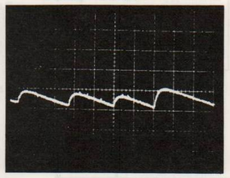 – GND
③ TP1-Pin 6: PLAY MODE (FOER) 100mV/div 10msec/div 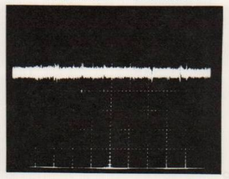 – GND	⑥ Q203 Emitter: PLAY MODE (TRDR) 500mV/div 1msec/div 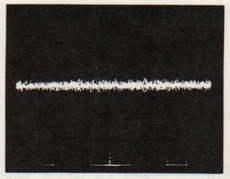 – GND	⑧ IC201-Pin 3: TRACK SEARCH MODE (CADR) 2V/div 200msec/div 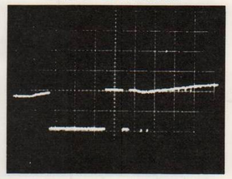 – GND
④ TP1-Pin 2: PLAY MODE (TRER) 1V/div 10msec/div 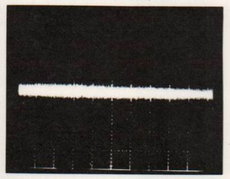 – GND	⑥ Q203 Emitter: 50T-JUMP (*1) MODE (TRDR) 500mV/div 1msec/div 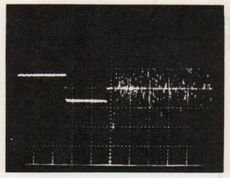 – GND	⑨ IC151-Pin 38: PLAY MODE (EFM) 2V/div 500nsec/div 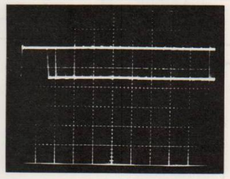 – GND
④ TP1-Pin 2: 50T-JUMP (*1) MODE (TRER) 1V/div 1msec/div 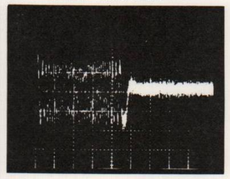 – GND	⑦ IC201-Pin 9: PLAY MODE (SPDR) 1V/div 50msec/div 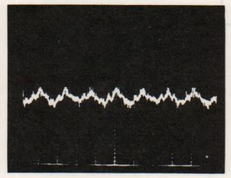 – GND	

⑯ IC301-Pin 35: PLAY MODE (1kHz) (BCLK) 2V/div 500nsec/div 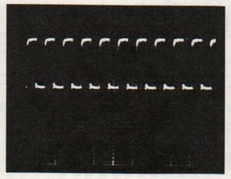 – GND	㉒ IC20-Pin 9: POWER SWITCH-ON (RST) 2V/div 100msec/div 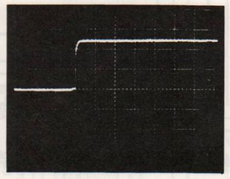 – GND	㉖
⑱ IC301-Pin 32: PLAY MODE (1kHz) (LRCK) 2V/div 10μsec/div 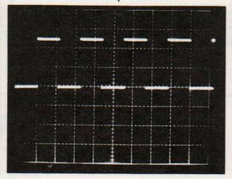 – GND	㉒ IC20-Pin 9: POWER SWITCH-OFF (RST) 2V/div 100msec/div 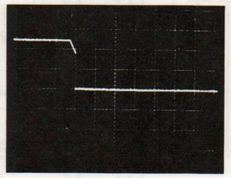 – GND	㉗
⑲ IC301-Pin 34: PLAY MODE (1kHz) (DATA) 2V/div 500nsec/div 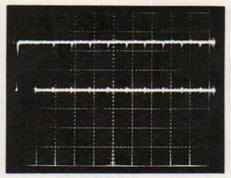 – GND	㉓ : TRACK SEARCH MODE Upper: TP1-Pin 1 (RF) 1V/div Lower: IC151-Pin 35 (MIRR) 2V/div 200μsec/div 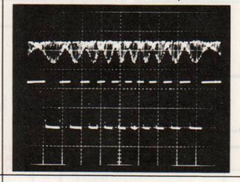 – GND – GND	㉘
⑳ IC401-Pin 9, Pin 10 (D/A OUT) : PLAY MODE (1kHz) 2V/div 0.1μsec/div 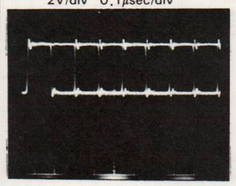 – GND	㉔ : PLAY MODE Upper: TP1-Pin 1 (RF) 1V/div Lower: IC151-Pin 36 (DFCT) 5V/div 200μsec/div 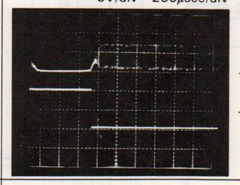 – GND – GND	㉝ IC301-Pin 4: PLAY MODE (MDP) 2V/div 2μsec/div 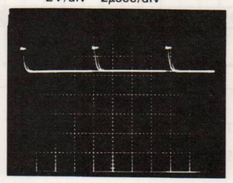 – GND
㉑ Pin -OUTPUT: PLAY MODE (1kHz) 1V/div 200μsec/div 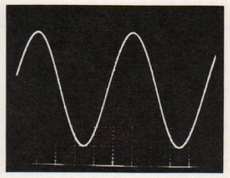 – GND	㉕	㊸ IC301-Pin 20: PLAY MODE (PCO) 2V/div 10μsec/div 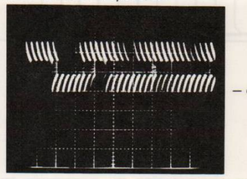 – GND

4. P.C.B 's PARTS LIST

NOTES:

- *Parts without part number cannot be supplied.*
- *Parts marked by "◉" are not always kept in stock. Their delivery time may be longer than usual or they may be unavailable.*
- *The ⚠ mark found on some component parts indicates the importance of the safety factor of the part. Therefore, when replacing, be sure to use parts of identical designation.*
- *When ordering resistors, first convert resistance values into code form as shown in the following examples.*

Ex. 1 *When there are 2 effective digits (any digit apart from 0), such as 560 ohm and 47k ohm (tolerance is shown by J = 5%, and K = 10%).*

560Ω	*56 × 10¹*	*561*	*RD1/4PS 5 6 1 J*
47kΩ	*47 × 10³*	*473*	*RD1/4PS 4 7 3 J*
0.5Ω	*0R5*		*RN2H 0 R 5 K*
1Ω	*010*		*RS1P 0 1 0 K*

Ex. 2 *When there are 3 effective digits (such as in high precision metal film resistors).*

5.62kΩ	*562 × 10¹*	*5621*	*RN1/4SR 5 6 2 1 F*

Mark No.	Description	Parts No.
AF assembly (AWZ3336)		
SEMICONDUCTORS		
IC1001	OP−AMP IC	RC4558DXP
IC151	REGULATOR IC	NJM78M05FA
IC152	REGULATOR IC	NJM79M05FA
IC153, 154	REGULATOR IC	UPC7812AHF
IC155	IC PROTECTOR	ICP−N75
IC2001	OP−AMP IC	RC4558DXP
IC2002	LOGIC IC	TC4066BP
IC2201	OP−AMP IC	RC4558DXP
IC2202	LOGIC IC	SN74LS05N
IC2302	DOLBY−B IC	CXA1100P
IC2451	OP−AMP IC	RC4558DXP
IC301	AUDIO IC	STK4162−2GP
IC601	OP−AMP IC	RC4558DXP
IC801	LOGIC IC	MC14052BCP
IC802	LOGIC IC	TC4066BP
IC803, 833	OP−AMP IC	RC4558DXP
Q2001−2204	TRANSISTOR	2SC2458
Q2005, 2006	TRANSISTOR	2SC2878
Q2007	TRANSISTOR	RN2203
Q2008	TRANSISTOR	RN2201
Q2009, 2201	TRANSISTOR	RN1201
Q2202	TRANSISTOR	RN2203
Q2203, 2204	TRANSISTOR	2SC2878
Q2301−2304	TRANSISTOR	2SC2458
Q2351	TRANSISTOR	RN2203
Q2401	TRANSISTOR	DTC124ES
Q2402	TRANSISTOR	DTA124ES
Q2403, 2404	TRANSISTOR	2SC2603
Q2405	TRANSISTOR	2SA1115
Q2406	TRANSISTOR	2SC2458
Q401−403	TRANSISTOR	2SC2458
Q404	TRANSISTOR	RN1203
Q405	TRANSISTOR	2SC2458
Q406	TRANSISTOR	2SA1048
Q601	TRANSISTOR	RN2203
Q602	N−FET	2SK246
Q801	TRANSISTOR	RN2203
Q802	TRANSISTOR	RN1203
Q803	TRANSISTOR	RN2203
D151	DIODE	D3SBA20 (A)
D152−159	DIODE	1SR139−400
D161	ZENER DIODE	RD6.2ESB2
D162	DIODE	1SS252
D163−166	DIODE	1SR139−400
D168, 170	DIODE	1SR139−400
D2301, 2302	DIODE	1SS252
D2401	ZENER DIODE	RD6.8ESB
D2402	DIODE	1SS252
D2451, 2452	DIODE	1SS252
D401	ZENER DIODE	RD22EB
D403	DIODE	1SR139−400
D404	DIODE	1SS252
D405	ZENER DIODE	RD6.8ESB2
D406, 601	DIODE	1SS252
RELAY		
RY401	RELAY	ASR1035
COILS		
F2351, 2352	DOLBY FILTER	ATF1064
L151	AXIAL INDUCTOR	LAU2R2K
L2201, 2202	INDUCTOR	LTA392J
L501, 502	COIL	ATH−133

Mark No.	Description	Parts No.
CAPACITORS		
C1001 – 1004	CERAMIC CAPACITOR	CCCSL101J50
C1005	CERAMIC CAPACITOR	CKSQYB152K50
C1006	CERAMIC CAPACITOR	CKDYB152K50
C1007, 1008	CERAMIC CAPACITOR	CKDYB562K50
C1009 – 1012	ELECTR.CAPACITOR	CEAS2R2M50
C1015, 1016	ELECTR.CAPACITOR	CEAS470M16
C151, 152	ELECTROLYTIC CAPACIT (3300/50)	ACH1017
C153	ELECTR.CAPACITOR	CEAS222M16
C154	ELECTR.CAPACITOR	CEAS102M16
C155, 156	ELECTR.CAPACITOR	CEAS220M16
C157	ELECTR.CAPACITOR	CEAS222M25
C158, 159	ELECTR.CAPACITOR	CEAS220M25
C160	ELECTR.CAPACITOR	CEAS100M25
C161	CERAMIC CAPACITOR	CKDYB103K500
C162	CKA (0.01/AC250V)	ACG1005
C2007, 2008	MYLOR FILM CAPACITOR	CQMA273J50
C2009, 2010	MYLOR FILM CAPACITOR	CQMA183J50
C2011, 2012	CERAMIC CAPACITOR	CKSQYB152K50
C2201 – 2204	ELECTR.CAPACITOR	CEAS010M50
C2205, 2206	CHIP CAPACITOR	CKSQYB222K50
C2207, 2208	AUDIO FILM CAPACITOR	CFTXA104J50
C2209, 2210	ELECTR.CAPACITOR	CEAS330M16
C2211, 2212	CERAMIC CAPACITOR	CKCYX183M25
C2213, 2214	MYLOR FILM CAPACITOR	CQMA752J50
C2215, 2216	CERAMIC CAPACITOR	CKSQYB562K50
C2217, 2218	MYLOR FILM CAPACITOR	CQMA273J50
C2221, 2222	ELECTR.CAPACITOR	CEAS2R2M50
C2225, 2226	ELECTR.CAPACITOR	CEAS470M16
C2303, 2304	ELECTR.CAPACITOR	CEAS010M50
C2305	ELECTR.CAPACITOR	CEAS220M16
C2306	ELECTR.CAPACITOR	CEAS220M25
C2351, 2352	ELECTR.CAPACITOR	CEAS100M50
C2353, 2354	ELECTR.CAPACITOR	CEASR22M50
C2355	ELECTR.CAPACITOR	CEAS101M10
C2356 – 2359	ELECTR.CAPACITOR	CEAS100M50
C2401	ELECTR.CAPACITOR	CEAS331M16
C2402	ELECTR.CAPACITOR	CEAS100M25
C2451	CERAMIC CAPACITOR	CKSQYB473K50
C2452	CERAMIC CAPACITOR	CCSQCH560J50
C2453	ELECTR.CAPACITOR	CEAS010M50
C2454	ELECTR.CAPACITOR	CEAS0R1M50
C301, 302	ELECTR.CAPACITOR	CEAS2R2M50
C303, 304	CERAMIC CAPACITOR	CKMYB331K50
C305, 306	ELECTR.CAPACITOR	CEAS220M50
C307, 308	ELECTR.CAPACITOR	CEAS101M25
C309	ELECTR.CAPACITOR	CEANP220M50
C310	ELECTR.CAPACITOR	CEANP100M50
C311, 312	ELECTR.CAPACITOR	CEAS100M50
C313	ELECTROLYTIC CAPACIT (47/50)	ACH1143
C401 – 404	CERAMIC CAPACITOR	CKCYF473Z50
C405	ELECTR.CAPACITOR	CEAS221M16
C406	ELECTR.CAPACITOR	CEAS330M25
C407	ELECTR.CAPACITOR	CEAS221M16
C408	ELECTR.CAPACITOR	CEAS100M50
C501	ELECTR.CAPACITOR (10/100)	ACH1144
C601, 602	CERAMIC CAPACITOR	CKMYB471K50
C603, 604	ELECTR.CAPACITOR	CEAS2R2M50
C605	CERAMIC CAPACITOR	CKSQYB681K50
C606	CERAMIC CAPACITOR	CKCYF473Z50
C831, 832	CERAMIC CAPACITOR	CCCSL101J50
C856 – 858	CERAMIC CAPACITOR	CKDYB471K50
RESISTORS		
VR2201, 2202	VR	VRTB6VS222
R1013	CHIP RESISTOR	RS1/10S104J
R157, 158	CARBON FILM RESISTOR	RD1/2PM8R2J
R159 – 162	CARBON FILM RESISTOR	RD1/4PM100J
R163, 164	METAL OXIDE RESISTOR	RS2LMFR22J
R2001, 2002	CHIP RESISTOR	RS1/10S103J
R2003, 2004	CHIP RESISTOR	RS1/10S122J
R2005, 2006	CHIP RESISTOR	RS1/10S105J
R2007, 2008	CHIP RESISTOR	RS1/10S332J
R2009, 2010	CHIP RESISTOR	RS1/10S105J
R2011, 2014	CHIP RESISTOR	RS1/10S472J
R2016	CHIP RESISTOR	RS1/10S472J
R2019, 2020	CHIP RESISTOR	RS1/10S154J
R2021, 2022	CHIP RESISTOR	RS1/10S222J
R2207, 2208	CHIP RESISTOR	RS1/10S104J
R2209, 2210	CHIP RESISTOR	RS1/10S683J
R2211, 2212	CHIP RESISTOR	RS1/10S223J
R2213, 2214	CHIP RESISTOR	RS1/10S333J
R2223, 2224	CHIP RESISTOR	RS1/10S471J
R2226	CHIP RESISTOR	RS1/10S681J
R2233, 2234	CHIP RESISTOR	RS1/10S102J
R2301, 2302	CHIP RESISTOR	RS1/10S273J
R2303, 2304	CHIP RESISTOR	RS1/10S362J
R2305, 2306	CHIP RESISTOR	RS1/10S103J
R2317, 2318	CHIP RESISTOR	RS1/10S222J
R2351, 2352	CHIP RESISTOR	RS1/10S242J
R2355, 2356	CHIP RESISTOR	RS1/10S682J
R2357	CHIP RESISTOR	RS1/10S433J
R2361, 2362	CHIP RESISTOR	RS1/10S222J
R2363, 2364	CHIP RESISTOR	RS1/10S273J
R2366	CHIP RESISTOR	RS1/10S103J

Mark No.	Description	Parts No.
R2451	CHIP RESISTOR	RS1/10S224J
R2452	CHIP RESISTOR	RS1/10S154J
R2454	CHIP RESISTOR	RS1/10S223J
R2457	CHIP RESISTOR	RS1/10S123J
R305, 306	CARBON FILM RESISTOR	RD1/4PM104J
R309–312	CARBON FILM RESISTOR	RD1/4PM222J
R313	CARBON FILM RESISTOR	RD1/4PMFL471J
R314	CARBON FILM RESISTOR	RD1/4PMFL101J
R315	CARBON FILM RESISTOR	RD1/4PM102J
R316, 317	CARBON FILM RESISTOR	RD1/4PMFL222J
R318	CARBON FILM RESISTOR	RD1/4PMFL101J
R401, 402	CARBON FILM RESISTOR	RD1/4PM100J
R409	CARBON FILM RESISTOR	RD1/2PM182J
R416	METAL OXIDE RESISTOR	RS2LMF331J
R417	METAL OXIDE RESISTOR	RS2LMF391J
R501, 502	CARBON FILM RESISTOR	RD1/4PMFL100J
R805, 806	CHIP RESISTOR	RS1/10S273J
R843, 844	CHIP RESISTOR	RS1/10S223J
R855, 856	CHIP RESISTOR	RS1/10S332J
R857	CHIP RESISTOR	RS1/10S104J
R858	CHIP RESISTOR	RS1/10S000J
	Other resistors	RD1/8PM□□□J

OTHERS

CN10	CONNECTOR (14P)	KPE14
CN11	CONNECTOR (15P)	KPE15
CN12	CONNECTOR (13P)	KPE13
CN16	CONNECTOR (7P)	KPE7
CN4	CONNECTOR (13P)	KPE13
CN5	CONNECTOR (5P)	KPE5
CN6	CONNECTOR (4P)	KPC4
	PIN JACK (4P)	AKB1124
	PIN JACK (2P)	AKB1146
	SPEAKER TERMINAL 4–P	AKE–109
	JACK	AKN–203
	SOCKET (14P)	AKP1048
	GEQ assembly	AWX1048

⊙ GEQ assembly (AWX1048)

The GEQ assembly (AWX1048) is a part of AF assembly (AWZ3336).

SEMICONDUCTORS

Mark No.	Description	Parts No.
IC701, 702	GEQ IC	LA3607
IC703	GEQ EVR IC	LC7522

CAPACITORS

Mark No.	Description	Parts No.
C701, 702	CERAMIC CAPACITOR	CCSQSL331J50
C703–706	ELECTR.CAPACITOR	CEAS2R2M50
C707, 708	ELECTROLYTIC CAPACIT	CEASR15M50
C709, 710	ELECTR.CAPACITOR	CEASR47M50
C711, 712	CERAMIC CAPACITOR	CKCYX683M16
C713, 714	ELECTROLYTIC CAPACIT	CEASR15M50
C715, 716	CERAMIC CAPACITOR	CKCYX273M16
C717, 718	CERAMIC CAPACITOR	CKCYX683M16
C719, 720	CERAMIC CAPACITOR	CKSQYB103K50
C721, 722	CERAMIC CAPACITOR	CKCYX273M16
C723, 724	CERAMIC CAPACITOR	CKSQYB472K50
C725, 726	CERAMIC CAPACITOR	CKSQYB103K50
C727, 728	CERAMIC CAPACITOR	CKSQYB182K50
C729, 730	CERAMIC CAPACITOR	CKSQYB472K50
C731, 732	CERAMIC CAPACITOR	CKSQYB681K50
C733, 734	CERAMIC CAPACITOR	CKSQYB182K50
C735, 736	ELECTR.CAPACITOR	CEAS101M10
C737, 738	CERAMIC CAPACITOR	CKSQYB473K50

RESISTORS

Mark No.	Description	Parts No.
R701	CARBONFILM RESISTOR	RD1/8PM103J
R703, 704	CARBONFILM RESISTOR	RD1/8PM223J
R710	RESISTOR ARRAY (1M)	RA8T105J
R711, 712	CARBON FILM RESISTOR	RD1/4PM390J
R726, 727	CARBONFILM RESISTOR	RD1/8PM103J
	Other resistors	RS1/10S□□□J

VR assembly

SEMICONDUCTORS

Mark No.	Description	Parts No.
IC551	OP–AMP IC	RC4558DXP
IC552	MECHANISM DRIVER IC	TA7291S
Q551, 552	TRANSISTOR	2SC2878
Q553	TRANSISTOR	RN2203

Mark No.	Description	Parts No.
CAPACITORS		
C551, 552	ELECTR.CAPACITOR	CEAS4R7M50
C553, 554	CHIP CAPACITOR	CCSQCH101J50
C555, 556	ELECTR.CAPACITOR	CEAS101M16
C557	ELECTR.CAPACITOR	CEAS220M25
C558	CERAMIC CAPACITOR	CKSQYF104Z50
C559	CERAMIC CAPACITOR	CKCYF473Z50
RESISTORS		
VR551	VARIABLE RESISTOR	ACX1051
R554	CHIP RESISTOR	RS1/10S000J
R555, 556	CHIP RESISTOR	RS1/10S104J
R561	CHIP RESISTOR	RS1/10S000J
R565, 566	CHIP RESISTOR	RS1/10S102J
	Other resistors	RD1/8PM□□□J

HEAD PHONE assembly

Mark No.	Description	Parts No.
CAPACITOR		
C453	CERAMIC CAPACITOR	CKDYF473Z50
RESISTORS		
R451, 452	METAL OXIDE RESISTOR	RS2LMF331J
R453	CARBONFILM RESISTOR	RD1/8PM100J
OTHERS		
	JACK (HEAD PHONE)	AKN1010
CN1	CONNECTOR (5P)	KPC5

TRANS CONNECT assembly

No parts are supplied with the TRANS CONNECT assembly.

⊙ DISPLAY assembly (AWZ3351)

Mark No.	Description	Parts No.
SEMICONDUCTORS		
IC1501	LOGIC IC	SN74LS05N
IC1502	LOGIC IC	SN74LS03N
IC1503	GEQ−BPF IC	BA3826S
IC1504	OP−AMP IC	RC4558DXP
IC1505	SPECTRUM ANALYZER CONTROL μ−COM	PD3174A
IC1651	SYSTEM CONTROL μ−COM	PD5147B
IC1652	RESET IC	M51951BSL
Q1501−1504	TRANSISTOR	RN1201
Q1505−1507	TRANSISTOR	RN1203
Q1508, 1509	TRANSISTOR	RN2201
Q1510	TRANSISTOR	RN1203
Q1601	TRANSISTOR	RN2204
Q1602	TRANSISTOR	RN1203
Q1603	TRANSISTOR	RN2204
Q1604	TRANSISTOR	2SA1515
Q1605	TRANSISTOR	RN1203
Q1606	TRANSISTOR	2SA1515
Q1607	TRANSISTOR	RN1203
Q1608	TRANSISTOR	2SA1515
Q1609	TRANSISTOR	RN1203
Q1610	TRANSISTOR	2SA1515
Q1611	TRANSISTOR	RN1203
D1501−1504	LED (GREEN)	AEL1130
D1505	LED (RED)	AEL1119
D1506, 1507	LED (RED)	AEL1126
D1508, 1509	LED	AEL1128
D1510	LED (RED)	AEL1065
D1511−1516	LED (RED)	AEL1108
D1517−1531	DIODE	1SS252
D1535−1543	DIODE	1SS252
D1544, 1545	LED (GREEN)	AEL1129
D1546	LED (RED)	AEL1065
D1547, 1548	DIODE	1SS252
D1601−1617	DIODE	1SS252
D1651−1664	DIODE	1SS252
SWITCHES		
S1504−1507	SWITCH	ASG1034
S1510−1514	SWITCH	ASG1034
S1516−1519	SWITCH	ASG1034
S1522−1525	SWITCH	ASG1034
S1528	SWITCH	ASD1012
S1529	ROTARY ENCODER	ASX1009
S1530−1535	SWITCH	ASG1034
S1537−1544	SWITCH	ASG1034
S1546−1549	SWITCH	ASG1034
COILS		
L1501	AXIAL INDUCTOR	LAU221K
L1651	AXIAL INDUCTOR	LAU220K
CAPACITORS		
C1501	CERAMIC CAPACITOR	CKDYX473M16
C1504	ELECTR.CAPACITOR	CEJA470M10
C1505	CEA (47000/5.5V)	ACH1070
C1506	CERAMIC CAPACITOR (0.022)	ACG1022
C1507	CERAMIC CAPACITOR	CCDSL100D50

Mark No.	Description	Parts No.
C1508	CERAMIC CAPACITOR	ACG1022
C1509	CERAMIC CAPACITOR	CKMYB102K50
C1510	CERAMIC CAPACITOR	CKDYX473M16
C1601	ELECTR.CAPACITOR	CEAS470M10
C1602	ELECTR.CAPACITOR	CEASR33M50
C1651	CERAMIC CAPACITOR	CKCYF473Z50
C1652	ELECTR.CAPACITOR	CEAS101M16
C1653	CERAMIC CAPACITOR	CKCYF473Z50
C1654 – 1658	CERAMIC CAPACITOR (1000p)	ACG1020
C1659	ELECTR.CAPACITOR	CEAS010M50
RESISTORS		
VR1601, 1602	VR	VRTM6V203
VR1603	VR	VRTM6V103
R1543	RESISTOR ARRAY (100k)	RA13S104J
R1544	RESISTOR ARRAY (100k)	RA15T104J
R1662	RESISTOR ARRAY (3.3K)	RA8T332J
	Other resistors	RD1/8PM□□□J
OTHERS		
V1501	FL TUBE	AAV1116
X1502	CERAMIC RESONATOR	ASS1018
X1651	CERAMIC RESONATOR	ASS1025
	REMOTE RECEIVER UNIT	AXX1010
CN8	CONNECTOR (15P)	KPE15

1 MECHA SW assembly

SWITCHES		
S1551 – 1555	SWITCH	ASG1034

2 MECHA SW assembly

SWITCHES		
S1556 – 1560	SWITCH	ASG1034

MIC BALANCE assembly

SEMICONDUCTORS		
IC901	OP – AMP IC	NJM4558S – X
CAPACITORS		
C901	CERAMIC CAPACITOR	CKMYB681K50
C902	ELECTR.CAPACITOR	CEAS010M50
C903	CERAMIC CAPACITOR	CKMYB471K50
C904, 905	ELECTR.CAPACITOR	CEAS100M25
C906, 907	CERAMIC CAPACITOR	CKDYX473M16
C908	CERAMIC CAPACITOR	CKDYF473Z50
RESISTORS		
VR552	VARIABLE RESISTOR	ACS1066
VR901	VARIABLE (10K – X1)	ACS1065
	Other resistors	RD1/8PM□□□J
OTHERS		
CN3	JUMPER CONNECTOR	KPC6
	JACK (MIC)	AKN1017

⊙ SUB TRANS assembly (AWR1056)

SEMICONDUCTORS		
IC101	REGULATOR IC	NJM78M56FA
IC102	REGULATOR IC	UPC78M12AHF
Q101	TRANSISTOR	2SC2458
Q102	TRANSISTOR	2SB560
D101	ZENER DIODE	RD10ESB2
D102	ZENER DIODE	RD30ESB2
D103 – 106	DIODE	1SR139 – 400
D107, 109	DIODE	1SS252
RELAY		
RY101	RELAY	ASR1027
TRANSFORMER		
T101	POWER TRANSFORMER	ATT1149
CAPACITORS		
C101	ELECTR.CAPACITOR	CEAS222M25
C102	ELECTR.CAPACITOR	CEAS221M50
C103, 104	ELECTR.CAPACITOR	CEAS470M16
C105	ELECTR.CAPACITOR	CEAS470M50
C106	ELECTR.CAPACITOR	CEAS220M50
C107	ELECTR.CAPACITOR	CEAS470M16
RESISTORS		
R101	METAL OXIDE RESISTOR	RS3LMF392J
	Other resistors	RD1/8PM□□□J

Mark No.	Description	Parts No.
1 MECHA assembly		
CAPACITORS		
C2001, 2002	CERAMIC CAPACITOR	CKMYB391K50
C2005, 2006	AUDIO FILM CAPACITOR	CFTXA223J50
C2007, 2008	ELECTR.CAPACITOR	CEAS4R7M50
C2009, 2010	ELECTR.CAPACITOR	CEAS470M10
RESISTORS		
VR2001, 2002	VR	VRTM6H202
	Other resistors	RD1/8PM□□□J
2 MECHA assembly		
SEMICONDUCTORS		
IC2001, 2021	OP−AMP IC	RC4558DXP
Q2021, 2022	N−FET	2SK373
Q2251	TRANSISTOR	RN1201
Q2252	TRANSISTOR	2SA1515
Q2253, 2254	TRANSISTOR	2SC3377
Q2255	TRANSISTOR	2SC2458
D2021−2026	DIODE	1SS252
COILS & TRANSFORMERS		
L2204, 2205	INDUCTOR	LTA822J
T2251	OSC TRANSFORMER	ATX−043
CAPACITORS		
C2021, 2022	CERAMIC CAPACITOR	CCMSL100D50
C2023, 2024	CERAMIC CAPACITOR	CKMYB391K50
C2027, 2028	AUDIO FILM CAPACITOR	CFTXA223J50
C2029, 2030	ELECTR.CAPACITOR	CEAS4R7M50
C2031, 2032	ELECTR.CAPACITOR	CEAS470M10
C2219, 2220	CERAMIC CAPACITOR	CCDSL271K500
C2223, 2224	CERAMIC CAPACITOR	CKDYB681K50
C2251	ELECTR.CAPACITOR	CEAS470M16
C2252, 2253	CERAMIC CAPACITOR	CGMYX103M16
C2254	CERAMIC CAPACITOR	CKMYB221K50
C2255	MYLOR FILM CAPACITOR	CQMA153K50
C2256	CERAMIC CAPACITOR	CKMYB681K50
C2257	MYLOR FILM CAPACITOR	CQMA123K250
C2258	ELECTR.CAPACITOR	CEAS4R7M50
C2259, 2260	CERAMIC CAPACITOR	CCCSL101K500
C2261	MYLOR FILM CAPACITOR	CQMA562K400
C2262	CQPA (2000P/630V)	ACE1020
C2263	ELECTR.CAPACITOR	CEAS100M50
RESISTORS		
VR2021, 2022	VR	VRTM6V202
VR2251, 2252	VR	VRTM6H204
R2253	CARBON FILM RESISTOR	RD1/2PM360J
	Other resistors	RD1/8PM□□□J

⊙ MOTHER P.C.B ASSEMBLY (PWM1349)

Mark No.	Description	Parts No.
SEMICONDUCTORS		
IC101	PRE AMP IC	CXA1471S
IC151	SERVO IC	CXA1372S
⚠ IC20	REGULATOR IC	M5298P
⚠ IC201	POWER OP−AMP, IC	LA6520
⚠ IC30	IC PROTECTOR	ICP−N10
IC301	EFM DEMODULATION IC	CXD2500Q
IC351	MICROCOMPUTER	PD4305B
IC401	8FS DF DA CONVERTER IC	TC9237N
IC404	OP−AMP IC	NJM4558D−D
Q101	TRANSISTOR	2SA854S
Q201	TRANSISTOR	2SC3581
Q202	TRANSISTOR	2SA1399
Q203	TRANSISTOR	2SC3581
Q204	TRANSISTOR	2SA1399
Q381, 382	TRANSISTOR	2SC1740S
Q403, 404	TRANSISTOR	2SD2144S
Q405	TRANSISTOR	DTC124ES
Q62	TRANSISTOR	2SC1740S
⚠ D1, 2	DIODE	11ES2
D211	ZENNER DIODE	MTZJ6.2B/C
D381−385	DIODE	1SS254
COILS		
L381	AXIAL INDUCTOR	LAU010K
L401	AXIAL COIL	LAUR22K
L402, 403	AXIAL INDUCTOR	LAU010K
CAPACITORS		
C101	ELECTROLYTIC CAPACIT	CEAS471M6R3
C102	ELECTR.CAPACITOR	CEAS101M10
C103	CERAMIC CAPACITOR	CCCCH180J50
C104	ELECTR.CAPACITOR	CEAS101M10
C11, 110	CERAMIC CAPACITOR	CKCYF103Z50
C12−14	CERAMIC CAPACITOR	CKCYF103Z50
C153	ELECTR.CAPACITOR	CEAS101M10
C155	MYLOR FILM CAPACITOR	CQMA182J50
C156	MYLOR FILM CAPACITOR	CQMA333K50

Mark No.	Description	Parts No.
C157	MYLOR FILM CAPACITOR	CQMA103K50
C158, 159	MYLOR FILM CAPACITOR	CQMA104K50
C160	ELECTR.CAPACITOR	CEAS4R7M50
C161	MYLOR FILM CAPACITOR	CQMA104K50
C162	ELECTR.CAPACITOR	CEAS010M50
C163	MYLOR FILM CAPACITOR	CQMA104K50
C164	MYLOR FILM CAPACITOR	CQMA103K50
C167	CERAMIC CAPACITOR	CKCYF103Z50
C168	MYLOR FILM CAPACITOR	CQMA333K50
C169	MYLOR FILM CAPACITOR	CQMA103K50
C170	MYLOR FILM CAPACITOR	CQMA332J50
C171	MYLOR FILM CAPACITOR	CQMA472J50
C172	MYLOR FILM CAPACITOR	CQMA472K50
C202	CERAMIC CAPACITOR	CKCYF103Z50
C212	MYLOR FILM CAPACITOR	CQMA103K50
C216, 217	ELECTR.CAPACITOR	CEAS330M16
C27	ELECTROLYTIC CAPACIT	CEAS471M6R3
C28	ELECTR.CAPACITOR	CEAS101M10
C301	MYLOR FILM CAPACITOR	CQMA104K50
C306	CERAMIC CAPACITOR	CKCYB152K50
C307	MYLOR FILM CAPACITOR	CQMA473J50
C308	MYLOR FILM CAPACITOR	CQMA103K50
C309	ELECTR.CAPACITOR	CEASR47M50
C351	ELECTROLYTIC CAPACIT	CEAS471M6R3
C353, 355	CERAMIC CAPACITOR	CKCYF103Z50
C361	CERAMIC CAPACITOR	CKCYF103Z50
C383, 384	CERAMIC CAPACITOR	CKCYF103Z50
C401	CERAMIC CAPACITOR	CKCYF103Z50
C403, 404	CERAMIC CAPACITOR	CCCCH470J50
C410, 411	CERAMIC CAPACITOR	CCCSL560J50
C412–415	CERAMIC CAPACITOR	CCCCH390J50
C420	ELECTR.CAPACITOR	CEAS330M16
C421	CERAMIC CAPACITOR	CKCYF473Z50
C422	CERAMIC CAPACITOR	CKCYF103Z50
C429, 430	ELECTR.CAPACITOR	CEAS220M25
C431, 432	MYLOR FILM CAPACITOR	CQMA104K50
C433, 434	MYLOR FILM CAPACITOR	CQMA103K50
C435	CERAMIC CAPACITOR	CKCYF103Z50
C60	ELECTR.CAPACITOR	CEAS010M50
RESISTORS		
VR102	VR	RCP1046
VR103	VR	RCP1044
VR151, 152	VR	RCP1046
	Other resistors	RD1/6PM□□□J
OTHERS		
CN1	CONNECTOR (6P)	KPE6
CN101	CONNECTOR	52045–1610
CN351	CONNECTOR	HLEM30S–1
CN381	CONNECTOR (7P)	KPE7
X351	CERAMIC RESONATOR	VSS1014
X401	XTAL RES (OSC)	PSS1006

⊙ SUB P.C.B ASSEMBLY (PWX1143)

SEMICONDUCTORS		
D701–704	DIODE	1SS254
D708	DIODE	1SS254
SWITCHES		
S701–716	SWITCH	PSG1006
OTHERS		
CN701	CONNECTOR	HLEM30R-1
V701	FL INDICATOR TUBE	PEL1050

MECHA P.C.B ASSEMBLY

SWITCHES		
S601–603	SWITCH	DSG1017

5. IC INFORMATION

• PD3174A

• Pin Function

No.	Pin name	I/O	Description
1	S5/KO5	DP	FL SEGMENT Output (S5), KEY SCAN Output (KO5)
2	S4/KO4	DP	FL SEGMENT Output (S4), KEY SCAN Output (KO4)
3	S3/KO3	DP	FL SEGMENT Output (S3), KEY SCAN Output (KO3)
4	S2/KO2	DP	FL SEGMENT Output (S2), KEY SCAN Output (KO2)
5	S1/KO1	DP	FL SEGMENT Output (S1), KEY SCAN Output (KO1)
6	1G	DP	FL DIGIT Output (1G)
7	2G	DP	FL DIGIT Output (2G)
8	3G	DP	FL DIGIT Output (3G)
9	4G	DP	FL DIGIT Output (4G)
10	5G	DP	FL DIGIT Output (5G)
11	6G	DP	FL DIGIT Output (6G)
12	7G	DP	FL DIGIT Output (7G)
13	8G	DP	FL DIGIT Output (8G)
14	9G	DP	FL DIGIT Output (9G)
15	10G	DP	FL DIGIT Output (10G)
16	11G	DP	FL DIGIT Output (11G)
17	12G	DP	FL DIGIT Output (12G)
18	POWER	I	When AC power supply ceases, the backup mode is activated.
19	−27V	I	Vfdp (−27V)
20	13G	DP	FL DIGIT Output (13G)
21	14G/ MODE 1	DP	FL DIGIT Output (14G)
22	15G/ MODE 2	DP	FL DIGIT Output (15G)

No.	Pin name	I/O	Description
23	N.C.	DP	Not used
24	DEL 1	O	Not used
25	DEL 2	O	Not used
26	DEL 3	O	Not used
27	DATA	O	LC7522 DATA Output
28	CLOCK	O	LC7522 CLOCK Output
29	S. DATA	I	SYSTEM BUS DATA Input
		O	SYSTEM BUS DATA Output
30	S. CLOCK	I	SYSTEM BUS CLOCK Input
31	REQ/EN	I	SYSTEM BUS TALKER ENABLE Input
		O	SYSTEM BUS TAKER REQUEST Output
32	Vcc		Connected to Power supply (+5V)
33	CTR	O	BA3826 L/R Switching Output
34	A	O	BA3826 A Output
35	B	O	BA3826 B Output
36	C	O	BA3826 C Output
37	DA0	O	A/D Converter Output
38	DA1	O	A/D Converter Output
39	DA2	O	A/D Converter Output
40	DA3	O	A/D Converter Output
41	DA4	O	A/D Converter Output
42	CMP IN	I	A/D converter Input
43	KI1	I	KEY SCAN Input
44	KI2	I	KEY SCAN Input
45	ENC B	I	Rotary pulse encoder B Input
46	ENC A	I	Rotary pulse encoder A Input

No.	Pin name	I/O	Description
47	RESET	I/O	RESET Input
48	OSC 2	O	Connected to ceramic oscilator (4.19MHz).
49	OSC 1	I	
50	GND		GND
51	CL 1	I	Not used (+5V)
52	CL 2	O	Not used (OPEN)
53	TEST	I	Not used (+5V)
54	S16	DP	FL SEGMENT Output (S16)
55	S15	DP	FL SEGMENT Output (S15)
56	S14	DP	FL SEGMENT Output (S14)
57	S13	DP	FL SEGMENT Output (S13)
58	S12	DP	FL SEGMENT Output (S12)
59	S11	DP	FL SEGMENT Output (S11)
60	S10/K10	DP	FL SEGMENT Output (S10), KEY SCAN Output (K10)
61	S9/K09	DP	FL SEGMENT Output (S9), KEY SCAN Output (K09)
62	S8/K08	DP	FL SEGMENT Output (S8), KEY SCAN Output (K08)
63	S7/K07	DP	FL SEGMENT Output (S7), KEY SCAN Output (K07)
64	S6/K06	DP	FL SEGMENT Output (S6), KEY SCAN Output (K06)

I : CMOS input
O : CMOS output
N : N ch open drain output
P : P ch open drain output
UN : N ch open drain output with pull−up resistor
DP : P ch open drain output with pull−down resistor
UI : CMOS input with pull−up resistor
DI : CMOS input with pull−down resistor

6. FOR HEWZIW TYPE

NOTES:
- *Parts without part number cannot be supplied.*
- *The ⚠ mark found on some component parts indicates the importance of the safety factor of the part. Therefore, when replacing, be sure to use parts of identical designation.*
- *Parts marked by "◉" are not always kept in stock. Their delivery time may be longer than usual or they may be unavailable.*

6.1 CONTRAST OF MISCELLANEOUS PARTS

The XD−Z84T/HEWZIW type is the same as the XD−Z84T/HE type with the exception of the following sections.

Mark	Symbol & Description	Part No.		Remarks
		HE type	HEWZIW type	
	AF assembly	AWZ3336	AWZ3337	
	VR assembly	Non supply	Non supply	
	HEAD PHONE assembly	Non supply	Non supply	
	MIC BALANCE assembly	Non supply	Non supply	
	SUB TRANS assembly	AWR1056	AWR1057	
	Screw (EARTH)	.....	ABA1047	
	Operating instructions (Duch, Swedish, Spanish, Portuguese)	ARC1242	.....	
	Operating instructions (English, German, French, Italian)	ARE1173	.....	
	Operating instructions (German, Italian)	.....	ARC1236	

6.2 VR assembly (HEWZIW type)

The VR assembly (HEWZIW type) is the same as the VR assembly (HE type) with the exception of the following sections.

Mark	Symbol & Description	Part No.		Remarks
		HE type	HEWZIW type	
	C561, C562	.....	CKMYB221K50	

6.3 SUB TRANS assembly (AWR1057)

The SUB TRANS assembly (AWR1057) is the same as the SUB TRANS assembly (AWR1056) with the exception of the following sections.

Mark	Symbol & Description	Part No.		Remarks
		HE type	HEWZIW type	
	L101	.....	ATF−151	
⚠	T101 Power transformer	ATT1149	ATT1144	
	C109 (0.01μF/AC400V)	.....	ACG1002	

6.4 AF assembly (AWZ3337)

The AF assembly (AWZ3337) is the same as the AF assembly (AWZ3336) with the exception of the following sections.

Mark	Symbol & Description	Part No.		Remarks
		AWZ3336	AWZ3337	
	L501, L502	ATH−133	ATH−059	
	L503, L504	.....	ATH−059	
	C162 (0.01μF/AC250V)	ACG1005	.....	
	C162	.....	CQMA473K250	
	C321, C322	.....	CCDCH101J50	
	C502, C503, C513, C514	.....	CKDYB103K50	
	C511, C512	.....	CKDYB102K50	
	C607, C608	.....	CCMSL101J50	
	C801−C804 (390p)	.....	ACG1026	
	C805−C808	.....	CKMYB391K50	
	C831, C832, C1003, C1004	CCCSL101J50	CCMSL101J50	
	C851−C853, C855	.....	CKDYF473Z50	
	C854	.....	CQMA224K50	
	C856−C858	CKDYB471K50	CKMYB471K50	
	C1001, C1002	CCMSL101J50	CKMYB391K50	
	C1013, C1014	.....	CKDYB471K50	
	R351, R352	.....	RD1/8PM222J	
	R501, R502	RD1/4PMFL100J	RD1/4PMFL101J	
	R807, R808	.....	RD1/8PM221J	
	R1001, R1002	RD1/8PM102J	RD1/8PM222J	

6.5 HEAD PHONE assembly (HEWZIW type)

The HEAD PHONE assembly (HEWZIW type) is the same as the HEAD PHONE assembly (HE type) with the exception of the following sections.

Mark	Symbol & Description	Part No.		Remarks
		.HE type	HEWZIW type	
	C451, C452	.....	CKDYF473Z50	
	C453	CKDYF473Z50	.....	
	R453	RD1/8PM100J	.....	

6.6 MIC BALANCE assembly (HEWZIW type)

The MIC BALANCE assembly (HEWZIW type) is the same as the MIC BALANCE assembly (HE type) with the exception of the following sections.

Mark	Symbol & Description	Part No.		Remarks
		HE type	HEWZIW type	
	C909, C910	.....	CCDSL101J50	
	C911, C912	.....	CKDYB102K50	
	C913	.....	CKDYB472K50	
	R909	.....	RD1/8PM222J	
	R910	.....	RD1/8PM100J	

7. PANEL FACILITIES

REAR PANEL FACILITIES

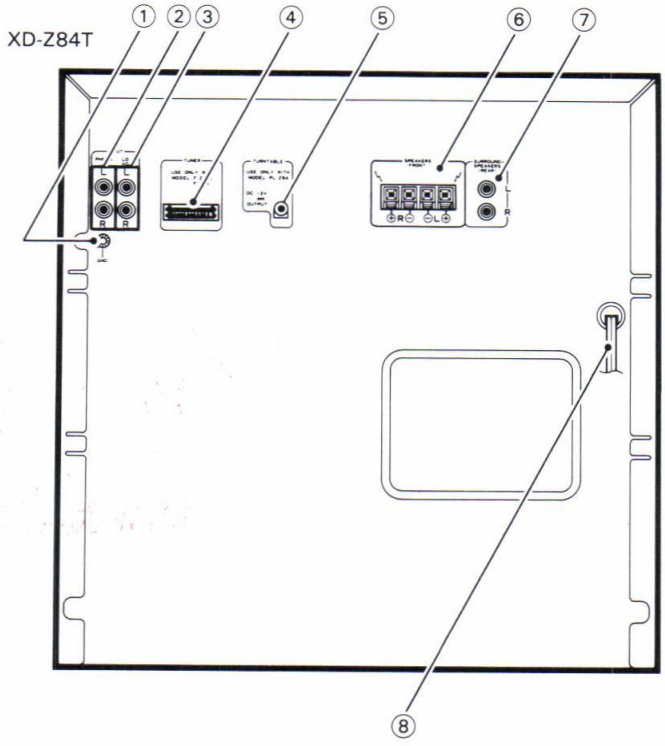

① Ground terminal (GND)

Connect this to the ground terminal on the turntable (except for PL-Z94).

② PHONO input jacks

Connect the audio cord of the turntable to these jacks.

③ LD/VCR jacks

Connect to audio output jacks of LD player or VCR, etc.

④ TUNER jacks

Connect the tuner cord here.

⑤ TURNTABLE (DC 12 V OUTPUT) jack

This jack supplies power to the turntable PL-Z94.
Connect the power supply cord of the turntable to this jack.

⑥ SPEAKERS terminals

L: Connect the left speaker system as seen from the listening position.
R: Connect the right speaker system as seen from the listening position.

NOTE:
Connect a speaker system having a nominal impedance ranging from 8 Ω to 16 Ω.

⑦ SURROUND SPEAKERS jacks

Connect the surround speaker systems.

NOTE:
Connect a speaker system having a nominal impedance of 16 Ω or more.

⑧ Power cord

Connect this to the household electrical outlet.

FRONT PANEL FACILITIES

Amplifier section

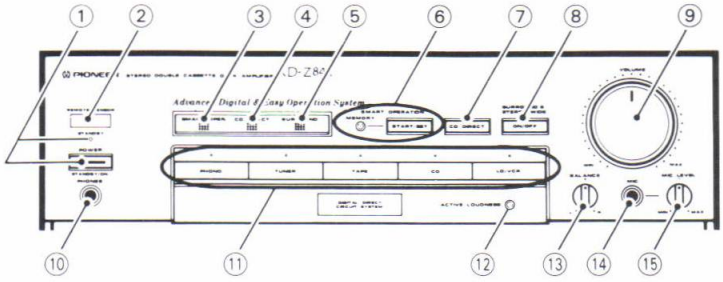

Sound image controller section

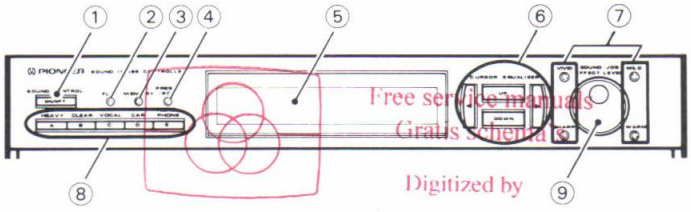

XD-Z84T

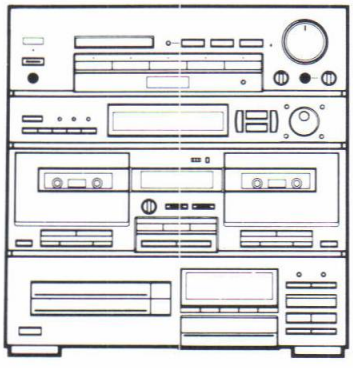

Cassette deck section

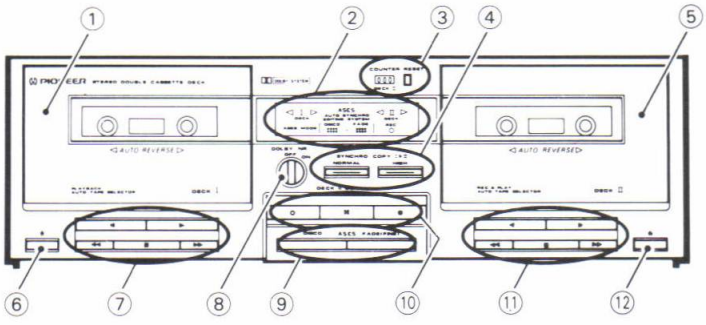

Compact disc player section

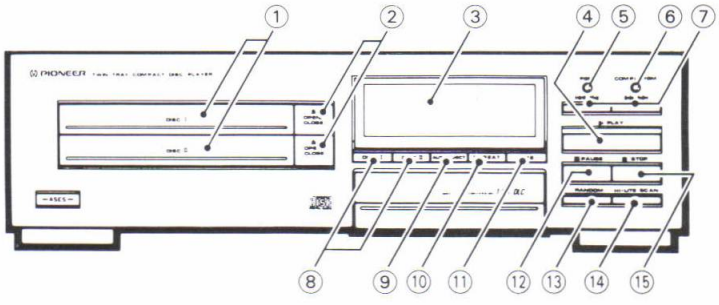

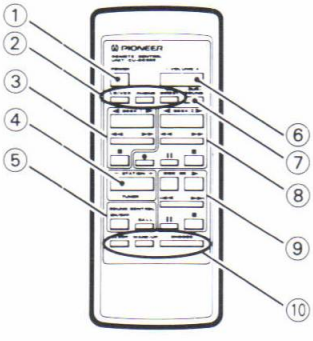

- This unit has an automatic tape type selector.
- Tapes can be played back on deck I; tapes can be played back and recorded on deck II.
- Sound can be recorded as adjusted by the sound image controller.
- Use a normal or chrome position tape.

Amplifier section

① POWER STANDBY/ON switch /STANDBY indicator

This is the switch for electric power.

ON: When set to the ON position, power is supplied and the unit becomes operational.

STANDBY: When set to the STANDBY position, the main power flow is cut and the unit is no longer fully operational. A minute flow of power feeds the unit to maintain operation readiness.
When the STANDBY indicator is on, the unit is in STANDBY.

② REMOTE SENSOR window

③ SMART OPER. (OPERATION) indicator

This lights when smart operation is on.
It goes out after about 30 seconds.

④ CD DIRECT indicator

This lights when CD DIRECT is on.

⑤ SURROUND indicator

This lights when SURROUND & STEREO WIDE is on.

⑥ SMART OPERATION buttons

[START/SET]
Use when programming memory and operating SMART OPERATION.
[MEMORY]
Use when programming SMART OPERATION into memory.

⑦ CD DIRECT button

Press this button to listen to a CD without passing the signal through sound quality adjustment circuits.

⑧ SURROUND & STEREO WIDE button

By turning this switch ON, you can enjoy surround reproduction when rear speakers are used.
By turning this switch ON, you can enjoy STEREO WIDE reproduction with greater left-right spread when rear speakers are not used.

NOTE:
- *In the case of monaural source, SURROUND & STEREO WIDE effects cannot be obtained.*
- *SURROUND & STEREO WIDE functions do not operate if CD DIRECT is on.*

⑨ VOLUME control

⑩ PHONES (Headphones) jack

For stereo headphones.

NOTE:
There is no output from the speakers when headphones are plugged into PHONES jack.

⑪ Input selector buttons

[PHONO]
Press to play records on a turntable connected to the PHONO jacks.
[TUNER]
Press to listen to radio broadcast.
[TAPE]
Press to listen to cassette tape.
[CD]
Press to listen to a CD.
[LD/VCR]
Press for playback on an LD player or VCR connected to the LD/VCR jacks.

⑫ ACTIVE LOUDNESS button

This switches the active loudness function ON and OFF. Depending on the volume setting on the amplifier, this function automatically boosts bass and treble response.

⑬ BALANCE control

Used for changing the balance between left and right channels. Usually set this control to the center position.

⑭ MIC (Microphone) jack

This is a standard jack for connecting a microphone.

⑮ MIC LEVEL control

Used for adjusting the volume of microphone.

Sound image controller section

① SOUND CONTROL ON/OFF button

This switches the sound image controller on/off. When it's on, the SOUND CONTROL indicator in the display section lights.
During playback with CD DIRECT on, sound control is not possible.

② FLAT button

Press to reset the equalizer to flat response (no equalization).

③ MEMORY button

Use this to program your desired equalization setting into the memory recall buttons (A to E).

④ PRESET/PGM (PROGRAM) button

Use to switch between recall of PRESET memory settings and your own original memory settings (PROGRAM) with the memory recall buttons. The memory being recalled is indicated by the lit indicator in the display section.

⑤ Display section

Ⓐ Visual display of spectrum analyzer and graphic equalizer.
Ⓑ This lights when the sound control is on.
Ⓒ This indicates the recalled image effect. A lit bar under the letters indicates the one selected.
Ⓓ This indicates the memory (PRESET and PROGRAM) that can be recalled with the memory recall buttons.
Ⓔ This lights when active loudness is on.
Ⓕ Display of the memory being recalled with the memory recall buttons. A lit bar under A to E indicates the one selected.

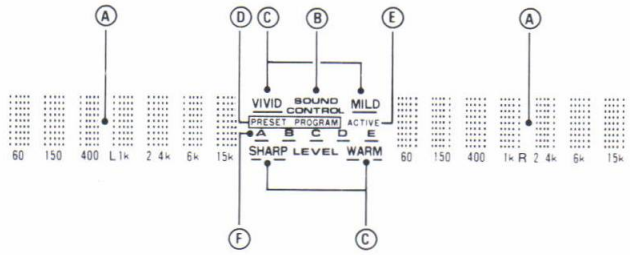

⑥ CURSOR EQUALIZER buttons

Use to adjust graphic equalizer settings.
[◄, ►]: Use these to change the frequency range to be adjusted.
[UP, DOWN]: Use these to adjust the degree of equalization.

⑦ Image effect buttons

These buttons let you select the effect mode most suitable for a particular genre of music. Adjust the effect level with the SOUND JOG.

⑧ Memory (PRESET/PROGRAM) recall buttons

Use to recall preset equalization settings. Also use to program into memory and recall desired sound settings.

⑨ SOUND JOG

Use to adjust image effect level.

Cassette Deck Section

① Deck I cassette door

② Operation indicators

Ⓐ **Direction (◁, ▷):** Indicates direction of tape travel during recording or playback. Flashes slowly in Pause mode. Flashes rapidly during Music Search (MS).
Ⓑ **REC:** Lights when recording. It flashes during tape copying.
Ⓒ **ASES mode**
FADE: Fade edit in progress.
DISCO: Disco edit in progress.

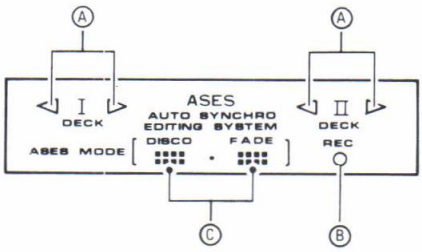

③ DECK II COUNTER and RESET button

Press the RESET button to reset the tape counter display to 000.

④ SYNCHRO COPY I ► II buttons

Used for tape copying.
NORMAL: Copying from the Deck I tape to the Deck II tape at normal recording/playback speed.
HIGH: Copying at about twice normal tape speed. (Copies can be made in about half the NORMAL time.)

⑤ Deck II cassette door

⑥ Deck I EJECT button

⑦ Deck I operation buttons

► **(PLAY: FWD)** ..... For playing back a tape in the forward mode.
◄ **(PLAY: REV)** ..... For playing back a tape in the reverse mode.
■ **(STOP)** ..... For stopping the tape.
►► **(FAST)** ..... Fast forward in forward mode, rewind in reverse mode.
Music search (MS) starts if this is pressed during playback.
◄◄ **(FAST)** ..... Rewind in forward mode, fast forward in reverse mode.
Music search (MS) starts if this is pressed during playback.

⑧ DOLBY* NR switch

Set this switch to the ON position to activate the DOLBY NR system.

- Tapes recorded using Dolby noise reduction should always be played back with the noise reduction system on. Sound quality will be adversely affected if played back with the system off, or if tapes recorded using a different noise reduction system are played back with the Dolby NR system on.
- It is recommended that tapes recorded with Dolby B type NR be so marked on the label. This will help prevent incorrect setting of the noise reduction switch during playback.

*

Dolby noise reduction manufactured under license from Dolby Laboratories Licensing Corporation.
"DOLBY" and the double-D symbol DD are trademarks of Dolby Laboratories Licensing Corporation.

⑨ A.S.E.S. buttons

Used for automatically recording a CD on cassette tape.
FADE (FINE): The sound fades out at the end of the tape.
DISCO: This cross-fades between songs during recording.

NOTE:

- *FINE is the mode when performing CD player COMPU PGM EDIT (Computer Allocated Program Editing).*
- *The FADE (FINE) modes provide a blank space of about five seconds between songs.*

⑩ DECK II CONTROL buttons

● **(REC)** ..... To set to recording standby mode. The REC indicator lights and the direction indicators (◁ and ▷) flash. Recording begins when you press the PLAY button (◄ or ►).
II **(PAUSE)** ..... Temporarily stops tape travel. Cancels pause mode when pressed again or press the PLAY button.
● **(MUTE)** ..... Used for creating a blank space between songs.

⑪ Deck II operation buttons

Same as Deck I operation buttons ⑦.

⑫ Deck II EJECT button

CD player section

① DISC (I, II)

This is where the disc is set. When power is switched ON and the OPEN/CLOSE button is pressed, the tray is ejected forward.
To insert the tray, press the OPEN/CLOSE button, or lightly push the tray in with your finger. With the disc tray open, press the PLAY button to close the disc tray and start playback.

② OPEN/CLOSE button (I, II)

Press when you wish to eject or load a disc. Each time the buttons is pressed, the tray is alternately pushed out or pulled in.
I: Opens and closes DISC I.
II: Opens and closes DISC II.

③ Indicators

COMPU PGM:	Display when COMPU PGM editing is set or used.
AUTO EJECT:	Lights during auto eject playback.
PGM:	Lights after programming (after program has been memorized).
RND:	Lights during random playback.
SCAN:	Lights during HI-LITE scan playback.
I, II:	Displays the disc number (I or II) of the disc to be played.
►:	Lights during playback.
II:	Lights during temporarily interrupted playback.
1 ► REP:	Lights during repeat playback of one track.
REP:	Lights during repeat play.
TRACK (figure):	Displays the current track number and index number (during normal playback and programmed playback) or the track being programmed (during programmed operation).
MINUTES (figure):	Displays the minutes of the elapsed time, total playback time, and remaining time.
SECOND (figure):	Displays the seconds of the elapsed time, total playback time, and remaining time.

= = Display change = =
Changes each time the TIME (CALENDER) button is pressed.

- **TIME:** Displays the track number of the track being played (TRACK) and the elapsed time (minutes and seconds).
- **REMAIN:** Displays the remaining time on the track being played. When the TIME (CALENDER) button is pressed again, the remaining time on the disc being played will be displayed.
- **TOTAL:** Displays the total number of tracks on the disc (TRACK) and the overall playback time of disc II will be displayed. During playback, the display goes on for about 5 seconds before changing to the TIME display.
- **I/II (music calender):**
  Only the numbers of the track recorded on DISC I (DISC II) will light.
  When inputing a program and when playing, only the programmed track number will light.
  The track number will go out one by one after the tracks are played.
  Music calender changes DISC I to DISC II (DISC II to DISC I) by holding down TIME (CALENDER) button.
- **A/B (music calender):**
  TAPE SIDE A/TAPE SIDE B
  After editing, the track numbers that can be recorded on the A (B) side of the tape will light.
  Music calender changes A to B (B to A) by holding down TIME (CALENDER) button.

NOTE:
The music calendar section only indicates the tracks on a single disc, but manual switching between Disc I and Disc II is possible. Switching is not automatic.

④ PLAY button (►)

Press to begin playback, and to cancel the pause mode.

⑤ PGM button (PROGRAM)

Use to program a sequence of tracks.

- Press this button after selecting a desired disc and track with DISC SELECT and track search button. Tunes will be added to the program in the order in which they are specified.

⑥ COMPU PGM button

Press this button, and with the MANUAL/TRACK SEARCH buttons (|◄◄ ◄◄, ►► ►►|) specify the length of tape you want to use for recording. Before recording, the CD player automatically programs the order of tracks to minimize the amount of unused tape at the end of a selected tape length.

⑦ MANUAL/TRACK SEARCH buttons (|◄◄ ◄◄, ►► ►►|)

Use these buttons to perform track search during regular playback, programmed playback, or during pause.
Press a button to skip to the previous or the next track. You will continue moving to the next track in the direction of the button you pressed as long as you continue pressing the button.

⑧ DISC SELECT buttons

DISC I: Use to select DISC I for playback or programming.
DISC II: Use to select DISC II for playback or programming.

- During playback, when the disc select button for the disc not being played is pressed, the current playback will stop and playback of that disc will begin.

⑨ AUTO EJECT button

Press to perform auto eject playback.
When a disc is finished playing, the disc's disc tray will automatically eject. The other disc tray will close and playback will start. By replacing discs, continuous playback can be maintained.

⑩ REPEAT button

Press this button for repeat playback. Pressing the button once, twice, or three times will change the repeat mode from single track repeat, all tracks repeat, and repeat playback cancellation.

⑪ TIME (CALENDER) button

This button selects the display mode. Each time the button is pressed, the indication changes from Time, Remain, to Total in that order. Calendar display can be switched by pressing this button. (For details concerning the display contents, refer to the explanation about the indicators.)

⑫ PAUSE button (II)

Press to temporarily interrupt playback. When pressed again, the pause mode is canceled and playback resumes.

⑬ RANDOM PLAY button

Press to begin random playback.

⑭ HI-LITE SCAN button

10 second passages are played starting from the first minute of each track on the CD, in sequence, beginning with the first track.
To set the point in the tracks you want to scan, press this button during playback. The elapsed time is memorized, and then ten second passages of all the remaining tracks are played at the memorized time.

⑮ STOP button (■)

Press to stop playback. When pressed, the player goes into stop mode and all operations stop.
Press to clear a program. When pressed during stop mode, the program stored in memory is cleared.

PRECAUTIONS DURING TRANSPORTATION

- Before transporting, press the OPEN/CLOSE button (II) and open Disc II tray, then press the OPEN/CLOSE button again and close Disc II tray.
- When the track number display goes from "II-01" to "II-00," turn the power off.

NOTE:
Always remove the discs when moving the unit.

Remote control unit

① POWER button

② Function buttons

LD/VCR ..... Sets function to LD/VCR.
PHONO ..... Sets function to PHONO.
CD DIRECT ..... Sets function to CD DIRECT.

③ DECK I operation buttons:

Same as Deck I operation buttons on the CD cassette deck amplifier.

④ TUNER STATION button

- Before operation, memorize broadcast stations in the STATION CALL buttons.

+ ..... Stations change in order in the upward direction.
− ..... Stations change in order in the downward direction.

⑤ SOUND CONTROL operation buttons

ON/OFF: Turns the sound image controller on and off.
CALL: Recalls the preset equalizing curves (PRESET) and memorized sound control (PROGRAM) in sequence.

⑥ VOLUME + (UP)/− (DOWN) button

When pressed, VOLUME on the amplifier is actually moved by a motor.

⑦ SURROUND button

Turns SURROUND & STEREO WIDE on and off.

⑧ Deck II operation button:

Same as Deck II operation buttons and DECK II CONTROL buttons on the cassette deck amplifier (except MUTE).

⑨ CD operation buttons

► ..... Play
DISC ..... DISC selection
■ ..... Stop
II ..... Pause
|◄◄, ►►| ..... Track search

⑩ Timer operation buttons

SLEEP: Sets the sleep timer.
WAKE-UP: Timer playback setting/cancellation can be performed when the timer playback time has been set. This is shown in the tuner display section.
SNOOZE: Turns off power if pressed after timer playback begins. Timer playback begins again approx. 5 minutes later.

The amplifier input selector automatically switches to the music source being operated when you press the CD playback (►), cassette deck playback (◄, ►), or tuner station controls.

Range of remote control

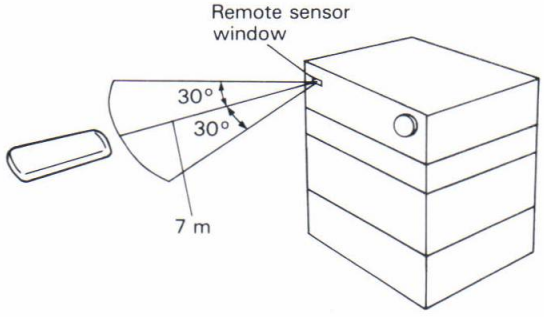

When the remote control unit is pointed at the remote sensor window on the amplifier section and any of its buttons is pressed, the tuner and other components can be operated by remote control.
Distance: Within a range of approx. 7 meters from the remote sensor window.
Angle: Within approx. 30 degrees from the center of the remote sensor window.
Remote control will not be possible if there is an obstacle between the remote control unit itself and the remote sensor window.
Performance of the remote control unit is adversely affected in the presence of strong fluorescent light. Keep such lights away, especially from the sensor window.

8. SPECIFICATIONS

Twin CD cassette deck amplifier: XD-Z84T

Amplifier Section

Music power (DIN) ..... 80 W + 80 W (1 kHz, T.H.D. 1 %, 8 Ω)
Continuous Power Output (DIN) ..... 45 W + 45 W (1 kHz, T.H.D. 1 %, 8 Ω)
Graphic equalizer frequency band..... 60 Hz, 150 Hz, 400 Hz, 1 kHz, 2.4 kHz, 6 kHz, 15 kHz, ±5.5 dB
Total Harmonic Distortion (40 Hz to 20,000 Hz, 22.5 W, 8 Ω)** ..... No more than 0.2 %

Cassette Deck Section

Systems..... 4 track, 2-channel stereo
Heads..... Recording/playback head x 1
Erasing head x 1
Playback head x 1
Motor..... DC servo 2 speed motor x 2
Wow and Flutter..... No more than 0.09 % (WRMS)
Fast Winding Time ..... Approximately 105 seconds (C-60 tape)
Frequency Response (−20 dB recording):
Normal tape ..... 35 Hz to 14,000 Hz ±6 dB
CrO_2 tape ..... 35 Hz to 15,000 Hz ±6 dB
Signal-to-Noise ratio
Dolby NR OFF..... 56 dB
Noise Reduction Effect
Dolby B type NR ON ..... More than 10 dB (at 5 kHz)

CD Section

Type ..... Compact disc digital audio system
Operating temperature..... +5°C — +35°C
Frequency response ..... 2 Hz — 20 kHz
S/N ..... 100 dB or more (EIAJ)
Wow and flutter..... Limit of measurement (±0.001 % W.PEAK) or less (EIAJ)
Number of channels ..... 2 channels (stereo)

Furnished Parts

Operating Instructions 1
Remote Control Unit 1
Dry Cell Batteries..... 2

Miscellaneous

Power requirements ..... a.c. 220 Volts~, 50/60 Hz
Power Consumption ..... 310 W
Dimensions ..... 360 (W) x 375.5 (H) x 309 (D) mm
Weight (without package) ..... 10 kg

Accessories

EP Adapter..... 1

- *Specifications and design subject to possible modification without notice due to improvement.*

** *Measured By Audio Spectrum Analyzer.*