# Service Manual

PIONEER®
*The Art of Entertainment*

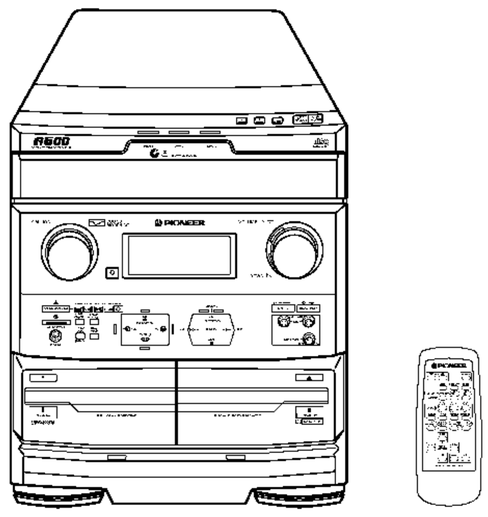

ORDER NO.
**ARP2973**

## STEREO CD CASSETTE DECK RECEIVER

# XR-A600
# XR-A500
# XR-A500EE

**THIS MANUAL IS APPLICABLE TO THE FOLLOWING MODEL(S) AND TYPE(S).**

| Type | Model | | | Power Requirement | The voltage can be converted by the following method. |
|---|---|---|---|---|---|
| | XR-A600 | XR-A500 | XR-A500EE | | |
| DDXJ | O | O | — | AC110 – 127V/220 – 230V/240V | With the voltage selector |
| DLXJ/NC | O | — | — | AC110 – 120V/220 – 230V/240V | With the voltage selector |
| DLXJN/NC | O | — | — | AC110 – 120V/220 – 230V/240V | With the voltage selector |
| DXJ/NC | O | — | — | AC110 – 127V/220 – 230V/240V | With the voltage selector |
| YPWXJ | O | O | — | AC240V | ———— |
| DLWXJ/EE | — | — | O | AC110 – 120V/220 – 230V/240V | With the voltage selector |

## CONTENTS


1. SAFETY INFORMATION ..... 2
2. EXPLODED VIEWS AND PARTS LIST ..... 3
3. SCHEMATIC DIAGRAM ..... 16
4. PCB CONNECTION DIAGRAM ..... 34
5. PCB PARTS LIST ..... 47
6. ADJUSTMENT ..... 55
7. GENERAL INFORMATION ..... 62
   7.1 PARTS ..... 62
      7.1.1 IC ..... 62
      7.1.2 DISPLAY ..... 70
   7.2 DIAGNOSIS ..... 71
      7.2.1 DISASSEMBLY ..... 71
   7.3 BLOCK DIAGRAM ..... 73
8. PANEL FACILITIES AND SPECIFICATIONS ..... 75



**PIONEER ELECTRONIC CORPORATION** 4-1, Meguro 1-Chome, Meguro-ku, Tokyo 153, Japan
**PIONEER ELECTRONICS SERVICE, INC.** P.O.Box 1760, Long Beach, CA 90801-1760, U.S.A.
**PIONEER ELECTRONIC [EUROPE] N.V.** Haven 1087, Keetberglaan 1, 9120 Melsele, Belgium
**PIONEER ELECTRONICS ASIACENTRE PTE. LTD.** 501 Orchard Road, #10-00 Lane Crawford Place, Singapore 0923



**© PIONEER ELECTRONIC CORPORATION 1997**



O-FZG OCT. 1997 Printed in Belgium

# 1. SAFETY INFORMATION

**This service manual is intended for qualified service technicians; it is not meant for the casual do-it-yourselfer. Qualified technicians have the necessary test equipment and tools, and have been trained to properly and safely repair complex products such as those covered by this manual. Improperly performed repairs can adversely affect the safety and reliability of the product and may void the warranty. If you are not qualified to perform the repair of this product properly and safely, you should not risk trying to do so and refer the repair to a qualified service technician.**

LABEL CHECK (For DLXJ/NC, DLXJN/NC AND YPWXJ types)

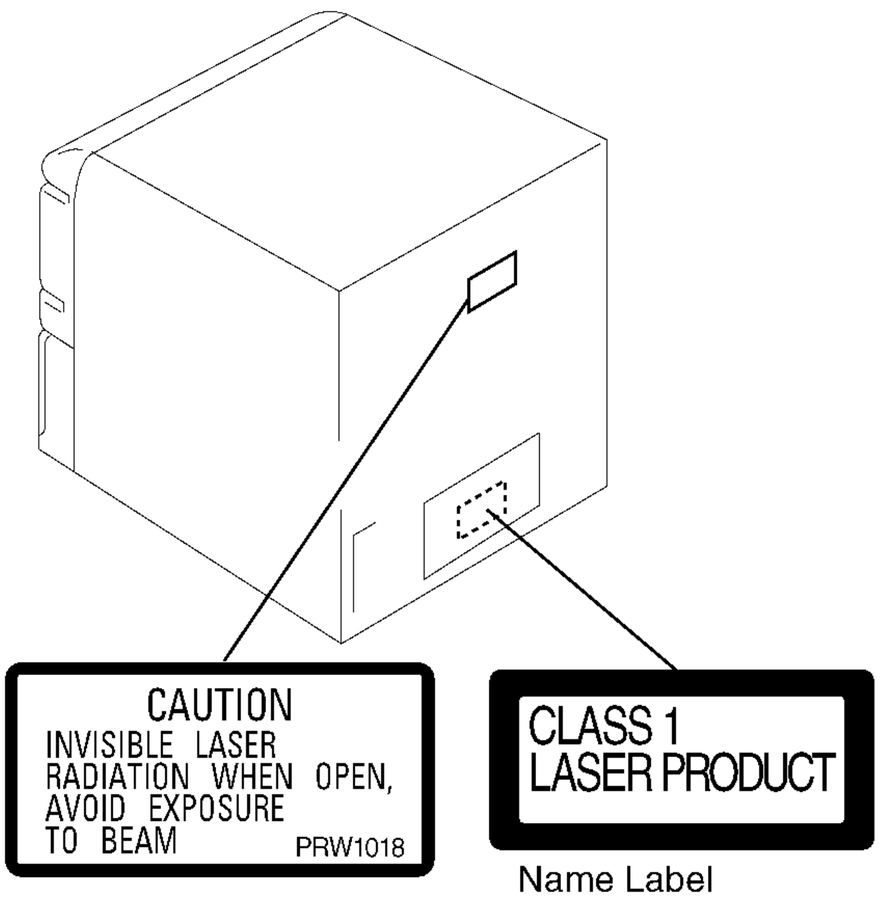


Name Label
AAL7196(XR-A600/DLXJ/NC,DLXJN/NC)
AAL7197(XR-A600/YPWXJ)
AAL7186(XR-A500/YPWXJ)

**Additional Laser Caution**

1. Laser Interlock Mechanism
   The position of the switch (S8501) for detecting loading state is detected by the system microprocessor, and the design prevents laser diode oscillation when the switch (S8501) is pressed physically.
   Thus, the interlock will no longer function if the switch (S8501) is released physically and deliberatery.
   The interlock also does not function in the test mode ✻. Laser diode oscillation will continue, if pin 62 of LA9240ML (IC8101) on the CD ASSY mounted on the $M Loading Mechanism assembly is connected to GND, or else the terminals of Q8101 are shorted to each other (fault condition).

2. When the cover is opened, close viewing of the objective lens with the naked eye will cause exposure to a Class 1 laser beam.

✻ : Refer to page 61.

# 2. EXPLODED VIEWS AND PARTS LIST

*NOTES:*
- *Parts marked by "NSP" are generally unavailable because they are not in our Master Spare Parts List.*
- *The ⚠ mark found on some component parts indicates the importance of the safety factor of the part. Therefore, when replacing, be sure to use parts of identical designation.*
- *Screws adjacent to ▼ mark on product are used for disassembly.*

## 2.1 PACKING

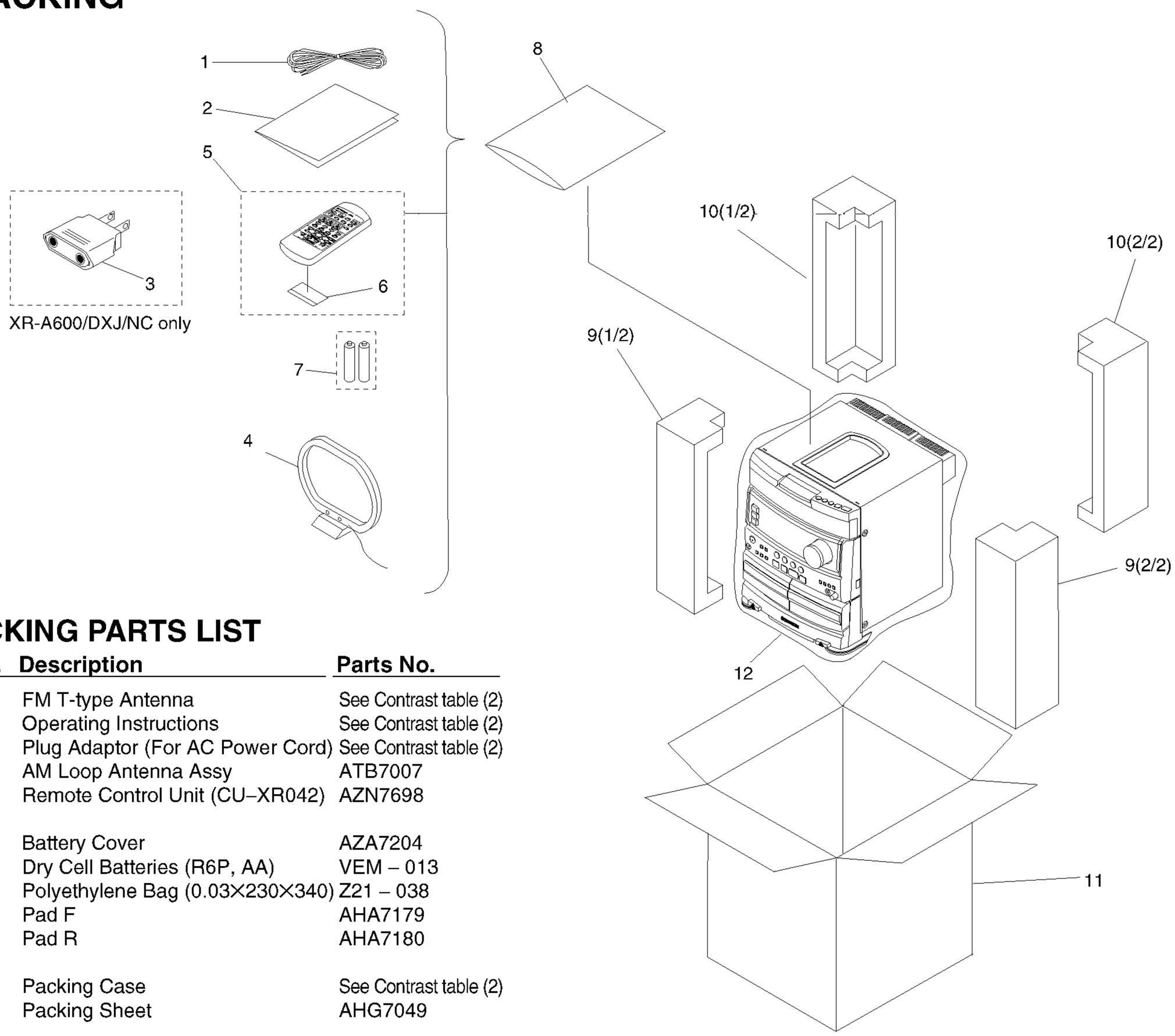


### (1) PACKING PARTS LIST

| Mark | No. | Description | Parts No. |
|---|---|---|---|
| | 1 | FM T-type Antenna | See Contrast table (2) |
| | 2 | Operating Instructions | See Contrast table (2) |
| | 3 | Plug Adaptor (For AC Power Cord) | See Contrast table (2) |
| | 4 | AM Loop Antenna Assy | ATB7007 |
| | 5 | Remote Control Unit (CU–XR042) | AZN7698 |
| | 6 | Battery Cover | AZA7204 |
| NSP | 7 | Dry Cell Batteries (R6P, AA) | VEM – 013 |
| | 8 | Polyethylene Bag (0.03×230×340) | Z21 – 038 |
| | 9 | Pad F | AHA7179 |
| | 10 | Pad R | AHA7180 |
| | 11 | Packing Case | See Contrast table (2) |
| | 12 | Packing Sheet | AHG7049 |

### (2) CONTRAST TABLE

XR-A600/DDXJ, DLXJ/NC, DLXJN/NC, YPWXJ, DXJ/NC, XR-A500/DDXJ, YPWXJ and XR-A500EE/DLWXJ/EE are constructed the same except for the following:

| Mark | No. | Symbol and Description | Part No. | | | | | | | | Remarks |
|---|---|---|---|---|---|---|---|---|---|---|---|
| | | | XR-A600 | | | | | XR-A500 | | XR-A500EE | |
| | | | DDXJ | DLXJ/NC | DLXJN/NC | YPWXJ | DXJ/NC | DDXJ | YPWXJ | DLWXJ/EE | |
| | 1 | FM T-type Antenna | ADH7004 | ADH7004 | ADH7004 | ADH7004 | ADH7004 | ADH7004 | ADH7004 | ADH7011 | |
| | 2 | Operating Instructions (English/Spanish/Chinese) | ARE7142 | Not used | Not used | Not used | Not used | ARE7142 | Not used | Not used | |
| | 2 | Operating Instructions (English) | Not used | Not used | Not used | ARB7128 | Not used | Not used | ARB7128 | Not used | |
| | 2 | Operating Instructions (English/Russian) | Not used | Not used | Not used | Not used | Not used | Not used | Not used | ARE7141 | |
| | 2 | Operating Instructions (English/Chinese) | Not used | ARE7137 | ARE7137 | Not used | Not used | Not used | Not used | Not used | |
| | 2 | Operating Instructions (English/Spanish/Portuguese) | Not used | Not used | Not used | Not used | ARE7139 | Not used | Not used | Not used | |
| | 3 | Plug Adaptor(For AC Power Cord) | Not used | Not used | Not used | Not used | VKX1007 | Not used | Not used | Not used | |
| | 11 | Packing Case | AHD7504 | AHD7505 | AHD7558 | AHD7550 | AHD7505 | AHD7499 | AHD7549 | AHD7502 | |

## 2.2 EXTERIOR (1/3)

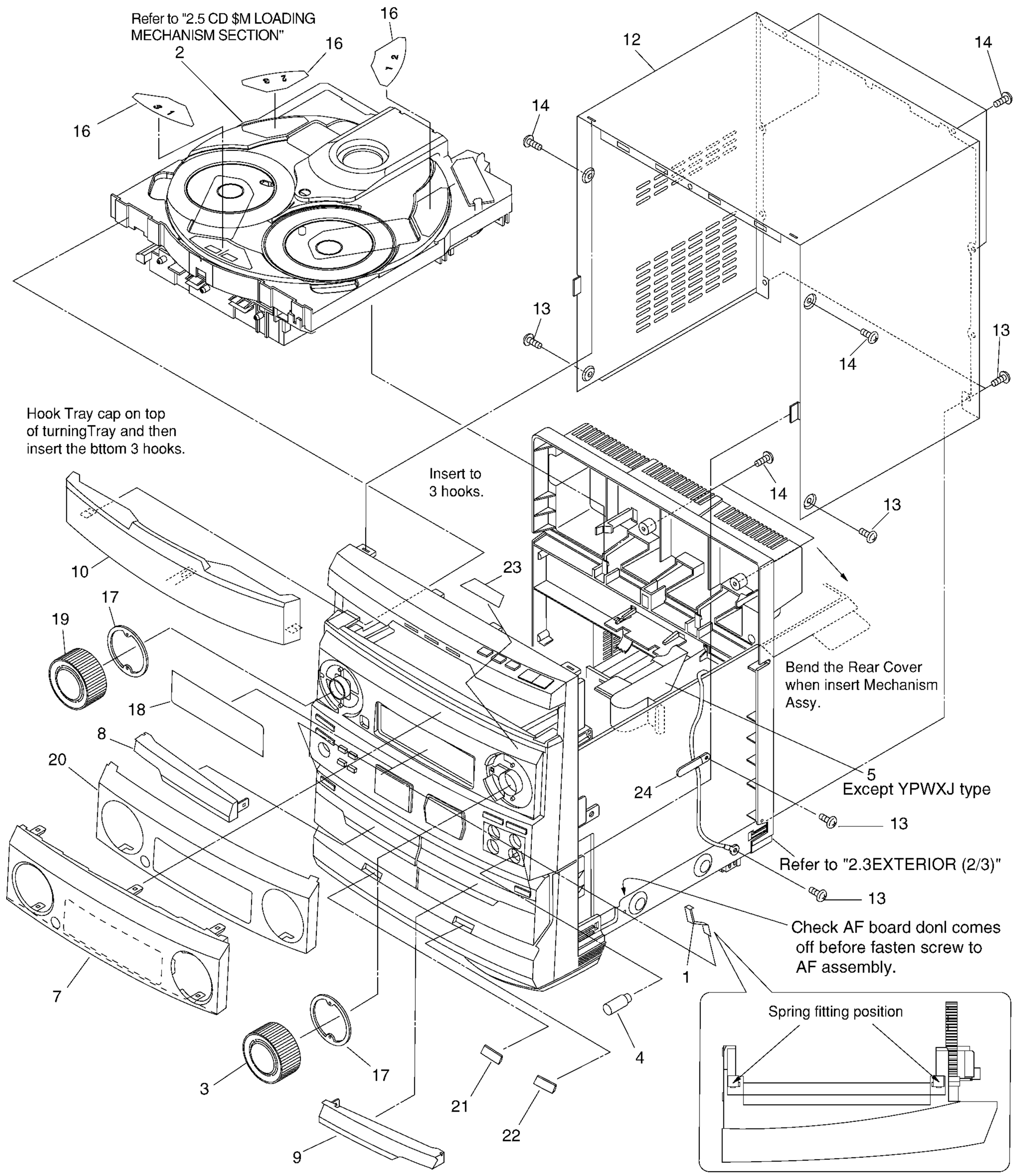


**NOTE : Screws adjacent to ▼ mark on product are used for disassembly.**
**However, there is no indication on the hood installation screws of the Rear Cover.**

## (1) EXTERIOR (1/3) PARTS LIST

| Mark | No. | Description | Parts No. |
|---|---|---|---|
| | 1 | Spring | RBK1004 |
| NSP | 2 | CD $M Loading Mechanism | See Contrast table (2) |
| | 3 | VOL Knob | AAB7134 |
| | 4 | MIC Knob | See Contrast table (2) |
| | 5 | 20P F.F.C/30V | See Contrast table (2) |
| | 6 | ..... | |
| | 7 | FL Lens | AAK7453 |
| | 8 | Deck Door Lens L | AAK7459 |
| | 9 | Deck Door Lens R | AAK7460 |
| | 10 | Tray Cap | AAK7457 |
| | 11 | ..... | |
| | 12 | Bonnet Case | AZN7703 |
| | 13 | Screw | VBZ30P080FZK |
| | 14 | Screw | BPZ30P100FZK |
| | 15 | ..... | |
| | 16 | Disc Label | XAX3046 |
| | 17 | Knob Spacer | AAK7498 |
| | 18 | FL Filter | AAK7518 |
| | 19 | Jog Knob Assy | AXG7051 |
| | 20 | FL Cover | AAK7542 |
| | 21 | Azimuth Cover L | AAK7555 |
| | 22 | Azimuth Cover R | AAK7556 |
| NSP | 23 | Getter | See Contrast table (2) |
| | 24 | Cord Pressure | See Contrast table (2) |

## (2) CONTRAST TABLE

XR-A600/DDXJ, DLXJ/NC, DLXJN/NC, YPWXJ, DXJ/NC, XR-A500/DDXJ, YPWXJ and XR-A500EE/DLWXJ/EE are constructed the same except for the following:

| Mark | No. | Symbol and Description | Part No. | | | | | | | | Remarks |
|---|---|---|---|---|---|---|---|---|---|---|---|
| | | | XR-A600 | | | | | XR-A500 | | XR-A500EE | |
| | | | DDXJ | DLXJ/NC | DLXJN/NC | YPWXJ | DXJ/NC | DDXJ | YPWXJ | DLWXJ/EE | |
| NSP | 2 | CD $M Loading Mechanism | XXA3002 | XXA3002 | XXA3002 | AXA7056 | XXA3002 | XXA3002 | AXA7056 | XXA3002 | |
| | 4 | MIC Knob (MIC LEVEL) | AAB7132 | AAB7132 | AAB7132 | AAB7132 | AAB7132 | AAB732 | AAB7132 | Not used | |
| | 5 | 20P F.F.C/30V | ADD7041 | ADD7041 | ADD7041 | Not used | ADD7041 | ADD7041 | Not used | ADD7041 | |
| | 5 | 22P F.F.C/30V | Not used | Not used | Not used | ADD7055 | Not used | Not used | ADD7055 | Not used | |
| NSP | 23 | Getter | AAX7572 | AAX7572 | AAX7572 | AAX7576 | AAX7572 | AAX7568 | AAX7575 | AAX7575 | |
| | 24 | Cord Pressure | Not used | Not used | Not used | RNH – 184 | Not used | Not used | RNH – 184 | Not used | |

## 2.3 EXTERIOR (2/3)

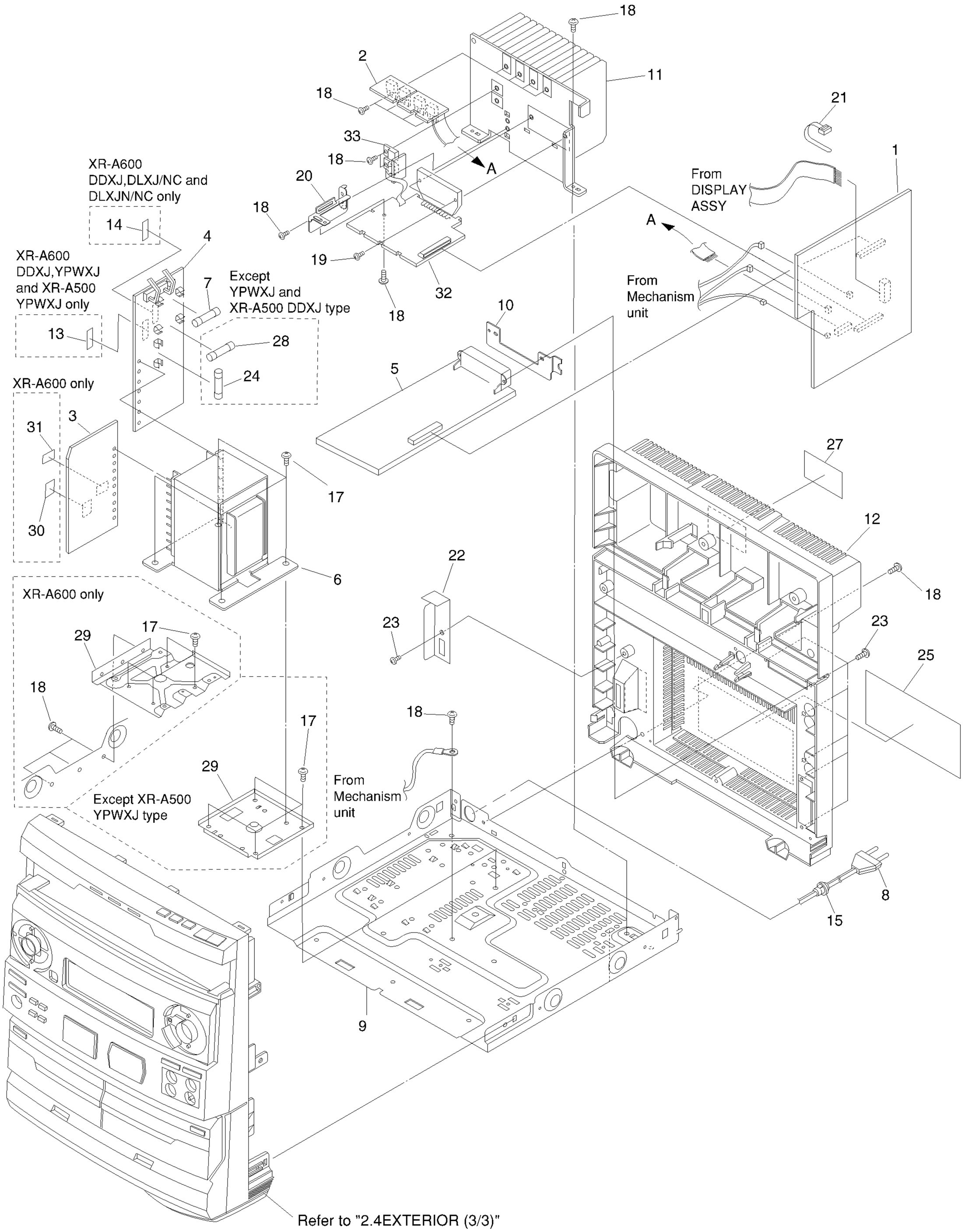

## (1) EXTERIOR (2/3) PARTS LIST

| Mark | No. | Description | Parts No. |
|---|---|---|---|
| | 1 | AF Assy | See Contrast table (2) |
| | 2 | REG. ASSY | AWZ8905 |
| | 3 | SECONDARY ASSY | See Contrast table (2) |
| | 4 | PRIMARY ASSY | See Contrast table (2) |
| | 5 | FM/AM TUNER MODULE | See Contrast table (2) |
| ⚠ | 6 | Power Transformer (T1) | See Contrast table (2) |
| ⚠ | 7 | Fuse (FU1) | See Contrast table (2) |
| ⚠ | 8 | AC Power Cord | See Contrast table (2) |
| NSP | 9 | Chassis | ANA7051 |
| | 10 | GND Plate | ANG7106 |
| | 11 | Heat Sink | See Contrast table (2) |
| | 12 | Rear Cover | See Contrast table (2) |
| NSP | 13 | Fuse card | See Contrast table (2) |
| NSP | 14 | Fuse card | See Contrast table (2) |
| | 15 | Strain relief | CM – 22B |
| | 16 | ..... | |
| | 17 | Screw | ASZ40P060FMC |
| | 18 | Screw | VBZ30P080FZK |
| | 19 | Screw | BBZ30P180FMC |
| | 20 | Bracket B | ANG7107 |
| | 21 | Binder | ZCA – SKB90BK |
| | 22 | PVC Barrier | See Contrast table (2) |
| | 23 | Screw | BPZ30P100FZK |
| ⚠ | 24 | Fuse (FU2) | See Contrast table (2) |
| NSP | 25 | Name Label | See Contrast table (2) |
| | 26 | ..... | |
| | 27 | Caution Label | See Contrast table (2) |
| ⚠ | 28 | Fuse (FU3) | See Contrast table (2) |
| | 29 | Trans. Frame | See Contrast table (2) |
| | 30 | ICP Label | See Contrast table (2) |
| | 31 | ICP Label | See Contrast table (2) |
| | 32 | POWER ASSY | See Contrast table (2) |
| | 33 | FET ASSY | AWZ8921 |

## (2) CONTRAST TABLE

XR-A600/DDXJ, DLXJ/NC, DLXJN/NC, YPWXJ, DXJ/NC, XR-A500/DDXJ, YPWXJ and XR-A500EE/DLWXJ/EE are constructed the same except for the following:

| Mark | No. | Symbol and Description | Part No. | | | | | | | | Remarks |
|---|---|---|---|---|---|---|---|---|---|---|---|
| | | | XR-A600 | | | | | XR-A500 | | XR-A500EE | |
| | | | DDXJ | DLXJ/NC | DLXJN/NC | YPWXJ | DXJ/NC | DDXJ | YPWXJ | DLWXJ/EE | |
| | 1 | AF ASSY | AWZ8908 | AWZ8908 | AWZ8908 | AWU7045 | AWZ8908 | AWZ8907 | AWU7010 | AWU7046 | |
| | 3 | SECONDARY ASSY | AWZ8913 | AWZ8913 | AWZ8913 | AWZ8913 | AWZ8913 | AWU7051 | AWU7051 | AWU7051 | |
| | 4 | PRIMARY ASSY | AWZ8910 | AWZ8910 | AWZ8910 | AWZ8922 | AWZ8910 | AWZ8910 | AWZ8922 | AWZ8910 | |
| | 5 | FM/AM TUNER MODULE | AXQ7061 | AXQ7061 | AXQ7061 | AXQ7061 | AXQ7061 | AXQ7061 | AXQ7061 | AXQ7069 | |
| ⚠ | 6 | Power Transformer (T1) | ATS7184 | ATS7184 | ATS7184 | ATS7184 | ATS7184 | ATS7185 | ATS7185 | ATS7185 | |
| ⚠ | 7 | Fuse (T5A/250V, FU1) | AEK1061 | AEK1061 | AEK1061 | Not used | AEK1061 | Not used | Not used | Not used | |
| ⚠ | 7 | Fuse (T2.5A/250V, FU1) | Not used | Not used | Not used | AEK1058 | Not used | AEK1058 | Not used | Not used | |
| ⚠ | 7 | Fuse (T1.25A/250V, FU1) | Not used | Not used | Not used | Not used | Not used | Not used | AEK1055 | AEK1055 | |
| ⚠ | 8 | AC Power Cord | ADG1157 | PDG1058 | PDG1058 | ADG1159 | PDG1058 | ADG1157 | ADG1159 | PDG1058 | |
| | 11 | Heat Sink | ANH7065 | ANH7065 | ANH7065 | ANH7065 | ANH7065 | ANH7078 | ANH7078 | ANH7078 | |
| | 12 | Rear Cver | AMC7021 | AMC7023 | AMC7023 | AMC7012 | AMC7021 | AMC7017 | AMC7012 | AMC7018 | |
| NSP | 13 | Fuse card | AAX7277 | AAX7277 | AAX7277 | AAX7277 | AAX7277 | Not used | Not used | Not used | |
| NSP | 14 | Fuse card | AAX7098 | AAX7098 | AAX7098 | Not used | AAX7098 | Not used | AAX2348 | Not used | |
| | 22 | PVC Barrier | AEC7103 | AEC7103 | AEC7103 | AEC7115 | AEC7103 | AEC7099 | AEC7115 | AEC7099 | |
| ⚠ | 24 | Fuse (T2.5A/250V, FU2) | AEK1058 | AEC1058 | AEC1058 | Not used | AEK1058 | Not used | Not used | AEK1058 | |
| ⚠ | 24 | Fuse (T1.25A/250V, FU2) | Not used | Not used | Not used | Not used | Not used | AEK1055 | Not used | Not used | |
| NSP | 25 | Name Label | AAL7194 | AAL7196 | AAL7196 | AAL7197 | AAL7195 | AAL7185 | AAL7186 | AAL7191 | |
| | 27 | Caution Label | Not used | PRW1018 | PRW1018 | PRW1018 | Not used | Not used | PRW1018 | Not used | |
| ⚠ | 28 | Fuse (T2.5A/250V, FU3) | AEK1058 | AEK1058 | AEK1058 | Not used | AEK1058 | Not used | Not used | Not used | |
| ⚠ | 28 | Fuse (T1.25A/250V, FU3) | Not used | Not used | Not used | Not used | Not used | AEK1055 | Not used | AEK1055 | |
| | 29 | Trans. Frame | ANG7149 | ANG7149 | ANG7149 | ANG7149 | ANG7149 | ANG7171 | Not used | ANG7171 | |
| | 30 | ICP Label | AAX7577 | AAX7577 | AAX7577 | AAX7577 | AAX7577 | Not used | Not used | Not used | |
| | 31 | ICP Label | AAX7578 | AAX7578 | AAX7578 | AAX7578 | AAX7578 | Not used | Not used | Not used | |
| | 32 | POWER Assy | AWZ8920 | AWZ8920 | AWZ8920 | AWZ8920 | AWZ8920 | AWZ8919 | AWZ8919 | AWZ8919 | |

## 2.4 EXTERIOR (3/3)

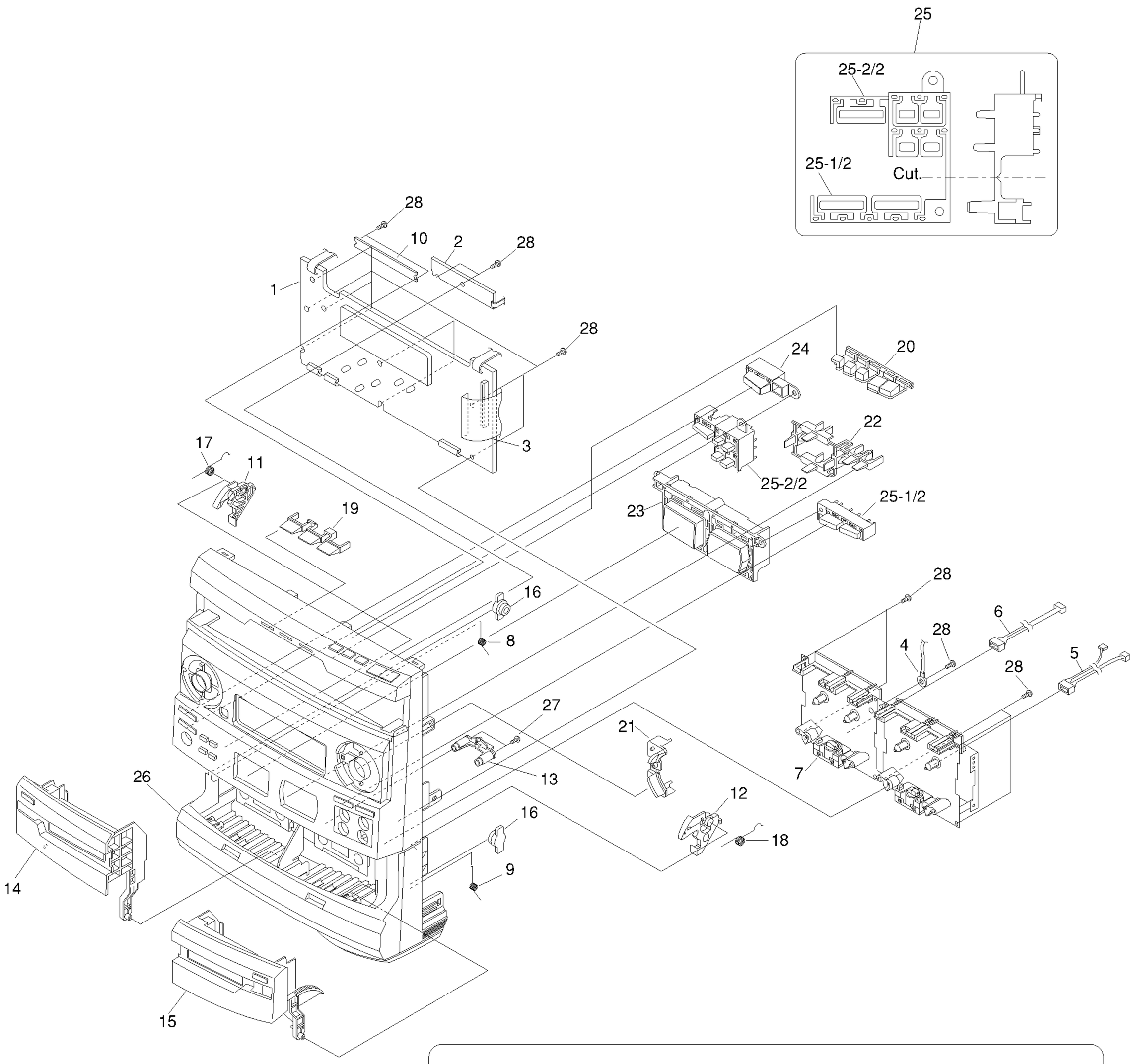


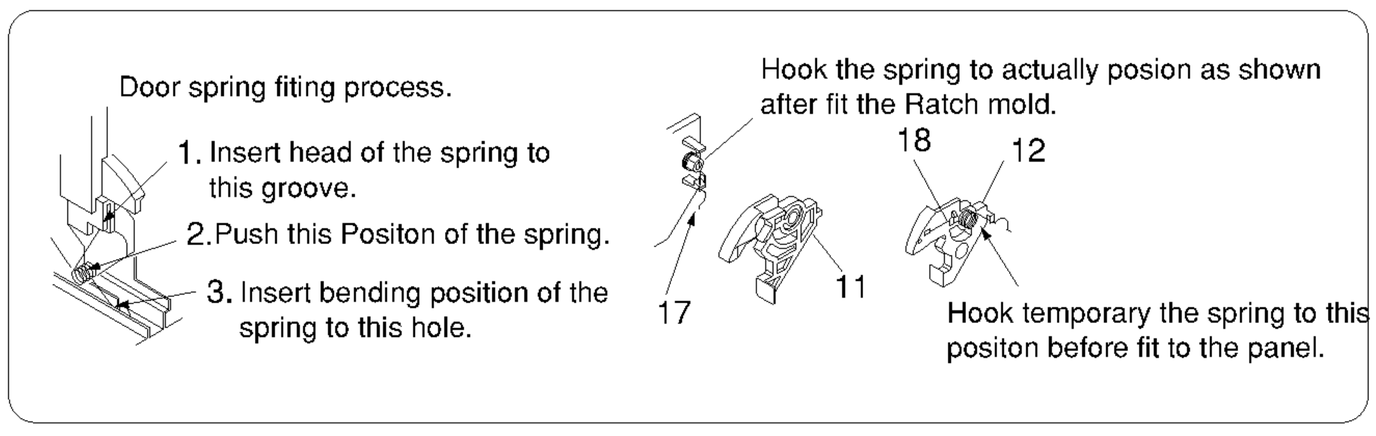

## (1) EXTERIOR (3/3) PARTS LIST

| Mark | No. | Description | Parts No. |
|---|---|---|---|
| | 1 | DISPLAY ASSY | See Contrast table (2) |
| NSP | 2 | CD SWITCH ASSY | AWZ8932 |
| | 3 | 35P F.F.C/60V | See Contrast table (2) |
| | 3 | 29P F.F.C60V | See Contrast table (2) |
| NSP | 4 | Earth Lead Wire | DEO15VEO |
| | 5 | Connector Assy 5P, (J3) | RKP1582 |
| | 6 | Connector Assy 3P, (J4) | RKP1583 |
| | 7 | Mechanism Unit | AYM7002 |
| | 8 | Door Spring L | ABH7152 |
| | 9 | Door Spring R | ABH7153 |
| NSP | 10 | CD LED ASSY | AWZ8933 |
| | 11 | Ratch Mold L | AMR7128 |
| | 12 | Ratch Mold R | AMR7129 |
| | 13 | Mechanism Support C | AMR7192 |
| | 14 | Deck Door L | AAN7168 |
| | 15 | Deck Door R | See Contrast table (2) |
| | 16 | Damper Assy | AXA7057 |
| | 17 | Ratch Spring L | ABH7130 |
| | 18 | Ratch Spring R | ABH7131 |
| | 19 | CD Lens | AAK7455 |
| | 20 | CD Button | AAD7402 |
| | 21 | VOL Lens | AAK7456 |
| | 22 | Function Lens | AAK7458 |
| | 23 | Function Button | AAD7403 |
| | 24 | SFC Button | AAD7405 |
| | 25 | Power Button | AAD7404 |
| | 26 | Front Panel | See Contrast table (2) |
| | 27 | Screw | BPZ30P100FMC |
| | 28 | Screw | BPZ30P100FZK |

## (2) CONTRAST TABLE

XR-A600/DDXJ, DLXJ/NC, DLXJN/NC, YPWXJ, DXJ/NC, XR-A500/DDXJ, YPWXJ and XR-A500EE/DLWXJ/EE are constructed the same except for the following:

| Mark | No. | Symbol and Description | Part No. | | | | | | | | Remarks |
|---|---|---|---|---|---|---|---|---|---|---|---|
| | | | XR-A600 | | | | | XR-A500 | | XR-A500EE | |
| | | | DDXJ | DLXJ/NC | DLXJN/NC | YPWXJ | DXJ/NC | DDXJ | YPWXJ | DLWXJ/EE | |
| | 1 | DISPLAY ASSY | AWZ8914 | AWZ8914 | AWZ8914 | AWZ8915 | AWZ8914 | AWZ8914 | AWZ8915 | AWZ8916 | |
| | 3 | 35P.F.F.C/60V | ADD7070 | ADD7070 | ADD7070 | ADD7070 | ADD7070 | ADD7070 | ADD7070 | Not used | |
| | 3 | 29P.F.F.C/60V | Not used | Not used | Not used | Not used | Not used | Not used | Not used | ADD7069 | |
| | 15 | Deck Door R | AAN7169 | AAN7169 | AAN7169 | AAN7176 | AAN7169 | AAN7169 | AAN7176 | AAN7176 | |
| | 26 | Front Panel | AMB7478 | AMB7478 | AMB7478 | AMB7478 | AMB7478 | AMB7472 | AMB7472 | AMB7473 | |

## 2.5 CD $M LOARDING MECHANISM SECTION

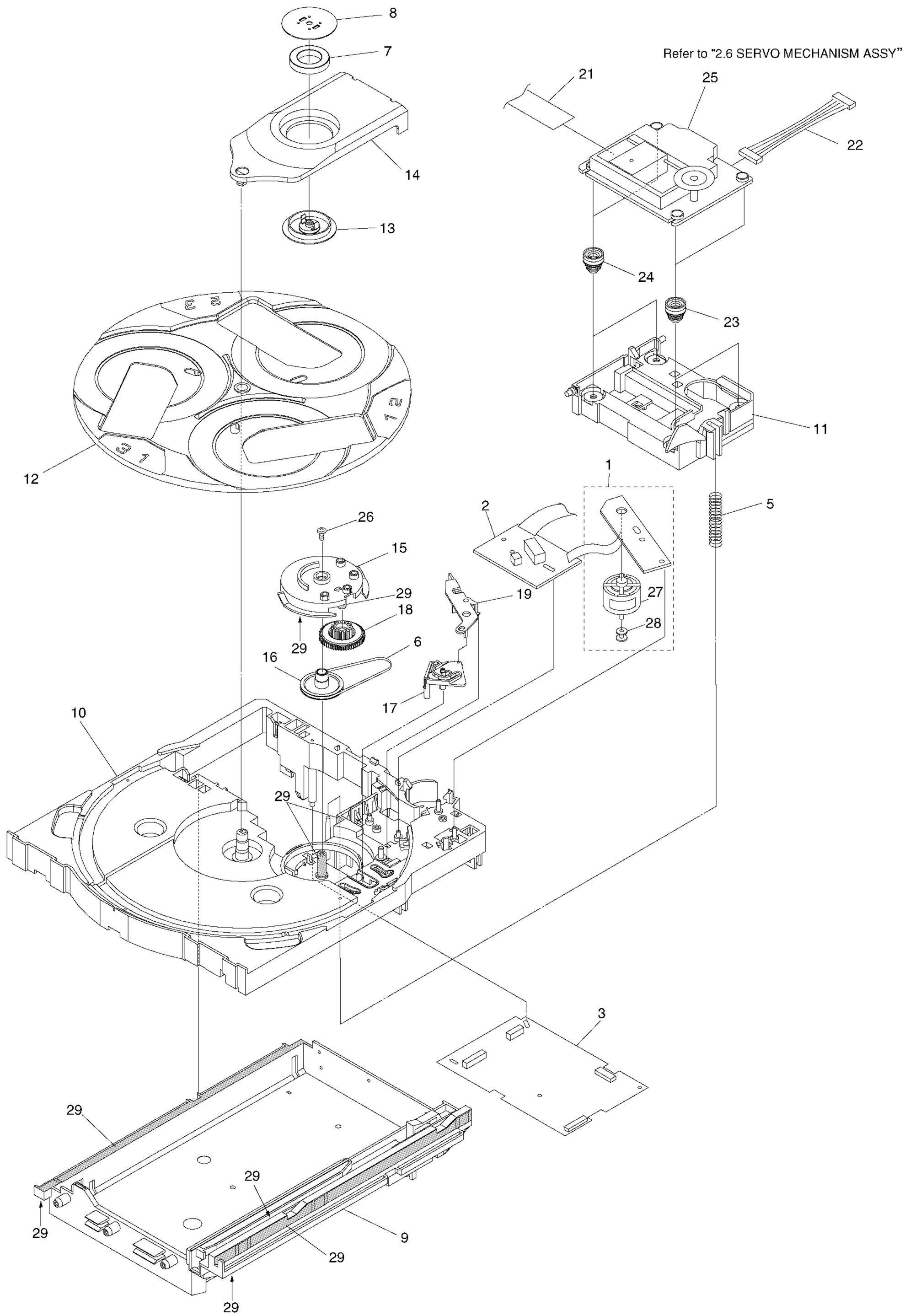

## (1) CD $M LOADING MECHANISM SECTION PARTS LIST

| Mark | No. | Description | Parts No. |
|---|---|---|---|
| | 1 | MOTOR ASSY | AWZ8428 |
| NSP | 2 | SW ASSY | AWZ8429 |
| | 3 | CD ASSY | See Contrast table(2) |
| | 4 | ..... | |
| | 5 | Servo Spring | ABH7126 |
| | 6 | Belt | AEB7072 |
| | 7 | Clamp Magnet | AMF7001 |
| | 8 | Yoke | ANB7067 |
| | 9 | Mechanism Base | ANW7087 |
| | 10 | Loading Tray | ANW7088 |
| | 11 | Servo Base | ANW7089 |
| | 12 | Rotary Tray | ANW7113 |
| | 13 | Clamper | ANW7091 |
| | 14 | Clamper Holder | ANW7092 |
| | 15 | Main Cam | ANW7093 |
| | 16 | Gear Pully | ANW7094 |
| | 17 | Lock Lever | ANW7095 |
| | 18 | Planet Gear | ANW7096 |
| | 19 | Actuater | ANW7097 |
| | 20 | Motor Cover | ANW7098 |
| | 21 | 15P F.F.C/30V | ADD7038 |
| | 22 | Connector Assy (6P) | ADE7010 |
| | 23 | Float Rubber A | AEB7063 |
| | 24 | Float Rubber B | AEB7066 |
| | 25 | Servo Mechanism Assy | AXA7039 |
| | 26 | Screw | IPZ30P080FMC |
| | 27 | Carriage Motor | VXM1033 |
| | 28 | Motor Pully | PNW1634 |
| | 29 | Ha Narl (For service) | GEM1016 |

## (2) CONTRAST TABLE

XR-A600/DDXJ, DLXJ/NC, DLXJN/NC, YPWXJ, DXJ/NC, XR-A500/DDXJ, YPWXJ and XR-A500EE/DLWXJ/EE are constructed the same except for the following:

| Mark | No. | Symbol and Description | Part No. | | | | | | | | Remarks |
|---|---|---|---|---|---|---|---|---|---|---|---|
| | | | XR-A600 | | | | | XR-A500 | | XR-A500EE | |
| | | | DDXJ | DLXJ/NC | DLXJN/NC | YPWXJ | DXJ/NC | DDXJ | YPWXJ | DLWXJ/EE | |
| | 3 | CD ASSY | AWZ8427 | AWZ8427 | AWZ8427 | AWZ8742 | AWZ8427 | AWZ8427 | AWZ8742 | AWZ8427 | |

## 2.6 SERVOMECHANISM ASSY

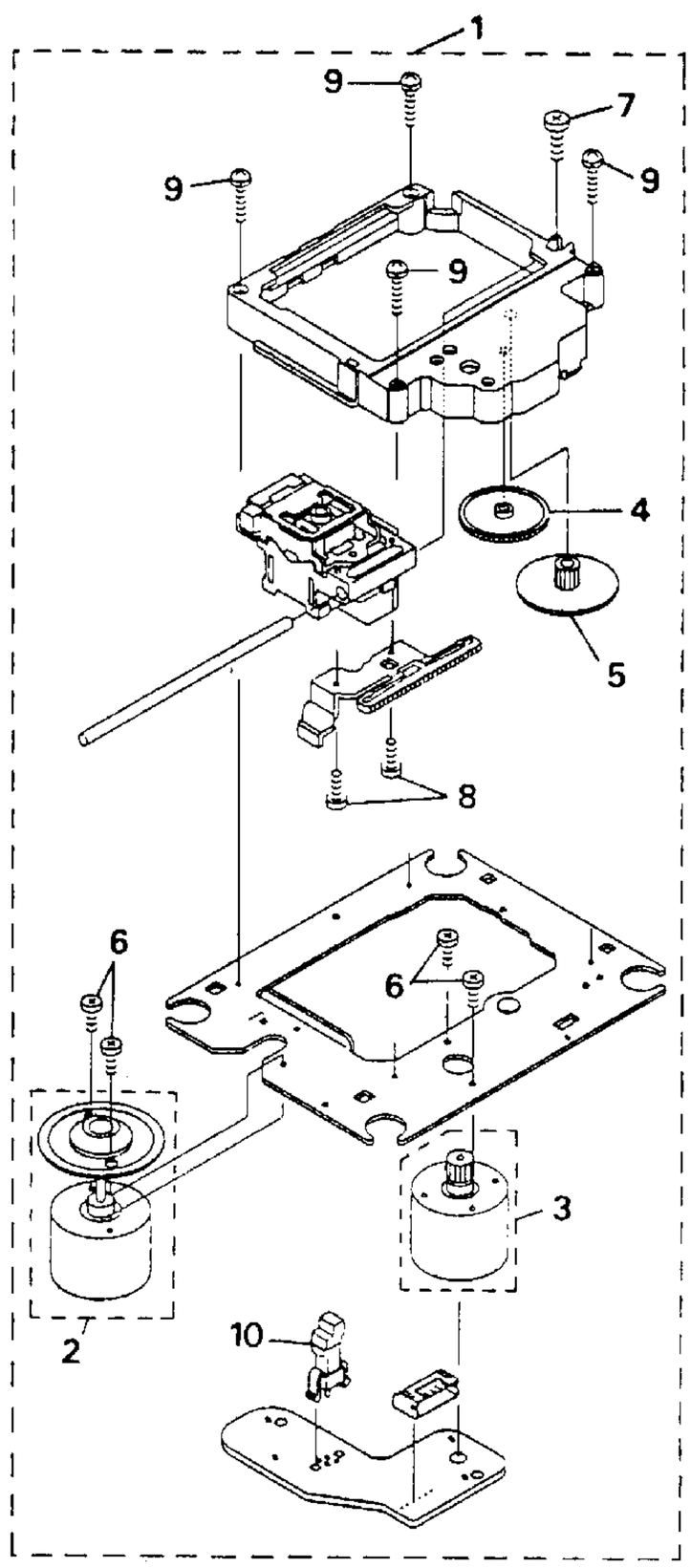


### ● SERVO MECHANISM ASSY PARTS LIST

| Mark | No. | Description | Parts No. |
|---|---|---|---|
| | 1 | Servo Mechanism | AXA7039 |
| | 2 | SPINDLE MOTOR ASSY | AEA7009 |
| | 3 | SLEAD MOTOR ASSY | AEA7010 |
| | 4 | Gear A | AEA7013 |
| | 5 | Gear B | AEA7014 |
| | 6 | Screw | AEA7015 |
| | 7 | Screw | AEA7016 |
| | 8 | Screw | AEA7017 |
| | 9 | Screw | AEA7018 |
| | 10 | Leaf Switch | AEA7011 |

## 2.7 MECHANISM UNIT SECTION (1/2), (2/2) FRONT

● **Mecha. unit I, II section (1/2)**

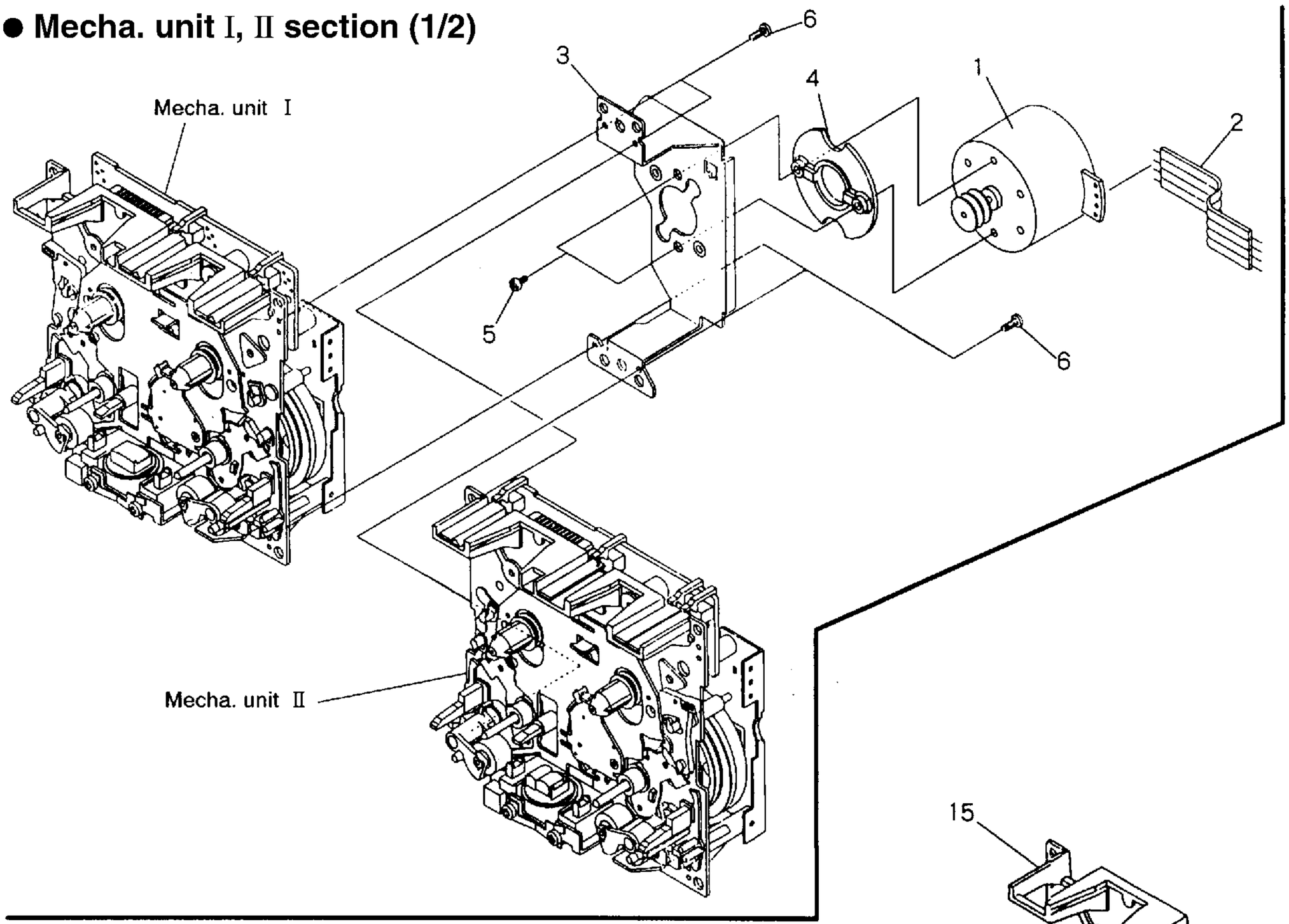


● **Mecha. unit I, II section (2/2 - front side)**

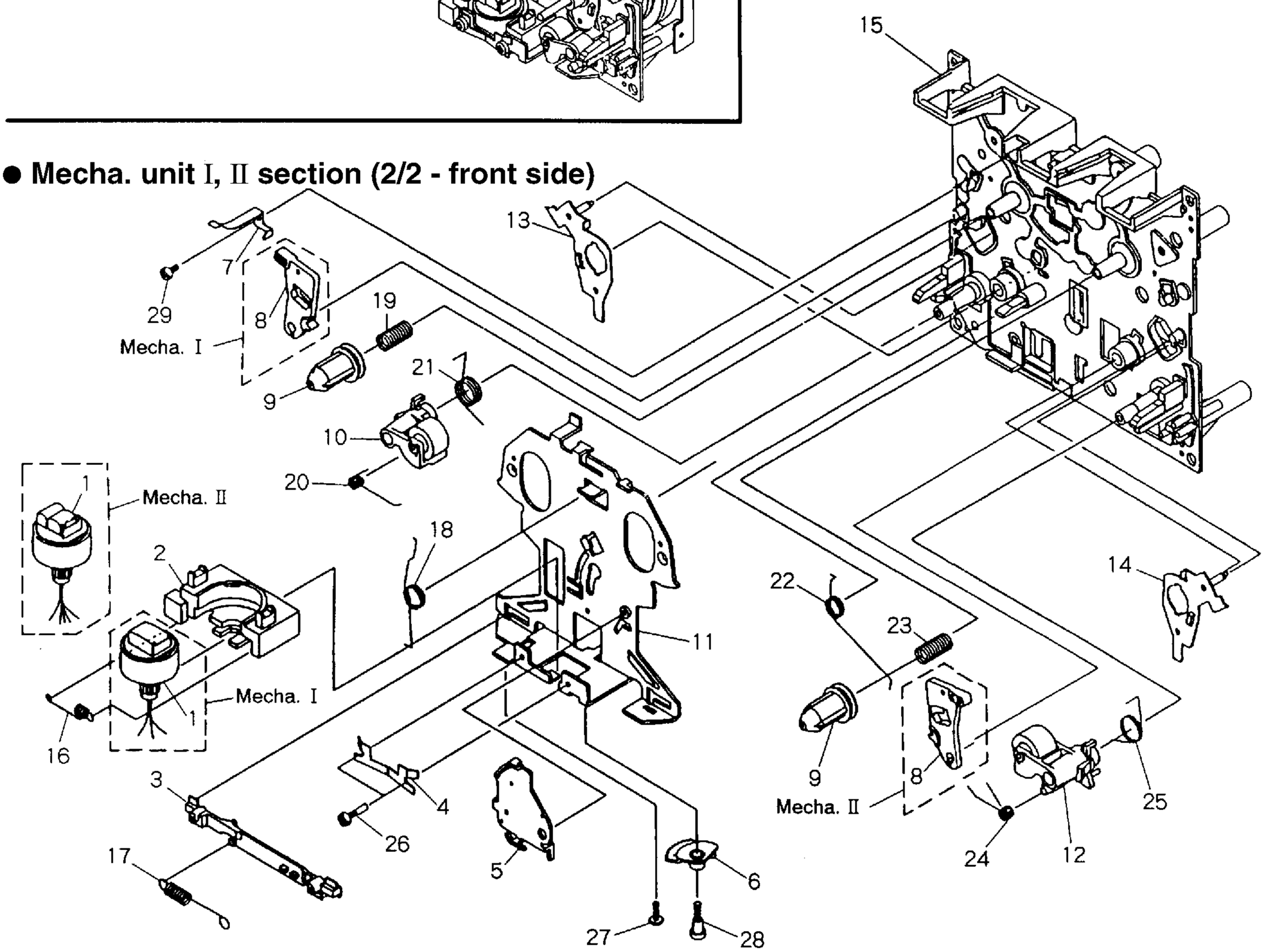

## ● MECHANISM UNIT SECTION (1/2) PARTS LIST

| Mark | No. | Description | Parts No. |
|---|---|---|---|
| | 1 | Assy Motor | RXM1080 |
| NSP | 2 | Jumper Cable | RDD1012 |
| | 3 | Bracket Motor | RNE1830 |
| | 4 | Spacer | RNK1822 |
| | 5 | Screw | RBA1100 |
| | 6 | Screw | PCZ20P040FMC |

## ● MECHANISM UNIT SECTION (2/2) FRONT PARTS LIST

| Mark | No. | Description | Parts No. |
|---|---|---|---|
| | 1 | Assy Holder Head (Mecha. I) | RXA1400 |
| | 1 | Assy Holder Head (Mecha. II) | RXA1664 |
| | 2 | Frame Head | RNK1715 |
| | 3 | Lever Head | RNK1716 |
| | 4 | Spring Azimuth | RBK1006 |
| | 5 | Assy Arm Assist | RXA1401 |
| | 6 | Gear Arm Head | RNK1717 |
| | 7 | Spring Cassette | RBK1039 |
| | 8 | Eject Lock | RNK1718 |
| | 9 | Cap Reel | RNK1719 |
| | 10 | Assy Pinch Arm L | RXA1403 |
| | 11 | Chassis Head | RNE1437 |
| | 12 | Assy Pinch Arm R | RXA1404 |
| | 13 | Arm Play L | RNK1866 |
| | 14 | Arm Play R | RNK1868 |
| | 15 | Chassis OS | RXA1411 |
| | 16 | Spring | RBH1282 |
| | 17 | Spring | RBH1283 |
| | 18 | Spring | RBH1284 |
| | 19 | Spring | RBH1286 |
| | 20 | Spring | RBH1288 |
| | 21 | Spring | RBH1291 |
| | 22 | Spring | RBH1285 |
| | 23 | Spring | RBH1287 |
| | 24 | Spring | RBH1289 |
| | 25 | Spring | RBH1290 |
| | 26 | Screw (azimuth) | RBA1023 |
| | 27 | Screw | RBA1027 |
| | 28 | Screw | RBA1030 |
| | 29 | Screw | PCZ20P040FMC |

## 2.8 MECHANISM UNIT SECTION (2/2) REAR

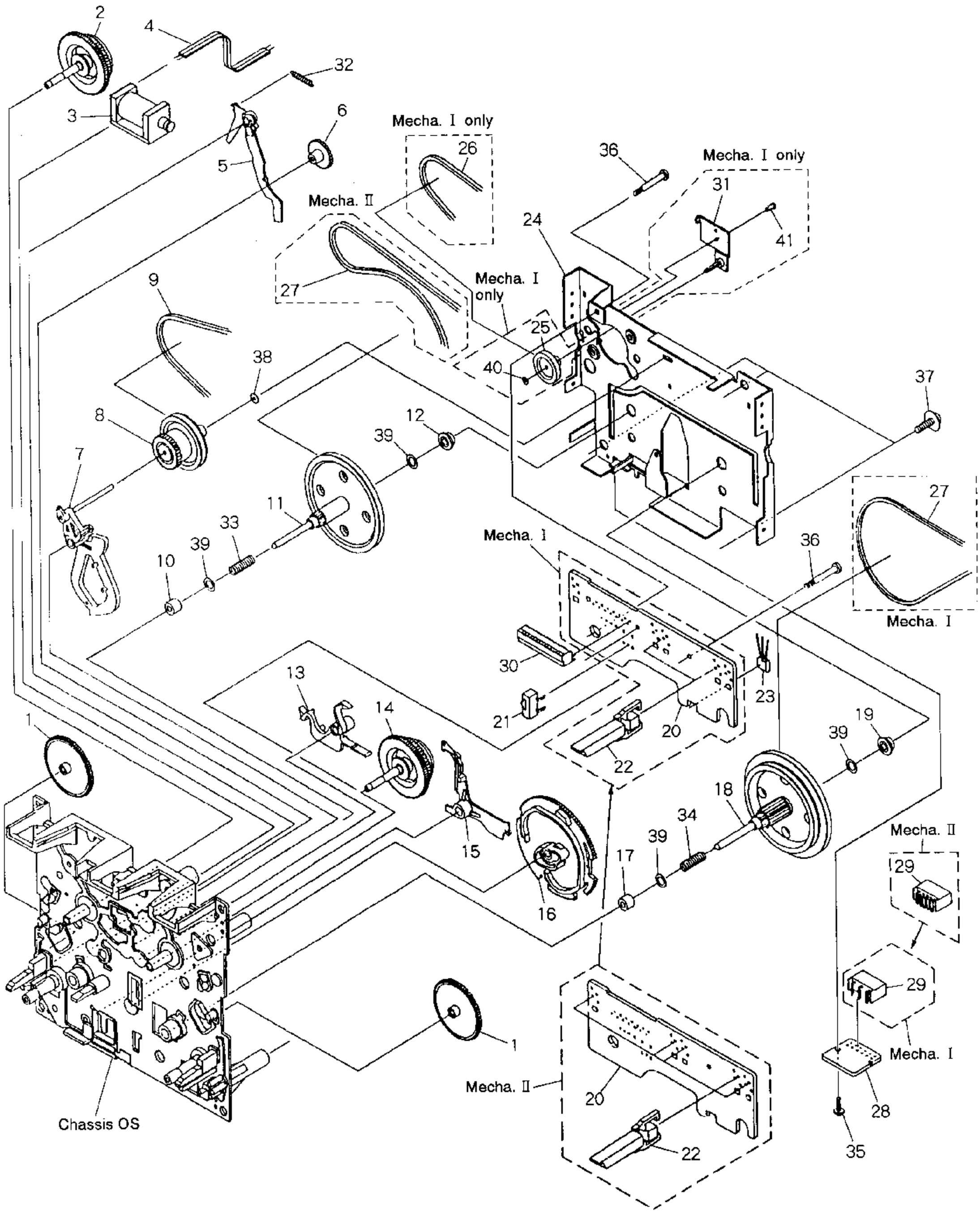

## ● MECHANISM UNIT SECTION (2/2) REAR PARTS LIST

| Mark No. | Description | Parts No. |
|---|---|---|
| 1 | Gear Play | RNK1867 |
| 2 | Assy Sub Reel L | RXA1407 |
| 3 | Solenoid | RXP1020 |
| 4 | Wire | RDC1006 |
| 5 | Arm RVS | RNK1721 |
| 6 | Gear FF | RNK1723 |
| 7 | Assy Arm FR | RXA1412 |
| 8 | Assy Pulley FR | RXA1413 |
| 9 | Belt FR | REB1292 |
| 10 | Metal | RNG1048 |
| 11 | Assy Flywheel L | RXA1690 |
| 12 | Metal | RNG1005 |
| 13 | Arm Brake | RNK1724 |
| 14 | Assy Sub Reel R | RXA1408 |
| 15 | Arm Trigger | RNK1722 |
| 16 | Gear Cam | RNK1725 |
| 17 | Metal | RNG1049 |
| 18 | Assy Flywheel R | RXA1691 |
| 19 | Metal | RNG1004 |
| 20 | P.C. Board | RNP1610 |
| 21 | Switch Mode | RSN1020 |
| 22 | Switch (LEAF) | RSN1019 |
| 23 | Hall IC | DN6851A |
| 24 | Bracket FW (Mecha. I) | RNE1854 |
| 24 | Bracket FW (Mecha. II) | RNE1438 |
| 25 | Pulley (Mecha. I only) | RNK2132 |
| 26 | Belt FW (Mecha. II only) | REB1291 |
| 27 | Belt Main (Mecha. I) | REB1290 |
| 27 | Belt Main (Mecha. II) | REB1289 |
| 28 | P.C. Board | RNP1348 |
| 29 | Housing (Mecha. I) | RKP1396 |
| 29 | Housing (Mecha. II) | RKP1397 |
| 30 | Connector (Mecha. I) | RKP1713 |
| 30 | Connector (Mecha. II) | RKP1714 |
| 31 | Assy Holder (Mecha. I only) | RXA1689 |
| 32 | Spring | RBH1292 |
| 33 | FWR SP (Spring) | RBH1061 |
| 34 | Spring | RBH1325 |
| 35 | Screw | PCZ20P040FMC |
| 36 | Screw | RBA1093 |
| 37 | Screw | RBA1094 |
| 38 | Washer | RBF1046 |
| 39 | Washer | WA26D047D013 |
| 40 | Washer (Mecha. I only) | WT13D030D025 |
| 41 | Screw (Mecha. I only) | RBA1118 |

# 3. SCHEMATIC DIAGRAM

Note : When ordering service parts, be sure to refer to "EXPLODED VIEWS and PARTS LIST" or "PCB PARTS LIST"

## 3.1 OVERALL CONNECTION

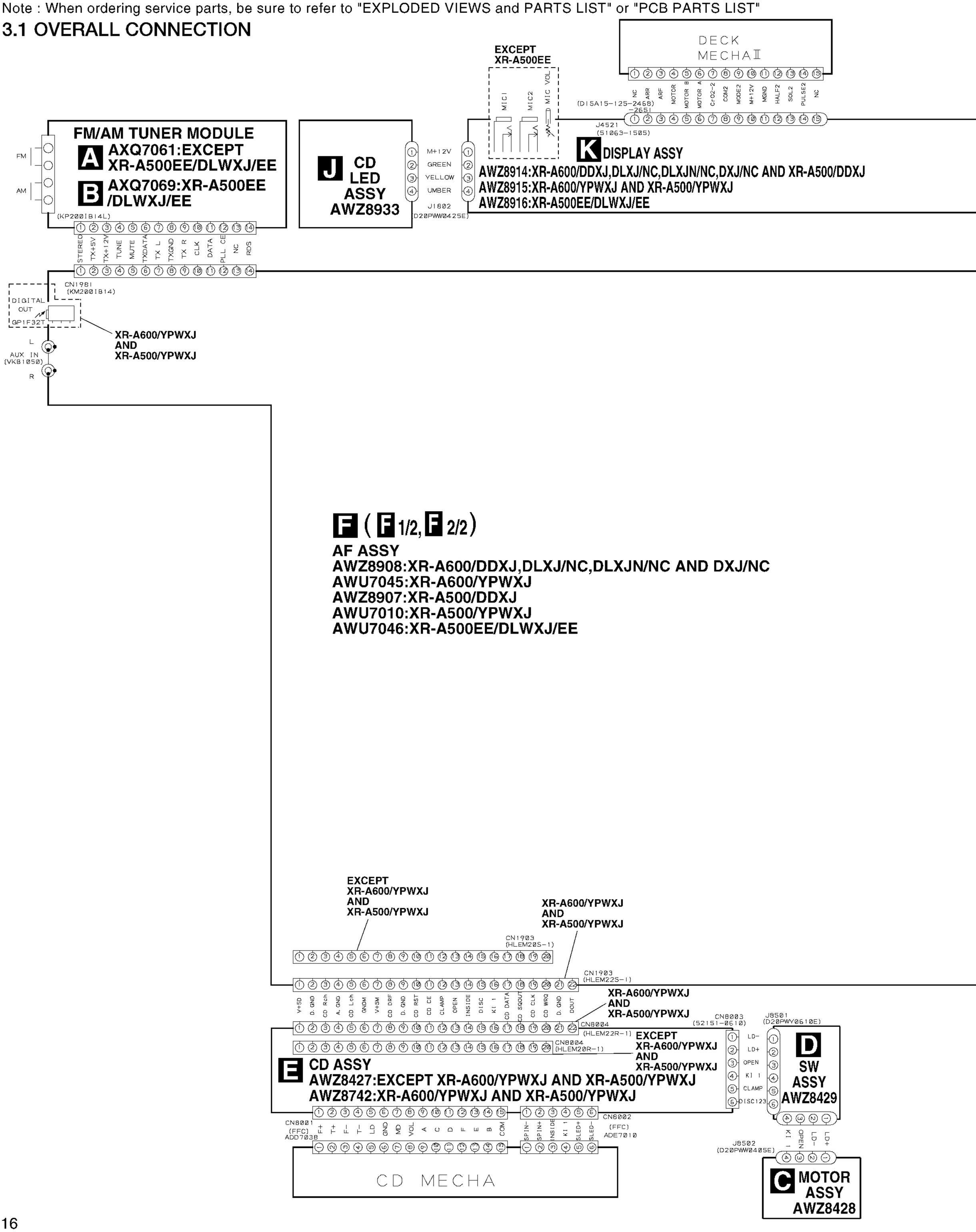

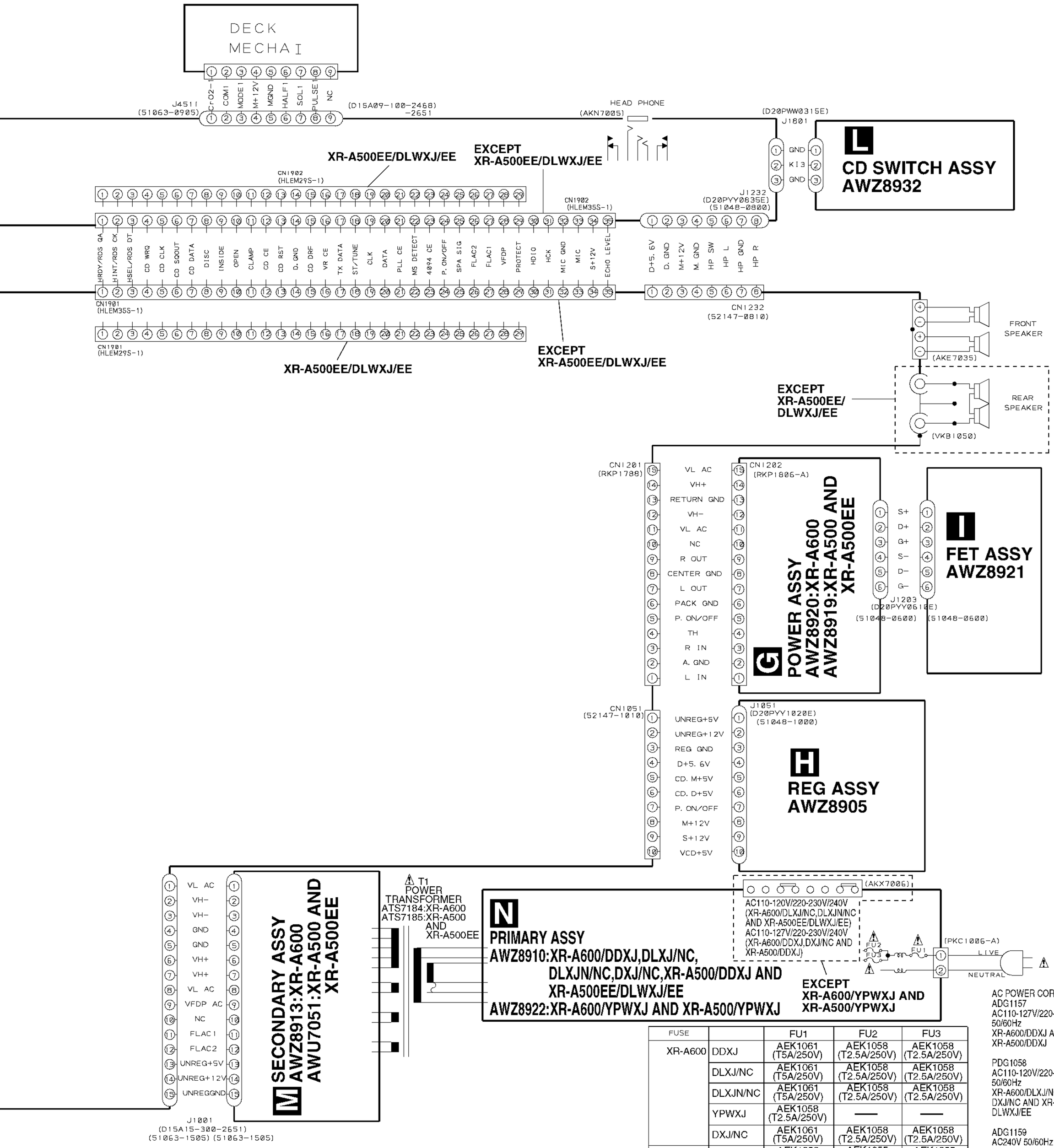


AC POWER CORD
ADG1157
AC110-127V/220-230V/240V
50/60Hz
XR-A600/DDXJ AND
XR-A500/DDXJ

PDG1058
AC110-120V/220-230V/240V
50/60Hz
XR-A600/DLXJ/NC,DLXJN/NC,
DXJ/NC AND XR-A500EE/
DLWXJ/EE

ADG1159
AC240V 50/60Hz
XR-A600/YPWXJ AND
XR-A500/YPWXJ

| FUSE | | FU1 | FU2 | FU3 |
|---|---|---|---|---|
| XR-A600 | DDXJ | AEK1061 (T5A/250V) | AEK1058 (T2.5A/250V) | AEK1058 (T2.5A/250V) |
| | DLXJ/NC | AEK1061 (T5A/250V) | AEK1058 (T2.5A/250V) | AEK1058 (T2.5A/250V) |
| | DLXJN/NC | AEK1061 (T5A/250V) | AEK1058 (T2.5A/250V) | AEK1058 (T2.5A/250V) |
| | YPWXJ | AEK1058 (T2.5A/250V) | — | — |
| | DXJ/NC | AEK1061 (T5A/250V) | AEK1058 (T2.5A/250V) | AEK1058 (T2.5A/250V) |
| XR-A500 | DDXJ | AEK1058 (T2.5A/250V) | AEK1055 (T1.25A/250V) | AEK1055 (T1.25A/250V) |
| | YPWXJ | AEK1055 (T1.25A/250V) | — | — |
| XR-A500EE | DLWXJ/EE | AEK1055 (T1.25A/250V) | AEK1058 (T2.5A/250V) | AEK1055 (T1.25A/250V) |

## NOTE FOR FUSE REPLACEMENT

CAUTION— FOR CONTINUED PROTECTION AGAINST RISK OF FIRE, REPLACE ONLY WITH SAME TYPE AND RATINGS ONLY.

## 3.2 FM/AM TUNER MODULE (DDXJ, DLXJ/NC, DLXJN/NC, DXJ/NC AND YPWXJ TYPES)

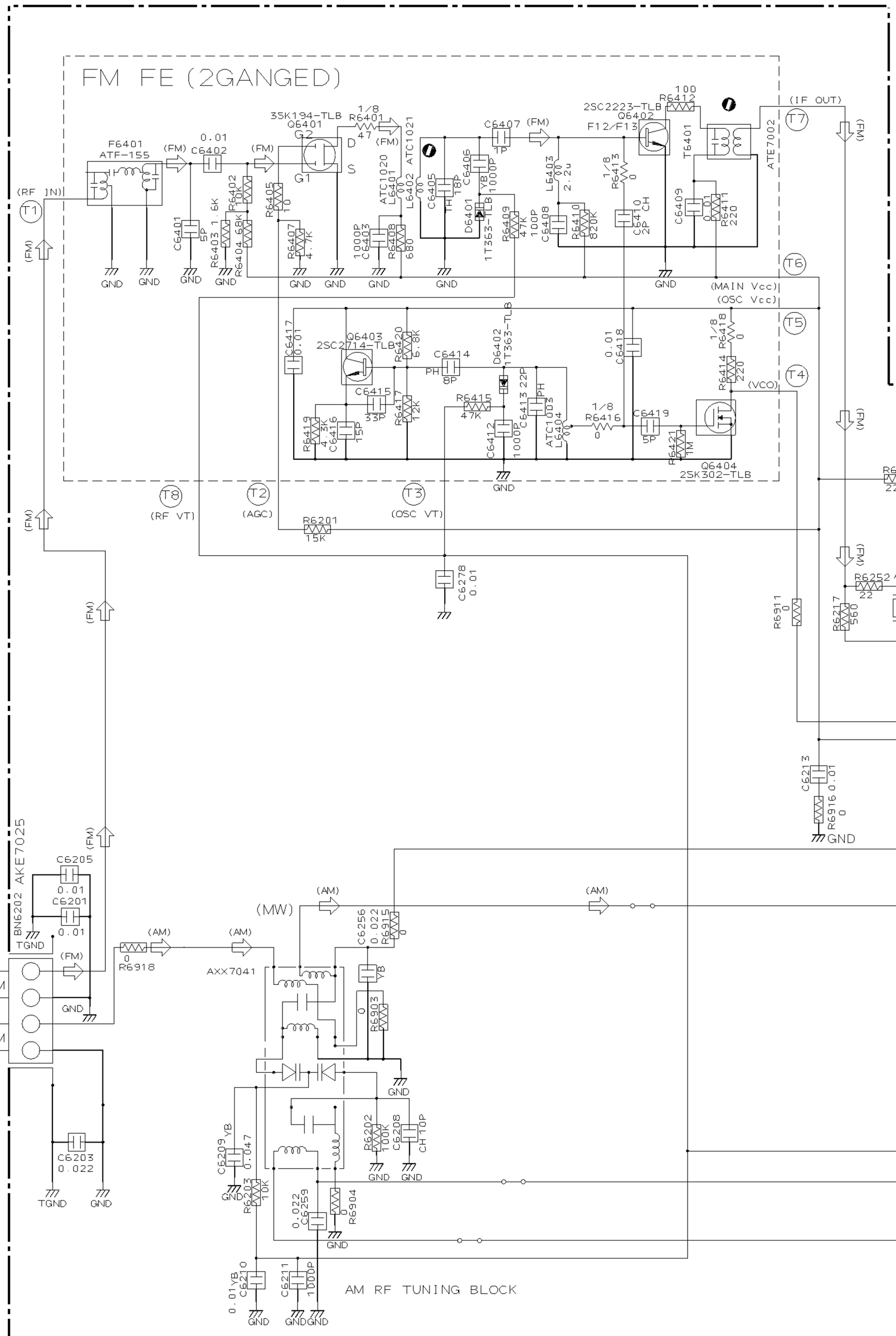


**A FM/AM TUNER MODULE**
**AXQ7061:XR-A600/DDXJ,DLXJ/NC,DLXJN/NC,YPWXJ,DXJ/NC**
**XR-A500/DDXJ AND YPWXJ**

SIGNAL ROUTE
(AM) : AM SIGNAL ROUTE
(FM) : FM SIGNAL ROUTE
(TA) : TUNER AUDIO SIGNAL ROUTE

Notes

1. RESISTORS
   Indicated in Ω, 1/10W±5% Tolerance unless otherwise noted K:KΩ, M:MΩ.

2. CAPACITORS
   Indicated in Capacity(μF)/VOLTAGE(V) unless otherwise noted P:PF.

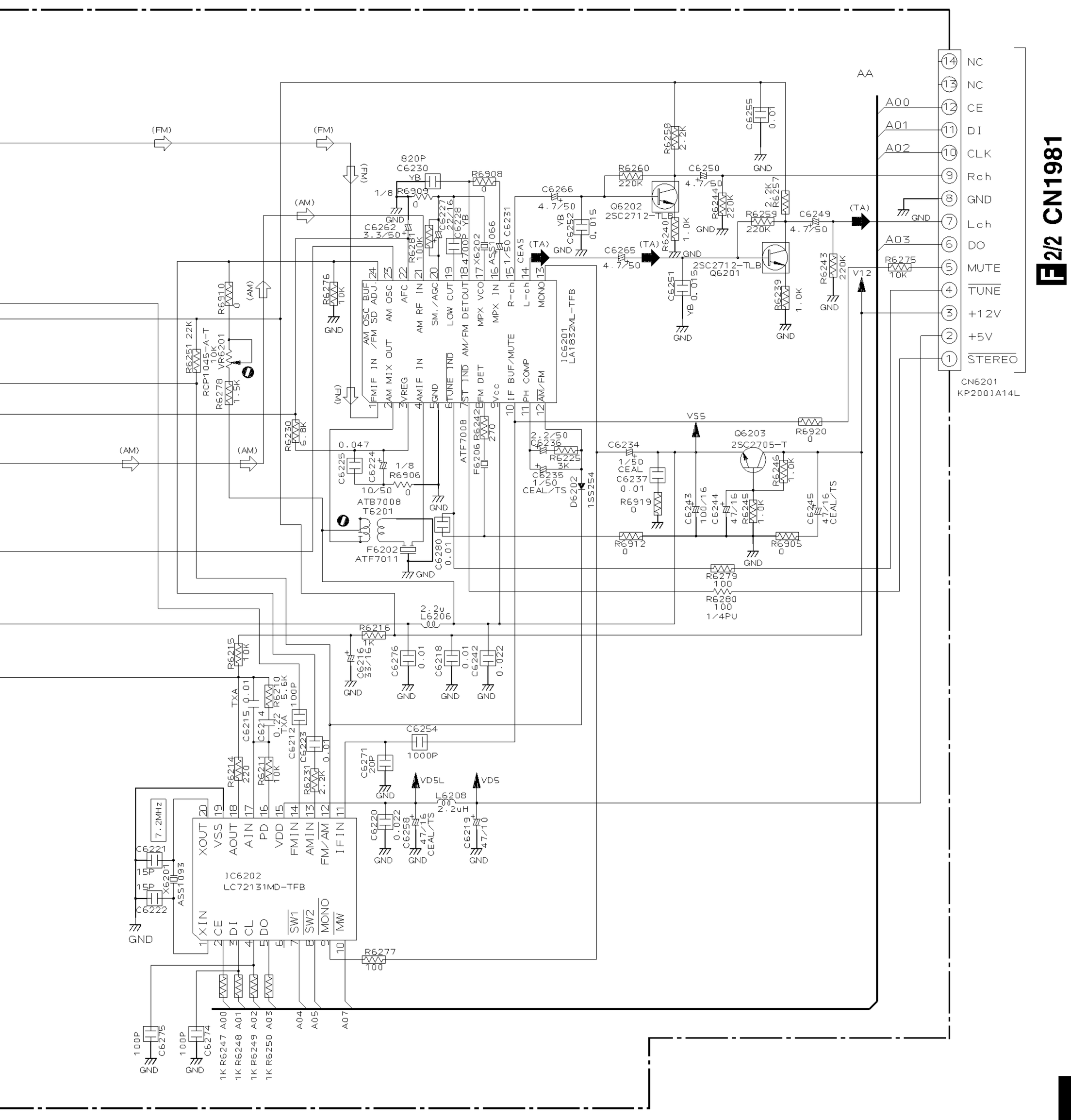

## 3.3 FM/AM TUNER MODULE (DLWXJ/EE TYPE)

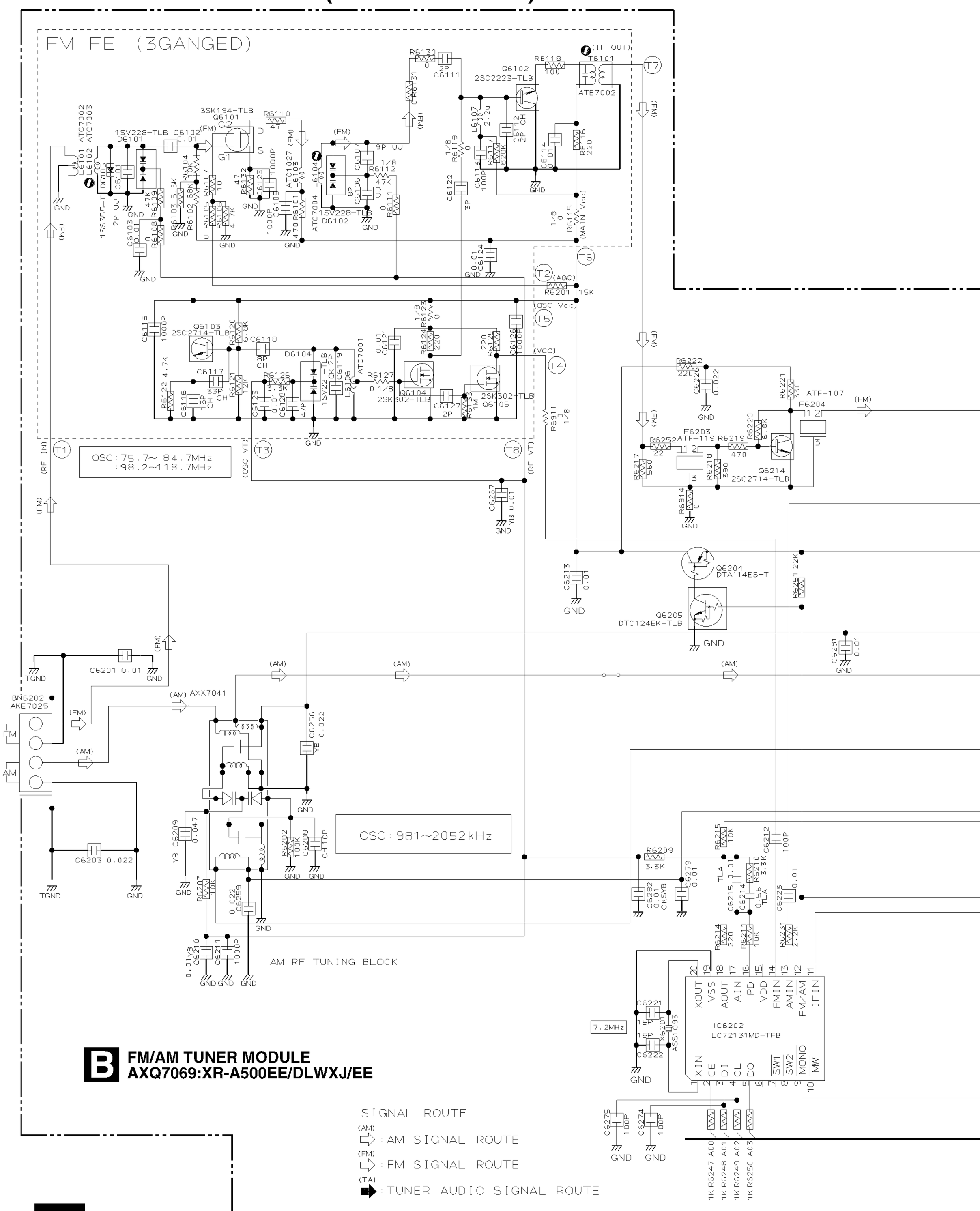


**B FM/AM TUNER MODULE**
**AXQ7069:XR-A500EE/DLWXJ/EE**

A

Notes

1. RESISTORS
   Indicated in Ω, 1/10W±5% Tolerance unless otherwise noted K:KΩ, M:MΩ.
2. CAPACITORS
   Indicated in Capacity(μF)/VOLTAGE(V) unless otherwise noted P:PF.
3. DIODES
   No mark diode is 1SS254.

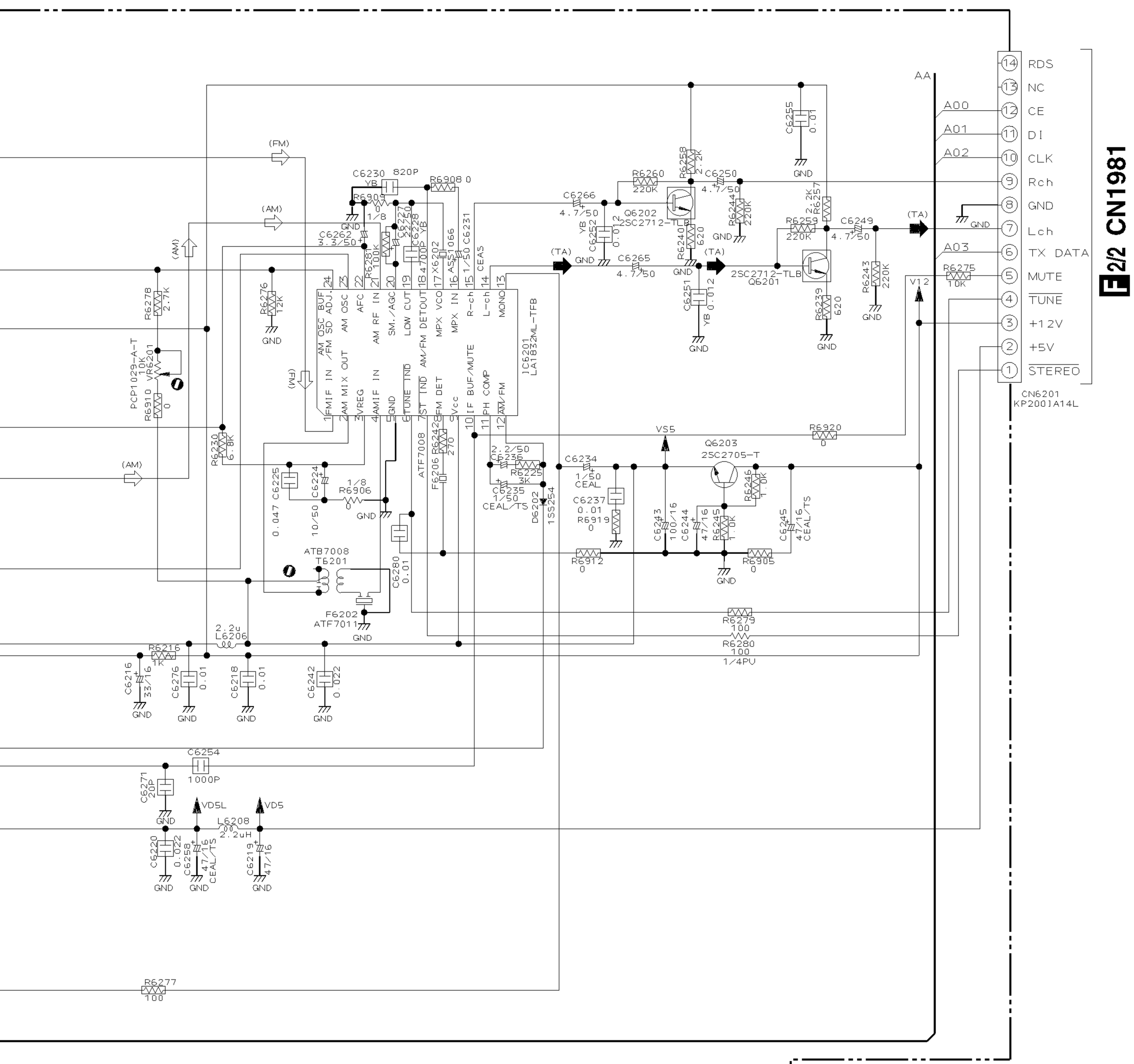


B

C

D

2/2 CN1981

B

## 3.4 MOTOR ASSY, SW ASSY AND CD ASSY

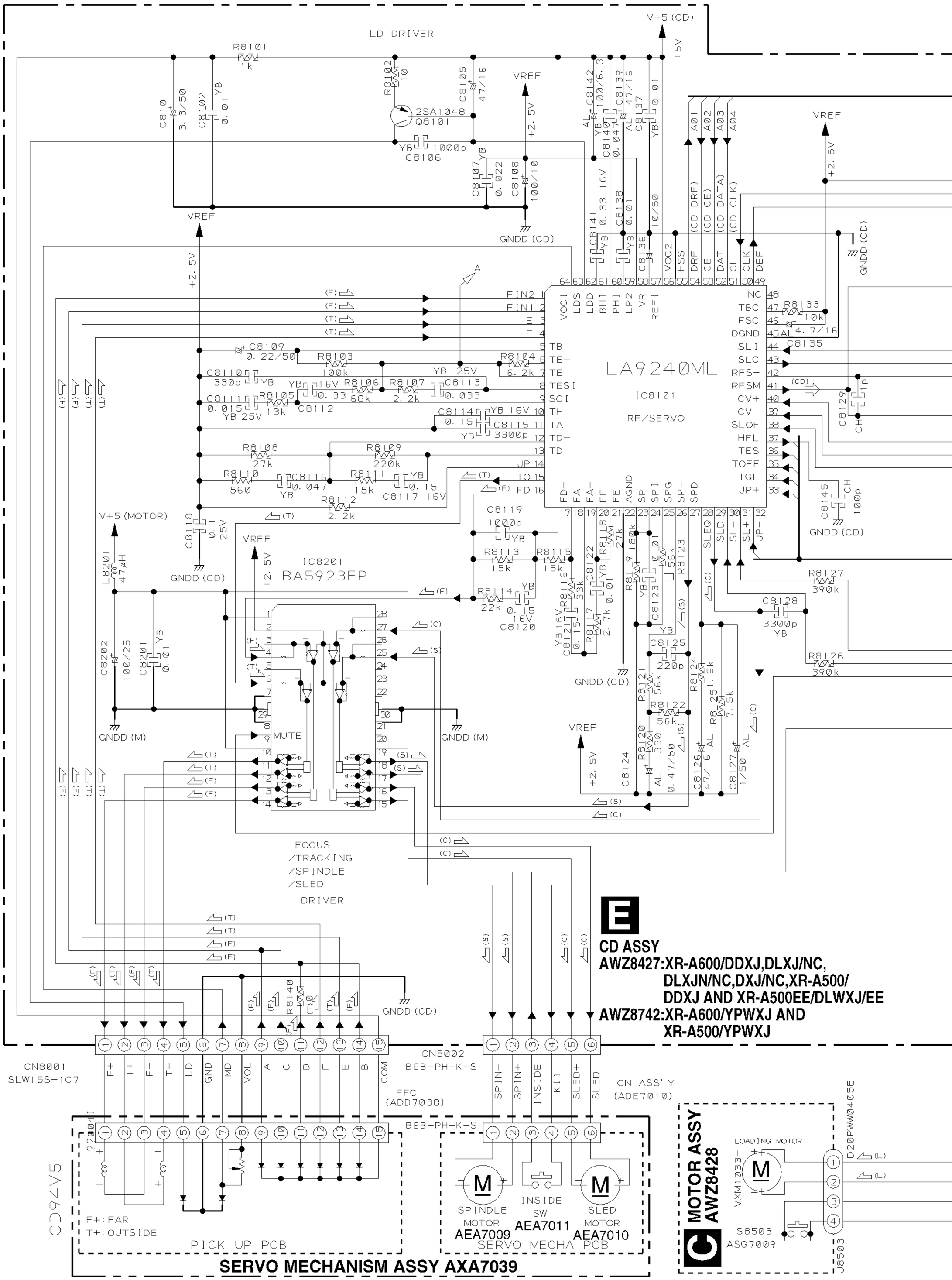

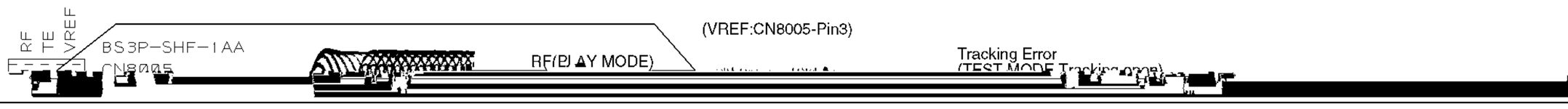
RF
TE
VREF
BS3P-SHF-1AA
CN8005
RF(PLAY MODE)
(VREF:CN8005-Pin3)
Tracking Error

## 3.5 AF ASSY(1/2)

**F 1/2 AF ASSY**
**AWZ8908:XR-A600/DDXJ,DLXJ/NC,DLXJN/NC AND DXJ/NC**
**AWU7045:XR-A600/YPWXJ**
**AWZ8907:XR-A500/DDXJ**
**AWU7010:XR-A500/YPWXJ**
**AWU7046:XR-A500EE/DLWXJ/EE**

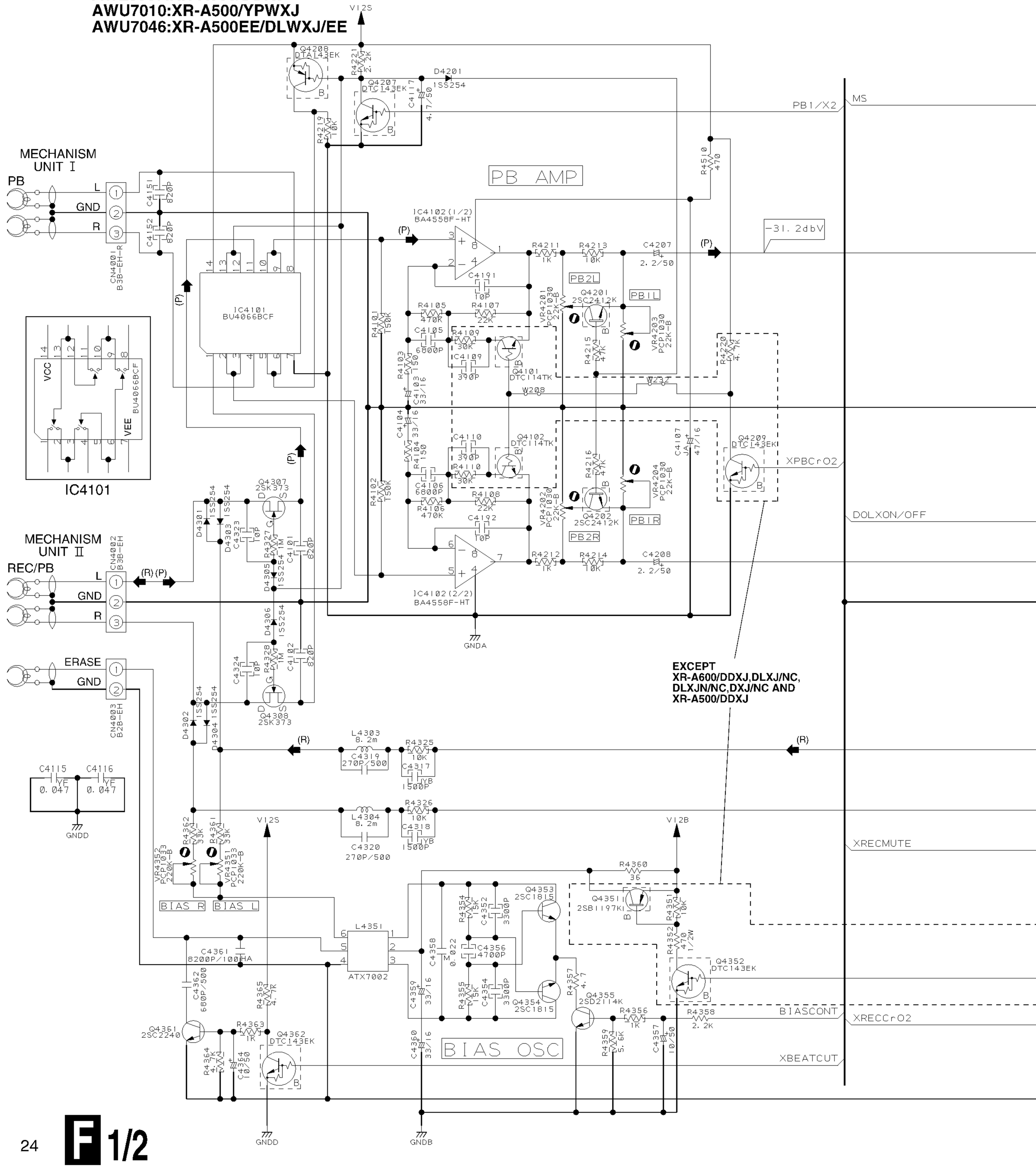

SIGNAL ROUTE
(P) ➡ :DECK AUDIO SIGNAL ROUTE(PLAYBACK)
(R) ➡ :DECK AUDIO SIGNAL ROUTE(RECORDING)

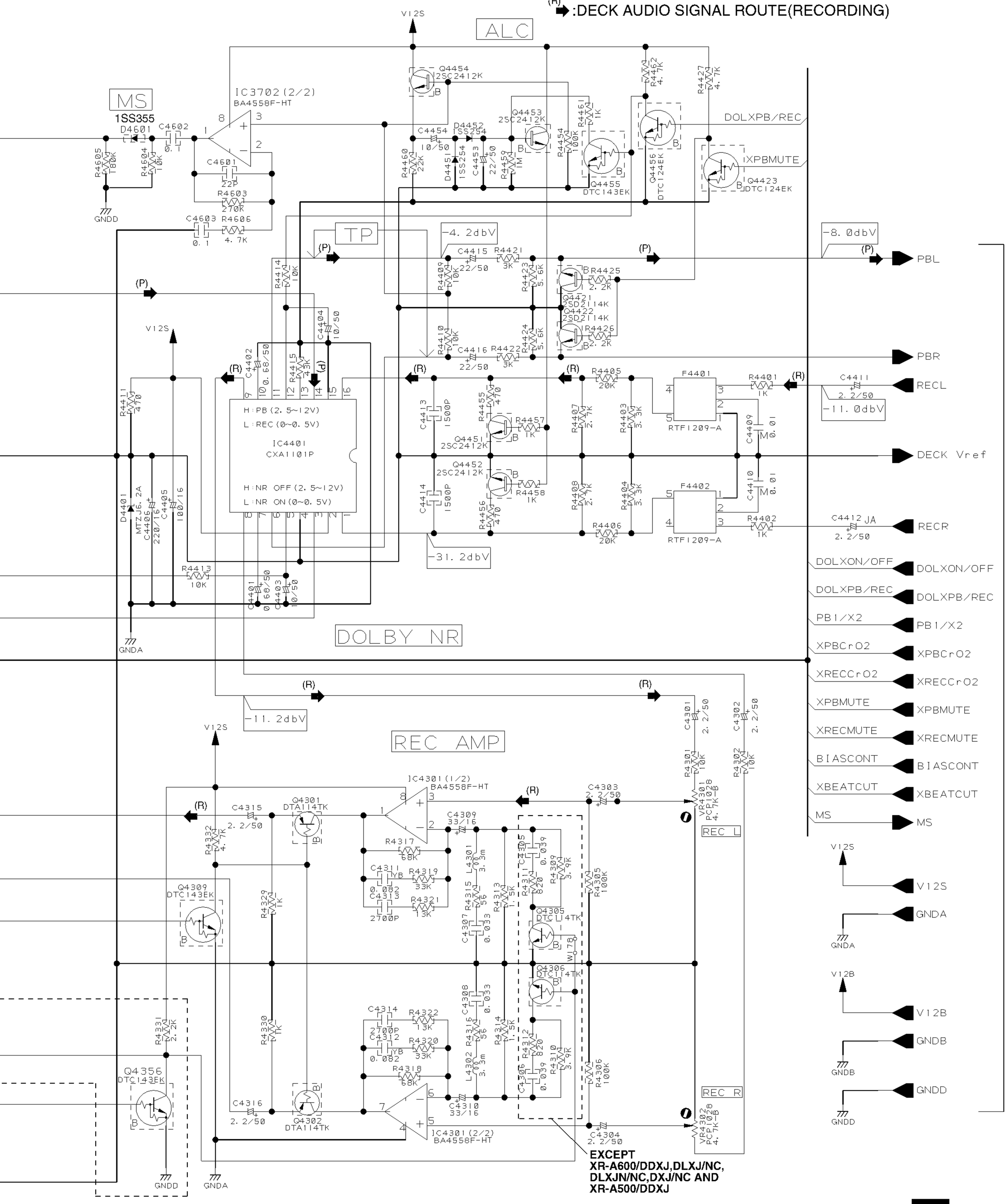


F 2/2

F 1/2

## 3.6 AF ASSY(2/2)

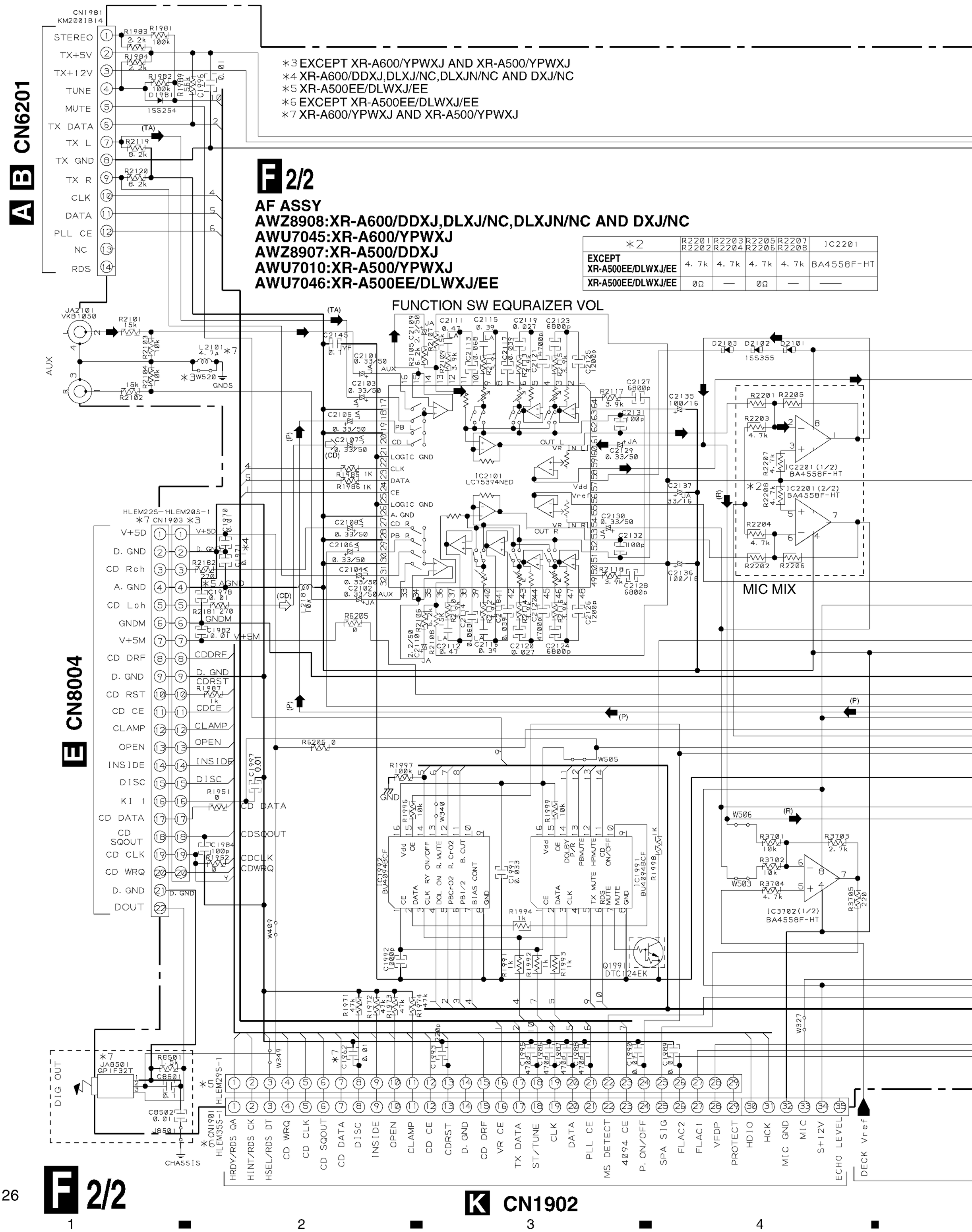


| *2 | R2201 R2202 | R2203 R2204 | R2205 R2206 | R2207 R2208 | IC2201 |
|---|---|---|---|---|---|
| EXCEPT XR-A500EE/DLWXJ/EE | 4.7k | 4.7k | 4.7k | 4.7k | BA4558F-HT |
| XR-A500EE/DLWXJ/EE | 0Ω | — | 0Ω | — | —— |

SIGNAL ROUTE
➡ : AUDIO SIGNAL ROUTE
(TA) ➡ : TUNER AUDIO SIGNAL ROUTE
(P) ➡ : DECK AUDIO SIGNAL ROUTE(PLAYBACK)
(R) ➡ : DECK AUDIO SIGNAL ROUTE(RECORDING)
(CD) ⇨ : CD AUDIO SIGNAL ROUTE

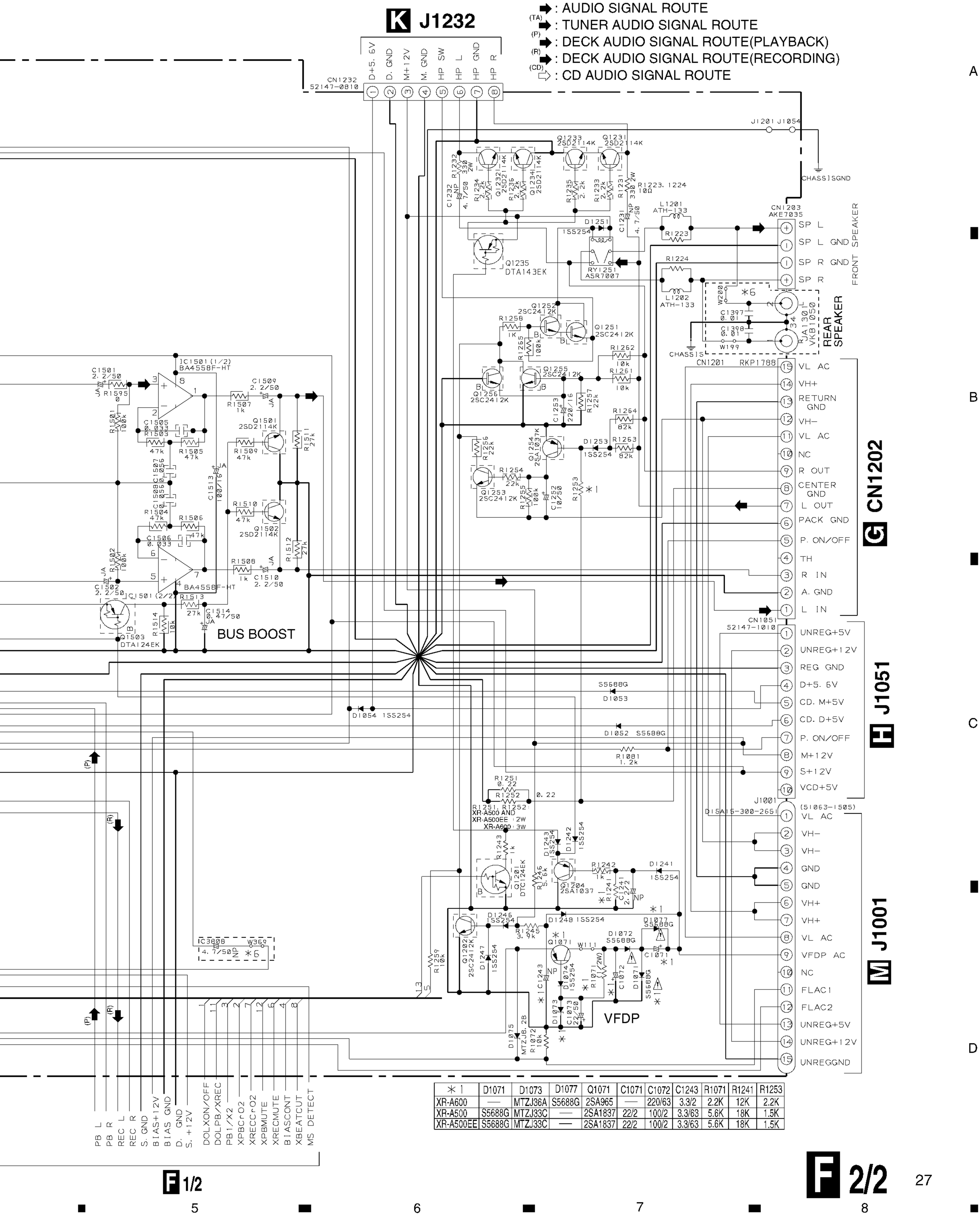


| ＊1 | D1071 | D1073 | D1077 | Q1071 | C1071 | C1072 | C1243 | R1071 | R1241 | R1253 |
|---|---|---|---|---|---|---|---|---|---|---|
| XR-A600 | — | MTZJ36A | S5688G | 2SA965 | — | 220/63 | 3.3/2 | 2.2K | 12K | 2.2K |
| XR-A500 | S5688G | MTZJ33C | — | 2SA1837 | 22/2 | 100/2 | 3.3/63 | 5.6K | 18K | 1.5K |
| XR-A500EE | S5688G | MTZJ33C | — | 2SA1837 | 22/2 | 100/2 | 3.3/63 | 5.6K | 18K | 1.5K |

## 3.7 POWER ASSY, REG ASSY AND FET ASSY

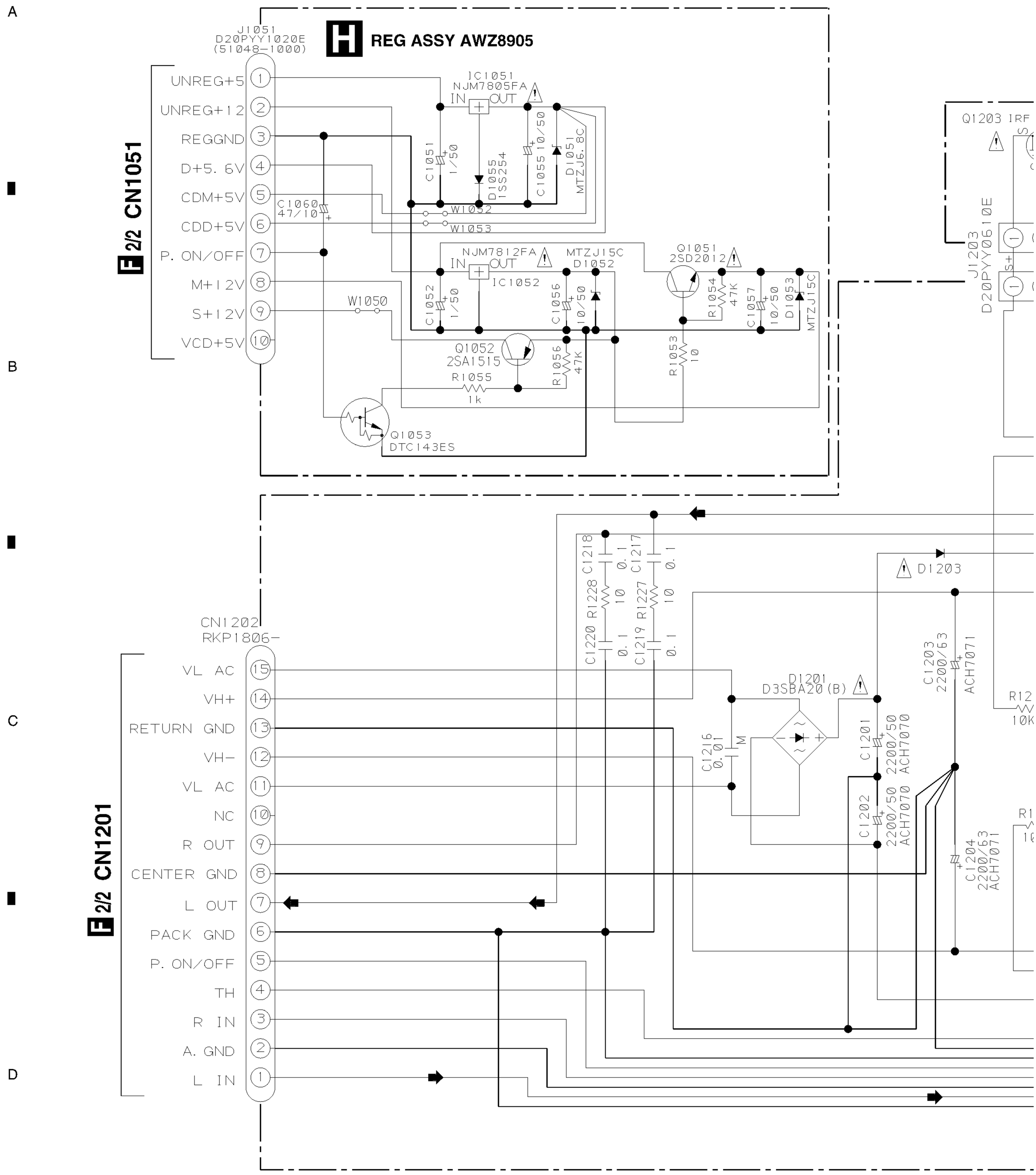

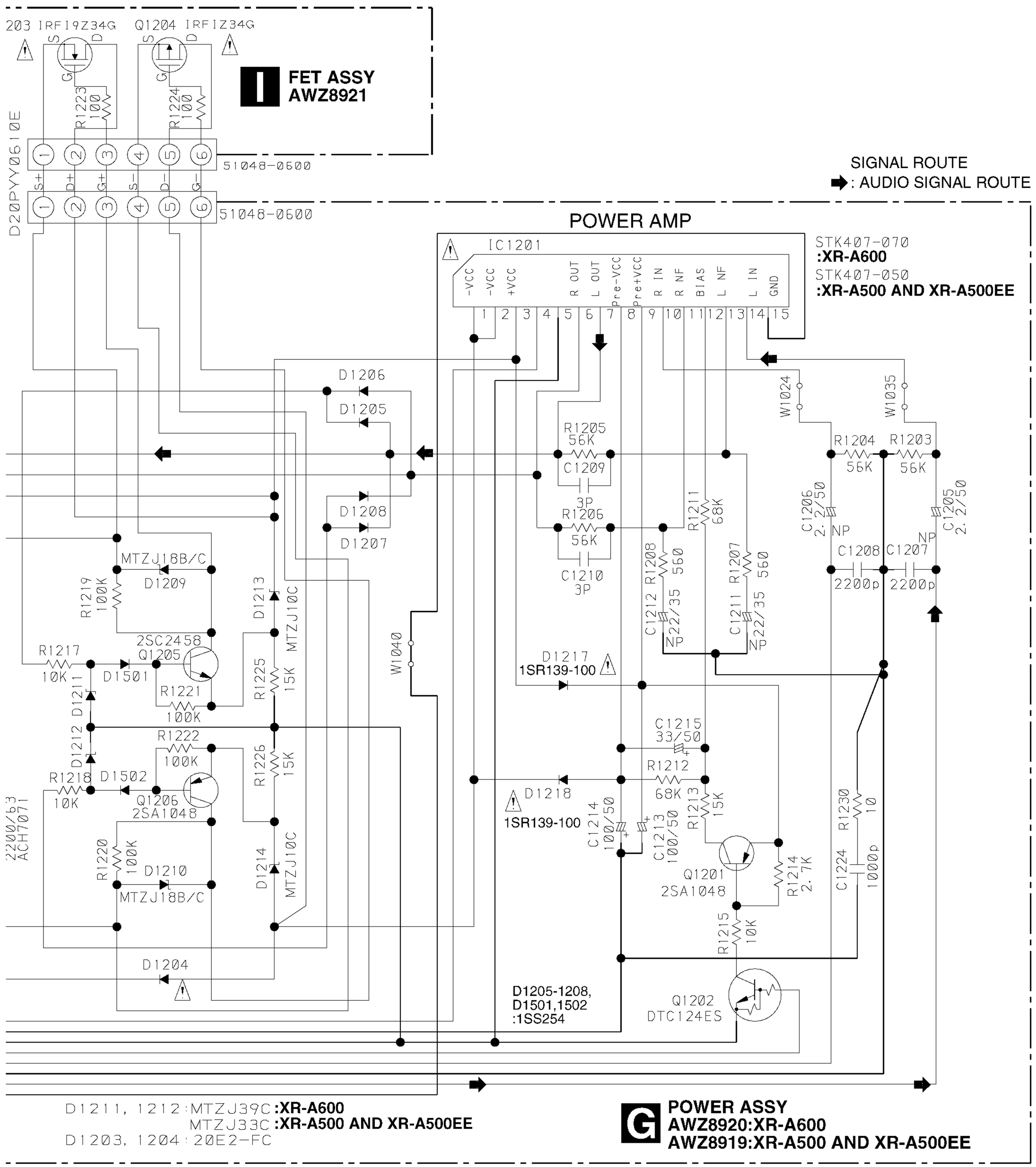
203 IRFI9Z34G
Q1204 IRFIZ34G
FET ASSY
AWZ8921
R1223 100
R1224 100
D20PYY0610E
51048-0600
S+ D+ G+ S- D- G-
SIGNAL ROUTE
: AUDIO SIGNAL ROUTE
POWER AMP
IC1201
STK407-070
:XR-A600
STK407-050
:XR-A500 AND XR-A500EE
-VCC -VCC +VCC R OUT L OUT Pre-VCC Pre+VCC R IN R NF BIAS L NF L IN GND
D1206
D1205
D1208
D1207
R1205 56K
C1209 3P
R1206 56K
C1210 3P
R1211 68K
C1212 R1208 560
C1211 R1207 560
22/35 NP
W1024
W1035
R1204 56K
R1203 56K
C1206 2.2/50 NP
C1205 2.2/50 NP
C1208 2200p
C1207 2200p
MTZJ18B/C
D1209
R1219 100K
D1213
MTZJ10C
2SC2458
Q1205
R1217 10K
D1501
R1221 100K
R1225 15K
W1040
D1211
D1212
R1222 100K
R1226 15K
R1218 10K
D1502
Q1206 2SA1048
2200/63 ACH7071
R1220 100K
D1210
MTZJ18B/C
D1214
MTZJ10C
D1204
D1217 1SR139-100
C1215 33/50
R1212 68K
D1218 1SR139-100
C1214 100/50
C1213 100/50
R1213 15K
Q1201 2SA1048
R1214 2.7K
R1215 10K
R1230 10
C1224 1000p
D1205-1208, D1501,1502 :1SS254
Q1202 DTC124ES
D1211, 1212:MTZJ39C :XR-A600
MTZJ33C :XR-A500 AND XR-A500EE
D1203, 1204:20E2-FC
POWER ASSY
AWZ8920:XR-A600
AWZ8919:XR-A500 AND XR-A500EE

# 3.8 DISPLAY ASSY, CD SWITCH ASSY AND CD LED ASSY

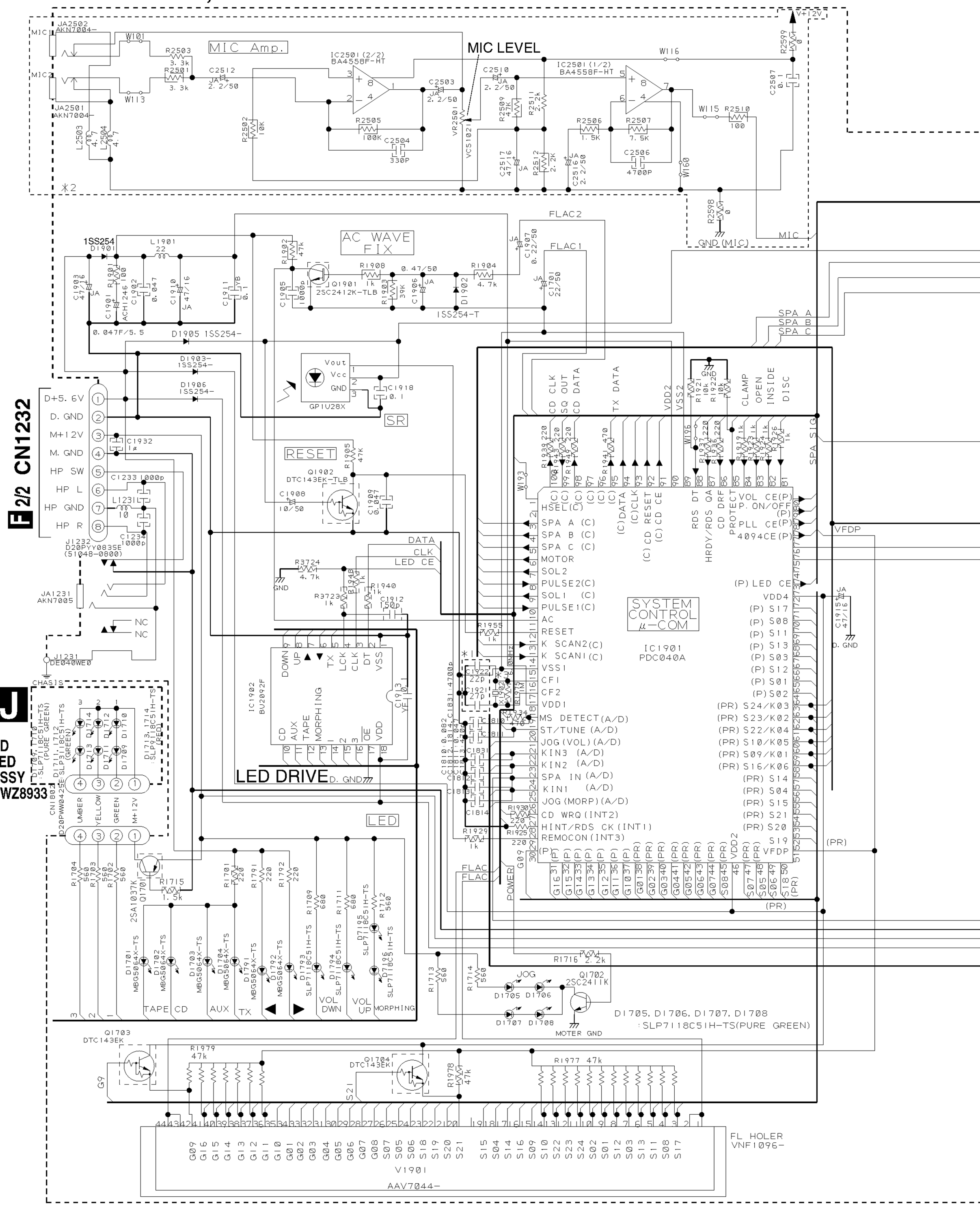


*1 XR-A500EE/DLWXJ/EE
*2 EXCEPT XR-A500EE/DLWXJ/EE
*4 XR-A600/YPWXJ AND XR-A500/YPWXJ
*5 XR-A600/YPWXJ,XR-A500/YPWXJ AND XR-A500EE/DLWXJ/EE

## F 2/2 CN1901

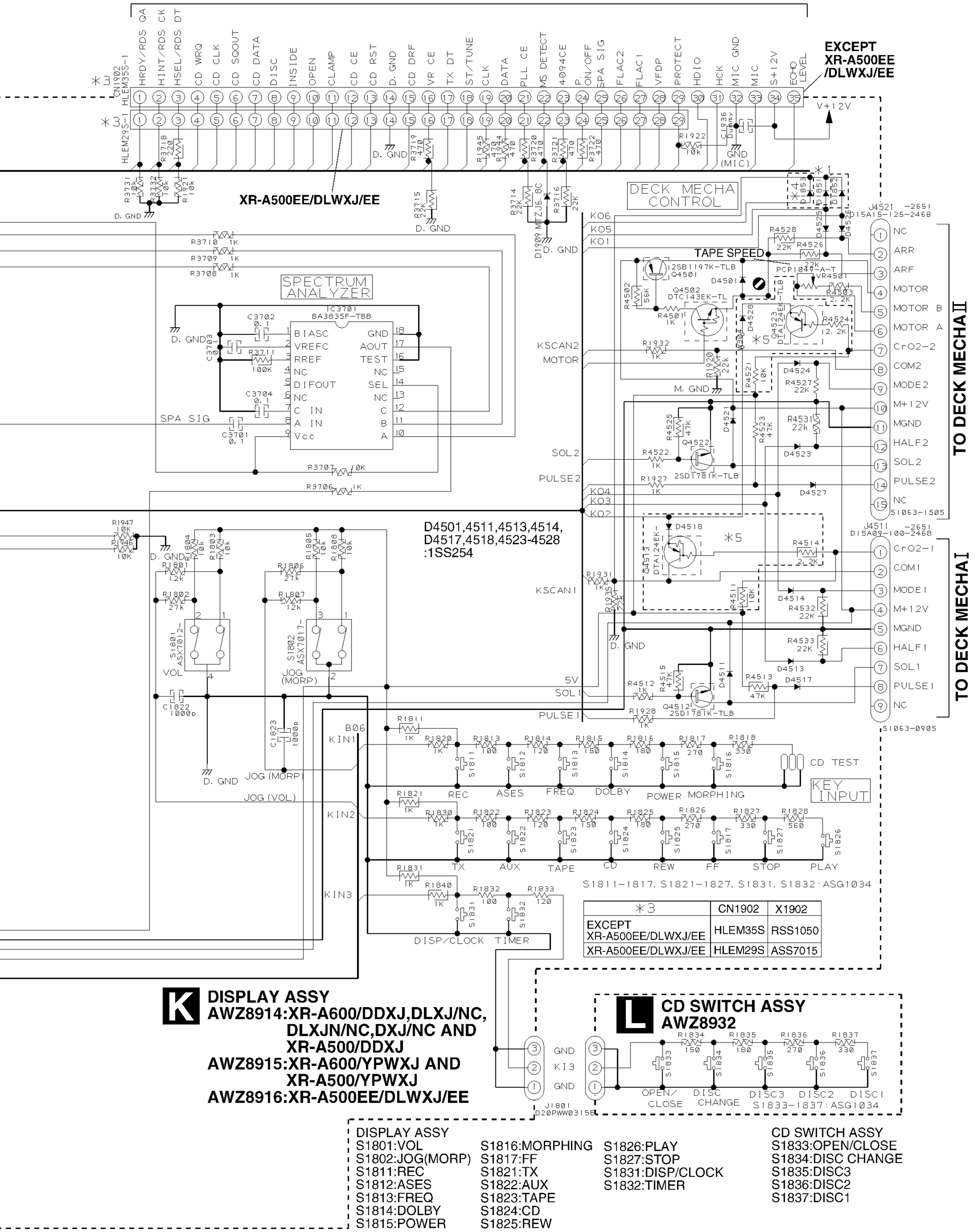


| ＊3 | CN1902 | X1902 |
|---|---|---|
| EXCEPT XR-A500EE/DLWXJ/EE | HLEM35S | RSS1050 |
| XR-A500EE/DLWXJ/EE | HLEM29S | ASS7015 |

## 3.9 PRIMARY ASSY AND SECONDARY ASSY

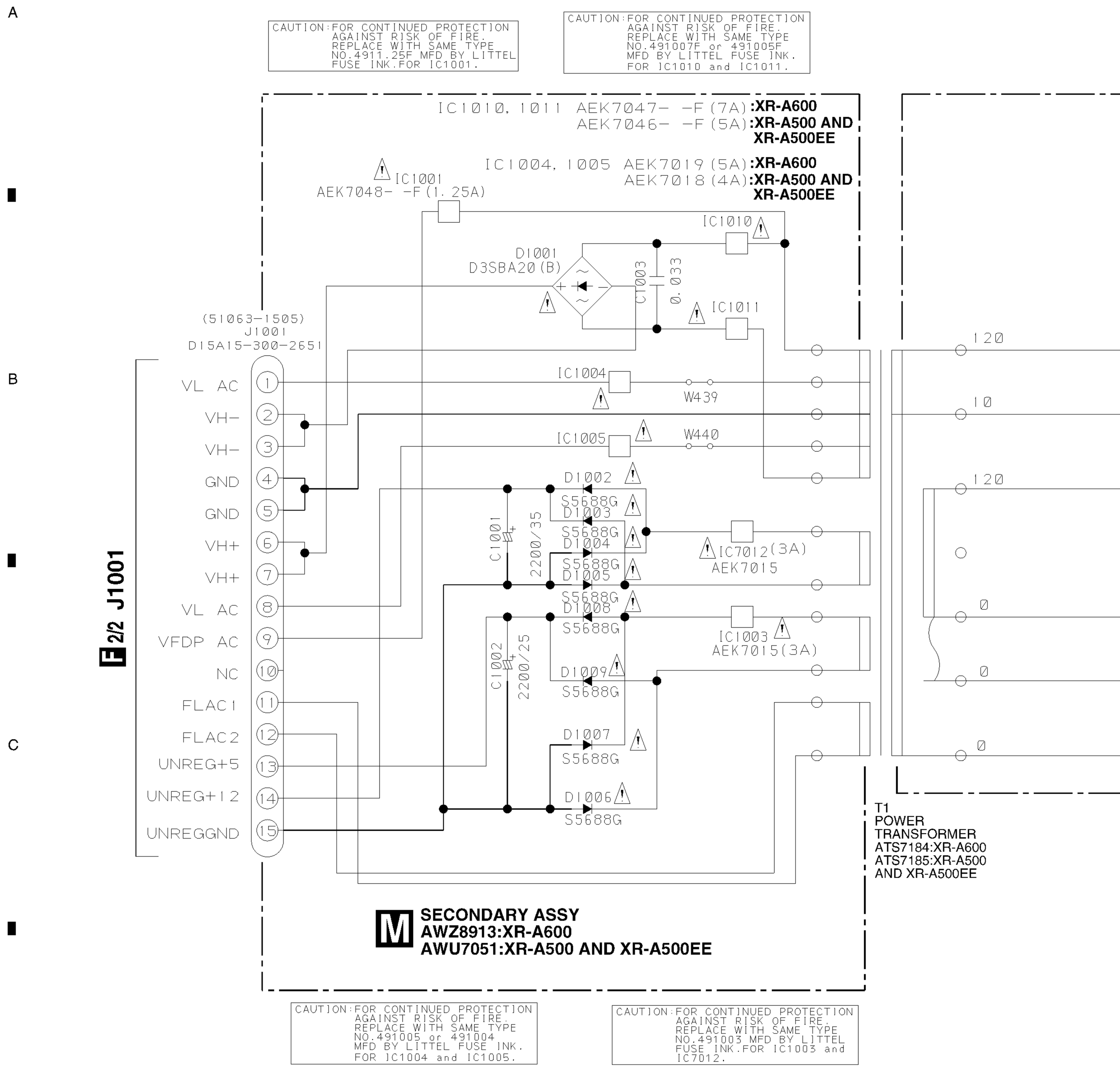

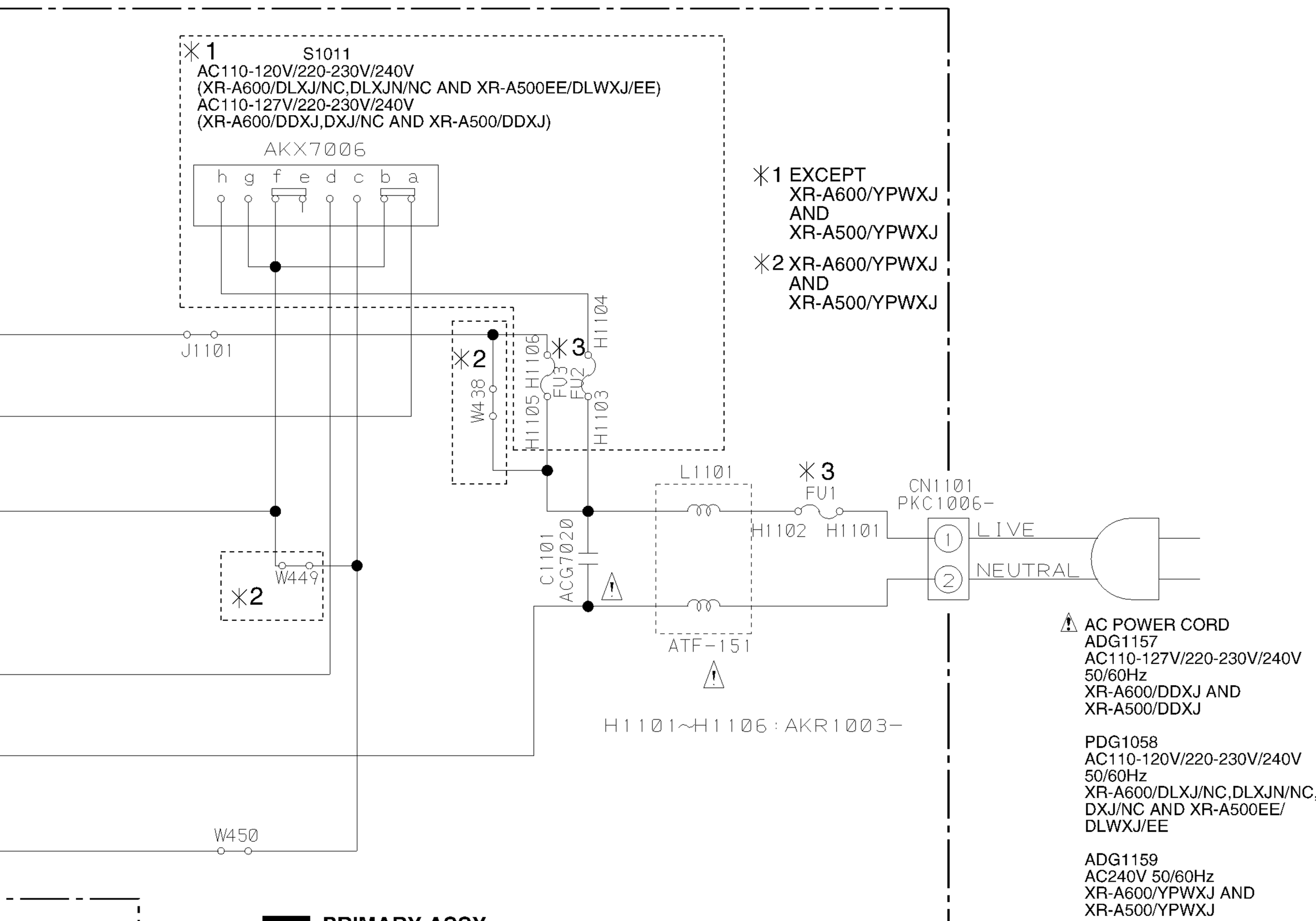


**N** **PRIMARY ASSY**
**AWZ8910:XR-A600/DDXJ,DLXJ/NC,DLXJN/NC,DXJ/NC,**
**XR-A500/DDXJ AND XR-A500EE/DLWXJ/EE**
**AWZ8922:XR-A600/YPWXJ AND XR-A500/YPWXJ**

## NOTE FOR FUSE REPLACEMENT

CAUTION— FOR CONTINUED PROTECTION AGAINST RISK OF FIRE, REPLACE ONLY WITH SAME TYPE AND RATINGS ONLY.

✳3

| FUSE | | FU1 | FU2 | FU3 |
|---|---|---|---|---|
| XR-A600 | DDXJ | AEK1061 (T5A/250V) | AEK1058 (T2.5A/250V) | AEK1058 (T2.5A/250V) |
| | DLXJ/NC | AEK1061 (T5A/250V) | AEK1058 (T2.5A/250V) | AEK1058 (T2.5A/250V) |
| | DLXJN/NC | AEK1061 (T5A/250V) | AEK1058 (T2.5A/250V) | AEK1058 (T2.5A/250V) |
| | YPWXJ | AEK1058 (T2.5A/250V) | —— | —— |
| | DXJ/NC | AEK1061 (T5A/250V) | AEK1058 (T2.5A/250V) | AEK1058 (T2.5A/250V) |
| XR-A500 | DDXJ | AEK1058 (T2.5A/250V) | AEK1055 (T1.25A/250V) | AEK1055 (T1.25A/250V) |
| | YPWXJ | AEK1055 (T1.25A/250V) | —— | —— |
| XR-A500EE | DLWXJ/EE | AEK1055 (T1.25A/250V) | AEK1058 (T2.5A/250V) | AEK1055 (T1.25A/250V) |

# 4. PCB CONNECTION DIAGRAM

**NOTE FOR PCB DIAGRAMS**

1. Part numbers in PCB diagrams match those in the schematic diagrams.
2. A comparison between the main parts of PCB and schematic diagrams is shown below.

| Symbol in PCB Diagrams | Symbol in Schematic Diagrams | Part Name |
|---|---|---|
| B C E | B C E B C E | Transistor |
| B C E | B C E B C E | Transistor with resistor |
| D G S | D G S D G S | Field effect transistor |

| Symbol in PCB Diagrams | Symbol in Schematic Diagrams | Part Name |
|---|---|---|
| | | Resistor array |
| | | 3-terminal regulator |

3. The parts mounted on this PCB include all necessary parts for several destination.
For further information for respecitve destinations, be sure to check with the schematic diagram.

4. Viewpoint of PCB diagrams

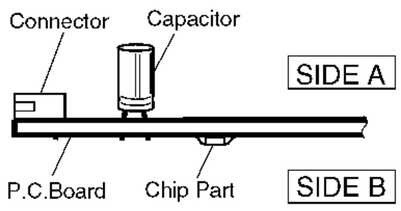


## 4.1 FM/AM TUNER MODULE (DDXJ,DLXJ/NC, DLXJN/NC, DXJ/NC AND YPWXJ TYPES)

**A** FM/AM TUNER MODULE(AXQ7061)

**F** CN1981

**SIDE A**

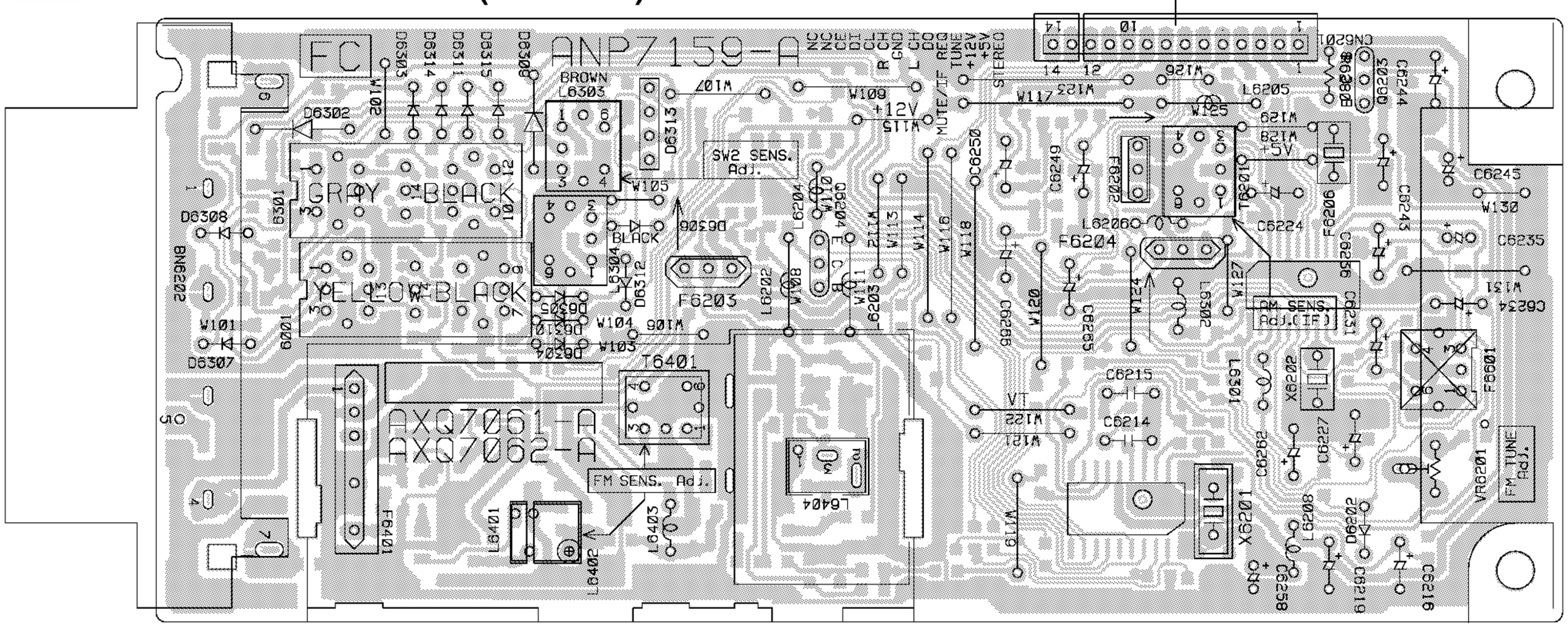


**A** FM/AM TUNER MODULE(AXQ7061)

**SIDE B**

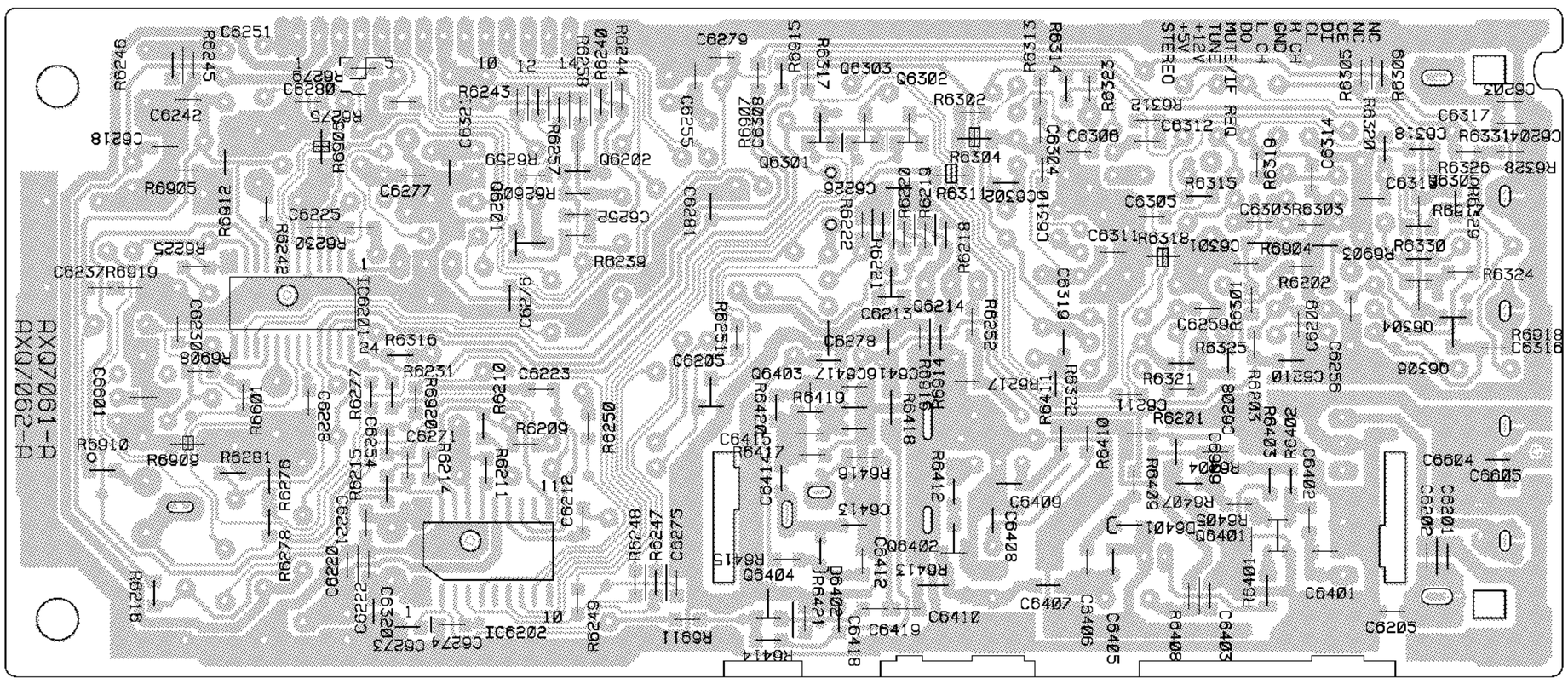

## 4.2 FM/AM TUNER MODULE (DLWXJ/EE TYPE)

**B** FM/AM TUNER MODULE(AXQ7069)

**F** CN1981

**SIDE A**

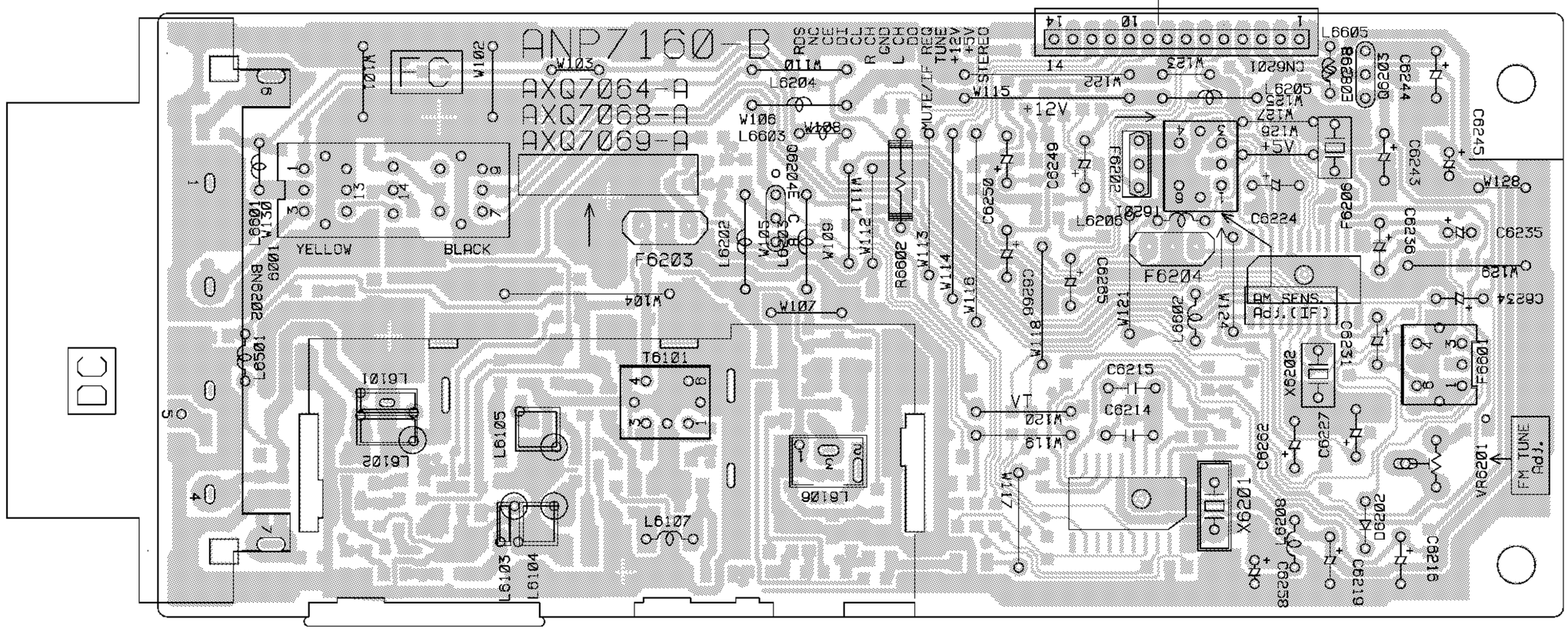


**B** FM/AM TUNER MODULE(AXQ7069)

**SIDE B**

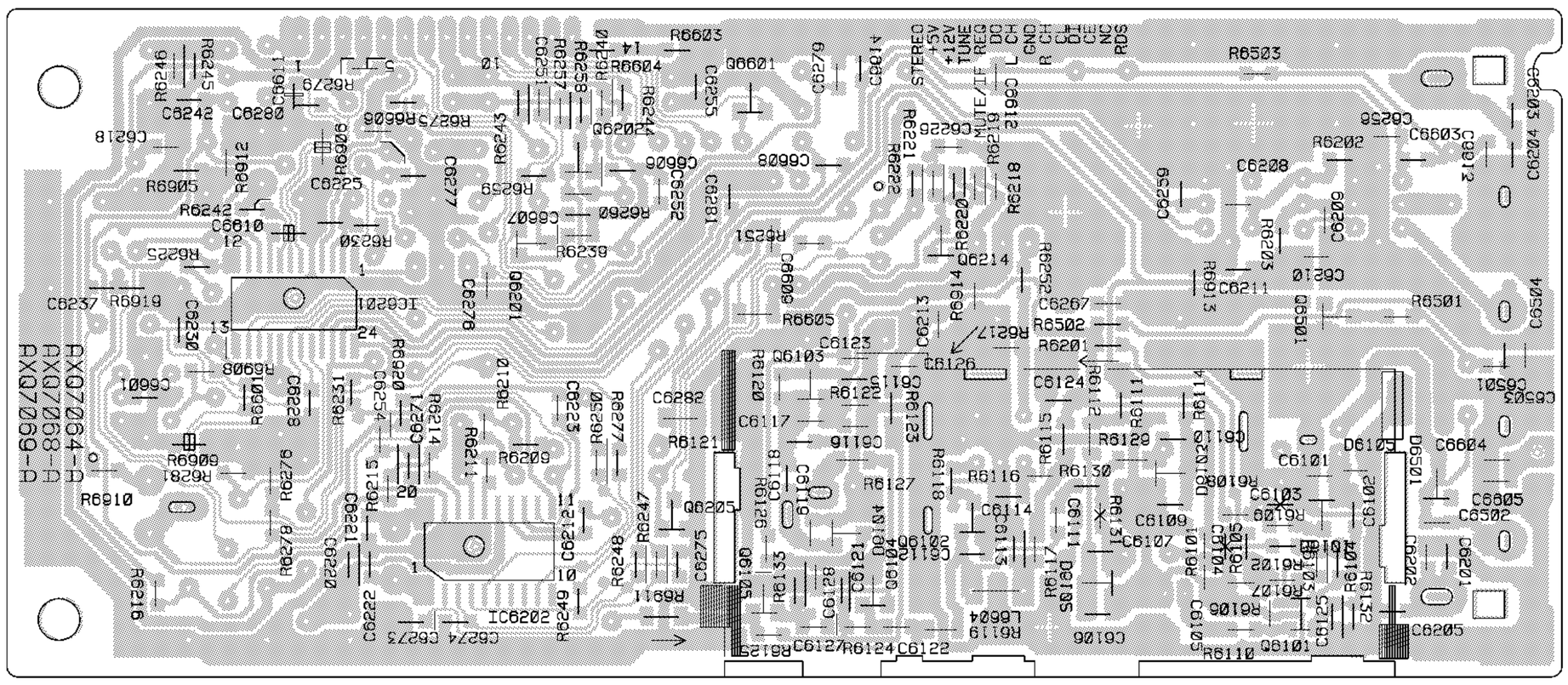

## 4.3 MOTOR ASSY, SW ASSY AND CD ASSY

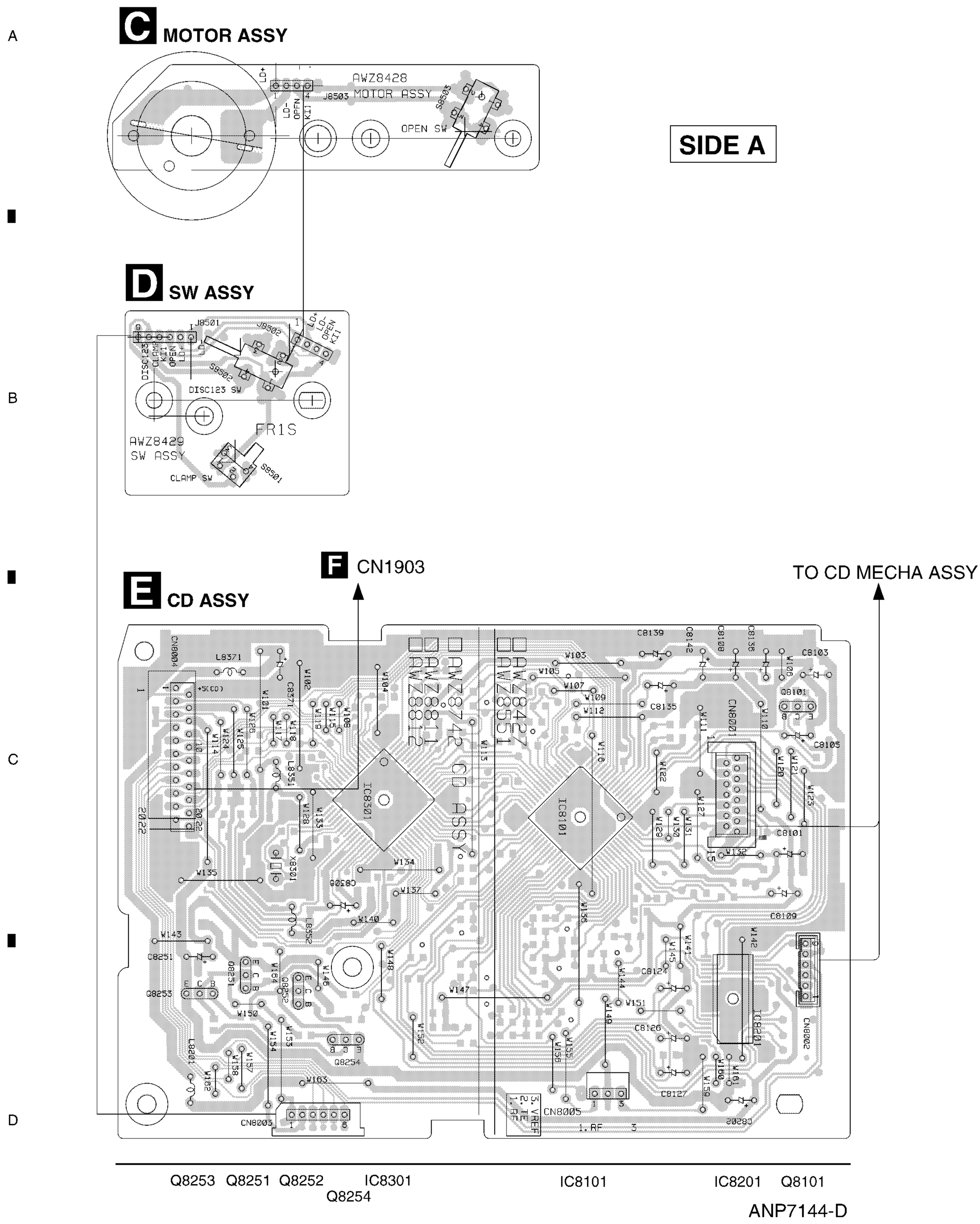

## C MOTOR ASSY

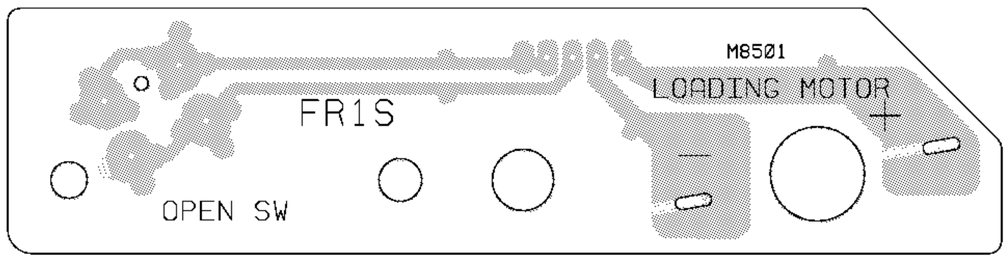


## SIDE B

## D SW ASSY

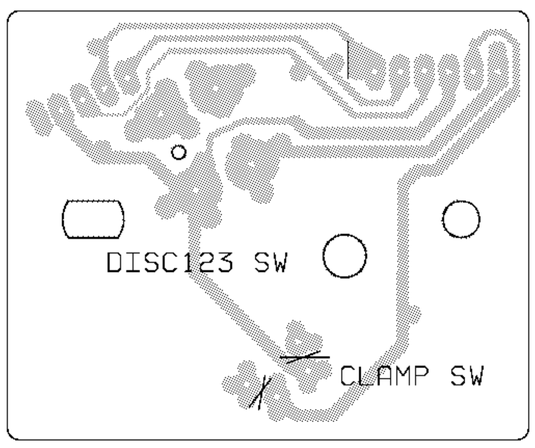


## E CD ASSY

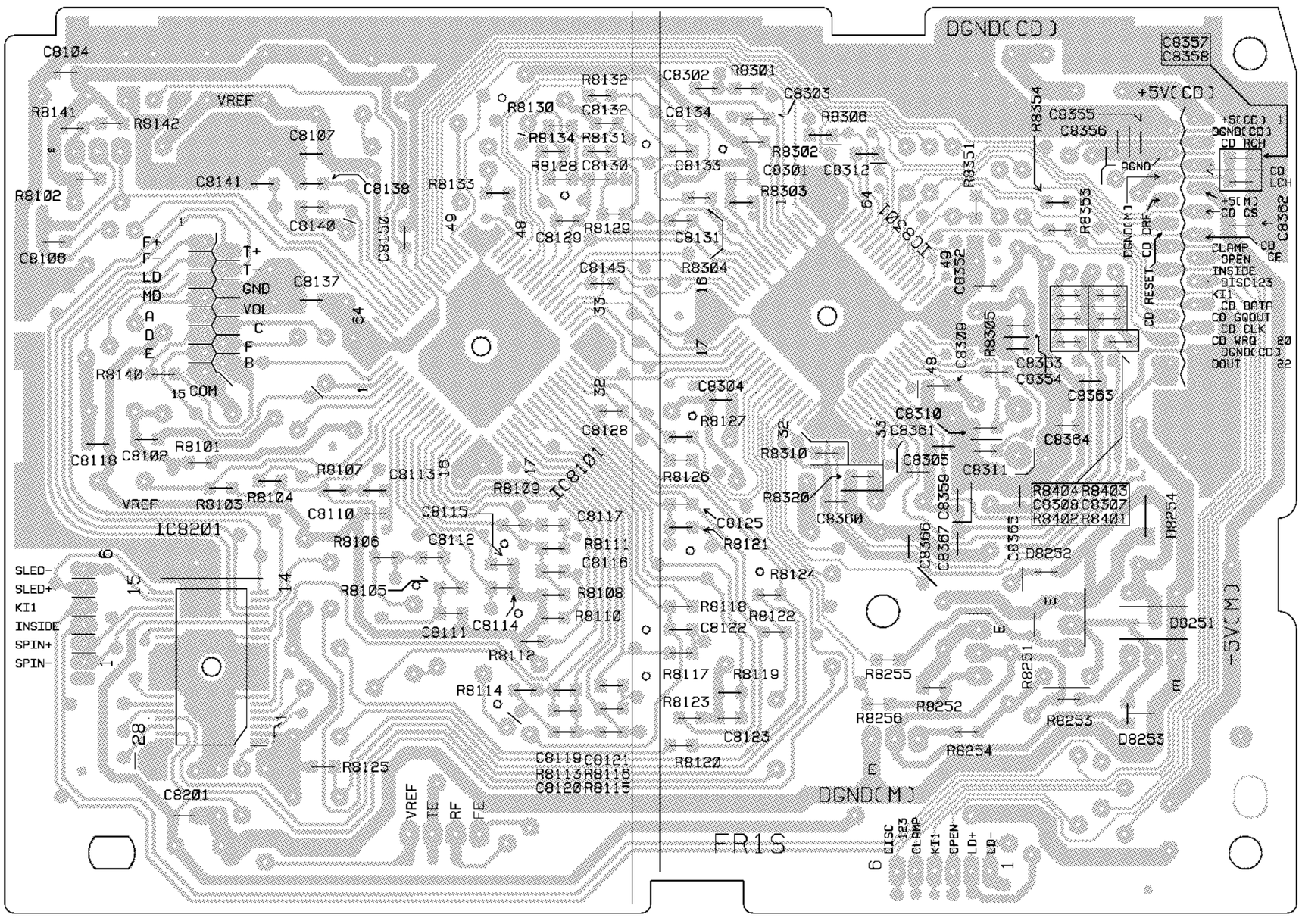


IC8201 IC8101 IC8301

ANP7144-D

C D E

## 4.4 AF ASSY, REG ASSY, SECONDARY ASSY AND FET ASSY

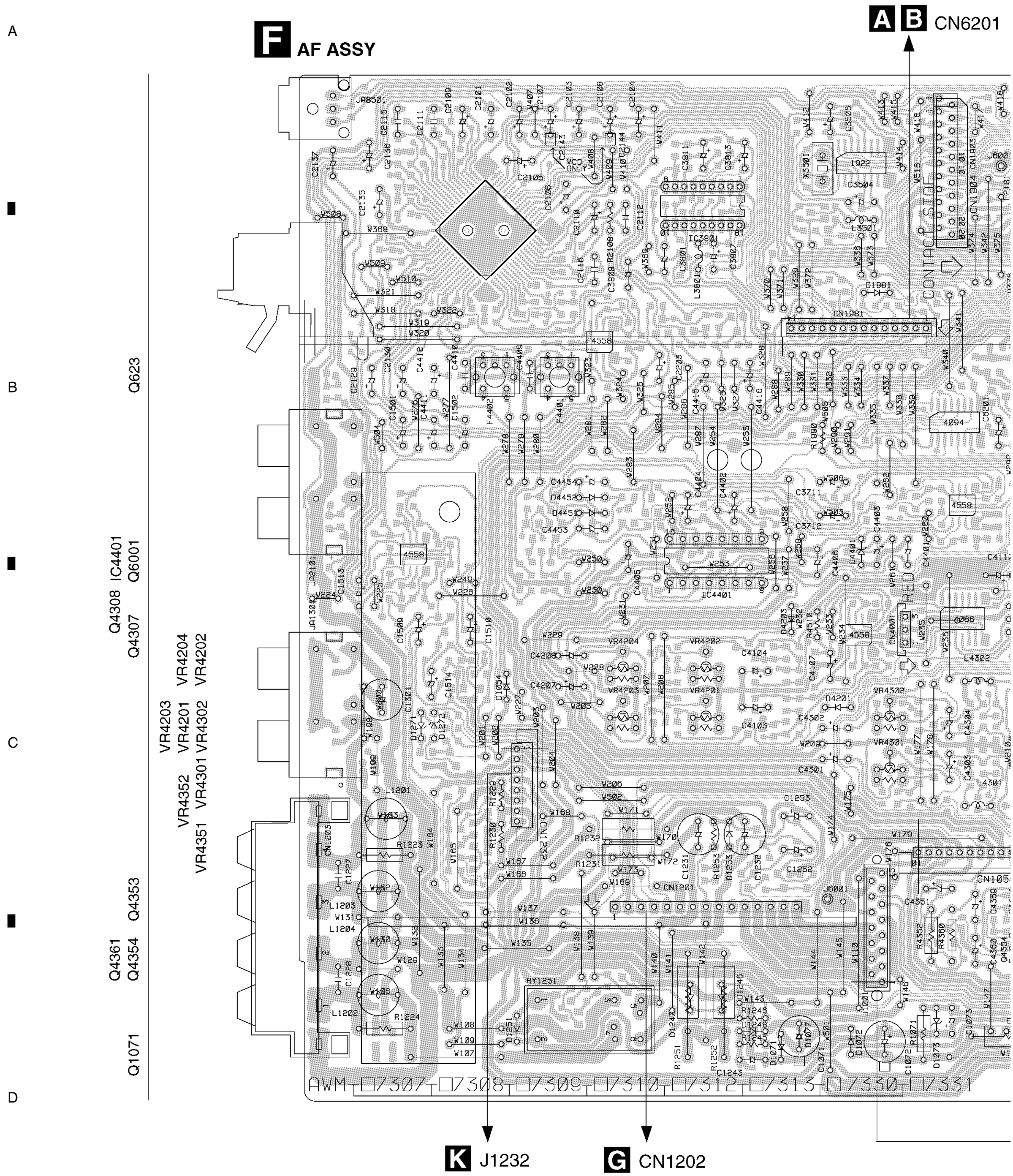

E CN8004 K CN1902

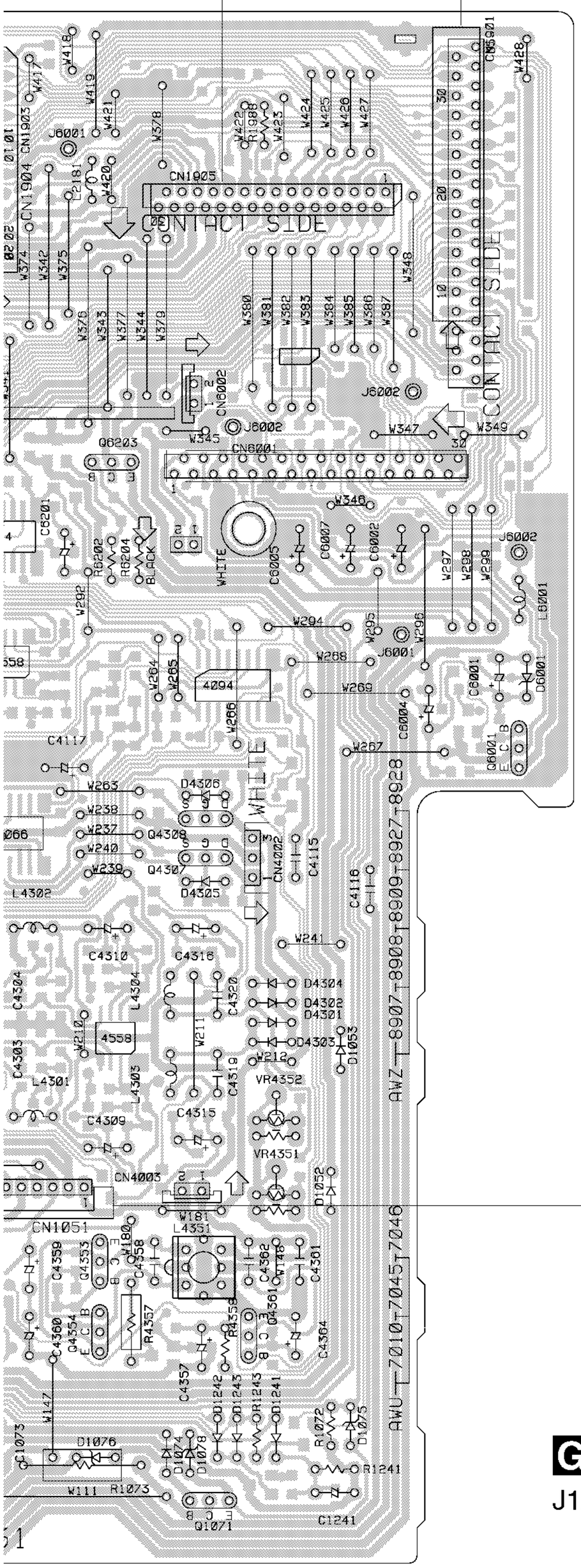


ANP7197-A

H REG ASSY

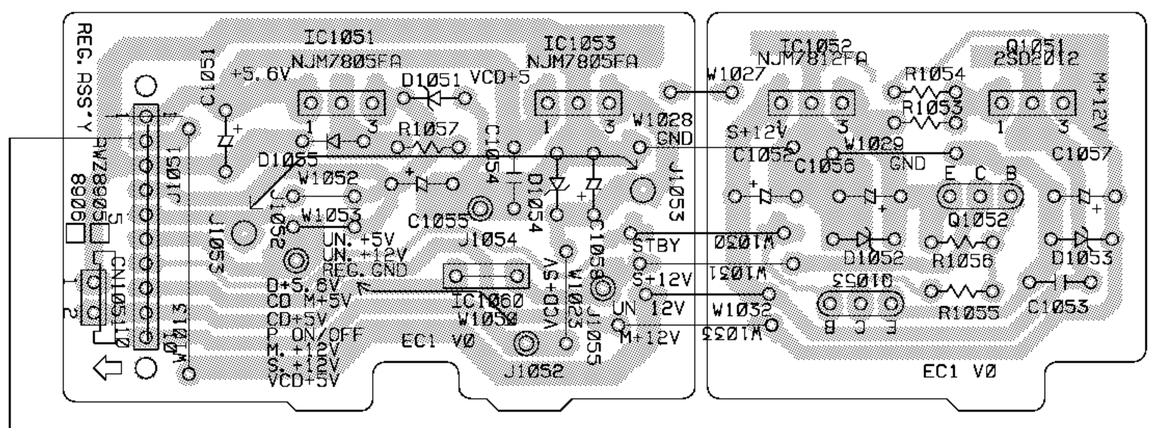


IC1051 IC1060 IC1052 Q1052
IC1053 Q1053 Q1051

ANP7198-B

M SECONDARY ASSY

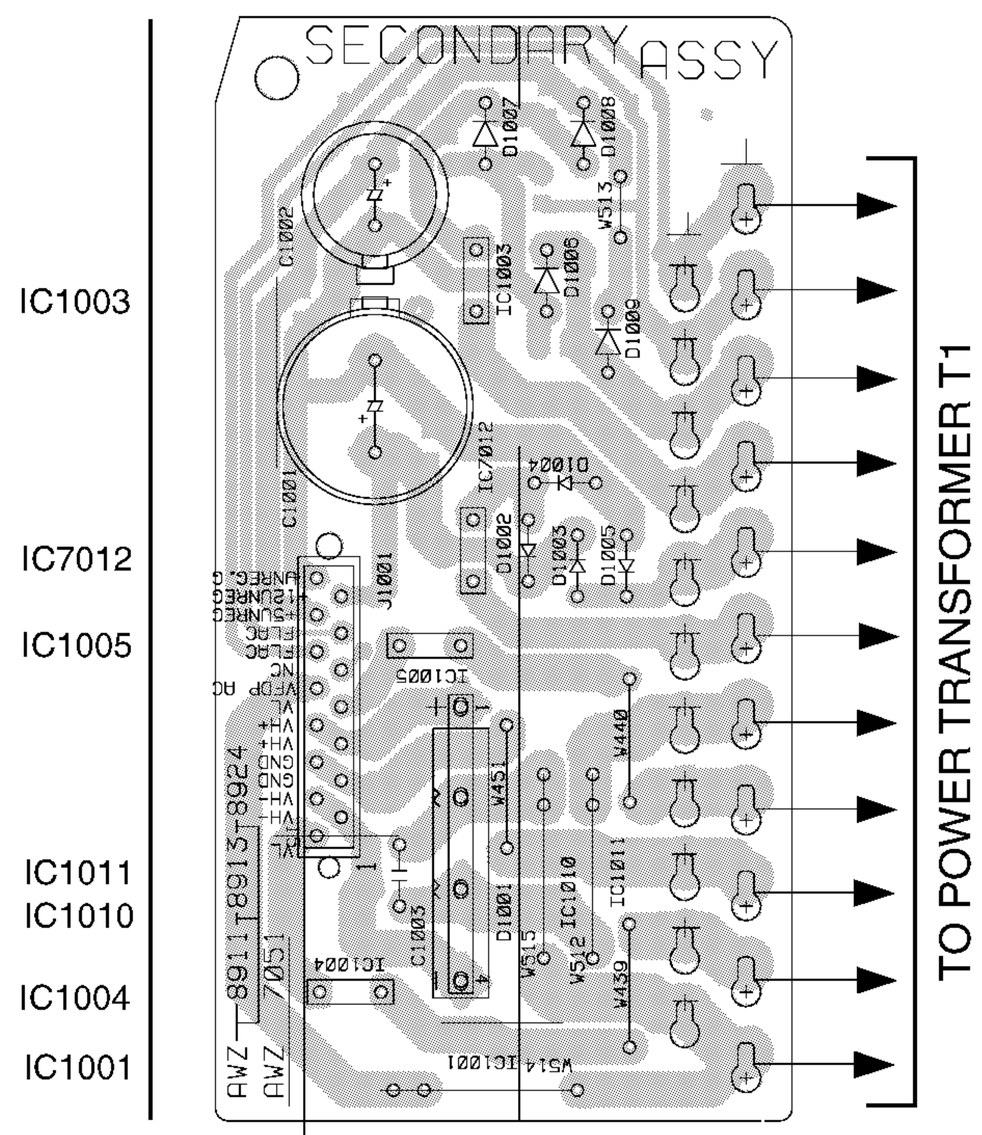


ANP7197-A

I FET ASSY

G J1203

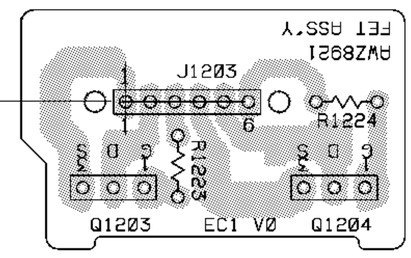


ANP7198-B

## F AF ASSY

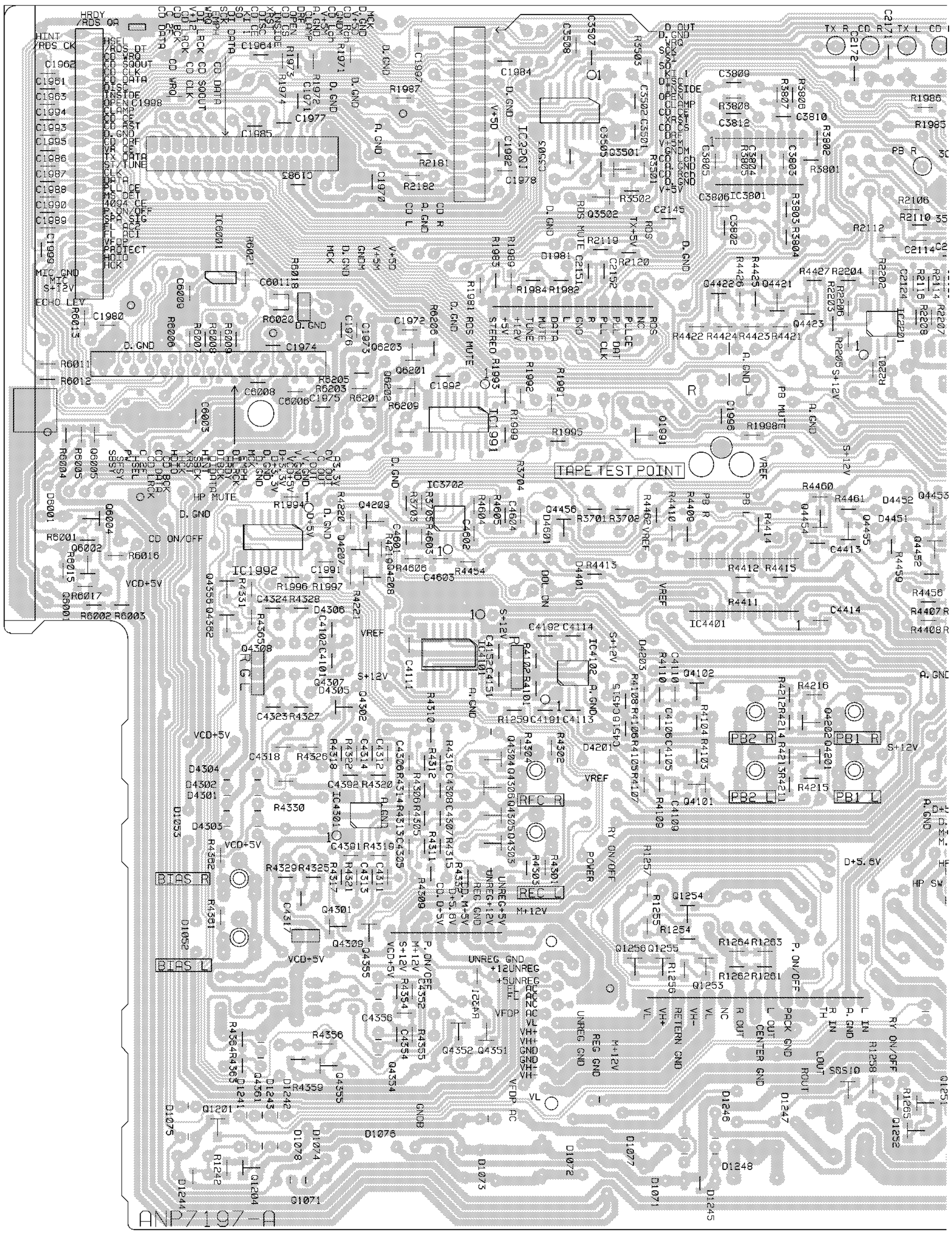


| | | | | | | | | | | | |
|---|---|---|---|---|---|---|---|---|---|---|---|
| | | | | | | | | | | IC1992 | Q6004 |
| | | | | | | | | | | Q4207 | Q4209 |
| | | | | | | | | | | Q4455 | IC3702 |
| | | | | | | | | | | Q4452 | Q4456 |
| | | | | | | | | | | Q4451 | Q4454 |
| | | | | | | | | | | IC1501 | Q4453 |
| | | | | | | | | | | Q4351 | Q1201 |
| | | | | | | | | | | Q1202 | Q1252 |
| | | | | | | | | | | Q4352 | Q4361 |
| | | | | | | | | | | Q4354 | Q4355 |
| | | | | | | | | | | Q1251 | Q1204 |
| | | | | | | | | | | Q1071 | |
| Q4301 | IC4301 | | | | | | | | | | |
| Q4355 | Q4309 | Q4305 | | | | | | | | | |
| Q1256 | Q1254 | Q4303 | Q4304 | Q4202 | Q4308 | | | | | | |
| Q1255 | Q1231 | Q1272 | Q4306 | Q1502 | IC4101 | | | | | | |
| Q1253 | Q1233 | Q1235 | Q4101 | Q1501 | IC4102 | | | | | | |
| Q1232 | Q1234 | Q1271 | Q4201 | Q4102 | | | | | | | |
| Q4302 | Q6002 | Q4356 | Q4362 | Q4208 | Q4401 | | | | | | |
| Q4422 | IC4401 | | | | | | | | | | |
| Q6203 | | | | | | | | | | | |
| IC1991 | Q4422 | | | | | | | | | | |
| Q6202 | Q4421 | | | | | | | | | | |
| Q6005 | Q3201 | Q4423 | | | | | | | | | |
| IC2201 | IC6001 | IC2101 | IC3501 | | | | | | | | |

A

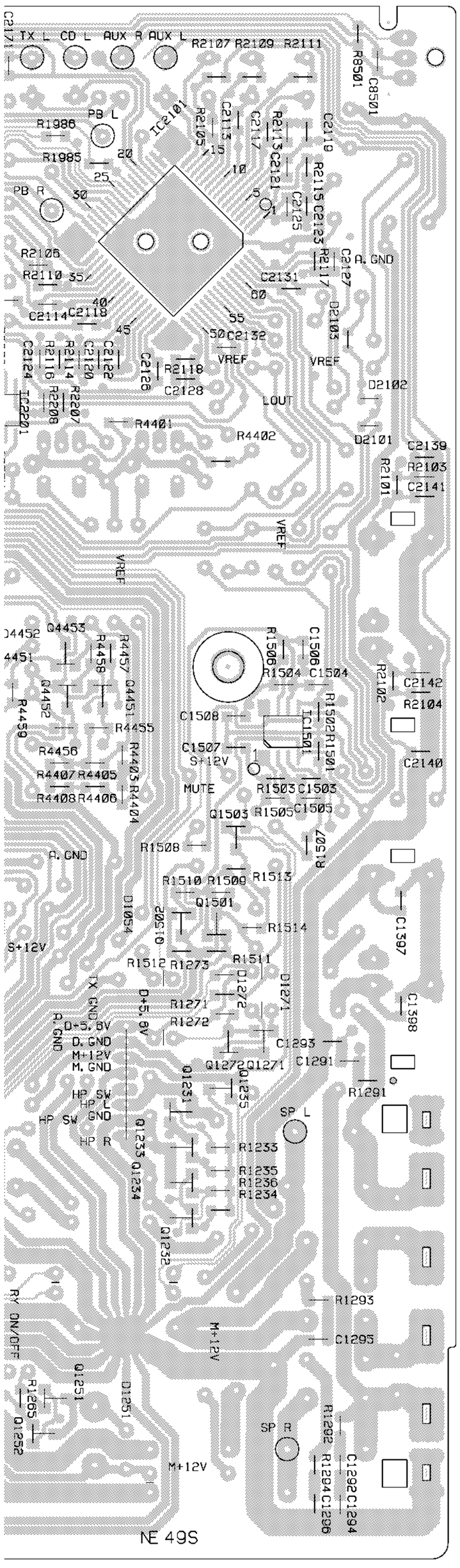


ANP7197-A

## H REG ASSY

SIDE B

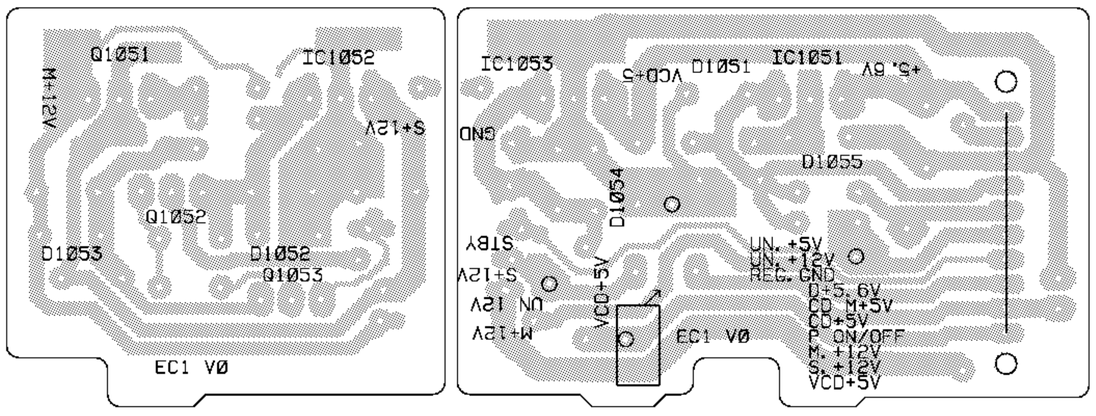


Q1051 IC1052 IC1053 IC1051
Q1052 Q1053

ANP7198-B

B

## M SECONDARY ASSY

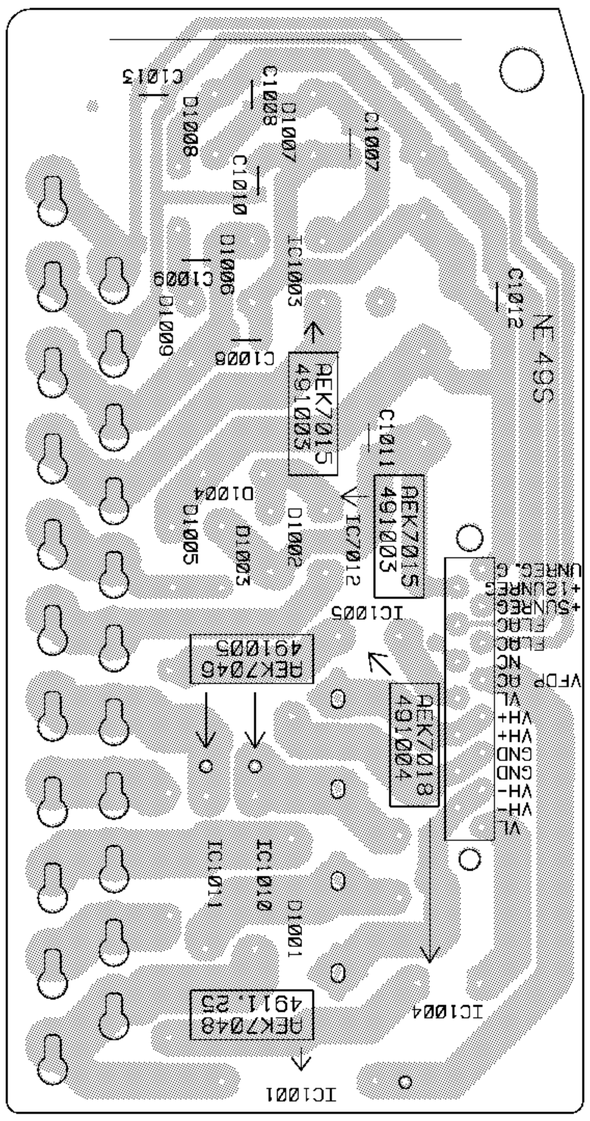


IC1003

IC7012

C

IC1011
IC1010

IC1001

ANP7197-A

## I FET ASSY

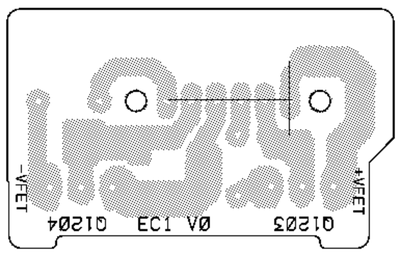


ANP7198-B

D

## 4.5 POWER ASSY, CD SWITCH ASSY AND CD LED ASSY

**G** POWER ASSY

**SIDE A**

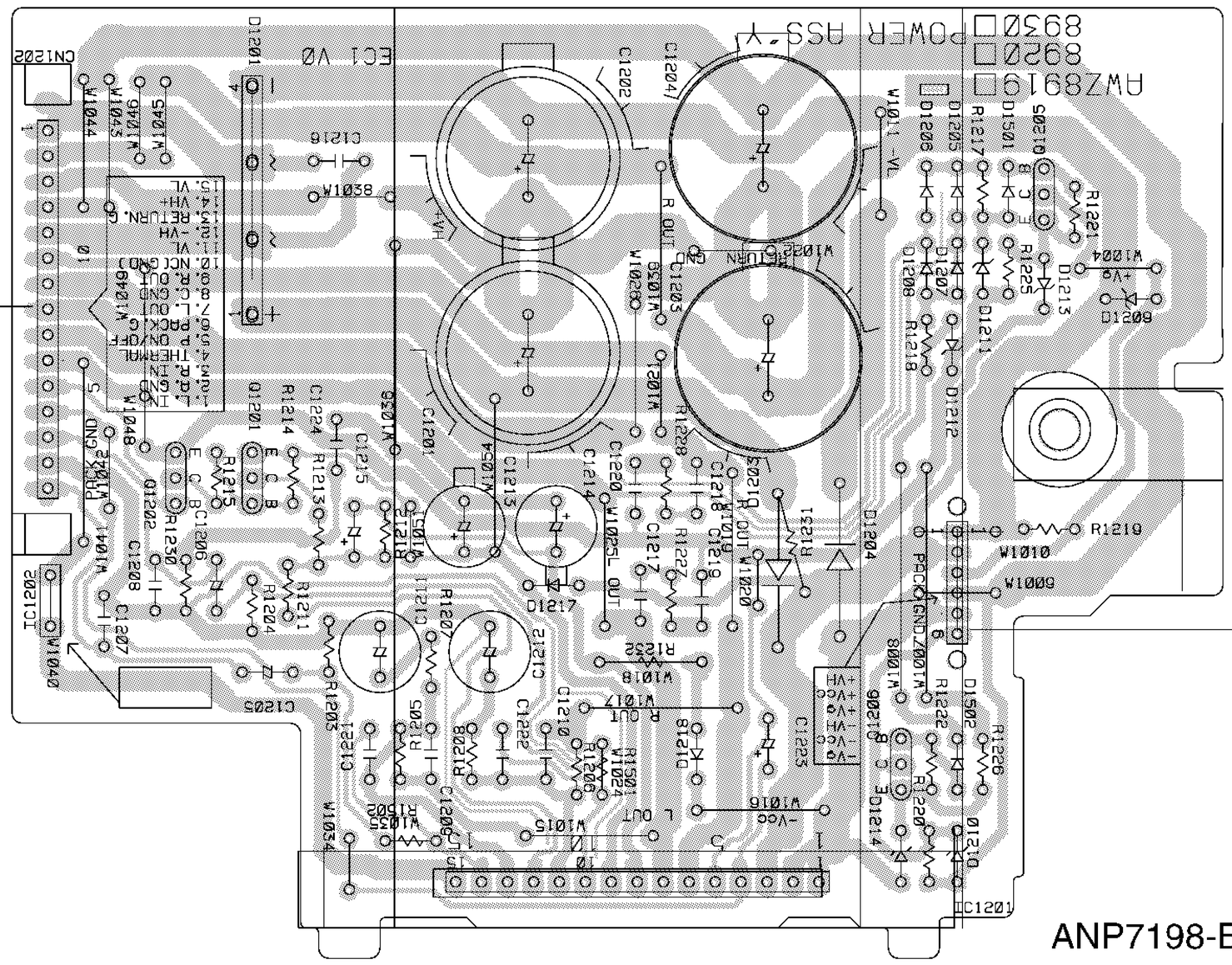


IC1202 Q1202 Q1201 Q1206 Q1205 IC1201

**L** CD SWITCH ASSY

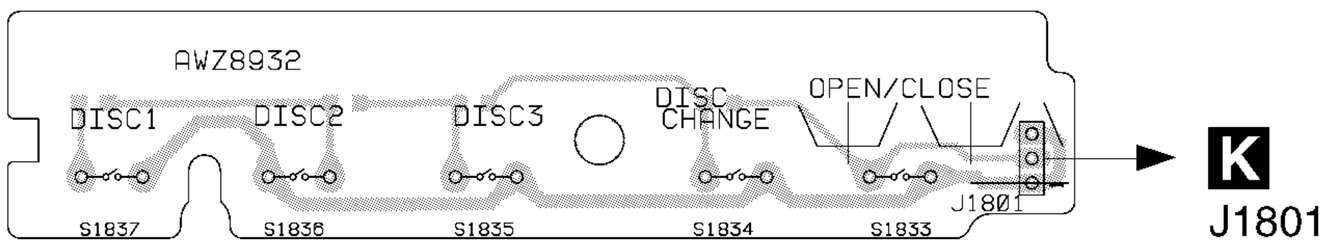


**J** CD LED ASSY

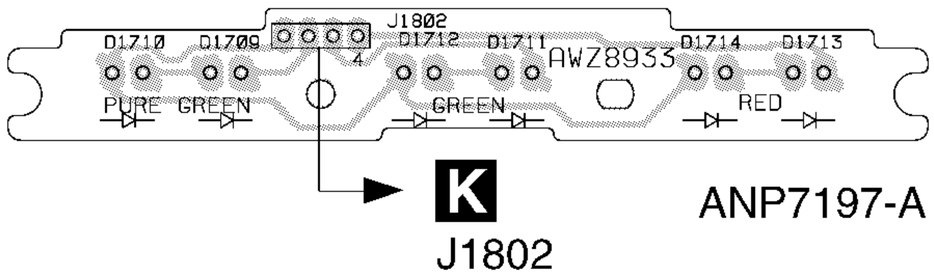

A

## G POWER ASSY

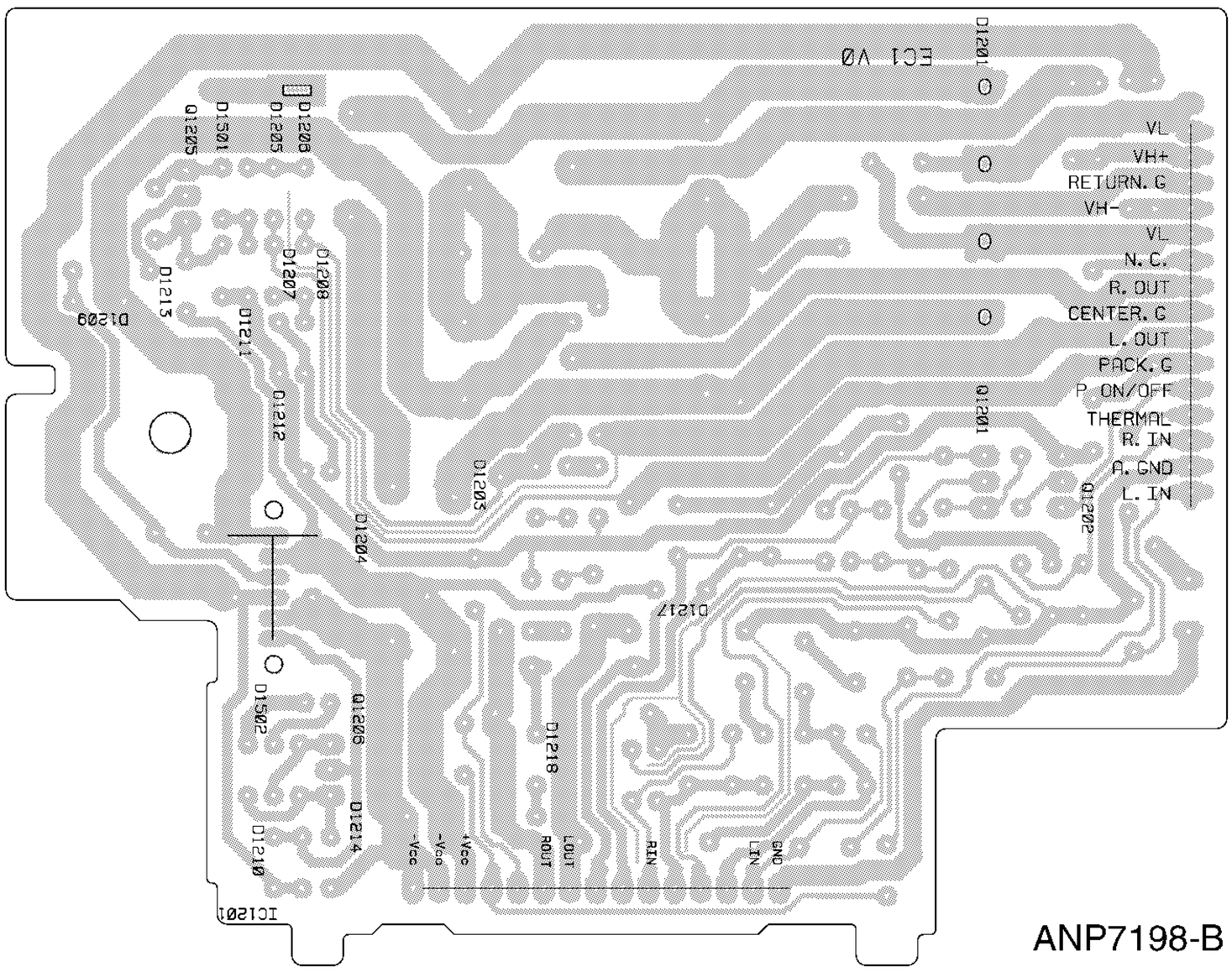


B

Q1205 Q1206 Q1201
IC1201 Q1202

C

## L CD SWITCH ASSY

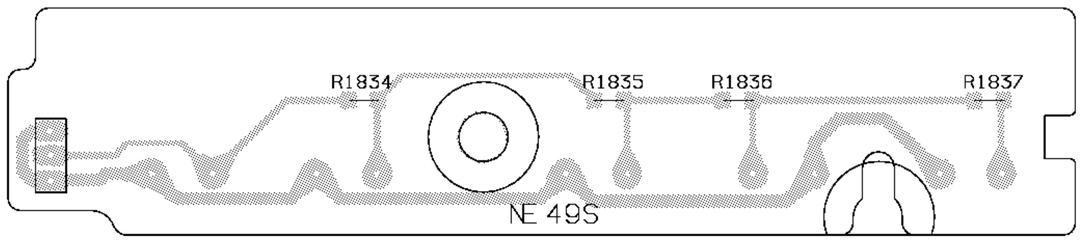


ANP7197-A

## J CD LED ASSY

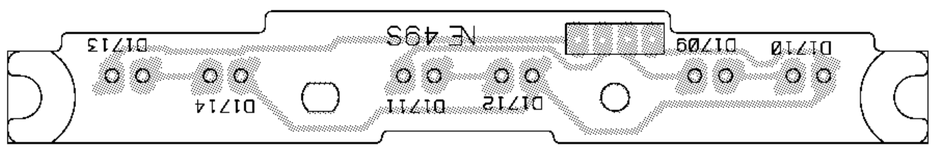


ANP7197-A

D

## 4.6 DISPLAY ASSY

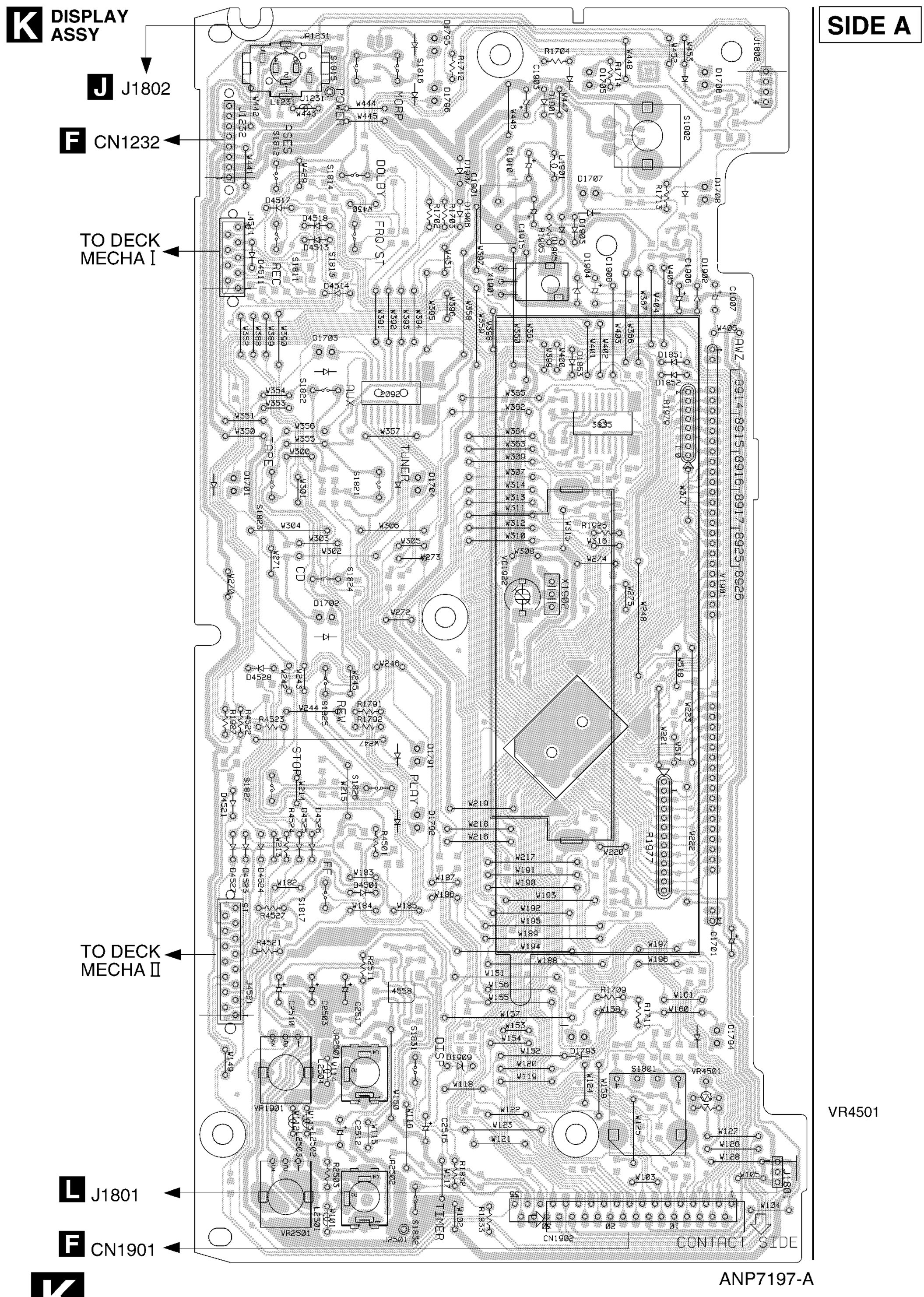

**K DISPLAY ASSY**

Q1702
Q1701
Q1901
Q4512
Q4513
Q1902
Q1703
IC1902
IC3701
Q4523
Q1740
IC1901
Q4522
Q4501
Q4502
IC2501

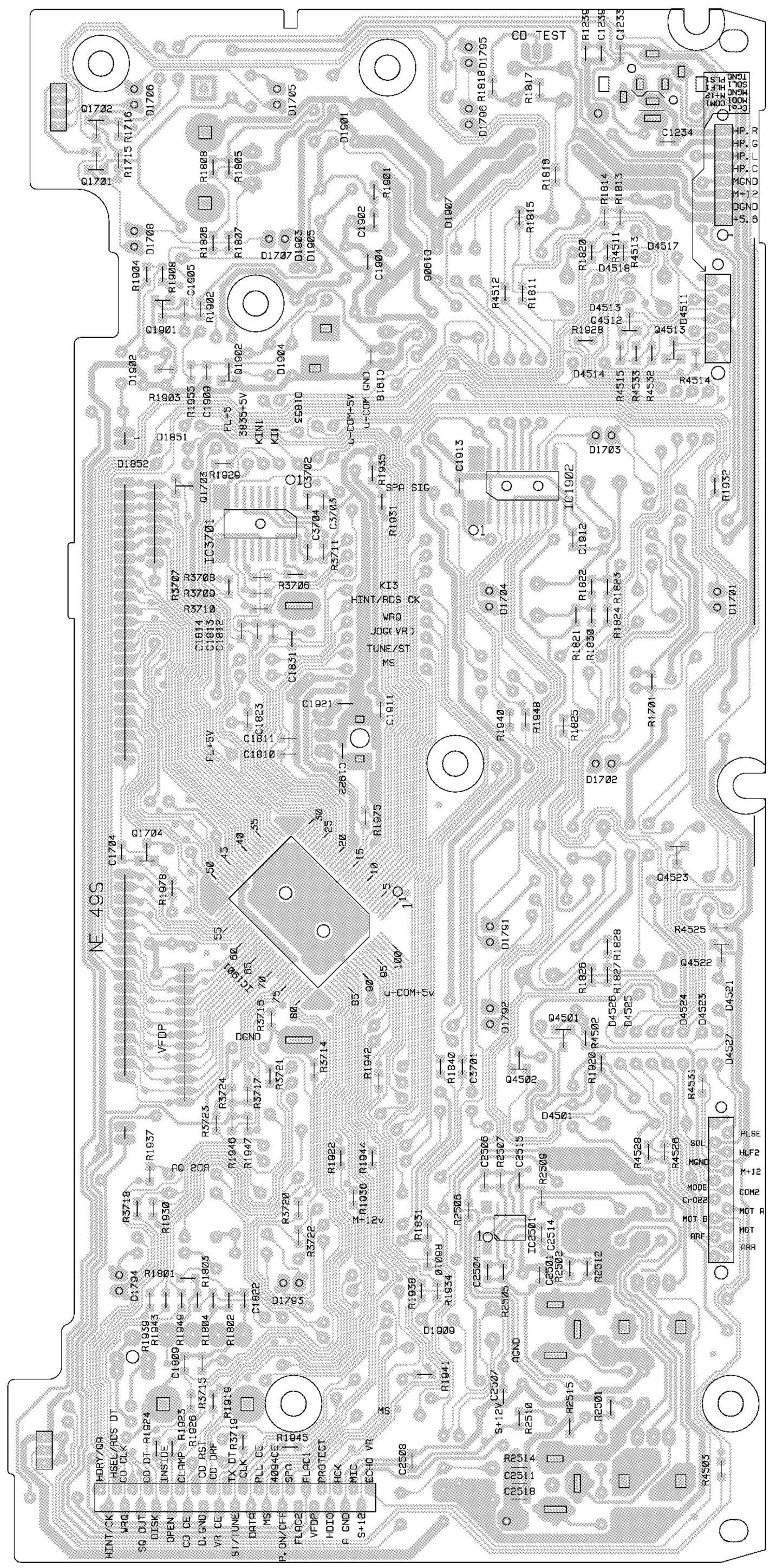


A

B

C

D

ANP7197-A

**K**

## 4.7 PRIMARY ASSY

SIDE A

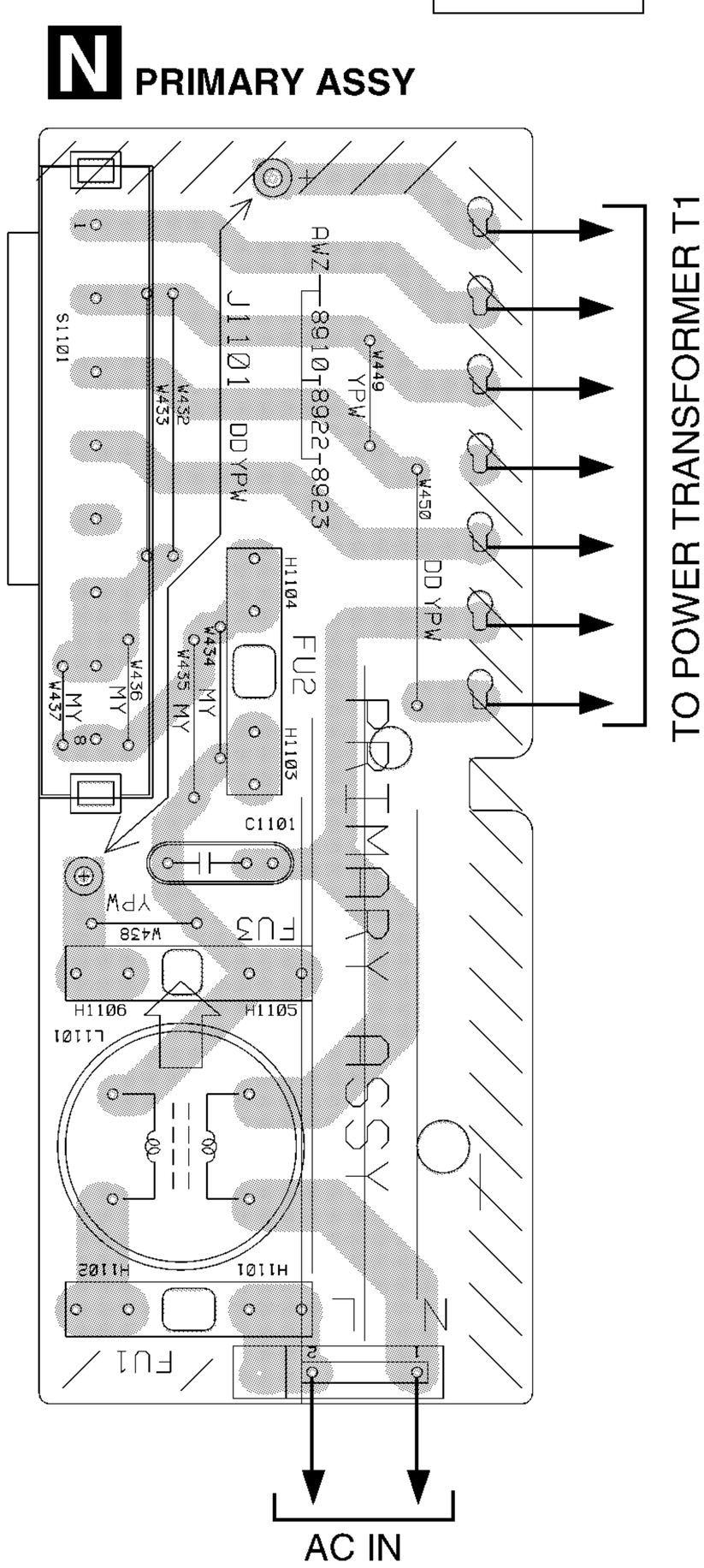


SIDE B

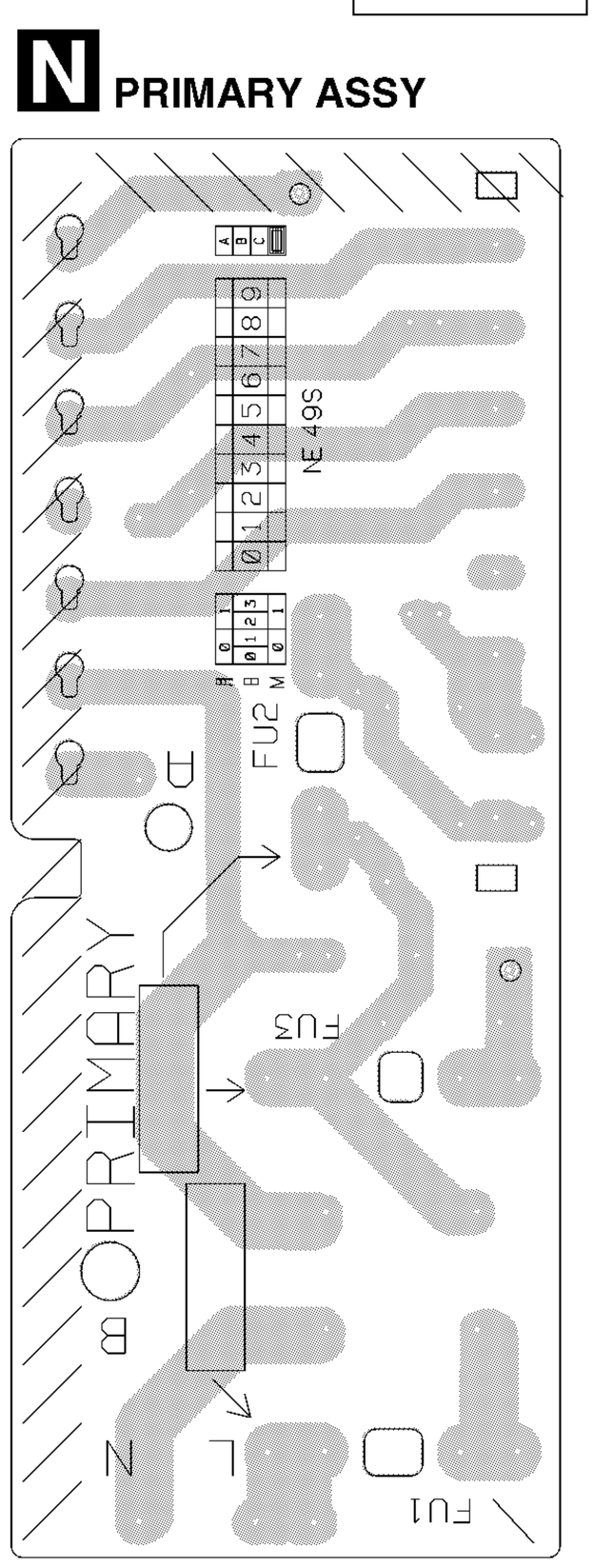


ANP7197-A

# 5. PCB PARTS LIST

*NOTES:*
- *Parts marked by "NSP" are generally unavailable because they are not in our Master Spare Parts List.*
- *The ⚠ mark found on some component parts indicates the importance of the safety factor of the part. Therefore, when replacing, be sure to use parts of identical designation.*
- *When ordering resistors, first convert resistance values into code form as shown in the following examples.*

  *Ex.1 When there are 2 effective digits (any digit apart from 0), such as 560 ohm and 47k ohm (tolerance is shown by J = 5%, and K = 10%).*

  *560Ω → 56 × 10¹ → 561 ..... RD1/4PU561J*
  *47kΩ → 47 × 10³ → 473 ..... RD1/4PU473J*
  *0.5Ω → 0R5 ..... RN2H0R5K*
  *1Ω → 1R0 ..... RS1P1R0K*

  *Ex.2 When there are 3 effective digits (such as in high precision metal film resistors).*
  *5.62kΩ → 562 × 10¹ → 5621 ..... RN1/4PC5621F*

## ■ LIST OF WHOLE PCB ASSEMBLIES

| Mark | Symbol and Description | Part No. | | | | | | | | Remarks |
|---|---|---|---|---|---|---|---|---|---|---|
| | | XR-A600 /DDXJ | XR-A600 /DLXJ/NC | XR-A600 DLXJN/NC | XR-A600 /YPWXJ | XR-A600 /DXJ/NC | XR-A500 /DDXJ | XR-A500 /YPWXJ | XR-A500EE /DLWXJ/EE | |
| NSP | POWER ASSY | AWK7409 | AWK7409 | AWK7409 | AWK7409 | AWK7409 | AWK7408 | AWK7408 | AWK7408 | |
| | ├REG ASSY | AWZ8905 | AWZ8905 | AWZ8905 | AWZ8905 | AWZ8905 | AWZ8905 | AWZ8905 | AWZ8905 | |
| | ├POWER ASSY | AWZ8920 | AWZ8920 | AWZ8920 | AWZ8920 | AWZ8920 | AWZ8919 | AWZ8919 | AWZ8919 | |
| | └FET ASSY | AWZ8921 | AWZ8921 | AWZ8921 | AWZ8921 | AWZ8921 | AWZ8921 | AWZ8921 | AWZ8921 | |
| NSP | COMPLEX ASSY | AWM7308 | AWM7308 | AWM7308 | AWM7331 | AWM7308 | AWM7307 | AWM7330 | AWM7309 | |
| | ├SECONDARY ASSY | AWZ8913 | AWZ8913 | AWZ8913 | AWZ8913 | AWZ8913 | AWU7051 | AWU7051 | AWU7051 | |
| | ├AF ASSY | AWZ8908 | AWZ8908 | AWZ8908 | AWU7045 | AWZ8908 | AWZ8907 | AWU7010 | AWU7046 | |
| | ├PRIMARY ASSY | AWZ8910 | AWZ8910 | AWZ8910 | AWZ8922 | AWZ8910 | AWZ8910 | AWZ8922 | AWZ8910 | |
| | ├DISPLAY ASSY | AWZ8914 | AWZ8914 | AWZ8914 | AWZ8915 | AWZ8914 | AWZ8914 | AWZ8915 | AWZ8916 | |
| NSP | ├CD SWITCH ASSY | AWZ8932 | AWZ8932 | AWZ8932 | AWZ8932 | AWZ8932 | AWZ8932 | AWZ8932 | AWZ8932 | |
| NSP | └CD LED ASSY | AWZ8933 | AWZ8933 | AWZ8933 | AWZ8933 | AWZ8933 | AWZ8933 | AWZ8933 | AWZ8933 | |
| | FM/AM TUNER MODULE | AXQ7061 | AXQ7061 | AXQ7061 | AXQ7061 | AXQ7061 | AXQ7061 | AXQ7061 | AXQ7069 | |
| NSP | CD $M LOADING MECHANISM | XXA3002 | XXA3002 | XXA3002 | AXA7056 | XXA3002 | XXA3002 | AXA7056 | XXA3002 | |
| NSP | └$M SERVO BOARD ASSY | AWX7030 | AWX7030 | AWX7030 | AWX7033 | AWX7030 | AWX7030 | AWX7033 | AWX7030 | |
| | ├MOTOR ASSY | AWZ8428 | AWZ8428 | AWZ8428 | AWZ8428 | AWZ8428 | AWZ8428 | AWZ8428 | AWZ8428 | |
| NSP | ├SW ASSY | AWZ8429 | AWZ8429 | AWZ8429 | AWZ8429 | AWZ8429 | AWZ8429 | AWZ8429 | AWZ8429 | |
| | └CD ASSY | AWZ8427 | AWZ8427 | AWZ8427 | AWZ8742 | AWZ8427 | AWZ8427 | AWZ8742 | AWZ8427 | |

## ■ CONTRAST OF PCB ASSEMBLIES

### POWER ASSY

### AWZ8920 and AWZ8919 are constructed the same except for the following:

| Mark | Symbol and Description | Part No. | | Remarks |
|---|---|---|---|---|
| | | AWZ8920 | AWZ8919 | |
| | D1211, D1212 | MTZJ39C | MTZJ33C | |
| | IC1201 | STK407 – 070 | STK407 – 050 | |

### SECONDARY ASSY

### AWZ8913 and AWU7051 are constructed the same except for the following:

| Mark | Symbol and Description | Part No. | | Remarks |
|---|---|---|---|---|
| | | AWZ8913 | AWU7051 | |
| ⚠ | IC1004, IC1005 | AEK7019 | AEK7018 | |
| ⚠ | IC1010, IC1011 | AEK7047 | AEK7046 | |

## PRIMARY ASSY

**AWZ8910 and AWZ8922 are constructed the same except for the following:**

| Mark | Symbol and Description | Part No. | | Remarks |
|---|---|---|---|---|
| | | AWZ8910 | AWZ8922 | |
| | H1103 – H1106 FUSE CLIP | AKR1003 | Not Used | |
| | S1101 | AKX7006 | Not Used | |

## AF ASSY

**AWZ8908, AWU7045, AWZ8907, AWU7010 and AWU7046 are constructed the same except for the following:**

| Mark | Symbol and Description | Part No. | | | | | Remarks |
|---|---|---|---|---|---|---|---|
| | | AWZ8908 | AWU7045 | AWZ8907 | AWU7010 | AWU7046 | |
| | C1071 | Not Used | Not Used | CEAT220M2A | CEAT220M2A | CEAT220M2A | |
| | C1072 | CEAT221M63 | CEAT221M63 | CEAT101M2A | CEAT101M2A | CEAT101M2A | |
| | C1243 | CEANP3R3M2A | CEANP3R3M2A | CEANP3R3M63 | CEANP3R3M63 | CEANP3R3M63 | |
| | C1397, C1398 | CKAQYB103K50 | CKAQYB103K50 | CKAQYB103K50 | CKAQYB103K50 | Not Used | |
| | C1962 | Not Used | SKSQYB103K50 | Not Used | CKSQYB103K50 | Not Used | |
| | C1971 | CKSQYB103K50 | Not Used | CKSQYB103K50 | Not Used | Not Used | |
| | C1978 | Not Used | Not Used | Not Used | Not Used | CKSQYB103K50 | |
| | C3803 | CEANP4R7M50 | CEANP4R7M50 | CEANP4R7M50 | CEANP4R7M50 | Not Used | |
| | C4109,C4110 | Not Used | CCSQCH391J50 | Not Used | CCSQCH391J50 | CCSQCH391J50 | |
| | C4305, C4306 | Not Used | CKSQYB393K50 | Not Used | CKSQYB393K50 | CKSQYB393K50 | |
| | C8501 | Not Used | CKSQYF104Z50 | Not Used | CKSQYF104Z50 | Not Used | |
| | C8502 | Not Used | CKSQYB103K50 | Not Used | CKSQYB103K50 | Not Used | |
| | D1071 | Not Used | Not Used | S5688G | S5688G | S5688G | |
| | D1073 | MTZJ36A | MTZJ36A | MTZJ33C | MTZJ33C | MTZJ33C | |
| | D1077 | S5688G | S5688G | Not Used | Not Used | Not Used | |
| | IC2201 | BA4558F – HT | BA4558F – HT | BA4558F – HT | BA4558F – HT | Not Used | |
| | L2101 | Not Used | LAU4R7J | Not Used | LAU4R7J | Not Used | |
| | Q1071 | 2SA965 | 2SA965 | 2SA1837 | 2SA1837 | 2SA1837 | |
| | Q4101, Q4102, Q4305, Q4306 | Not Used | DTC114TK | Not Used | DTC114TK | DTC114TK | |
| | Q4209 | Not Used | DTC143EK | Not Used | DTC143EK | DTC143EK | |
| | Q4351 | Not Used | 2SB1197K | Not Used | 2SB1197K | 2SB1197K | |
| | Q4352, Q4356 | Not Used | DTC143EK | Not Used | DTC143EK | DTC143EK | |
| | R1071 | RD1/2LMF222J | RD1/2LMF222J | RD1/2LMF562J | RD1/2LMF562J | RD1/2LMF562J | |
| | R1241 | RD1/4PU123J | RD1/4PU123J | RD1/4PU183J | RD1/4PU183J | RD1/4PU183J | |
| | R1251, R1252 | RS3LMFR22J | RS3LMFR22J | RS2LMFR22J | RS2LMFR22J | RS2LMFR22J | |
| | R1253 | RD1/4PU222J | RD1/4PU222J | RD1/4PU152J | RD1/4PU152J | RD1/4PU152J | |
| | R2201, R2202, R2205, R2206 | RD1/10S472J | RD1/10S472J | RD1/10S472J | RD1/10S472J | RD1/10S0R0J | |
| | R2203, R2204, R2207, R2208 | RD1/10S472J | RD1/10S472J | RD1/10S472J | RD1/10S472J | Not Used | |
| | R4109, R4110 | Not Used | RS1/10S303J | Not Used | RS1/10S303J | RS1/10S303J | |
| | R4220 | Not Used | RS1/10S472J | Not Used | RS1/10S472J | RS1/10S472J | |
| | R4309, R4310 | Not Used | RS1/10S392J | Not Used | RS1/10S392J | RS1/10S392J | |
| | R4311, R4312 | Not Used | RS1/10S821J | Not Used | RS1/10S821J | RS1/10S821J | |
| | R4331 | Not Used | RS1/10S222J | Not Used | RS1/10S222J | RS1/10S222J | |
| | R4351 | Not Used | RS1/10S103J | Not Used | RS1/10S103J | RS1/10S103J | |
| | R4352 | Not Used | RD1/2LMF471J | Not Used | RD1/2LMF471J | RD1/2LMF471J | |
| | R8501 | Not used | RS1/10S152J | Not Used | RS1/10S152J | Not Used | |
| | CN1901 CONNECTOR | HLEM35S – 1 | HLEM35S – 1 | HLEM35S – 1 | HLEM35S – 1 | HLEM29S – 1 | |
| | CN1903 CONNECTOR | HLEM20S – 1 | HLEM22S – 1 | HLEM20S – 1 | HLEM22S – 1 | HLEM20S – 1 | |
| | JA1301 JACK (2P) | VKB1050 | VKB1050 | VKB1050 | VKB1050 | Not Used | |
| | JA8501 OPTICAL LINK OUT | Not Used | GP1F32T | Not Used | GP1F32T | Not Used | |

## DISPLAY ASSY

**AWZ8914, AWZ8915 and AWZ8916 are constructed the sane except for the following:**

| Mark | Symbol and Description | Part No. | | | Remarks |
|---|---|---|---|---|---|
| | | AWZ8914 | AWZ8915 | AWZ8916 | |
| | C1921 | Not used | Not Used | CCSQCH270J50 | |
| | C1922 | Not used | Not Used | CCSQCH220J50 | |
| | C2503 | CEJA2R2M50 | CEJA2R2M50 | Not Used | |
| | C2504 | CCSQSL331J50 | CCSQSL331J50 | Not Used | |
| | C2506 | CKSQYB472K50 | CKSQYB472K50 | Not Used | |
| | C2507 | CKSQYB104K25 | CKSQYB104K25 | Not Used | |
| | C2510, C2512, C2516 | CEJA2R2M50 | CEJA2R2M50 | Not Used | |
| | C2517 | CEJA470M16 | CEJA470M16 | Not Used | |
| | D1851 | Not Used | Not Used | 1SS254 | |
| | D1852, D1853 | Not Used | 1SS254 | Not Used | |
| | D4518, D4528 | Not Used | 1SS254 | 1SS254 | |
| | IC2501 | BA4558F – HT | BA4558F – HT | Not Used | |
| | L2503, L2504 | LAU4R7J | LAU4R7J | Not Used | |
| | Q4513, Q4523 | Not Used | DTA124EK | DTA124EK | |
| | R2501 | RS1/10S332J | RS1/10S332J | Not Used | |
| | R2502 | RS1/10S103J | RS1/10S103J | Not Used | |
| | R2503 | RD1/4PU332J | RD1/4PU332J | Not Used | |
| | R2505 | RS1/10S104J | RS1/10S104J | Not Used | |
| | R2506 | RS1/10S152J | RS1/10S152J | Not Used | |
| | R2507 | RS1/10S752J | RS1/10S752J | Not Used | |
| | R2509 | RS1/10S473J | RS1/10S473J | Not Used | |
| | R2510 | RS1/10S101J | RS1/10S101J | Not Used | |
| | R2511 | RD1/4PU222J | RD1/4PU222J | Not Used | |
| | R2512 | RS1/10S222J | RS1/10S222J | Not Used | |
| | R2598, R2599 | RS1/10S0R0J | RS1/10S0R0J | Not Used | |
| | R4511 | Not Used | RS1/10S103J | RS1/10S103J | |
| | R4514 | Not Used | RS1/10S222J | RS1/10S222J | |
| | R4521 | Not Used | RD1/4PU103J | RD1/4PU103J | |
| | R4524 | Not Used | RD1/4PU222J | RD1/4PU222J | |
| | VR2501 | VCS1021 | VCS1021 | Not Used | |
| | X1902 CERAMIC RESONATOR | RSS1050 | RSS1050 | ASS7015 | |
| | CN1902 CONNECTOR | HLEM35S – 1 | HLEM35S – 1 | HLEM29S – 1 | |
| | JA2501, JA2502 SR JACK | AKN7004 | AKN7004 | Not Used | |

## CD ASSY

**AWZ8427 and AWZ8742 are constructed the same except for the following:**

| Mark | Symbol and Description | Part No. | | Remarks |
|---|---|---|---|---|
| | | AWZ8427 | AWZ8742 | |
| | C8310 | CCSQCH150J50 | CCSQCH180J50 | |
| | CN8004 | HLEM20R – 1 | HLEM22R – 1 | |
| | R8305 | RS1/10S0R0J | RS1/10S331J | |
| | R8310 | Not Used | RS1/10S102J | |
| | X8301 CRYSTAL RESONATOR (16.9344MHz) | DSS1083 | PSS1008 | |

# XR-A600,XR-A500,XR-A500EE

| Mark | No. | Description | Parts No. |
|---|---|---|---|

## H REG ASSY

### SEMICONDUCTORS

| | | | |
|---|---|---|---|
| ⚠ | IC1051 | | NJM7805FA |
| ⚠ | IC1052 | | NJM7812FA |
| | Q1052 | | 2SA1515 |
| ⚠ | Q1051 | | 2SD2012 |
| | Q1053 | | DTC143ES |
| | D1055 | | 1SS254 |
| | D1052, D1053 | | MTZJ15C |
| | D1051 | | MTZJ6.8C |

### CAPACITORS

| | | | |
|---|---|---|---|
| | C1055 – C1057 | | CEAT100M50 |
| | C1051, C1052 | | CEAT1R0M50 |
| | C1060 | | CEAT470M10 |

### RESISTORS

| | | | |
|---|---|---|---|
| | | All Resistors | RD1/4PU□□□J |

### OTHERS

| | | | |
|---|---|---|---|
| | 1051 | CABLE HOLDER(10P) | 51048 – 1000 |

## G POWER ASSY

### SEMICONDUCTORS

| | | | |
|---|---|---|---|
| ⚠ | IC1201 | | STK407 – 070 |
| | Q1201, Q1206 | | 2SA1048 |
| | Q1205 | | 2SC2458 |
| | Q1202 | | DTC124ES |
| ⚠ | D1217, D1218 | | 1SR139 – 100 |
| | D1205 – D1208, D1501, D1502 | | 1SS254 |
| ⚠ | D1203, D1204 | | 20E2 – FC |
| ⚠ | D1201 | | D3SBA20(B) |
| | D1213, D1214 | | MTZJ10C |
| | D1209, D1210 | | MTZJ18B/C |
| | D1211, D1212 | | MTZJ39C |

### CAPACITORS

| | | | |
|---|---|---|---|
| | C1201, C1202 | (2200µF/50V) | ACH7070 |
| | C1203, C1204 | (2200µF/63V) | ACH7071 |
| | C1209, C1210 | | CCCSL3R0C50 |
| | C1211, C1212 | | CEANP220M35 |
| | C1205, C1206 | | CEANP2R2M50 |
| | C1213, C1214 | | CEAT101M50 |
| | C1215 | | CEAT330M50 |
| | C1217 – C1220 | | CGCYF104Z50 |
| | C1224 | | CKCYB102K50 |
| | C1207, C1208 | | CKCYF222Z50 |
| | C1216 | | CQMA103K2E |

### RESISTORS

| | | | |
|---|---|---|---|
| | | All Resistors | RD1/4PU□□□J |

### OTHERS

| | | | |
|---|---|---|---|
| | 1204 | CABLE HOLDER(6P) | 51048 – 0600 |
| | CN1202 | B TO B CONNECTOR 15P | RKP1806 |

## I FET ASSY

### SEMICONDUCTORS

| | | | |
|---|---|---|---|
| ⚠ | Q1203 | | IRFI9Z34G |
| ⚠ | Q1204 | | IRFIZ34G |

### RESISTORS

| | | | |
|---|---|---|---|
| | | All Resistors | RD1/4PU□□□J |

### OTHERS

| | | | |
|---|---|---|---|
| | 1203 | CABLE HOLDER(6P) | 51048 – 0600 |
| | J1203 | JUMPER WIRE | D20PYY0610E |

## M SECONDARY ASSY

### SEMICONDUCTORS

| | | | |
|---|---|---|---|
| ⚠ | IC1003, IC7012 | | AEK7015 |
| ⚠ | IC1004, IC1005 | | AEK7019 |
| ⚠ | IC1010, IC1011 | | AEK7047 |
| ⚠ | IC1001 | | AEK7048 |
| ⚠ | D1001 | | D3SBA20(B) |
| ⚠ | D1002 – D1009 | | S5688G |

### CAPACITORS

| | | | |
|---|---|---|---|
| | C1002 | | CEAT222M25 |
| | C1001 | | CEAT222M35 |
| | C1003 | | CQMA333K2E |

### OTHERS

| | | | |
|---|---|---|---|
| | | CABLE HOLDER(15P) | 51063 – 1505 |

## F AF ASSY

### SEMICONDUCTORS

| | | | |
|---|---|---|---|
| | IC1501, IC2201, IC3702, IC4102, IC4301 | | BA4558F – HT |
| | IC4101 | | BU4066BCF |
| | IC1991, IC1992 | | BU4094BCF |
| | IC4401 | | CXA1101P |
| | IC2101 | | LC75394NED |
| | Q1204, Q1254 | | 2SA1037K |
| | Q1071 | | 2SA965 |
| | Q4353, Q4354 | | 2SC1815 |
| | Q4361 | | 2SC2240 |
| | Q1202, Q1251 – Q1253, Q1255, Q1256 | | 2SC2412K |
| | Q4201, Q4202, Q4451 – Q4454 | | 2SC2412K |
| | Q1231 – Q1234, Q1501, Q1502, Q4355 | | 2SD2114K |
| | Q4421, Q4422 | | 2SD2114K |
| | Q4307, Q4308 | | 2SK373 |
| | Q4301, Q4302 | | DTA114TK |
| | Q1503 | | DTA124EK |
| | Q1235, Q4208 | | DTA143EK |
| | Q1201, Q1991, Q4423, Q4456 | | DTC124EK |
| | Q4207, Q4309, Q4362, Q4455 | | DTC143EK |
| | D1054, D1074, D1241 – D1243 | | 1SS254 |
| | D1246 – D1248, D1251, D1253, D1981 | | 1SS254 |
| | D4201, D4301 – D4306, D4451, D4452 | | 1SS254 |
| | D2101 – D2103, D4601 | | 1SS355 |
| | D1073 | | MTZJ36A |
| | D4401 | | MTZJ6.2A |
| | D1075 | | MTZJ8.2B |
| | D1052, D1053 | | S5688G |
| ⚠ | D1072, D1077 | | S5688G |

### COILS AND FILTERS

| | | | |
|---|---|---|---|
| | L1201, L1202 | (1mH) | ATH – 133 |
| | L4351 | (4.05mH) | ATX7002 |
| | L2181 | | LAU100J |
| | L4301, L4302 | | LTA332J |
| | L4303, L4304 | | LTA822J |

| Mark | No. | Description | Parts No. |
|---|---|---|---|
| | F4401, F4402 | | RTF1209 |
| **SWITCHES AND RELAYS** | | | |
| | RY1251 | | ASR7007 |
| **CAPACITORS** | | | |
| | C4319, C4320 | | CCCSL271K2H |
| | C4191, C4192, C4323, C4324 | | CCSQCH100D50 |
| | C1984, C2131, C2132 | | CCSQCH101J50 |
| | C4601 | | CCSQCH220J50 |
| | C1993 | | CCSQCH221J50 |
| | C4101, C4102, C4151, C4152 | | CCSQCH821J50 |
| | C1241 | | CEANP2R2M2A |
| | C1243 | | CEANP3R3M2A |
| | C1231, C1232, C3808 | | CEANP4R7M50 |
| | C4401, C4402 | | CEASR68M50 |
| | C1252, C4357, C4364, C4403, C4404 | | CEAT100M50 |
| | C4454 | | CEAT100M50 |
| | C1513, C2135, C2136, C4405 | | CEAT101M16 |
| | C1073, C4415, C4416, C4453 | | CEAT220M50 |
| | C1253, C4406 | | CEAT221M16 |
| | C1072 | | CEAT221M63 |
| | C4117 | | CEAT4R7M50 |
| | C1501, C1502, C1509, C1510 | | CEJA2R2M50 |
| | C2109, C2110, C4207, C4208 | | CEJA2R2M50 |
| | C4301 – C4304, C4315, C4316 | | CEJA2R2M50 |
| | C4411, C4412 | | CEJA2R2M50 |
| | C2137, C4103, C4104, C4309, C4310 | | CEJA330M16 |
| | C4359, C4360 | | CEJA330M16 |
| | C4107 | | CEJA470M16 |
| | C2101 – C2108, C2129, C2130 | | CEJAR33M50 |
| | C1514 | | CEJAR47M50 |
| | C2115, C2116 | | CFTLA394J50 |
| | C2111, C2112 | | CFTLA474J50 |
| | C4362 | | CKCYB681J2H |
| | C4115, C4116 | | CKCYF473Z50 |
| | C1992 | | CKSQYB102K50 |
| | C1397, C1398, C1970, C1971, C1982 | | CKSQYB103K50 |
| | C1989, C1990, C1996, C1997 | | CKSQYB103K50 |
| | C4602, C4603 | | CKSQYB104K25 |
| | C2125, C2126 | | CKSQYB122K50 |
| | C4317, C4318, C4413, C4414 | | CKSQYB152K50 |
| | C4313, C4314 | | CKSQYB272K50 |
| | C2119, C2120 | | CKSQYB273K50 |
| | C4352, C4354 | | CKSQYB332K50 |
| | C1505, C1506, C1991, C4307, C4308 | | CKSQYB333K50 |
| | C2117, C2118 | | CKSQYB393K50 |
| | C1986 – C1988, C1995 | | CKSQYB471K50 |
| | C2121, C2122, C4356 | | CKSQYB472K50 |
| | C1507, C1508 | | CKSQYB563K25 |
| | C2123, C2124, C2127, C2128 | | CKSQYB682K50 |
| | C4105, C4106 | | CKSQYB682K50 |
| | C2113, C2114 | | CKSQYB683K25 |
| | C4311, C4312 | | CKSQYB823K25 |
| | C2145 | | CKSQYF104Z50 |
| | C4361 | | CQHA822J2A |
| | C4409, C4410 | | CQMBA103J50 |
| | C4358 | | CQMBA223J50 |

| Mark | No. | Description | Parts No. |
|---|---|---|---|
| **RESISTORS** | | | |
| | R1071 | | RD1/2LMF222J |
| | R1223, R1224 | | RD1/4LMF100J |
| | R4360 | | RD1/4LMF360J |
| | R4357 | | RD1/4LMF4R7J |
| | R1243 | | RD1/4PU102J |
| | R1072 | | RD1/4PU103J |
| | R1081 | | RD1/4PU122J |
| | R1241 | | RD1/4PU123J |
| | R2108 | | RD1/4PU153J |
| | R1253, R4358 | | RD1/4PU222J |
| | R1245 | | RD1/4PU392J |
| | R4510 | | RD1/4PU471J |
| | R1246 | | RD1/4PU562J |
| | R1231, R1232 | | RS2LMF331J |
| | R1251, R1252 | | RS3LMFR22J |
| | VR4301, VR4302 (4.7kΩ/0.1W) | | PCP1028 |
| | VR4201 – VR4204 (22kΩ/0.1W) | | PCP1030 |
| | VR4351, VR4352 (220kΩ/0.1W) | | PCP1033 |
| | | Other Resistors | RS1/10S□□□J |
| **OTHERS** | | | |
| | | CABLE HOLDER(15P) | 51063 – 1505 |
| | CN1232 | 8P JUMPER CONNECTOR | 52147 – 0810 |
| | CN1051 | 10PJUMPER CONNECTOR | 52147 – 1010 |
| | CN1203 | SPEAKER TERMINAL 4 – P | AKE7035 |
| | CN4003 | 2P TOP POST | B2B – EH |
| | CN4002 | 3P TOP POST | B3B – EH |
| | CN4001 | 3P TOP POST(RED) | B3B – EH – R |
| | CN1903 | CONNECTOR 20P | HLEM20S – 1 |
| | CN1901 | CONNECTOR | HLEM35S – 1 |
| | CN1981 | 14P PLUG | KM200IB14 |
| | CN1201 | B TO B CONNECTOR 15P | RKP1788 |
| | JA1301, JA2101 | JACK | VKB1050 |

## N PRIMARY ASSY

| Mark | No. | Description | Parts No. |
|---|---|---|---|
| **COILS AND FILTERS** | | | |
| ⚠ | L1101 | | ATF – 151 |
| **SWITCHES AND RELAYS** | | | |
| | S1101 | | AKX7006 |
| **CAPACITORS** | | | |
| ⚠ | C1101 | (10000pF/AC250V) | ACG7020 |
| **OTHERS** | | | |
| | H1101 – H1106 | FUSE CLIP | AKR1003 |

## K DISPLAY ASSY

| Mark | No. | Description | Parts No. |
|---|---|---|---|
| **SEMICONDUCTORS** | | | |
| | IC3701 | | BA3835F |
| | IC2501 | | BA4558F – HT |
| | IC1902 | | BU2092F |
| | IC1901 | | PDC040A |
| | Q1701 | | 2SA1037K |
| | Q4501 | | 2SB1197K |
| | Q1702 | | 2SC2411K |
| | Q1703 | | DTC143EK |
| | Q1901 | | 2SC2412K |
| | Q4512, Q4522 | | 2SD1781K |

| Mark | No. | Description | Parts No. |
|---|---|---|---|
| | Q1704, Q1902, Q4502 | | DTC143EK |
| | D1901 – D1903, D1905, D1906, D4501 | | 1SS254 |
| | D4511, D4513, D4514, D4517, D4521 | | 1SS254 |
| | D4523 – D4527 | | 1SS254 |
| | D1701 – D1704, D1791, D1792 | | MBG5064X |
| | D1909 | | MTZJ6.8C |
| | D1705 – D1708, D1793 – D1796 | | SLP7118C51H |
| **COILS AND FILTERS** | | | |
| | L1231 | | LAU100J |
| | L1901 | | LAU220J |
| | L2503, L2504 | | LAU4R7J |
| **SWITCHES AND RELAYS** | | | |
| | S1811 – S1817, S1821 – S1827 | | ASG1034 |
| | S1831, S1832 | | ASG1034 |
| | S1801 | | ASX7012 |
| | S1802 | | ASX7017 |
| **CAPACITORS** | | | |
| | C1901 | | ACH1246 |
| | C1912 | | CCSQCH151J50 |
| | C2504 | | CCSQSL331J50 |
| | C1908 | | CEAT100M50 |
| | C1701 | | CEJA220M50 |
| | C2503, C2510, C2512, C2516 | | CEJA2R2M50 |
| | C1903, C1910, C1915, C2517 | | CEJA470M16 |
| | C1907 | | CEJAR22M50 |
| | C1906 | | CEJAR47M50 |
| | C1233, C1234, C1822, C1823, C1905 | | CKSQYB102K50 |
| | C1911, C1918, C2507, C3701 – C3704 | | CKSQYB104K25 |
| | C1813 | | CKSQYB471K50 |
| | C1812, C1814, C1831, C2506 | | CKSQYB472K50 |
| | C1811 | | CKSQYB473K50 |
| | C1810 | | CKSQYB823K25 |
| | C1913 | | CKSQYF104Z50 |
| | C1932 | | CKSQYF105Z16 |
| | C1902, C1909 | | CKSQYF473Z50 |
| **RESISTORS** | | | |
| | R1977 | | RA12T473J |
| | R1979 | | RA7T473J |
| | R1832 | | RD1/4PU101J |
| | R1927, R4501, R4522 | | RD1/4PU102J |
| | R1833 | | RD1/4PU121J |
| | R1791, R1792, R1925 | | RD1/4PU221J |
| | R2511 | | RD1/4PU222J |
| | R4527 | | RD1/4PU223J |
| | R2503 | | RD1/4PU332J |
| | R1905, R4523 | | RD1/4PU473J |
| | R1702 – R1704, R1712 – R1714 | | RD1/4PU561J |
| | R1709, R1711 | | RD1/4PU681J |
| | VR4501 | (3.3kΩ/0.1W) | PCP1049 |
| | VR2501 | (10kΩ – B) | VCS1021 |
| | | Other Resistors | RS1/10S□□□J |
| **OTHERS** | | | |
| | | CABLE HOLDER(8P) | 51048 – 0800 |
| | | CABLE HOLDER(9P) | 51063 – 0905 |
| | | CABLE HOLDER(15P) | 51063 – 1505 |
| | V1901 | FL TUBE | AAV7044 |
| | JA2501, JA2502 | JACK | AKN7004 |

| Mark | No. | Description | Parts No. |
|---|---|---|---|
| | JA1231 | MINITURE JACK | AKN7005 |
| | | REMOTE RECEIVER UNIT | GP1U28X |
| | CN1902 | CONNECTOR | HLEM35S – 1 |
| | | FL HOLDER(FE) | VNF1096 |
| | X1902 | CERAMIC RESONATOR (6MHz) | RSS1050 |

## L CD SWITCH ASSY

| | | | |
|---|---|---|---|
| **SWITCHES AND RELAYS** | | | |
| | S1833 – S1837 | | ASG1034 |
| **RESISTORS** | | | |
| | | All Resistors | RS1/10S□□□J |
| **OTHERS** | | | |
| | J1801 | 3P JUMPER WIRE | D20PWW0315E |

## J CD LED ASSY

| | | |
|---|---|---|
| **SEMICONDUCTORS** | | |
| | D1711, D1712 | SLP3118C51H |
| | D1709, D1710 | SLP7118C51H |
| | D1713, D1714 | SLP9118C51H |

## A FM/AM TUNER MODULE (EXCEPT XR-A500EE/DLWXJ/EE)

| | | | |
|---|---|---|---|
| **SEMICONDUCTORS** | | | |
| | IC6201 | | LA1832ML |
| | IC6202 | | LC72131MD |
| | Q6402 | | 2SC2223 |
| | Q6203 | | 2SC2705 |
| | Q6201, Q6202 | | 2SC2712 |
| | Q6214, Q6403 | | 2SC2714 |
| | Q6404 | | 2SK302 |
| | Q6401 | | 3SK194 |
| | Q6204 | | DTA124ES |
| | Q6205 | | DTC124EK |
| | D6202 | | 1SS254 |
| | D6401, D6402 | | 1T363 |
| **COILS AND FILTERS** | | | |
| | L6404 | | ATC1003 |
| | L6401 | | ATC1020 |
| | L6402 | | ATC1021 |
| | F6204 | | ATF – 107 |
| | F6203 | | ATF – 119 |
| | F6401 | | ATF – 155 |
| | F6206 | | ATF7008 |
| | F6202 | (455kHz) | ATF7011 |
| | L6206, L6208, L6403 | | LAU2R2J |
| **TRANSFORMERS** | | | |
| | T6201 | | ATB7008 |
| | T6401 | | ATE7002 |
| **CAPACITORS** | | | |
| | C6208 | | CCSQCH100D50 |
| | C6212, C6274, C6275, C6408 | | CCSQCH101J50 |
| | C6221, C6222, C6416 | | CCSQCH150J50 |
| | C6271 | | CCSQCH200J50 |
| | C6415 | | CCSQCH330J50 |
| | C6401, C6419 | | CCSQCH5R0C50 |
| | C6407 | | CCSQCK1R0C50 |
| | C6410 | | CCSQCK2R0C50 |

| Mark | No. | Description | Parts No. |
|---|---|---|---|
| | C6413 | | CCSQPH220J50 |
| | C6414 | | CCSQPH8R0D50 |
| | C6405 | | CCSQTH180J50 |
| | C6234, C6235 | | CEAL1R0M50 |
| | C6245 | | CEAL470M16 |
| | C6224 | | CEAS100M50 |
| | C6243 | | CEAS101M16 |
| | C6231 | | CEAS1R0M50 |
| | C6227 | | CEAS220M16 |
| | C6236 | | CEAS2R2M50 |
| | C6216 | | CEAS330M16 |
| | C6262 | | CEAS3R3M50 |
| | C6219 | | CEAS470M10 |
| | C6244 | | CEAS470M16 |
| | C6249, C6250, C6265, C6266 | | CEAS4R7M50 |
| | C6258 | | CEJA470M16 |
| | C6215 | | CFTLA103J50 |
| | C6214 | | CFTLA224J50 |
| | C6211, C6254, C6403, C6406, C6412 | | CKSQYB102K50 |
| | C6201, C6205, C6210, C6213, C6237 | | CKSQYB103K50 |
| | C6276, C6278, C6280, C6281, C6402 | | CKSQYB103K50 |
| | C6409, C6417, C6418 | | CKSQYB103K50 |
| | C6251, C6252 | | CKSQYB153K50 |
| | C6203, C6259 | | CKSQYB223K50 |
| | C6228 | | CKSQYB472K50 |
| | C6209 | | CKSQYB473K50 |
| | C6230 | | CKSQYB821K50 |
| | C6218, C6223, C6255 | | CKSQYF103Z50 |
| | C6220, C6226, C6242, C6256 | | CKSQYF223Z50 |
| | C6225 | | CKSQYF473Z50 |
| **RESISTORS** | | | |
| | R6280 | | RD1/4PU101J |
| | R6413, R6416, R6418, R6906, R6909 | | RS1/8S0R0J |
| | R6401 | | RS1/8S470J |
| | VR6201 | (10kΩ/0.1W) | RCP1045 |
| | | Other Resistors | RS1/10S□□□J |
| **OTHERS** | | | |
| | BN6202 | TERMINAL 4 – P | AKE7025 |
| | X6202 | CRYSTAL RESONATOR (456kHz) | ASS1066 |
| | X6201 | CRYSTAL RESONATOR (7.2MHz) | ASS1093 |
| | CN6201 | 14P SOCKET | KP200IA14L |

## B FM/AM TUNER MODULE(XR-A500EE/DLWXJ/EE)

| Mark | No. | Description | Parts No. |
|---|---|---|---|
| **SEMICONDUCTORS** | | | |
| | IC6201 | | LA1832ML |
| | IC6202 | | LC72131MD |
| | Q6102 | | 2SC2223 |
| | Q6203 | | 2SC2705 |
| | Q6201 ,Q6202 | | 2SC2712 |
| | Q6103 ,Q6214 | | 2SC2714 |
| | Q6104 ,Q6105 | | 2SK302 |
| | Q6101 | | 3SK194 |
| | Q6204 | | DTA114ES |
| | Q6205 | | DTC124EK |
| | D6202 | | 1SS254 |
| | D6105 | | 1SS355 |
| | D6101 ,D6102 ,D6104 | | 1SV228 |
| **COILS AND FILTERS** | | | |
| | L6103 | | ATC1027 |
| | L6106 | | ATC7001 |
| | L6101 | | ATC7002 |
| | L6102 | | ATC7003 |
| | L6104 | | ATC7004 |
| | F6204 | | ATF – 107 |
| | F6203 | | ATF – 119 |
| | F6206 | | ATF7008 |
| | F6202 | (455kHz) | ATF7011 |
| | L6107 ,L6206 ,L6208 | | LAU2R2J |
| **TRANSFORMERS** | | | |
| | T6201 | | ATB7008 |
| | T6101 | | ATE7002 |
| **CAPACITORS** | | | |
| | C6208 | | CCSQCH100D50 |
| | C6113 ,C6212 ,C6274 ,C6275 | | CCSQCH101J50 |
| | C6116 ,C6221 ,C6222 | | CCSQCH150J50 |
| | C6271 | | CCSQCH200J50 |
| | C6117 | | CCSQCH330J50 |
| | C6128 | | CCSQCH470J50 |
| | C6118 | | CCSQCH8R0D50 |
| | C6122 | | CCSQCJ3R0C50 |
| | C6111 ,C6112 ,C6119 ,C6127 | | CCSQCK2R0C50 |
| | C6101 | | CCSQUJ2R0C50 |
| | C6106 | | CCSQUJ8R0D50 |
| | C6107 | | CCSQUJ9R0D50 |
| | C6234 ,C6235 | | CEAL1R0M50 |
| | C6245 | | CEAL470M16 |
| | C6224 | | CEAT100M50 |
| | C6243 | | CEAT101M16 |
| | C6231 | | CEAT1R0M50 |
| | C6227 | | CEAT220M50 |
| | C6236 | | CEAT2R2M50 |
| | C6216 | | CEAT330M16 |
| | C6262 | | CEAT3R3M50 |
| | C6219 ,C6244 | | CEAT470M16 |
| | C6249 ,C6250 ,C6265 ,C6266 | | CEAT4R7M50 |
| | C6258 | | CEJA470M16 |
| | C6215 | | CFTLA103J50 |
| | C6214 | | CFTLA564J50 |
| | C6105 ,C6115 ,C6125 ,C6126 ,C6211 | | CKSQYB102K50 |
| | C6254 | | CKSQYB102K50 |
| | C6102 ,C6103 ,C6114 ,C6121 | | CKSQYB103K50 |
| | C6123 ,C6124 ,C6201 ,C6210 ,C6213 | | CKSQYB103K50 |
| | C6237 ,C6267 ,C6276 ,C6279 – C6281 | | CKSQYB103K50 |
| | C6251 ,C6252 | | CKSQYB123K50 |
| | C6203 ,C6259 | | CKSQYB223K50 |
| | C6228 | | CKSQYB472K50 |
| | C6209 | | CKSQYB473K50 |
| | C6230 | | CKSQYB821K50 |
| | C6218 ,C6223 ,C6255 | | CKSQYF103Z50 |
| | C6220 ,C6226 ,C6242 ,C6256 | | CKSQYF223Z50 |
| | C6225 | | CKSQYF473Z50 |
| | C6282 | | CKSYB103K50 |

| Mark | No. | Description | Parts No. |
|---|---|---|---|
| **RESISTORS** | | | |
| | R6280 | | RD1/4PU101J |
| | R6115 ,R6119 ,R6123 ,R6127 ,R6906 | | RS1/8S0R0J |
| | R6909 ,R6911 | | RS1/8S0R0J |
| | R6112 | | RS1/8S473J |
| | VR6201 | (10kΩ/0.1W) | PCP1029 |
| | | Other Resistors | RS1/10S□□□J |
| **OTHERS** | | | |
| | BN6202 | TERMINAL 4 – P | AKE7025 |
| | X6202 | CRYSTAL RESONATOR(456kHz) | ASS1066 |
| | X6201 | CRYSTAL RESONATOR(7.2MHz) | ASS1093 |
| | CN6201 | 14P SOCKET | KP200IA14L |

## C MOTOR ASSY

| | | | |
|---|---|---|---|
| **SWITCHES AND RELAYS** | | | |
| | S8503 | | ASG7009 |
| **OTHERS** | | | |
| | | MOTOR PULLEY | PNW1634 |
| | | SLIDER MOTOR | VXM1033 |

## D SW ASSY

| | | | |
|---|---|---|---|
| **SWITCHES AND RELAYS** | | | |
| | S8502 | | ASG7009 |
| | S8501 | | DSG1017 |
| **OTHERS** | | | |
| | J8501 | | D20PWY0610E |

## E CD ASSY

| | | | |
|---|---|---|---|
| **SEMICONDUCTORS** | | | |
| | IC8201 | | BA5923FP |
| | IC8101 | | LA9240ML |
| | IC8301 | | LC78622ED |
| | Q8101 | | 2SA1048 |
| | Q8251, Q8252 | | 2SA1560 |
| | Q8253, Q8254 | | 2SC4040 |
| | D8253 | | 1SS181 |
| | D8251, D8252 | | 1SS355 |
| **COILS AND FILTERS** | | | |
| | L8351, L8352 | | LFA1R0K |
| | L8201, L8371 | | LFA470J |
| **CAPACITORS** | | | |
| | C8145, C8352, C8354, C8356, C8358 | | CCSQCH101J50 |
| | C8361, C8362 | | CCSQCH101J50 |
| | C8132, C8310, C8311 | | CCSQCH150J50 |
| | C8131 | | CCSQCH300J50 |
| | C8129 | | CCSQCK1R0C50 |
| | C8142 | | CEAL101M6R3 |
| | C8127 | | CEAL1R0M50 |
| | C8126, C8139 | | CEAL470M16 |
| | C8135 | | CEAL4R7M16 |
| | C8124 | | CEALR47M50 |
| | C8136 | | CEAS100M50 |
| | C8108, C8251, C8306, C8371 | | CEAS101M10 |
| | C8202 | | CEAS101M25 |
| | C8101 | | CEAS3R3M50 |
| | C8105 | | CEAS470M16 |
| | C8109 | | CEASR22M50 |
| | C8106, C8119, C8133, C8360 | | CKSQYB102K50 |
| | C8102, C8122, C8123, C8130 | | CKSQYB103K50 |
| | C8137, C8138, C8201, C8309, C8312 | | CKSQYB103K50 |
| | C8134, C8302, C8303 | | CKSQYB104K25 |
| | C8353, C8359 | | CKSQYB152K50 |
| | C8111 | | CKSQYB153K25 |
| | C8114, C8117, C8120, C8121 | | CKSQYB154K16 |
| | C8125 | | CKSQYB221K50 |
| | C8107 | | CKSQYB223K50 |
| | C8110 | | CKSQYB331K50 |
| | C8115, C8128 | | CKSQYB332K50 |
| | C8113 | | CKSQYB333K25 |
| | C8112, C8141 | | CKSQYB334K16 |
| | C8355, C8357 | | CKSQYB471K50 |
| | C8116, C8140 | | CKSQYB473K50 |
| | C8118, C8301, C8304, C8305 | | CKSQYF104Z25 |
| **RESISTORS** | | | |
| | | All Resistors | RS1/10S□□□J |
| **OTHERS** | | | |
| | CN8003 | 6PJUMPER CONNECTOR | 52151 – 0610 |
| | CN8002 | | B6B – PH – K – S |
| | CN8005 | | BS3P – SHF – 1AA |
| | CN8004 | CONNECTOR | HLEM20R – 1 |
| | CN8001 | CONNECTOR | SLW15S – 1C7 |
| | X8301 | CRYSTAL RESONATOR(16.9344MHz) | DSS1083 |

# 6. ADJUSTMENTS

## 6.1 TUNER SECTION

### ■ FM Tuner Section

- Set the mode selector to FM BAND.
- Connect the wiring as shown in Fig. 1–1.

- For XR-A500EE/DLWXJ/EE type (AXQ7069)

| Step No. | Adjustment Title | FM SG (1kHz, ±75kHz dev.) | | Reception Frequency Display | Adjustment Location | Specifications |
|---|---|---|---|---|---|---|
| | | Frequency (MHz) | Level (dBμV) | | | |
| 1 | Front End Sensitivity | 70 | 0-30 | 70MHz | L6104<br>L6102<br>T6101 | Adjust so that the DC voltage between the IC6201-Pin 20 and GND becomes at maximum level. |
| 2 | TUNED IND. Lighting Level | 98 | 18±2 | 98MHz | VR6201 | Adjust so that the indicator of TUNED IND. starts to light up. |

*Notes:*

- *Before adjusting, make sure there is no gap between L6401 and L6402. If there is a gap between them, bring them into contact with each other first, and then make adjustments.*

- For DDXJ, DLXJ/NC, DLXJN/NC, YPWXJ and DXJ/NC types (AXQ7061)

| Step No. | Adjustment Title | FM SG (1kHz, ±75kHz dev.) | | Reception Frequency Display | Adjustment Location | Specifications |
|---|---|---|---|---|---|---|
| | | Frequency (MHz) | Level (dBμV) | | | |
| 1 | Front End Sensitivity | 98 | 0-30 | 98MHz | L6402<br>T6401 | Adjust so that the DC voltage between the IC6201-Pin 20 and GND becomes at maximum level. |
| 2 | TUNED IND. Lighting Level | 98 | 18±2 | 98MHz | VR6201 | Adjust so that the indicator of TUNED IND. starts to light up. |

*Notes:*

- *Before adjusting, make sure there is no gap between L6101 and L6102 as well as between L6103 and L6104. If there is a gap between them, bring them into contact with each other first, and then make adjustments.*

### ■ AM Tuner Section

- Set the mode selector to AM BAND.
- Connect the wiring as shown in Fig. 1–1.

- For (AXQ7061) and (AXQ7069)

| Step No. | Adjustment Title | AM SG (400Hz, 30% Mod.) | | Reception Frequency Display | Adjustment Location | Specifications |
|---|---|---|---|---|---|---|
| | | Frequency (kHz) | Level (dBμV/m) | | | |
| 1 | Front End Sensitivity | 999*1 | 35-45 | 999kHz*1 | T6201 | Adjust so that the DC voltage between the IC6201-Pin 20 and GND becomes at maximum level. |

*1: For the area using 10kHz step, frequencies should be 1000 kHz

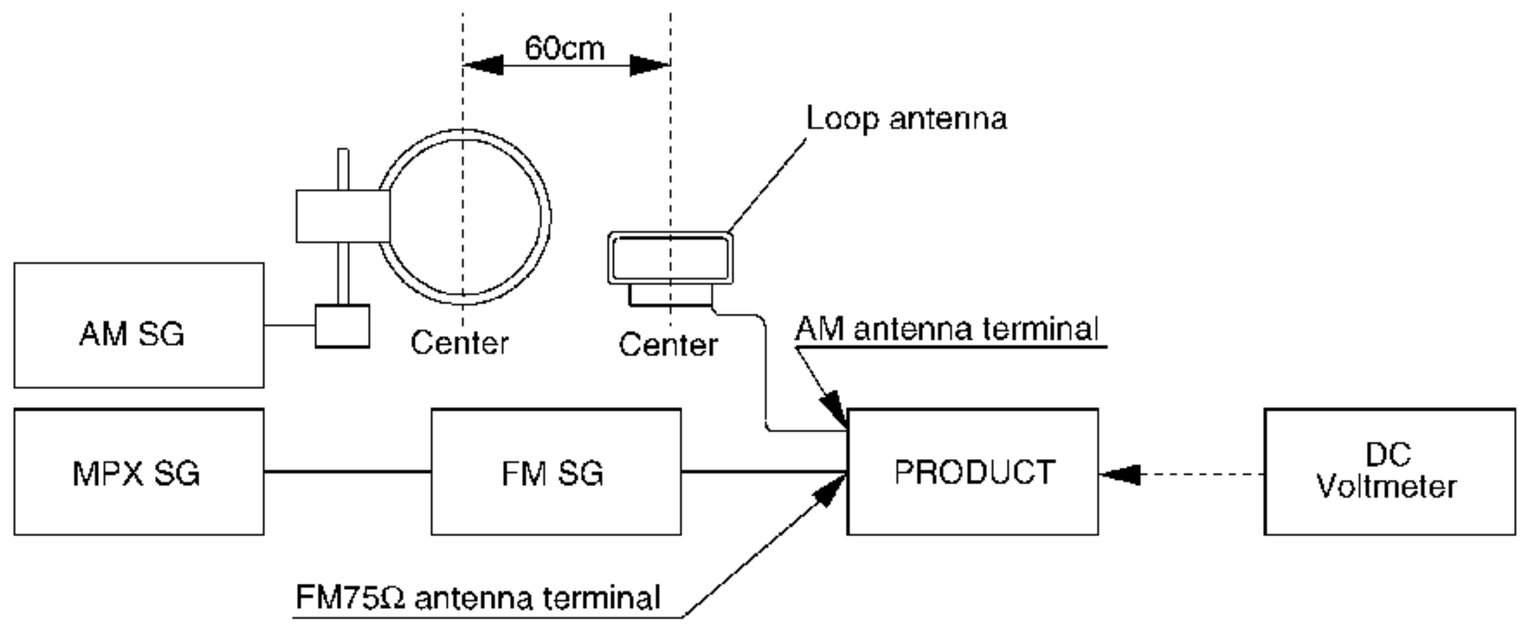


Fig. 1–1 AM and FM Adjustment Wiring Diagram

FM/AM TUNER MODULE (AXQ7069) – DLWXJ/EE TYPE

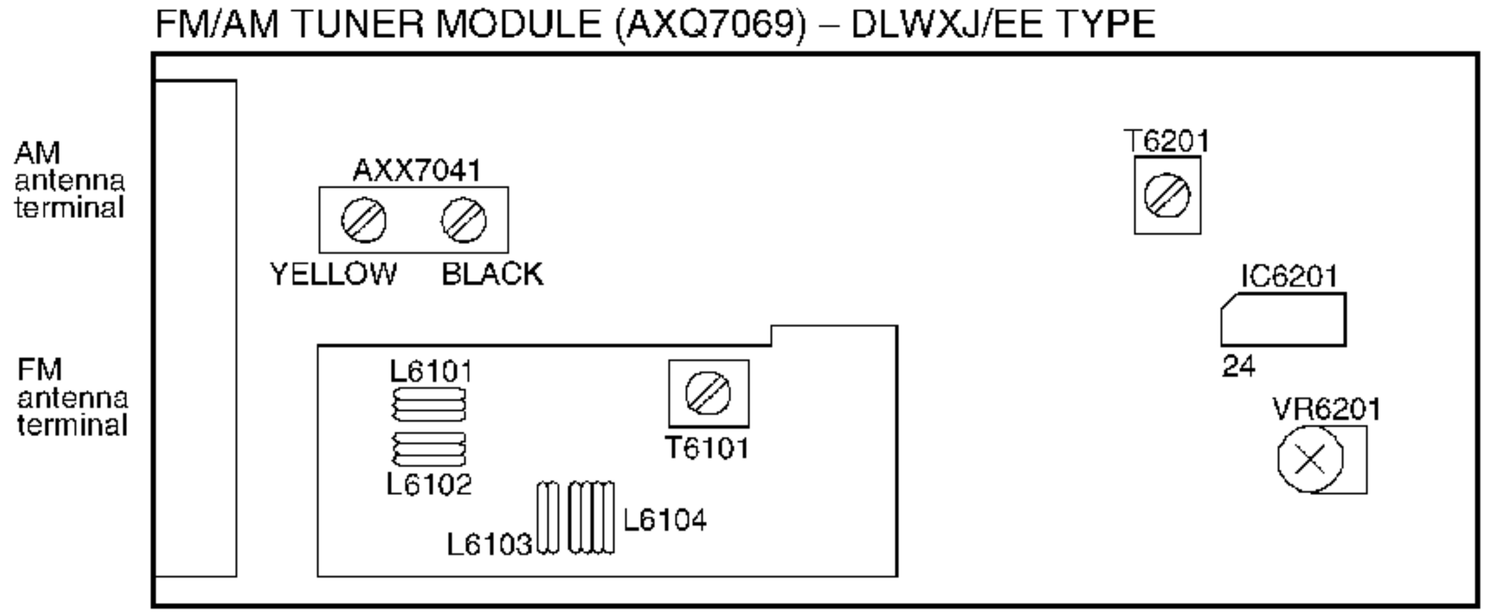


FM/AM TUNER MODULE (AXQ7061) – DDXJ, DLXJ/NC, DLXJN/NC, YPWXJ AND DXJ/NC TYPES

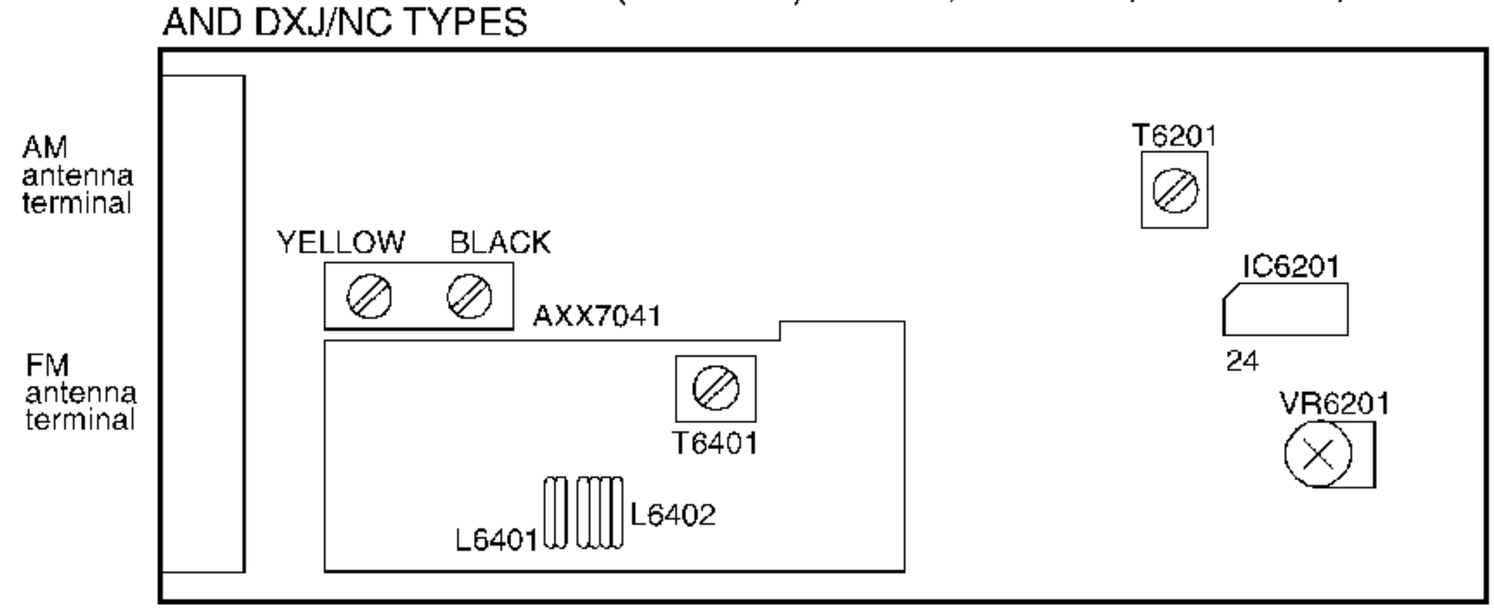


Fig. 1–2 Adjustment Points

## 6.2 CASSETTE DECK SECTION

- Adjustment points and test points are shown in Fig. 2-2 and Fig. 2-4.

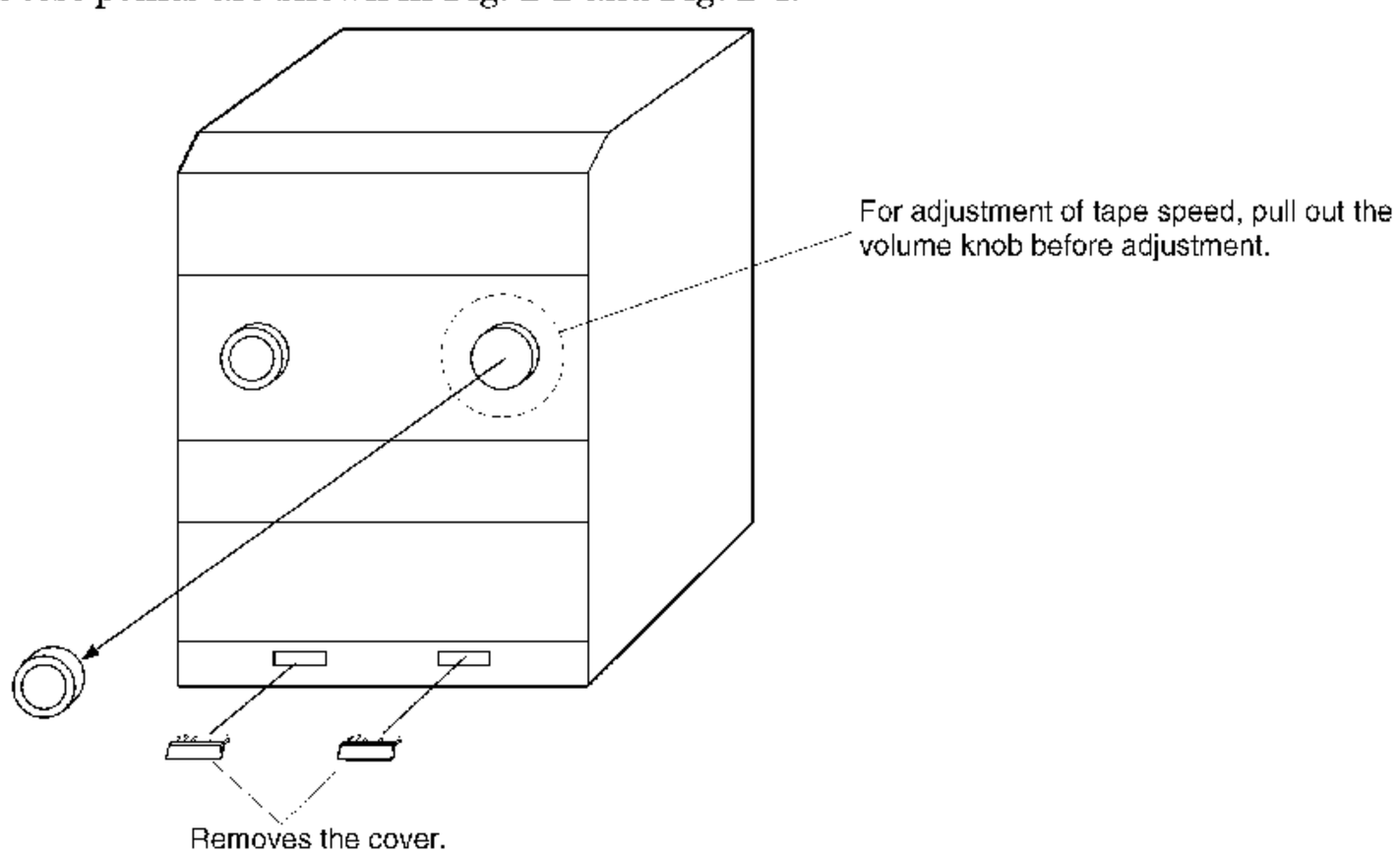

## ■ Mechanical Adjustment

- Test tape: NCT-111 (3kHz, 30min).
- Remove the Volume knob.

### (1) Tape Speed Adjustment

| No. | Mode | Test Tape | Adjusting Points | Measurement Points | Adjustment Procedure | Remarks |
|---|---|---|---|---|---|---|
| 1 | Deck I PLAY | NCT-111 (Playback: 3kHz) | DISPLAY ASSY VR4501 | TAPE TEST POINT (Rch) (AF Assy) | Press the PLAY SW and adjust so that the reading becomes 3000Hz ±20Hz. Confirm that wow & flutter level is below 0.2% (in the reverse direction, confirm that the reading is within 3000Hz ±60Hz). | |

## ■ Electrical Adjustment

Check the following before starting.

(1) Confirm that the tape speed adjustment has been completed.
(2) Clean the heads and demagnetize them using a head eraser.
(3) Set the measurement level to 0 dBV = 1 Vrms.
(4) Use the specified tape for adjustment. Use the labeled (A) side of the test tape.
STD-331E: For playback adjustment
STD-632: Normal blank tape
(5) Provide yourself with the following measuring devides:
- AC millivoltmeter
- Low-frequency oscillator
- Attenuator
- Oscilloscope

(6) Adjust both right and left channels unless otherwise specified.
(7) Turn the DOLBY NR switch off unless otherwize specified.
(8) Warm up the unit for several minutes before adjustment. In particular, be sure to warm up the unit in the REC/PLAY mode for 3 to 5 minutes before starting recording/playback frequency characteristics adjustment.
(9) Always follow the indicated adjustment order.

Otherwise, a complete adjustment may not be achieved.

### Playback Adjustment (Decks I and II)

(1) Head Azimuth Adjustment
(2) Playback Level Adjustment

### Recording Adjustment (Deck II)

(1) Bias Oscillation Frequency Adjustment
(2) Recording Bias Adjustment
(3) Recording Level Adjustment.
(4) ALC Operation Check

* *As the reference recording level is 250nwb / m for STD-331E, the recording level will be higher by 4 dB for STD-331B (160nwb / m). When adjusting, pay carefull attention to the type of tape used.*

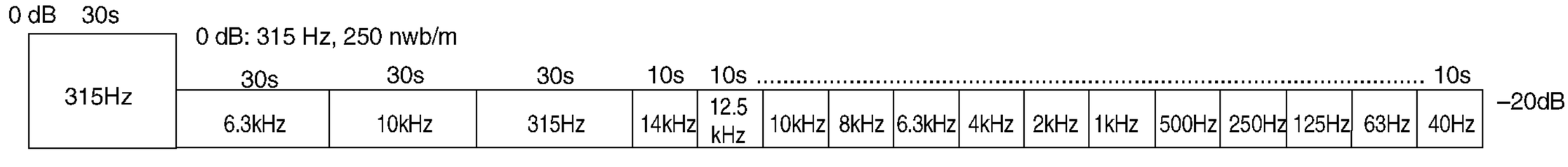


Fig. 2–1 STD-331E Test Tape

## ■ Playback Adjustment

(1) Head Azimuth Adjustment

● Do not switch between forward and reverse operation with the screwdriver inserted.

| Step | Mode | Input Signal/ Test Tape | Adjusting Points | | Measurement Points | Adjustment Value | Remarks |
|---|---|---|---|---|---|---|---|
| 1 | PLAY | STD-331E test tape (Playback: 10kHz, –20dB) | Deck I<br>Deck II | Head azimuth adjustment screw (Fig. 2-2) | TAPE TEST POINT (L, Rch) (AF Assy) | Max. playback signal level | After adjustment, apply silicon bond to the head azimuth adjustment screw. |

2. Playback Level Adjustment

● Since this adjustment determines playback Dolby NR level, perform it carefully.

| Step | Mode | Input Signal/ Test Tape | Adjusting Points | | Measurement Points | Adjustment Value | Remarks |
|---|---|---|---|---|---|---|---|
| 1 | PLAY | STD-331E test tape (Playback: 315Hz, 0dB) | Deck I<br>Deck II | VR4201 (Lch) VR4202 (Rch)<br>VR4203 (Lch) VR4204 (Rch) | TAPE TEST POINT (L, Rch) (AF Assy) | – 4.2 dBV | |

Note: Please execute playback level adjustment always in the order of deck I → deck II.
When deck I has been adjusted, always adjust deck II also.

*Dolby noise reduction manufactured under license from Dolby Laboratories Licensing Corporation.*
*"DOLBY" and the double-D symbol are trademarks of Dolby Laboratories Licensing Corporation.*

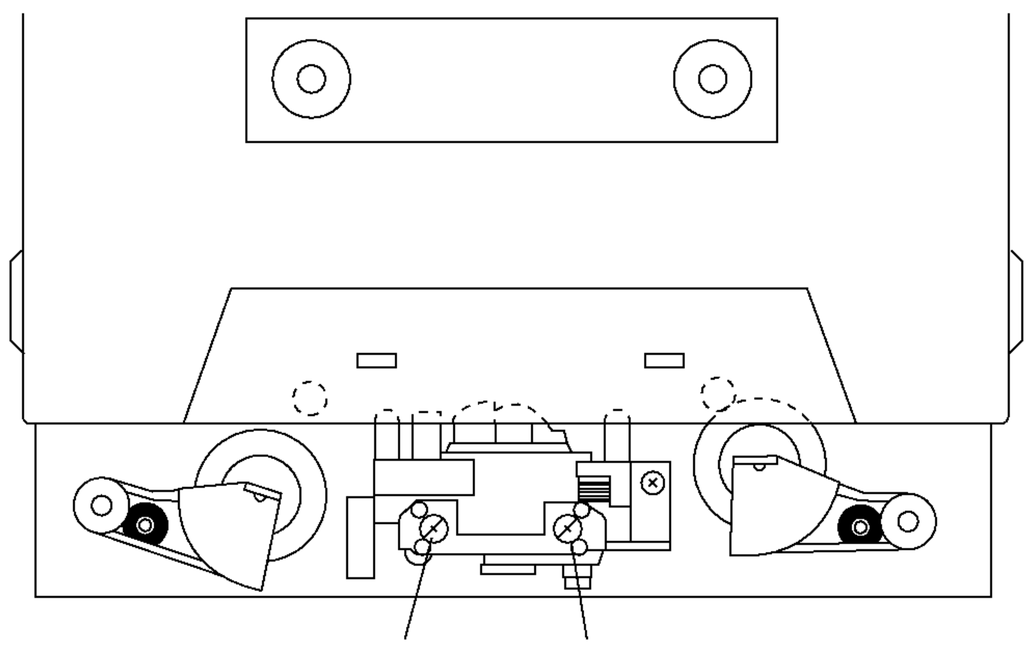


Fig. 2–2 Head Azimuth Adjustment

PLAY BACK

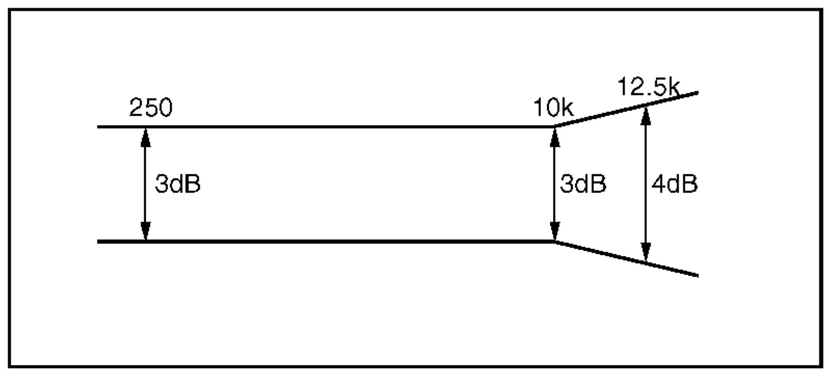


RECORDING

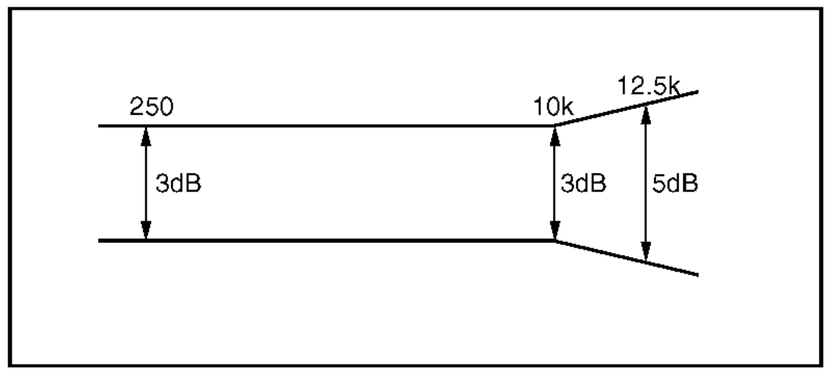


Fig. 2–3 Frequency Characteristics

## ■ Recording Adjustment

### (1) Bias Oscillation Frequency Adjustment

| Step | Mode | Input Signal/ Test Tape | Adjusting Points | | Measurement Points | Adjustment Value | Remarks |
|---|---|---|---|---|---|---|---|
| 1 | REC | Load the STD–632 test tape and set the recording mode. | Deck I | ———— | ———— | Oscillation frequency to be 105.0kHz ±2kHz. | When the power is turned ON while the MONO button is depressed, the frequency will decrease 2 – 3 kHz. |
| | | | DeckII | L4351 | Between Ⓐ point in Fig. 2-4 and GND. | | |

### (2) Recording Bias Adjustment

● Since this adjustment affects recording bias, prevent distortion from increasing due to underbias.

| Step | Mode | Input Signal/Test Tape | Adjusting Points | | Measurement Points | Adjustment Value | Remarks |
|---|---|---|---|---|---|---|---|
| 1 | REC | Input a 315Hz signal to the AUX terminal and set the input selector to AUX. | Deck I | ———— | TAPE TEST POINT (L, Rch) (AF Assy) | – 24.2 dBV | |
| | | | Deck II | Input signal level | | | |
| 2 | REC→ PLAY | Load the STD-632 test tape and record/playback the 315Hz and 10kHz signals. (see the Note below) | Deck I | ———— | TAPE TEST POINT (L, Rch) (AF Assy) | Repeat adjustment until playback level of the 10kHz signal is within 0±0.5dB from that of the 315Hz signal. | |
| | | | Deck II | VR4351 (Lch) VR4352 (Rch) | | | |

*Note: Set the 10kHz input signal level to the same value as the 315Hz input signal level of step 1.*

### (3) Recording Level Adjustment

| Step | Mode | Input Signal/Test Tape | Adjusting Points | | Measurement Points | Adjustment Value | Remarks |
|---|---|---|---|---|---|---|---|
| 1 | REC | Input a 315Hz signal to the AUX terminal and set the input selector to AUX. | Deck I | Input signal level | TAPE TEST POINT (L, Rch) (AF Assy) | – 8.2 dBV | |
| | | | Deck II | | | | |
| 2 | REC → PLAY | STD-632 test tape and record/ playback the 315Hz signal. | Deck I | ———— | TAPE TEST POINT (L, Rch) (AF Assy) | Repeat recording, playback and adjustment until playback level of the 315Hz signal becomes -8.2dBV. | |
| | | | Deck II | VR4301 (Lch) VR4302 (Rch) | | | |

### (4) ALC Operation Check

| Step | Mode | Input Signal/Test Tape | Adjusting Points | Measurement Points | Adjustment Value | Remarks |
|---|---|---|---|---|---|---|
| 1 | REC/ PAUSE | Input a 315Hz signal to the AUX terminal and set the input selector to AUX. | Input signal level | TAPE TEST POINT (L, Rch) (AF Assy) | – 8.2 dBV | |
| 2 | | | Set to a level +10 dB above the input level at step 1. | | Confirm that the reading is –3.2±2.5dBV. | |

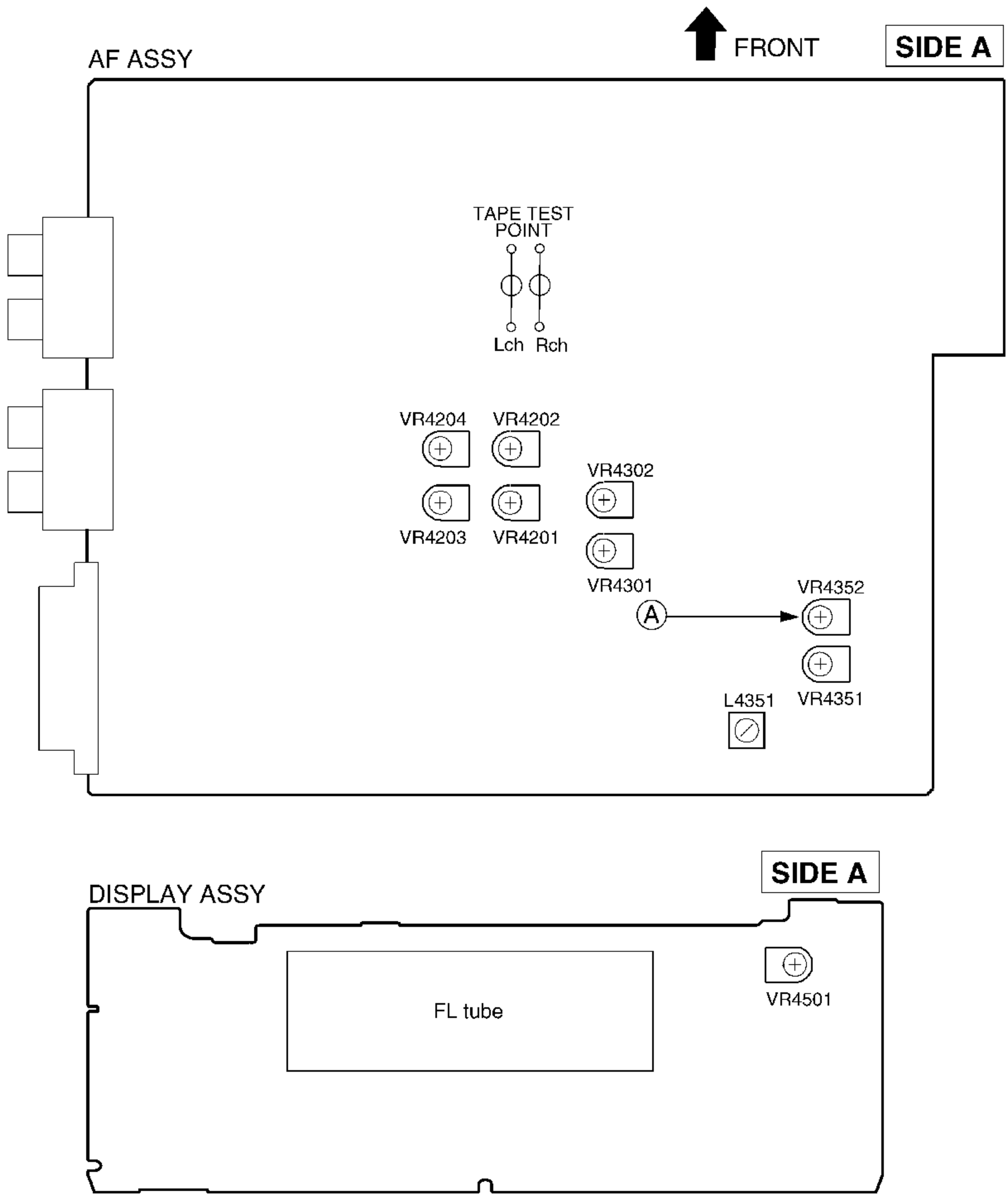


Fig. 2-4 Adjustment and Measurement points

## 6.3 TEST MODE

NOTE:There is no information to be shown is this CD adjustment.

### ■ How to Start/Cancel Test Mode （テストモ-ドの設定/解除）

**TEST MODE: ON**

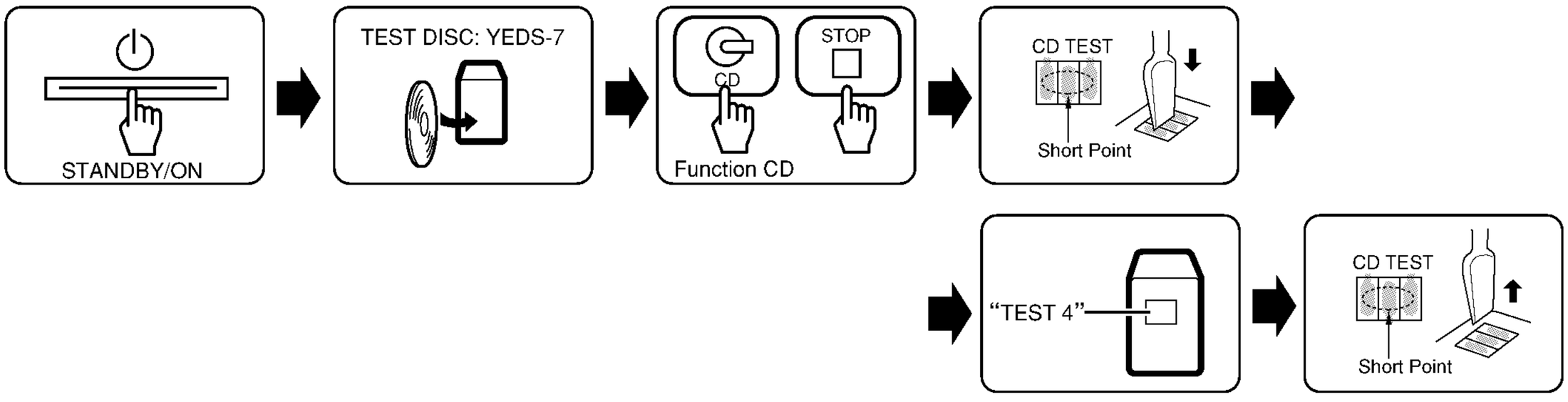


**TEST MODE: PLAY**

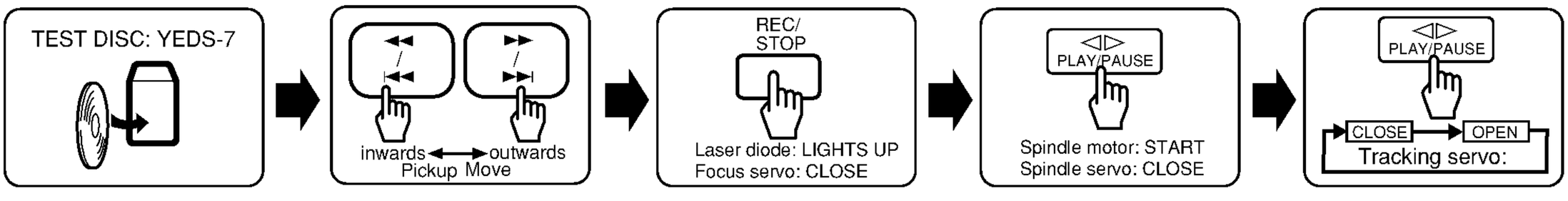


**TEST MODE: STOP → CANCEL**

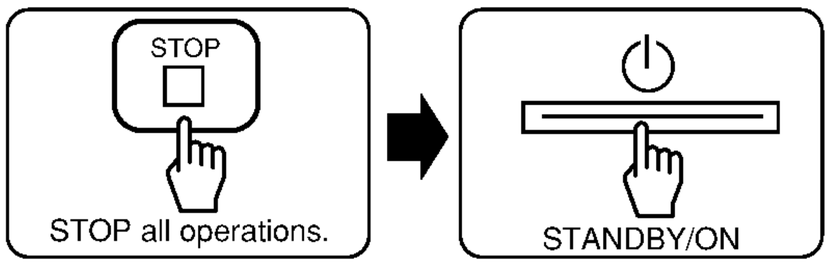


### ■ Test Point（テストポイントの位置）

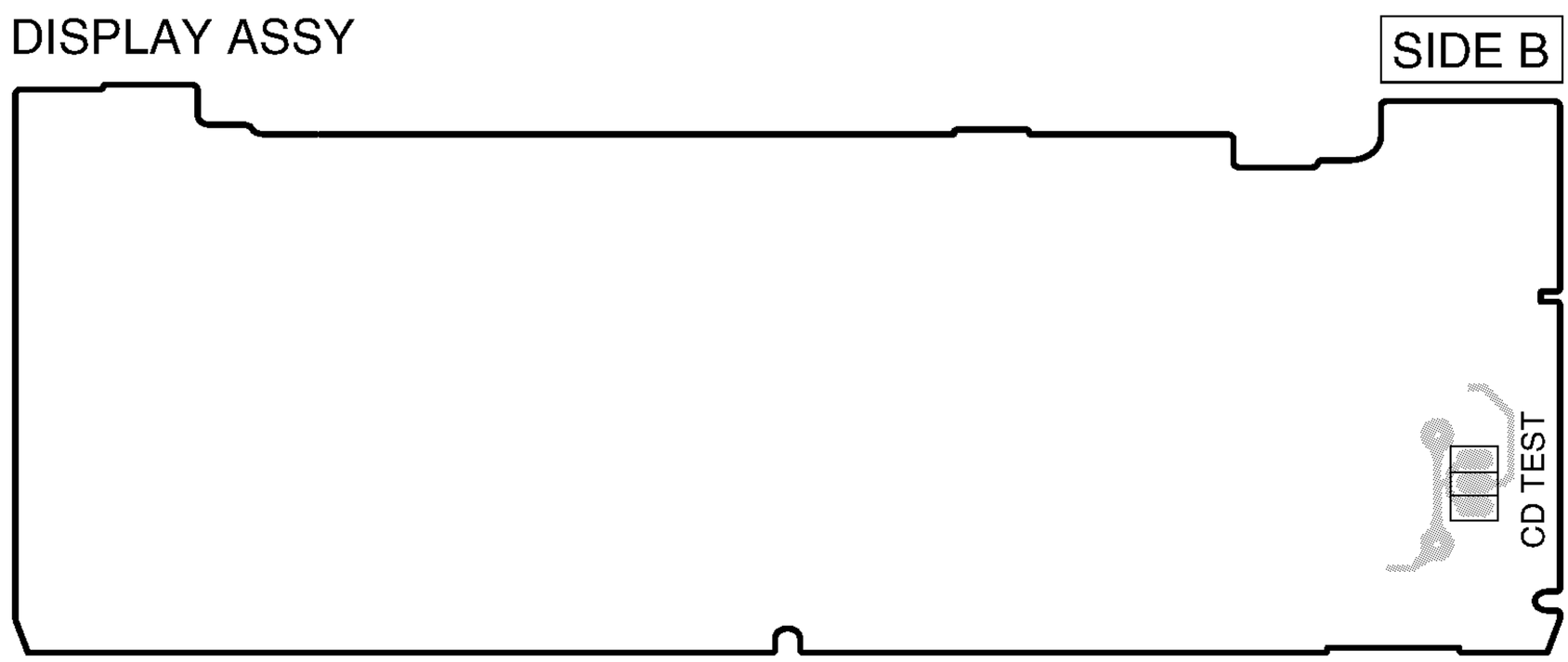

# 7. GENERAL INFORMATION

## 7.1 PARTS

### 7.1.1 IC

■ PDC040A (IC1901 : DISPLAY ASSY)

● SYSTEM CONTROL MICROCOMPUTER

● Pin Function

| No. | Name | I/O | Function |
|---|---|---|---|
| 1 | HSEL | O | VCD module I/F address/data switching output |
| 2 | | O | Not Used |
| 3 | SPA A | O | Spectrum analyzer BA3835 output A |
| 4 | SPA B | O | Spectrum analyzer BA3835 output B |
| 5 | SPA C | O | Spectrum analyzer BA3835 output C |
| 6 | MOTOR | O | DECK mechanism motor control output |
| 7 | SOL2 | O | DECK 2 mechanism solenoid control output |
| 8 | PULSE2 | I | DECK 2 mechanism reel pulse input |
| 9 | SOL1 | O | DECK 1 mechanism solenoid control output |
| 10 | PULSE1 | I | DECK 1 mechanism reel pulse input |
| 11 | AC | I | AC pulse input |
| 12 | RESET | I | Microprocessor reset input |
| 13 | KSCAN2 | I | KEY Scan 2 input |
| 14 | KSCAN1 | I | KEY Scan 1 input |
| 15 | VSS1 | I | Microprocessor GND terminal |
| 16 | CF1 | I | Microprocessor clock input, connection to 6.00 MHz oscillator |
| 17 | CF2 | O | Microprocessor clock output, 6.00 MHz oscillator connection |
| 18 | VDD1 | I | Microprocessor positive power terminal +5V |
| 19 | MS | I | MS A/D input from tape deck |
| 20 | ST/TUNE | I | Tuner STEREO/TUNE identification A/D input |
| 21 | JOG(VOL) | I | Volume JOG pulse A/D input |
| 22 | KIN3 | I | KEY A/D Input 3 |
| 23 | KIN2 | I | KEY A/D Input 2 |
| 24 | SPA IN | I | Spectrum analyzer BA3835 level A/D input |
| 25 | KIN1 | I | KEY A/D input 1 |
| 26 | JOG(MORP) | I | Morphing JOG pulse A/D input |
| 27 | CD WRQ | I | CD WRQ interrupt input |
| 28 | HINT/RDS CK | I | VCD module HINT interrupt input or RDS clock interrupt input |
| 29 | REMOCON | I | Remote controller pulse interrupt input |
| 30 | G09 | O | FL display control grid output G09 |
| 31 | G16 | O | FL display control grid output G16 |
| 32 | G15 | O | FL display control grid output G15 |
| 33 | G14 | O | FL display control grid output G14 |
| 34 | G13 | O | FL display control grid output G13 |
| 35 | G12 | O | FL display control grid output G12 |
| 36 | G11 | O | FL display control grid output G11 |
| 37 | G10 | O | FL display control grid output G10 |
| 38 | G01 | O | FL display control grid output G01 |
| 39 | G02 | O | FL display control grid output G02 |
| 40 | G03 | O | FL display control grid output G03 |
| 41 | G04 | O | FL display control grid output G04 |
| 42 | G05 | O | FL display control grid output G05 |
| 43 | G06 | O | FL display control grid output G06 |
| 44 | G07 | O | FL display control grid output G07 |
| 45 | G08 | O | FL display control grid output G08 |
| 46 | VDD2 | I | Microprocessor positive power terminal +5V |
| 47 | S07 | O | FL display control segment output S07 |
| 48 | S05 | O | FL display control segment output S05 |
| 49 | S06 | O | FL display control segment output S06 |
| 50 | S18 | O | FL display control segment output S018 |
| 51 | VFDP | I | Negative power terminal for FL control terminal |
| 52 | S19 | O | FL display control segment output S19 |
| 53 | S20 | O | FL display control segment output S20 |
| 54 | S21 | O | FL display control segment output S21 |
| 55 | S15 | O | FL display control segment output S15 |

- The information shown in the list is basic information and may not correspond exactly to that shown in the schematic diagrams.

| | | | |
|---|---|---|---|
| 56 | S04 | O | FL display control segment output S04 |
| 57 | S14 | O | FL display control segment output S14 |
| 58 | S16/K06 | O | FL display control segment output S16 or KEY scan output K06 |
| 59 | S09/K01 | O | FL display control segment output S09 or KEY scan output K01 |
| 60 | S10/K05 | O | FL display control segment output S10 or KEY scan output K05 |
| 61 | S22/K04 | O | FL display control segment output S22 or KEY scan output K04 |
| 62 | S23/K02 | O | FL display control segment output S23 or KEY scan output K02 |
| 63 | S24/K03 | O | FL display control segment output S24 or KEY scan output K03 |
| 64 | S02 | O | FL display control segment output S02 |
| 65 | S01 | O | FL display control segment output S01 |
| 66 | S12 | O | FL display control segment output S12 |
| 67 | S03 | O | FL display control segment output S03 |
| 68 | S13 | O | FL display control segment output S13 |
| 69 | S11 | O | FL display control segment output S11 |
| 70 | S08 | O | FL display control segment output S08 |
| 71 | S17 | O | FL display control segment output S17 |
| 72 | VDD4 | I | Microprocessor positive power terminal +5V |
| 73 | LED CE | O | LED driver IC BU2092 LCK I/F latch pulse output |
| 74 | | O | Not Used |
| 75 | | O | |
| 76 | | O | |
| 77 | 4094 CE | O | Port expansion IC BU4094 CE I/F chip enable output |
| 78 | PLL CE | O | Tuner module I/F chip enable output |
| 79 | P.ON/OFF | O | System power control output |
| 80 | VOL CE | O | LC75394 CE chip enable |
| 81 | DISC | I | CD mechanism disc position detection SW input |
| 82 | INSIDE | I | CD mechanism slider position detection SW input |
| 83 | OPEN | I | CD mechanism open/close position detection SW input |
| 84 | CLAMP | I | CD mechanism disc clamp detection SW input |
| 85 | | I | Not Used |
| 86 | CD DRF | I | CD RF level detection input |
| 87 | HDRY | I | VCD module I/F BUSY input |
| 88 | RDS DT | I | RDS data input |
| 89 | VSS2 | I | Microprocessor GND terminal |
| 90 | VDD2 | I | Microprocessor positive power terminal |
| 91 | CD CE | O | CD I/F chip enable output |
| 92 | CD RESET | O | CD reset output |
| 93 | CLK | O | Common I/F clock output for tuner module, BU75394, port expansion IC BU4094 and LED driver BU2092 |
| 94 | DATA | O | Common I/F data output for tuner module, BU75394, port expansion IC BU4094 and LED driver BU2092 |
| 95 | TX DATA | I | Tuner module I/F data input |
| 96 | HDIO | I/O | VCD module I/F data input/output |
| 97 | HCK | O | VCD module I/F clock output |
| 98 | CD DATA | O | CD I/F data output |
| 99 | SQ OUT | I | CD I/F data input |
| 100 | CD CLK | O | CD I/F clock output |

## ■ LA9240ML (IC8101 : CD ASSY)

### ● SERVO SIGNAL PROCESSOR IC FOR CD PLAYER

● Block Diagram

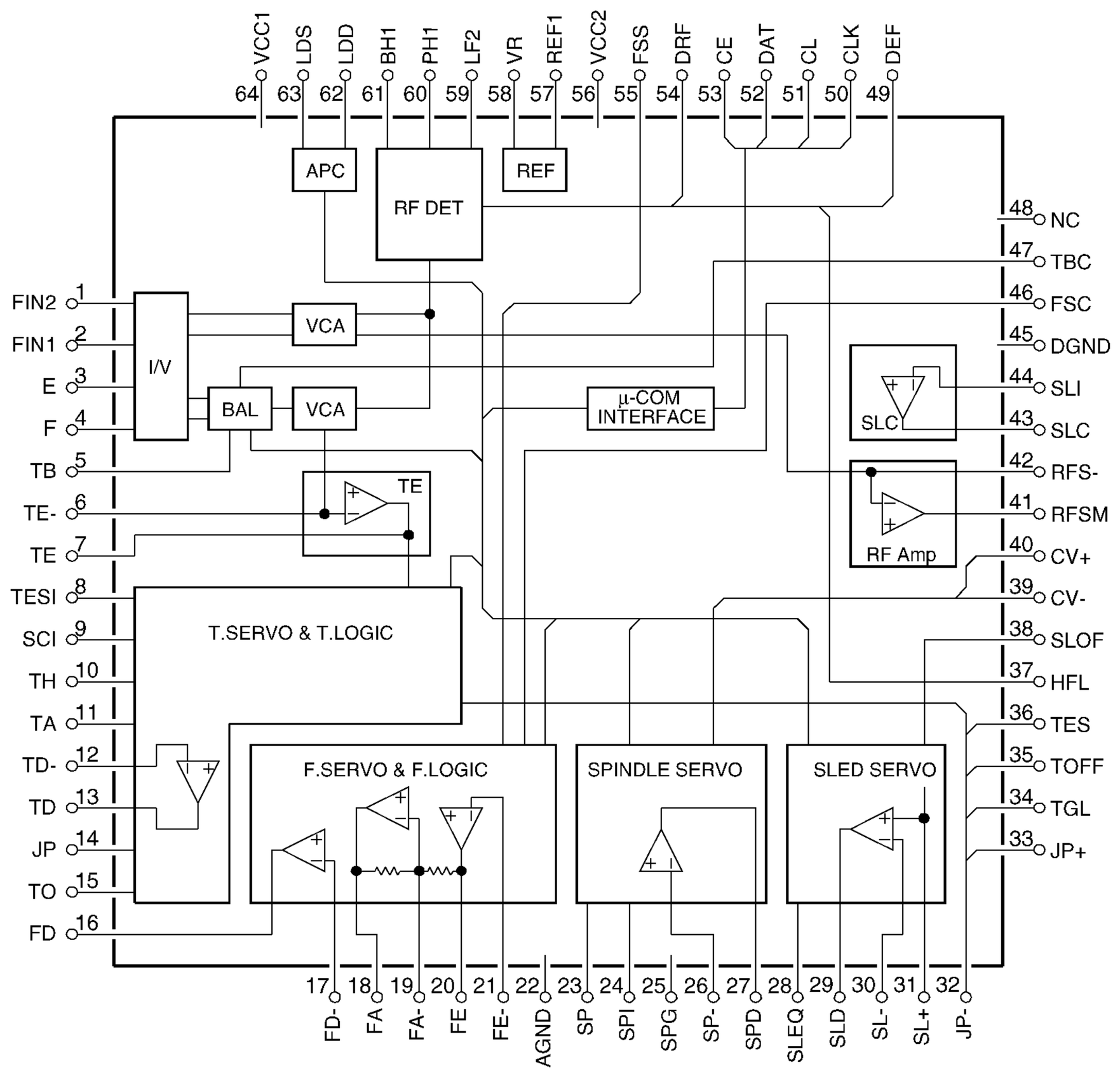


● Pin Function

| No. | Name | I/O | Function |
|---|---|---|---|
| 1 | FIN2 | I | Pin for connection of the photodiode of the pickup. Generates RF signal by addition with the FIN1 pin, and FE signal by subtraction. |
| 2 | FIN1 | I | Pin for connection of the photodiode of the pickup. |
| 3 | E | I | Pin for connection of the photodiode of the pickup. Generates TE signal by subtraction with the F pin. |
| 4 | F | I | Pin for connection of the photodiode of the pickup. |
| 5 | TB | I | Pin for DC component input of TE signal. |
| 6 | TE- | I | Pin to connect resistance for gain setting of TE signal between the TE pin. |
| 7 | TE | O | TE signal output pin. |
| 8 | TESI | I | TES (Track Error Sense) comparator input pin. Passes and inputs TE signal through the band-pass filter. |
| 9 | SCI | I | Input pin for shock detection. |
| 10 | TH | I | Pin for setting tracking gain time constant. |
| 11 | TA | O | TA amplifier output pin. |
| 12 | TD- | I | Pin to form the tracking phase compensation constant between the TD and VR pins. |
| 13 | TD | O | Pin for setting tracking phase compensation. |
| 14 | JP | I | Pin for setting tracking jump signal (kick pulse) amplitude. |

LA9240ML

| No. | Name | I/O | Function |
|---|---|---|---|
| 15 | TO | O | Tracking control signal output pin. |
| 16 | FD | O | Focusing control signal output pin. |
| 17 | FD- | I | Pin to form the focusing phase compensation constant between the FD and FA pins. |
| 18 | FA | O | Pin to form the focusing phase compensation constant between the FD- and FA- pins. |
| 19 | FA- | I | Pin to form the focusing phase compensation constant between the FA and FE pins. |
| 20 | FE | O | Output pin of FE signal. |
| 21 | FE- | I | Pin to connect the resistance for gain setting of FE signal between the FE pin. |
| 22 | AGND | - | GND for analog signal. |
| 23 | SP | O | Single end output of CV+/CV- pin input signal. |
| 24 | SPI | I | Spindle amplifier input. |
| 25 | SPG | I | Resistance connection pin for gain setting in 12-cm mode for spindle. |
| 26 | SP- | I | Pin for connection of spindle phase compensation constant, as well as with the SPD pin. |
| 27 | SPD | O | Spindle control signal output pin. |
| 28 | SLEQ | I | Pin for connection of thread phase compensation constant. |
| 29 | SLD | O | Thread control signal output pin. |
| 30 | SL- | I | Pin to input thread feeding signal from the microprocessor. |
| 31 | SL+ | I | Pin to input thread feeding signal from the microprocessor. |
| 32 | JP+ | I | Pin to input tracking jump signal from DSP. |
| 33 | JP+ | I | Pin to input tracking jump signal from DSP. |
| 34 | TGL | I | Pin to input tracking gain control signal from DSP. Tracking is set to gain low when TGL is “H”. |
| 35 | TOFF | I | Pin to input tracking OFF control signal from DSP. Tracking is OFF when TOFF is “H”. |
| 36 | TES | O | Pin to output TES signal to DSP. |
| 37 | HFL | I | High Frequency Level to be used for judgment whether the phase of the main beam is on the bit or mirror. |
| 38 | SLOF | I | Thread servo OFF control input pin. |
| 39 | CV- | I | Pin to input CLV error signal from DSP. |
| 40 | CV+ | I | Pin to input CLV error signal from DSP. |
| 41 | RFSM | O | RF output pin. |
| 42 | RFS- | I | Pin for RF gain setting and EFM signal 3T compensation constant setting, as well as with the RFSM pin. |
| 43 | SLC | O | Slice Level Control. Output pin to control the level of data slice by DSP of RF waveforms. |
| 44 | SLI | I | Input pin to control the level of data slice by DSP. |
| 45 | DGND | - | GND pin of the digital system. |
| 46 | FSC | O | Output pin for focus search smoothing capacitor. |
| 47 | TBC | I | Tracking Balance Control. Pin to set EF balance variable range. |
| 48 | NC | - | No Connect. |
| 49 | DEF | O | Pin to output defect detection of disc. |
| 50 | CLK | I | Reference clock input pin. Frequency of 4.23MHz is input from DSP. |
| 51 | CL | I | Microprocessor command clock input pin. |
| 52 | DAT | I | Microprocessor command data input pin. |
| 53 | CE | I | Microprocessor command chip enable input pin. |
| 54 | DRF | O | Detect RF. RF level detection output. |
| 55 | FSS | I | Focus Search Select. Pin to switch focus search mode (switching between ü}search and +search for the reference voltage). |
| 56 | VCC2 | - | VCC pin for the servo and digital systems. |
| 57 | REFI | I | Pin for connection of reference voltage bypass capacitor. |
| 58 | VR | O | Reference voltage output pin. |
| 59 | LF2 | I | Pin for setting defect detection time constant of disc. |
| 60 | PH1 | I | Pin to connect capacitor for peak hold of RF signal. |
| 61 | BH1 | I | Pin to connect capacitor for bottom hold of RF signal. |
| 62 | LDD | O | APC circuit output pin. |
| 63 | LDS | I | APC circuit input pin. |
| 64 | VCC1 | - | VCC pin for the RF system. |

## ■ BA5923FP (IC8201 : CD ASSY)

### ● POWER DRIVER IC FOR CD PLAYER

● Block Diagram

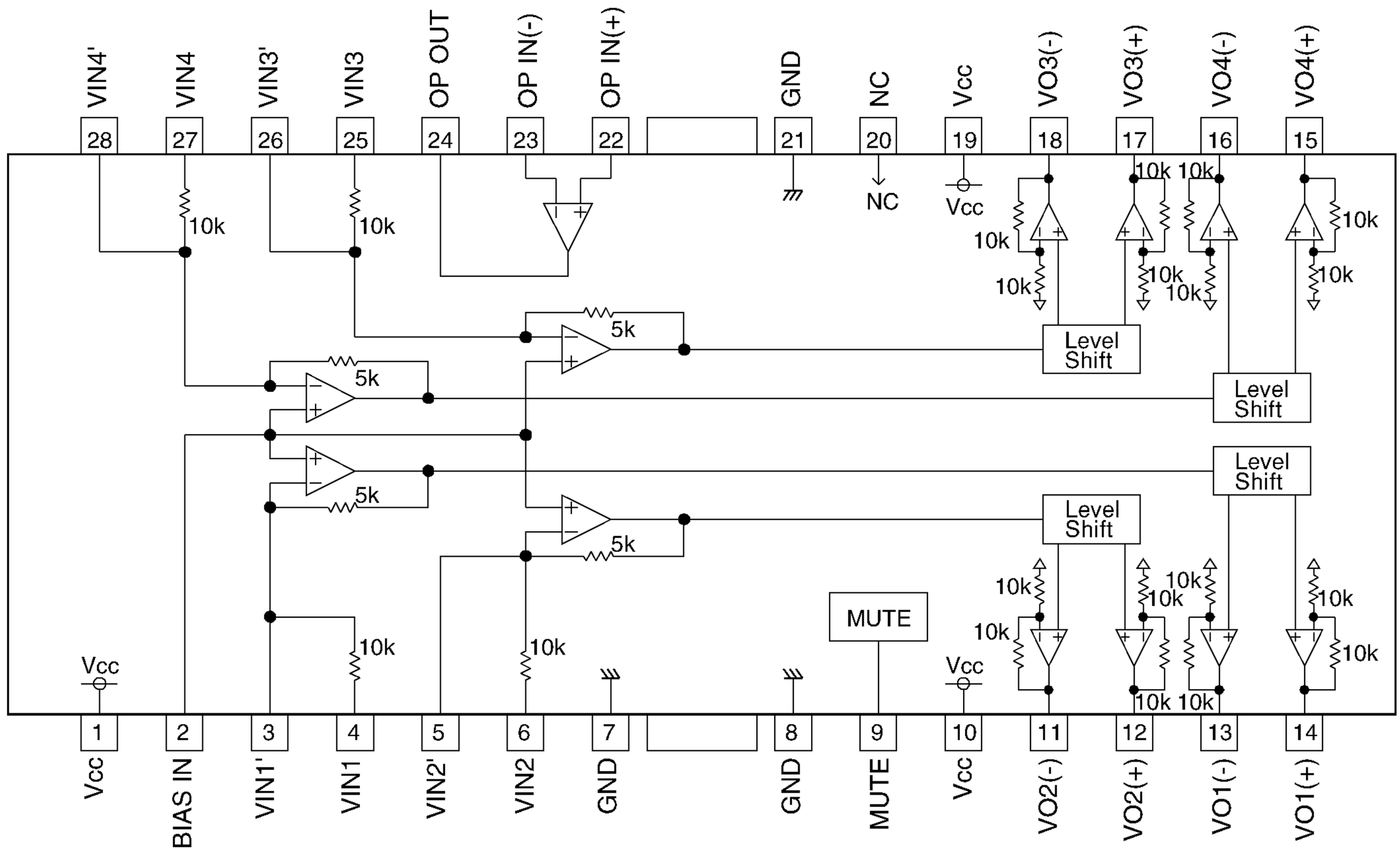


● Pin Function

| No. | Name | I/O | Function |
|---|---|---|---|
| 1 | Vcc | - | Vcc |
| 2 | BIAS IN | I | Bias amplifier input. |
| 3 | VIN1' | I | Driver CH1 input, gain adjustment pin. |
| 4 | VIN1 | I | Driver CH1 input. |
| 5 | VIN2' | I | Driver CH2 input, gain adjustment pin. |
| 6 | VIN2 | I | Driver CH2 input. |
| 7 | GND | - | Substrate Ground. |
| 8 | GND | - | Ground |
| 9 | MUTE | I | Driver mute control input. |
| 10 | Vcc | - | Vcc |
| 11 | VO2 (-) | O | Driver CH2 inverted output. |
| 12 | VO2 (+) | O | Driver CH2 noninverted output. |
| 13 | VO1 (-) | O | Driver CH1 inverted output. |
| 14 | VO1 (+) | O | Driver CH1 noninverted output. |

Note) Symbol of+ and - (output of DRIVERS) means polarity to input pin.
(For example if voltage of pin4 is high, pin14 is high.)

| No. | Name | I/O | Function |
|---|---|---|---|
| 15 | VO4 (+) | O | Driver CH4 noninverted output. |
| 16 | VO4 (-) | O | Driver CH4 inverted output. |
| 17 | VO3 (+) | O | Driver CH3 noninverted output. |
| 18 | VO3 (-) | O | Driver CH3 inverted output. |
| 19 | Vcc | - | Vcc |
| 20 | NC | - | |
| 21 | GND | - | Substrate Ground. |
| 22 | OP IN (+) | I | Op-amp input, positive. |
| 23 | OP IN (-) | I | Op-amp input, negative. |
| 24 | OP OUT | O | Op-amp output. |
| 25 | VIN3 | I | Driver CH3 input. |
| 26 | VIN3' | I | Driver CH3 input, gain adjustment pin. |
| 27 | VIN4 | I | Driver CH4 input. |
| 28 | VIN4' | I | Driver CH4 input, gain adjustment pin. |

## ■ LC78622ED (IC8301 : CD ASSY)

### ● SIGNAL PROCESSOR AND SERVO CONTROL IC FOR CD PLAYER

● Block Diagram

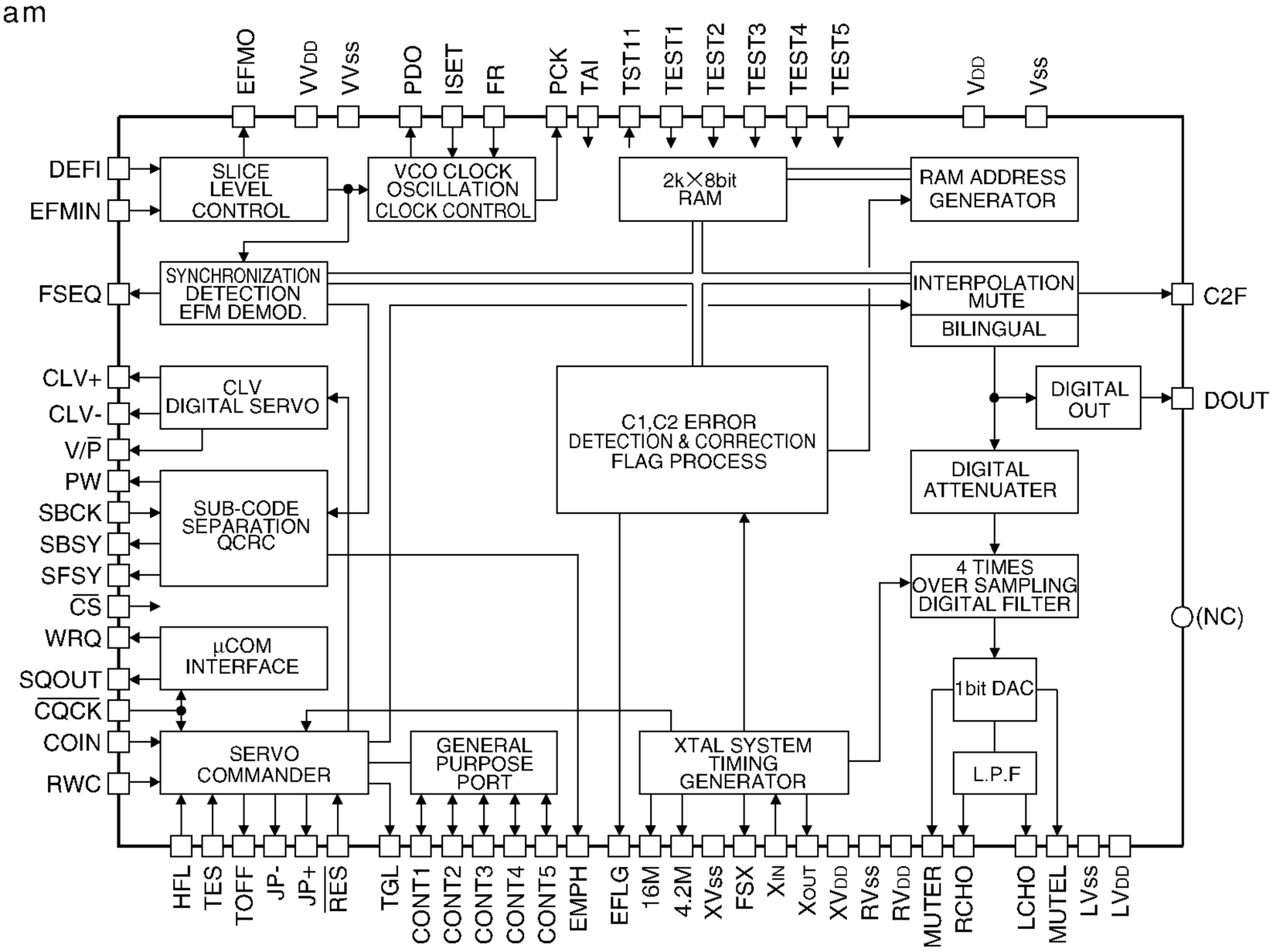


● Pin Assignment

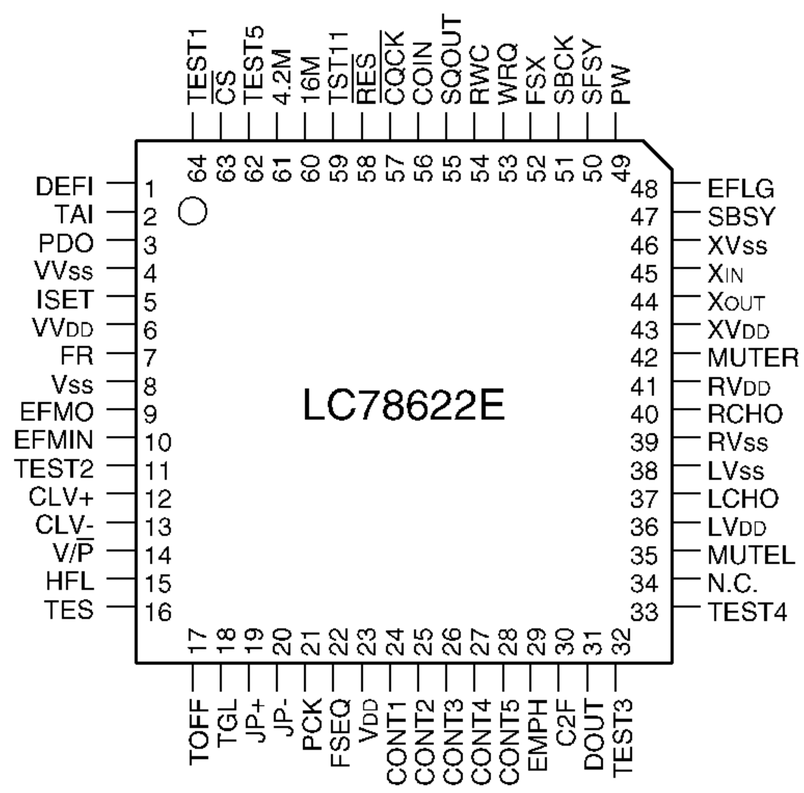


● Pin Function

| No. | Name | I/O | Function | |
|---|---|---|---|---|
| 1 | DEFI | I | Defect detection signal (DEF) input. (Must be connected to 0V when unused). | |
| 2 | TAI | I | PLL pins | Test input. A pull-down resistor is built-in. Must be connected to 0V. |
| 3 | PDO | O | | External VCO control phase comparator output. |
| 4 | VVss | - | | Internal VCO ground. Must be connected to 0V. |
| 5 | ISET | AI | | PDO output current adjustment resistor connection. |
| 6 | VVDD | - | | Internal VCO power supply. |
| 7 | FR | AI | | VCO frequency range adjustment. |
| 8 | Vss | - | Digital system ground. Must be connected to 0V. | |
| 9 | EFMO | O | Since level control | EFM signal output pin. |
| 10 | EFMIN | I | | EFM signal input pin. |

● Pin Function

| No. | Name | I/O | Function |
|---|---|---|---|
| 11 | TEST2 | I | Test pin. A pull-down resistor is built-in. Must be connected to 0V. |
| 12 | CLV+ | O | Disc motor control output. Can be set to 3-value output by microprocessor command. |
| 13 | CLV- | O | Three-value output is also possible when specified microprocessor command. |
| 14 | V/P | O | Rough servo/phase control automatic switching monitor output. Outputs a high during rough servo and a low level. |
| 15 | HFL | I | Track detection signal input. This is a Schmitt input. |
| 16 | TES | I | Tracking error signal input. This is a Schmitt input. |
| 17 | TOFF | O | Tracking off output. |
| 18 | TGL | O | Tracking gain switching output. Increase the gain when low. |
| 19 | JP+ | O | Track jump output. |
| 20 | JP- | O | Three-value output is also possible when specified by microprocessor command. |
| 21 | PCK | O | EFM data playback clock monitor. Outputs 4.3218MHz when the phase command. |
| 22 | FSEQ | O | Synchronization signal detection output. Outputs a high level when the synchronization signal detected from the EFM signal and the internally generated synchronization signal range. |
| 23 | VDD | - | Digital system power supply. |
| 24 | CONT1 | I/O | General-purpose 1. Controlled by serial data commands from the microprocessor. Any of these that are unused must be either set up as input ports and connected to 0V. or set up as output ports and left open. |
| 25 | CONT2 | I/O | General-purpose 2. |
| 26 | CONT3 | I/O | General-purpose 3. |
| 27 | CONT4 | I/O | General-purpose 4. |
| 28 | CONT5 | I/O | General-purpose 5. |
| 29 | EMPH | O | De-emphasis monitor pin. A high level indicates playback of a de-emphasis disc. |
| 30 | C2F | O | C2 flag output. |
| 31 | DOUT | O | Digital ouput. (EIAJ format) |
| 32 | TEST3 | I | Test input. A pull-down resistor is built-in. Must be connected to 0V. |
| 33 | TEST4 | I | Test input. A pull-down resistor is built-in. Must be connected to 0V. |
| 34 | N.C. | - | Unused. Must be left open. |
| 35 | MUTEL | O | Left channel one-bit D/A converter: Left channel mute output. |
| 36 | LVDD | - | Left channel power supply. |
| 37 | LCHO | O | Left channel output. |
| 38 | LVss | - | Left channel ground. Must be connected to 0V. |
| 39 | RVss | - | Right channel one-bit D/A converter: Right channel ground. Must be connected to 0V. |
| 40 | RCHO | O | Right channel output. |
| 41 | RVDD | - | Right channel power supply. |
| 42 | MUTER | O | Right channel mute output. |
| 43 | XVDD | - | Crystal oscillator power supply. |
| 44 | XOUT | O | Connections for a 16.9344 crystal oscillator element. |
| 45 | XIN | I | |
| 46 | XVss | - | Crystal oscillator ground. Must be connected to 0V. |
| 47 | SBSY | O | Subcode block synchronization signal. |
| 48 | EFLG | O | C1, C2, signal and double error correction monitor pin. |
| 49 | PW | O | Subcode P, Q, R, S, T, U and W output. |
| 50 | SFSY | O | Subcode frame synchronization signal output. This signal falls when the subcodes are in the standby state. |
| 51 | SBCK | I | Subcode readout clock input. This is a Schmitt input. (Must be connected to 0V when unused). |
| 52 | FSX | O | Output for the 7.35kHz synchronization signal divided from crystal oscillator. |
| 53 | WRQ | O | Subcode Q output standby output. |
| 54 | RWC | I | Read/write control input. This is a Schmitt input. |
| 55 | SQOUT | O | Subcode Q output. |
| 56 | COIN | I | Command input from the control microprocessor. |
| 57 | CQCK | I | input for both the command input acquisition clock and the SQOUT pin subcode readout clock input. This is a Schmitt input. |
| 58 | RES | I | Chip reset input. This pin must be set low briefly after power is first applied. |
| 59 | TST11 | O | Test output. Leave open. (Normaly outputs a low level). |
| 60 | 16M | O | 16.9344MHz output. |
| 61 | 4.2M | O | 4.2336MHz output. |
| 62 | TEST5 | I | Test input. A pull-down resistor is built-in. Must be connected to 0V. |
| 63 | CS | I | Chip select input. A pull-down resistor is built in. Must be connected to 0V if not controlled. |
| 64 | TEST1 | I | Test input. A pull-down resistor is built-in. Must be connected to 0V. |

## ■ STK407-070 (IC1201 : POWER ASSY, XR-A600 ONLY)
## ■ STK407-050 (IC1201 : POWER ASSY, XR-A500 AND XR-A500EE ONLY)
## ● 2 CHANNEL AF POWER AMP

● Block Diagram

* C.C.C. : CONSTANT CURRENT CIRCUIT

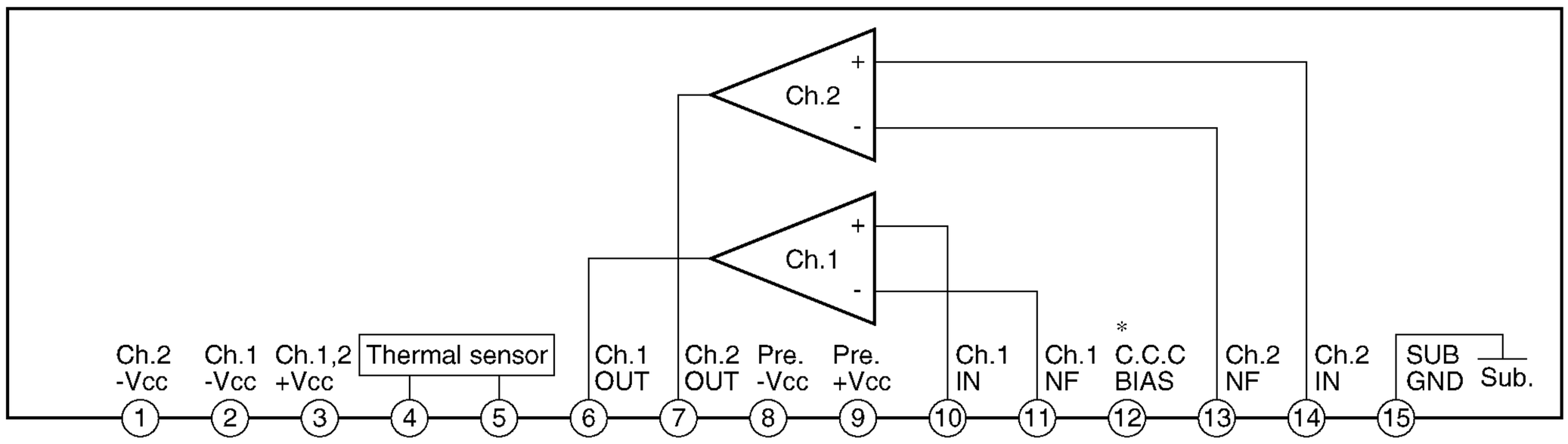


● Pin Assignment

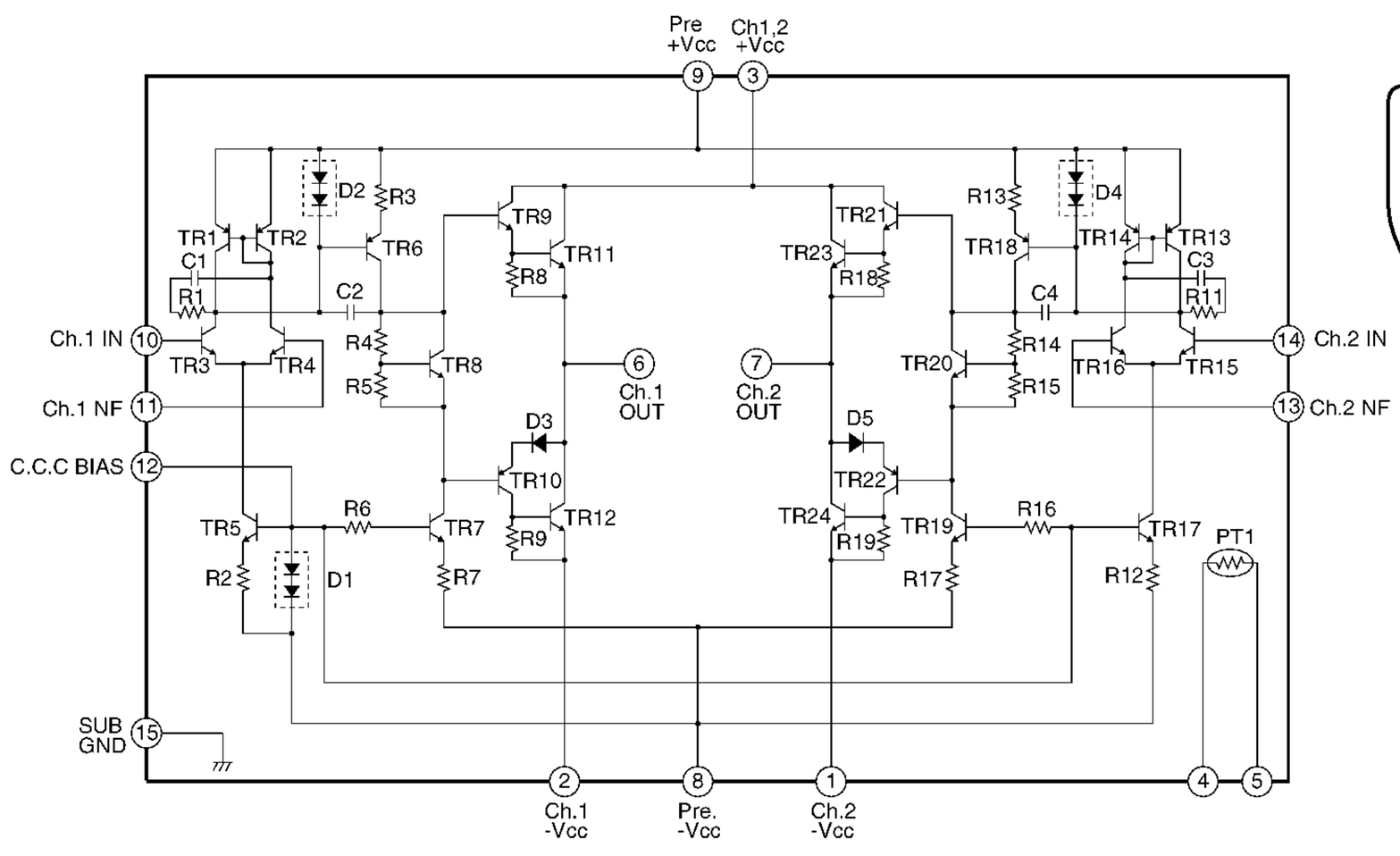


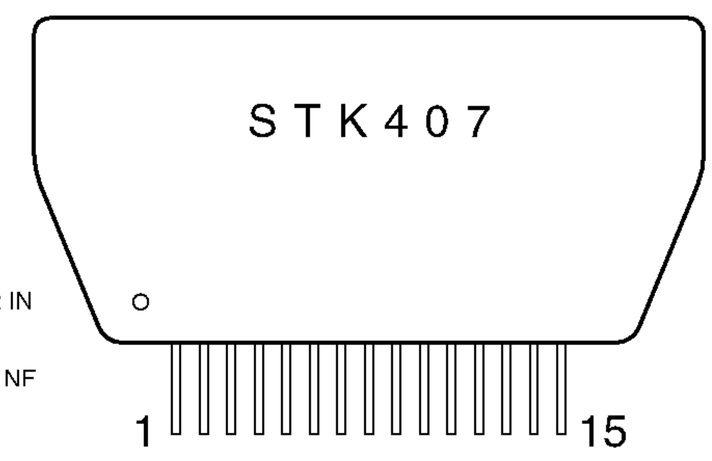

## 7.1.2 DISPLAY

### ■ AAV7044 (V1901 : DISPLAY ASSY)

● FL TUBE

● Pin Assignment

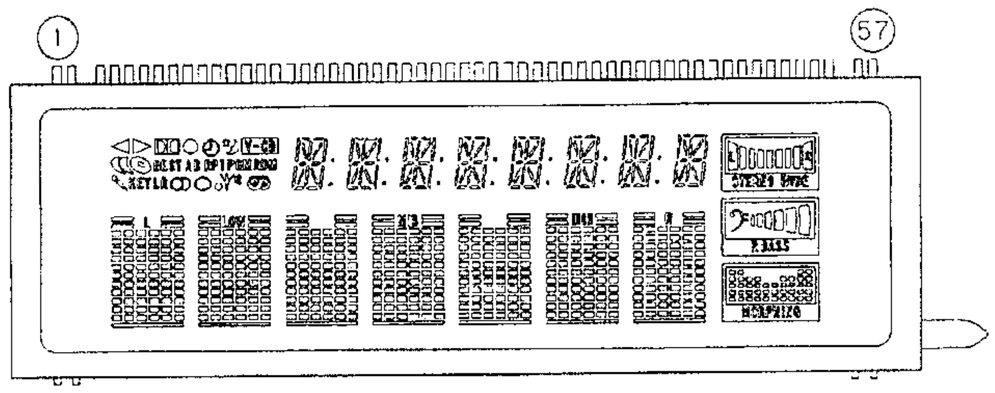


● Anode and Grid Assignment

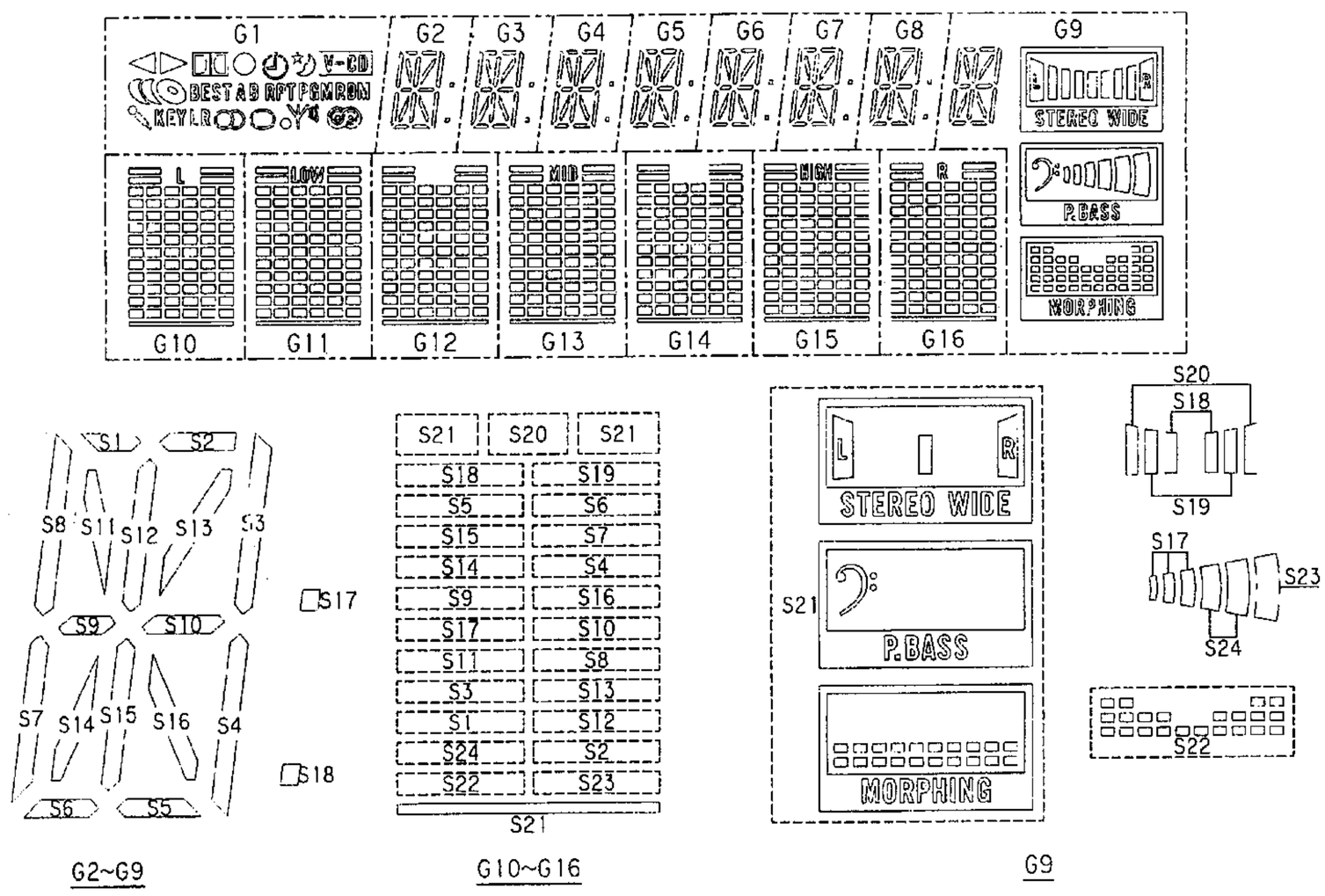


| | G1 | G2~G8 | G9 | GA | GB |
|---|---|---|---|---|---|
| S1 | S1 | S1 | S1 | S1 | S1 |
| S2 | S2 | S2 | S2 | S2 | S2 |
| S3 | S3 | S3 | S3 | S3 | S3 |
| S4 | S4 | S4 | S4 | S4 | S4 |
| S5 | S5 | S5 | S5 | S5 | S5 |
| S6 | S6 | S6 | S6 | S6 | S6 |
| S7 | S7 | S7 | S7 | S7 | S7 |
| S8 | S8 | S8 | S8 | S8 | S8 |
| S9 | S9 | S9 | S9 | S9 | S9 |
| S10 | S10 | S10 | S10 | S10 | S10 |
| S11 | S11 | S11 | S11 | S11 | S11 |
| S12 | S12 | S12 | S12 | S12 | S12 |
| S13 | S13 | S13 | S13 | S13 | S13 |
| S14 | S14 | S14 | S14 | S14 | S14 |
| S15 | S15 | S15 | S15 | S15 | S15 |
| S16 | S16 | S16 | S16 | S16 | S16 |
| S17 | S17 | S17 | S17 | S17 | S17 |
| S18 | S18 | S18 | S18 | S18 | S18 |
| S19 | S19 | | S19 | S19 | S19 |
| S20 | S20 | | S20 | S20 | |
| S21 | S21 | | S21 | S21 | S21 |
| S22 | S22 | | S22 | S22 | S22 |
| S23 | S23 | | S23 | S23 | S23 |
| S24 | S24 | | S24 | S24 | S24 |

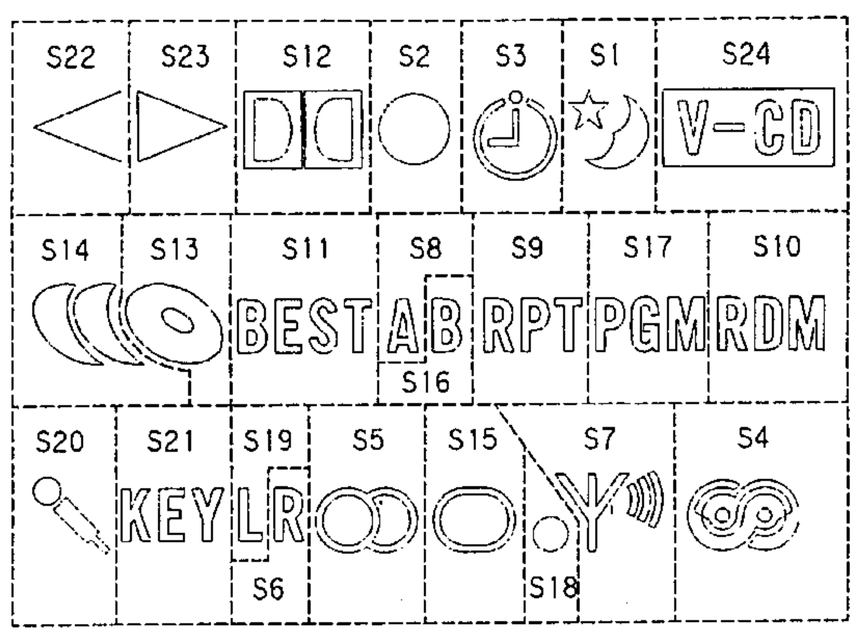


● Pin Connection

| Pin No. | 1 | 2 | 3 | 4 | 5 | 6 | 7 | 8 | 9 | 10 | 11 | 12 | 13 | 14 | 15 | 16 | 17 | 18 | 19 | 20 | 21 | 22 | 23 |
|---|---|---|---|---|---|---|---|---|---|---|---|---|---|---|---|---|---|---|---|---|---|---|---|
| Assignment | F1 | F1 | NP | NL | G9 | G16 | G15 | G14 | G13 | G12 | G11 | G10 | G1 | G2 | G3 | G4 | G5 | G6 | G7 | G8 | S7 | S5 | S6 |

| Pin No. | 24 | 25 | 26 | 27 | 28 | 29 | 30 | 31 | 32 | 33 | 34 | 35 | 36 | 37 | 38 | 39 | 40 | 41 | 42 | 43 | 44 | 45 | 46 |
|---|---|---|---|---|---|---|---|---|---|---|---|---|---|---|---|---|---|---|---|---|---|---|---|
| Assignment | S18 | S19 | S20 | S21 | NL | NL | NL | NL | NL | NL | NL | NL | S15 | S4 | S14 | S16 | S9 | S10 | S22 | S23 | S24 | S2 | S1 |

| Pin No. | 47 | 48 | 49 | 50 | 51 | 52 | 55 | 54 | 55 | 56 | 57 |
|---|---|---|---|---|---|---|---|---|---|---|---|
| Assignment | S12 | S3 | S13 | S11 | S8 | S17 | NL | NL | NP | F2 | F2 |

# 7.2 DIAGNOSIS

## 7.2.1 DISASSEMBLY

### ■ CD $M LOADING MECHANISM ASSY

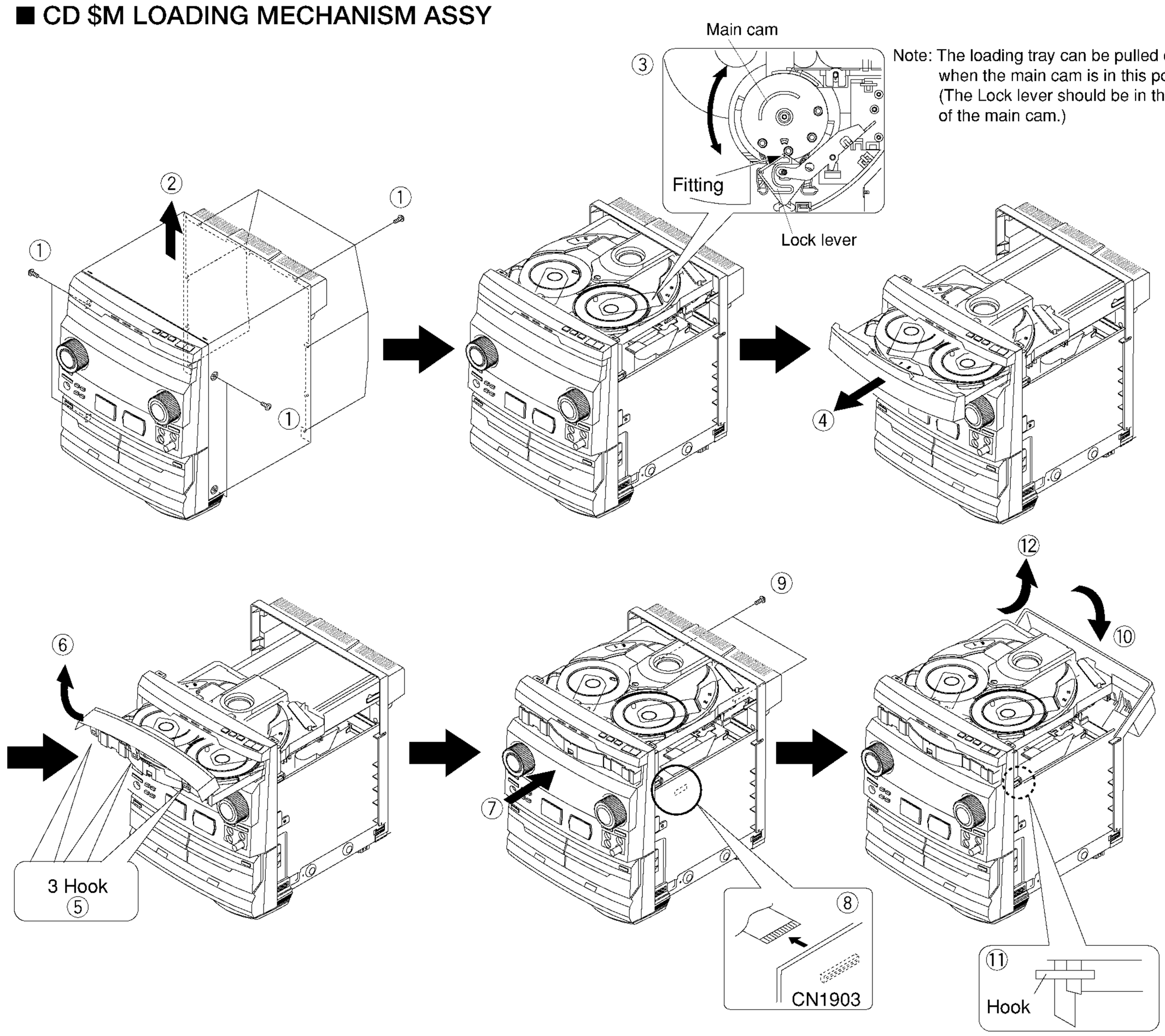


### ■ CD $M LOADING MECHANISM ASSY ADDITIONAL TO JOB

● Mechanism Base

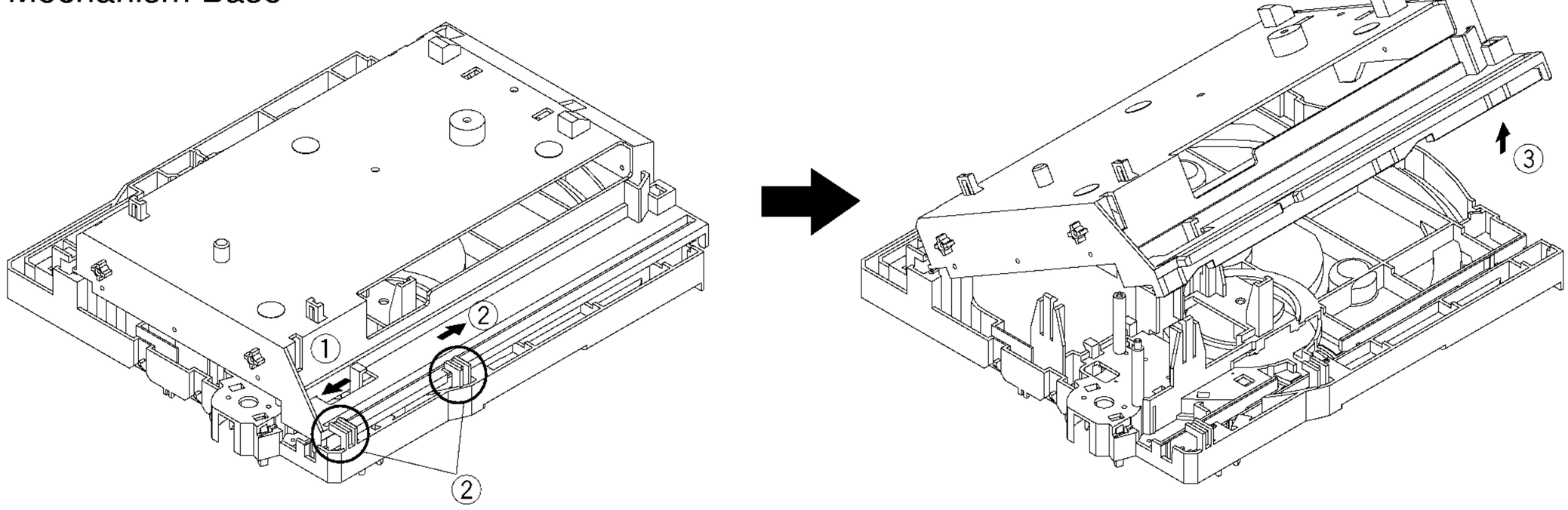

● Clamper Holder

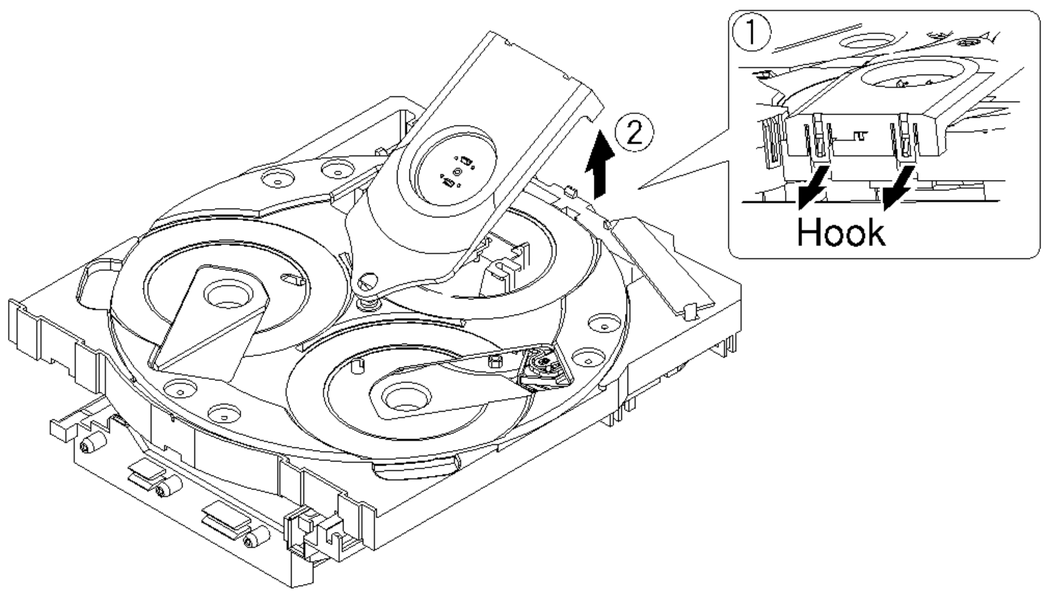


● Servo Base

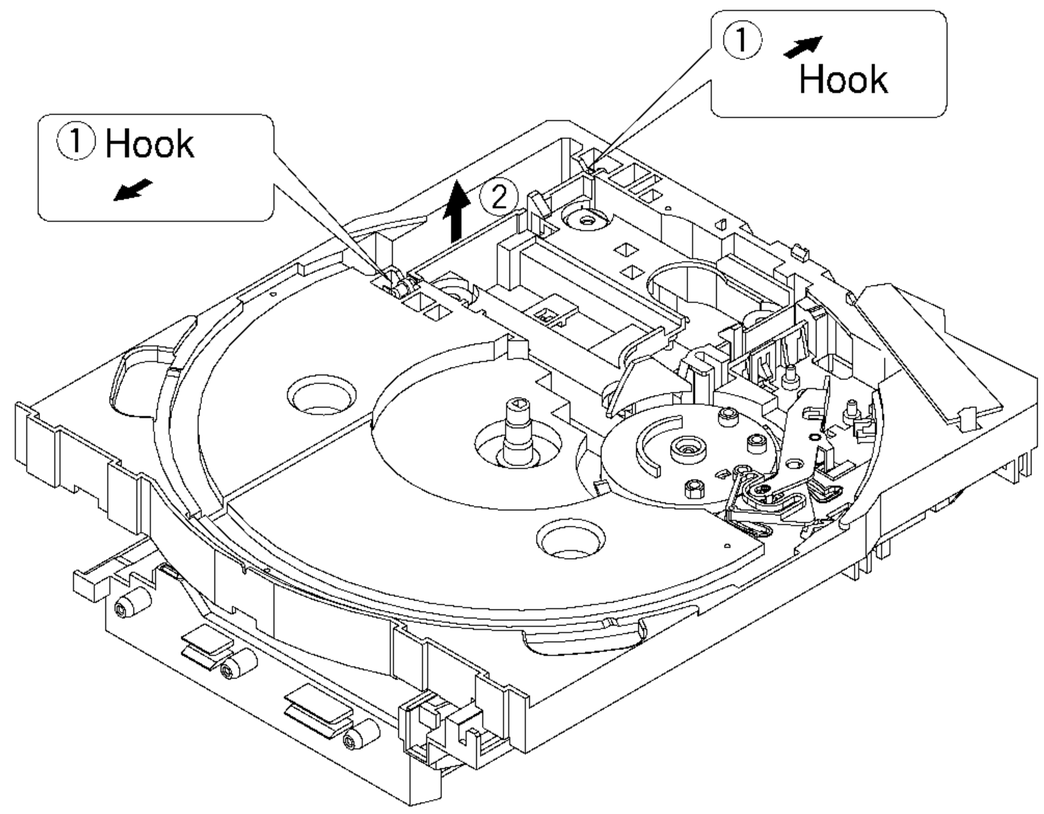


● Actuater

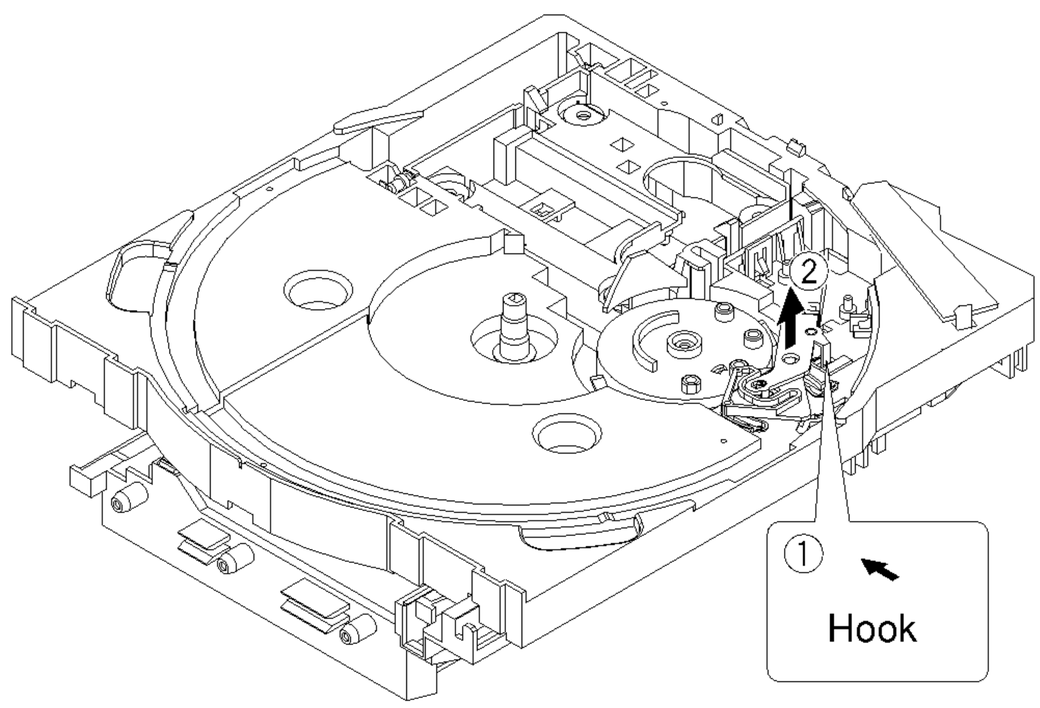


## ■ FITTING THE PULLEY INTO THE CARRIAGE MOTOR

For replacement of the carriage motor, fit the motor pulley by using the servicing pulley press-in station located on the loading tray, as shown in the figure on the right.

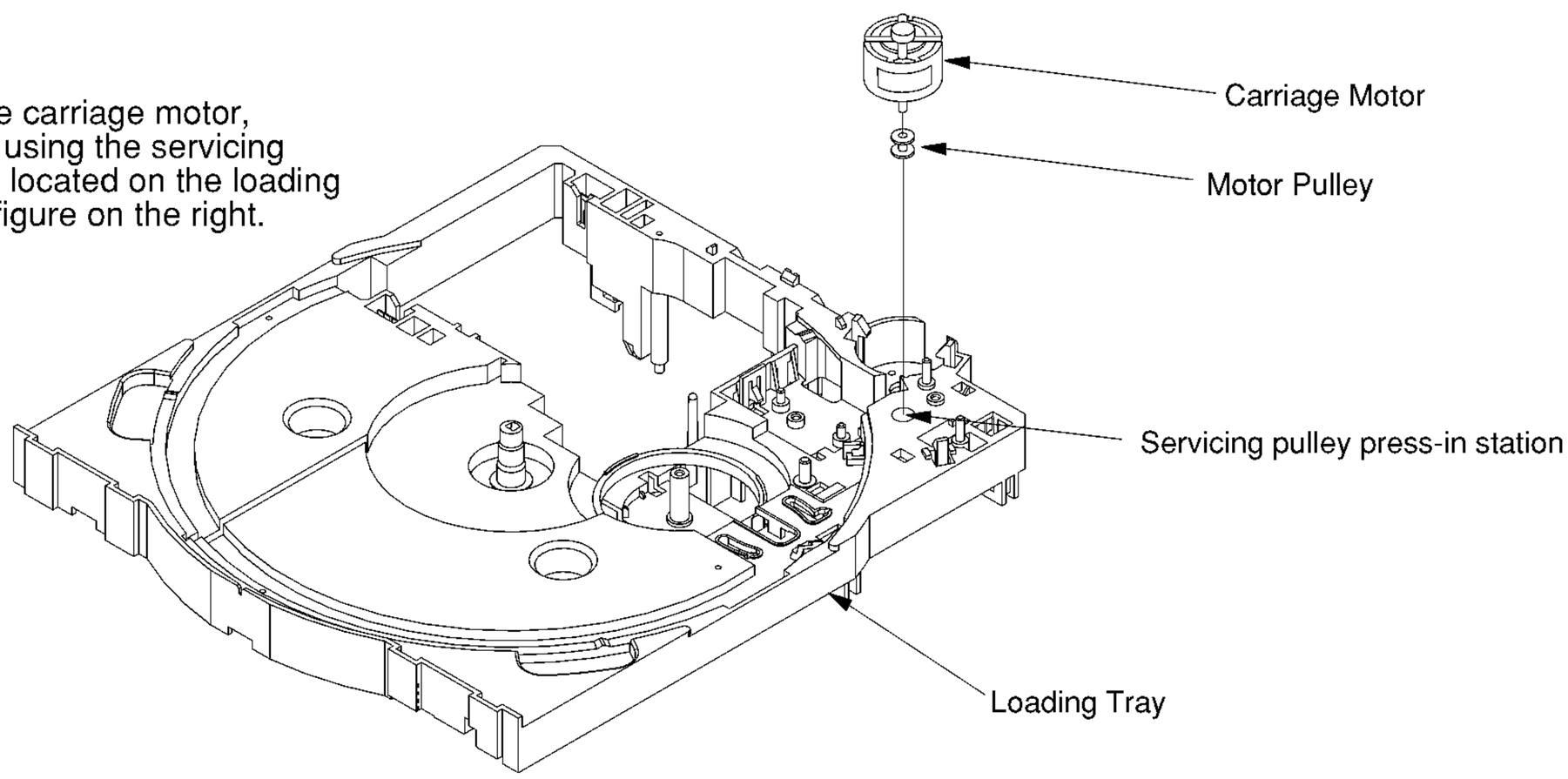

# 7.3 BLOCK DIAGRAM

## 7.3.1 OVERALL DIAGRAM

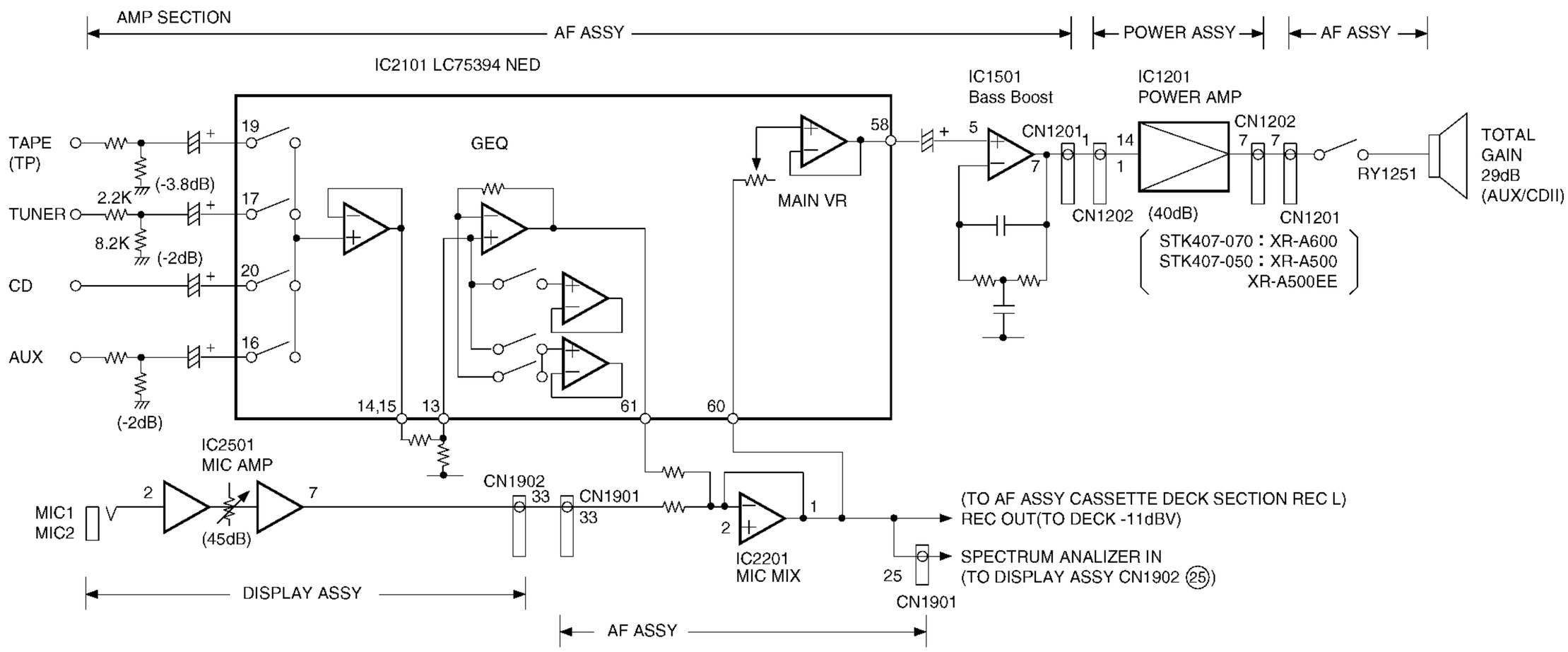


## 7.3.2 MICROCOMPUTER CONNECTION DIAGRAM

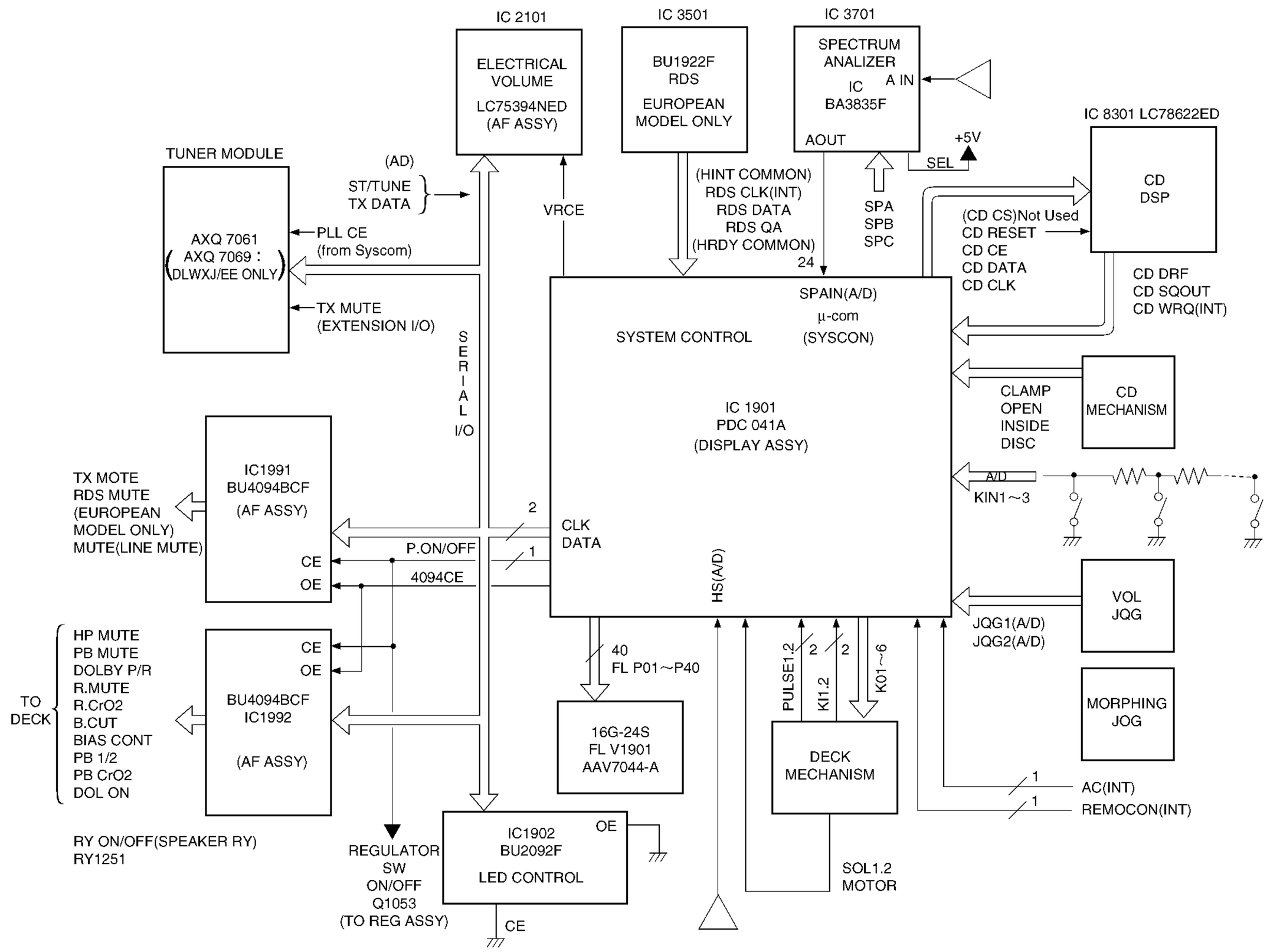

## 7.3.3 CASSETTE DECK BLOCK (AF ASSY)

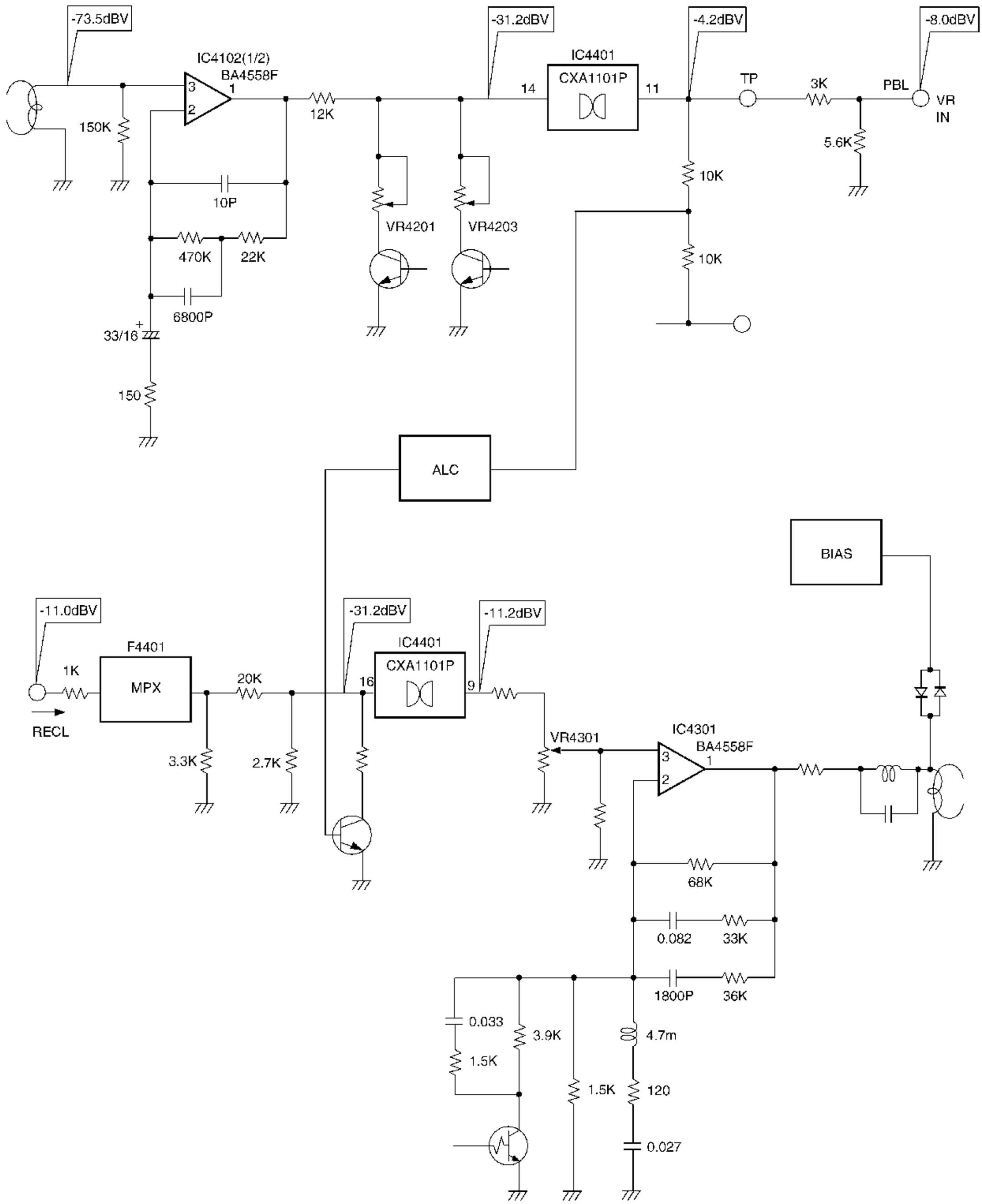

# 8. PANEL FACILITIES AND SPECIFICATIONS

The illustration shows XR-A600.
Front panel

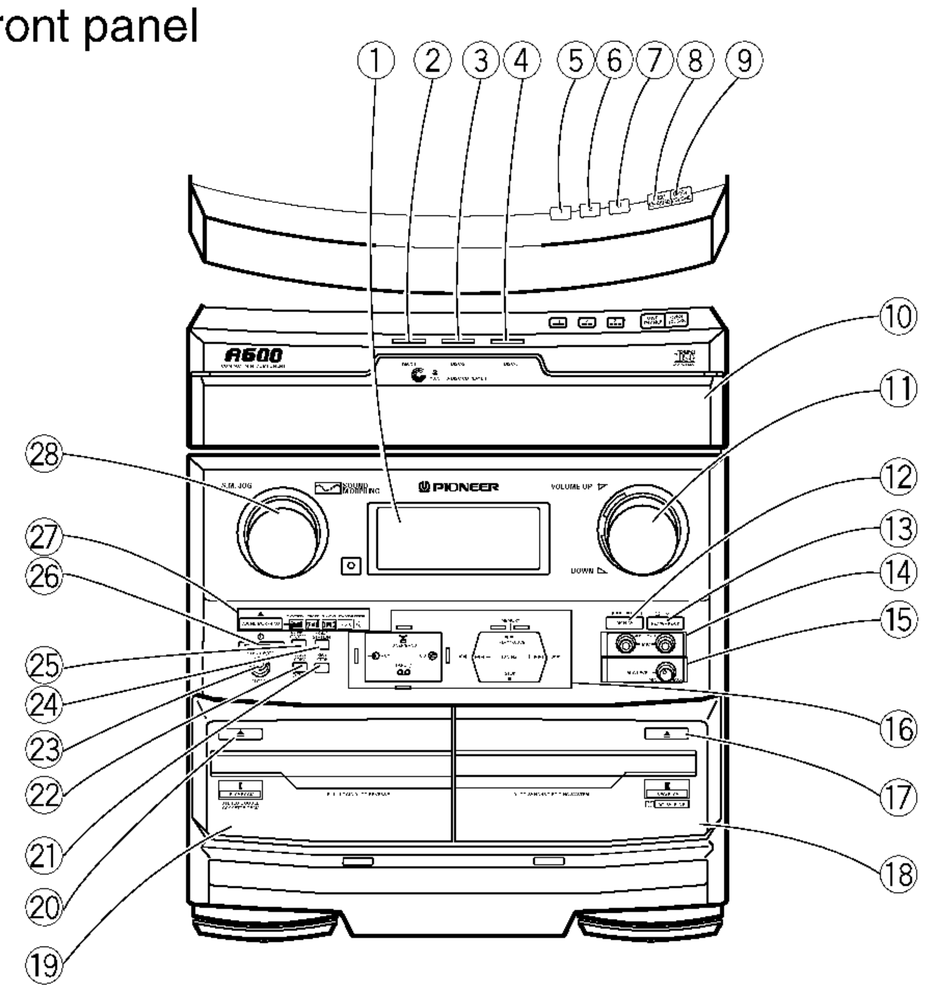


## Function button section

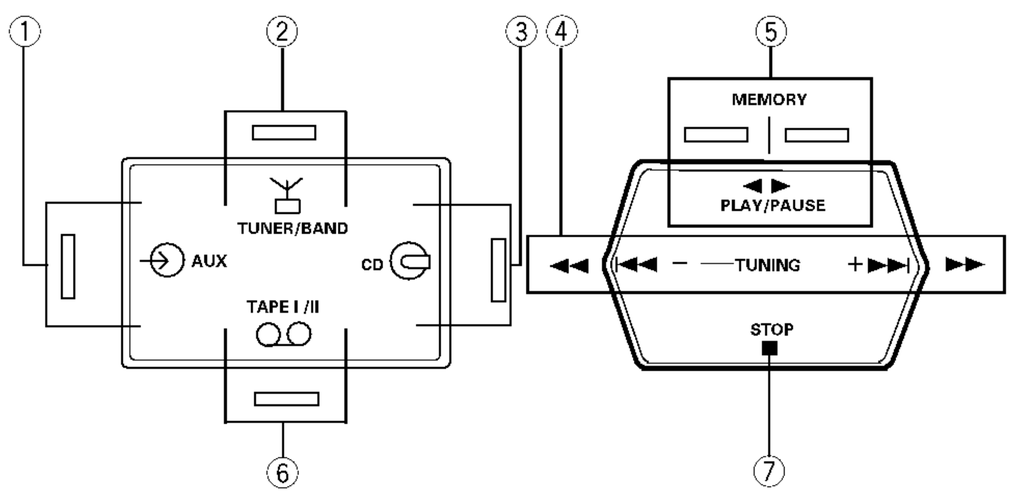


① **AUX function button and indicator**
② **TUNER/BAND function button and indicator**
③ **CD function button and indicator**
④ **TUNING ◄◄, I◄◄ (–), (+) ►►I, ►► buttons**
⑤ **PLAY/PAUSE button and indicator (◄ ►)**
⑥ **TAPE (I/II) function button and indicator**
⑦ **STOP button (■)**

- **Roles of the common operation buttons (The rules of the buttons vary depending on the input functions as shown below.)**

**During CD input**
PLAY/PAUSE: Play/pause button
STOP: Stop button
(+) ►►I, ►►: Fast forward/track search button
◄◄, I◄◄ (–): Fast reverse/track search button

**During cassette deck input**
PLAY/PAUSE: Play button/Tape transport direction
STOP: Stop button
(+) ►►I, ►►: Fast forward button/Music search button
◄◄, I◄◄ (–): Rewind button/Music search button

**During tuner operation**
(+) ►►I, ►►: Frequency & Station + (up) button
◄◄, I◄◄ (–): Frequency & Station – (down) button

① **Display**
② **DISC-1 indicator**
③ **DISC-2 indicator**
④ **DISC-3 indicator**
⑤ **DISC 1 select button**
⑥ **DISC 2 select button**
⑦ **DISC 3 select button**
⑧ **DISC CHANGE button**
⑨ **OPEN/CLOSE button**
⑩ **CD disc tray**
⑪ **Volume control (VOLUME)**
⑫ **DISPLAY (CLOCK ADJUST) button**
⑬ **TIMER REC/WAKE-UP button**
⑭ **MIC jack**
⑮ **MIC LEVEL control**
⑯ **Function buttons & common OPERATION buttons**
⑰ **TAPE II Eject button (▲)**
⑱ **TAPE II cassette door**
⑲ **TAPE I cassette door**
⑳ **TAPE I Eject button (▲)**
㉑ **REC/STOP button**
㉒ **ASES/COPY (DEMO) button**
㉓ **PHONES jack (Headphones)**
㉔ **FREQ/STATION button**
㉕ **DD *NR ON/OFF button**
Each time this button is pressed, DOLBY NR system turns ON and OFF.
㉖ **STANDBY/ON Switch**
This is the switch for electric power.
ON: When set to the ON position, power is supplied and the unit becomes operational.
STANDBY: When set to the STANDBY position, the main power flow is cut and the unit is no longer fully operational. A minute flow of power feeds the unit to maintain operation readiness .
㉗ **SOUND MORPHING buttons**
(MORPHING, P.BASS, ST.WIDE, BALANCE, PRESET)
㉘ **S. M. (Sound Morphing) JOG**

*
- *Dolby noise reduction manufactured under license from Dolby Laboratories Licensing Corporation.*
- *"Dolby" and the double-D symbol are trademarks of Dolby Laboratories Licensing Corporation*

---

**■ Auto Function**
This model is equipped with an "Auto Function" operation, so when the function button for CD, TAPE, AUX, TUNER/BAND (BAND with the remote control unit) or PLAY/PAUSE is pressed, the function switches automatically. Use the AUX function button on the remote control unit to select the component connected to the AUX-IN jacks, since the Auto Function is not effective for this.

***NOTE:***
*The function cannot be switched during recording and tape copying.*

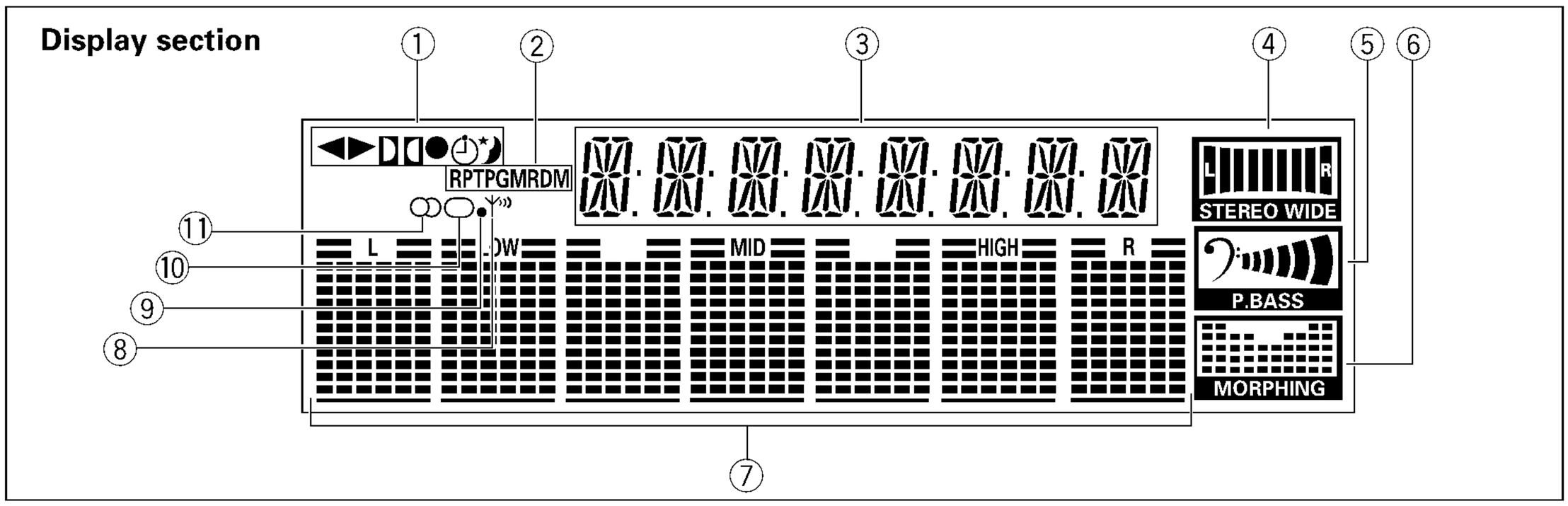


① ◀ ▶ Lights to indicate the recording direction of the cassette deck II
Lights when Dolby NR is ON
● Lights during recording on a cassette deck.
Lights when the timer function is activated.
Lights when the sleep time is activated.
② RPT... Lights when the REPEAT button of the remote control unit pressed.
PGM.. Lights when the PGM button of the remote control unit pressed.
RDM.. Lights when the RDM button of the remote control unit pressed.

③ Displays the frequency and major operating modes
④ Lights when ST.WIDE is set.
⑤ Lights when P.BASS is set.
⑥ Lights when MORPHING is set.
⑦ Displays the level meter or spectrum analyzer
⑧ Lights during radio reception.
⑨ Lights when the beat cut function is used.
⑩ Lights when the MONO button of the remote control unit is pressed.
⑪ Lights during FM stereo reception.

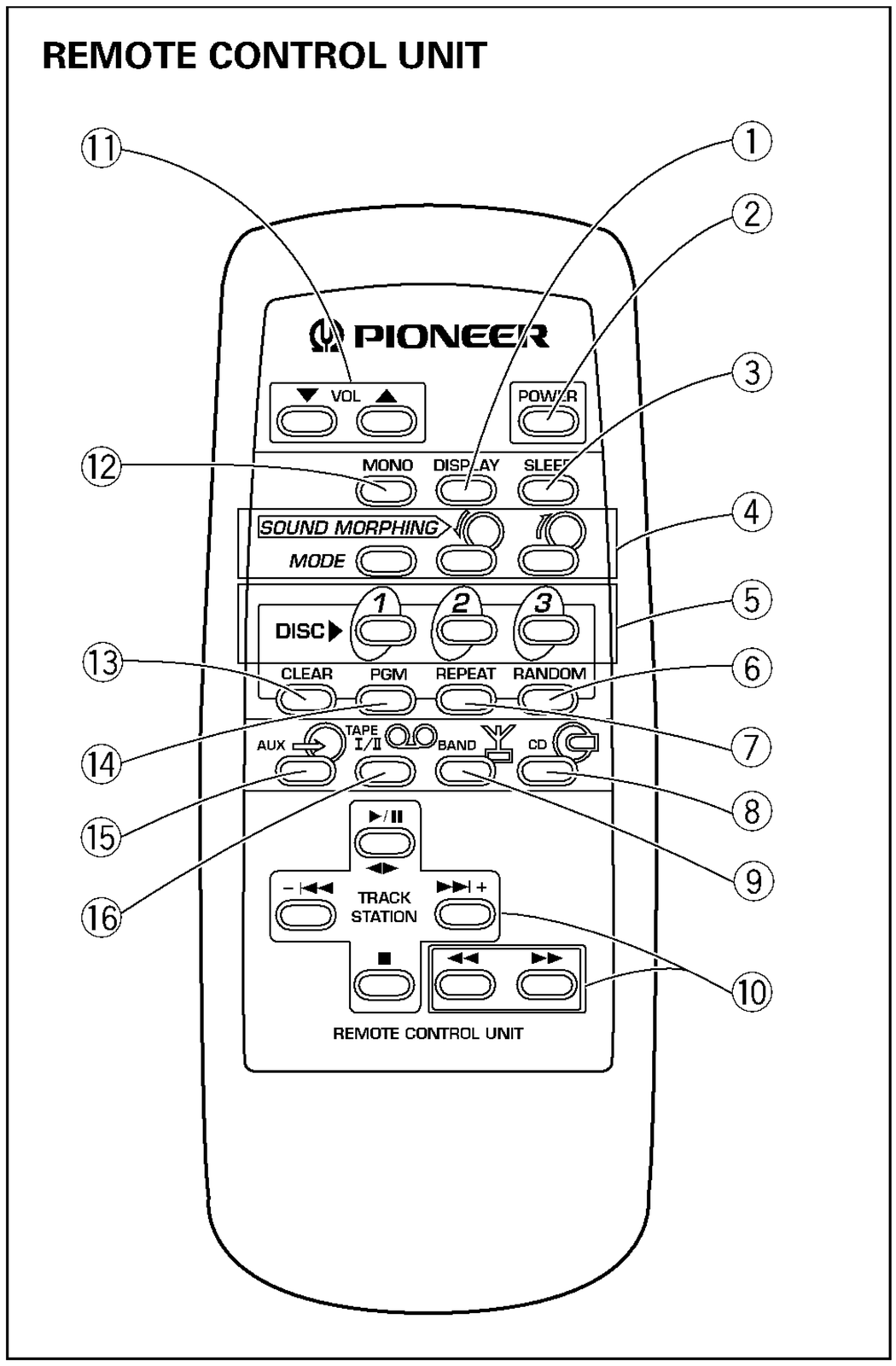


① **DISPLAY button**
② **POWER button**
③ **SLEEP timer button**
④ **SOUND MORPHING MODE buttons & SOUND MORPHING JOG control button**
⑤ **DISC select button (1-3)**
⑥ **RANDOM button**
⑦ **REPEAT button**
⑧ **CD function button**
⑨ **BAND button**
- Use to switch between FM and AM bands.

⑩ **CD/TAPE/STATION (up,down) operation buttons**
- **CD operation buttons**
  (Play/Pause ▶/II, Track search ⏮ ⏭, Stop ■, Fast ◀◀ ▶▶ )
- **TAPE operation buttons**
  (Play ◀ ▶, Music Search ⏮ ⏭ Stop ■, Fast ◀◀ ▶▶ )
- **TUNER operation buttons**

+ ... Stations change in order in the upward direction.
– ... Stations change in order in the downward direction.
▶▶... Frequency down.
◀◀... Frequency up.

⑪ **VOLUME ▲ (up), ▼ (down) button**
⑫ **MONO button**
⑬ **CLEAR button**
⑭ **PGM button**
⑮ **AUX function button**
⑯ **TAPE (I/II) function button**

## STEREO CD CASSETTE DECK RECEIVER

### Amplifier section

**<XR-A600>**

**[FRONT]**

Continuous Power Output (RMS) ..... 100 W + 100 W
(1 kHz, T.H.D. 10%, 6 Ω)

- *Above specifications are for when power supply is 230 V.*

**<XR-A500>**

**[FRONT]**

Continuous Power Output (RMS) ..... 70 W + 70 W
(1 kHz, T.H.D. 10%, 6 Ω)

- *Above specifications are for when power supply is 230 V.*

### FM/AM Tuner section

**FM tuner section**

Frequency Range ..... 87.5 MHz to 108 MHz
Antenna input ..... 75 Ω unbalanced

**AM tuner section**

Frequency Range
With 9 kHz step ..... 531 kHz to 1,602kHz
With 10 kHz step ..... 530 kHz to 1,700 kHz
Antenna ..... Loop antenna

**Miscellaneous**

Power Requirements ..... AC 110 – 127, 220 – 230, 240 V
50/60 Hz
Power Consumption ..... 140 W (XR-A600)
125 W (XR-A500)

### CD section

Type ..... Compact disc digital audio system
Wow and Flutter ..... Limit of measurement
(±0.001 % W.PEAK) or less (EIAJ)

### Cassette deck section

Systems ..... 4 track, 2-channel stereo
Heads ..... Recording/playback head x 1
Playback head x 1
Erasing head x 1
Motor ..... DC servo motor x 1
Tape type ..... TYPE I (Normal) tape
Dimensions ..... 270 (W) x 310 (H) x 344 (D) mm
Weight (without package) ..... 8.1 kg (XR-A600)
7.6 kg (XR-A500)

### Accessories

Operating instructions ..... 1
Remote control unit ..... 1
FM antenna ..... 1
AM loop antenna ..... 1
Size AA/R6P dry cell batteries ..... 2

***NOTE:***

*Specifications and design subject to possible modification without notice due to improvement.*

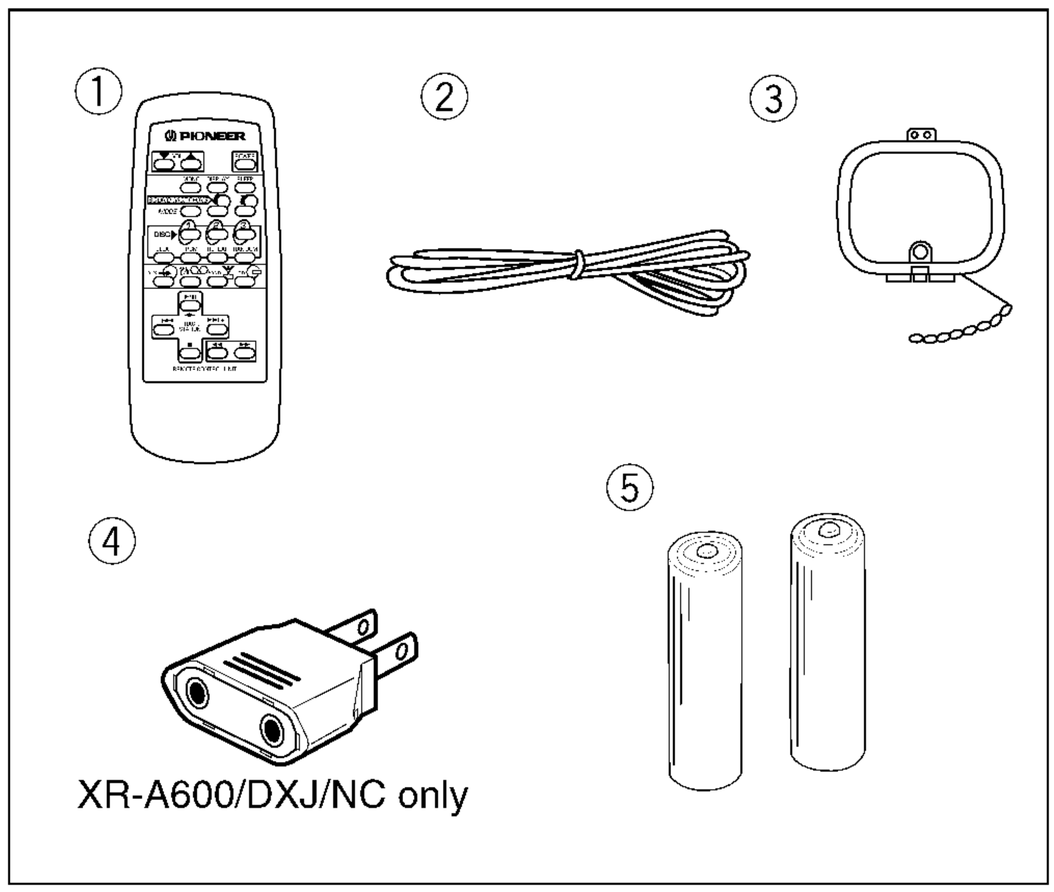


① Remote control unit x 1 : AZN7698(CU-XR042)
② FM antenna x 1 : ADH7004(XR-A600,XR-A500)
ADH7011(XR-A500EE)
③ AM loop antenna x 1 : ATB7007
④ Power-cord plug conversion adapter x 1 : VKX1007(XR-A600/DXJ/NC only)
⑤ AA/R6P dry cell batteries x 2 : VEM-013