Service Manual

PIONEER®
The Art of Entertainment

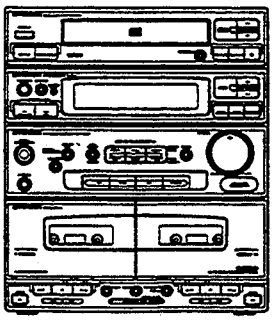

ORDER NO.
ARP2428

STEREO CD CASSETTE DECK RECEIVER

XR-P320

XR-P320 HAS FOLLOWING VERSIONS:

Type	Power Requirement	Remarks
HEXK	AC220V-230V, 240V (switchable)*	
HBXK	AC220V-230V, 240V (switchable)*	
SD	AC110V, 120V-127V, 220V, 240V (switchable)	
YPW	AC240V only	
HEWZIXK	AC220V-230V, 240V (switchable)*	
KUC	AC120V only	
KUC/CA	AC120V only	

*Change the connection with power transformer primary taps.

- **This manual is applicable to HEXK, HBXK, SD and YPW types.**
- **As to HBXK, SD and YPW types, refer to page 132.**
- **As to the other types, refer to the applicable service manuals.**
- **As to IC INFORMATION and DISASSEMBLY, refer to XR-P310/HE service manual ARP2185 or XR-P310/KUC service manual ARP2186.**
- **Ce manuel pour le service comprend les explications de réglage en français.**
- **Este manual de servicio trata del método ajuste escrito en español.**

CONTENTS

PIONEER ELECTRONIC CORPORATION 4-1, Meguro 1-Chome, Meguro-ku, Tokyo 153, Japan
PIONEER ELECTRONICS SERVICE INC. P.O. Box 1760, Long Beach, California 90801 U.S.A.
PIONEER ELECTRONICS OF CANADA, INC. 300 Allstate Parkway Markham, Ontario L3R 0P2 Canada
PIONEER ELECTRONIC [EUROPE] N.V. Haven 1087 Keetberglaan 1, 9120 Melsele, Belgium
PIONEER ELECTRONICS AUSTRALIA PTY. LTD. 178-184 Boundary Road, Braeside, Victoria 3195, Australia TEL: [03] 580-9911

3682
AV FEB. 1992 Printed in Japan

This service manual is intended for qualified service technicians; it is not meant for the casual do-it-yourselfer. Qualified technicians have the necessary test equipment and tools, and have been trained to properly and safely repair complex products such as those covered by this manual.
Improperly performed repairs can adversely affect the safety and reliability of the product and may void the warranty. If you are not qualified to perform the repair of this product properly and safely, you should not risk trying to do so and refer the repair to a qualified service technician.

WARNING
Lead in solder used in this product is listed by the California Health and Welfare agency as a known reproductive toxicant which may cause birth defects or other reproductive harm (California Health & Safety Code, Section 25249.5).
When servicing or handling circuit boards and other components which contain lead in solder, avoid unprotected skin contact with the solder. Also, when soldering do not inhale any smoke or fumes produced.

1. SAFETY INFORMATION

(FOR USA MODEL ONLY)

1. SAFETY PRECAUTIONS

The following check should be performed for the continued protection of the customer and service technician.

LEAKAGE CURRENT CHECK

Measure leakage current to a known earth ground (water pipe, conduit, etc.) by connecting a leakage current tester such as Simpson Model 229-2 or equivalent between the earth ground and all exposed metal parts of the appliance (input/output terminals, screwheads, metal overlays, control shaft, etc.). Plug the AC line cord of the appliance directly into a 120V AC 60Hz outlet and turn the AC power switch on. Any current measured must not exceed 0.5mA.

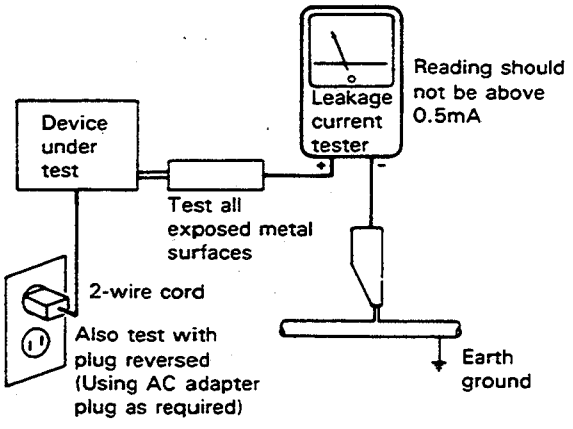

AC Leakage Test

ANY MEASUREMENTS NOT WITHIN THE LIMITS OUTLINED ABOVE ARE INDICATIVE OF A POTENTIAL SHOCK HAZARD AND MUST BE CORRECTED BEFORE RETURNING THE APPLIANCE TO THE CUSTOMER.

2. PRODUCT SAFETY NOTICE

Many electrical and mechanical parts in the appliance have special safety related characteristics. These are often not evident from visual inspection nor the protection afforded by them necessarily can be obtained by using replacement components rated for voltage, wattage, etc. Replacement parts which have these special safety characteristics are identified in this Service Manual.

Electrical components having such features are identified by marking with a ⚠ on the schematics and on the parts list in this Service Manual.
The use of a substitute replacement component which dose not have the same safety characteristics as the PIONEER recommended replacement one, shown in the parts list in this Service Manual, may create shock, fire, or other hazards.

Product Safety is continuously under review and new instructions are issued from time to time. For the latest information, always consult the current PIONEER Service Manual. A subscription to, or additional copies of, PIONEER Service Manual may be obtained at a nominal charge from PIONEER.

(FOR EUROPEAN MODEL ONLY)

VARO!
AVATTAESSA JA SUOJALUKITUS OHITETTAESSA OLET ALTTIINA NÄKYMÄTTÖMÄLLE LASERSÄTEILYLLE. ÄLÄ KATSO SÄTEESEEN.

ADVERSEL:
USYNLIG LASERSTRÅLING VED ÅBNING NÅR SIKKERHEDSAFBRYDERE ER UDE AF FUNKTION UNDGÅ UDSAETTELSE FOR STRÅLING.

VARNING!
OSYNLIG LASERSTRÅLNING NÄR DENNA DEL ÄR ÖPPNAD OCH SPÄRREN ÄR URKOPPLAD. BETRAKTA EJ STRÅLEN.

LASER
Kuva 1
Lasersateilyn varoitusmerkki

WARNING!
DEVICE INCLUDES LASER DIODE WHICH EMITS INVISIBLE INFRARED RADIATION WHICH IS DANGEROUS TO EYES. THERE IS A WARNING SIGN ACCORDING TO PICTURE 1 INSIDE THE DEVICE CLOSE TO THE LASER DIODE.

LASER
Picture 1
Warning sign for laser radiation

IMPORTANT
THIS PIONEER APPARATUS CONTAINS LASER OF CLASS 1.
SERVICING OPERATION OF THE APPARATUS SHOULD BE DONE BY A SPECIALLY INSTRUCTED PERSON.

LASER DIODE CHARACTERISTICS
MAXIMUM OUTPUT POWER: 5 mw
WAVELENGTH: 780-785 nm

LABEL CHECK

HEWZIXK type

CLASS 1
LASER PRODUCT
ARW1046

HEWZIXK type

ADVARSEL
USYNLIG LASERSTRÅLING VED ÅBNING NÅR SIKKERHED SAFBRYDERE ER UDE AF FUNKTION.
UNDGÅ UDSÆTTELSE FOR STRÅLING.
VORSICHT!
UNSICHTBARE LASER-STRAHLUNG TRITT AUS, WENN DECKEL (ODER KLAPPE) GEÖFFNET IST! NICHT DEM STRAHL AUSSETZEN!
ARW1049

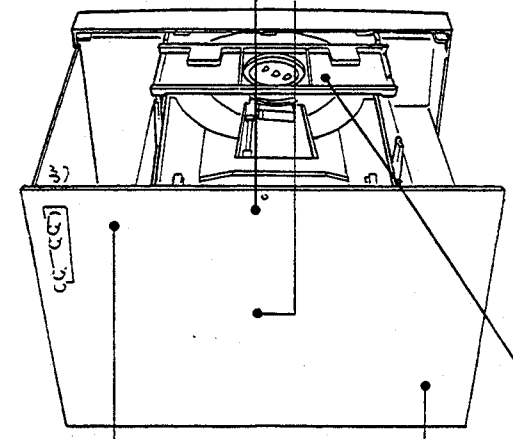

Additional Laser Caution

1. Laser Interlock Mechanism
   The position of the switch (S601) for detecting loading completion is detected by the system microprocessor, and the design prevents laser diode oscillation when the switch (S601) is not in $\overline{\text{CLMP}}$ terminal side (when the mechanism is not clamped and $\overline{\text{CLMP}}$ signal is high level).
   Thus, the interlock will no longer function if the switch (S601) is deliberately set to $\overline{\text{CLMP}}$ terminal side (if $\overline{\text{CLMP}}$ signal is low level).
   In the test mode *, the interlock mechanism will not function.
   Laser diode oscillation will continue if pins 2 and 3 of CXA1471S (IC2101) are connected to ground or pin 20 is connected to high level (ON) or the terminals of Q2101 are shorted to each other (fault condition).
2. When the cover is opened, close viewing of the objective lens with the naked eye will cause exposure to a Class 1 laser beam.

* Refer to page 79.

ADVARSEL
USYNLIG LASERSTRÅLING VED ÅBNING NÅR SIKKERHED SAFBRYDERE ER UDE AF FUNKTION UNDGÅ UDSÆTTELSE FOR STRÅLING
VARO!
VORSICHT!
UNSICHTBARE LASER-STRAHLUNG TRITT AUS, WENN DECKEL(ODER KLAPPE)GEÖFFNET IST! NICHT DEM STRAHL AUSSETZEN!
VARNING!
ARW 1047

HEXK type

CAUTION
INVISIBLE LASER RADIATION WHEN OPEN, AVOID EXPOSURE TO BEAM
ARW1050

HBXK type

CLASS 1
LASER PRODUCT
ARW1046

HEXK and HBXK types

2. EXPLODED VIEWS, PACKING AND PARTS LIST

2.1 EXTERIOR, FRONT PANEL SECTION and PACKING

NOTES:

- *The parts with an encircled number are generally unavailable because they are not in our Master Spare Parts List.*
- *The ⚠ mark found on some component parts indicates the importance of the safety factor of the part. Therefore, when replacing, be sure to use parts of identical designation.*
- *Parts marked by "◉" are not always kept in stock. Their delivery time may be longer than usual or they may be unavailable.*

• Parts List of Exterior, Front Panel Section and Packing

Mark	No.	Description	Part No.
	1	VR.KNOB (ABS)	AAB1278
	2	WAKE UP BUTTON	AAD2180
	3	TIMER BUTTON	AAD2181
	4	POWER BUTTON	AAD2183
	5	AUDITION BUTTON	AAD2185
	6	DECK BUTTON Ass'y	AAD2191
	7	CD-TUNER BUTTON (OPEN/CLOSE)	AAD2192
	8	CD-TUNER BUTTON (BAND)	AAD2193
	9	S.F.C. BUTTON	AAD2194
	10	EJECT BUTTON (L)	AAD2195
	11	EJECT BUTTON (R)	AAD2196
	12	FUNCTION BUTTON	AAD2208
	13	WAKE UP BUTTON	AAD2215
	14	SLIDE KNOB	AAE1158
	15	REMOTE CONTROL FILTER	AAK2010
	16	INDICATOR LENS	AAK2101
	17	DOOR PANEL (L)	AAK2265
	18	DOOR PANEL (R)	AAK2266
	19	TRAY CAP	AAK2267
	20	TUNER DISPLAY WINDOW	AAK2268
	21	DOOR WINDOW PLATE (L)	AAK2269
	22	DOOR WINDOW PLATE (R)	AAK2270
	23	HALF-POCKET (L)	AAN1316
	24	HALF-POCKET (R)	AAN1317
	25	INSULATING SPACER	AAX-444
	26	.....	
	27	SCREW (STEEL)	ABA1095
	28	DOOR SPRING (L)	ABH1070
	29	DOOR SPRING (R)	ABH1071
	30	KEEP PLATE	ABK1017
⚠	31	AC POWER CORD	ADG1049
	32	FM ANTENNA	ADH1005
	33	RUBBER SHEET	AEB1111
	34	NYLON BINDER	AEC-093
	35	BINDER	AEC-826
	36	STRAIN RELIEF	AEC-882
	37	NYLON RIVET	AEC1160
	38	BINDER	AEP-215
	39	DRY CELL (R03,AAA)	AEX-021
	40	FRONT PAD (L,R)	AHA1485
	41	REAR PAD (L,R)	AHA1486
	42	PACKING CASE	AHD2237
	43	PACKING SHEET	AHG1090
	44	LITERATURE BAG	AHG1091
	45	FRONT PANEL	AMB1942
	46	MECHANISM BEARING MOLD	AMR2257
	47	CHASSIS	ANA1164
	48	REAR PANEL	ANC1855
	49	BONNET	ANE1337
	50	PACK HOLDER	ANG1428
	51	HEAT SINK HOLDER	ANG1542
	52	P.C.B. SUPPORT METAL	ANG1543
	53	CD SUB CHASSIS	ANG1636
	54	HEAT SINK	ANH1244
	55	SHIELD PLATE OF MECHANISM	ANK1157
	56	OPE. INSTRUCTIONS (Dutch,Swedish, Spanish,Portuguese)	ARC1330
	57	OPE. INSTRUCTIONS (English,French, German,Italian)	ARE1226
	58	.....	
	59	.....	
	60	.....	
	61	.....	
	62	SPACER Ass'y	AWZ3923
◉	63	AF-TUNER Ass'y	AWZ3914
◉	64	VOLUME Ass'y	AWZ3919
◉	65	DECK SW Ass'y	AWZ3921
◉	66	DECK-1 Ass'y	AWZ3212
◉	67	DECK-2 Ass'y	AWZ3213
◉	68	TRANS Ass'y	AWZ3214
◉	69	REGULATOR Ass'y	AWZ3215
◉	70	POWER Ass'y	AWZ3230
◉	71	TX-CD SW Ass'y	AWZ3925
◉	72	AMP SW Ass'y	AWZ3926
	73	.....	
	74	DUMPER Ass'y	AXA1011
	75	REMOTE CONTROL UNIT (CU-SX039)	AXD1273
	76	BATTERY COVER	AZN2176
	77	SCREW	BBZ30P080FMC
	78	SCREW	BBZ30P080FZK
	79	SCREW	BBZ30P180FMC
	80	SCREW	BCZ30P060FZK
	81	SCREW	BPZ26P080FMC
	82	SCREW	BPZ30P100FMC
	83	SCREW	CBZ30P080FMC
◉	84	2 MECHA UNIT	EXK2015
◉	85	1 MECHA UNIT	EXK2025
	86	NUT	NK90FUC
	87	.....	
	88	FOOT (RUBBER)	REC-434
	89	SCREW	VBZ30P060FMC
	90	SCREW	VBZ35P080FMC
	91	SCREW	VPZ30P080FMC
	92	SCREW	VPZ30P080FZK
	93	SCREW	VPZ30P200FMC
⚠	94	FU701 FUSE (T800mA/250V)	AEK-507
⚠	95	FU702 FUSE (T2A/250V)	AEK-511
⚠	96	FU703 FUSE (T1A/250V)	AEK-508
⚠	97	FU704 FUSE (T500mA/250V)	AEK-505
	98	LOOP ANTENNA	ATB1006
⚠	99	T1 POWER TRANSFORMER	ATS1404

• **Exterior**

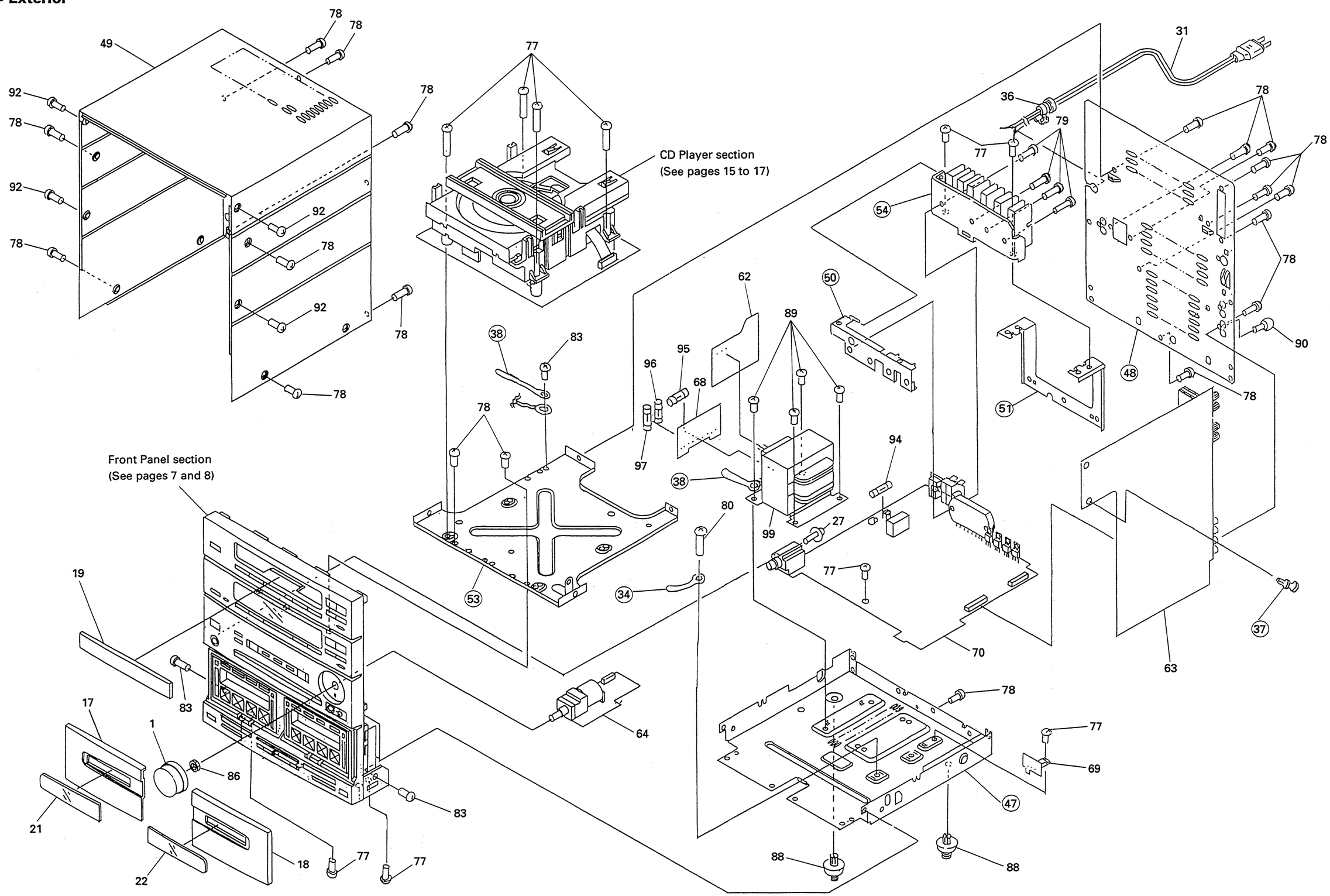
CD Player section
(See pages 15 to 17)
Front Panel section
(See pages 7 and 8)
49
78
92
77
31
36
79
54
62
50
89
38
83
95
96
68
97
94
99
27
80
34
53
51
48
90
37
63
70
64
69
47
88
17
1
86
21
22
18
19

• **Front Panel Section (Rear View)**

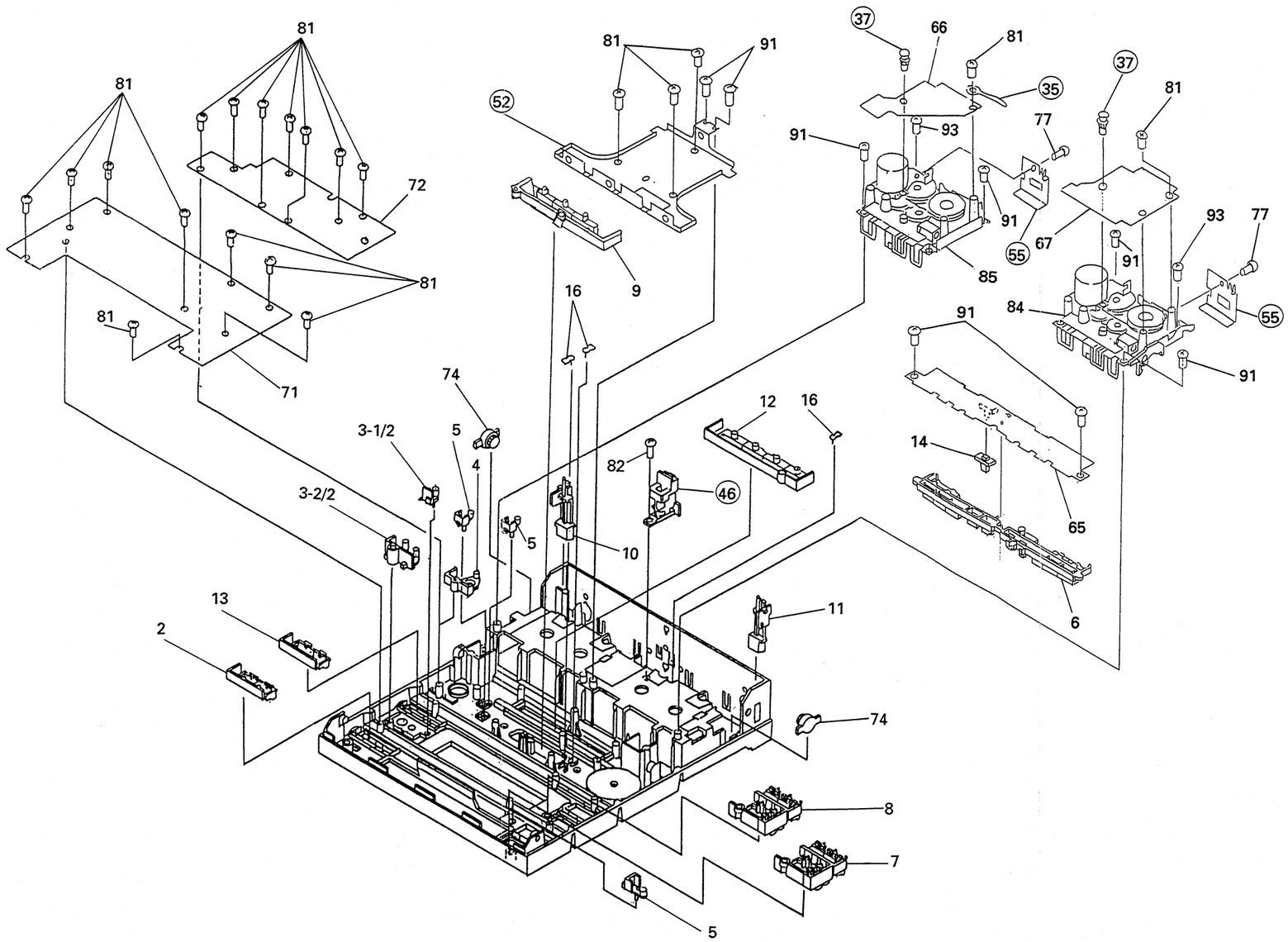

• **Front Panel Section (Front View)**

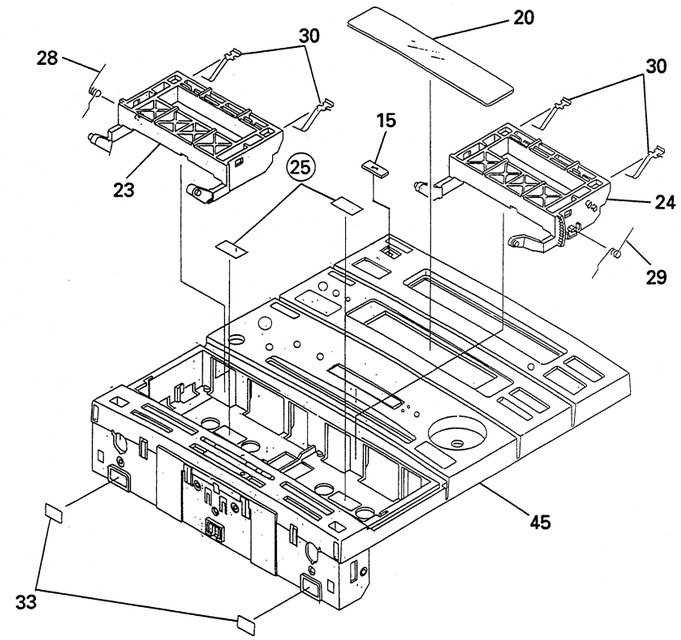

• **Packing**

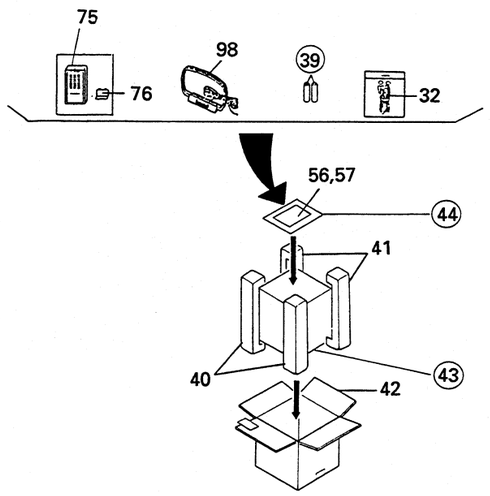

2.2 1 MECHA UNIT (EXK2025)

• Parts list of 1 Mecha unit

Mark	No.	Description	Parts No.
	1	FLYWHEEL UNIT (FWD)	EXA1222
	2	FLYWHEEL UNIT (RVS)	EXA1223
	3	ROLLER UNIT (FWD)	EXA1224
	4	ROLLER UNIT (RVS)	EXA1225
	5	LIMITER UNIT	EXA1226
	6	LEVER UNIT	EXA1227
	7	EJECT LEVER L2	AZN2063
	8	LEVER	ENV1155
	9	BRAKE	ENV1317
	10	CAM GEAR	ENV1158
	11	LOCK ARM	ENV1159
	12	NR ARM	ENV1163
	13	.....	
	14	REEL	ENV1335
	15	REEL BUSH	ENV1338
	16	ARM	ENV1330
	17	EJECT LEVER L1	AZN2108
	18	BUSH	ENV1184
	19	MAGNET	ENV1336
	20	BELT	ENT1023
	21	SPRING	EBH1424
	22	SPRING	EBH1401
	23	SPRING	EBH1203
	24	SPRING	EBH1402
	25	SPRING	EBH1405
	26	SPRING	EBH1406
	27	SPRING	EBH1407
	28	SPRING	EBH1408
	29	SPRING	EBH1413
	30	SPRING	EBH1409
	31	SPRING	EBH1410
	32	SPRING	EBH1256
	33	SPRING	EBL1013
	34	SPRING	EBL1014
	35	MOTOR UNIT	EXA1241
	36	SWITCH (Detect)	ESN1003
	37	SWITCH (Mode)	ESN1004
	38	SOLENOID	EXP1005
	39	HALL IC	DN6847SE
	40	COMPLEX PCB	ENX1007
	41	CONNECTOR (10P)	EKS1013
	42	LEAD WIRE (4P)	EDD1003
	43	CONNECTOR (3P)	EDE1009
	44	SCREW (AZIMUTH)	EBA1020
	45	.....	
	46	SCREW (M2×8)	ATZ20P080FMC
	47	SCREW	BSZ20P050FMC
	48	SCREW	PMS26P025FUC
	49	WASHER	EBF1008
	50	WASHER	EBF1009
	51	WASHER	EBF1010
	52	WASHER	EBF1011
	53	.....	
	54	ARM UNIT	EXX1006
	55	ARM UNIT	EXX1003
	56	P HEAD ASSEMBLY	EXX1008
	101	HEAD BASE	ENC1281
	102	BRACKET	ENC1194
	103	PLATE	ENC1285
	104	BRACKET	ENC1199
	105	ARM	ENC1188
	106	HOLDER	ENV1161
	107	HOLDER	ENV1301
	108	GEAR	ENV1177
	109	P HEAD UNIT	EXA1110
	110	SCREW	JGZ14P085FNI
	111	SCREW	JGZ14P040FNI
	112	CHASSIS UNIT	.....

• 1 Mecha unit

Note :
When removing the chassis unit to replace the arm unit (EXX1003), the chassis unit can be easily removed by cutting the Ⓐ part of No.55 (1/2) with a nippers, etc. (see following illustration).

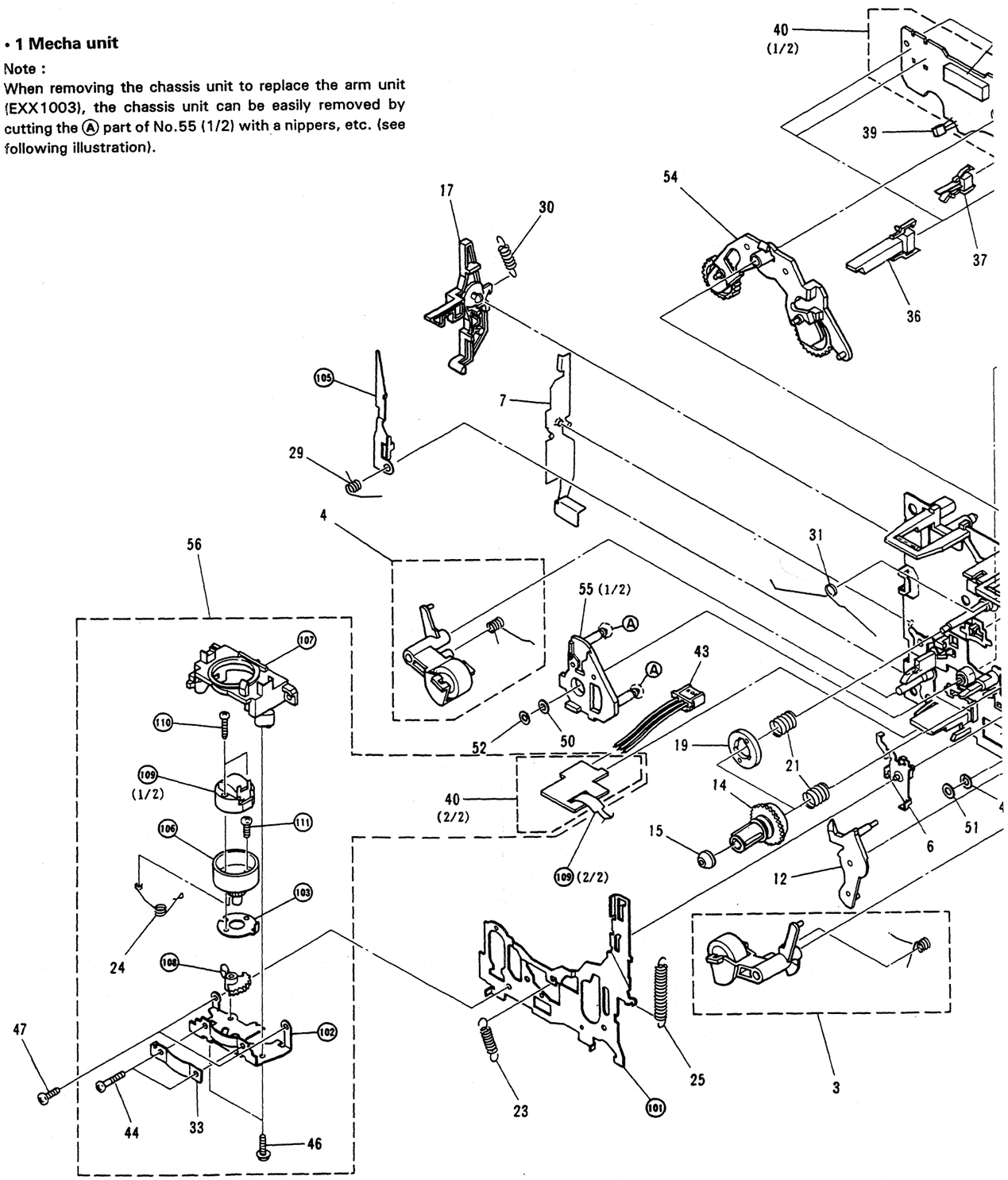

• 1 Mecha unit

Note :
When removing the chassis unit to replace the arm unit (EXX1003), the chassis unit can be easily removed by cutting the Ⓐ part of No.55 (1/2) with a nippers, etc. (see following illustration).

Parts No.
ATZ20P080FMC
BSZ20P050FMC
PMS26P025FUC
EBF1008
EBF1009
EBF1010
EBF1011
EXX1006
EXX1003
EXX1008
ENC1281
ENC1194
ENC1285
ENC1199
ENC1188
ENV1161
ENV1301
ENV1177
EXA1110
JGZ14P085FNI
JGZ14P040FNI

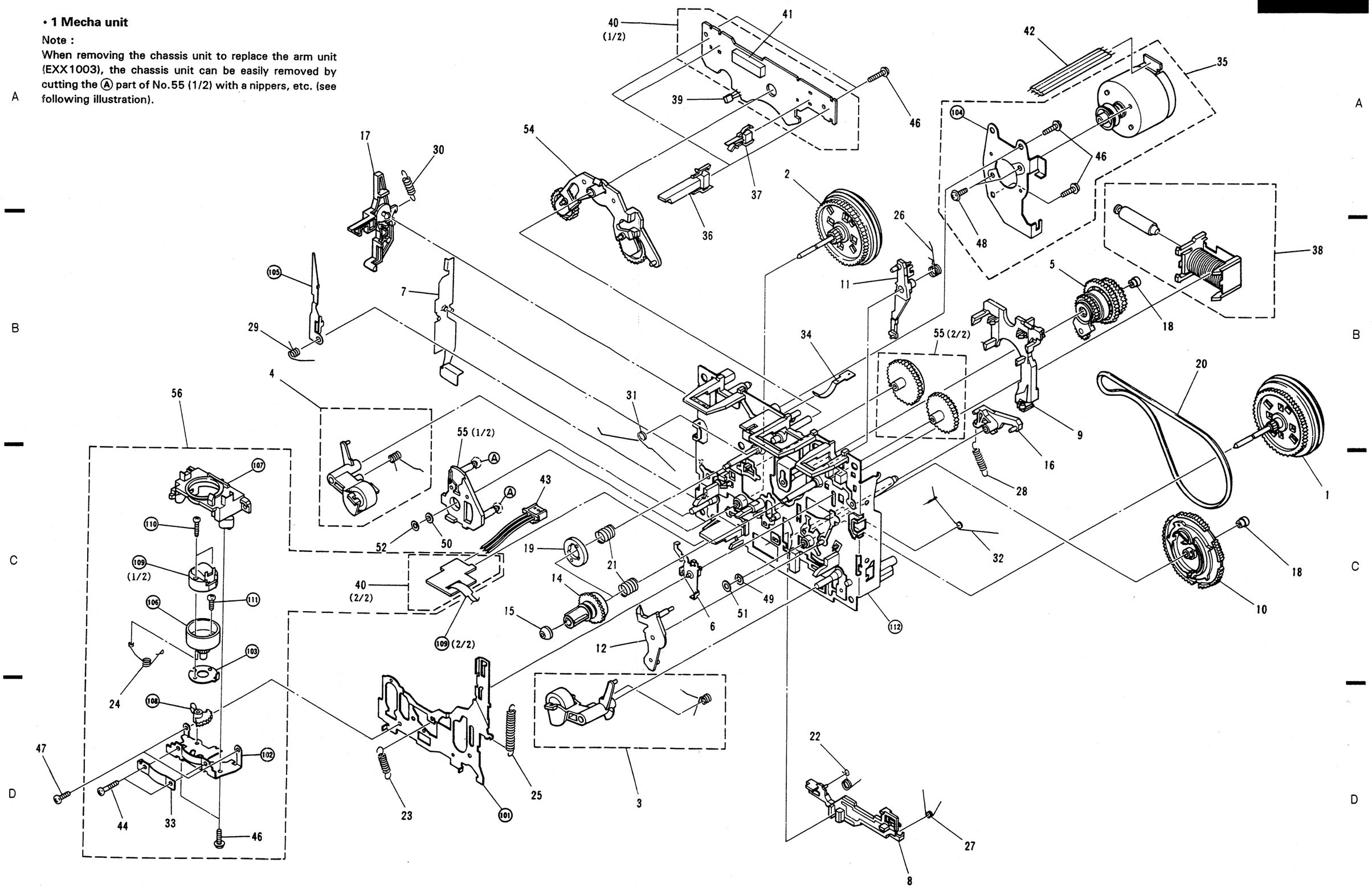

2.3 2 MECHA UNIT (EXK2015)

• Parts list of 2 Mecha unit

Mark	No.	Description	Parts No.
	1	FLYWHEEL UNIT (FWD)	EXA1222
	2	FLYWHEEL UNIT (RVS)	EXA1223
	3	ROLLER UNIT (FWD)	EXA1224
	4	ROLLER UNIT (RVS)	EXA1225
	5	LIMITER UNIT	EXA1226
	6	LEVER UNIT	EXA1227
	7	EJECT LEVER R2	AZN2064
	8	NR LEVER	ENV1155
	9	BRAKE	ENV1317
	10	CAM GEAR	ENV1158
	11	LOCK ARM	ENV1159
	12	NR ARM	ENV1163
	13	.....	
	14	REEL	ENV1335
	15	REEL BUSH	ENV1338
	16	ARM	ENV1330
	17	EJECT LEVER R1	AZN2109
	18	BUSH	ENV1184
	19	MAGNET	ENV1336
	20	BELT	ENT1023
	21	SPRING	EBH1424
	22	SPRING	EBH1401
	23	SPRING	EBH1203
	24	SPRING	EBH1402
	25	SPRING	EBH1405
	26	SPRING	EBH1406
	27	SPRING	EBH1407
	28	SPRING	EBH1408
	29	SPRING	EBH1412
	30	SPRING	EBH1409
	31	SPRING	EBH1410
	32	SPRING	EBH1256
	33	SPRING	EBL1013
	34	SPRING	EBL1014
	35	MOTOR UNIT	EXA1241
	36	SWITCH (Detect)	ESN1003
	37	SWITCH (Mode)	ESN1004
	38	SOLENOID	EXP1005
	39	HALL IC	DN6847SE
	40	COMPLEX PCB	ENX1012
	41	CONNECTOR (15P)	EKS1012
	42	LEAD WIRE (4P)	EDD1003
	43	CONNECTOR (5P)	EDE1008
	44	SCREW (AZIMUTH)	EBA1020
	45	.....	

Mark	No.	Description	Parts No.
	46	SCREW (M2×8)	ATZ20P080FMC
	47	SCREW	BSZ20P050FMC
	48	SCREW	PMS26P025FUC
	49	WASHER	EBF1008
	50	WASHER	EBF1009
	51	WASHER	EBF1010
	52	WASHER	EBF1011
	53	.....	
	54	ARM UNIT	EXX1006
	55	ARM UNIT	EXX1003
	56	R/P HEAD ASSEMBLY	EXX1007
	101	HEAD BASE	ENC1281
	102	BRACKET	ENC1194
	103	PLATE	ENC1285
	104	BRACKET	ENC1199
	105	ARM	ENC1189
	106	HOLDER	ENV1161
	107	HOLDER	ENV1301
	108	GEAR	ENV1177
	109	R/P HEAD UNIT	EXA1109
	110	SCREW	JGZ14P085FNI
	111	SCREW	JGZ14P040FNI
	112	CHASSIS UNIT	.....

• 2 Mecha unit

Note :
When removing the chassis unit to replace the arm unit (EXX1003), the chassis unit can be easily removed by cutting the Ⓐ part of No.55 (1/2) with a nippers, etc. (see following illustration).

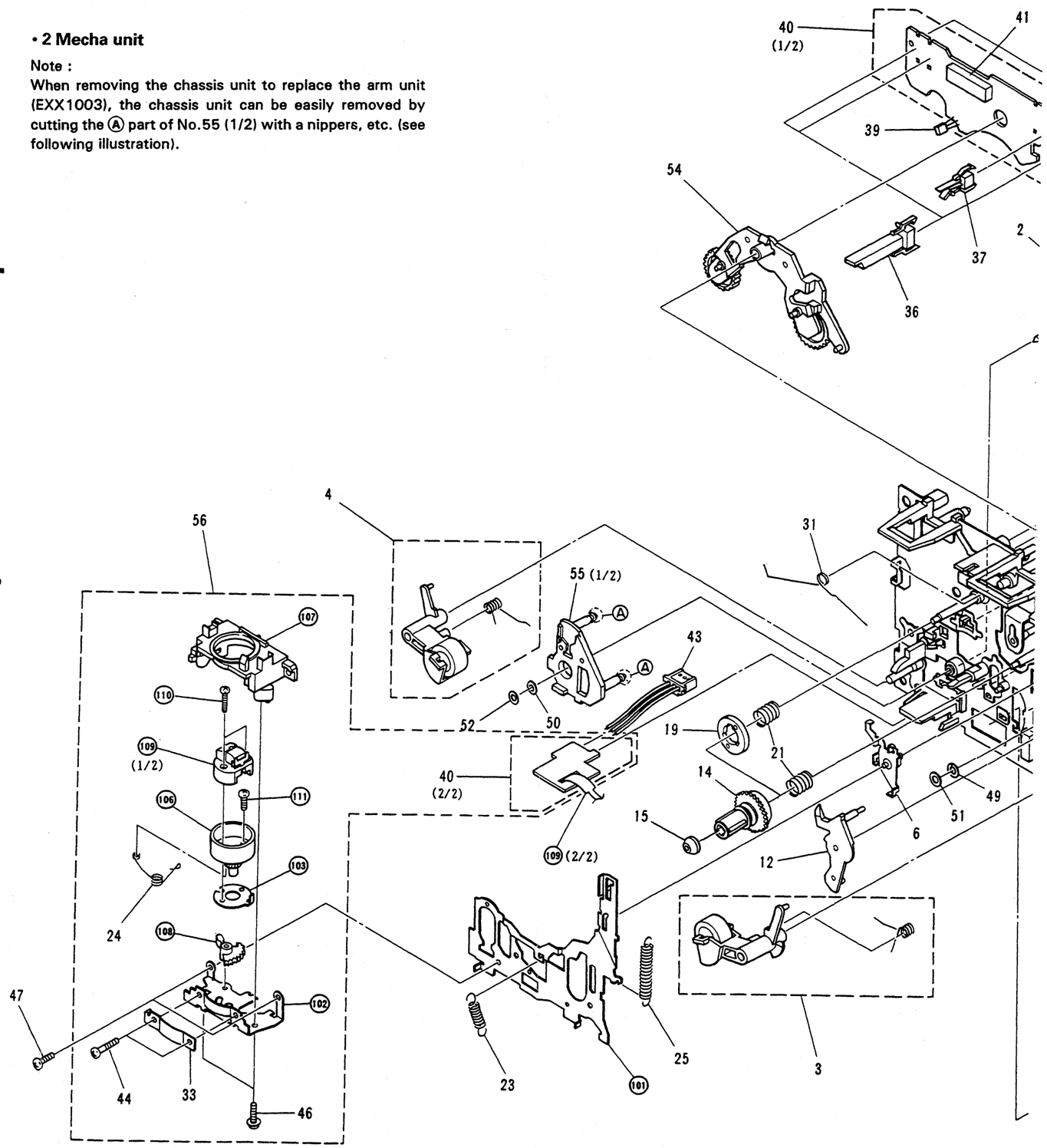

• 2 Mecha unit

Note :
When removing the chassis unit to replace the arm unit (EXX1003), the chassis unit can be easily removed by cutting the Ⓐ part of No.55 (1/2) with a nippers, etc. (see following illustration).

s No.
20P080FMC
20P050FMC
26P025FUC
1008
1009
1010
1011
1006
1003
1007
1281
1194
1285
1199
1189
1161
1301
1177
1109
4P085FNI
4P040FNI
.....

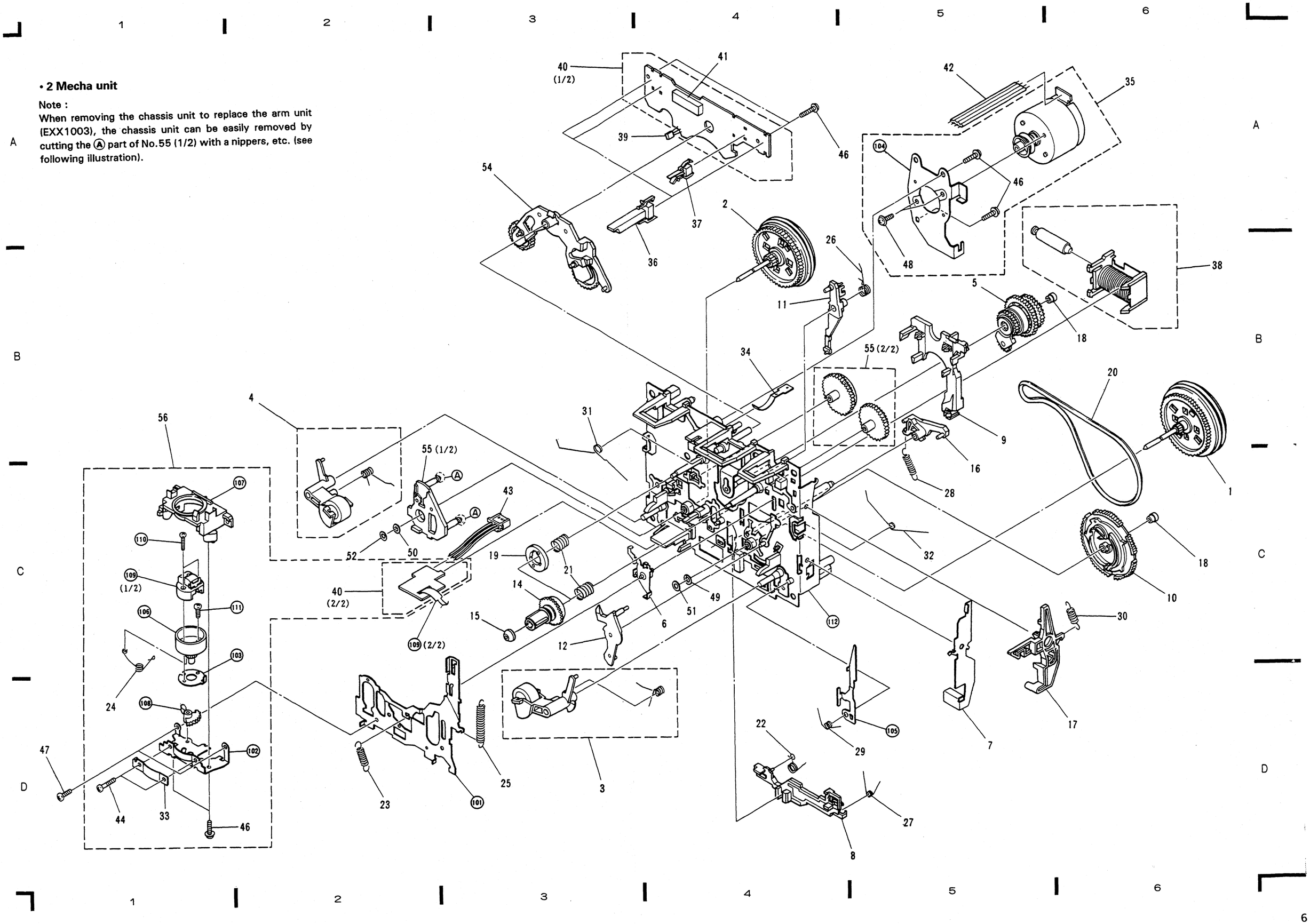

2.4 CD PLAYER SECTION

• Parts List of CD Player Section

Mark	No.	Description	Part No.
	1	Float screw (FE)	PBA1042
	2	Coil spring	PBH1085
	3	Rubber belt	PEB1127
	4	Shaft (FE)	.....
	5	Magnet	.....
	6	Yoke (FE)	.....
	7	Swing lever (FE)	PNB1296
	8	Shield plate (FE)	.....
	9	Clamper S (ABS)	.....
	10	Motor pulley (POM)	PNW1634
	11	Clamper base (ABS)	PNW1673
	12	Rack (ABS)	PNW1674
	13	Sync plate (POM)	PNW1675
	14	Gear A (POM)	PNW1676
	15	Gear B (POM)	PNW1677
	16	Gear pulley (POM)	PNW1678
	17	Sensor head (ABS)	PNW1679
	18	Slide bush (POM)	PNW1680
	19	Loading base (ABS)	.....
	20	Servo mechanism Ass'y	.....
	21	DC motor/0.75W	PXM1010
	22	Screw	BPZ26P080FMC
	23	Screw	IPZ30P080FMC
	24	Lever switch (S601)	DSK1003
◉	25	Main board Ass'y	PWM1556
	26	Screw	BPZ20P080FZK
	27	Screw	JFZ20P025FMC
	28	Ground spring	PBH1009
	29	Drive spring (STEEL)	PBH1084
	30	Plate spring	PBK1057
	31	Belt	PEB1072
	32	Drive screw	PLA1003
	33	Guide bar (STEEL)	PLA1071
	34	Screw	PMZ20P030FMC
	35	Motor base (FE)	.....
	36	Pulley	PNW1066
	37	Half nut (PLASTIC)	PNW1605
	38	Disk table (PC)	PNW1608
	39	Motor pulley (POM)	PNW1634
	40	Pick-up Ass'y	PEA1030
	41	Mechanism base	.....
	42	Spindle DC motor assembly	PEA1028
	43	DC motor/1.7W	PXM1013
	44	Push switch	DSG1014
	45	Floating rubber	PEB1014
	46	Floating rubber	PEB1132
	47	Actuator cover	.....
	48	Connector Ass'y (5P)	.....
	49	Ground lead unit	.....
	50	Connector Ass'y	.....

Mark	No.	Description	Part No.
	51	Semi – fixed VR	PCP1008
	52	Chip capacitor	CKSYF105Z16
	53	Screw	PMZ26P040FMC
	54	Washer	WT26D060D013
	55	Washer	WA62D095D013
	56	Screw	PBZ30P080FMC
	57	Mechanism chassis	.....
	58	Screw	PPZ30P100FMC
	59	Screw	ZMK20H040FBT
	60	Screw	PPZ30P100FMC
	61	Tray	PNW2172

• CD Player Section

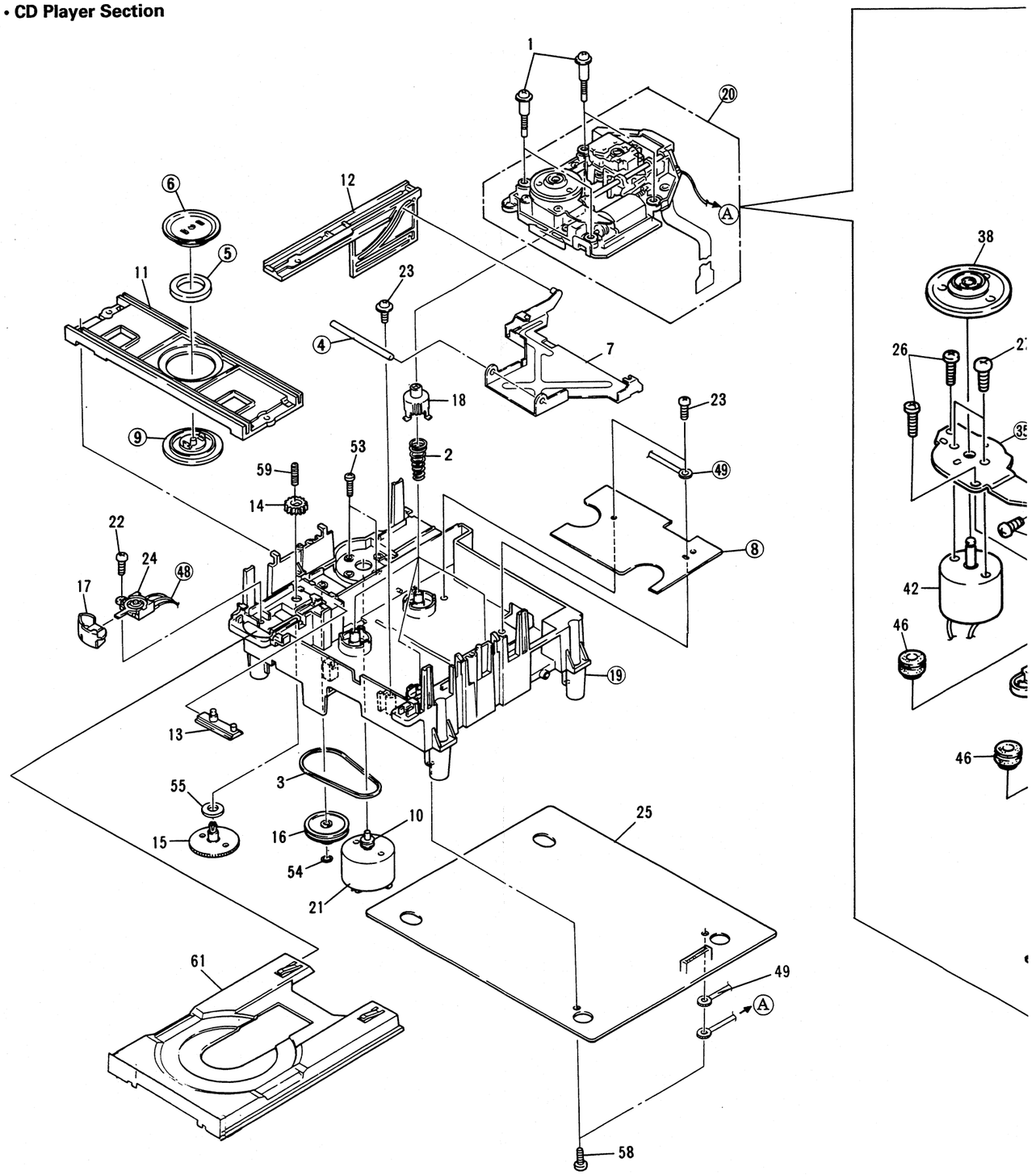

• **CD Player Section**

Part No.
PCP1008
CKSYF105Z16
PMZ26P040FMC
WT26D060D013
WA62D095D013
PBZ30P080FMC
PPZ30P100FMC
ZMK20H040FBT
PPZ30P100FMC
PNW2172

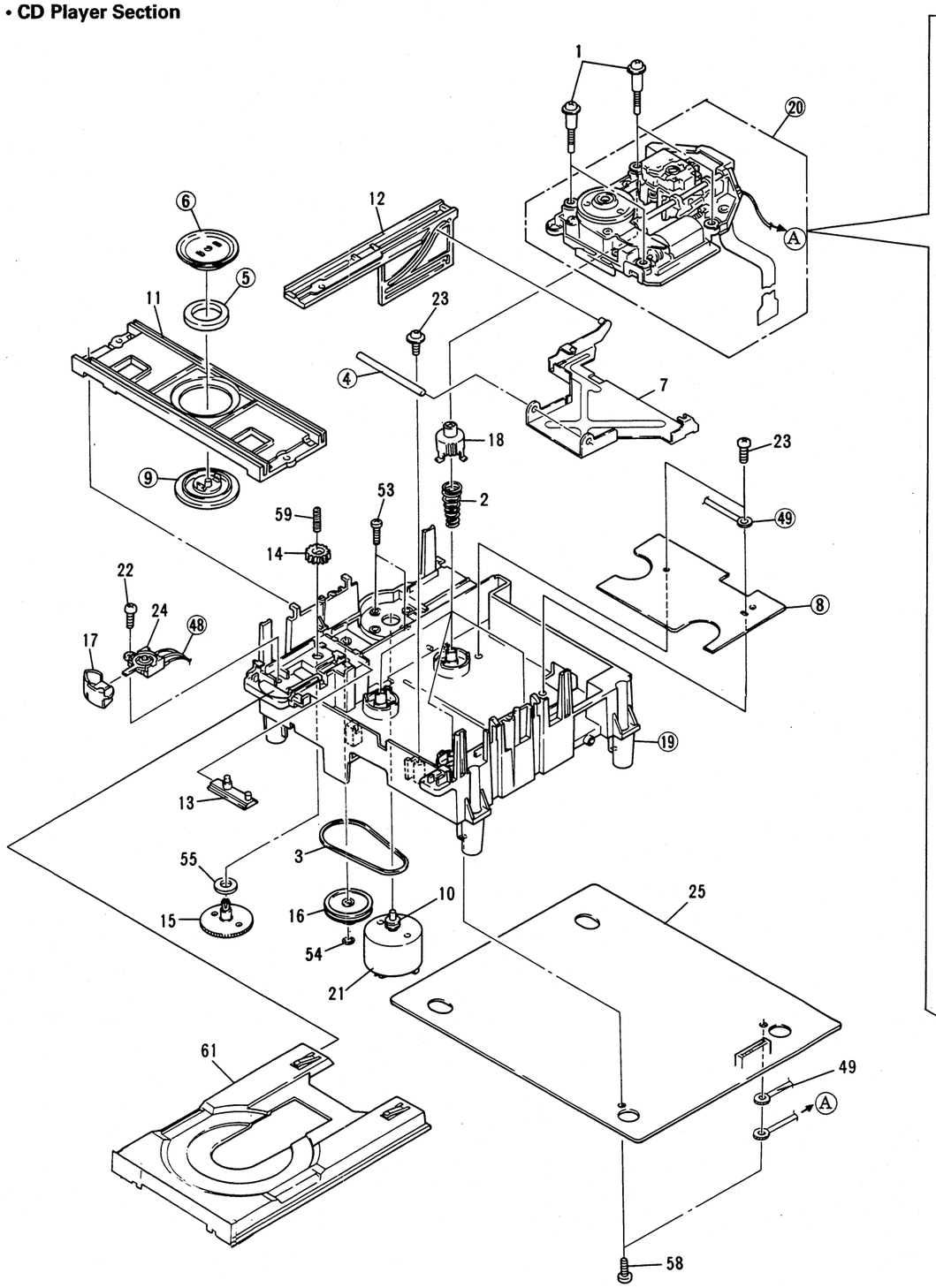

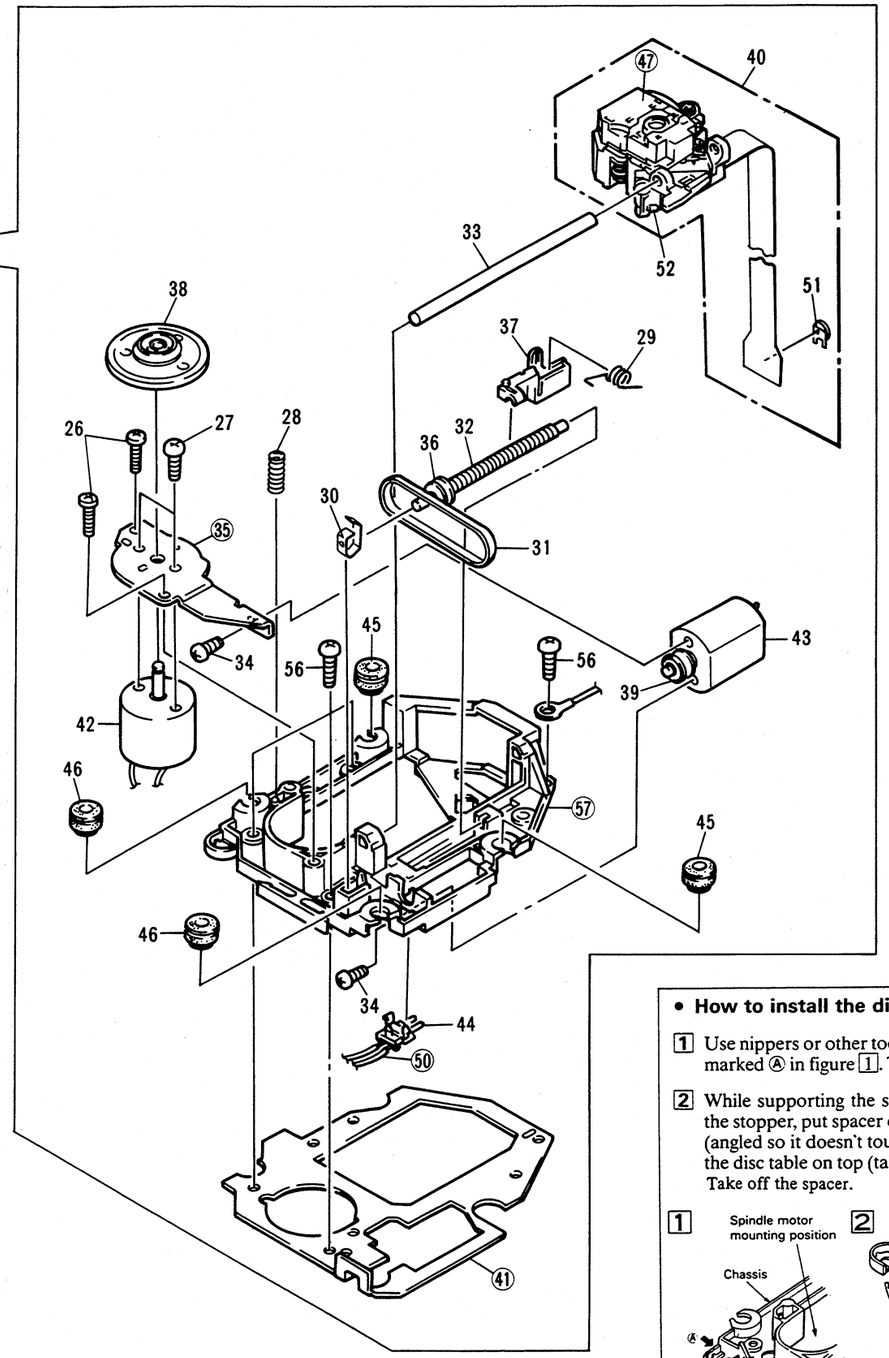

• **How to install the disc table**

1 Use nippers or other tool to cut the two sections marked Ⓐ in figure 1. Then remove the spacer.

2 While supporting the spindle motor shaft with the stopper, put spacer on top of the motor base (angled so it doesn't touch section Ⓑ), and stick the disc table on top (takes about 9kg pressure). Take off the spacer.

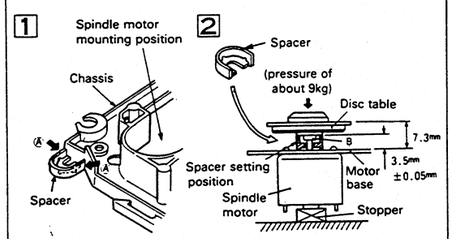

3. SCHEMATIC AND PCB CONNECTIONS DIAGRAMS

3.1 OVERALL WIRING DIAGRAM

1. RESISTORS :
   Indicated in Ω, 1/8W, ±5% tolerance unless otherwise noted
   k ; kΩ, M ; MΩ, (F) ; ±1%, (G) ; ±2%, (K) ; ±10%, (M) ; ±20% tolerance.

2. CAPACITORS :
   Indicated in capacity (μF) /voltage (V) unless otherwise noted
   p ; pF. Indication without voltage is 50V except electrolytic capacitor.

3. VOLTAGE CURRENT :
   V ; Signal voltage at 22W+22W/8Ω output (1kHZ).
   ; DC voltage (V) at no input signal.
   Value in ( ) is DC voltage at rated power.

4. OTHERS
   ▶ (RED) ; Measurement point.
   ➡ : Signal route.
   ⊘ ; Adjusting point.
   The ⚠ mark found on some component parts indicates the importance of the safety factor of the part. Therefore, when replacing, be sure to use parts of identical designation.
   ※ marked capacitors and resistors have parts numbers.

   This is the basic schematic diagram, but the actual circuit may

5. SWITCHS (The underlineed indicates the switch position)

AF-TUNER Ass'y
S301 :BEAT CUT 1-2

DECK SW Ass'y
S1401:DOLBY NR ON-OFF
S1402:DECK2 STOP
S1403:DECK2 FWD
S1404:DECK2 FF
S1405:ASES
S1406:DECK2 REV
S1407:DECK2 REW
S1409:DECK1 STOP
S1410:REC/PAUSE
S1411:DECK1 FF
S1412:DECK1 FWD
S1413:COPY)
S1414:DECK1 REW
S1415:DECK1 REV

TX-CD SW Ass'y
S1201:CLOCK ADJ.
S1202:TIMER SET
S1203:WAKE UP
S1204:REC
S1205:DISPLAY
S1206:AUTO PRE.MEMORY
S1207:AM-NR/FM-MONO
S1208:BAND
S1209:TUNING +
S1210:TUNING -
S1211:FREQ./STATION
S1221:PLAY
S1222:TRACK -
S1223:TRACK +
S1224:OPEN/CLOSE
S1225:STOP
S1226:PAUSE
S1227:PROGRAM
S1228:HI-LITE SCAN
S1229:REPEAT

AMP SW Ass'y
S1301:MEMORY
S1302:START/SET
S1303:MODE
S1304:POWER
S1305:B.G.M./TREBLE EQ
S1306:HALL/S.ST./WIDE
S1307:DISCO./P.BASS EQ
S1308:SFC CLEAR
S1309:CD
S1310:TUNER
S1311:TAPE
S1312:PHONO

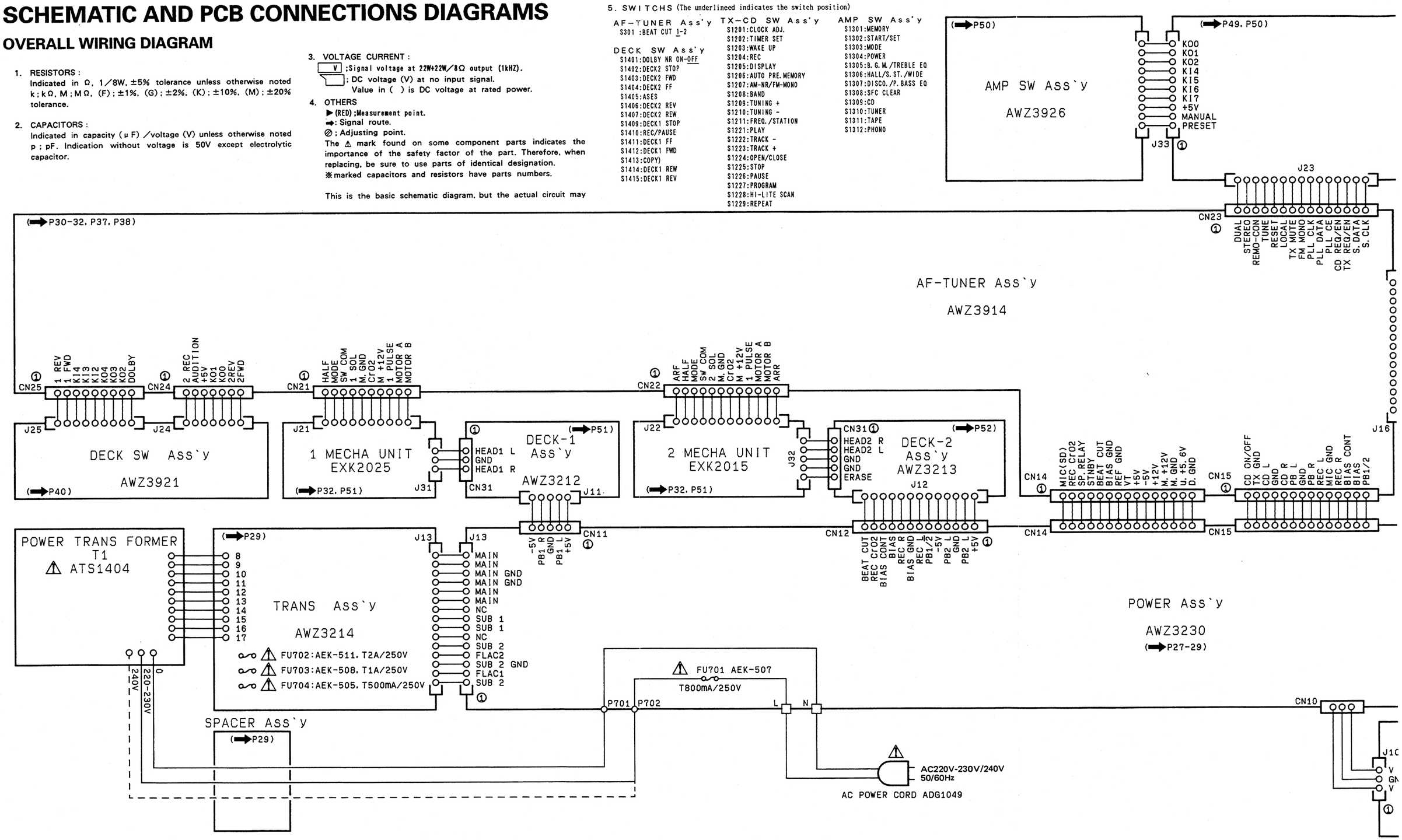

MS

.

ver.

ts indicates the
Therefore, when
signation.
numbers.

ctual circuit may

5. SWITCHS (The underlineed indicates the switch position)

AF-TUNER Ass'y
S301 :BEAT CUT 1-2

DECK SW Ass'y
S1401:DOLBY NR ON-OFF
S1402:DECK2 STOP
S1403:DECK2 FWD
S1404:DECK2 FF
S1405:ASES
S1406:DECK2 REV
S1407:DECK2 REW
S1409:DECK1 STOP
S1410:REC/PAUSE
S1411:DECK1 FF
S1412:DECK1 FWD
S1413:COPY)
S1414:DECK1 REW
S1415:DECK1 REV

TX-CD SW Ass'y
S1201:CLOCK ADJ.
S1202:TIMER SET
S1203:WAKE UP
S1204:REC
S1205:DISPLAY
S1206:AUTO PRE.MEMORY
S1207:AM-NR/FM-MONO
S1208:BAND
S1209:TUNING +
S1210:TUNING -
S1211:FREQ./STATION
S1221:PLAY
S1222:TRACK -
S1223:TRACK +
S1224:OPEN/CLOSE
S1225:STOP
S1226:PAUSE
S1227:PROGRAM
S1228:HI-LITE SCAN
S1229:REPEAT

AMP SW Ass'y
S1301:MEMORY
S1302:START/SET
S1303:MODE
S1304:POWER
S1305:B.G.M./TREBLE EQ
S1306:HALL/S.ST./WIDE
S1307:DISCO./P.BASS EQ
S1308:SFC CLEAR
S1309:CD
S1310:TUNER
S1311:TAPE
S1312:PHONO

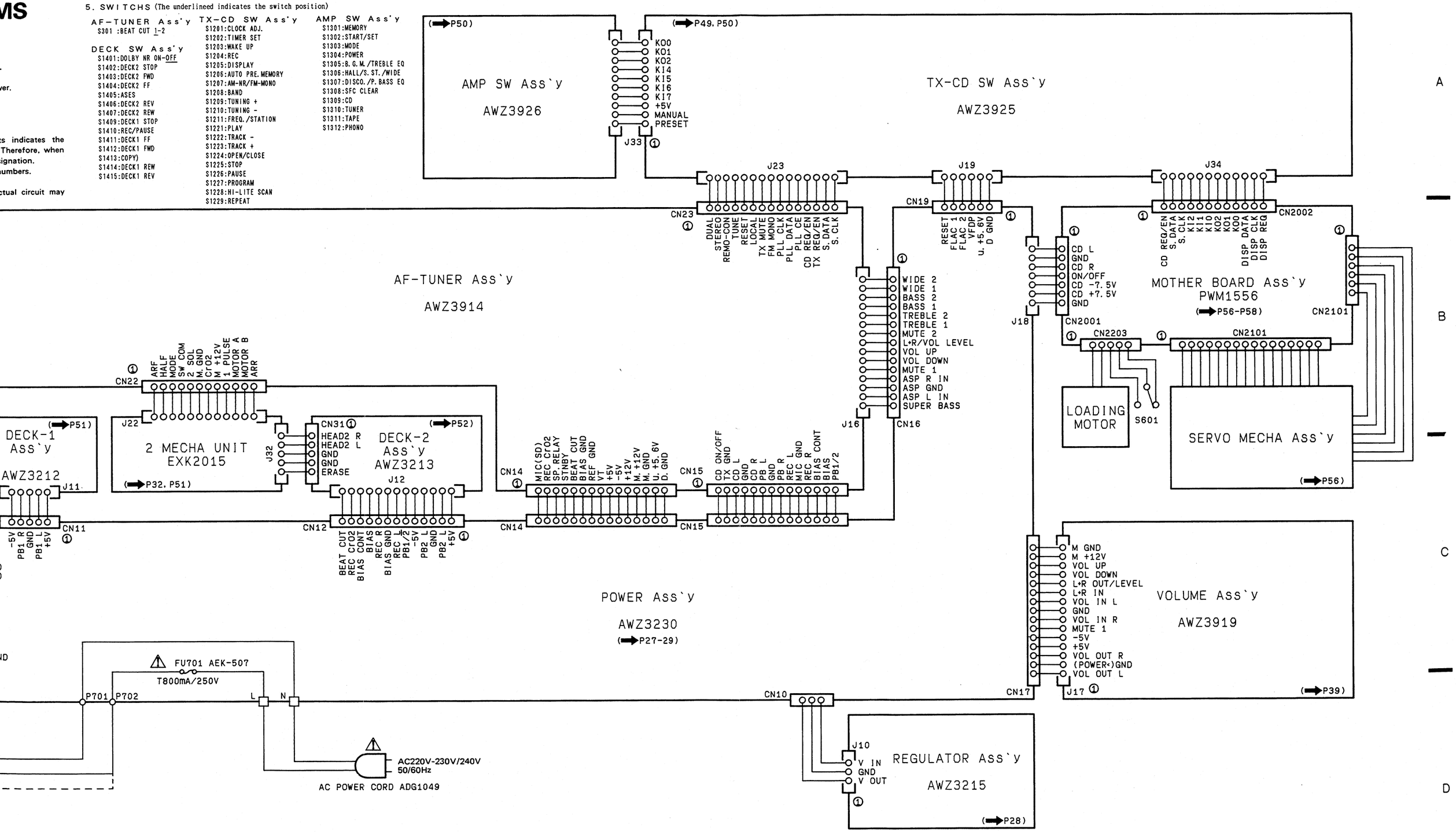

3.2 POWER Ass'y, TRANS Ass'y, REGULATOR Ass'y and SPACER Ass'y

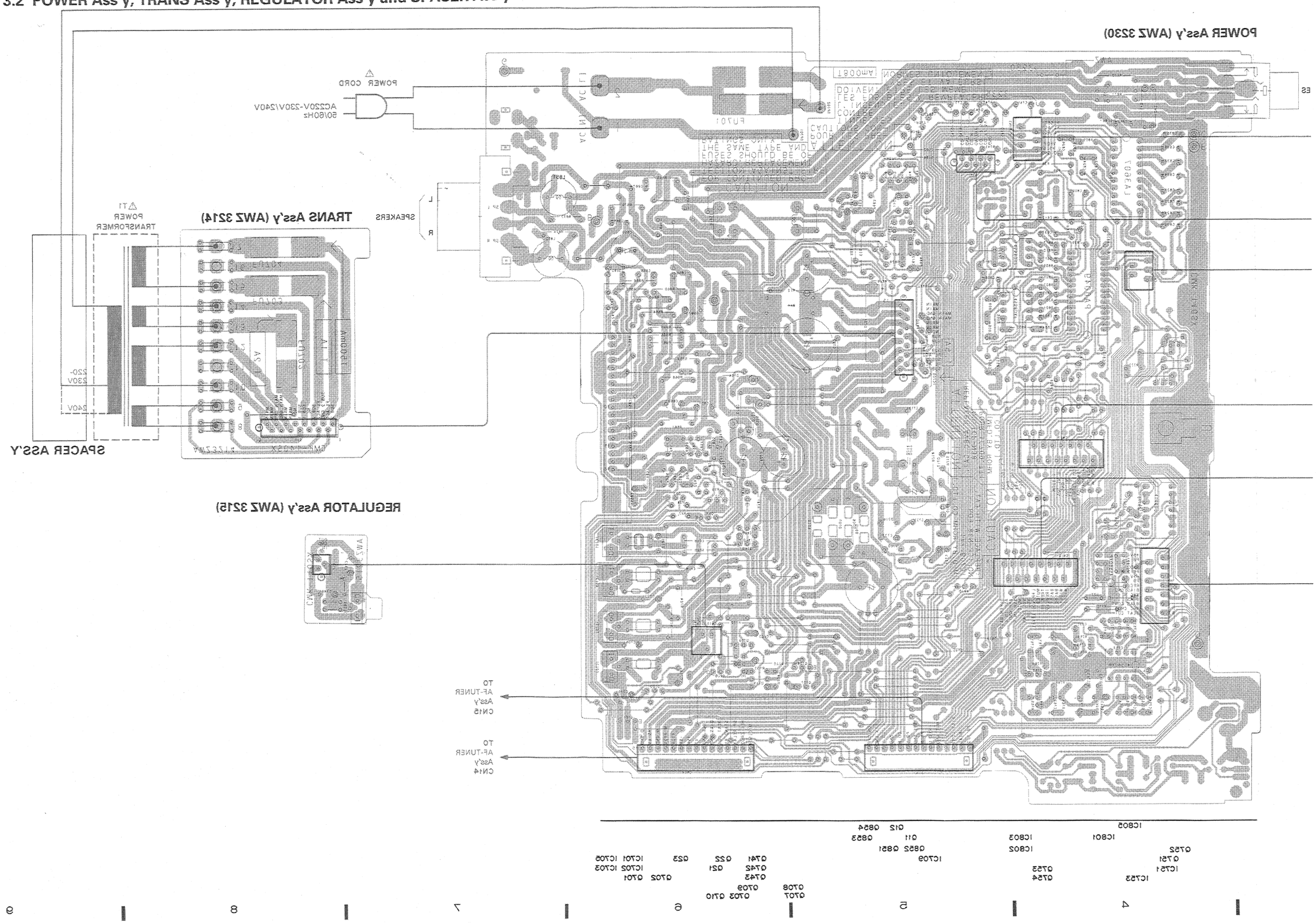

CER Ass'y

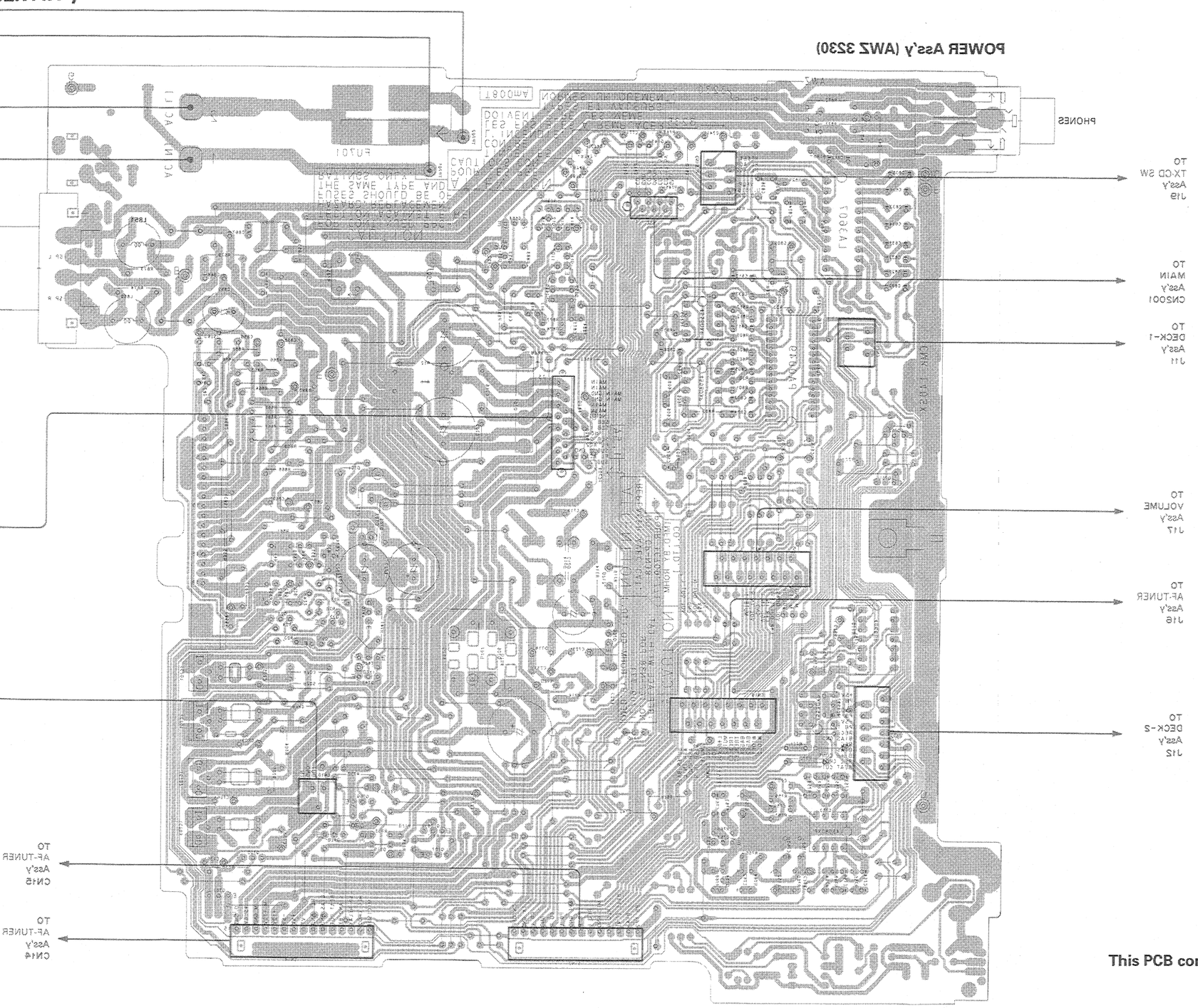

This PCB connection diagram is viewed from the foil side.

NOTE

1. This P.C.B connection diagram is viewed from the parts mounted side.
2. The parts which have been mounted on the board can be replaced with those shown with the corresponding wiring symbols listed in the following Table.

P.C.B. pattern diagram indication	Corresponding part symbol	Part Name
Q504 (E)	E or E	Transistor
Q215	or	Radiator type transistor
D203	D203	Diode
R237	R237	Resistor
C513	+	Capacitor (Polarity)
C518		Capacitor (Non-polarity)

Others

P.C.B. pattern diagram indication	Part Name
IC	IC
S	Switch
RY	Relay
L	Coil
F	Filter
VR	Variable resistor or Semi-fixed resistor

3. The capacitor terminal marked with ◎ (double circles) shows negative terminal.
4. The diode terminal marked with ◎ (double circles) shows cathode side.
5. The transistor terminal to which E is affixed shows the emitter.

POWER Ass'y (AWZ 3230)

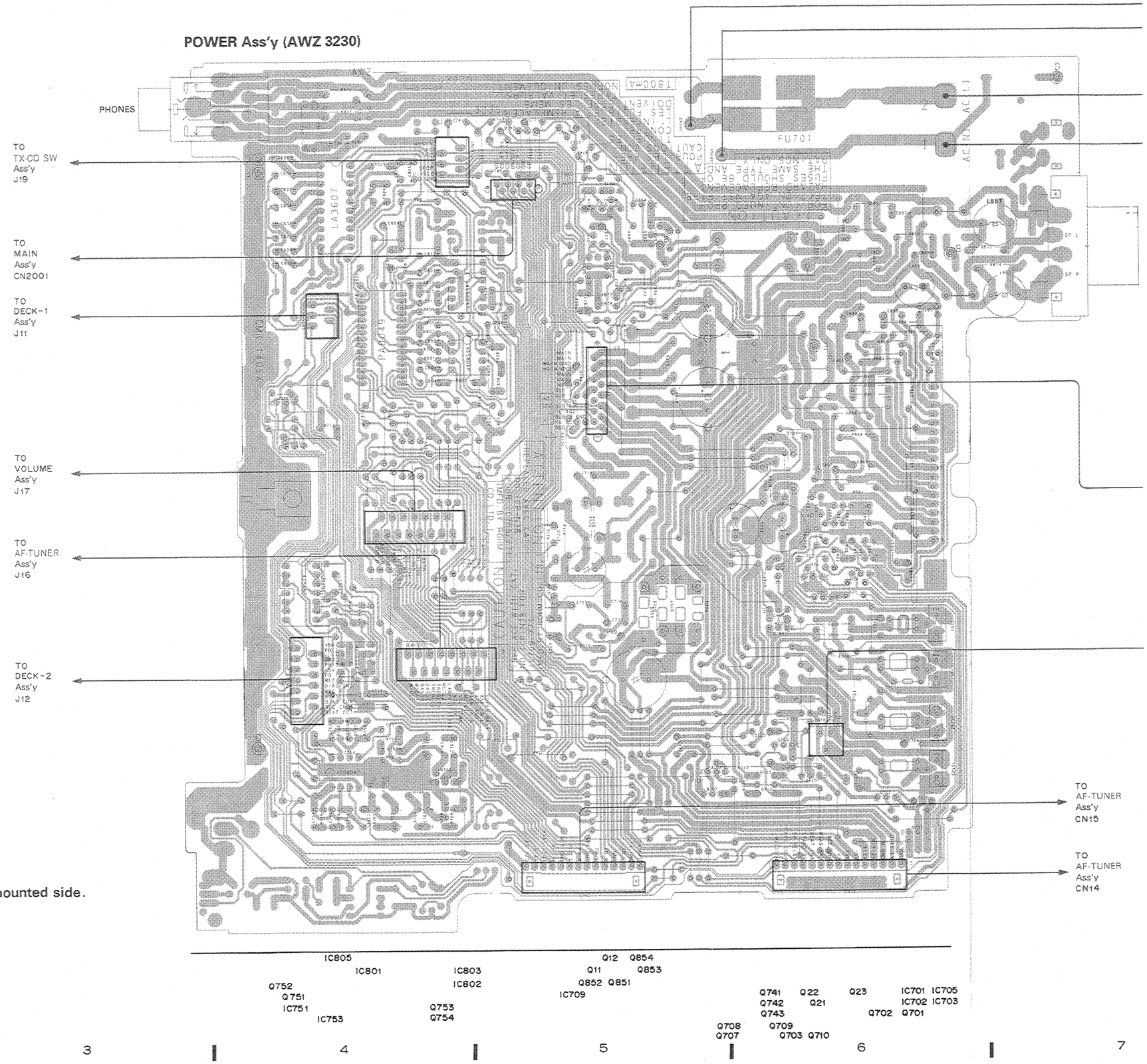

This PCB connection diagram is viewed from the parts mounted side.

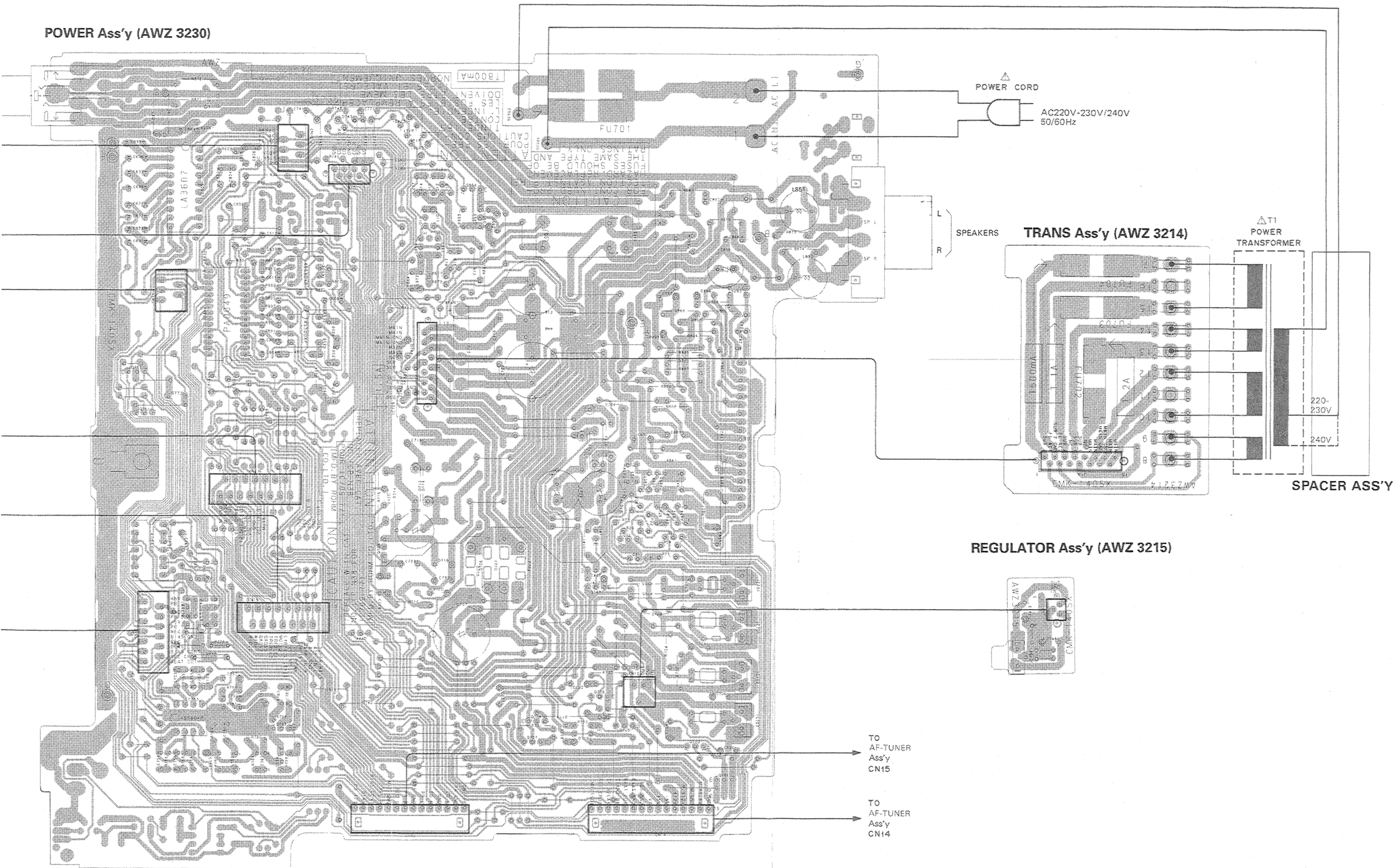

IC805
IC801
IC803
IC802
Q752
Q751
IC751
IC753
Q753
Q754
Q12 Q854
Q11 Q853
Q852 Q851
IC709
Q741 Q22 Q23 IC701 IC705
Q742 Q21 IC702 IC703
Q743 Q702 Q701
Q708
Q707
Q709
Q703 Q710

POWER Ass'y (AWZ3230)

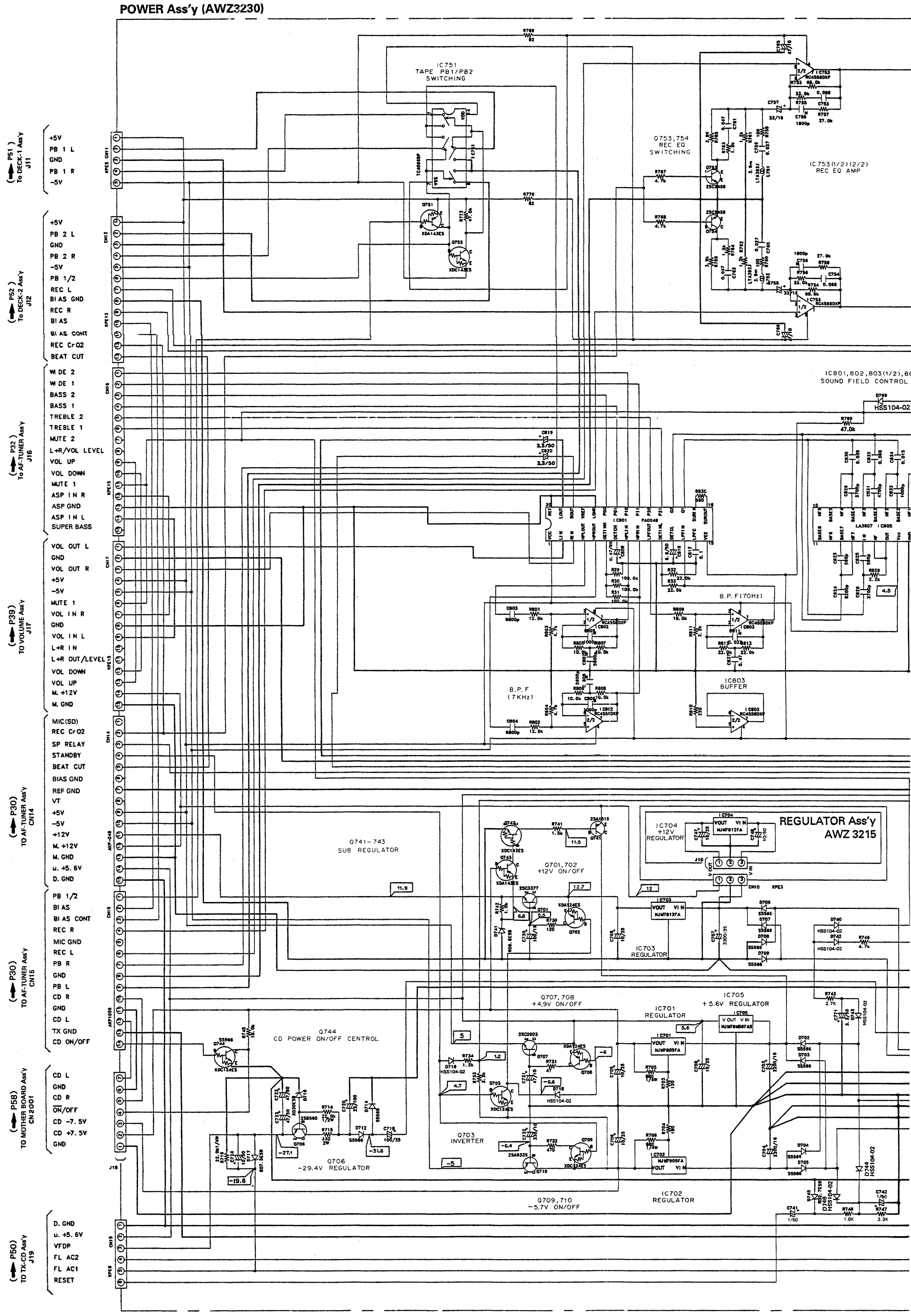

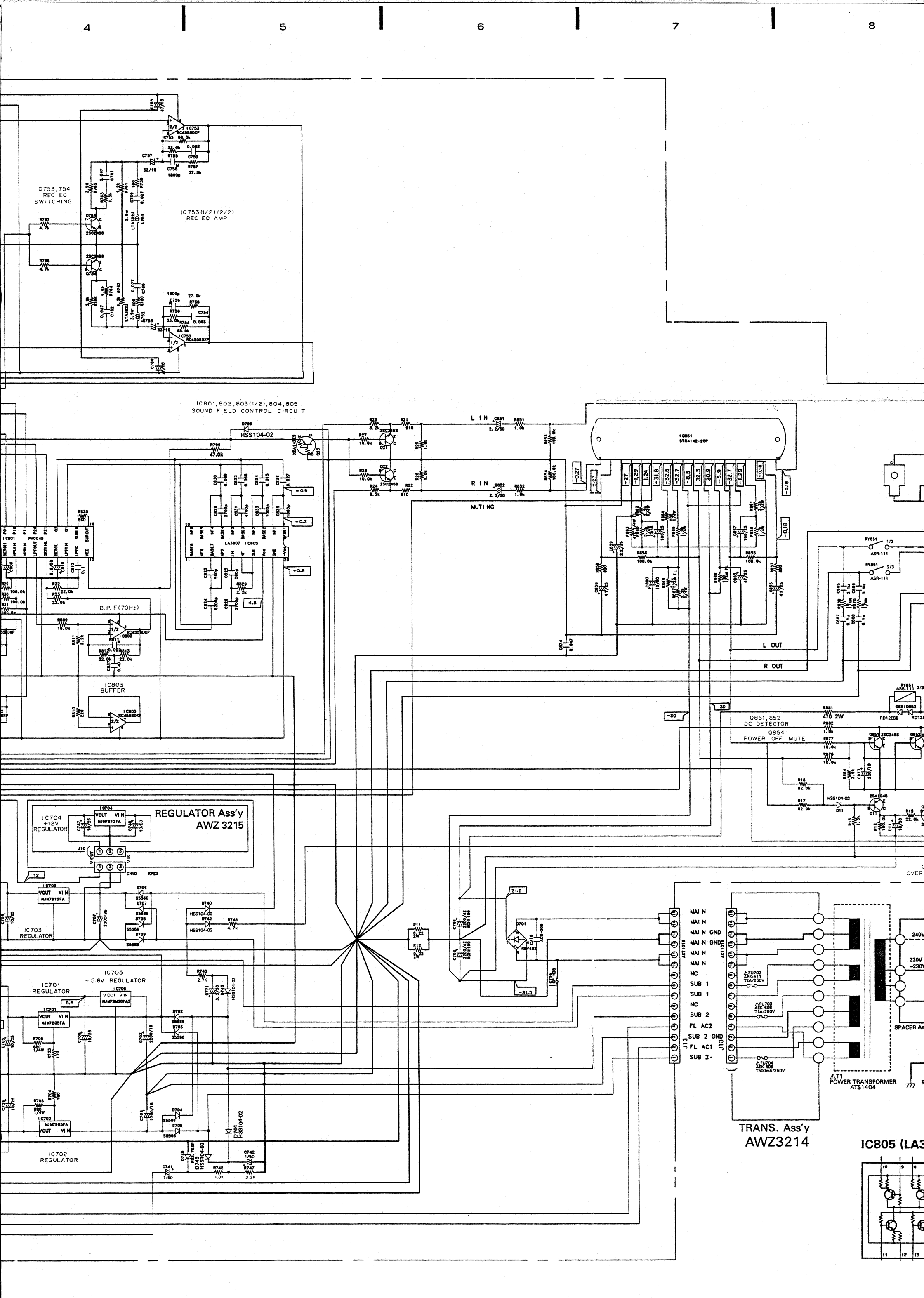
4
5
6
7
8
Q753,754
REC EQ
SWITCHING
IC753(1/2)(2/2)
REC EQ AMP
IC801,802,803(1/2),804,805
SOUND FIELD CONTROL CIRCUIT
HSS104-02
L IN
R IN
MUTING
B.P.F(70Hz)
IC803
BUFFER
L OUT
R OUT
Q851,852
DC DETECTOR
Q854
POWER OFF MUTE
REGULATOR Ass'y
AWZ 3215
IC704
+12V
REGULATOR
IC703
REGULATOR
IC705
+5.6V REGULATOR
IC701
REGULATOR
IC702
REGULATOR
MAIN
MAIN GND
NC
SUB 1
SUB 2
FL AC2
SUB 2 GND
FL AC1
TRANS. Ass'y
AWZ3214
T1
POWER TRANSFORMER
ATS1404
SPACER Ass'y
IC805 (LA3

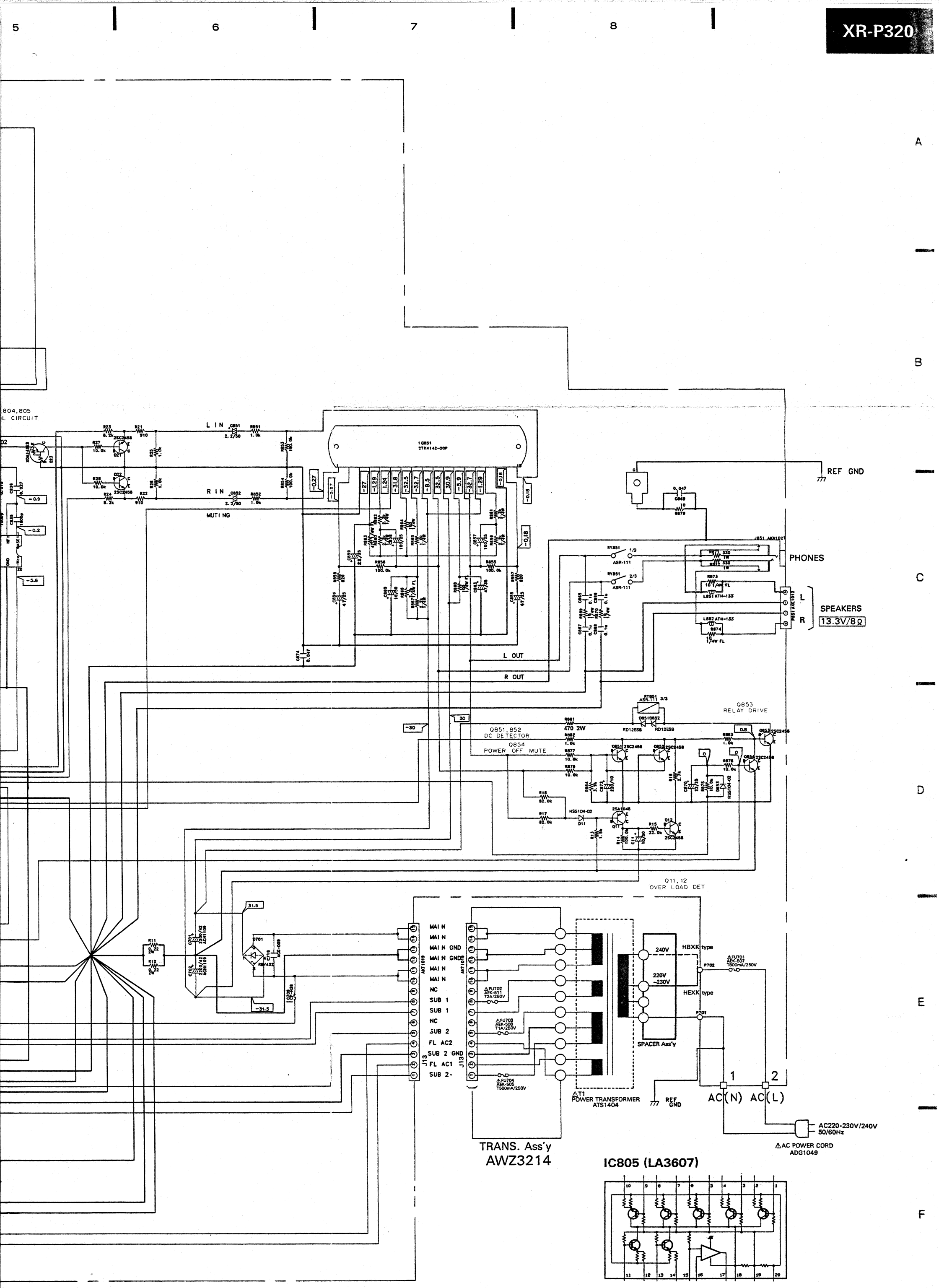
L IN
R IN
MUTING
IC851
STK4142-20P
REF GND
PHONES
SPEAKERS
13.3V/8Ω
L OUT
R OUT
Q853
RELAY DRIVE
Q851,852
DC DETECTOR
Q854
POWER OFF MUTE
Q11,12
OVER LOAD DET
MAIN
MAIN GND
SUB 1
SUB 2
NC
FL AC2
FL AC1
SUB 2 GND
240V
220V
-230V
HBXK type
HEXK type
SPACER Ass'y
POWER TRANSFORMER
ATS1404
REF GND
AC(N)
AC(L)
AC220-230V/240V
50/60Hz
AC POWER CORD
ADG1049
TRANS. Ass'y
AWZ3214
IC805 (LA3607)

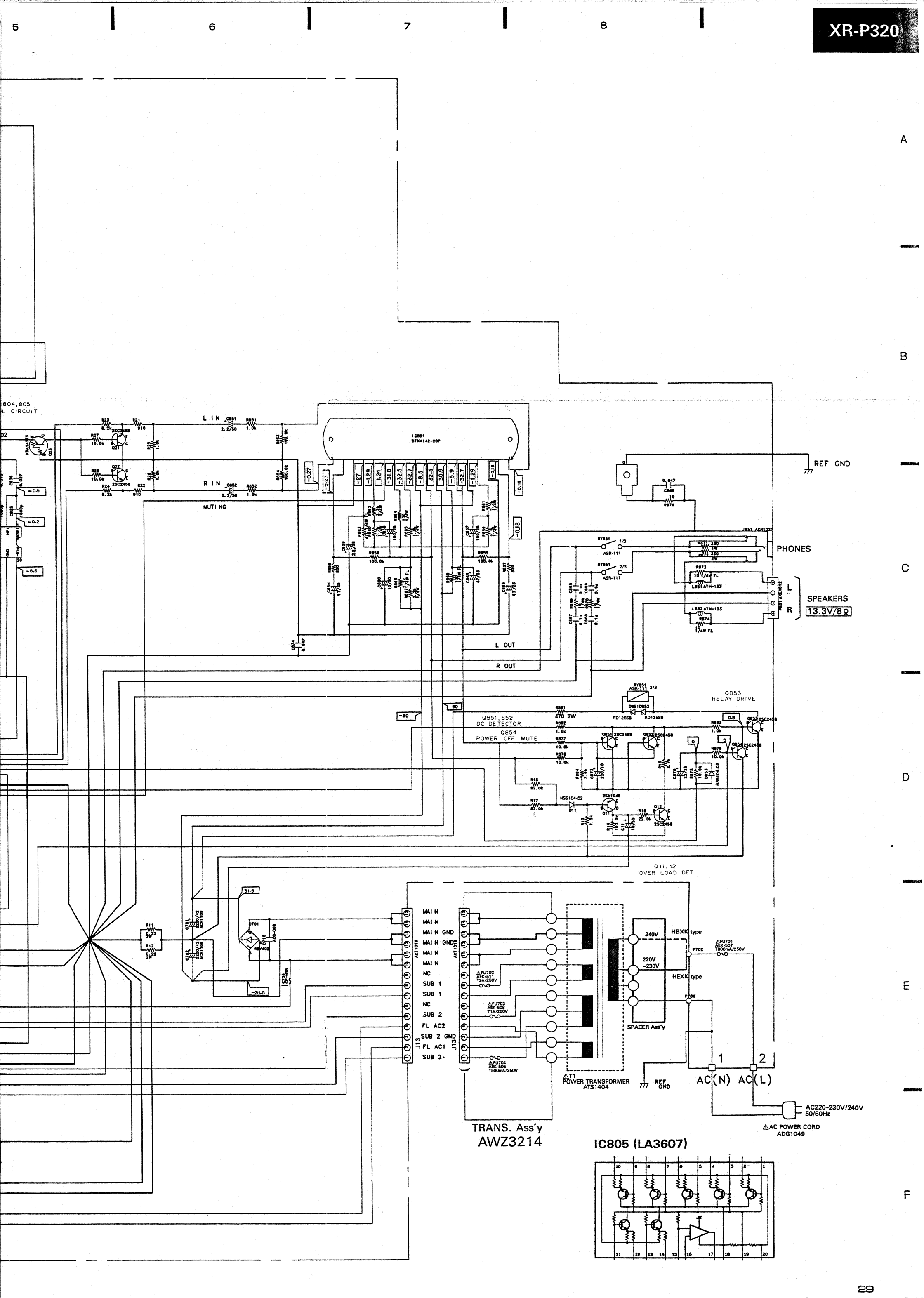
L IN
R IN
MUTING
IC851
STK4142-20P
REF GND
PHONES
SPEAKERS
13.3V/8Ω
L
R
L OUT
R OUT
Q853
RELAY DRIVE
Q851,852
DC DETECTOR
Q854
POWER OFF MUTE
Q11,12
OVER LOAD DET
MAIN
MAIN GND
NC
SUB 1
SUB 2
FL AC2
SUB 2 GND
FL AC1
SUB 2
240V
220V
~230V
HBXK type
HEXK type
SPACER Ass'y
POWER TRANSFORMER
ATS1404
REF GND
AC(N)
AC(L)
AC220-230V/240V
50/60Hz
AC POWER CORD
ADG1049
TRANS. Ass'y
AWZ3214
IC805 (LA3607)

3.3 AF-TUNER Ass'y (1/2), (2/2), 1 MECHA unit (1/2) and 2 MECHA unit (1/2)

AF- TUNER Ass'y (1/2) (AWZ3914)

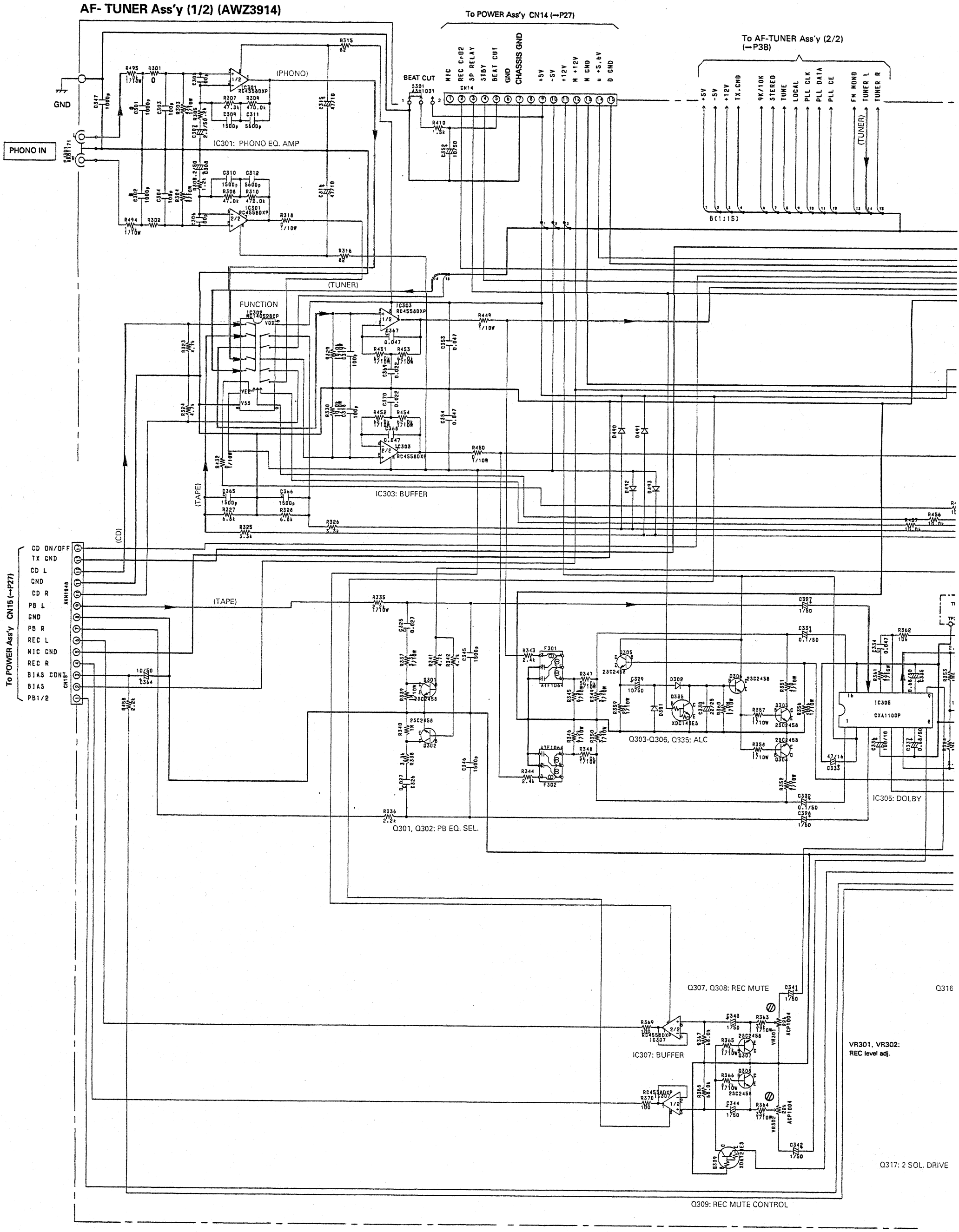

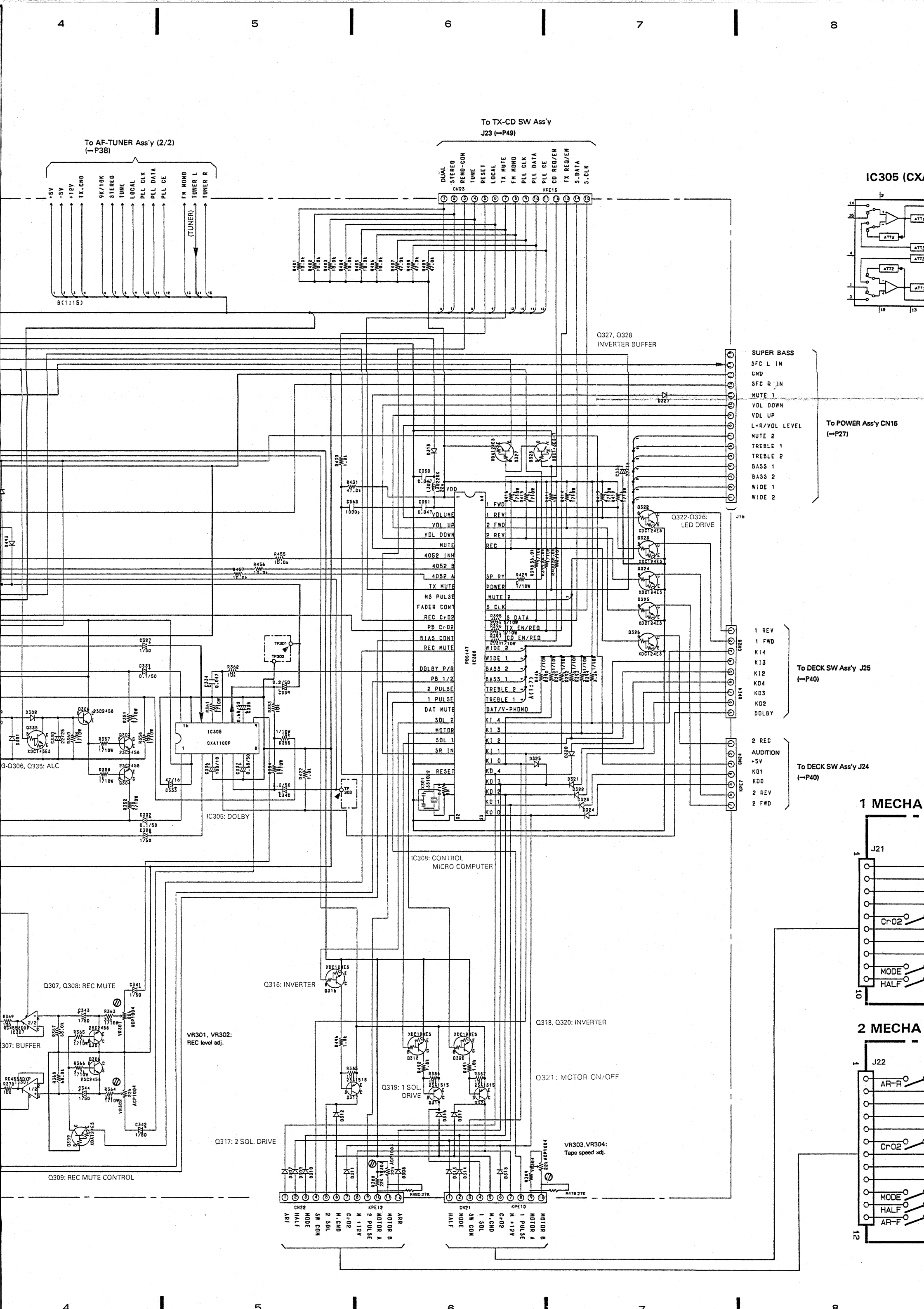
4
5
6
7
8
To AF-TUNER Ass'y (2/2)
(→P38)
+5V
-5V
+12V
TX.GND
9K/10K
STEREO
TUNE
LOCAL
PLL CLK
PLL DATA
PLL CE
FM MONO
TUNER L
TUNER R
(TUNER)
B(1:15)
To TX-CD SW Ass'y
J23 (→P49)
DUAL
STEREO
REMO-CON
TUNE
RESET
LOCAL
TX MUTE
FM MONO
PLL CLK
PLL DATA
PLL CE
CD REQ/EN
TX REQ/EN
S.DATA
S.CLK
CN23
KPE15
IC305 (CXA
Q327, Q328
INVERTER BUFFER
SUPER BASS
SFC L IN
GND
SFC R IN
MUTE 1
VOL DOWN
VOL UP
L+R/VOL LEVEL
MUTE 2
TREBLE 1
TREBLE 2
BASS 1
BASS 2
WIDE 1
WIDE 2
To POWER Ass'y CN16
(→P27)
J16
Q322-Q326:
LED DRIVE
1 REV
1 FWD
K14
K13
K12
KO4
KO3
KO2
DOLBY
To DECK SW Ass'y J25
(→P40)
CN25
KPE9
2 REC
AUDITION
+5V
KO1
KOO
2 REV
2 FWD
To DECK SW Ass'y J24
(→P40)
CN24
KPE7
1 MECHA
J21
Cr02
MODE
HALF
10
2 MECHA
J22
AR-R
Cr02
MODE
HALF
AR-F
12
IC305
CXA1100P
IC305: DOLBY
Q306, Q335: ALC
TP301
TP302
TP303
IC308: CONTROL
MICRO COMPUTER
PD5147
IC308
VDD
VOLUME
VOL UP
VOL DOWN
MUTE
4052 INH
4052 B
4052 A
TX MUTE
MS PULSE
FADER CONT
REC CrO2
PB CrO2
BIAS CONT
REC MUTE
DOLBY P/R
PB 1/2
2 PULSE
1 PULSE
DAT MUTE
SOL 2
MOTOR
SOL 1
SR IN
RESET
1 FWD
1 REV
2 FWD
2 REV
REC
SP RY
POWER
MUTE 2
S CLK
S DATA
TX EN/REQ
CD EN/REQ
WIDE 2
WIDE 1
BASS 2
BASS 1
TREBLE 2
TREBLE 1
DAT/V-PHONO
KI 4
KI 3
KI 2
KI 1
KI 0
KO 4
KO 3
KO 2
KO 1
KO 0
Q307, Q308: REC MUTE
Q307: BUFFER
Q309: REC MUTE CONTROL
VR301, VR302:
REC level adj.
Q316: INVERTER
Q318, Q320: INVERTER
Q319: 1 SOL.
DRIVE
Q321: MOTOR ON/OFF
Q317: 2 SOL. DRIVE
VR303,VR304:
Tape speed adj.
CN22
KPE12
ARF
HALF
MODE
SW COM
2 SOL
M.GND
Cr02
M +12V
2 PULSE
MOTOR A
MOTOR B
ARR
CN21
KPE10
1 SOL
1 PULSE

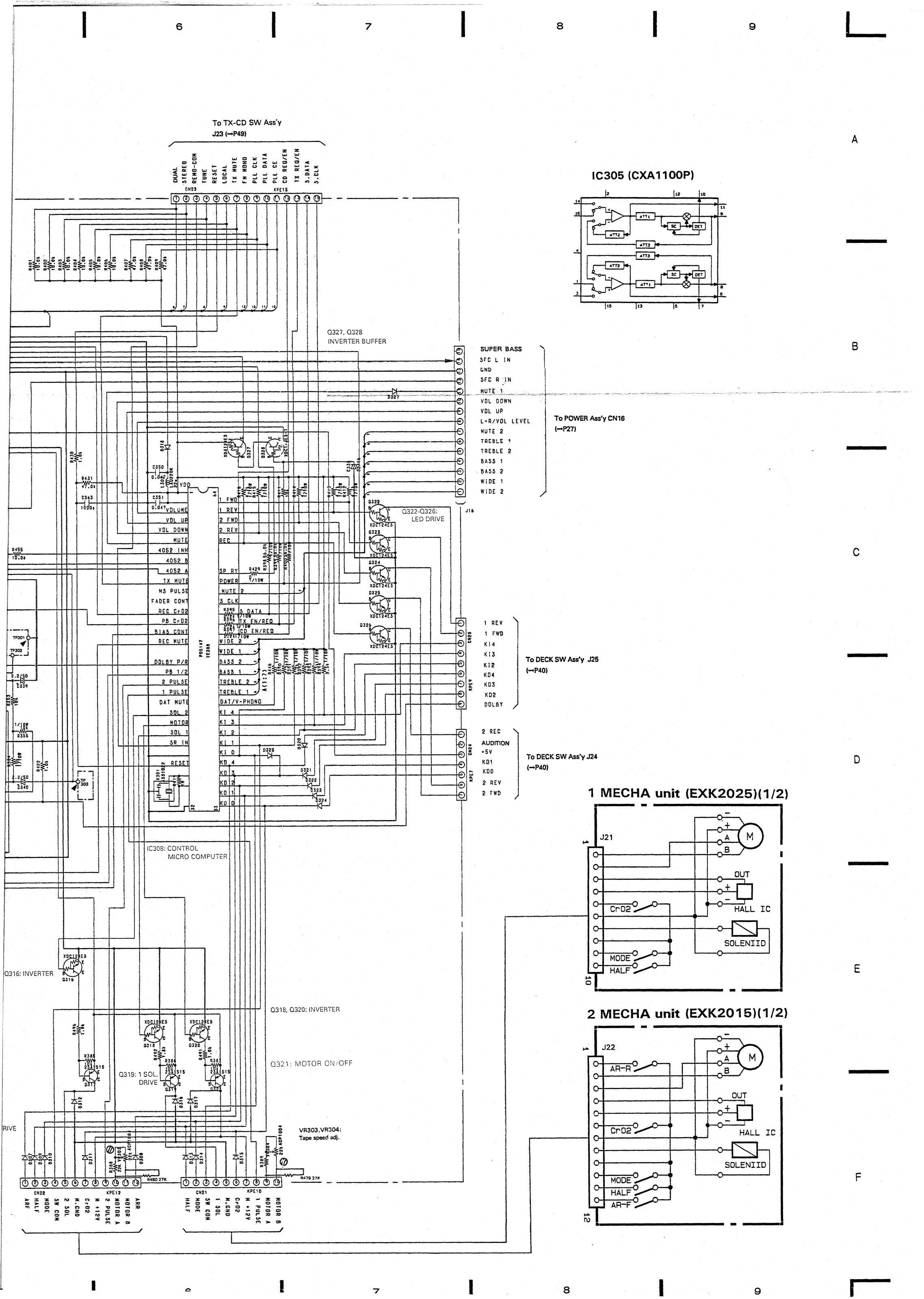
To TX-CD SW Ass'y
J23 (→P49)
DUAL
STEREO
REMO-CON
TUNE
RESET
LOCAL
TX MUTE
FM MONO
PLL CLK
PLL DATA
PLL CE
CD REQ/EN
TX REQ/EN
S.DATA
S.CLK
CN23
KPE15
IC305 (CXA1100P)
ATT1
ATT2
ATT3
SC
DET
Q327, Q328
INVERTER BUFFER
SUPER BASS
SFC L IN
GND
SFC R IN
MUTE 1
VOL DOWN
VOL UP
L+R/VOL LEVEL
MUTE 2
TREBLE 1
TREBLE 2
BASS 1
BASS 2
WIDE 1
WIDE 2
To POWER Ass'y CN16
(→P27)
J16
Q322-Q326:
LED DRIVE
VOLUME
VOL UP
VOL DOWN
MUTE
4052 INH
4052 B
4052 A
TX MUTE
MS PULSE
FADER CONT
REC CrO2
PB CrO2
BIAS CONT
REC MUTE
DOLBY P/R
PB 1/2
2 PULSE
1 PULSE
DAT MUTE
SOL 2
MOTOR
SOL 1
SR IN
RESET
1 FWD
1 REV
2 FWD
2 REV
REC
SP RY
POWER
MUTE 2
S CLK
S DATA
TX EN/REQ
CD EN/REQ
WIDE 2
WIDE 1
BASS 2
BASS 1
TREBLE 2
TREBLE 1
DAT/V-PHONO
KI 4
KI 3
KI 2
KI 1
KI 0
KO 4
KO 3
KO 2
KO 1
KO 0
PD5147
IC308
1 REV
1 FWD
KI4
KI3
KI2
KO4
KO3
KO2
DOLBY
CN25
KPE9
To DECK SW Ass'y J25
(→P40)
2 REC
AUDITION
+5V
KO1
KO0
2 REV
2 FWD
CN24
KPE7
To DECK SW Ass'y J24
(→P40)
IC308: CONTROL
MICRO COMPUTER
Q316: INVERTER
Q318, Q320: INVERTER
Q319: 1 SOL.
DRIVE
Q321: MOTOR ON/OFF
VR303,VR304:
Tape speed adj.
CN22
KPE12
ARF
HALF
MODE
SW COM
2 SOL
M.GND
CrO2
M +12V
2 PULSE
MOTOR A
MOTOR B
ARR
CN21
KPE10
HALF
MODE
SW COM
1 SOL
M.GND
CrO2
M +12V
1 PULSE
MOTOR A
MOTOR B
1 MECHA unit (EXK2025)(1/2)
J21
M
A
B
OUT
HALL IC
CrO2
SOLENIID
MODE
HALF
2 MECHA unit (EXK2015)(1/2)
J22
AR-R
AR-F

This PCB connection diagram is viewed from the parts mounted side.

AF-TUNER Ass'y (AWZ 3914)

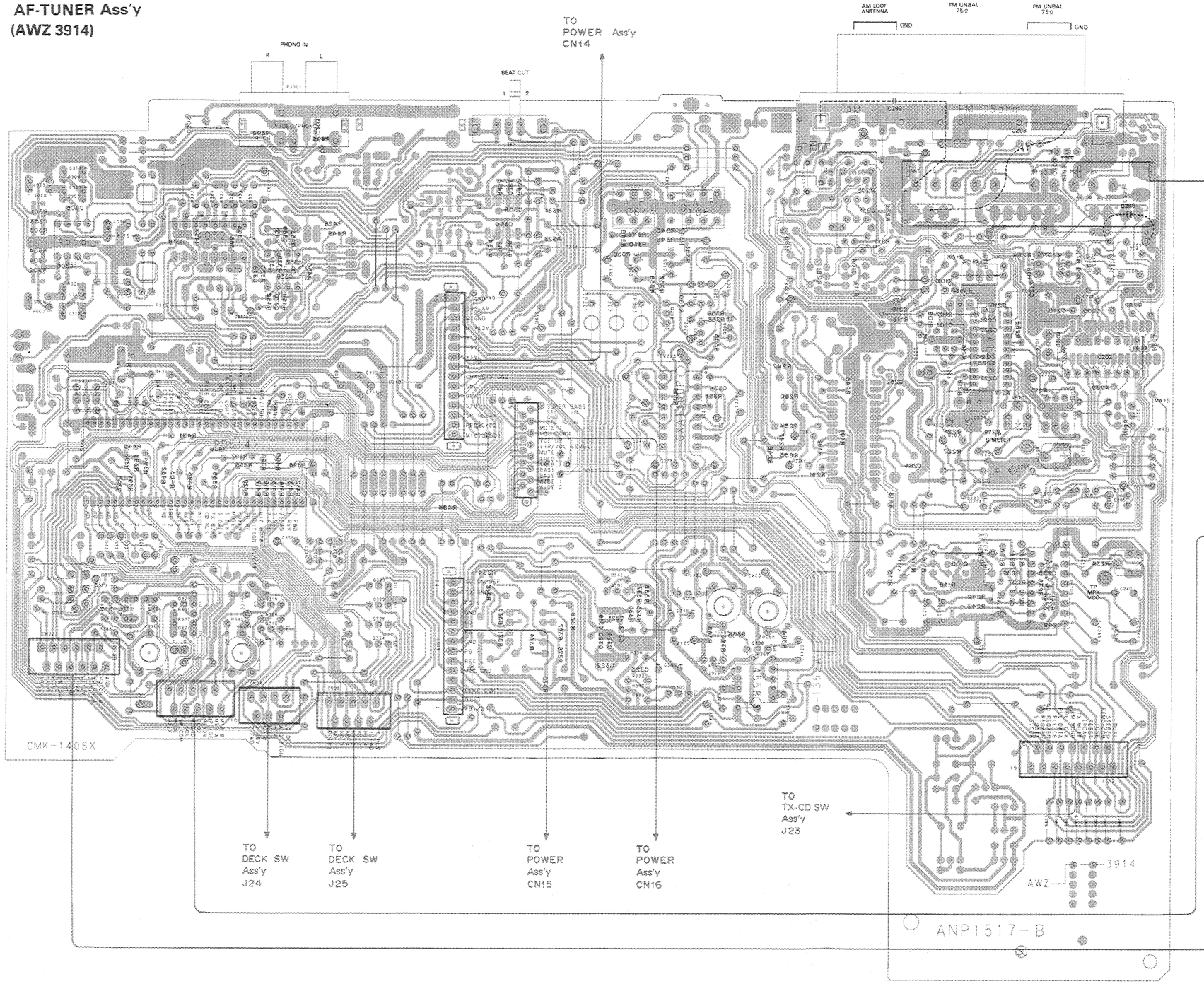

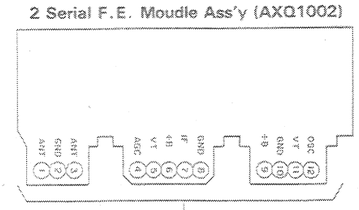

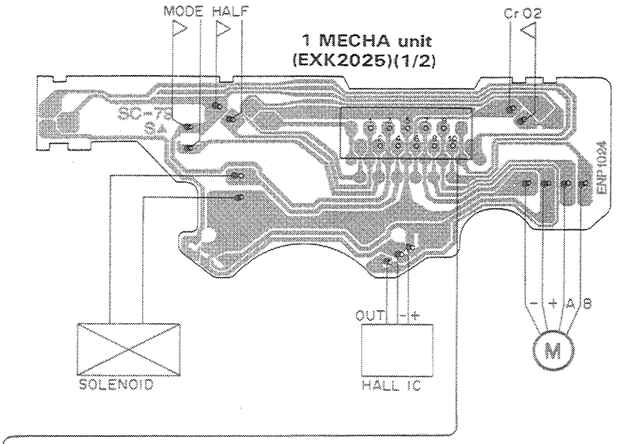

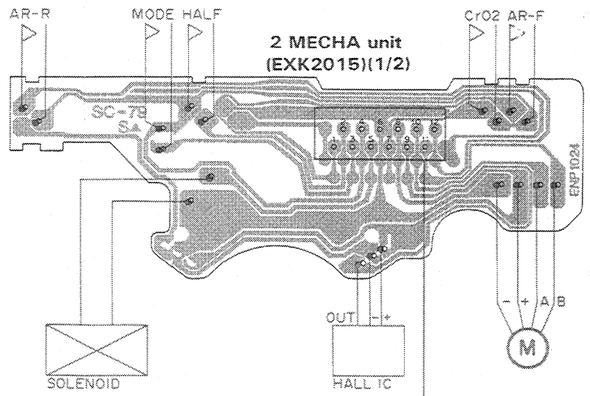

VR303 VR304 VR301 VR302 VR202 VR201 VR203

IC302 IC303 Q334 IC310 IC309 Q304 Q303 Q306 Q335 Q305 IC305 Q309 Q301 Q302 Q307 Q308 IC307 Q102 Q103 Q101 IC201 Q205 Q204 Q206 IC202 Q105 Q106 Q208

IC308 Q317 Q316 Q320 Q321 Q319 Q318 Q328 Q327 Q323 Q322 Q325 Q324

This PCB connection diagram is viewed from the foil side.

AF-TUNER Ass'y (AWZ 3914)

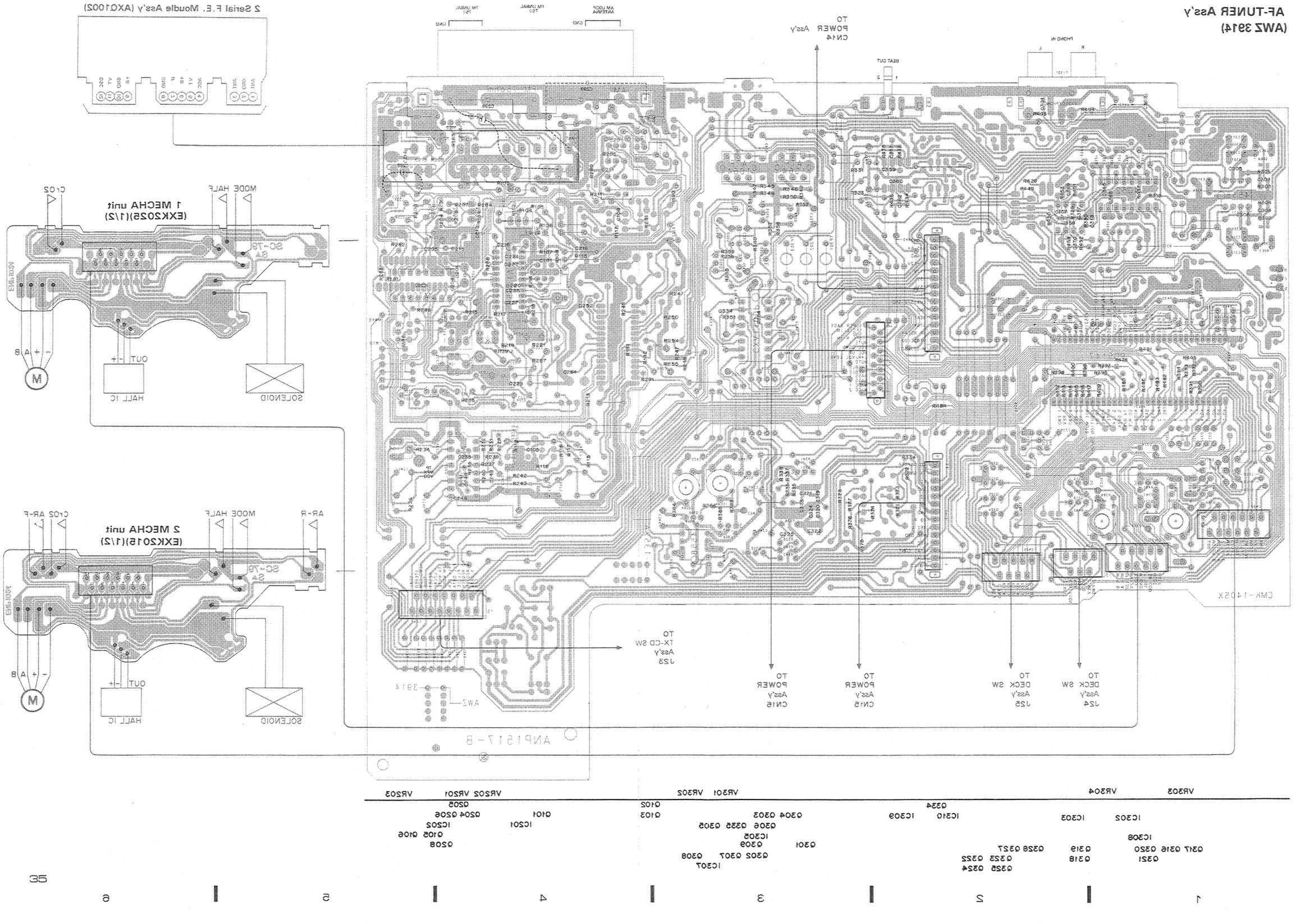

This PCB connection diagram is viewed from the parts mounted side.

VOLUME Ass'y (AWZ 3919)

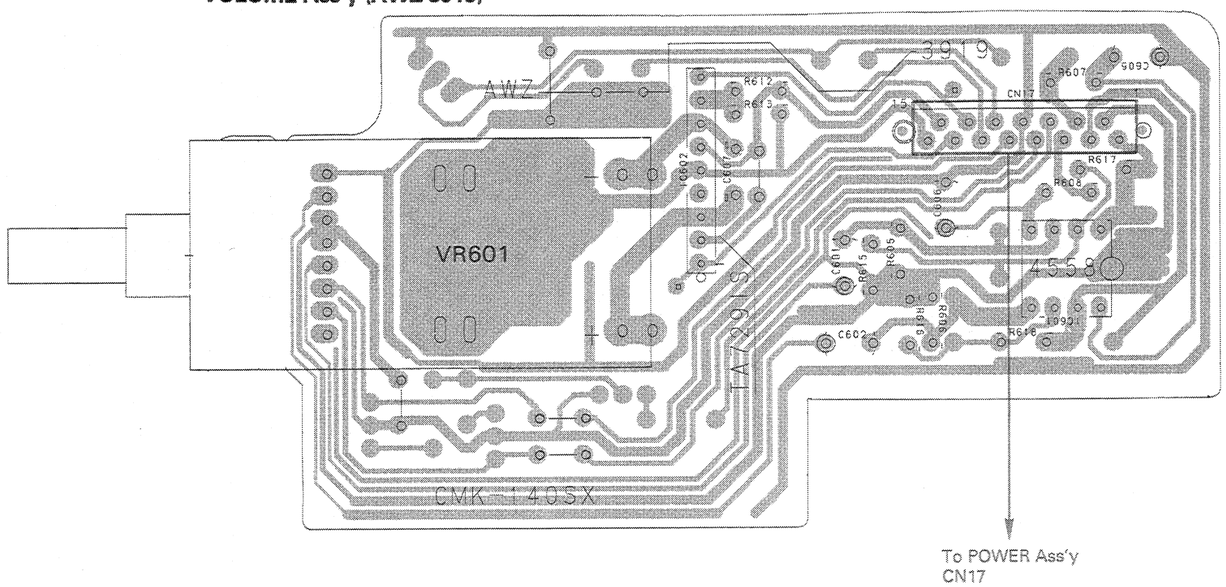

DECK SW Ass'y (AWZ3921)

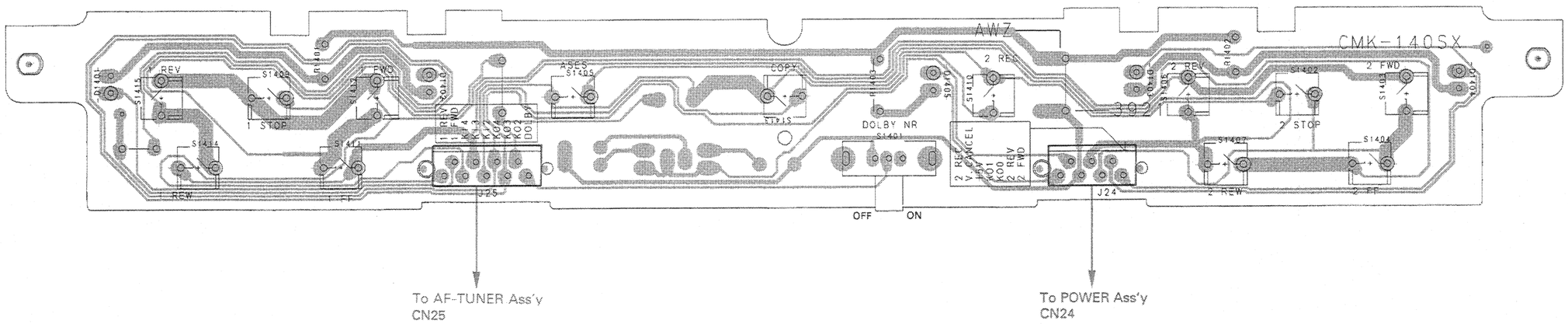

This PCB connection diagram is viewed from the foil side.

VOLUME Ass'y (AWZ 3919)

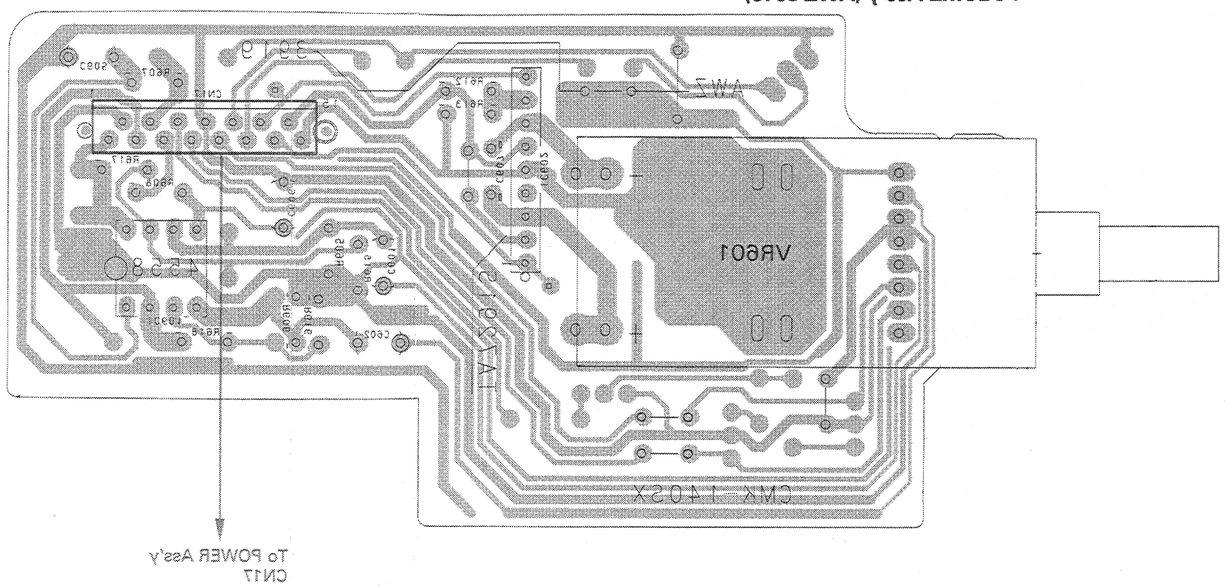

DECK SW Ass'y (AWZ3921)

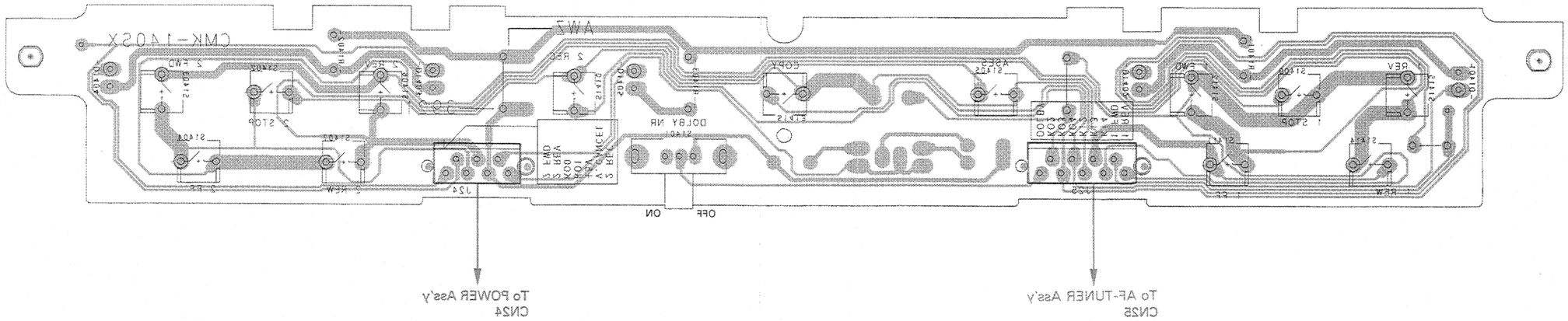

3.5 TX-CD SW Ass'y and AMP SW Ass'y

This PCB connection diagram is viewed from the foil side.

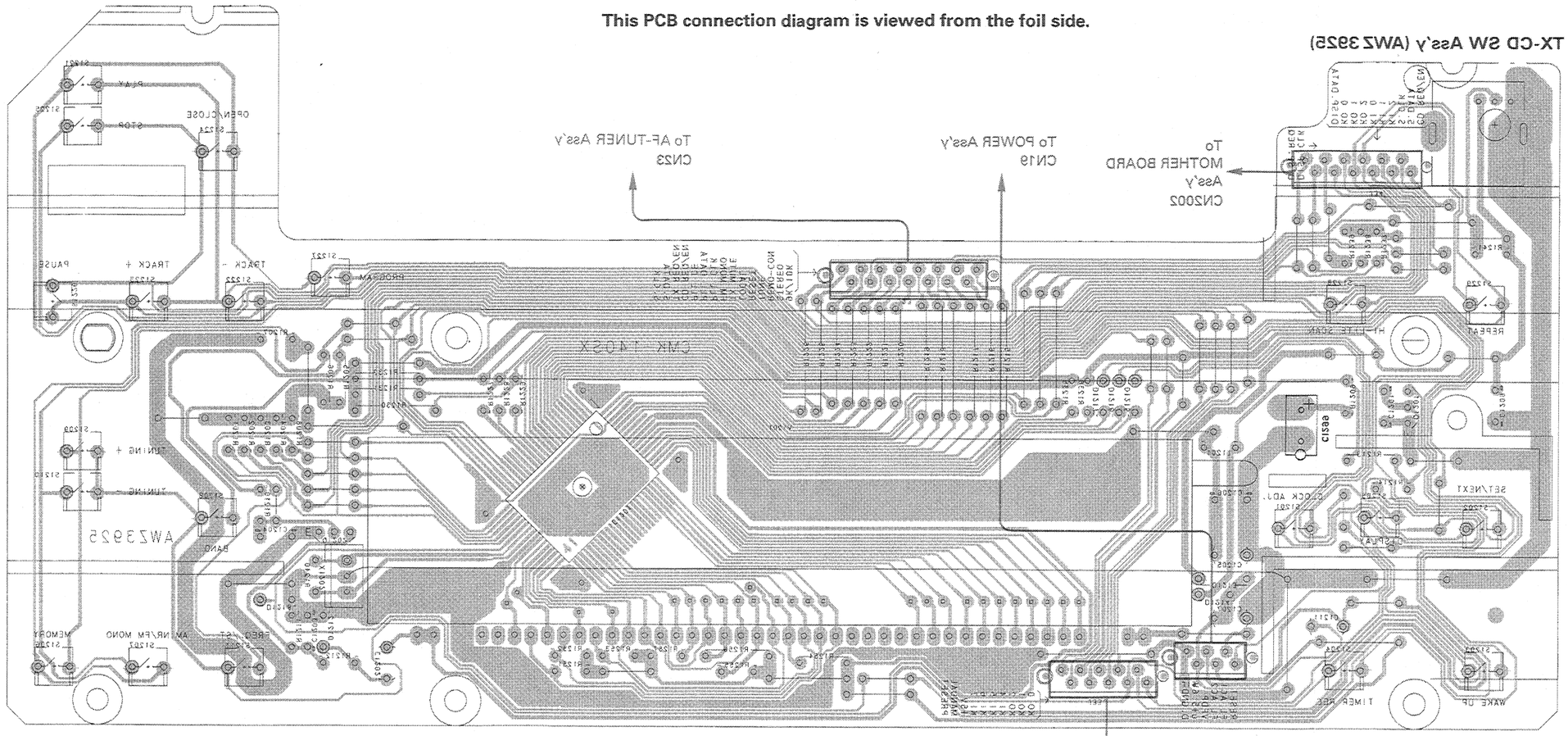

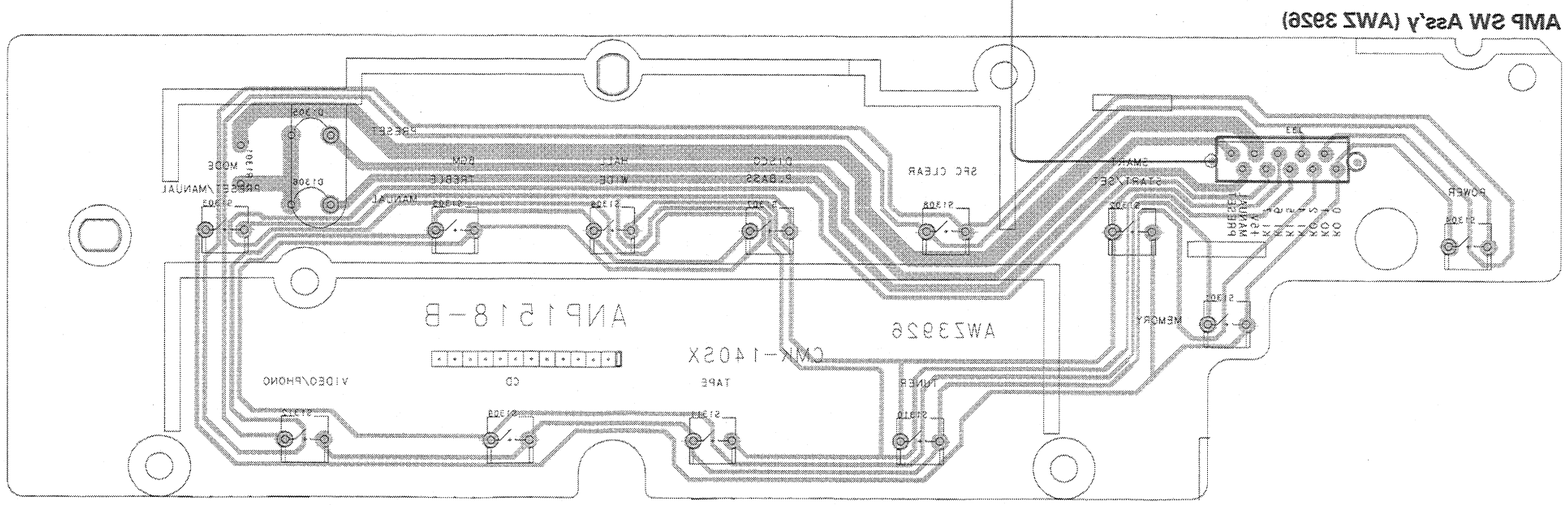

This PCB connection diagram is viewed from the parts mounted side.

TX-CD SW Ass'y (AWZ 3925)

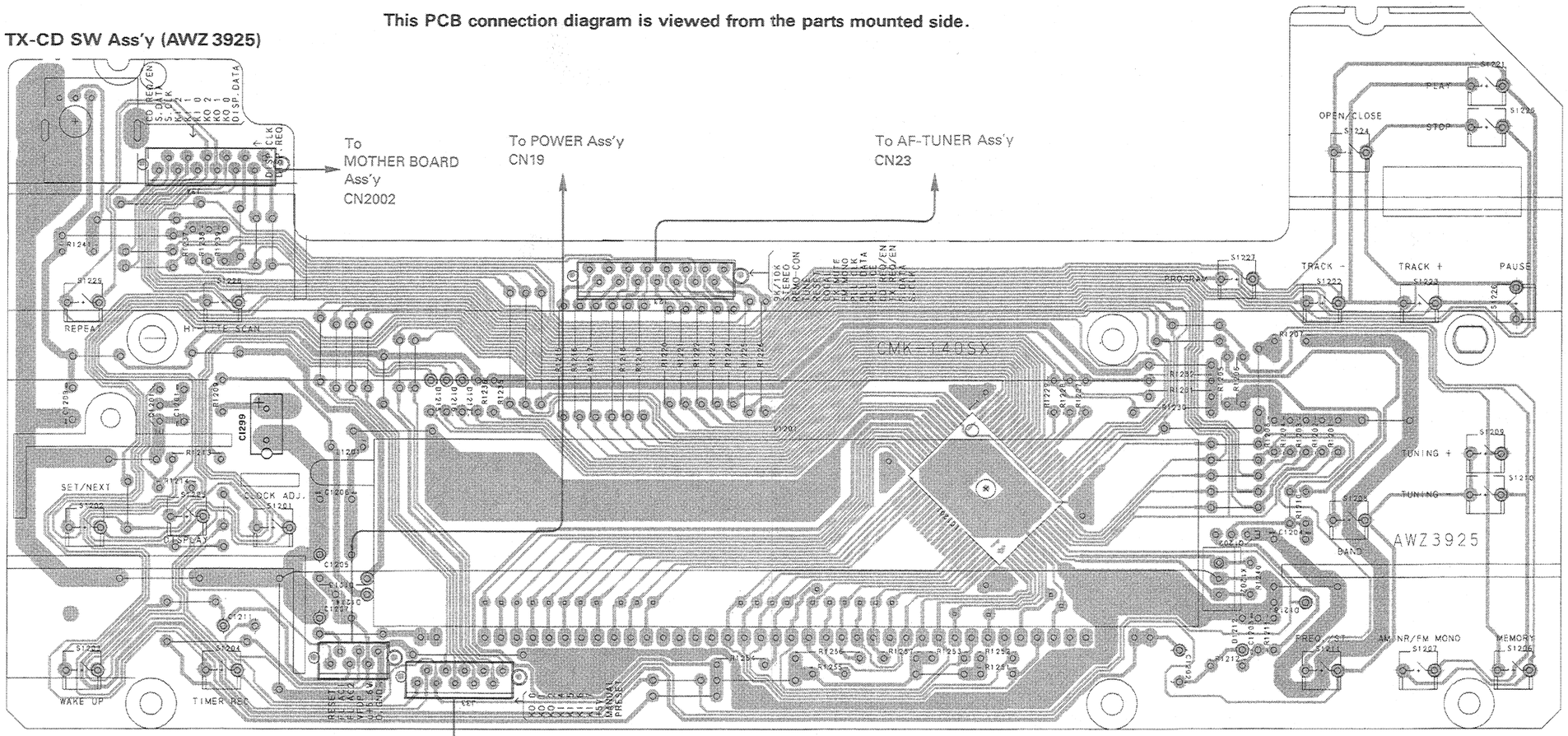

AMP SW Ass'y (AWZ 3926)

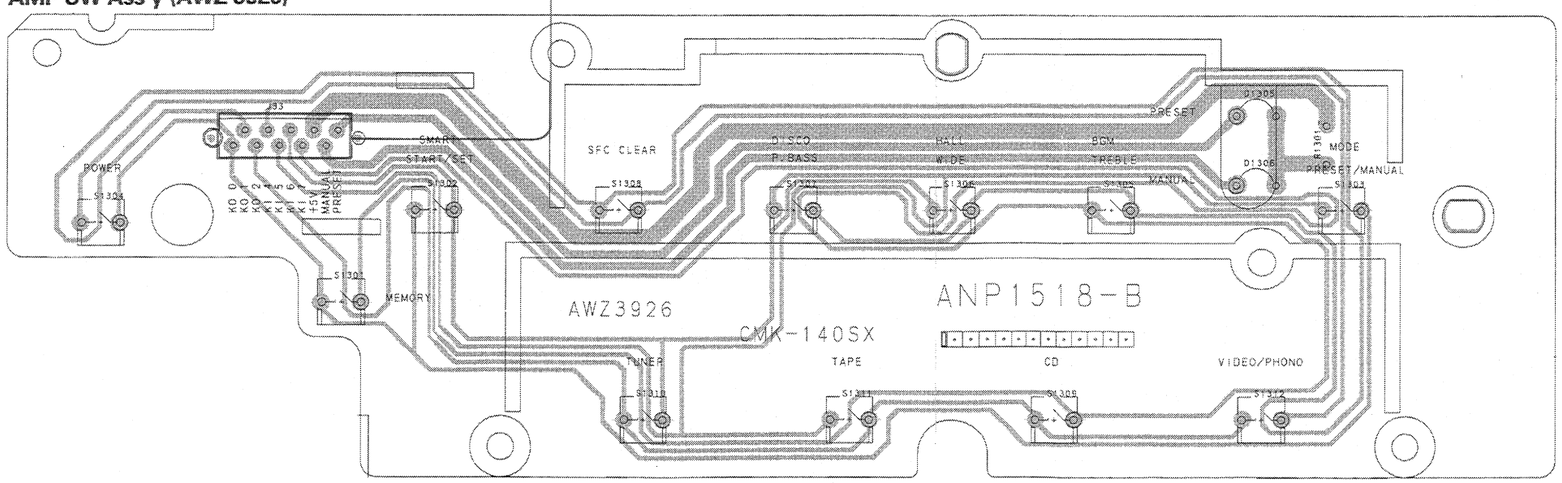

TX-CD SW Ass'y (AWZ3925)

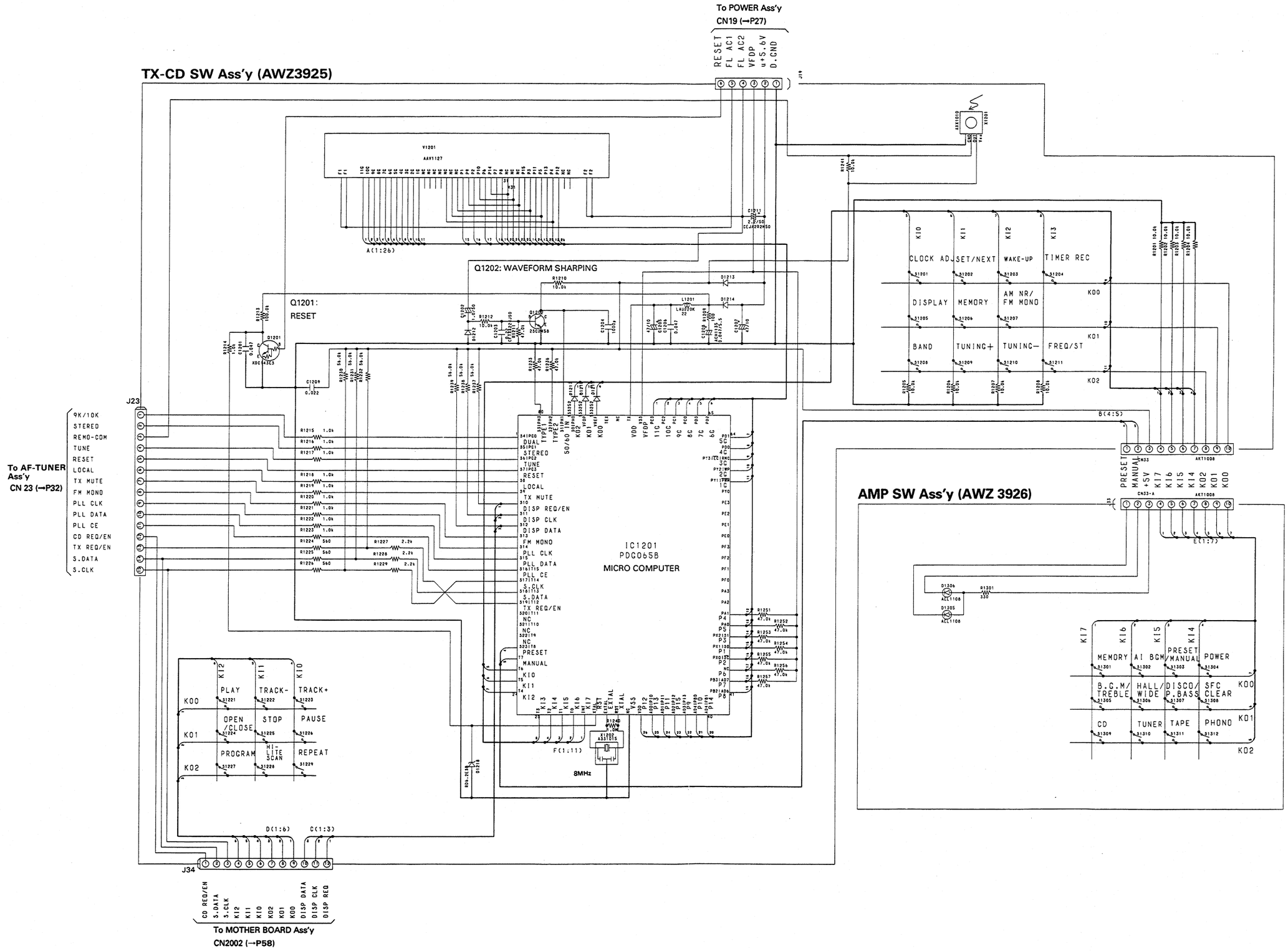

AMP SW Ass'y (AWZ 3926)

3.6 DECK-1 Ass'y, DECK-2 Ass'y, 1 MECHA Unit (2/2) and 2 MECHA (2/2) unit

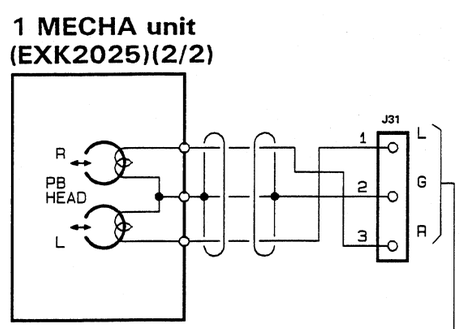

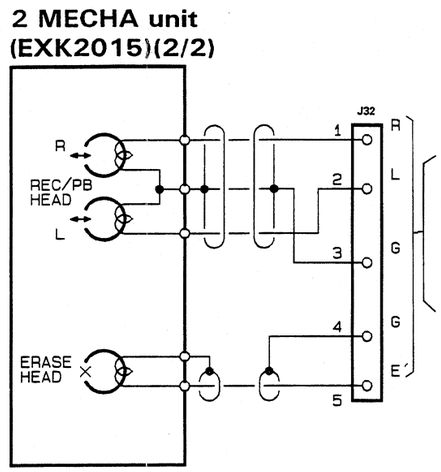

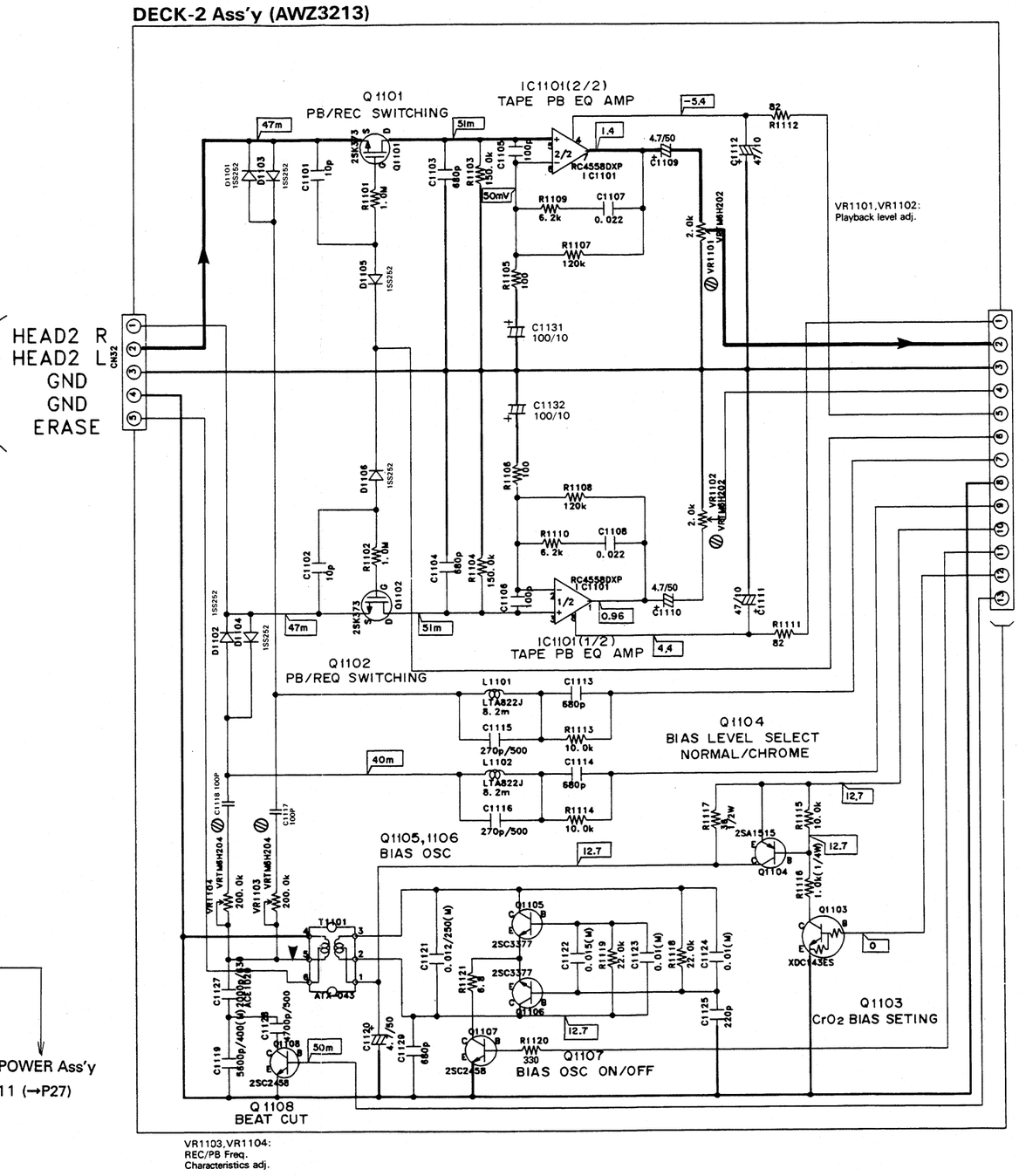

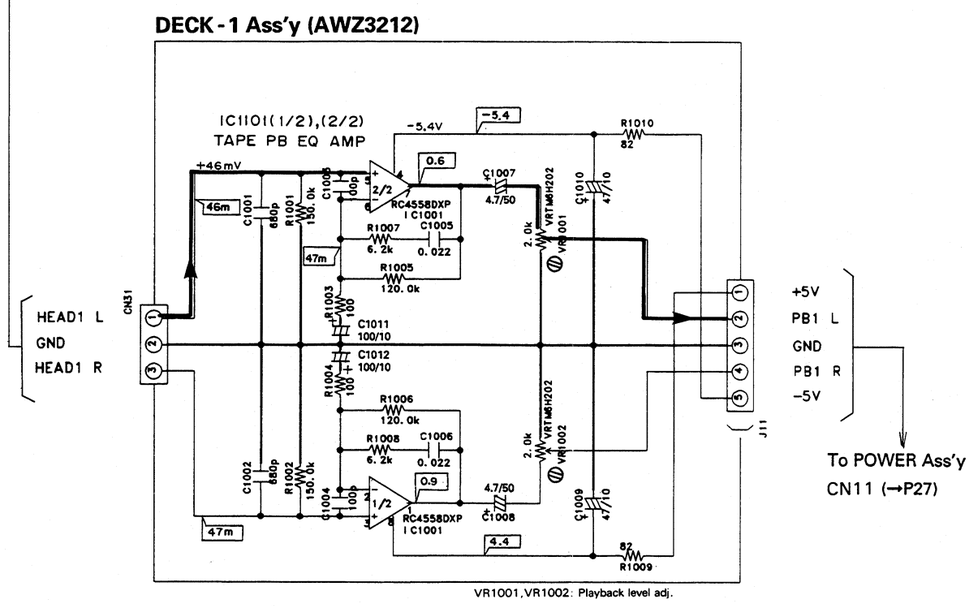

This PCB connection diagram is viewed from the parts mounted side.

DECK-1 Ass'y (AWZ3212)

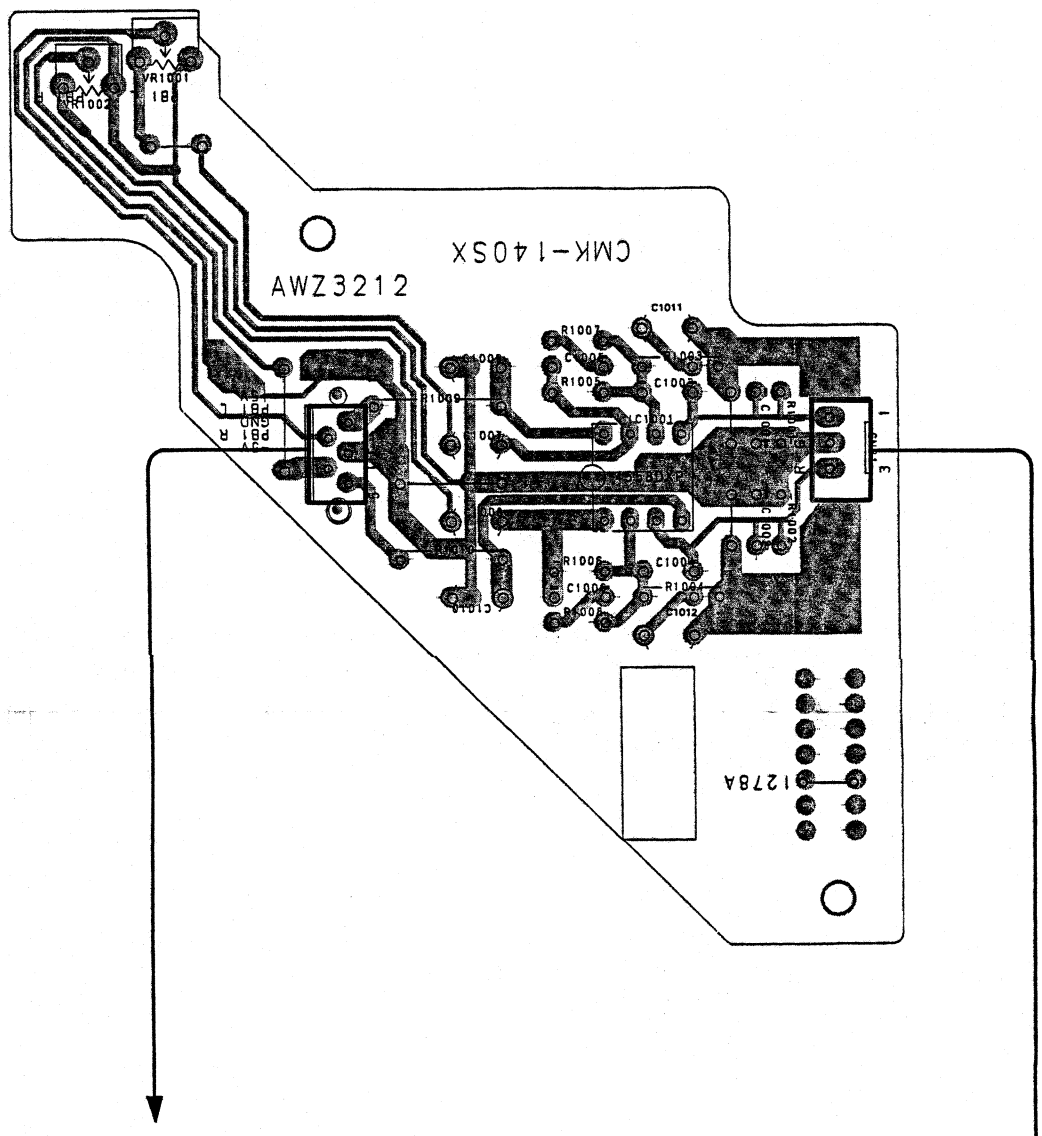

DECK-2 Ass'y (AWZ3213)

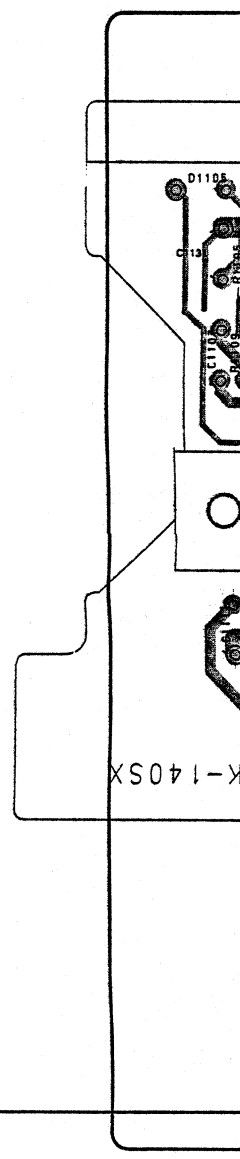

This P'C B connection diagram is viewed from the foil side.

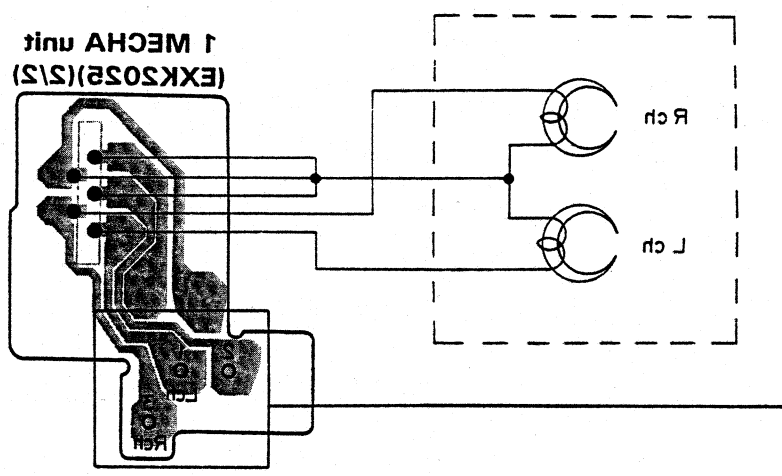

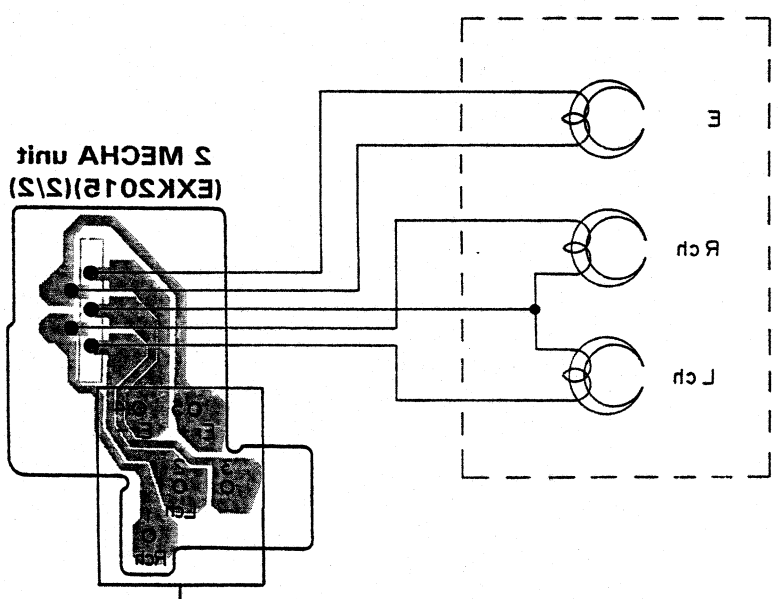

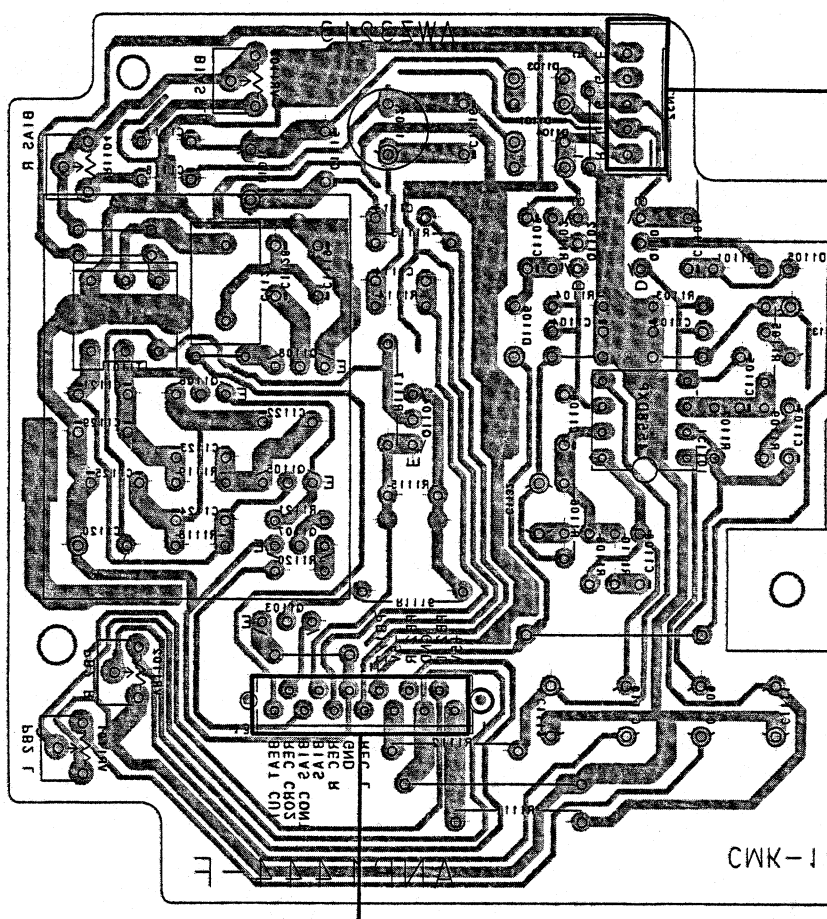

4 5 6 7 8

DECK-2 Ass'y (AWZ3213)

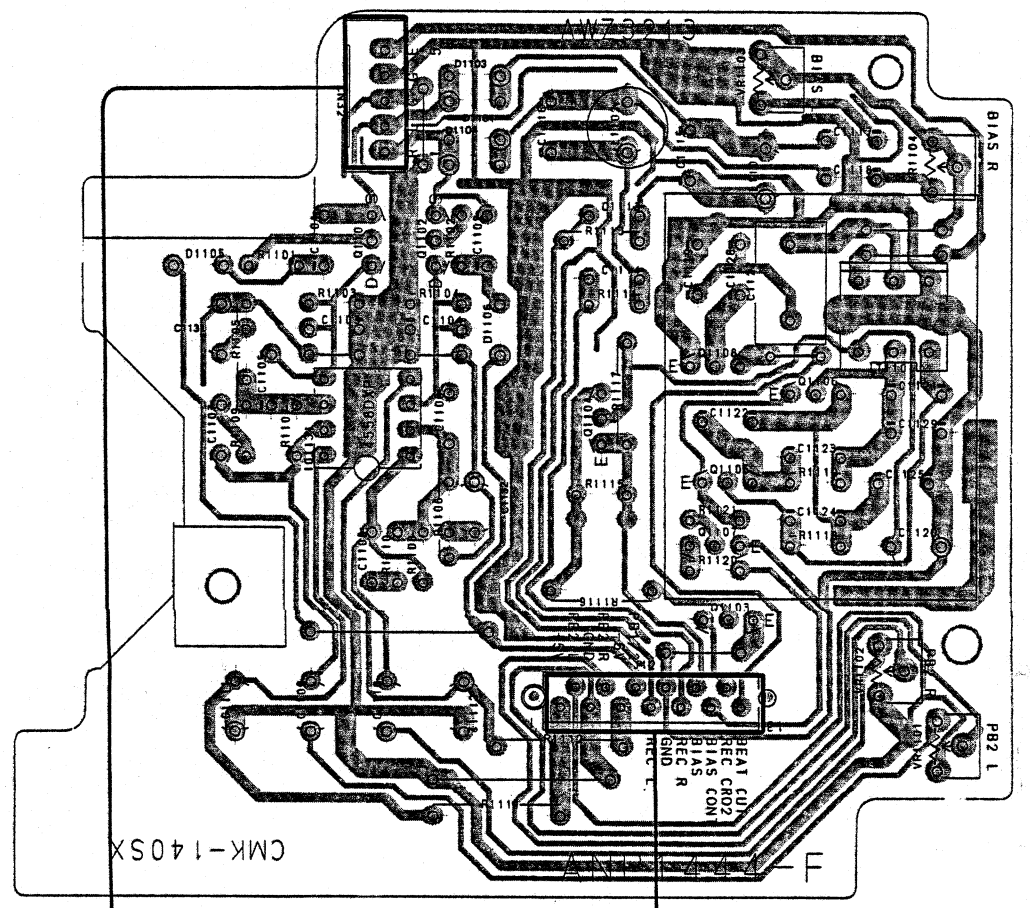

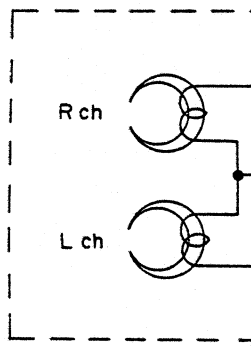

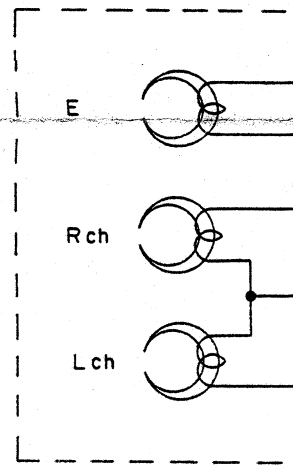

To POWER Ass'y
CN12

DECK-2 Ass'y (AWZ3213)

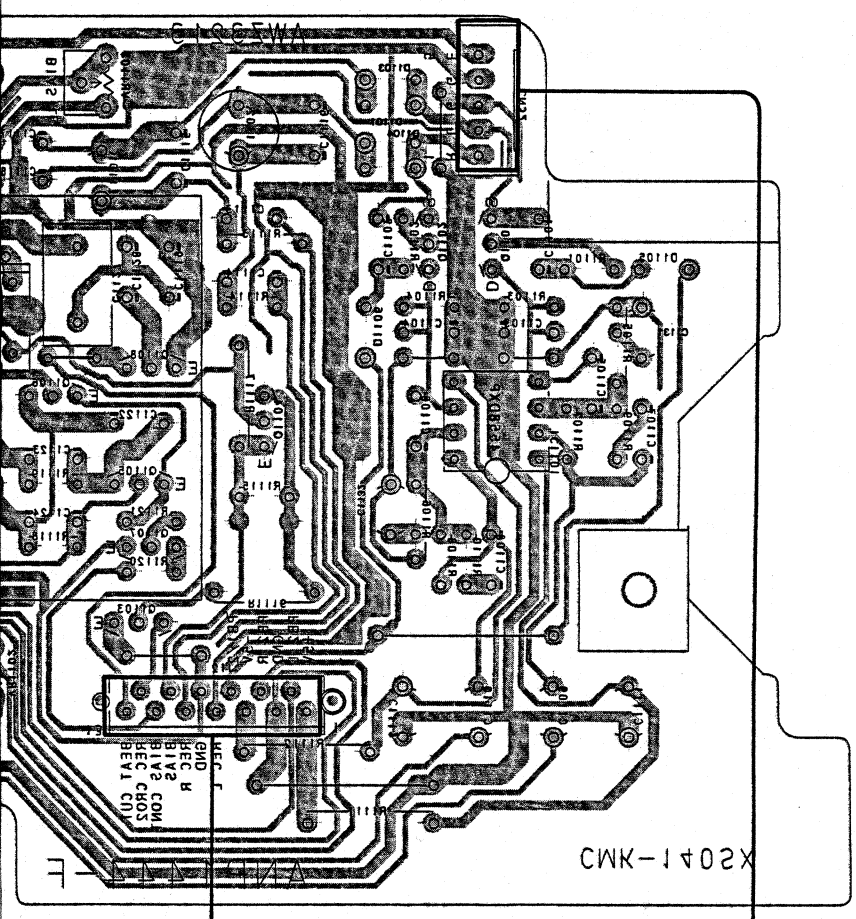

To POWER Ass'y
CN12

DECK-1 Ass'y (AWZ3212)

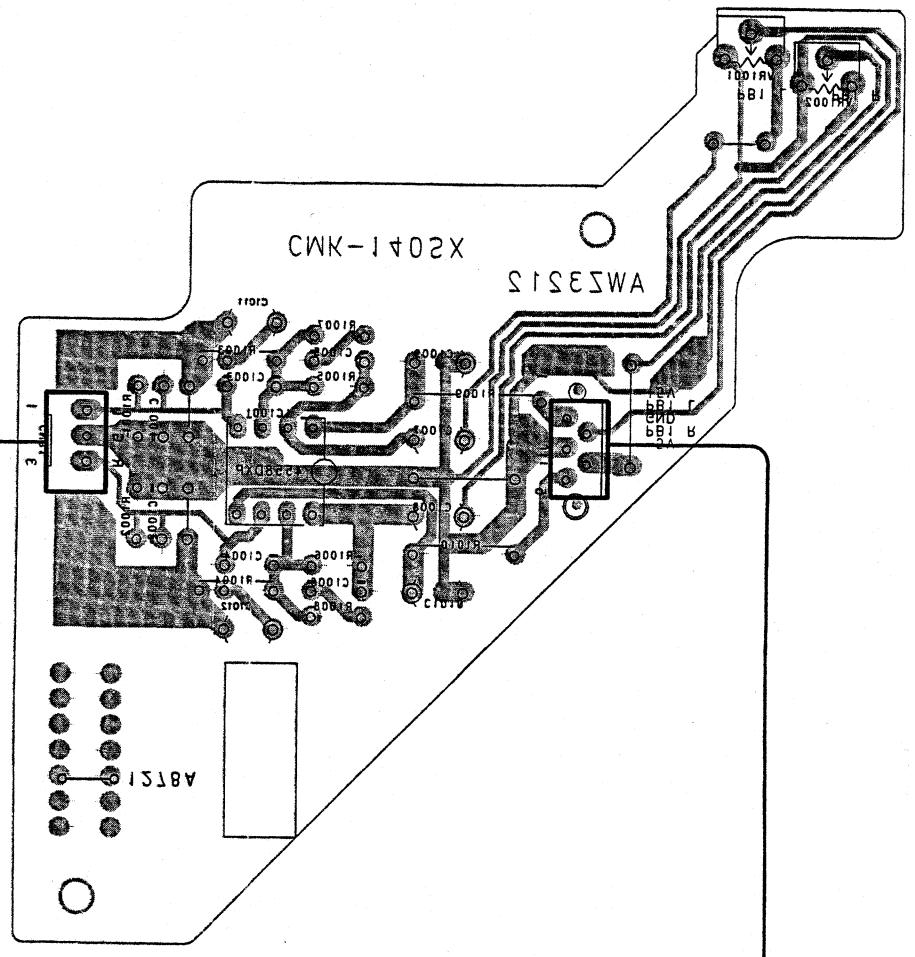

To POWER Ass'y
CN11

4 5 6 7 8

Ass'y (AWZ3213)

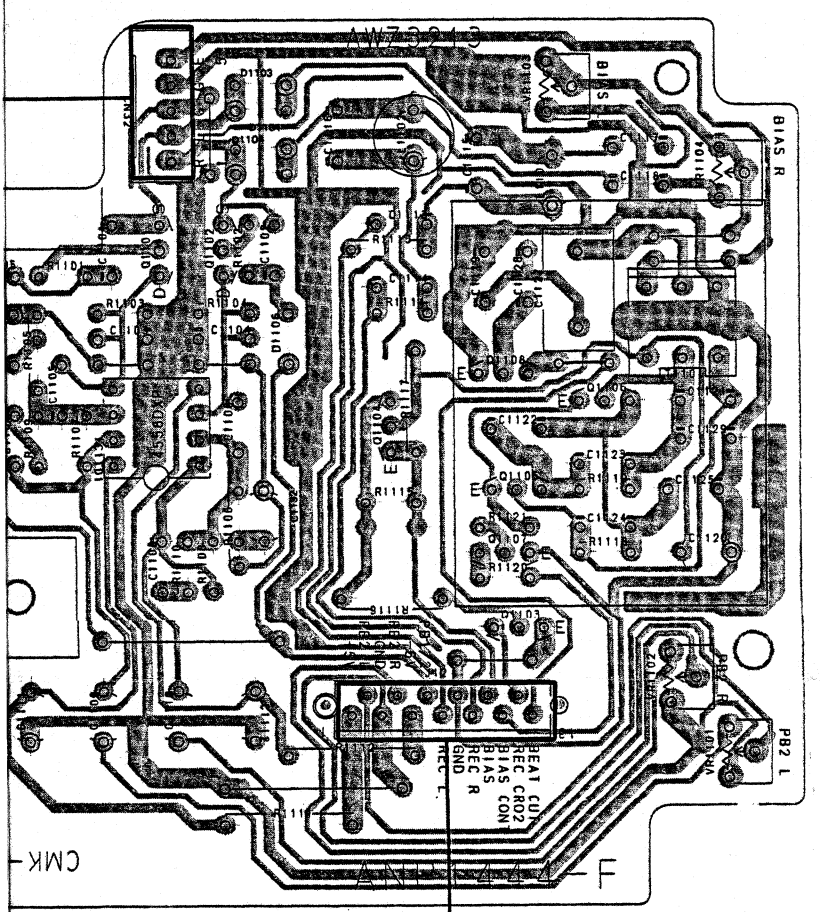

To POWER Ass'y
CN12

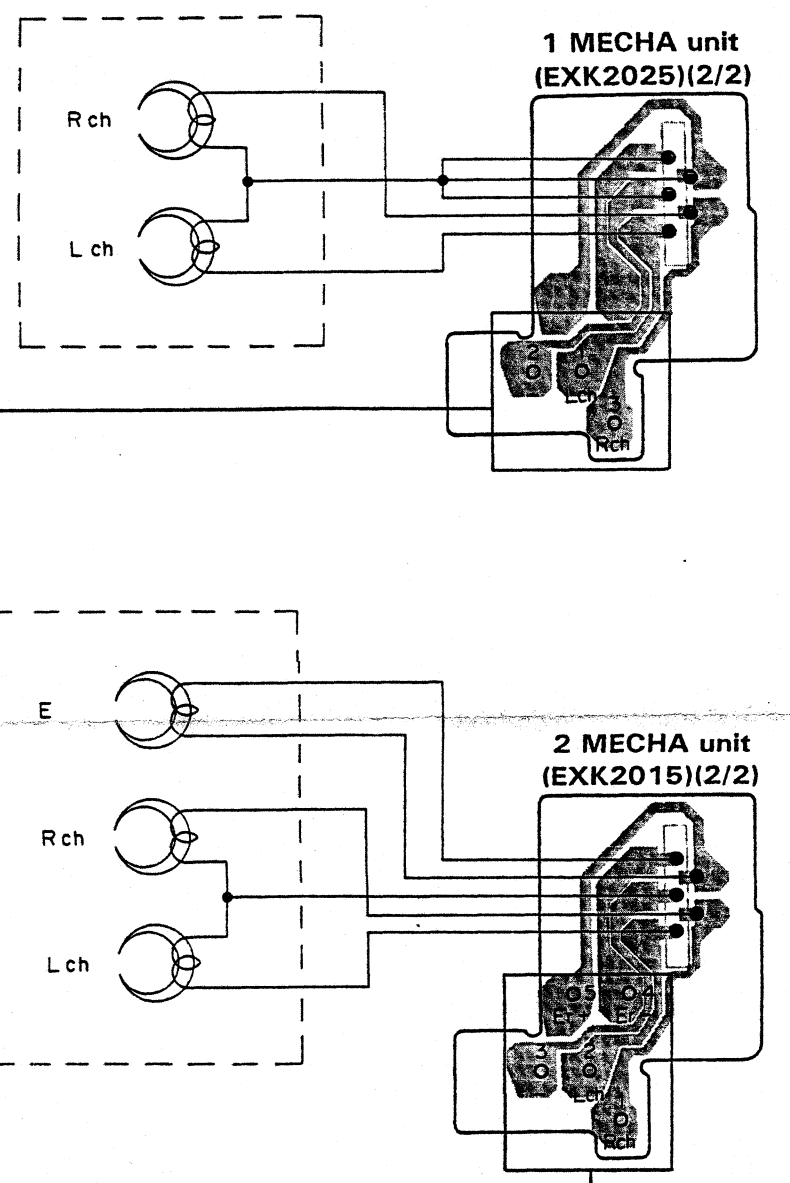

DECK-1 Ass'y (AWZ3212)

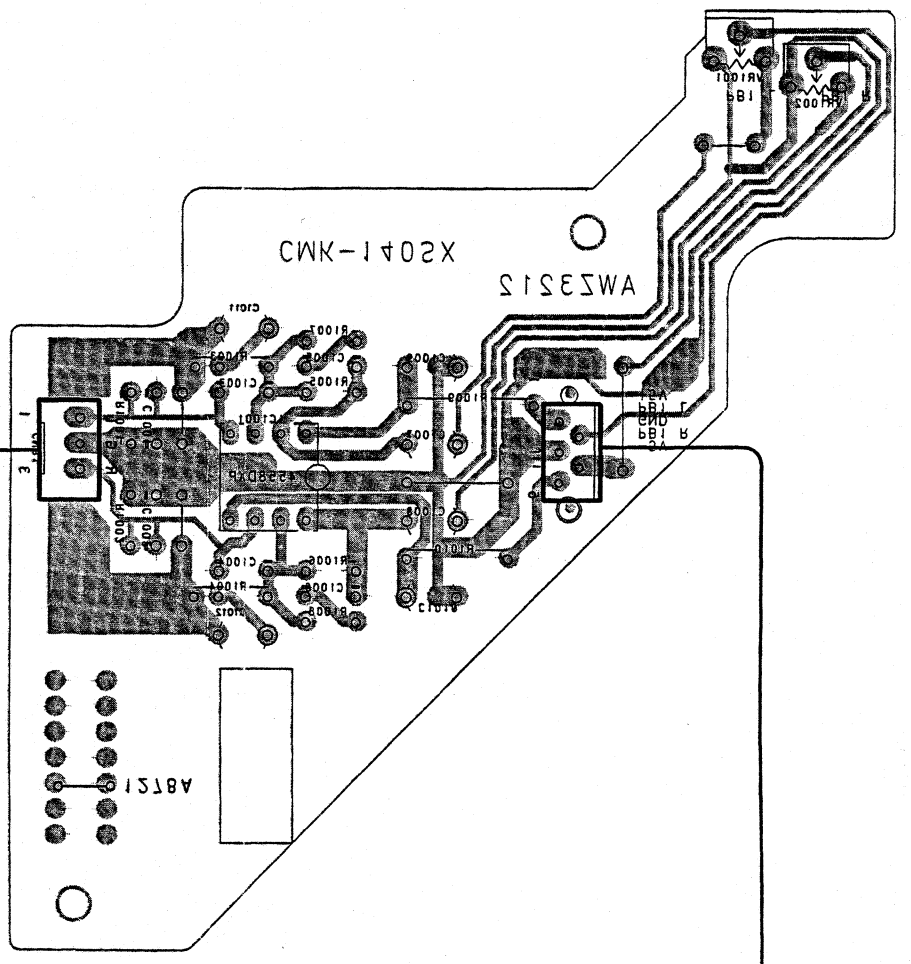

To POWER Ass'y
CN11

AF-TUNER Ass'y (2/2) (AWZ3914)

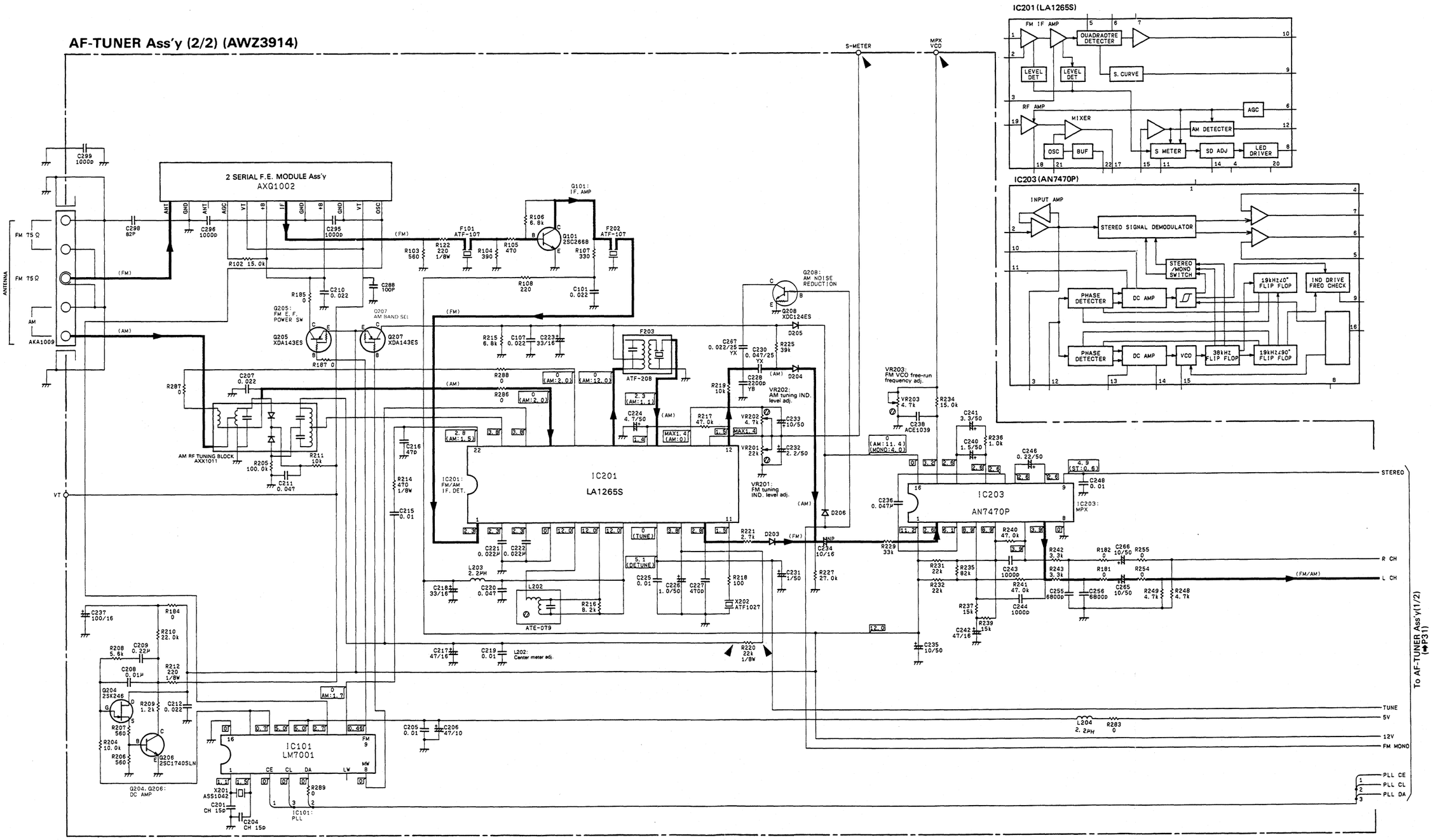

3.4 VOLUME Ass'y and DECK SW Ass'y

VOLUME Ass'y (AWZ 3919)

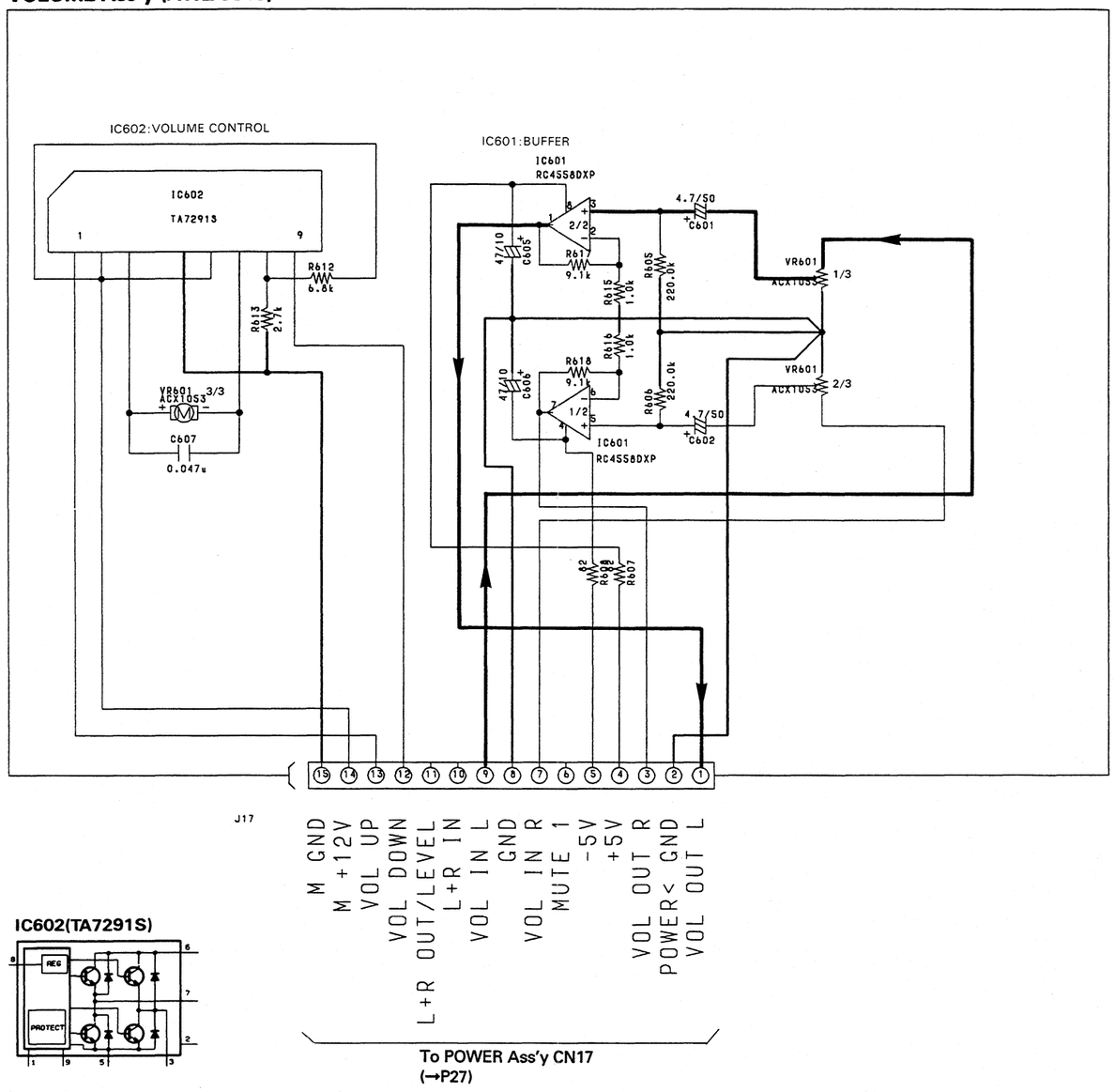

IC602(TA7291S)

DECK SW Ass'y (AWZ 3921)

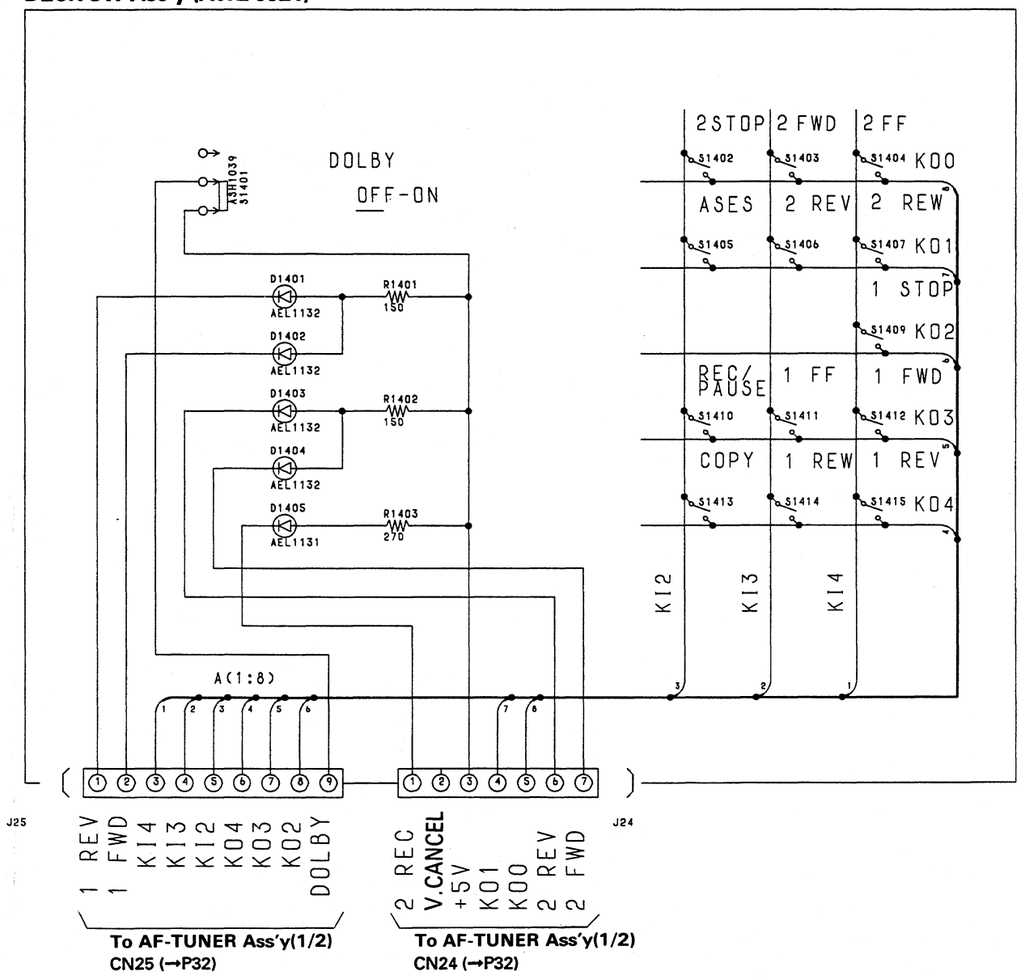

3.7 MOTHER BOARD Ass'y and SERVO MECHA Ass'y

MOTHER BOARD Ass'y (PWM1556)

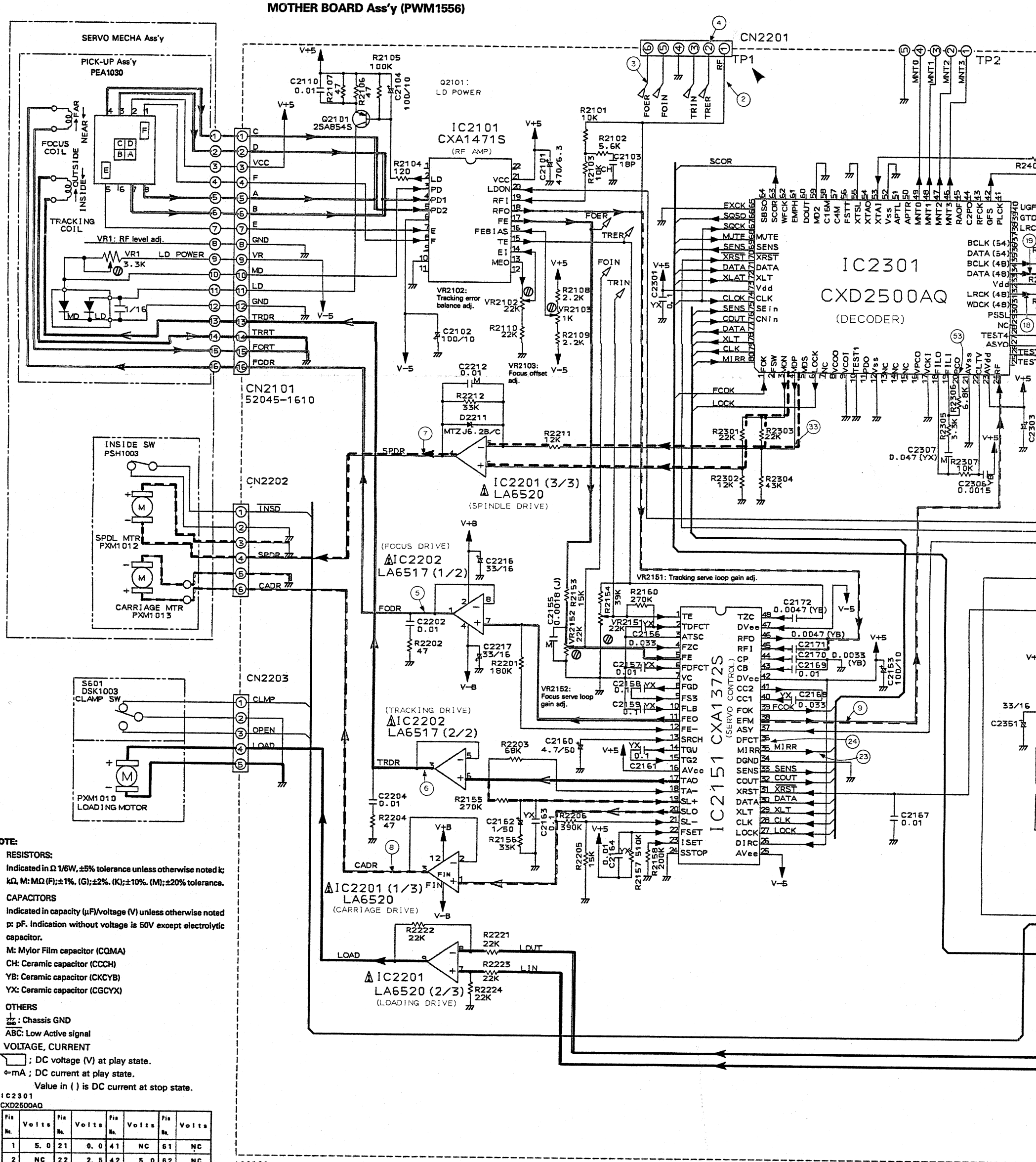

NOTE:

1. RESISTORS:
   Indicated in Ω 1/6W, ±5% tolerance unless otherwise noted k; kΩ, M: MΩ (F);±1%, (G);±2%. (K);±10%. (M);±20% tolerance.
2. CAPACITORS
   Indicated in capacity (μF)/voltage (V) unless otherwise noted p: pF. Indication without voltage is 50V except electrolytic capacitor.
   M: Mylor Film capacitor (CQMA)
   CH: Ceramic capacitor (CCCH)
   YB: Ceramic capacitor (CKCYB)
   YX: Ceramic capacitor (CGCYX)
3. OTHERS
   ⏚ : Chassis GND
   ABC: Low Active signal
4. VOLTAGE, CURRENT
   [ ] ; DC voltage (V) at play state.
   ⇦mA ; DC current at play state.
   Value in ( ) is DC current at stop state.

IC2301
CXD2500AQ

Pin No.	Volts	Pin No.	Volts	Pin No.	Volts	Pin No.	Volts
1	5. 0	21	0. 0	41	NC	61	NC
2	NC	22	2. 5	42	5. 0	62	NC
3	5. 0	23	5. 0	43	NC	63	0. 0
4	2. 6	24	2. 5	44	NC	64	NC
5	NC	25	NC	45	NC	65	0. 0
6	5. 0	26	0. 0	46	4. 4	66	3.3 ~4.5
7	NC	27	2. 5	47	0. 0	67	5. 0
8	NC	28	0. 0	48	0. 0	68	0. 0
9	0. 0	29	NC	49	0.8 ~0.1	69	2.1 ~2.8
10	0. 0	30	0. 0	50	NC	70	5. 0
11	NC	31	NC	51	NC	71	5. 0
12	0. 0	32	2. 5	52	0. 0	72	5. 0
13	NC	33	5. 0	53	2. 5	73	5. 0
14	NC	34	2. 5	54	NC	74	5. 0
15	NC	35	2. 5	55	0. 0	75	5. 0
16	NC	36	NC	56	NC	76	0. 0
17	0. 0	37	NC	57	NC	77	5. 0
18	2. 5	38	NC	58	NC	78	5. 0
19	2. 4	39	NC	59	0. 0	79	5. 0
20	2. 4	40	NC	60	NC	80	0. 0

IC2101
CXA1471S

Pin No.	Volts	Pin No.	Volts
1	NC	12	NC
2	2. 9	13	−0. 9
3	−4. 7	14	−0. 7
4	0. 0	15	0. 0
5	0. 0	16	0. 0
6	−5. 0	17	0. 0
7	0. 0	18	0. 8
8	0. 0	19	0. 0
9	NC	20	5. 0
10	0. 0	21	5. 0
11	NC	22	NC

IC2404
NJM4558D-D

Pin No.	Volts
1	−0. 2
2	1. 0
3	1. 0
4	−5. 0
5	1. 0
6	1. 0
7	−0. 2
8	5. 0

IC2202
LA6517

Pin No.	Volts
1	0. 0
2	6. 5
3	0. 0
4	−6. 5
5	0. 0
6	0. 0
7	0. 0
8	0. 0

IC2020
M5298P

Pin No.	Volts
1	−6. 5
2	NC
3	−5. 0
4	0. 0
5	−6. 5
6	−5. 7
7	3. 3
8	1. 1
9	5. 0
10	1. 1
11	0. 6
12	5. 0
13	6. 5
14	5. 0
15	1. 2
16	6. 5

IC2201
LA6520

Pin No.	Volts
1	8.3 ~8.9
2	8.3 ~8.9
3	8.3 ~8.9
4	−0. 7
5	1. 7
6	1. 7
7	0. 0
8	0. 0
9	0. 0
10	NC
11	NC
12	6. 5
Fin	−6. 5

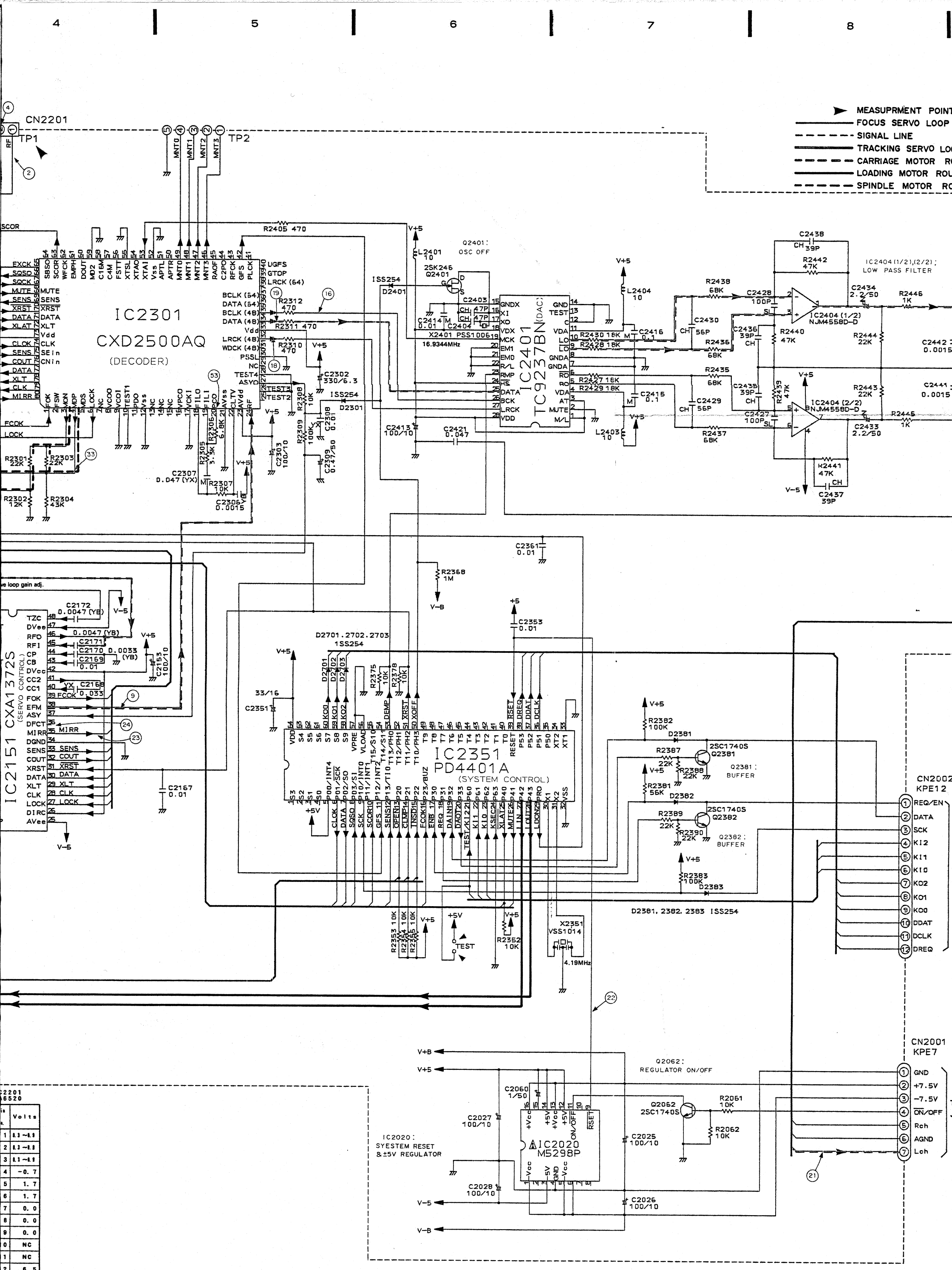

	Volts
1	0.3 ~0.9
2	0.3 ~0.9
3	0.1 ~0.9
4	-0. 7
5	1. 7
6	1. 7
7	0. 0
8	0. 0
9	0. 0
0	NC
1	NC
2	6. 5
	-6. 5

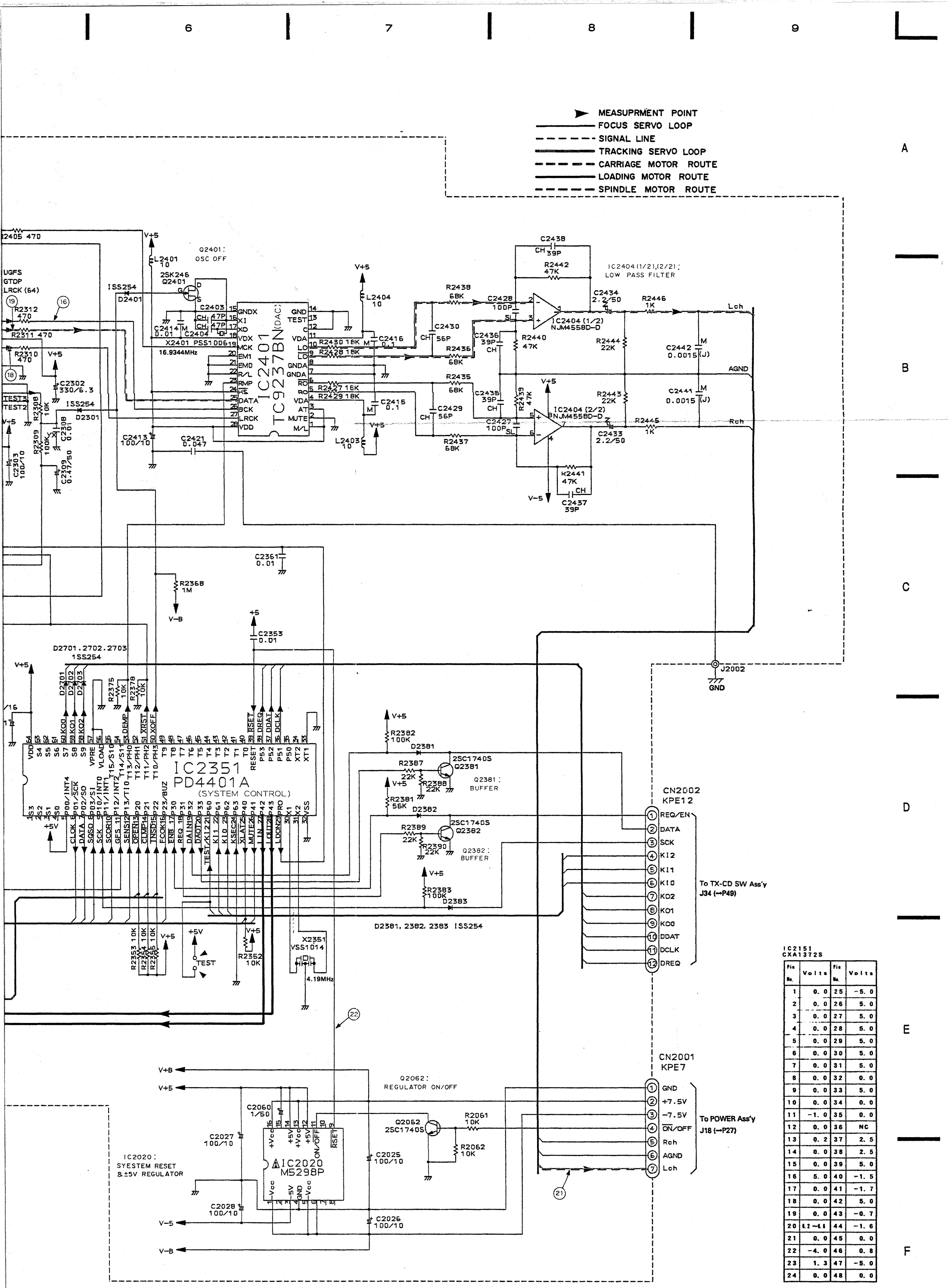

IC2151
CXA1372S

Pin No.	Volts	Pin No.	Volts
1	0.0	25	-5.0
2	0.0	26	5.0
3	0.0	27	5.0
4	0.0	28	5.0
5	0.0	29	5.0
6	0.0	30	5.0
7	0.0	31	5.0
8	0.0	32	0.0
9	0.0	33	5.0
10	0.0	34	0.0
11	-1.0	35	0.0
12	0.0	36	NC
13	0.2	37	2.5
14	0.0	38	2.5
15	0.0	39	5.0
16	5.0	40	-1.5
17	0.0	41	-1.7
18	0.0	42	5.0
19	0.0	43	-0.7
20	1.2 ~ 1.1	44	-1.6
21	0.0	45	0.0
22	-4.0	46	0.8
23	1.3	47	-5.0
24	0.0	48	0.0

(16) IC2301-Pin 35: PLAY MODE (1kHz)
(BCLK)
2V/div 500nsec/div

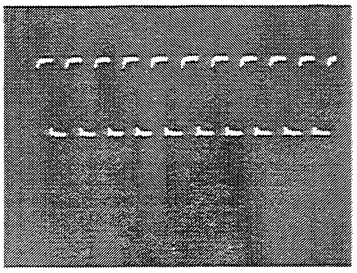

— GND

(22) IC2020-Pin 9: POWER SWITCH-ON
(RST)
2V/div 100msec/div

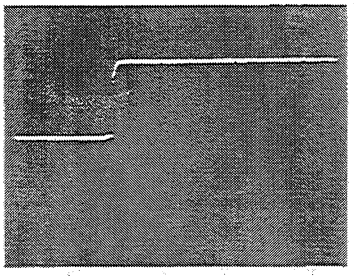

— GND

(26)

(18) IC2301-Pin 32: PLAY MODE (1kHz)
(LRCK)
2V/div 10μsec/div

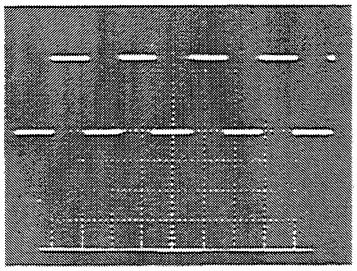

— GND

(22) IC2020-Pin 9: POWER SWITCH-OFF
(RST)
2V/div 100msec/div

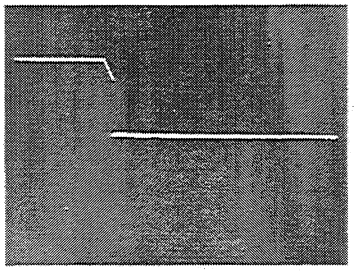

— GND

(27)

(19) IC2301-Pin34: PLAY MODE (1kHz)
(DATA)
2V/div 500nsec/div

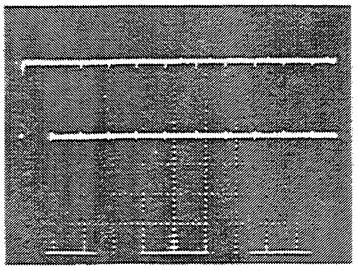

— GND

(23) : TRACK SEARCH MODE
Upper: TP1-Pin 1 (RF) 1V/div
Lower: IC151-Pin 35 (MIRR)
2V/div 200μsec/div

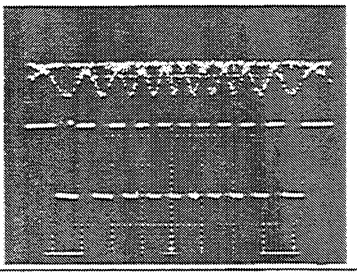

— GND

— GND

(28)

(20)

(24) : PLAY MODE
Upper: TP1-Pin 1 (RF) 1V/div
Lower: IC151-Pin 36 (DFCT)
5V/div 200μsec/div

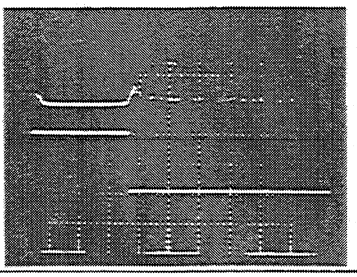

— GND

— GND

(33) IC2301-Pin 4: PLAY MODE
(MDP)
2V/div 2μsec/div

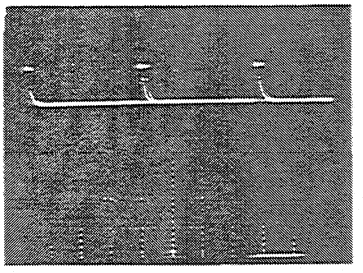

— GND

(21) Pin-OUTPUT: PLAY MODE (1kHz)
CN2001-Pin7
1V/div 200μsec/div

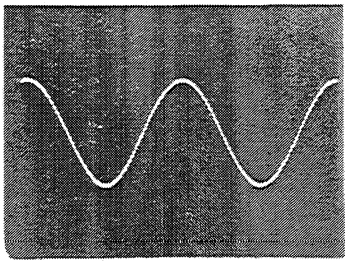

— GND

(25)

(53) IC2301-Pin 20: PLAY MODE
(PCO)
2V/div 10μsec/div

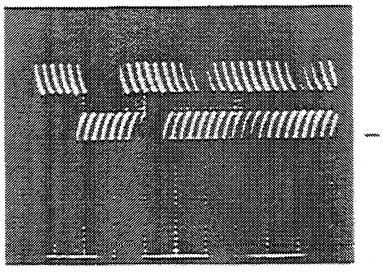

— GND

Waveforms

Note: The encircled numbers denote measuring points in the schematic diagram.

*1 50T-JUMP: After switching to the pause mode, press the manual search key.
*2 FOCUS-IN: Press the key without loading a disc.

② TP1-Pin 1: PLAY MODE
(RF)
500mV/div 500nsec/div

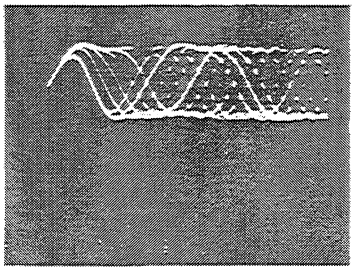

— GND

⑤ IC2202-Pin 1: FOCUS-IN (*2) MODE
(FODR)
1V/div 200msec/div

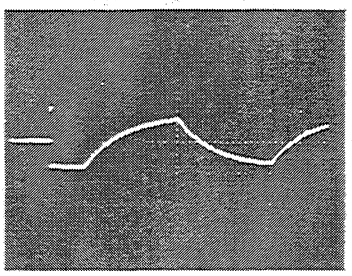

— GND

⑦ IC2201-Pin 4: TRACK SEARCH MODE
(SPDR)
2V/div 50msec/div

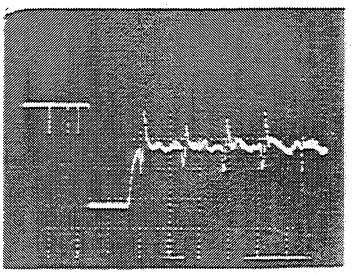

— GND

② TP1-Pin 1: TRACK SEARCH MODE
(RF)
500mV/div 200μsec/div

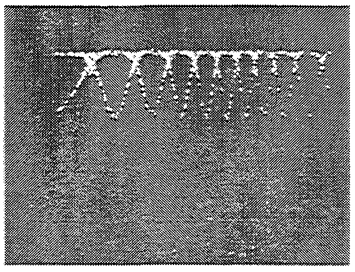

— GND

⑤ IC2202-Pin 1: PLAY MODE
(FODR)
1V/div 1msec/div

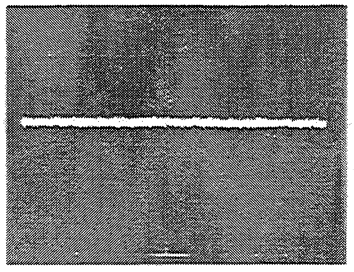

— GND

⑧ IC2201-Pin 3: PLAY MODE
(CADR)
1V/div 2S/div

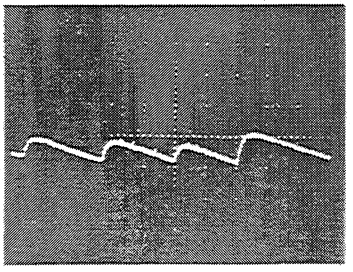

— GND

③ TP1-Pin 6: PLAY MODE
(FOER)
100mV/div 10msec/div

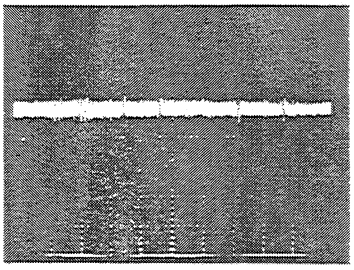

— GND

⑥ IC2202-Pin 3: PLAY MODE
(TRDR)
500mV/div 1msec/div

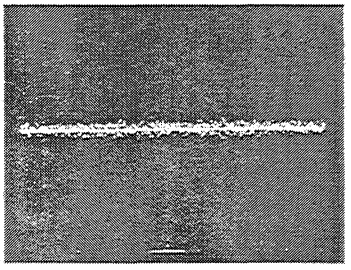

— GND

⑧ IC2201-Pin 3: TRACK SEARCH MODE
(CADR)
2V/div 200msec/div

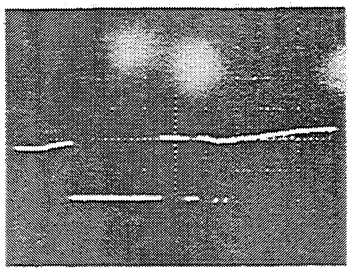

— GND

④ TP1-Pin 2: PLAY MODE
(TRER)
1V/div 10msec/div

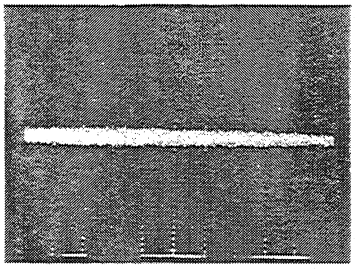

— GND

⑥ IC2202-Pin 3: 50T-JUMP (*1) MODE
(TRDR)
500mV/div 1msec/div

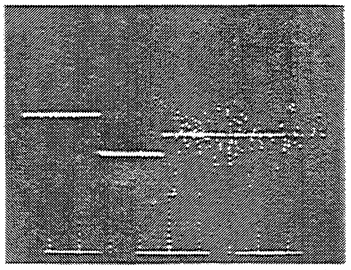

— GND

⑨ IC2151-Pin 38: PLAY MODE
(EFM)
2V/div 500nsec/div

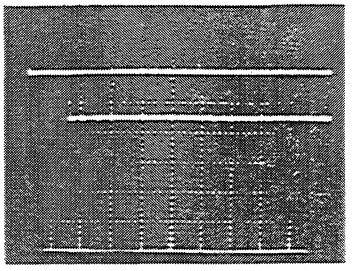

— GND

④ TP1-Pin 2: 50T-JUMP (*1) MODE
(TRER)
1V/div 1msec/div

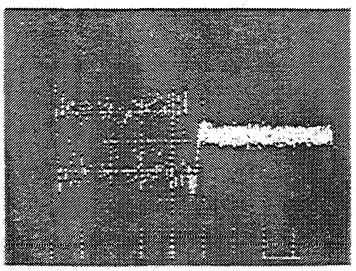

— GND

⑦ IC2201-Pin 4: PLAY MODE
(SPDR)
1V/div 50msec/div

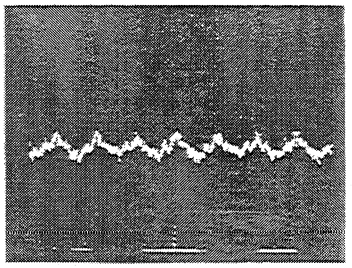

— GND

This PCB connection diagram is viewed from the parts mounted side.

P.C.B. pattern diagram indication	Corresponding part symbol	Part name
		Transistor
		FET
		Diode
		Zenner diode
		LED
		Varactor
		Tact switch
		Inductor
		Coil
		Transformer
		Filter
		Ceramic capacitor
		Mylar capacitor
		Styrol capacitor
		Electrolytic capacitor (Non polarized)
		Electrolytic capacitor (Noiseless)
		Electrolytic capacitor (Polarized)
		Electrolytic capacitor (Polarized)
		Power capacitor
		Semi-fixed resistor
		Resistor array
		Resistor
		Resonator
		Thermistor

1. This P.C.B. connection diagram is viewed from the parts mounted side.
2. The parts which have been mounted on the board can be replaced with those shown with the corresponding wiring symbols listed in the above Table.
3. The capacitor terminal marked with ▭ shows negative terminal.
4. The diode marked with ○ shows cathode side.
5. The transistor terminal marked with ▭ shows emitter.

IC2301
CXD2500AQ

Pin No.	Volts	Pin No.	Volts	Pin No.	Volts
1	5	31	N. C	61	N. C
2	N. C	32	2. 5	62	N. C
3	5	33	5	63	0
4	2. 6	34	2. 5	64	N. C
5	N. C	35	2. 5	65	0
6	5	36	N. C	66	3.3~4.6
7	N. C	37	N. C	67	5
8	N. C	38	N. C	68	0
9	0	39	N. C	69	2.1~3
10	0	40	N. C	70	5
11	N. C	41	N. C	71	5
12	0	42	5	72	5
13	N. C	43	N. C	73	5
14	N. C	44	N. C	74	5
15	N. C	45	N. C	75	5
16	N. C	46	4. 4	76	0
17	0	47	0	77	5
18	2. 5	48	0	78	5
19	2. 4	49	0~0.3	79	5
20	2. 4	50	N. C	80	0
21	0	51	N. C		
22	2. 5	52	0		
23	5	53	2. 5		
24	2. 5	54	N. C		
25	N. C	55	0		
26	0	56	N. C		
27	2. 5	57	N. C		
28	0	58	N. C		
29	N. C	59	0		
30	0	60	N. C		

MOTHER BOARD Ass'y (PWM 1556)

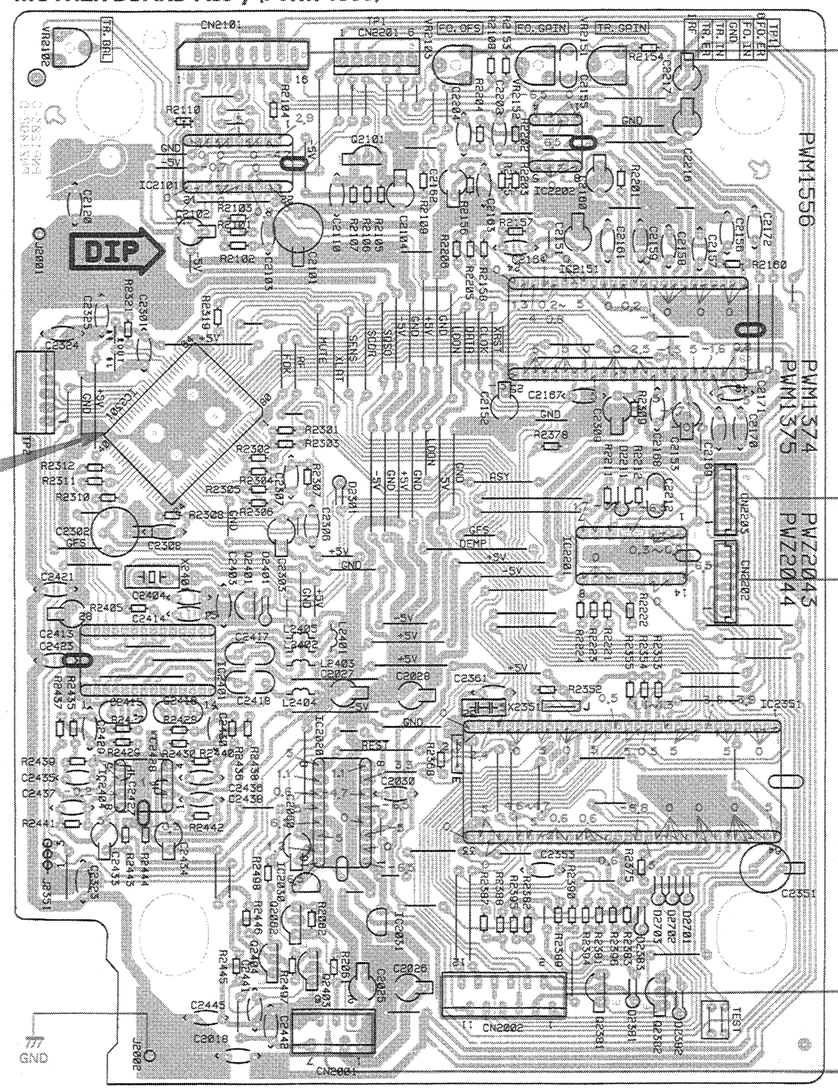

VR2102 VR2103 VR2152 VR2151
IC2101 Q2101 IC2202
IC2301
IC2401 Q2401 IC2151
IC2201
IC2404 IC2020 IC2351
Q2062 Q2381 Q2382

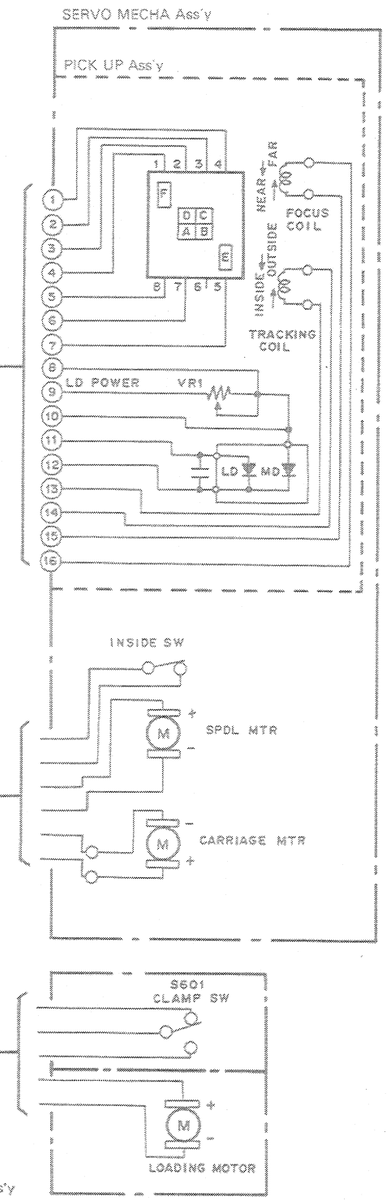

This PCB connection diagram is viewed from the foil side.

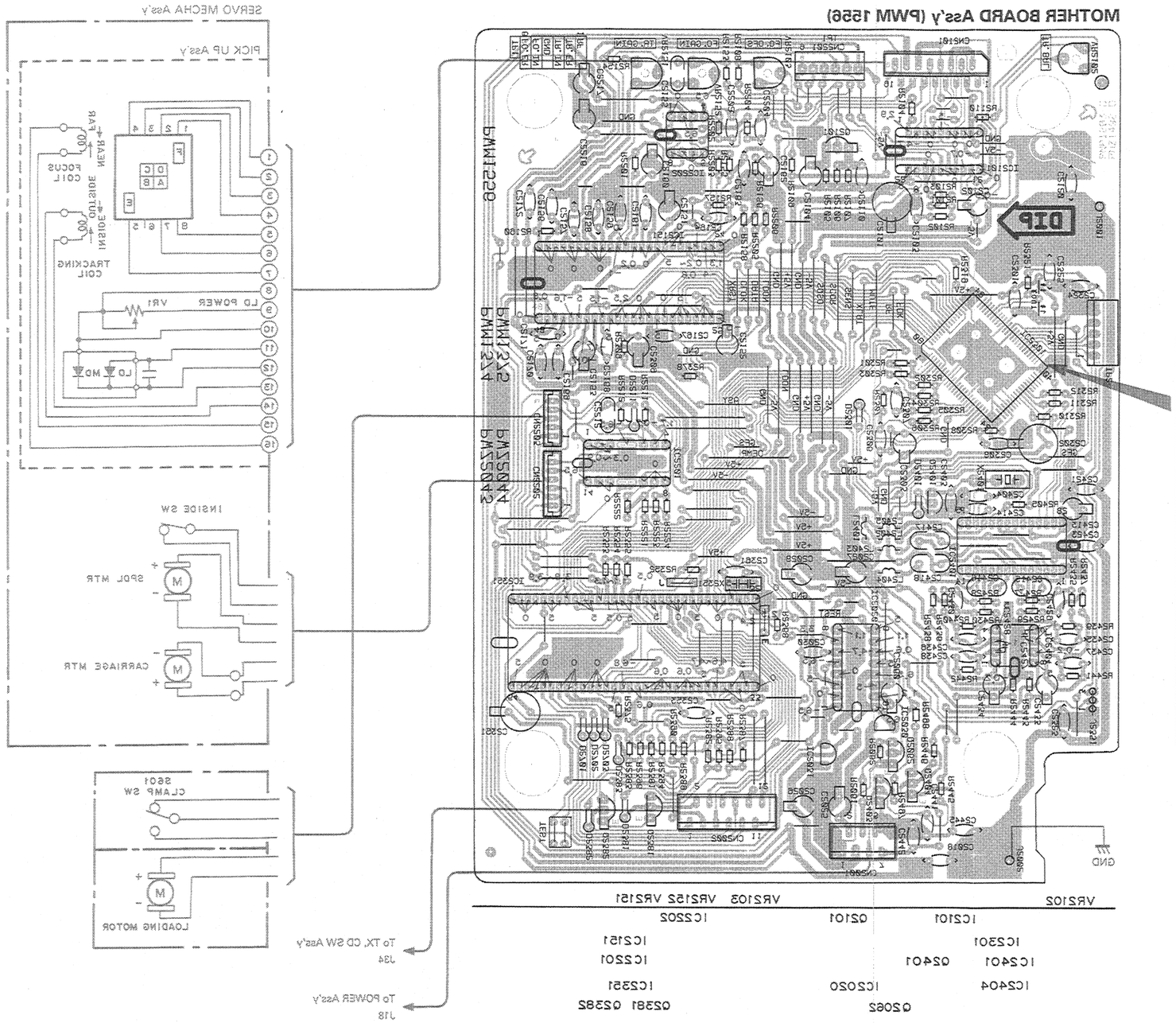

IC2301
CXD2500AQ

Pin No.	Volts	Pin No.	Volts	Pin No	Volts
1	5	31	N. C	61	N. C
2	N. C	32	2.5	62	N. C
3	5	33	5	63	0
4	2.6	34	2.5	64	N. C
5	N. C	35	2.5	65	0
6	5	36	N. C	66	3.3~4.6
7	N. C	37	N. C	67	5
8	N. C	38	N. C	68	0
9	0	39	N. C	69	2.1~3
10	0	40	N. C	70	5
11	N. C	41	N. C	71	5
12	0	42	5	72	5
13	N. C	43	N. C	73	5
14	N. C	44	N. C	74	5
15	N. C	45	N. C	75	5
16	N. C	46	4.4	76	0
17	0	47	0	77	5
18	2.5	48	0	78	5
19	2.4	49	0~0.3	79	5
20	2.4	50	N. C	80	0
21	0	51	N. C		
22	2.5	52	0		
23	5	53	2.5		
24	2.5	54	N. C		
25	N. C	55	0		
26	0	56	N. C		
27	2.5	57	N. C		
28	0	58	N. C		
29	N. C	59	0		
30	0	60	N. C		

4. LINE VOLTAGE SELECTION

Line voltage can be changed with the following steps.

1. Disconnect the AC power cord.
2. Remove the bonnet.
3. Change the connection with the power transformer primary taps.
4. Stick the line voltage label on the rear panel.

Part No.	Description
AAX-193	220V label
AAX-192	240V label

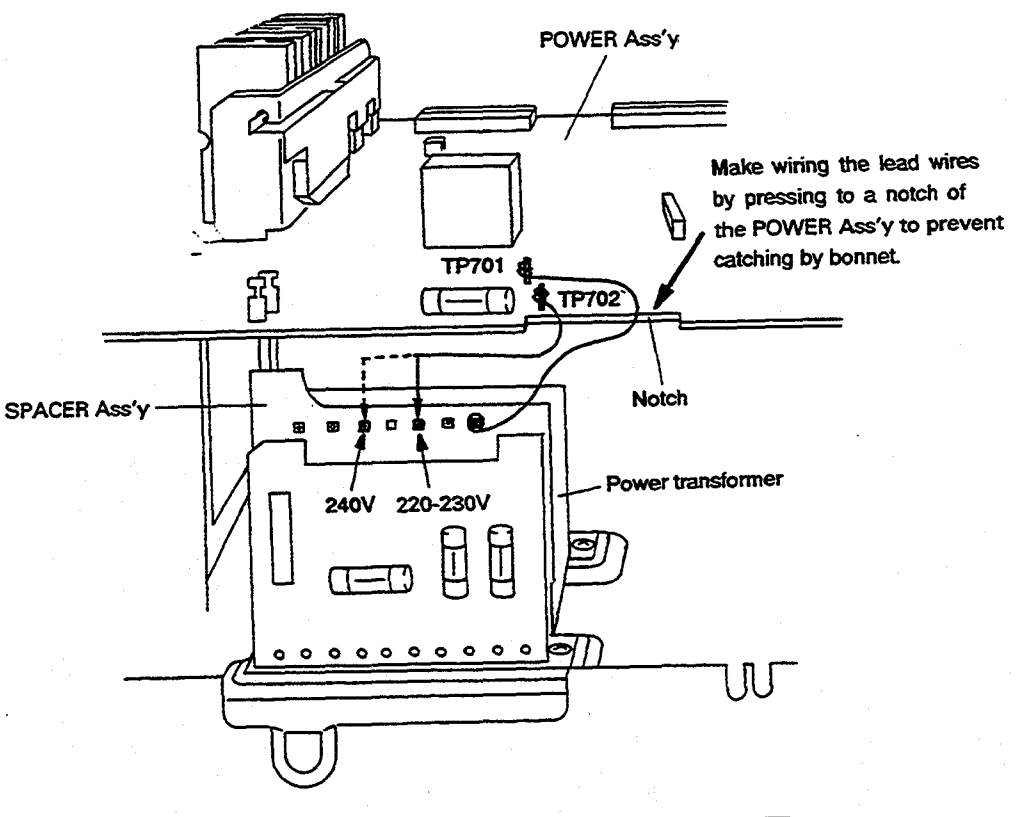

5. P.C.B PARTS LIST

NOTES:

- *Part without part number cannot be supplied.*
- *Parts marked by "◉" are not always kept in stock. Their delivery time may be longer than usual or they may be unavailable.*
- *The ⚠ mark found on some component parts indicates the importance of the safety factor of the part. Therefore, when replacing, be sure to use parts of identical designation.*
- *When ordering resistors, first convert resistance values into code form as shown in the following examples.*

Ex. 1 When there are 2 effective digits (any digit apart from 0), such as 560 ohm and 47k ohm (tolerance is shown by J = 5%, and K = 10%).

560Ω	*56×10^1*	*561*	*RD1/8PM 5 6 1 J*
47kΩ	*47×10^3*	*473*	*RD1/4PS 4 7 3 J*
0.5Ω	*0R5*		*RN2H 0 R 5 K*
1Ω	*010*		*RS1P 0 1 0 K*

Ex. 2 When there are 3 effective digits (such as in high precision metal film resistors).

5.62kΩ	*562×10^1*	*5621*	*RN1/4SR 5 6 2 1 F*

Mark	No.	Description	Part No.
		LIST OF ASSEMBLIES	
		SPACER Ass'y	
◉		AF-TUNER Ass'y	AWZ3914
◉		VOLUME Ass'y	AWZ3919
◉		DECK SW Ass'y	AWZ3921
◉		DECK-1 Ass'y	AWZ3212
◉		DECK-2 Ass'y	AWZ3213
◉		TRANS Ass'y	AWZ3214
◉		REGULATOR Ass'y	AWZ3215
◉		POWER Ass'y	AWZ3230
◉		TX-CD SW Ass'y	AWZ3925
◉		AMP SW Ass'y	AWZ3926
◉		MOTHER BOARD Ass'y	PWM1556
		SPACER Ass'y	
		There is no supply part in this unit.	
		◉DECK-1Ass'y (AWZ3212)	
		SEMICONDUCTORS	
	IC1001	OP-AMP IC	RC4558DXP
		CAPACITORS	
	C1001,1002	CERAMIC CAPACITOR	CKCYB681K50
	C1003,1004	CERAMIC CAPACITOR	CCCSL101J50
	C1005,1006	AUDIO FILM CAPACITOR	CFTXA223J50
	C1007,1008	ELECTR.CAPACITOR	CEAS2R2M50
	C1009,1010	ELECTR.CAPACITOR	CEAS470M10
	C1011,1012	ELECTR.CAPACITOR	CEAS101M10
		RESISTORS	
	VR1001	VR	VRTM6H202
	VR1002	VR	VRTM6H202
		OTHER RESISTORS	RD1/8PM□□□J
		◉DECK-2 Ass'y (AWZ3213)	
		SEMICONDUCTORS	
	IC1101	OP-AMP	RC4558DXP
	Q1101,1102	N-FET	2SK373
	Q1103	TRANSISTOR	XDC143ES
	Q1104	TRANSISTOR	2SA1515
	Q1105,1106	TRANSISTOR	2SC3377
	Q1107,1108	TRANSISTOR	2SC2458
	D1101-1106	DIODE	1SS252
		COILS and TRANSFORMERS	
	L1101,1102	INDUCTOR	LTA822J
	T1101	OSC TRANSFORMER	ATX-043
		CAPACITORS	
	C1101,1102	CERAMIC CAPACITOR	CCMSL100D50
	C1103,1104	CERAMIC CAPACITOR	CKCYB681K50
	C1105,1106	CERAMIC CAPACITOR	CCCSL101J50
	C1107,1108	AUDIO FILM CAPACITOR	CFTXA223J50
	C1109,1110	ELECTR.CAPACITOR	CEAS2R2M50
	C1111,1112	ELECTR.CAPACITOR	CEAS470M10
	C1113,1114	CERAMIC CAPACITOR	CKDYB681K50
	C1115,1116	CERAMIC CAPACITOR	CCDSL271K500
	C1117,1118	CERAMIC CAPACITOR	CCCSL101K500
	C1119	MYLAR FILM CAPACITOR	CQMA562K400
	C1120	ELECTR.CAPACITOR	CEAS4R7M50
	C1121	MYLAR FILM CAPACITOR	CQMA123K250
	C1122	MYLAR FILM CAPACITOR	CQMA153K50
	C1123,1124	MYLAR FILM CAPACITOR	CQMA103K50
	C1125	CERAMIC CAPACITOR	CCDSL221J50
	C1127	CQPA (2000P/630V)	ACE1020
	C1128	CERAMIC CAPACITOR	CKDYB472K500
	C1129	CERAMIC CAPACITOR	CKDYB681K50
	C1131,1132	ELECTR.CAPACITOR	CEAS101M10
		RESISTORS	
	R1116	CARBON FILM RESISTOR	RD1/4PM102J
	R1117	CARBON FILM RESISTOR	RD1/2PM360J
	VR1101	VR	VRTM6H202
	VR1102	VR	VRTM6H202
	VR1103	VR	VRTM6H204
	VR1104	VR	VRTM6H204
		OTHER RESISTORS	RD1/8M□□□

Mark No.	Description	Part No.

⊙TRANS Ass'y (AWZ3214)
There is no supply part in this unit.

⊙REGULATOR Ass'y (AWZ3215)
SEMICONDUCTORS

IC704	REGULATOR IC	NJM7812FA

CAPACITORS

C747	ELECTR.CAPACITOR	CEAS100M25
C748	ELECTR.CAPACITOR	CEAS100M50

⊙POWER Ass'y (AWZ3230)
SEMICONDUCTORS

IC701,702	REGULATOR IC	NJM7805FA
IC703	REGULATOR IC	NJM7812FA
IC705	REGULATOR IC	NJM78M56FAS
IC709	IC PROTECTOR	ICP-N38
IC751	LOGIC IC	TC4066BP
IC753	OP-AMP IC	RC4558DXP
IC801	SOUND PROCESSOR IC	PA0049
IC802,803	OP-AMP IC	RC4558DXP
IC805	GEQ IC	LA3607
IC851	AUDIO IC	STK4142-2GP
Q11	TRANSISTOR	2SA1048
Q12	TRANSISTOR	2SC2458
Q21,22	TRANSISTOR	2SC2458
Q23	TRANSISTOR	XDA143ES
Q701	TRANSISTOR	2SC3377
Q702,708	TRANSISTOR	XDA124ES
Q706	TRANSISTOR	2SB560
Q707	TRANSISTOR	2SC2603
Q703,709	TRANSISTOR	XDC124ES
Q710	TRANSISTOR	2SA933S
Q741	TRANSISTOR	2SA1515
Q742,752	TRANSISTOR	XDC143ES
Q744	TRANSISTOR	XDC124ES
Q751,743	TRANSISTOR	XDA143ES
Q753,754	TRANSISTOR	2SC2458
Q851-854	TRANSISTOR	2SC2458
D11	DIODE	HSS104-02
D701	DIODE	RBV402
D702-709	DIODE	S5566
D712,714	DIODE	S5566
D716	ZENER DIODE	RD30ESB
D717	ZENER DIODE	RD7.5ESB
D718,719	DIODE	HSS104-02
D740	DIODE	HSS104-02
D741	ZENER DIODE	RD6.8ESB3
D742-744	DIODE	HSS104-02
D745	ZENER DIODE	RD2.7ESB
D746,799	DIODE	HSS104-02
D851,852	ZENER DIODE	RD12ESB
D853	DIODE	HSS104-02

COILS and RELAY

L751,752	INDUCTOR	LTA392J
L851,852	COIL	ATH-133
RY851	RELAY	ASR-111

CAPACITORS

C11	ELECTR.CAPACITOR	CEAS100M50
C701,702	ELECTR.CAPACITOR (2200μF/42V)	ACH1109
C703,704	ELECTR.CAPACITOR	CEAS222M16
C705,706	ELECTR.CAPACITOR	CEAS100M25
C707	ELECTR.CAPACITOR	CEAS332M35
C708,709	ELECTR.CAPACITOR	CEAS100M25
C716	CERAMIC CAPACITOR	ACG-009
C718	ELECTR.CAPACITOR	CEAS101M35
C720	ELECTR.CAPACITOR	CEAS220M100
C723	ELECTR.CAPACITOR	CEAS470M50
C724	ELECTR.CAPACITOR	CEAS100M50
C730	ELECTR.CAPACITOR	CEAS101M16
C731	ELECTR.CAPACITOR	CEAS470M10
C732	ELECTR.CAPACITOR	CEAS331M10
C733	ELECTR.CAPACITOR	CEAS470M50
C741,742	ELECTR.CAPACITOR	CEAS010M50
C753,754	AUDIO FILM CAPACITOR	CFTXA683J50
C755,756	MYLAR FILM CAPACITOR	CQMA182J50
C757,758	ELECTR.CAPACITOR	CEAS330M16
C759,760	AUDIO FILM CAPACITOR	CFTXA273J50
C761,762	AUDIO FILM CAPACITOR	CFTXA473J50
C765,766	ELECTR.CAPACITOR	CEAS470M10
C771	ELECTR.CAPACITOR	CEAS3R3M50
C803,804	CERAMIC CAPACITOR	CKDYB682K50
C805,806	MYLAR FILM CAPACITOR	CQMA102J50
C807,808	MYLAR FILM CAPACITOR	CQMA562J50
C809	ELECTR.CAPACITOR	CEASR47M50
C810	ELECTR.CAPACITOR	CEAS6R8M50
C811	MYLAR FILM CAPACITOR	CQMA223J50
C812	CERAMIC CAPACITOR	CKCYX104M25
C819,820	ELECTR.CAPACITOR	CEAS3R3M50
C823	CERAMIC CAPACITOR	CKDYB561K50
C824	CERAMIC CAPACITOR	CKDYB822K50
C825	CERAMIC CAPACITOR	CKDYB561K50
C826,829	CERAMIC CAPACITOR	CKDYB272K50
C830	CERAMIC CAPACITOR	CKDYX393M25
C831	CERAMIC CAPACITOR	CKDYB472K50
C832	CERAMIC CAPACITOR	CKDYX683M25
C833	CERAMIC CAPACITOR	CKDYB102K50
C834	CERAMIC CAPACITOR	CKDYX153M25
C835	CERAMIC CAPACITOR	CKDYB182K50
C836	CERAMIC CAPACITOR	CKDYX273M25
C837	AUDIO FILM CAPACITOR	CFTXA474J50
C851,852	ELECTR.CAPACITOR	CEAS2R2M50
C855,856	ELECTR.CAPACITOR	CEAS470M25
C857,858	ELECTR.CAPACITOR	CEAS101M25
C859	ELECTR.CAPACITOR	CEANP220M35
C860	ELECTR.CAPACITOR	CEAS100M50
C863	ELECTR.CAPACITOR	CEAS470M35
C865-868	CERAMIC CAPACITOR	CKDYX104M25
C869	CERAMIC CAPACITOR	CKDYF473Z50
C870	ELECTR.CAPACITOR	CEAS220M25
C873	ELECTR.CAPACITOR	CEAS221M10
C874	CERAMIC CAPACITOR	CKCYF473Z50

RESISTORS

R11,12	METAL OXIDE RESISTOR	RS2LMFR22J
R705,706	CARBON FILM RESISTOR	RD1/4PM681J
R714	CARBONFILM RESISTOR	RD1/2PM223J
R715	METAL OXIDE RESISTOR	RS2LMF331J
R716	CARBON FILM RESISTOR	RD1/4PM223J
R859-862	CARBON FILM RESISTOR	RD1/4PM222J

Mark	No.	Description	Part No.
	R863	CARBON FILM RESISTOR	RD1/4PMFL471J
	R864	CARBON FILM RESISTOR	RD1/4PM101J
	R865	CARBON FILM RESISTOR	RD1/4PM102J
	R866	CARBON FILM RESISTOR	RD1/4PMFL222J
	R867	CARBON FILM RESISTOR	RD1/4PM222J
	R868	CARBON FILM RESISTOR	RD1/4PMFL101J
	R869,870	CARBON FILM RESISTOR	RD1/4PM100J
	R871,872	METAL OXIDE RESISTOR	RS1LMF331J
	R873,874	CARBON FILM RESISTOR	RD1/4PMFL100J
	R881	METAL OXIDE RESISTOR	RS2LMF471J
		OTHER RESISTORS	RD1/8PM□□□

OTHERS

	CN	JACK	AKN1027
	CN10	CONNECTOR (3P)	KPE3
	CN11	CONNECTOR (5P)	KPE5
	CN12	CONNECTOR (13P)	KPE13
	CN16,17	CONNECTOR (15P)	KPE15
	CN19	CONNECTOR (6P)	KPE6
		SPEAKER TERMINAL 4-P	AKE1012
		SOCKET 15-P	AKP-048
		SOCKET 14-P	AKP1056

⊙AF-TUNER Ass'y (AWZ3914)

SEMICONDUCTORS

	IC101	PLL IC	LM7001
	IC201	AM/FM IC	LA1265S
	IC203	MPX IC	AN7470P
	IC301	OP-AMP IC	RC4558DXP
	IC302	LOGIC IC	MC14052BCP
	IC303	OP-AMP IC	RC4558DXP
	IC305	DOLBY-B IC	CXA1100P
	IC307	OP-AMP IC	RC4558DXP
	IC308	SYSTEM CONTROL IC	PD5147C
	Q101	TRANSISTOR	2SC2668
	Q204	N-FET	2SK246
	Q205	TRANSISTOR	XDA143ES
	Q206	TRANSISTOR	2SC1740SLN
	Q207	TRANSISTOR	XDA143ES
	Q208	TRANSISTOR	XDC124ES
	Q301-308	TRANSISTOR	2SC2458
	Q309	TRANSISTOR	XDA124ES
	Q316	TRANSISTOR	XDC124ES
	Q317	TRANSISTOR	2SA1515
	Q318	TRANSISTOR	XDC124ES
	Q319	TRANSISTOR	2SA1515
	Q320	TRANSISTOR	XDC124ES
	Q321	TRANSISTOR	2SA1515
	Q322-326	TRANSISTOR	XDC124ES
	Q328,335	TRANSISTOR	XDC143ES
	D203-206	DIODE	HSS104-02
	D301,302	DIODE	HSS104-02
	D307-318	DIODE	HSS104-02
	D320-325	DIODE	HSS104-02
	D327	DIODE	HSS104-02
	D490-493	DIODE	HSS104-02

SWITCHS

	S301	SLIDE SWITCH (BEAT CUT)	ASH1031

COILS and FILTERS

	L202	COIL	ATE-079
	L203,204	AXIAL INDUCTOR	LAU2R2M
	L303	AXIAL INDUCTOR	LAU220K
	F101,202	CERAMIC FILTER	ATF-107
	F203	CERAMIC FILTER	ATF-208
	F301,302	DOLBY FILTER	ATF1064

CAPACITORS

	C101,107	CHIP CAPACITOR	CKSQYF223Z50
	C201,204	CHIP CERAMIC C.	CCSQCH150J50
	C205	CHIP CAPACITOR	CKSQYF103Z50
	C206	ELECTR.CAPACITOR	CEAS470M10
	C207	CHIP CAPACITOR	CKSQYF223Z50
	C208	CERAMIC CAPACITOR	CKDYX103M25
	C209	AUDIO FILM CAPACITOR	CFTXA224J50
	C210	CHIP CAPACITOR	CKSQYF223Z50
	C211	CERAMIC CAPACITOR	CKSQYF473Z50
	C212	CHIP CAPACITOR	CKSQYF223Z50
	C215	CERAMIC CAPACITOR	CKSQYB103K50
	C216	CERAMIC CAPACITOR	CCSQCH470J50
	C217	ELECTR.CAPACITOR	CEAS470M16
	C218	ELECTR.CAPACITOR	CEAS330M16
	C219	CHIP CAPACITOR	CKSQYF103Z50
	C220	CERAMIC CAPACITOR	CKSQYF473Z50
	C221,222	CHIP CAPACITOR	CKSQYF223Z50
	C223	ELECTR.CAPACITOR	CEAS330M16
	C224	ELECTR.CAPACITOR	CEAS4R7M50
	C225	CHIP CAPACITOR	CKSQYF103Z50
	C226	ELECTR.CAPACITOR	CEAS010M50
	C227	CERAMIC CAPACITOR	CKSQYB471K50
	C228	CHIP CAPACITOR	CKSQYB222K50
	C230	CERAMIC CAPACITOR	CKDYX473M25
	C231	ELECTR.CAPACITOR	CEAS010M50
	C232	ELECTR.CAPACITOR	CEAS2R2M50
	C233	ELECTR.CAPACITOR	CEAS100M50
	C234	ELECTR.CAPACITOR	CEANP100M35
	C235	ELECTR.CAPACITOR	CEAS100M50
	C236	CERAMIC CAPACITOR	CKSQYF473Z50
	C237	ELECTR.CAPACITOR	CEAS101M16
	C238	CAPACITOR	ACE1039
	C240	ELECTR.CAPACITOR	CEAS1R5M50
	C241	ELECTR.CAPACITOR	CEAS3R3M50
	C242	ELECTR.CAPACITOR	CEAS470M16
	C243,244	CHIP CAPACITOR	CKSQYB102K50
	C246	ELECTR.CAPACITOR	CEASR22M50
	C248	CHIP CAPACITOR	CKSQYF103Z50
	C255,256	CERAMIC CAPACITOR	CKDYB682K50
	C265,266	ELECTR.CAPACITOR	CEAS100M50
	C267	CERAMIC CAPACITOR	CKDYX223M25
	C288	CERAMIC CAPACITOR	CCDSL101J50
	C295,296	CERAMIC CAPACITOR	CKPUYB102K50
	C298	CERAMIC CAPACITOR	CCDSL820J50
	C299	CERAMIC CAPACITOR	CKDYF102Z50
	C303-306	CHIP CAPACITOR	CCSQCH101J50
	C307,308	ELECTR.CAPACITOR	CEAS2R2M50
	C309,310	CERAMIC CAPACITOR	CKCYB152K50
	C311,312	CERAMIC CAPACITOR	CKCYB562K50
	C315,316	ELECTR.CAPACITOR	CEAS470M10
	C317,318	CHIP CAPACITOR	CCSQCH101J50
	C325,326	C. CERAMIC CAPACITOR	CKSQYB273K50
	C327,328	ELECTR.CAPACITOR	CEAS010M50
	C329	ELECTR.CAPACITOR	CEAS100M50
	C330	ELECTR.CAPACITOR	CEAS220M25
	C331,332	ELECTR.CAPACITOR	CEAS0R1M50
	C333	ELECTR.CAPACITOR	CEAS470M16
	C334	CERAMIC CAPACITOR	CKSQYB473K50
	C335	ELECTR.CAPACITOR	CEASR68M50

Mark	No.	Description	Part No.
	C336	ELECTR.CAPACITOR	CEAS101M10
	C337	ELECTR.CAPACITOR	CEASR68M50
	C338	ELECTR.CAPACITOR	CEAS220M16
	C339,340	ELECTR.CAPACITOR	CEAS2R2M50
	C341-344	ELECTR.CAPACITOR	CEAS010M50
	C345,346	CERAMIC CAPACITOR	CKCYB152K50
	C347	CERAMIC CAPACITOR	CKCYB102K50
	C350,351	CERAMIC CAPACITOR	CKCYF473Z50
	C352	ELECTR.CAPACITOR	CEAS100M50
	C353,354	CERAMIC CAPACITOR	CKDYF473Z50
	C363	CERAMIC CAPACITOR	CKCYB102K50
	C364	ELECTR.CAPACITOR	CEAS100M50
	C365,366	CERAMIC CAPACITOR	CKSQYB152K50
	C367,368	CERAMIC CAPACITOR	CKSQYF473Z50
	C369,370	CHIP CAPACITOR	CKSQYF223Z50

RESISTORS

	R122,212	CARBONFILM RESISTOR	RD1/8PM221J
	R214	CARBONFILM RESISTOR	RD1/8PM471J
	R220	CARBONFILM RESISTOR	RD1/8PM223J
	R305,306	CARBONFILM RESISTOR	RD1/8PM122J
	R307,308	CARBONFILM RESISTOR	RD1/8PM473J
	R309,310	CARBONFILM RESISTOR	RD1/8PM474J
	R315,316	CARBONFILM RESISTOR	RD1/8PM820J
	R323,324	CARBONFILM RESISTOR	RD1/8PM472J
	R325,326	CARBONFILM RESISTOR	RD1/8PM332J
	R327,328	CARBONFILM RESISTOR	RD1/8PM682J
	R336	CARBONFILM RESISTOR	RD1/8PM222J
	R338	CARBONFILM RESISTOR	RD1/8PM332J
	R340	CARBONFILM RESISTOR	RD1/8PM105J
	R341,342	CARBONFILM RESISTOR	RD1/8PM472J
	R343,344	CARBONFILM RESISTOR	RD1/8PM242J
	R353,362	CARBONFILM RESISTOR	RD1/8PM103J
	R367,368	CARBONFILM RESISTOR	RD1/8PM683J
	R369,370	CARBONFILM RESISTOR	RD1/8PM101J
	R385-387	CARBONFILM RESISTOR	RD1/8PM103J
	R388-389	CARBONFILM RESISTOR	RD1/8PM223J
	R401-406	CARBONFILM RESISTOR	RD1/8PM103J
	R407-409	CARBONFILM RESISTOR	RD1/8PM473J
	R410	CARBONFILM RESISTOR	RD1/8PM152J
	R411	CARBONFILM RESISTOR	RD1/8PM103J
	R419	CARBONFILM RESISTOR	RD1/8PM105J
	R422,430	CARBONFILM RESISTOR	RD1/8PM102J
	R431	CARBONFILM RESISTOR	RD1/8PM473J
	R455-457	CARBONFILM RESISTOR	RD1/8PM103J
	R458	CARBONFILM RESISTOR	RD1/8PM222J
	R491	CARBONFILM RESISTOR	RD1/8PM102J
	R492,496	CARBONFILM RESISTOR	RD1/8PM182J
	VR201	VR	VRTB6VS223
	VR202,203	VR	VRTB6VS472
	VR301-304	VR (20k)	ACP1004
		OTHER RESISTORS	RS1/10S□□□J

OTHERS

	CN	PIN JACK (2P)	AKB1171
	CN21	CONNECTOR (10P)	KPE10
	CN22	CONNECTOR (12P)	KPE12
	CN23	CONNECTOR (15P)	KPE15
	CN24	CONNECTOR (7P)	KPE7
	CN25	CONNECTOR (9P)	KPE9
	X201	CRYSTAL RESONATOR (7,200MHz)	ASS1042
	X202	CERAMIC RESONATOR (450kHz)	ATF1027
	X301	CERAMIC OSCILLATOR (4.19MHz)	ASS1022
		ANTENNA TERMINAL4-P	AKA1010
		PLUG 15-P	AKM-080
		PLUG 14-P	AKM1048
		2 SERIAL F.E.MODULE Ass'y	AXQ1002
		AM RF TUNING BLOCK	AXX1011

NOTE: Since the 2 serial F.E.Module Ass'y (AXQ1002) is replaced during the service, the parts in the Ass'y are not designated as the service parts.

⊙VOLUME Ass'y (AWZ3919)

SEMICONDUCTORS

	IC601	OP-AMP IC	RC4558DXP
	IC602	MECHANISM DRIVER IC	TA7291S

CAPACITORS

	C601,602	ELECTR.CAPACITOR	CEAS4R7M50
	C605,606	ELECTR.CAPACITOR	CEAS470M10
	C607	CERAMIC CAPACITOR	CKCYF473Z50

RESISTORS

	VR601	VR (VOLUME CONTROL)	ACX1053
		OPTHER RESISTOR	RS1/8PM□□□J

⊙DECK SW Ass'y (AWZ3921)

SEMICONDUCTORS

	D1401	LED (GREEN) (DECK1 REV)	AEL1132
	D1402	LED (GREEN) (DECK1 FWD)	AEL1132
	D1403	LED (GREEN) (DECK2 REV)	AEL1132
	D1404	LED (GREEN) (DECK2 FWD)	AEL1132
	D1405	LED (RED) (REC/PAUSE)	AEL1131

SWITCHS

	S1401	SLIDE SWITCH (DOLBY NR)	ASH1039
	S1402	SWITCH (DECK2 STOP)	ASG1034
	S1403	SWITCH (DECK2 FWD)	ASG1034
	S1404	SWITCH (DECK2 FF)	ASG1034
	S1405	SWITCH (ASES)	ASG1034
	S1406	SWITCH (DECK2 REV)	ASG1034
	S1407	SWITCH (DECK2 REW)	ASG1034
	S1409	SWITCH (DECK1 STOP)	ASG1034
	S1410	SWITCH (REC/PAUSE)	ASG1034
	S1411	SWITCH (DECK1 FF)	ASG1034
	S1412	SWITCH (DECK1 FWD)	ASG1034
	S1413	SWITCH (COPY)	ASG1034
	S1414	SWITCH (DECK1 REW)	ASG1034
	S1415	SWITCH (DECK1 REV)	ASG1034

⊙TX-CD SW Ass'y (AWZ3925)

SEMICONDUCTORS

	IC1201	IC	PDG065C
	Q1201	TRANSISTOR	XDC143ES
	Q1202	TRANSISTOR	2SC2458
	D1212-1217	DIODE	HSS104-02
	D1218	ZENER DIODE	RD6.2ESB

SWITCHS

	S1201	SWITCH (CLOCK ADJ.)	ASG1034
	S1202	SWITCH (TIMER SET)	ASG1034

Mark	No.	Description	Part No.
	S1203	SWITCH (WAKE UP)	ASG1034
	S1204	SWITCH (REC)	ASG1034
	S1205	SWITCH (DISPLAY)	ASG1034
	S1206	SWITCH (AUTO PRE.MEMORY)	ASG1034
	S1207	SWITCH (AM-NR/FM-MONO)	ASG1034
	S1208	SWITCH (BAND)	ASG1034
	S1209	SWITCH (TUNING +)	ASG1034
	S1210	SWITCH (TUNING -)	ASG1034
	S1211	SWITCH (FREQ./STATION)	ASG1034
	S1221	SWITCH (PLAY)	ASG1034
	S1222	SWITCH (TRACK -)	ASG1034
	S1223	SWITCH (TRACK +)	ASG1034
	S1224	SWITCH (OPEN/CLOSE)	ASG1034
	S1225	SWITCH (STOP)	ASG1034
	S1226	SWITCH (PAUSE)	ASG1034
	S1227	SWITCH (PROGRAM)	ASG1034
	S1228	SWITCH (HI-LITE SCAN)	ASG1034
	S1229	SWITCH (REPEAT)	ASG1034

COLIS

	L1201	AXIAL INDUCTOR	LAU220K

CAPACITORS

	C1201	CERAMIC CAPACITOR	CKDYX473M25
	C1202	ELECTR.CAPACITOR	CEJA010M50
	C1203	AUDIO FILM CAPACITOR	CFTXA224J50
	C1204	CERAMIC CAPACITOR	CKDYB102K50
	C1205	ELECTR.CAPACITOR	CEJA470M10
	C1206	CERAMIC CAPACITOR	CKDYF473Z50
	C1207	ELECTR.CAPACITOR	CEJA470M10
	C1208	CAPACITOR (0.047F/5.5V)	ACH1135
	C1209	CERAMIC CAPACITOR	CKDYF223Z50
	C1211	ELECTR.CAPACITOR	CEJA2R2M50

RESISTORS

		ALL RESISTORS	RS1/8PM□□□J

OTHERS

	V1201	FL TUBE	AAV1127
	X1202	CRYSTAL RESONATOR (8MHz)	ASS1015
		REMOTE RECEIVER UNIT	AXX1010

⊙AMP SW Ass'y (AWZ3926)

SEMICONDUCTORS

	D1305	LED (RED) (PRESET)	AEL1108
	D1306	LED (RED) (MANUAL)	AEL1108

SWITCHS

	S1301	SWITCH (MEMORY)	ASG1034
	S1302	SWITCH (START/SET)	ASG1034
	S1303	SWITCH (MODE)	ASG1034
	S1304	SWITCH (POWER)	ASG1034
	S1305	SWITCH (B.G.M./TREBLE EQ)	ASG1034
	S1306	SWITCH (HALL/S.ST./WIDE)	ASG1034
	S1307	SWITCH (DISCO./P.BASS EQ)	ASG1034
	S1308	SWITCH (SFC CLEAR)	ASG1034
	S1309	SWITCH (CD)	ASG1034
	S1310	SWITCH (TUNER)	ASG1034
	S1311	SWITCH (TAPE)	ASG1034
	S1312	SWITCH (PHONO)	ASG1034

RESISTORS

	R1301	CARBONFILM RESISTOR	RD1/8PM331J

⊙MOTHER BOARD Ass'y (PWM1556)

SEMICONDUCTORS

⚠	IC2020	REGULATOR IC	M5298P
	IC2101	PRE AMP IC	CXA1471S
	IC2151	SERVO IC	CXA1372S
⚠	IC2201	POWER OP-AMP,IC	LA6520
⚠	IC2202	POWER OP-AMP,IC	LA6517
	IC2301	EFM DEMODULATION IC	CXD2500AQ
	IC2351	MICROCOMPUTER,IC	PD4401A
	IC2401	8FS DF DACONVERTERIC	TC9237BN
	IC2404	OP-AMP IC	NJM4558D-D
	Q2062	TRANSISTOR	2SC1740S
	Q2101	TRANSISTOR	2SA854S
	Q2381,2382	TRANSISTOR	2SC1740S
	Q2401	N-FET	2SK246
	D2211	ZENNER DIODE	MTZJ6.2B/C
	D2301	DIODE	1SS254
	D2381-2383	DIODE	1SS254
	D2401	DIODE	1SS254
	D2701-2703	DIODE	1SS254

COILS

	L2401	AXIAL INDUCTOR	LAU100K
	L2403,2404	AXIAL INDUCTOR	LAU100K

CAPACITORS

	C2025-2028	ELECTR.CAPACITOR	CEAS101M10
	C2060	ELECTR.CAPACITOR	CEAS010M50
	C2101	ELECTROLYTIC CAPACIT	CEAS471M6R3
	C2102	ELECTR.CAPACITOR	CEAS101M10
	C2103	CERAMIC CAPACITOR	CCCCH180J50
	C2104	ELECTR.CAPACITOR	CEAS101M10
	C2110	CERAMIC CAPACITOR	CKCYF103Z50
	C2153	ELECTR.CAPACITOR	CEAS101M10
	C2155	MYLAR FILM CAPACITOR	CQMA182J50
	C2156	CERAMIC CAPACITOR	CGCYX333K25
	C2157	CERAMIC CAPACITOR	CGCYX103K25
	C2158,2159	CERAMIC CAPACITOR	CGCYX104K25
	C2160	ELECTR.CAPACITOR	CEAS4R7M50
	C2161	CERAMIC CAPACITOR	CGCYX104K25
	C2162	ELECTR.CAPACITOR	CEAS010M50
	C2163	CERAMIC CAPACITOR	CGCYX104K25
	C2164	CERAMIC CAPACITOR	CGCYX103K25
	C2167	CERAMIC CAPACITOR	CKCYF103Z50
	C2168	CERAMIC CAPACITOR	CGCYX333K25
	C2169	CERAMIC CAPACITOR	CGCYX103K25
	C2170	CERAMIC CAPACITOR	CKCYB332K50
	C2171,2172	CERAMIC CAPACITOR	CKCYB472K50
	C2202,2204	CERAMIC CAPACITOR	CKCYF103Z50
	C2212	MYLAR FILM CAPACITOR	CQMA103K50
	C2216,2217	ELECTR.CAPACITOR	CEAS330M16
	C2301	CERAMIC CAPACITOR	CGCYX104K25
	C2302	ELECTROLYTIC CAPACIT	CEAS331M6R3
	C2303	ELECTR.CAPACITOR	CEAS101M10
	C2306	CERAMIC CAPACITOR	CKCYB152K50
	C2307	CERAMIC CAPACITOR	CGCYX473K25
	C2308	CERAMIC CAPACITOR	CGCYX103K25
	C2309	ELECTR.CAPACITOR	CEASR47M50

Mark	No.	Description	Part No.
	C2351	ELECTR.CAPACITOR	CEAS330M16
	C2353,2361	CERAMIC CAPACITOR	CKCYF103Z50
	C2403,2404	CERAMIC CAPACITOR	CCCCH470J50
	C2413	ELECTR.CAPACITOR	CEAS101M10
	C2414	MYLAR FILM CAPACITOR	CQMA103K50
	C2415,2416	MYLAR FILM CAPACITOR	CQMA104K50
	C2421	CERAMIC CAPACITOR	CKCYF473Z50
	C2427,2428	CERAMIC CAPACITOR	CCDSL101J50
	C2429,2430	CERAMIC CAPACITOR	CCCCH560J50
	C2433,2434	ELECTR.CAPACITOR	CEANP2R2M50
	C2435-2438	CERAMIC CAPACITOR	CCCCH390J50
	C2441,2442	MYLAR FILM CAPACITOR	CQMA152J50

RESISTORS

VR2102	VR (22k)	RCP1035
VR2103	VR (1k)	RCP1027
VR2151	VR (22k)	RCP1035
VR2152	VR (22k)	RCP1035
	OTHER RESISTORS	RS1/6PM□□□J

OTHERS

CN2001	CONNECTOR (7P)	KPE7
CN2002	CONNECTOR (12P)	KPE12
CN2101	CONNECTOR	52045-1610
X2351	CERAMIC RESONATOR (4.19MHz)	VSS1014
X2401	XTAL RES (16.9344MHz)	PSS1006

Mark	No.	Description	Part No.

6. ADJUSTMENTS

6.1 TUNER SECTION

Preparations

- Set the VOLUME control to minimum.
- Set the input selector to TUNER.
- Refer to Fig. 6-3. for adjustment test points and controls.

FM tuner section adjustment

- Select the FM mode with the BAND selector switch.
- Connect as shown in Fig. 6-1.

Step	Adjustment name	FM SG (1 kHz ± 75 kHz dev.)		Reception frequency indication	Adjustment	
		Frequency (MHz)	Level (dB μ)		Adjusting point	Specification
1	Center meter adjustment	98	60	98 MHz	L202	Adjust so that the voltage of both side of R220 becomes 0V ± 50 mV.
2	FM VCO free-run frequency adjustment	98	60 (No modulation)	98 MHz	VR203	Adjust so that the frequency between TP MPX VCO and GND becomes 76±0.5 kHz.
3	Tuning indicator level adjustment	98	17 (±3dB)	98 MHz	VR201	Adjust to the point where the tuning indicator just lights down.

AM tuner section adjustment

- AM SG level (dB μ/m) indicates the electric field strength of the loop antenna.
- Select the AM mode with the BAND selector switch.
- Connect as shown in Fig. 6-2.

Step	Adjustment name	AM SG (400 Hz, 30% modulation)		Reception frequency indication	Adjustment	
		Frequency (kHz)	Level (dB μ/m)		Adjusting point	Specification
1	Tracking adjustment *1	603 *2	55	*2 603 kHz	ANT coil of AM RF turning block	Adjust so that the DC voltage between TP S-METER and GND becomes maximum.
2		1395 *3	55	*3 1395 kHz	TC101	Adjust so that the DC voltage betwen TP S-METER and GND becomes maximum.
3	Repeat steps 1 and 2 so that both steps are satisfied. *1					
4	IFT adjustment *1	603 *2	55	*2 603 kHz	F203	Adjust so that the DC voltage between TP S-METER and GND becomes maximum.
5	Tuning indicator level adjustment	999 *4	55 (±5dB)	*4 999 kHz	VR202	Adjust to the point where the tuning indicator just lights down.

*1: HEWZIXK only

*2-*4: The frequencies in the above table are for the 9 kHz area. (For the 9 kHz area of SD, KUC, HEXK, HBXK, HEWZIXK and YPW types)
The frequencies in the case of the 10 kHz area are as follows (The 10 kHz area of SD and KUC types):
*2: 600 kHz
*3: 1400 kHz
*4: 1000 kHz

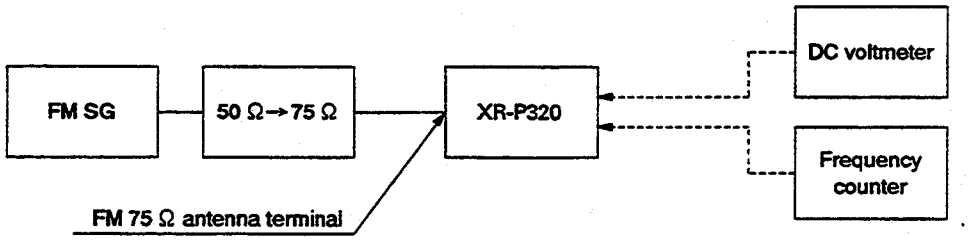

Fig. 6-1. FM Adjustment Connection Diagram

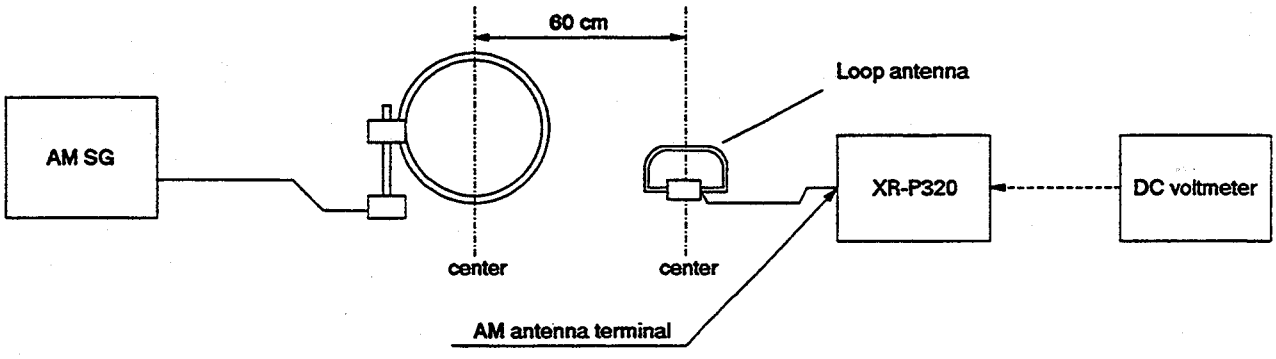

Fig. 6-2. AM Adjustment Connection Diagram

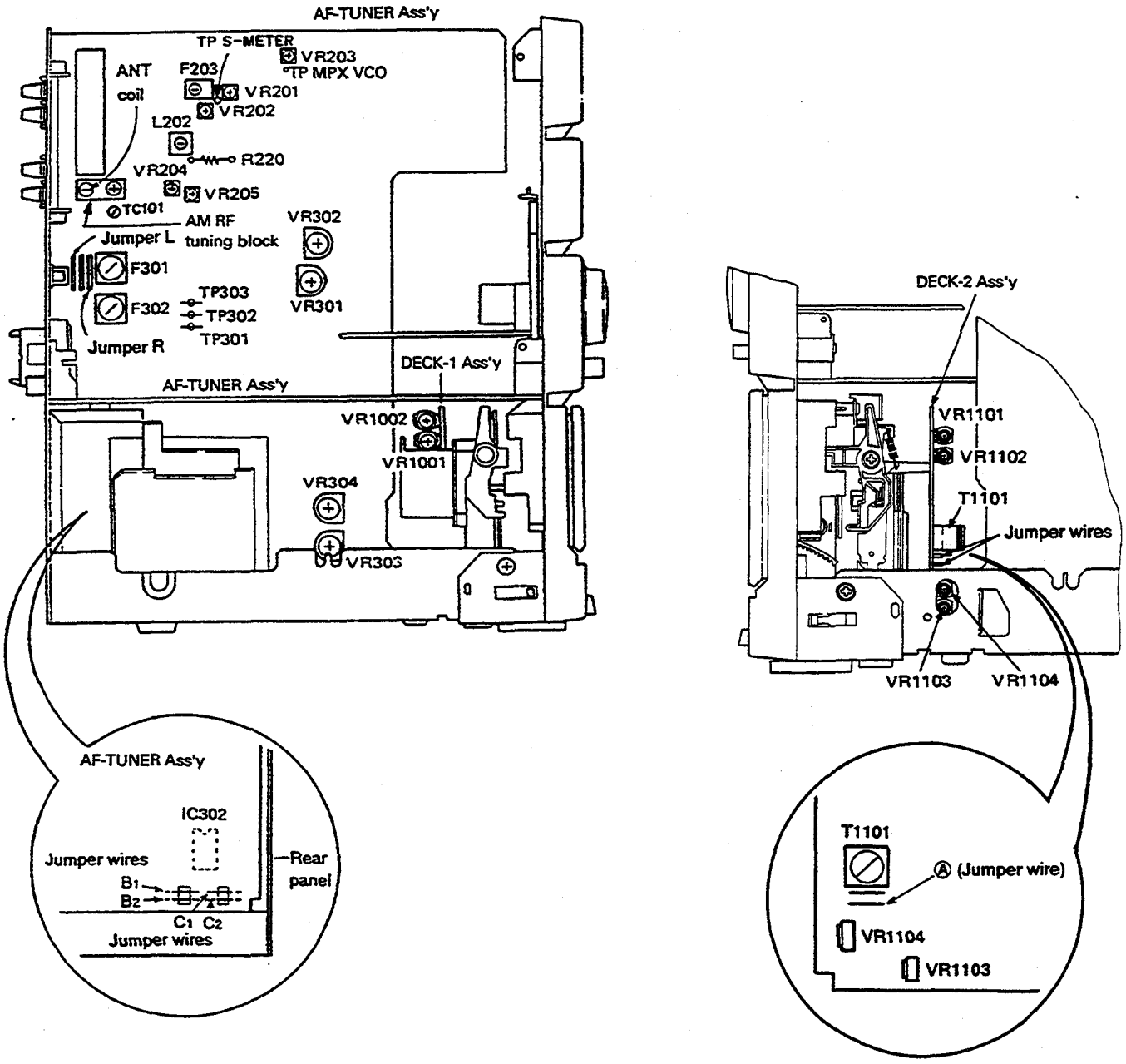

Fig. 6-3. Adjustment Points and Test Points

6.2 TAPE DECK SECTION

• Adjustment points and test points are shown in Fig. 6-3.

● Mechanical Adjustment

• Set the TAPE function.
• Test tape: STD–301 (3 kHz, 30 min.)

1. Tape Speed Adjustment							
No.	Mode	Test tape	Adjusting points		Measurement points	Adjustment procedure	Remarks
1	PLAY	STD–301 (playback 3 kHz)	Deck I	AF-TUNER Ass'y VR304	TP303 (Rch)	Press the PLAY SW and adjust so that the reading becomes 3010 ± 10 Hz. Confirm that wow & flutter level is below 0.2% (in the reverse direction, confirm that the reading is within 3010 ± 55 Hz).	
2	PLAY		Deck II	AF-TUNER Ass'y VR303	TP303 (Rch)	Press the PLAY SW and adjust so that the reading becomes 3010 ± 10 Hz. Confirm that wow & flutter level is below 0.2% (in the reverse direction, confirm that the reading is within 3010 ± 55 Hz).	

● Electrical Adjustment

Check the following before starting.

1. Confirm that tape speed adjustment has been completed.
2. Clean the heads and demagnetize them using a head eraser.
3. Set the measurement level to 0 dBV=1 Vrms.
4. Use the specified tape for adjustment. Use the labeled (A) side of the test tape.
   STD–331B: for playback adjustment
   STD–630: normal blank tape
5. Provide yourself with the following measuring devices:
   AC millivoltmeter, low–frequency oscillator, attenuator, oscilloscope
6. Adjust both right and left channels unless otherwise specified.
7. Turn the DOLBY NR switch off unless otherwise specified.
8. Warm up the unit for several minutes before adjustment. In particular, be sure to warm up the unit in the REC/PLAY mode for 3 to 5 minutes before starting recording/playback frequency characteristics adjustment.
9. Always follow the indicated adjustment order. Otherwise, a complete adjustment may not be achieved.

Playback Adjustment (decks I, II)

1. Head angle adjustment
2. Playback level adjustment

Recording Adjustment (deck II)

1. Bias oscillation frequency check
2. Recording/playback frequency characteristics adjustment
3. Recording level adjustment
4. ALC operation check

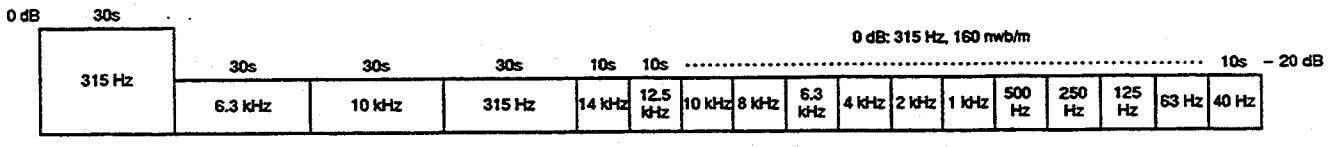

Fig. 6-4. STD–331B Test Tape

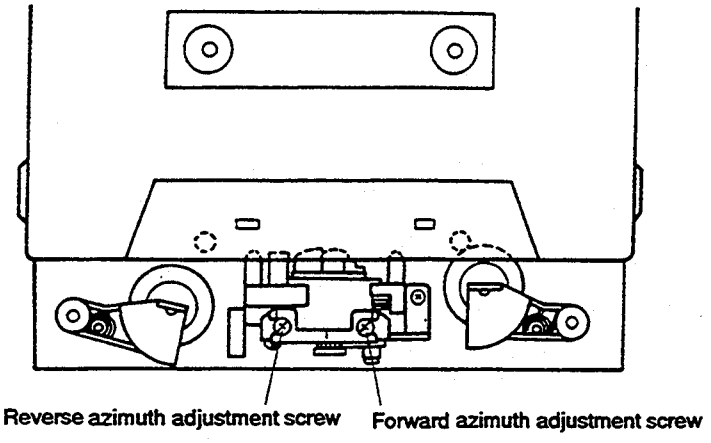

Fig. 6-5. Head Angle Adjustment

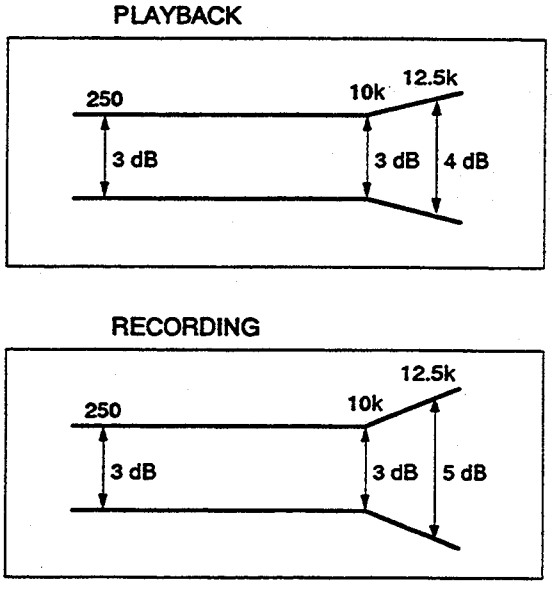

Fig. 6-6. Frequency Characteristics

● Playback Adjustment

1. Head Angle Adjustment

• This unit is equipped with auto tape selector.
• Do not switch between forward and reverse operation with the screwdriver inserted.

Step	Tape selector (AUTO)	Mode	Input signal/ test tape	Adjusting points		Measurement points	Adjustment value	Remarks
1	NORMAL	PLAY	STD-331B test tape (playback 10 kHz, −20 dB)	Deck I	Head angle adjustment screw (Fig. 6-5)	TP301 (Lch) TP303 (Rch) (DOLBY TP)	Max. playback signal level	After adjustment, apply lock paint to the head angle adjustment screw.
				Deck II				

2. Playback Level Adjustment

• Since this adjustment determines playback Dolby NR level, perform it carefully.

Step	Tape selector (AUTO)	Mode	Input signal/ test tape	Adjusting points		Measurement points	Adjustment value	Remarks
1	NORMAL	PLAY	STD-331B test tape (playback 315 kHz, 0 dB)	Deck I	VR1001 (Lch) VR1002 (Rch)	TP301 (Lch) TP303 (Rch) (DOLBY TP)	−5.2 dBV	
				Deck II	VR1101 (Lch) VR1102 (Rch)			

Note: Deck II level also changes when deck I level is adjusted.
Therefore, adjust deck I level first.

● Recording Adjustment

Note: To make frequency response of the phone equalizer flat, perform the following adjustment items 2 to 4 with connecting B1 to B2 and C1 to C2 in Fig. 6-3 respectively.

1. Bias Oscillation Frequency Check

Step	Tape selector (AUTO)	Mode	Input signal/ test tape	Adjusting points		Measurement points	Adjustment value	Remarks
1	NORMAL	REC	Load the STD-630 test tape and set the recording mode.	Deck I			Oscillation frequency to be 106.5 ± 2 kHz with the rear panel beat-cut switch in the "1" position.	Frequency is 2 to 3 kHz lower with the rear panel beat-cut switch in the "2" position.
				Deck II	—	Between the Ⓐ point in Fig. 6-3 and GND		

2. Recording/Playback Frequency Characteristics Adjustment

• Since this adjustment affects recording bias, prevent distortion from increasing due to underbias.

Step	Tape selector (AUTO)	Mode	Input signal/ test tape	Adjusting points		Measurement points	Adjustment value	Remarks
1	NORMAL	REC	Input a 315 Hz signal to the phono terminal and set the input selector to PHONO.	Deck I		TP301 (Lch) TP303 (Rch) (DOLBY TP)	-25.2 dBV	
				Deck II	Input signal level			
2	NORMAL	REC/ PLAY	Load the STD-630 test tape and record/ playback the 315 Hz and 10 kHz signals (see the Note below).	Deck I		TP301 (Lch) TP303(Rch) (DOLBY TP)	Repeat adjustment until playback level of the 10 kHz signal is within 0 ± 0.5 dB from that of the 315 Hz signal.	
				Deck II	VR1103 (Lch) VR1104 (Rch)			

Note: Set to the same level used for the 315 Hz input signal at step 1.

3. Recording Level Adjustment

Step	Tape selector (AUTO)	Mode	Input signal/ test tape	Adjusting points		Measurement points	Adjustment value	Remarks
1	NORMAL	REC	Input a 315 Hz signal to the phono terminal and set the input selector to PHONO.	Deck I	Input signal level	TP301 (Lch) TP303 (Rch) (DOLBY TP)	-5.2 dBV	
				Deck II				
2	NORMAL	REC/ PLAY	STD-630 test tape and record/playback the 315 Hz signal.	Deck I		TP301 (Lch) TP303 (Rch) (DOLBY TP)	Repeat recording, playback and adjustment until playback level of the 315 Hz signal becomes -5.2 dBV.	
				Deck II	VR301 (Lch) VR302 (Rch)			

4. ALC Operation Check

Step	Tape selector (AUTO)	Mode	Input signal/ test tape	Adjusting points	Measurement points	Adjustment value	Remarks
1	NORMAL	REC-PAUSE	Input a 315 Hz signal to the PHONO terminal and set the input selector to PHONO.	Input signal level	TP301 (Lch) TP303 (Rch) (DOLBY TP)	-5.2 dBV	
2				Set to a level +10 dB above the input level at step 1.		-1.2 ± 2.5 dBV	

6.3 CD PLAYER SECTION

Adjustment Methods

If a disc player is adjusted incorrectly or inadequately, it may malfunction or not work at all even though there is nothing at all wrong with the pickup or the circuitry. Adjust correctly following the adjustment procedure.

● Adjustment items/verification items and order

Step	Item	Test point	Adjustment location
1	Focus offset adjustment	TP1, Pin 6 (FCS. ERR)	VR2103 (FCS. OFS)
2	Grating adjustment	TP1, Pin 2 (TRK. ERR)	Grating adjustment slit
3	Tracking error balance adjustment	TP1, Pin 2 (TRK. ERR)	VR2102 (TRK. BAL)
4	Pickup radial/ tangential direction tilt adjustment	TP1, Pin 1 (RF)	Radial tilt adjustment screw, Tangential tilt adjustment screw
5	RF level adjustment	TP1, Pin 1 (RF)	VR1 (RF level)
6	Focus servo loop gain adjustment	TP1, Pin 5 (FCS. IN) TP1, Pin 6 (FCS. ERR)	VR2152 (FCS. GAN)
7	Tracking servo loop gain adjustment	TP1, Pin 3 (TRK. IN) TP1, Pin 2 (TRK. ERR)	VR2151 (TRK. GAN)
8	Focus error signal verification	TP1, Pin 6 (FCS. ERR)	———

[Abbreviation table]

FCS. ERR : Focus Error
FCS. OFS : Focus Offset
TRK. ERR : Tracking Error
TRK. BAL : Tracking Balance
FCS. IN : Focus In
TRK. IN : Tracking In

● Measuring instruments and tools

1. Dual trace oscilloscope (10:1 probe)
2. Low-frequency oscillator
3. Test disc (YEDS-7)
4. 12-cm disc (with at least about 70 minutes of recording)
5. Low-pass filter (39 kΩ + 0.001 μF)
6. Resistor (100 kΩ)
7. Hexagonal wrench (M3 mm)
8. Standard tools

● Test point and adjustment variable resistor positions

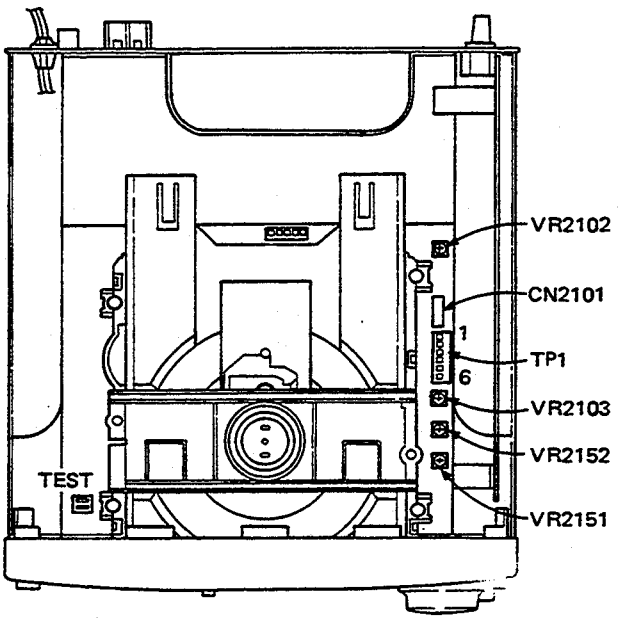

Fig. 6-7 Adjustment Locations

● Notes

1. Use a 10:1 probe for the oscilloscope.
2. All the knob positions (settings) for the oscilloscope in the adjustment procedures are for when a 10:1 probe is used.

● Test mode

These models have a test mode so that the adjustments and checks required for service can be carried out easily. When these models are in test mode, the keys on the front panel work differently from normal. Adjustments and checks can be carried out by operating these keys with the correct procedure. For these models, all adjustments are carried out in test mode.

[Setting these models to test mode]

How to set this model into test mode.
1. Turn off the power switch.
2. Short the test mode jumper wires. (See Fig. 6-7.)
3. Turn on the power switch.

When the test mode is set correctly, the display is different from what it usually is when the power is turned on. If the display is still the same as usual, test mode has not been set correctly, so repeat Steps 1-3.

[Release from test mode]

Here is the procedure for releasing the test mode:
1. Press the STOP key and stop all operations.
2. Turn off the power switch on the front panel.

[Operations of the keys in test mode]

Code	Key name	Function in test mode	Explanation
	PROGRAM	Focus servo close	The laser diode is lit up and the focus actuator is lowered, then raised slowly and the focus servo is closed at the point where the objective lens is focused on the disc. With the player in this state, if you lightly rotate the stopped disc by hand, you can hear the sound the focus servo. If you can hear this sound, the focus servo is operating correctly. If you press this key with no disc mounted, the laser diode lights up, the focus actuator is pulled down, then the actuator is raised and lowered twice and returned to its original position.
▶	PLAY	Spindle servo ON	Starts the spindle motor in the clockwise direction and when the disc rotation reaches the prescribed speed (about 500 rpm at the inner periphery), sets the spindle servo in a closed loop. Be careful. Pressing this key when there is no disc mounted makes the spindle motor run at the maximum speed. If the focus servo does not go correctly into a closed loop or the laser light shines on the mirror section at the outermost periphery of the disc, the same symptom is occurred.
❚❚	PAUSE	Tracking servo close/open	Pressing this key when the focus servo and spindle servo are operating correctly in closed loops puts the tracking servo into a closed loop, displays the track number being played back and the elapsed time on the front panel, and outputs the playback signal. If the elapsed time is not displayed or not counted correctly or the audio is not played back correctly, it may be that the laser is shining on the section with no sound recorded at the outer edge of the disc, that something is out of adjustment, or that there is some other problem. This key is a toggle key and open/close the tracking servo alternately. This key has no effect if no disc is mounted.
⏮/ ◀◀	TRACK/ MANUAL SEARCH REV	Carriage reverse (inwards)	Moves the pickup position toward the inner periphery of the disc. When this key is pressed with the tracking servo in a closed loop, the tracking servo automatically goes into an open loop. Since the pickup does not automatically stop at the mechanical end point in test mode, be careful with this operation.
▶▶/ ⏭	TRACK/ MANUAL SEARCH FWD	Carriage forward (outwards)	Moves the pickup position toward the outer periphery of the disc. When this key is pressed with the tracking servo in a closed loop, the tracking servo automatically goes into an open loop. Since the pickup does not automatically stop at the mechanical end point in test mode, be careful with this operation.
■	STOP	Stop	Switches off all the servos and initializes. The pickup remains where it was when this key was pressed.
⏏	OPEN/CLOSE	Disc tray open/close	Opens/closes the disc tray. This key is a toggle key and open/close tray alternately. Pressing this key when the disc is turning stops the disc, then opens the tray. This key operation does not affect the position of the pickup.

[How to play back a disc in test mode]

In test mode, since the servos operate independently, playing back a disc requires that you operate the keys in the correct order to close the servos.
Here is the key operation sequence for playing back a disc in test mode.

PROGRAM	Lights up the laser diode and closes the focus servo.
⇓	
PLAY ▶	Starts the spindle motor and closes the spindle servo.
⇓	
PAUSE ❚❚	Closes the tracking servo.

Wait at least 2-3 seconds between each of these operations.

1. Focus offset adjustment

● Objective ● Symptom when out of adjustment	Sets the DC offset for the focus error amp. The player does not focus in and the RF signal is dirty.		
● Measurement instrument connections	Connect the oscilloscope to TP1, Pin 6 (FCS ERR). [Settings] 5 mV/division 10 ms/division DC mode	● Player state ● Adjustment location ● Disc	Test mode, stopped (just the Power switch on) VR2103 (FCS OFS) None needed

[Procedure]

Adjust VR2103 (FCS OFS) so that the DC voltage at TP1, Pin 6 (FCS ERR) is –50 ± 50 mV.

2. Grating adjustment

● Objective	To align the tracking error generation laser beam spots to the optimum angle on the track		
● Symptom when out of adjustment	Play does not start, track search is impossible, tracks are skipped.		
● Measurement instrument connections	Connect the oscilloscope to TP1, Pin 2 (TRK ERR) via a low pass filter. (See Fig. 6-8) [Settings] 50 mV/division 5 ms/division DC mode	● Player state ● Adjustment location ● Disc	Test mode, focus and spindle servos closed and tracking servo open Pickup grating adjustment slit 12 cm disc. (YEDS-7 can not be used.)

[Procedure]

1. Move the pickup to the outer edge of the disc with the TRACK/MANUAL SEARCH FWD ▶▶/▶▶| or |◀◀/◀◀ key so that the grating adjustment slit is at the outer edge of the disc where it can be adjusted.
2. Press the PROGRAM key, then the PLAY ▶ key in that order to close the focus servo then the spindle servo.
3. Insert an ordinary screwdriver into the grating adjustment slit and adjust the grating to find the null point. For more details, see the next page.
4. If you slowly turn the screwdriver counterclockwise from the null point, the amplitude of the wave gradually increases, then if you continue turning the screwdriver, the amplitude of the wave becomes smaller again. Turn the screwdriver counterclockwise from the null point and set the grating to the first point where the wave amplitude reaches its maximum.

   Reference: Fig. 6-9 shows the relation between the angle of the tracking beam with the track and the wave form.

   Note: The amplitude of the tracking error signal is about 3 Vp-p (when a 39 kΩ + 0.001 μF low pass filter is used). If this amplitude is extremely small (2 Vp-p or less), the objective lens or the pickup malfunction may be the case. If the difference between the amplitude of the error signal at the innermost edge and outermost edge of the disc is more than 10%, the grating is not adjusted to the optimum point, so adjust it again.
5. Return the pickup to more or less midway across the disc with the TRACK/MANUAL SEARCH REV |◀◀/◀◀ key, press the PAUSE ▮▮ key and check that the track number and elapsed time are displayed on the front panel. If they are not displayed at this time or the elapsed time changes irregularly, check the null point and adjust the grating again.

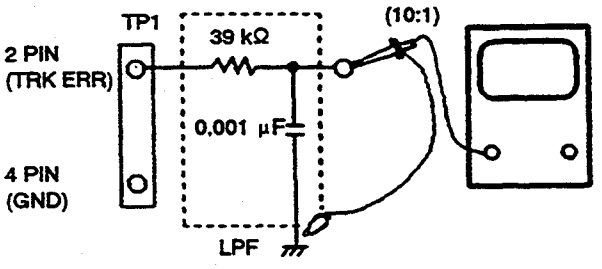

Fig. 6-8

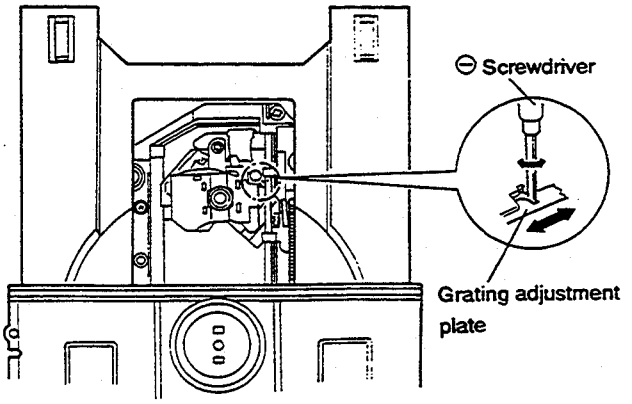

Adjustment Locations

[How to find the null point]

When you insert the regular screwdriver into the slit for the grating adjustment and change the grating angle, the amplitude of the tracking error signal at TP1 Pin 2 changes. Within the range for the grating, there are five or six locations where the amplitude of the wave reaches a minimum. Of these five or six locations, there is only one at which the envelope of the wave form is smooth. This location is where the three laser beams divided by the grating are all right above the same track. (See Fig. 6-9.)
This point is called the null point. When adjusting the grating, this null point is found and used as the reference position.

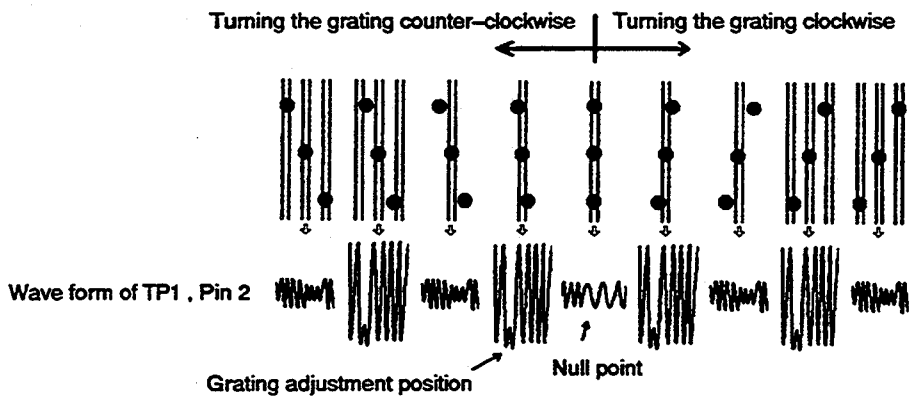

Fig. 6-9

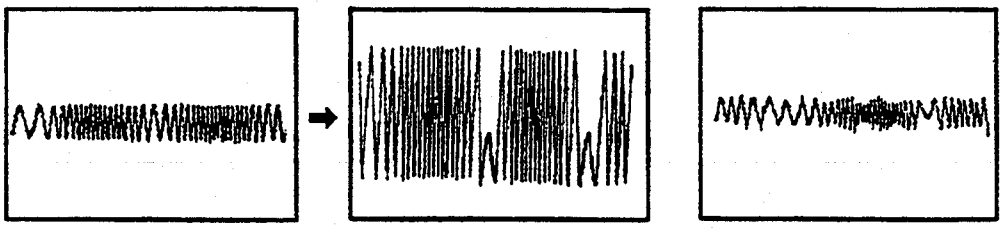

Nullo point waveform | Maximum amplitude waveform | Waveform other than the null point

3. Tracking error balance adjustment

● Objective	To correct for the variation in the sensitivity of the tracking photodiode		
● Symptom when out of adjustment	Play does not start or track search is impossible		
● Measurement instrument connections	Connect the oscilloscope to TP1, Pin 2 (TRK ERR). This connection may be via a low pass filter. [Settings] 50 mV/division 5 ms/division DC mode	● Player state ● Adjustment location ● Disc	Test mode, focus and spindle servos closed and tracking servo open VR2102 (TRK BAL) YEDS-7

[Procedure]

1. Move the pickup to midway across the disc (R = 35 mm) with the TRACK/MANUAL SEARCH FWD ▶▶/▶▶| or |◀◀/◀◀ key.
2. Press the PROGRAM key, then the PLAY ▶ key in that order to close the focus servo then the spindle servo.
3. Line up the bright line (ground) at the center of the oscilloscope screen and put the oscilloscope into DC mode.
4. Adjust VR2102 (TRK BAL) so that positive amplitude and negative amplitude of the tracking error signal at TP1 Pin 2 (TRK ERR) are the same (in other words, so that there is no DC component).

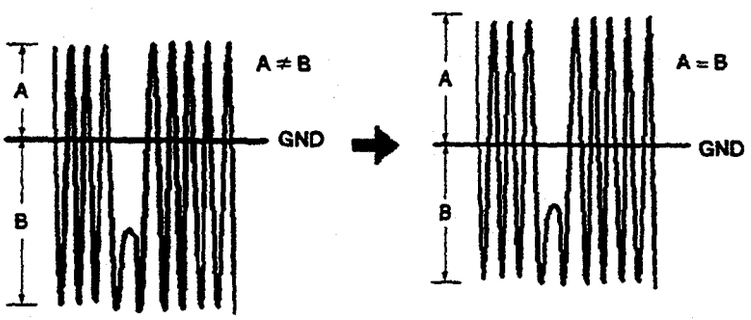

When there is a DC component

When there is no DC component

4. Pickup radial/tangential tilt adjustment

● Objective	To adjust the angle of the pickup relative to the disc so that the laser beams are shone straight down into the disc for the best read out of the RF signals.		
● Symptom when out of adjustment	Sound broken; some discs can be played but not others.		
● Measurement instrument connections	Connect the oscilloscope to TP1, Pin 1 (RF). [Settings] 20 mV/division 200 ns/division AC mode	● Player state ● Adjustment location ● Disc	Test mode, play Pickup radial tilt adjustment screw and tangential tilt adjustment screw 12 cm disc. (YEDS-7 can not be used.)

[Procedure]

1. Move the pickup to the outer edge of the disc with the TRACK/MANUAL SEARCH FWD ▶▶ / ▶▶| or |◀◀ / ◀◀ key so that the radial/tangential tilt screws can be adjusted.
   Press the PROGRAM key, the PLAY ▶ key, then the PAUSE ▮▮ key in that order to close the focus servo then the spindle servo and put the player into play mode.

2. First, adjust the radial tilt adjustment screw with an M3 mm hexagonal wrench so that the eye pattern (the diamond shape at the center of the RF signal) can be seen the most clearly.

3. Next, adjust the tangential tilt adjustment screw with an M3 mm hexagonal wrench so that the eye pattern (the diamond shape at the center of the RF signal) can be seen the most clearly (Fig. 6-11).

4. Adjust the radial tilt adjustment screw and the tangential tilt adjustment screw again so that the eye pattern can be seen the most clearly. As necessary, adjust the two screws alternately so that the eye pattern can be seen the most clearly.

   Note: Radial and tangential mean the directions relative to the disc shown in Fig. 6-10.

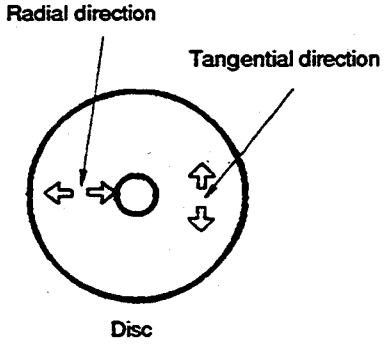

Fig. 6-10

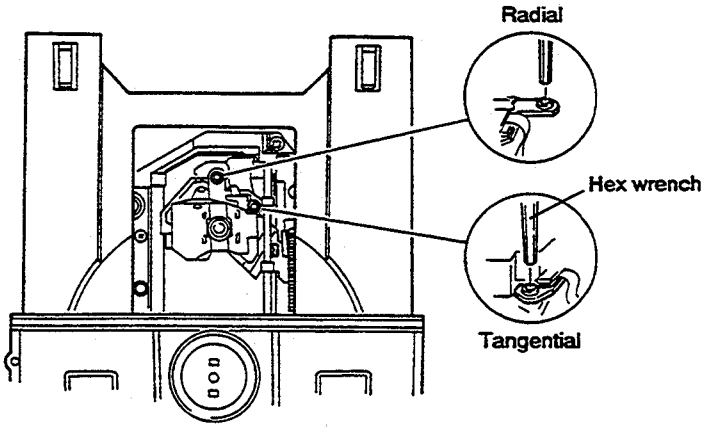

Adjustment Locations

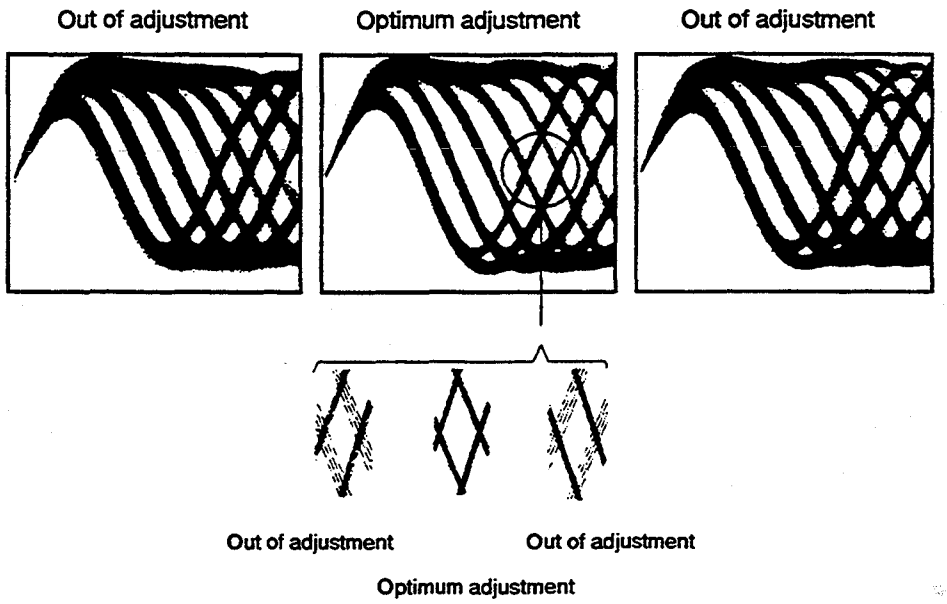

Fig. 6-11 Eye Pattern

5. RF level adjustment

● Objective ● Symptom when out of adjustment	To optimize the playback RF signal amplitude No play or no search		
● Measurement instrument connections	Connect the oscilloscope to TP1, Pin 1 (RF). [Settings] 50 mV/division 10 ms/division AC mode	● Player state ● Adjustment location ● Disc	Test mode, play VR1 (laser power) YEDS-7

[Procedure]

1. Move the pickup to midway across the disc (R = 35 mm) with the TRACK/MANUAL SEARCH FWD ▶▶ / ▶▶| or |◀◀ / ◀◀ key, then press the PROGRAM key, then the PLAY ▶ key in that order to close the respective servos and put the player into play mode.
2. Adjust VR1 (laser power) so that the RF signal amplitude is 1.2 Vp-p ± 0.1V.

6. Focus servo loop gain adjustment

● Objective ● Symptom when out of adjustment	To optimize the focus servo loop gain Playback does not start or focus actuator noisy		
● Measurement instrument connections	See Fig. 6-12. [Settings] CH1 20 mV/division CH2 5 mV/division X-Y mode	● Player state ● Adjustment location ● Disc	Test mode, play VR2152 (FCS GAN) YEDS-7

[Procedure]

1. Set the AF generator output to 1.2 kHz and 1 Vp-p.
2. Press the TRACK/MANUAL SEARCH FWD ▶▶ / ▶▶| or |◀◀ / ◀◀ key to move the pickup to halfway across the disc (R = 35 mm), then press the PROGRAM key, the PLAY ▶ key, then the PAUSE ▮▮ key in that order to close the corresponding servos and put the player into play mode.
3. Adjust VR2152 (FCS GAN) so that the Lissajous wave form is symmetrical about the X axis and the Y axis.

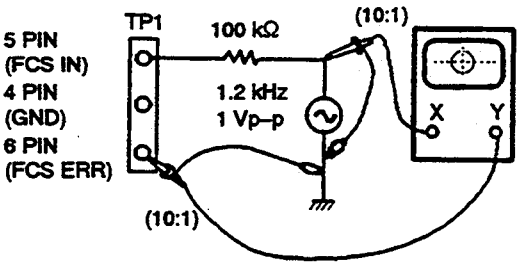

Fig. 6-12

Focus Gain Adjustment

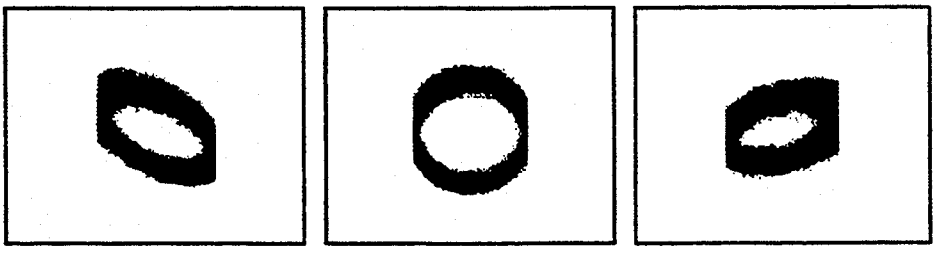

Higher gain | Optimum gain | ver gain

7. Tracking servo loop gain adjustment

● Objective ● Symptom when out of adjustment	To optimize the tracking servo loop gain Playback does not start, during searches the actuator is noisy, or tracks are skipped.		
● Measurement instrument connections	See Fig. 6-13. [Settings] CH1 50 mV/division CH2 50 mV/division X-Y mode	● Player state ● Adjustment location ● Disc	Test mode, play VR2151 (TRK GAN) YEDS-7

[Procedure]

1. Set the AF generator output to 1.2 kHz and 2 Vp-p.
2. Press the TRACK/MANUAL SEARCH FWD ▶▶/▶▶I or I◀◀/◀◀ key to move the pickup to halfway across the disc (R = 35 mm), then press the PROGRAM key, the PLAY ▶ key, then the PAUSE ▮▮ key in that order to close the corresponding servos and put the player into play mode.
3. Adjust VR2151 (TRK GAN) so that the Lissajous wave form is symmetrical about the X axis and the Y axis.

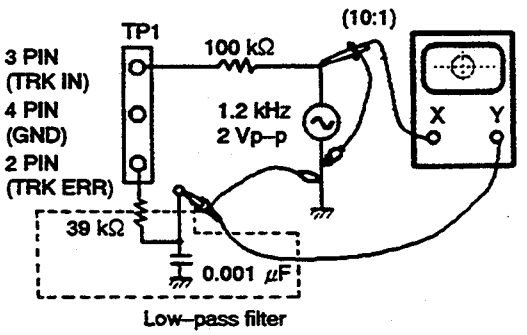

Fig. 6-13

Tracking Gain Adjustment

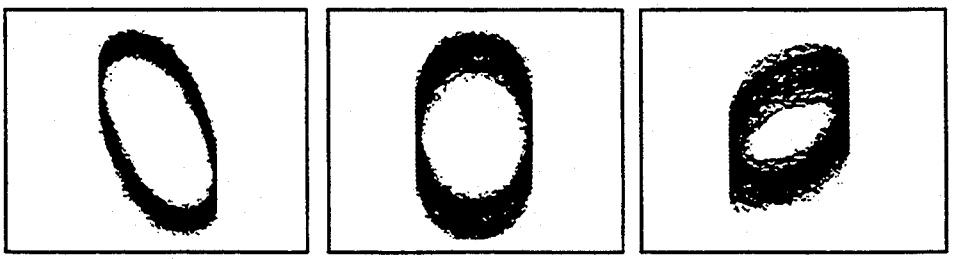

Higher gain | Optimum gain | Lower gain

8. Focus error signal (focus S curve) verification

● Objective ● Symptom when out of adjustment	To judge whether the pickup is ok or not by observing the focus error signal. The pickup is judged from the amplitude of the tracking error signal (as discussed in the section on adjusting the tracking error balance) and the wave form for the focus error signal.		
● Measurement instrument connections	Connect the oscilloscope to TP1, Pin 6 (FCS ERR). [Settings] 100 mV/division 5 ms/division DC mode	● Player state ● Adjustment location ● Disc	Test mode, stop None YEDS-7

[Procedure]

1. Connect TP1 Pin 5 to ground.
2. Mount the disc.
3. While watching the oscilloscope screen, press the PROGRAM key and observe the wave form in Fig. 6-14 for a moment. Verify that the amplitude is at least 2.5 Vp-p and that the positive and negative amplitude are about equal. Since the wave form is only output for a moment when the PROGRAM key is pressed, press this key over and over until you have checked the wave form.

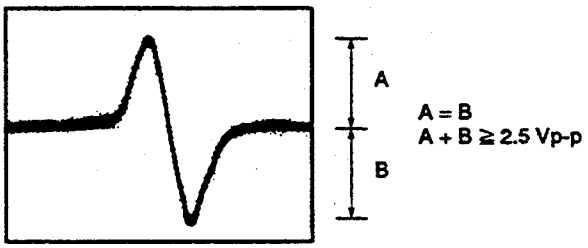

Fig. 6-14

[Judging the pickup]

Do not judge the pickup until all the adjustments have been made correctly. In the following cases, there may be something wrong with the pickup.

1. The tracking error signal amplitude is extremely small (less than 2 Vp-p).
2. The focus error signal amplitude is extremely small (less than 2.5 Vp-p).
3. The positive and negative amplitudes of the focus error signal are extremely asymmetrical (2:1 ratio or more).
4. The RF signal is too small (less than 0.8 Vp-p) and even if VR1 is adjusted (laser power), the RF signal can not be brought up to the standard level.

7. FOR HBXK, SD AND YPW TYPES

7.1 CONTRAST OF MISCELLANEOUS PARTS

NOTES:
- *Part without part number cannot be supplied.*
- *The ⚠ mark found on some component parts indicates the importance of the safety factor of the part. Therefore, when replacing, be sure to use parts of identical designation.*
- *Parts marked by "◉" are not always kept in stock. Their delivery time may be longer than usual or they may be unavailable.*

The XR-P320/HBXK, SD and YPW types are the same as the XR-P320/HEXK type with the exception of the following sections.

Mark	Symbol & Description	Parts No.				Remarks
		XR-P320/ HEXK type	XR-P320/ HBXK type	XR-P320/ SD type	XR-P320/ YPW type	
⊙	AF-TUNER Ass'y	AWZ3914	AWZ3914	AWZ3916	AWZ3917	
⊙	DECK SW Ass'y	AWZ3921	AWZ3921	AWZ3922	AWZ3922	
⊙	POWER Ass'y	AWZ3230	AWZ3230	AWZ3233	AWZ3234	
⊙	AUDITION Ass'y	.....	.....	AWZ3924	AWZ3924	
	Front Panel	AMB1942	AMB1942	AMB1943	AMB1943	
	VR. Knob	.....	.....	AAB1253	AAB1253	
	APSS Knob (ABS)	.....	.....	RAC1526	RAC1526	
	Function Button	AAD2208	AAD2208	AAD2209	AAD2209	
	Bonnet	ANE1337	ANE1337	ANE1330	ANE1330	
	Front Pad(L,R)	AHA1485	AHA1485	AHA1427	AHA1427	
	Rear Pad(L,R)	AHA1486	AHA1486	AHA1428	AHA1428	
	Packing Case	AHD2237	AHD2237	AHD2232	AHD2232	
	OPE. Instructions (Dutch, Swedish, Spanish, Portuguese)	ARC1330	.....	.....	.....	
	OPE. Instructions (English, French, German, Italian)	ARE1226	.....	.....	.....	
	OPE. Instructions(English)	.....	ARB1356	ARB1356	ARB1356	
	OPE. Instructions(Spanish)	.....	.....	ARC1331	.....	
⚠	Fuse (FU705, T800mA/250V)	.....	.....	AEK-507	.....	
⚠	AC Power Cord	ADG1049	ADG1087	ADG1051	ADG1050	
⚠	Power Transformer(T1)	ATS1404	ATS1404	ATS1405	ATS1417	
⚠	Voltage Selector (S1, 110/120-127/220/240V)	.....	.....	AKX-507	.....	
	Screw(3X14B)	.....	.....	ABA1024	ABA1024	For AUDITION Ass'y

⊙ DECK SW Ass'y (AWZ3922)

The DECK SW Ass'y (AWZ3922) is the same as the DECK SW Ass'y (AWZ3921) with the exception of the following sections.

Mark	Symbol & Description	Parts No.		Remarks
		AWZ3921	AWZ3922	
	D1406-D1408	.....	AEL1131	
	R1404-R1406	.....	RD1/8PM271J	
	S1416	.....	ASG1034	

⊙ **AF-TUNER Ass'y (AWZ3916 and AWZ3917)**

The AF-TUNER Ass'y (AWZ3916 and AWZ3917) is the same as the AF-TUNER Ass'y (AWZ3914) with the exception of the following sections.

Mark	Symbol & Description	Parts No.			Remarks
		AWZ3914	AWZ3916	AWZ3917	
	IC301	RC4558DXP	·····	·····	
	IC310	·····	RC4558DXP	RC4558DXP	
	Q332	·····	XDC124ES	XDC124ES	
	Q333	·····	XDA143ESA	XDA143ESA	
	Q334	·····	2SC2458	2SC2458	
	C197	·····	CCDSL101J50	CCDSL101J50	
	C198	·····	CKDYF102Z50	CKDYF102Z50	
	C199	·····	CCDSL050C50	CCDSL050C50	
	C243, C244	CKSQYB102K50	CKSQYB122K50	CKSQYB102K50	
	C255, C256	CKDYB682K50	CKDYB822K50	CKDYB682K50	
	C288	CCDSL101J50	·····	·····	
	C298	CCDSL820J50	CCDSL101J50	CCDSL101J50	
	C303-C306	CCSQCH101J50	·····	·····	
	C307, C308	CEAS2R2M50	·····	·····	
	C309, C310	CKCYB152K50	·····	·····	
	C311, C312	CKCYB562K50	·····	·····	
	C315, C316	CEAS470M10	·····	·····	
	R301, R302	RS1/10S000J	·····	·····	
	R303, R304	RS1/10S473J	·····	·····	
	R305, R306	RD1/8PM122J	·····	·····	
	R307, R308	RD1/8PM473J	·····	·····	
	R309, R310	RD1/8PM474J	·····	·····	
	R315, R316	RD1/8PM820J	·····	·····	
	R317	·····	RD1/8PM682J	RD1/8PM682J	
	R318	RS1/10S000J	RS1/10S682J	RS1/10S682J	
	R417	·····	RS1/10S102J	RS1/10S102J	
	R418	·····	RD1/8PM102J	RD1/8PM102J	
	R437-R439	·····	RS1/10S682J	RS1/10S682J	
	R440	·····	RD1/8PM682J	RD1/8PM682J	
	R441, R442	·····	RS1/10S682J	RS1/10S682J	
	R443, R444	·····	RS1/10S392J	RS1/10S392J	
	R445	·····	RD1/8PM473J	RD1/8PM473J	
	R446	RS1/10S473J	·····	·····	
	R447	·····	RS1/10S473J	RS1/10S473J	
	R449, R450	RS1/10S000J	·····	·····	
	R494, R495	RS1/10S102J	RS1/10S000J	RS1/10S000J	
	S101	·····	ASH1027	·····	
	CN26	·····	KPE8	KPE8	
	Antenna Terminal 4-P	AKA1010	AKA1009	AKA1009	

⊙POWER Ass'y (AWZ3233 and AWZ3234)

The POWER Ass'y (AWZ3233 and AWZ3234) is the same as the POWER Ass'y (AWZ3230) with the exception of the following sections.

Mark	Symbol & Description	Parts No.			Remarks
		AWZ3230	AWZ3233	AWZ3234	
	IC791	·····	RC4558DXP	RC4558DXP	
	C718	CEAS101M35	CEAS101M50	CEAS101M50	
	C791	·····	CKDYF103Z50	CKDYF103Z50	
	C792	·····	CEAS010M50	CEAS010M50	
	C793	·····	CCDSL680J50	CCDSL680J50	
	C794	·····	CEAS100M25	CEAS100M25	
	C795	·····	CEAS0R1M50	CEAS0R1M50	
	C796-C798	·····	CKDYF473Z50	CKDYF473Z50	
	C863	CEAS470M35	CEAS470M50	CEAS470M35	
	R791	·····	RD1/8PM222J	RD1/8PM222J	
	R792	·····	RD1/8PM104J	RD1/8PM104J	
	R793	·····	RD1/8PM103J	RD1/8PM103J	
	R794	·····	RD1/8PM681J	RD1/8PM681J	
	R795	·····	RD1/8PM224J	RD1/8PM224J	
	R796	·····	RD1/8PM102J	RD1/8PM102J	
	R797	·····	RD1/8PM104J	RD1/8PM104J	
	R798	·····	RD1/8PM100J	RD1/8PM100J	
	VR791	·····	ACS1064	ACS1064	
	Maic Jack	·····	AKN1017	AKN1017	

7.2 PCB PARTS LIST

⊙AUDITION Ass'y (AWZ3924)

Mark No.	Symbol & Description	Parts No.
SEMICONDUCTORS		
IC1501-1505	OP-AMP IC	RC4558DXP
IC1506	LOGIC IC	XRU4066B
Q1501	TRANSISTOR	XDA143ES
Q1502	TRANSISTOR	XDC143ES
CAPACITORS		
C1501, 1502	CHIP CAPACITOR	CKSQYF683Z50
C1503, 1504	ELECTR. CAPACITOR	CEASR33M50
C1505, 1506	CHIP CAPACITOR	CKSQYB272K50
C1507-1512	CHIP CAPACITOR	CKSQYB561K50
C1513, 1514	CHIP CAPACITOR	CKSQYB681K50
C1515, 1516	C.CERAMIC CAPACITOR	CCSQCH221J50
C1517	CHIP CAPACITOR	CCSQCH101J50
C1518-1520	CHIP CAPACITOR	CKSQYB183K50
C1521-1524	ELECTR. CAPACITOR	CEAS4R7M50
C1525,1526	ELECTR. CAPACITOR	CEAS470M10

Mark No.	Symbol & Description	Parts No.
RESISTORS		
R1513,1515	RESISTOR	RD1/8PM223J
R1517, 1527	RESISTOR	RD1/8PM223J
R1523	RESISTOR	RD1/8PM433J
R1534	RESISTOR	RD1/8PM473J
R1535-1538	RESISTOR	RD1/8PM104J
R1539,1540	RESISTOR	RD1/8PM330J
	OTHER RESISTORS	RS1/10S□□□J

NOTE

1. This P.C.B connection diagram is viewed from the parts mounted side.
2. The parts which have been mounted on the board can be replaced with those shown with the corresponding wiring symbols listed in the following Table.

P.C.B. pattern diagram indication	Corresponding part symbol	Part Name
Q504 (E)	E or E	Transistor
Q215	or	Radiator type transistor
D203	D203	Diode
R237	R237	Resistor
C513	+	Capacitor (Polarity)
C518		Capacitor (Non-polarity)

Others

P.C.B. pattern diagram indication	Part Name
IC	IC
S	Switch
RY	Relay
L	Coil
F	Filter
VR	Variable resistor or Semi-fixed resistor

3. The capacitor terminal marked with ◎ (double circles) shows negative terminal.
4. The diode terminal marked with ◎ (double circles) shows cathode side.
5. The transistor terminal to which E is affixed shows the emitter.

This PCB connection diagram is viewed from the parts mounted side.

POWER Ass'y (SD: AWZ3233) (YPW: AWZ3234)

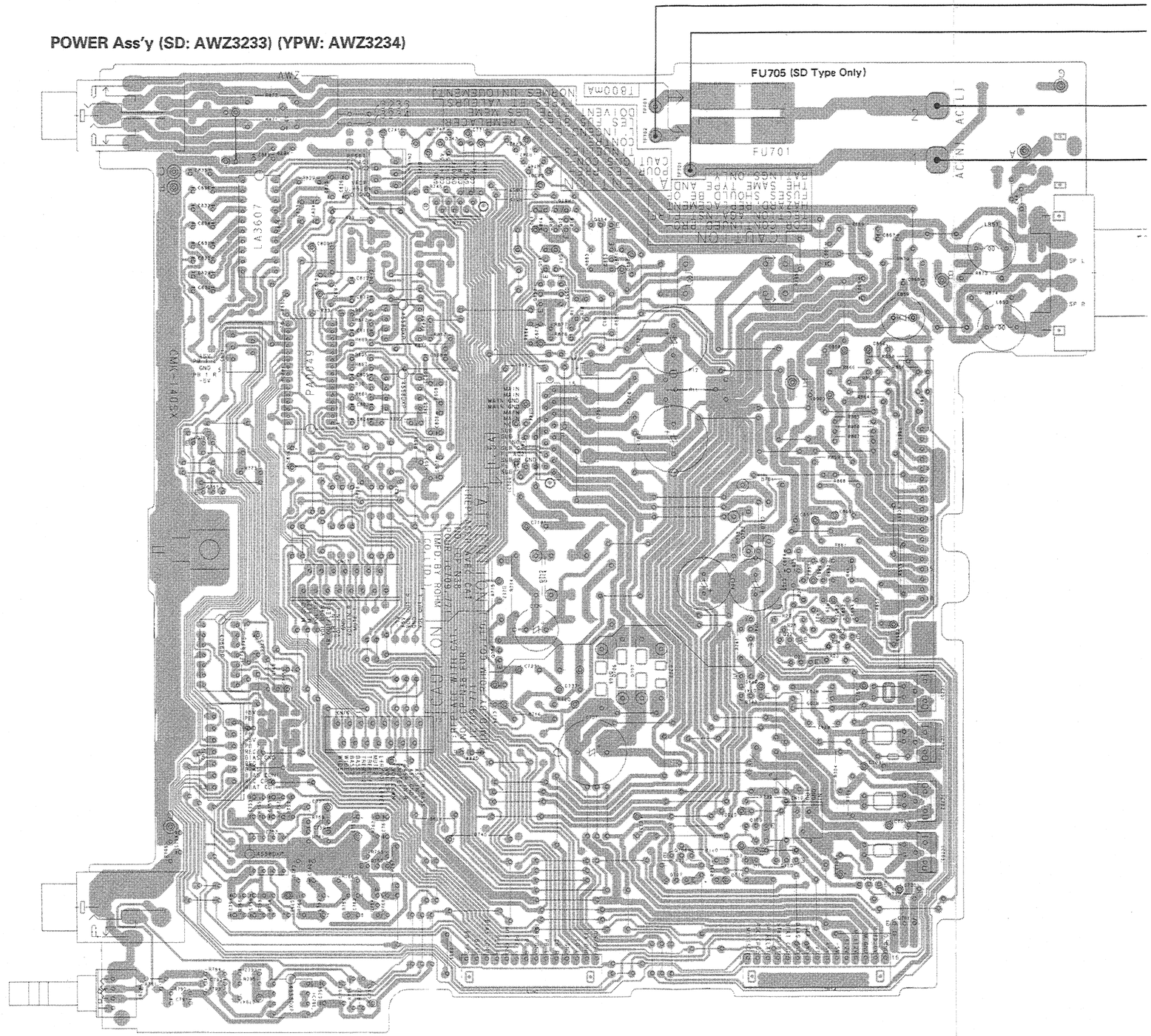

POWER Ass'y (SD: AWZ3233) (YPW: AWZ3234)

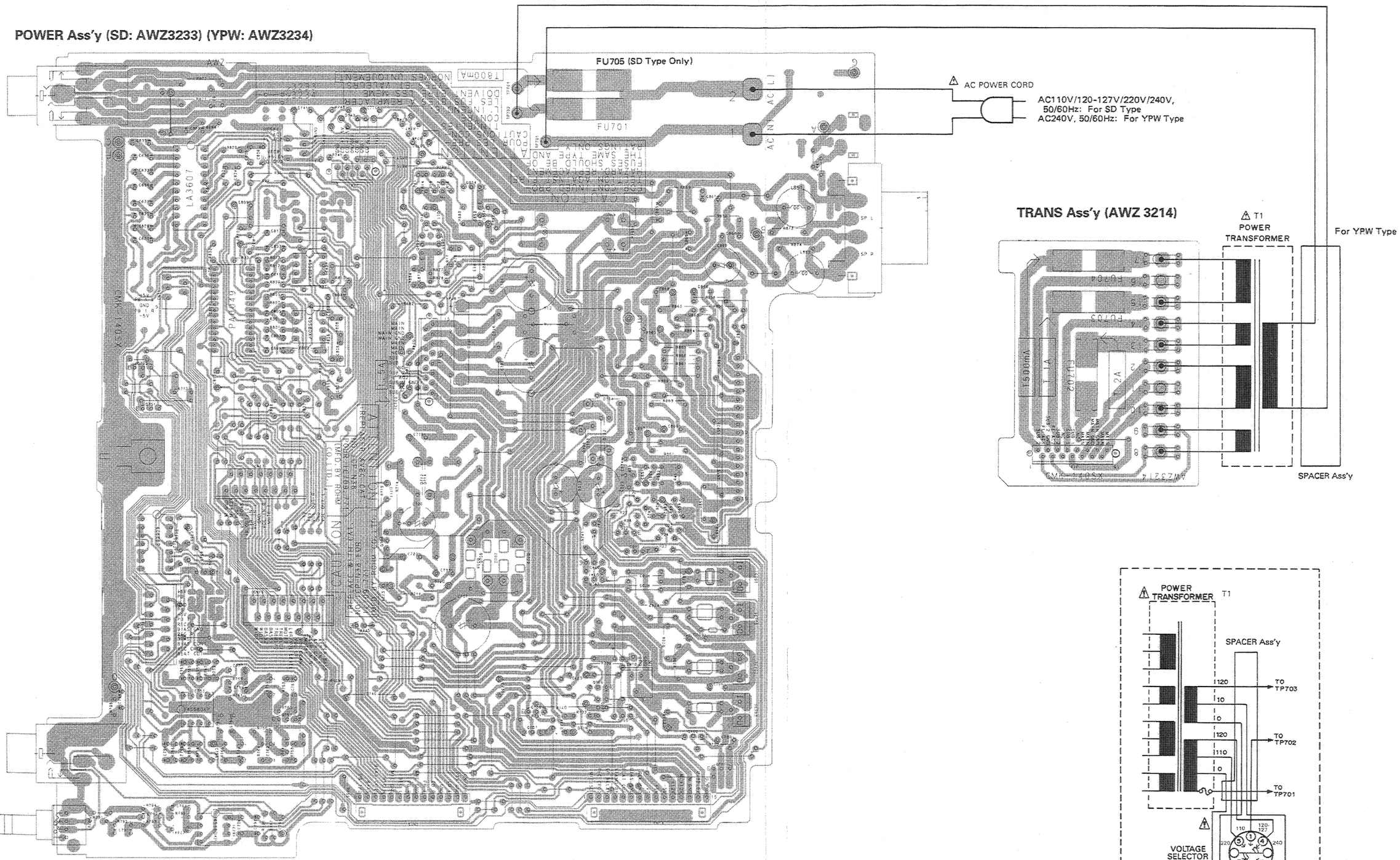

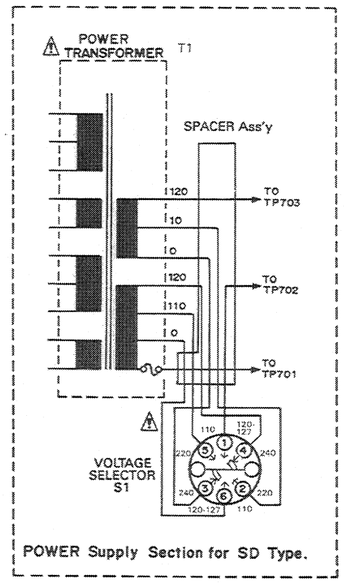

POWER Supply Section for SD Type.

IC805
IC801 IC803
Q12 Q854
Q11 Q853
Q752 IC791 IC802
Q852 Q851
Q751
IC709
IC751 Q753
Q754
IC753
Q741 Q22 Q23 IC701 IC705
Q742 Q21 IC702 IC703
Q743 Q702 Q701
Q708 Q709
Q707 Q703 Q710

7.3 SCHEMATIC and PCB CONNECTIONS DIAGRAMS (For SD and YPW Types)

7.3.1 POWER Ass'y, TRANS Ass'y, REGULATOR Ass'y and SPACER Ass'y

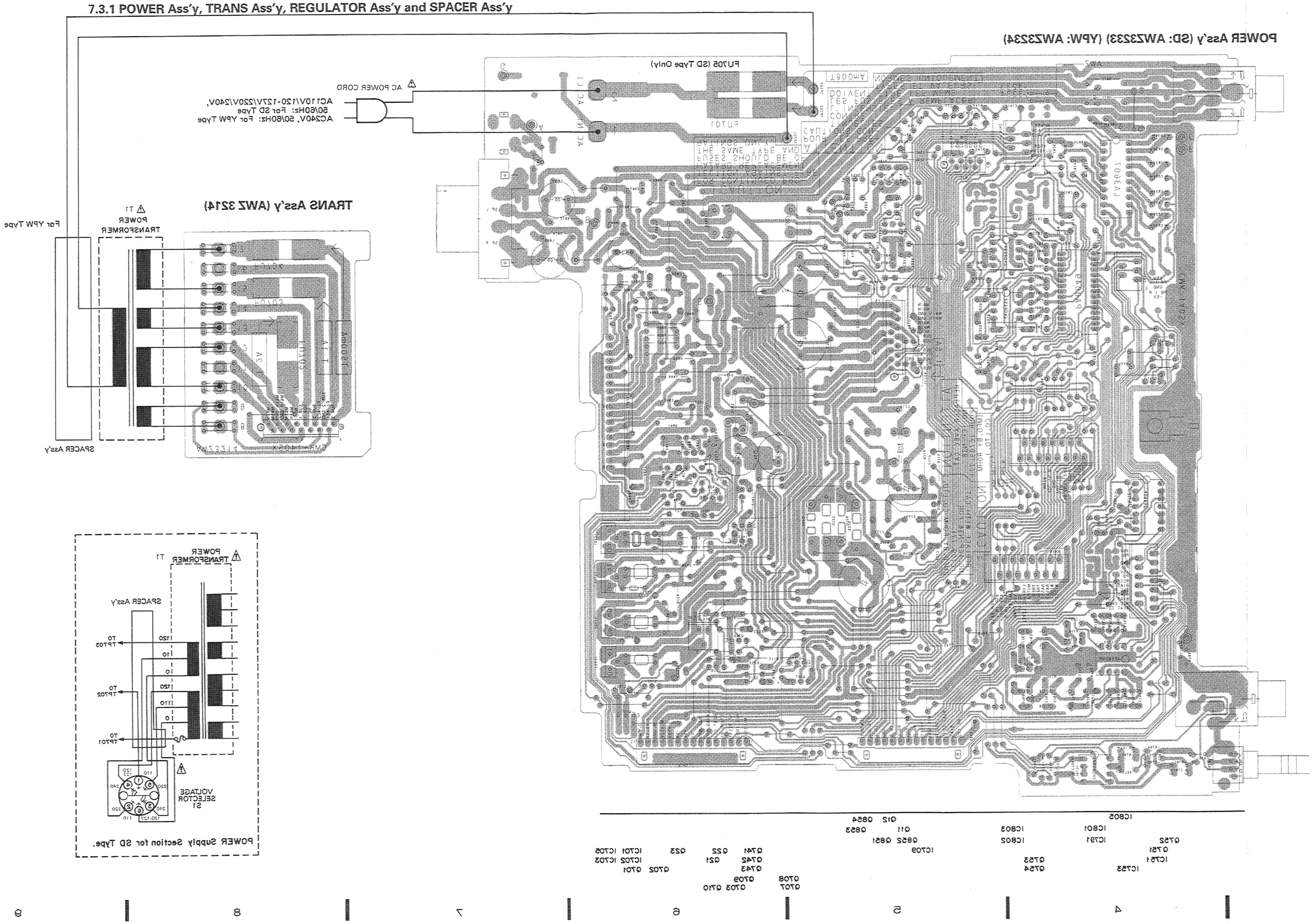

or SD and YPW Types)

CER Ass'y

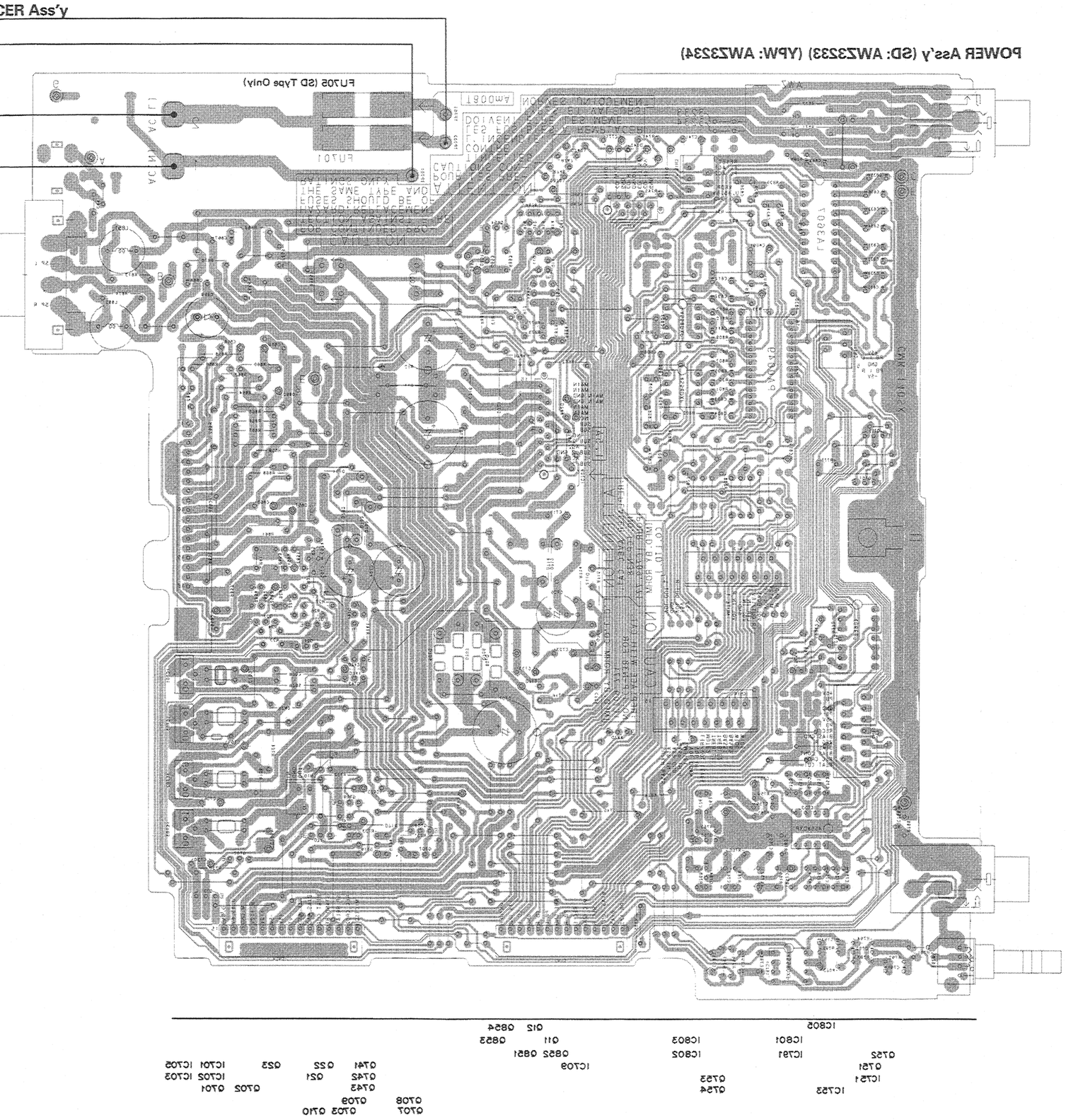

This PCB connection diagram is viewed from the foil side.

POWER Ass'y (SD: AWZ3233) (YPW: AWZ3234)

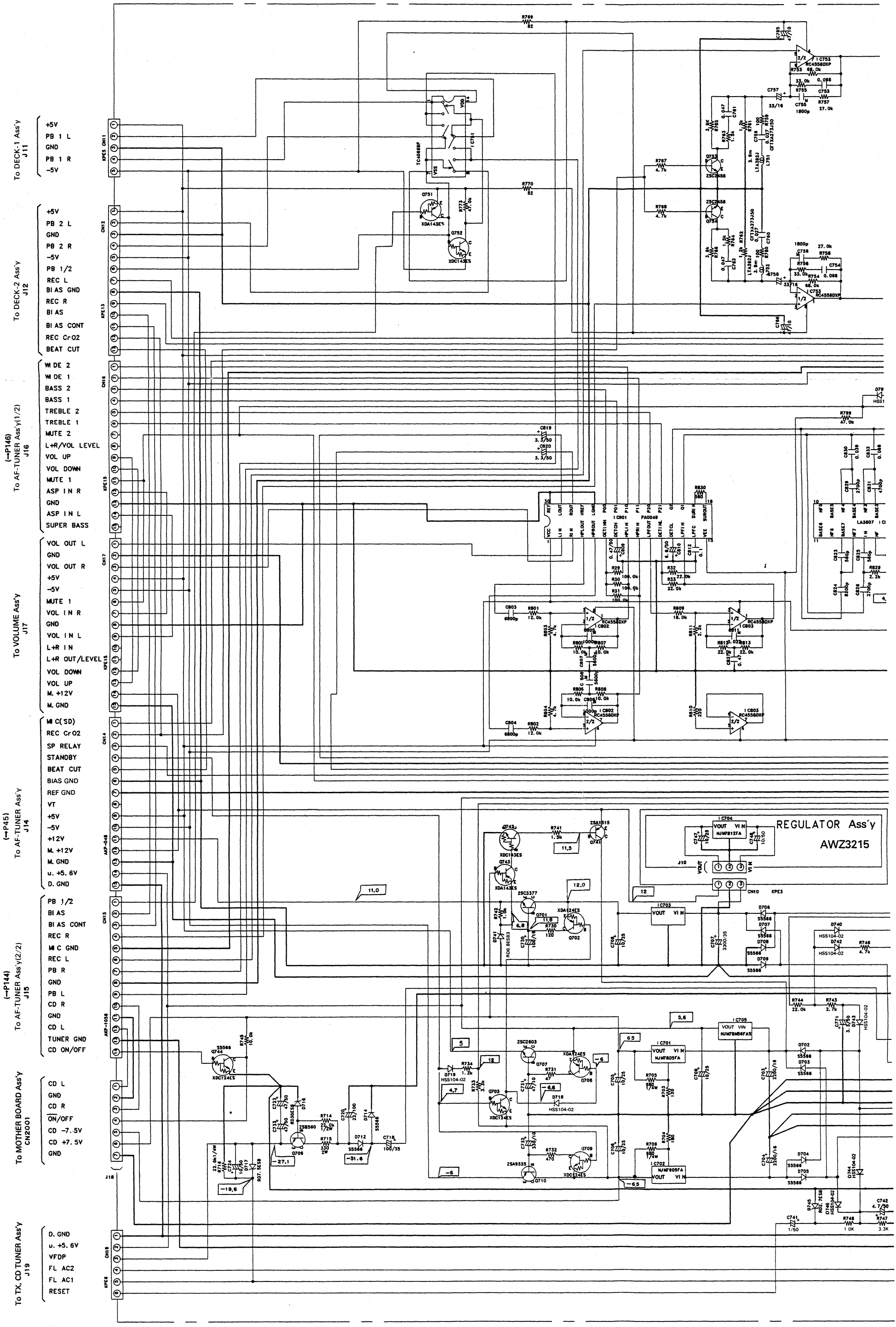

1 2 3 4

1. RESISTORS :
Indicated in Ω, 1/8W, ±5% tolerance unless otherwise noted k ; kΩ, M ; MΩ, (F) ; ±1%, (G) ; ±2%, (K) ; ±10%, (M) ; ±20% tolerance.

2. CAPACITORS :
Indicated in capacity (μF) /voltage (V) unless otherwise noted p ; pF. Indication without voltage is 50V except electrolytic capacitor.

3. VOLTAGE CURRENT :
V ; Signal voltage at 22W+22W/8Ω output (1kHz).
; DC voltage (V) at no input signal.
Value in ( ) is DC voltage at rated power.

4. OTHERS
▶(RED) ; Measurement point.
➡ : Signal route.
⊘ ; Adjusting point.
The ⚠ mark found on some component parts indicates the importance of the safety factor of the part. Therefore, when replacing, be sure to use parts of identical designation.
※ marked capacitors and resistors have parts numbers.

This is the basic schematic diagram, but the actual circuit may

5. SWITCHS (The underl

AF-TUNER Ass'y
S101 : CANNEL STEP FM/AM (50/9kHz-100/10kHz)
S301 : BEAT CUT 1-2

DECK SW Ass'y
S1401 : DOLBY NR ON-OFF
S1402 : DECK2 STOP
S1403 : DECK2 FWD
S1404 : DECK2 FF
S1405 : ASES
S1406 : DECK2 REV
S1407 : DECK2 REW
S1409 : DECK1 STOP
S1410 : REC/PAUSE
S1411 : DECK1 FF
S1412 : DECK1 FWD
S1413 : COPY)
S1414 : DECK1 REW
S1415 : DECK1 REV
S1416 : VOCAL CANCEL

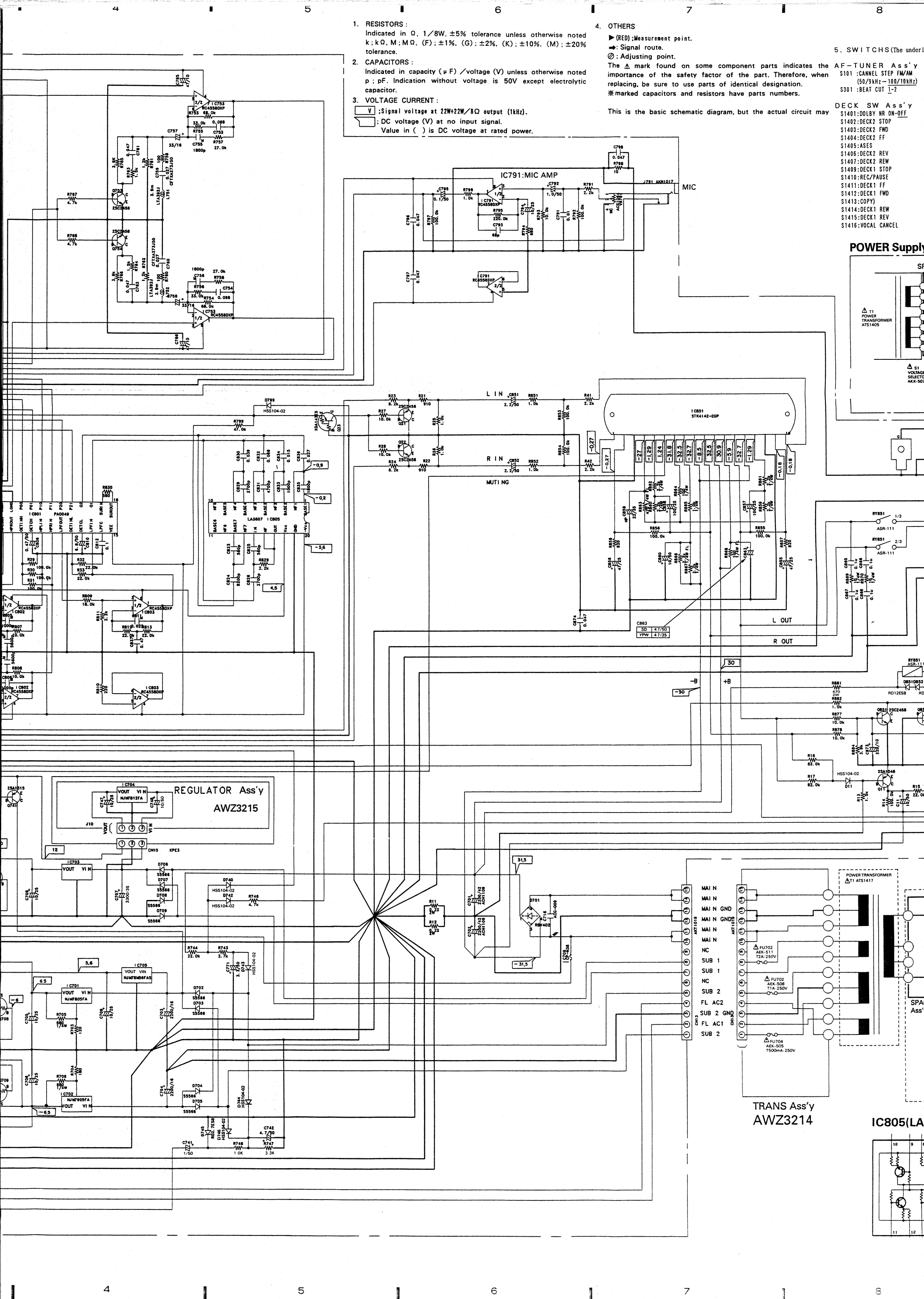

1. RESISTORS :
Indicated in Ω, 1/8W, ±5% tolerance unless otherwise noted
k ; kΩ, M ; MΩ, (F) ; ±1%, (G) ; ±2%, (K) ; ±10%, (M) ; ±20% tolerance.

2. CAPACITORS :
Indicated in capacity (μF) /voltage (V) unless otherwise noted
p ; pF. Indication without voltage is 50V except electrolytic capacitor.

3. VOLTAGE CURRENT :
V ;Signal voltage at 22W+22W/8Ω output (1kHz).
; DC voltage (V) at no input signal.
Value in ( ) is DC voltage at rated power.

4. OTHERS
▶(RED) ;Measurement point.
➡: Signal route.
⊘ : Adjusting point.
The ⚠ mark found on some component parts indicates the importance of the safety factor of the part. Therefore, when replacing, be sure to use parts of identical designation.
※marked capacitors and resistors have parts numbers.

This is the basic schematic diagram, but the actual circuit may

5. SWITCHS (The underlineed indicates the switch position)

AF-TUNER Ass'y
S101 :CANNEL STEP FM/AM (50/9kHz-100/10kHz)
S301 :BEAT CUT 1-2

DECK SW Ass'y
S1401:DOLBY NR ON-OFF
S1402:DECK2 STOP
S1403:DECK2 FWD
S1404:DECK2 FF
S1405:ASES
S1406:DECK2 REV
S1407:DECK2 REW
S1409:DECK1 STOP
S1410:REC/PAUSE
S1411:DECK1 FF
S1412:DECK1 FWD
S1413:COPY)
S1414:DECK1 REW
S1415:DECK1 REV
S1416:VOCAL CANCEL

TX-CD SW Ass'y
S1201:CLOCK ADJ.
S1202:TIMER SET
S1203:WAKE UP
S1204:REC
S1205:DISPLAY
S1206:AUTO PRE.MEMORY
S1207:AM-NR/FM-MONO
S1208:BAND
S1209:TUNING +
S1210:TUNING -
S1211:FREQ./STATION
S1221:PLAY
S1222:TRACK -
S1223:TRACK +
S1224:OPEN/CLOSE
S1225:STOP
S1226:PAUSE
S1227:PROGRAM
S1228:HI-LITE SCAN
S1229:REPEAT

AMP SW Ass'y
S1301:MEMORY
S1302:START/SET
S1303:MODE
S1304:POWER
S1305:B.G.M./TREBLE EQ
S1306:HALL/S.ST./WIDE
S1307:DISCO./P.BASS EQ
S1308:SFC CLEAR
S1309:CD
S1310:TUNER
S1311:TAPE
S1312:PHONO

OTHERS
S1 :VOLTAGE SELECTOR (110/120/220-230/240V)

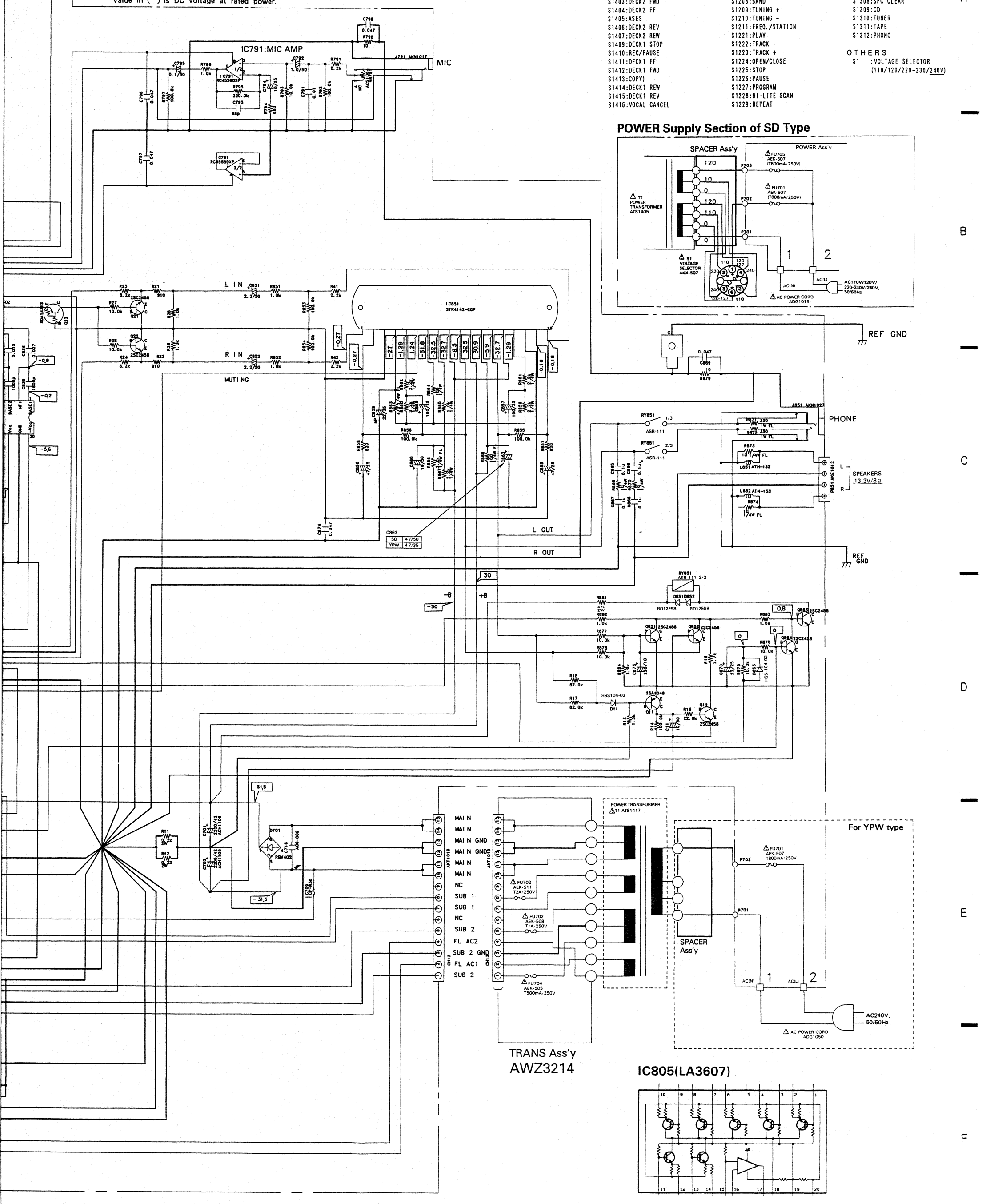

7.3.2 AF-TUNER Ass'y (1/2,2/2)

AF, TUNER Ass'y (1/2) (SD: AWZ3916) (YPW: AWZ3917)

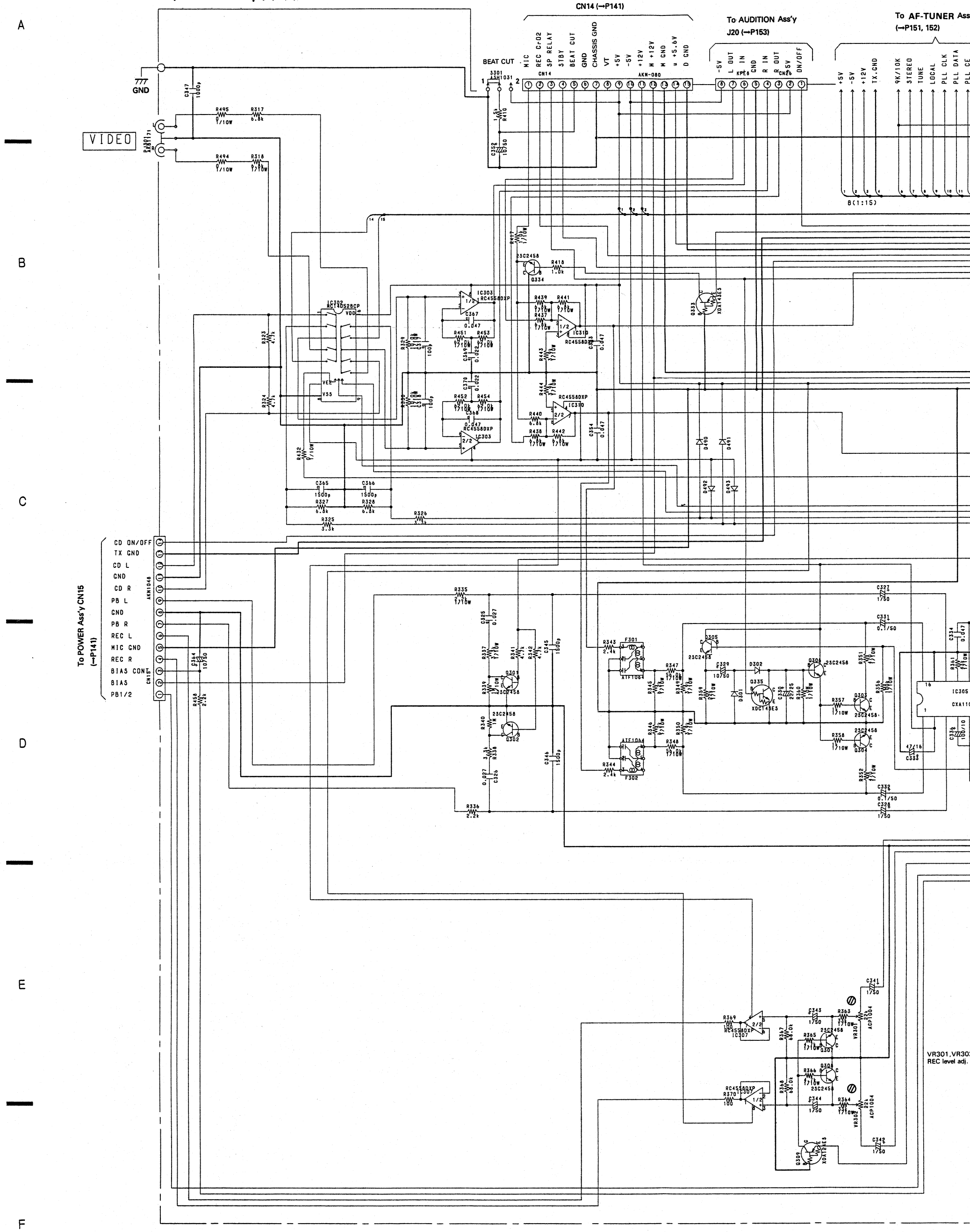

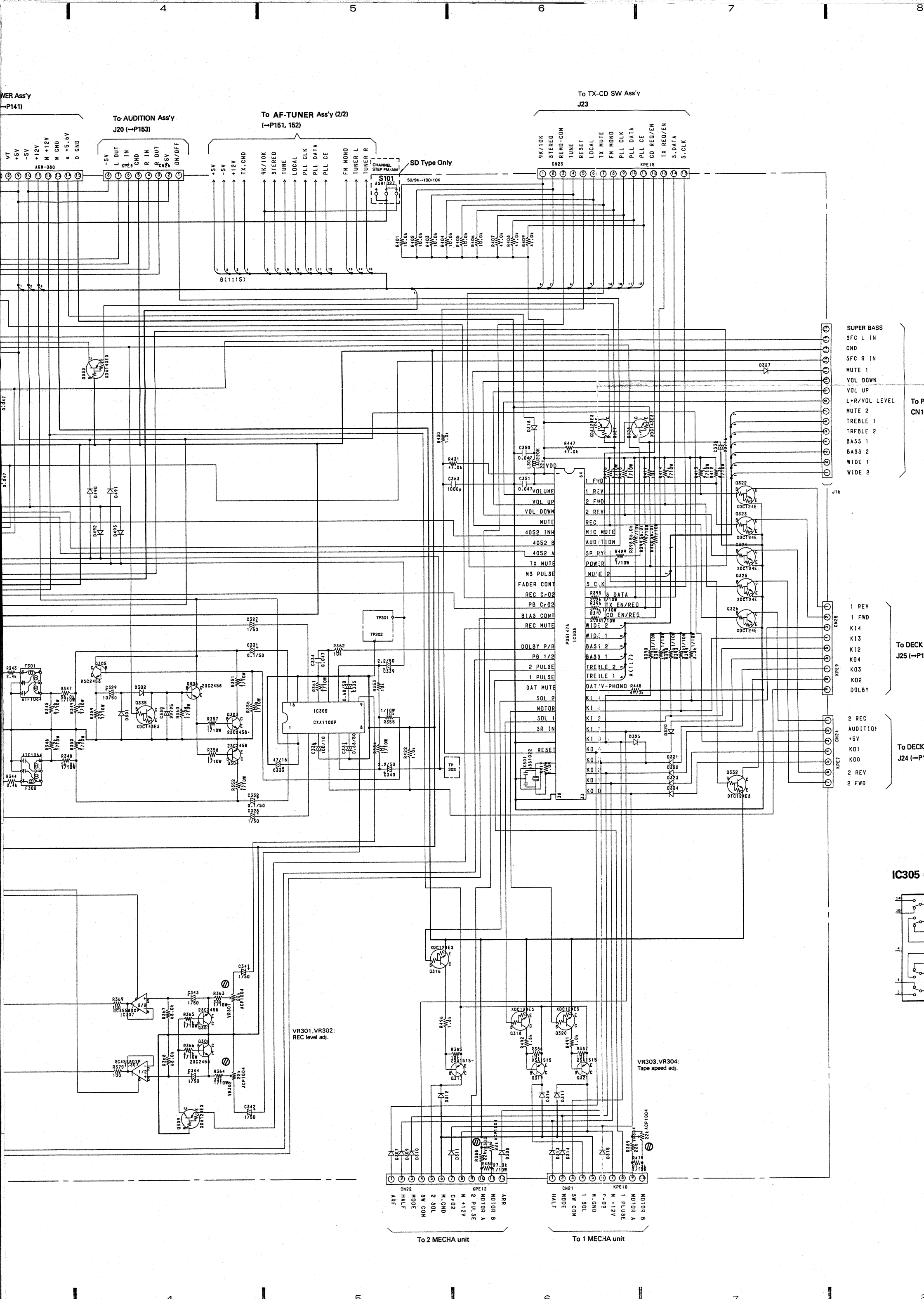
4
5
6
7
8
To AUDITION Ass'y
J20 (→P153)
To AF-TUNER Ass'y (2/2)
(→P151, 152)
To TX-CD SW Ass'y
J23
SD Type Only
S101
CHANNEL STEP FM/AM
50/9K--100/10K
SUPER BASS
SFC L IN
GND
SFC R IN
MUTE 1
VOL DOWN
VOL UP
L+R/VOL LEVEL
MUTE 2
TREBLE 1
TREBLE 2
BASS 1
BASS 2
WIDE 1
WIDE 2
To PC CN1
1 REV
1 FWD
KI4
KI3
KI2
KO4
KO3
KO2
DOLBY
To DECK J25 (→P1
2 REC
AUDITION
+5V
KO1
KO0
2 REV
2 FWD
To DECK J24 (→P1
IC305
VR301,VR302:
REC level adj.
VR303,VR304:
Tape speed adj.
To 2 MECHA unit
To 1 MECHA unit

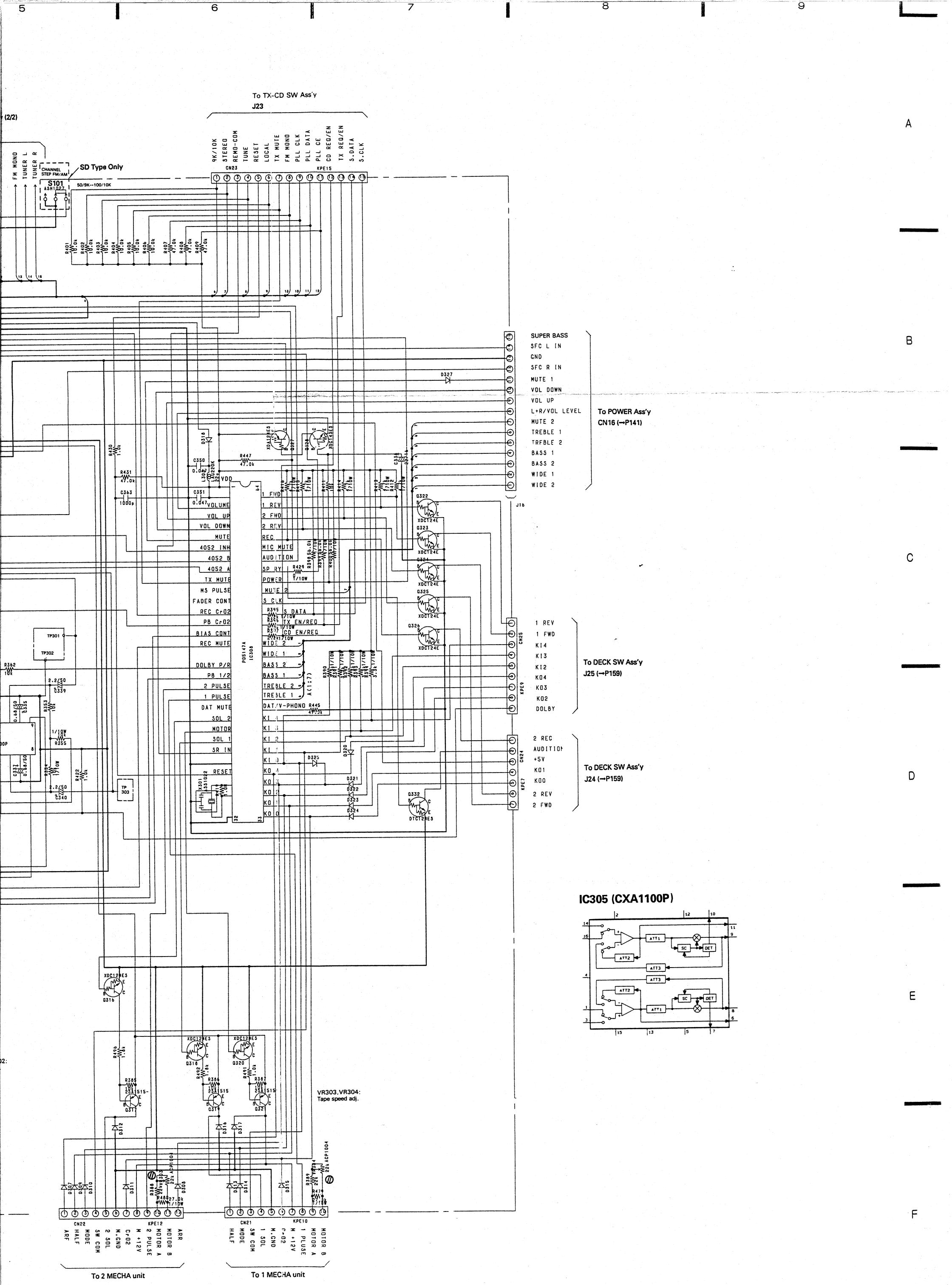
To TX-CD SW Ass'y
J23
9K/10K
STEREO
REMO-COM
TUNE
RESET
LOCAL
TX MUTE
FM MONO
PLL CLK
PLL DATA
PLL CE
CD REQ/EN
TX REQ/EN
S.DATA
S.CLK
CN23
KPE15
SD Type Only
CHANNEL STEP FM/AM
S101
ASH1027
50/9K--100/10K
FM MONO
TUNER L
TUNER R
SUPER BASS
SFC L IN
GND
SFC R IN
MUTE 1
VOL DOWN
VOL UP
L+R/VOL LEVEL
MUTE 2
TREBLE 1
TREBLE 2
BASS 1
BASS 2
WIDE 1
WIDE 2
J16
To POWER Ass'y
CN16 (→P141)
1 REV
1 FWD
KI4
KI3
KI2
KO4
KO3
KO2
DOLBY
CN25
KPE9
To DECK SW Ass'y
J25 (→P159)
2 REC
AUDITION
+5V
KO1
KO0
2 REV
2 FWD
CN24
KPE7
To DECK SW Ass'y
J24 (→P159)
IC305 (CXA1100P)
ATT1
ATT2
ATT3
SC
DET
VOLUME
VOL UP
VOL DOWN
MUTE
4052 INH
4052 B
4052 A
TX MUTE
MS PULSE
FADER CONT
REC Cr02
PB Cr02
BIAS CONT
REC MUTE
DOLBY P/R
PB 1/2
2 PULSE
1 PULSE
DAT MUTE
SOL 2
MOTOR
SOL 1
SR IN
RESET
1 FWD
1 REV
2 FWD
2 REV
REC
MIC MUTE
AUDITION
SP RY
POWER
MUTE 2
S CLK
S DATA
TX EN/REQ
CD EN/REQ
WIDE 2
WIDE 1
BASS 2
BASS 1
TREBLE 2
TREBLE 1
DAT/V-PHONO
IC308
P05147A
VR303,VR304:
Tape speed adj.
CN22
KPE12
ARF
HALF
MODE
SW COM
2 SOL
M.GND
Cr02
M +12V
2 PULSE
MOTOR A
MOTOR B
ARR
To 2 MECHA unit
CN21
KPE10
HALF
MODE
SW COM
1 SOL
M.GND
Cr02
M +12V
1 PULSE
MOTOR A
MOTOR B
To 1 MECHA unit

AF-TUNER Ass'y
(SD: AWZ3916)
(YPW: AWZ3917)

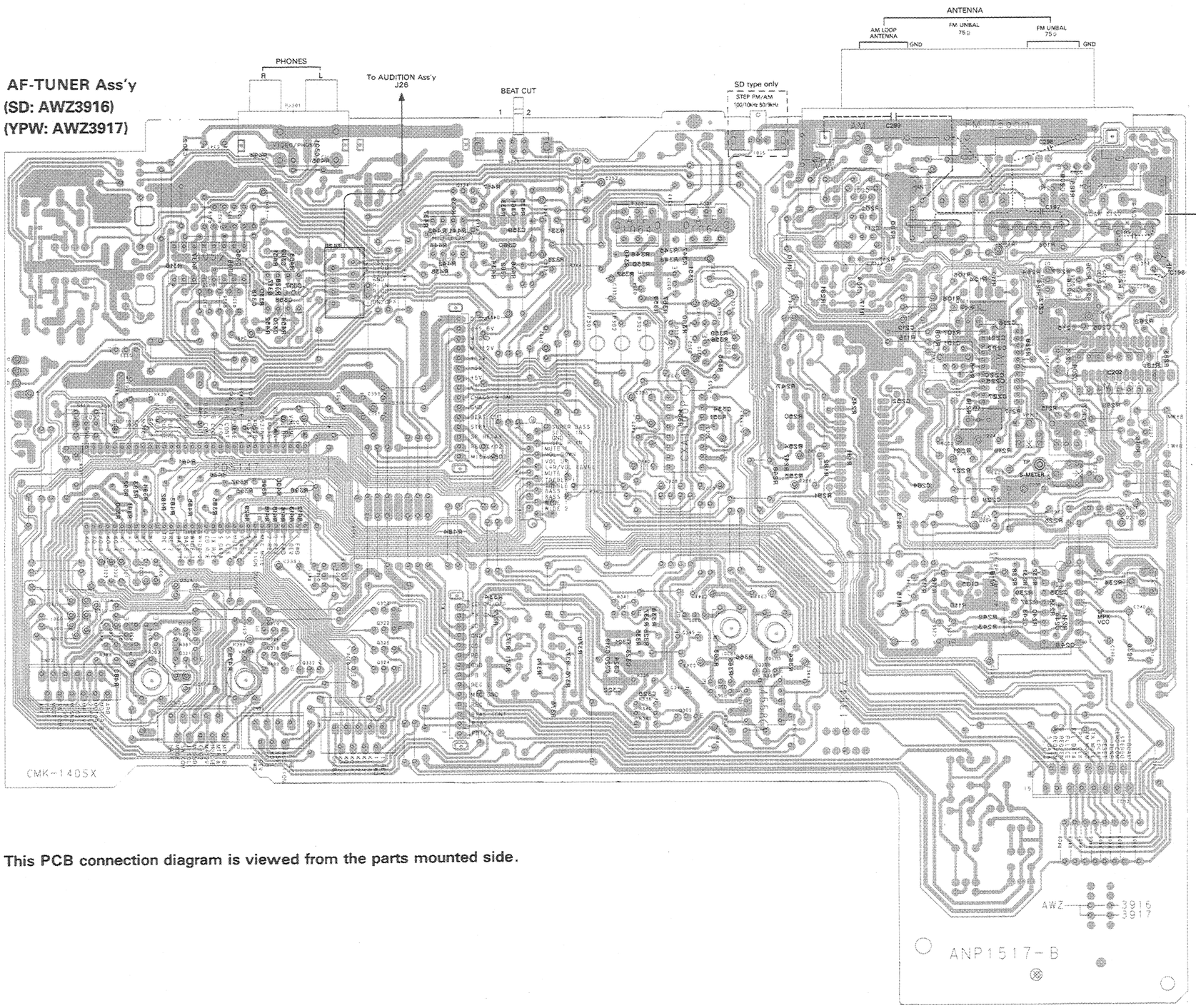

2 Serial F.E. Module Ass'y (AXQ1002)

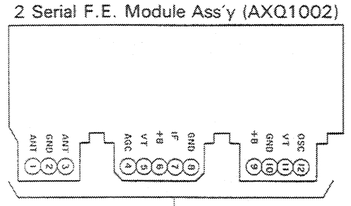

This PCB connection diagram is viewed from the parts mounted side.

VR303 VR304 VR301 VR302 VR202 VR201 VR203
Q334 Q102 Q205
IC302 IC303 IC310 IC309 Q304 Q303 Q103 Q101 Q204 Q206
Q306 Q335 Q305 IC201 IC202
IC308 IC305 Q105 Q106
Q317 Q316 Q320 Q319 Q328 Q327 Q301 Q309 Q208
Q321 Q318 Q323 Q322 Q302 Q307 Q308
Q325 Q324 IC307

AF-TUNER Ass'y
(SD: AWZ3916)
(YPW: AWZ3917)

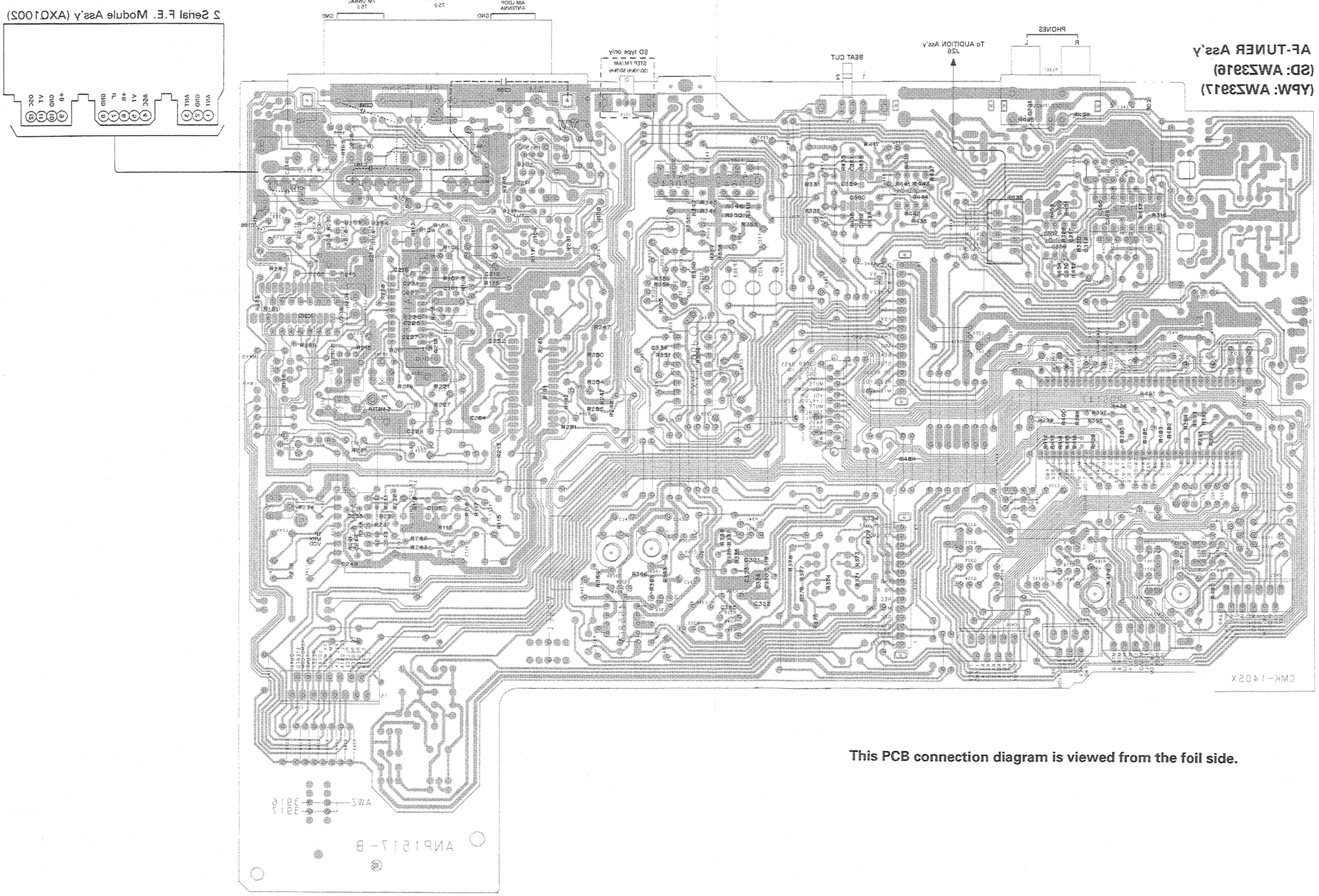

This PCB connection diagram is viewed from the foil side.

AF-TUNER Ass'y (2/2) (SD:AWZ3916)(YPW:AWZ3917)

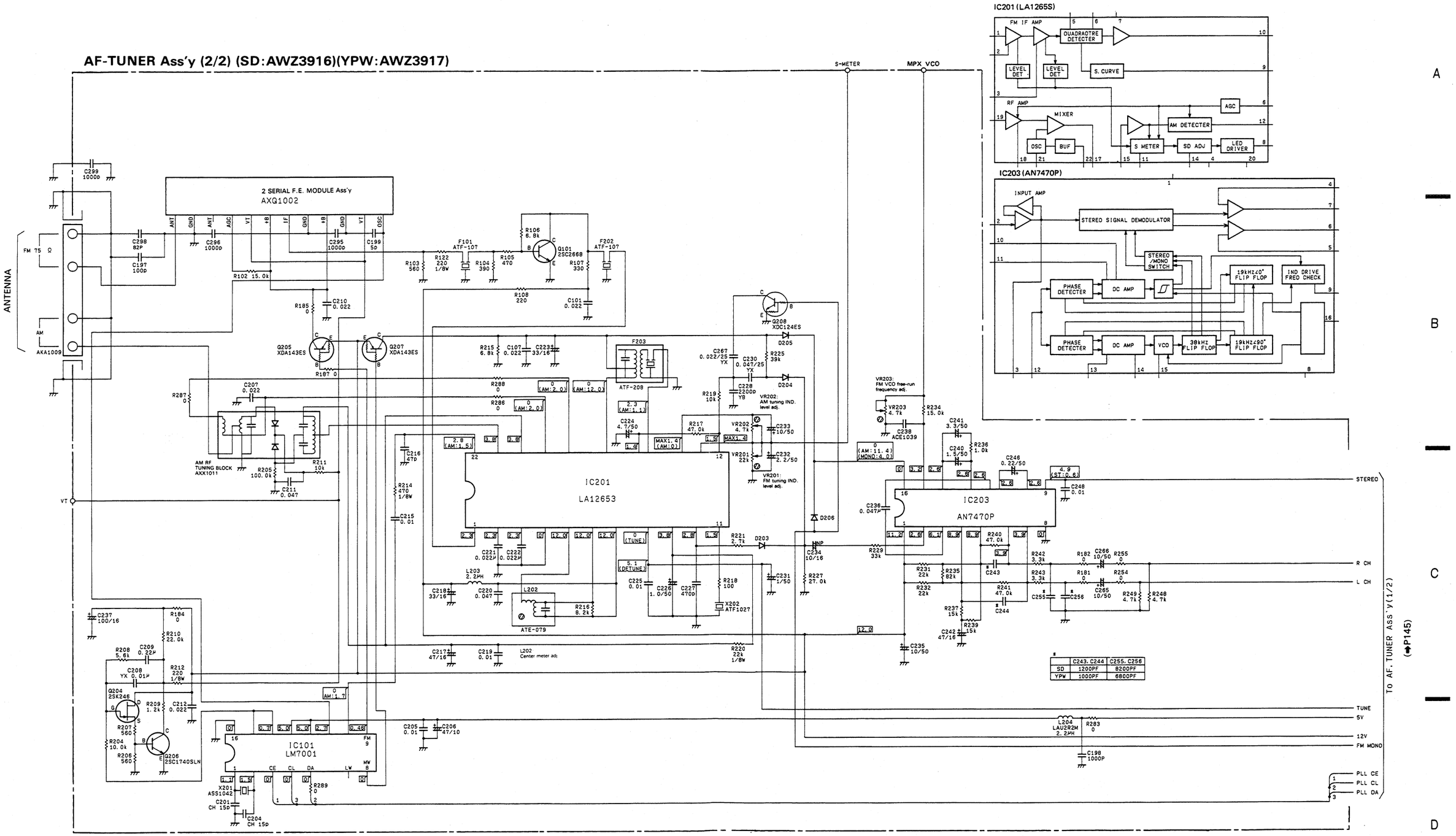

	C243, C244	C255, C256
SD	1200PF	8200PF
YPW	1000PF	6800PF

7.3.3 AUDITION Ass'y

AUDITION Ass'y (AWZ3924)

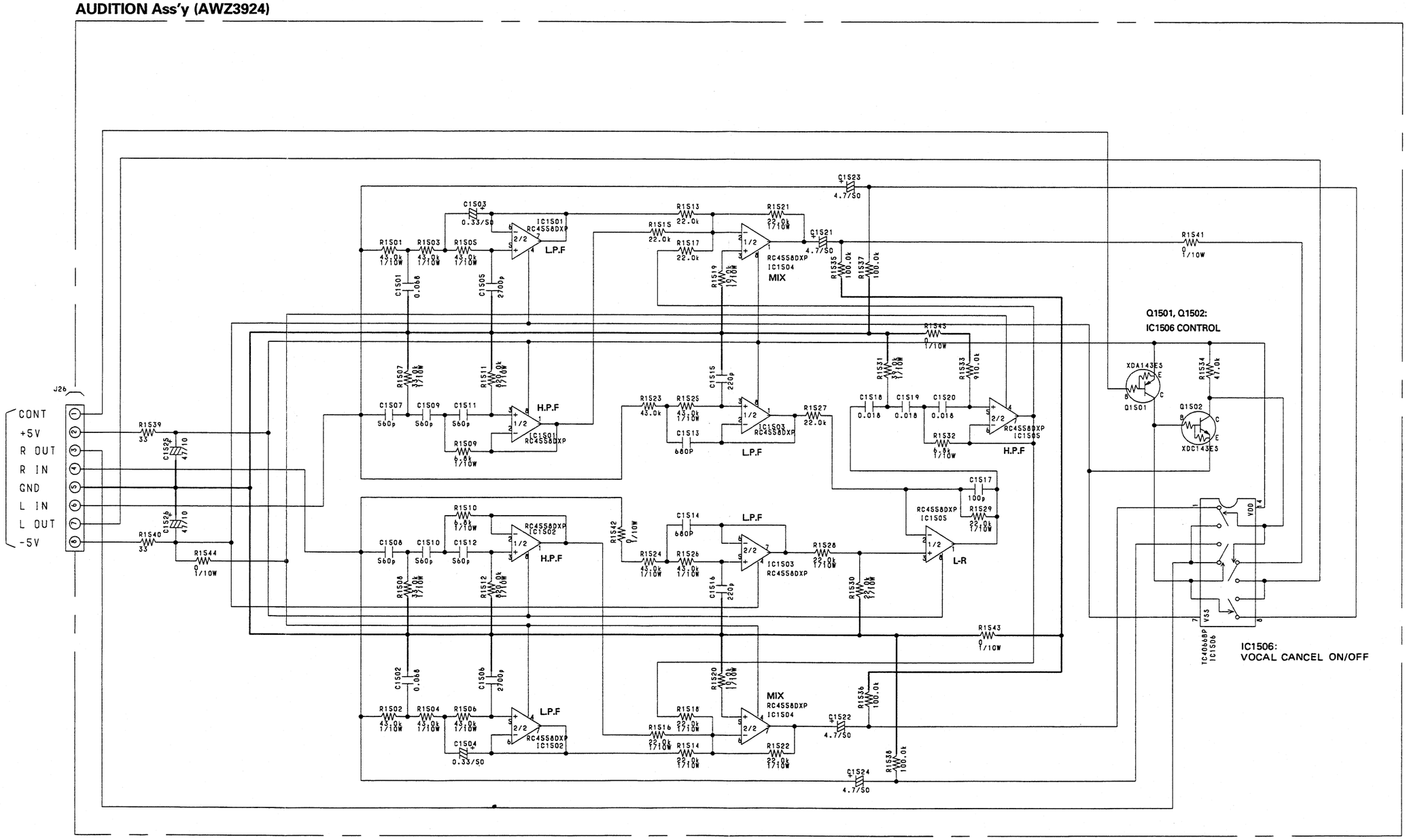

This PCB connection diagram is viewed from the parts mounted side.

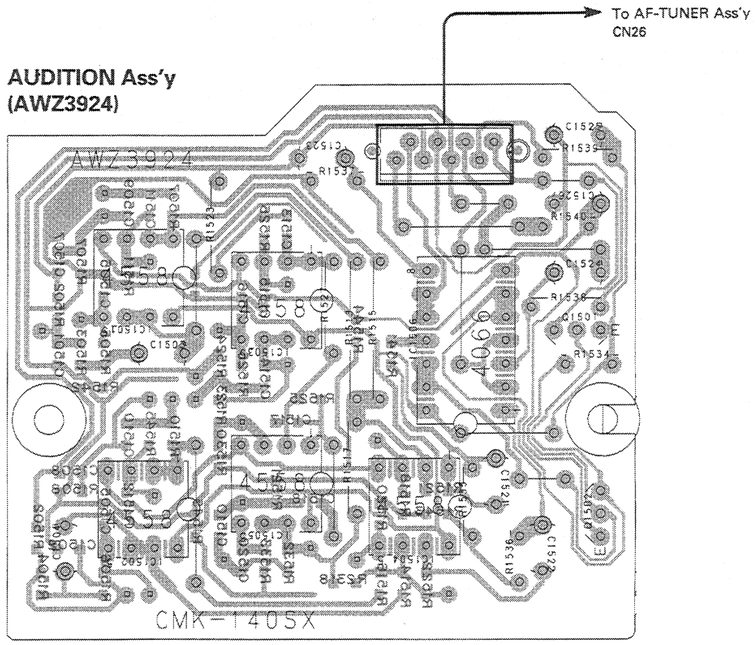

IC1501	IC1503	IC1506	Q1501
IC1502	IC1504	IC1504	Q1502

This PCB connection diagram is viewed from the foil side.

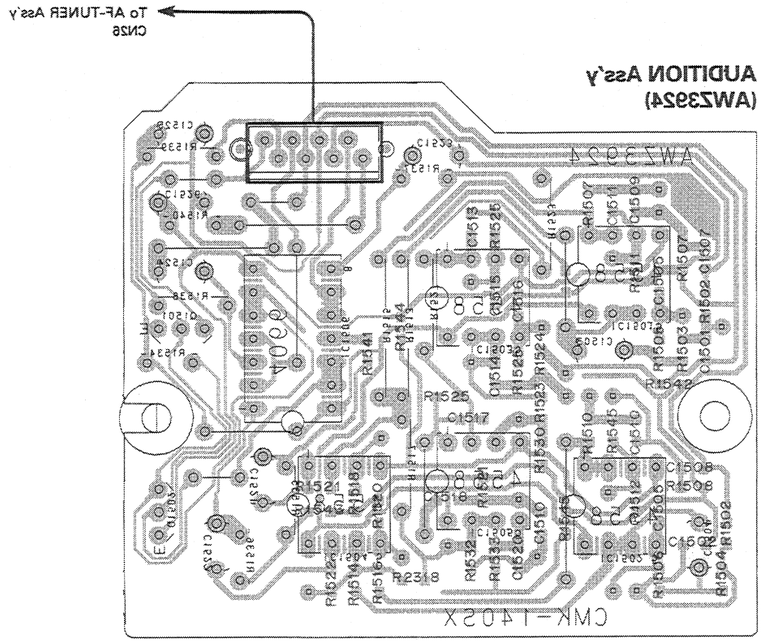

IC1501	IC1503	IC1506	Q1501
IC1502	IC1504	IC1504	Q1502

7.3.4 DECK SW Ass'y

This PCB connection diagram is viewed from the parts mounted side.

DECK SW Ass'y (AWZ3922)

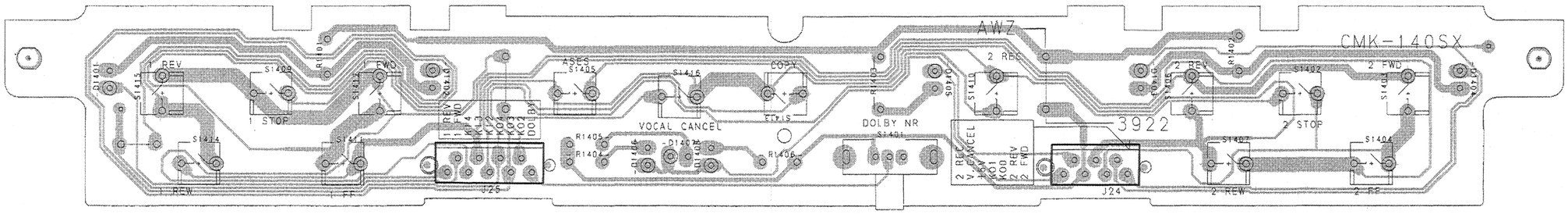

This PCB connection diagram is viewed from the foil side.

DECK SW Ass'y (AWZ3922)

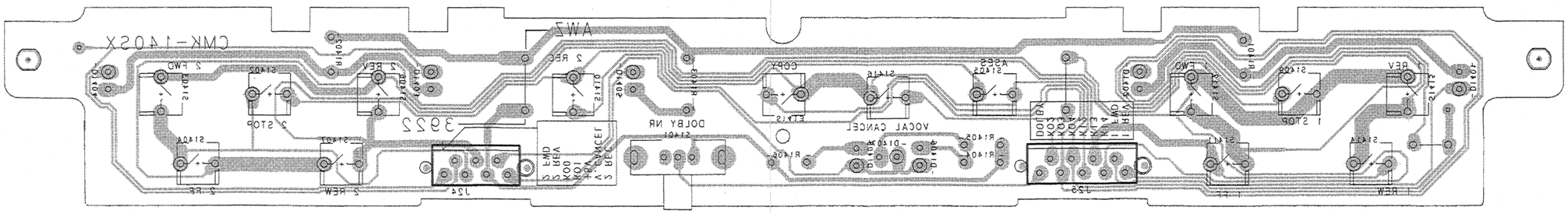

8. SPECIFICATIONS

Amplifier section

Music Power (DIN) ..... 37 W + 37 W
Continuous Power Output (DIN) ..... 22 W + 22 W
(1 kHz, T.H.D. 1%, 8 Ω)
Continuous Power Output (RMS) ..... 28 W + 28W
(1 kHz, T.H.D. 5%, 8 Ω)
Hum & Noise
(DIN, Continuous Power/50 mW) ..... 68 dB/60 dB
Total Harmonic Distortion
(40 Hz to 20,000 Hz, 11 W, 8 ohms)
*PHONO ..... No more than 0.2%

FM/AM tuner section

FM Tuner Section

Frequency Range ..... 87.5 MHz to 108 MHz
Usable Sensitivity ..... Mono: 12.8 dBf, IHF
(1.2 μV/75 ohms)
Sensitivity (DIN) ..... Mono S/N 26 dB: 1 μV/75 Ω
Stereo S/N 46 dB: 50 μV/75 Ω
Signal-to-Noise Ratio (IHF, 85 dBf Input) ..... Mono: 77 dB
Stereo: 73 dB
Signal-to-Noise Ratio (DIN) ..... Mono: 66 dB
Stereo: 60 dB
Distortion ..... Stereo: 0.5 % (1kHz)
Antenna Input ..... 75 ohms unbalanced

MW (AM) Tuner Section

Frequency Range ..... 531 kHz to 1,602 kHz
Sensitivity (IHF, Loop antenna) ..... 350 μV/m
Antenna ..... Loop Antenna

CD Section

Type ..... Compact disc digital audio system
Signal-to-Noise Ratio ..... 98 dB or more (EIAJ)
Dynamic Range ..... 92 dB or more (EIAJ)
Wow and Flutter ..... Limit of measurement
(±0.001% W.PEAK) or less (EIAJ)

Cassette deck section

Systems ..... 4 track, 2-channel stereo
Heads ..... Recording/playback head x 1
Playback head x 1
Erasing head x 1
Motor ..... DC servo motor x 2
Wow and Flutter ..... No more than 0.09 % (WRMS)
Frequency Response (–20 dB recording):
TYPE II (HIGH/CrO_2) tape ..... 35 Hz to 15,000 Hz ±6 dB
TYPE I (Normal) tape ..... 35 Hz to 14,000 Hz ±6 dB
Signal-to-Noise Ratio
Dolby NR OFF ..... 56 dB
Noise Reduction Effect
Dolby B type NR ON ..... More than 10 dB (at 5 kHz)

Miscellaneous

Power Requirements ..... AC. 220 - 230 Volt, 50/60 Hz
Power Consumption ..... 160 W
Dimensions ..... 260 (W) x 310 (H) x 295 (D) mm
Weight (without package) ..... 8.1 kg

Accessories

Operating Instructions 1
Remote Control Unit 1
Dry Cell Batteries (AAA/R03) 2
FM T-type Antenna 1
AM Loop Antenna 1

NOTE:
Specifications and design subject to possible modification without notice due to improvements.

* Measured by audio spectrum analyzer.

DECK SW Ass'y (AWZ3922)

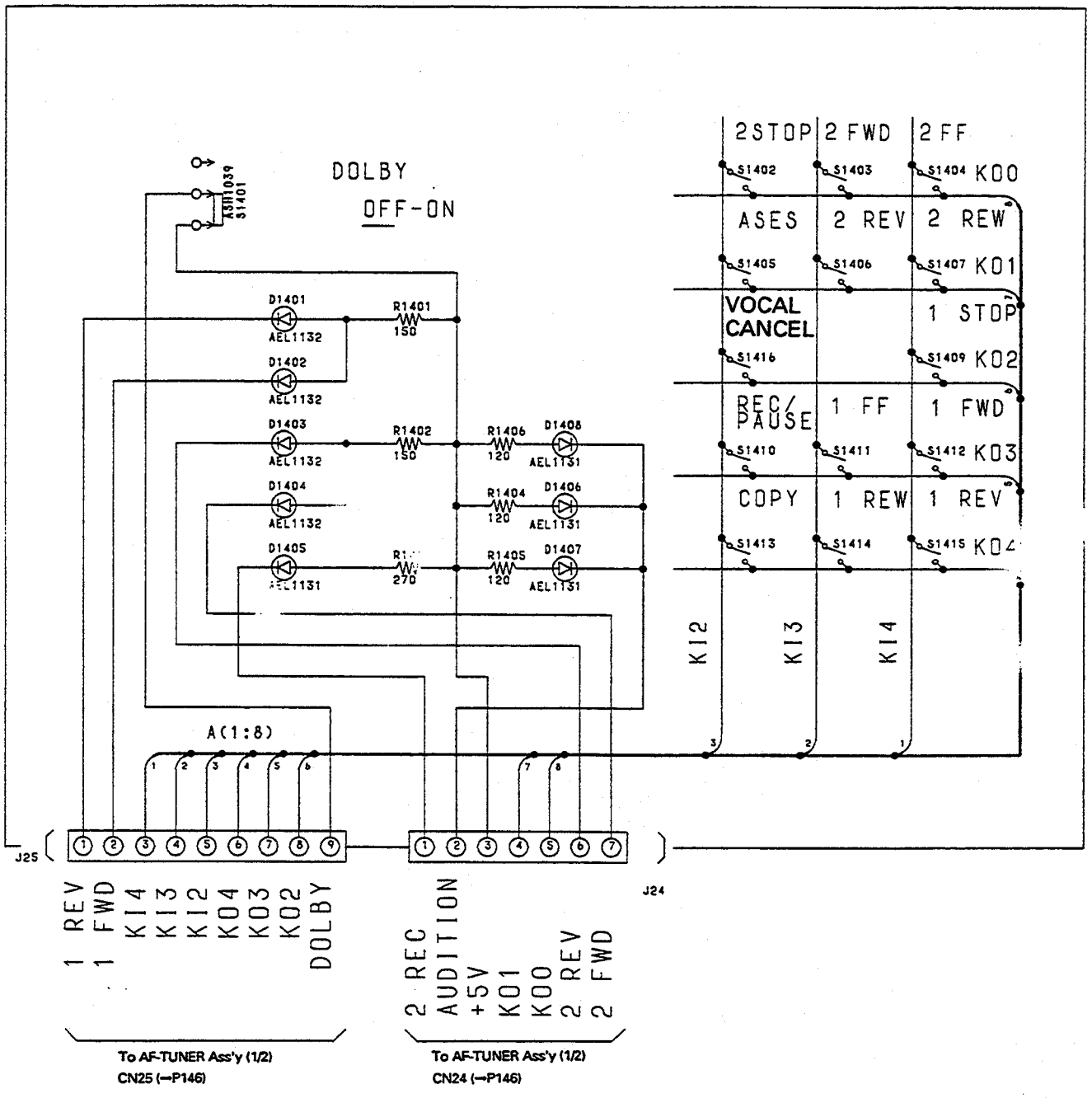

9. PANEL FACILITIES

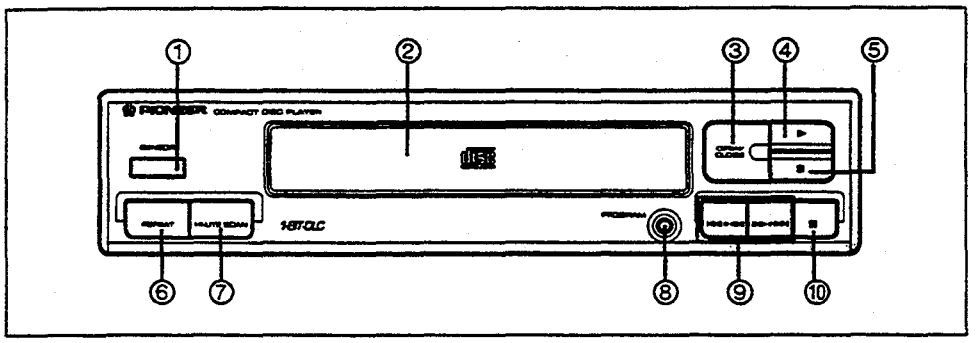

CD PLAYER

① Remote sensor window (SENSOR)
② Disc tray
③ OPEN/CLOSE button
④ Play button (▶)
⑤ Stop button (■)
⑥ REPEAT button
⑦ HI-LITE SCAN button
⑧ PROGRAM button
⑨ Manual/Track search buttons (⏮ · ◀◀ ▶▶ · ⏭)
⑩ Pause button (❚❚)

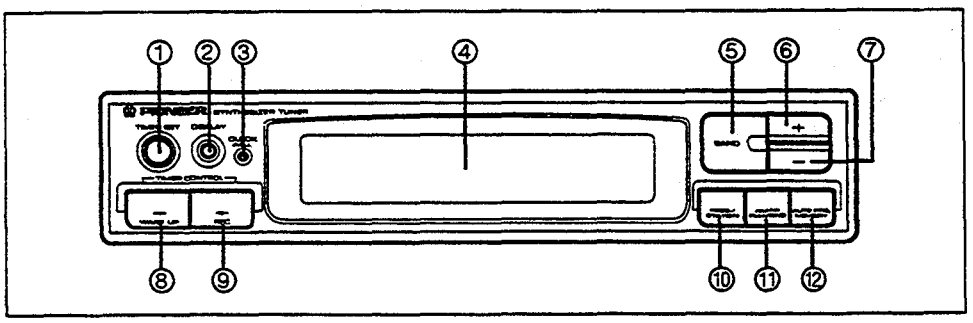

TUNER

① TIMER SET button
② DISPLAY button
③ CLOCK ADJ. button
④ Display
⑤ BAND button
⑥ + (tuner up) button
⑦ – (tuner down) button
⑧ TIMER CONTROL WAKE UP/– button
⑨ TIMER CONTROL REC/+ button
⑩ FREQ./STATION button
⑪ AM-NR/FM-MONO button
⑫ AUTO PRE. MEMORY button

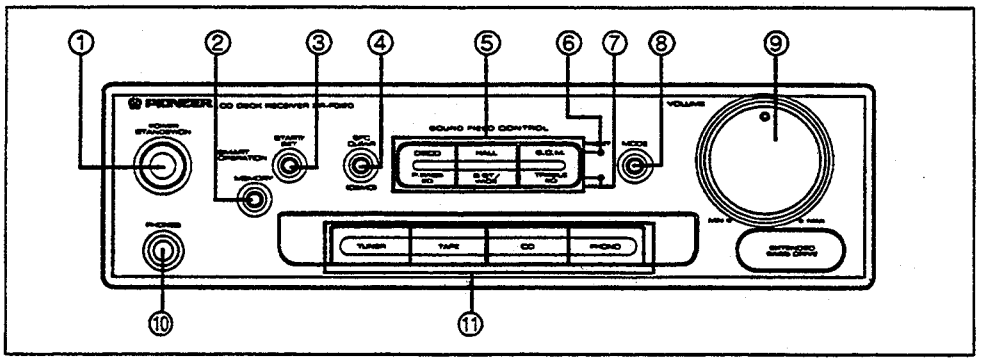

AMPLIFIER

① POWER STANDBY/ON switch

This is the switch for electric power.

ON: When set to the ON position, power is supplied and the unit becomes operational.

STANDBY: When set to the STANDBY position, the main power flow is cut and the unit is no longer fully operational. A minute flow of power feeds the unit to maintain operation readiness. (The display shows only the time.)

② SMART OPERATION MEMORY button

③ SMART OPERATION START/SET button

④ SFC CLEAR (DEMO) button

⑤ SOUND FIELD CONTROL buttons (DISCO/P.BASS EQ, HALL/S.ST./WIDE, B.G.M./TREBLE EQ)

⑥ PRESET mode indicator

⑦ MANUAL mode indicator

⑧ MODE button

⑨ VOLUME control

⑩ Headphones jack (PHONES)

⑪ Input selector buttons (TUNER/TAPE/CD/PHONO)

Auto Function

This model is equipped with "Auto Function" operation, so when the switch for CD PLAY, RANDOM, PLAY (tape), +/– (tuner up/down) or BAND is pressed, the function switches automatically. Use the PHONO function button to select the component connected to the PHONO jacks, since Auto Function is not effective for this.

NOTE:

The function cannot be switched during recording except for tape copying. (Auto Function does not operate either.)

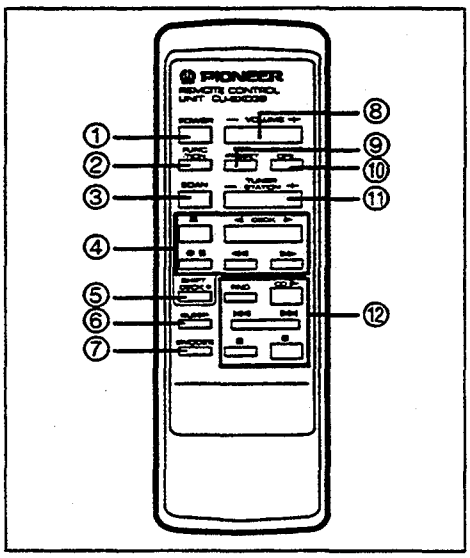

REMOTE CONTROL UNIT

① **POWER button**

② **FUNCTION button**

Each time this button is pressed, the function changes in the following sequence: TUNER → TAPE → CD → PHONO → TUNER.

③ **SCAN button**

In TUNER mode: This button is used for scanning preset stations.
In CD mode: This button is used for Hi-Lite Scan.

④ **DECK operation buttons**
(◄ ► DECK Play, ■ Stop, ◄◄ ►► Fast, ● II Rec pause)

⑤ **SHIFT DECK II button**

To operate Deck II, press the desired deck operation button while pressing this button.

⑥ **SLEEP button**

⑦ **SNOOZE button**

⑧ **VOLUME –/+ button**

⑨ **SFC PRESET button**

Each time this button is pressed, the SOUND FIELD CONTROL setting changes in the following sequence: DISCO → HALL → B.G.M. → CLEAR (SFC clear).

⑩ **SMART OPE. button**

⑪ **TUNER STATION –/+ button**

⑫ **CD operation buttons**
(► Play, ■ Stop, II Pause, |◄◄ ►►| Track search, RND)

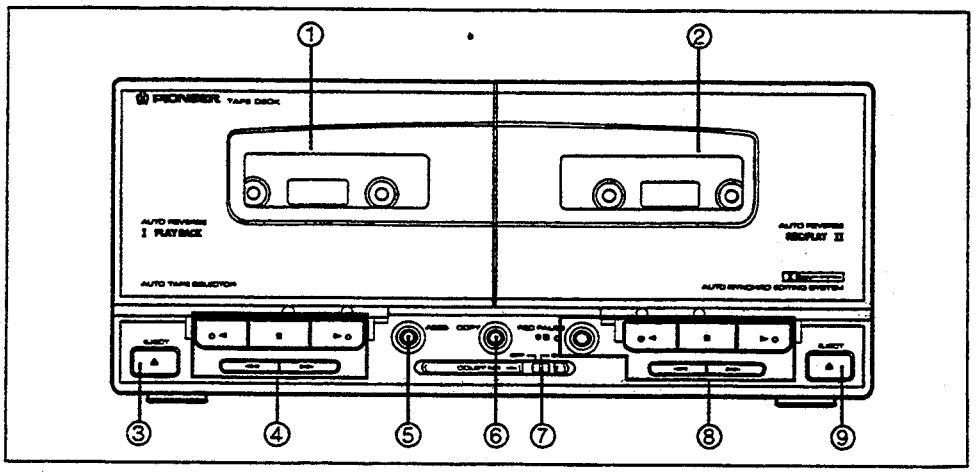

CASSETTE DECK

① **DECK I cassette door**
② **DECK II cassette door**
③ **DECK I EJECT button (⏏)**
④ **DECK I operation buttons (Play ◄ ►, Stop ■, Fast ◄◄ ►►)**
⑤ **ASES (Auto Synchro Editing System) button**
⑥ **COPY button**
⑦ **DOLBY* NR switch**
⑧ **DECK II operation buttons (Play ◄ ►, Stop ■, Fast ◄◄ ►►, REC PAUSE ● II)**
⑨ **DECK II EJECT button (⏏)**

* Dolby noise reduction manufactured under license from Dolby Laboratories Licensing Corporation.
"DOLBY" and the double-D symbol are trademarks of Dolby Laboratories Licensing Corporation.

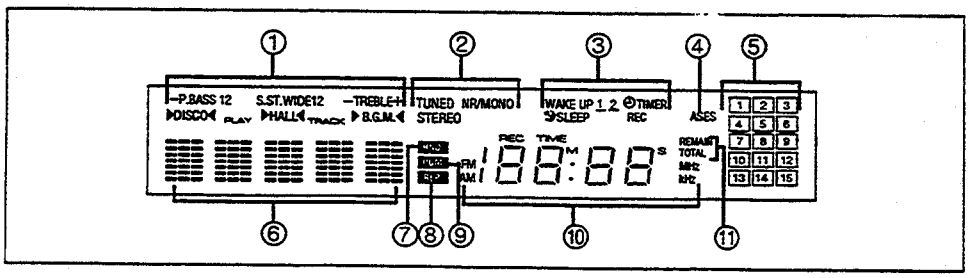

DISPLAY

① **Sound field control indicators**
Display the SOUND FIELD CONTROL settings.

② **Tuner indicators**
Indicate the tuning mode.

③ **Timer indicators**
Display timer settings.

④ **ASES (Auto Synchro Editing System) indicator.**
Lights when A.S.E.S. is performed.

⑤ **Music calendar**

⑥ **Function display**
Displays the selected function. In the TUNER mode, this displays the station No., and when playing a CD it displays the track No.
When you change the setting of the SOUND FIELD CONTROL buttons, the corresponding mode is displayed.

⑦ **Random indicator**

⑧ **Repeat indicator**

⑨ **Program indicator**

⑩ **Frequency/Time display**
In TUNER mode, frequency is displayed. In any other mode it displays the time.

⑪ **REMAIN/TOTAL indicator**
In CD mode, "REMAIN" shows the remaining play time and "TOTAL" shows the total play time.