Pioneer

Service Manual

ORDER NO.
RRV2214

STEREO CD/VCD CASSETTE DECK RECEIVER

XR-VS88
XR-VS66

THIS MANUAL IS APPLICABLE TO THE FOLLOWING MODEL(S) AND TYPE(S).

Type	Model		Power Requirement	The voltage can be converted by the following method.
	XR-VS88	XR-VS66		
DBDXJ	○	○	AC110-127V/220-230V/240V	With the voltage selector
DXJN/NC	○	○	AC110-127V/220-230V/240V	With the voltage selector
DLXJ/NC	○	○	AC110-127V/220-230V/240V	With the voltage selector

● **This service manual should be used together with the following manual(s):**

Model No.	Order No.	Remarks
XR-A670/KUCXJ	RRV2188	

CONTENTS

1. SAFETY INFORMATION ····· 2
2. CONTRAST OF MISCELLANEOUS PARTS ····· 3
3. SCHEMATIC DIAGRAM ····· 12
4. PCB CONNECTION DIAGRAM ····· 28
5. ADJUSTMENT ····· 30

PIONEER CORPORATION 4-1, Meguro 1-chome, Meguro-ku, Tokyo 153-8654, Japan
PIONEER ELECTRONICS SERVICE, INC. P.O. Box 1760, Long Beach, CA 90801-1760, U.S.A.
PIONEER ELECTRONIC (EUROPE) N.V. Haven 1087, Keetberglaan 1, 9120 Melsele, Belgium
PIONEER ELECTRONICS ASIACENTRE PTE. LTD. 253 Alexandra Road, #04-01, Singapore 159936

©PIONEER CORPORATION 1999

T – ZZK OCT. 1999 Printed in Japan

1. SAFETY INFORMATION

LABEL CHECK (for DLXJ/NC and DXJN/NC types)

IMPORTANT

THIS PIONEER APPARATUS CONTAINS LASER OF CLASS 1.
SERVICING OPERATION OF THE APPARATUS SHOULD BE DONE BY A SPECIALLY INSTRUCTED PERSON.

LASER DIODE CHARACTERISTICS

MAXIMUM OUTPUT POWER: 1.3 mW
WAVELENGTH: 790nm ± 25 nm

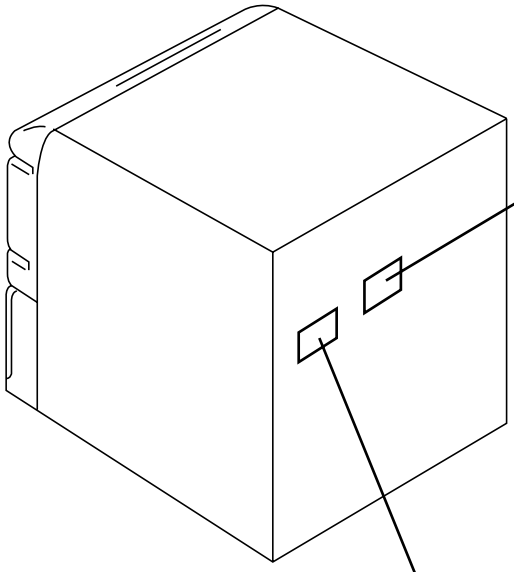

CAUTION
INVISIBLE LASER RADIATION WHEN OPEN, AVOID EXPOSURE TO BEAM
PRW1018

CLASS 1
LASER PRODUCT

Printed on the Rear Panel

Additional Laser Caution

1. Laser Interlock Mechanism
   The position of the switch (S9501) for detecting loading state is detected by the system microprocessor, and the design prevents laser diode oscillation when the switch (S9501) is pressed physically.
   Thus, the interlock will no longer function if the switch (S9501) is released physically and deliberatery.
   The interlock also does not function in the test mode ∗.
   Laser diode oscillation will continue, if pin 62 of L9240ML (IC1101) on the CD ASSY mounted on the $M Loading Mechanism assembly is connected to GND, or else the terminals of Q1101 are shorted to each other (fault condition).

2. When the cover is opened, close viewing of the objective lens with the naked eye will cause exposure to a Class 1 laser beam.

∗ : Refer to page 66 on the service manual RRV2188.

2. CONTRAST OF MISCELLANEOUS PARTS

NOTES:
- *Parts marked by "NSP" are generally unavailable because they are not in our Master Spare Parts List.*
- *The ⚠ mark found on some component parts indicates the importance of the safety factor of the part. Therefore, when replacing, be sure to use parts of identical designation.*
- *Screws adjacent to ▼ mark on product are used for disassembly.*
- *Reference Nos. indicate the pages and Nos. in the service manual for the base model.*
- *When ordering resistors, first convert resistance values into code form as shown in the following examples.*

Ex.1 When there are 2 effective digits (any digit apart from 0), such as 560 ohm and 47k ohm (tolerance is shown by J=5%, and K=10%).

560 → 56 x 10^1 → 561 ..... RD1/4PU 5 6 1 J
47k → 47 x 10^3 → 473 ..... RD1/4PU 4 7 3 J
0.5 → R50 ..... RN2H R 5 0 K
1 → 1R0 ..... RS1P 1 R 0 K

Ex.2 When there are 3 effective digits (such as in high precision metal film resistors).

5.62k → 562 x 10^1 → 5621 ..... RN1/4PC 5 6 2 1 F

■ CONTRAST TABLE

XR-VS88/DBDXJ, DXJN/NC, DLXJ/NC and XR-A670/KUCXJ are constructed the same except for the following :

Ref. No.	Mark	Symbol and Description	Part No.				Remarks
			XR-A670 /KUCXJ	XR-VS88 /DBDXJ	XR-VS88 /DXJN/NC	XR-VS88 /DLXJ/NC	
		PCB ASSEMBLIES					
		MAIN ASSY	XWM3100	XWM3102	XWM3102	XWM3102	
P6- 1		└─ AF ASSY	XWZ3199	XWZ3201	XWZ3201	XWZ3201	
		COMPLEX ASSY	XWM3113	XWM3115	XWM3115	XWM3115	
P6- 2		├─ PRIMARY ASSY	XWZ3224	XWZ3222	XWZ3222	XWZ3222	
P6- 3		├─ SUB TRANS ASSY	XWZ3227	XWZ3226	XWZ3226	XWZ3226	
P9- 1		└─ DISPLAY ASSY	XWZ3214	XWZ3216	XWZ3216	XWZ3216	
		PACKING SECTION					
P4- 1	⚠	Power Cord	ADG7022	ADG1158	ADG1154	ADG1154	
P4- 4		Remote Control Unit (CU-XR060)	XZN3067	Not used	Not used	Not used	
P4- 4		Remote Control Unit (CU-XR061)	Not used	XZN3068	XZN3068	XZN3068	
P4- 5		Battery Cover	XZN3065	XZN3066	XZN3066	XZN3066	
P4-10		Packing Case	XHD3091	XHD3096	XHD3113	XHD3097	
P4-11	NSP	Warranty Card	ARY7033	Not used	Not used	Not used	
P4-13		Operating Instructions (English/French)	XRE3024	Not used	Not used	Not used	
		Operating Instructions (English/Chinese/Spanish)	Not used	XRE3026	Not used	XRE3026	
		Operating Instructions (Thai)	Not used	Not used	XRC3019	Not used	
		Video Cord (L=1.5m/Yellow)	Not used	VDE1034	VDE1034	VDE1034	Accessories
		EXTERIOR SECTION					
P6- 6	NSP	$M Mechanism CD-2	XXA3012	Not used	Not used	Not used	
P6- 6	NSP	$M Mechanism VCD	Not used	XXA3007	XXA3007	XXA3007	
P6- 7	⚠	Power Transformer (AC120V)	XTS3032	Not used	Not used	Not used	
P6- 7	⚠	Power Transformer (AC110-127V/220-230V/240V)	Not used	XTS3031	XTS3031	XTS3031	
P6- 8	⚠	Fuse (FU1 : 6.3A)	REK1085	Not used	Not used	Not used	
P6- 8	⚠	Fuse (FU1 : T5A)	Not used	AEK1061	AEK1061	AEK1061	
P6- 9	NSP	Fuse Caution Label	XAX3157	Not used	Not used	Not used	
P6-12		25P 120 Flexible Cable/60V	XDD3034	Not used	Not used	Not used	
P6-12		30P 120 Flexible Cable/60V	Not used	XDD3035	XDD3035	XDD3035	
P6-13		19P 190 Flexible Cable/30V	XDD3038	Not used	Not used	Not used	
P6-14		8P 230 Flexible Cable/30V	XDD3039	Not used	Not used	Not used	
P6-14		16P Flexible Cable/30V	Not used	XDD3006	XDD3006	XDD3006	
P6-19	NSP	Chassis	XNA3004	XNA3003	XNA3003	XNA3003	
P6-20		Rear Panel	XNC3040	XNC3043	XNC3043	XNC3043	
P6-35	NSP	Fuse Label	AAX2374	AAX7098	AAX7098	AAX7098	
P6-39		Cushion Leg B	XEB3009	Not used	Not used	Not used	
P6-43	NSP	Getter	XAX3143	XAX3146	XAX3146	XAX3146	
P6-44		Caution Label	Not used	Not used	PRW1018	PRW1018	
P6-45		65 Label	ORW1069	Not used	Not used	Not used	

Ref. No.	Mark	Symbol and Description	Part No. XR-A670 /KUCXJ	XR-VS88 /DBDXJ	XR-VS88 /DXJN/NC	XR-VS88 /DLXJ/NC	Remarks
P6-56		Cusion Leg A	XEB3008	Not used	Not used	Not used	
P6-57		Leg	XMR3012	Not used	Not used	Not used	
	⚠	Fuse (FU2, FU3 : T3.15A)	Not used	AEK1059	AEK1059	AEK1059	*1
		Fuse Label	Not used	AAX7493	AAX7493	AAX7493	*2
	NSP	Name Label	Not used	XAL3036	Not used	Not used	*3
		Mic Knob	Not used	XAB3007	XAB3007	XAB3007	No.1
		Cord Clamper	RNH1005	Not used	Not used	Not used	
		FRONT PANEL SECTION					
P9- 3		Earth Plate B	XNG3023	XNG3023	XNG3023	Not used	
P9-13		V button A	XAD3034	XAD3035	XAD3035	XAD3035	
P9-14		V button B	XAD3039	XAD3040	XAD3040	XAD3040	
P9-17		Display Panel	XAK3113	XAK3119	XAK3119	XAK3119	
P9-19		FL Cover	XAK3088	XAK3124	XAK3124	XAK3124	
P9-23		S.C. button	XAD3026	XAD3029	XAD3029	XAD3029	
P9-27		JOG Lens	XAK3084	XAK3096	XAK3096	XAK3096	
P9-30		Sub Panel	XAK3106	XAK3107	XAK3107	XAK3107	
P9-37		Cusion Leg A	XEB3008	Not used	Not used	Not used	
		Earth Plate A	Not used	XNG3018	XNG3018	XNG3018	No.2

Notes : ●The numbers in the remarks column correspond to the numbers on the " EXPLODED VIEWS ".
● For PCB ASSEMBLIES, Refer to "CONTRAST OF PCB ASSEMBLIES" and "3. SCHEMATIC DIAGRAM".
*1 : Refer to "3. SCHEMATIC DIAGRAM".
*2 : Stick Fuse Card on PRIMARY Assy.
*3 : Stick Name Label on Rear Panel.

XR-VS66/DBDXJ, DXJN/NC, DLXJ/NC and XR-A370/KUCXJ are constructed the same except for the following :

Ref. No.	Mark	Symbol and Description	Part No. XR-A370 /KUCXJ	XR-VS66 /DBDXJ	XR-VS66 /DXJN/NC	XR-VS66 /DLXJ/NC	Remarks
		PCB ASSEMBLIES					
		MAIN ASSY	XWM3097	XWM3099	XWM3099	XWM3099	
P6- 1		└─ AF ASSY	XWZ3196	XWZ3198	XWZ3198	XWZ3198	
		COMPLEX ASSY	XWM3108	XWM3118	XWM3110	XWM3110	
P6- 2		├─ PRIMARY ASSY	XWZ3224	XWZ3222	XWZ3222	XWZ3222	
P6- 3		├─ SUB TRANS ASSY	XWZ3227	XWZ3226	XWZ3226	XWZ3226	
P9- 1		└─ DISPLAY ASSY	XWZ3209	XWZ3219	XWZ3211	XWZ3211	
		PACKING SECTION					
P4- 1	⚠	Power Cord	ADG7022	ADG1158	ADG1154	ADG1154	
P4- 4		Remote Control Unit (CU-XR060)	XZN3067	Not used	Not used	Not used	
P4- 4		Remote Control Unit (CU-XR061)	Not used	XZN3068	XZN3068	XZN3068	
P4- 5		Battery Cover	XZN3065	XZN3066	XZN3066	XZN3066	
P4-10		Packing Case	XHD3082	XHD3088	XHD3112	XHD3089	
P4-11	NSP	Warranty Card	ARY7033	Not used	Not used	Not used	
P4-13		Operating Instructions (English/French)	XRE3024	Not used	Not used	Not used	
		Operating Instructions (English/Chinese/Spanish)	Not used	XRE3026	Not used	XRE3026	
		Operating Instructions (Thai)	Not used	Not used	XRC3019	Not used	
		Video Cord (L=1.5m/Yellow)	Not used	VDE1034	VDE1034	VDE1034	Accessories
		SW Antenna	Not used	ADH7006	Not used	Not used	Accessories

Ref. No.	Mark	Symbol and Description	Part No. XR-A370 /KUCXJ	XR-VS66 /DBDXJ	XR-VS66 /DXJN/NC	XR-VS66 /DLXJ/NC	Remarks
		EXTERIOR SECTION					
P6- 5		FM/AM TUNER Module	AXQ7065	AXQ7062	AXQ7065	AXQ7065	
P6- 6	NSP	$M Mechanism CD-2	XXA3009	Not used	Not used	Not used	
P6- 6	NSP	$M Mechanism VCD	Not used	XXA3007	XXA3007	XXA3007	
P6- 7	⚠	Power Transformer (AC120V)	XTS3017	Not used	Not used	Not used	
P6- 7	⚠	Power Transformer (AC110-127V/220-230V/240V)	Not used	XTS3015	XTS3015	XTS3015	
P6- 8	⚠	Fuse (FU1 : 5A)	REK1083	Not used	Not used	Not used	
P6- 8	⚠	Fuse (FU1 : T4A)	Not used	AEK1060	AEK1060	AEK1060	
P6- 9	NSP	Fuse Caution Label	XAX3122	Not used	Not used	Not used	
P6-12		25P 120 Flexible Cable/60V	XDD3034	Not used	Not used	Not used	
P6-12		30P 120 Flexible Cable/60V	Not used	XDD3035	XDD3035	XDD3035	
P6-13		19P 190 Flexible Cable/30V	XDD3038	Not used	Not used	Not used	
P6-14		8P 230 Flexible Cable/30V	XDD3039	Not used	Not used	Not used	
P6-14		16P Flexible Cable/30V	Not used	XDD3006	XDD3006	XDD3006	
P6-19	NSP	Chassis	XNA3004	XNA3003	XNA3003	XNA3003	
P6-20		Rear Panel	XNC3035	XNC3038	XNC3038	XNC3038	
P6-35	NSP	Fuse Label	AAX7097	Not used	Not used	Not used	
P6-39		Cushion Leg B	XEB3009	Not used	Not used	Not used	
P6-43	NSP	Getter	XAX3138	XAX3141	XAX3141	XAX3141	
P6-44		Caution Label	Not used	Not used	PRW1018	PRW1018	
P6-45		65 Label	ORW1069	Not used	Not used	Not used	
P6-56		Cusion Leg A	XEB3008	Not used	Not used	Not used	
P6-57		Leg	XMR3012	Not used	Not used	Not used	
	⚠	Fuse (FU2, FU3 : T2A)	Not used	AEK1057	AEK1057	AEK1057	*1
	NSP	Name Label	Not used	XAL3031	Not used	Not used	*2
		Mic Knob	Not used	XAB3007	XAB3007	XAB3007	No.1
		FRONT PANEL SECTION					
P9-13		V button A	XAD3034	XAD3035	XAD3035	XAD3035	
P9-14		V button B	XAD3039	XAD3040	XAD3040	XAD3040	
P9-17		Display Panel	XAK3108	XAK3110	XAK3110	XAK3110	
P9-19		FL Cover	XAK3088	XAK3124	XAK3124	XAK3124	
P9-23		S.C. button	XAD3026	XAD3029	XAD3029	XAD3029	
P9-24		POWER button	XAD3027	XAD3033	XAD3033	XAD3033	
P9-27		JOG Lens	XAK3084	XAK3096	XAK3096	XAK3096	
P9-30		Sub Panel	XAK3080	XAK3103	XAK3103	XAK3103	
P9-37		Cusion Leg A	XEB3008	Not used	Not used	Not used	
		Earth Plate A	Not used	XNG3018	XNG3018	XNG3018	No.2

Notes : ●The numbers in the remarks column correspond to the numbers on the " EXPLODED VIEWS ".
● For PCB ASSEMBLIES, Refer to "CONTRAST OF PCB ASSEMBLIES" and "3. SCHEMATIC DIAGRAM".
*1 : Refer to "3. SCHEMATIC DIAGRAM".
*2 : Stick Name Label on Rear Panel.

■ EXPLODED VIEWS

● EXTERIOR SECTION

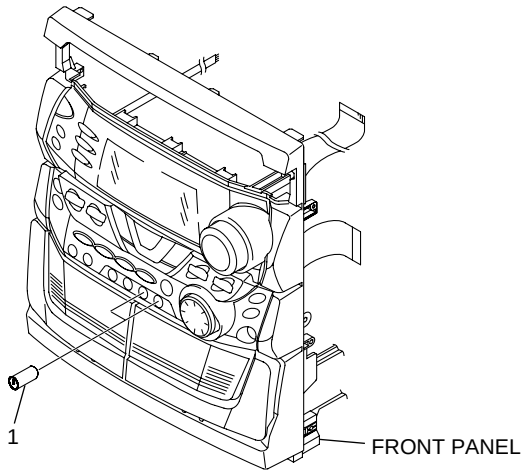

● FRONT PANEL SECTION

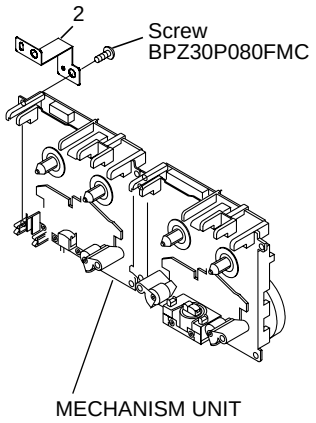

■ CONTRAST OF $M MECHANISM

XXA3007 and XXA3012 are constructed the same except for the following :

Ref. No.	Mark	Symbol and Description	Part No.		Remarks
			XXA3012 (XR-A670)	XXA3007 (XR-VS88, XR-VS66)	
		$M SERVO MECHA ASSY	XWX3008	Not used	
P11- 1		├─ MOTOR ASSY	XWZ3230	Not used	
P11- 2		├─ SW ASSY	XWZ3231	Not used	
P11- 3		├─ CD ASSY	XWZ3233	Not used	
P11- 4		└─ TRADE ASSY	XWZ3232	Not used	
P11- 3		$M VCD SURVO ASSY	Not used	XWX3003	
		$M MECHA PCB ASSY	Not used	XWX3004	
P11- 1		├─ MOTOR ASSY	Not used	XWZ3080	
P11- 2		├─ SW ASSY	Not used	XWZ3081	
P11- 4		└─ TRADE ASSY	Not used	XWZ3082	
P11-11		Traverse Base	XNW3006	XNW3010	
P11-12		Rotary Tray	ANW7124	ANW7113	
P11-13		Clamper	XNW3007	ANW7091	
P11-21		16P 200 Flexible Cable/60V	XDD3036	Not used	
P11-21		15P Flexible Cable/30V	Not used	XDD3007	
P11-25		Servo Mechanism Assy	XXA3010	AXA7039 *1	
P11-31		11P 185 Flexible Cable/30V	XDD3037	Not used	
P11-31		13P Flexible Cable/30V	Not used	XDD3008	
P11-32		Cushion Rubber	XEB3007	Not used	

Notes : For PCB ASSEMBLIES, Refer to “ ”, “3. SCHEMATIC DIAGRAM” and “4. PCB CONNECTION DIAGRAM”.
*1 : Refer to “ EXPLODED VIEWS ”.

■ EXPLODED VIEWS

● SERVO MECHANISM ASSY

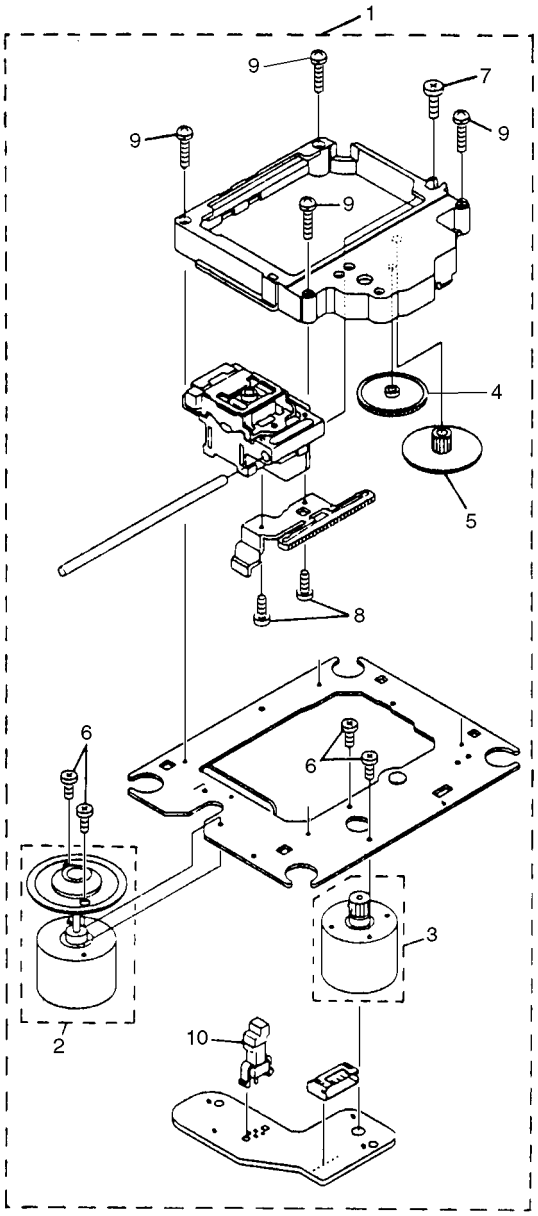

● SERVO MECHANISM ASSY PARTS LIST

Mark	No.	Description	Part No.
	1	Servo Mechanism	AXA7039
	2	SPINDLE MOTOR Assy	AEA7009
	3	SLEAD MOTOR Assy	AEA7010
	4	Gear A	AEA7013
	5	Gear B	AEA7014
	6	Screw	AEA7015
	7	Screw	AEA7016
	8	Screw	AEA7017
	9	Screw	AEA7018
	10	Leaf Switch	AEA7011

■ CONTRAST OF PCB ASSEMBLIES

F AF ASSY

XWZ3201 and XWZ3199 are constructed the same except for the following :

Mark	Symbol and Description	Part No.		Remarks
		XWZ3199	XWZ3201	
⚠	IC51	Not used	NJM7805FA	
	IC3951	Not used	BA4558F	
	Q51, Q52	Not used	2SB1237X	
	Q53	Not used	2SC2412K	
	D46	1SS133	Not used	
	D51, D52	S5688G	Not used	
	D53	Not used	MTZJ6.8C	
	D63, D64	1SS355	Not used	
	C52, C3953	Not used	CEAT100M50	
	C53	Not used	CEAT220M50	
	C1992, C1993	Not used	CKSQYB104K25	
	C3011, C3012	CEATR47M50	Not used	
	C3038	CEJA2R2M50	CEAT2R2M50	
	C3041, C3042	Not used	CEAT2R2M50	
	R51, R53, R56	Not used	RS1/10S473J	
	R52	Not used	RD1/2PM221J	
	R54	Not used	RD1/2PM101J	
	R55, R3951–R3956	Not used	RS1/10S472J	
	R63, R64	Not used	RS1/10S0R0J	
	R1999	Not used	RS1/10S102J	
	R3957, R3958	Not used	RS1/10S101J	
	CN1052	52045-0845	Not used	
	CN1053	Not used	52045-1645	
	CN5102	52045-2545	52045-3045	

XWZ3198 and XWZ3196 are constructed the same except for the following :

Mark	Symbol and Description	Part No.		Remarks
		XWZ3196	XWZ3198	
⚠	IC51	Not used	NJM7805FA	
	IC3951	Not used	BA4558F	
	Q51, Q52	Not used	2SB1237X	
	Q53	Not used	2SC2412K	
	D46	1SS133	Not used	
	D51, D52	S5688G	Not used	
	D53	Not used	MTZJ6.8C	
	D63, D64	1SS355	Not used	
	C52, C3953	Not used	CEAT100M50	
	C53	Not used	CEAT220M50	
	C1992, C1993	Not used	CKSQYB104K25	
	C3011, C3012	CEATR47M50	Not used	
	C3038	CEJA2R2M50	CEAT2R2M50	
	C3041, C3042	Not used	CEAT2R2M50	
	R51, R53, R56	Not used	RS1/10S473J	
	R52	Not used	RD1/2PM221J	
	R54	Not used	RD1/2PM101J	
	R55, R3951–R3956	Not used	RS1/10S472J	
	R63, R64	Not used	RS1/10S0R0J	
	R1999	Not used	RS1/10S102J	
	R2212, R2213	RS1/10S0R0J	RS1/10S102J	
	R3957, R3958	Not used	RS1/10S101J	
	CN1052	52045-0845	Not used	
	CN1053	Not used	52045-1645	
	CN5102	52045-2545	52045-3045	

HF PRIMARY ASSY

XWZ3222 and XWZ3224 are constructed the same except for the following :

Mark	Symbol and Description	Part No.		Remarks
		XWZ3224	XWZ3222	
⚠	S1 VOLTAGE SELECTOR	Not used	XKX3001	
	H3–H6 FUSE CLIP	Not used	AKR7001	
NSP	Y4 JUMPER WIRE	Not used	XDX3009	

JF DISPLAY ASSY

XWZ3216 and XWZ3214 are constructed the same except for the following :

Mark	Symbol and Description	Part No.		Remarks
		XWZ3214	XWZ3216	
	IC3901	Not used	BA4558F	
	IC3931	Not used	M65855FP	
	D3931	Not used	MTZJ5.1B	
	D5551–D5554	1SS181	Not used	
	D5591	Not used	1SS133	
	D5597	1SS355	Not used	
	D5613–D5616	MBG5064X	MAA5064X	
	D5617, D5618	SLP7118C51H	SLP6118C51H	
	F3903, F3904	Not used	DTF1069	
	L3931	Not used	LCTB100K2125	
	C3901, C3902, C3904, C3906	Not used	CEJA2R2M50	
	C3903	Not used	CCSQSL331J50	
	C3905	Not used	CEJA470M16	
	C3907, C3948	Not used	CKSQYB472K50	
	C3910	Not used	CKSQYB104K25	
	C3911, C3931, C3934, C3940	Not used	CKSQYB103K50	
	C3932	Not used	CEJAR47M50	
	C3933	Not used	CEJA220M16	
	C3935	Not used	CKSQYB473K50	
	C3936, C3937	Not used	CEJA4R7M50	
	C3938	Not used	CKSQYB472K50	
	C3939	Not used	CKSQYB123K50	
	C3942	Not used	CKSQYF104K50	
	C3943	Not used	CEJA101M16	
	R3901, R3902, R3907, R3911, R3912	Not used	RS1/10S332J	
	R3903, R3936	Not used	RS1/10S103J	
	R3904	Not used	RS1/10S104J	
	R3905	Not used	RS1/10S473J	
	R3906	Not used	RS1/10S681J	
	R3908	Not used	RS1/10S101J	
	R3922	Not used	RS1/10S0R0J	
	R3931	Not used	RS1/10S472J	
	R3932, R3937, R3938	Not used	RS1/10S123J	
	R3933	Not used	RS1/10S154J	
	R3934	Not used	RS1/10S124J	
	R3935	Not used	RS1/10S822J	
	R3940	Not used	RD1/4PU331J	
	R5554 (1.5kΩ)	ACN7062	Not used	
	R5558 (47kΩ)	ACN7077	Not used	
	R5605, R5606	RD1/4PU301J	RD1/4PU391J	
	VR3901, VR3931	Not used	XCS3002	
	JA3901, JA3902	Not used	XKN3003	
	CN5501	52492-1920	Not used	
	CN5502	Not used	52045-3045	
	CN5503	52045-2545	Not used	

XWZ3219, XWZ3211 and XWZ3209 are constructed the same except for the following :

Mark	Symbol and Description	Part No.			Remarks
		XWZ3209	XWZ3219	XWZ3211	
	IC3901	Not used	BA4558F	BA4558F	
	IC3931	Not used	M65855FP	M65855FP	
	D3931	Not used	MTZJ5.1B	MTZJ5.1B	
	D5551–D5554	1SS181	Not used	Not used	
	D5591	Not used	1SS133	1SS133	
	D5594	Not used	1SS133	Not used	
	D5597	1SS355	Not used	Not used	
	F3903, F3904	Not used	DTF1069	DTF1069	
	L3931	Not used	LCTB100K2125	LCTB100K2125	
	C3901, C3902, C3904, C3906	Not used	CEJA2R2M50	CEJA2R2M50	
	C3903	Not used	CCSQSL331J50	CCSQSL331J50	
	C3905	Not used	CEJA470M16	CEJA470M16	
	C3907, C3948	Not used	CKSQYB472K50	CKSQYB472K50	
	C3910	Not used	CKSQYB104K25	CKSQYB104K25	
	C3911, C3931, C3934, C3940	Not used	CKSQYB103K50	CKSQYB103K50	
	C3932	Not used	CEJAR47M50	CEJAR47M50	
	C3933	Not used	CEJA220M16	CEJA220M16	
	C3935	Not used	CKSQYB473K50	CKSQYB473K50	
	C3936, C3937	Not used	CEJA4R7M50	CEJA4R7M50	
	C3938	Not used	CKSQYB472K50	CKSQYB472K50	
	C3939	Not used	CKSQYB123K50	CKSQYB123K50	
	C3942	Not used	CKSQYF104K50	CKSQYF104K50	
	C3943	Not used	CEJA101M16	CEJA101M16	
	R3901, R3902, R3907, R3911, R3912	Not used	RS1/10S332J	RS1/10S332J	
	R3903, R3936	Not used	RS1/10S103J	RS1/10S103J	
	R3904	Not used	RS1/10S104J	RS1/10S104J	
	R3905	Not used	RS1/10S473J	RS1/10S473J	
	R3906	Not used	RS1/10S681J	RS1/10S681J	
	R3908	Not used	RS1/10S101J	RS1/10S101J	
	R3922	Not used	RS1/10S0R0J	RS1/10S0R0J	
	R3931	Not used	RS1/10S472J	RS1/10S472J	
	R3932, R3937, R3938	Not used	RS1/10S123J	RS1/10S123J	
	R3933	Not used	RS1/10S154J	RS1/10S154J	
	R3934	Not used	RS1/10S124J	RS1/10S124J	
	R3935	Not used	RS1/10S822J	RS1/10S822J	
	R3940	Not used	RD1/4PU331J	RD1/4PU331J	
	R5554 (1.5kΩ)	ACN7062	Not used	Not used	
	R5558 (47kΩ)	ACN7077	Not used	Not used	
	VR3901, VR3931	Not used	XCS3002	XCS3002	
	JA3901, JA3902	Not used	XKN3003	XKN3003	
	CN5501	52492-1920	Not used	Not used	
	CN5502	Not used	52045-3045	52045-3045	
	CN5503	52045-2545	Not used	Not used	

IF SUB TRANS ASSY

XWZ3226 and XWZ3227 are constructed the same except for the following :

Mark	Symbol and Description	Part No.		Remarks
		XWZ3227	XWZ3226	
	R1 (2.2MΩ/ 1/2)	RCN1080	Not used	
⚠	AN1 1P AC INLET	XKP3042	XKP3041	

Mark	No.	Description	Part No.

● PCB PARTS LIST

BF VCD SURVO ASSY

SEMICONDUCTORS

Mark	No.	Description	Part No.
⚠	IC1001		BA033FP
	IC1401		BA4558F-HT
	IC1301		BA5923FP
	IC1701		CL680T-D1
	IC1101		LA9240ML
	IC1201		LC78632RE
	IC1752		MB814260-70PJ
	IC1501		PDC051A
	IC1751		PDK032A
	IC1754		TC7W14F
	IC1753		TC7WU04F
	Q1101		2SA1048
	Q1351, Q1352		2SB1237X
	Q1353, Q1354		2SD1858X
	D1351–D1354		1SS355

COILS AND FILTERS

Mark	No.	Description	Part No.
	F1501		DTF1064
	F1201		DTF1066
	F1202		DTF1067
	F1705, F1706		DTF1069
	L1702		LCTB1R8K2125
	L1701		LCTB2R7K2125
	L1201		LFA100J
	L1001		LFA220J

CAPACITORS

Mark	No.	Description	Part No.
	C1129, C1205, C1208, C1213, C1353		CCSQCH101J50
	C1706, C1722		CCSQCH101J50
	C1133, C1755, C1756		CCSQCH120J50
	C1720		CCSQCH121J50
	C1216		CCSQCH150J50
	C1708		CCSQCH151J50
	C1217		CCSQCH180J50
	C1705		CCSQCH271J50
	C1132		CCSQCH300J50
	C1707		CCSQCH331J50
	C1130		CCSQCH3R0C50
	C1715, C1717		CCSQCH470J50
	C1138		CEAT100M50
	C1003, C1108, C1144, C1207, C1214		CEAT101M10
	C1301, C1351, C1501		CEAT101M10
	C1127		CEAT1R0M50
	C1005, C1007, C1126, C1141, C1409		CEAT470M16
	C1411		CEAT470M16
	C1718		CEAT471M6R3
	C1136		CEAT4R7M50
	C1109		CEATR22M50
	C1124		CEATR47M50
	C1101		CEJA3R3M50
	C1105		CEJA470M10
	C1106, C1119, C1134		CKSQYB102K50
	C1102, C1122, C1123, C1139, C1140		CKSQYB103K50
	C1209, C1215, C1218, C1231, C1302		CKSQYB103K50
	C1354, C1502–C1506, C1703, C9002		CKSQYB103K50
	C9005, C9013, C9015		CKSQYB103K50
	C1001, C1002, C1004, C1008, C1135		CKSQYB104K25
	C1151, C1202, C1203, C1511		CKSQYB104K25
	C1701, C1702, C1704, C1710–C1714		CKSQYB104K25
	C1716, C1751–C1754, C1757, C9004		CKSQYB104K25
	C9006, C9008, C9017, C9019		CKSQYB104K25
	C1405, C1406		CKSQYB152K50
	C1111		CKSQYB153K25
	C1114, C1117, C1120, C1121		CKSQYB154K16
	C1125		CKSQYB221K50
	C1131		CKSQYB222K50
	C1107		CKSQYB223K50
	C1110, C1403, C1404, C1407, C1408		CKSQYB331K50
	C1115, C1128		CKSQYB332K50
	C1113		CKSQYB333K25
	C1112, C1143		CKSQYB334K16
	C1212		CKSQYB471K50
	C1507		CKSQYB472K50
	C1116, C1142		CKSQYB473K50
	C1401, C1402		CKSQYB561K50
	C1118, C1201, C1204, C1206		CKSQYF104Z25

RESISTORS

Mark	No.	Description	Part No.
	R1704		RS1/10S2001F
	Other Resistors		RS1/10S□□□J

OTHERS

Mark	No.	Description	Part No.
	CN1004	16P FFC CONNECTOR	52044-1645
	CN1003	3P SIDE POST	B3P-SHF-1AA
	CN1002	13P FFC CONNECTOR	SLW13R-1C7
	CN1001	15P FFC CONNECTOR	SLW15R-1C7
	JA1701	1P PIN JACK	VKB1063
	X1201	CRYSTAL RESONATOR (16.9344MHz)	PSS1008
	X1501	CERAMIC RESONATOR (6MHz)	RSS1050
	X1751	CRYSTAL RESONATOR (27MHz)	VSS1086

CF MOTOR ASSY

SWITCHES AND RELAYS

Mark	No.	Description	Part No.
	S9503		ASG7009

OTHERS

Mark	No.	Description	Part No.
	J9502	JUMPER WIRE 4P	D20PWW0405E
		MOTOR PULLEY	PNW1634
		CARRIAGE MOTOR	VXM1033

Mark	No.	Description	Part No.

DF SW ASSY

SWITCHES AND RELAYS

S9502		ASG7009
S9501		DSG1017

OTHERS

J9501	JUMPER WIRE 6P	D20PWY0610E

EF TRADE ASSY

OTHERS

CN9501	6P JUMPER CONNECTOR	52147-0610
CN9001	CONNECTOR	S6B-PH-K-S
CN9002	13P CONNECTOR	SLW13R-1C7

AF FM/AM TUNER MODULE (AXQ7062)

SEMICONDUCTORS

IC6201		LA1832ML
IC6202		LC72131MD
Q6402		2SC2223
Q6203		2SC2705
Q6201, Q6202		2SC2712
Q6214, Q6403		2SC2714
Q6304, Q6306		2SD2114K
Q6404		2SK302
Q6401		3SK194
Q6301–Q6303		DTA124EK
Q6204		DTA124ES
Q6205		DTC124EK
D6202, D6303–D6308, D6310–D6312		1SS254
D6314, D6315		1SS254
D6302, D6309		1SS85
D6401, D6402		1T363
D6313		KV1561A-2

COILS AND FILTERS

L6303		ATA7001
L6304		ATA7002
L6404		ATC1003
L6401		ATC1020
L6402		ATC1021
F6204		ATF-107
F6203		ATF-119
F6401		ATF-155
F6206		ATF7008
F6202		ATF7017
L6206, L6208, L6403		LAU2R2J
L6301, L6302		LTA393J

TRANSFORMERS

T6201		ATB7008
T6401		ATE7002

Mark	No.	Description	Part No.

CAPACITORS

C6208		CCSQCH100D50
C6212, C6274, C6275, C6408		CCSQCH101J50
C6412		CCSQCH102J50
C6221, C6222, C6416		CCSQCH150J50
C6271		CCSQCH200J50
C6415		CCSQCH330J50
C6401, C6419		CCSQCH5R0C50
C6304		CCSQCH7R0D50
C6407		CCSQCK1R0C50
C6320, C6410		CCSQCK2R0C50
C6413		CCSQPH220J50
C6414		CCSQPH8R0D50
C6405		CCSQTH180J50
C6234, C6235		CEAL1R0M50
C6245		CEAL470M16
C6224		CEAS100M50
C6243		CEAS101M16
C6231		CEAS1R0M50
C6227		CEAS220M16
C6236		CEAS2R2M50
C6216		CEAS330M16
C6262		CEAS3R3M50
C6219		CEAS470M10
C6244		CEAS470M16
C6249, C6250, C6265, C6266		CEAS4R7M50
C6258		CEJA470M16
C6215		CFTLA103J50
C6214		CFTLA224J50
C6211, C6254, C6403, C6406		CKSQYB102K50
C6201, C6205, C6210, C6213, C6237		CKSQYB103K50
C6276, C6278, C6280, C6281, C6302		CKSQYB103K50
C6308, C6312, C6314, C6318, C6319		CKSQYB103K50
C6402, C6409, C6417, C6418		CKSQYB103K50
C6251, C6252		CKSQYB153K50
C6303		CKSQYB222K50
C6203, C6259, C6301, C6305, C6306		CKSQYB223K50
C6311, C6315		CKSQYB223K50
C6228		CKSQYB472K50
C6209		CKSQYB473K50
C6310		CKSQYB562K50
C6230		CKSQYB821K50
C6218, C6223, C6255		CKSQYF103Z50
C6316		CKSQYF105Z16
C6220, C6226, C6242, C6256		CKSQYF223Z50
C6225		CKSQYF473Z50

RESISTORS

R6280		RD1/4PU101J
R6311, R6318, R6413, R6416, R6418		RS1/8S0R0J
R6906, R6909		RS1/8S0R0J
R6304		RS1/8S103J
R6401		RS1/8S470J
VR6201	(2.2kΩ/0.1W)	RCP1046
Other Resistors		RS1/10S□□□J

Mark	No.	Description	Part No.
OTHERS			
	BN6202	TERMINAL 4-P	AKE7051
	X6202	CERAMIC RESONATOR (456kHz)	ASS1066
	X6201	CRYSTAL RESONATOR (7.2MHz)	ASS1093
	CN6201	14P SOCKET	KP200IA14L
		AM RF TUNING BLOCK	AXX7039
		AM RF TUNING BLOCK	AXX7040

3. SCHEMATIC DIAGRAM

3.1 FM/AM TUNER MODULE (FOR XR-VS66/DBDXJ)

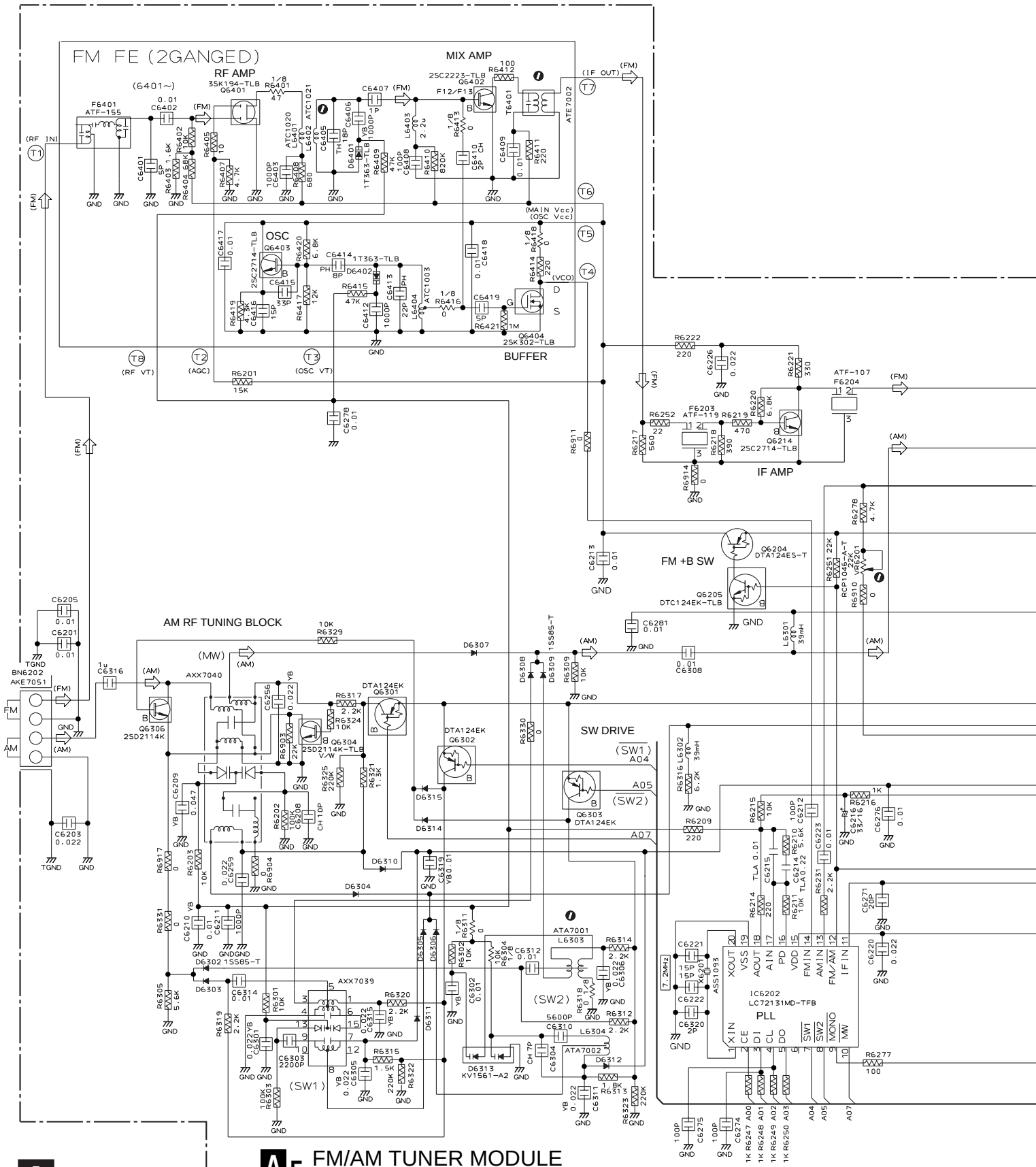

FM/AM TUNER MODULE
(AXQ7062)

Note : When ordering service parts, be sure to refer to "EXPLODED VIEWS and PARTS LIST" or "PCB PARTS LIST"

SIGNAL ROUTE

(AM) : AM SIGNAL ROUTE

(FM) : FM SIGNAL ROUTE

(TA) : TUNER AUDIO SIGNAL ROUTE

Notes

1. RESISTORS
   Indicated in Ω, 1/10W±5% Tolerance unless otherwise noted K:KΩ, M:MΩ.
2. CAPACITORS
   Indicated in Capacity(μF)/VOLTAGE(V) unless otherwise noted P:PF.
3. DIODES
   No mark diode is 1SS254.

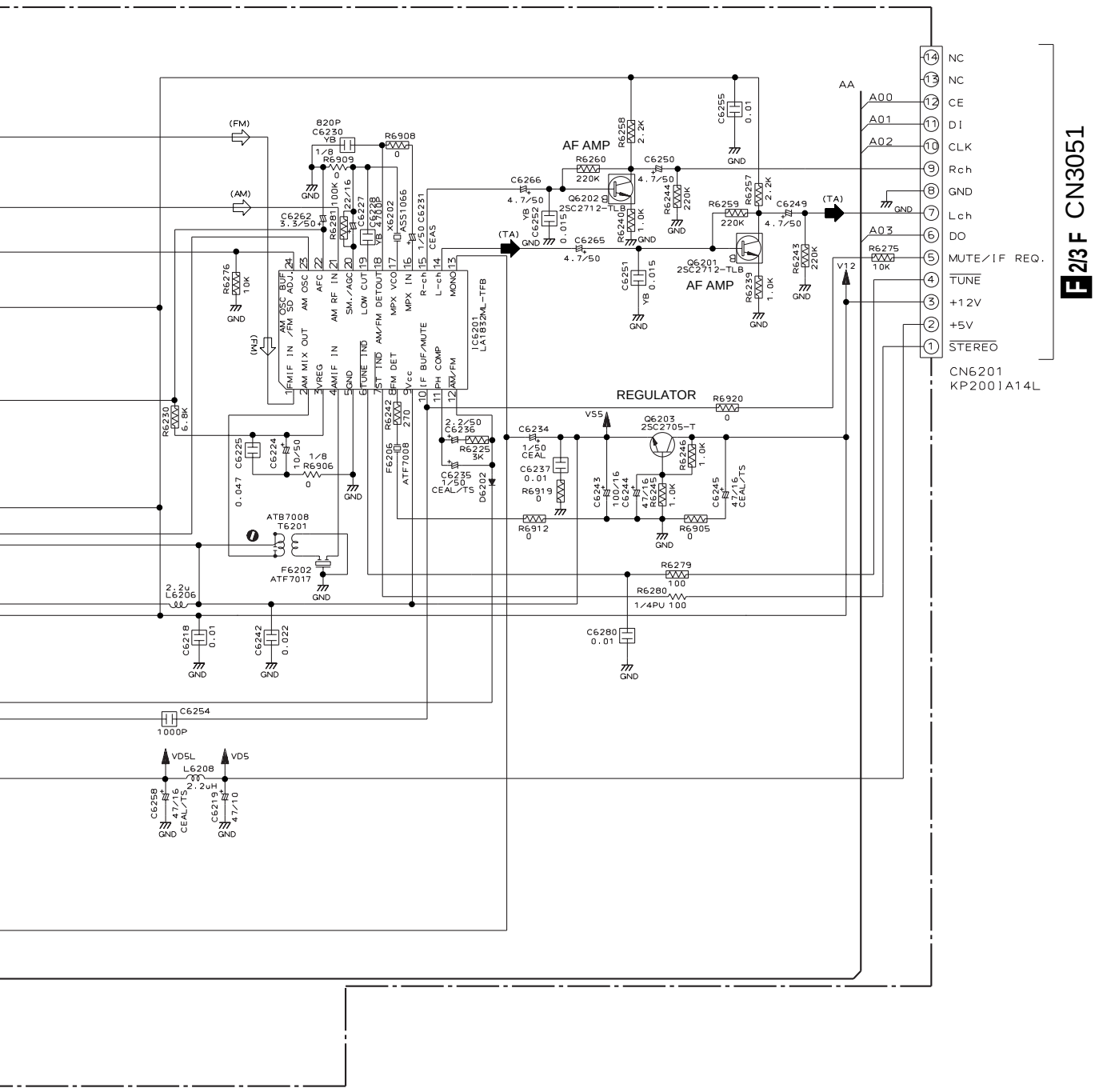

3.2 VCD SURVO (1/2), MOTOR, SW and TRADE ASSYS

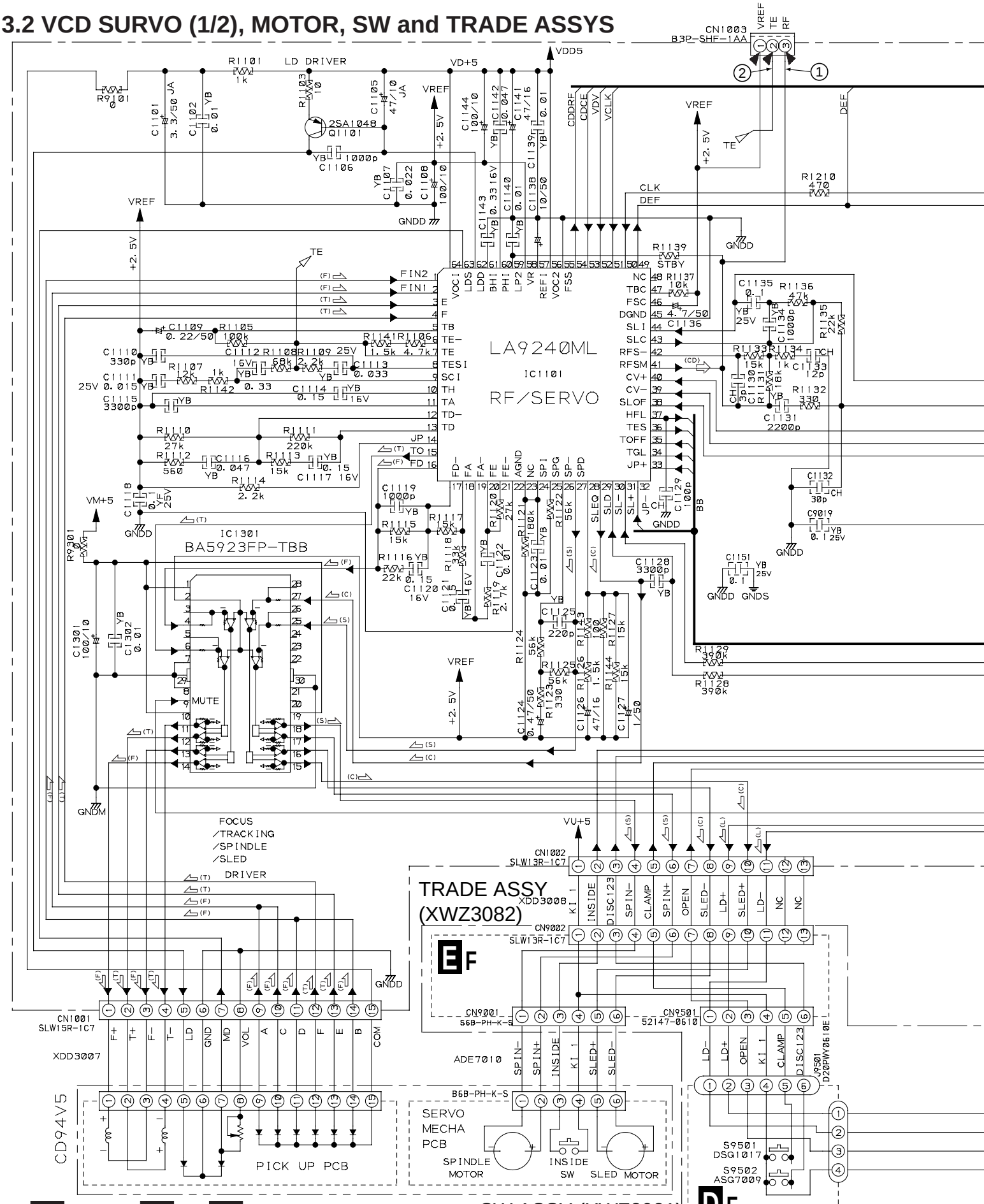

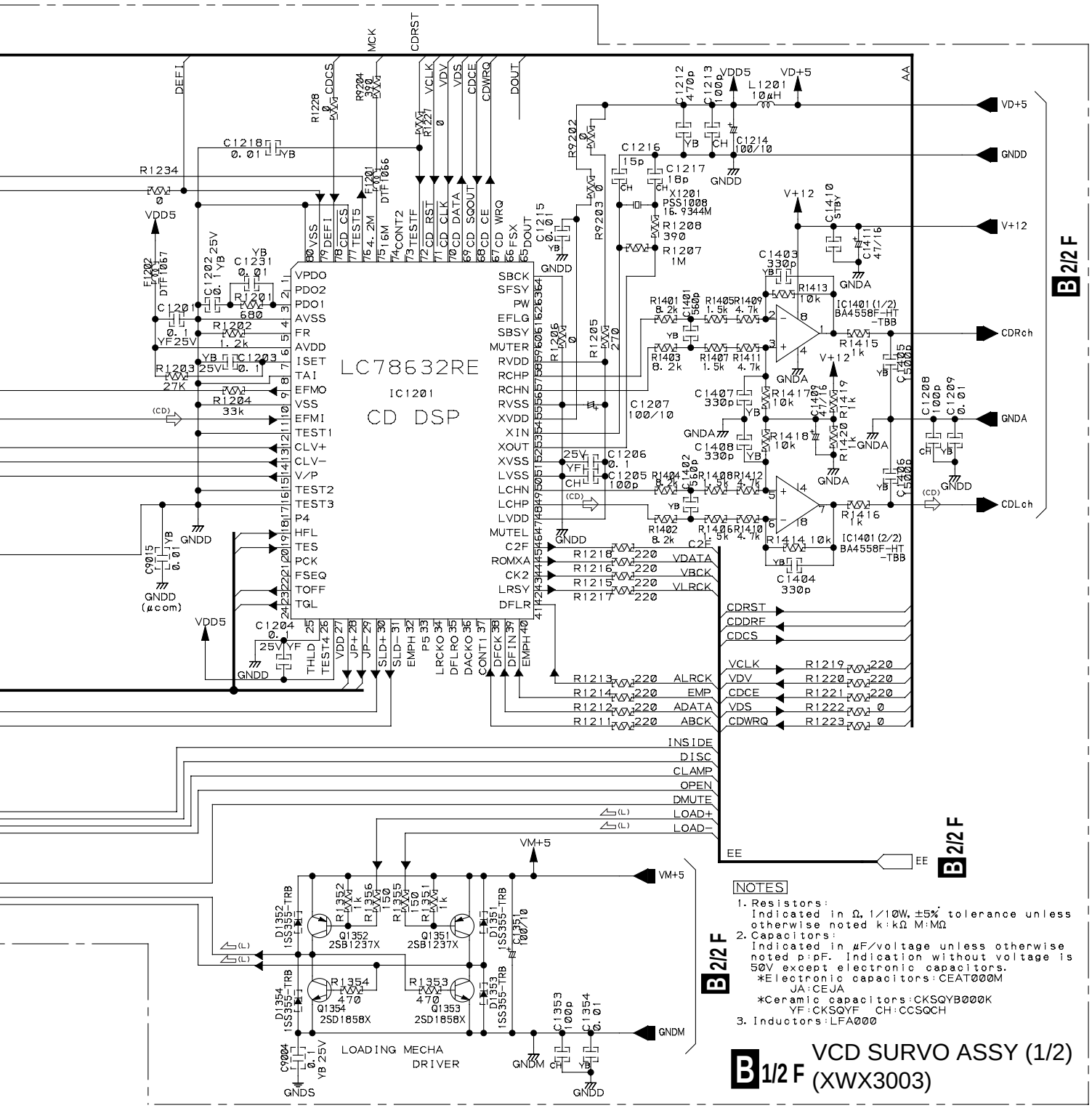

NOTES

1. Resistors:
   Indicated in Ω, 1/10W, ±5% tolerance unless otherwise noted k:kΩ M:MΩ
2. Capacitors:
   Indicated in μF/voltage unless otherwise noted p:pF. Indication without voltage is 50V except electronic capacitors.
   *Electronic capacitors:CEAT000M
   JA:CEJA
   *Ceramic capacitors:CKSQYB000K
   YF:CKSQYF CH:CCSQCH
3. Inductors:LFA000

VCD SURVO ASSY (1/2) (XWX3003)

MECHA ASS'Y
XWX3004−

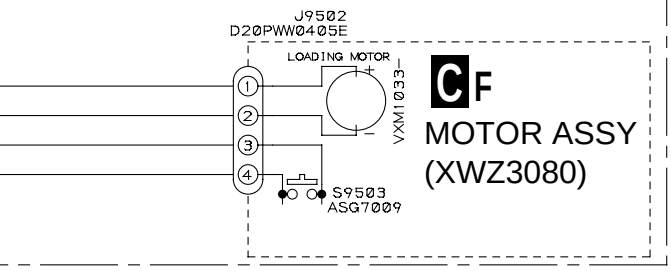

C F

MOTOR ASSY (XWZ3080)

Note: The encircled numbers denote measuring point in the schematic diagram.

① CN1003- Pin 3 : PLAY MODE (RF)
H : 500nsec/div

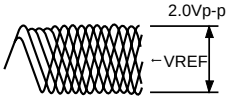

② CN1003- Pin 2 : TEST MODE, Tracking Open(TRER)
H : 5msec/div

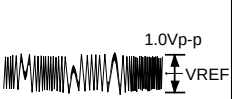

VREF:CN1003- Pin1

SIGNAL ROUTE

(CD) :CD AUDIO SIGNAL ROUTE
(FS) : FOCUS SERVO LOOP LINE
(TS) : TRACKING SERVO LOOP LINE
(SM) : SPINDLE MOTOR ROUTE
(CM) : CARRIAGE MOTOR ROUTE
(LM) : LOADING MOTOR ROUTE

B 1/2F C F

3.3 VCD SURVO ASSY (2/2)

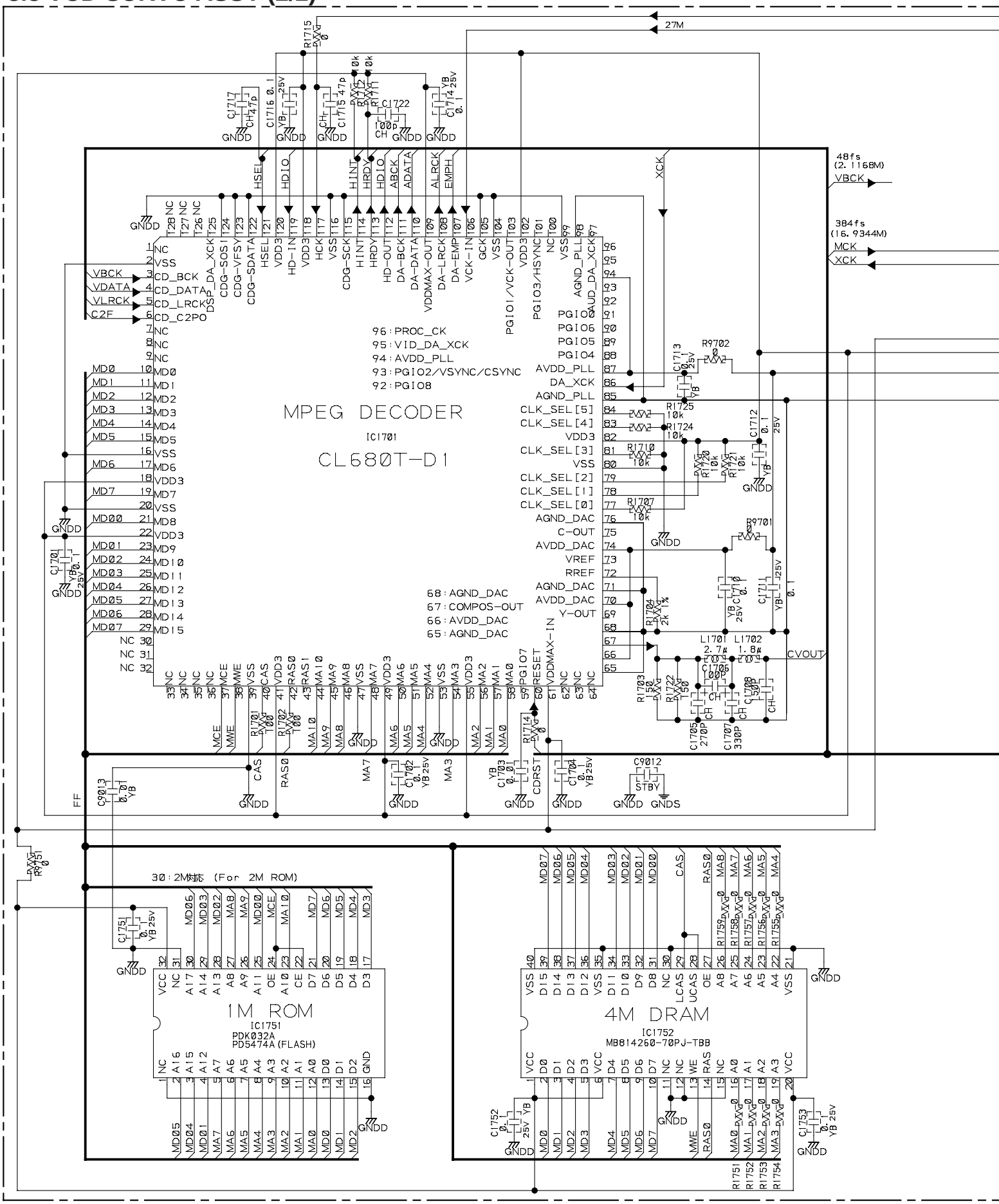

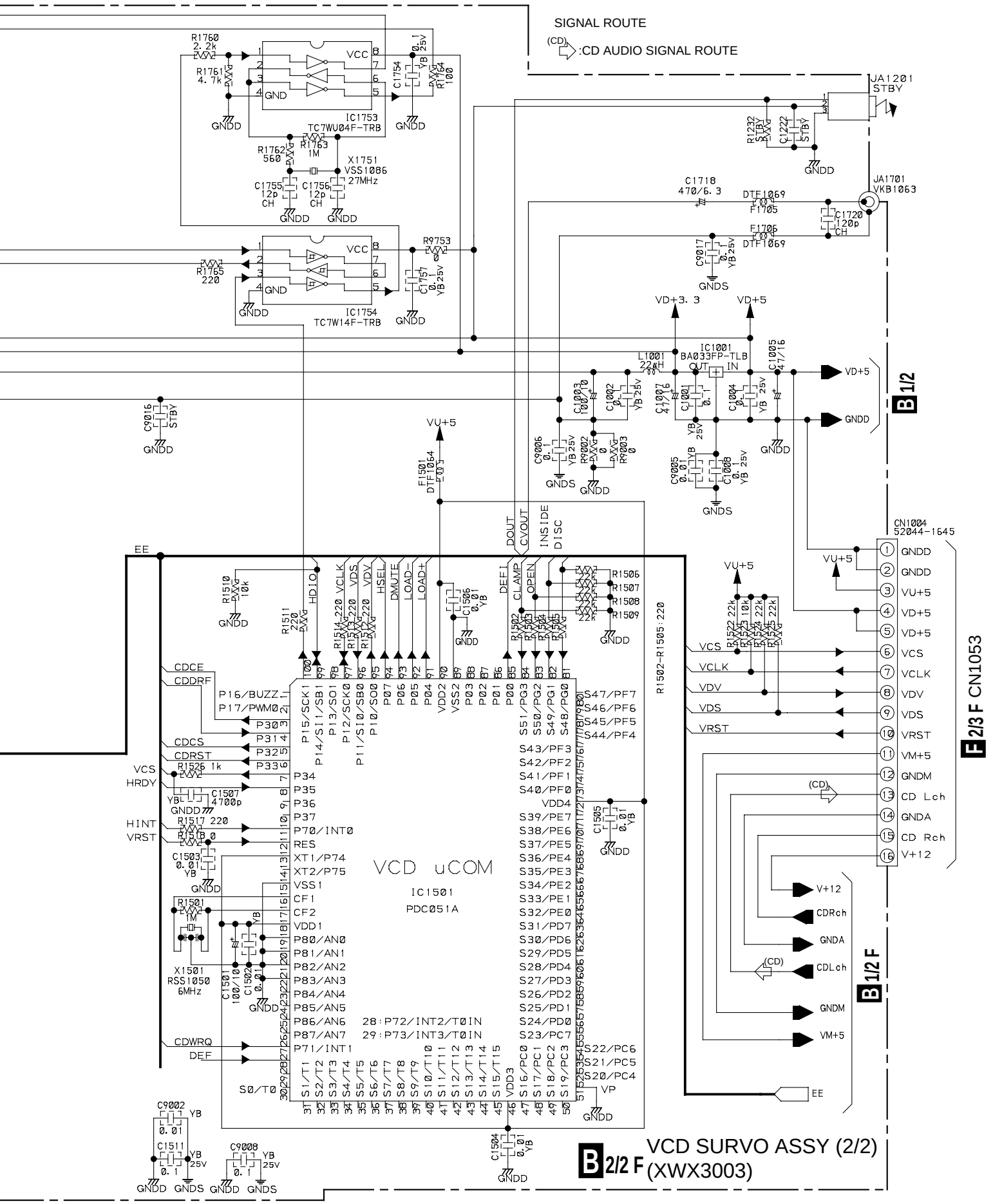
SIGNAL ROUTE
(CD) :CD AUDIO SIGNAL ROUTE
IC1753
TC7WU04F-TRB
IC1754
TC7W14F-TRB
X1751
VSS1086
27MHz
JA1201
STBY
JA1701
VKB1063
IC1001
BA033FP-TLB
VD+3.3
VD+5
VU+5
EE
CN1004
52044-1645
B 1/2
E 2/3 F CN1053
B 1/2 F
VCD uCOM
IC1501
PDC051A
X1501
RSS1050
6MHz
28:P72/INT2/T0IN
29:P73/INT3/T0IN
VCD SURVO ASSY (2/2)
(XWX3003)
B 2/2 F

3.4 AF ASSY (2/3)

F 2/3F

AF ASSY
(XR-VS88 : XWZ3201)
(XR-VS66 : XWZ3198)

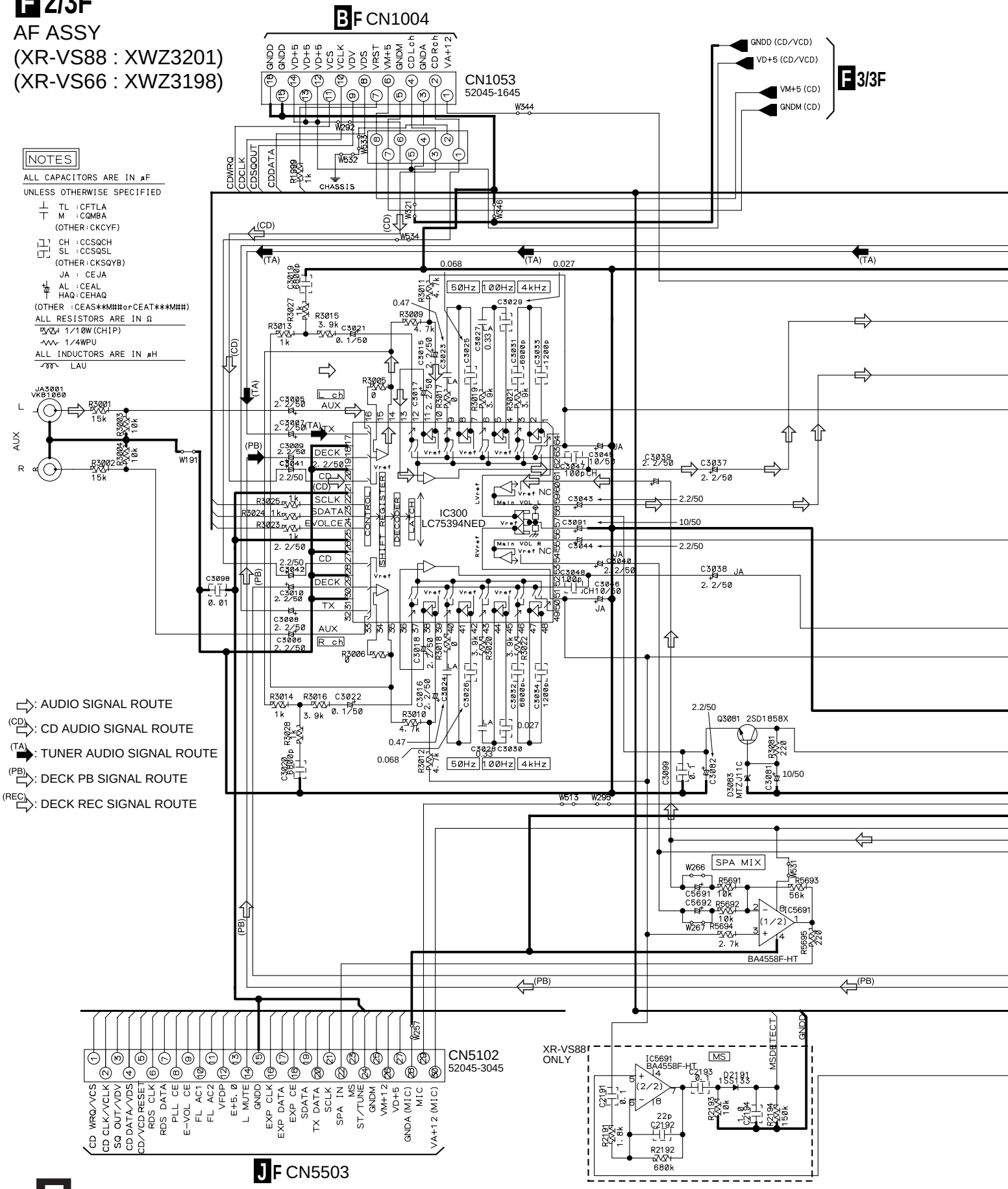

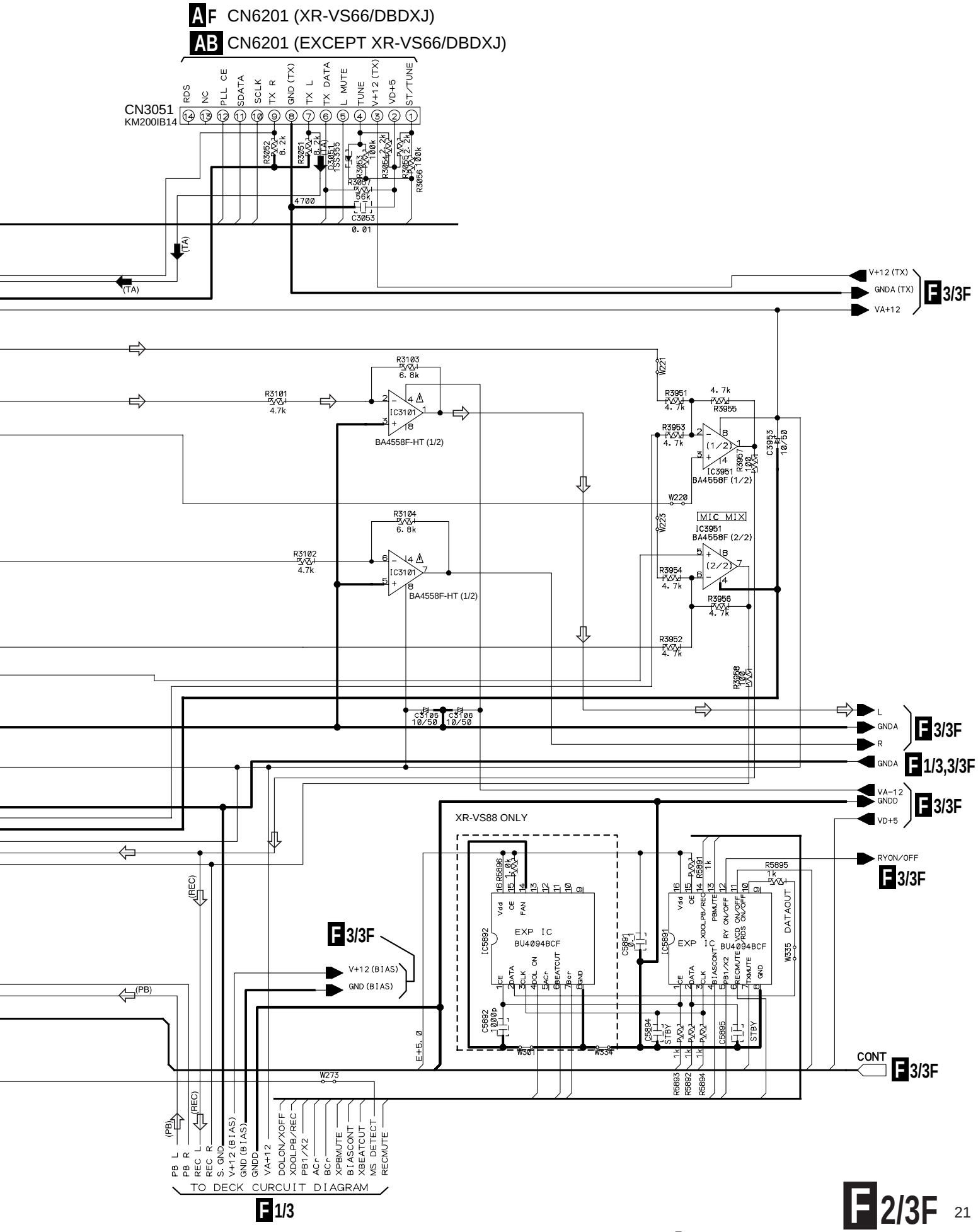
AF CN6201 (XR-VS66/DBDXJ)
AB CN6201 (EXCEPT XR-VS66/DBDXJ)
CN3051
KM200IB14
RDS
NC
PLL CE
SDATA
SCLK
TX R
GND (TX)
TX L
TX DATA
L MUTE
TUNE
V+12 (TX)
VD+5
ST/TUNE
R3052 8.2k
R3051 8.2k
R3053 100k
R3054 2.2k
R3055 2.2k
R3056 100k
R3057 56k
C3053 0.01
4700
(TA)
V+12 (TX)
GNDA (TX)
VA+12
F 3/3F
R3101 4.7k
R3102 4.7k
R3103 6.8k
R3104 6.8k
IC3101
BA4558F-HT (1/2)
W221
W220
W223
R3951 4.7k
R3952 4.7k
R3953 4.7k
R3954 4.7k
R3955 4.7k
R3956 4.7k
IC3951
BA4558F (1/2)
BA4558F (2/2)
MIC MIX
C3953 10/50
C3105 10/50
C3106 10/50
L
GNDA
R
GNDA
F 1/3,3/3F
VA-12
GNDD
VD+5
XR-VS88 ONLY
IC5892
EXP IC
BU4094BCF
IC5891
EXP IC
BU4094BCF
R5896 1.0k
R5891 1k
R5895 1k
C5891 0.1
C5892 1000p
C5894 1k
C5895 1k
R5893 1k
R5892 1k
R5894 1k
W301
W334
W335 DATAOUT
RYON/OFF
F 3/3F
F 3/3F
V+12 (BIAS)
GND (BIAS)
E+5.0
CONT
F 3/3F
W273
(REC)
(PB)
PB L
PB R
REC L
REC R
S. GND
V+12 (BIAS)
GND (BIAS)
GNDD
VA+12
DOLON/XOFF
XDOLPB/REC
PB1/X2
ACr
BCr
XPBMUTE
BIASCONT
XBEATCUT
MS DETECT
RECMUTE
TO DECK CURCUIT DIAGRAM
F 1/3
F 2/3F

3.5 AF (3/3) and SECONDARY ASSYS

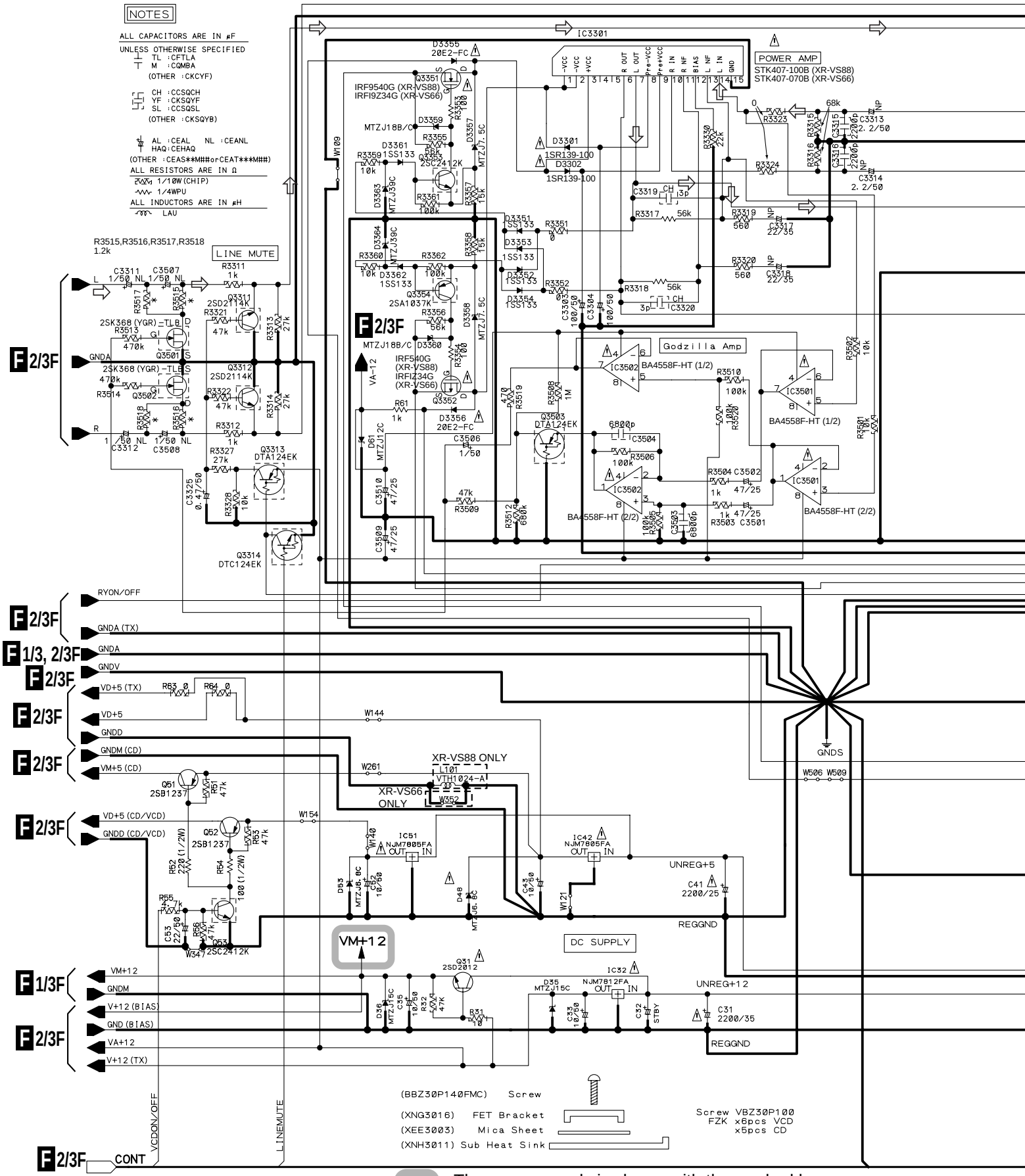

: The power supply is shown with the marked box.

CAUTION : FOR CONTINUED PROTECTION AGAINST RISK OF FIRE. REPLACE ONLY WITH SAME TYPE NO. 4911.25 MFD, BY LITTELFUSE INK. FOR IC71 (AEK7010).	CAUTION : FOR CONTINUED PROTECTION AGAINST RISK OF FIRE. REPLACE ONLY WITH SAME TYPE NO. 491004 MFD, BY LITTELFUSE INK. FOR IC31 (AEK7053: XR-VS88).
CAUTION : FOR CONTINUED PROTECTION AGAINST RISK OF FIRE. REPLACE ONLY WITH SAME TYPE NO. 491003 MFD, BY LITTELFUSE INK. FOR IC41 (AEK7050).	CAUTION : FOR CONTINUED PROTECTION AGAINST RISK OF FIRE. REPLACE ONLY WITH SAME TYPE NO. 491003 MFD, BY LITTELFUSE INK. FOR IC31 (AEK7050: XR-VS66).

F 3/3F

AF ASSY
(XR-VS88 : XWZ3201)
(XR-VS66 : XWZ3198)

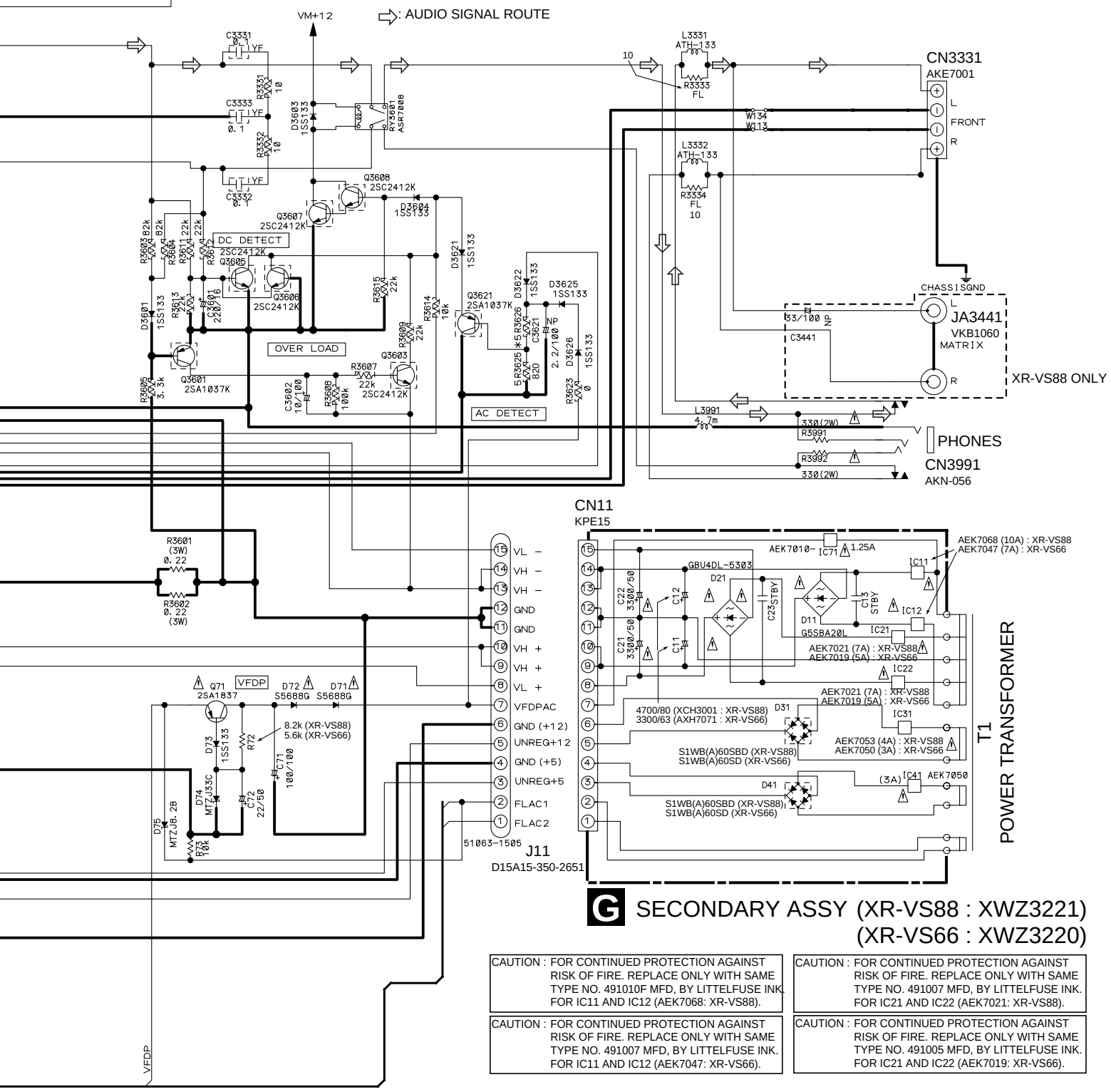

G SECONDARY ASSY (XR-VS88 : XWZ3221)
(XR-VS66 : XWZ3220)

CAUTION : FOR CONTINUED PROTECTION AGAINST RISK OF FIRE. REPLACE ONLY WITH SAME TYPE NO. 491010F MFD, BY LITTELFUSE INK. FOR IC11 AND IC12 (AEK7068: XR-VS88).	CAUTION : FOR CONTINUED PROTECTION AGAINST RISK OF FIRE. REPLACE ONLY WITH SAME TYPE NO. 491007 MFD, BY LITTELFUSE INK. FOR IC21 AND IC22 (AEK7021: XR-VS88).
CAUTION : FOR CONTINUED PROTECTION AGAINST RISK OF FIRE. REPLACE ONLY WITH SAME TYPE NO. 491007 MFD, BY LITTELFUSE INK. FOR IC11 AND IC12 (AEK7047: XR-VS66).	CAUTION : FOR CONTINUED PROTECTION AGAINST RISK OF FIRE. REPLACE ONLY WITH SAME TYPE NO. 491005 MFD, BY LITTELFUSE INK. FOR IC21 AND IC22 (AEK7019: XR-VS66).

3.6 PRIMARY and SUB TRANS ASSYS

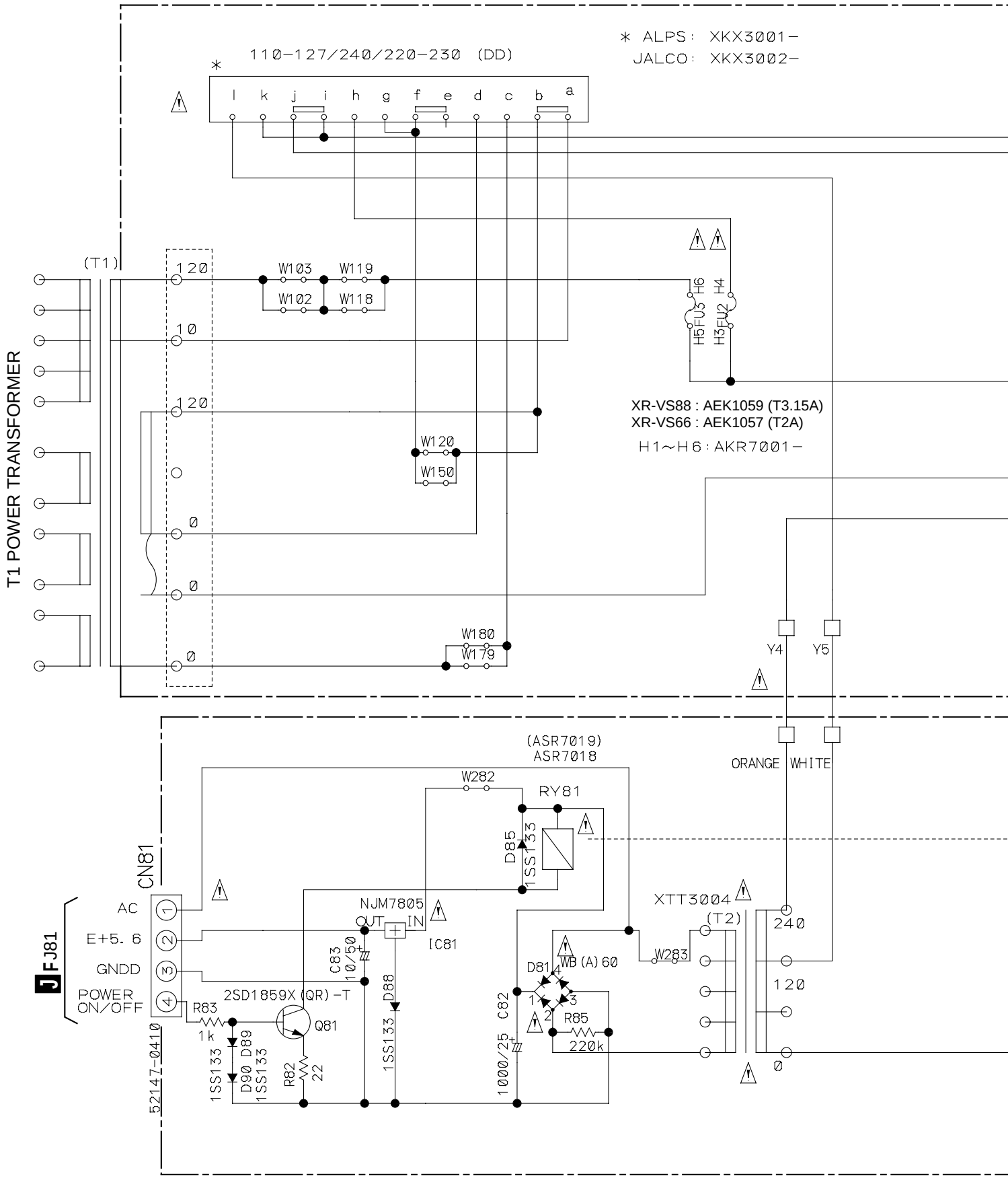

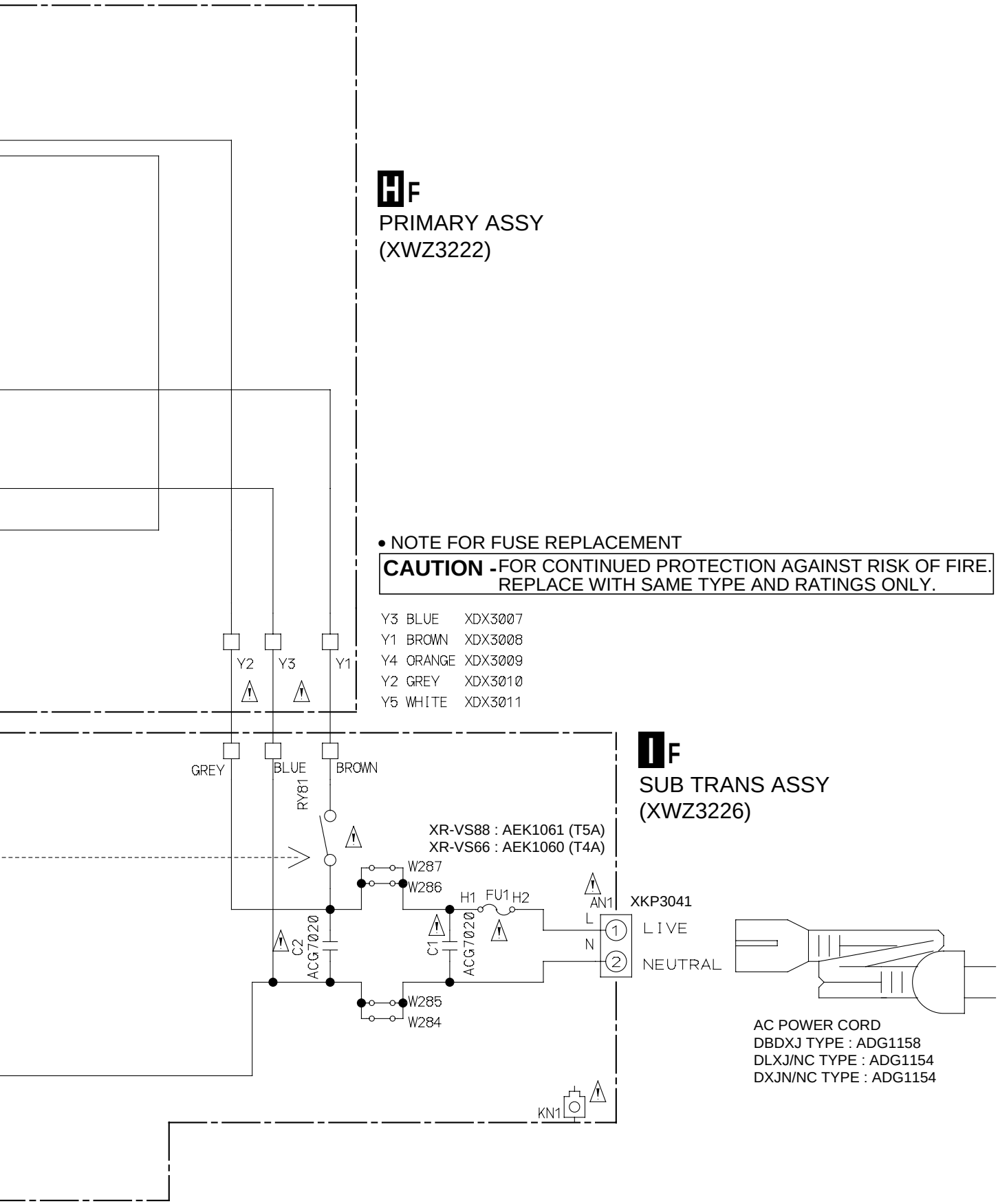
HF
PRIMARY ASSY
(XWZ3222)
• NOTE FOR FUSE REPLACEMENT
CAUTION - FOR CONTINUED PROTECTION AGAINST RISK OF FIRE. REPLACE WITH SAME TYPE AND RATINGS ONLY.
Y3 BLUE XDX3007
Y1 BROWN XDX3008
Y4 ORANGE XDX3009
Y2 GREY XDX3010
Y5 WHITE XDX3011
Y2
Y3
Y1
GREY
BLUE
BROWN
RY81
XR-VS88 : AEK1061 (T5A)
XR-VS66 : AEK1060 (T4A)
W287
W286
H1
FU1
H2
AN1
XKP3041
L
N
LIVE
NEUTRAL
C2
ACG7020
C1
ACG7020
W285
W284
KN1
IF
SUB TRANS ASSY
(XWZ3226)
AC POWER CORD
DBDXJ TYPE : ADG1158
DLXJ/NC TYPE : ADG1154
DXJN/NC TYPE : ADG1154

3.7 DISPLAY ASSY

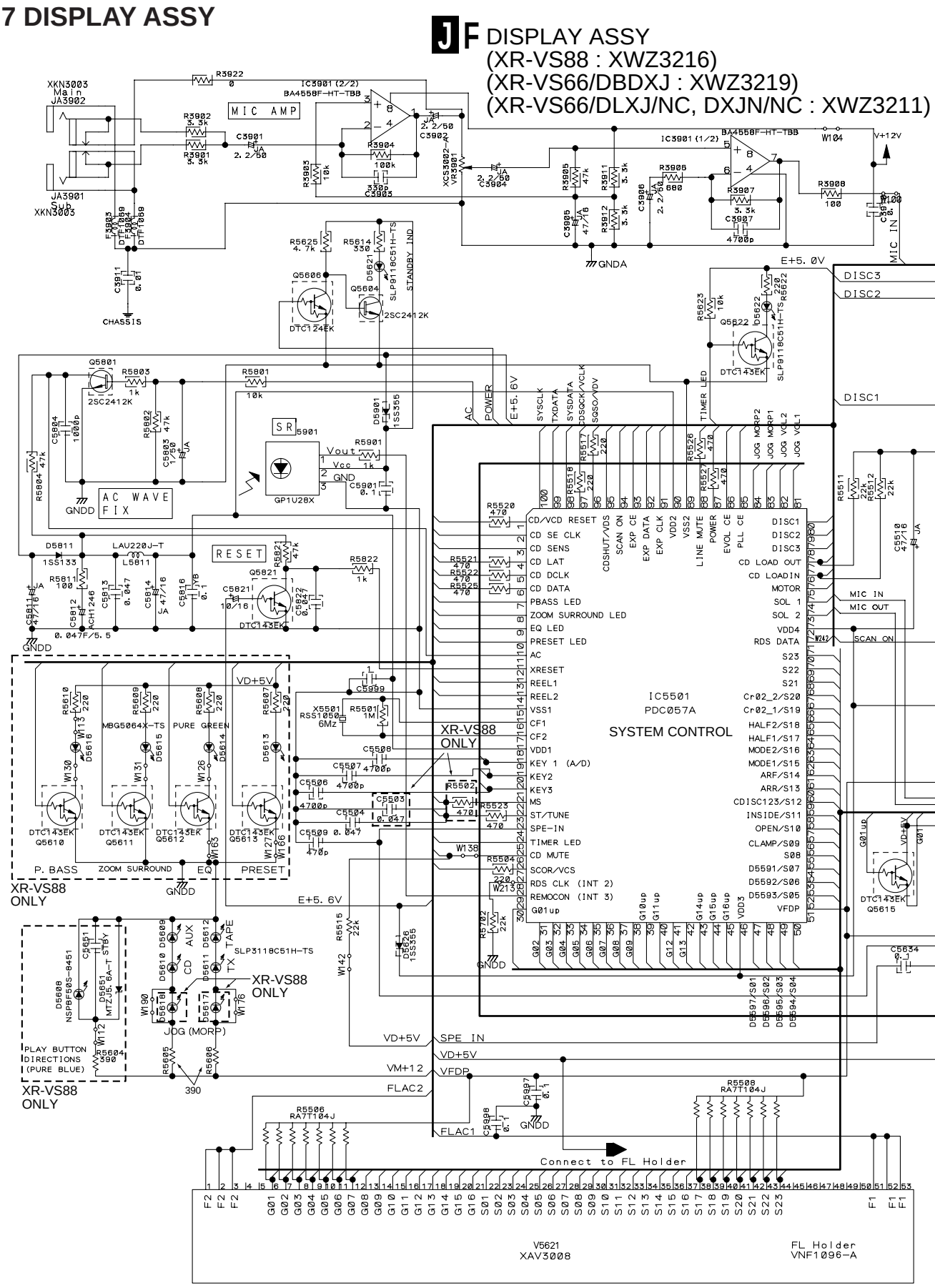

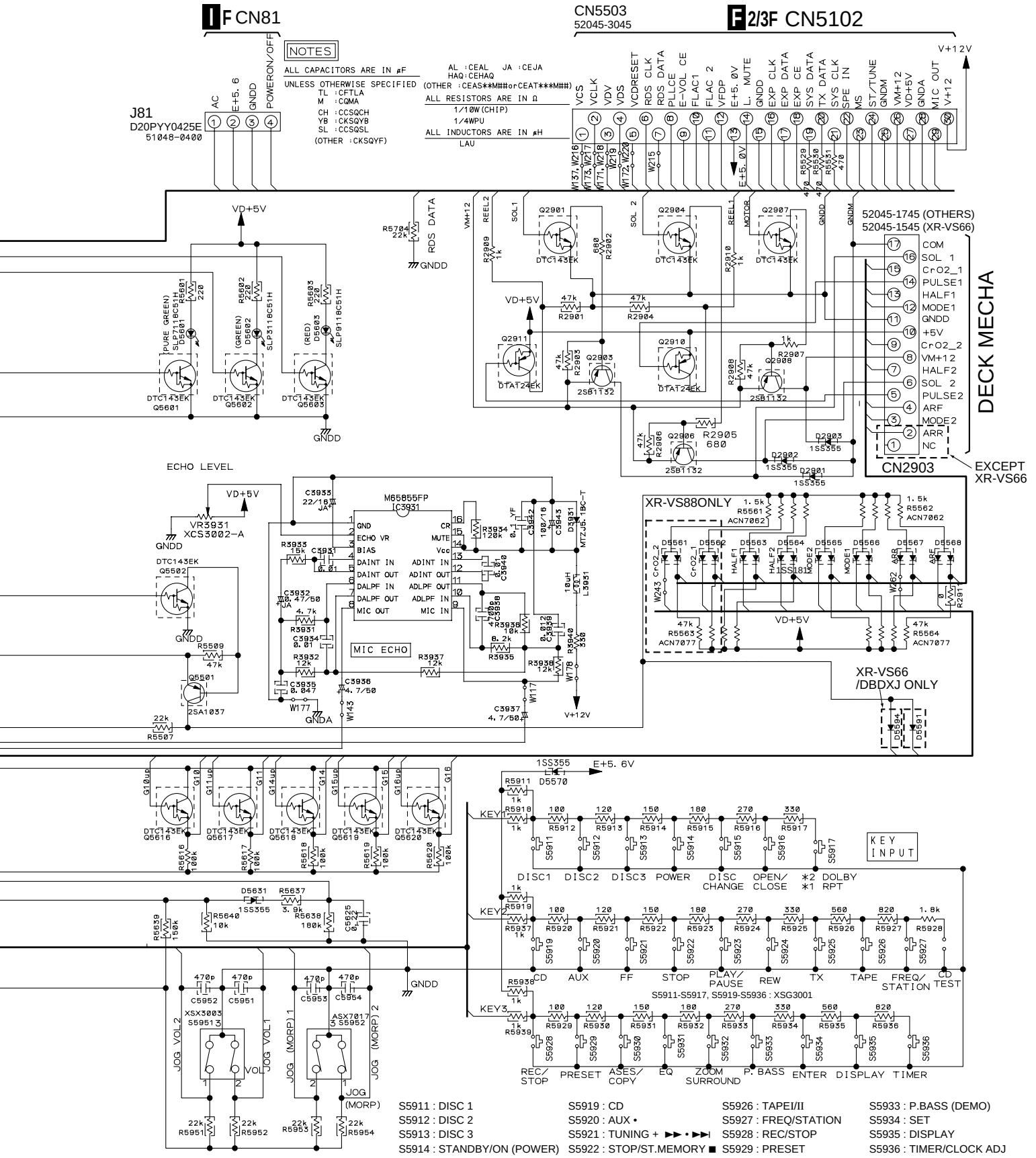

S5911 : DISC 1
S5912 : DISC 2
S5913 : DISC 3
S5914 : STANDBY/ON (POWER)
S5915 : DISC CHANGE
S5916 : OPEN/CLOSE
S5917 : NR ON/OFF

S5919 : CD
S5920 : AUX •
S5921 : TUNING + ▶▶ • ▶▶|
S5922 : STOP/ST.MEMORY ■
S5923 : PLAY/PAUSE ◀ ▶
S5924 : TUNING – |◀◀ • ◀◀
S5925 : TUNER/BAND

S5926 : TAPEI/II
S5927 : FREQ/STATION
S5928 : REC/STOP
S5929 : PRESET
S5930 : ASES/COPY
S5931 : EQUALIZER
S5932 : ZOOM SURROUND

S5933 : P.BASS (DEMO)
S5934 : SET
S5935 : DISPLAY
S5936 : TIMER/CLOCK ADJ
S5951 : VOLUME
S5952 : SOUND MORPHING JOG

4. PCB CONNECTION DIAGRAM

4.1 VCD SURVO, MOTOR, SW and TRADE ASSYS

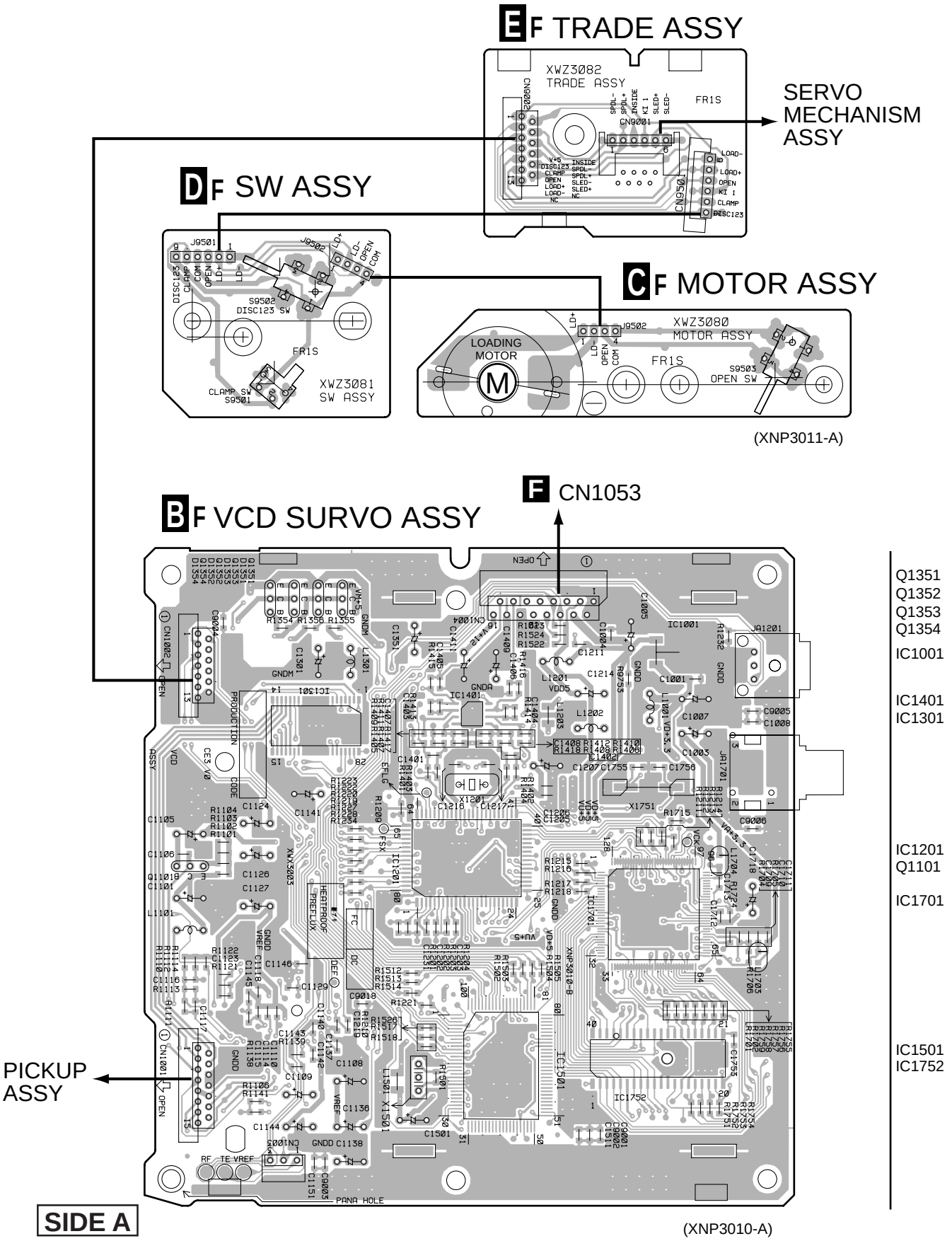

BF VCD SURVO ASSY

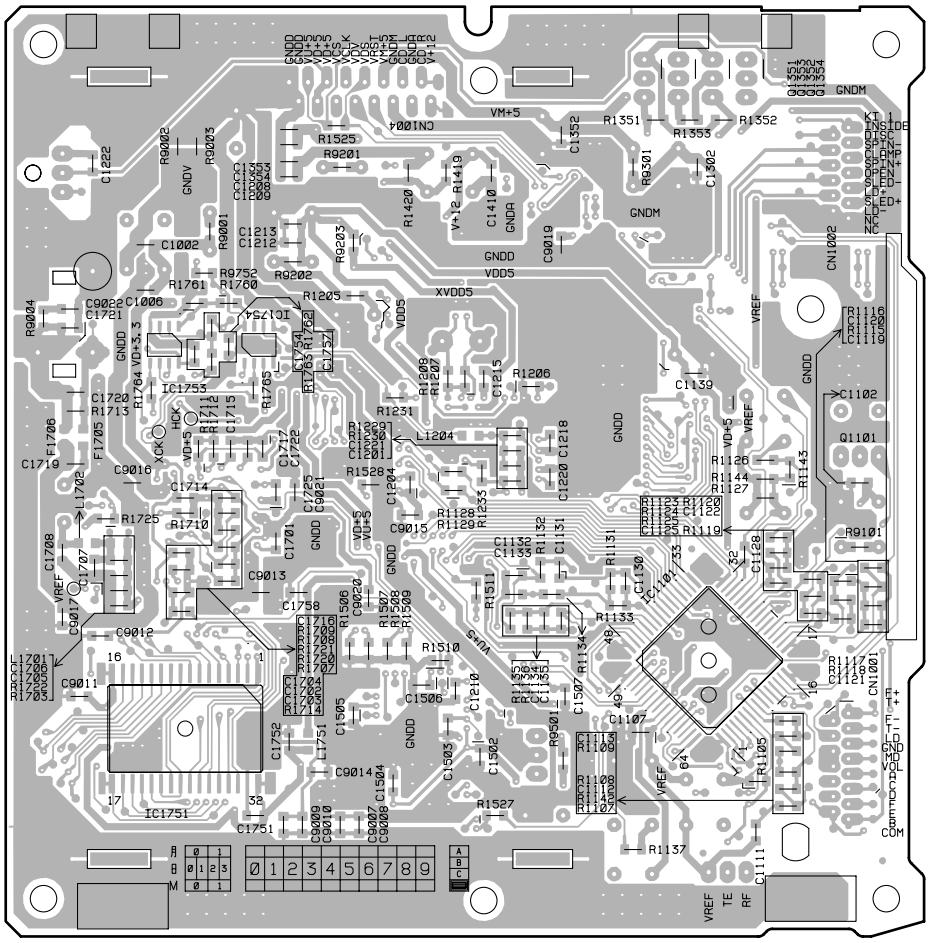

(XNP3010-A)

IC1754
IC1755

IC1101
IC1751

SIDE B

5. ADJUSTMENT (FOR XR-VS66/DBDXJ)

Note : Adjustment of XR-VS66/DBDXJ are the same as those of XR-A370/KUCXJ except for the following:

■ AM Tuner SW Section

- Set the mode selector to SW2.
- Connect the wiring as shown in Fig. 1.

Step No.	Adjustment Title	AM SG (400Hz, 30% Mod.)		Reception Frequency Display	Adjustment Location	Specifications
		Frequency (MHz)	Input Level (dBµV/EMF)			
1	AM Front End Sensitivity Adjustment	14	25-35	14MHz	L6303	Adjust so that the DC voltage between the IC6201-Pin 20 and GND becomes at maximum level.

Befor adjustment, connect AM-ANT. and IEC-dummy ANT.. Signal input is through IEC-dummy ANT.. Connecting AM-ANT. follows Fig. 1.

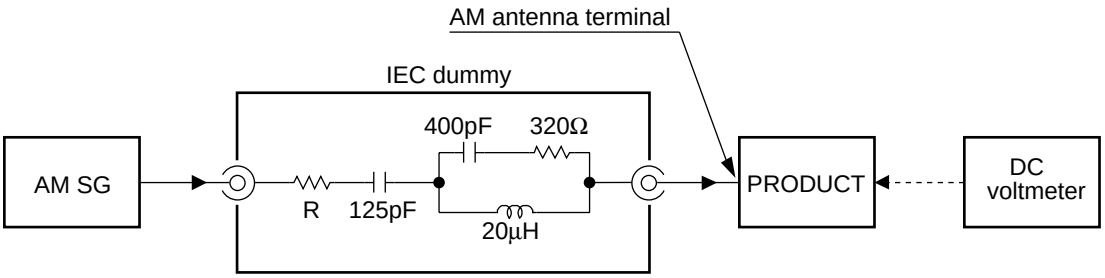

R is 30Ω when SG output is 50Ω, 5Ω when SG output is 75Ω.

Fig. 1 SW adjustment wiring diagram

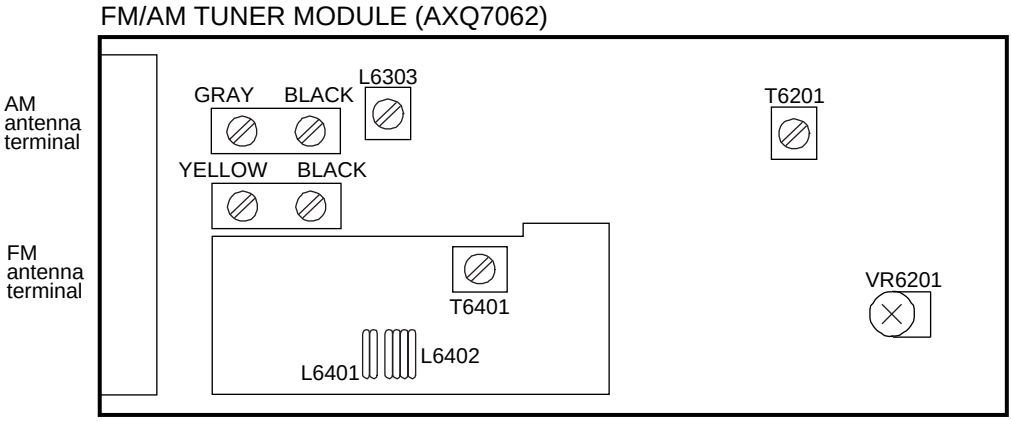

Fig. 2 Adjustment points