Service Manual

Pioneer

ORDER NO.
RRV2309

DVD TUNER
XV-DV55

THIS MANUAL IS APPLICABLE TO THE FOLLOWING MODEL(S) AND TYPE(S).

Type	Model	Power Requirement	Regional restriction codes(Region N0.)	Remarks
	XV-DV55			
AUCXJ	O	AC power supplied from power trans former's secondary of other system component.	1	
ADXJ/RA	O	AC power supplied from power trans former's secondary of other system component.	1	
APWXJ	O	AC power supplied from power trans former's secondary of other system component.	4	
AVXJ	O	AC power supplied from power trans former's secondary of other system component.	2	
AYXJ	O	AC power supplied from power trans former's secondary of other system component.	2	

● **This product is component of system.**

Component		Model	Service Manual	Remarks
DVD SURROUND SYSTEM		-	-	
	DVD TUNER	XV-DV55	RRV2309	This service manual
	POWERED SUBWOOFER	S-DV55SW-K	RRV2310	
	SATELLITE SPEAKER	S-DV55ST-K	RRV2306	

CONTENTS

1. SAFETY INFORMATION ····· 2
2. EXPLODED VIEWS AND PARTS LIST ····· 4
3. BLOCK DIAGRAM AND SCHEMATIC DIAGRAM ·· 12
4. PCB CONNECTION DIAGRAM ····· 41
5. PCB PARTS LIST ····· 54
6. ADJUSTMENT ····· 61
7. GENERAL INFORMATION ····· 62
7.1 DIAGNOSIS ····· 62
7.1.1 SELF-DIAGNOSTIC FUNCTION OF PICKUP DEFECTIVE ····· 62
7.1.2 TEST POINTS LOCATIONS ····· 63
7.1.3 TEST MODE SCREEN DISPLAY ····· 64
7.1.4 POWER ON SEQUENCE ····· 66
7.1.5 TROUBLE SHOOTING ····· 67
7.1.6 SINGLE OPERATION METHOD ····· 68
7.1.7 TEST MODE (FOR SERVICE) ····· 69
7.1.8 ERROR CODE ····· 70
7.1.9 DISASSEMBLY ····· 74
7.2 PARTS ····· 77
7.2.1 IC ····· 77
8. PANEL FACILITIES AND SPECIFICATIONS ····· 90

PIONEER CORPORATION 4-1, Meguro 1-chome, Meguro-ku, Tokyo 153-8654, Japan
PIONEER ELECTRONICS SERVICE, INC. P.O. Box 1760, Long Beach, CA 90801-1760, U.S.A.
PIONEER ELECTRONIC NV Haven 1087, Keetberglaan 1, 9120 Melsele, Belgium
PIONEER ELECTRONICS ASIACENTRE PTE. LTD. 253 Alexandra Road, #04-01, Singapore 159936

©PIONEER CORPORATION 2000

T – ZZY JUNE 2000 Printed in Japan

1. SAFETY INFORMATION

This service manual is intended for qualified service technicians ; it is not meant for the casual do-it-yourselfer. Qualified technicians have the necessary test equipment and tools, and have been trained to properly and safely repair complex products such as those covered by this manual.
Improperly performed repairs can adversely affect the safety and reliability of the product and may void the warranty. If you are not qualified to perform the repair of this product properly and safely, you should not risk trying to do so and refer the repair to a qualified service technician.

WARNING
This product contains lead in solder and certain electrical parts contain chemicals which are known to the state of California to cause cancer, birth defects or other reproductive harm.

Health & Safety Code Section 25249.6 – Proposition 65

NOTICE
(FOR CANADIAN MODEL ONLY)
Fuse symbols (fast operating fuse) and/or (slow operating fuse) on PCB indicate that replacement parts must be of identical designation.

REMARQUE
(POUR MODÈLE CANADIEN SEULEMENT)
Les symboles de fusible (fusible de type rapide) et/ou (fusible de type lent) sur CCI indiquent que les pièces de remplacement doivent avoir la même désignation.

(FOR USA MODEL ONLY)

1. SAFETY PRECAUTIONS

The following check should be performed for the continued protection of the customer and service technician.

LEAKAGE CURRENT CHECK

Measure leakage current to a known earth ground (water pipe, conduit, etc.) by connecting a leakage current tester such as Simpson Model 229-2 or equivalent between the earth ground and all exposed metal parts of the appliance (input/output terminals, screwheads, metal overlays, control shaft, etc.). Plug the AC line cord of the appliance directly into a 120V AC 60Hz outlet and turn the AC power switch on. Any current measured must not exceed 0.5mA.

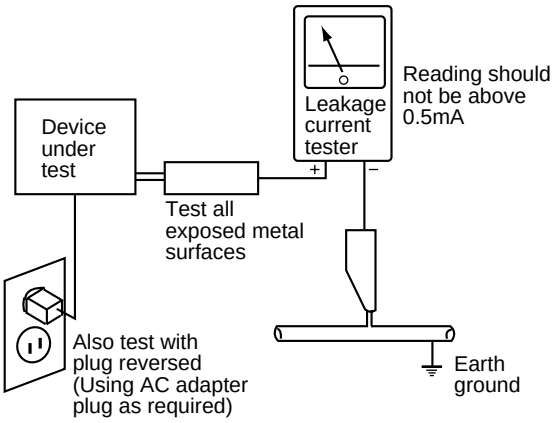

AC Leakage Test

ANY MEASUREMENTS NOT WITHIN THE LIMITS OUTLINED ABOVE ARE INDICATIVE OF A POTENTIAL SHOCK HAZARD AND MUST BE CORRECTED BEFORE RETURNING THE APPLIANCE TO THE CUSTOMER.

2. PRODUCT SAFETY NOTICE

Many electrical and mechanical parts in the appliance have special safety related characteristics. These are often not evident from visual inspection nor the protection afforded by them necessarily can be obtained by using replacement components rated for voltage, wattage, etc. Replacement parts which have these special safety characteristics are identified in this Service Manual.

Electrical components having such features are identified by marking with a ⚠ on the schematics and on the parts list in this Service Manual.
The use of a substitute replacement component which does not have the same safety characteristics as the PIONEER recommended replacement one, shown in the parts list in this Service Manual, may create shock, fire, or other hazards.

Product Safety is continuously under review and new instructions are issued from time to time. For the latest information, always consult the current PIONEER Service Manual. A subscription to, or additional copies of, PIONEER Service Manual may be obtained at a nominal charge from PIONEER.

WARNING

THE AEL(ACCESSIBLE EMISSION LEVEL) OF THE LASER POWER OUTPUT IS LESS THAN CLASS 1 BUT THE LASER COMPONENT IS CAPABLE OF EMITTING RADIATION EXCEEDING THE LIMIT FOR CLASS1.
A SPECIALLY INSTRUCTED PERSON SHOULD DO SERVICING OPERATION OF THE APPARATUS.

LASER DIODE CHARACTERISTICS

FOR DVD :	MAXIMUM OUTPUT POWER : 5 mW
	WAVELENGTH : 655 nm
FOR CD :	MAXIMUM OUTPUT POWER : 5mW
	WAVELENGTH : 785 nm

LABEL CHECK

ADXJ/RA, APWXJ, AVXJ and AYXJ only

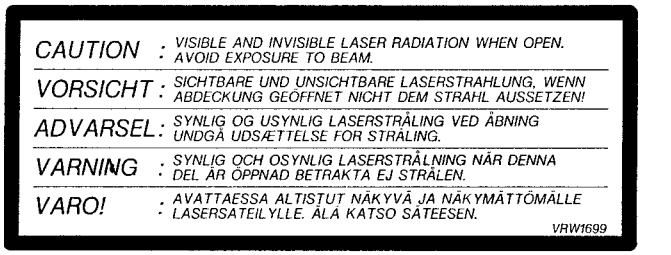

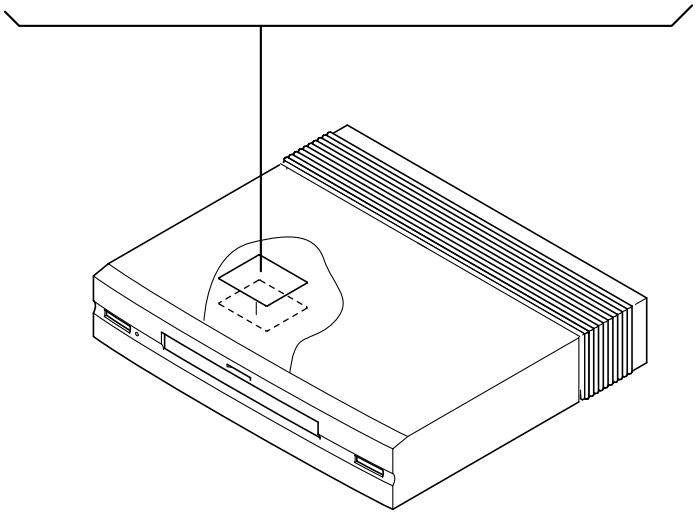

Additional Laser Caution

1. Inside detection switch (S201 on the SMEB assy) and loading-status detection switch (S101 on the LOAB assy) are detected by the microprocessor (IC11 in the DVDM assy).
   - To permit the laser diode to oscillate, it is required to set the inside detection switch for the inside position (S201 : ON) and to set the loading-status detection switch for the clamp position (the center terminal of S101 is shorted to +5V). The 655 nm laser diode for DVD oscillation will continue if pin 19 of IC1 is shorted to +5V (fault condition) in the DVDM assy.
     The 785 nm laser diode for CD oscillates if pin 20 of IC1 is shorted to +5V in the DVDM assy.
     In the test mode ∗ , the laser diode oscillates when microprocessor detects a PLAY signal, or when the PLAY key is pressed (S5924 ON in the KEYB assy), with the above requirements satisfied.

2. When the cover is open, close viewing through the objective lens with the naked eye will cause exposure to the laser beam.

∗ : See page 69.

2. EXPLODED VIEWS AND PARTS LIST

NOTES:
- *Parts marked by "NSP" are generally unavailable because they are not in our Master Spare Parts List.*
- *The ⚠ mark found on some component parts indicates the importance of the safety factor of the part. Therefore, when replacing, be sure to use parts of identical designation.*
- *Screws adjacent to ▼ mark on the product are used for disassembly.*

2.1 PACKING

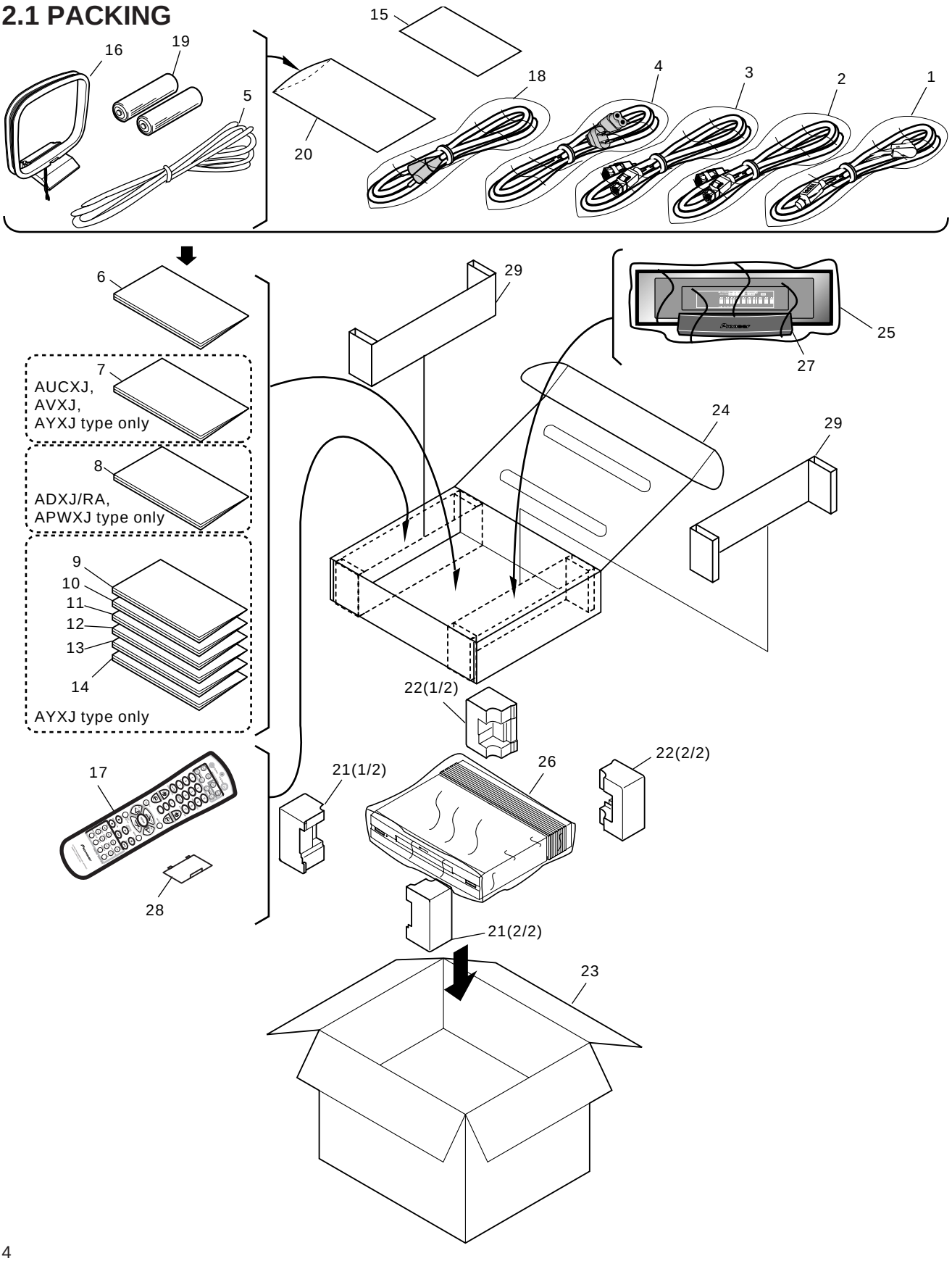

(1) PACKING PARTS LIST

Mark	No.	Description	Part No.
	1	Display Cable (10P Din)	ADE7014
	2	Control Cable A (Blue) (10P)	See Contrast table (2)
	3	Control Cable B (Black) (12P)	See Contrast table (2)
⚠	4	AC Power Cord	See Contrast table (2)
	5	FM Antena	See Contrast table (2)
	6	Operating Instructions (Basic) (English/Flanch)	See Contrast table (2)
	7	Operating Instructions (English/Flanch)	See Contrast table (2)
	8	Operating Instructions (English)	See Contrast table (2)
	9	Operating Instructions (Dutch/Italian)	See Contrast table (2)
	10	Operating Instructions (Dutch/Spanish)	See Contrast table (2)
	11	Operating Instructions (Basic) (Dutch/Italian)	See Contrast table (2)
	12	Operating Instructions (Basic) (Dutch/Spanish)	See Contrast table (2)
	13	Operating Instructions (Swedish/Portuguese)	See Contrast table (2)
	14	Operating Instructions (Basic) (Swedish/Portuguese)	See Contrast table (2)
NSP	15	Warranty Card	See Contrast table (2)
	16	AM Loop Antenna	ATB7009
	17	Remote Control Unit	See Contrast table (2)
	18	Video cable	VDE1053
NSP	19	Alkaline battery(AA/LR6) 2p	VEM1021
NSP	20	Polyethylene Bag (340 x 230 x 0.03)	Z21-038
	21	Pad Front(Pls)	AHA7291
	22	Pad Rear(Pls)	AHA7292
	23	Packing Case	See Contrast table (2)
	24	Accessory Case	AHD7877
	25	Packing Sheet(300 x 350 x 0.5)	AHG7073
	26	Sheet (650 x 550 x 0.2)	Z23-022
	27	Display Unit	AXX7075
	28	Battery Cover	AZN7826
	29	Partition	See Contrast table (2)

(2) CONTRAST TABLE

AUCXJ, ADXJ/RA, APWXJ, AVXJ and AYXJ types are constructed the same except for the following:

Mark	No.	Symbol and Description	Part No.					Remarks
			AUCXJ type	ADXJ/RA type	APWXJ type	AVXJ type	AYXJ type	
	2	Control Cable A (Blue) (10P)	ADE7061	ADE7061	ADE7061	ADE7062	ADE7062	
	3	Control Cable B (Black) (12P)	ADE7063	ADE7063	ADE7063	ADE7064	ADE7064	
⚠	4	AC Power Cord	ADG7022	ADG1158	ADG1160	ADG1156	ADG1154	
	5	FM Antena	ADH7004	ADH7004	ADH7004	ADH7005	ADH7005	
	6	Operating Instructions (Basic) (English/Flanch)	ARE7262	ARE7262	ARE7262	ARE7261	ARE7261	
	7	Operating Instruction (English/Flanch)	ARE7260	Not used	Not used	ARE7259	ARE7259	
	8	Operating Instructions (English)	Not used	ARB7228	ARB7228	Not used	Not used	
	9	Operating Instructions (Dutch/Italian)	Not used	Not used	Not used	Not used	ARC7303	
	10	Operating Instructions (Dutch/Spanish)	Not used	Not used	Not used	Not used	ARC7304	
	11	Operating Instructions (Basic) (Dutch/Italian)	Not used	Not used	Not used	Not used	ARC7305	
	12	Operating Instructions (Basic) (Dutch/Spanish)	Not used	Not used	Not used	Not used	ARC7306	
	13	Operating Instructions (Swedish/Portuguese)	Not used	Not used	Not used	Not used	ARC7328	
	14	Operating Instructions (Basic) (Swedish/Portuguese)	Not used	Not used	Not used	Not used	ARC7329	
NSP	15	Warranty Card	ARY7045	ARY7025	ARY7027	ARY7022	ARY7022	
	17	Remote Control Unit	AXD7264	AXD7264	AXD7264	AXD7265	AXD7265	
	23	Packing Case	AHD7943	AHD7913	AHD7914	AHD7911	AHD7911	
	29	Partition	AHB7049	Not used	AHB7049	AHB7049	AHB7049	

2.2 EXTERIOR

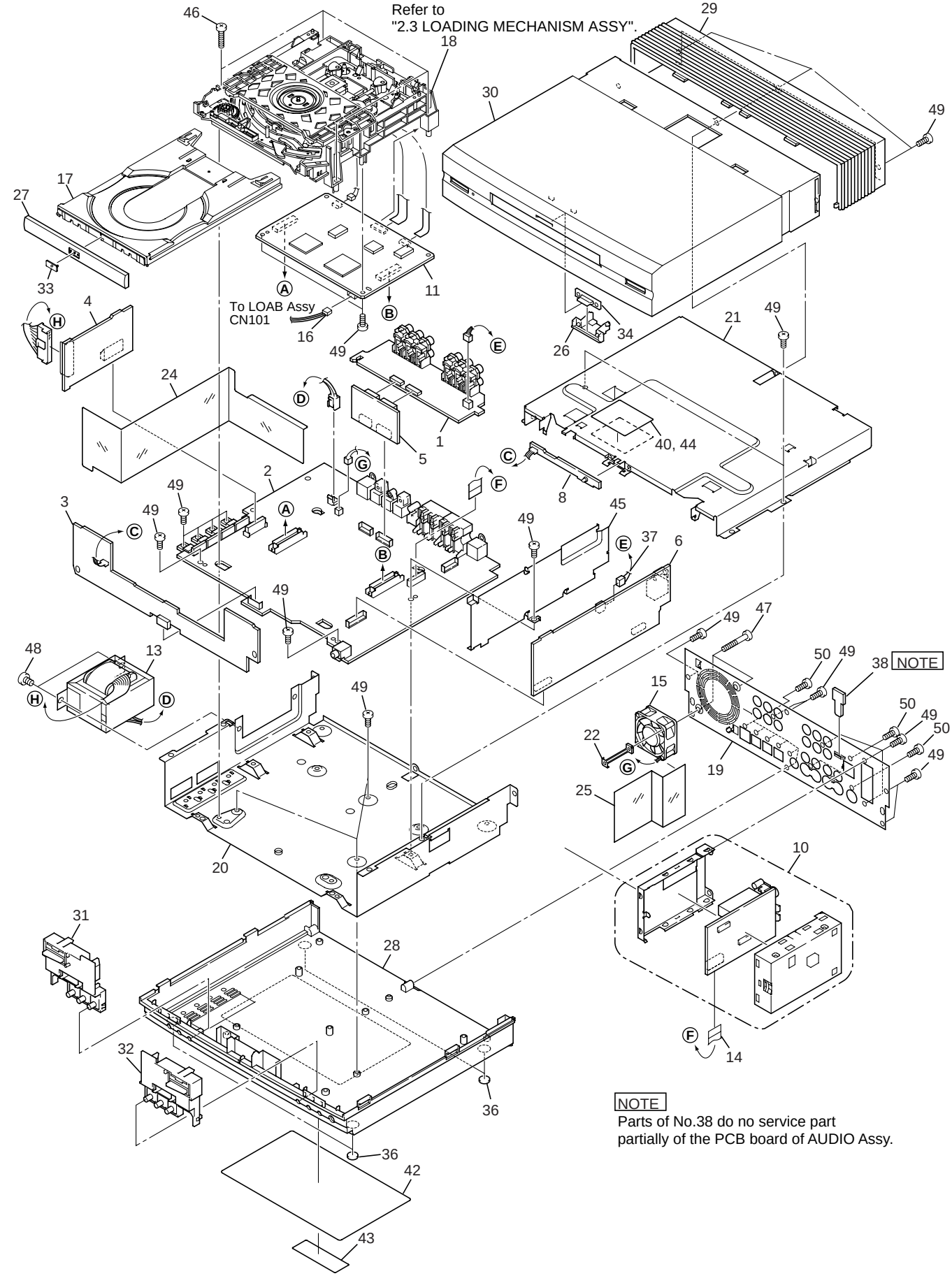

NOTE
Parts of No.38 do no service part
partially of the PCB board of AUDIO Assy.

● EXTERIOR PARTS LIST

Mark	No.	Description	Part No.
	1	AJKB ASSY	See Contrast table (2)
	2	MOTHER ASSY	See Contrast table (2)
	3	KEYB ASSY	AWU7675
	4	REGULATOR ASSY	AWU7676
	5	TRADE ASSY	AWU7677
	6	DSP ASSY	See Contrast table (2)
	7	• • • • •	
	8	BLED ASSY	AWU7680
	9	• • • • •	
	10	TUNER MODULE	See Contrast table (2)
	11	DVDM ASSY	AWX7724
	12	• • • • •	
	13	Power Transformer	ATT7068
	14	13p F•F•C/60v	ADD7246
	15	DC Fan Motor	AXM7014
	16	Connector Ass'y	PG03KK-E07
	17	Tray	VNL1858
NSP	18	Loading Mechanism Ass'y	VWT1174
	19	Rear Panel(Mtl)	See Contrast table (2)
NSP	20	Bottom Plate(Mtl)	ANF7023
NSP	21	Top Plate(Mtl)	ANF7024
	22	Fan Plate (Fe)	ANG7153
	23	• • • • •	
	24	Power Barrier(Pls)	AEC7271
	25	Fan Barrier(Pls)	AEC7292
	26	Lens Holder(Pls)	AMR7320
	27	Tray Panel(Pls)	AAN7199
	28	Bottom Base(Pls)	AMA7019
	29	Bonnet(Pls)	AMA7020
	30	Top Panel(Pls)	See Contrast table (2)
	31	Button Assy A	AXG7100
	32	Button Assy B	AXG7101
	33	DVD Plate (Ni)	VAM1077
	34	Illumination Lens	VNK4168
	35	• • • • •	
	36	Leg	AEB7090
	37	Connector Assy 3p	ADE7068
NSP	38	Spacer	• • • • •
	39	• • • • •	
NSP	40	Fuse Caution	See Contrast table (2)
	41	• • • • •	
	42	Name Label	See Contrast table (2)
NSP	43	Label	See Contrast table (2)
	44	Caution Label	See Contrast table (2)
	45	DSP Shield	See Contrast table (2)
	46	Screw	BBZ30P180FMC
	47	Screw	BBZ30P300FZK
	48	Screw	BBZ40P060FMC
	49	Screw	BPZ30P080FMC
	50	Screw	PSC30P080FNI

(2) CONTRAST TABLE

AUCXJ, ADXJ/RA, APWXJ, AVXJ and AYXJ types are constructed the same except for the following:

Mark	No.	Symbol and Description	Part No.					Remarks
			AUCXJ type	ADXJ/RA type	APWXJ type	AVXJ type	AYXJ type	
	1	AJKB ASSY	AWU7641	AWU7641	AWU7641	AWU7670	AWU7670	
	2	MOTHER ASSY	AWU7674	AWU7650	AWU7651	AWU7648	AWU7648	
	6	DSP ASSY	AWU7640	AWU7640	AWU7640	AWU7669	AWU7669	
	10	TUNER MODULE	AXQ7228	AXQ7228	AXQ7228	AXQ7229	AXQ7229	
	19	Rear Panel(Mtl)	ANC7919	ANC7956	ANC7957	ANC7920	ANC7920	
	30	Top Panel	AMB7734	AMB7703	AMB7734	AMB7734	AMB7734	
NSP	40	Fuse Caution	AAX7808	Not used	Not used	Not used	Not used	
	42	Name Label	ARW7097	ARW7100	ARW7098	ARW7098	ARW7098	
NSP	43	Label	VRW1629	Not used	Not used	Not used	Not used	
	44	Caution Label	Not used	VRW1699	VRW1699	VRW1699	VRW1699	
	45	DSP Shield	Not used	Not used	Not used	ANG7320	ANG7320	

2.3 LOADING MECHANISM ASSY

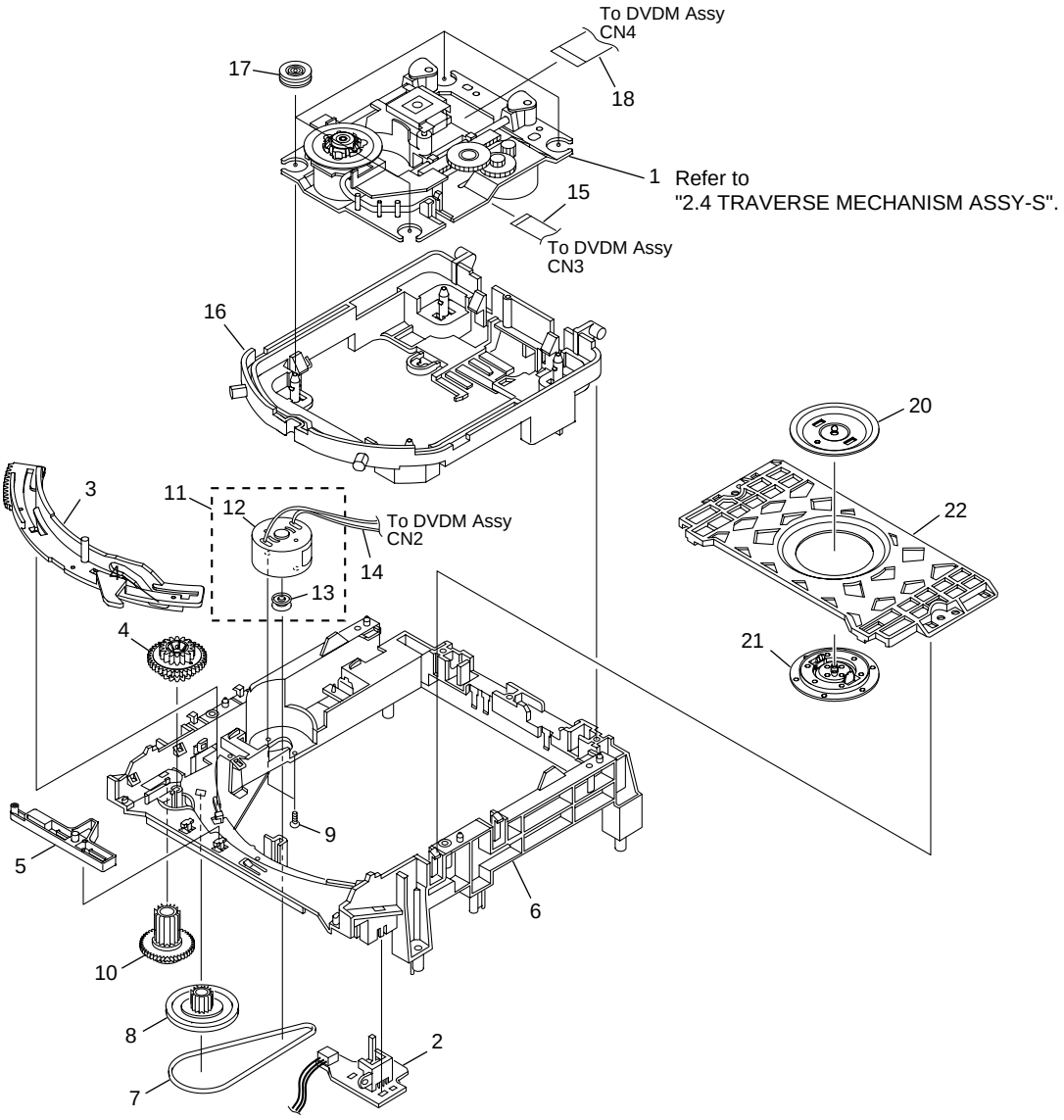

● LOADING MECHANISM ASSY PARTS LIST

Mark	No.	Description	Part No.
	1	Traverse Mechanism Assy-S	VXX2653
NSP	2	LOAB Assy	VWG2171
	3	Drive Cam	VNL1862
	4	Drive Gear	VNL1861
	5	Lock Plate	VNL1820
	6	Loading Base	VNL1863
	7	Belt	VEB1315 (or VEB1320)
	8	Gear Pulley	VNL1866
	9	Screw	JGZ17P028FMC
	10	Loading Gear	VNL1860

Mark	No.	Description	Part No.
	11	Loading Motor Assy	VXX2505
	12	DC Motor / 0.3W (LOADING)	PXM1027
	13	Motor Pulley	PNW1634
	14	Connector Assy	VKP2253
	15	Flexible Cable (08P)	VDA1822 (or VDA1818)
	16	Float Base	VNL1865
	17	Floating Rubber	VEB1286
	18	Flexible Cable (24P)	VDA1821 (or VDA1820)
	19	• • • • •	
	20	Clamper Plate	VNE2162
	21	Clamper	VNL1738
	22	Bridge	VNL1859

2.4 TRAVERSE MECHANISM ASSY-S

• **Top View**

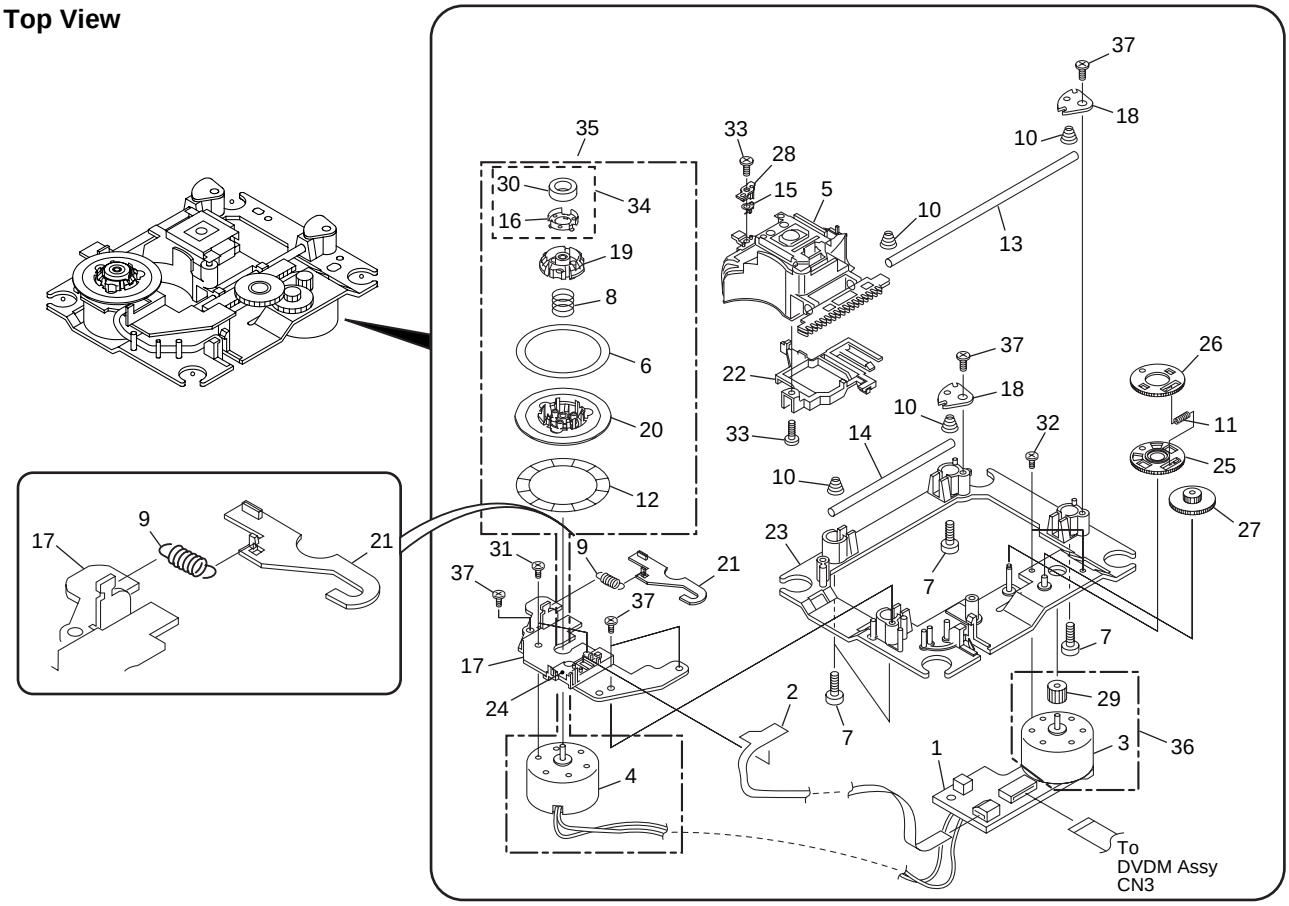

● TRAVERSE MECHANISM ASSY-S PARTS LIST

Mark	No.	Description	Part No.
NSP	1	SMEB Assy	VWG2048
NSP	2	FGSB Assy	VWG2009
NSP	3	Motor (CARRIAGE)	VXM1079
NSP	4	Motor (SPINDLE)	VXM1084
⚠ NSP	5	Pickup Assy	VWY1055
	6	Table Sheet	DEC2040
	7	Screw	VBA1058
	8	Centering Spring	VBH1278
	9	Hook Spring	VBH1317
	10	Skew Spring	VBH1303
	11	Gear Spring	VBH1308
NSP	12	Reflected Sheet	VEC1959
	13	Guide Bar	VLL1504
	14	Sub-guide Bar	VLL1505
	15	Hold Spring	VNC1017
NSP	16	Magnet Holder	VNE2070
NSP	17	Motor Base	VNE2154
NSP	18	Cover	VNE2155
	19	Centering Ring	VNL1746
NSP	20	Disc Table	VNL1747

Mark	No.	Description	Part No.
	21	Hook	VNL1770
	22	FFC Holder	VNL1802
	23	Mechanism Base	VNL1806
	24	FG Holder	VNL1807
	25	Gear A	VNL1808
	26	Gear B	VNL1809
	27	Gear C	VNL1810
	28	Slider	VNL1811
	29	Gear D	VNL1814
NSP	30	Magnet	VYM1024
	31	Screw	JFZ17P025FZK
	32	Screw	JGZ17P028FMC
	33	Screw	VBA1051
	34	Magnet Holder Assy	VXX2507
	35	Spindle Motor Assy	VXX2649
	36	Carriage Motor Assy	VXX2650
NSP	37	Screw	PBA1069

2.5 DISPLAY UNIT

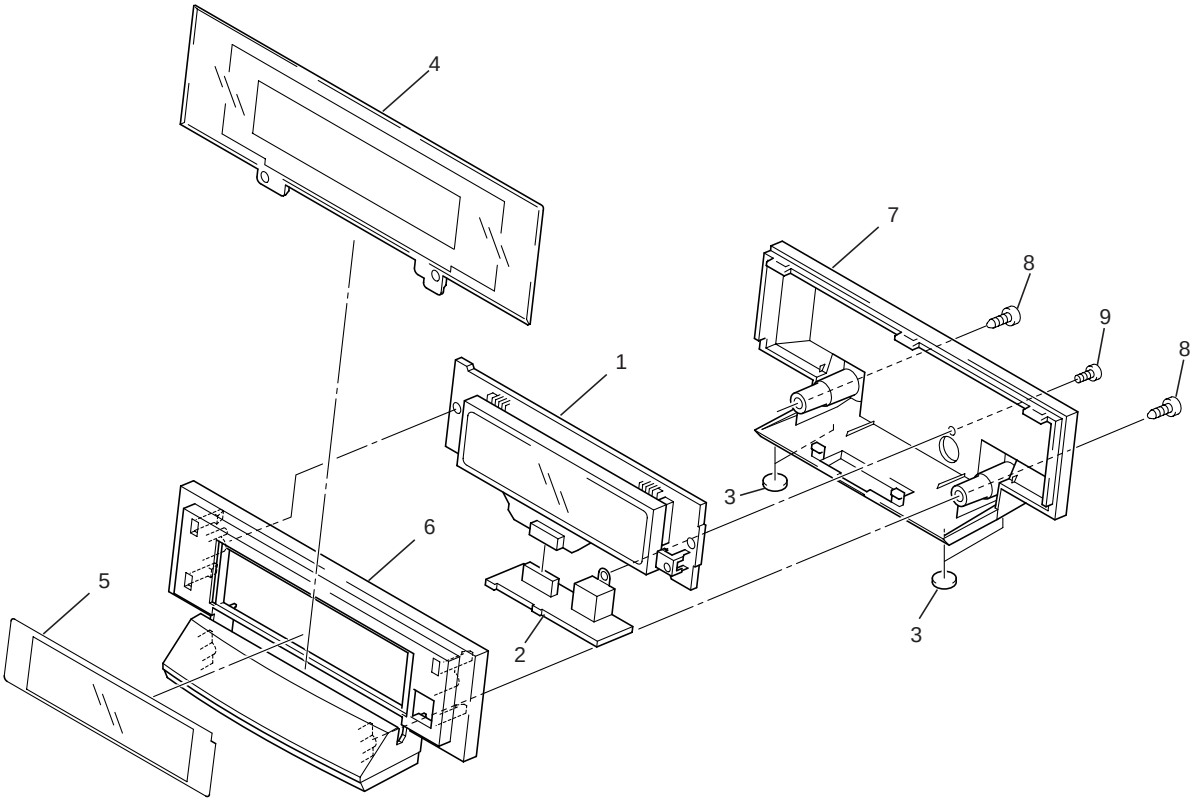

● DISPLAY UNIT PARTS LIST

Mark	No.	Description	Part No.
	1	FLDP ASSY	AWU7678
	2	CNB ASSY	AWU7679
	3	Leg	AEB7090
	4	Window (Pls)	AAK7785
	5	Fl Filter(Pls)	AEC7272
	6	Display Panel(Pls)	AMB7704
	7	Display Cover(Pls)	AMC7044
	8	Screw	BPZ30P080FMC
	9	Screw	PSC30P080FNI

3. BLOCK DIAGRAM AND SCHEMATIC DIAGRAM

3.1 BLOCK DIAGRAM

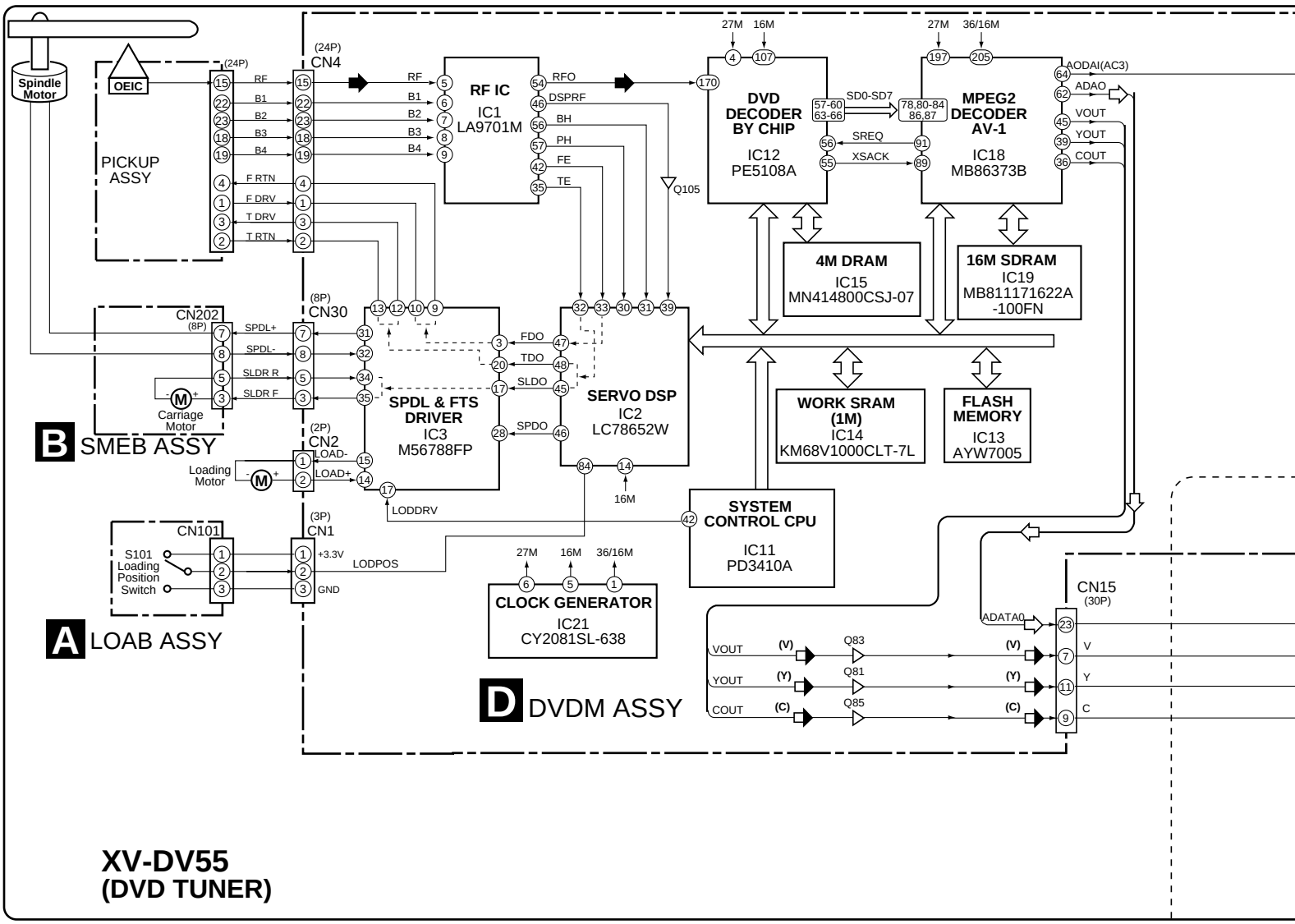

: RF Signal Route
: Audio Signal Route (L ch)
(D) : Digital Audio
(SL) : SL Audio Signal Route (L ch)
(FL) : FL Audio Signal Route (L ch)
(C) : C Audio Signal Route (L ch)
(SW) : SW Audio Signal Route (L ch)
(V) : V Signal Route
(Y) : Y Signal Route
(C) : C Signal Route

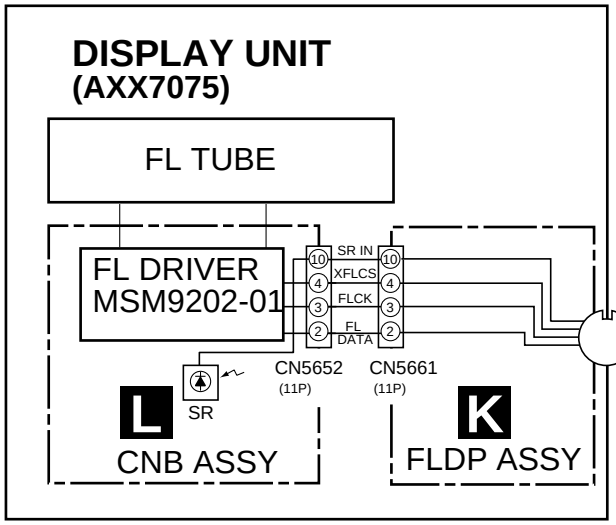

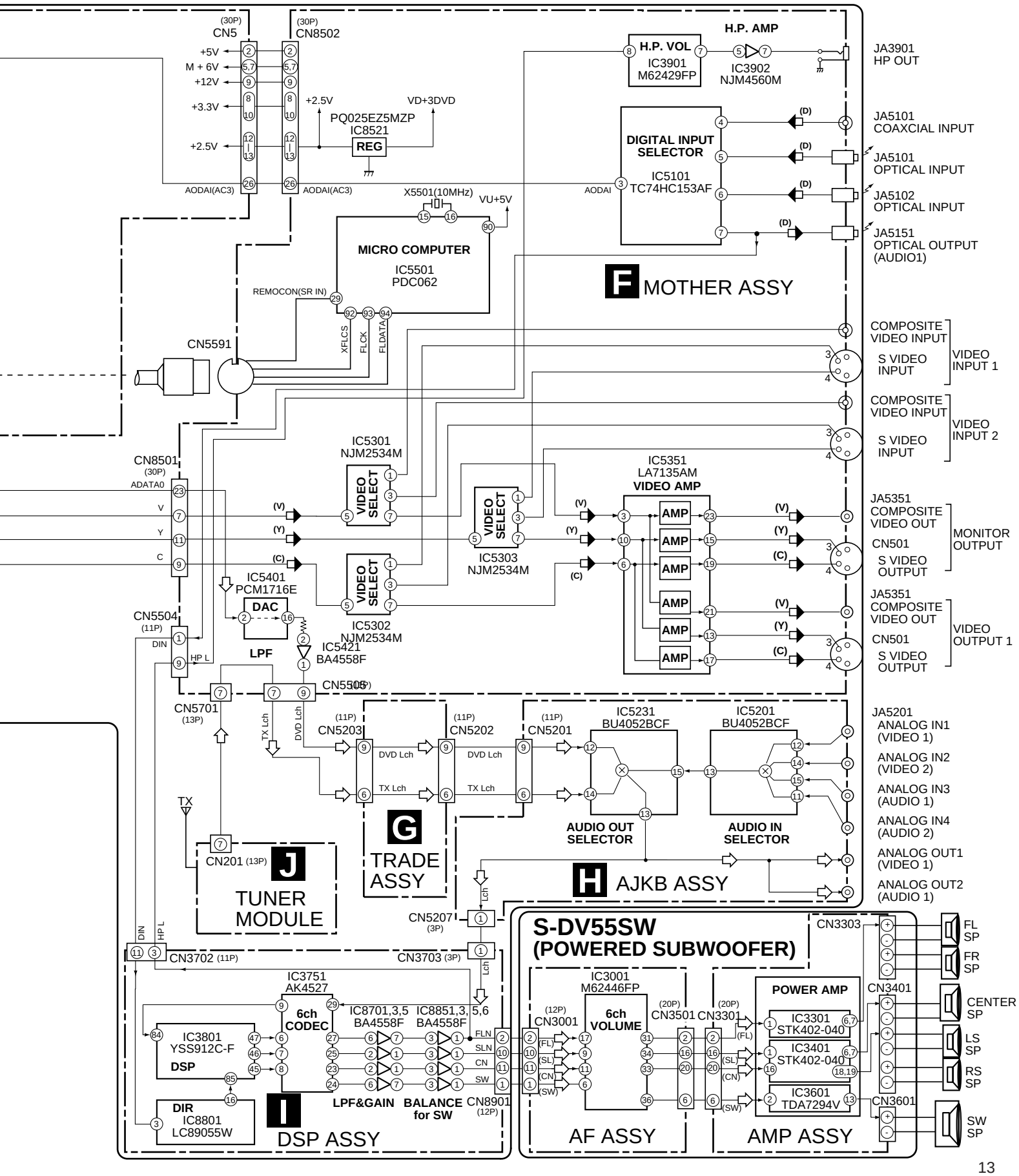
CN5
(30P)
CN8502
(30P)
+5V
M + 6V
+12V
+3.3V
+2.5V
AODAI(AC3)
PQ025EZ5MZP
IC8521
REG
VD+3DVD
H.P. AMP
H.P. VOL
IC3901
M62429FP
IC3902
NJM4560M
JA3901
HP OUT
DIGITAL INPUT
SELECTOR
IC5101
TC74HC153AF
AODAI
JA5101
COAXCIAL INPUT
JA5101
OPTICAL INPUT
JA5102
OPTICAL INPUT
JA5151
OPTICAL OUTPUT
(AUDIO1)
X5501(10MHz)
VU+5V
MICRO COMPUTER
IC5501
PDC062
REMOCON(SR IN)
XFLCS
FLCK
FLDATA
F MOTHER ASSY
CN5591
COMPOSITE
VIDEO INPUT
S VIDEO
INPUT
VIDEO
INPUT 1
COMPOSITE
VIDEO INPUT
S VIDEO
INPUT
VIDEO
INPUT 2
CN8501
(30P)
ADATA0
V
Y
C
IC5301
NJM2534M
VIDEO
SELECT
IC5303
NJM2534M
IC5302
NJM2534M
IC5351
LA7135AM
VIDEO AMP
AMP
JA5351
COMPOSITE
VIDEO OUT
CN501
S VIDEO
OUTPUT
MONITOR
OUTPUT
JA5351
COMPOSITE
VIDEO OUT
CN501
S VIDEO
OUTPUT
VIDEO
OUTPUT 1
IC5401
PCM1716E
DAC
LPF
IC5421
BA4558F
CN5504
(11P)
DIN
HP L
CN5505
(13P)
CN5701
(13P)
TX Lch
DVD Lch
(11P)
CN5203
(11P)
CN5202
(11P)
CN5201
DVD Lch
TX Lch
IC5231
BU4052BCF
IC5201
BU4052BCF
AUDIO OUT
SELECTOR
AUDIO IN
SELECTOR
JA5201
ANALOG IN1
(VIDEO 1)
ANALOG IN2
(VIDEO 2)
ANALOG IN3
(AUDIO 1)
ANALOG IN4
(AUDIO 2)
ANALOG OUT1
(VIDEO 1)
ANALOG OUT2
(AUDIO 1)
TX
CN201 (13P)
J
TUNER
MODULE
G
TRADE
ASSY
H AJKB ASSY
CN5207
(3P)
Lch
S-DV55SW
(POWERED SUBWOOFER)
CN3303
FL
SP
FR
SP
CN3702 (11P)
CN3703 (3P)
IC3751
AK4527
6ch
CODEC
IC8701,3,5
BA4558F
IC8851,3, 5,6
BA4558F
IC3801
YSS912C-F
DSP
DIR
IC8801
LC89055W
FLN
SLN
CN
SW
LPF&GAIN
BALANCE
for SW
CN8901
(12P)
I
DSP ASSY
IC3001
M62446FP
6ch
VOLUME
(12P)
CN3001
(20P)
CN3501
(20P)
CN3331
(FL)
(SL)
(CN)
(SW)
AF ASSY
POWER AMP
IC3301
STK402-040
IC3401
STK402-040
IC3601
TDA7294V
AMP ASSY
CN3401
CENTER
SP
LS
SP
RS
SP
CN3601
SW
SP

3.2 OVERALL CONNECTION DIAGRAM

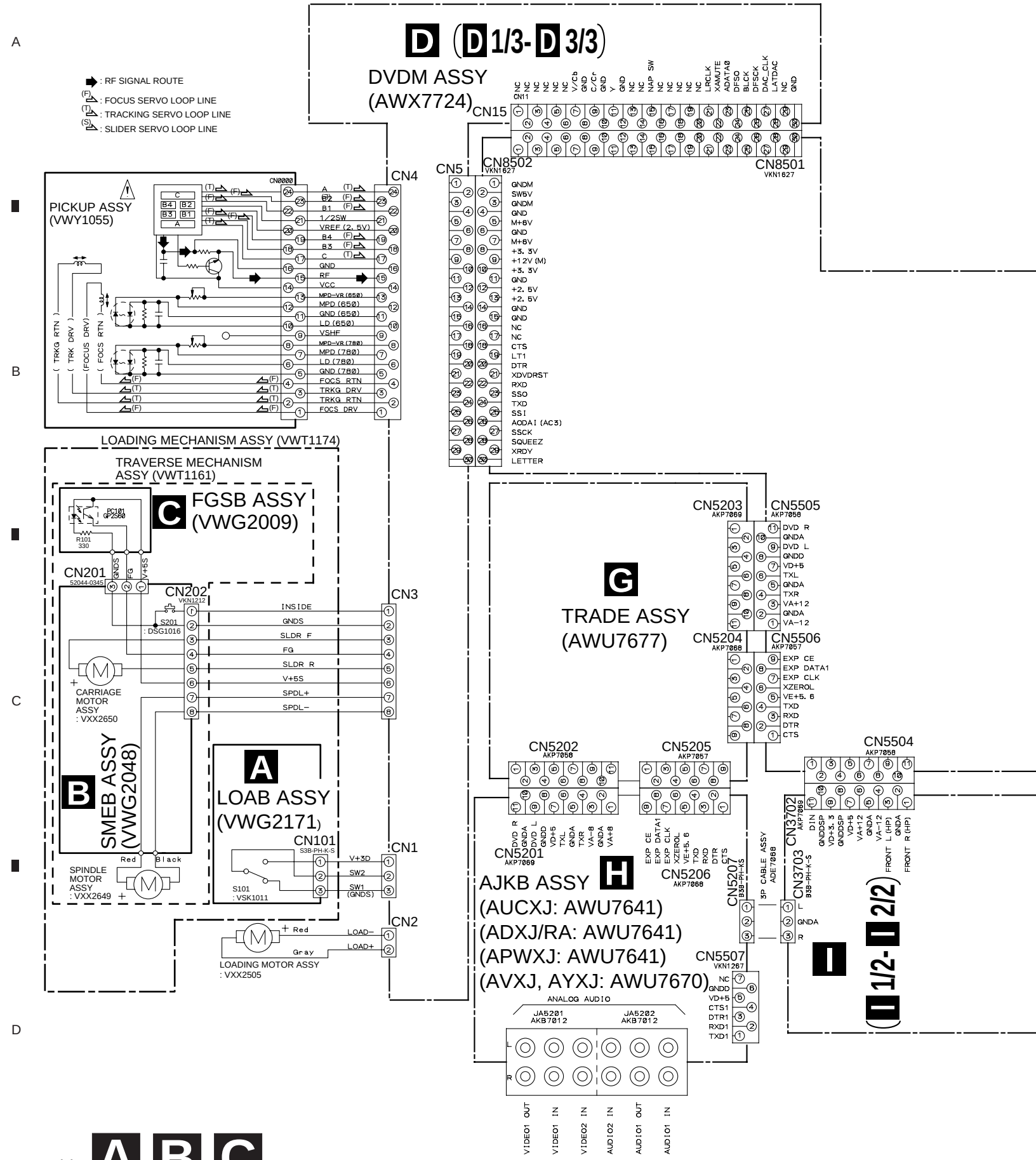

Note : When ordering service parts, be sure to refer to "EXPLODED VIEWS and PARTS LIST" or "PCB PARTS LIST".

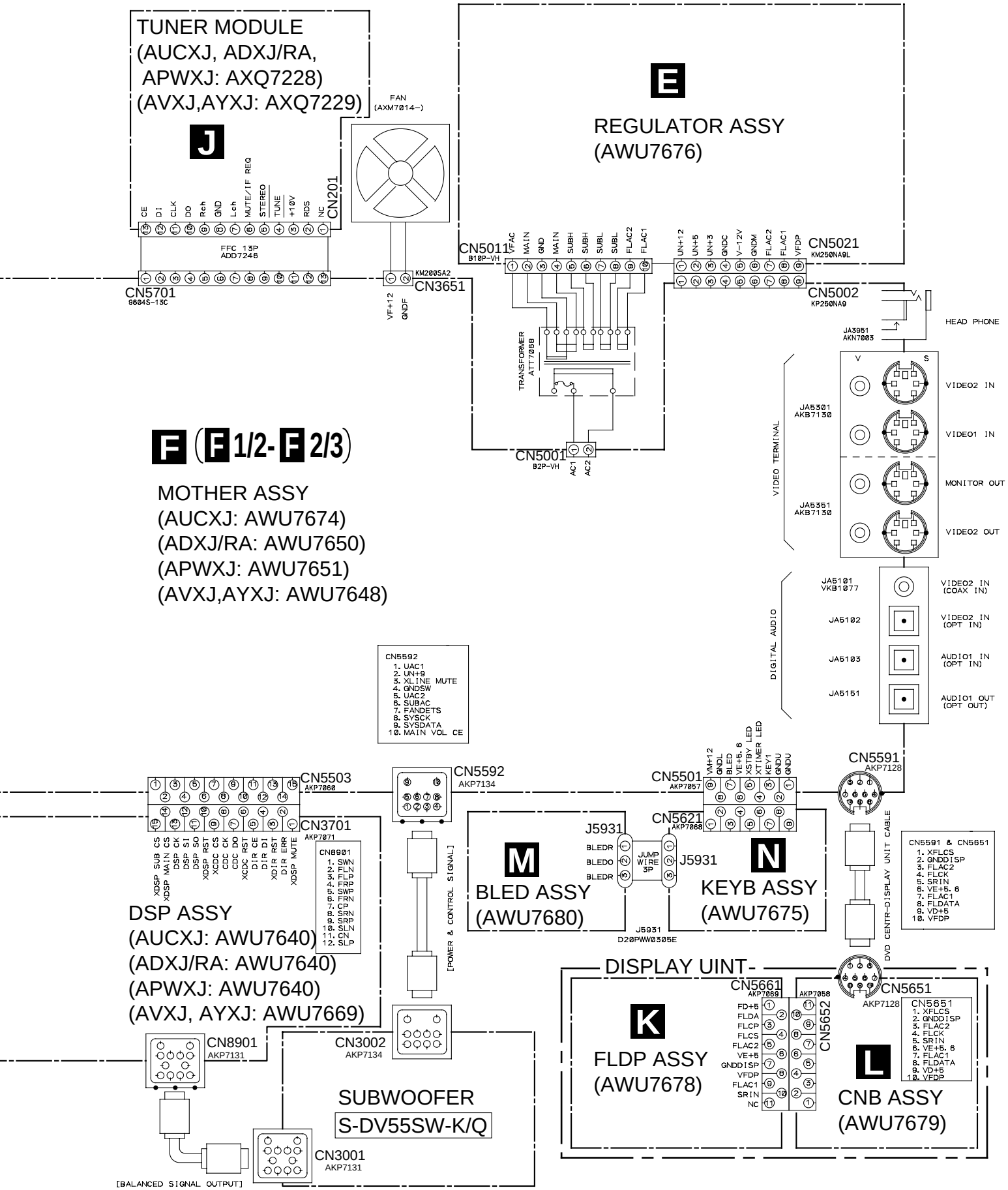

3.3 DVDM ASSY (1/3)

D 1/3 DVDM ASSY (AWX7724)

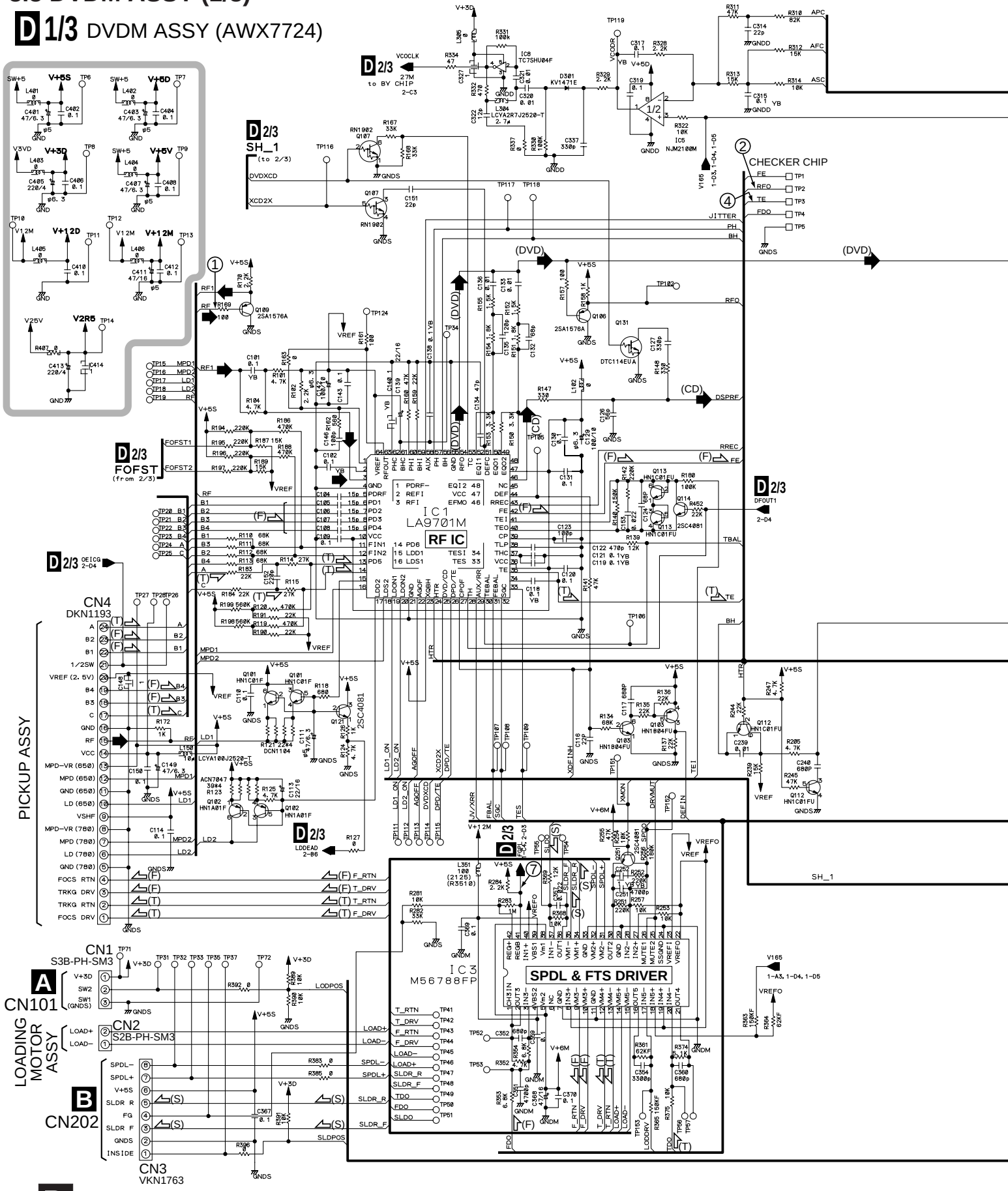

: The power supply is shown with the marked box.

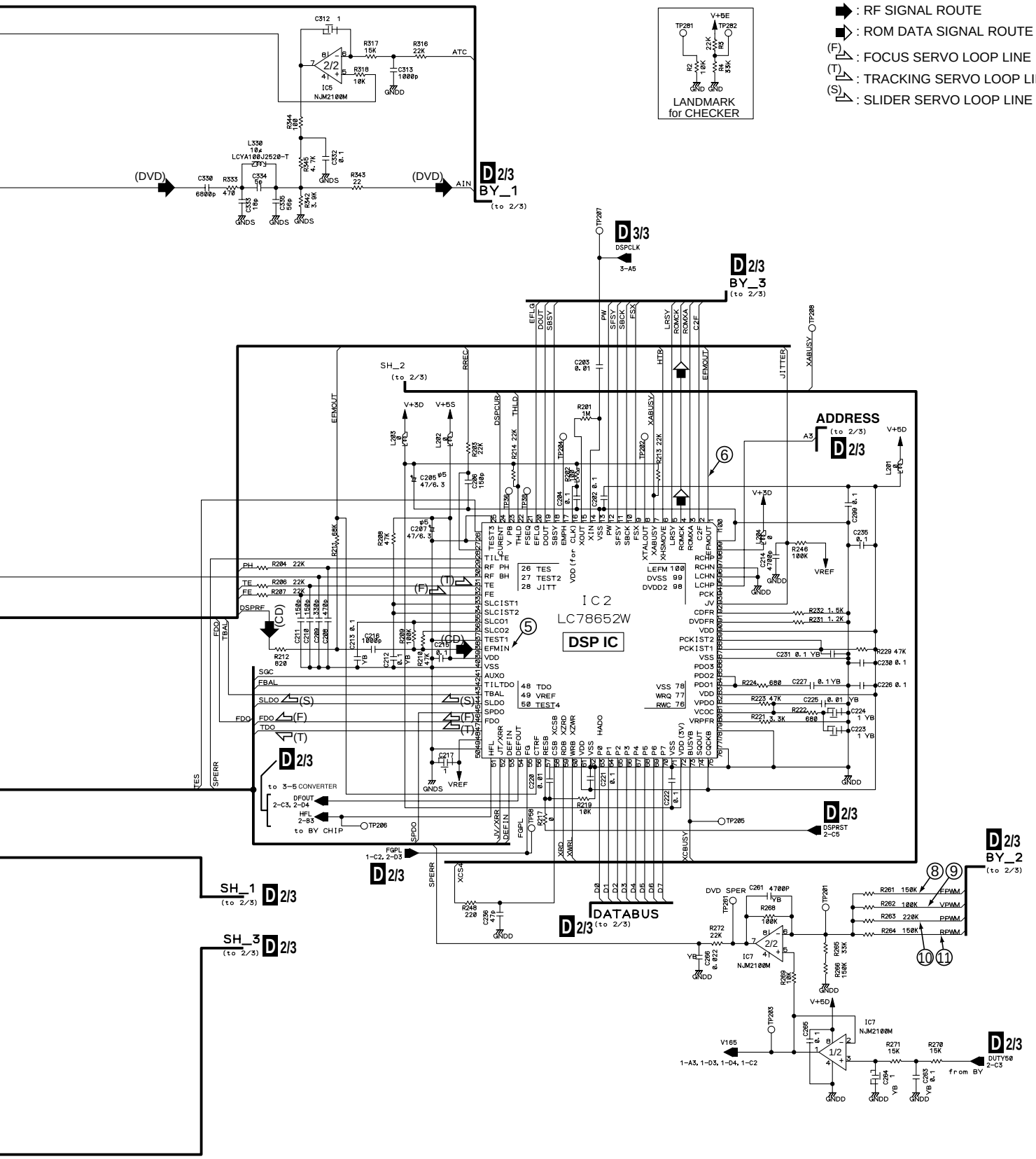

3.4 DVDM ASSY (2/3)

D 2/3 DVDM ASSY (AWX7724)

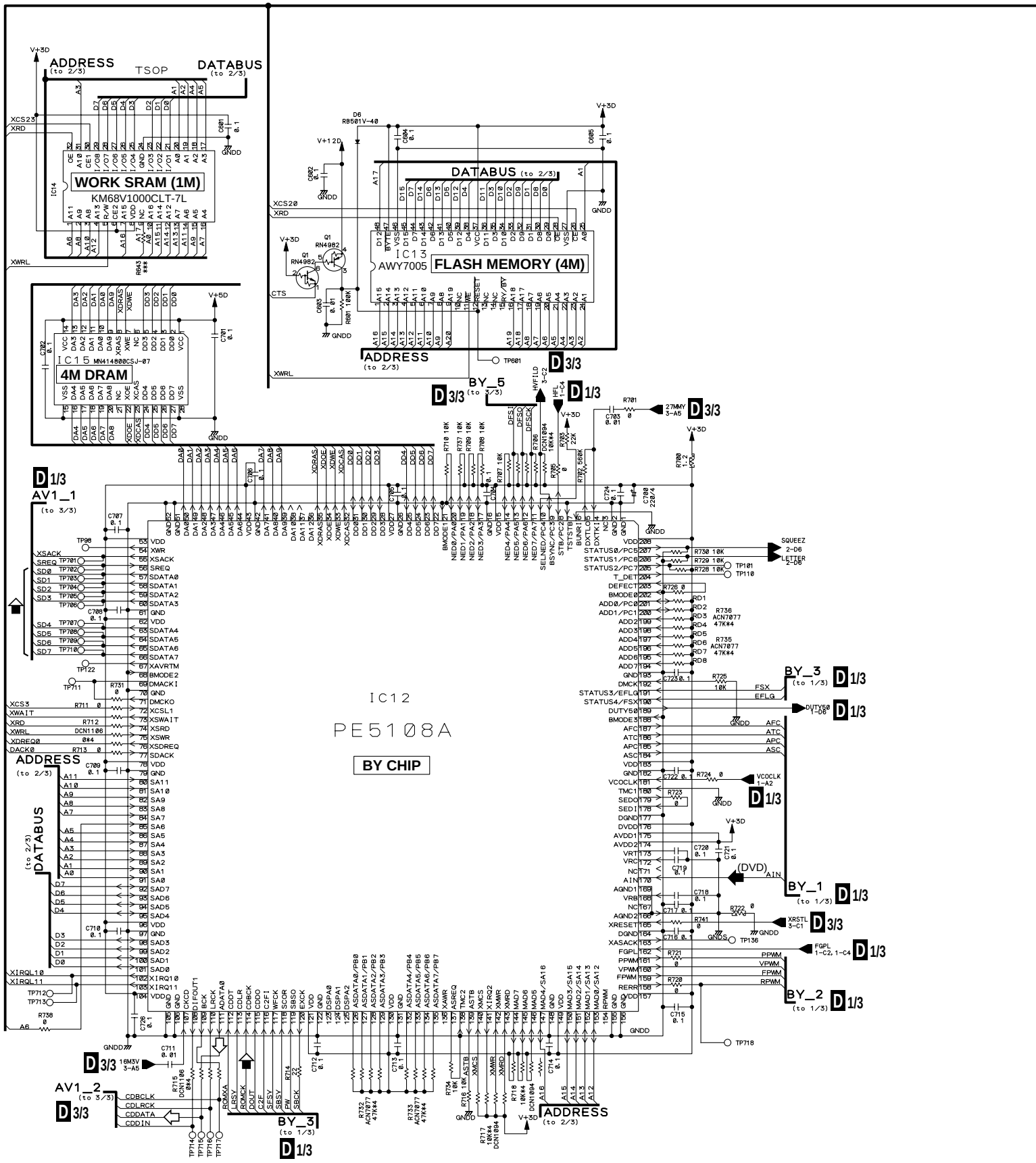

: RF SIGNAL ROUTE
: ROM DATA SIGNAL ROUTE
: AUDIO SIGNAL ROUTE

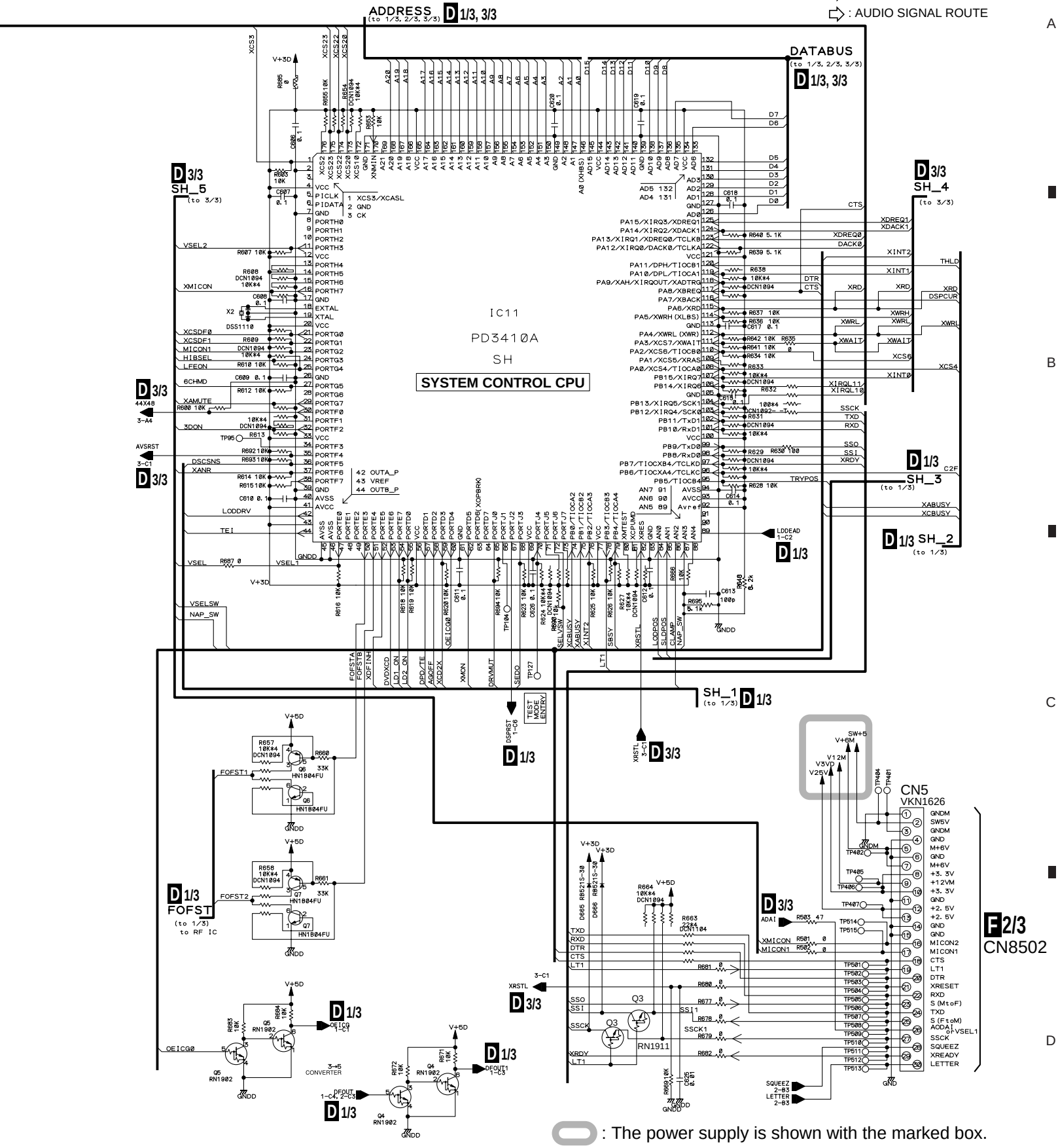

3.5 DVDM ASSY (3/3)

D 3/3 DVDM ASSY (AWX7724)

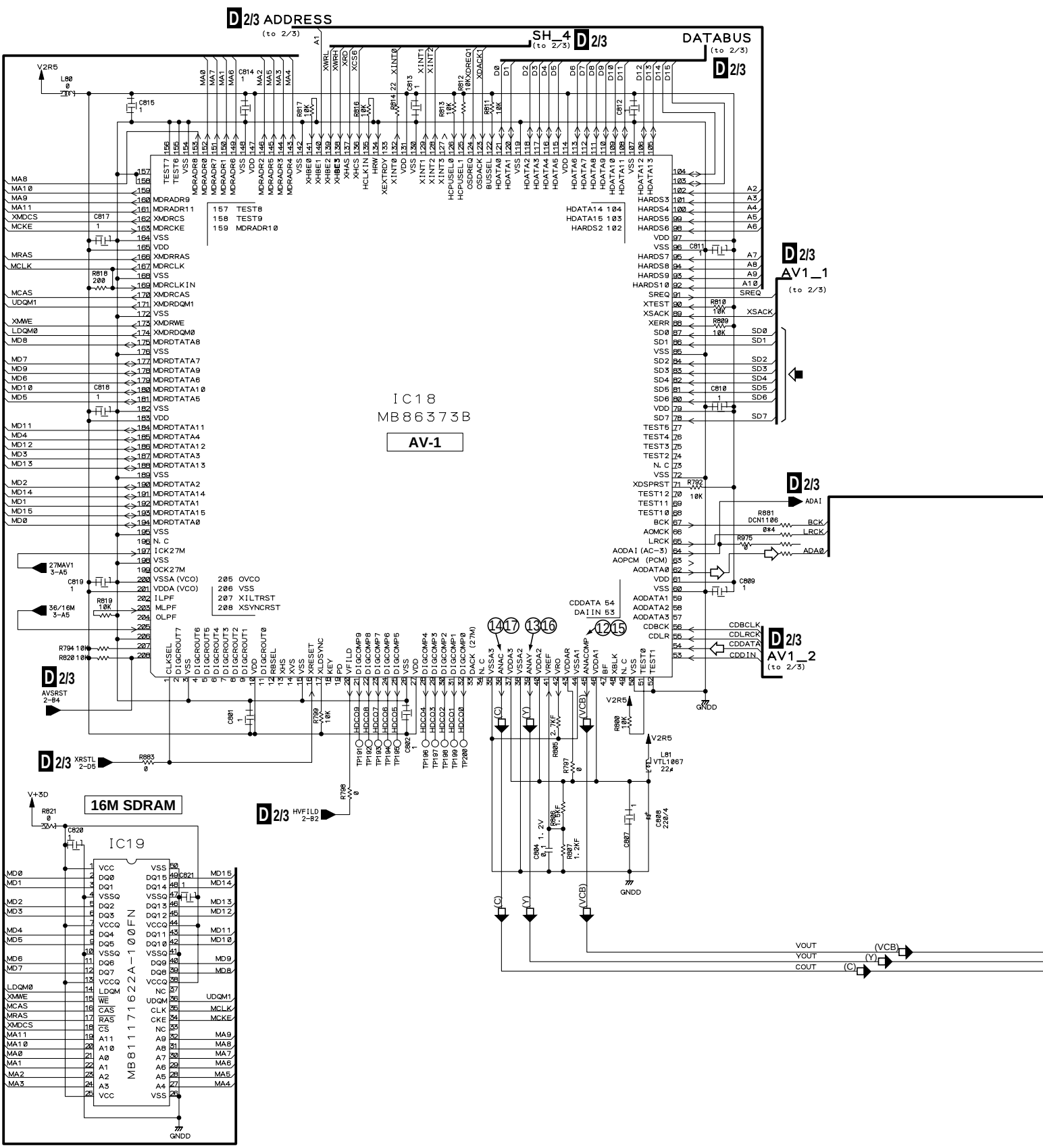

: AUDIO SIGNAL ROUTE
: ROM DATA SIGNAL ROUTE
(VCB) : V/CB SIGNAL ROUTE
(Y) : Y SIGNAL ROUTE
(C) : C SIGNAL ROUTE

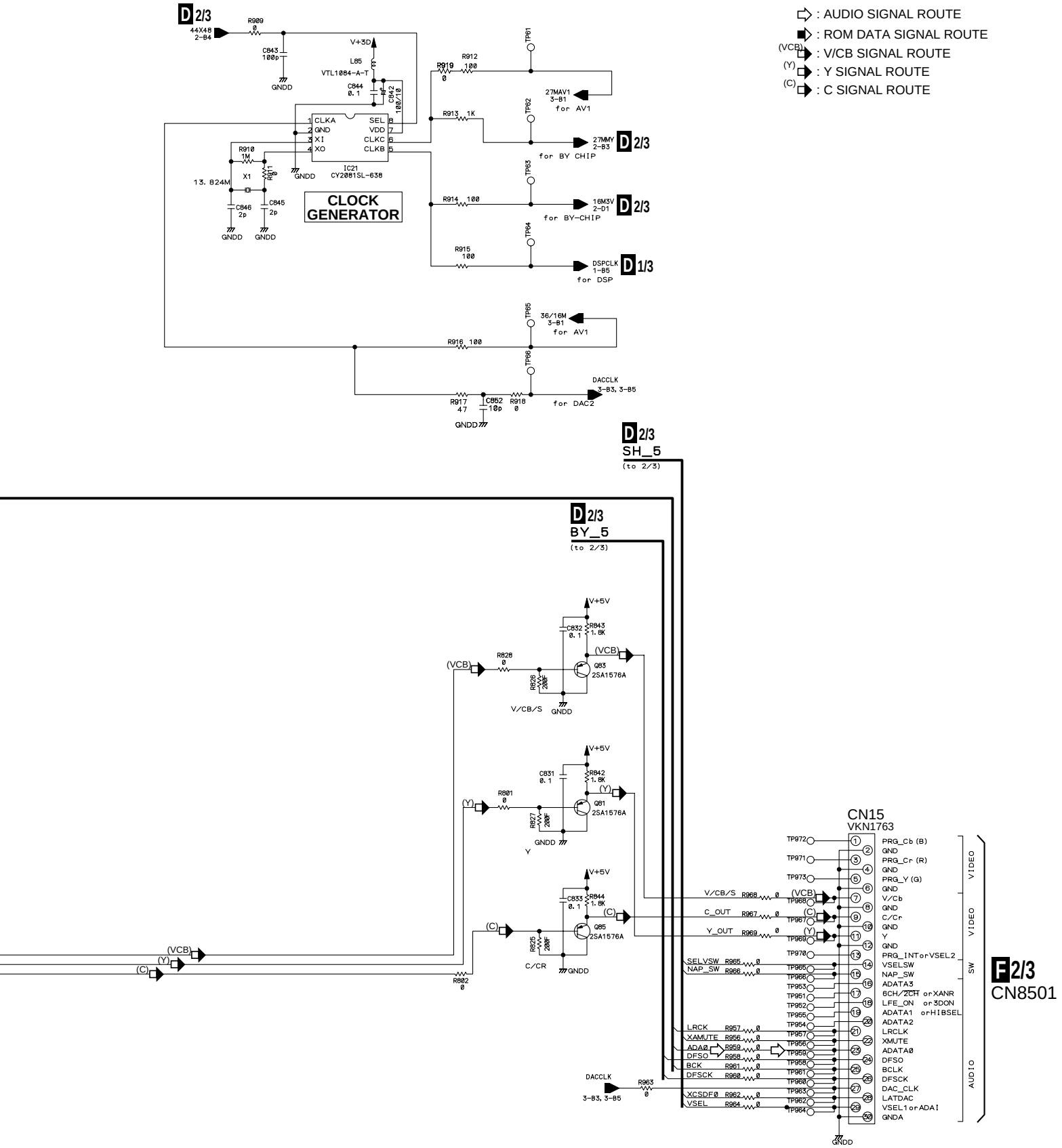

3.6 REGULATOR and MOTHER ASSYS (1/3)

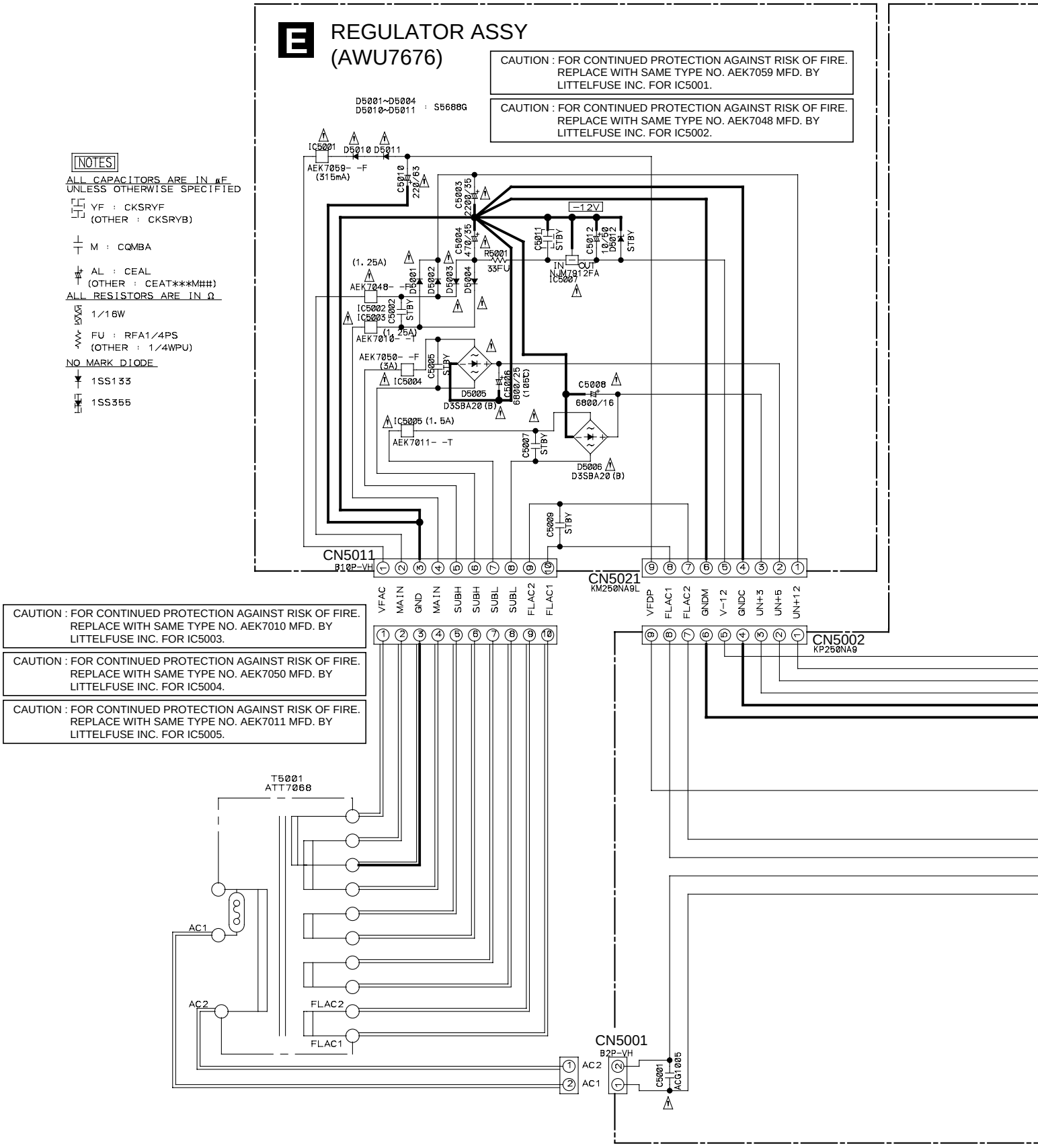

: The power supply is shown with the marked box.

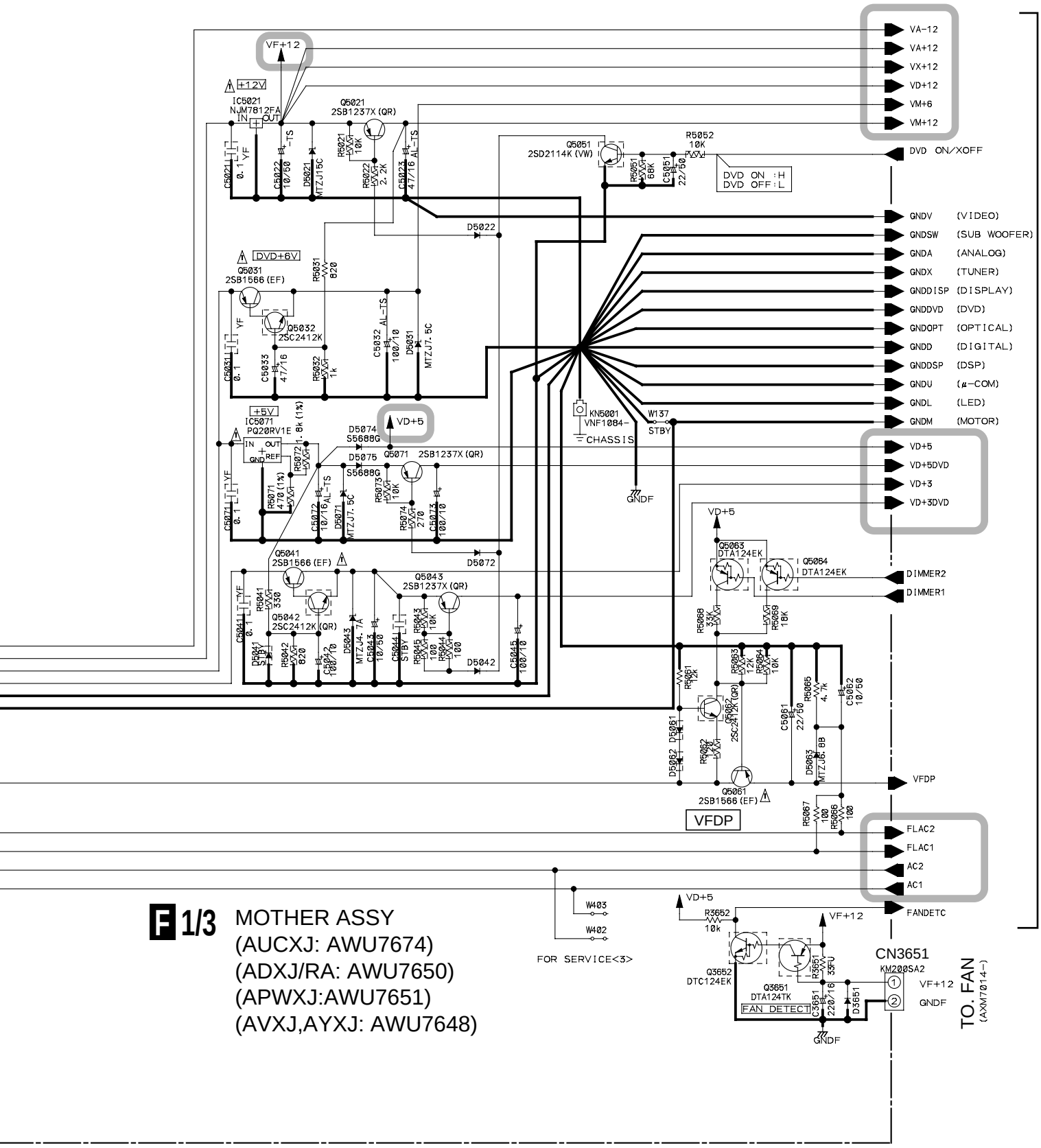

F 1/3 MOTHER ASSY
(AUCXJ: AWU7674)
(ADXJ/RA: AWU7650)
(APWXJ:AWU7651)
(AVXJ,AYXJ: AWU7648)

3.7 MOTHER ASSY (2/3)

F 2/3 MOTHER ASSY
(AUCXJ: AWU7674)
(ADXJ/RA: AWU7650)
(APWXJ:AWU7651)
(AVXJ,AYXJ: AWU7648)

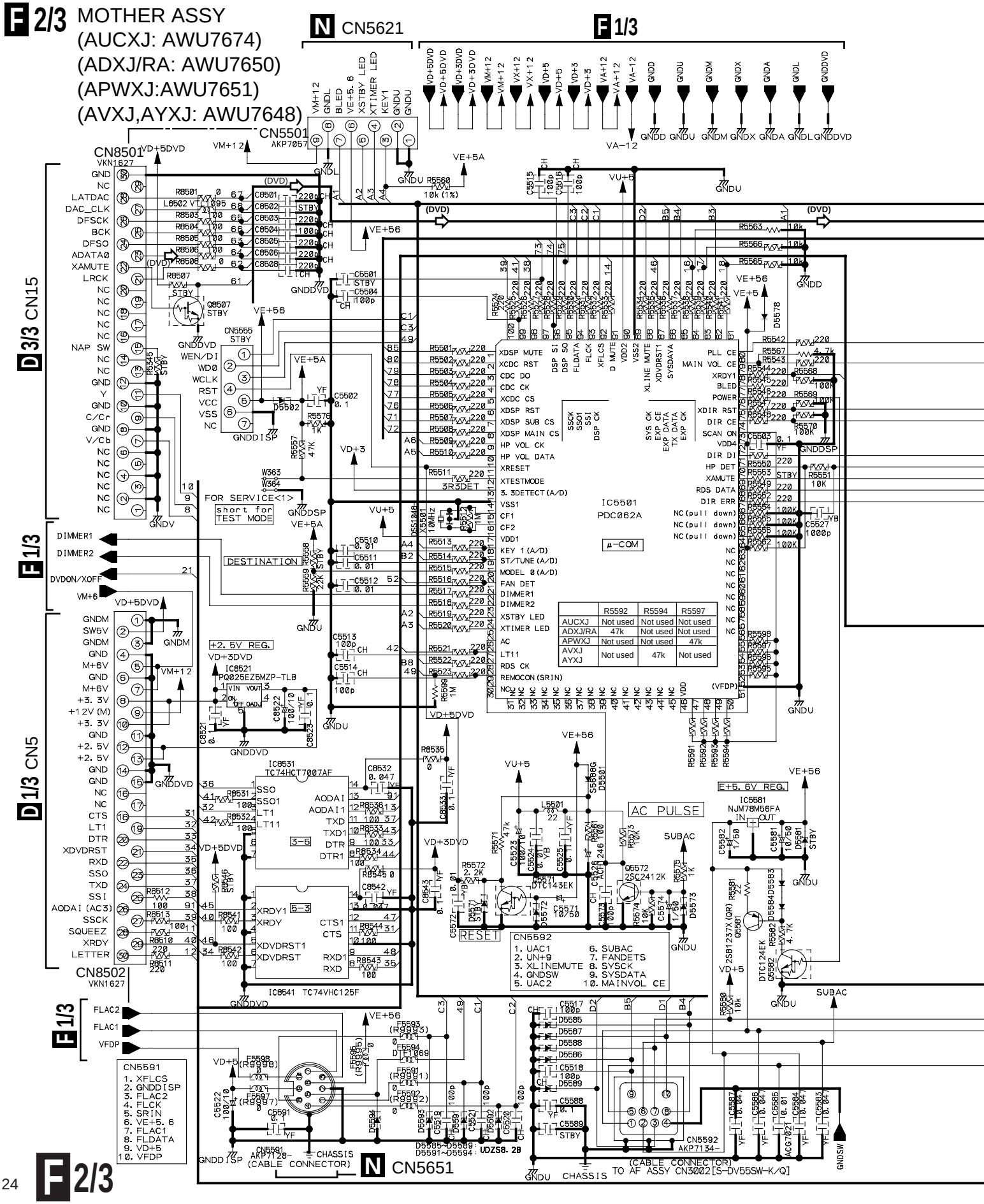

	R5592	R5594	R5597
AUCXJ	Not used	Not used	Not used
ADXJ/RA	47k	Not used	Not used
APWXJ	Not used	Not used	47k
AVXJ AYXJ	Not used	47k	Not used

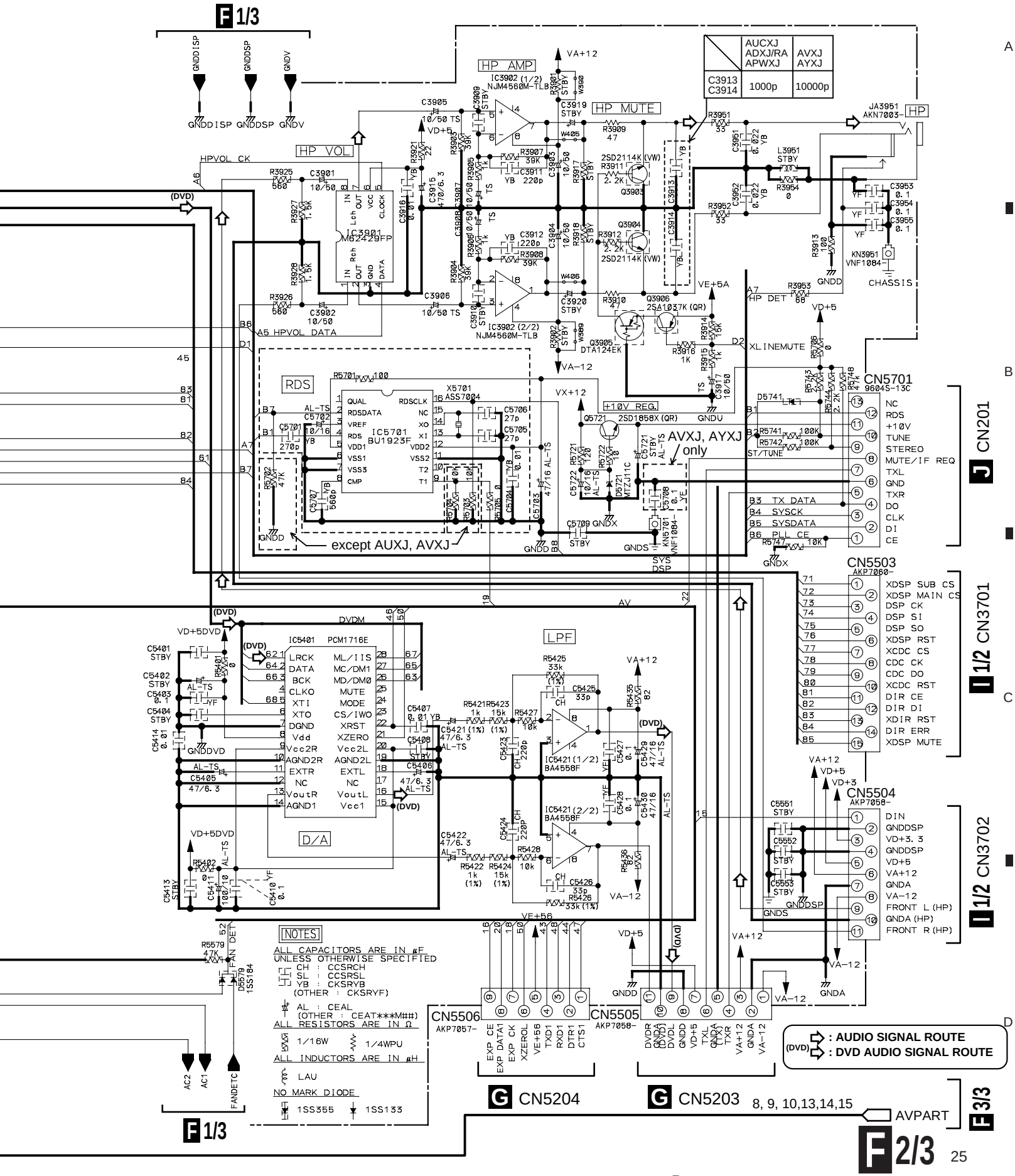
F 1/3
GNDDISP
GNDDSP
GNDV
HP AMP
IC3902 (1/2)
NJM4560M-TLB
HP MUTE
HP VOL
HPVOL CK
IC3901
M62429FP
A5 HPVOL DATA
RDS
X5701
ASS7004
IC5701
BU1923F
except AUXJ, AVXJ
+10V REG.
AVXJ, AYXJ
only
XL INEMUTE
HP DET
JA3951
AKN7003-
HP
CHASSIS
CN5701
9604S-13C
J CN201
NC
RDS
+10V
TUNE
STEREO
MUTE/IF REQ
TXL
GND
TXR
DO
CLK
DI
CE
TX DATA
SYSCK
SYSDATA
PLL CE
CN5503
AKP7060-
I 1/2 CN3701
XDSP SUB CS
XDSP MAIN CS
DSP CK
DSP SI
DSP SO
XDSP RST
XCDC CS
CDC CK
CDC DO
XCDC RST
DIR CE
DIR DI
XDIR RST
DIR ERR
XDSP MUTE
IC5401
PCM1716E
D/A
LPF
IC5421(1/2)
BA4558F
IC5421(2/2)
BA4558F
CN5504
AKP7058-
I 1/2 CN3702
DIN
GNDDSP
VD+3.3
GNDDSP
VD+5
VA+12
GNDA
VA-12
FRONT L (HP)
GNDA (HP)
FRONT R (HP)
NOTES
ALL CAPACITORS ARE IN μF
UNLESS OTHERWISE SPECIFIED
CH : CCSRCH
SL : CCSRSL
YB : CKSRYB
(OTHER : CKSRYF)
AL : CEAL
(OTHER : CEAT***M##)
ALL RESISTORS ARE IN Ω
1/16W
1/4WPU
ALL INDUCTORS ARE IN μH
LAU
NO MARK DIODE
1SS355
1SS133
CN5506
AKP7057-
EXP CE
EXP DATA1
EXP CK
XZEROL
VE+56
TXD1
RXD1
DTR1
CTS1
CN5505
AKP7058-
DVDR
GNDA
(DVD)
DVDL
GNDD
VD+5
TXL
GNDA
TXR
VA+12
GNDA
VA-12
: AUDIO SIGNAL ROUTE
(DVD) : DVD AUDIO SIGNAL ROUTE
G CN5204
G CN5203
8, 9, 10,13,14,15
AVPART
E 3/3
F 2/3
F 1/3

3.8 MOTHER ASSY (3/3)

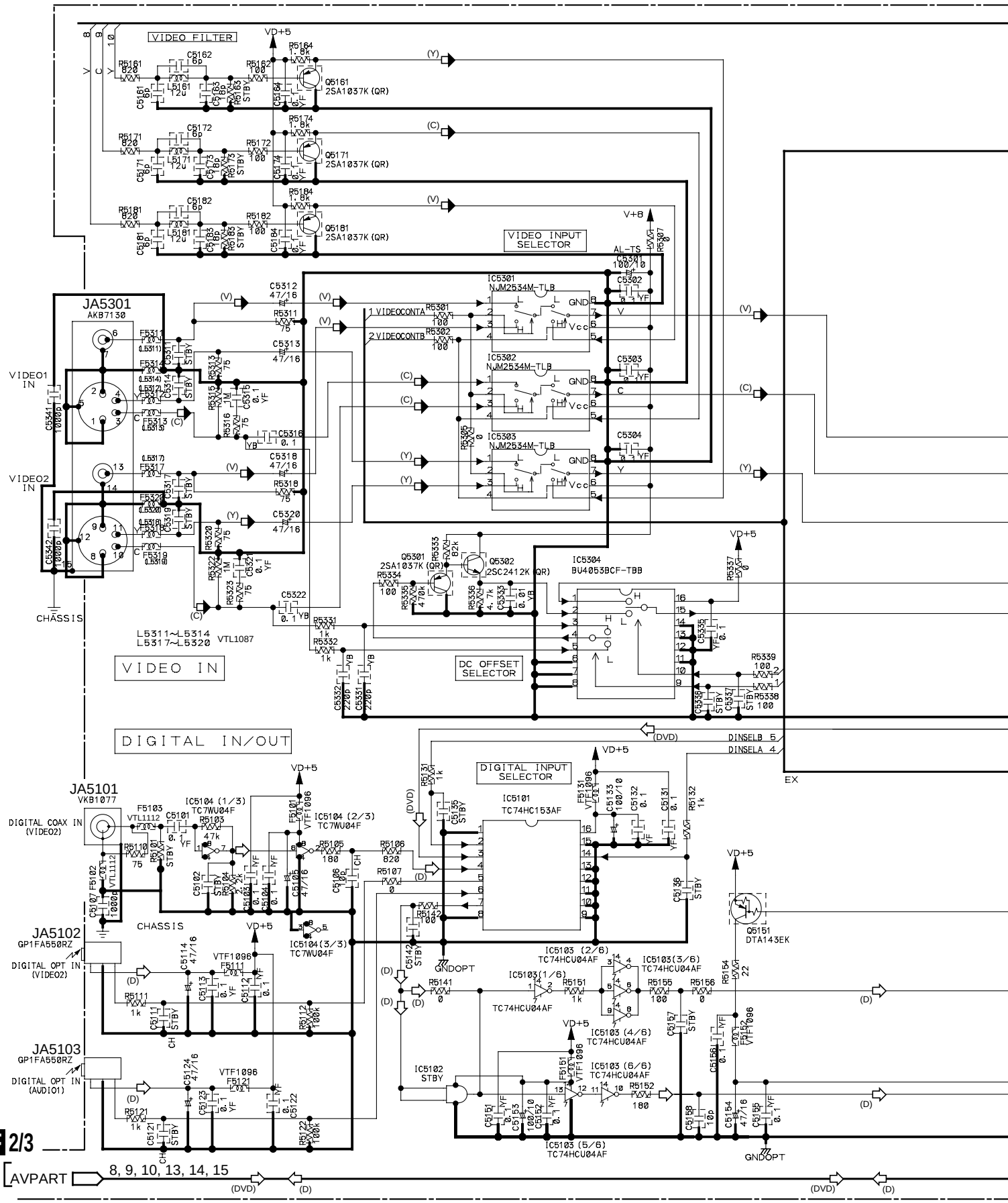

FUNCTION	VIDEO CONTA	VIDEO CONTB	VIDEOOUT MUTE
DVD	H	H	H
TUNER	H	H	H
VIDEO1	L	L	L
VIDEO2	H	L	H
AUDIO1	H	H	H
AUDIO2	H	H	H

F 3/3 MOTHER ASSY
(AUCXJ: AWU7674)
(ADXJ/RA: AWU7650)
(APWXJ:AWU7651)
(AVXJ,AYXJ: AWU7648)

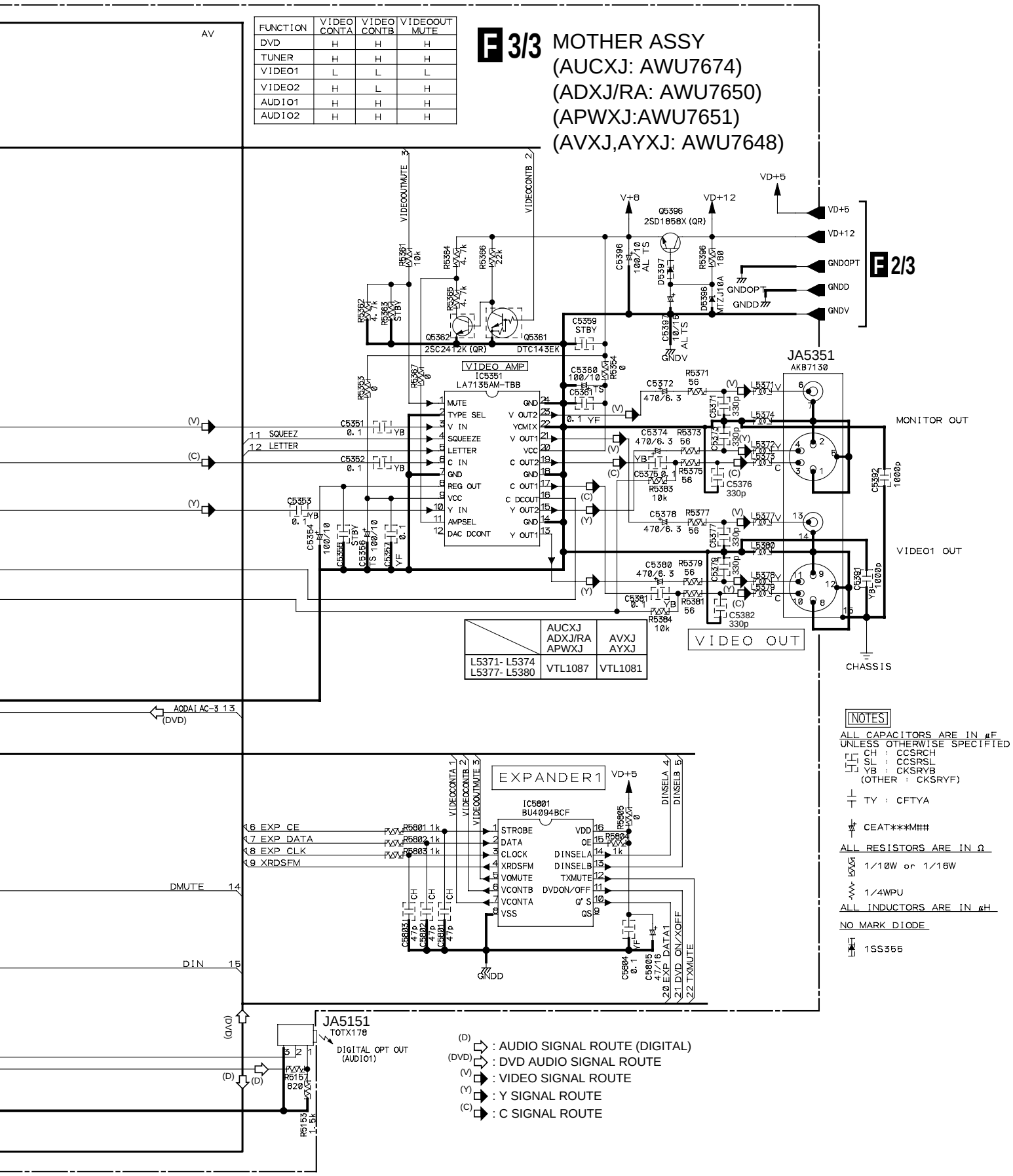

	AUCXJ ADXJ/RA APWXJ	AVXJ AYXJ
L5371- L5374 L5377- L5380	VTL1087	VTL1081

NOTES

ALL CAPACITORS ARE IN μF
UNLESS OTHERWISE SPECIFIED
CH : CCSRCH
SL : CCSRSL
YB : CKSRYB
(OTHER : CKSRYF)

TY : CFTYA

CEAT***M###

ALL RESISTORS ARE IN Ω

1/10W or 1/16W

1/4WPU

ALL INDUCTORS ARE IN μH

NO MARK DIODE

1SS355

3.9 AJKB and TRADE ASSYS

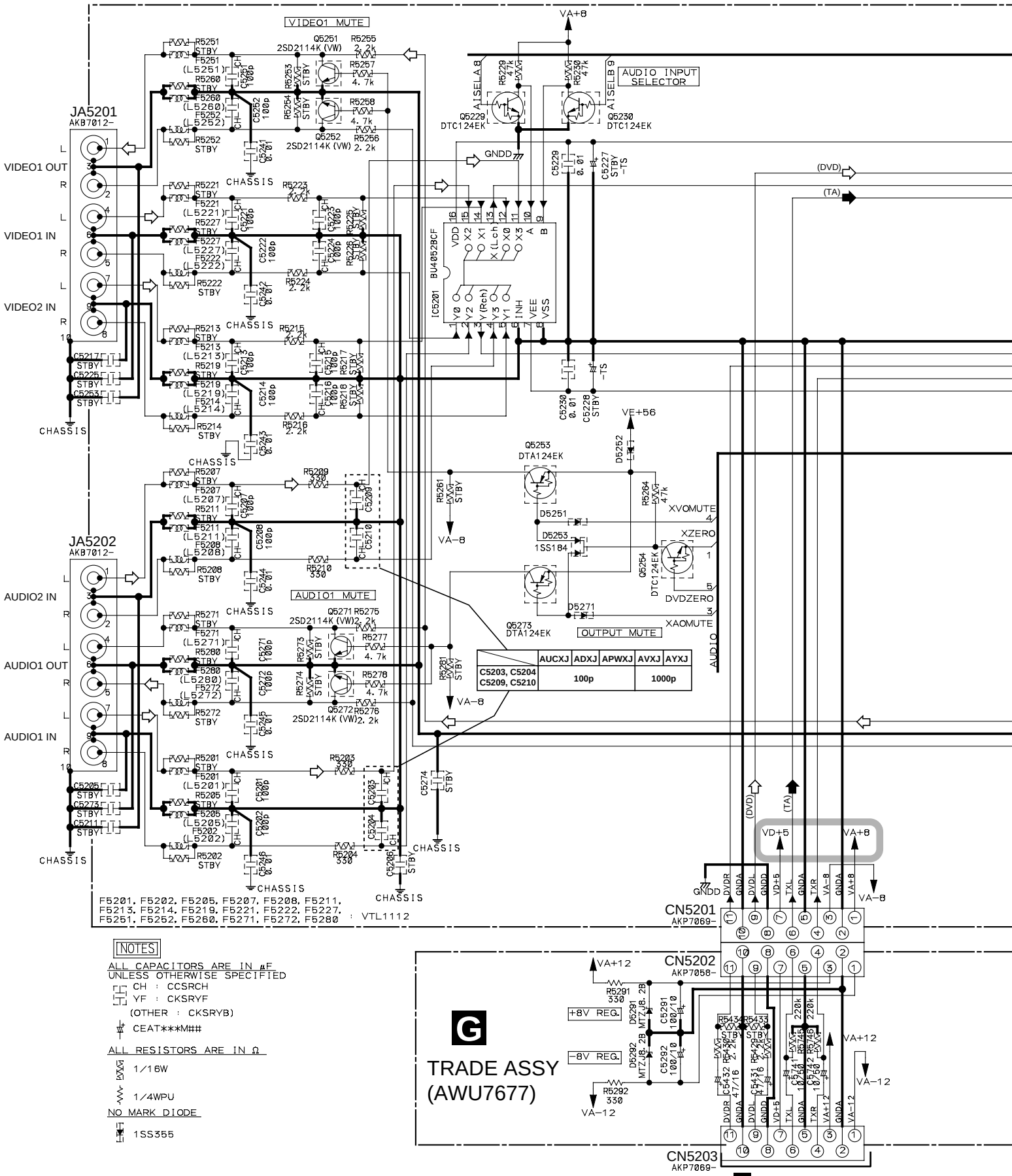

	AUCXJ	ADXJ	APWXJ	AVXJ	AYXJ
C5203, C5204 C5209, C5210	100p			1000p	

F 2/3 CN5505

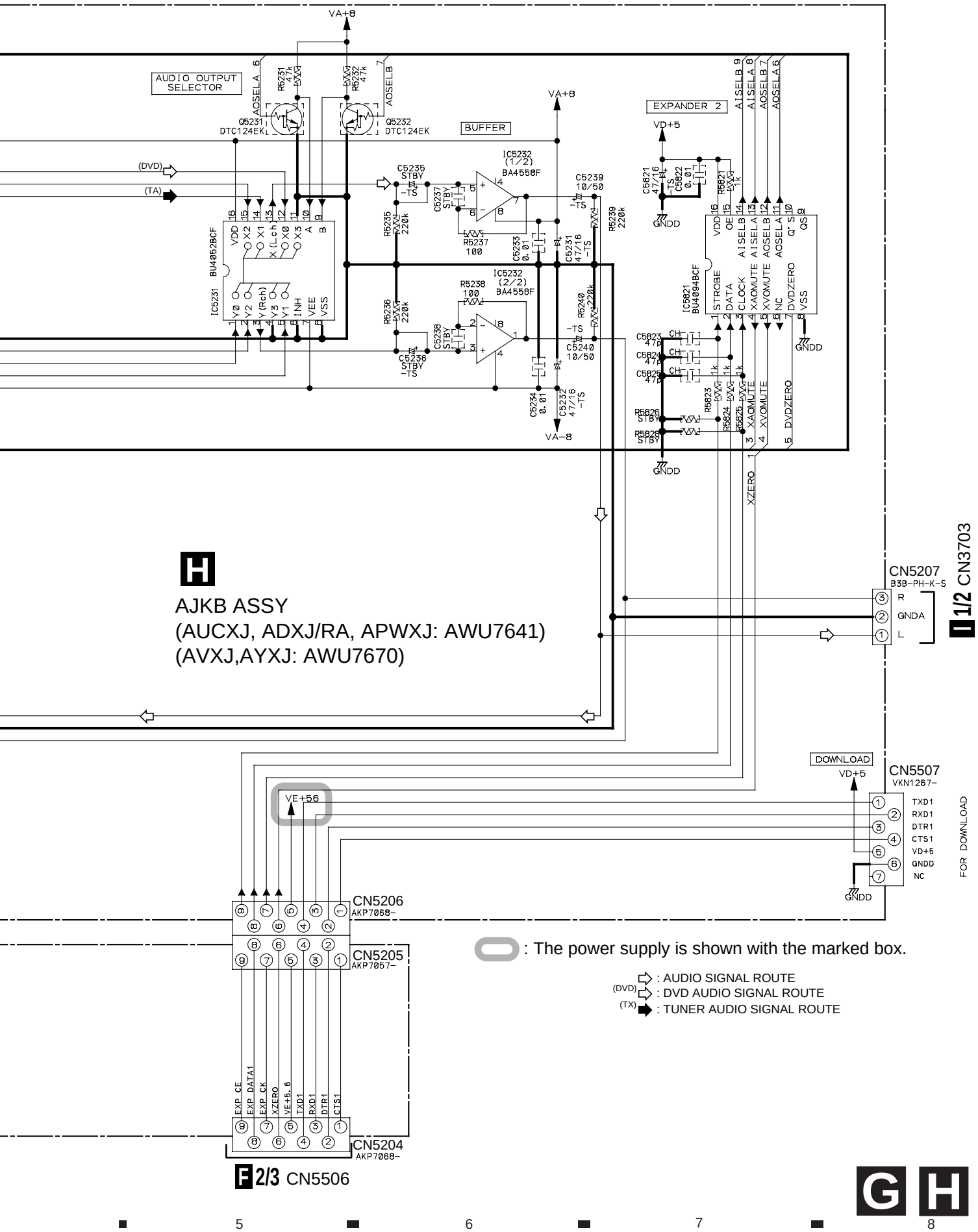
AUDIO OUTPUT SELECTOR
BUFFER
EXPANDER 2
DOWNLOAD
H
AJKB ASSY
(AUCXJ, ADXJ/RA, APWXJ: AWU7641)
(AVXJ,AYXJ: AWU7670)
CN5207
B3B-PH-K-S
1/2 CN3703
CN5507
VKN1267-
FOR DOWNLOAD
CN5206
AKP7068-
CN5205
AKP7057-
CN5204
AKP7068-
2/3 CN5506
: The power supply is shown with the marked box.
: AUDIO SIGNAL ROUTE
(DVD) : DVD AUDIO SIGNAL ROUTE
(TX) : TUNER AUDIO SIGNAL ROUTE

3.10 DSP ASSY (1/2)

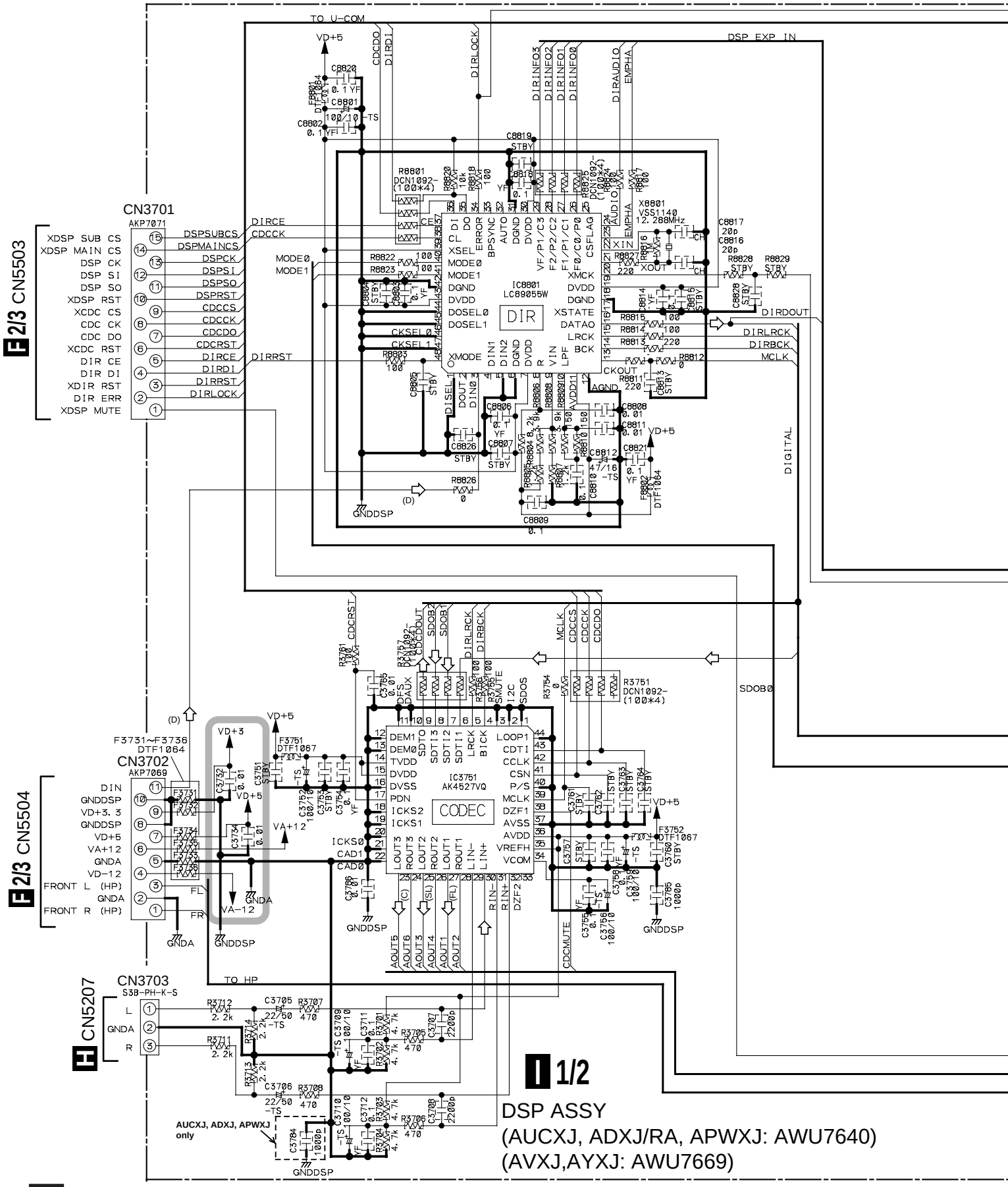

: The power supply is shown with the marked box.

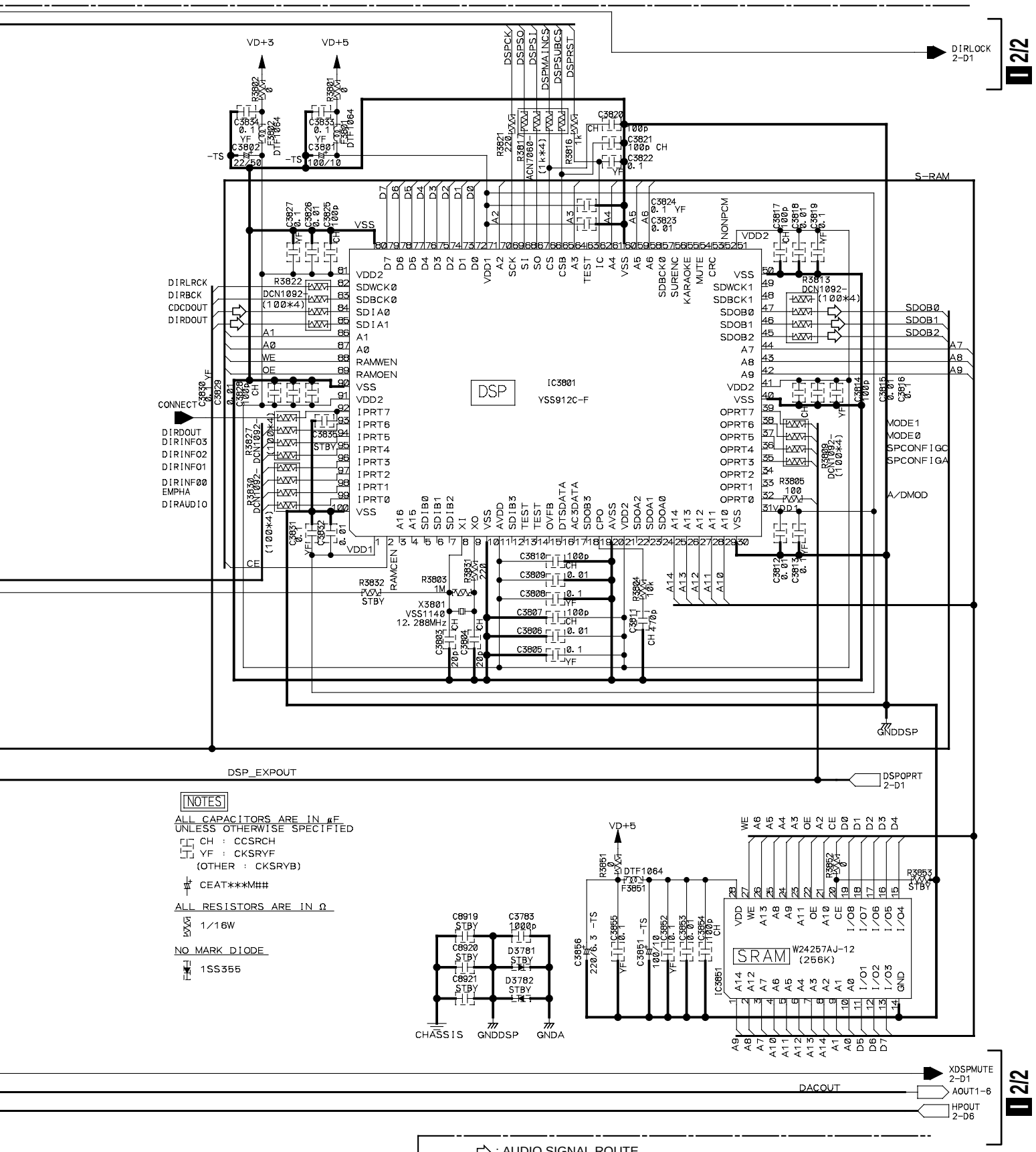

NOTES

ALL CAPACITORS ARE IN μF
UNLESS OTHERWISE SPECIFIED
CH : CCSRCH
YF : CKSRYF
(OTHER : CKSRYB)

CEAT***M##

ALL RESISTORS ARE IN Ω

1/16W

NO MARK DIODE

1SS355

: AUDIO SIGNAL ROUTE
(FL) : FL AUDIO SIGNAL ROUTE
(SL) : SL AUDIO SIGNAL ROUTE
(C) : C AUDIO SIGNAL ROUTE
(D) : AUDIO SIGNAL ROUTE (DIGITAL)

3.11 DSP ASSY (2/2)

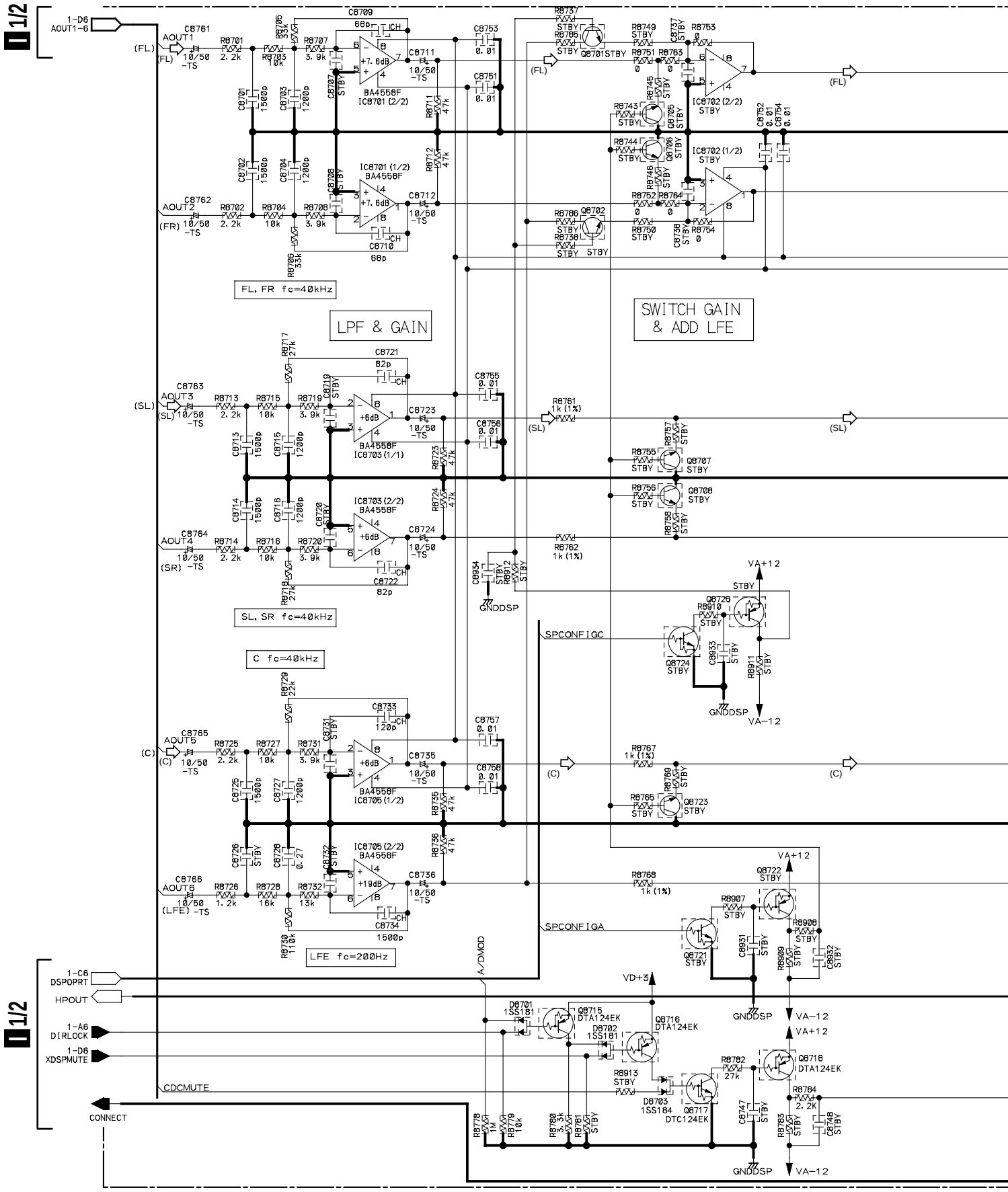

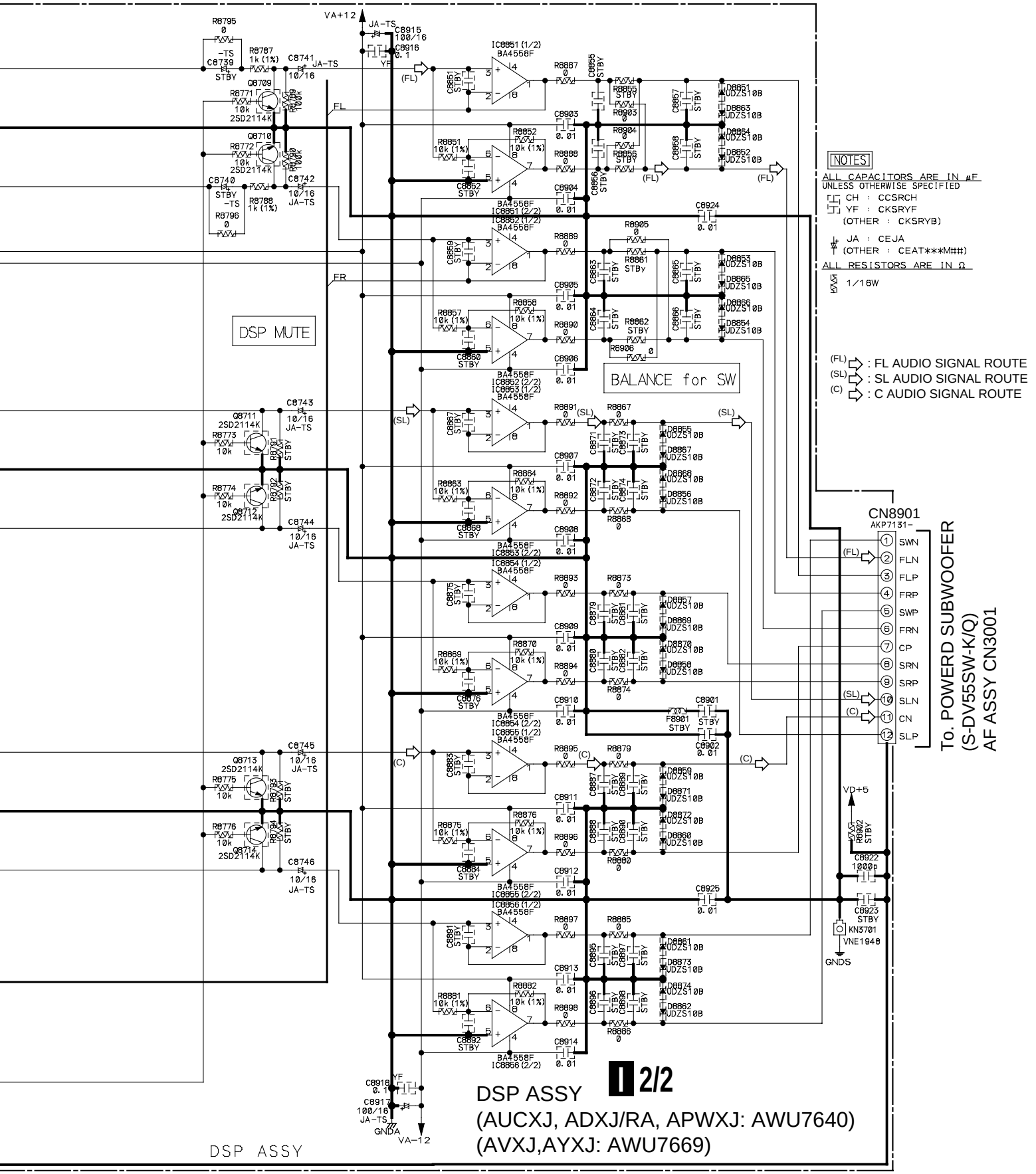
NOTES
ALL CAPACITORS ARE IN μF
UNLESS OTHERWISE SPECIFIED
CH : CCSRCH
YF : CKSRYF
(OTHER : CKSRYB)
JA : CEJA
(OTHER : CEAT***M##)
ALL RESISTORS ARE IN Ω
1/16W
(FL) : FL AUDIO SIGNAL ROUTE
(SL) : SL AUDIO SIGNAL ROUTE
(C) : C AUDIO SIGNAL ROUTE
DSP MUTE
BALANCE for SW
CN8901
AKP7131-
SWN
FLN
FLP
FRP
SWP
FRN
CP
SRN
SRP
SLN
CN
SLP
To. POWERD SUBWOOFER
(S-DV55SW-K/Q)
AF ASSY CN3001
VA+12
VA-12
VD+5
GNDA
GNDS
DSP ASSY
2/2
DSP ASSY
(AUCXJ, ADXJ/RA, APWXJ: AWU7640)
(AVXJ,AYXJ: AWU7669)

3.12 TUNER MODULE (AXQ7228)

J FM/AM TUNER MODULE (AXQ7228)
(AUCXJ, ADXJ/RA, APWXJ)

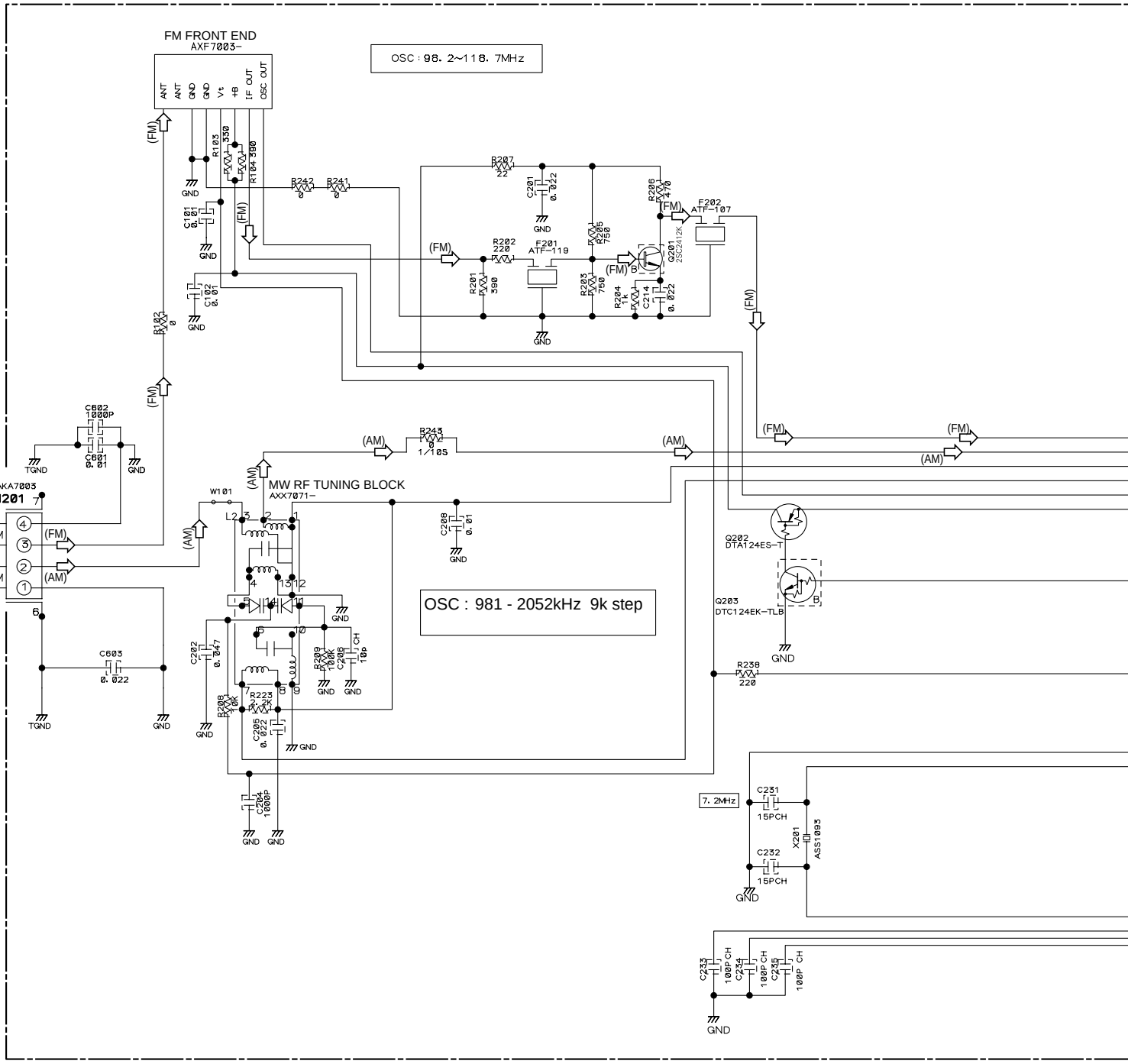

Notes

1. RESISTORS
   Indicated in Ω, 1/16W±5% Tolerance unless otherwise noted K:KΩ, M:MΩ.
2. CAPACITORS
   Indicated in Capacity(μF)/VOLTAGE(V) unless otherwise noted P:PF.
3. DIODES
   No mark diode is 1SS133.

: The power supply is shown with the marked box.

(TX) : AUDIO SIGNAL ROUTE (TUNER)
(AM) : AM SIGNAL ROUTE
(FM) : FM SIGNAL ROUTE

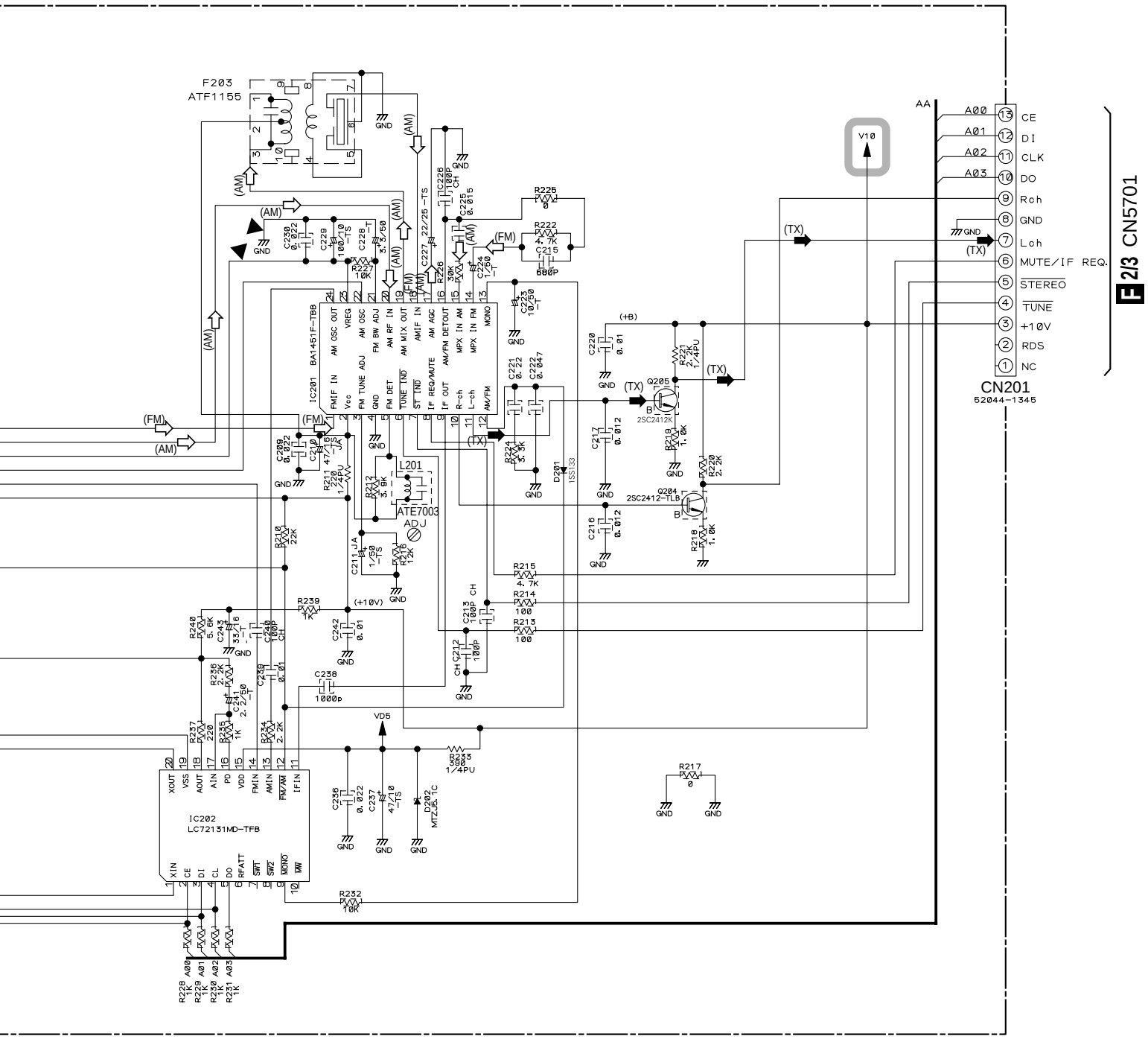

3.13 TUNER MODULE (AXQ7229)

J FM/AM TUNER MODULE (AXQ7229)
(AVXJ, AYXJ)

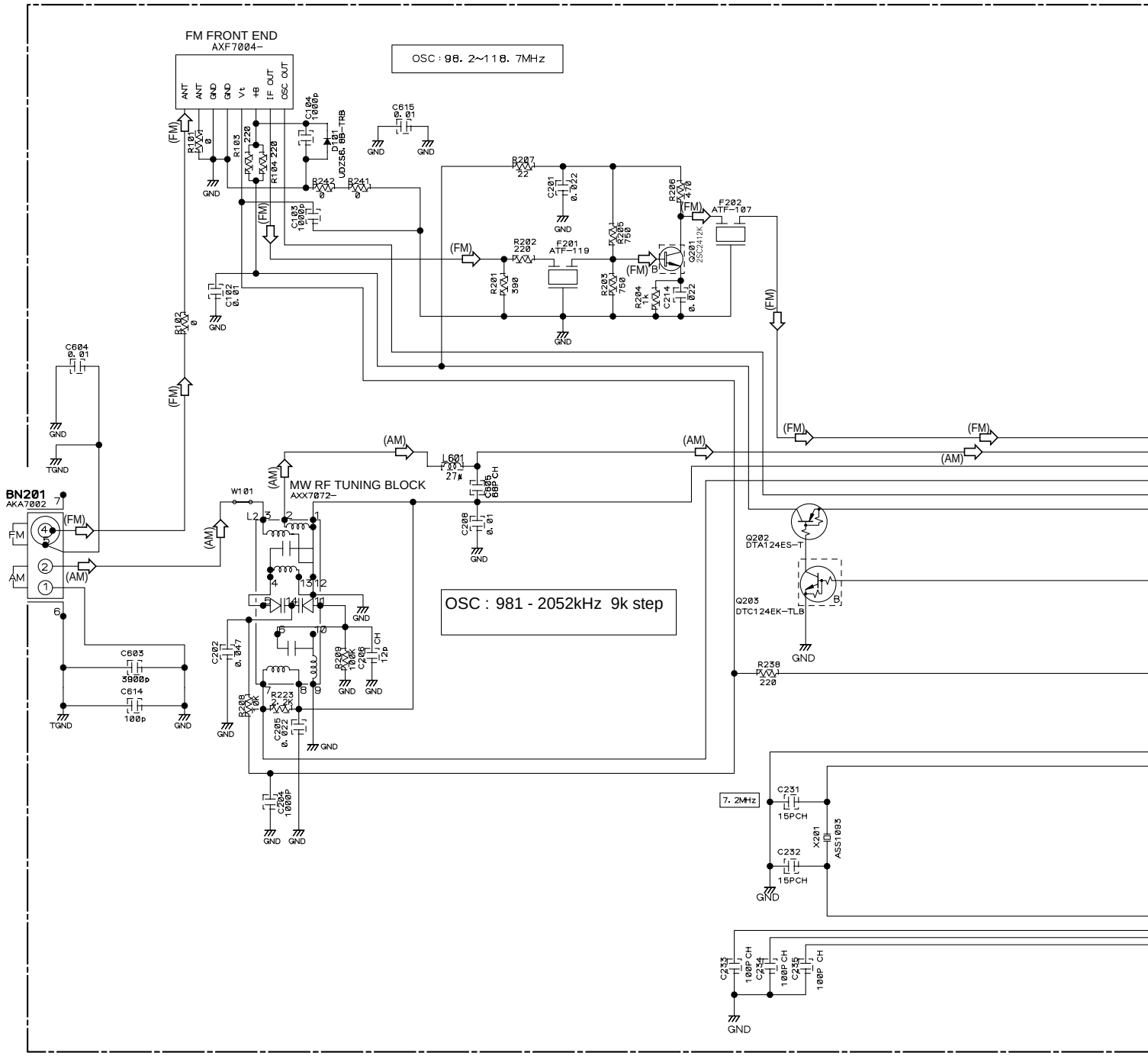

Notes

1. RESISTORS
   Indicated in Ω, 1/16W±5% Tolerance unless otherwise noted K:KΩ, M:MΩ.
2. CAPACITORS
   Indicated in Capacity(μF)/VOLTAGE(V) unless otherwise noted P:PF.
3. DIODES
   No mark diode is 1SS133.

: The power supply is shown with the marked box.

(TX) : AUDIO SIGNAL ROUTE (TUNER)

(AM) : AM SIGNAL ROUTE

(FM) : FM SIGNAL ROUTE

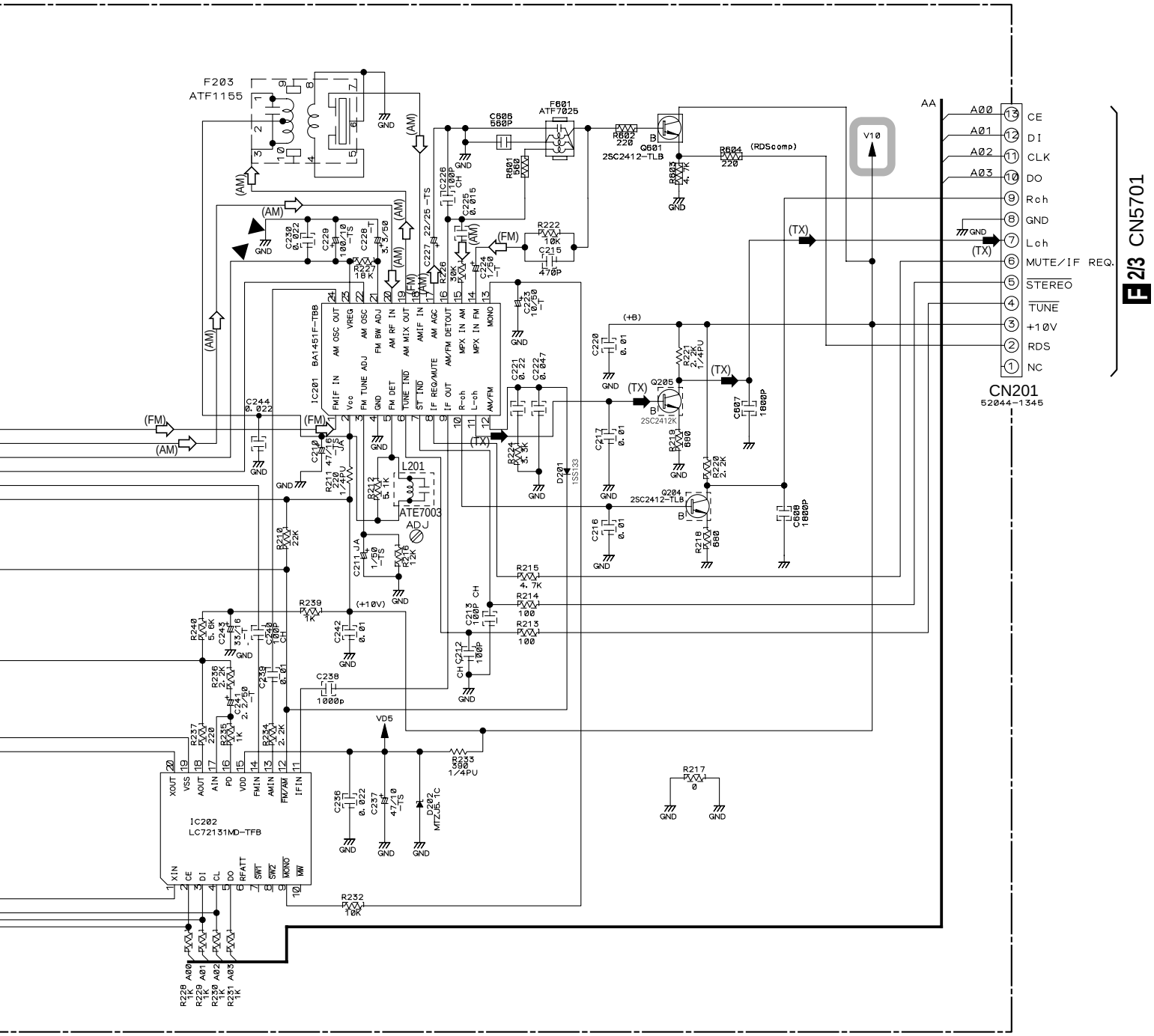

3.14 CNB, FLDP, BLED and KEYB ASSYS

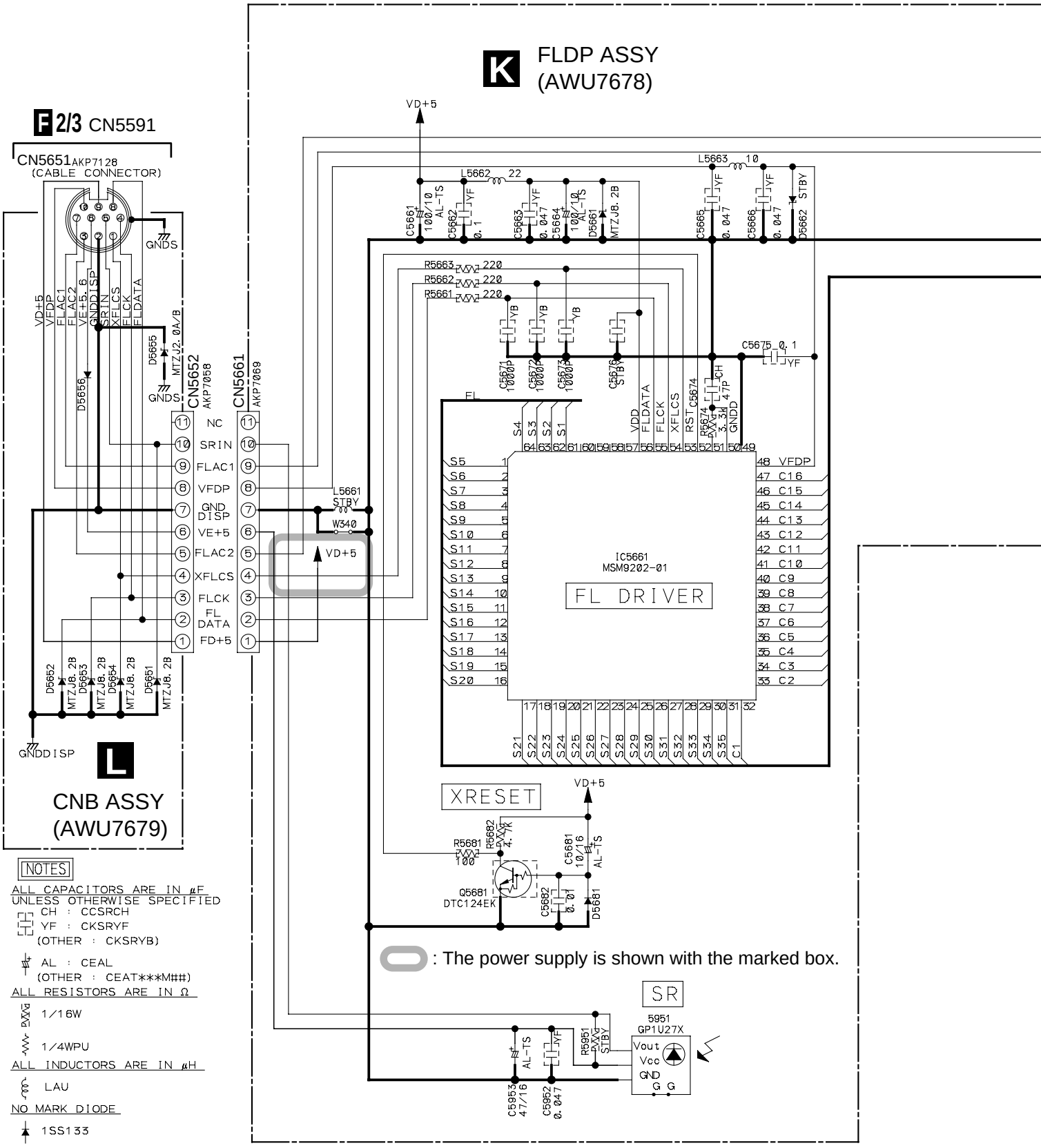

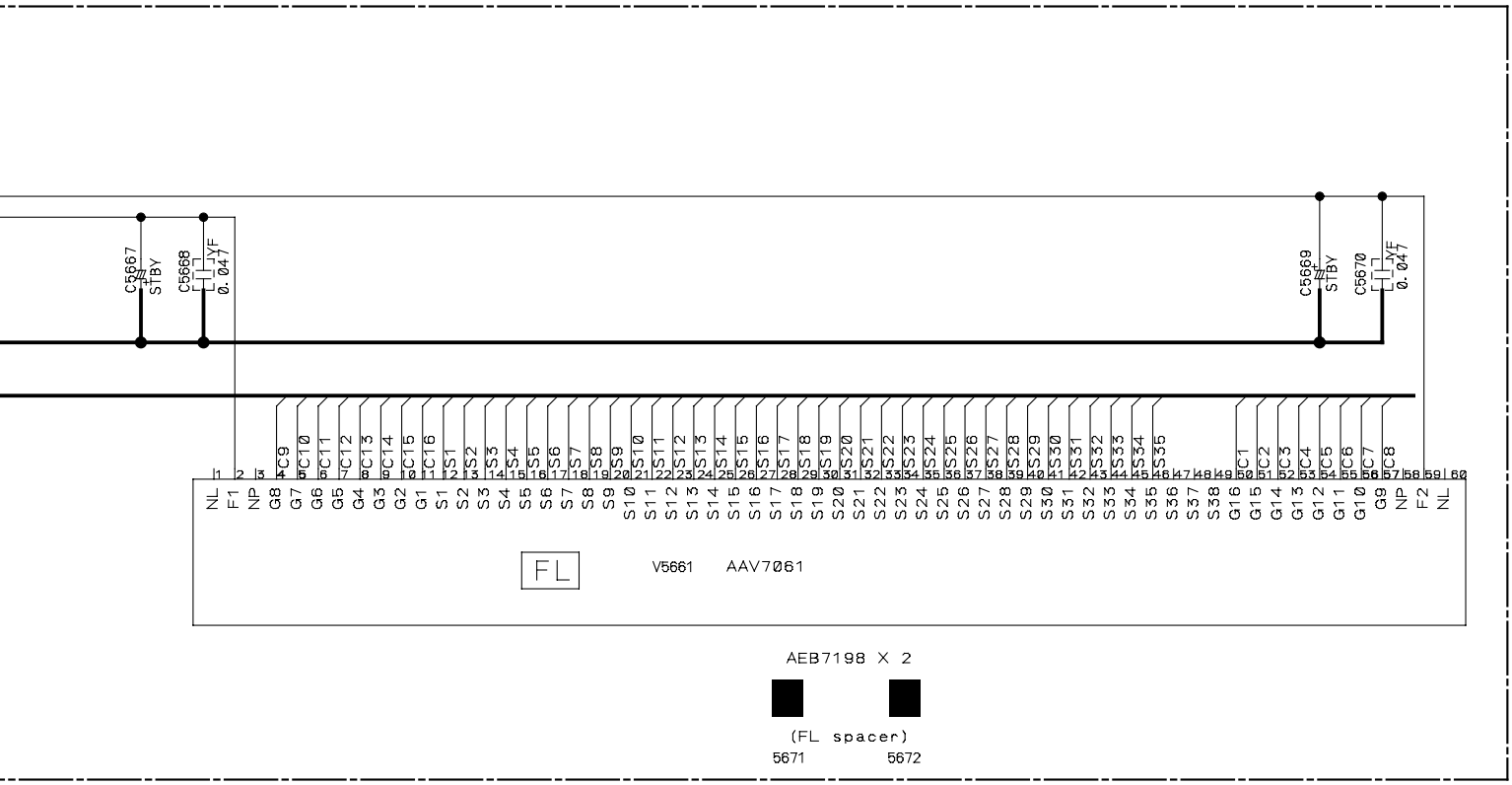
C5667 STBY
C5668 YF 0.047
C5669 STBY
C5670 YF 0.047
FL
V5661 AAV7061
AEB7198 X 2
(FL spacer)
5671
5672

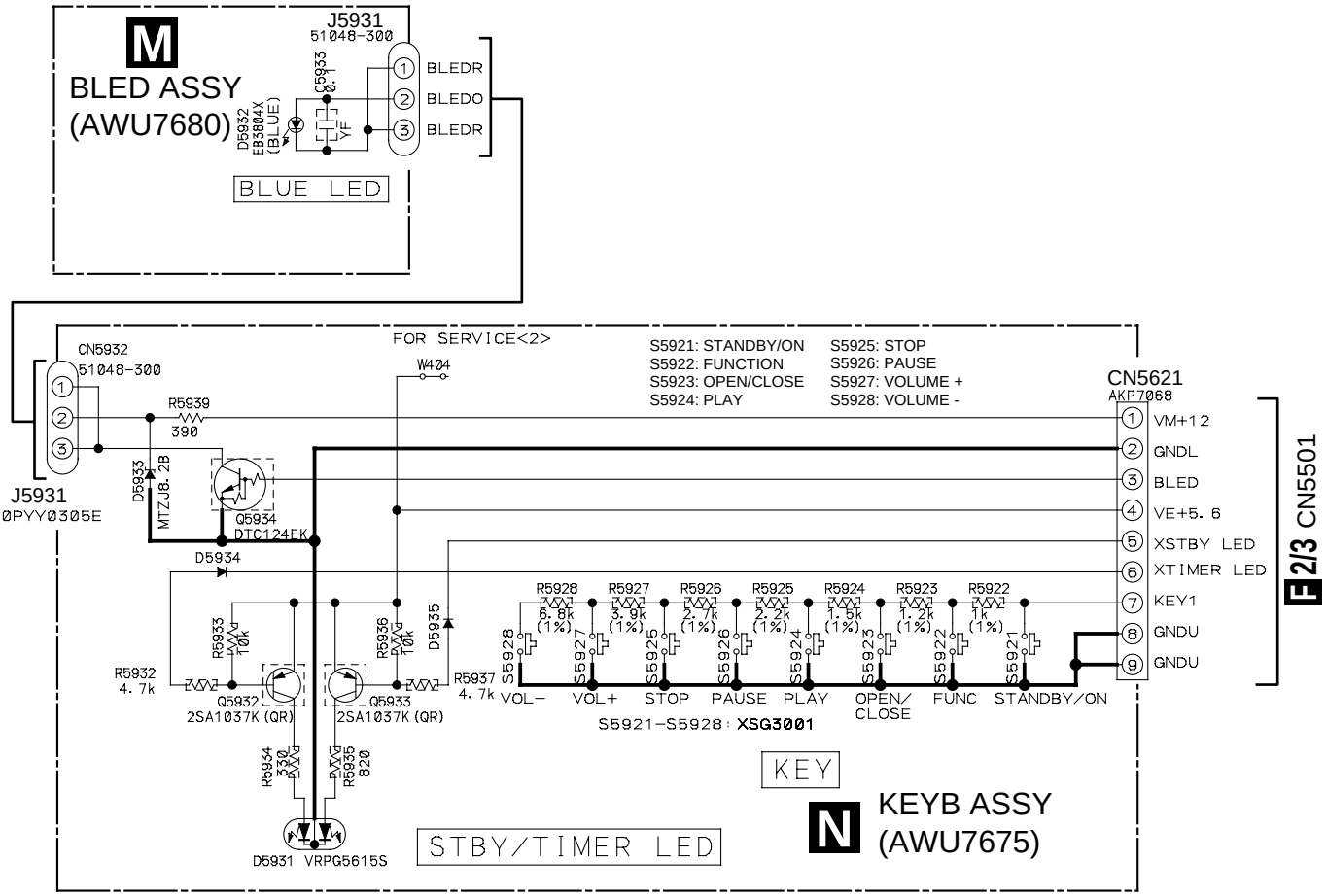
M
BLED ASSY
(AWU7680)
J5931
51048-300
BLEDR
BLEDO
BLEDR
C5933 0.1
D5932 EB3804X (BLUE)
YF
BLUE LED
CN5932
51048-300
J5931
D20PYY0305E
R5939 390
D5933 MTZJ8.2B
Q5934 DTC124EK
D5934
FOR SERVICE<2>
W404
S5921: STANDBY/ON
S5922: FUNCTION
S5923: OPEN/CLOSE
S5924: PLAY
S5925: STOP
S5926: PAUSE
S5927: VOLUME +
S5928: VOLUME -
CN5621
AKP7068
VM+12
GNDL
BLED
VE+5.6
XSTBY LED
XTIMER LED
KEY1
GNDU
GNDU
F 2/3 CN5501
R5928 6.8k (1%)
R5927 3.9k (1%)
R5926 2.7k (1%)
R5925 2.2k (1%)
R5924 1.5k (1%)
R5923 1.2k (1%)
R5922 1k (1%)
R5933 10k
R5936 10k
D5935
R5932 4.7k
R5937 4.7k
Q5932 2SA1037K (QR)
Q5933 2SA1037K (QR)
S5928 VOL−
S5927 VOL+
S5925 STOP
S5926 PAUSE
S5924 PLAY
S5923 OPEN/CLOSE
S5922 FUNC
S5921 STANDBY/ON
S5921−S5928: XSG3001
KEY
R5934 330
R5935 820
D5931 VRPG5615S
STBY/TIMER LED
N
KEYB ASSY
(AWU7675)

WAVEFORMS (DVDM ASSY)

Note : The encircled numbers denote measuring point in the schematic diagram.

Measurement condition :
- No. 1 to 4 and 6 to 11 : MJK1, Title 1-chp 1
- No. 5 : CD, ABEX-784 Track 1
- No. 12 to 14 : MJK1, Title 1-chp 4
- No. 15 to 17 : MJK1, Title 1-chp 5

1 Foot of R169 (RF)
V: 100mV/div. H: 0.2µsec/div.

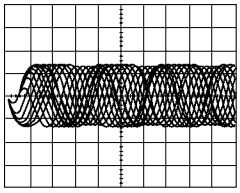

2 TP2 (RFO)
V: 500mV/div. H: 0.1µsec/div.

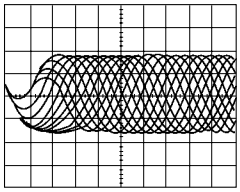

3

4 TP3 (Tracking Error)
(AI-Inner Tracking Off)
V: 500mV/div. H: 2msec/div.

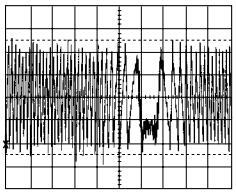

5 IC2 - pin 39 (EFM before slice)
V: 1V/div. H: 1µsec/div.

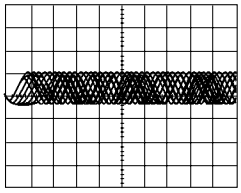

6 IC2 - pin 1 (EFM)
V: 1V/div. H: 0.2µsec/div.

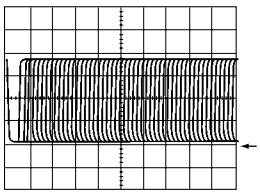

7 IC3 - pin 41 (REGB)
V: 1V/div. H: 5msec/div.

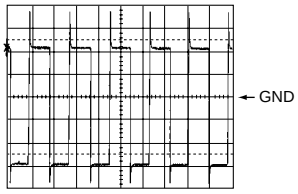

8 Foot of R261 (FPWM)
V: 1V/div. H: 5msec/div.

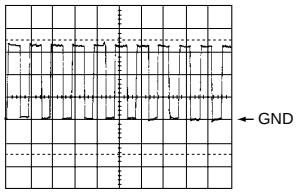

9 Foot of R262 (VPWM)
V: 1V/div. H: 5msec/div.

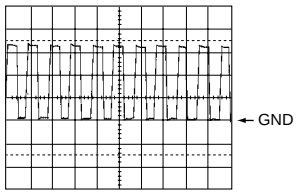

10 Foot of R263 (PPWM)
V: 1V/div. H: 5msec/div.

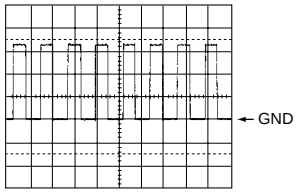

11 Foot of R264 (RPWM)
V: 1V/div. H: 5msec/div.

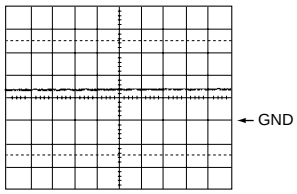

12 IC18 - pin 45
(Composite Video output)
V: 2V/div. H: 1msec/div.

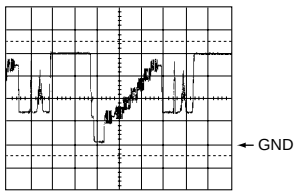

13 IC18 - pin 39 (Y output)
V: 0.2V/div. H: 5msec/div.

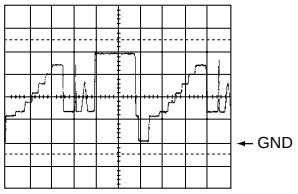

14 IC18 - pin 36 (C output)
V: 0.2V/div. H: 5msec/div.

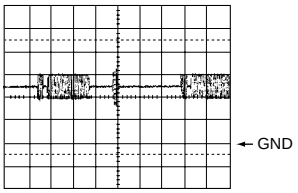

15 IC18 - pin 45 (C_B output when selecting color difference output)
V: 0.2V/div. H: 5msec/div.

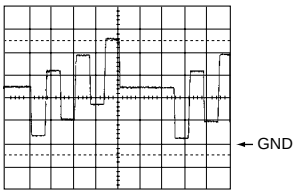

16 IC18 - pin 39 (Y output when selecting color difference output)
V: 0.2V/div. H: 5msec/div.

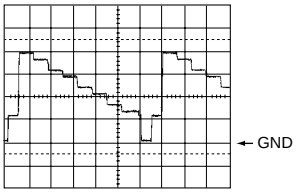

17 IC18 - pin 36 (C_R output when selecting color difference output)
V: 2V/div. H: 5msec/div.

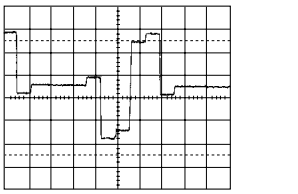

4. PCB CONNECTION DIAGRAM

NOTE FOR PCB DIAGRAMS :

1. Part numbers in PCB diagrams match those in the schematic diagrams.
2. A comparison between the main parts of PCB and schematic diagrams is shown below.

Symbol In PCB Diagrams	Symbol In Schematic Diagrams	Part Name
B C E	B C E B C E	Transistor
B C E	B C E B C E	Transistor with resistor
D G S	D G S D G S	Field effect transistor
		Resistor array
		3-terminal regulator

3. The parts mounted on this PCB include all necessary parts for several destinations.
   For further information for respective destinations, be sure to check with the schematic diagram.
4. View point of PCB diagrams.

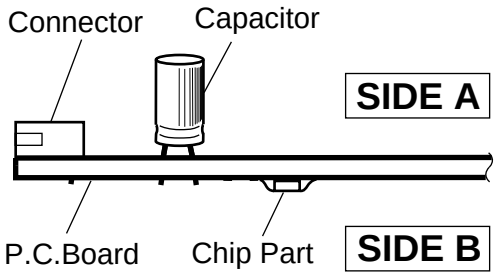

4.1 LOAB, SMEB ASSYS

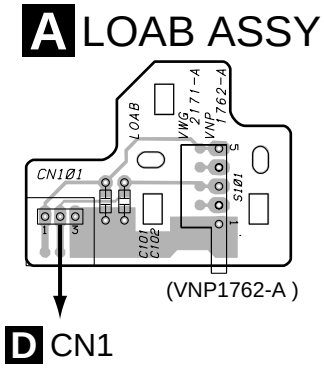

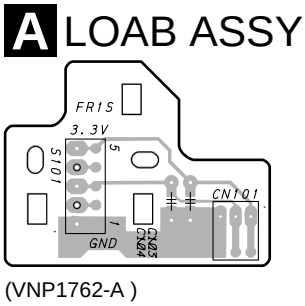

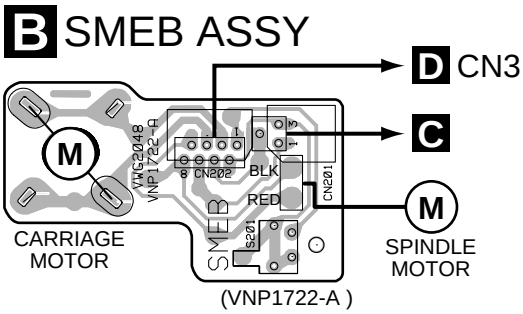

SIDE A

SIDE B

4.2 DVDM ASSY

D DVDM ASSY

• This PCB is a four-layered board.

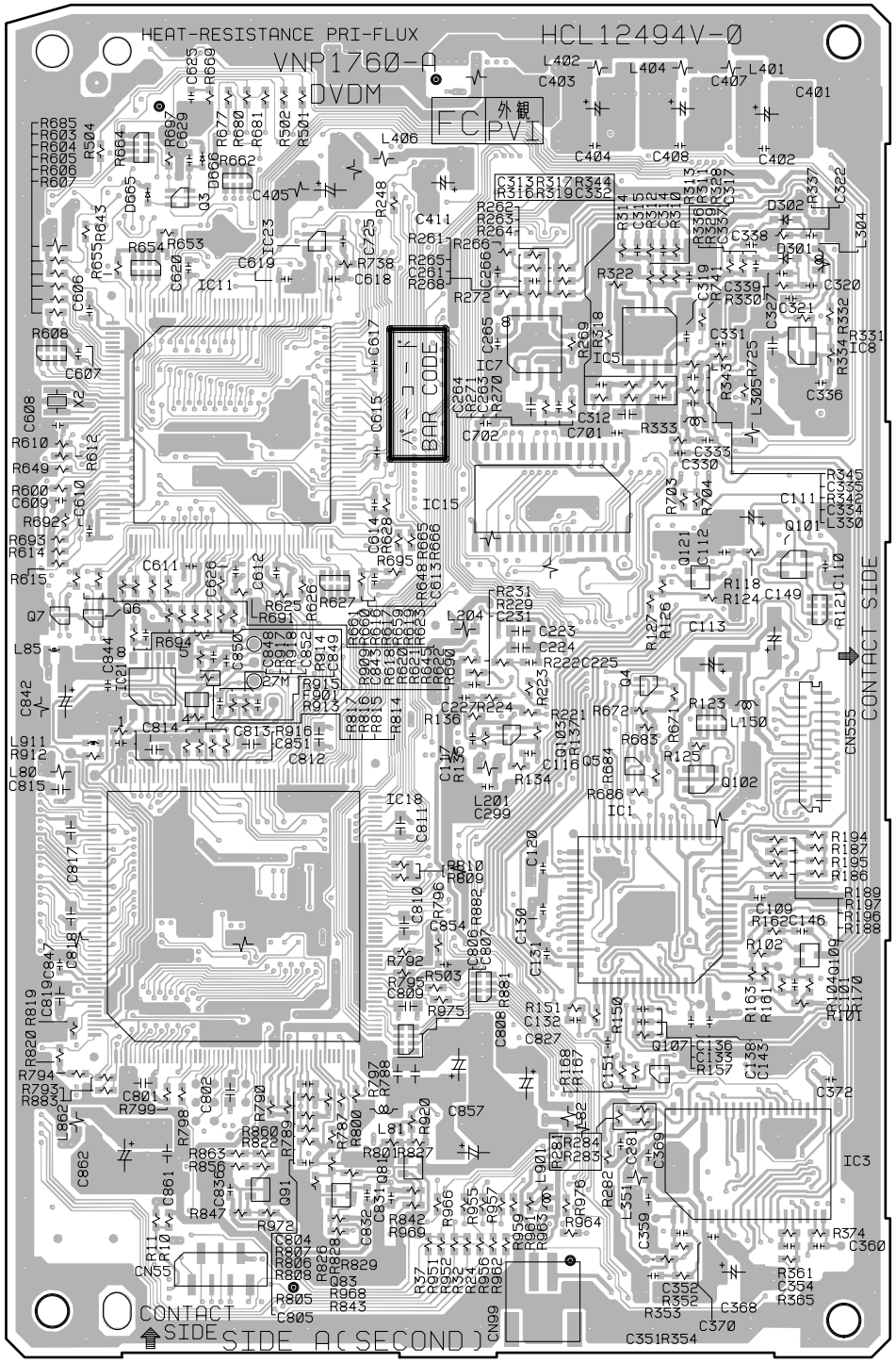

Q3

IC7 IC5 IC8

IC11

IC15

Q121 Q101
Q7 Q6

IC21 Q4

Q103
Q5 Q102

IC18 IC1
Q109

Q107

Q81 IC3
Q91 Q83

(VNP1760-A)

SIDE A

D DVDM ASSY

• This PCB is a four-layered board.

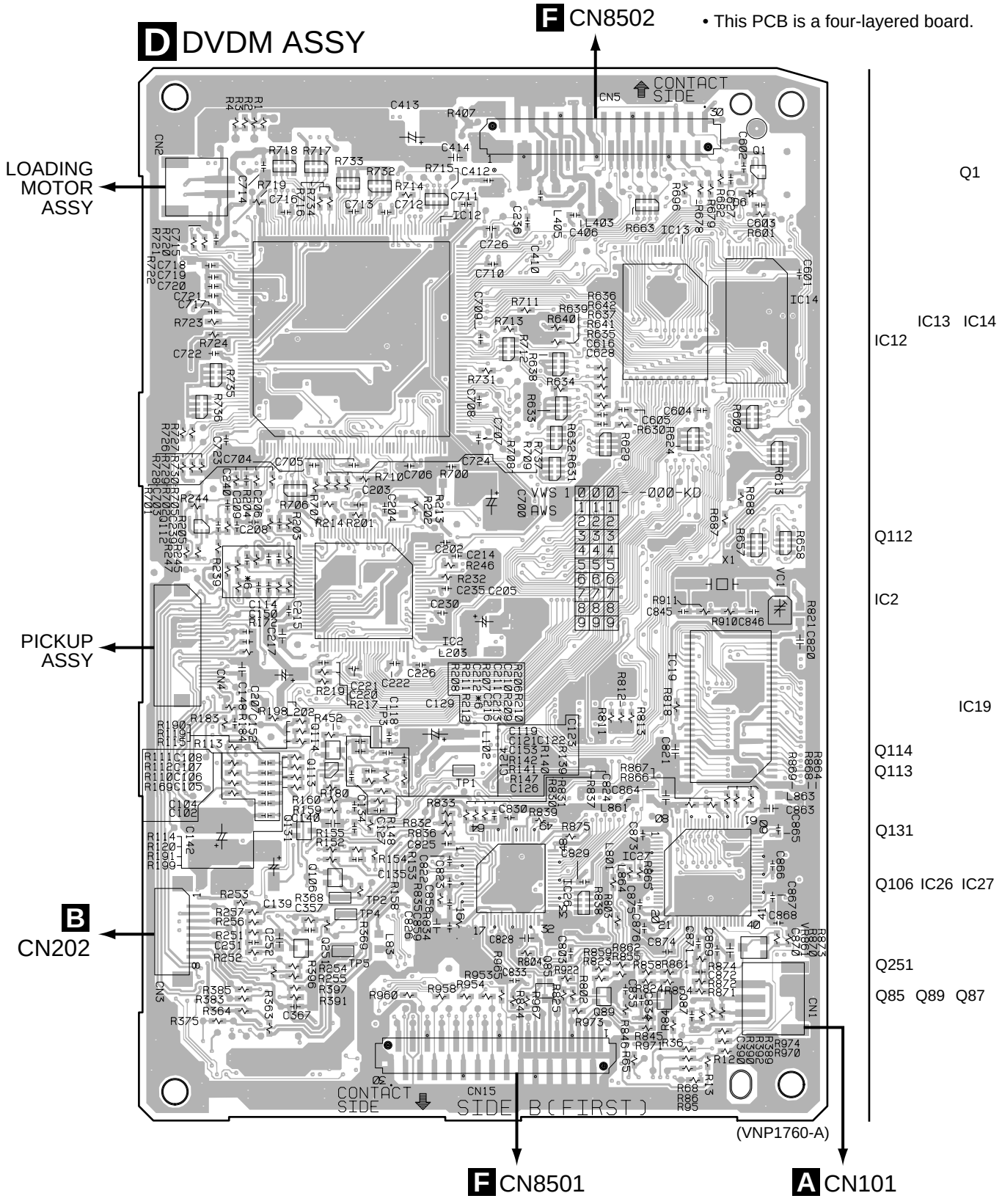

SIDE B

4.3 REGULATOR and MOTHER ASSYS

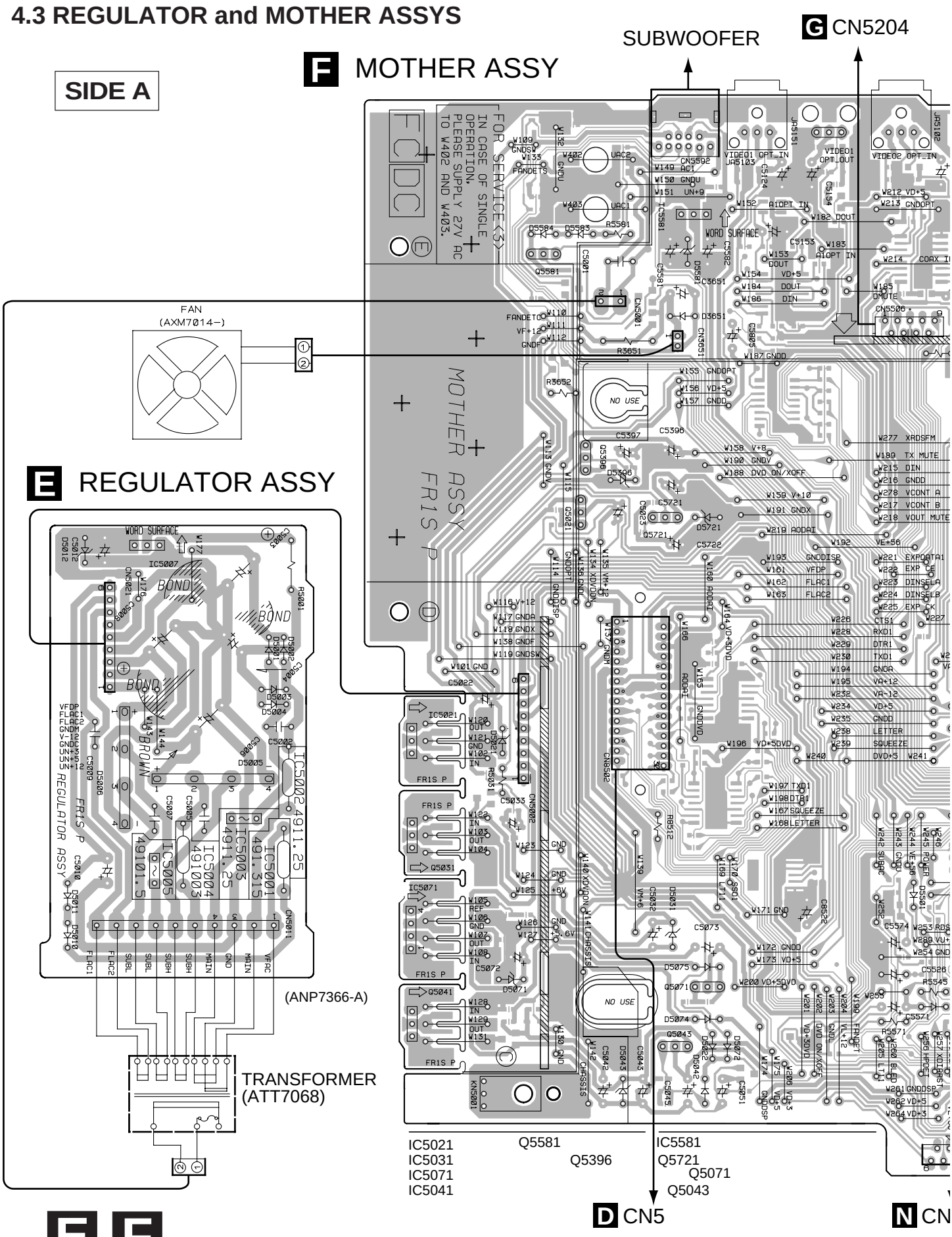

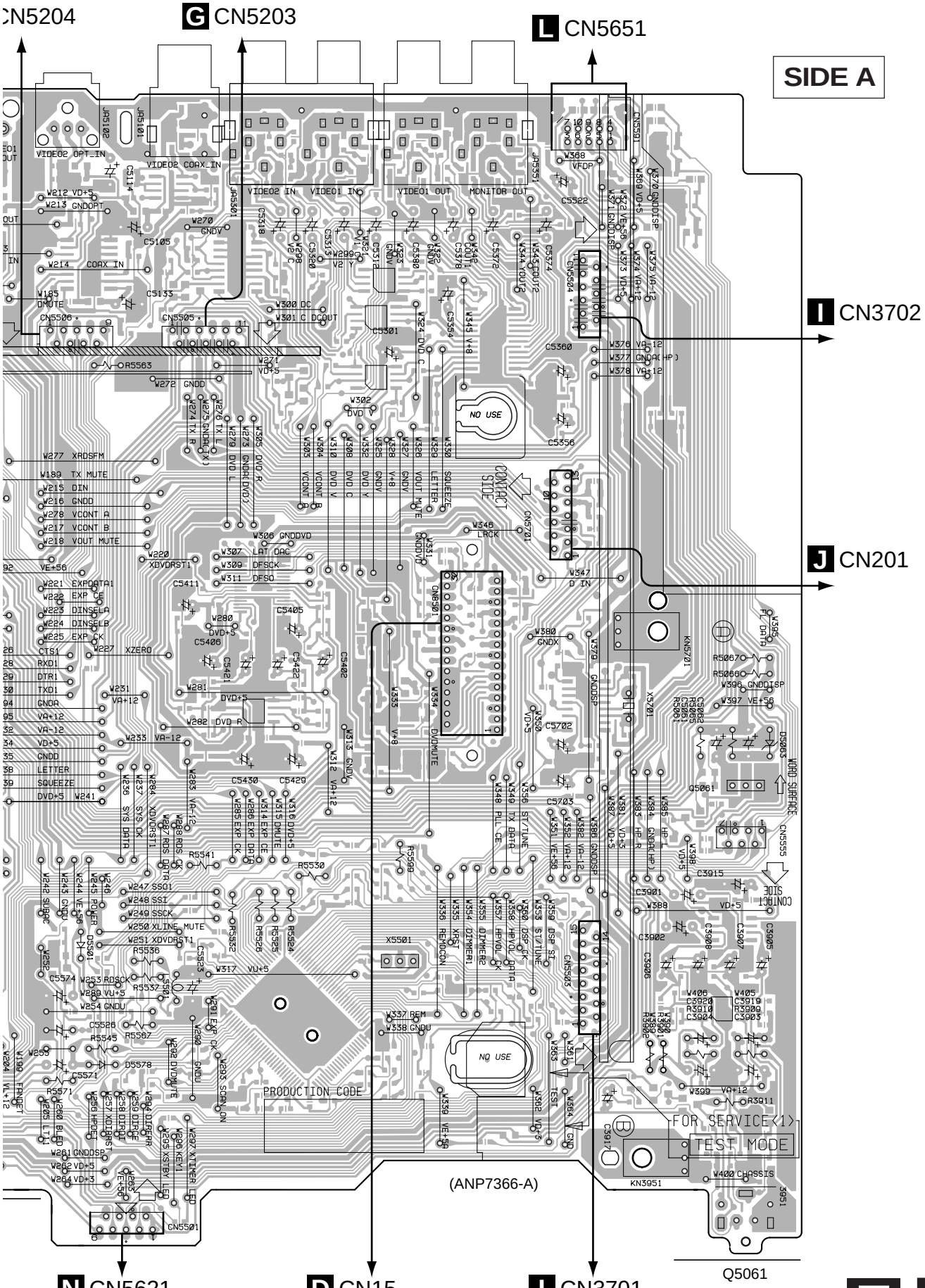
CN5204
G CN5203
L CN5651
SIDE A
I CN3702
J CN201
N CN5621
D CN15
I CN3701
Q5061
(ANP7366-A)
PRODUCTION CODE
NO USE
CONTACT SIDE
FOR SERVICE<1>
TEST MODE

MOTHER ASSY

SIDE B

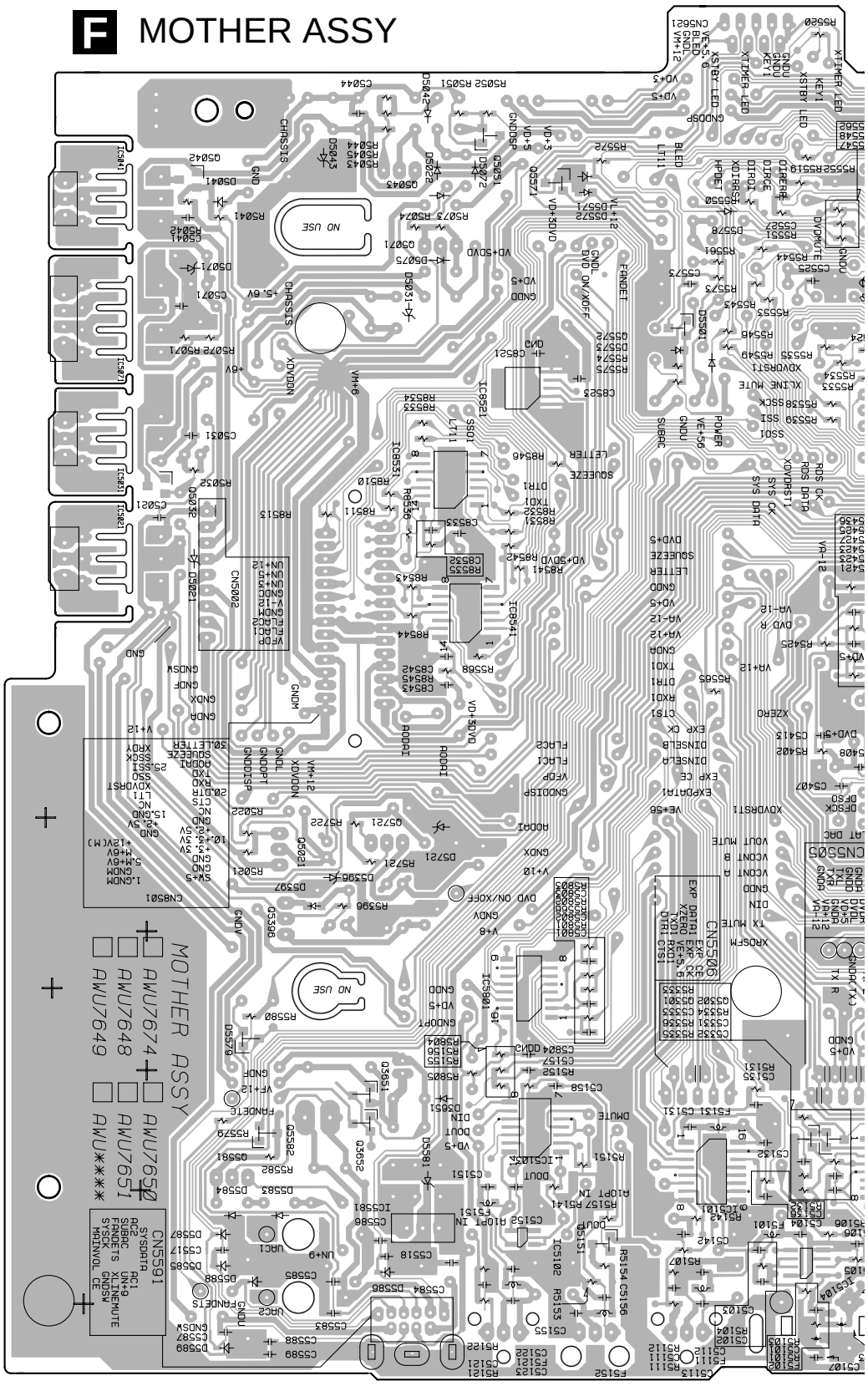

Q5582 Q3651 Q3652 Q5051 IC8531 IC8541 Q5571 IC8521 IC5801 IC5103 Q5151 IC5101 Q5301 Q530 IC5104

SIDE B

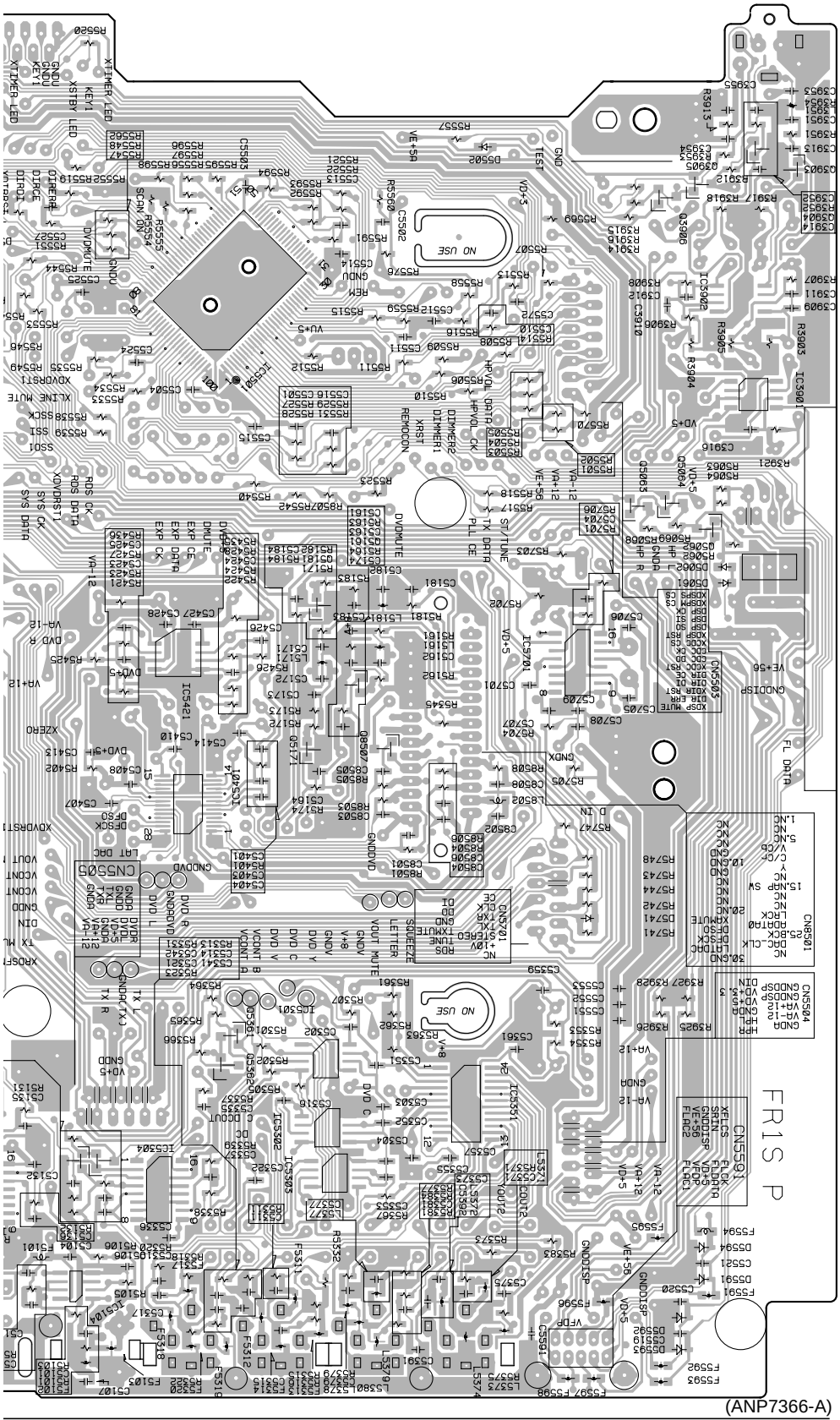

(ANP7366-A)

IC5421 IC5501 Q5181 Q5161
IC5401 IC5301 Q5171 Q8507
Q5301 Q5302 Q5361 IC5302 IC5351
IC5104 IC5304 Q5362 IC5303

Q3906 Q3905 Q3903
Q5063 Q5064 Q3904
IC5701 Q5062 IC3901
IC3901

4.4 TRADE and AJKB ASSYS

G TRADE ASSY

SIDE A

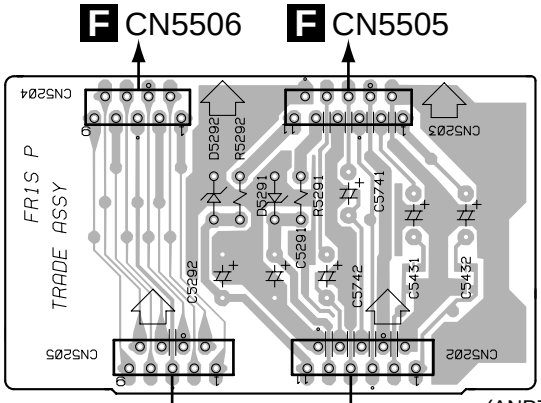

(ANP7366-A)

H AJKB ASSY

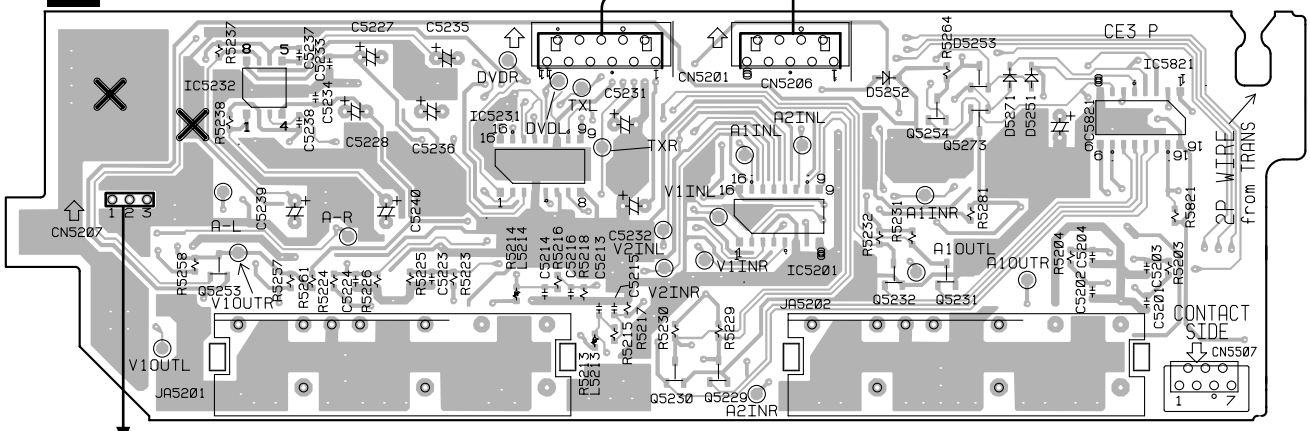

I CN3703

IC5232 Q5253 IC5231 Q5230 Q5229 IC5201 Q5232 Q5231 Q5254 Q5273 IC5821

(ANP7366-A)

H AJKB ASSY

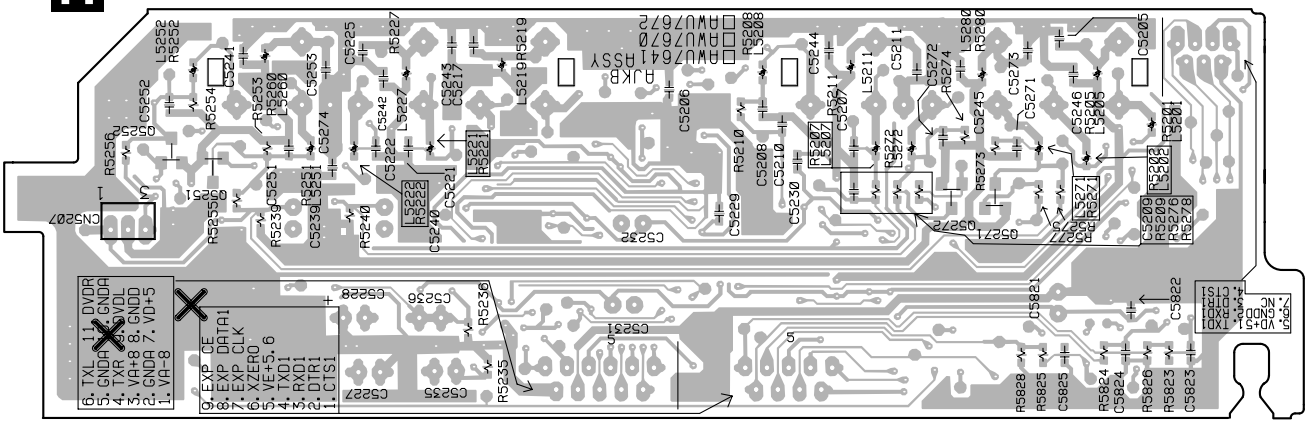

Q5252 Q5251 Q5272 Q5271

(ANP7367-B)

G TRADE ASSY

SIDE B

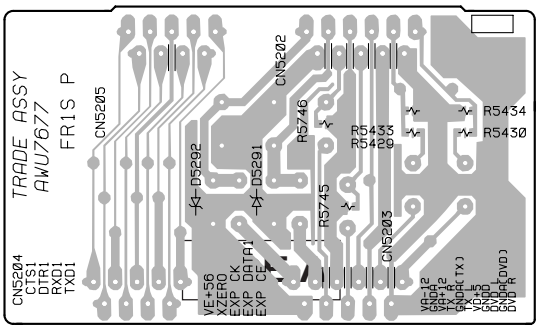

(ANP7366-A)

4.5 DSP ASSY

I DSP ASSY

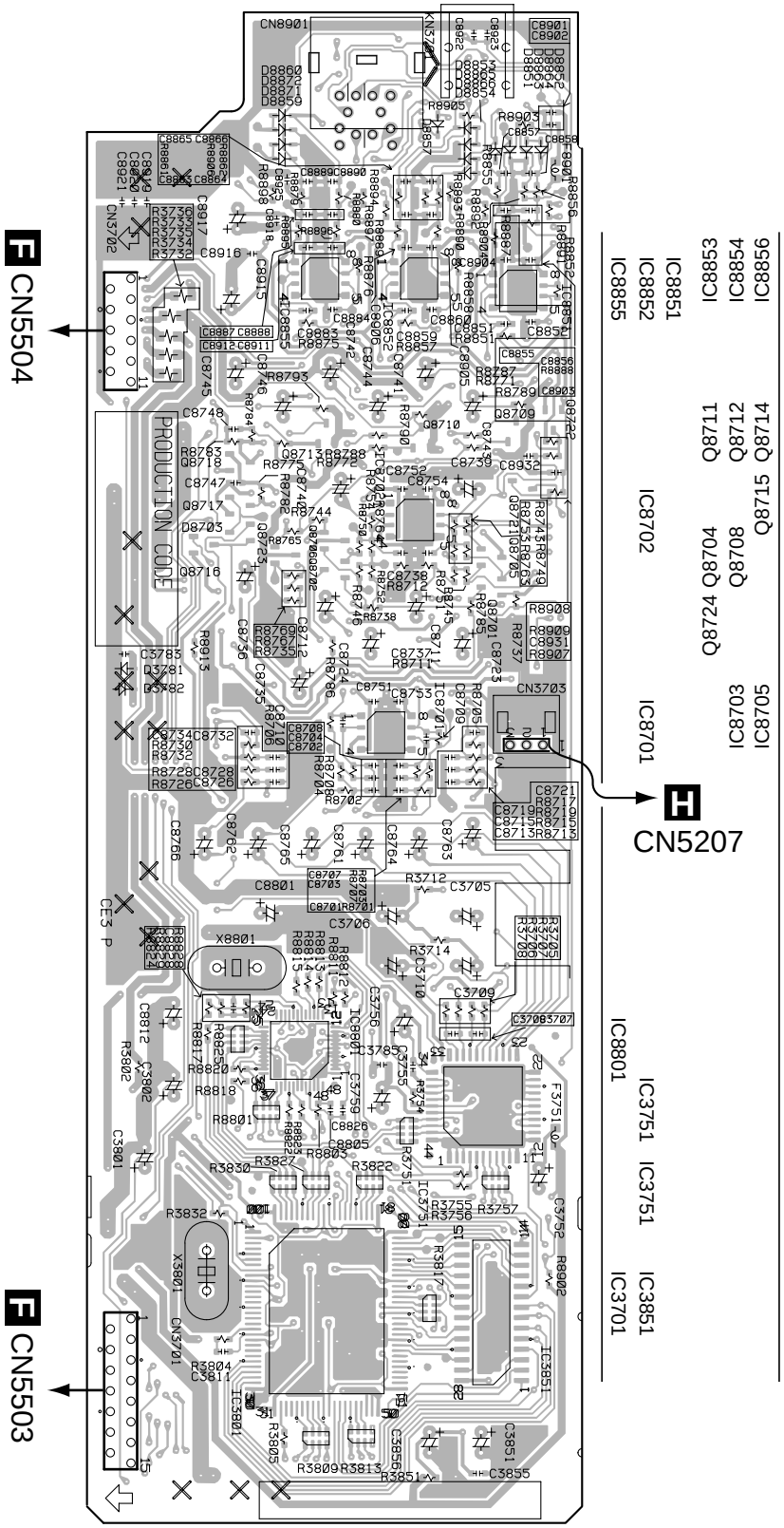

(ANP7367-B)

SIDE A

I DSP ASSY

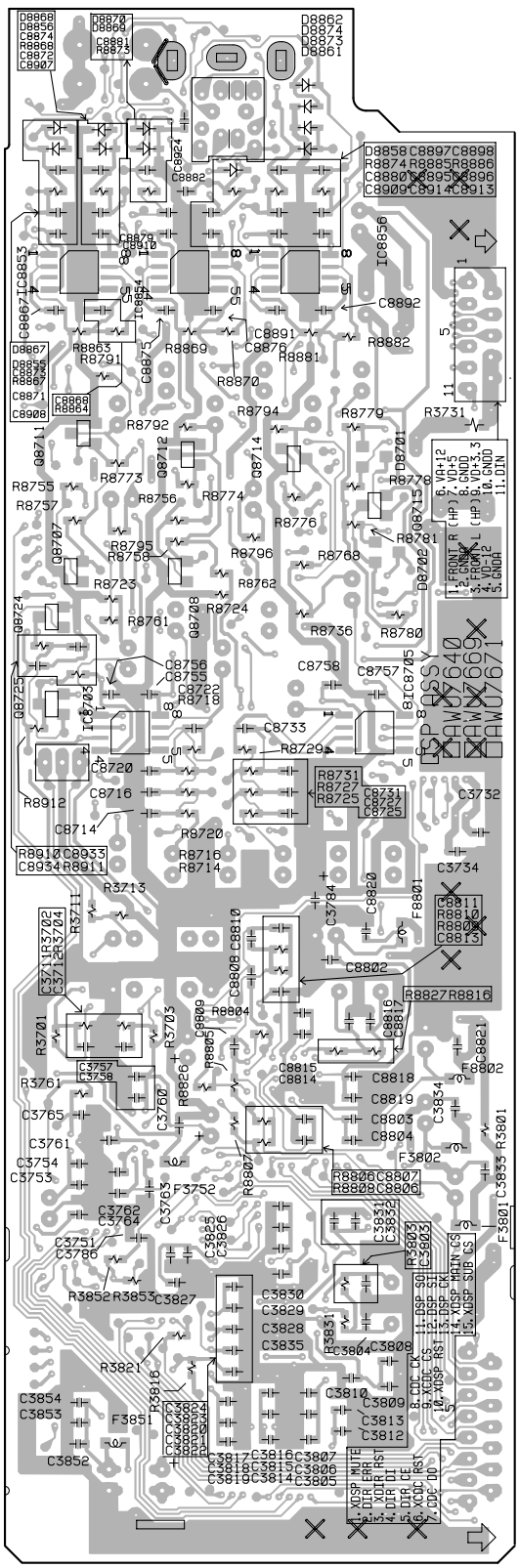

(ANP7367-B)

SIDE B

4.6 FM/AM TUNER MODULE

J FM/AM TUNER MODULE

SIDE A

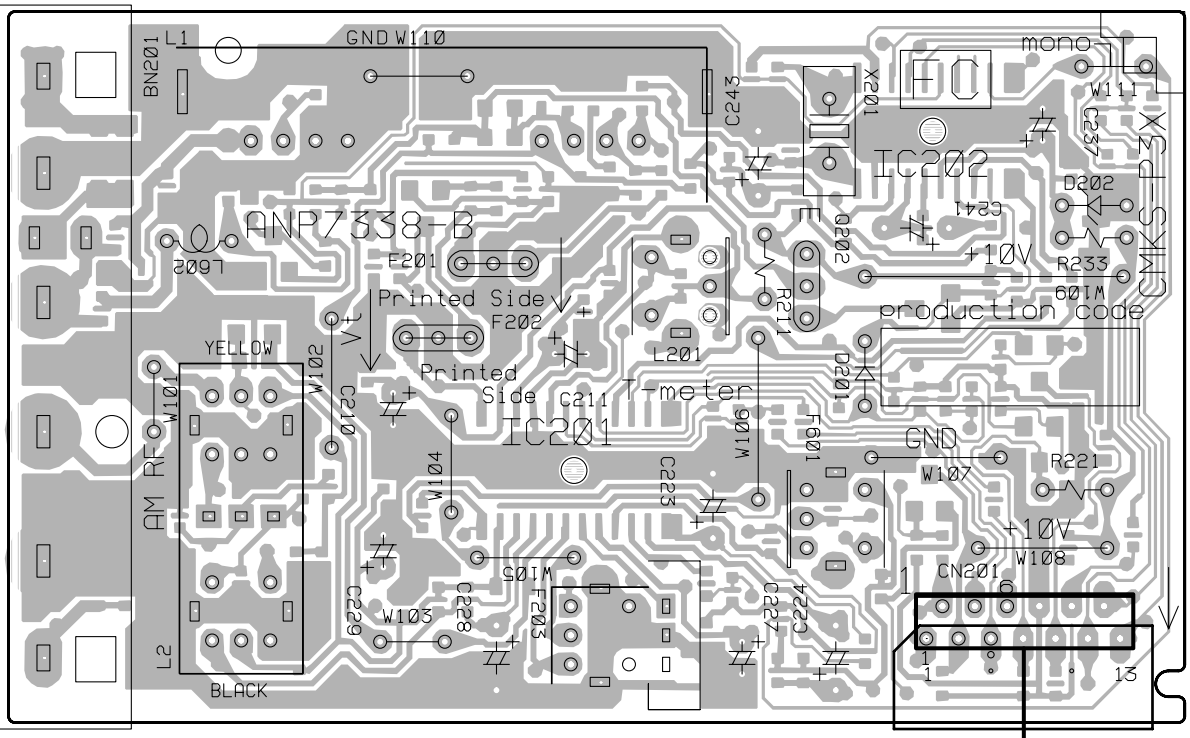

(ANP7338-B)

Q202

J FM/AM TUNER MODULE

SIDE B

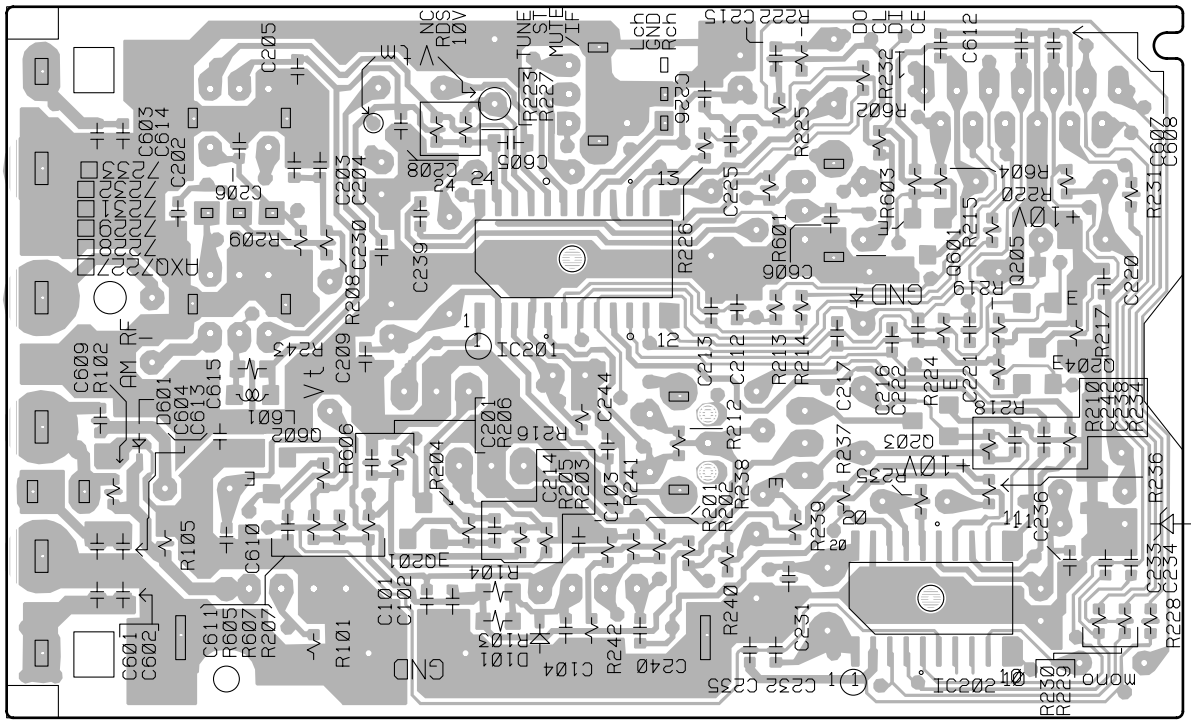

(ANP7338-B)

Q201 IC201 Q203 IC202 Q205 Q204

4.7 FLDP and CNB ASSYS

K FLDP ASSY

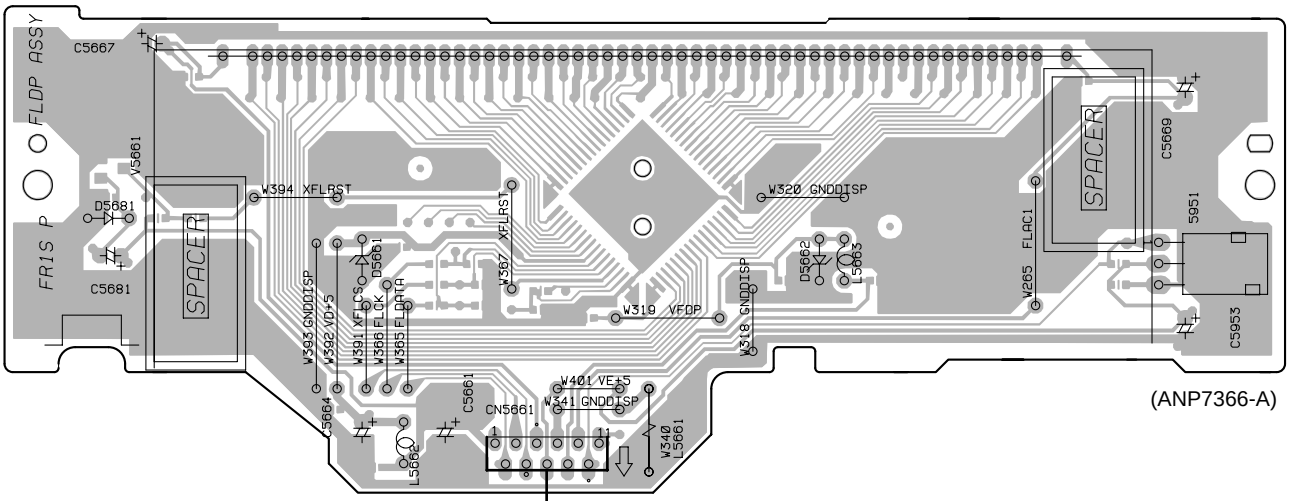

(ANP7366-A)

L CNB ASSY

SIDE A

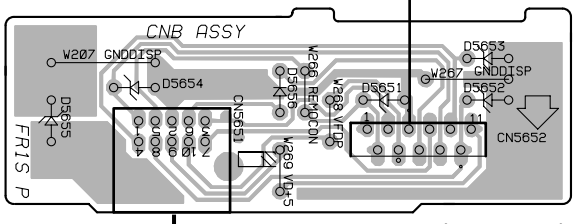

(ANP7366-A)

F CN5591

K FLDP ASSY

SIDE B

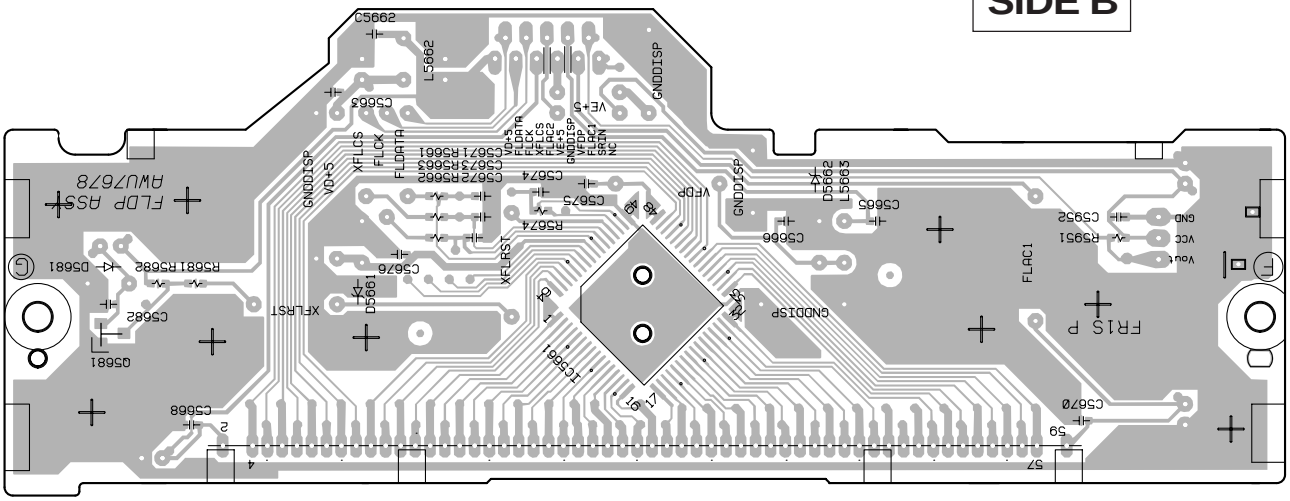

(ANP7366-A)

Q5681 IC5661

4.8 BLED and KEYB ASSYS

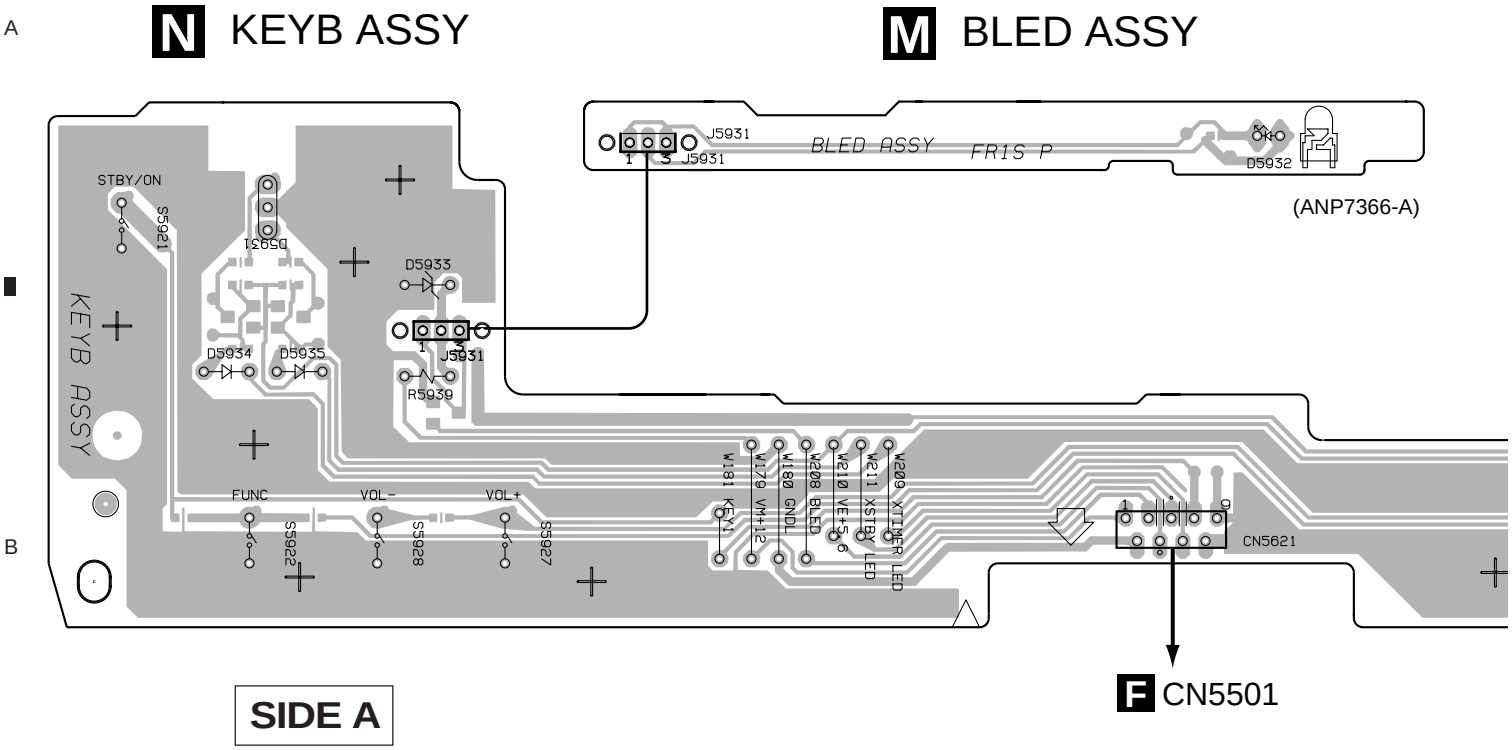

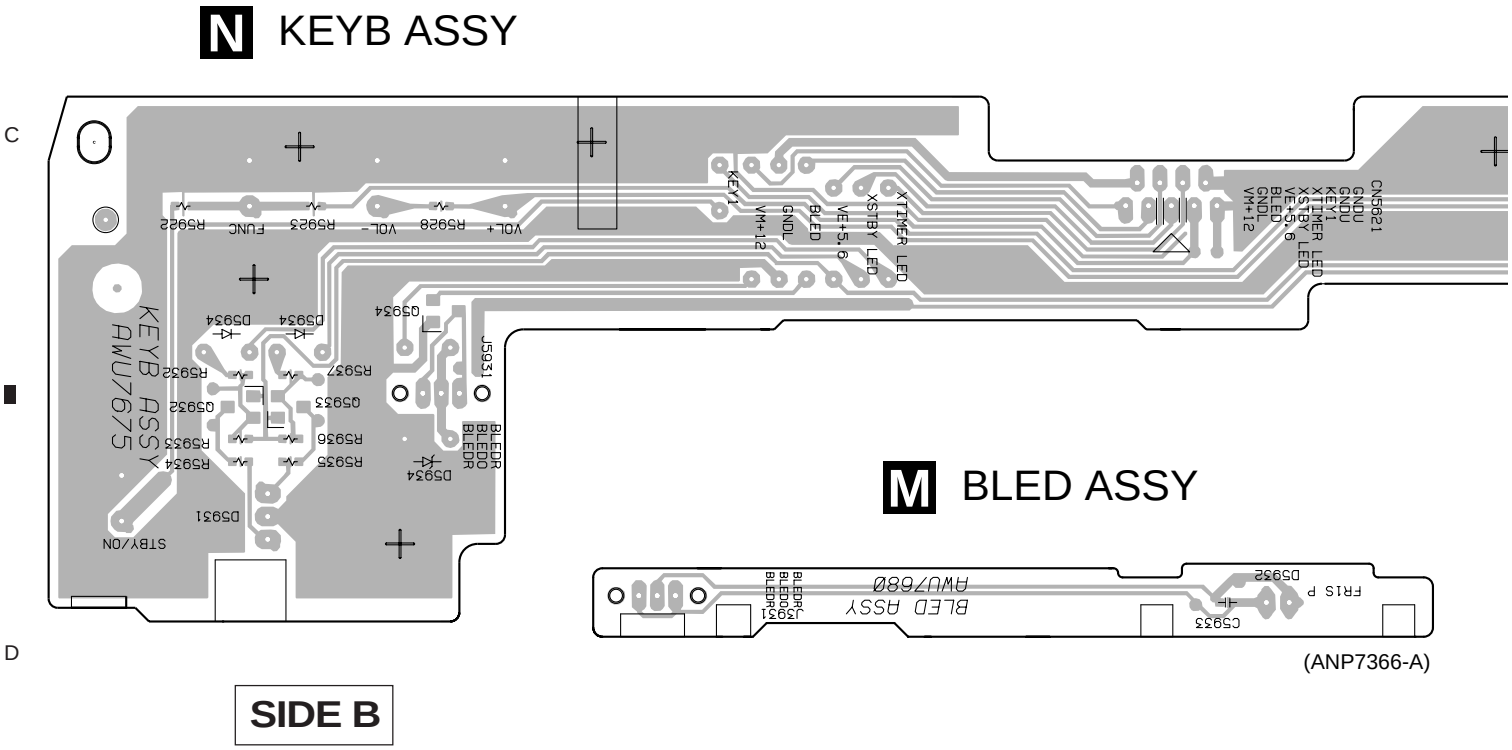

A

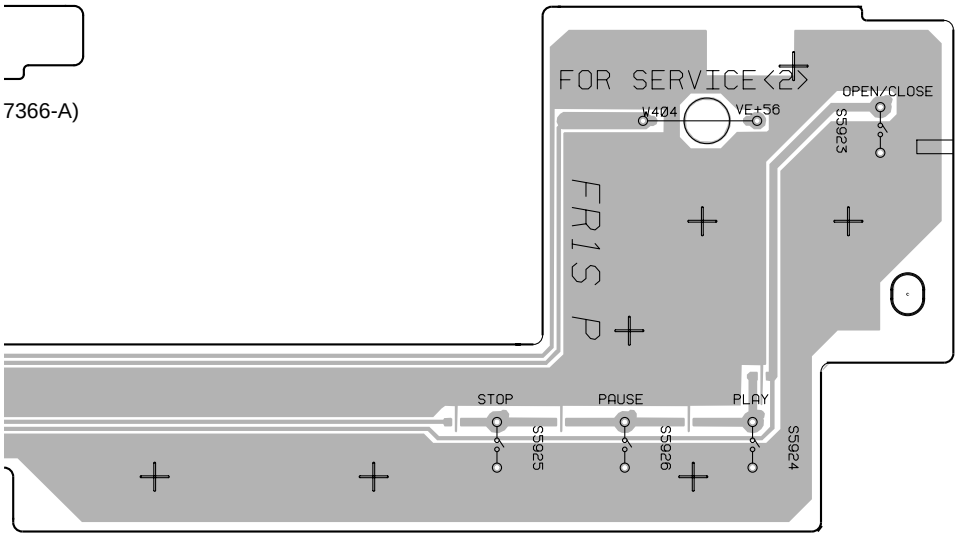

(ANP7366-A)

B

SIDE A

C

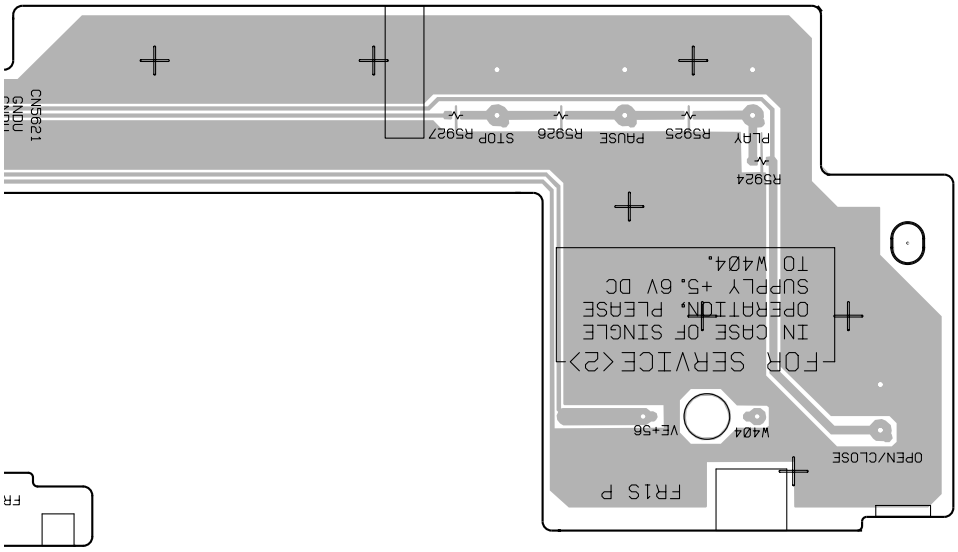

(ANP7366-A)

D

SIDE B

5. PCB PARTS LIST

NOTES: ●*Parts marked by "NSP" are generally unavailable because they are not in our Master Spare Parts List.*
●*The ⚠ mark found on some component parts indicates the importance of the safety factor of the part. Therefore,* **W***hen replacing, be sure to use parts of identical designation.*
●**W***hen ordering resistors, first convert resistance values into code form as sho***W***n in the follo***W***ing examples.*

Ex.1 **W***hen there are 2 effective digits (any digit apart from 0), such as 560 ohm and 47k ohm (tolerance is sho***W***n by J=5%, and K=10%).*

560 **W** → 56×10^1 → *561* ..... *RD1/4PU* 5 6 1 *J*
47k **W** → 47×10^3 → *473* ..... *RD1/4PU* 4 7 3 *J*
0.5 **W** → *R50* ..... *RN2H* R 5 0 *K*
1 **W** → *1R0* ..... *RS1P* 1 R 0 *K*

Ex.2 **W***hen there are 3 effective digits (such as in high precision metal film resistors).*

5.62k **W** → 562×10^1 → *5621* ..... *RN1/4PC* 5 6 2 1 *F*

5.1 LIST OF WHOLE PCB ASSEMBLIES

Mark	Symbol and Description	Part No.					Remarks
		AUCXJ type	ADXJ/RA type	APWXJ type	AVXJ type	AYXJ type	
NSP	LOAB ASSY	VWG2171	VWG2171	VWG2171	VWG2171	VWG2171	
NSP	TRAVERSE MECHANISM ASSY	VWT1161	VWT1161	VWT1161	VWT1161	VWT1161	
NSP	├ FGSB ASSY	VWG2009	VWG2009	VWG2009	VWG2009	VWG2009	
NSP	└ SMEB ASSY	VWG2048	VWG2048	VWG2048	VWG2048	VWG2048	
NSP	AUDIO ASSY	AWM7542	AWM7542	AWM7542	AWM7546	AWM7546	
	├ DSP ASSY	AWU7640	AWU7640	AWU7640	AWU7669	AWU7669	
	└ AJKB ASSY	AWU7641	AWU7641	AWU7641	AWU7670	AWU7670	
NSP	COMPLEX ASSY	AWM7548	AWM7540	AWM7541	AWM7538	AWM7538	
	├ MOTHER ASSY	AWU7674	AWU7650	AWU7651	AWU7648	AWU7648	
	├ KEYB ASSY	AWU7675	AWU7675	AWU7675	AWU7675	AWU7675	
	├ REGULATOR ASSY	AWU7676	AWU7676	AWU7676	AWU7676	AWU7676	
	├ TRADE ASSY	AWU7677	AWU7677	AWU7677	AWU7677	AWU7677	
	├ FLDP ASSY	AWU7678	AWU7678	AWU7678	AWU7678	AWU7678	
	├ CNB ASSY	AWU7679	AWU7679	AWU7679	AWU7679	AWU7679	
	└ BLED ASSY	AWU7680	AWU7680	AWU7680	AWU7680	AWU7680	
	DVDM ASSY	AWX7724	AWX7724	AWX7724	AWX7724	AWX7724	
	TUNER MODULE	AXQ7228	AXQ7228	AXQ7228	AXQ7229	AXQ7229	

■CONTRAST OF PCB ASSEMBLIES

F MOTHER ASSY

AWU7674, AWU7650, AWU7651 and AWU7648 are constructed the same except for the folloWing:

Mark	Symbol and Description	Part No.				Remarks
		AWU7674	AWU7650	AWU7651	AWU7648	
	IC5701	Not used	Not used	Not used	BU1923F	
	L5371- L5374, L5377- L5380	VTL1087	VTL1087	VTL1081	VTL1081	
	C3913 - C3914	CKSRYB102K50	CKSRYB102K50	CKSRYB102K50	CKSRYB103K50	
	C5701	Not used	Not used	Not used	CCSRCH271J50	
	C5702	Not used	Not used	Not used	CEAL100M16	
	C5704	Not used	Not used	Not used	CKSRYB103K50	
	C5705,C5706	Not used	Not used	Not used	CCSRCH270J50	
	C5707	Not used	Not used	Not used	CKSRYB561K50	
	C5708	Not used	Not used	Not used	CKSRYF104Z25	
	R5592	Not used	RS1/16S473J	Not used	Notused	
	R5594	Not used	Not used	Not used	RS1/16S473J	
	R5597	Not used	Not used	RS1/16S473J	Not used	
	R5701	Not used	Not used	Not used	RS1/16S101J	
	R5702	RS1/16S473J	RS1/16S473J	RS1/16S473J	Not used	
	R5703, R5704	RS1/16S103J	RS1/16S103J	RS1/16S103J	Not used	
	R5705	Not used	Not used	Not used	RS1/16S0R0J	
	X5701	Not used	Not used	Not used	ASS7004	

H AJKB ASSY

AWU7641 and AWU7670 are constructed the same except for the folloWing:

Mark	Symbol and Description	Part No.		Remarks
		AWU7641	AWU7670	
	C5203, 5204, C5209, C5210	CCSRCH101J50	CKSRYB102K50	

I DSP ASSY

AWU7640 and AWU7669 are constructed the same except for the folloWing:

Mark	Symbol and Description	Part No.		Remarks
		AWU7640	AWU7669	
	C3784	CKSRYB102K50	Not used	

PCB PARTS LIST FOR XV-DV55/AUCXJ UNLESS OTHERWISE NOTED

Mark	No.	Description	Part No.
A LOAB ASSY			
SWITCH			
	S101		VSK1011
OTHERS			
	CN101	KR CONNECTOR	S3B-PH-K-S
B SMEB ASSY			
SWITCH			
	S201		DSG1016
OTHERS			
	CN201	3P FFC CONNECTOR	52044-0345
	CN202	8P FFC CONNECTOR	VKN1212
C FGSB ASSY			
SEMICONDUCTOR			
	PC101		GP2S60
RESISTOR			
	R101		RS1/10S331J
D DVDM ASSY			
SEMICONDUCTORS			
	IC13		AYW7005
	IC5, IC7		BA4510F
	IC21		CY2081SL-638
	IC14		KM68V1000CLT-7L
	IC1		LA9701M
	IC2		LC78652W
	IC3		M56788FP
	IC19		MB811171622A-100FN
	IC18		MB86373B
	IC15		MN414800CSJ-07
	IC11		PD3410A
	IC12		PE5108A
	IC8		TC7SHU04F
	Q106, Q109, Q81, Q83, Q85		2SA1576A
	Q114, Q121, Q251		2SC4081
	Q131		DTC114EUA
	Q102		HN1A01F
	Q103, Q6, Q7		HN1B04FU
	Q101		HN1C01F
	Q112, Q113		HN1C01FU
	Q107, Q4, Q5		RN1902
	Q3		RN1911
	Q1		RN4982
	D301		KV1471E
	D6		RB501V-40
	D665, D666		RB521S-30
COILS AND FILTERS			
	L150, L330		LCYA100J2520
	L304		LCYA2R7J2520
	L81		VTL1067
	L85		VTL1084
CAPACITORS			
	C852		CCSRCH100D50
	C123, C146, C613, C843		CCSRCH101J50
	C322		CCSRCH120J50
	C135		CCSRCH121J50
	C104–C108		CCSRCH150J50

Mark	No.	Description	Part No.
	C206, C210, C211		CCSRCH151J50
	C333		CCSRCH180J50
	C116, C151, C314		CCSRCH220J50
	C152		CCSRCH221J50
	C127, C209, C337		CCSRCH331J50
	C134, C236		CCSRCH470J50
	C122, C208		CCSRCH471J50
	C126, C335		CCSRCH560J50
	C334		CCSRCH5R0C50
	C124, C132		CCSRCH680J50
	C117, C240, C352, C360		CCSRCH681J25
	C845, C846		CCSRCK2R0C50
	C129, C142, C842		CEV101M10
	C113, C139		CEV220M16
	C405, C413, C700, C808		CEV221M4
	C111, C149, C205, C207, C401		CEV470M6R3
	C403, C407		CEV470M6R3
	C140, C223, C224, C252, C264		CKSQYB105K10
	C312		CKSQYB105K10
	C148, C217, C327, C414		CKSQYF105Z16
	C801, C802, C807, C809–C815		CKSQYF105Z16
	C817–C821		CKSQYF105Z16
	C216, C313		CKSRYB102K50
	C133, C136, C203, C220, C225		CKSRYB103K50
	C239, C320, C321, C603, C625		CKSRYB103K50
	C703, C711		CKSRYB103K50
	C101, C102, C114, C118, C119		CKSRYB104K16
	C121, C138, C204, C212, C213		CKSRYB104K16
	C227, C231, C263, C315, C317		CKSRYB104K16
	C332, C804		CKSRYB104K16
	C153, C266		CKSRYB223K25
	C357		CKSRYB223K50
	C354		CKSRYB332K50
	C214, C251, C261, C351		CKSRYB472K50
	C330		CKSRYB682K50
	C109, C110, C120, C130, C131		CKSRYF104Z16
	C143, C150, C202, C215		CKSRYF104Z16
	C221, C222, C226, C230, C235		CKSRYF104Z16
	C265, C299, C319, C359, C367		CKSRYF104Z16
	C369, C370, C402, C404, C406		CKSRYF104Z16
	C408, C410, C412, C601, C602		CKSRYF104Z16
	C604–C612, C614, C615		CKSRYF104Z16
	C617–C620, C626, C701, C702		CKSRYF104Z16
	C704–C710, C712–C724, C726		CKSRYF104Z16
	C831–C833, C844		CKSRYF104Z16
	C368, C411	(47µF/16V)	VCH1166

RESISTORS

Mark	No.	Description	Part No.
	R123	(39Ω)	ACN7047
	R732, R733, R735, R736	(47KΩ)	ACN7077
	R632	(100Ω)	DCN1092
	R608, R609, R613, R624, R627	(10KΩ)	DCN1094
	R629, R631, R633, R638, R654	(10KΩ)	DCN1094
	R657, R658, R664, R706	(10KΩ)	DCN1094
	R717, R718	(10KΩ)	DCN1094
	R121, R663	(20Ω)	DCN1104
	R712, R715, R881	(0Ω)	DCN1106
	R1020, R2010, R2020, R2030, R2040		RS1/10S0R0J
	R3050, R4010, R4020, R4030, R4040		RS1/10S0R0J
	R4050, R4060, R407, R685, R722		RS1/10S0R0J
	R8000, R821		RS1/10S0R0J
	R202, R3510		RS1/10S101J
	R700		RS1/10S1R2J
	R807		RS1/16S1201F
	R806		RS1/16S1501F
	R363, R365		RS1/16S1503F
	R825–R827		RS1/16S2000F
	R805		RS1/16S2701F
	R361, R364		RS1/16S6202F
	Other Resistors		RS1/16S□□□J

OTHERS

Mark	No.	Description	Part No.
	CN4	FLEXIBLE CONNECTOR	DKN1193
	X2	CHIP CERALOCK (20MHz)	DSS1110
	CN2	PH CONNECTOR	S2B-PH-SM3
	CN1	PH CONNECTOR	S3B-PH-SM3
		FLEXIBLE CABLE 7P	VDA1681
	CN15,CN5	CONNECTOR 30P	VKN1626
	CN3	8P FFC CONNECTOR	VKN1763
	X1	CRYSTAL RESONATOR (13.824MHz)	VSS1147

E REGULATOR ASSY

SEMICONDUCTORS

Mark	No.	Description	Part No.
⚠	IC5003	(1.25A)	AEK7010
⚠	IC5005	(1.5A)	AEK7011
⚠	IC5002	(1.25A)	AEK7048
⚠	IC5004	(3A)	AEK7050
⚠	IC5001	(315mA)	AEK7059
⚠	IC5007		NJM7912FA
⚠	D5005, D5006		D3SBA20(B)
⚠	D5001–D5004, D5010, D5011		S5688G

CAPACITORS

Mark	No.	Description	Part No.
	C5012		CEAT100M50
⚠	C5010		CEAT221M63
⚠	C5003		CEAT222M35
⚠	C5004		CEAT471M35
⚠	C5008		CEAT682M16
⚠	C5006		CEHAT682M25

RESISTORS

Mark	No.	Description	Part No.
⚠	R5001		RFA1/4PS330J

OTHERS

Mark	No.	Description	Part No.
	CN5011	10P CONNECTOR	B10P-VH
	CN5021	9P PLUG	KM250NA9L

F MOTHER ASSY

SEMICONDUCTORS

Mark	No.	Description	Part No.
	IC5421		BA4558F-HT
	IC5304		BU4053BCF
	IC5801		BU4094BCF
	IC5351		LA7135AM
	IC3901		M62429FP
	IC5301-IC5303		NJM2534M
	IC3902		NJM4560M
⚠	IC5021		NJM7812FA
⚠	IC5581		NJM78M56FA
	IC5401		PCM1716E

Mark	No.	Description	Part No.
	IC5501		PDC062A
⚠	IC8521		PQ025EZ5MZP
⚠	IC5071		PQ20RV1E
	IC5101		TC74HC153AF
	IC8531		TC74HCT7007AF
	IC5103		TC74HCU04AF
	IC8541		TC74VHC125F
	IC5104		TC7WU04F
	Q3906, Q5161, Q5171, Q5181, Q5301		2SA1037K
	Q5021, Q5043, Q5071, Q5581		2SB1237X
⚠	Q5031, Q5041, Q5061		2SB1566
	Q5032, Q5042, Q5062, Q5302, Q5362		2SC2412K
	Q5572		2SC2412K
	Q5396, Q5721		2SD1858X
	Q3903, Q3904, Q5051		2SD2114K
	Q3905, Q5063, Q5064		DTA124EK
	Q3651		DTA124TK
	Q5151		DTA143EK
	Q3652, Q5582		DTC124EK
	Q5361, Q5571		DTC143EK
	D3651, D5022, D5042, D5072, D5578		1SS133
	D5583, D5584		1SS133
	D5579		1SS184
	D5061, D5062, D5397, D5502		1SS355
	D5572, D5573, D5741		1SS355
	D5396		MTZJ10A
	D5721		MTZJ11C
	D5021		MTZJ15C
	D5043		MTZJ4.7A
	D5063		MTZJ6.8B
	D5031, D5071		MTZJ7.5C
	D5074, D5075, D5501		S5688G
	D5585–D5589, D5591–D5594		UDZS8.2B

COILS AND FILTERS

	X5501		DSS1048
	F5594		DTF1064
	L5501		LAU220J
	L5161, L5171, L5181		LCTB120K1608
	F5101, F5111, F8121, F5131		VTF1096
	F5151, F5152		VTF1096
	L5311–L5314, L5317–L5320		VTL1087
	L5371–L5374, L5377–L5380		VTL1087
	L8502		VTL1095

CAPACITORS

⚠	C5001	(0.01µF/AC250V)	ACG1005
	C5585	(0.01µF/AC250V)	ACG7021
	C5526		ACH1246
	C5106, C5158		CCSRCH100D50
	C5504, C5513–C5521, C5573, C8504		CCSRCH101J50
	C5163, C5173, C5183		CCSRCH180J50
	C5423, C5424, C8501, C8503		CCSRCH221J50
	C8505, C8506, C8508		CCSRCH221J50
	C5425, C5426		CCSRCH330J50
	C5801–C5803		CCSRCH470J50
	C5161, C5162, C5171, C5172		CCSRCH6R0D50
	C5181, C5182		CCSRCH6R0D50
	C5072, C5397, C5722		CEAL100M16
	C5301, C5396, C5411		CEAL101M10
	C5023, C5033, C5429, C5430, C5703		CEAL470M16
	C5405, C5406, C5421, C5422		CEAL470M6R3
	C3901–C3908, C3917, C5022, C5043		CEAT100M50
	C5062, C5571, C5581		CEAT100M50
	C5032, C5042, C5045, C5073, C5133		CEAT101M10
	C5153, C5354, C5356, C5360		CEAT101M10
	C5522, C5523, C8522		CEAT101M10
	C5574, C5582		CEAT1R0M50
	C5051, C5061		CEAT220M50
	C3651		CEAT221M16
	C5105, C5114, C5124, C5154		CEAT470M16
	C5312, C5313, C5318, C5320, C5805		CEAT470M16
	C3915, C5372, C5374, C5378, C5380		CEAT471M6R3
	C3913, C3914, C5107, C5341, C5342		CKSRYB102K50
	C5391, C5392, C5527		CKSRYB102K50
	C3916, C5333, C5407, C5414		CKSRYB103K50
	C5510–C5512, C5524, C5572		CKSRYB103K50
	C5316, C5322, C5351–C5353, C5375		CKSRYB104K16
	C5381		CKSRYB104K16
	C3911, C3912, C5331, C5332		CKSRYB221K50
	C3951, C3952		CKSRYB223K50
	C3953–C3955, C5021, C5031, C5041		CKSRYF104Z25
	C5071, C5101, C5103, C5104		CKSRYF104Z25
	C5112, C5113, C5122, C5123		CKSRYF104Z25
	C5131, C5132, C5151, C5152		CKSRYF104Z25
	C5155, C5156, C5164, C5174, C5184		CKSRYF104Z25
	C5302–C5304, C5315, C5321, C5335		CKSRYF104Z25
	C5357, C5361, C5403, C5410		CKSRYF104Z25
	C5427, C5428, C5502, C5503, C5525		CKSRYF104Z25
	C5588, C5591, C5804, C8521, C8523		CKSRYF104Z25
	C8533, C8543		CKSRYF104Z25
	C5583, C5584, C5587, C8532, C8542		CKSRYF473Z25
	C5586		CKSRYF473Z50

RESISTORS

	R5066, R5067, R8512		RD1/4PU101J
	R3652, R5563		RD1/4PU103J
	R5599		RD1/4PU105J
	R5061		RD1/4PU123J
	R5581		RD1/4PU220J
	R5524–R5526, R5530, R5532		RD1/4PU221J
	R5536, R5537, R5541		RD1/4PU221J
	R3911		RD1/4PU222J
	R3909, R3910		RD1/4PU470J
	R5065, R5567		RD1/4PU472J
	R5545, R5571		RD1/4PU473J
	R5031		RD1/4PU821J
⚠	R3651		RFA1/4PS330J
	R5421, R5422		RS1/16S1001F
	R5560		RS1/16S1002F
	R5423, R5424		RS1/16S1502F
	R5072		RS1/16S1801F
	R5425, R5426		RS1/16S3302F
	R5071		RS1/16S4700F
	Other Resistors		RS1/16S□□□J

OTHERS

	CN5701	FFC CONNECTOR 13P	9604S-13C
	JA5301,JA5351	2P DIN+2P JACK	AKB7130
	3951	JACK	AKN7003
	CN5501,CN5506	9P PLUG	AKP7057
	CN5504,CN5505	11P PLUG	AKP7058

Mark	No.	Description	Part No.
	CN5503	15P PLUG	AKP7060
	CN5591	10P MIN DIN SOCKET	AKP7128
	CN5592	10P CONNECTOR	AKP7134
	CN5001	29 CONNECTOR	B2P-VH
	JA5102,JA5103	OPTICAL LINK IN	GP1FA550RZ
	CN5002	9P SOCKET	KP250NA9
	JA5151	OPTICAL OUTPUT JACK	TOTX178
	JA5101	1P JACK	VKB1077
	CN8501,CN8502	30P CONNECTOR	VKN1627
	KN3951,KN5001,KN5701		VNF1084
		EARTH METAL FITTING	

G TRAD ASSY

SEMICONDUCTORS

	D5291, D5292		MTZJ8.2B

CAPACITORS

	C5741, C5742		CEAT100M50
	C5291, C5292		CEAT101M10
	C5431, C5432		CEAT470M16

RESISTORS

	R5291, R5292		RD1/4PU331J
	Other Resistors		RS1/16S□□□J

OTHERS

	CN5205	9P PLUG	AKP7057
	CN5202	11PLUG	AKP7058
	CN5204	9P SOCKET	AKP7068
	CN5203	11P SOCKET	AKP7069

H AJKB ASSY

SEMICONDUCTORS

	IC5232		BA4558F-HT
	IC5201,IC5231		BU4052BCF
	IC5821		BU4094BCF
	Q5251, Q5252, Q5271, Q5272		2SD2114K
	Q5253, Q5273		DTA124EK
	Q5229–Q5232, Q5254		DTC124EK
	D5253		1SS184
	D5251, D5252, D5271		1SS3550

COILS AND FILTERS

	L5201, L5202, L5205, L5207, L5208		VTL1112
	L5211, L5213,L5214, L5219		VTL1112
	L5221, L5222, L5227, L5251, L5252		VTL1112
	L5260, L5271, L5272, L5280		VTL1112

CAPACITORS

	C5201–C5204, C5207–C5210		CCSRCH101J50
	C5213–C5216, C5221–C5224		CCSRCH101J50
	C5251, C5252, C5271, C5272		CCSRCH101J50
	C5823–C5825		CCSRCH470J50
	C5239, C5240		CEAT100M50
	C5231, C5232, C5821		CEAT470M16
	C5229, C5230, C5233, C5234		CKSRYB103K50
	C5241–C5246, C5822		CKSRYB103K50

RESISTORS

	Other Resistors		RS1/16S□□□J

OTHERS

	5201, 5202	PIN JACK 6P	AKB7012
	CN5206	SOCKET 9P	AKP7068
	CN5201	SOCKET 11P	AKP7069
	CN5207	CONNECTOR 3P	B3B-PH-K-S
	CN5507	CONNECTOR 7P	VKN1267

I DSP ASSY

SEMICONDUCTORS

	IC3751		AK4527VQ
	IC8701,IC8703,IC8705		BA4558F-HT
	IC8851-IC8856		BA4558F-HT
	IC8801		LC89055W
	IC3851		W24257AJ-12
	IC3801		YSS912C
	Q8709–Q8714		2SD2114K
	Q8715, Q8716, Q8718		DTA124EK
	Q8717		DTC124EK
	D8701, D8702		1SS181
	D8703		1SS184
	D8851–D8874		UDZS10B

COILS AND FILTERS

	F3731–F3736, F3801,F3802, F3851		DTF1064
	F8801, F8802		DTF1064
	F3751, F3752		DTF1067
	X3801, X8801		VSS1140
	L8867, L8868, L8873, L8874		VTL1112
	L8879, L8880, L8885, L8886		VTL1112
	L8903–L8906		VTL1112

CAPACITORS

	C3807, C3810, C3814, C3817		CCSRCH101J50
	C3820, C3821, C3825, C3828, C3854		CCSRCH101J50
	C3803, C3804, C8816, C8817		CCSRCH200J50
	C3811		CCSRCH471J50
	C8709, C8710		CCSRCH680J50
	C8721, C8722, C8733		CCSRCH820J50
	C8711, C8712, C8723, C8724		CEAT100M50
	C8735, C8736, C8761–C8766		CEAT100M50
	C3709, C3710, C3759, C3801, C3851		CEAT101M10
	C8801		CEAT101M10
	C3705, C3706, C3802		CEAT220M50
	C3752, C3756, C3856		CEAT221M6R3
	C8812		CEAT470M16
	C8741–C8746		CEJQ100M16
	C8915, C8917		CEJQ101M16
	C3783–C3785, C8922		CKSRYB102K50
	C3732, C3734, C3765, C3786, C3806		CKSRYB103K50
	C3809, C3812, C3815, C3818, C3823		CKSRYB103K50
	C3826, C3829, C3832, C3853		CKSRYB103K50
	C8751–C8758, C8808, C8811, C8901		CKSRYB103K50
	C8903–C8914, C8924, C8925		CKSRYB103K50
	C8809, C8810		CKSRYB104K16
	C8703, C8704, C8715, C8716, C8727		CKSRYB122K50
	C8734		CKSRYB122K50
	C8701, C8702, C8713, C8714, C8725		CKSRYB152K50
	C3707, C3708		CKSRYB222K50
	C3711, C3712, C3754, C3755, C3758		CKSRYF104Z25
	C3805, C3808, C3813, C3816, C3819		CKSRYF104Z25
	C3822, C3824, C3827, C3830, C3831		CKSRYF104Z25
	C3833, C3834, C3852, C3855		CKSRYF104Z25

Mark	No.	Description	Part No.
	C8802, C8803, C8806, C8814, C8818		CKSRYF104Z25
	C8820, C8821, C8916, C8918		CKSRYF104Z25
	C8728		CKSRYF224Z16

RESISTORS

	R3817		ACN7060
	R3751, R3757, R3809, R3813, R3822 (100Ω)		DCN1092
	R3827, R3830, R8801, R8825 (100Ω)		DCN1092
	R8761, R8762, R8767, R8768		RS1/16S1001F
	R8787, R8788		RS1/16S1001F
	R8851, R8852, R8857, R8858		RS1/16S1002F
	R8863, R8864, R8869, R8870		RS1/16S1002F
	R8875, R8876, R8881, R8882		RS1/16S1002F
	Other Resistors		RS1/16S□□□J

OTHERS

	CN3702	SOCKET 11P	AKP7069
	CN3701	SOCKET 15P	AKP7071
	CN8901	CONNECTOR 12P	AKP7131
	CN3703	CONNECTOR 3P	S3B-PH-K-S
	3701	SCREW PLATE	VNE1948

J TUNER MODULE (AXQ7228)

SEMICONDUCTORS

	IC201		BA1451F
	IC202		LC72131MD
	Q201, Q204, Q205		2SC2412K
	Q202		DTA124ES
	Q203		DTC124EK
	D201		1SS133
	D202		MTZJ5.1C

COILS AND FILTERS

	L201		ATE7003
	F202		ATF-107
	F201		ATF-119
	F203		ATF1155

CAPACITORS

	C206		CCSRCH100D50
	C212, C213, C226, C233–C235		CCSRCH101J50
	C240		CCSRCH101J50
	C231, C232		CCSRCH150J50
	C223		CEAT100M50
	C229		CEAT101M10
	C224		CEAT1R0M50
	C227		CEAT220M25
	C241		CEAT2R2M50
	C243		CEAT330M16
	C228		CEAT3R3M50
	C237		CEAT470M10
	C211		CEJA1R0M50
	C210		CEJA470M16
	C204, C238, C602		CKSRYB102K50
	C101, C102, C208, C220, C239		CKSRYB103K50
	C242, C601		CKSRYB103K50
	C216, C217		CKSRYB123K50
	C225		CKSRYB153K50
	C201, C205, C209, C214, C230		CKSRYB223K50
	C236, C603		CKSRYB223K50
	C221		CKSRYB224K10
	C202, C222		CKSRYB473K16
	C215		CKSRYB681K50

RESISTORS

	R211		RD1/4PU221J
	R221		RD1/4PU222J
	R233		RD1/4PU391J
	R243		RS1/10S0R0J
	R103		RS1/10S331J
	R104		RS1/10S391J
	Other Resistors		RS1/16S□□□J

OTHERS

	CN201	13P CONNECTOR	52044-1345
	BN201	TERMINAL 4P	AKA7003
		SHIELD CASE T(MTL)	ANK7072
		SHIELD CASE B(MTL)	ANK7073
	X201	(7.2000MHz)	ASS1093

J TUNER MODULE (AXQ7229)

SEMICONDUCTORS

	IC201		BA1451F
	IC202		LC72131MD
	Q201, Q204, Q205, Q601		2SC2412K
	Q202		DTA124ES
	Q203		DTC124EK
	D201		1SS133
	D202		MTZJ5.1C
	D101		UDZS6.8B

COILS AND FILTERS

	L201		ATE7003
	F202		ATF-107
	F201		ATF-119
	F203		ATF1155
	F601		ATF7025
	L601		LCTA270J2520

CAPACITORS

	C605		CCSQCH680J50
	C212, C213, C226, C233–C235		CCSRCH101J50
	C240, C614		CCSRCH101J50
	C206		CCSRCH120J50
	C231, C232		CCSRCH150J50
	C223		CEAT100M50
	C229		CEAT101M10
	C224		CEAT1R0M50
	C227		CEAT220M25
	C241		CEAT2R2M50
	C243		CEAT330M16
	C228		CEAT3R3M50
	C237		CEAT470M10
	C211		CEJA1R0M50
	C210		CEJA470M16
	C103, C104, C204, C238		CKSRYB102K50
	C102, C208, C216, C217, C220		CKSRYB103K50
	C239, C242, C604, C615		CKSRYB103K50
	C225		CKSRYB153K50
	C607, C608		CKSRYB182K50

Mark	No.	Description	Part No.
	C201, C205, C214, C230, C236		CKSRYB223K50
	C244		CKSRYB223K50
	C221		CKSRYB224K10
	C603		CKSRYB392K50
	C215		CKSRYB471K50
	C202, C222		CKSRYB473K16
	C606		CKSRYB561K50

RESISTORS

	R211		RD1/4PU221J
	R221		RD1/4PU222J
	R233		RD1/4PU391J
	R103, R104		RS1/10S221J
	Other Resistors		RS1/16S□□□J

OTHERS

	CN201	13P CONNECTOR	52044-1345
	BN201	TERMINAL 4P	AKA7002
		SHIELD CASE T(MTL)	ANK7072
		SHIELD CASE B(MTL)	ANK7073
	X201	(7.2000MHz)	ASS1093

K FLDP ASSY

SEMICONDUCTORS

	IC5661		MSM9202-01
	Q5681		DTC124EK
	D5681		1SS133
	D5661		MTZJ8.2B

COILS AND FILTERS

	L5663		LAU100J
	L5662		LAU220J

CAPACITORS

	C5674		CCSRCH470J50
	C5681		CEAL100M16
	C5661, C5664		CEAL101M10
	C5953		CEAL470M16
	C5671–C5673		CKSRYB102K50
	C5682		CKSRYB103K50
	C5662		CKSRYF104Z25
	C5675		CKSRYF104Z50
	C5663, C5665, C5666, C5668, C5670		CKSRYF473Z50
	C5952		CKSRYF473Z50

RESISTORS

	Other Resistors		RS1/16S□□□J

OTHERS

	V5661	FL TUBE	AAV7061
	CN5661	11P SOCKET	AKP7069
	5951	REMOTE RECEIVER UNIT	GP1U27X

L CNB ASSY

SEMICONDUCTORS

	D5656		1SS133
	D5655		MTZJ2.0A/B
	D5651–D5654		MTZJ8.2B

OTHERS

	CN5652	11P PLUG	AKP7058
	CN5651	10P MIN DIN SOCKET	AKP7128

M BLED ASSY

SEMICONDUCTORS

	D5932		EB3804X

CAPACITORS

	C5933		CKSRYF104Z25

OTHERS

	59333P	CABLE HOLDER	51048-0300
	J5931	JAMPER WIRE	D20PYY0305E

N KEYB ASSY

SEMICONDUCTORS

	Q5932, Q5933		2SA1037K
	Q5934		DTC124EK
	D5934, D5935		1SS133
	D5933		MTZJ8.2B
	D5931		VRPG5615S

SWITCHES AND RELAYS

	S5921–S5928		XSG3001

RESISTORS

	R5939		RD1/4PU391J
	R5922		RS1/16S1001F
	R5923		RS1/16S1201F
	R5924		RS1/16S1501F
	R5925		RS1/16S2201F
	R5926		RS1/16S2701F
	R5927		RS1/16S3901F
	R5928		RS1/16S6801F
	Other Resistors		RS1/16S□□□J

OTHERS

	5932		51048-0300
	CN5621		AKP7068

6. ADJUSTMENT

6.1 TUNER SECTION

■ AM Tuner Section

• There is no adjustment in the AM tuner.

■ FM Tuner Section

• Set the mode selector to FM BAND.
• Connect the wiring as shown in Fig. 1.

Step No.	Adjustment Title	ANT. Input level and signal condition			Adjustment	
		Frequency (MHz)	Modulation	Input Level (dBμV)	Adjust point	Contents
1	T-METER Adjustment	98	OFF	80	L201	Adjust L201 so that the DC voltage between Pin 21 and Pin 23 of IC201 (Test point Vtm) gets within 0 ± 50mV.

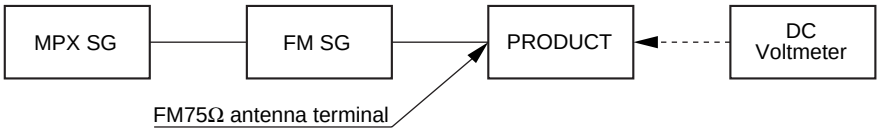

Fig.1 Adjustment Wiring Diagram

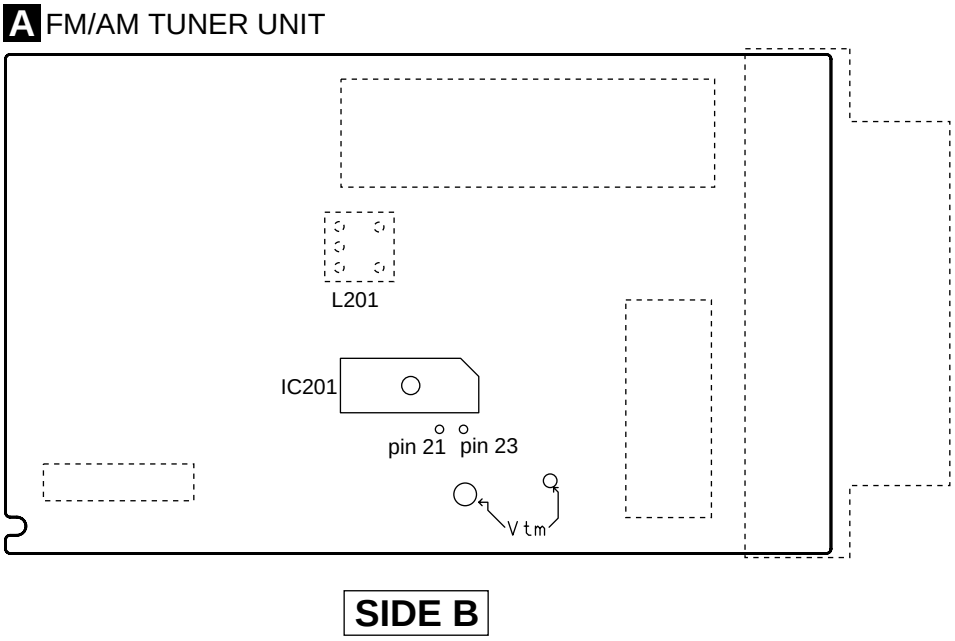

Fig.2 Adjustment Point

6.2 DVD SECTION

• The DVD part is not adjusted.

7. GENERAL INFORMATION

7.1 DIAGNOSIS

7.1.1 SELF-DIAGNOSTIC FUNCTION OF PICKUP DEFECTIVE

Symptom

- Indicates "No Disc" in FL display.
- Player does not playback, etc..

Procedure of Self-Diagnosis

① Press the TEST → 1 buttons (of the test mode remote control unit : GGF1067) in the test mode screen, and turn on the laser diode (It light-up for nine seconds.).

② Confirm the indicated value of the laser diode current (LDI).

③ When indicated value is more than 110, pickup is defective. → Release the Traverse Mechanism Assy.

Note : When a DVD disc is played in the test mode, this function is effective.
This function is effective only for DVD pickup (650nm).

Character in bold : Item name
□: Information display

Laser diode current value

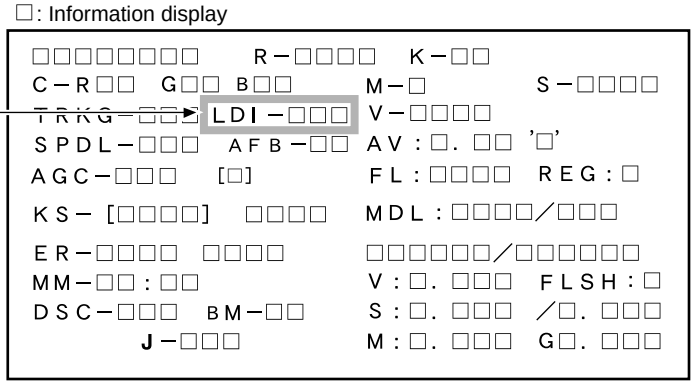

Test Mode Screen Display

7.1.2 TEST POINTS LOCATION

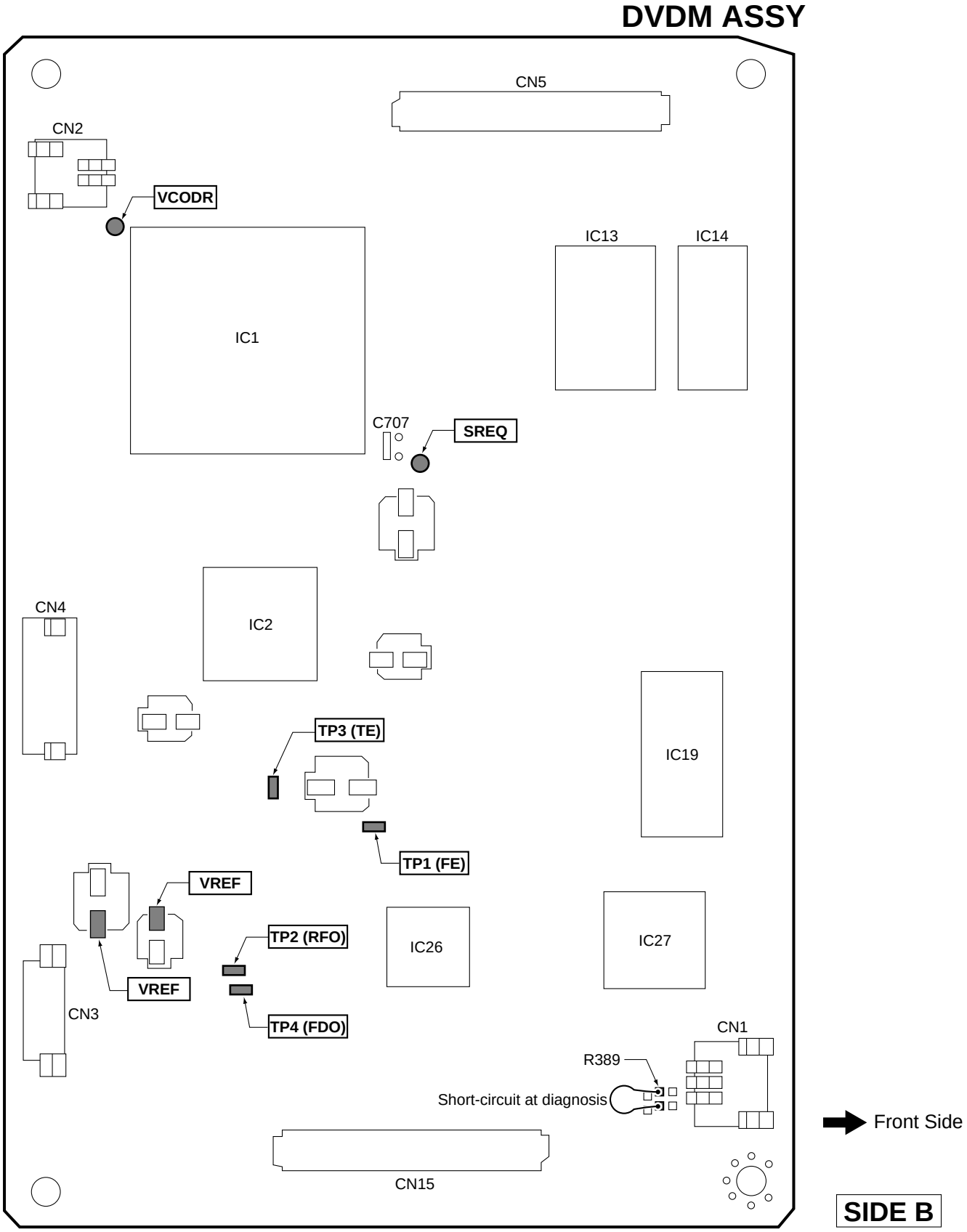

7.1.3 TEST MODE SCREEN DISPLAY

■ TEST MODE SCREEN DISPLAY

Consecutive double-OSD display is supported during test mode. The screen is composed 10 lines with a maximum of 32 characters per line. It can't be used with the debugging display mode together.

• Screen Composition

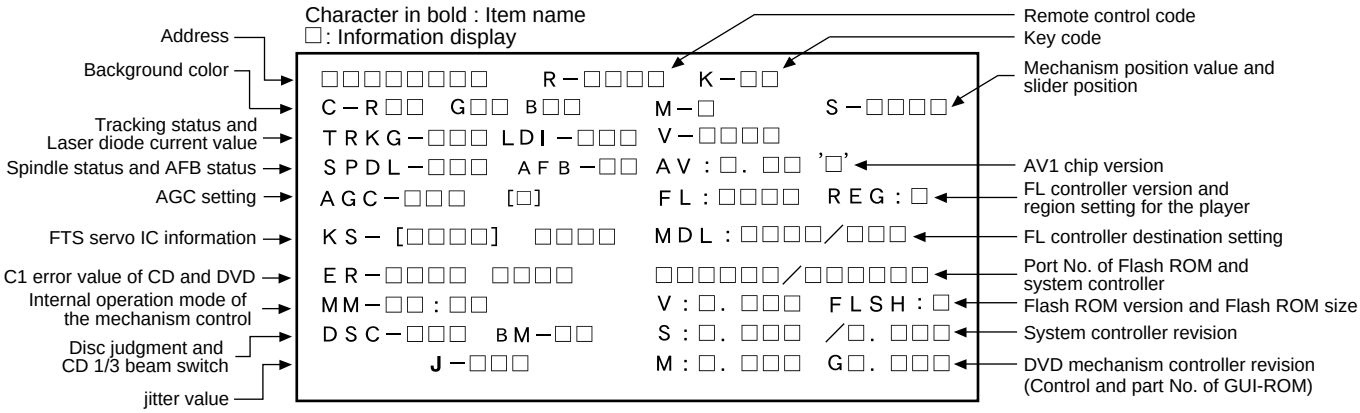

First Screen Display

Caution :
The first screen and second screen switch by pressing [DISPLAY] key of the remote control unit.
It is only a version display part on the lower right of the screen those contents of display change.
ATB : ON/OFF information display and AGC manual setting display deleted with the second generation.
The displays of Tilt error value, Tilt servo status and pickup DVD/CLD display deleted with the third generation becomes LD part is deleted.

• Description of Each Item on the Display

(1) Address indication

The address being traced is displayed in number.
DVD : ID indication (hexadecimal number, 8 digits) [* * * * * * * *]
CD : A-TIME (min. sec.) [0 0 0 0 * * * *]
(Note : For DVDs, decimal-number indication is possible.)

(2) Code indication of the remote control unit [R – * * * *]

The code for the key pressed on the remote control unit, which is received by the FL controller, is displayed while the key is pressed. In the case of the double code, the second code will be displayed.

(3) Key code indication for the main unit [K – * *]

The code for the key pressed on the main unit, which is received by the system controller, is displayed while the key is pressed.

(4) Background color indication [C – R* * G* * B* *]

(5) ① Tracking status [TRKG – *]**

Tracking on [ON]
Tracking off [OFF]

② Laser diode current value [LDI – *]**

(6) ① Spindle status [SPDL – * * *]

Spindle accelerator and brake, free-runnimg	[A/B]
FG servo	[FG]
Rough, velocity phase servo	[SRV]
Offset addition, rough, velocity phase servo	[O_S]

② AFB status [AFB – * *]

ON	[ON]
OFF	[OFF]

(7) Mechanism position value [M – *]

Position code	[1] to [3]

(8) Slider position [S – * * * *]

CD TOC area	[IN]
CD active area	[CD]

(9) AGC setting [AGC – * *]

AGC on	[AGC-ON]
AGC off	[AGC-OFF]

(10) Output video system [V – ∗ ∗ ∗ ∗]

NTSC system [NTSC]
PAL system [PAL]
Auto-setting [AUTO]

(11) FTS servo IC information

DSP coefficient indication [KS – [∗ ∗ ∗ ∗] ∗ ∗ ∗ ∗]
Displays the address (four digits) of the specified coefficient and the setting value (four digits) with [TEST] and [9] keys.

(12) Error rate indication

① C1 error value of CD [ER – C1 ∗ ∗ ∗ ∗]
② C1 error value of DVD [ER – ∗ ∗ ∗ ∗ ∗ ∗ ∗ ∗]

(13) Internal operation mode of mechanism controller [MM – ∗ ∗ : ∗ ∗]

Internal mechanism mode (2 digits) and internal mechanism step (2 digits) of the mechanism controller

(14) ① Disc sensing [DSC – ∗ ∗ ∗]

The type of discs loaded is displayed.
[DVD], [CD], [VCD], [ ]

② CD 1/3 beam switch [BM – ∗ ∗]

(15) Jitter value [J – ∗ ∗]

CD is effective only in the jitter value.

(16) Version of the AV-1 chip [AV : ∗ . ∗ ∗' ∗']

(17) ① Version of the FL controller [FL : ∗ ∗ ∗ ∗]

② Region setting of the player [REG : ∗]

Setting value [1] to [6]

(18) Destination setting of the FL controller [MDL : ∗ ∗ ∗ ∗ / ∗ ∗ ∗]

For charactors in front represent the type of model :
There charactors that follow represent the destination code.
J : /J, K : /KU, /KC, /KU/KC, R : /RAM, /RL, /RD, /LB,
WY : /WY

(19) The part number of the flash ROM and system controller [∗ ∗ ∗ ∗ ∗ ∗ / ∗ ∗ ∗ ∗ ∗ ∗ ∗]

① Part number of the flash ROM <Front>
(Example) VYW1536-A = W1536A
(Example) PD6256A9 = 6256A9
② Part number of the system controller <Rear>
(Example) PD3381T1 = 3381T1

(20) ① Version of the flash ROM [V : ∗ . ∗ ∗ ∗]

② Flash ROM size [FLSH = ∗]

(21) Revision of the system controller [S : ∗ . ∗ ∗ ∗ / ∗ . ∗ ∗]

① Revision number of the external ROM part (flash ROM) of the system controller <Front>
② Revision of the internal ROM part of the system controller <Rear>

(22) Revision of the DVD mechanism controller [M : ∗ . ∗ ∗ ∗]

Revision number of the external ROM part (flash ROM) of the DVD mechanism controller

(23) Control and part numbers of the GUI-ROM [GUI : ∗ ∗ ∗ ∗]

No GUI model displays as "—— / ——".
OEM model displays the part number of GUI-ROM
[GUI : ∗ ∗ ∗ ∗]

7.1.4 POWER ON SEQUENCE

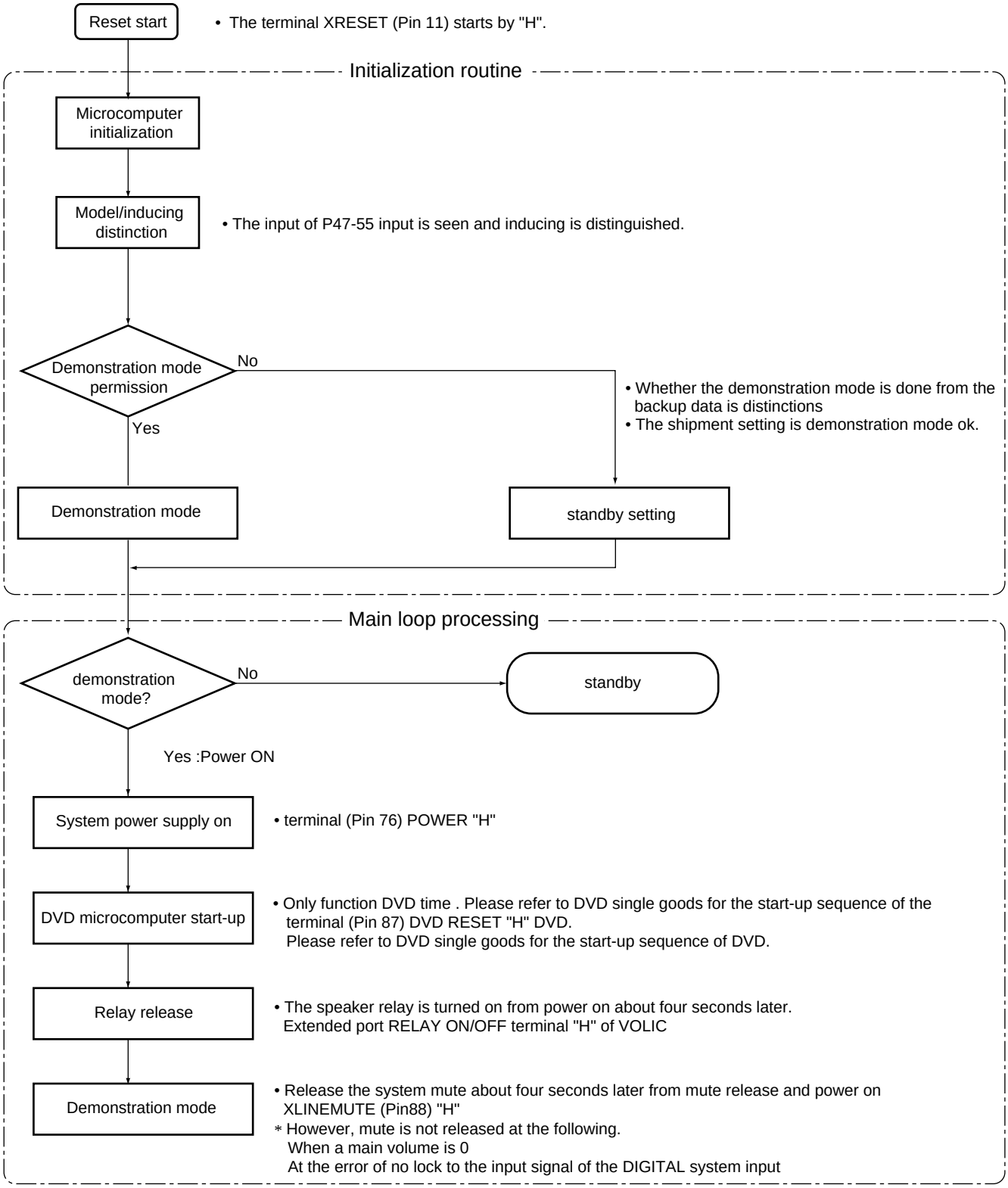

∗ If the pulse is not input to the terminal P26 AC between about 60ms, the microcomputer enters the memory backup mode . The memory backup mode inside does not process all.

∗ The returns from the memory backup mode when there is a standing up input in the terminal P11(XRESET).

7.1.5 TROUBLE SHOOTING

XV-DV55 microcomputer troubleshooting

Symptom of problem	Thought cause	Check method
• The power supply does not enter . • The standby LED lights even if the POWER key is pushed.	• The microcomputer is not reset.	• Whether terminal RESET (12Pin) is "H" is confirmed. The operation of the RESET circuit is confirmed if not becoming "H".
	• The AC pulse is not input.	• Whether the AC pulse is input to AC input terminal (11Pin) is confirmed. If the AC pulse is not input, the AC pulse generation circuit is confirmed.
	• The oscillation circuit of the microcomputer does not oscillate.	• The microcomputer or the oscillation circuit is broken. The microcomputer or the oscillation circuit is exchanged.
• It enters the state of POWER OFF soon even in case of the POWER ON.	• If the function is DVD, the 3.3DETECT input is 2.9V or less.	• If the voltage of the 3.3DETECT (13Pin) terminal of the microcomputer is 2.9V or less, the voltage is adjusted to 2.9V or more.
• DVD does not operate at all. • Time is not displayed in FL DISPLAY at the DVD function.	• It does not communicate with the DVD microcomputer.	• Whether terminal (27Pin, 78Pin, 98-100Pin) for the communication with the DVD microcomputer does the communication operation is confirmed. If the communication operation is not done, whether the B to B connector etc. are disconnected is confirmed. • Whether "H" is output to terminal DVDRESET (87Pin) is confirmed.
• The operation key is not accepted at all.	• It is recognized that other KEY has already been pushed.	• When KEY is not pushed, whether KEY input terminal (18Pin) is 5V is confirmed. If the KEY input terminal is not 5V, whether KEY SW on the line breaks is confirmed.

7.1.6 SINGLE OPERATION METHOD

■ Jigs and Measuring instruments

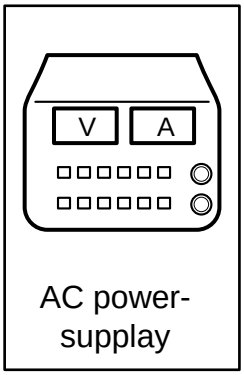

■ Single operation method and frequnency oscilator inputlevel.

1. Connect part Ⓐ of the MOTHER ASSY W402(AC2), W403(AC1) and AC power-supplay. (Refer to Fig 7.1)

Connect point Ⓐ	AC power-supplay	
	Voltage (V)	Remarks
MOTHER ASSY (W402: AC2)	AC 27V	
MOTHER ASSY (W403: AC1)	AC 27V	

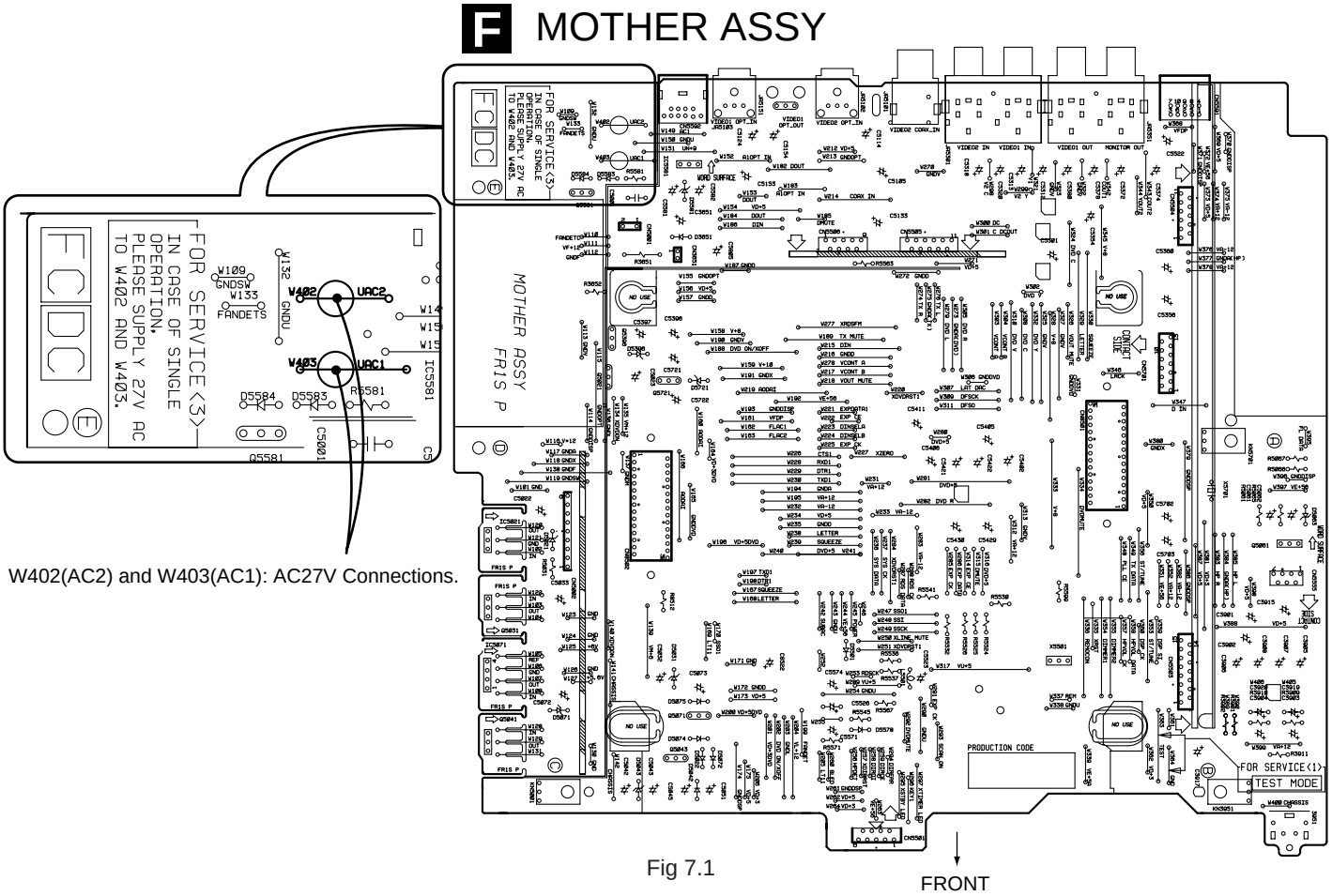

W402(AC2) and W403(AC1): AC27V Connections.

Fig 7.1

7.1.7 TEST MODE (For Service)

How to Start / Cancel Test Mode

TEST MODE : ON

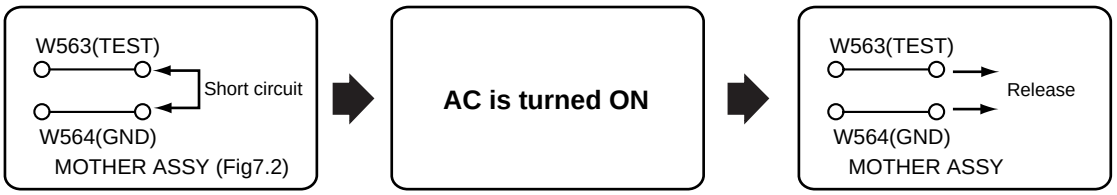

Check on circuit and module composition

- Subwoofer is not connected.
  (Neither the AC pulse check nor the FAN check are done)
- The DISPLAY unit is connected.
- The function mode not change into the DVD mode though the test operation is done even if the connection of the DVD mechanism unit is removed.

Operation

- The operation is the same as a usual operation.

TEST MODE : STOP → CANCEL

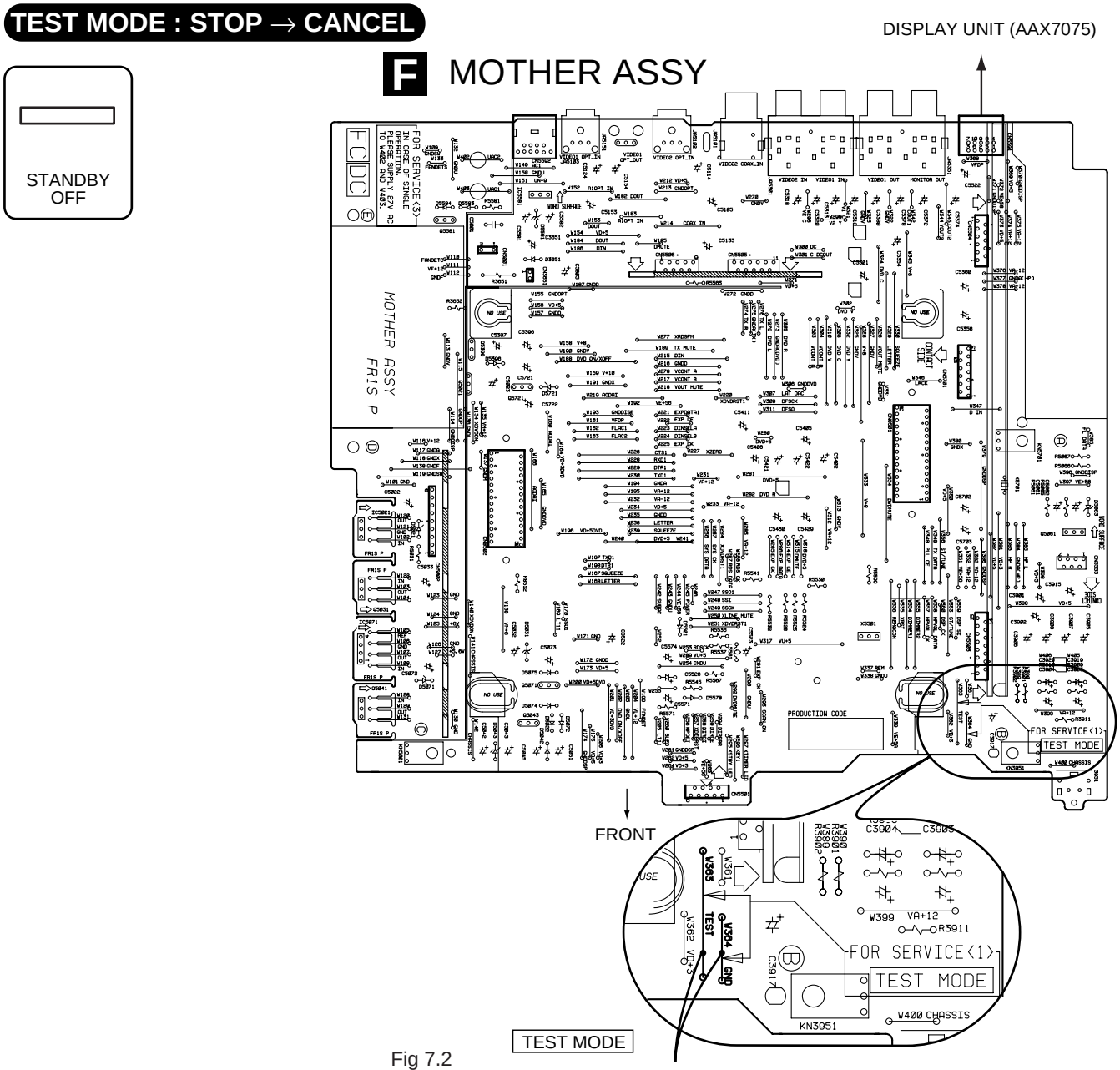

Fig 7.2

7.1.8 ERROR CODE

Error codes that are displayed on the FL display without using the remote control unit

FL Display	Possible causes	Operation of the unit
AV1 VER	AV-1 chip is not a match with the program of system controller	The sound may not out with the specific audio.
CPU AERR	CPU address error (Hardware is unusual.)	No operation
DMA AERR	DMA address error (Hardware is unusual.)	No operation
FLASH ID	Difference in versions of the internal ROM of the system controller and of the flash ROM, or bus line failure or reverse installation	No operation
FLASH WRP	Write protect error of the flash ROM	No operation
FLASH SIG	Difference in part number of the flash ROM (When the ROM which could't be used was used.)	No operation
FLASH SUM	Check sum error of the flash ROM (It exceeds the regular size.) or reverse installation (Hardware is unusual.)	No operation
FLASH SIZE	Size error of the flash ROM (Use 4 or 8 M-bit.)	No operation
ILLGAL	The system controller fetched a code other than an operation code (Hardware is unusual.)	No operation
RESERVE	Undefined interrupt (Hardware is unusual.)	No operation
SLOT	Inappropriate slot command issued (Hardware is unusual.)	No operation
DVD DETECT ERR	This display appears when the terminal of microcomputer PIN.No13 becomes 2.9V or less and the set enters the state of the standby.	No operation
CT FAN ERR	display appears when the terminal of microcomputer PIN.No21 becomes a 3-5V (fan abnormality of the center part), and the set enters the state of the standby.	No operation
SW FAN ERR	Fan abnormality of the part (subwoofer) when the terminal of microcomputer PIN.No21 becomes 1-3V. This display appears, and the set enters the state of the standby.	No operation

Error codes that are displayed on the FL display by using the remote control unit (Mechanism controller error)

To display: ESC + DISPLAY + DISPLAY; Location of the display: At the two digits of center of the FL display

To display the error history: ESC + DISPLAY + One shot; Location of the display: TV screen

FL	Description of Error	Causes if with a DVD	Causes if with a CD	Operation of the Unit
11	Search timeout	Search could not be complete within 7 seconds.	Search could not be complete within 7 seconds, and it could not enter the target area within 7 seconds by VCD scan.	CD : Stops, DVD : Continues operation
12	Search retry error	A search could not be completed after 3 retries, search backup was executed 4 times, or in a case of timeout (6 seconds) while the unit was tracing 11 tracks or more beyond the target while the search operation was converging.	Backup against slider skip was executed 4 times during a search, or slider skip twice resulted in starting from the read-in point.	CD : Stops, DVD : Continues operation
19	Tracing timeout while converging	Timeout (10.5 seconds) while tracing at the stage of convergence of a search.		Stop
1B	Index 0 search error		During Track (Index) Search, the search for the beginning of a program could not be completed within 3 seconds (20 seconds in the case of Index Search) after positioning based on the TOC data was completed.	Stop
22	Timeout of slider inner circumference	Inside switch could not ON within 3 seconds.		Stop
23	Timeout of slider outer circumference	Inside switch could not OFF within 2 seconds.		Stop
33	No FOK pulse during playback CLVA	When the focus was deviated continuously 20 times.		Adjusts focus at the innermost circumference and tries to return to its position where the error was generated (for 3 times),then opens. If the same error persists after one retry, the tray opens. (No FOK pulse)

FL	Description of Error	Causes if with a DVD	Causes if with a CD	Operation of the
38	Disc-type-sensing error	If normal starting was impossible in the following three cases, disc-type sensing will be retried if other errors occure excepting C5 error. However, when the focus error "33" was occured continuously 3 times, it is finished as "38 error" at the moment: (1) startup with the first disc-type-sensing result, (2) forced startup with another disc by designating the disc type, (3) forced startup with the original disc by designating the disc type.		Open
39	SGC converge timeout	SGC could not converge during detects the peak		Open
41	Spindle timeout	The unit did not enter Stop mode within 10 seconds of issuance of a Stop command.		Stop
48	Spindle FG transition timeout	The spindle could not converge into within ± 12% of the target FG rotation speed within 10 seconds after spindle kick. The first time after startup (the first time after disc distinction), it doesn't become the number of the target rotation within five seconds. The first time after startup, detects the abnormal rotation number of high-speed continuously 3 loops. DVD: 5 to 9 mS , CD: 40 to 60 mS		Stops. (FG timeout)
49	Spindle PLL transition timeout	After the second times after startup, it doesn't become the number of the target rotation within five seconds. Detects the abnormal high-speed or low-speed rotations. DVD: 5 to 9 mS , CD: 40 to 60 mS		Stops. ("73" is displayed during starting process.)
4A	Spindle lock timeout	Spindle could not lock more than 1.5 seconds before start the AFB.		Stops. ("73" is displayed during starting process.)
51	Auto sequence timeout of peak	ABUSY did not return within 1 second after the DDTCT (peak detection) command was sent.		Stop
52	Auto sequence timeout of focus jump down	ABUSY did not return within 30 mS after the FJMPD (Focus jump 1 to 0) command was sent.		Stop
53	Auto sequence timeout of focus	ABUSY did not return within 30 mS after the FJMPU (Focus jump 0 to 1) command was sent.		Stop
54	Auto sequence timeout of play AGC	ABUSY did not return within 50 mS after the GSUMON (play-AGC-measuring) command was sent.		Stop
55	Auto sequence timeout of disc-type-sensing	ABUSY did not return within 2 seconds after the DJSRT (disc-sensing) command was sent.		Stop
56	Auto sequence timeout of ATB2	ABUSY did not return within 1 second after the TBLOFS (Internal ATB after the completion of external ATB) command was sent.		Stop
57	Auto sequence timeout of tracking servo ON	ABUSY did not return within 500 mS after the TSON (tracking servo ON) command was sent.		Stop
58	Auto sequence timeout of ATB1	ABUSY did not return within 200 mS after the TBL (external ATB) command was sent.		Stop
59	Auto sequence timeout of focus gain adjustment	ABUSY did not return within 2 seconds after the FGN (focus gain adjustment) command was sent.		Stop
5A	Auto sequence timeout of tracking gain adjustment	ABUSY did not return within 2 seconds after TGN (tracking gain adjustment) command was sent.		Stop
5B	Auto sequence timeout of offset adjustment	ABUSY did not return within 1 second after the CMDAVE (offset adjustment) command was sent.		Stop
5C	Auto sequence timeout of modulation factor measurement	ABUSY did not return within 200 mS after the ADJMIR (modulation factor measurement) command was sent.		Stop
5D	Auto sequence timeout of auto focus bias	ABUSY did not return within 2 seconds after the AFB (auto focus bias) command was sent.		Stop
5F	Auto sequence already busy	A command could not be sent because ABUSY was low. ABUSY did not return within 200 mS after TLV command was sent.		Stop
62	Pause retry error	Pause mode could not be restored within three retries after it had been released.		Continues operation

FL	Description of Error	Causes if with a DVD	Causes if with a CD	Operation of the Unit
71	ID can not read during tracing	An ID could not be read for 1 second or more.		Stop
72	Subcode check failure during playback		No frame could be read for 3 seconds or more.	Stop
73	ID can not read at the startup	An ID could not be read within 1 second after the AFB adjustment had been finished.		Opens (ID readout failure)
74	Subcode check failure during startup		No subcode could be read within 3 seconds after AFB adjustment had been finished.	Opens (Subcode readout failure).
81	Timeout for reading TOC of the mechanism controller		TOC readout took 30 seconds or more.	Stop
82	Timeout for reading TOC of the system controller		Reading TOC of the system controller took 30 seconds or more.	Stop
A1	Communication timeout of DSP command	A command could not be issued to DSP because Command Busy (XCBUSY) was in force (XCBUSY = L) for a specified time (about 200 mS).		No operation
A2	Communication timeout for reading DSP coefficient	Command Busy (XCBUSY) was in force for a specified time (about 200 mS) before and after a coefficient read command was issued to DSP, or the address echo-back after command issuance did not match the setup address.		No operation
A3	Communication timeout for writing DSP coefficient	Command Busy (XCBUSY) was in force for a specified time (about 1024 mS) before and after the coefficient write command was issued to DSP.		No operation
A4	Communication timeout for continuously writing DSP coefficient	Command Busy (XCBUSY) was in force for 200 mS during continuous coefficient writing, or before and after a continuous write command was issued to DSP.		No operation
B1	Timeout error for backup	In the tracing state during the backup sequence, codes could not be read for 1 second or more. In the backup sequence, tracking ON sequence of the servo DSP could not be completed even if more than 500 mS after the tracking ON command was issued.		Stops
B2	Retry error for backup	Tracing impossible after retring the tracking ON for 3 times in the backup sequence.		Stops
B3	Retry error for trace	During tracing, runaway was detected after three iterations of backup operations for detecting runaway.		Stops
C3	Detection of tracking overcurrent	During playback, the overcurrent detection port was at L for 300 ms or more continuously.		Stops (the mechanical controller operates independently).
(C5)	Short-circuit test corresponding error	While the power was on, the overcurrent detection port was at L for 40 ms or more continuously.		Turns off the power instantly (No indication on the FL display and no writing to flash memory)
E3	Violation against digital copy guard			Stops
F5	Tray being pushed	The tray switch that had been Open mode was forcibly changed to a mode other than Open by an external force.		Closes
F8	Loading timeout	Loading, unloading or clamping could not be completed within a specified time (about 5 seconds).		Reverses the loading direction. It timeout is repeated upon retry, the unit stops.
FC	Focus	The following error occured eight times. (1) Focus ON sequence could not be completed even if more than two seconds after the focus ON command (to the servo DSP) was sent. (2) Focus IN sequence was finished, actually focus IN was not completed.		Stops wherever possible then opens (stops in the case of side B).

Error codes that are displayed on the FL display by using the remote control unit (Device error)
To display : ESC + DISPLAY + DISPLAY ; Location of the display : At the two digits of left of the FL display

FL	Description of Error	Causes if with a DVD	Causes if with a CD	Operation of the Unit
bit3=1 08 etc.	AV1 access error (read, write NG)			No operation or it becomes debugging indication if the power is able to ON.
bit2=1 04 etc.	MY CHIP access error			
bit1=1 01 etc.	SRAM access error			

7.1.9 DISASSEMBLY

DIAGNOSIS OF PCBS

Note

When diagnosing the unit, be sure to use two connection cables for service. (Part No : GGD1228)

1 Test Disc Clamp

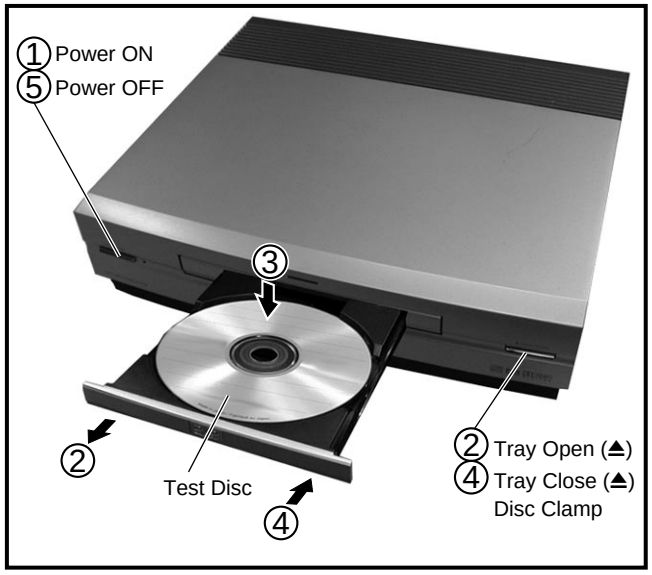

2 Bonnet and Top Panel Assy

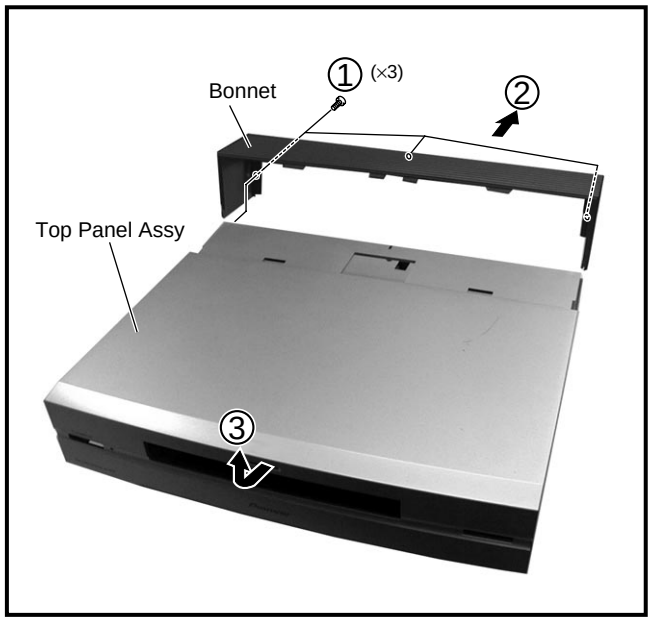

3 BLED Assy and Top Plate

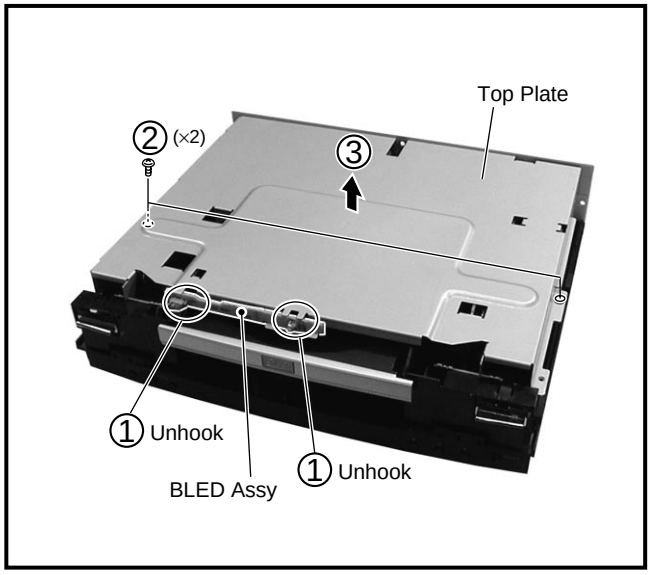

4 Loading Mechanism Assy

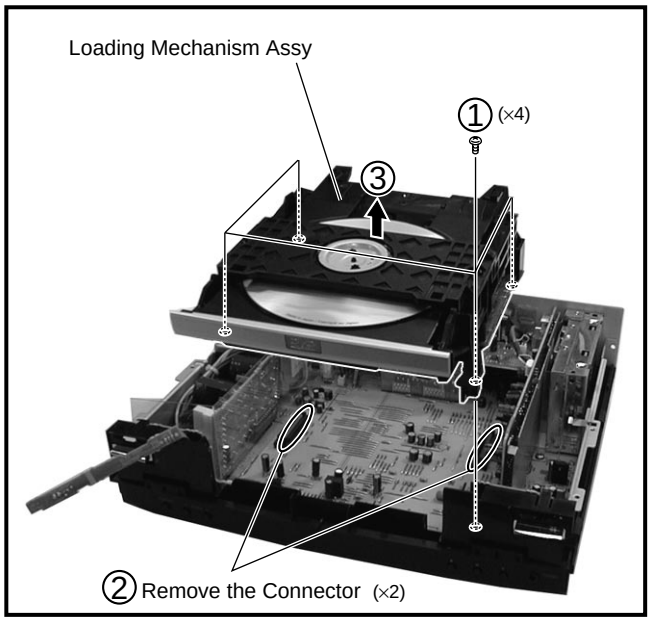

5 Short Circuit R389

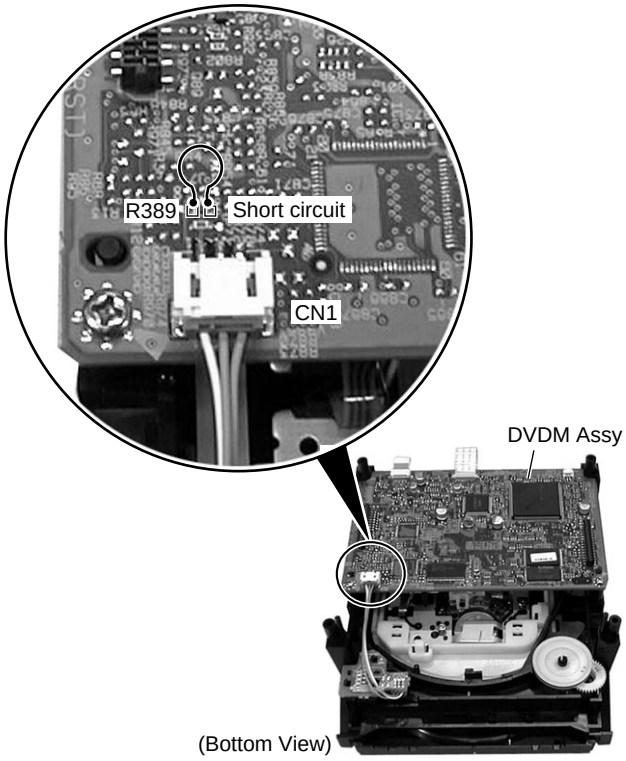

Note ;
1 : When does not short-circuit with R389, playback will not possible after the next steps.
2 : Release the short-circuit after the 7 Diagnosis is completed.

6 Power Transformer and MOTHER Assy

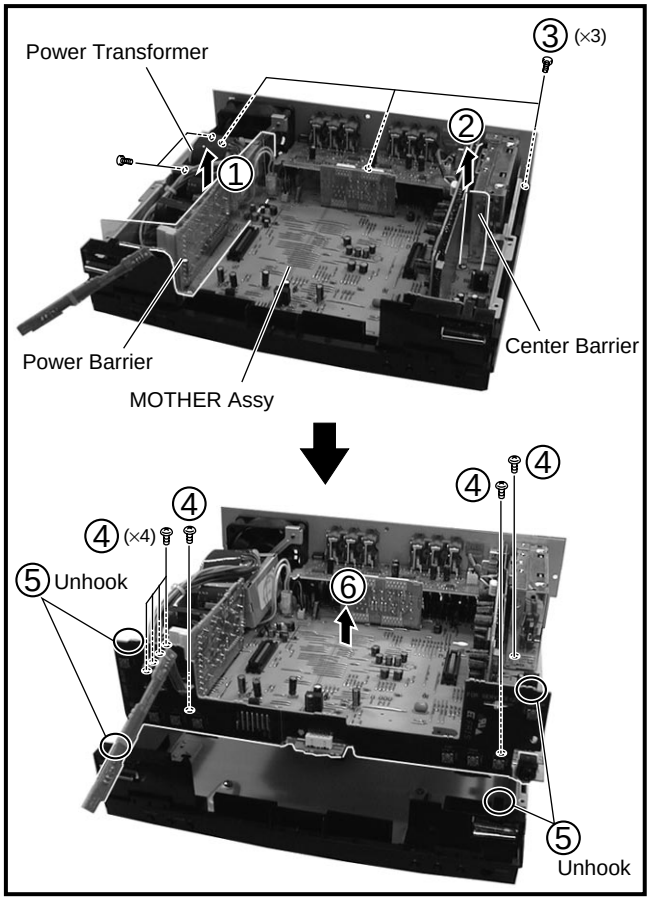

7 Styling of the Connection Cables (Diagnosis)

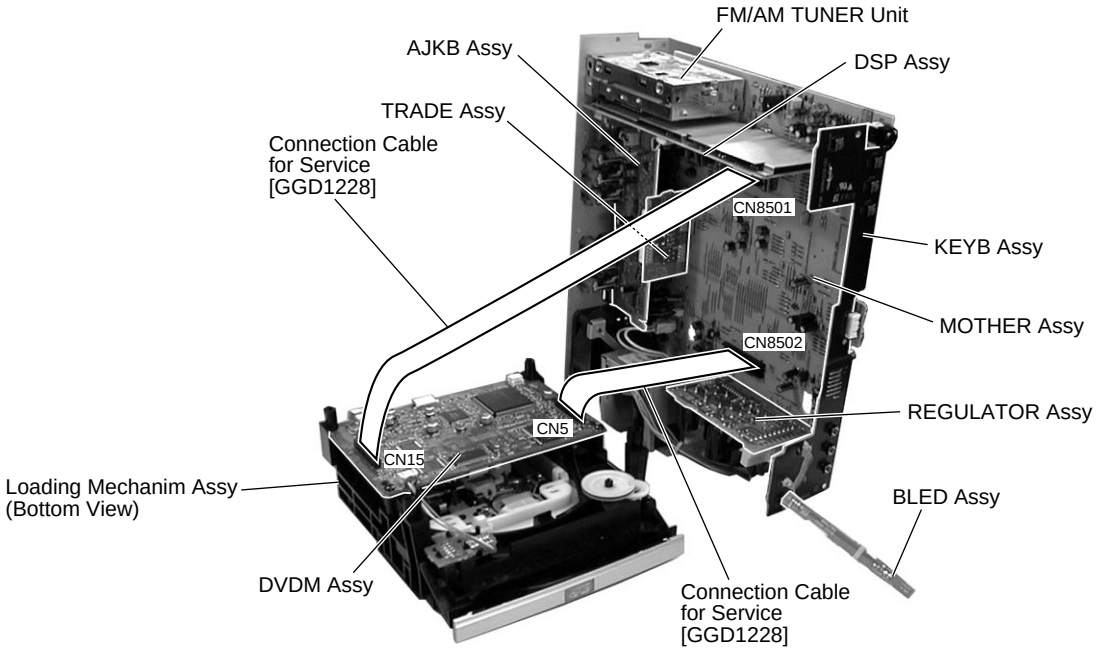

DISASSEMBLY OF TRAVERSE MECHANISM ASSY-S

① Remove the Bonnet (Screws × 3)
② Remove the Top Panel Assy
③ Remove the Top Plate (Screws × 2)
④ Power ON
⑤ Tray Open (⏏)

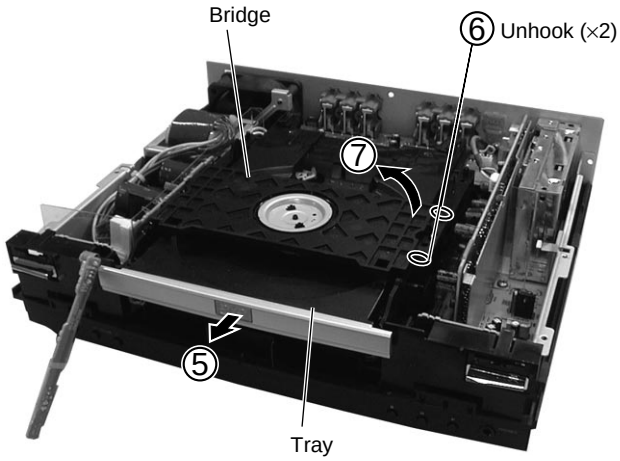

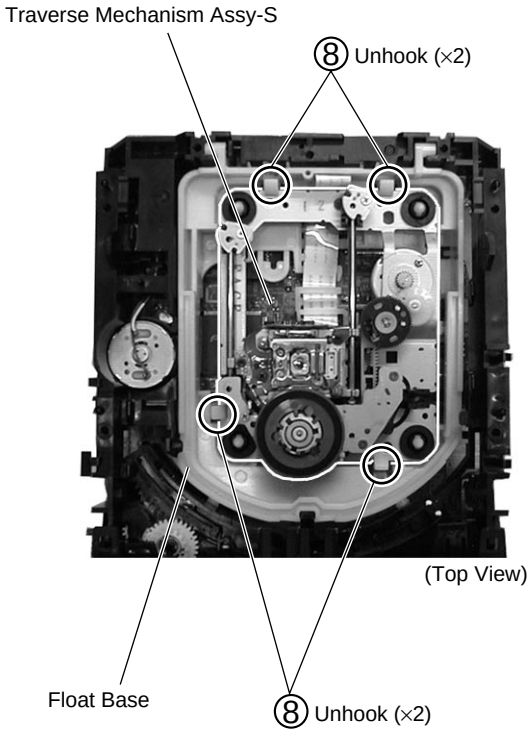

⑨ Remove the Traverse mechanism assy-S

7.2 PARTS

7.2.1 IC

• The information shown in the list is basic information and may not correspond exactly to that shown in the schematic diagrams.

●List of IC

LC78652W, PD3410A, MB86373B, PDC062, BU4099

■ LC78652W (DVDM ASSY : IC2)

• DSP IC

● Block Diagram

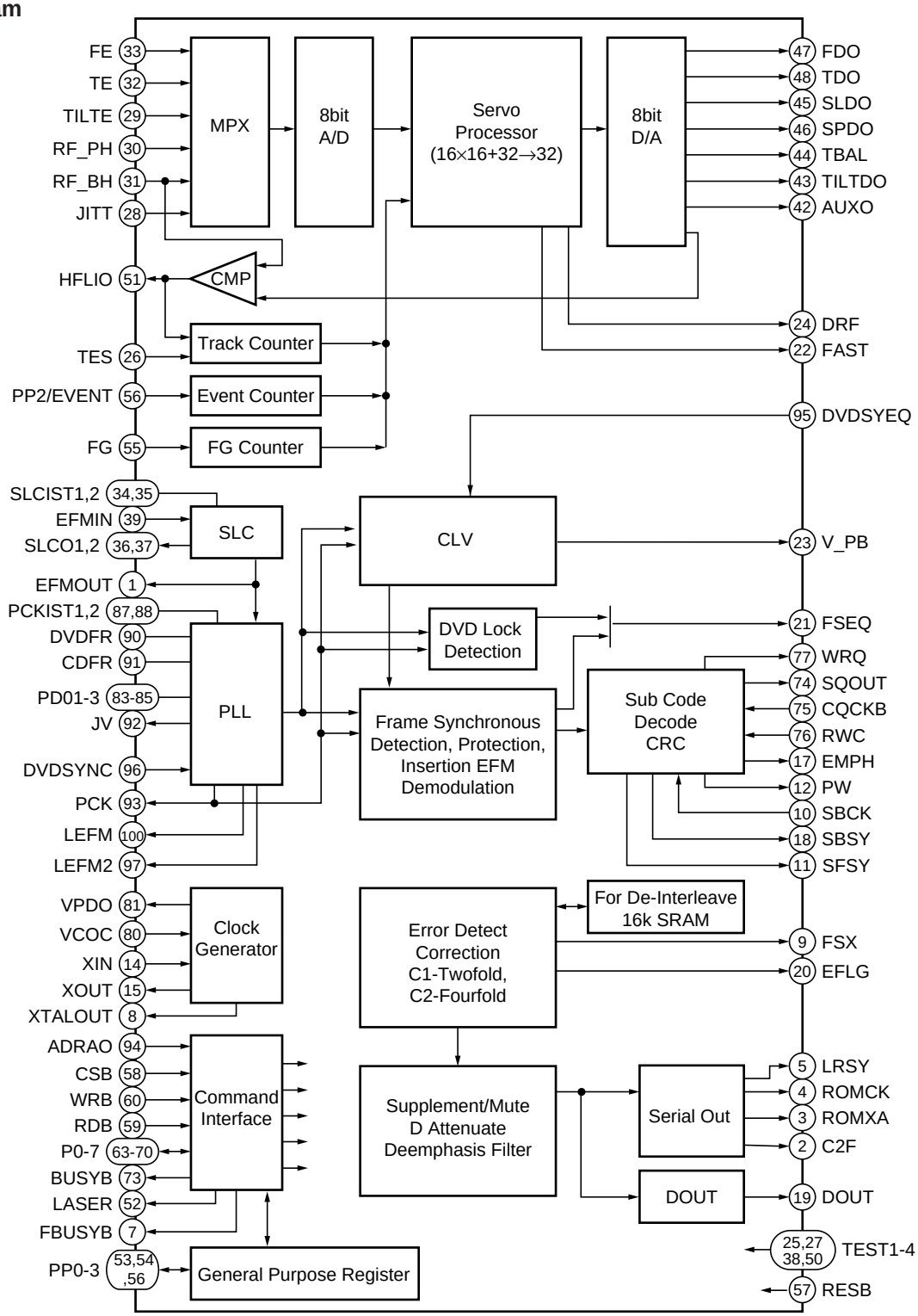

●Pin Function

No.	Pin Name	I/O	Function
1	EFMOUT	O	Output the state that was binary-stated value EFM
2	C2F	O	C2 flag output
3	ROMXA	O	CD-ROM data output
4	ROMCK	O	Shift clock output for CD-ROM data output
5	LRSY	O	L/R clock output for CD-ROM data output
6	PP3	I/O	General-purpose port input/output / DVD sync. signal input N ch-OD output
7	FBUSYB	O	Busy signal output of DSP process operation N ch-OD output
8	XTALOUT	O	External system clock output
9	FSX	O	CD 1 frame sync. signal output
10	SBCK	I	Subcode reading out clock input
11	SFSY	O	Frame sync. signal output of subcode
12	PW	O	Subcode P, Q, R, S, T, U, V and W output
13	VSS	–	GND pin
14	XIN	I	Connect a crystal resonator (16.9344MHz)
15	XOUT	O	Connect a crystal resonator
16	DVDD1	–	3.3V power supply of the oscillation circuit
17	EMPH	O	Monitor pin of the deemphasis
18	SBSY	O	Sync. signal output of the subcode block
19	DOUT	O	Audio EIAJ data output
20	EFLG	O	Error correction state monitor of the error correction C1 and C2
21	FSEQ	O	Detection monitor of the CD/DVD frame sync. signal
22	FAST	O	Playback speed monitor N ch-OD output
23	V_PB	O	Monitor output of the rough servo/CLV control
24	DRF	O	In focus monitor
25	TEST3	I	Test input 3
26	TES	I	Tracking error signal input
27	TEST2	I	Test input 2
28	JITT	I	Jitter quantity detecting signal input of EFM PLL
29	TILTE	I	Tilt error signal input
30	RF_PH	I	RF peak hold signal input
31	RF_BH	I	RF bottom hold signal input
32	TE	I	Tracking error signal input
33	FE	I	Focus error signal input
34	SLCIST1	–	Current setting pin 1 of the constant current charge pump for SLC
35	SLCIST2	–	Current setting pin 2 of the constant current charge pump for SLC
36	SLCO1	O	Control output 1 for SLC
37	SLCO2	O	Control output 2 for SLC
38	TEST1	I	Test input 1
39	EFMIN	I	EFM/EFM + input
40	AVDD	–	5V power supply of A/D and D/A for servo
41	AVSS	–	GND of A/D and D/A for servo
42	AUXO	O	DA auxiliary output
43	TILTDO	O	Tilt control signal output
44	TBAL	O	Tracking balance control signal output
45	SLDO	O	Sled control signal output
46	SPDO	O	Spindle control signal output
47	FDO	O	Focus control signal output
48	TDO	O	Tracking control signal output
49	VREF	–	Reference level of D/A for servo
50	TEST4	I	Test input 4

No.	Pin Name	I/O	Pin Function
51	HFLIO	I/O	Mirror detection signal input/output
52	LASER	O	Output pin for laser ON/OFF control
53	PP0/DVD_CDB	I/O	General-purpose port input/output / Disc discrimination signal output
54	PP1/CRCERRB	I/O	General-purpose port input/output / Subcode CRC result signal output
55	FG	I	FG counter input
56	PP2/EVENT	I/O	General-purpose port input/output / Event counter input
57	RESB	I	Reset input
58	CSB	I	Chip select input
59	RDB	I	Internal state reading signal input
60	WRB	I	Command / data writing signal input
61	DVDD2	–	5V power supply
62	VSS	–	GND
63	P0	I/O	Command / data input/output
64	P1		
65	P2		
66	P3		
67	P4		
68	P5		
69	P6		
70	P7		
71	VSS	–	GND
72	DVDD1	–	3.3V power supply for internal
73	BUSYB	O	Busy signal output of command process
74	SQOUT	O	Serial output of subcode Q
75	CQCKB	I	Shift clock input for subcode Q data output
76	RWC	I	Update permission input of subcode Q
77	WRQ	O	Read out ready monitor of subcode Q
78	AVSS	–	PLL GND for internal system clock
79	VRPFR	–	VCO oscillation range setting of PLL for system clock
80	VCOC	I	Connect a PLL filter for system clock
81	VPDO	O	
82	AVDD	–	PLL 5V power supply for system clock
83	PDO1	I/O	PLL filter connection pin 1 for EFM playback
84	PDO2	I/O	PLL filter connection pin 2 for EFM playback
85	PDO3	I/O	PLL filter connection pin 3 for EFM playback
86	AVSS	–	PLL GND for EFM playback
87	PCKIST1	–	Current setting 1 of PLL constant current charge pump for EFM playback
88	PCKIST2	–	Current setting 2 of PLL constant current charge pump for EFM playback
89	AVDD	–	PLL 5V power supply for EFM playback
90	DVDFR	–	VCO oscillation range setting of PLL for EFM playback 1
91	CDFR	–	VCO oscillation range setting of PLL for EFM playback 2
92	JV	O	Jitter output of PLL clock for EFM playback
93	PCK	O	Bit clock output for EFM playback
94	ADRAO	I	Address input
95	DVDSYEQ	I	DVD synchronize pulse input
96	DVDSYNC	I	DVD synchronous signal input
97	LEFM2	O	Output the state that cut and out a signal which was binary-stated value EFM with PCK 2
98	DVDD1	–	3.3V power supply for I/O
99	VSS	–	GND
100	LEFM	O	Output the state that cut and out a signal which was binary-stated value EFM with PCK 1

■ PD3410A (DVDM ASSY : IC11)

• **System Control IC**

● Pin Function

No.	Mark	Pin Name	I/O	Function
1	XCS3/XCASL	XCS3	O	PD4995A (MY CHIP) chip select signal output
2	GND	GND	–	GND
3	CK	HCPUCK	O	N.C.
4	VCC	V+3D	–	V+3D
5	PICLK	–	I/O	N.C.
6	PIDATA	–	I/O	N.C.
7	GND	GND	–	GND
8	PORTH0	–	O	N.C.
9	PORTH1	–	O	N.C.
10	PORTH2	36MVH	O	BU2158F (Clock generator) [WY model]
11	PORTH3	V_SEL2	O	Composite/S switching signal output of the skirt terminal
12	VCC	V+3D	–	V+3D
13	PORTH4	–	O	N.C.
14	PORTH5	–	O	N.C.
15	PORTH6	–	O	N.C.
16	PORTH7	–	O	N.C.
17	GND	GND	–	GND
18	EXTAL	EXTAL	I	Connect a ceramic resonator
19	XTAL	XTAL	O	
20	VCC	V+3D	–	V+3D
21	PORTG0	XCSDF0	O	DAC chip select signal output (←XLAT3)
22	PORTG1	–	O	N.C.
23	PORTG2	–	O	N.C.
24	PORTG3	–	O	N.C.
25	PORTG4	–	O	N.C.
26	GND	GND	–	GND
27	PORTG5	–	O	N.C.
28	PORTG6	–	O	N.C.
29	PORTG7	XAMUTE	O	Last stage mute signal output of the audio
30	PORTF0	44X48	O	DAC 44/48 FS switching signal output
31	PORTF1	–	I	N.C.
32	PORTF2	3DON	O	3D audio ON/bypass switching signal output
33	VCC	V+3D	–	V+3D
34	PORTF3	–	O	N.C.
35	PORTF4	XAVSRST	O	Sync. reset port
36	PORTF5	–	O	N.C.

No.	Mark	Pin Name	I/O	Function
37	PORTF6	–	O	N.C.
38	PORTF7	XCSVE	O	Serial communication enable signal output of the video encoder [WY model]
39	GND	GND	–	GND
40	AVSS	GND	–	GND
41	AVCC	V+3D	–	V+3D
42	OUTA_P	LODRV	O	Loading drive output
43	VREF	V+3D	–	V+3D
44	OUTB_P	TEI	O	Tracking offset signal output
45	AVSS	GND	–	GND
46	AVSS	GND	–	GND
47	PORTE0	V_SEL	O	Component/composite switching signal output
48	PORTE1	–	I	N.C.
49	PORTE2	–	I	N.C.
50	PORTE3	FOFST1	I/O	Focus offset adjustment output 1
51	PORTE4	FOFST2	I/O	Focus offset adjustment output 2
52	PORTE5	XDFINH	I/O	Defect shunt signal output
53	PORTE6	DVD/XCD	O	DVD/CD switching signal output
54	PORTE7	LD1_ON	O	650 nm laser diode ON signal output
55	PORTD0	LD2_ON	O	780 nm laser diode ON signal output
56	VCC	V+3D	–	V+3D
57	PORTD1	DPD/TE	O	1 beam/3 beams switching signal output
58	PORTD2	AGOFF	O	AGC ON/OFF switching signal output of RF IC
59	PORTD3	XCD2X	O	Signal output for switching the double speed playback (VCD)
60	PORTD4	OEICG	O	OEIC gain switching signal output
61	GND	GND	–	GND
62	PORTD5	XMON	O	ON/OFF switching signal output of the spindle motor control output
63	PORTD6	–	O	N.C.
64	PORTD7	–	I	N.C.
65	PORTJ0	XDRVMUT	O	Driver mute output
66	PORTJ1	–	O	N.C.
67	PORTJ2	XDSPRST	O	Servo DSP reset
68	PORTJ3	–	I	N.C.
69	VCC	V+3D	–	V+3D
70	PORTJ4	TM_ENT	I	Test mode entry
71	PORTJ5	–	O	N.C.
72	PORTJ6	VSEL_SW	I	Component/composite SW input
73	PORTJ7	–	I	N.C.
74	PB0/TIOCA2	XCBUSY	I	Command busy input
75	PB1/TIOCB2	XABUSY	I	Auto-sequence busy input
76	PB2/TIOCA3	XINT2	I	Interrupt input 2 (AV-1)
77	VCC	V+3D	–	V+3D
78	PB3/TIOCB3	LT1	O	Communication response signal output to the FL controller
79	PB4/TIOCA4	SBSY	I	Subcode block sync. input
80	XMTEST	–	I	Test terminal (V+3D)
81	XCPUMD	–	I	Test terminal (V+3D)
82	XRES	XRESET	I	Reset input

No.	Mark	Pin Name	I/O	Function
83	GND	GND	–	GND
84	AN0	LODPOS	I	Loading position input
85	AN1	SLDPOS	I	Slider position input
86	AN2	–	I	N.C.
87	AN3	NAP_SW	I	NTSC/AUTO/PAL SW input
88	AN4	XOEM	I	Input terminal of OEM model protection
89	AN5	LDDEAD	I	Input for LD current value display
90	AN6	–	I	N.C.
91	AN7	–	I	N.C.
92	Avref	V+3D	–	V+3D
93	AVCC	V+3D	–	V+3D
94	AVSS	GND	–	GND
95	PB5/TIOCB4	–	I	N.C.
96	PB6/TIOCXA4/TCLKC	C2F	I	C2 error input
97	PB7/TIOCXB4/TCLKD	XRDY	I	Communication request input from the FL controller
98	PB8/RxD0	SSI	I	Serial data input (FL controller)
99	PB9/TxD0	SSO	O	Serial data output (FL controller)
100	VCC	V+3D	–	V+3D
101	PB10/RxD1	RXD	I	Data input of the RS-232C
102	PB11/TxD1	TXD	O	Data output of the RS-232C
103	PB12/XIRQ4/SCK0	SSCK	I/O	Serial clock output (FL controller)
104	PB13/XIRQ5/SCK1	XIRQL10	I	Interrupt input #0 (MY CHIP)
105	GND	GND	–	GND
106	PB14/XIRQ6	XIRQL11	I	Interrupt input #1 (MY CHIP)
107	PB15/XIRQ7	XINT0	I	Interrupt input #0 (AV-1)
108	PA0/XCS4/TIOCA0	XCS4	O	Servo DSP chip select signal output
109	PA1/XCS5/XRAS	–	O	N.C.
110	PA2/XCS6/TIOCB0	XCS6	O	AV-1 chip select signal output
111	XWAIT	XWAIT	I	Wait signal input
112	XWRL	XWRL	O	Write pulse output L
113	GND	GND	–	GND
114	XWRH	XWRH	O	Write pulse output H
115	XRD	XRD	O	Read pulse output
116	PA7/XBACK	XCURDET	I	Over-current detection signal input
117	PA8/XBREQ	CTS	I	RS-232C transfer permit input
118	PA9/XAH/XIRQOUT/ XADTRG	DTR	O	RS-232C transfer permit output
119	PA10/DPL/TIOCA1	XINT1	I	Interrupt input 1 (AV-1)
120	PA11/DPH/TIOCB1	THLD	I	Tracking hold signal input
121	VCC	V+3D	–	V+3D
122	PA12/XIRQ0/DACK0/ TCLKA	DACK0	O	DMA response output (MY CHIP)
123	PA13/XIRQ1/ XDREQ0/TCLKB	XDREQ0	I	DMA request input (MY CHIP)
124	PA14/XIRQ2/XDACK1	XDACK1	O	DMA response output (AV-1)
125	PA15/XIRQ3/XDREQ1	XDREQ1	I	DMA request input (AV-1)
126	AD0	D0	I/O	Data bus 0

No.	Mark	Pin Name	I/O	Function
127	GND	GND	–	GND
128	AD1	D1	I/O	Data bus 1
129	AD2	D2	I/O	Data bus 2
130	AD3	D3	I/O	Data bus 3
131	AD4	D4	I/O	Data bus 4
132	AD5	D5	I/O	Data bus 5
133	AD6	D6	I/O	Data bus 6
134	VCC	V+3D	–	V+3D
135	AD7	D7	I/O	Data bus 7
136	AD8	D8	I/O	Data bus 8
137	AD9	D9	I/O	Data bus 9
138	AD10	D10	I/O	Data bus 10
139	GND	GND	–	GND
140	AD11	D11	I/O	Data bus 11
141	AD12	D12	I/O	Data bus 12
142	AD13	D13	I/O	Data bus 13
143	AD14	D14	I/O	Data bus 14
144	VCC	V+3D	–	V+3D
145	AD15	D15	I/O	Data bus 15
146	A0 (XHBS)	A0	O	Address bus 0
147	A1	A1	O	Address bus 1
148	A2	A2	O	Address bus 2
149	GND	GND	–	GND
150	A3	A3	O	Address bus 3
151	A4	A4	O	Address bus 4
152	A5	A5	O	Address bus 5
153	A6	A6	O	Address bus 6
154	A7	A7	O	Address bus 7
155	A8	A8	O	Address bus 8
156	A9	A9	O	Address bus 9
157	A10	A10	O	Address bus 10
158	A11	A11	O	Address bus 11
159	A12	A12	O	Address bus 12
160	A13	A13	O	Address bus 13
161	A14	A14	O	Address bus 14
162	A15	A15	O	Address bus 15
163	A16	A16	O	Address bus 16
164	A17	A17	O	Address bus 17
165	VCC	V+3D	–	V+3D
166	A18	A18	O	Address bus 18
167	A19	A19	O	Address bus 19
168	A20	A20	O	Address bus 20 [RAM model]
169	A21	A21	O	N.C.
170	XNMI	XNMI	I	V+3D
171	GND	GND	–	GND
172	XCS10	–	O	N.C.
173	XCS20	XCS20	O	Chip select signal output of the flash ROM
174	XCS22	–	O	Chip select signal output of the GUI ROM [OEM model]
175	XCS23	XCS23	O	Chip select signal output of the SRAM
176	XCS2	–	O	N.C.

■ MB86373B (DVDM ASSY : IC18)

• **MPEG2 Decoder IC**

● **Block Diagram**

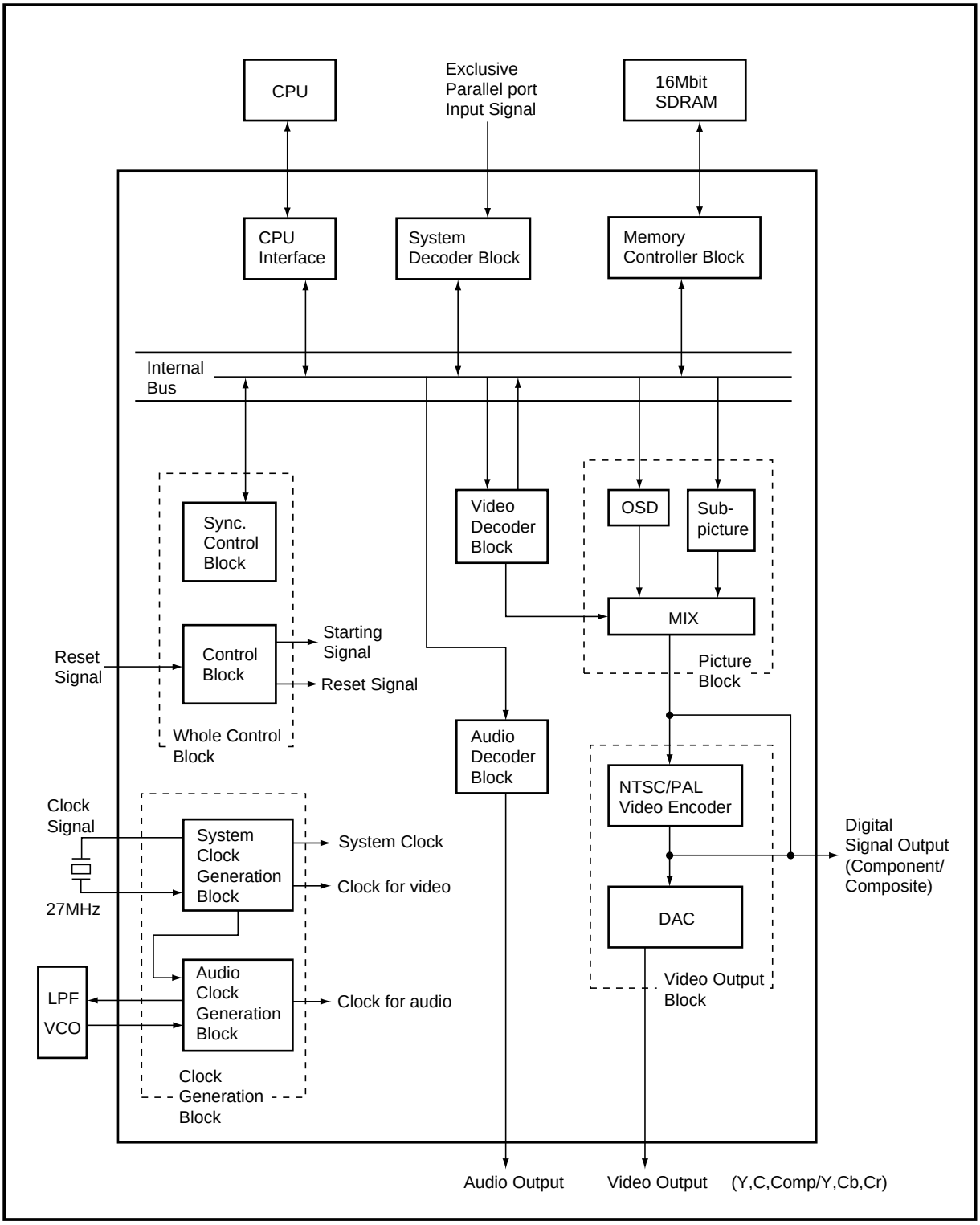

● Pin Function

No.	Pin Name	I/O	Function	No.	Pin Name	I/O	Function
1	CLKSEL	I	ON/OFF signal of PLL ("H" : ON, "L" : OFF)	27	VDD	–	2.5V power supply
2	DIGCPN7	O	Digital component signal output (MSB) Digital Y signal output (9-bit) (MSB)	28	DIGCOMP4	O	Digital composite signal output Digital C signal output
3	VSS	–	GND	29	DIGCOMP3		
4	DIGCPN6	O	Digital component signal output Digital Y signal output (9-bit)	30	DIGCOMP2		
5	DIGCPN5			31	DIGCOMP1		
6	DIGCPN4			32	DIGCOMP0		Digital composite signal output (LSB) Digital C signal output (LSB)
7	DIGCPN3			33	DACK	O	27 MHz clock output
8	DIGCPN2			34	N.C.	–	Non connection
9	DIGCPN1			35	VSSA3	–	GND (D/A converter)
10	VDD	–	2.5V power supply	36	ANAC	O	Analog color (C) output signal
11	DIGCPN0	O	Digital component signal output (LSB) Digital Y signal output (9-bit) (LSB)	37	VDDA3	–	2.5V power supply (for built-in D/A converter only)
12	RBSEL	O	Cb and Cr discrimination signal at the digital component signal output. LSB at the digital Y signal output.	38	VSSA2	–	GND (D/A converter)
13	XHS	O	Horizontal sync. output signal	39	ANAY	O	Analog luminance (Y) output signal
14	XVS	O	Vertical sync. output signal	40	VDDA2	–	2.5V power supply (for built-in D/A converter only)
15	VSS	–	GND	41	VREF	I	Reference voltage for D/A converter
16	XRESET	I	LSI reset signal	42	VRO	O	Internal current setting pin of D/A converter
17	XLDCSYNC	I	External sync. signal input (LD mode)	43	VDDA4	–	2.5V power supply (for built-in D/A converter only)
18	KEY	O	KEY signal for LD and OSD overlay (LD mode)	44	VSSA1	–	GND (D/A converter)
19	PD	O	Phase comparison result output signal of horizontal sync. (LD mode)	45	ANACOMP	O	Analog composite output signal
20	VFLD	O	Field discrimination signal at the digital signal output H : even field L : odd field	46	VDDA1	–	2.5V power supply (for built-in D/A converter only)
21	DIGCOMP9	O	Digital composite signal output (MSB) Digital C signal output (MSB)	47	BF	O	Burst flag signal
22	DIGCOMP8		Digital composite signal output Digital C signal output	48	XBLK	O	H/V composite blanking signal
23	DIGCOMP7			49	TEST4	O	Normally, set to "open".
24	DIGCOMP6			50	VSS	–	GND
25	DIGCOMP5			51	TEST0	I	Normally, set to "open".
26	VSS	–	GND	52	TEST1	I	"L" status normally

No.	Pin Name	I/O	Function	No.	Pin Name	I/O	Function
53	DAIIN	I	Digital data input of external input (SPDIF)	92	HADRS10	I	CPU address bus signal (MSB)
54	CDDATA	I	Audio data input of external input (correspond to CD)	93	HADRS9	I	CPU address bus signal
55	CDLR	I	Data channel clock input of external input (correspond to CD)	94	HADRS8		
56	CDBCK	I	Data clock input of external input (correspond to CD)	95	HADRS7		
57	AODATA3	O	Audio decode data	96	VSS	–	GND
58	AODATA2			97	VDD	–	2.5V power supply
59	AODATA1			98	HADRS6	I	CPU address bus signal
60	VSS	–	GND	99	HADRS5		
61	VDD	–	2.5V power supply	100	HADRS4		
62	AODATA0	O	Audio decode data	101	HADRS3		
63	AOPCM	O	Digital audio interface output (compression data)	102	HADRS2		CPU address bus signal (LSB)
64	AODAI	O	Digital audio interface output (decode data)	103	HDATA15	I/O	CPU data bus signal (MSB)
65	LRCK	O	Data channel clock for D/A and digital filter	104	HDATA14		CPU data bus signal
66	AOMCK	O	Master clock for D/A and digital filter	105	HDATA13		
67	BCK	O	Bit clock for D/A and digital filter	106	HDATA12		
68	TEST2	I	Normally, set to "open".	107	VSS	–	GND
69	TEST3			108	HDATA11	I/O	CPU data bus signal
70	NC	–	Non connection	109	HDATA10		
71	XDSPRST	I	Normally, set to "open".	110	HDATA9		
72	VSS	–	GND	111	HDATA8		
73	TEST5	O	Normally, set to "open".	112	HDATA7		
74	NC	–	Normally, set to "open".	113	HDATA6		
75	NC			114	VDD	–	2.5V power supply
76	NC			115	HDATA5	I/O	CPU data bus signal
77	NC			116	HDATA4		
78	SD7	I	Parallel data input	117	HDATA3		
79	VDD	–	2.5V power supply	118	HDATA2		
80	SD6	I	Parallel data input	119	VSS	–	GND
81	SD5			120	HDATA1	I/O	CPU data bus signal
82	SD4			121	HDATA0		CPU data bus signal (LSB)
83	SD3			122	BUSSEL	I	Bus width selection signal (0 : 8-bit bus, 1 : 16-bit bus)
84	SD2			123	XOSDACK	I	OSD data acknowledge signal
85	VSS	–	GND	124	XOSDREQ	O	OSD data request signal
86	SD1	I	Parallel data input	125	HCPUSEL1	I	CPU selection signal (00 :SPARC, 01 :86 system, 10 :68 system, 11 :Reserve)
87	SD0			126	HCPUSEL0		
88	XERR	I	Error input signal	127	XINT3	O	Interrupt request signal to the CPU
89	XSACK	I	Acknowledge signal	128	XINT2		
90	XTEST	I	Set to "H" at normal use	129	XINT1		
91	SREQ	O	Data request signal	130	VSS	–	GND

No.	Pin Name	I/O	Function	No.	Pin Name	I/O	Function
131	VDD	–	2.5V power supply	170	XMDRCAS	O	CAS signal for SDRAM
132	XINT0	O	Interrupt request signal to CPU	171	XMDRDQM1	O	Input mask / output enable signal for SDRAM
133	XEXTRDY	O	SPARC, 68 system : Ready signal to CPU 86 system : Acknowledge (ACK) signal to CPU	172	VSS	–	GND
134	HRW	I	CPU read / write signal	173	XMDRWE	O	Write enable signal for SDRAM
135	HCLKIN	I	Host clock input	174	XMDRDQM0	O	Input mask / output enable signal for SDRAM
136	XHCS	I	LSI chip select signal	175	MDRDAT8	I/O	Data bus signal for SDRAM
137	XHAS	I	SPARC, 68 system : CPU address strobe 86 system : CPU address status	176	VSS	–	GND
138	XHBE3	I	CPU byte enable signal	177	MDRDAT7	I/O	Data bus signal for SDRAM
139	XHBE2			178	MDRDAT9		
140	XHBE1			179	MDRDAT6		
141	XHBE0			180	MDRDAT10		
142	VSS	–	GND	181	MDRDAT5		
143	MDRADR4	O	Address signal for SDRAM	182	VSS	–	GND
144	MDRADR3			183	VDD	–	2.5V power supply
145	MDRADR5			184	MDRDAT11	I/O	Data bus signal for SDRAM
146	MDRADR2			185	MDRDAT4		
147	VDD	–	2.5V power supply	186	MDRDAT12		
148	VSS	–	GND	187	MDRDAT3		
149	MDRADR6	O	Address signal for SDRAM	188	MDRDAT13		
150	MDRADR1			189	VSS	–	GND
151	MDRADR7			190	MDRDAT2	I/O	Data bus signal for SDRAM
152	MDRADR0		Address signal for SDRAM (LSB)	191	MDRDAT14		
153	MDRADR8		Address signal for SDRAM	192	MDRDAT1		
154	VSS	–	GND	193	MDRDAT15		Data bus signal for SDRAM (MSB)
155	TEST6	I	"L" status normally	194	MDRDAT0	I/O	Data bus signal for SDRAM (LSB)
156	TEST7			195	VSS	–	GND
157	TEST8			196	N.C.	–	Non connection
158	TEST9			197	ICK27M	I	System clock input
159	MDRADR10	O	Address signal for SDRAM	198	VSS	–	GND
160	MDRADR9			199	OCK27M	O	System clock output
161	MDRADR11		Address signal for SDRAM (MSB)	200	VSSA(VCO)	–	GND (for VCO only)
162	XMDRCS	O	Chip select signal for SDRAM	201	VDDA(VCO)	–	2.5V power supply (for VCO only)
163	MDRCKE	O	Clock enable signal for SDRAM	202	ILPF	O	PLL block inverter output for audio
164	VSS	–	GND	203	MLPF	I	PLL block inverter input for audio
165	VDD	–	2.5V power supply	204	OLPF	O	Phase detector output for audio
166	XMDRRAS	O	RAS signal for SDRAM	205	OVCO	I	VCO input for audio clock
167	MDRCLK	O	Clock output signal for SDRAM	206	VSS	–	GND
168	VSS	–	GND	207	XPLLRST	I	PLL section reset signal
169	MDRCLKIN	I	Clock input signal for SDRAM	208	XSYNCRST	I	SYNC reset signal

■ PDC062 (MOTHER ASSY : IC5501)

- **System Microcomputer**
- **Pin Function**

No.	Pin Name	I/O	Function	No.	Pin Name	I/O	Function
1	XDSP_MUTE	O	DSP mute (Assy mute)	41	NC	O	-
2	XCDC_RST	O	CODEC reset	42	NC	O	-
3	CDC_DIR_DO	O	CODEC&DIR control data out	43	NC	O	-
4	CDC_DIR_CK	O	CODEC&DIR control clock	44	NC	O	-
5	XCDC_CS	O	CODEC chip selection	45	NC	O	-
6	XDSP_RST	O	YSS912 reset	46	VDD	-	VDD
7	XDSP SUB CS	O	CS for YSS912 sub-DSP control	47	MODEL_1	I/O	Destination input
8	XDSP MAIN CS	O	CS for main DSP control of YSS912	48	MODEL_2	I/O	
9	HP VOL CLK	O	Headphone VOL clock	49	MODEL_3	I/O	
10	HP VOL DATA	O	Headphone VOL data	50	MODEL_4	I/O	
11	XRESET	-	Microcomputer reset terminal	51	GND	-	GND
12	XTESTMODE	I	System test mode In input	52	MODEL_5	I/O	
13	3.3DETECT	I	DVD 3.3VOLT detection input	53	MODEL_6	I/O	
14	VSS	-	GND	54	MODEL_7	I/O	
15	CF1	-	OSC input	55	MODEL_8	I/O	
16	CF2	-	OSC output	56	NC	O	-
17	VDD	-	Power supply	57	NC	O	-
18	KEY1	I	A/D key input	58	NC	O	-
19	ST/TUNE	I	TUNER STREO TUNED detection	59	NC	O	-
20	MODEL_0	I	Inducing diode input 0	60	NC	O	-
21	FAN STOP DET	I	Protection circuit abnormality detection	61	NC	O	-
22	FL DIMMER 1	O	FL DIMMER CONTROL	62	NC	O	-
23	FL DIMMER 2	O	FL DIMMER CONTROL	63	NC	O	-
24	XSTBY LED	O	STAND-BY LED control	64	NC	O	-
25	XTIMER LED	O	Timer LED control	65	NC	O	-
26	AC	I	AC pulse detection	66	NC	O	-
27	LT11	I	DVD microcomputer communication latch input	67	DIR ERR	I	ERR input from DIR
28	RDS CLK	I	RDS IC clock input (external interrupt use)	68	RDSDATA	I	RDS IC data input
29	REMOCON	I	Remote control pulse input	69	XAMUTE	I	MUTE input from DVD
30	NC	O	-	70	H.P.,DET	I	Headphone pulling out opening check
31	NC	O	-	71	DIR_DI	I	Data Inn from DIR
32	NC	O	-	72	VDD	O	VDD
33	NC	O	-	73	SCAN ON	O	Model Input port scanning ON port
34	NC	O	-	74	DIR CE	O	DIR chip enable
35	NC	O	-	75	XDIR RST	O	DIR reset
36	NC	O	-	76	POWER	O	System power control
37	NC	O	-	77	BLED	O	LED control
38	NC	O	-	78	XRDY1	O	DVD microcomputer communication READY output
39	NC	O	-	79	MAIN VOL CE	O	MAIN VOL IC M62446 chip enable
40	NC	O	-	80	PLL CE	O	PLL IC chip enable

No.	Pin Name	I/O	Function	No.	Pin Name	I/O	Function
81	EXP CK	O	Expander IC communication clock	91	D_MUTE	O	Digital output mute
82	TXDATA	I	Data signal input for communication with PLL	92	XFL CS	O	Expander IC chip enable
83	EXP DATA	O	Expander IC communication data	93	FL CK	O	FL driver communication clock
84	EXP CE	O	Expander IC communication chip enable	94	FL DATA	O	FL driver communication data
85	SYSCK	O	Clock signal for communication M62446 and PLL	95	DSP_SO	O	Data output signal for communication with YSS912
86	SYSDATA	O	Data signal for communication M62446 and PLL	96	DSP_SI	I	Data input signal for communication with YSS912
87	XDVDRST	O	DVD reset	97	DSP_CK	O	Clock signal for communication with YSS912
88	XLINE MUTE	O	System audio mute	98	SSI (SSO)	O	The DVD microcomputer communication data output (The AMP side outputs)
89	VSS	-	VSS	99	SSO(SSI)	I	The DVD microcomputer communication data input (The AMP side inputs)
90	VDD	-	VDD	100	SSCK	O	DVD microcomputer communication clock output

■ BU4094 (MOTHER ASSY : IC5801)

• Extended output IC

● Pin Function

No.	Pin Name		No.	Pin Name	Function
1	STROBE	Strobe	9	QS	Qs
2	DATA	Data	10	Q'S	Qs
3	CLOCK	Clock	11	DVD ON/OFF	DVD Power control
4	RDS ON/OFF	RDS IC Power control	12	TXMUTE	TX mute
5	VIDEO OUT MUTE	Oscillation prevention by external I/O	13	DINSEL B	DIG IN Select
6	VIDEOCONTB	NJM2296 control	14	DINSEL A	DIG IN Select
7	VIDEOCONTA	NJM2296 control	15	OE	-
8	VSS	GND	16	VDD	+5V

■ BU4099 (AJKB : IC5821)

• Extended output IC

● Pin Function

No.	Pin Name		No.	Pin Name	Function
1	STROBE	Strobe	9	QS	Qs
2	DATA	Data	10	Q'S	Qs
3	CLOCK	Clock	11	AOUTSEL A	Audio OUT change
4	XAOUT MUTE	Oscillation prevention by external I/O	12	AOUTSEL B	Audio OUT change
5	XVOUT MUTE	Oscillation prevention by external I/O	13	AINSEL A	Function (Audio) change
6	NC	-	14	AINSEL B	Function (Audio) change
7	FUNCINFO	Whether it is DVD function or not?	15	OE	-
8	VSS	GND	16	VDD	+5V

8. PANEL FACILITIES AND SPECIFICATIONS

8.1 PANEL FACILITIES

Front Panel

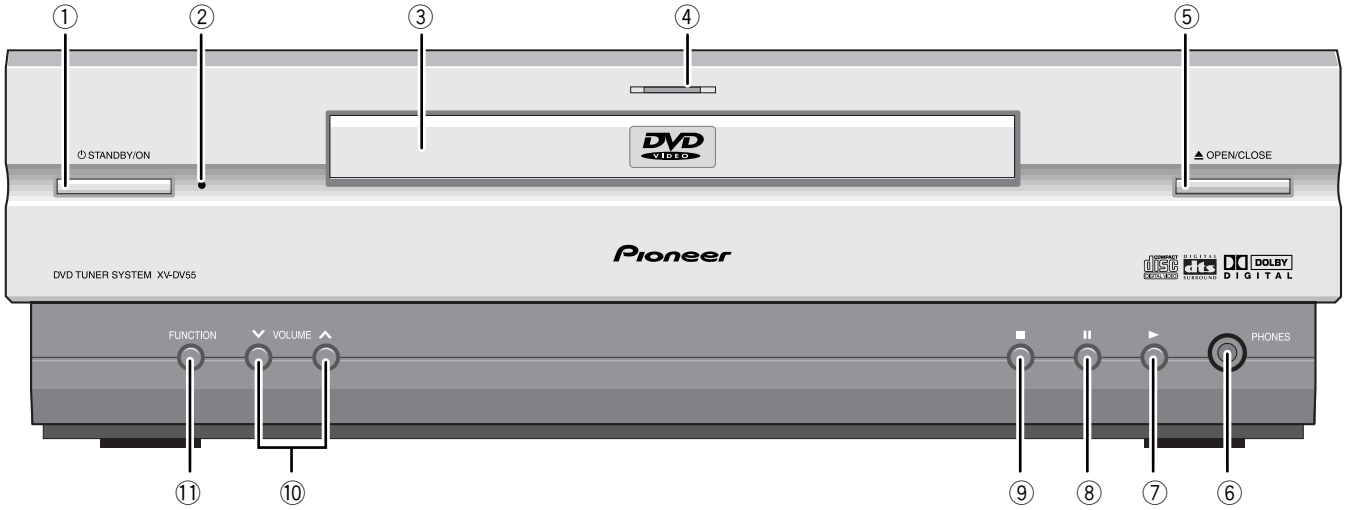

1 **STANDBY / ON** – Press to switch the system on or into standby.

2 **Standby/timer indicator** – Lights red when the system is in standby; lights in green if the timer has been set.

3 **Disc tray**

4 **DVD function indicator** – Lights when the system is set to the DVD function.

5 **⏏ OPEN/CLOSE** – Press to open or close the disc tray.

6 **PHONES** – Plug in a pair of headphones for private listening.

7 **►** – Press to start or resume playback.

8 **II** – Press to pause a disc that's playing, or restart a paused disc.

9 **■** – Press to stop the disc.

10 **VOLUME controls** – Use to adjust the overall system volume.

11 **FUNCTION** – Press to select the input source (DVD, tuner, etc.)

Rear Panel

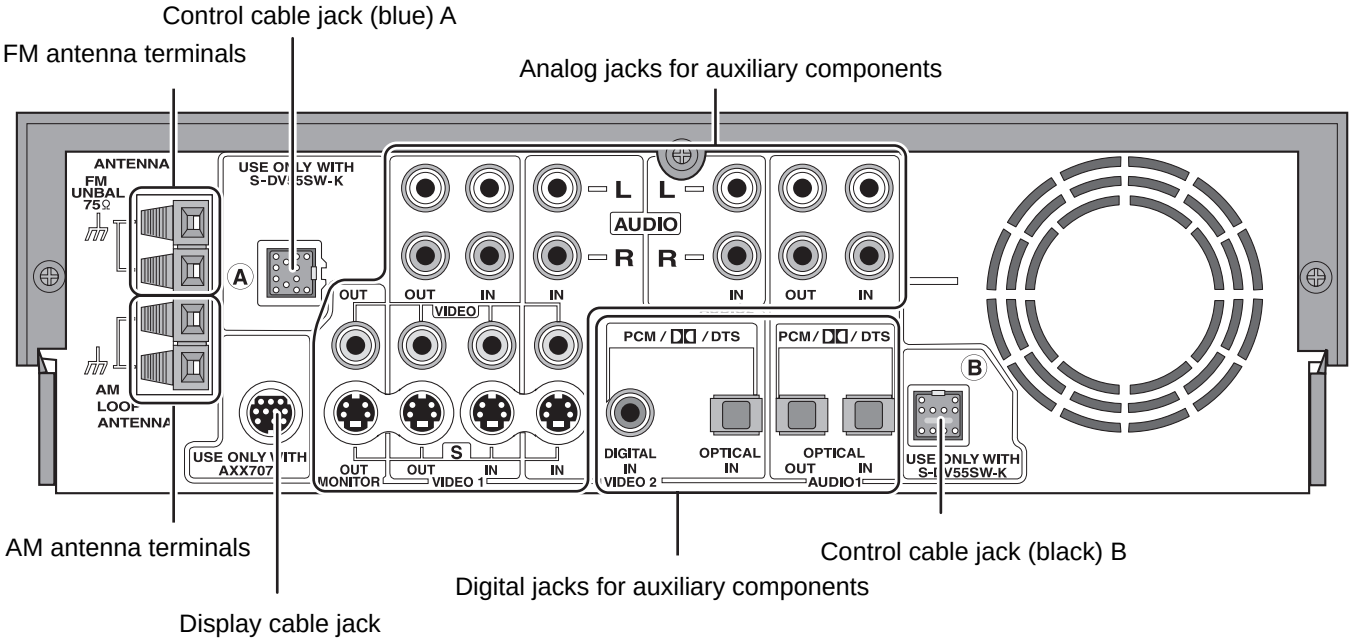

Disply unit (AXX7075)

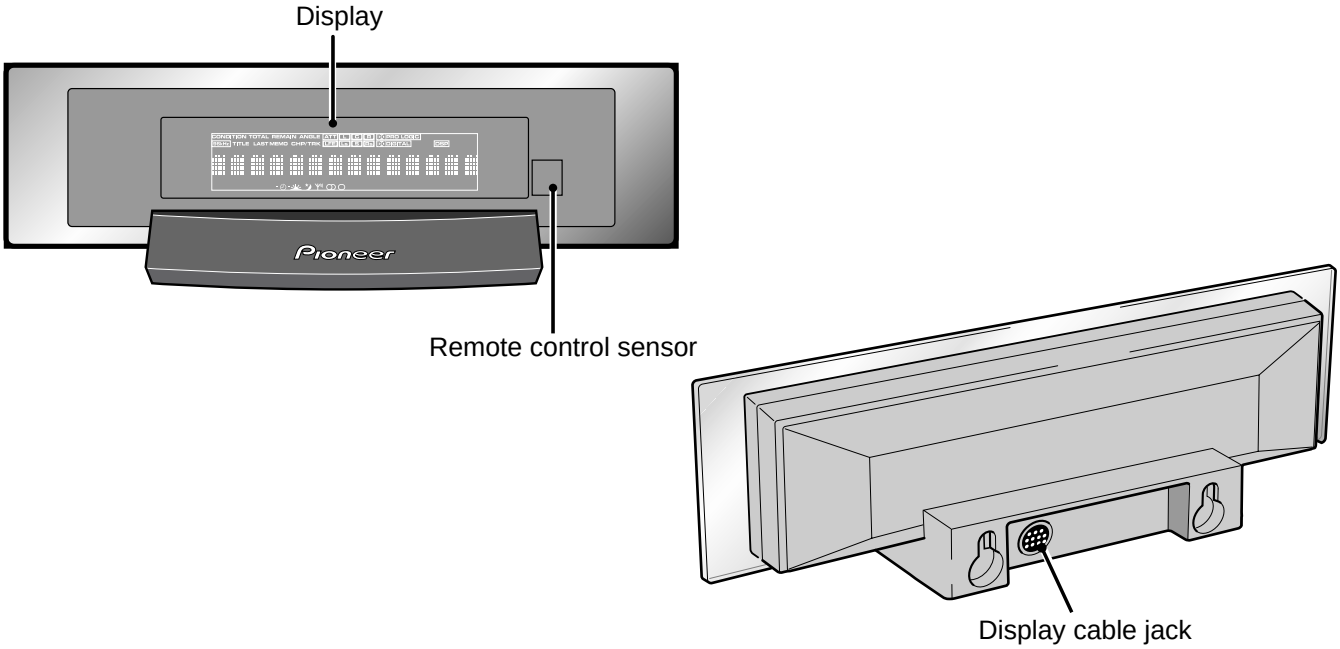

Display

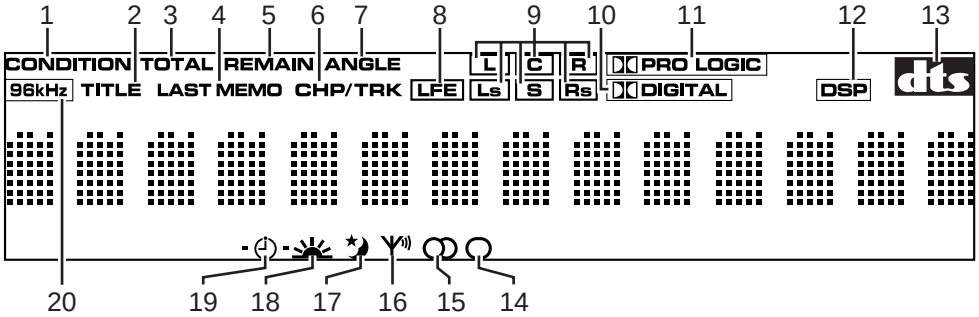

1 **CONDITION** – Indicates playback settings (condition) are memorized.

2 **TITLE** – Indicates a title playback.

3 **TOTAL** – Indicates total playback time of disc side currently playing.

4 **LAST MEMO** – Indicates that the location on a disc where you last stopped watching is memorized.

5 **REMAIN** – Indicates remaining playback time.

6 **CHP/TRK** – Indicates playback of a chapter or track.

7 **ANGLE** – Indicates multi-angle playback.

8 **LFE** – Lights if the current Dolby Digital or DTS source has a Low Frequency Effects (LFE) channel.

9 **Channel indicators** – Shows which channels are recorded on the disc loaded.

10 **2 DIGITAL** – Indicates Dolby Digital playback.

11 **2 PRO LOGIC** – Indicates Dolby Pro Logic playback.

12 **DSP** – Lights when a DSP mode or Advanced Theater effect is on.

13 **DTS** – Indicates DTS playback.

14 **Mono** – Lights when the mono FM reception mode is selected.

15 **Stereo Station Reception** – Lights during stereo broadcast station reception.

16 **Station Reception** – Lights during broadcast station reception.

17 **Sleep Timer** – Lights when the sleep timer is ON and during sleep timer operation.

18 **Wake-up Timer** – Lights when the wake-up timer is ON, and flashes during wake-up timer operation.

19 **Timer ON** – Lights when the wake-up timer is ON, and flashes during wake-up timer operation.

20 **96 kHz** – Lights during playback of a source with a sampling frequency of 96kHz.

REMOTO CONTROL UNIT

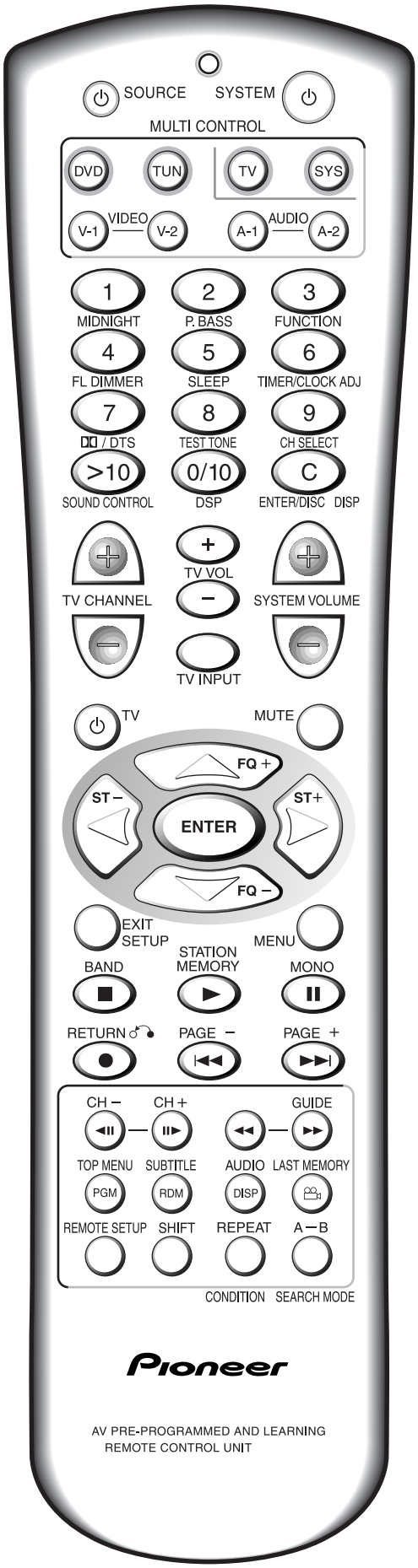

■ – Press to stop a disc playing.

► – Press to start or restart a disc playing.

II – Press to pause or restart a disc.

● – Press twice within 10 seconds to start recording on a recorder connected to the AUDIO 1 or VIDEO 1 outputs.

|◄◄ – Press to skip back tracks/chapters/titles on a disc.

►►| – Press to skip forward tracks/chapters/titles on a disc.

◄II – Use for slow motion reverse playback and frame reverse with a DVD or Video CD.

II► – Use for slow motion forward playback and frame advance with a DVD or Video CD.

◄◄ – Press and hold to reverse scan through a disc.

►► – Press and hold to forward scan through a disc.

– Press to switch the camera angle during a multi-angle scene on a DVD disc.

0/10 – Use as zero, or 10 when selecting tracks/chapters/titles from a DVD, Video CD or CD, or radio station presets.

1–9 (number buttons) – Use to select tracks/chapters/titles from a DVD, Video CD or CD, or radio station presets.

>10 – Use when entering a track/chapter/title or radio station preset number greater than 10. After pressing, input the required number (>10, 2, 4 for 24, and so on).

A **A-1** – Press to switch to an audio component connected to the AUDIO 1 inputs/outputs.

A-2 – Press to switch to an audio component connected to the AUDIO 2 inputs.

A-B – Use to set the start and end points of a repeating loop.

AUDIO (sky blue) – Press to switch to another audio channel or language on the disc playing.

B **BAND** – Press to switch between AM and FM bands when listening to the radio.

C **C** – Press to clear settings or entries.

CH+ / CH – Press to change channels on a satellite tuner, cable box, VCR, etc.

CH SELECT – Press to select the speaker channel when setting up your system for surround sound.

CONDITION – Press to save the current settings for the DVD disc playing. Next time you load the disc, the player will automatically revert to these settings.

D **DISP** (orange) – Press to switch the displayed information for the DVD or CD loaded.

DISP (green) – Press to display the time.

DSP – Use to select a DSP room effect mode.

DVD – Press when you want to play a DVD, Video CD or CD.

E **ENTER** – Use to confirm menu choices, setups and so on.

ENTER/DISC – Used for controlling external components only. Function varies with the external component.

EXIT – Press to exit the guide feature of cable TV.

F **FL DIMMER** – Use to adjust the brightness of the fluorescent display.

FQ+/– – Use to manually tune to radio stations.

FUNCTION – Press to switch the system function (DVD, tuner, Video 1, etc.), without changing the remote control mode.

G **GUIDE** – Press to access the guide feature on cable TV.

L **LAST MEMORY** – Use to bookmark the current place on a DVD or Video CD disc, and to start playing from a previously bookmarked place on a disc.

M **MENU** – Press to display a DVD or Video CD disc menu for navigating the contents of a disc.

MIDNIGHT – Press to switch the Midnight listening mode on or off. This mode aids listening at low volume.

MONO – Press to listen to a stereo FM radio broadcast in mono (this can improve the sound quality). Press again to switch back to stereo.

MUTE – Press to mute the speakers. Press again to cancel the mute.

P **P.BASS** – Press to switch P.BASS on or off. Switch on for extended bass.

PAGE +/– – Press to display the next/previous page of a cable TV guide.

PGM – Use to program a playlist for a DVD, Video CD or CD.

R **RDM** – Use to set the random play mode when playing a DVD, Video CD or CD.

REMOTE SETUP – Press to put the remote into setup mode. Use to setup the remote to control other components in your system.

REPEAT – Use to set the repeat mode for a DVD, Video CD or CD.

RETURN – Use to return to the previous level of a DVD disc menu, or to display the menu of a Video CD playing in PBC mode.

S **SEARCH MODE** – Use to select a search mode (title, chapter, track, time) for a DVD, Video CD or CD.

SETUP – Press to show the on-screen display for making audio, video and other settings for DVD playback.

SHIFT – Press to access the remote functions printed in orange on the remote. After pressing, the shift mode remains in effect for up to 10 seconds.

SLEEP – Use to select a preset time until the system switches into standby.

SOUND CONTROL – Press to adjust the bass or treble.

SOURCE ⏻ – Press to switch on/off a source component (tape or MD deck, for example) connected to this system. (You need to set up the remote first for this to work).

ST +/– – Press to switch the station preset when listening to the radio.

STATION MEMORY – Use to save the current frequency as a station preset.

SUBTITLE – Press to switch the subtitle language on a multilingual DVD disc.

SYS – Press to switch the remote to system control without changing the source function of the system.

SYSTEM ⏻ – Press to switch the system on or into standby.

SYSTEM VOLUME – Use to adjust the overall system volume.

T **TEST TONE** – While setting up the channel levels of the speakers, press to start or stop the test tone.

TIMER/CLOCK ADJ – Use to set the timer or clock.

TOP MENU – Press to display the top level menu of a DVD disc.

TUN – Press to switch to tuner for listening to the radio.

TV – Press to switch the remote from system, DVD, tuner, etc. control to TV control.

TV ⏻ – Press to switch your TV on/off. (You need to set up the remote first for this to work).

TV CHANNEL – Use to change the TV channel.

TV INPUT – Press to switch the TV input (from internal tuner, to VCR1, and so on).

TV VOL – Use to adjust the TV volume.

V **V-1** – Press to switch to a video component connected to the VIDEO 1 inputs/outputs.

V-2 – Press to switch to a video component connected to the VIDEO 2 inputs.

8.2 SPECIFICATIONS

DVD Player (Audio)Section

S/N ratio ..... 115 dB (EIAJ)
Dynamic range ..... 100 dB (EIAJ)
Distortion 0.004%
Frequency response
48 kHz sampling ..... 4 Hz to 22 kHz
96 kHz sampling ..... 4 Hz to 44 kHz
Wow & flutter ..... Below measurable levels
(±0.001% W.PEAK)

DVD Player (Video) Section

Output level ..... 1 Vp-p (75 Ω)
Video Y output level ..... 1 Vp-p (75 Ω)
Video C output level ..... 286 mVp-p (75 Ω)

DVD (Other jacks) Section

Digital optical output (PCM/2/DTS) ... Optical connector
Digital optical input (PCM/2/DTS) ..... Optical connector
Digital coaxial input (PCM/2/DTS) ..... Coaxial connector

Tuner Section

FM tuner
Frequency range ..... 87.5 MHz to 108.0 MHz
Antenna ..... 75 Ω unbalanced
AM tuner
Frequency range 530 kHz to 1,700 kHz (10 kHz step)
Antenna ..... loop antenna (supplied)

Miscellaneous

DVD tuner system
Dimensions ..... 280 (W) x 240 (D) x 82 (H) mm
(11(W) x 9-7/16 (D) x 3-1/4 (H) in.)
Weight ..... 3.1 kg (6.8 lbs)

Display unit
Dimensions ..... 210 (W) x 62 (D) x 86 (H) mm
(8-1/2 (W) x 2-7/16 (D) x 3-3/8 (H) in.)
Weight ..... 0.23 kg (.51 lb)

Operating conditions:
Temperature ..... +5°C to +35°C (+41°F to 95°F)
Humidity ..... 5% to 85% (without condensation)

Accessories

Remote control 1
Alkaline Batteries (AA/LR6) 2
Display unit 1
AM loop antenna 1
FM antenna 1
Video cable 1
AC Power cord 1
Display cable 1
Control cable A (Blue) 1
Control cable B (Black) 1
Operating instructions (Setting up) 1
Operating instructions (Basic/Detailed) 1
Warranty 1

Note:

• Specifications and design subject to possible modification without notice, due improvements.

Accessories

● Display unit (AXX7075)

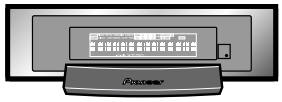

● Video cable
(VDE1053)
(L=1.5 m)

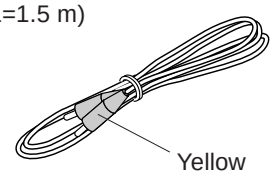

● Control cable A (Blue)
(AUCXJ, ADXJ/RA, APWXJ: ADE7061)(L= 3 m)
(AVXJ, AYXJ: ADE7062)(L= 5 m)

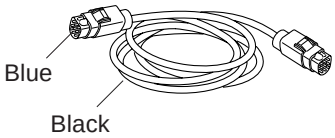

● Alkaline batteries
(size AA/LR6) × 2
(VEM-1021)

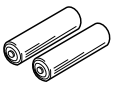

● Display cable
(ADE7014) (L=1.5 m)

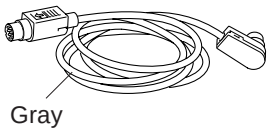

● Control cable B (Black)
(AUCXJ, ADXJ/RA, APWXJ: ADE7063)(L= 3 m)
(AVXJ, AYXJ: ADE7064)(L= 7.5 m)

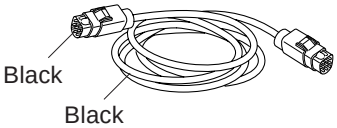

● Remote control
(AUCXJ, ADXJ/RA, APWXJ: AXD7264)
(AVXJ, AYXJ: AXD7265)

● AC Power cords
(AUCXJ : ADG7022), (ADXJ/RA: ADG1158)
(APWXJ: ADG1160), (AVXJ: ADG1156)
(AYXJ: ADG1154)

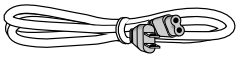

● AM antenna
(AUCXJ, ADXJ/RA, APWXJ: ADH7004)
(AVXJ, AYXJ: ADH7005)

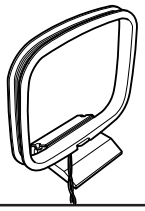
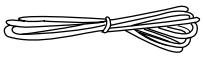
● FM antenna
(AUCXJ, ADXJ/RA, APWXJ: ADH7004)
(AVXJ, AYXJ: ADH7005)