Pioneer

# Service Manual

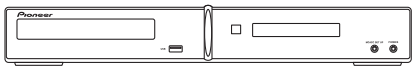

XV-DV590

ORDER NO.
**RRV3950**

## DVD/CD RECEIVER

# XV-DV590
# XV-DV585
# XV-DV30FS
# XV-DV595K

### THIS MANUAL IS APPLICABLE TO THE FOLLOWING MODEL(S) AND TYPE(S).

| Model | Type | Power Requirement | Region No. | Remarks |
|---|---|---|---|---|
| XV-DV590 | YXJ5 | AC 220 V to 240 V | 2 | |
| XV-DV585 | YXJ5 | AC 220 V to 240 V | 2 | |
| XV-DV30FS | YXJ5 | AC 220 V to 240 V | 2 | |
| XV-DV595K | SXJ5 | AC 220 V to 240 V | 5 | |

For details, refer to "Important Check Points for good servicing".

**PIONEER CORPORATION** 4-1, Meguro 1-chome, Meguro-ku, Tokyo 153-8654, Japan
**PIONEER ELECTRONICS (USA) INC.** P.O. Box 1760, Long Beach, CA 90801-1760, U.S.A.
**PIONEER EUROPE NV** Haven 1087, Keetberglaan 1, 9120 Melsele, Belgium
**PIONEER ELECTRONICS ASIACENTRE PTE. LTD.** 253 Alexandra Road, #04-01, Singapore 159936
ⓒ**PIONEER CORPORATION 2009**

T-ZZK JUNE 2009 Printed in Japan

# SAFETY INFORMATION

**This service manual is intended for qualified service technicians; it is not meant for the casual do-it-yourselfer. Qualified technicians have the necessary test equipment and tools, and have been trained to properly and safely repair complex products such as those covered by this manual.**
**Improperly performed repairs can adversely affect the safety and reliability of the product and may void the warranty. If you are not qualified to perform the repair of this product properly and safely, you should not risk trying to do so and refer the repair to a qualified service technician.**

WARNING !

THE AEL (ACCESSIBLE EMISSION LEVEL) OF THE LASER POWER OUTPUT IS LESS THAN CLASS 1 BUT THE LASER COMPONENT IS CAPABLE OF EMITTING RADIATION EXCEEDING THE LIMIT FOR CLASS 1.
A SPECIALLY INSTRUCTED PERSON SHOULD DO SERVICING OPERATION OF THE APPARATUS.

LASER DIODE CHARACTERISTICS

FOR DVD : MAXIMUM OUTPUT POWER : 5 mW
WAVELENGTH : 650 nm
FOR CD : MAXIMUM OUTPUT POWER : 5 mW
WAVELENGTH : 780 nm

# LABEL CHECK

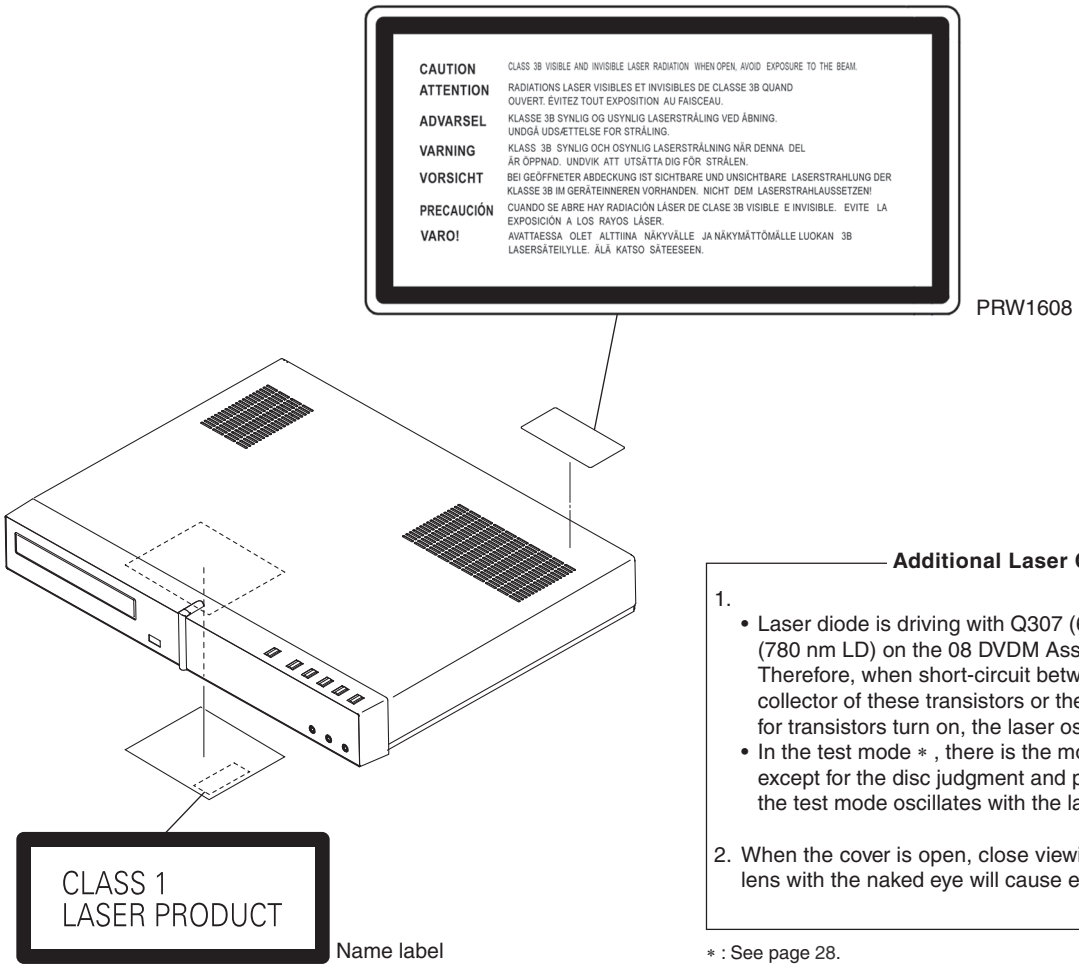


**Additional Laser Caution**

1.
- Laser diode is driving with Q307 (650 nm LD) and Q308 (780 nm LD) on the 08 DVDM Assy.
  Therefore, when short-circuit between the emitter and collector of these transistors or the base voltage is supplied for transistors turn on, the laser oscillates. (failure mode)
- In the test mode ∗ , there is the mode that the laser oscillates except for the disc judgment and playback. LD ON mode in the test mode oscillates with the laser forcibly.

2. When the cover is open, close viewing through the objective lens with the naked eye will cause exposure to the laser beam.

∗ : See page 28.

## [Important Check Points for Good Servicing]

In this manual, procedures that must be performed during repairs are marked with the below symbol.
Please be sure to confirm and follow these procedures.

### 1. Product safety

Please conform to product regulations (such as safety and radiation regulations), and maintain a safe servicing environment by following the safety instructions described in this manual.

① Use specified parts for repair.

Use genuine parts. Be sure to use important parts for safety.

② Do not perform modifications without proper instructions.

Please follow the specified safety methods when modification(addition/change of parts) is required due to interferences such as radio/TV interference and foreign noise.

③ Make sure the soldering of repaired locations is properly performed.

When you solder while repairing, please be sure that there are no cold solder and other debris.
Soldering should be finished with the proper quantity. (Refer to the example)

④ Make sure the screws are tightly fastened.

Please be sure that all screws are fastened, and that there are no loose screws.

⑤ Make sure each connectors are correctly inserted.

Please be sure that all connectors are inserted, and that there are no imperfect insertion.

⑥ Make sure the wiring cables are set to their original state.

Please replace the wiring and cables to the original state after repairs.
In addition, be sure that there are no pinched wires, etc.

⑦ Make sure screws and soldering scraps do not remain inside the product.

Please check that neither solder debris nor screws remain inside the product.

⑧ There should be no semi-broken wires, scratches, melting, etc. on the coating of the power cord.

Damaged power cords may lead to fire accidents, so please be sure that there are no damages.
If you find a damaged power cord, please exchange it with a suitable one.

⑨ There should be no spark traces or similar marks on the power plug.

When spark traces or similar marks are found on the power supply plug, please check the connection and advise on secure connections and suitable usage. Please exchange the power cord if necessary.

⑩ Safe environment should be secured during servicing.

When you perform repairs, please pay attention to static electricity, furniture, household articles, etc. in order to prevent injuries.
Please pay attention to your surroundings and repair safely.

### 2. Adjustments

To keep the original performance of the products, optimum adjustments and confirmation of characteristics within specification.
Adjustments should be performed in accordance with the procedures/instructions described in this manual.

### 3. Lubricants, Glues, and Replacement parts

Use grease and adhesives that are equal to the specified substance.
Make sure the proper amount is applied.

### 4. Cleaning

For parts that require cleaning, such as optical pickups, tape deck heads, lenses and mirrors used in projection monitors, proper cleaning should be performed to restore their performances.

### 5. Shipping mode and Shipping screws

To protect products from damages or failures during transit, the shipping mode should be set or the shipping screws should be installed before shipment. Please be sure to follow this method especially if it is specified in this manual.

# CONTENTS


SAFETY INFORMATION ..... 2
1. SERVICE PRECAUTIONS ..... 5
1.1 NOTES ON SOLDERING ..... 5
1.2 CAUTION ..... 5
1.3 WHEN REPLACING DVD DECK ..... 6
1.4 DISC REMOVAL METHOD ..... 6
2. SPECIFICATIONS ..... 7
2.1 SPECIFICATIONS, DISC/CONTENT FORMAT and ACCESORRIES ..... 7
2.2 PANEL FACILITIES ..... 9
3. BASIC ITEMS FOR SERVICE ..... 11
3.1 CHECK POINTS AFTER SERVICING ..... 11
3.2 PCB LOCATIONS ..... 12
3.3 JIGS LIST ..... 13
4. BLOCK DIAGRAM ..... 14
4.1 OVERALL WIRING CONNECTION DIAGRAM ..... 14
4.2 OVERALL BLOCK DIAGRAM ..... 16
4.3 DVD LOADER/DECODER BLOCK DIAGRAM ..... 18
5. DIAGNOSIS ..... 19
5.1 METHOD FOR DIAGNOSING DEGRADATION OF THE LDS ON THE PICKUP ..... 19
5.2 DVD TROUBLE SHOOTING ..... 20
5.3 CIRCUIT DESCRIPTION OF DIGITAL AMP SECTION ..... 22
5.4 SPECIFICATIONS FOR THE PROTECTION CIRCUITS FOR THE DIGITAL AMPLIFIER ..... 23
5.5 ERROR AND WARNING MESSAGE ..... 24
5.6 ADAPTER PORT TROUBLESHOOTING ..... 25
5.7 POWER ON SEQUENCE ..... 26
6. SERVICE MODE ..... 28
6.1 TEST MODE ..... 28
6.2 DISPLAY SPECIFICATION OF THE TEST MODE ..... 29
6.3 FUNCTIONAL SPECIFICATION OF THE SHORTCUT KEY ..... 30
6.4 SPECIFICATION OF MODEL INFORMATION DISPLAY ..... 31
6.5 FUNCTIONAL SPECIFICATION OF THE SERVICE MODE ..... 32
6.6 SERVICE TEST MODE ..... 33
6.7 DISPLAY SPECIFICATIONS OF DSP ERROR ..... 36
7. DISASSEMBLY ..... 37
8. EACH SETTING AND ADJUSTMENT ..... 46
8.1 ID NUMBER AND ID DATA SETTING ..... 46
9. EXPLODED VIEWS AND PARTS LIST ..... 50
9.1 PACKING SECTION ..... 50
9.2 EXTERIOR SECTION ..... 52
9.3 FRONT PANEL SECTION ..... 54
9.4 DVD MECHA ASSY ..... 56
10. SCHEMATIC DIAGRAM ..... 58
10.1 09 DVDM ASSY (1/2) ..... 58
10.2 09 DVDM ASSY (2/2) ..... 60
10.3 RHTS SYSMAIN ASSY (1/3) ..... 62
10.4 RHTS SYSMAIN ASSY (2/3) ..... 64
10.5 RHTS SYSMAIN ASSY (3/3) ..... 66
10.6 RHTS USB ASSY ..... 68
10.7 RHTS D-AMP ASSY (1/2) ..... 70
10.8 RHTS D-AMP ASSY (2/2) ..... 72
10.9 RHTS H-AMP ASSY (1/2) ..... 74
10.10 RHTS H-AMP ASSY (2/2) ..... 76
10.11 RHTS DISPLAY ASSY ..... 78
10.12 EUROSCART ASSY ..... 80
10.13 RHTS DSP ASSY ..... 82
10.14 POWER SUPPLY UNIT(60W) ..... 84
10.15 POWER SUPPLY UNIT(100W) ..... 86
10.16 WAVEFORMS ..... 88
11. PCB CONNECTION DIAGRAM ..... 90
11.1 09 DVDM and RHTS USB ASSYS ..... 90
11.2 RHTS SYSMAIN ASSY ..... 92
11.3 RHTS D-AMP ASSY ..... 96
11.4 RHTS H-AMP ASSY ..... 98
11.5 RHTS DISPLAY ASSY ..... 100
11.6 EUROSCART ASSY ..... 102
11.7 RHTS DSP ASSY ..... 103
11.8 POWER SUPPLY UNIT ..... 104
12. PCB PARTS LIST ..... 106

# 1. SERVICE PRECAUTIONS

## 1.1 NOTES ON SOLDERING

- For environmental protection, lead-free solder is used on the printed circuit boards mounted in this unit.
  Be sure to use lead-free solder and a soldering iron that can meet specifications for use with lead-free solders for repairs accompanied by reworking of soldering.

- Compared with conventional eutectic solders, lead-free solders have higher melting points, by approximately 40 ºC.
  Therefore, for lead-free soldering, the tip temperature of a soldering iron must be set to around 373 ºC in general, although the temperature depends on the heat capacity of the PC board on which reworking is required and the weight of the tip of the soldering iron.

Do NOT use a soldering iron whose tip temperature cannot be controlled.

Compared with eutectic solders, lead-free solders have higher bond strengths but slower wetting times and higher melting temperatures (hard to melt/easy to harden).

The following lead-free solders are available as service parts:
- Parts numbers of lead-free solder:
  GYP1006 1.0 in dia.
  GYP1007 0.6 in dia.
  GYP1008 0.3 in dia.

## 1.2 CAUTION

### NOTES ON BTL DRIVE

**As a signal to drive the BTL is output from the negative speaker terminal, DO NOT short-circuit between the negative speaker terminal and ground, such as the chassis.**
**Do not short-circuit between the plus speaker terminal and ground, such as the chassis, too.**

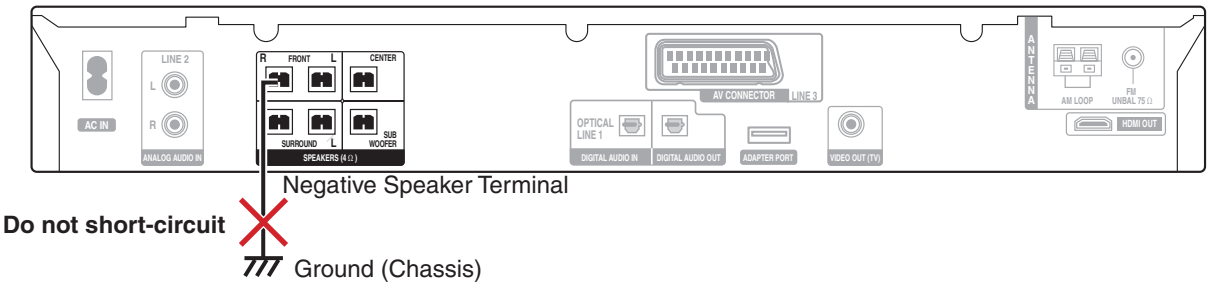

## 1.3 WHEN REPLACING DVD DECK

**[ Removing the DVD MECHA Assy ]**

Before removing Pickup PCB and DVD PCB connector, short circuit the position shown in **Fig. 1** using a soldering iron. If you remove the DVD MECHA Assy with no soldering, the Laser may be damaged.

**[ Installing the DVD MECHA Assy ]**

Remove all the soldering on the short circuit position after the connection of Pickup PCB and DVD PCB connector.

**NOTE**

- Be sure to use lead-free solder and a soldering iron.
- When Soldering/Removing of solder, use the draw in equipment over the Pickup Unit to prevent the Flux smoke from it.

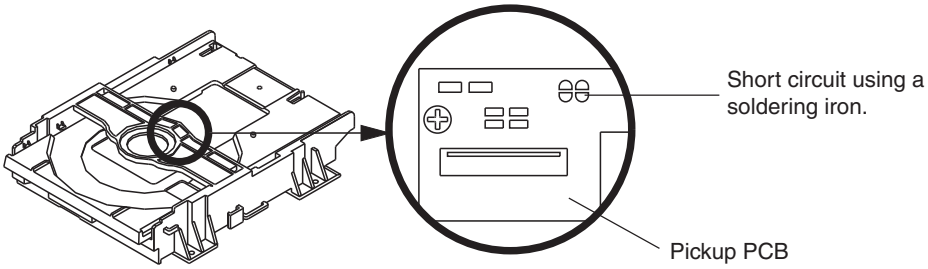


**Fig. 1**

## 1.4 DISC REMOVAL METHOD

**How to open the tray when the power cannot be on**

(1) Slide the rack, loading (White) toward the arrow direction by using a minus screwdriver to release the lock.
(2) Manually open the tray.

**Note:**
Please strongly pushing rack, loading (White) to release the lock because the tray doesn't go out easily.

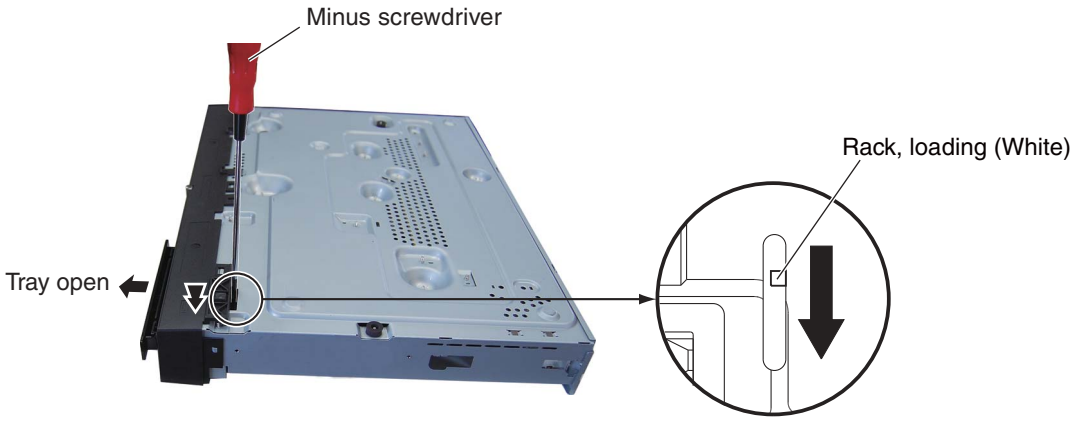


• Bottom view

# 2. SPECIFICATIONS

## 2.1 SPECIFICATIONS, DISC/CONTENT FORMAT and ACCESORRIES

**•Amplifier section**
RMS Power Output:
For XV-DV585/590
Front, Center, Surround . . .60 W per channel (1 kHz, 10 % T.H.D., 4 Ω)
Subwoofer. . . 60 W (100 Hz, 10 % T.H.D., 4 Ω)
For XV-DV30FS/595K
Front . . . . . .100 W per channel (1 kHz, 10 % T.H.D., 4 Ω)
Center, Surround (for XV-DV595K only) . . . . . .60 W per channel (1 kHz, 10 % T.H.D., 4 Ω)
Subwoofer. . .100 W (100 Hz, 10 % T.H.D., 4 Ω)

**•Disc section**
Type. . . . . .DVD system, Video CD/Super VCD system and Compact Disc digital audio system

**•FM tuner section**
Frequency range . . . . . .87.5 MHz to 108 MHz
Antenna . . . . . .75 Ω, unbalanced

**•AM tuner section**
Frequency range . . . . . .531 kHz to 1602 MHz
Antenna . . . . . Loop antenna

**•Miscellaneous**
Power requirements:
. . . . . .AC 220 V to 240 V, 50 Hz/60 Hz
Power consumption:
For XV-DV585/590 . . . . . .55 W
For XV-DV30FS. . . . . .70 W
For XV-DV595K. . . . . .70 W
Power consumption in standby:
KURO LINK ON . . . . . 0.73 W
KURO LINK OFF. . . . . .0.48 W
Dimensions
. . . . . .420 mm (W) x 62 mm (H) x 331 mm (D)
Weight
For XV-DV585/590 . . . . . .2.8 kg
For XV-DV30FS. . . . . .2.9 kg
For XV-DV595K. . . . . .2.9 kg

**•Accessories (DVD/CD receiver)**
Remote control . . . . . 1
AA/R6 dry cell batteries . . . . . 2
(to confirm system operation)
Video cable (yellow plugs) . . . . . .1
AM loop antenna. . . . . .1
FM antenna . . . . . 1
Microphone (for Auto MCACC setup)1. . . . . .1
Power cord . . . . . .1
Warranty card . . . . . .1
Setup Guide
Operating instructions

**Note**
1 For DCS-585/590 model only.

### Accessories

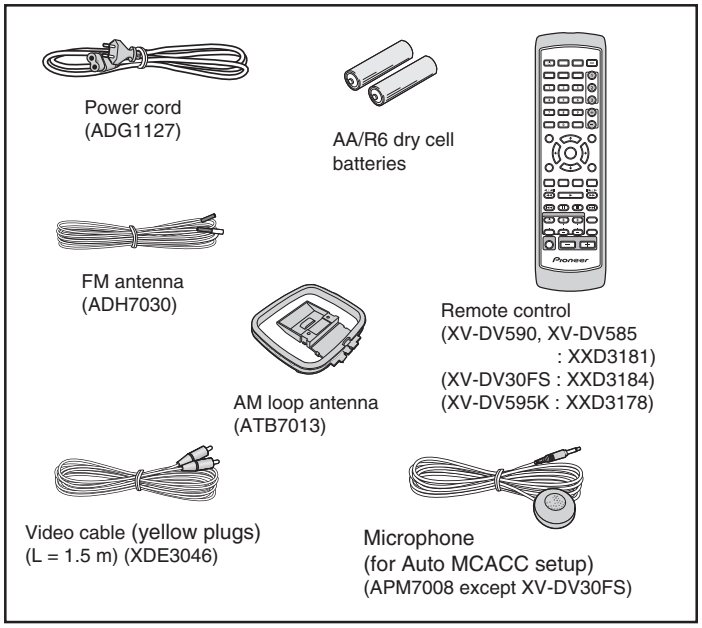


Manufactured under license from Dolby Laboratories. “Dolby”, “Pro Logic”, and the double-D symbol are trademarks of Dolby Laboratories.

Manufactured under license under U.S. Patent #’s: 5,451,942; 5,956,674; 5,974,380; 5,978,762; 6,487,535 & other U.S. and worldwide patents issued & pending. DTS and DTS Digital Surround are registered trademarks and the DTS logos and Symbol are trademarks of DTS, Inc. © 1996-2008 DTS, Inc. All Rights Reserved.

Manufactured under license under U.S. Patent #’s: 5,451,942; 5,956,674; 5,974,380; 5,978,762; 6,487,535 & other U.S. and worldwide patents issued & pending. DTS and DTS 2.0 + Digital Out are registered trademarks and the DTS logos and Symbol are trademarks of DTS, Inc. © 1996-2008 DTS, Inc. All Rights Reserved.

## Disc/content format playback compatibility

This player is compatible with a wide range of disc types (media) and formats. Playable discs will generally feature one of the following logos on the disc and/or disc packaging. Note however that some disc types, such as recordable CD and DVD, may be in an unplayable format.

See the Disc compatibility table below for more information.

DVD-Video DVD-R DVD-RW

Audio CD Video CD CD-R CD-RW

Fujicolor CD

- This unit will play DVD+R/+RW discs.
- is a trademark of FUJIFILM Corporation.
- is a trademark of DVD Format/Logo Licensing Corporation.
- Also compatible with KODAK Picture CD.

This player supports the IEC's Super VCD standard for superior picture quality, dual soundtracks, and widescreen support.

Super Video CD (Super VCD)

## 2.2 PANEL FACILITIES

### Front panel

The illustration shows the DCS-585/590.

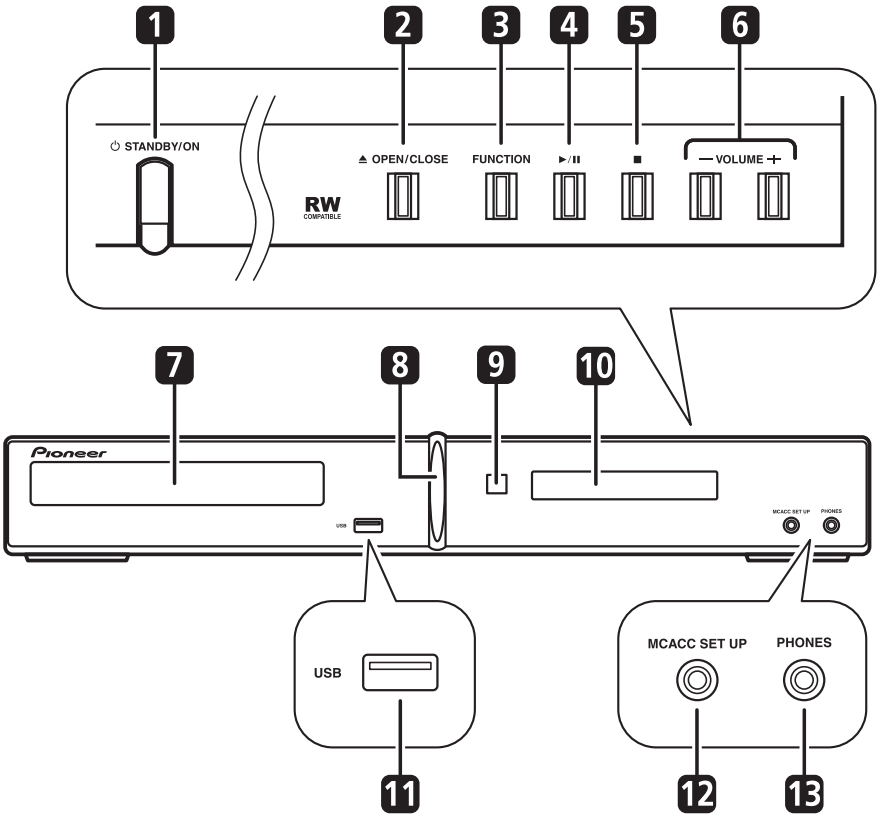


**1 ⏻ STANDBY/ON**
Switches the system on or into standby.

**2 ⏏ OPEN/CLOSE**
Opens/closes the disc tray.

**3 Function**

**4 ►/II**

**5 ■**

**6 VOLUME +/–**

**7 Disc tray**

**8 Power indicator (Blue)**

**9 Remote Sensor**

**10 Display**

**11 USB interface**

**12 MCACC jack (DCS-585/595 only)**

**13 PHONES jack**

### Display

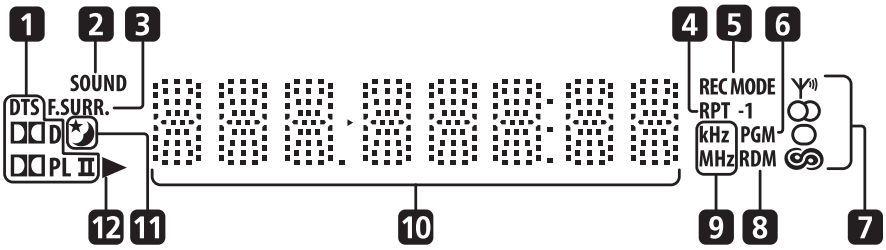


**1 Decord indicators**
**DTS** lights during playback of a DTS source. **PLII** lights during Dolby Pro Logic II decoding and **D** lights during playback of Dolby Digital sources.

**2 SOUND**
Lights when the Sound Retriever is active.

**3 SURR.**
Lights when one of the Advanced Surround modes or **PHONESUR** (virtual surround sound for headphones) mode is selected.

**F.SURR.**
Lights when one of the Front Stage Surround Advance mode is selected.

**4 RPT and RPT-1**
**RPT** lights during repeat play. **RPT-1** lights during repeat one-track play.

**5 REC MODE**
Lights when Line out mode is **LT/RT**.

**6 PGM**
Lights during program play.

**7 Tuner indicators**
Lights when a broadcast is being received, Lights when a stereo FM broadcast is being received, Lights when FM mono reception is selected and Lights when one of the RDS display or search modes is selected.

**8 RDM**
Lights during random play.

**9 kHz/MHz**
Indicates the frequency unit shown in the character display (**kHz** for AM, **MHz** for FM).

**10 Character display**

**11**
Lights when sleep timer is active.

**12 ►**
Lights during playback.

## Remote control

The illustration shows the DCS-585/590.

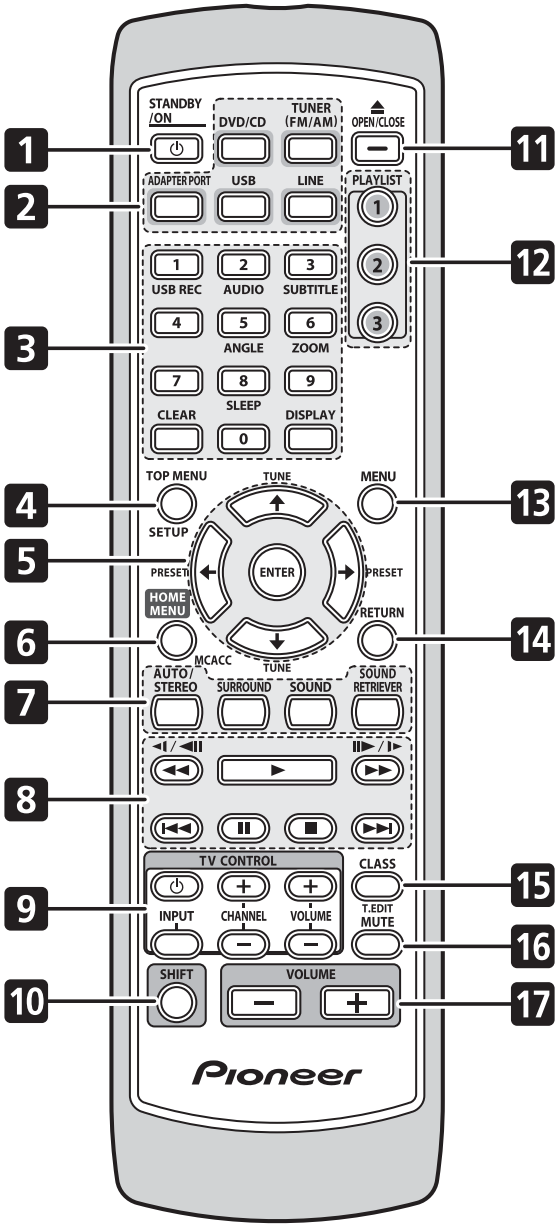


1 ⏻ **STANDBY/ON**

2 **Function select buttons**

3 **Number buttons**
**CLEAR**
**DISPLAY**
**SHIFT+SLEEP**
**SHIFT+USB REC**
**SHIFT+AUDIO**
**SHIFT+SUBTITLE**
**SHIFT+ANGLE**
**SHIFT+ZOOM**

4 **TOP MENU**
**SHIFT+SETUP**

5 **Cursor buttons**
**ENTER**
**TUNE**
**PRESET**

6 **HOME MENU**
**SHIFT+MCACC (DCS-585/595 only)**

7 **Sound controls**
**AUTO/STEREO**
**SURROUND**
**SOUND**
**SOUND RETRIEVER**

8 **Playback controls**

9 **TV CONTROL buttons**
These control Pioneer flat screen TVs.[1]

10 **SHIFT**

11 ⏏ **OPEN/CLOSE**

12 **PLAYLIST buttons**

13 **MENU**

14 **RETURN**

15 **Tuner controls**
**CLASS**
**SHIFT+T.EDIT**

16 **MUTE**

17 **VOLUME +/–**

**Note**
1 Hold down the number button **1** for over three seconds with the **CLEAR** pressed. If the TV refuses to respond, hold down the number button **2**. After control is properly switched over, the power to the TV can be operated by directing the **TV CONTROL** ⏻ toward the TV and pressing it.

# 3. BASIC ITEMS FOR SERVICE
## 3.1 CHECK POINTS AFTER SERVICING

### Items to be checked after servicing / HTZ(XV)

To keep the product quality after servicing, confirm recommended check points shown below.

| No. | Procedures | Check points |
|---|---|---|
| 1 | Confirm the firmware version on Test Mode. | The version of the firmware must be latest.<br>Update firmware to the latest one, if it is not the latest. |
| 2 | Confirm whether the customer complain has been solved.<br>If the customer complain occurs with the specific disc, use it for the operation check. | The customer complain must not be reappeared.<br>Video, audio and operations must be normal. |
| 3 | Play back a CD.<br>(track search) | Audio and operations must be normal. |
| 4 | Play back a DVD.<br>(Menu operation, Title/chapter search) | Video, audio and operations must be normal. |
| 5 | Check the tuner (AM and FM) operations. | Audio and operations must be normal. |
| 6 | Check the sound from headphone output. | Sound must be normal, without noise. |
| 7 | Check the appearance of the product. | No scratches or dirt on its appearance after receiving it for service. |

### Specific Items to be Checked

| No. | Procedures | Check points |
|---|---|---|
| 1 | Confirm playback error rates at the innermost and outermost tracks by using the following disc.<br>DVD test disc (GGV1025) | The error rates must be less than 5.0e-4.<br>(This procedure can determine if the drive is degraded.) |

See the table below for the items to be checked regarding video and audio.

| Item to be checked regarding video | Item to be checked regarding audio |
|---|---|
| Block noise | Distortion |
| Horizontal noise | Noise |
| Dot noise | Volume too low |
| Disturbed image (video jumpiness) | Volume too high |
| Too dark | Volume fluctuating |
| Too bright | Sound interrupted |
| Mottled color | |

### Cleaning

Before shipping out the product, be sure to clean the following positions by using the prescribed cleaning tools.

| Position to be cleaned | Name | Part No. | Remarks |
|---|---|---|---|
| Pickup leneses | Cleaning liquid | GEM1004 | |
| | Cleaning paper | GED-008 | |
| Fans | Cleaning paper | GED-008 | |

# 3.2 PCB LOCATIONS

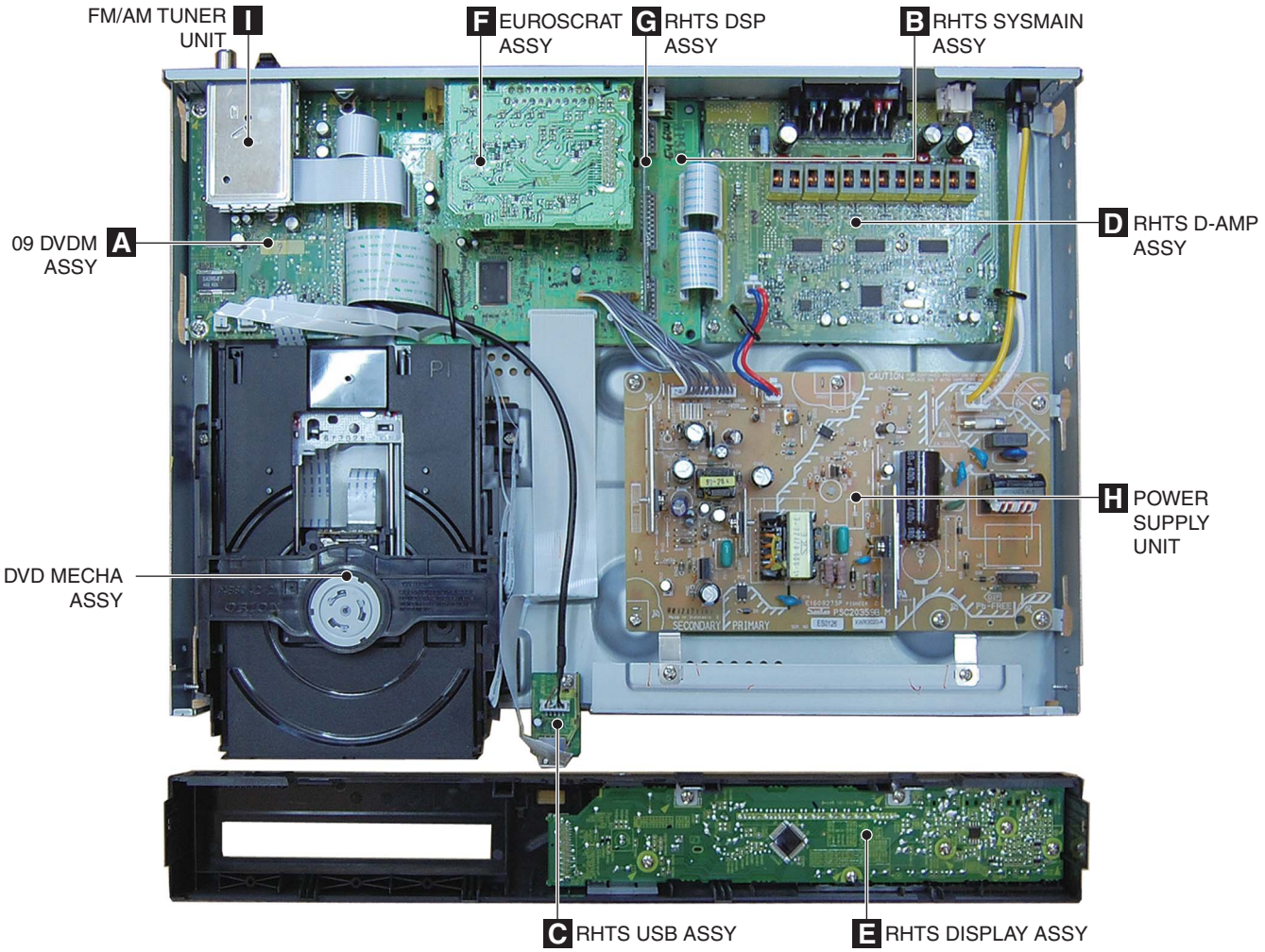


## LIST OF ASSEMBLIES

| Mark | Symbol and Description | XV-DV590/YXJ5 | XV-DV585/YXJ5 | XV-DV30FS/YXJ5 | XV-DV595K/SXJ5 |
|---|---|---|---|---|---|
| NSP | 1..NHTS JACK ASSY | AWM8034 | AWM8034 | AWM8034 | AWM8034 |
| | 2..EUROSCART ASSY | AWU8291 | AWU8291 | AWU8291 | AWU8291 |
| | 1..09 DVDM ASSY | AWM8177 | AWM8177 | AWM8177 | AWM8134 |
| | 1..RHTS DISPLAY ASSY | XWM3487 | XWM3487 | XWM3488 | XWM3484 |
| | 1..RHTS D-AMP ASSY | XWM3489 | XWM3489 | Not used | Not used |
| | 1..RHTS H-AMP ASSY | Not used | Not used | XWM3495 | XWM3494 |
| | 1..RHTS DSP ASSY | XWM3493 | XWM3493 | XWM3493 | XWM3493 |
| | 1..RHTS MAIN ASSY | XWM3503 | XWM3502 | XWM3504 | XWM3507 |
| | 2..RHTS USB ASSY | XWZ4414 | XWZ4414 | XWZ4414 | XWZ4414 |
| | 2..RHTS SYSMAIN ASSY | XWZ4432 | XWZ4431 | XWZ4433 | XWZ4436 |
| ⚠ | 1..POWER SUPPLY UNIT | XWR3020 | XWR3020 | XWR3021 | XWR3021 |
| | 1..FM/AM TUNER UNIT | XXX3085 | XXX3085 | XXX3085 | XXX3085 |

# 3.3 JIGS LIST

## ■ Jigs list

| Name | Jig No. | Remarks |
|---|---|---|
| Service Remote Control Unit | GGF1381 | Adjustment, diagnosis |
| DVD Test Disc (DVD-Video) | GGV1025 | Check of DVD-Video |
| CD Test Disc | STD-905 | Check of CD |
| DVD Data Disc | GGV1344 | ID data setting |
| Speaker Cable with terminal | SDS1174 (FL/WHITE)<br>SDS1175 (FR/RED), SDS1176 (SL/BLUE)<br>SDS1177 (SR/GRAY), SDS6050 (C/GREEN) | For checking audio at the SP terminal |

## ■ Lubricants and Glues list

| Name | Lubricants and Glues No. | Remarks |
|---|---|---|
| Daifree | GEM1036 (ZLX-ME413A) | Refer to "9.4 DVD MECHA ASSY" |
| Lubricating oil | GYA1001 (ZLB-PN397B) | Refer to "9.4 DVD MECHA ASSY" |
| Grease | GEM1018 | Refer to "9.4 DVD MECHA ASSY" |

# 4. BLOCK DIAGRAM

## 4.1 OVERALL WIRING CONNECTION DIAGRAM

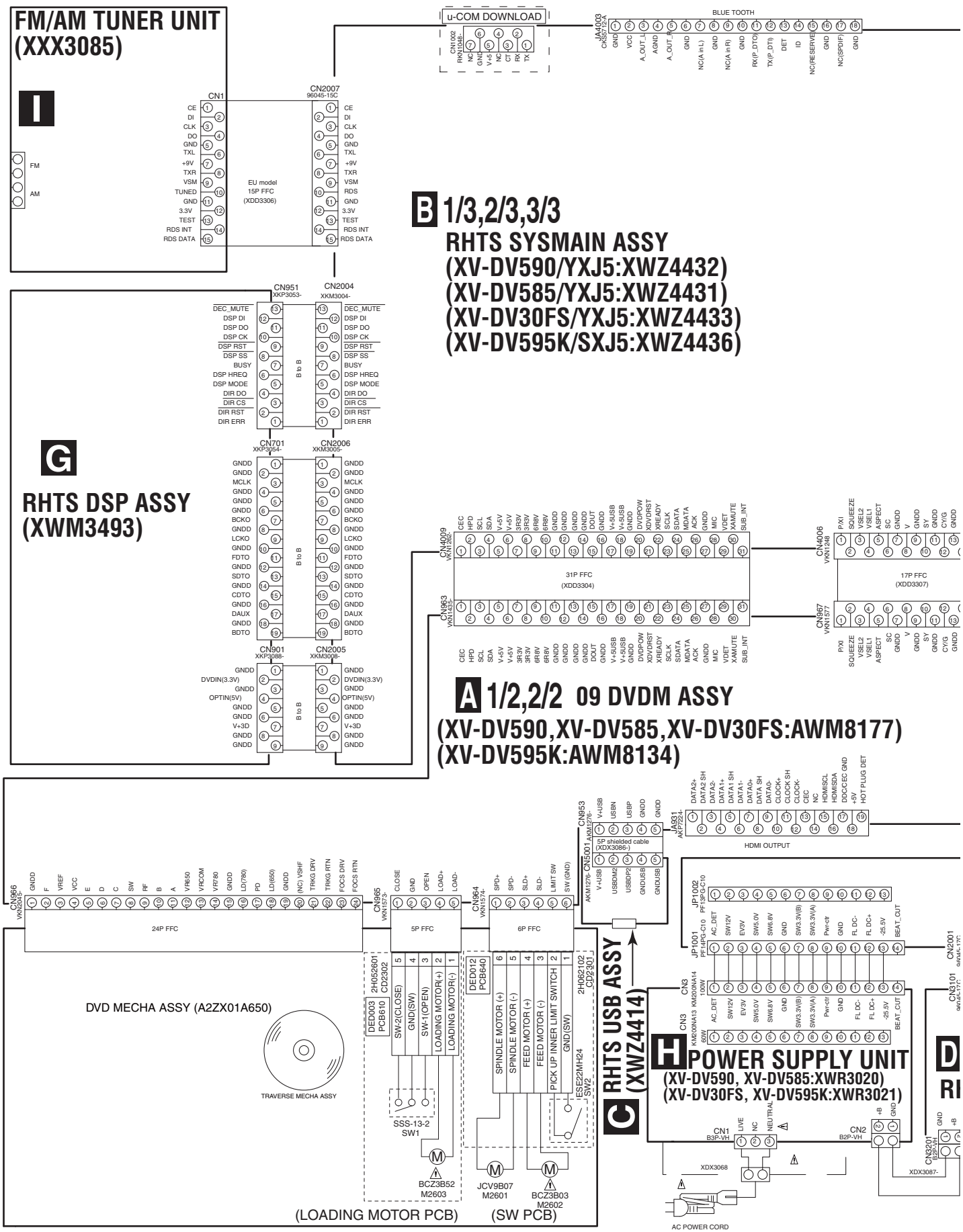

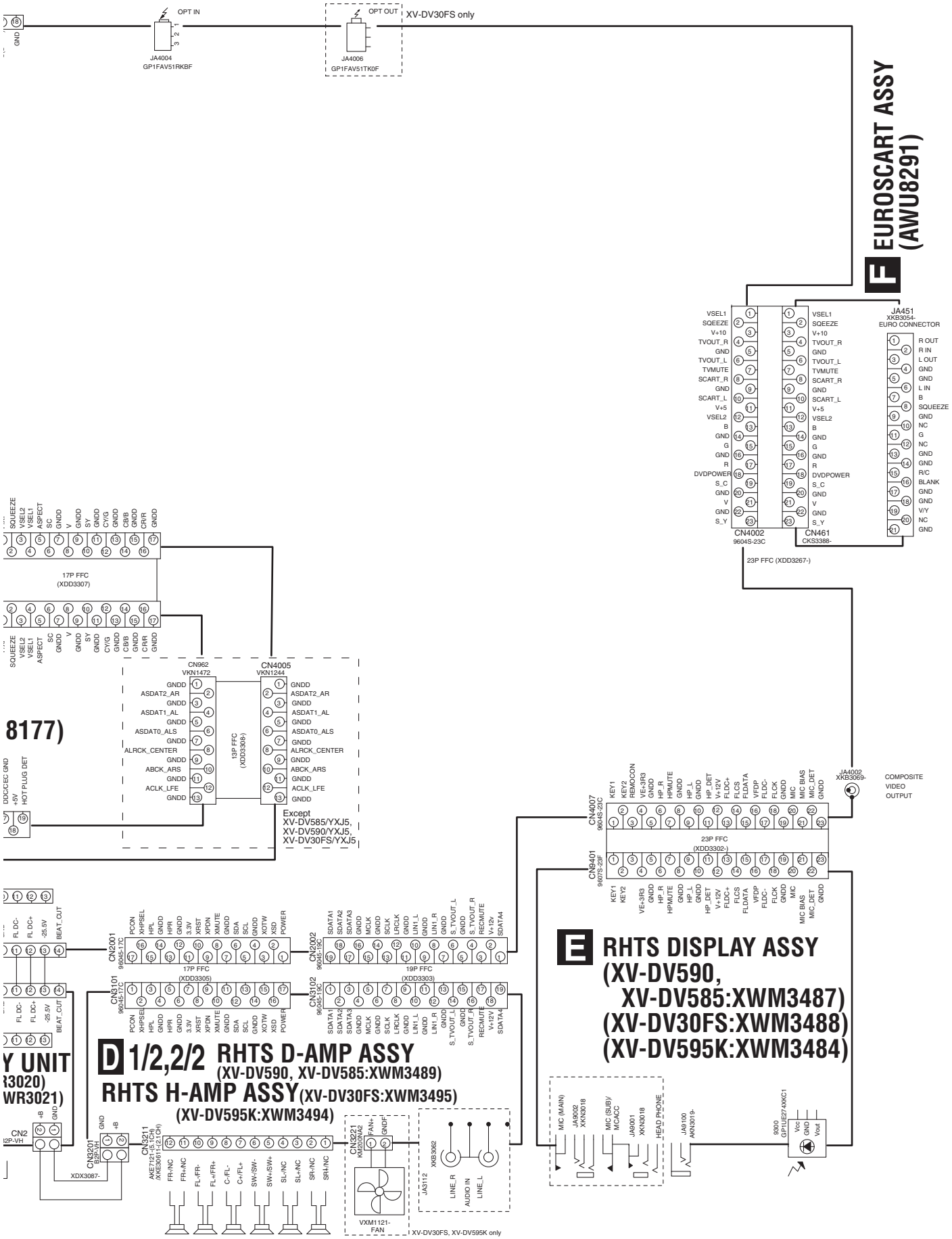
OPT IN
JA4004
GP1FAV51RKBF
OPT OUT
JA4006
GP1FAV51TK0F
XV-DV30FS only
F EUROSCART ASSY
(AWU8291)
JA451
XKB3054-
EURO CONNECTOR
CN4002
9604S-23C
CN461
CKS3388-
23P FFC (XDD3267-)
17P FFC
(XDD3307)
CN962
VKN1472
CN4005
VKN1244
13P FFC
(XDD3308)
Except
XV-DV585/YXJ5,
XV-DV590/YXJ5,
XV-DV30FS/YXJ5
8177)
JA4002
XKB3069-
COMPOSITE
VIDEO
OUTPUT
CN4007
9604S-23C
CN9401
9607S-23F
23P FFC
(XDD3302-)
CN2001
9604S-17C
17P FFC
(XDD3305)
CN2002
9604S-19C
19P FFC
(XDD3303)
CN3101
9604S-17C
CN3102
9604S-19C
E RHTS DISPLAY ASSY
(XV-DV590,
XV-DV585:XWM3487)
(XV-DV30FS:XWM3488)
(XV-DV595K:XWM3484)
D 1/2,2/2 RHTS D-AMP ASSY
(XV-DV590, XV-DV585:XWM3489)
RHTS H-AMP ASSY(XV-DV30FS:XWM3495)
(XV-DV595K:XWM3494)
Y UNIT
R3020)
WR3021)
CN2
B2P-VH
CN3201
B2P-VH
CN3211
AKE7121-(5,1CH)
AKE3061-(1,2,3CH)
XDX3087-
CN3221
KM200NA2
VXM1121-
FAN
XV-DV30FS, XV-DV595K only
JA3112
XKB3062
LINE_R
AUDIO IN
LINE_L
MIC (MAIN)
JA9002
XKN3018
MIC (SUB)/
MCACC
JA9001
XKN3018
HEAD PHONE
JA9100
AKN3019-
9300
GP1UE27 4XKC1
Vcc
GND
Vout

# 4.2 OVERALL BLOCK DIAGRAM

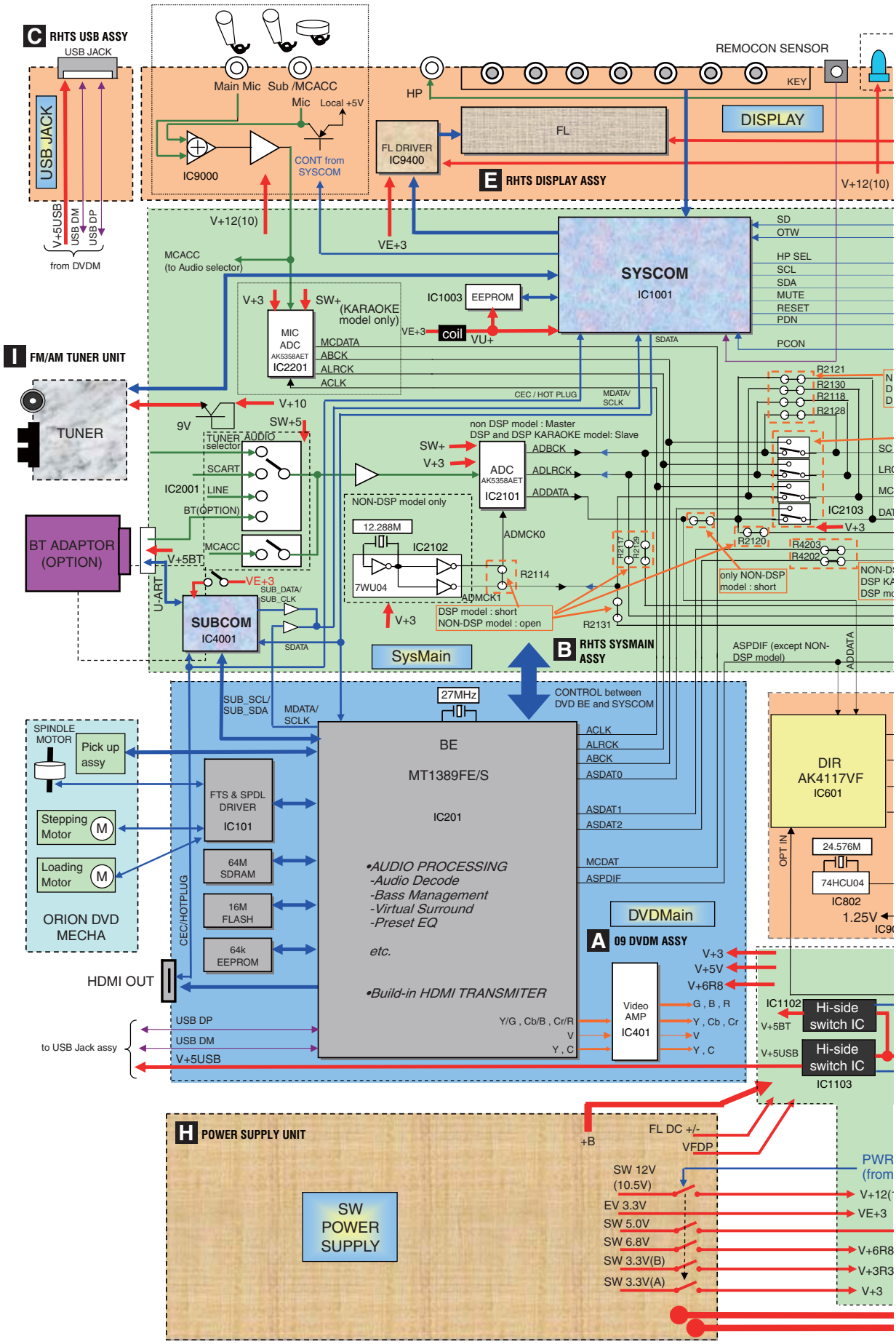

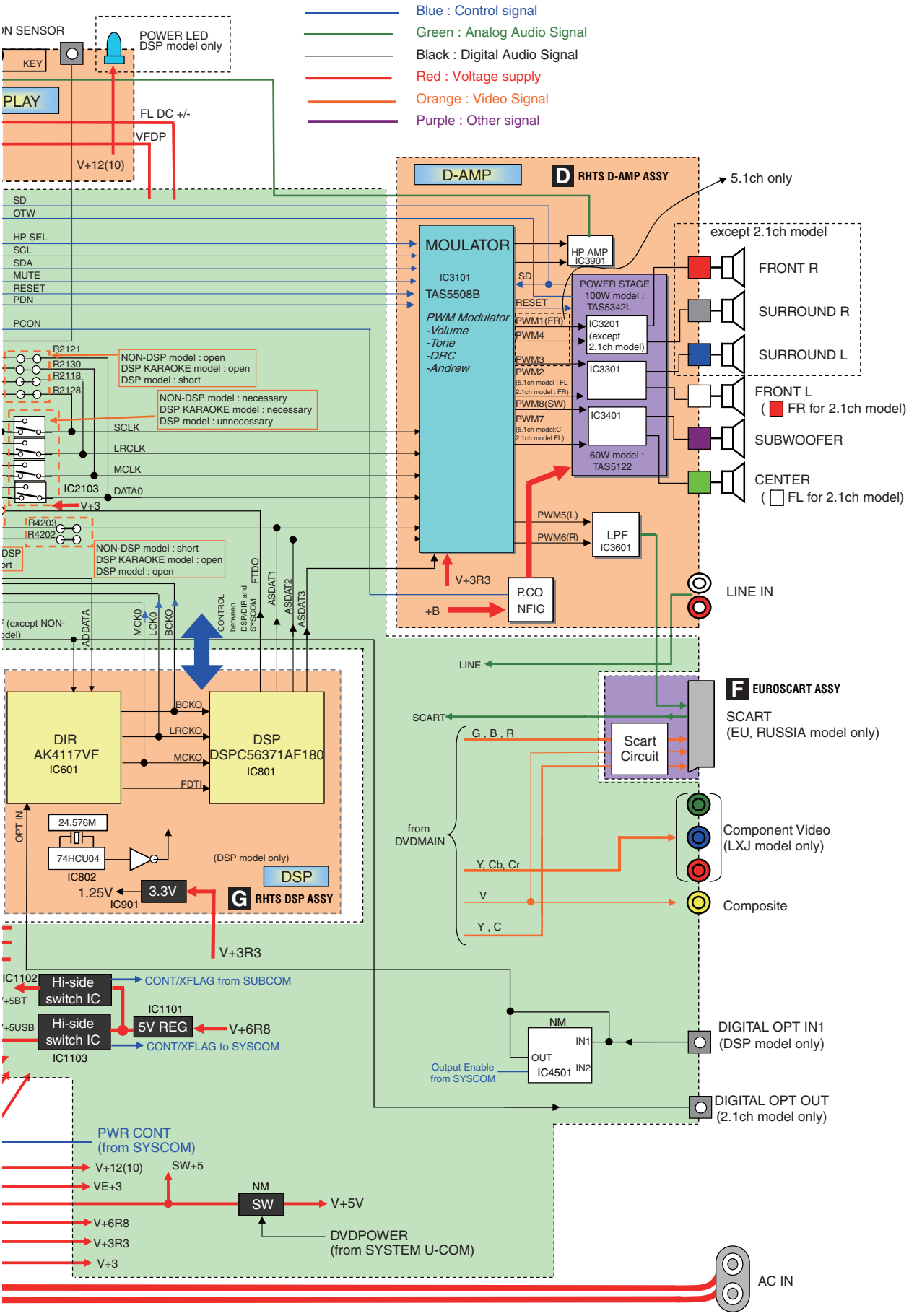
Blue : Control signal
Green : Analog Audio Signal
Black : Digital Audio Signal
Red : Voltage supply
Orange : Video Signal
Purple : Other signal
N SENSOR
KEY
POWER LED
DSP model only
PLAY
FL DC +/-
VFDP
V+12(10)
D-AMP
D RHTS D-AMP ASSY
5.1ch only
except 2.1ch model
SD
OTW
HP SEL
SCL
SDA
MUTE
RESET
PDN
PCON
MOULATOR
IC3101
TAS5508B
PWM Modulator
-Volume
-Tone
-DRC
-Andrew
HP AMP
IC3901
SD
RESET
POWER STAGE
100W model :
TAS5342L
PWM1(FR)
PWM4
IC3201
(except
2.1ch model)
PWM3
PWM2
(5.1ch model : FL
2.1ch model : FR)
IC3301
PWM8(SW)
PWM7
(5.1ch model:C
2.1ch model:FL)
IC3401
60W model :
TAS5122
FRONT R
SURROUND R
SURROUND L
FRONT L
( FR for 2.1ch model)
SUBWOOFER
CENTER
( FL for 2.1ch model)
R2121
R2130
R2118
R2128
NON-DSP model : open
DSP KARAOKE model : open
DSP model : short
NON-DSP model : necessary
DSP KARAOKE model : necessary
DSP model : unnecessary
SCLK
LRCLK
MCLK
DATA0
IC2103
V+3
R4203
R4202
NON-DSP model : short
DSP KARAOKE model : open
DSP model : open
PWM5(L)
PWM6(R)
LPF
IC3601
V+3R3
P.CO
NFIG
+B
LINE IN
LINE
ADDATA
MCKO
LCKO
BCKO
CONTROL between DSP/DIR and SYSCOM
FTDO
ASDAT1
ASDAT2
ASDAT3
F EUROSCART ASSY
SCART
(EU, RUSSIA model only)
SCART
G , B , R
Scart
Circuit
DIR
AK4117VF
IC601
BCKO
LRCKO
MCKO
FDTI
DSP
DSPC56371AF180
IC801
OPT IN
24.576M
74HCU04
IC802
(DSP model only)
DSP
1.25V
IC901
3.3V
G RHTS DSP ASSY
V+3R3
from
DVDMAIN
Y, Cb, Cr
V
Y , C
Component Video
(LXJ model only)
Composite
IC1102
Hi-side
switch IC
CONT/XFLAG from SUBCOM
+5BT
+5USB
Hi-side
switch IC
IC1103
IC1101
5V REG
V+6R8
CONT/XFLAG to SYSCOM
NM
IN1
OUT
IN2
IC4501
Output Enable
from SYSCOM
DIGITAL OPT IN1
(DSP model only)
DIGITAL OPT OUT
(2.1ch model only)
PWR CONT
(from SYSCOM)
V+12(10)
SW+5
VE+3
NM
SW
V+5V
V+6R8
V+3R3
V+3
DVDPOWER
(from SYSTEM U-COM)
AC IN

# 4.3 DVD LOADER/DECODER BLOCK DIAGRAM

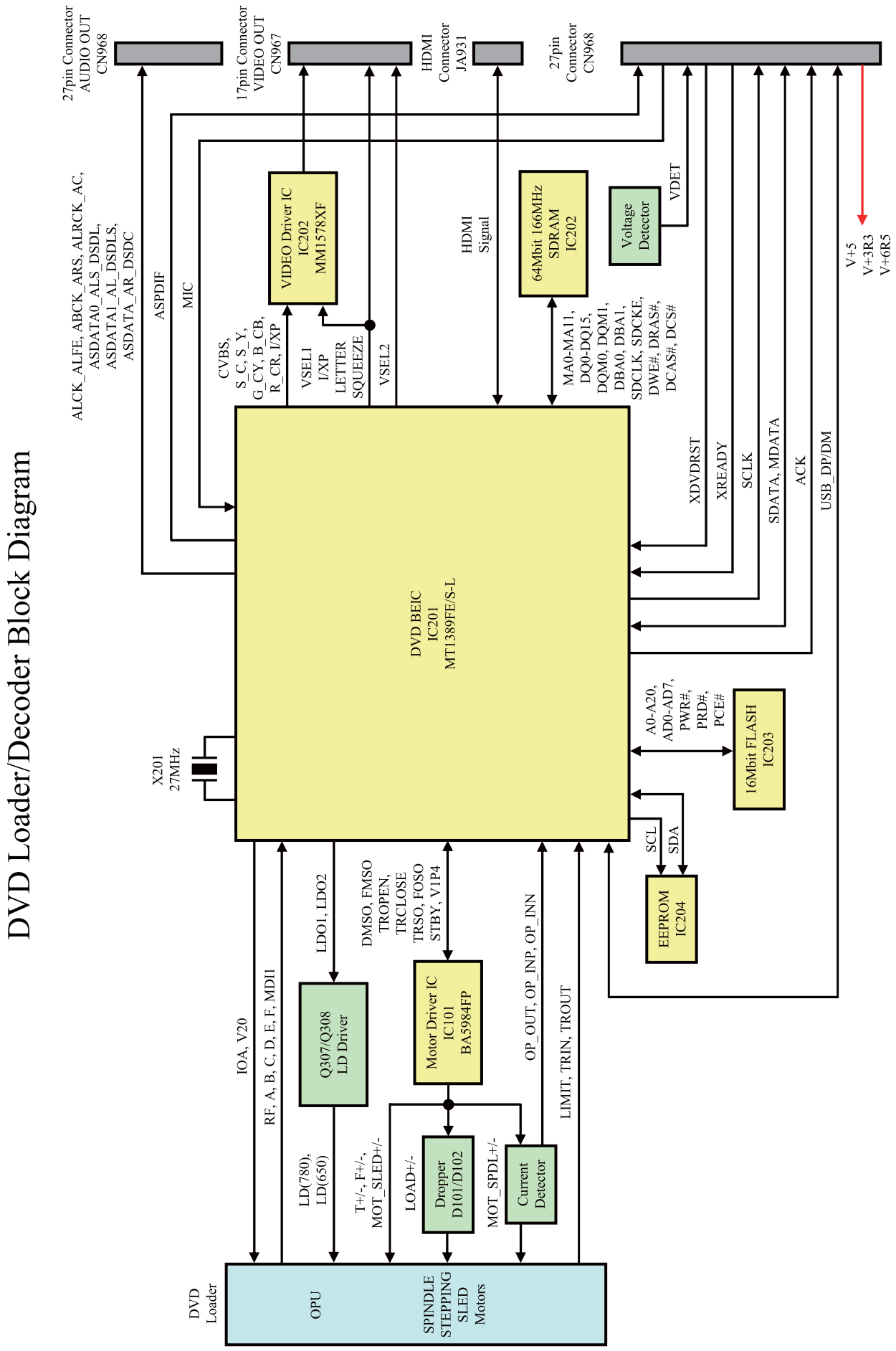

# 5. DIAGNOSIS

## 5.1 METHOD FOR DIAGNOSING DEGRADATION OF THE LDS ON THE PICKUP

**Case when this diagnosis is required :**
When playback of any disc, including a test disc (DVD: GGV1025, CD: STD-905), cannot be performed

### How to diagnose

In the case mentioned above, degradation of the laser diodes (LDs) mounted on the Pickup PCB is suspected.
Measure the voltage between the two ends of one of the resistors mentioned below.

- **No playback of a DVD :**

  Measure the voltage between the two ends of R322 or R325 on the 09DVDM Assy. If the voltage is 0.4 V or higher, the 650-nm LD is degraded.

- **No playback of a CD :**

  Measure the voltage between the two ends of R321 or R326 on the 09DVDM Assy. If the voltage is 0.4 V or higher, the 780-nm LD is degraded.

If the measurements show degradation of an LD, replace the DVD MECHA Assy.

### How to turn on the LD

Refer to “6.1 TEST MODE”.

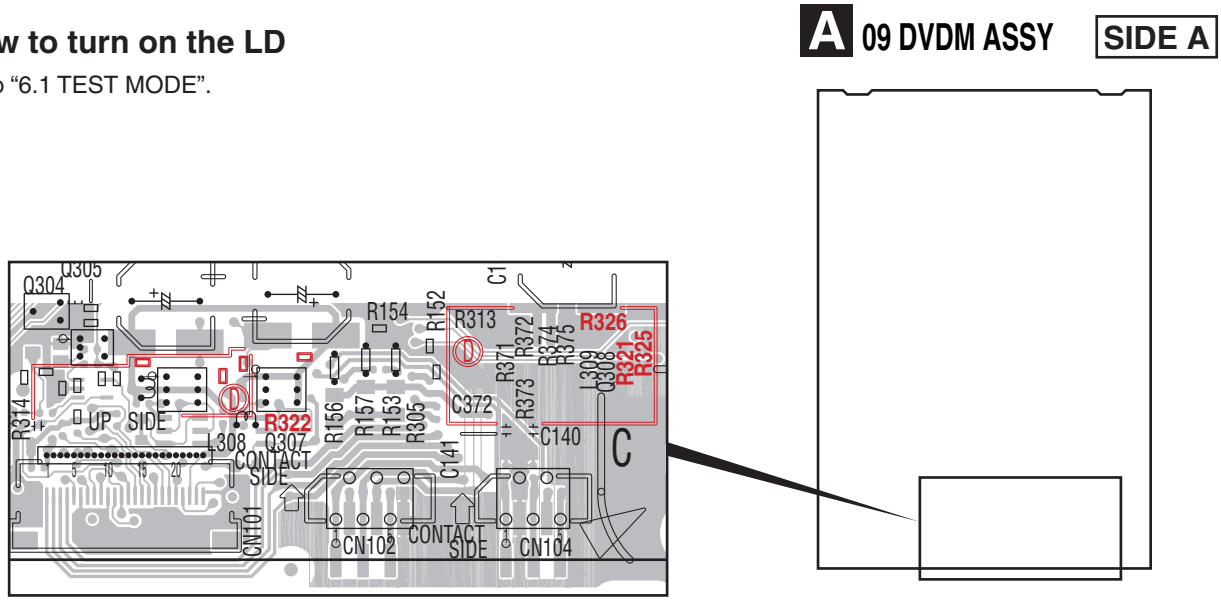

# 5.2 DVD TROUBLE SHOOTING

## ● Symptoms that may occur when any of the following ICs is in failure

| IC | Symptoms |
|---|---|
| **EEP ROM**<br>(09 DVDM Assy : IC204) | User's data cannot be stored in memory.<br>The ID number is lost. |
| **Flash ROM**<br>(09 DVDM Assy : IC203) | The power cannot be turned on.<br>Downloading of the firmware cannot be performed. |
| **DVD IC**<br>(09 DVDM Assy : IC201) | Any kind of symptoms (no power, a failure in any of the servo, video and audio systems, USB etc.) may be generated, because the DVD processing is performed by a single chip. |
| **64M SDRAM**<br>(09 DVDM Assy : IC202) | No power.<br>Block noise is generated during playback. |

| No. | Symptoms | Diagnosis Contents | Possible Defective Points |
|---|---|---|---|
| 1 | The power is not turned on. | Are wires of output connector (POWER SUPPLY Unit) and CN968 (09 DVDM Assy) disconnected or damaged ? | Connector / cable |
| | | Check that the following voltage is output :<br>CN968-pin 24 or pin 25 (09 DVDM Assy): 3.3 V | **POWER SUPPLY Unit** |
| 2 | An opening screen is not displayed on the monitor (The FL display lights. The mechanism does not work.) | Are the signals output from IC201-pin 97 (MDATA) and pin 98 (SCLK) on the 09 DVDM Assy ? (in the range of 0 to 3 V) | **09 DVDM Assy**<br>DVD IC (IC201) |
| | | Are the signals input into IC1001-pin 85 (MDATA) and pin 86 (SCLK) on the SYSMAIN Assy ? (in the range of 0 to 3 V) | **SYSMAIN Assy**<br>UCOM (IC1001) |
| | | Check that the following voltage are output :<br>R1108 (V+5 V) on the SYSMAIN Assy: 5 V | **POWER SUPPLY Unit /**<br>**SYSMAIN Assy** R1108 |
| | | Is a resonator (X201: 27 MHz) on the 09 DVDM Assy oscillating ? | **09 DVDM Assy**<br>Crystal resonator (X201)<br>DVD IC (IC201) |
| | | • Is a signal input into IC203-pin26 (PCE#) on the 09 DVDM Assy ?<br>(Is a signal "H" for 80 ms and then "L" after the power is turned on ?)<br>-> Communication with flash ROM.<br>• Are the signals input into IC202-pin 16 (DWE#), pin 19 (DCS#) and pin 38 (SDCLK) on the 09 DVDM Assy ?<br>(Is a signal fluctuating ?)<br>-> Communication with SDRAM | **09 DVDM Assy**<br>DVD IC (IC201)<br>Flash ROM (IC203)<br>SDRAM (IC202) |
| | | Is a signal output from IC203-pin 28 (PRD#) on the 09 DVDM Assy?<br>(Is a signal fluctuating for several hundred ms after the power is turned on ?) | **09 DVDM Assy**<br>Flash ROM (IC203) |
| | | Is a signal input into IC1001-pin 11 (DVD ACK) on the SYSMAIN Assy ? (Is a signal fluctuating ?)<br>-> Communication with FL Control IC | **09 DVDM Assy**<br>DVD IC (IC201)<br>**SYSMAIN Assy**<br>UCOM (IC1001) |
| | | Is a signal output from IC1001-pin 13 (XREADY) on the SYSMAIN Assy ? (Is a signal fluctuating in the range of 0 to 3.3 V ?) | **SYSMAIN Assy**<br>UCOM (IC1001) |
| | | Are the signals output from IC1001-pin 84 (SDATA) on the SYSMAIN Assy ? (in the range of 0 to 3.3 V) | **09 DVDM Assy**<br>DVD IC (IC201)<br>**SYSMAIN Assy**<br>UCOM (IC1001) |
| | | Are the signals of IC204-pin 5 (SDA) and pin 6 (SCL) on the 09 DVDM Assy fluctuating for one or two seconds after the power is turned? | **09 DVDM Assy**<br>EEPROM (IC204) |
| 3 | An opening screen is not displayed on the monitor (The FL display lights. The mechanism works.) | Check the video signal path between DVD IC (09 DVDM Assy IC201) and video-out terminal (see the block diagram) | **09 DVDM Assy**<br>Video circuit after DVD IC (IC201) |

| No. | Symptoms | Diagnosis Contents | Possible Defective Points |
|---|---|---|---|
| 4 | A tray cannot be opened. (An opening screen is displayed on the monitor) | Does the voltage of CN965-pin 1 and pin 2 on the 09 DVDM Assy change normally ?<br>Pin 1 (CLOSE (TRIN)): Tray is fully closed: "L"<br>Pin 3 (OPEN (TROUT)): Tray is fully opened: "L" | **DVD MECHA Assy**<br>Switch (SW1) |
| | | Is the signal input into IC101-pin 1 (TROPEN) on the 09 DVDM Assy?<br>At open: 3.3 V, At close: 0 V | **09 DVDM Assy**<br>DVD IC (IC201) |
| | | Are the signals output from CN965-pin 5 and pin 4 on the 09 DVDM Assy ?<br>Pin 5: Approx. 5 V during opening tray approx. 1 V during closing tray.<br>Pin 4: Approx. 0 V during opening tray approx. 6 V during closing tray. | **09 DVDM Assy**<br>FTS Driver IC (IC101) |
| | | Are wires of CN964 and CN965 on the 09 DVDM Assy disconnected or damaged ? | Connector / cable |
| | | Does the voltage of CN964-pin 5 on the 09 DVDM Assy change to 0 V by pressing the Push switch. | Push switch (SW2) |
| 5 | Playback impossible (no focusing) | Are the signals output from IC101-pin 16 (F+) and pin 15 (F–) on the 09 DVDM Assy ? | **09 DVDM Assy**<br>FTS Driver IC (IC101) |
| | | Does 650-nm LD emit light ?<br>Does a pickup lens move up / down ?<br>Does an actuator spring bend ? | Pickup |
| | | Are plastic parts damaged ? Or is a shaft detached ?<br>Is the turntable detached or tilted ? | Mechanism section (motor) |
| | | Is flexible cable of CN965 on the 09 DVDM Assy disconnected or damaged ? | Flexible cable / connector |
| | | Is signal output from IC201-pin 41 (FOSO) on the 09 DVDM Assy ?<br>(Device control of about 1.4 V is output usually. It is fluctuated by about 250 mV with focus up / down.) | **09 DVDM Assy**<br>DVD IC (IC201) |
| 6 | Playback impossible (Spindle does not turn) | Are the signals output from IC101-pin 12 (MOT_SPDL–) and pin 11 (MOT_SPDL+) on the 09 DVDM Assy ?<br>Is pin 21 (STBY) fixed LOW ? (pin 21 is High at playback: 3 V) | **09 DVDM Assy**<br>FTS Driver IC (IC101) |
| | | Is there any part detached from the spindle motor ?<br>Or Is there any foreign object lodged in it ? | Mechanism section<br>(Spindle motor) |
| | | Are wires of CN964 on the 09 DVDM Assy disconnected or damaged ? | Flexible cable / connector |
| | | Is signal output from IC201-pin 36 (DMSO) on the 09 DVDM Assy ? | **09 DVDM Assy**<br>DVD IC (IC201) |
| 7 | Playback impossible (Playback stops) | Does 650-nm LD deteriorate ?<br>If the voltage at each both ends of R322 and R325 on the 09 DVDM Assy is 0.4 V or more, the 650-nm LD is definitely deteriorated. | 650-nm LD deteriorated.<br>(When playback of a DVD is impossible) |
| | | Does 780-nm LD deteriorate ?<br>If the voltage at each both ends of R321 and R326 on the 09 DVDM Assy is 0.4 V or more, the 780-nm LD is definitely deteriorated. | 780-nm LD deteriorated.<br>(When playback of a CD is impossible) |
| | | Are there scratches or dirt on the disc ? | Disc |
| 8 | Picture disturbance during playback (block noise, freeze, other) | Are there scratches or dirt on the disc ?<br>Is there a problem with the format of the disc ? | Disc |
| | | Check the video signals.<br>Composite video signal (IC401-pin 23)<br>S video signal (IC401-pin 21, pin 26)<br>RGB video signal (IC401-pin 16, pin 18, pin 20) | **09 DVDM Assy**<br>DVD IC (IC201)<br>Video IC (IC401) |
| 9 | No sound (Picture is normal) | Check the waveform (ALCK: IC201-pin 231), (ALRCK: IC201-pin 227), (ABCK : IC201-pin 230), (ASDATA0/1/2: IC201-pin 226/225/223).<br>Check the waveform (ASPDIF: IC201-pin 215) | **09 DVDM Assy**<br>DVD IC (IC201) |

# 5.3 CIRCUIT DESCRIPTION OF DIGITAL AMP SECTION

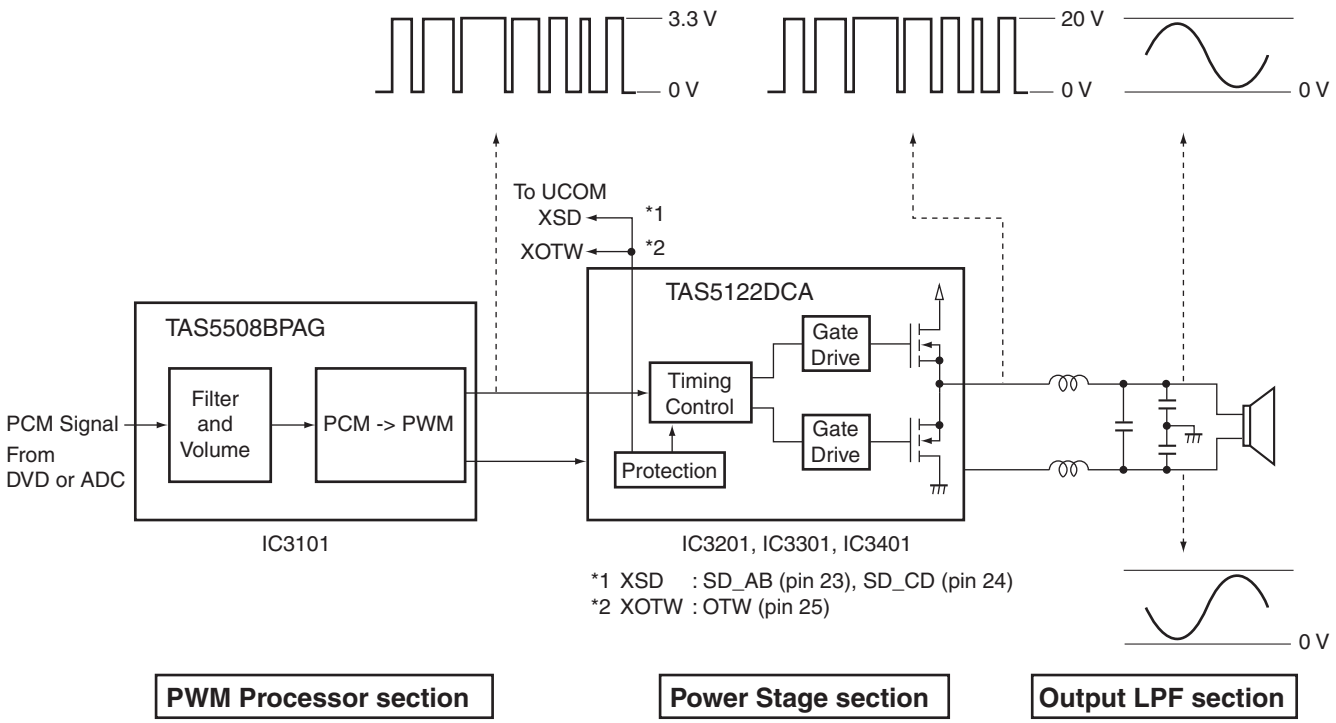


## PWM Processor section

The PCM signals output from the DVD decoder or AD converter are input to this section, and their volume and sound quality are digitally adjusted. At the output stage, after conversion from PCM to PWM, the signals are output to the Power stage.

## Power Stage section

In this section, timing is controlled so that the MOSFETs on the high and low sides will not be turned on simultaneously. The voltage of the PWM signals are raised to drive the gates of the MOSFET, and the PWM signals to drive the speakers are output from the MOSFET at the output stage. Detection and protection functions against short-circuiting of the output signals and temperature exceeding the standard value are also provided.

If the detection and protection work, the ports of the power stage ICs become the following state.

| Power Stage ICs No. | Protection Enable State |
|---|---|
| IC3201 | SD_AB (pin 23) => L |
| IC3301 | SD_CD (pin 24) => L |
| IC3401 | OTW (pin 25) => L |

## Output LPF section

The carrier elements, high-frequency signals that are unnecessary for these speakers, are eliminated. The signals passed through the LPF will become sine-wave signals, as shown in the figure above.

# 5.4 SPECIFICATIONS FOR THE PROTECTION CIRCUITS FOR THE DIGITAL AMPLIFIER

The protection circuits for the Digital Amplifier are activated, following the specifications shown below. The error indication on the FL display shows the reason a protection circuit was activated.
Upon diagnosis of the Digital Amplifier, refer to the specifications for the protection circuits here and the overview of the Digital Amplifier circuitry.

## 1. Overview

The system microcomputer monitors the ports for shutdown requests (pin 23: SD_AB and pin 24: SD_CD) and the ports for abnormal-temperature detection (pin 25: /OTW) of the Power Stage ICs (IC3201, IC3301, and IC3401). As soon as any abnormality is detected, it shuts the unit down.
To notify the user of the possibility of a too high a volume, when the unit is turned on the next time, the volume level will be set to 0, and an error message will be displayed on the FL display.

## 2. Ports on the system microcomputer to be used for detection

Pin 71: SHUTDOWN
Low voltage at this pin means overcurrent or voltage too low (= V+B27) at a Power Stage IC.

Pin 78: XOTW
Low voltage at this pin means the temperature at the Power Stage ICs exceeded 125 °C.

**Note:** As one Power Stage IC is provided with two channels, three Power Stage ICs (in total 6 channels) are mounted in this unit. For abnormality detection, the unit implements a logical OR operation regarding these three ICs. Therefore, which IC is abnormal cannot be known directly. To find which IC is abnormal, it is required to check the PWM outputs (pins 35, 38, 47, 50) of the each power stage ICs (IC3201, IC3301, IC3401).

## 3. Detection timing

Start : Detection starts 500 ms after the PWRCONT port (pin 34) of the system microcomputer becomes active by your pressing the STANDBY/ON key.

Finish : When the STANDBY/ON key is pressed again (when the power-off process starts).

## 4. Operation of the protection circuits

The following three protection circuits are activated when the conditions shown below are met:

Overcurrent detection 1: Indication on the FL display: OC ERR 1
Conditions: If the SHUTDOWN ports, which are monitored every 10 ms, become low 7 times in succession

Overcurrent detection 2: Indication on the FL display: OC ERR 2
Conditions: The PCONFIG ports (pin 58), which are monitored every 30 ms, become more than 2 Vrms more than 45 % in one minute.

Abnormal temperature detection 1: Indication on the FL display: OVERTEMP
Conditions: If the XOTW ports, which are monitored every 10 ms, become low in succession for one minute.

Abnormal temperature detection 2: Indication on the FL display: OVERTEMP
(Prerequisite: The XOTW ports, which are monitored every 10 ms, become low three times in succession.)
Conditions: The above prerequisite is upheld, and the conditions for an overcurrent detection are met.

## 5. Process when the protection circuits are activated

The unit is shut down within 30 ms after abnormality detection then the volume level is set to 0.
The unit can be turned on immediately after the shutdown.

# 5.5 ERROR AND WARNING MESSAGE

### USB related warning

U S B E R R

USB over current detect error (over 500 mA)

### HDMI related warning

H D M I E R R

HDCP authentication failed after HDMI cable was connected.
If the set has no HDCP key, it causes this error.

### BT ADAPTER related warning

B T E R R

Power consumption by Bluetooth ADAPTER is too high to supply the power.
Reconnect the Bluetooth ADAPTER.

B T A U D I O

Source change to BT from source other than BT.

↓

N O D E V I C E

When cannot detect a device at BT function

ADAPTER PORT terminal sequence in BT AUDIO function

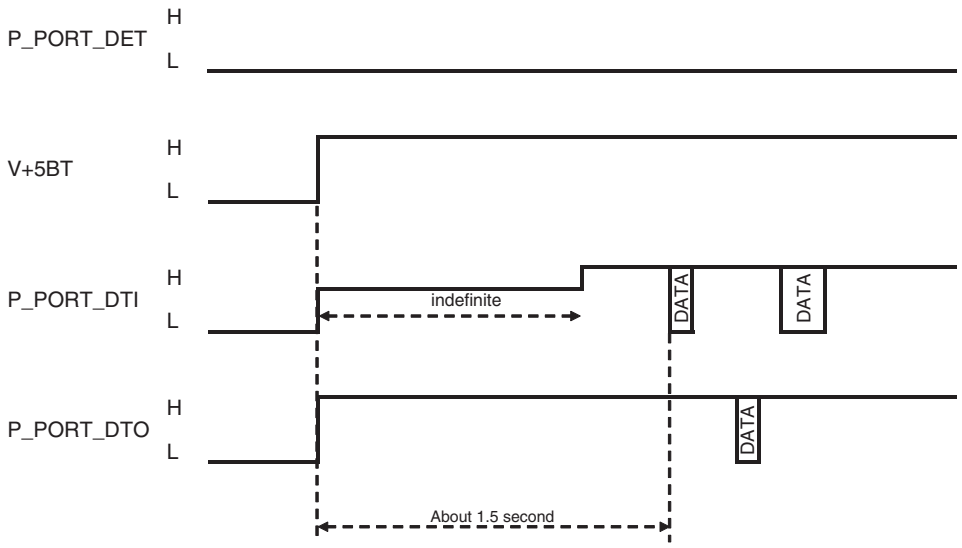


ADP_DET logic

| ADAPTER PORT | In non-connection | In connection |
|---|---|---|
| P_PORT_DET | H | L |
| P_PORT_ID | H | 0.6 V(0.28 - 0.8 V) |

# 5.6 ADAPTER PORT TROUBLESHOOTING

### Step 1: Connect AS-BT100 (Bluetooth adapter)

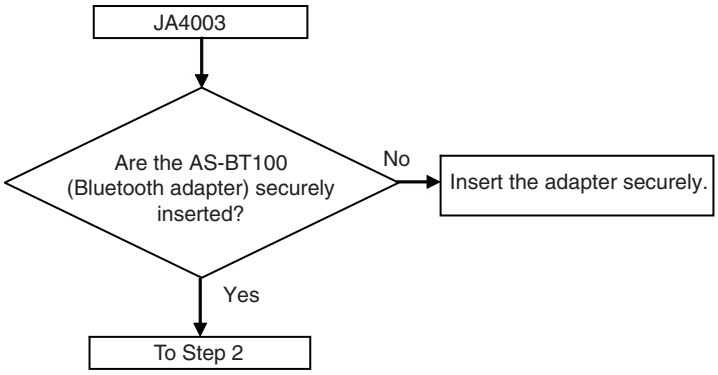


### Step 2: Playback check

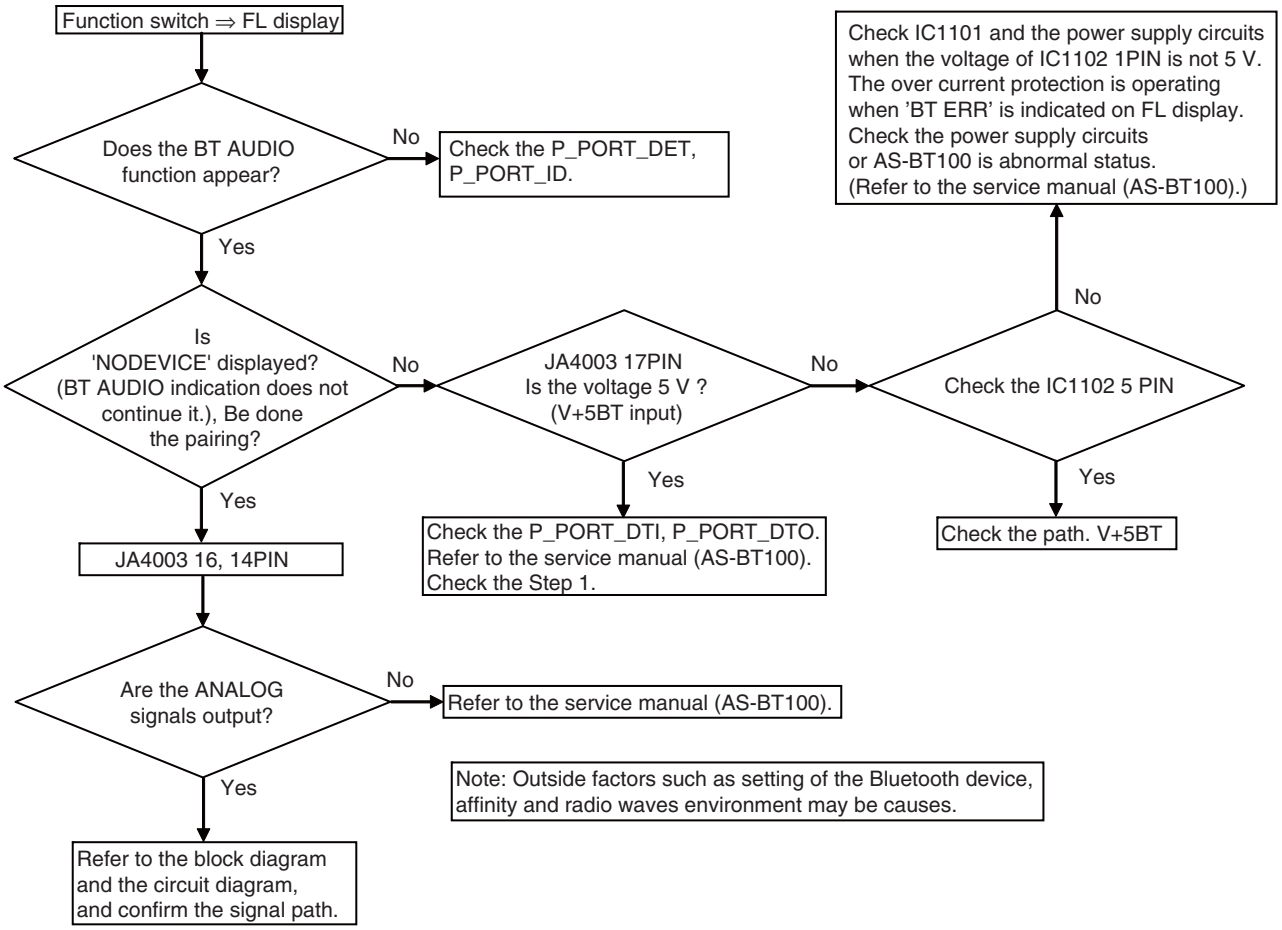

# 5.7 POWER ON SEQUENCE

POWER ON SEQUENCE for RegularHTS. (KURO LINK OFF)

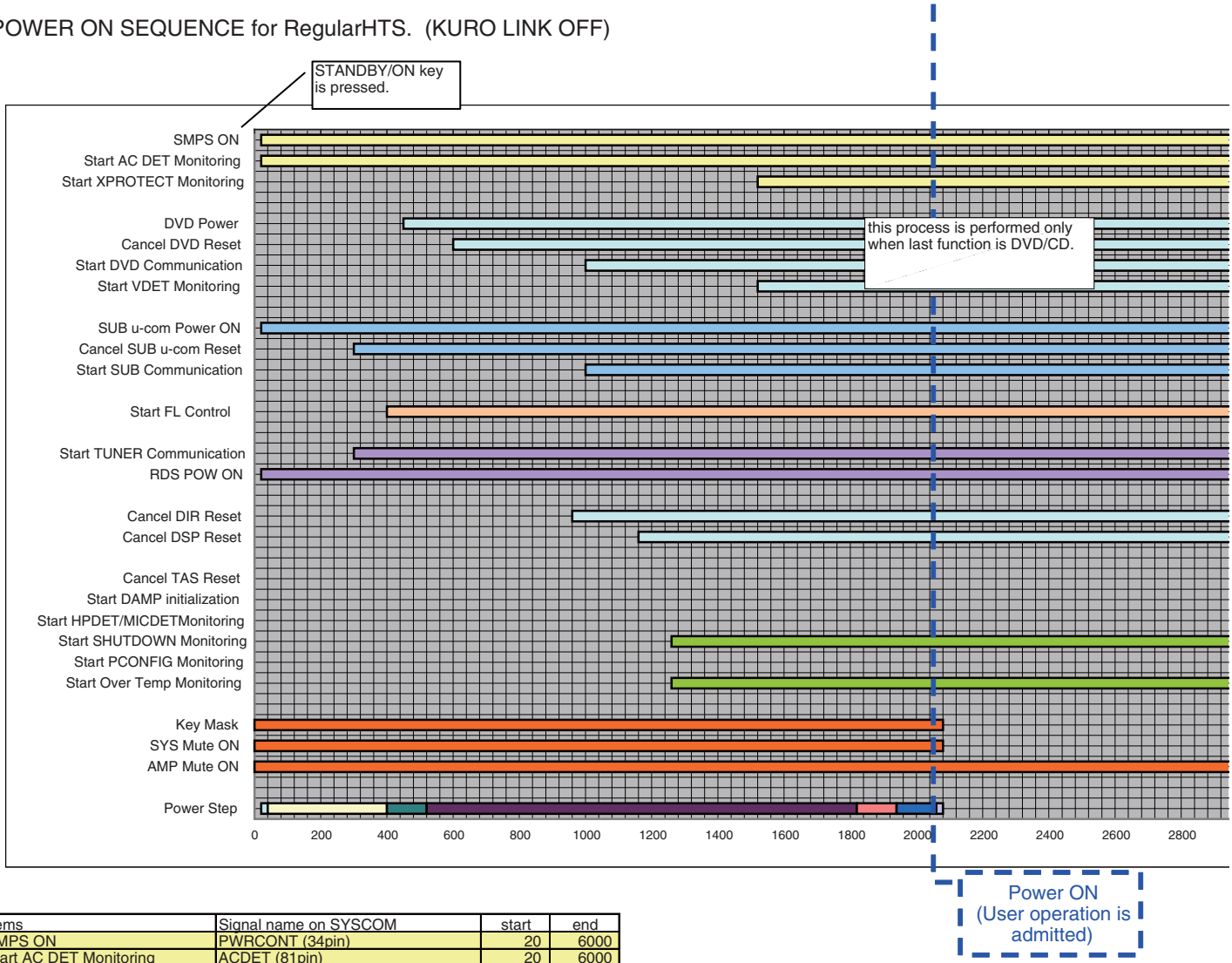


* I specify the shortest case in power on co

| Items | Signal name on SYSCOM | start | end |
|---|---|---|---|
| SMPS ON | PWRCONT (34pin) | 20 | 6000 |
| Start AC DET Monitoring | ACDET (81pin) | 20 | 6000 |
| Start XPROTECT Monitoring | XPROTECT (54pin) | 1520 | 6000 |
| | | | |
| DVD Power | DVDPOWER (15pin) | 450 | 6000 |
| Cancel DVD Reset | XDVDRST (14pin) | 600 | 6000 |
| Start DVD Communication | SDATA /MDATA /SCLK (84,85,86pin) | 1000 | 6000 |
| Start VDET Monitoring | VDET (53pin) | 1520 | 6000 |
| | | | |
| SUB u-com Power ON | SUBPOWER (17pin) | 20 | 6000 |
| Cancel SUB u-com Reset | SUB_RESET (16pin) | 300 | 6000 |
| Start SUB Communication | SDATA /MDATA /SCLK (84,85,86pin) | 1000 | 6000 |
| | | | |
| Start FL Control | XFLCS / FLDATA / FLCLK (38, 39, 40pin) | 400 | 6000 |
| | | | |
| Start TUNER Communication | TXIDATA /TXCLK /TXODATA /TXCE (3, 5, 6, 19pin) | 300 | 6000 |
| RDS POW ON | RDS POW (9pin) | 20 | 6000 |
| | | | |
| Cancel DIR Reset | XDIRRST (68pin) | 960 | 6000 |
| Cancel DSP Reset | XDSPRST (64pin) | 1160 | 6000 |
| | | | |
| Cancel TAS Reset | XDARST (76pin) | 3360 | 6000 |
| Start DAMP initialization | DASCK,DASDA (1, 2pin) | 3560 | 6000 |
| Start HPDET/MICDETMonitoring | HPDET /MIC DET (49,60pin) | 3760 | 6000 |
| Start SHUTDOWN Monitoring | XSHUTDWN (71pin) | 1260 | 6000 |
| Start PCONFIG Monitoring | PCONFIG (58pin) | 3560 | 6000 |
| Start Over Temp Monitoring | XOTW (78pin) | 1260 | 6000 |
| | | | |
| Key Mask | - | 0 | 2080 |
| SYS Mute ON | DMUTECHECK (22pin) | 0 | 2080 |
| AMP Mute ON | DSPMUTE (70pin) | 0 | 5860 |
| | | | |
| Power Step | | 20 | |

| | | | | | | | | |
|---|---|---|---|---|---|---|---|---|
| 20 | 360 | 120 | 1300 | 120 | 120 | 20 | | |
| STEP1^2 | STEP2^3 | STEP3^4 | STEP4^5 | STEP5^6 | STEP6^7 | STEP7^8 | | |
| 40 | 400 | 520 | 1820 | 1940 | 2060 | 2080 | | |

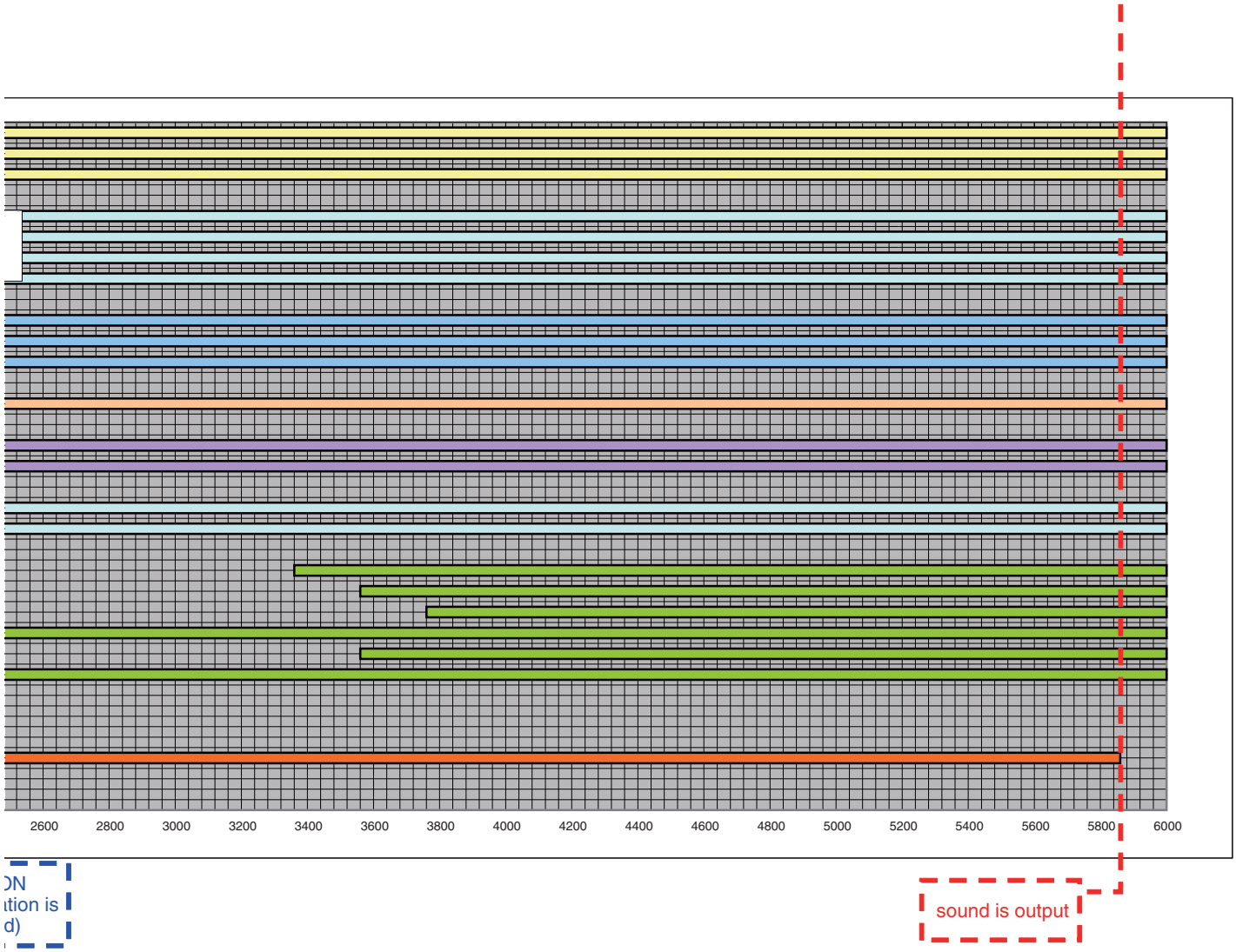


ON
ation is
d)

st case in power on completion time.

20
7^8
080

# 6. SERVICE MODE
## 6.1 TEST MODE

### Test Mode Functional Specification

**① Test mode entry**

In the power ON state, press the [ESC] key and [TEST] key in order of the Test mode remote control unit.

- OSD displays test mode.

**② LD ON**

Enter the test mode.

DVD : Press the [TEST] and [1] keys in order, and turn on the laser diode (650 nm).

CD : Press the [TEST] and [4] keys in order, and turn on the laser diode (780 nm).

**③ Release the Test mode**

- Turn off the power.
- Press the [ESC] key of the remote control unit and reset it.

# 6.2 DISPLAY SPECIFICATION OF THE TEST MODE

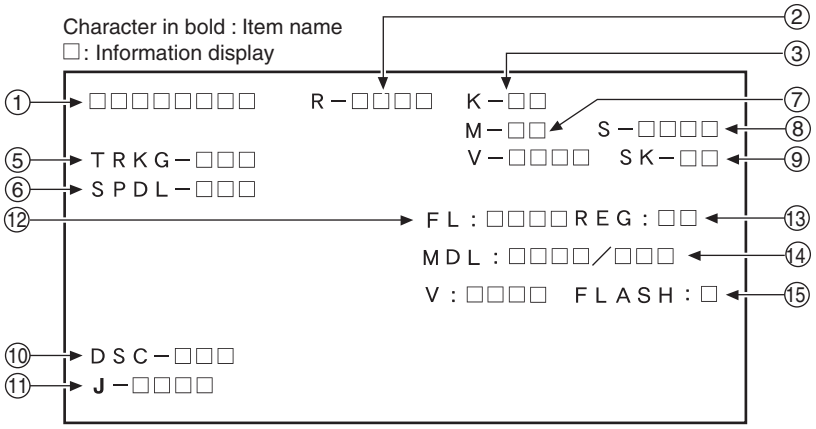


① **Address indication**
The address being traced is displayed in number.
(as for the DVD, indication of decimal number is possible.)
DVD : ID indication (hexadecimal number, 8 digits)
[* * * * * * * *]
CD : ID indication [* * * * * * * *]

② **Code indication of remote control unit [R – * * * *]**
In case of double code, display a 2nd code.

③ **Main unit keycode indication [K – * *]**

⑤ **Tracking status [TRKG – * * *]**
Tracking on : [ON]
Tracking off : [OFF]

⑥ **Spindle status [SPDL – * * *]**
CLV : [CLV]
Off : [OFF]

⑦ **Mechanism (loading) position value [M – * *]**
Unknown : [01] or [41]
Open state : [04]
Close state : [08]
During opening : [12]
During closing : [22]

⑧ **Slider position [S – * * * *]**
In Side Switch ON : [01]
In Side Switch OFF: [00]

⑨ **Output video system [V – * * * *]**
NTSC system : [NTSC]
PAL system : [PAL]
Automatic setting: [AUTO]
**Scart terminal output [SK – * *]**
(Display only the WY model which can do the output setting of scart terminal.)
VIDEO : [00]
S-VIDEO : [01]
RGB : [02]

⑩ **Disc sensing [DSC – * * *]**
The type of discs loaded is displayed.
[DVD], [CD ]

⑪ **Jitter value [J – * * * *]**
Note: Don't use it.

⑫ **Version of the FL controller [FL: * * * *]**
Note: Don't use it.

⑬ **Region setting of the player [REG: *]**
Setting value : [1] to [6]

⑭ **Destination setting of the FL controller [MDL: * * * * / * * *]**
Four characters in the front represent code 01.
Three characters in the back represent the destination code.
J: Japan, K: North America, R: General Area,
LB: Taiwan, WY: Europe, TH: Thai, RAM: China

⑮ **Version of the flash ROM [V: * *. * *]**
**Flash ROM size [FLASH = * *]**

# 6.3 FUNCTIONAL SPECIFICATION OF THE SHORTCUT KEY

Only during normal playback, the following shortcut keys can be assigned by pressing a required key after pressing the ESC key of the remote control unit. To quit, press the ESC key

| Command Contents | Conditions | Remote Control Key Name |
|---|---|---|
| Memory clear and region / revision indication | | CLEAR (*1) |
| Average value measurement of DVD error rate | | 5 (*1) |
| CD error rate measurement | | 5 (*1) |
| Scart terminal output : VIDEO | Models equipped with Scart terminal | AUDIO |
| Scart terminal output : S-VIDEO | | SUBTITLE |
| Scart terminal output : RGB | | ANGLE |
| Progressive OFF | Only for progressive models | R_SKIP |
| Progressive ON | | F_SKIP |
| HDMI Resolution : 1920 x 1080p | Only for HDMI models | PROGRAM |
| FL indication of ID number | | STEREO (*1) |
| ZOOM ON (x4) | | ZOOM |
| Service mode indication (error rate indication, etc.) | | CHP/TIM (*1) |
| Model information indication | | CHAP (*1) |
| Title search Input mode IN<br>Title No. input<br>Search execution | | SIDE A (*1)<br>Numbers (*1)<br>PLAY (*1) |
| Region confimation mode | | A.MON (*1)<br>Numbers (*1) |

*1 : Test mode remote control unit

**• Service mode indication (ESC + CHP/TIM keys)**

ID Address
The error rate is always displayed in exponential notation, e.g., *.* * e - *, for both DVDs and CDs.
EDC/ID/AV 1 error history (ID Address, EDC/ID Error, last eight errors)

**• Calculation of the average error rate (ESC + "5" [Test mode remote control unit] keys)**

The average of the last eight error rates is calculated and indicated in exponential notation. After the calculation is completed, "OK" or "NG" is displayed. If "NG" is displayed, the disc tray will open (for both DVDs and CDs)
For DVDs: OK with 5.0e-4 or less, for CDs: OK with 7.6e-3 or less

**• Indication of model information (ESC + CHAP keys)**

For details, see 6.4.

**• Region confirmation mode (ESC + A.MON [Test mode remote control unit] + "1"-"6" [Test mode remote control unit] keys)**

After you press the A.MON key while holding the ESC key pressed and then input the region number, if the number is different from that set in the unit, an error message is displayed, and the tray opens.

# 6.4 SPECIFICATION OF MODEL INFORMATION DISPLAY

To display model information : Press the ESC key then the CHAP key.
To close the model information display : Press the ESC key.

**• Display contents**

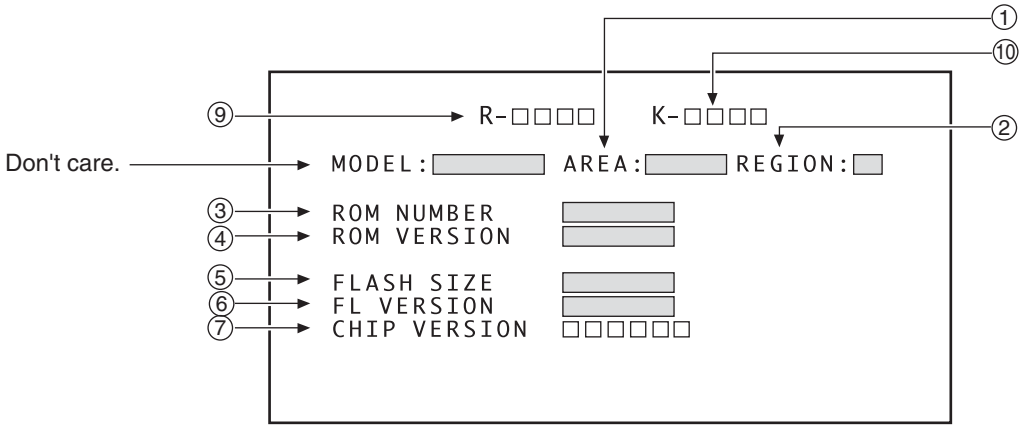


Character in bold : Item name
□: Information display

① **Destination indication**
Display it according to model information set from the FL controller.
② **Region No.**
③ **Part number**
④ **ROM version**
⑤ **Flash size**

⑥ **FL controller version**
⑦ **CHIP VERSION**

⑨ **Remote control code**
⑩ **Key code of Main unit**

# 6.5 FUNCTIONAL SPECIFICATION OF THE SERVICE MODE

• **Display during Service Mode**

To enter Service Mode, press the CHP/TIM key while holding the ESC key pressed.
To quit, press the ESC key.

**Service mode display**

① ID Address
② Error rate (always displayed), in exponential notation

ERROR RATE : ＊＊＊＊＊＊＊
(＊＊＊＊)
↑ Number of error

• Calculation of the average error rate
For DVDs: OK with 5.0e-4 or less, for CDs: OK with 7.6e-3 or less

ex) For DVDs

| • Step 1 | | • Step 2 | |
|---|---|---|---|
| △△e - □ | | △△e -4 | |
| △△e -6 | : OK | 3.0e -4 | : OK |
| △△e -5 | : OK | 4.0e -4 | : OK |
| △△e -4 | : Refer to Step 2 | 5.0e -4 | : OK |
| △△e -3 | : NG | 6.0e -4 | : NG |
| △△e -2 | : NG | 7.0e -4 | : NG |

③ EDC/ID error history (ID Address, EDC/ID errors, last eight errors)

Note:
＊ Error of AV1 is not supported in this player.

Indication plan contents

Character in bold : Item name
□: Information display

# 6.6 SERVICE TEST MODE

### 1. Configuration and conditions during checking

- Emergency shut down will not happen even if breakdown happens in the Service Test mode. (Just ignore it)
- POWER ON in test mode can be done in less than 1 minute even when emergency shut down happens when error is detected.
- Total power on time can be checked.

### 2. How to enter the Test Mode

- Test mode can also be entered in either of the following ways:
  1. Connect the power cord to the wall outlet with the STEST port (microcomputer terminal IC1001: pin 59) at GND. (See "Service Test Mode connecting point".)
  2. When power is on and VOL 0, Continually pressing the FUNCTION key and POWER key on the front panel for more than 8 seconds.
     *In case of method 2, "5. Error" is not displayed and the unit will be shut down for an emergency till enter Test mode.

■ **Service Test Mode connecting point**

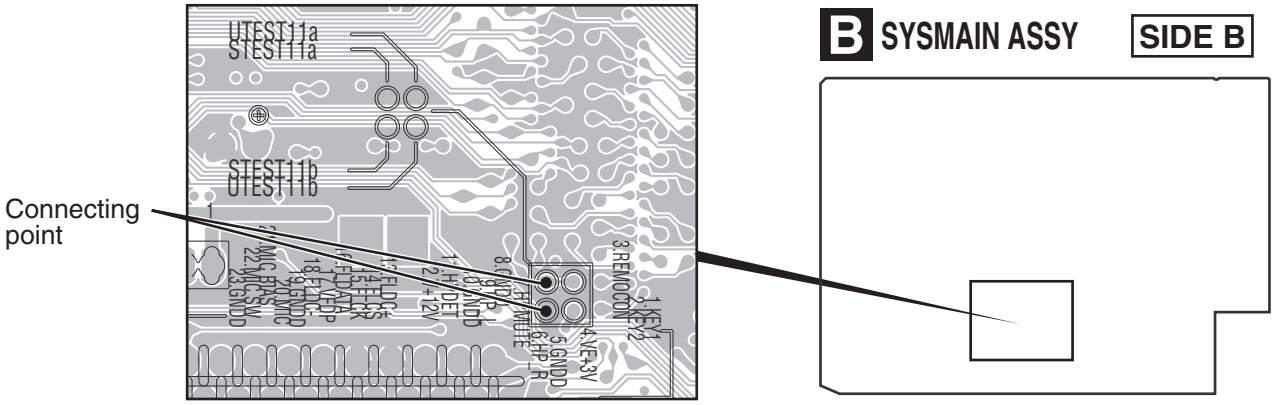


### 3. Indications on the FL display when Test mode is entered

Initial function is HDMI1.
The set will automatically power on and the following display will appear.

- The FL display during TEST MODE entry is different depending on whether NORMAL POWER OFF occurred before entering the TEST MODE or EMERGENCY SHUT DOWN occurred due to error detection.
- Listening mode will become Ext.Stereo (5ch Stereo) mode so that multichannel output can be obtained.
- Even if Display Mode is Auto Display setting, FL display is displayed during test modes.

**[After NORMAL POWER OFF]**

[display]

POWER ON
⇩
VOL 0
⇩

**[After AMP error]**

[display]

PRTCT E
⇩
VOL 0
⇩
LINE 2S

**[After DVD error]**

[display]

DVDPRTCT
⇩
VOL 0
⇩
LINE 2S

**[After EEPROM error]**

[display]

EEP ERR
⇩
VOL 0
⇩
LINE 2S

**[After ABNORMAL TEMP. DETECTION]**

[display]

OVERTEMP
⇩
VOL 0
⇩
LINE 2S

**[After OVERCURRENT DETECTION1]**

[display]

OC ERR 1
⇩
VOL 0
⇩
LINE 2S

**[After OVERCURRENT DETECTION2]**

[display]

OC ERR 2
⇩
VOL 0
⇩
LINE 2S

∗ POWER OFF to get out from TEST MODE.
∗ When the TEST MODE is released, only the RAM which stores the error status will be initialized. (RAM that can be set by the user will not initialized.)

## 4. Operation

- Basically, operation is the same as the NORMAL MODE.
  However, the following display will be indicated when function is changed to show that the TEST MODE is in operation.

| [Function] | [display] |
|---|---|
| **DVD/CD** | DVD/CDS |
| **USB** | USB S |
| **USB** | BT ADUIS |
| **TUNER** | TUNER S |

| | < DSP model > | < NonDSP model > | < NonDSP model > [MY,RUS model only] |
|---|---|---|---|
| **LINE1 (OPT IN)** | LINE 1S | | |
| **LINE2 (RCA IN)** | LINE 2S | LINE S | LINE 1S |
| **LINE3 (SCART IN)** | [MY,RUS model only] LINE 3S | | LINE 2S |

**[Only for models without DSP]**

- When function is switched to LINE, SURROUND mode will switch to X-STEREO (5CH STEREO) just for the TEST MODE. (NORMAL MODE: 2CH STEREO)
  At this point, sound checking can't be done using HP.
  (HP operation cannot be guaranteed for X-STEREO (5CH STEREO))
  All functions, other than LINE can be used for sound checking using HP.

**[Models with DSP]**

- Change the SURROUND mode to X-STEREO (5 ch STEREO) mode for multi CH output.

## 5. Errors

- BREAKDOWN CATEGORY: Depends on the error displayed during POWER ON.

PRTCT E

**Protect circuit is operating.**

1. Depending on the different power supply abnormalities, V+12, V+3SUB, V+3R3, V+6R8, SW+5 short-circuit occured or V+12, V+3SUB, V+3R3, V+6R8, SW+5 has exceeded the stipulated standardized values.

2. In the system microP (AYW7271, AYW7270) somewhere, the XPROTECT(54Pin) line has either shorted to ground or has been disconnected.

DVDPRTCT

**Abnormal DVD.**

1. Depending on the power supply abnormalities, V+6R5, V+5V, V+3R3 short-circuit occured or V+6R8, V+5V, V+3 has exceeded the stipulated standardized values.
2. In the system microP (AYW7271, AYW7270) somewhere, the VDET line has either short to ground or disconnected.

EEP ERR

1. Communication line to the EEPROM could either be disconnected or short.
2. The EEPROM IC itself could be faulty.

OC ERR 1

OC ERR 2

- If error display does not come on again when POWER ON in the NORMAL MODE, this could mean that the speaker terminal is short.
- If error display comes on, the following conditions are some possibilities:
  1. In the AMP ASSY, either one or more of the digital amp IC has broken down.
  2. Short-circuit occurred somewhere between the faulty IC(s) and speaker terminal.
  3. The XSD SHUTDOWN (71Pin) line has either short to ground or disconnected somewhere between the faulty digital amp IC and system microP (AYW7271, AYW7270).

OVERTEMP

- No abnormality if "OVERTEMP" display does not come on when POWER ON in the NORMAL MODE again. (The TEMP could have just gone up temporarily. Try reducing the volume)
- When the "OVERTEMP" display comes on again, the following conditions are some possibilities:
  1. In the AMP ASSY, either one or more of the digital amp IC has broken down.
  2. The XOTW(78 Pin) line has either short to ground or disconnected somewhere between the faulty digital amp IC(s) and system microP (AYW7271, AYW7270).

## 6. Total Power on Time Display

- If FUNCTION key is pushed continuously for 5 sec during POWER ON, the system microp version display will come on after the total POWER ON time.

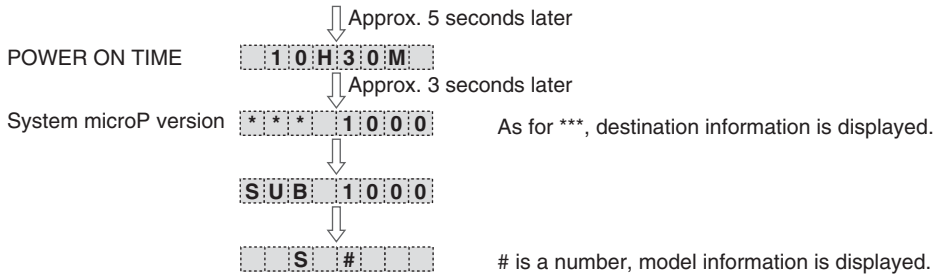


◆ Destination information
MY: Europe
KU: North America
DD: general
JJ: Japan
CN: China
LA: South and Central America
RUS: Russia
AU: Australia
THA: Thailand
DBD: Taiwan
MDX: the Middle and Near East

● Model information
1: BASE
2: BASE_ST
3: TALL
4: UPPER_ST
5: UPPER (TALL)
6: LCD match (2.1ch)
MODELERR:DUMMY

- Power-on time is always counted while the power is on, regardless of unit's functions and operations. However, it is not counted during Standby mode.
- The maximum countable power-on time is 255H59M (255 hours 59 minutes.) The indication will not advance beyond that.
- The accumulated power-on time basically cannot be cleared.

## 7. DSP Error Display (for models with DSP only)

- During POWER ON, you can switch between DSP error display <=> Normal display when the SOUND key on the remote control is pressed.

# 6.7 DISPLAY SPECIFICATIONS OF DSP ERROR

[FL display] ○○○○-UM9

- **9**6k (This character is displayed while the source is 88.2 or 96 kHz PCM)
- DSP **M**UTE (This character is displayed while DSPMUTE is active)
- DIR **U**NLOCK (This character is displayed while DIR is UNLOCK)
- Space
- The name of an error is displayed by four characters.

**[Example]**

| | | |
|---|---|---|
| ERR.0 | DIER-UM | Cannot receive data from the DIR<br>--> Probably due to faulty DIR or bad connection |
| ERR.1 | DSER-UM | Cannot receive data from the DSP<br>--> Faulty communication between DIR and DSP<br>--> Probably due to faulty DSP or connection on the circuit board |
| ERR.2 | HREQ-UM | No HREQ return value<br>--> Probably due to faulty DSP |
| ERR.3 | DSNG-UM | DSP error message<br>--> Faulty communication between the DIR and DSP<br>--> Probably due to faulty DSP |
| ERR.4 | DMUT- M | DECMUTE on all the time<br>--> Faulty communication between the DIR and DSP<br>--> Probably due to faulty DSP |
| NO ERR<br>(the source is 88.2/96 kHz.) | DSOK- 9 | 96 kHz source play |
| NO ERR<br>(the source is not 88.2/96 kHz.) | DSOK- | No abnormality |

### DSP error message mode

Press "SOUND" button in service test mode to show DSP error message displays.
Press "SOUND" again to select normal service test mode.
This means that the usual function of "SOUND" is not effective in the service test mode.

# 7. DISASSEMBLY

**Note 1:** Do NOT look directly into the pickup lens. The laser beam may cause eye injury.
**Note 2:** Even if the unit shown in the photos and illustrations in this manual may differ from your product, the procedures described here are common.

## Disassembly

### [1] Bonnet, Tray Panel

Remove the bonnet by removing the nine screws.

(1) Press the ⏻ STANDBY/ON button to turn on the power.

(2) Press the ⏏ OPEN/CLOSE button to open the tray.

(3) Remove the tray panel.
(4) Set the test disc.

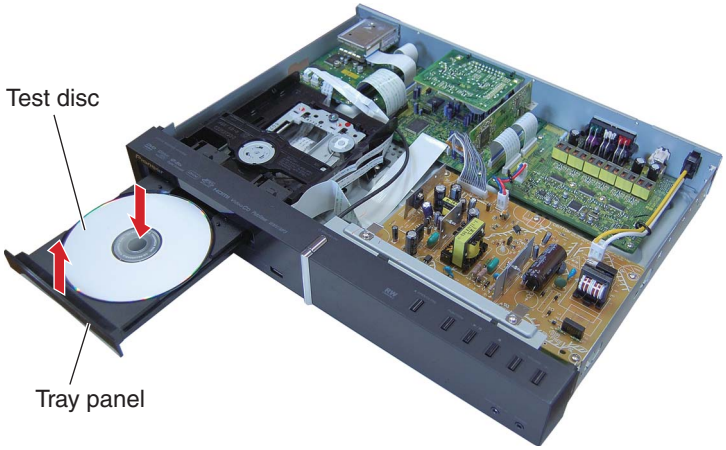

(5) Press the ⏏ OPEN/CLOSE button to close the tray. (Test disc is clamped.)

(6) Press the ⏻ STANDBY/ON button to turn off the power.
(7) Pull out the power cord.

**How to open the tray when the power cannot be on**

(1) Slide the rack, loading (White) toward the arrow direction by using a minus screwdriver to release the lock.
(2) Manually open the tray.

**Note:**
Please strongly pushing rack, loading (White) to release the lock because the tray doesn't go out easily.

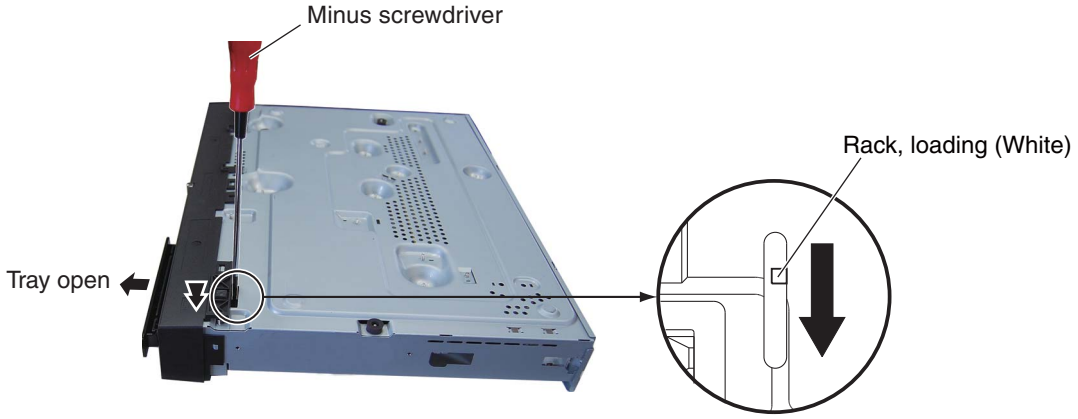


• Bottom view

## [2] Front Panel Section

(1) Remove the three screws. (BBZ30P080FNI)

• Bottom view

(2) Unhook the five hooks.

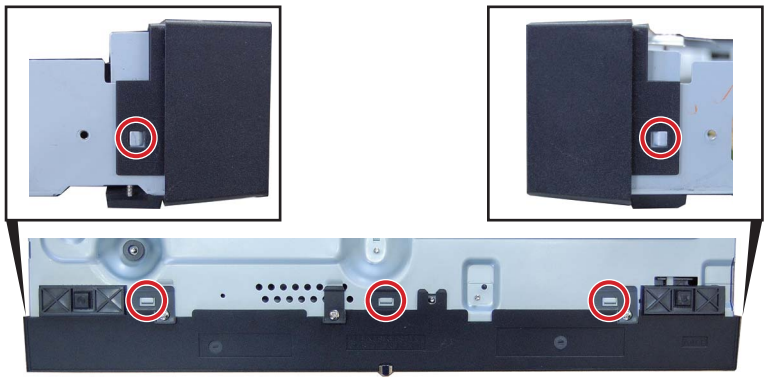

• Bottom view

(3) Remove the front panel section.

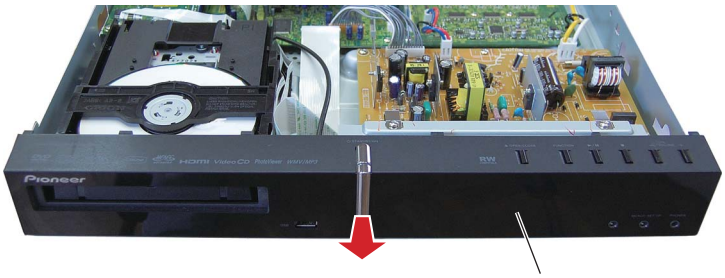


Front panel section

**Note Ⓐ:**
Do not use an electric screwdriver.
If the screw is over-tightened, the screw threads may be damaged.

• Bottom view

## [3] DVD MECHA Assy

(1) Short-circuit two positions soldering.

**Note:**
After replacement, connect the flexible cable, then remove the soldered joint (open).

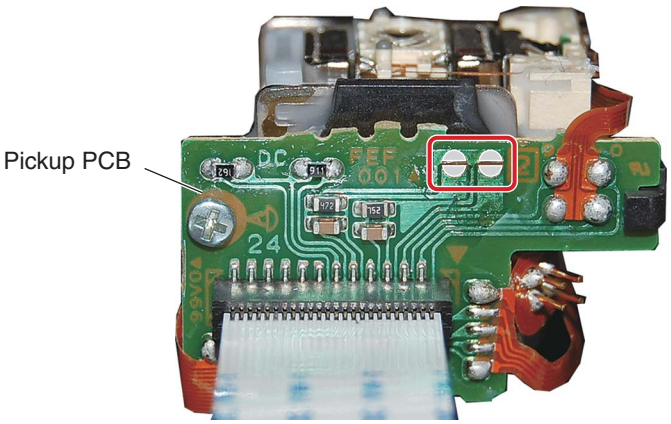


• Rear view

(2) Disconnect the three flexible cables.

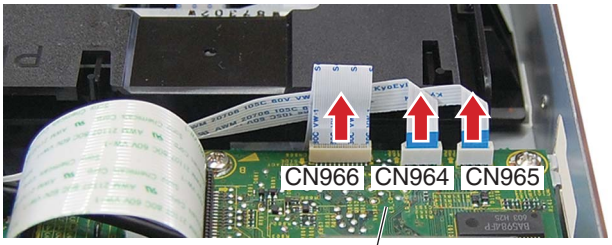


• Rear view

09 DVDM Assy

(3) Remove the four screws. (BBZ30P080FNI)
(4) Remove the DVD MECHA Assy.

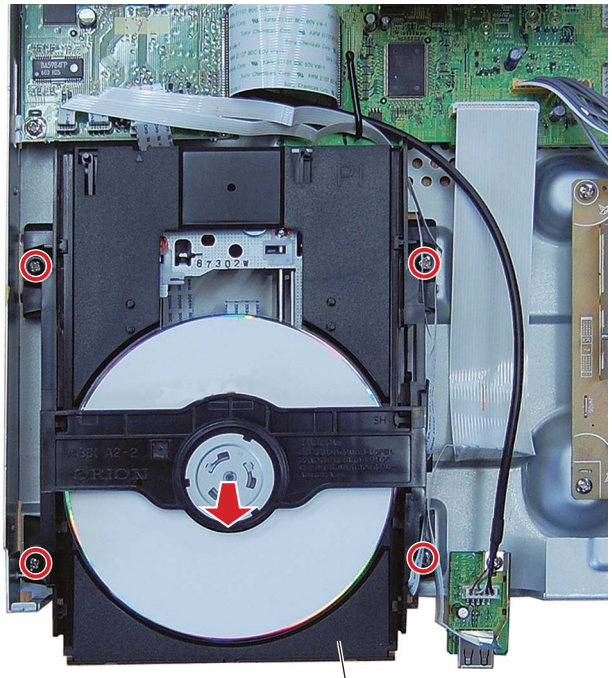

DVD MECHA Assy

## Arrangement of The Flexible Cables

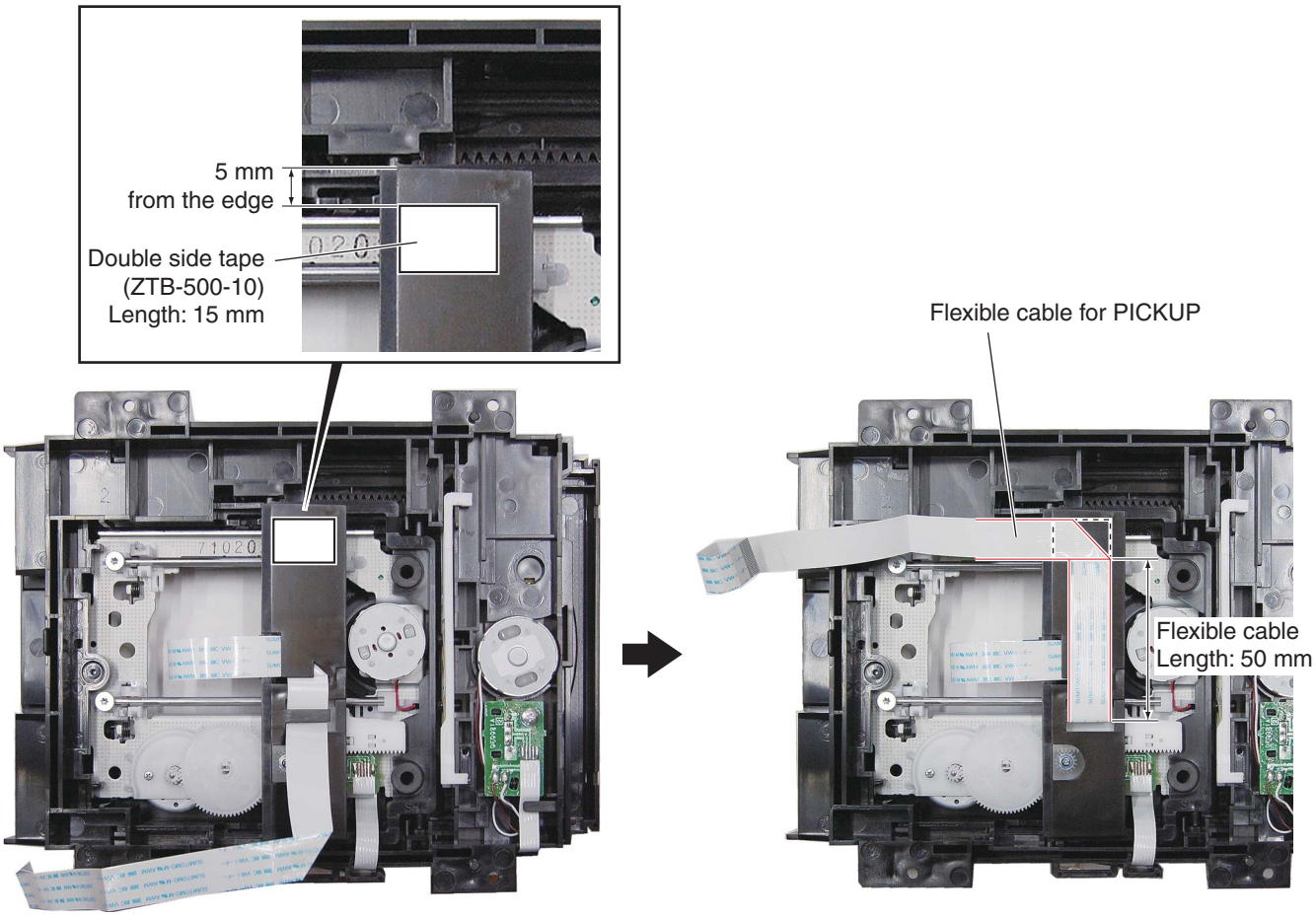


• Bottom view

• Bottom view

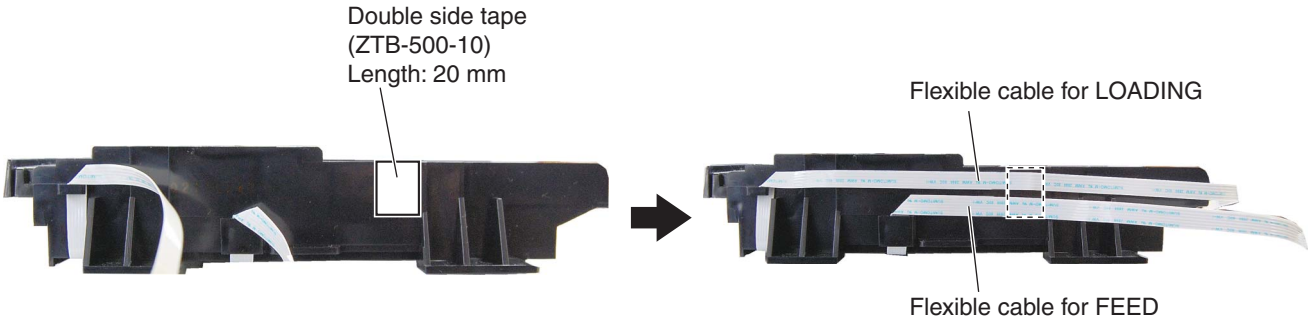


• Right view

• Right view

## Removal of DVD MECHA Assy Parts

**NOTE**
Disassemble only the DVD MECHA Assy parts listed here. Minute adjustments are needed if the disassembly is done. If the repair is needed except listed parts, replace the DVD MECHA Assy.

**1: TRAY (Refer to Fig. 1-A)**
1. Set the Tray opened. (Refer to the **DISC REMOVAL METHOD AT NO POWER SUPPLY**)
2. Unlock the 2 supports ① and draw it while sagging the Tray.

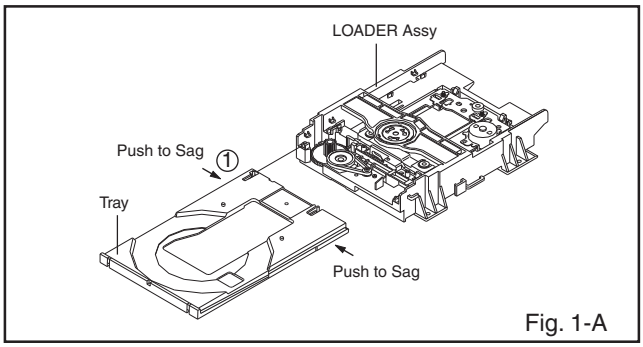

Fig. 1-A

**NOTE**
1. In case of the Tray installation, install them as the circled section of Fig. 1-B so that the each markers are met.

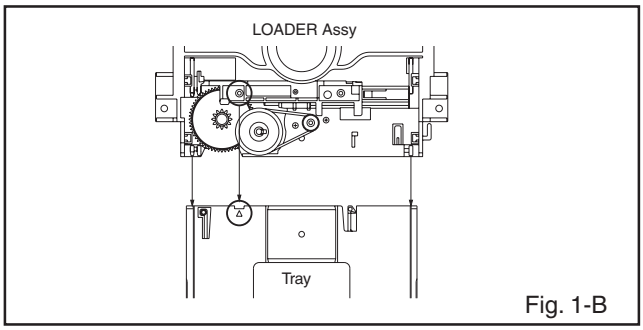

Fig. 1-B

**2: TRAVERSE ASSY (Refer to Fig. 2-A)**
1. Remove the screw ①.
2. Unlock the 2 supports ②.
3. Remove the Insulator (R) from the LOADER SUB Assy.
4. Remove the TRAVERSE Assy.

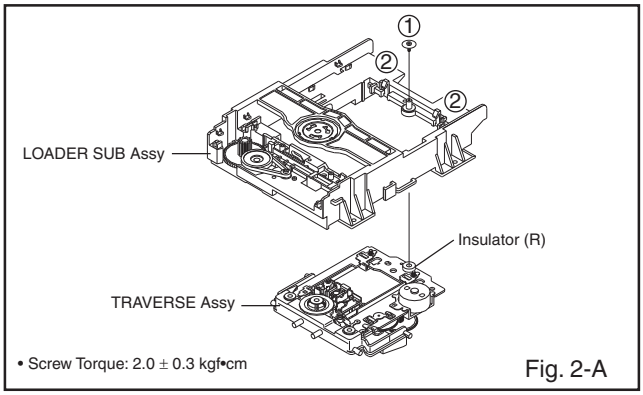

Fig. 2-A

**NOTE**
1. In case of the TRAVERSE Assy, install it from (1) to (4) in order. **(Refer to Fig. 2-B)**
2. In case of the TRAVERSE Assy installation, hook the wire on the LOADER Assy as shown Fig. 2-C.

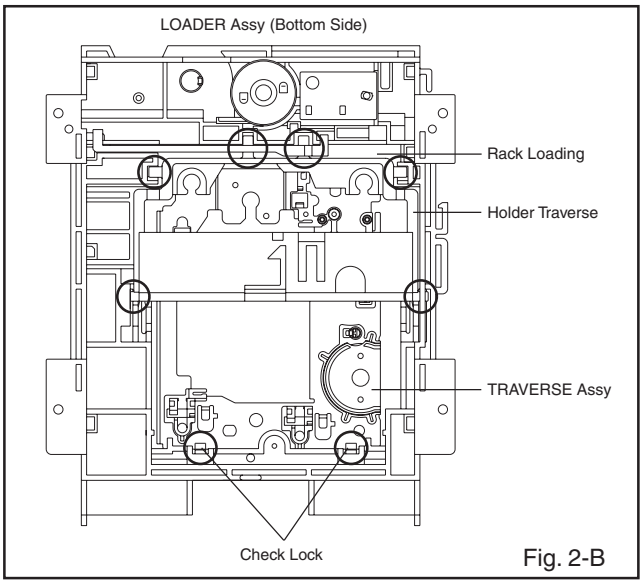

Fig. 2-B

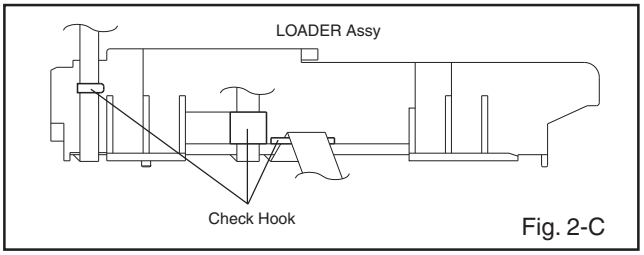

Fig. 2-C

**3: LOADING MOTOR PCB Assy / LOADING BELT (Refer to Fig. 3-A)**
1. Remove the Loading Belt.
2. Remove the screw ①.
3. Remove the LOADING MOTOR PCB Assy.
4. Remove the 2 screws ②.
5. Remove the Loading Motor.
6. Remove the Gear Pulley.

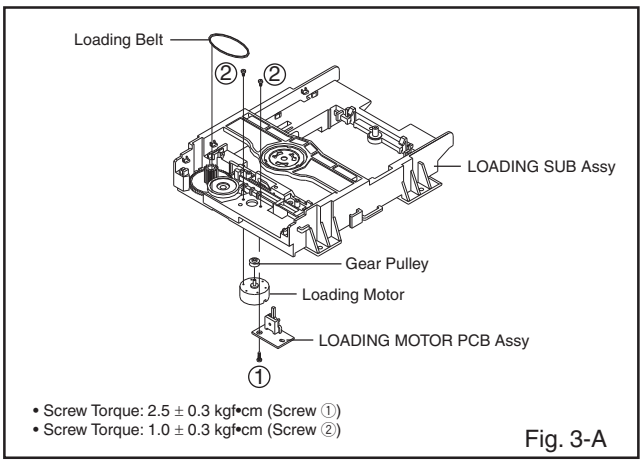

Fig. 3-A

**NOTE**

1. In case of the Pulley Motor installation, check if the value of the Fig. 3-B is correct.
2. When installing the wire of the LOADING MOTOR PCB Assy, install it correctly as Fig. 3-C.
   Manual soldering conditions
   • Soldering temperature: 320 ± 20 °C
   • Soldering time: Within 3 seconds
   • Soldering combination: Sn - 3.0 Ag - 0.5 Cu
3. When installing the LOADING MOTOR PCB Assy, install itcorrectly as Fig. 3-D.
4. In case of the LOADING MOTOR PCB Assy installation, hook the wire on the LOADER SUB Assy as shown Fig. 3-E.

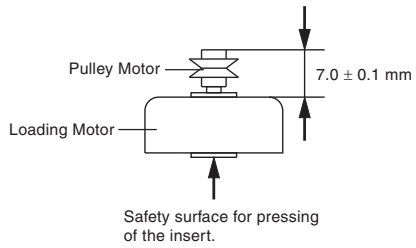

Fig. 3-B

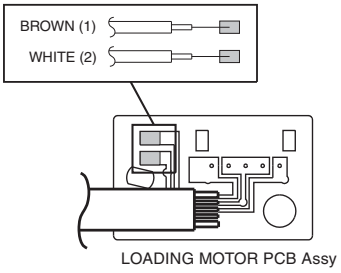

Fig. 3-C

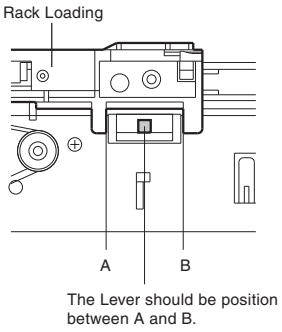

Fig. 3-D

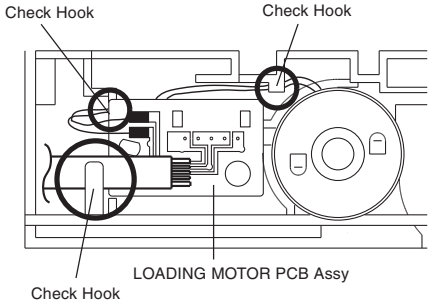

Fig. 3-E

**4: RACK LOADING / MAIN GEAR / PULLEY GEAR (Refer to Fig. 4-A)**

1. Unlock the support ② and remove the Gear Pulley.
2. Remove the Gear Main.
3. Press down the catcher ① and slide the Rack Loading.

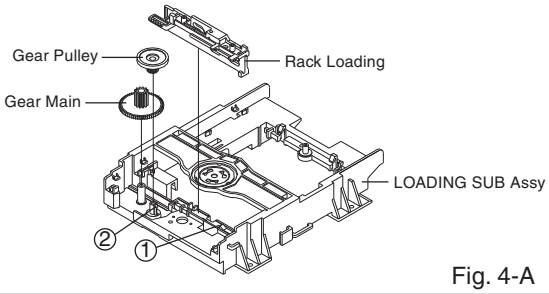

Fig. 4-A

**NOTE**

1. In case of the Rack Loading installation, hook the Rack Loading on the LOADER SUB Assy as shown Fig. 4-B.
2. When installing the Gear Main, take care the direction of up or down as shown Fig. 4-C.

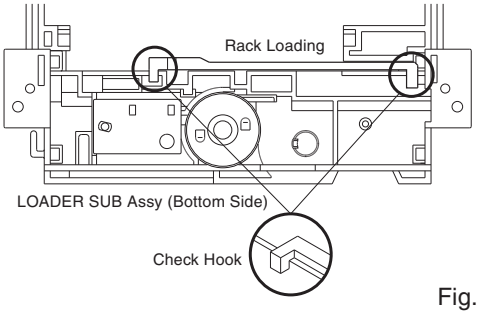

Fig. 4-B

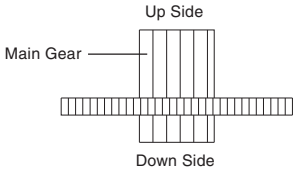

Fig. 4-C

**5: CLAMPER ASSY (Refer to Fig. 5-A)**

1. Press the Clamper and rotate the Plate Clamper clockwise, then unlock the 3 supports ①.
2. Remove the Plate Clamper, Magnet Clamper and Clamper.

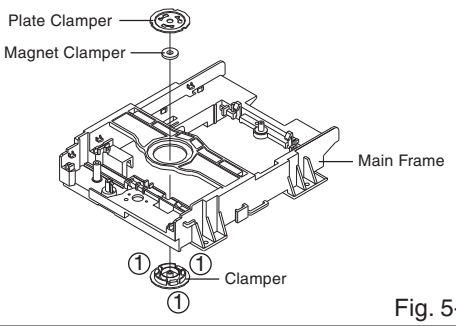

Fig. 5-A

**NOTE**

1. In case of the Clamper Assy installation, install correctly as Fig. 5-B.

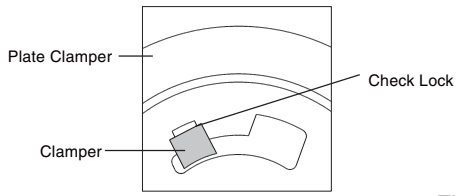


Fig. 5-B

**6: HOLDER TRAVERSE/INSULATOR (F)/INSULATOR (R) (Refer to Fig. 6-A)**

1. Remove the Holder Traverse.
2. Remove the 2 Insulator (F).
3. Remove the Insulator (R).

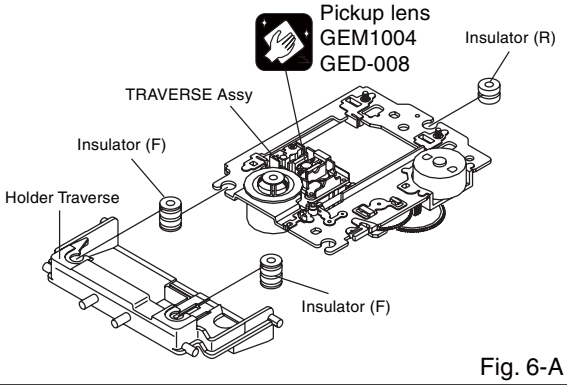


Fig. 6-A

**NOTE**

1. In case of the Insulator (F) installation, install correctly as Fig. 6-B.

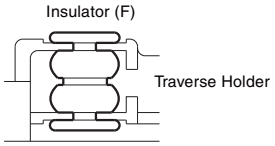


Fig. 6-B

**7: SW PCB ASSY/GEAR MIDDLE/GEAR FEED/ RACK FEED ASSY/FEED MOTOR (Refer to Fig. 7-A)**

1. Unlock the support ①.
2. Remove the Gear Middle.
3. Remove the screw ②.
4. Remove the Rack Feed Assy.
5. Remove the screw ③.
6. Remove the SW PCB Assy.
7. Remove the screw ④.
8. Remove the Gear Feed.
9. Remove the 2 screws ⑤.
10. Remove the Feed Motor.
11. Remove the Gear Motor.

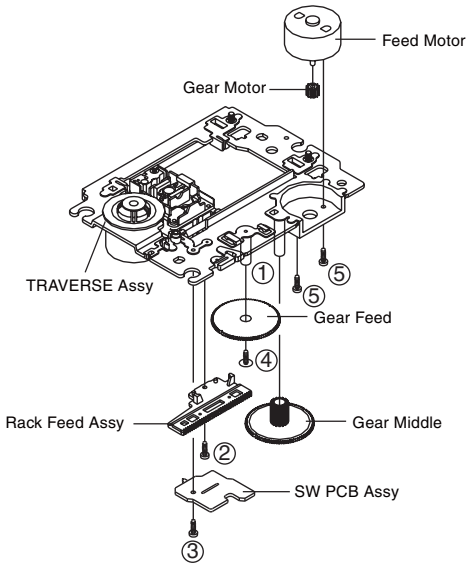


• Screw Torque: 1.3 ± 0.3 kgf•cm (Screw ②)
• Screw Torque: 3.0 ± 0.3 kgf•cm (Screw ③)
• Screw Torque: 1.0 ± 0.3 kgf•cm (Screw ④, ⑤)

Fig. 7-A

**NOTE**

1. When installing the Rack Feed Assy, push both ends to align the teeth as shown Fig. 7-B. Then install it.
2. In case of the Gear Motor installation, check if the value of the Fig. 7-C is correct.
3. When installing the wire of the SW PCB Assy, install it correctly as Fig. 7-D.
   Manual soldering conditions
   • Soldering temperature: 320 ± 20 °C
   • Soldering time: Within 3 seconds
   • Soldering combination: Sn - 3.0 Ag - 0.5 Cu
4. After the assembly of the TRAVERSE Assy, hook the wire on the TRAVERSE Assy as shown Fig. 7-E.

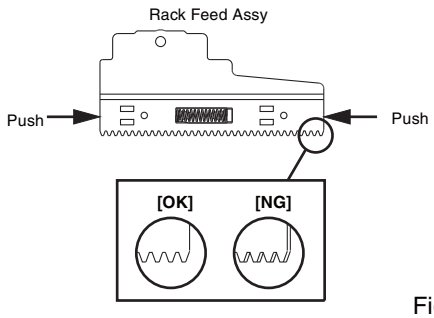


Fig. 7-B

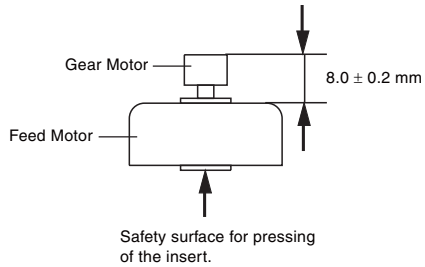


Fig. 7-C

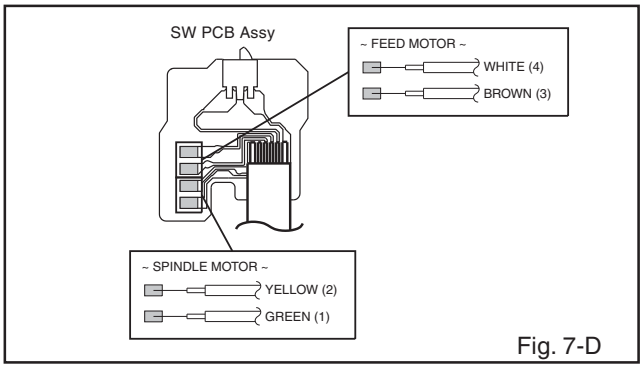
SW PCB Assy
~ FEED MOTOR ~
WHITE (4)
BROWN (3)
~ SPINDLE MOTOR ~
YELLOW (2)
GREEN (1)

Fig. 7-D

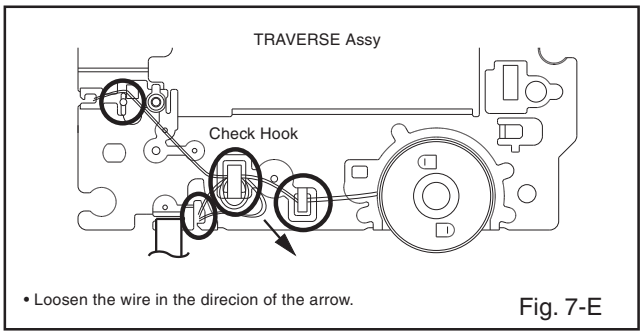
TRAVERSE Assy
Check Hook
• Loosen the wire in the direcion of the arrow.

Fig. 7-E

# 8. EACH SETTING AND ADJUSTMENT
## 8.1 ID NUMBER AND ID DATA SETTING

**Caution:**
For the DVD players compatible with DVD-RW, for playback of a DVD-RW disc (CPRM) and for the DVD players possessing HDMI output, for HDCP process, it is necessary that an individual ID number and ID data are set for each player. If the ID number and ID data be not properly set in the manner described below, future operations cannot be guaranteed. The ID number is written on the yellow label at the rear panel of the player.
**If there is no yellow label, before downloading FLASH ROM, take note of the ID number set following the procedures outlined in "ID Number Confirmation Mode" on the next page.**
**Note:** Enter ID numbers while the unit is in Stop mode so that the values set will be immediately written to the flash ROM.

**Setting an ID number or ID data is required in the following case:**
If "No NUM", "NO DATA" or "HDMI ERR" is displayed on the FL display for a few seconds immediately after the power to the player is turned on or during Stop mode.

**JIGS AND MEASURING INSTRUMENTS**

| | |
|---|---|
| 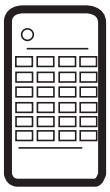 Service Remote Control Unit [GGF1381] | DVD Data Disc [GGV1344] |

### ID Number Input Mode

① To enter ID Number Input Mode, with no ID number set, such as in a case of immediately after upgrading the firmware, press the ESC key then the STEREO key.

**Note:** If a previous ID number and ID data, such as a factory-preset ID number and ID data, are maintained, the unit enters ID Number Confirmation Mode when the above keys are pressed. However, if only an ID number is maintained, the unit enters ID Data Input Mode.

② Enter a 9-digit ID number. The ID number is also displayed on the FL display.

③ By pressing the CLEAR key without having input a number, you can exit this mode. Each press of this key after a number has been input deletes one digit.

```
[Player's ID Number Setting]
 ID Number ?
 - - - - - - - - -

 <CLEAR>  Exit

 Input ID Number !
```

④ After entering all 9 digits, if you press the PLAY key, the unit enters Compare mode. Enter the same ID number again. Only if your two input numbers match, the ID number is set. Compare mode helps eliminate mistyping of the ID number.

**Note:** If you press the PLAY button before inputting a 9-digit ID number, the unit returns to Step ② without doing anything else.

⑤ After entering all 9 digits, if you press the SEARCH key, the unit unconditionally sets the input number as the ID number. Then the unit automatically enters Player's Data Input Mode. (The SEARCH key is not accepted after all 9 digits have been entered.)

```
[Player's ID Number Setting]
 ID Number ?
  0 0 0 0 0 0 0 0 1

 <PLAY>      Compare Mode
 <SEARCH>  Enter

 Input ID Number !
```

⑥ This display appears when the PLAY key is pressed in Step ④. Enter a 9-digit number to compare. The number is also displayed on the FL display.

⑦ By pressing the CLEAR key without having input a number, the unit returns to Step ② without doing anything else. Each press of this key after a number has been input deletes one digit.

```
[Player's ID Number Setting]
 ID Number ?
    0 0 0 0 0 0 0 0 1
 Compare
    * * * * * * * * *



 Input ID Number !
```

⑧ After entering all 9 digits, if you press the PLAY key, the unit compares the numbers input in Steps ② and ⑥, and only if the numbers match, that number is set as the ID. Then the unit automatically enters ID DATA Input Mode. If the numbers do not match, the disc tray is opened, and the unit exits ID Number Input Mode.

**Note:** If you press the PLAY button before inputting a 9-digit ID number, the unit returns to Step ⑥ without doing anything else.

```
[Player's ID Number Setting]
 ID Number ?
    0 0 0 0 0 0 0 0 1
 Compare
    0 0 0 0 0 0 0 0 1

 <PLAY>  Enter

 Input ID Number !
```

## ID Number Confirmation Mode

① To enter ID Number Confirmation Mode after the ID number and the ID data are set, press the ESC key then the STEREO key.

② The ID number already set is displayed.
(It is also displayed on the FL display.)

③ Enter a 9-digit number for comparison. This is not required when you only wish to check the ID number visually.
(The number is also displayed on the FL display.)

④ By pressing the CLEAR key without having input a number, you can exit this mode. Each press of this key after a number has been input deletes one digit.

```
[Player's ID Number Setting]
 ID Number ?
  0 0 0 0 0 0 0 0 1
 Compare
  * * * * * * * * *

 <CLEAR>  Exit

 Input ID Number !
```

⑤ After entering all 9 digits, if you press the PLAY key, the unit compares the number entered in Step ② with the ID number set, and only if the numbers match, the unit automatically exits ID Number Confirmation Mode. If an ID data has not been entered, the unit enters ID DATA Input Mode. If the numbers do not match, the disc tray is opened, and the unit exits ID Number Confirmation Mode.

**Note:** If you press the PLAY button before inputting a 9-digit ID number, the unit returns to Step ④ without doing anything else.

⑥ After entering all 9 digits, if you press the STOP key, the unit compares the number entered in Step ③ with the ID number set, and only if the numbers match, the unit automatically deletes the ID number and exits this mode. If the numbers do not match, the disc tray is opened, and the unit exits this mode. (The STOP key is not accepted after all 9 digits have been entered.)

```
[Player's ID Number Setting]
 ID Number ?
  0 0 0 0 0 0 0 0 1
 Compare
  0 0 0 0 0 0 0 0 1

 <PLAY>  Enter
 <STOP>  Memory Clear

 Input ID Number !
```

### • Indication of an ID number already set

An ID number already set is displayed in the following cases:

1) When the ESC key then the CLEAR key are pressed, user settings are cleared, then the ID number set is displayed on the screen. In this case, the ID number is not displayed on the FL display.
2) When the unit enters ID Number Confirmation Mode by your pressing the ESC key then the CLEAR key, the ID number set is displayed. In this case, the ID number is also displayed on the FL display.
   If you only need to confirm the ID number, you can exit this mode by pressing the CLEAR key or turning off the power.

### • Indication when no ID number is set

If no ID number is set, the message "No  NUM" flashes on the screen and FL display for a few seconds after the power is turned on or during Stop mode.

## ID DATA Input Mode

**NOTE: Be sure to use a specified DVD (ID) DATA DISC.**

① To enter ID DATA Input Mode, with the ID number set, press the ESC key then the STEREO key.

② When the STEREO key is pressed, the unit enters ID DATA Input Mode.

```
[Player's ID Number Setting]
 ID Number ?
 [ 0 0 0 0 0 0 0 0 1 ]
 Compare
 > * * * * * * * * *

 <CLEAR>  Exit
② <STEREO>  ID Data Setting Mode

 Input ID Number !
```

③ If the DVD DATA DISC is loaded in this mode, the unit automatically starts reading the data.
(If the DVD DATA DISC has already been loaded, the unit does not start reading the data. In this case, open then close the tray.)

④ To exit this mode, press the CLEAR key. While data are being read from the DVD DATA DISC, you cannot exit this mode.

```
[Player's Data Input Mode]

④ <CLEAR>  Exit

 Insert The ID Data Disc !
```

⑤ When writing of the data read from the disc to flash ROM is completed, "Rom Write OK!" is displayed. After seeing this message, you can exit this mode by pressing the CLEAR key.

**Note:** Whether or not the data have been written to flash ROM can be confirmed by watching for the message "Rom Write OK!" being displayed after the disc is read.

```
[Player's Data Input Mode]

⑤ Rom Write OK!

 <CLEAR>  Exit
```

⑥ If the data cannot be read from the disc, the unit will be exited ID Data Input Mode and proceed to the display of "**Pioneer**" logo.

**• Indication when the data have not been set**

If no ID data are set after the ID number is changed, the message "NO DATA" flashes on the screen and FL display for a few seconds after the power is turned on or during Stop mode.

# 9. EXPLODED VIEWS AND PARTS LIST

*NOTES:* ● *Parts marked by "NSP" are generally unavailable because they are not in our Master Spare Parts List.*
● *The ⚠ mark found on some component parts indicates the importance of the safety factor of the part. Therefore, when replacing, be sure to use parts of identical designation.*
● *Screws adjacent to ▼ mark on product are used for disassembly.*
● *For the applying amount of lubricants or glue, follow the instructions in this manual. (In the case of no amount instructions, apply as you think it appropriate.)*

## 9.1 PACKING SECTION

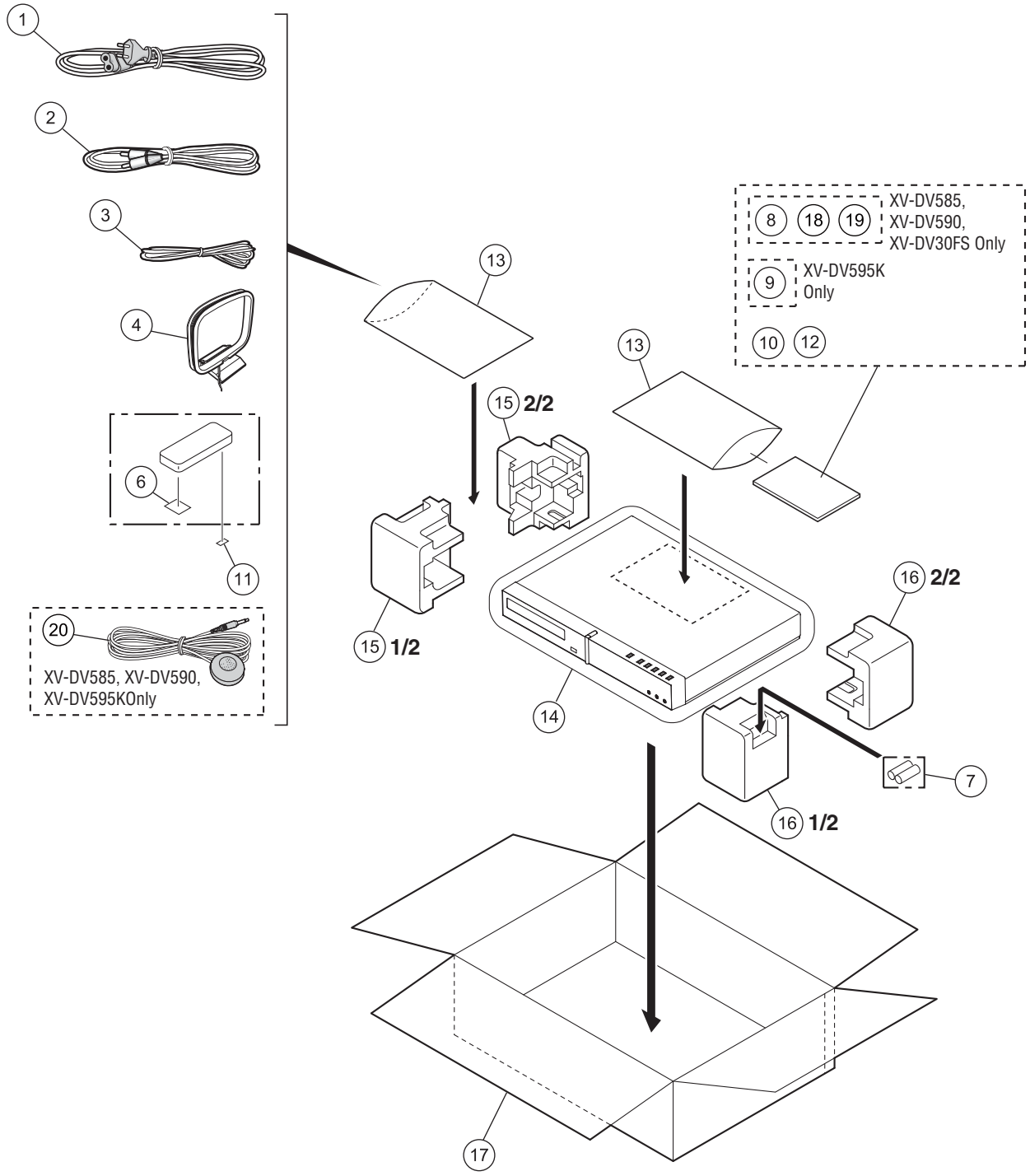

## PACKING SECTION PARTS LIST

| Mark | No. | Description | Part No. |
|---|---|---|---|
| ⚠ | 1 | Power Cord | ADG1127 |
| | 2 | Video Cable (yellow plugs) | XDE3046 |
| | 3 | FM Antenna | ADH7030 |
| | 4 | AM Loop Antenna | ATB7013 |
| | 5 | Remote Control | See Contrast table (2) |
| | 6 | Battery Cover | AZN8018 |
| NSP | 7 | Dry Cell Battery (R6, AA) | XEX3005 |
| | 8 | Operating Instructions (En, Fr) | See Contrast table (2) |
| | 9 | Operating Instructions (Ru) | See Contrast table (2) |
| | 10 | Setup Guide | See Contrast table (2) |
| | 11 | Label (WEEE) | ARW7322 |
| NSP | 12 | Warranty Card EU | ARY7128 |
| NSP | 13 | Polyethylene Bag (0.06 x 230 x 340) | AHG7117 |
| | 14 | Packing Sheet | AHG7053 |
| | 15 | Left Pad RHTS | XHA3191 |
| | 16 | Right Pad RHTS | XHA3190 |
| | 17 | Packing Case RHTS | See Contrast table (2) |
| | 18 | Operating Instructions (Ge, It) | See Contrast table (2) |
| | 19 | Operating Instructions (Du, Sp) | See Contrast table (2) |
| | 20 | Microphone | See Contrast table (2) |

## (2) CONTRAST TABLE

XV-DV590/YXJ5, XV-DV585/YXJ5, XV-DV30FS/YXJ5 and XV-DV595K/SXJ5 are constructed the same except for the following:

| Mark | No. | Symbol and Description | XV-DV590/YXJ5 | XV-DV585/YXJ5 | XV-DV30FS/YXJ5 | XV-DV595K/SXJ5 |
|---|---|---|---|---|---|---|
| | 5 | Remote Control | XXD3181 | XXD3181 | XXD3184 | XXD3178 |
| | 8 | Operating Instructions (En, Fr) | XRE3230 | XRE3230 | XRE3230 | Not used |
| | 9 | Operating Instructions (Ru) | Not used | Not used | Not used | XRC3452 |
| | 10 | Setup Guide (7LAN) | Not used | Not used | XRE3239 | Not used |
| | 10 | Setup Guide (8LAN) | Not used | XRE3238 | Not used | Not used |
| | 10 | Setup Guide (9LAN) | XRE3244 | Not used | Not used | XRE3244 |
| | 17 | Packing Case RHTS | XHD3895 | XHD3896 | XHD3897 | XHD3898 |
| | 18 | Operating Instructions (Ge, It) | XRC3441 | XRC3441 | XRC3441 | Not used |
| | 19 | Operating Instructions (Du, Sp) | XRC3442 | XRC3442 | XRC3442 | Not used |
| | 20 | Microphone (for Auto MCACC setup) | APM7008 | APM7008 | Not used | APM7008 |

# 9.2 EXTERIOR SECTION

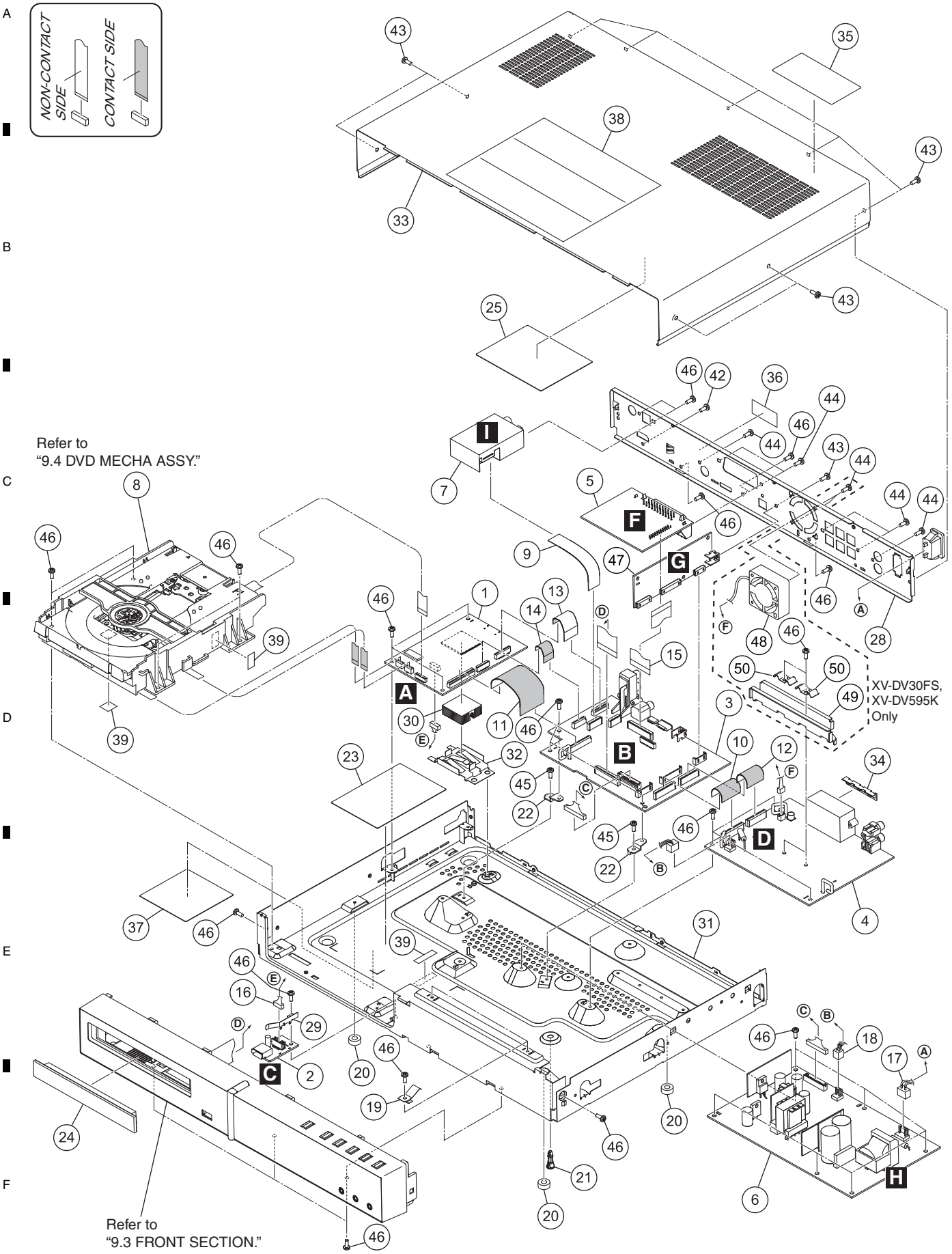

## EXTERIOR SECTION PARTS LIST

| Mark | No. | Description | Part No. |
|---|---|---|---|
| | 1 | 09 DVDM Assy | See Contrast table (2) |
| | 2 | RHTS USB Assy | XWZ4414 |
| | 3 | RHTS SYSMAIN Assy | See Contrast table (2) |
| | 4 | RHTS D-AMP Assy | See Contrast table (2) |
| | 5 | EUROSCART Assy | AWU8291 |
| ⚠ | 6 | POWER SUPPLY Unit | See Contrast table (2) |
| | 7 | FM/AM TUNER Unit | XXX3085 |
| | 8 | DVD MECHA Assy | A2ZX01A650 |
| | 9 | 15P FFC/60V (J1910) | XDD3306 |
| | 10 | 19P FFC/60V (J1905) | XDD3303 |
| | 11 | 31P FFC/60V (J1909) | XDD3304 |
| | 12 | 17P FFC 1.25MM/60V (J1906) | XDD3305 |
| | 13 | 17P FFC/60V (J1907) | XDD3307 |
| | 14 | 13P FFC/60V (J1908) | See Contrast table (2) |
| | 15 | 23P FFC/60V (J1911) | XDD3267 |
| | 16 | 5P Shielded Cable (J1902) | XDX3086 |
| | 17 | 2P Wire (J1901) | XDX3087 |
| | 18 | Cable Assy (J1903) | XDX3068 |
| | 19 | Earth Spring W5.1 | ABH7240 |
| NSP | 20 | Spacer | AEB7092 |
| | 21 | Locking Card Spacer | AEC7372 |
| | 22 | PCB Stay | VNE2489 |
| NSP | 23 | Guide Sheet | XAK3603 |
| | 24 | Tray Panel RHTS | XAK3653 |
| NSP | 25 | Primary Barrier RHTS | See Contrast table (2) |
| | 26 | ••••• | |
| | 27 | ••••• | |
| | 28 | Rear Panel RHTS | See Contrast table (2) |
| | 29 | USB GND Bracket RHTS | XNG3203 |
| | 30 | Heatsink WHTS | XNH3049 |
| NSP | 31 | Chassis RHTS | XNA3086 |
| NSP | 32 | Radiation Plate | XNG3183 |
| | 33 | Bonnet WHTS (BOX) | See Contrast table (2) |
| | 34 | GND Plate W5.1 | See Contrast table (2) |
| NSP | 35 | Laser Caution | PRW1608 |
| NSP | 36 | ID Label Assy | VXW1012 |
| NSP | 37 | Name Label RHTS | See Contrast table (2) |
| NSP | 38 | POP Getter RHTS | See Contrast table (2) |
| NSP | 39 | Double Side Tape | ZTB-500-10 |
| | 40 | ••••• | |
| | 41 | ••••• | |
| | 42 | Screw | BSZ30P060FTC |
| | 43 | Screw | BBZ30P080FTB |
| | 44 | Screw | BPZ30P080FNI |
| | 45 | Screw | BBZ30P060FNI |
| | 46 | Screw | BBZ30P080FNI |
| | 47 | RHTS DSP ASSY | XWM3493 |
| | 48 | DC Fan Motor | See Contrast table (2) |
| | 49 | Heat Sink NHTS | See Contrast table (2) |
| | 50 | Spring Plate NHTS | See Contrast table (2) |

### (2) CONTRAST TABLE

XV-DV590/YXJ5, XV-DV585/YXJ5, XV-DV30FS/YXJ5 and XV-DV595K/SXJ5 are constructed the same except for the following:

| Mark | No. | Symbol and Description | XV-DV590/YXJ5 | XV-DV585/YXJ5 | XV-DV30FS/YXJ5 | XV-DV595K/SXJ5 |
|---|---|---|---|---|---|---|
| | 1 | 09 DVDM Assy | AWM8177 | AWM8177 | AWM8177 | AWM8134 |
| | 3 | RHTS SYSMAIN ASSY | XWZ4432 | XWZ4431 | XWZ4433 | XWZ4436 |
| | 4 | RHTS D-AMP Assy | XWM3489 | XWM3489 | Not used | Not used |
| | 4 | RHTS H-AMP Assy | Not used | Not used | XWM3495 | XWM3494 |
| ⚠ | 6 | POWER SUPPLY Unit | XWR3020 | XWR3020 | XWR3021 | XWR3021 |
| | 14 | 13P FFC/60V (J1908) | Not used | Not used | Not used | XDD3308 |
| NSP | 25 | Primary Barrier RHTS | XAK3685 | XAK3685 | Not used | Not used |
| | 28 | Rear Panel RHTS | XNC3650 | XNC3652 | XNC3653 | XNC3654 |
| | 33 | Bonnet WHTS (BOX) | XZN3219 | XZN3219 | XZN3220 | XZN3220 |
| | 34 | GND Plate W5.1 | ABH7241 | ABH7241 | Not used | Not used |
| NSP | 37 | Name Label RHTS | XAL3330 | XAL3331 | XAL3332 | XAL3333 |
| NSP | 38 | POP Getter RHTS | XAX3759 | XAX3759 | XAX3760 | XAX3761 |
| | 48 | DC Fan Motor | Not used | Not used | VXM1121 | VXM1121 |
| | 49 | Heat Sink NHTS | Not used | Not used | ANH7190 | ANH7190 |
| | 50 | Spring Plate NHTS | Not used | Not used | ABH7244 | ABH7244 |

# 9.3 FRONT PANEL SECTION

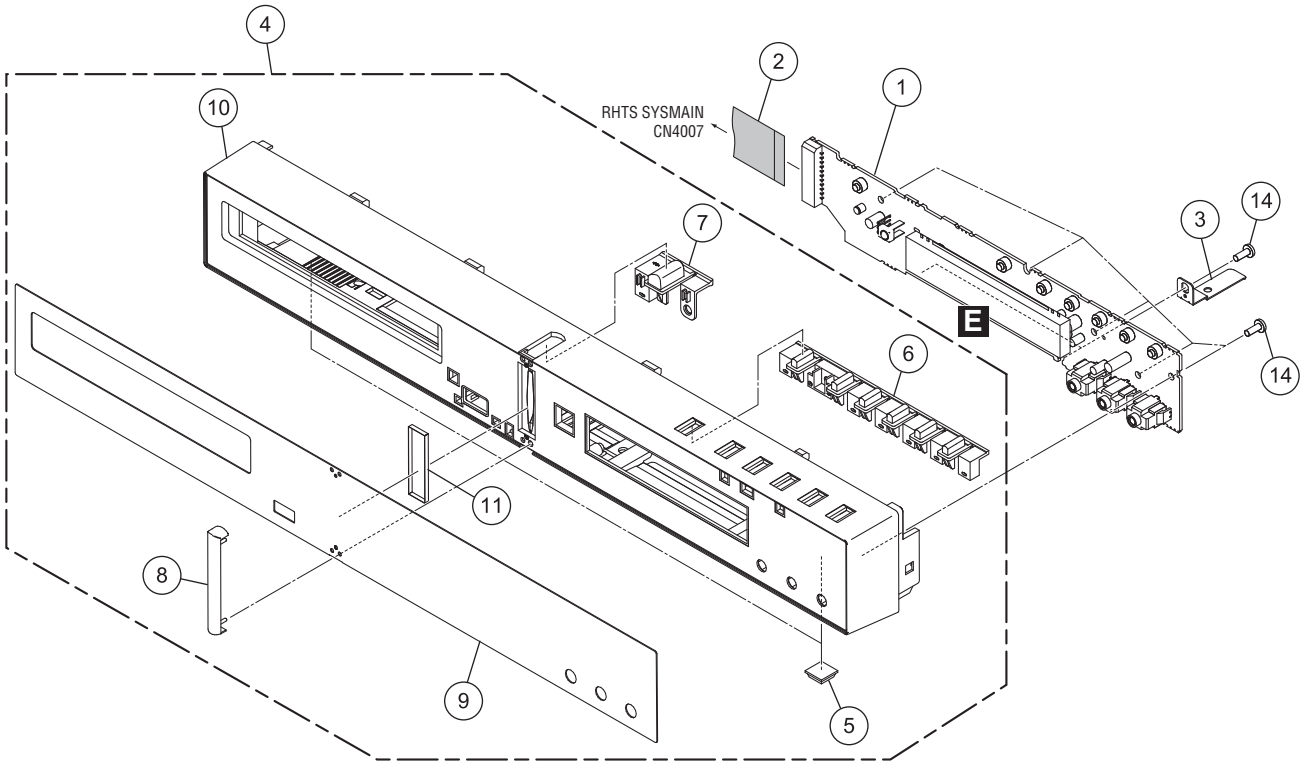


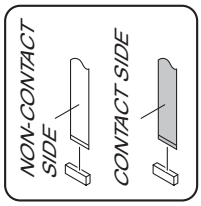

## FRONT PANEL SECTION PARTS LIST

| Mark | No. | Description | Part No. |
|---|---|---|---|
| | 1 | RHTS DISPLAY Assy | See Contrast table (2) |
| | 2 | 23P FFC/60V (J1904) | XDD3302 |
| | 3 | Ground Bracket RHTS | XBH3020 |
| | 4 | F/P Assy RHTS | See Contrast table (2) |
| NSP | 5 | Rubber Foot | VEB1325 |
| | 6 | Button Function RHTS | XAD3283 |
| | 7 | Button Power RHTS | XAD3285 |
| NSP | 8 | Cosmetic RHTS | XAK3657 |
| NSP | 9 | Display Window RHTS | See Contrast table (2) |
| NSP | 10 | Front Panel RHTS | See Contrast table (2) |
| NSP | 11 | Diffusion Sheet RHTS | XAK3658 |
| | 12 | • • • • • | |
| | 13 | • • • • • | |
| | 14 | Screw | BPZ30P080FNI |

### (2) CONTRAST TABLE

XV-DV590/YXJ5, XV-DV585/YXJ5, XV-DV30FS/YXJ5 and XV-DV595K/SXJ5 are constructed the same except for the following:

| Mark | No. | Symbol and Description | XV-DV590/YXJ5 | XV-DV585/YXJ5 | XV-DV30FS/YXJ5 | XV-DV595K/SXJ5 |
|---|---|---|---|---|---|---|
| | 1 | RHTS DISPLAY Assy | XWM3487 | XWM3487 | XWM3488 | XWM3484 |
| | 4 | F/P Assy RHTS | XXG3422 | XXG3423 | XXG3424 | XXG3425 |
| NSP | 9 | Display Window RHTS | XAK3655 | XAK3655 | XAK3660 | XAK3663 |
| NSP | 10 | Front Panel RHTS | XMB3358 | XMB3359 | XMB3360 | XMB3361 |

# 9.4 DVD MECHA ASSY

**Note :**
Check if the correct grease is applied for each position.

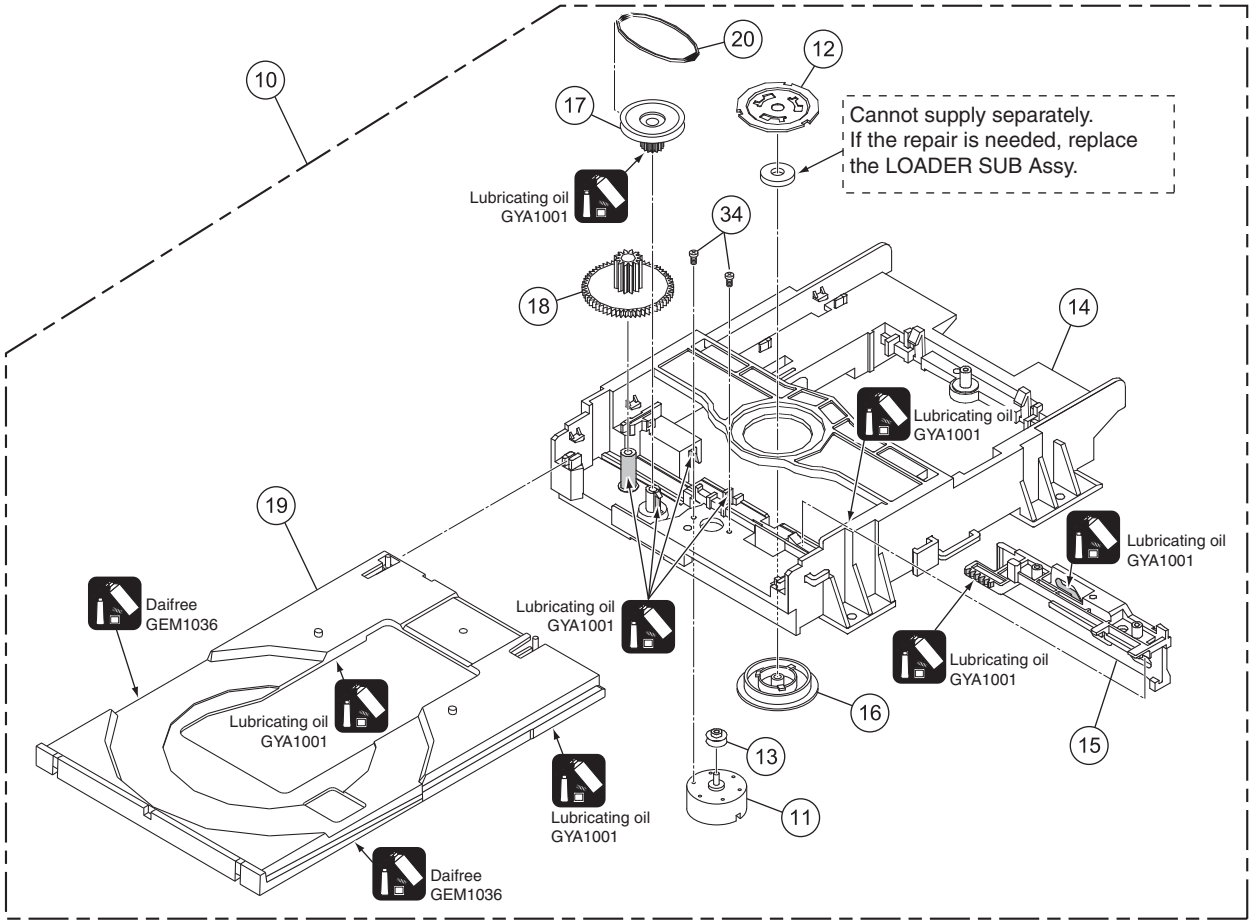


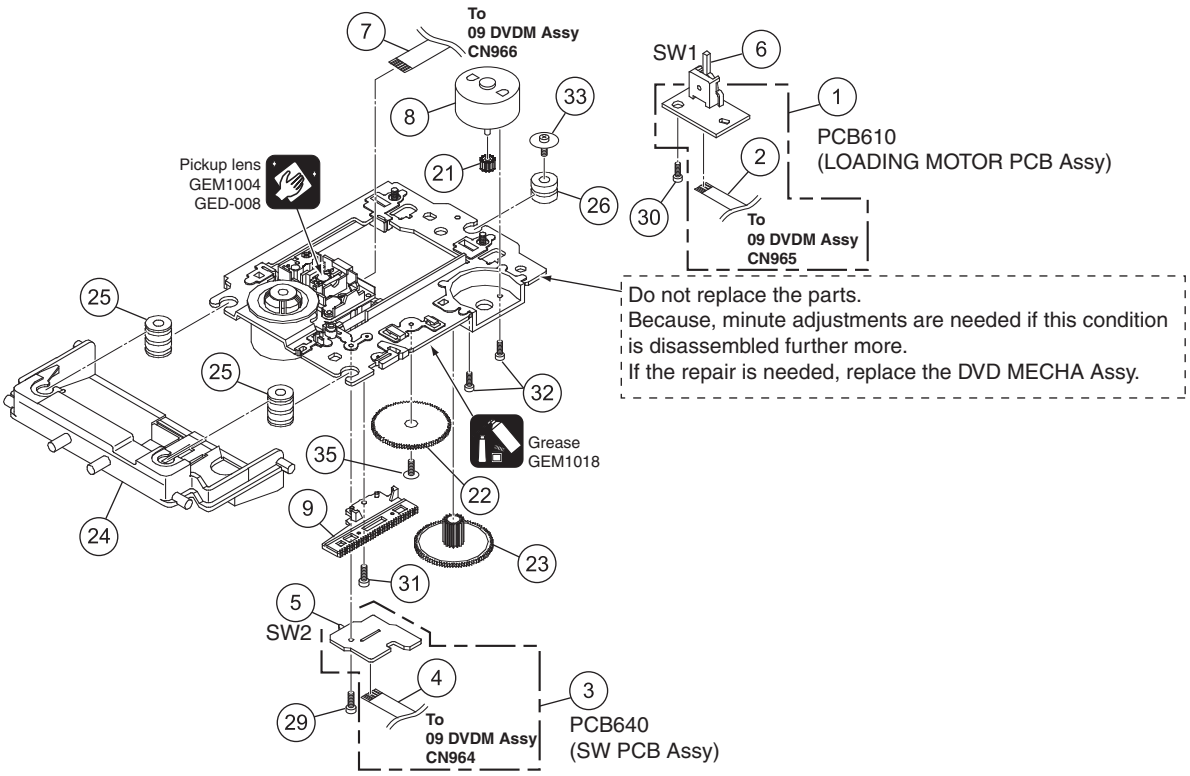

## DVD MECHA ASSY SECTION PARTS LIST

| Mark | No. | Description | Part No. |
|---|---|---|---|
| | 1 | LOADING MOTOR PCB Assy | A2ZX01A610 |
| | 2 | Cord Jumper (5P) | 12C1053601 |
| | 3 | SW PCB Assy | A2ZX01A640 |
| | 4 | Cord Jumper (6P) | 12C1063201 |
| | 5 | Switch (SW2) | 0500101036 |
| | 6 | Switch (SW1) | 0515S32003 |
| | 7 | Cord Jumper (24P) | 122F003101 |
| | 8 | FEED Motor | 1515T98006 |
| | 9 | Feed Rack Assy | 92AAA0017A |
| | 10 | LOADER SUB Assy | 92AAA0024A |
| | 11 | LOADING Motor | 1515S98004 |
| | 12 | Plate, Clamper | 92P000023A |
| | 13 | Pulley, Motor | 92P100097A |
| | 14 | Frame, Main | 92P100119A |
| | 15 | Rack, Loading | 92P100121A |
| | 16 | Clamper | 92P100122A |
| | 17 | Gear, Pulley | 92P100123A |
| | 18 | Gear, Main | 92P100124A |
| | 19 | Tray | 92P100151A |
| | 20 | Belt, Loading | 92P200015A |
| | 21 | Gear, Motor | 92P100088A |
| | 22 | Gear, Feed | 92P100116A |
| | 23 | Gear, Middle | 92P100117A |
| | 24 | Holder, Traverse | 92P100125A |
| | 25 | Insulator (F) | 92P200013A |
| | 26 | Insulator (R) | 92P200016A |
| | 27 | ••••• | |
| | 28 | ••••• | |
| | 29 | Screw, Bind (2 x 8) | 811022080U |
| | 30 | Screw, Tap tite (P)(2.6 x 8) | 811022680U |
| | 31 | Screw, T-tite (B)(M1.7 x 5.0 P3) | 813381750U |
| | 32 | Screw, Pan (M1.7 x 2.3 P3) | 814011723U |
| | 33 | Screw, Tap tite (P)(2 x 8) | 816112080U |
| | 34 | Screw, Pan (M1.7 x 3 P3) | 814011730U |
| | 35 | Screw, Gear Feed | 92P700007A |

# 10. SCHEMATIC DIAGRAM
## 10.1 09 DVDM ASSY (1/2)

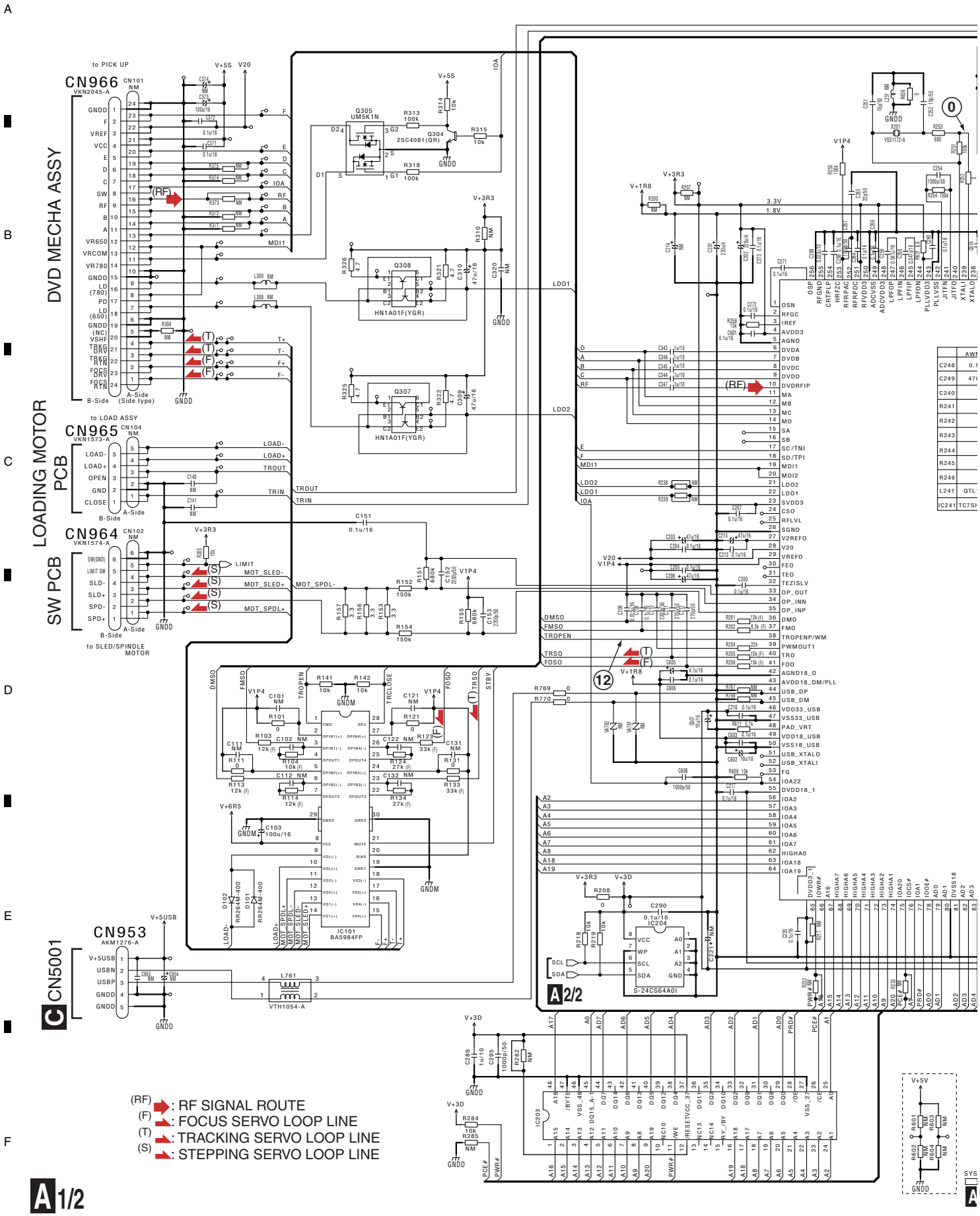

- When ordering service parts, be sure to refer to "EXPLODED VIEWS and PARTS LIST" or "PCB PARTS LIST".
- The ⚠ mark found on some component parts indicates the importance of the safety factor of the part. Therefore, when replacing, be sure to use parts of identical designation.
- : The power supply is shown with the marked box.

# A 1/2 09 DVDM ASSY (XV-DV590,XV-DV585,XV-DV30FS:AWM8177) (XV-DV595K:AWM8134)

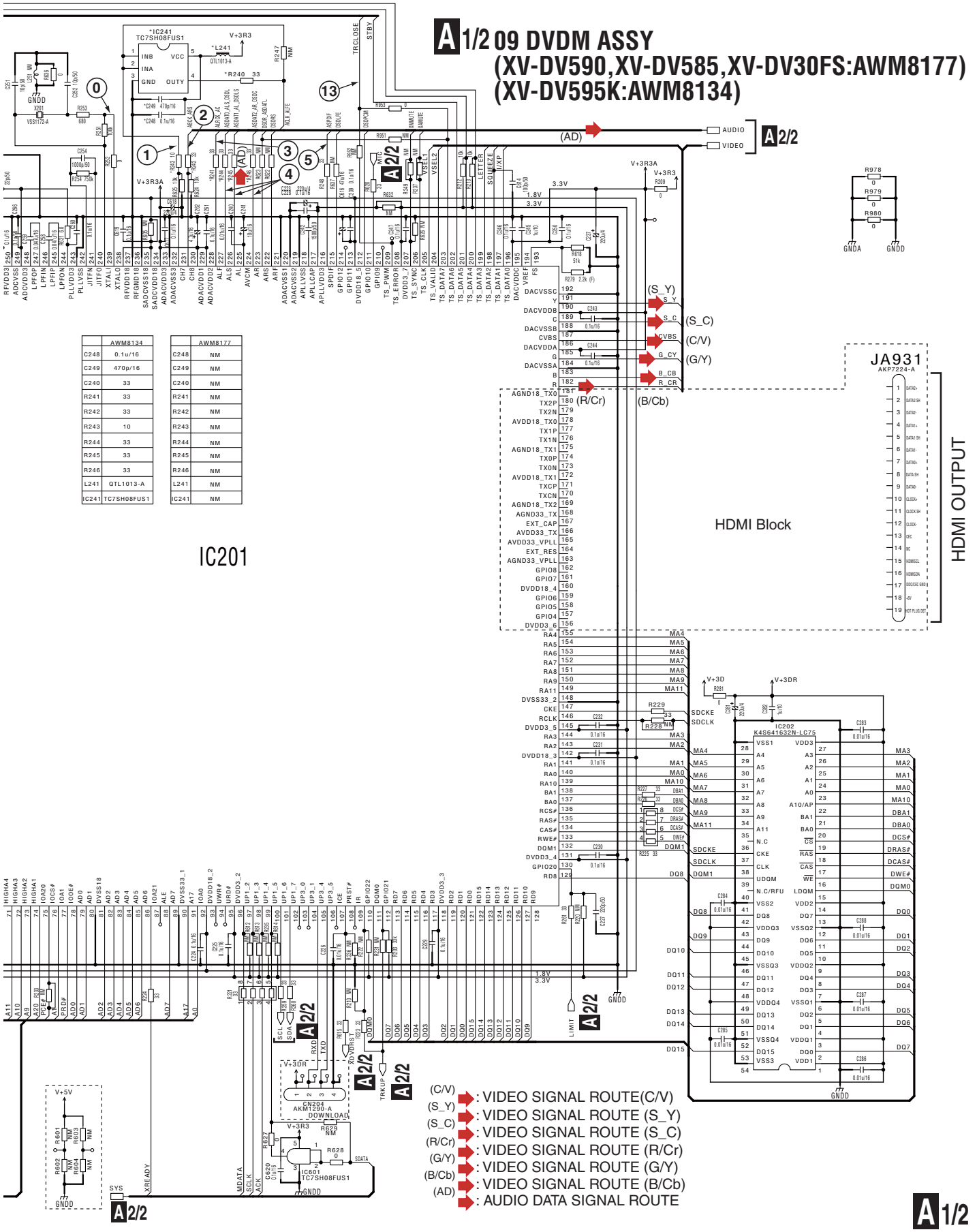


| | AWM8134 |
|---|---|
| C248 | 0.1u/16 |
| C249 | 470p/16 |
| C240 | 33 |
| R241 | 33 |
| R242 | 33 |
| R243 | 10 |
| R244 | 33 |
| R245 | 33 |
| R246 | 33 |
| L241 | QTL1013-A |
| IC241 | TC7SH08FUS1 |

| | AWM8177 |
|---|---|
| C248 | NM |
| C249 | NM |
| C240 | NM |
| R241 | NM |
| R242 | NM |
| R243 | NM |
| R244 | NM |
| R245 | NM |
| R246 | NM |
| L241 | NM |
| IC241 | NM |

# 10.2 09 DVDM ASSY (2/2)

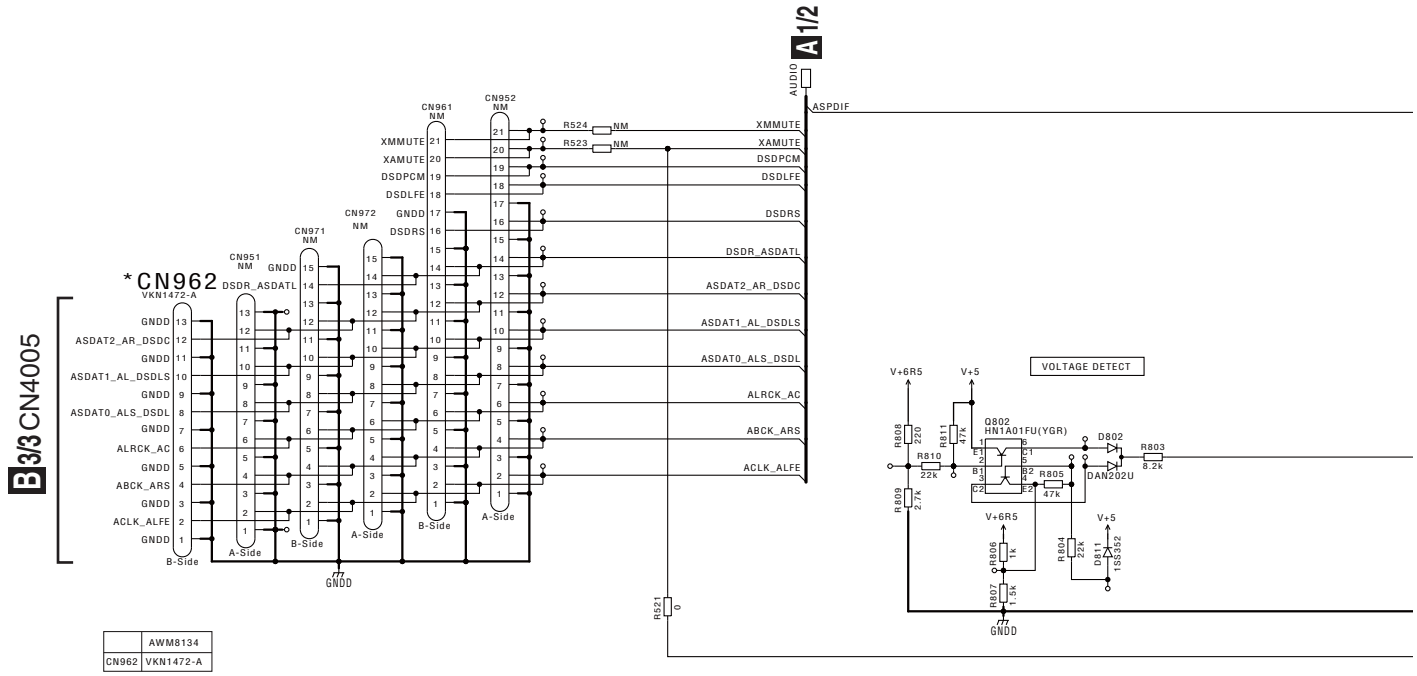


| | AWM8134 |
|---|---|
| CN962 | VKN1472-A |

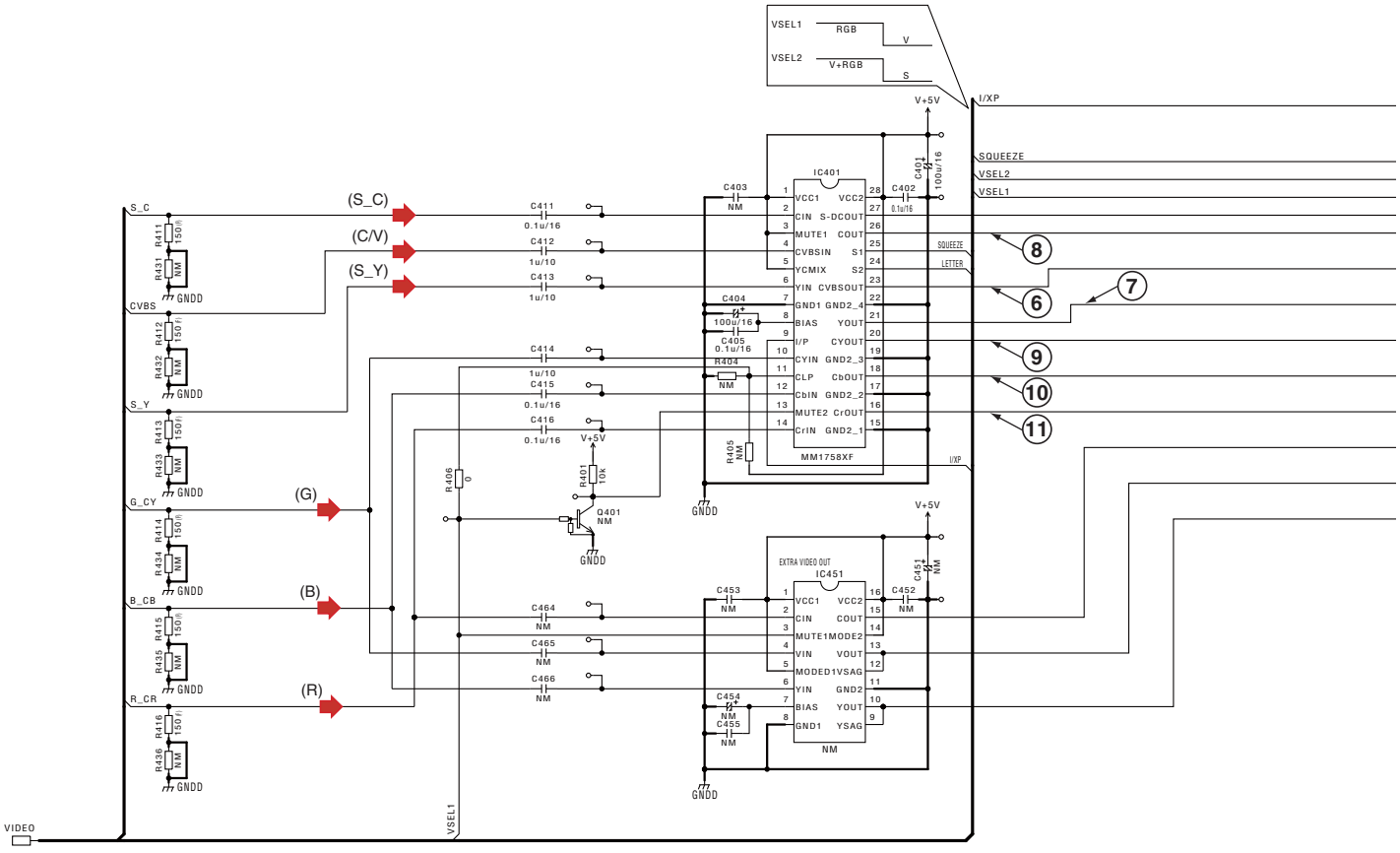


A 2/2

# A 2/2 09 DVDM ASSY
# (XV-DV590,XV-DV585,XV-DV30FS:AWM8177)
# (XV-DV595K:AWM8134)

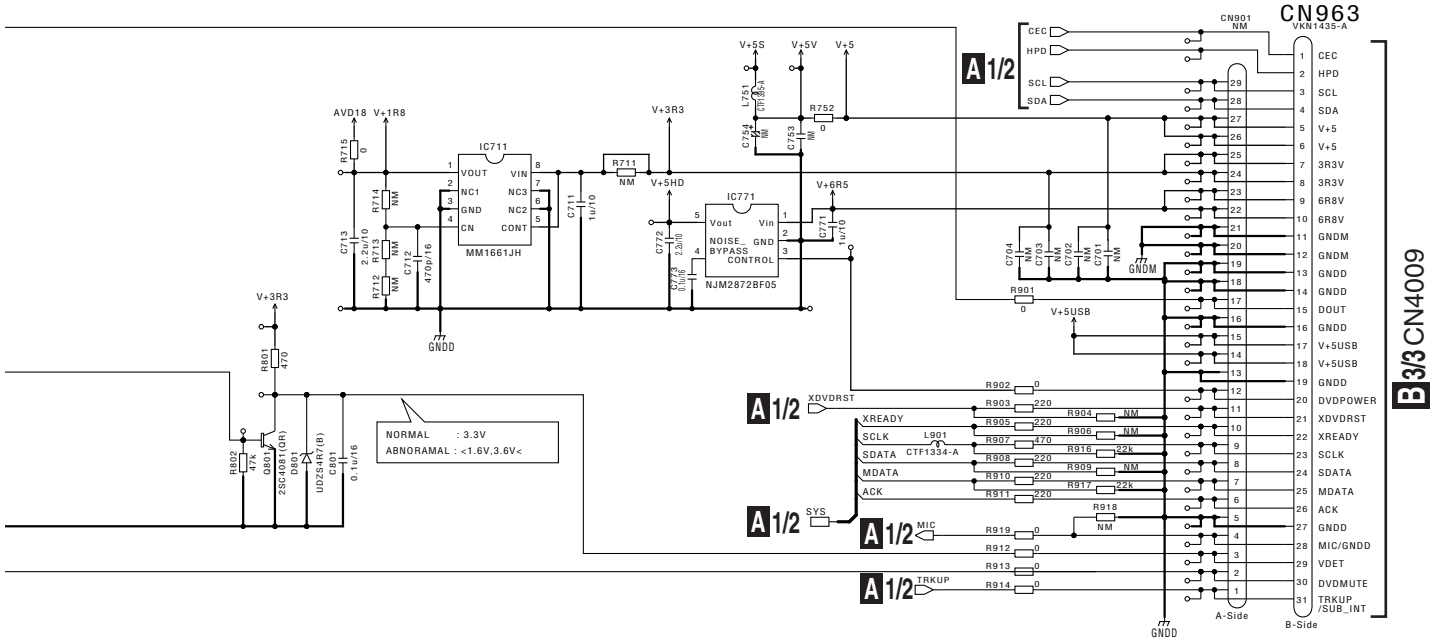


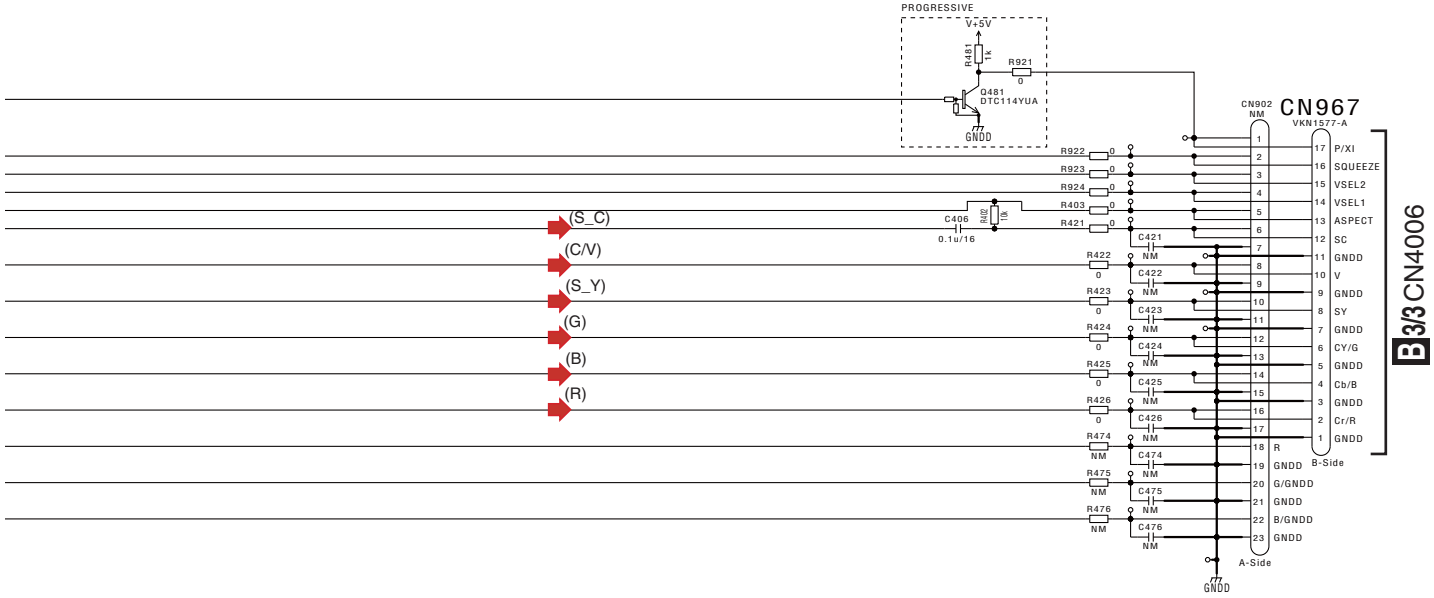


(C/V) : VIDEO SIGNAL ROUTE(C/V)
(S_Y) : VIDEO SIGNAL ROUTE (S_Y)
(S_C) : VIDEO SIGNAL ROUTE (S_C)
(R) : VIDEO SIGNAL ROUTE (R)
(G) : VIDEO SIGNAL ROUTE (G)
(B) : VIDEO SIGNAL ROUTE (B)

A 2/2

# 10.3 RHTS SYSMAIN ASSY (1/3)

## B 1/3 RHTS SYSMAIN ASSY
## (XV-DV590/YXJ5:XWZ4432)
## (XV-DV585/YXJ5:XWZ4431)
## (XV-DV30FS/YXJ5:XWZ4433)
## (XV-DV595K/SXJ5:XWZ4436)

| SIMUKE Syscom S52 | EUROPE | | | | | |
|---|---|---|---|---|---|---|
| | Europe YXJ5 | | | Russia SXJ5 | | |
| *1 R1021(Kohm) | - | | | 15 | | |
| *1 R1022(Kohm) | 47 | | | 82 | | |
| Model No. | XV-DV585 | XV-DV590 | XV-DV30FS | XV-DV585K | XV-DV590K | XV-DV595K |
| Assy No. | XWM3502 | XWM3503 | XWM3504 | XWM3505 | XWM3506 | XWM3407 |
| &AW301 MODEL Syscom S57 | S4 ST | S5 UPPER 4T | S6 2.1CH LCD | S1 BASE ST | S3 BASE 4T/2T | S5 UPPER 4T |
| *1 R1023(Kohm) | 33 | 39 | 39 | - | 68 | 39 |
| *1 R1024(Kohm) | 12 | 33 | 51 | 47 | 15 | 33 |
| *4 BT | M | M | M | M | M | M |

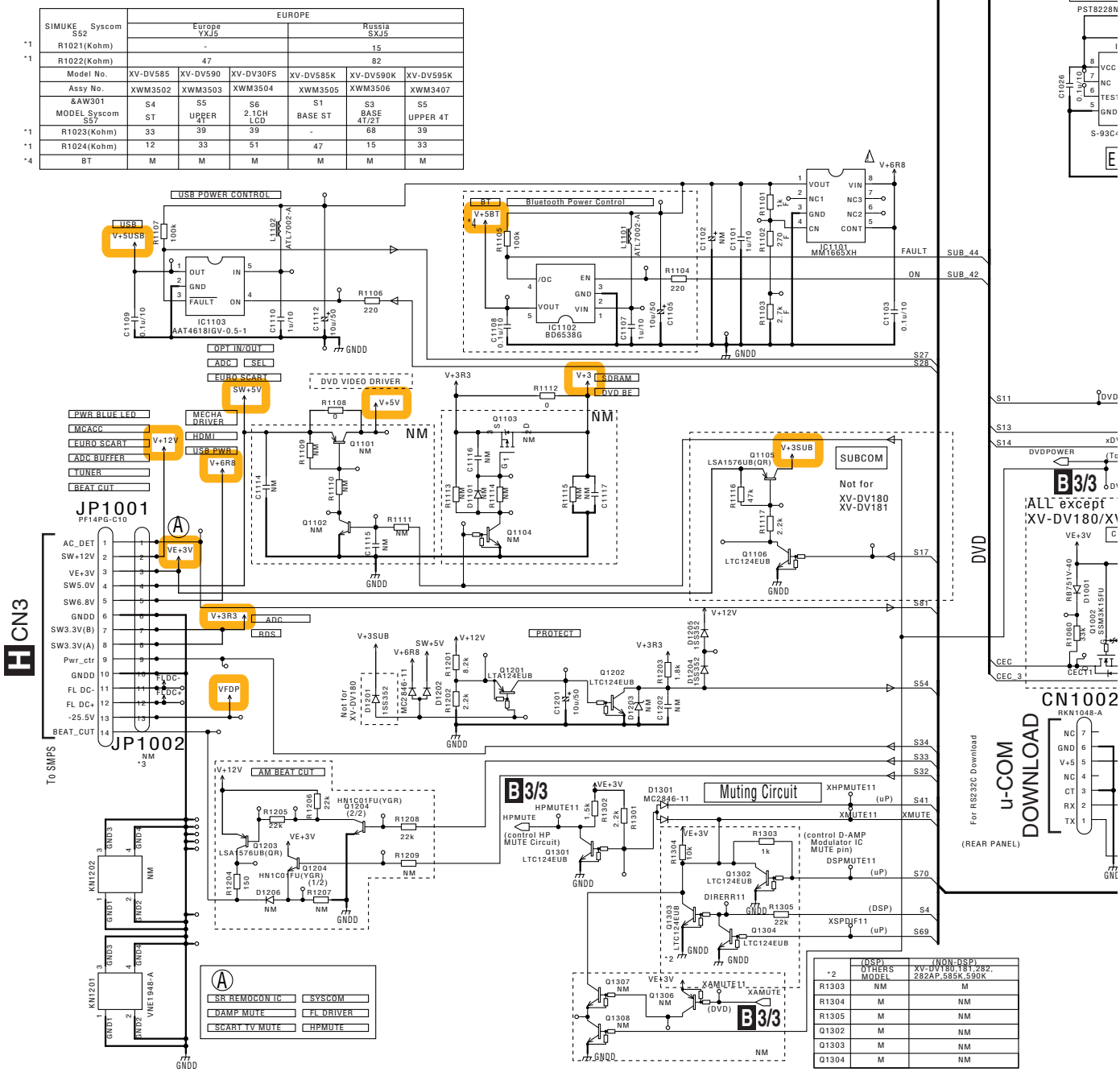


| *2 | (DSP) OTHERS MODEL | (NON-DSP) XV-DV180,181,282, 282AP,585K,590K |
|---|---|---|
| R1303 | NM | M |
| R1304 | M | NM |
| R1305 | M | NM |
| Q1302 | M | NM |
| Q1303 | M | NM |
| Q1304 | M | NM |

B 1/3

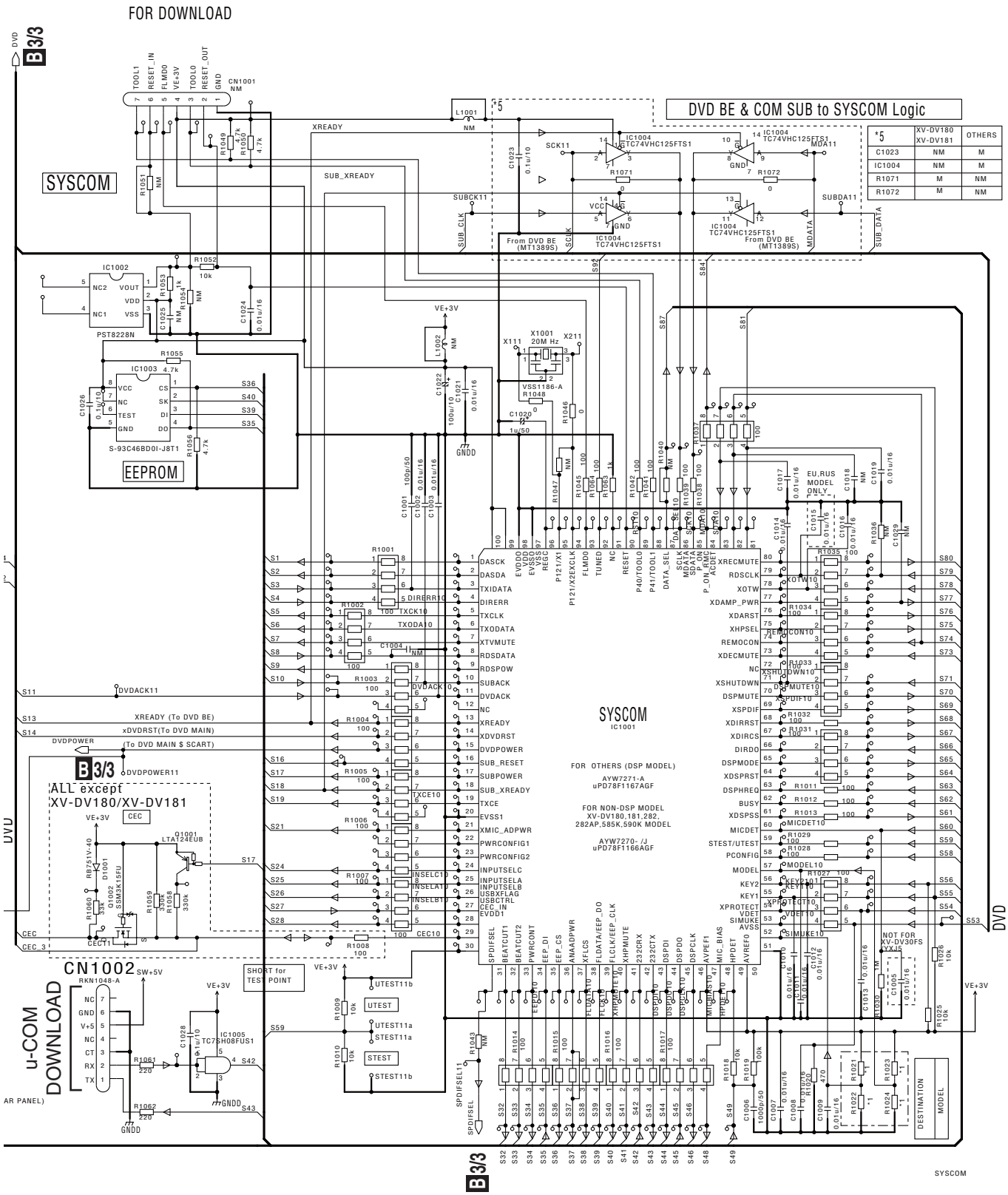


| *5 | XV-DV180 XV-DV181 | OTHERS |
|---|---|---|
| C1023 | NM | M |
| IC1004 | NM | M |
| R1071 | M | NM |
| R1072 | M | NM |

NOTES
ALL Capacitors are in p-pF or uF
unless otherwise specified
Ratings Capacity(uF)/Voltage(V)
Rated Voltage : 50V unless
otherwise specified
CH : CCSSCH(1005 size)
(others : CKSSYB(1608size))
AL CEAL
ALL Resistors are in k-kΩ,
M-MΩ or Ω
RS1/16S****J(1005 size)
RS1/10SR****F(1608size)
ALL Inductors are in uH
NM: No Mount

# 10.4 RHTS SYSMAIN ASSY (2/3)

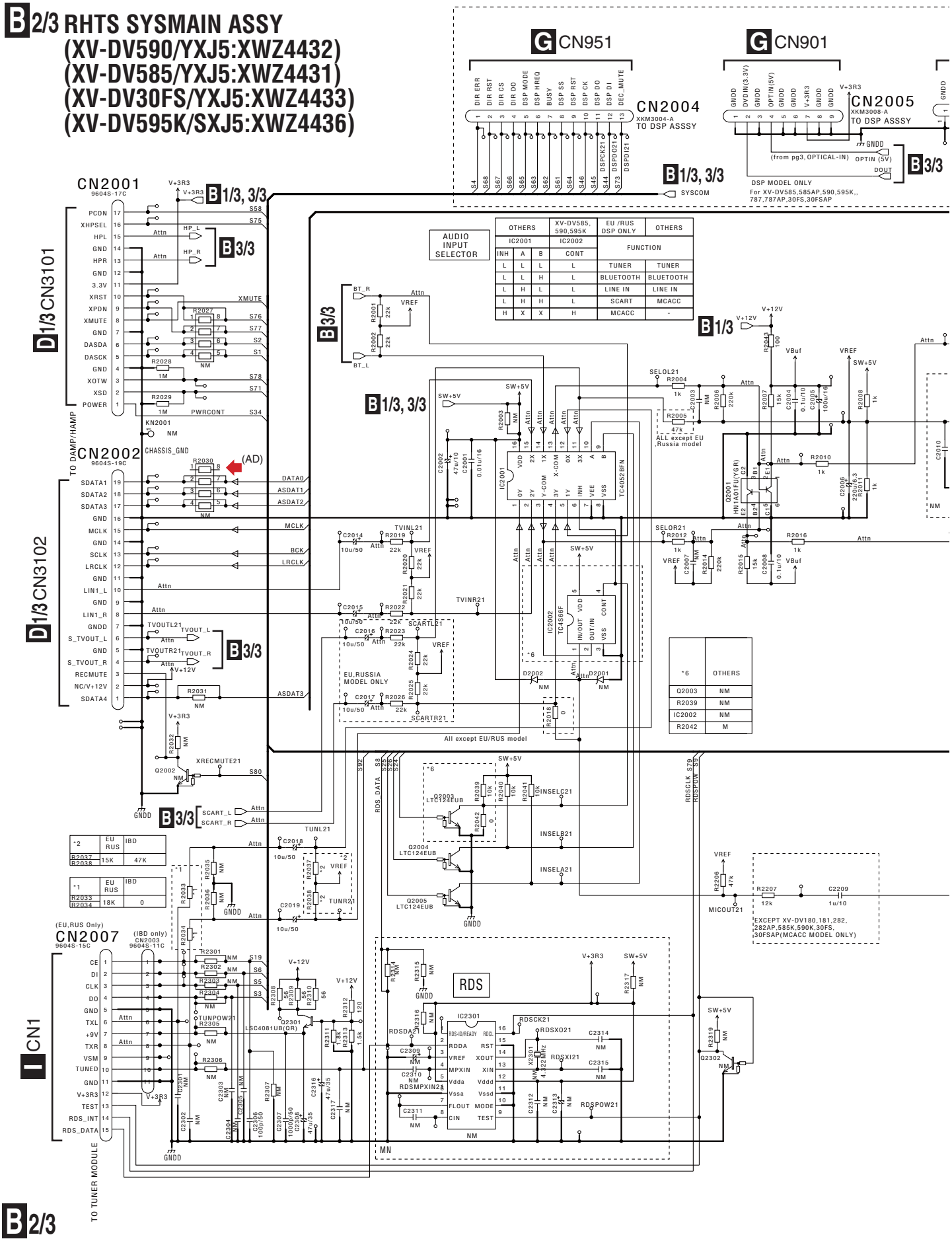


| OTHERS | | | XV-DV585, 590,595K | EU /RUS DSP ONLY | OTHERS |
|---|---|---|---|---|---|
| IC2001 | | | IC2002 | FUNCTION | |
| INH | A | B | CONT | | |
| L | L | L | L | TUNER | TUNER |
| L | L | H | L | BLUETOOTH | BLUETOOTH |
| L | H | L | L | LINE IN | LINE IN |
| L | H | H | L | SCART | MCACC |
| H | X | X | H | MCACC | - |

| *6 | OTHERS |
|---|---|
| Q2003 | NM |
| R2039 | NM |
| IC2002 | NM |
| R2042 | M |

| *2 | EU RUS | IBD |
|---|---|---|
| R2037 | 15K | 47K |
| R2038 | | |

| *1 | EU RUS | IBD |
|---|---|---|
| R2033 | 18K | 0 |
| R2034 | | |

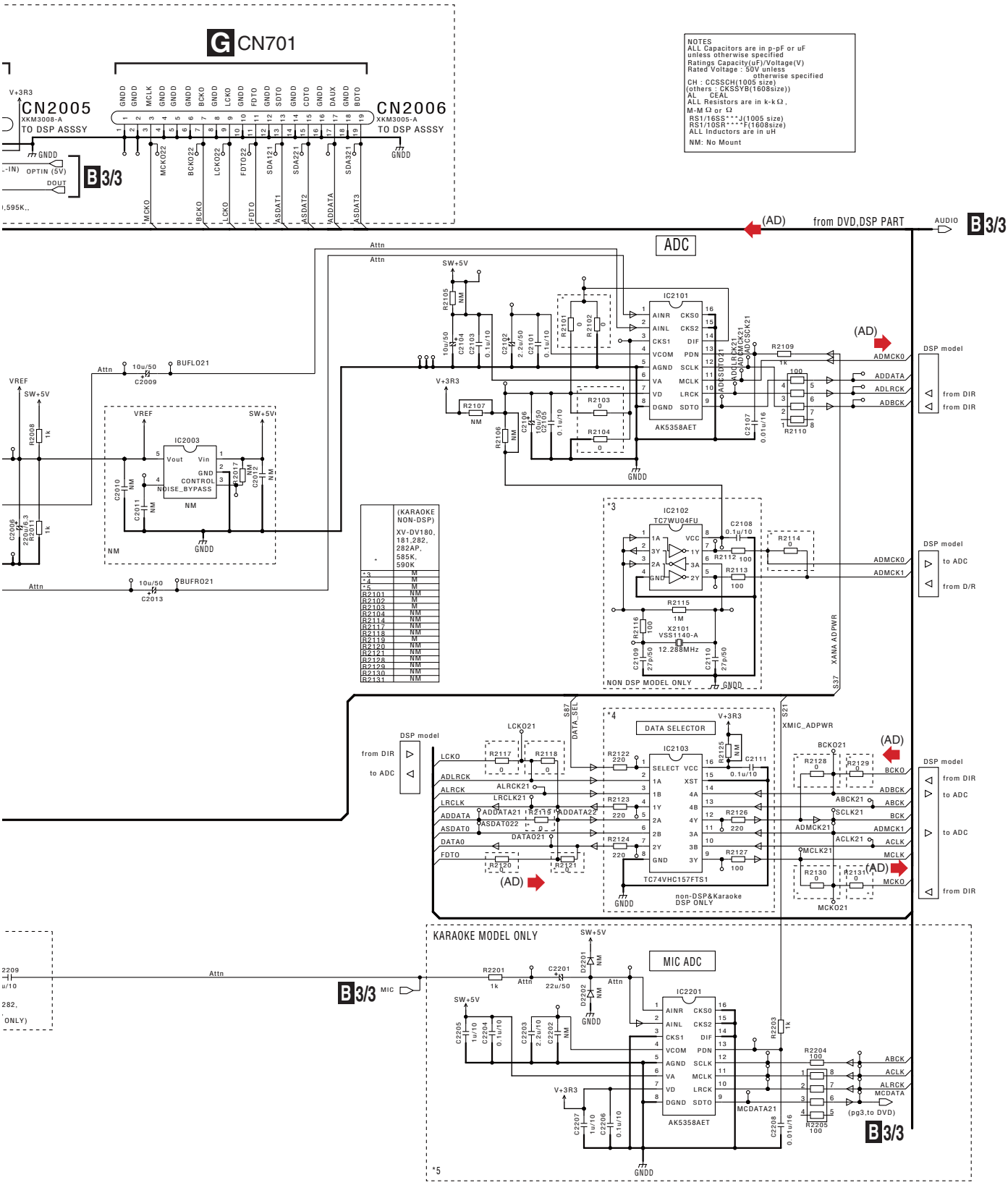
G CN701
CN2005
XKM3008-A
TO DSP ASSSY
CN2006
XKM3005-A
TO DSP ASSSY
B 3/3
NOTES
ALL Capacitors are in p-pF or uF
unless otherwise specified
Ratings Capacity(uF)/Voltage(V)
Rated Voltage : 50V unless
otherwise specified
CH : CCSSCH(1005 size)
(others : CKSSYB(1608size))
AL CEAL
ALL Resistors are in k-kΩ,
M-MΩ or Ω
RS1/16SS***J(1005 size)
RS1/10SR***F(1608size)
ALL Inductors are in uH
NM: No Mount
(AD)
from DVD,DSP PART
AUDIO
ADC
IC2101
AK5358AET
IC2003
IC2102
TC7WU04FU
X2101
VSS1140-A
12.288MHz
NON DSP MODEL ONLY
DSP model
from DIR
to ADC
from D/R
DATA SELECTOR
IC2103
TC74VHC157FTS1
non-DSP&Karaoke
DSP ONLY
KARAOKE MODEL ONLY
MIC ADC
IC2201
AK5358AET
(pg3.to DVD)
(AD) : AUDIO DATA SIGNAL ROUTE
B 2/3

# 10.5 RHTS SYSMAIN ASSY (3/3)

## B 3/3 RHTS SYSMAIN ASSY
## (XV-DV590/YXJ5:XWZ4432)
## (XV-DV585/YXJ5:XWZ4431)
## (XV-DV30FS/YXJ5:XWZ4433)
## (XV-DV595K/SXJ5:XWZ4436)

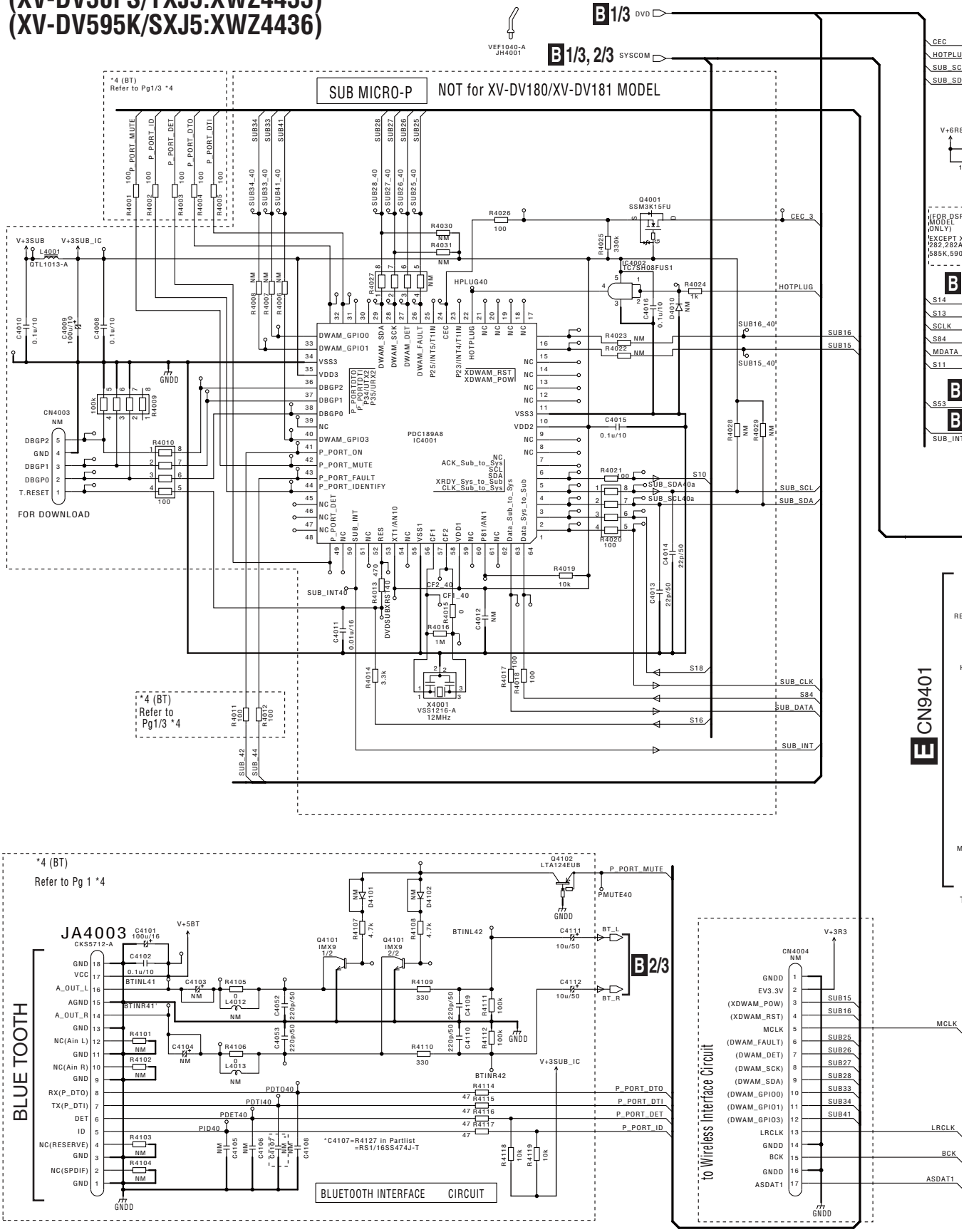

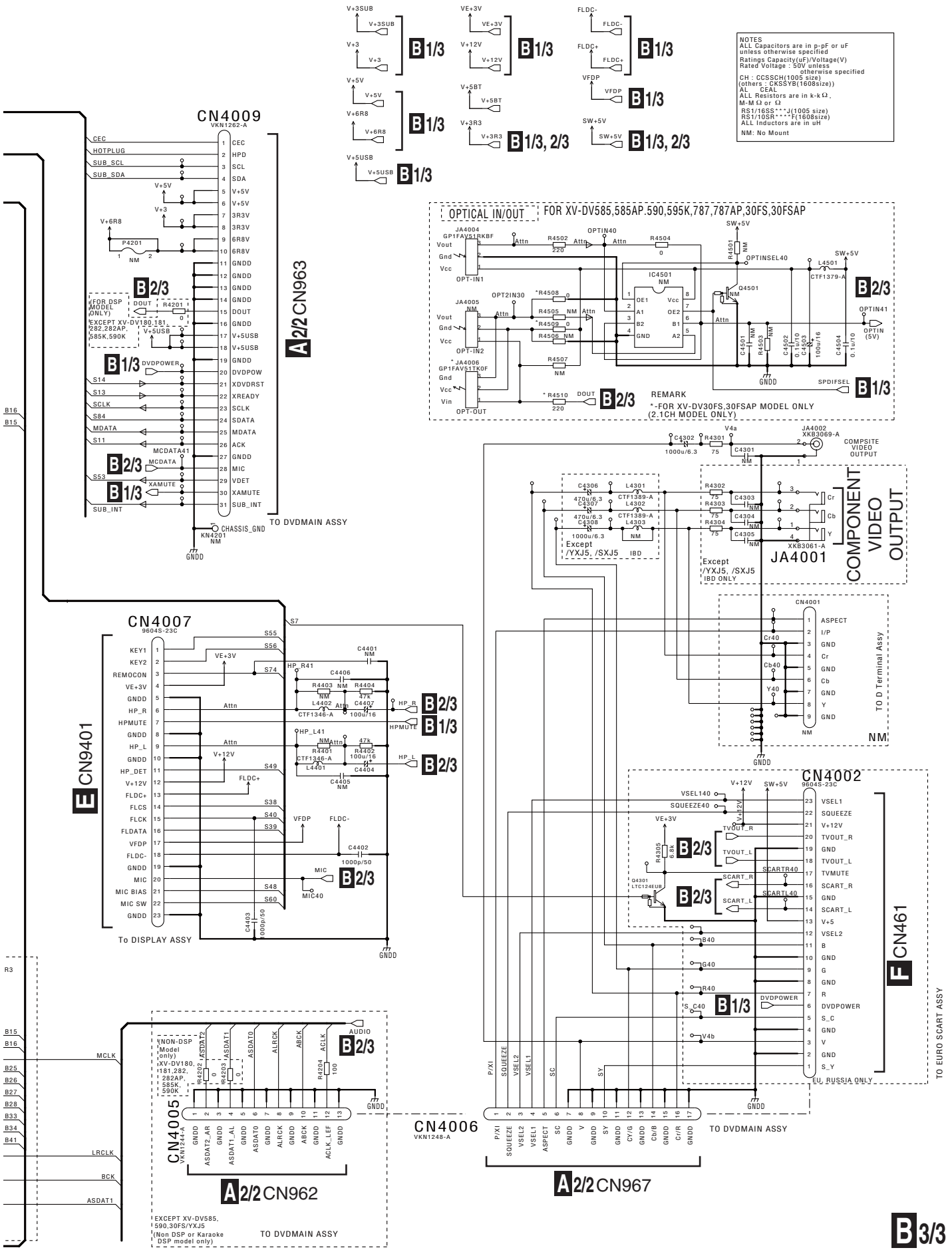
NOTES
ALL Capacitors are in p-pF or uF unless otherwise specified
Ratings Capacity(uF)/Voltage(V)
Rated Voltage : 50V unless otherwise specified
CH : CCSSCH(1005 size)
(others : CKSSYB(1608size))
AL CEAL
ALL Resistors are in k-k Ω, M-M Ω or Ω
RS1/16SS***J(1005 size)
RS1/10SR****F(1608size)
ALL Inductors are in uH
NM: No Mount
CN4009
VKN1262-A
TO DVDMAIN ASSY
CN4007
9604S-23C
To DISPLAY ASSY
CN9401
OPTICAL IN/OUT
FOR XV-DV585,585AP.590,595K,787,787AP,30FS,30FSAP
REMARK
*-FOR XV-DV30FS,30FSAP MODEL ONLY
(2.1CH MODEL ONLY)
COMPOSITE VIDEO OUTPUT
COMPONENT VIDEO OUTPUT
JA4001
CN4001
TO D Terminal Assy
CN4002
9604S-23C
CN461
TO EURO SCART ASSY
EU, RUSSIA ONLY
CN4005
VKN1244-A
(NON-DSP Model only)
XV-DV180, 181, 282, 282AP, 585K, 590K
A2/2 CN962
EXCEPT XV-DV585, 590,30FS/YXJ5
(Non DSP or Karaoke DSP model only)
TO DVDMAIN ASSY
CN4006
VKN1248-A
A2/2 CN967
B3/3

# 10.6 RHTS USB ASSY

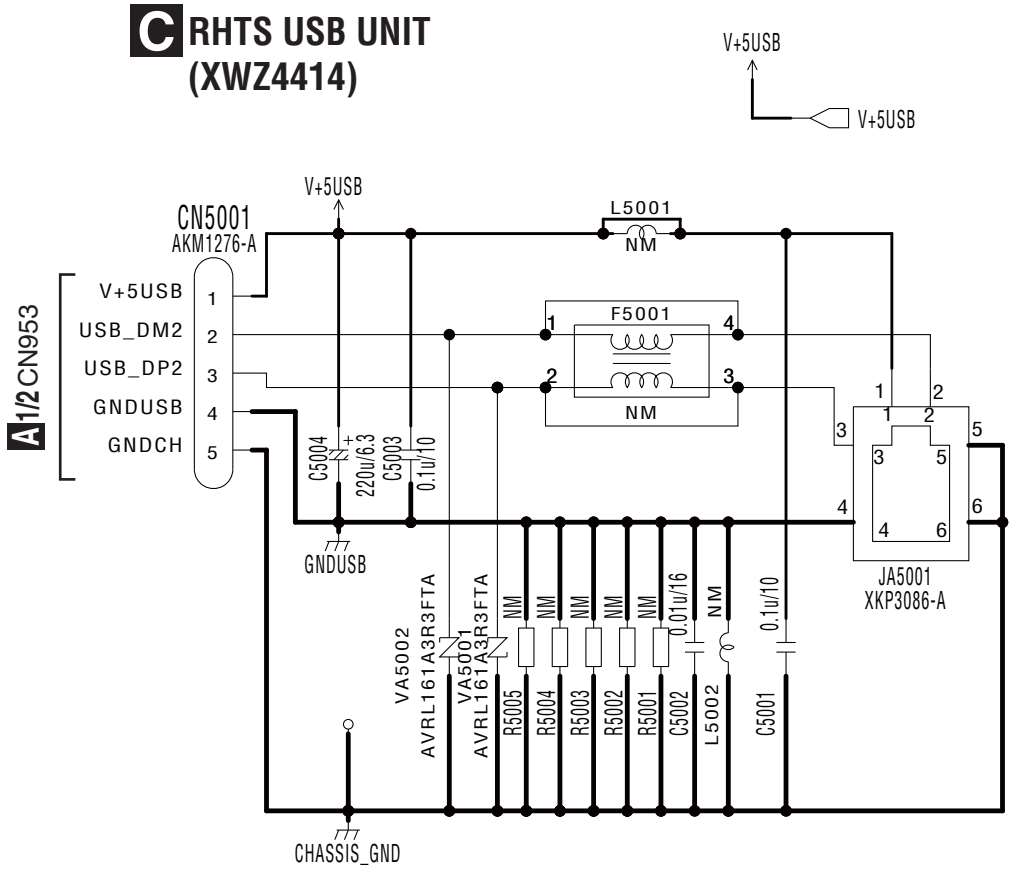


NOTES
ALL Capacitors are in p-pF or uF
unless otherwise specified
Ratings Capacity(uF)/Voltage(V)
Rated Voltage : 50V unless
otherwise specified
CH : CCSSCH(1005 size)
(others : CKSSYB(1608size))
AL CEAL
ALL Resistors are in k-kΩ,
M-MΩ or Ω
RS1/16SS***J(1005 size)
RS1/10SR****F(1608size)
ALL Inductors are in uH
NM: No Mount

A

B

C

D

E

F

# 10.7 RHTS D-AMP ASSY (1/2)

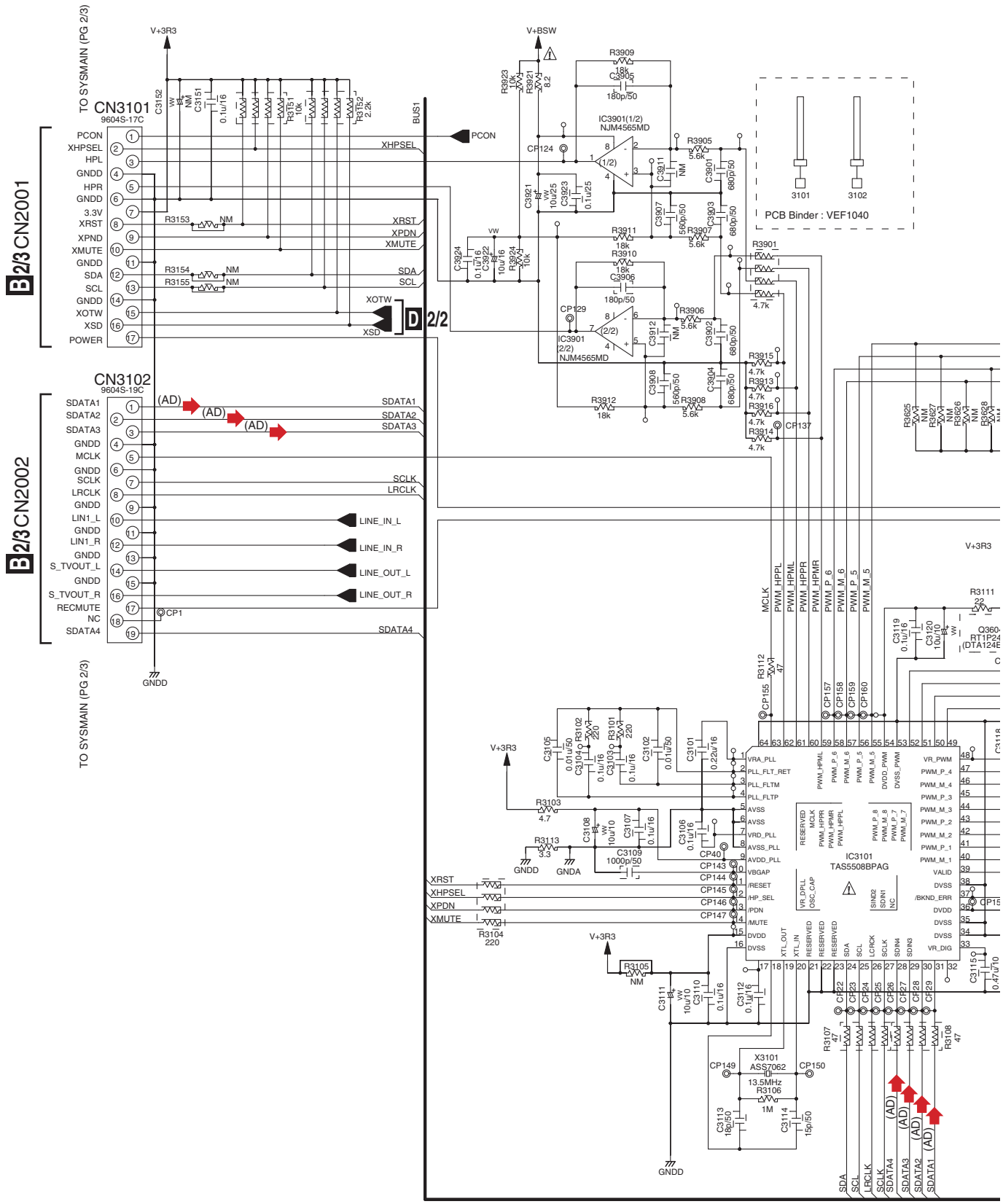

# D 1/2 RHTS D-AMP ASSY
# (XV-DV590, XV-DV585:XWM3489)

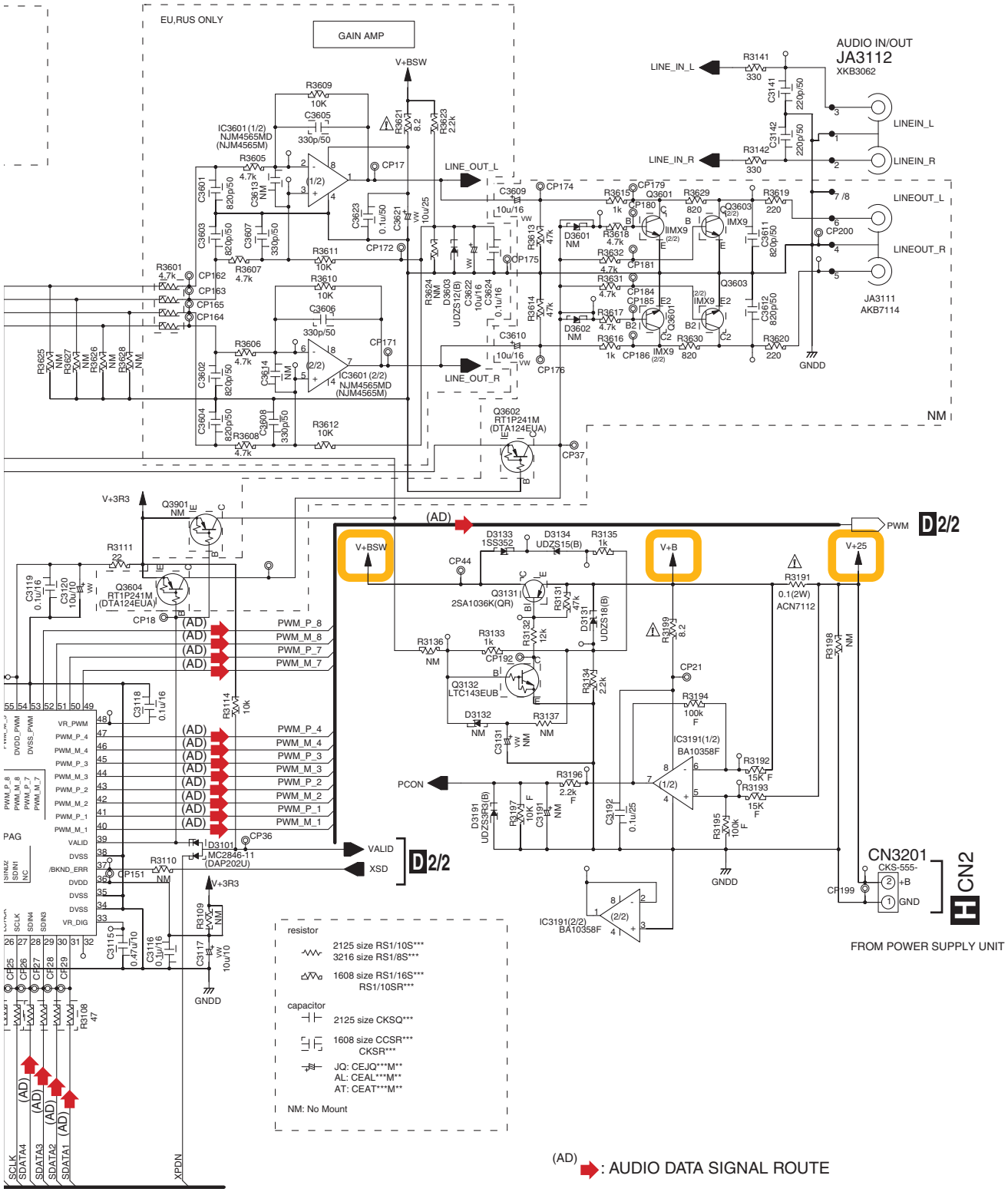

# 10.8 RHTS D-AMP ASSY (2/2)

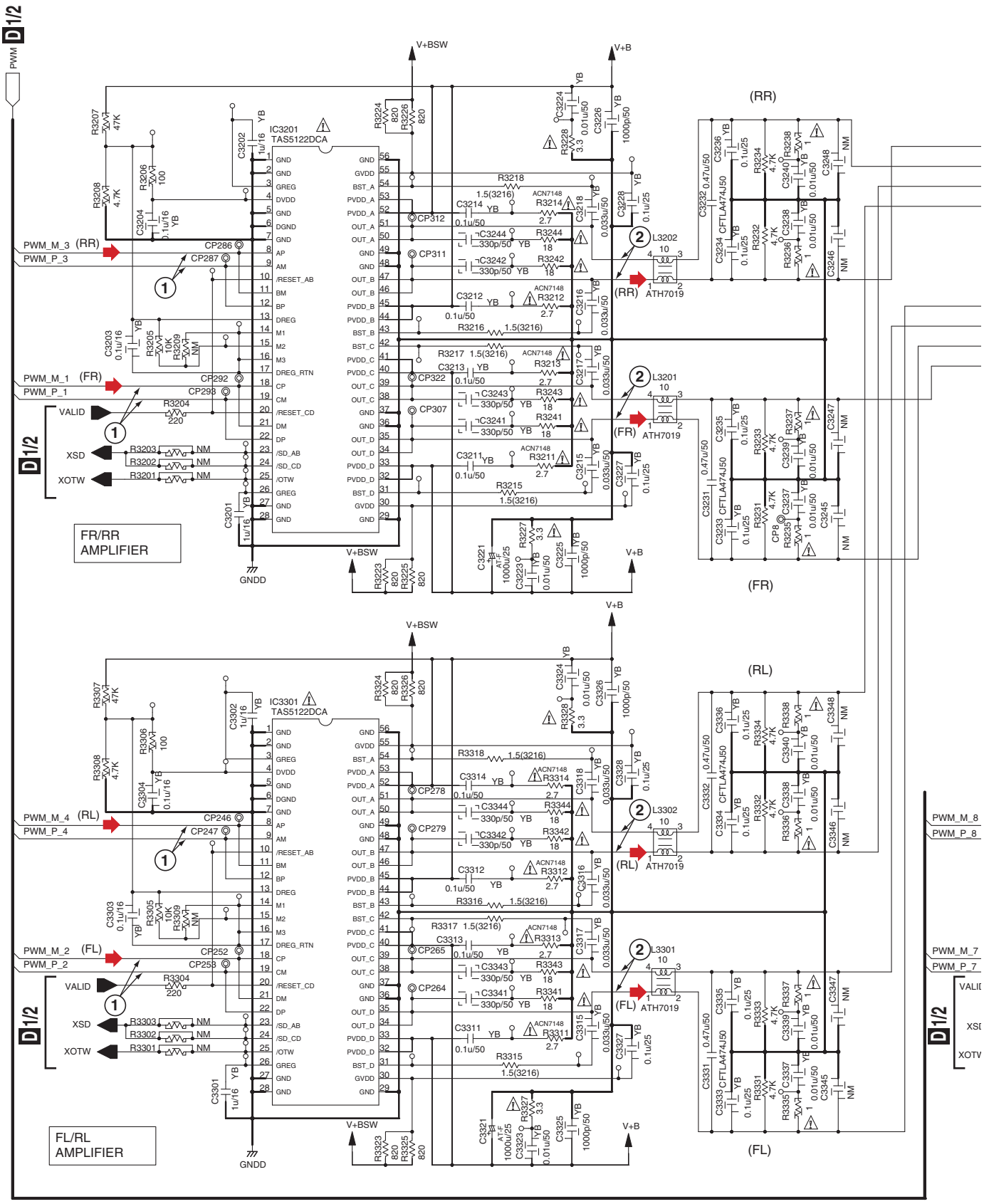


LAYOUT NOTE :
L325X L335X L345X are PCB track inductors approx.
50mm long and 1mm wide

D 2/2

# D 2/2 RHTS D-AMP ASSY (XV-DV590, XV-DV585:XWM3489)

(RL) : AUDIO DATA SIGNAL ROUTE (Rear Lch)
(RR) : AUDIO DATA SIGNAL ROUTE (Rear Rch)
(FL) : AUDIO DATA SIGNAL ROUTE (Front Lch)
(FR) : AUDIO DATA SIGNAL ROUTE (Front Rch)
(SW) : AUDIO DATA SIGNAL ROUTE (Sub woofer ch)
(C) : AUDIO DATA SIGNAL ROUTE (Center ch)

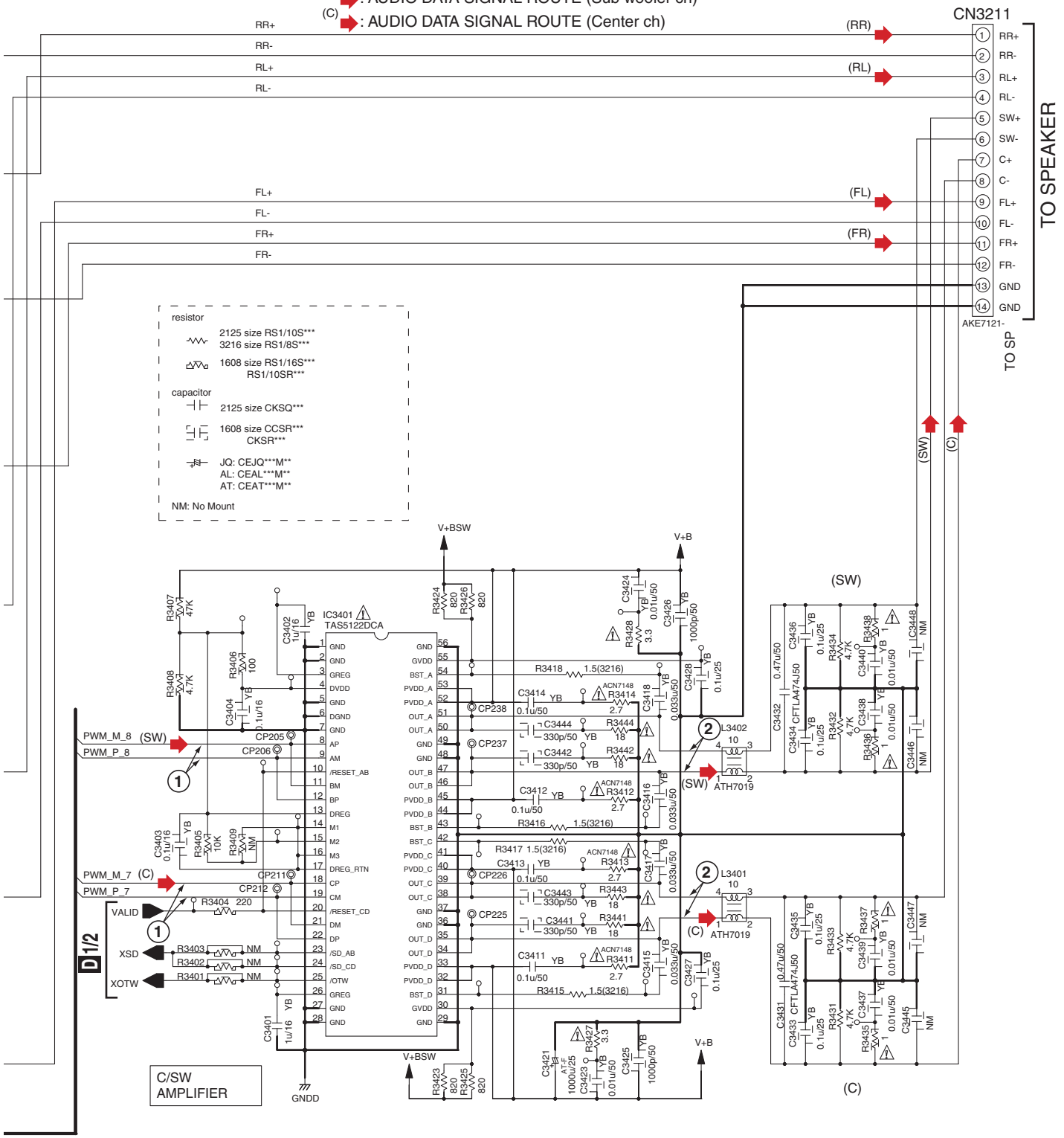


NOTICE
R3211 to R3214,R3311 to R3314,R3411 to R3414 : ACN7148-(2.7Ω)(SUB:ACN7141-(2.7Ω)) (2W)

# 10.9 RHTS H-AMP ASSY (1/2)

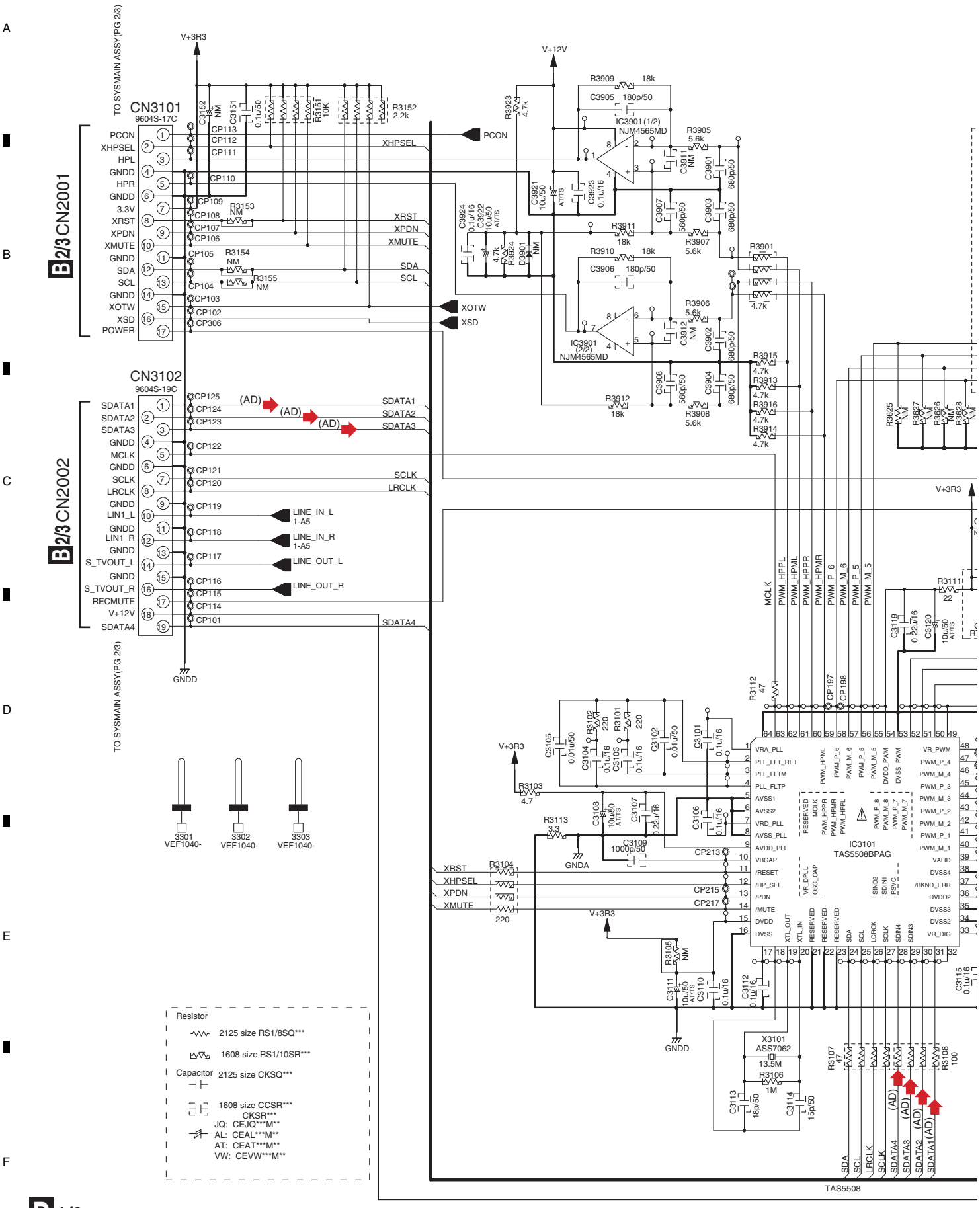


D 1/2

# D 1/2 RHTS H-AMP ASSY
# (XV-DV30FS:XWM3495)
# (XV-DV595K:XWM3494)

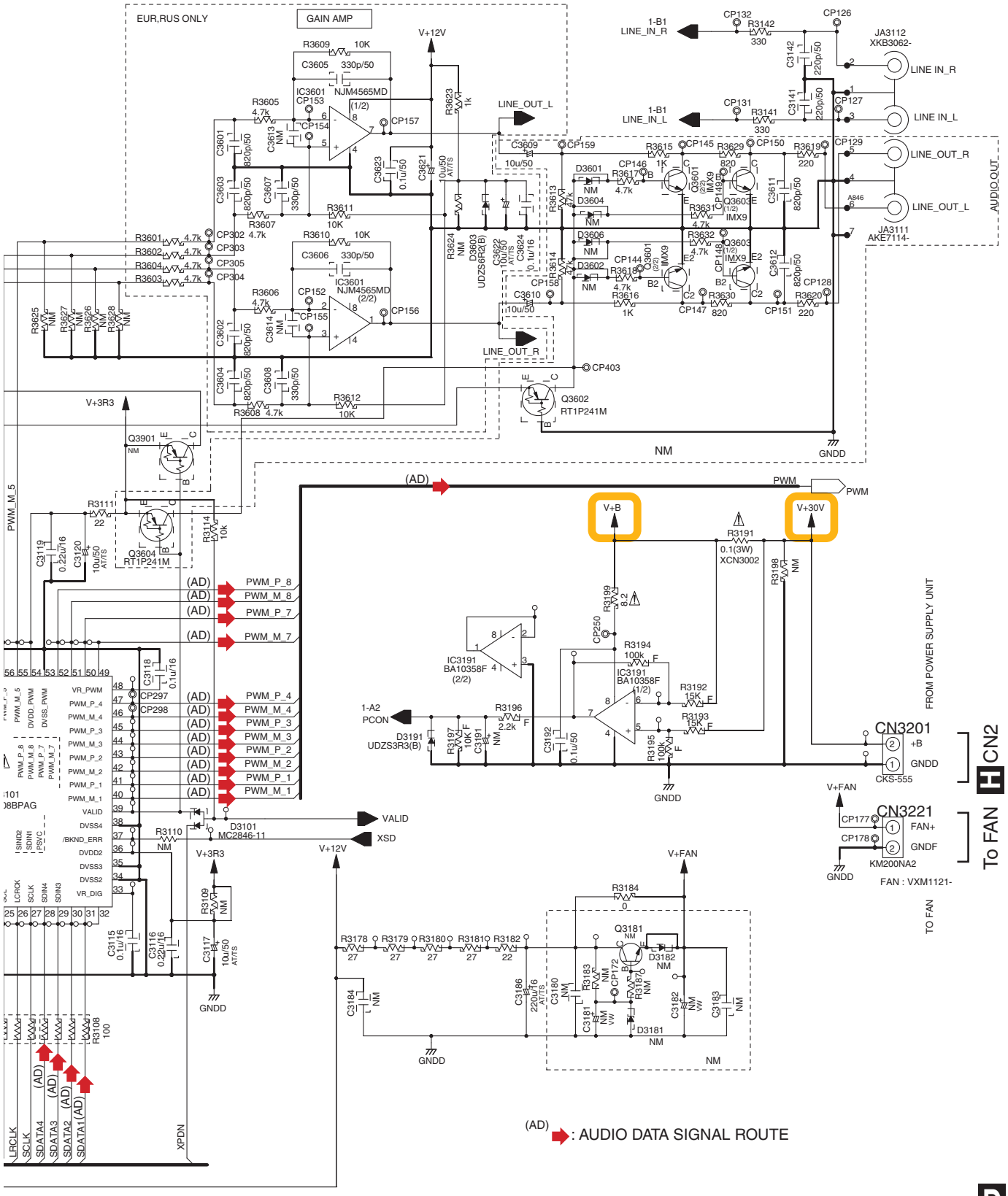


D 1/2

# 10.10 RHTS H-AMP ASSY (2/2)

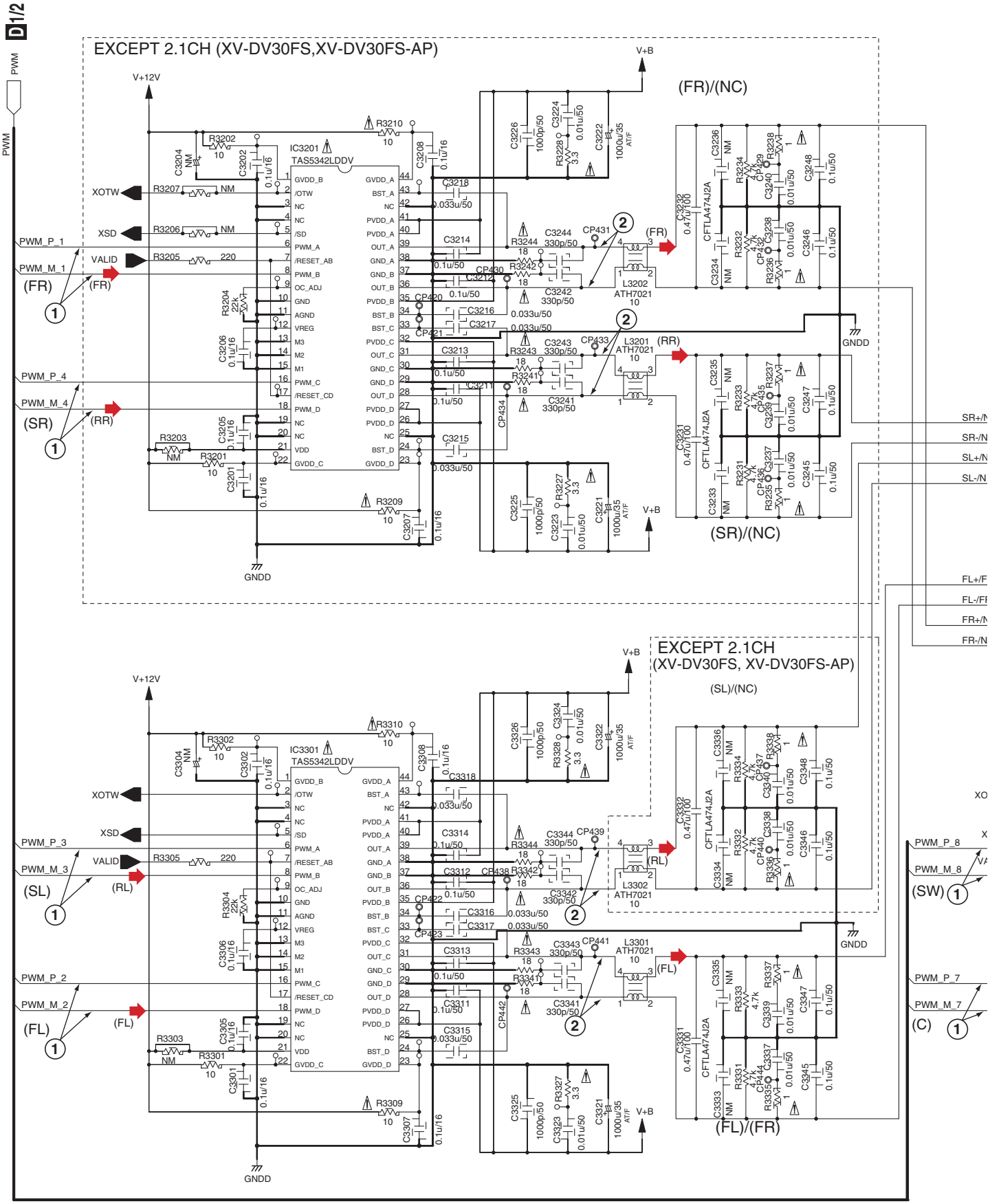

# D 2/2 RHTS H-AMP ASSY
# (XV-DV30FS:XWM3495)
# (XV-DV595K:XWM3494)

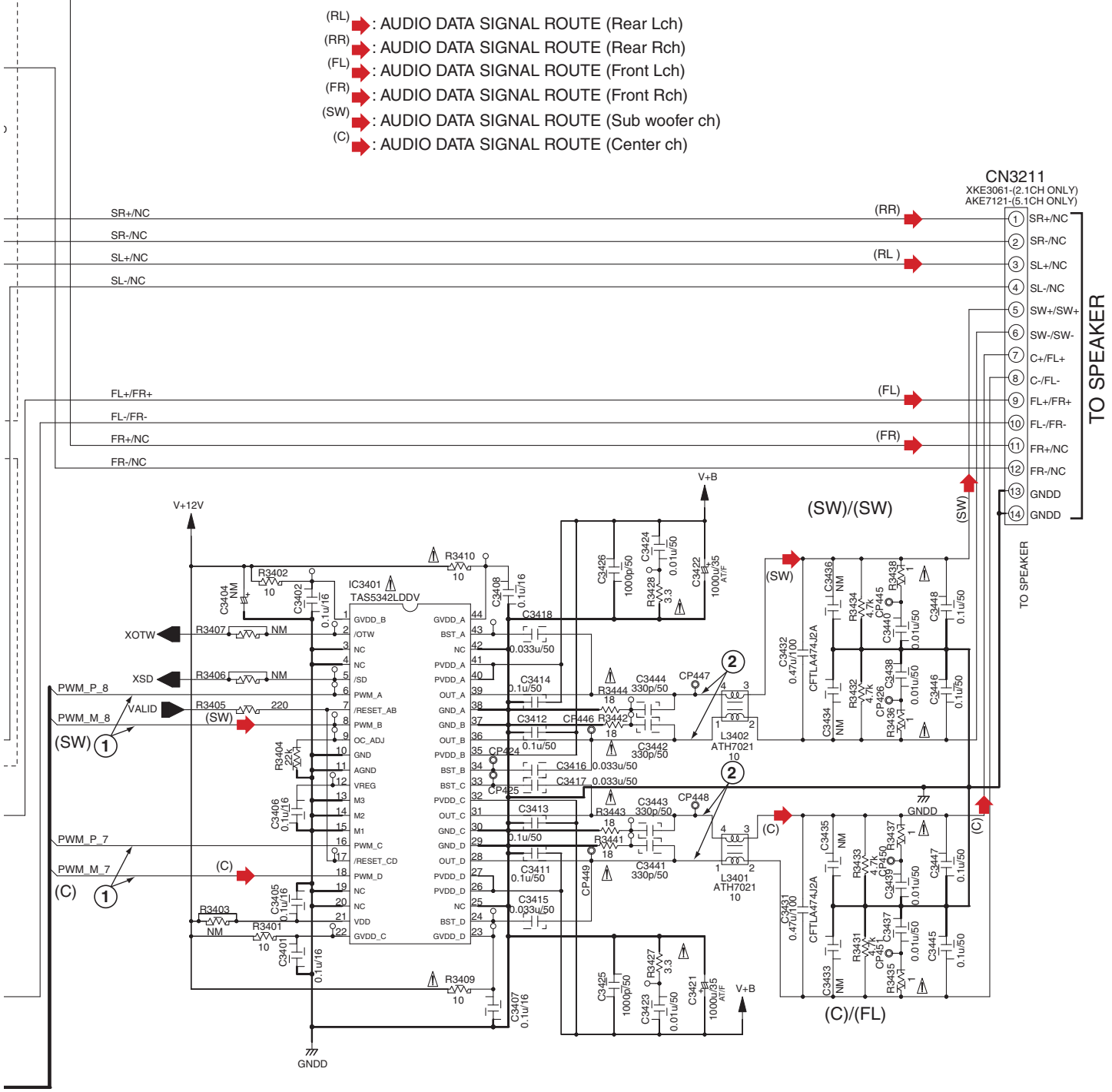

# 10.11 RHTS DISPLAY ASSY

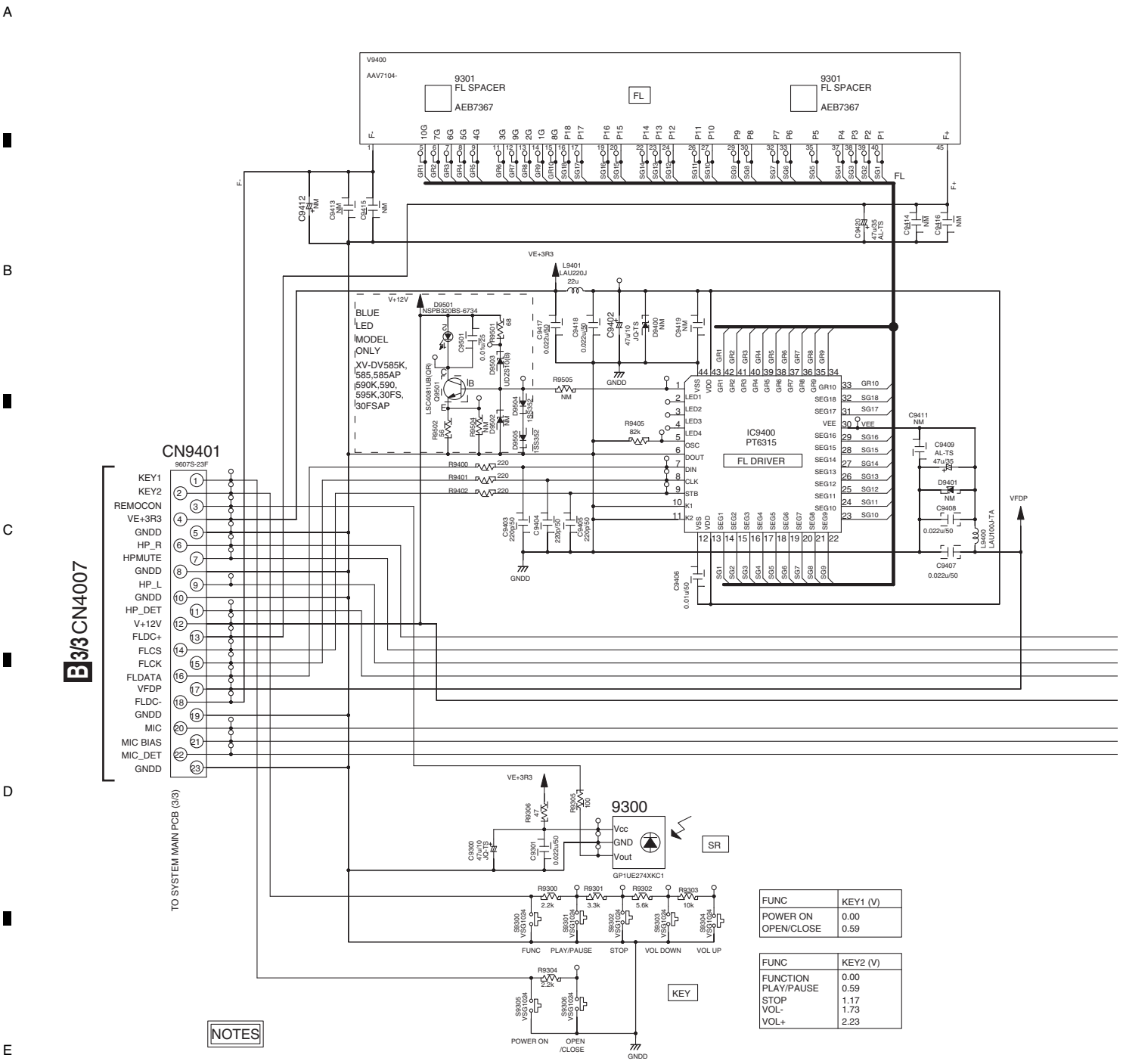


| FUNC | KEY1 (V) |
|---|---|
| POWER ON | 0.00 |
| OPEN/CLOSE | 0.59 |

| FUNC | KEY2 (V) |
|---|---|
| FUNCTION | 0.00 |
| PLAY/PAUSE | 0.59 |
| STOP | 1.17 |
| VOL- | 1.73 |
| VOL+ | 2.23 |

NOTES

ALL CAPACITORS ARE IN μF
UNLESS OTHERWISE SPECIFIED

CKSRYB***K**
CCSRCH***J**

JQ : CEJQ***M**
AL : CEAL***M**
AT : CEAT***M**

ALL RESISTORS ARE IN Ω

RS1/10SR***J

ALL INDUCTORS ARE IN μH

LAU***J-TA

NM: No Mount

# E RHTS DISPLAY ASSY
# (XV-DV590, XV-DV585:XWM3487)
# (XV-DV30FS:XWM3488)
# (XV-DV595K:XWM3484)

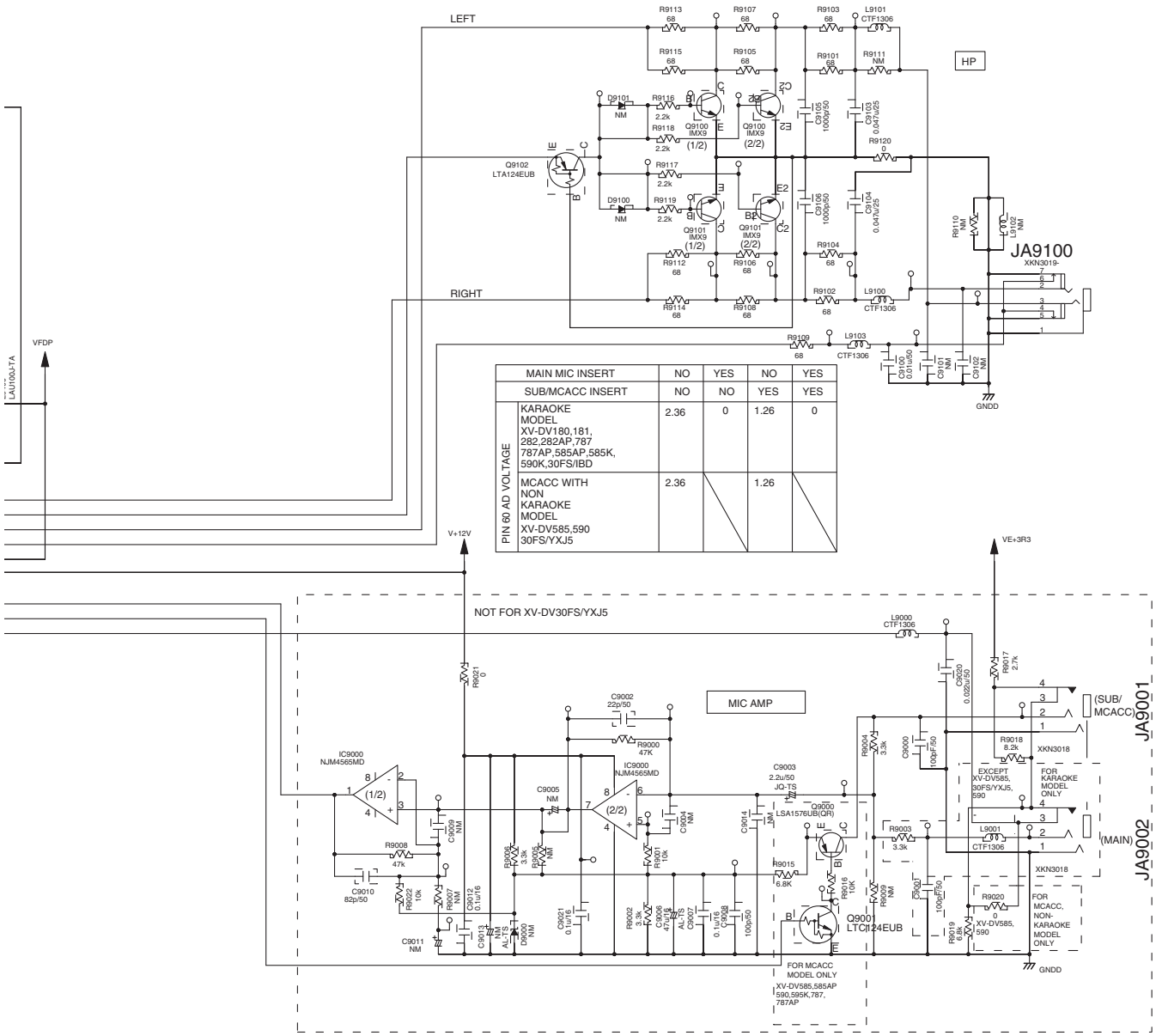


| MAIN MIC INSERT | NO | YES | NO | YES |
|---|---|---|---|---|
| SUB/MCACC INSERT | NO | NO | YES | YES |
| PIN 60 AD VOLTAGE: KARAOKE MODEL XV-DV180,181, 282,282AP,787 787AP,585AP,585K, 590K,30FS/IBD | 2.36 | 0 | 1.26 | 0 |
| PIN 60 AD VOLTAGE: MCACC WITH NON KARAOKE MODEL XV-DV585,590 30FS/YXJ5 | 2.36 | | 1.26 | |

# 10.12 EUROSCART ASSY

## F EUROSCART ASSY (AWU8291)

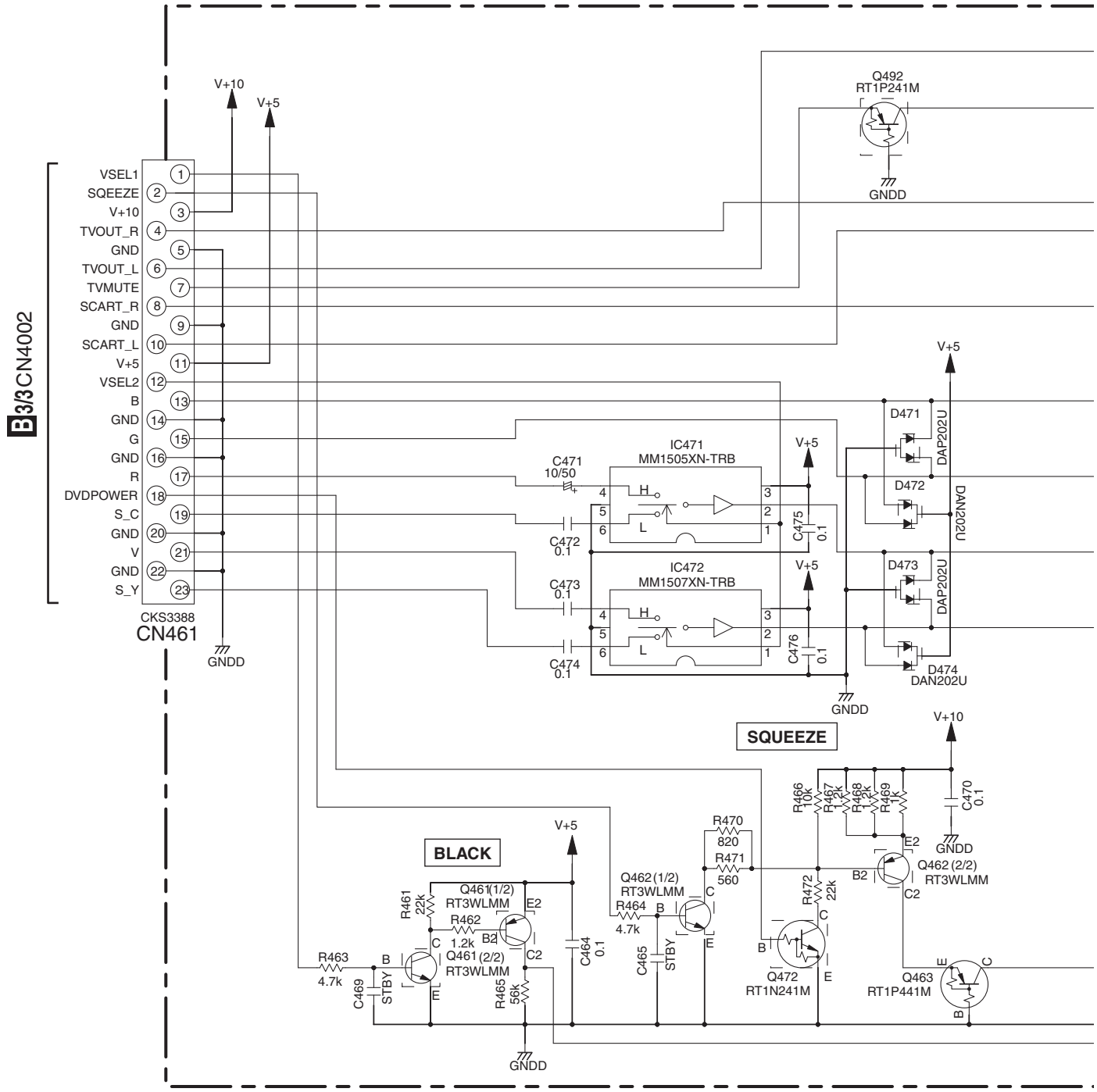

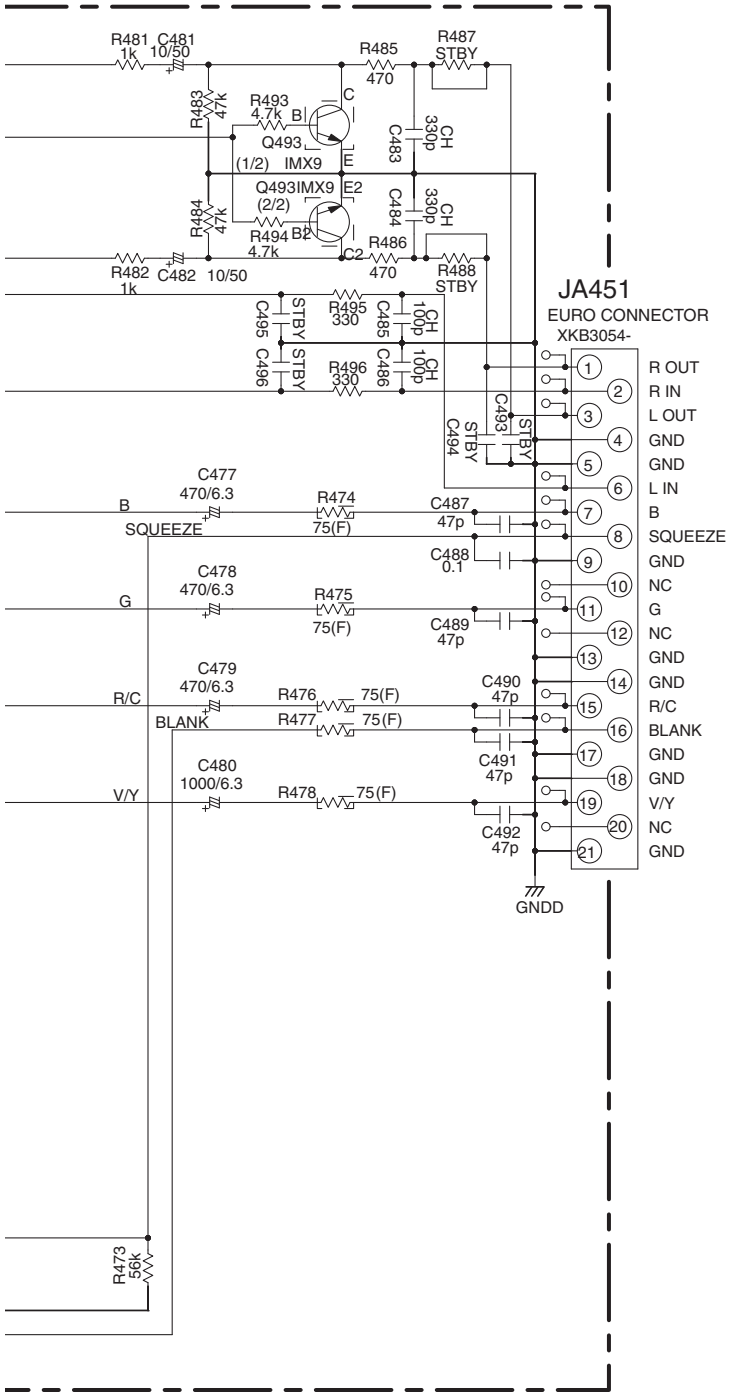


## NOTES

ALL CAPACITORS ARE IN μF
UNLESS OTHERWISE SPECIFIED

CKSRYB**K50

JQ : CEJQ**M**
AL : CEAL**M**
AT : CEAT**M**

ALL RESISTORS ARE IN Ω

RS1/16S***J
RS1/10S***J

ALL INDUCTORS ARE IN μH

LCYA***J2520

NM: No Mount

# 10.13 RHTS DSP ASSY

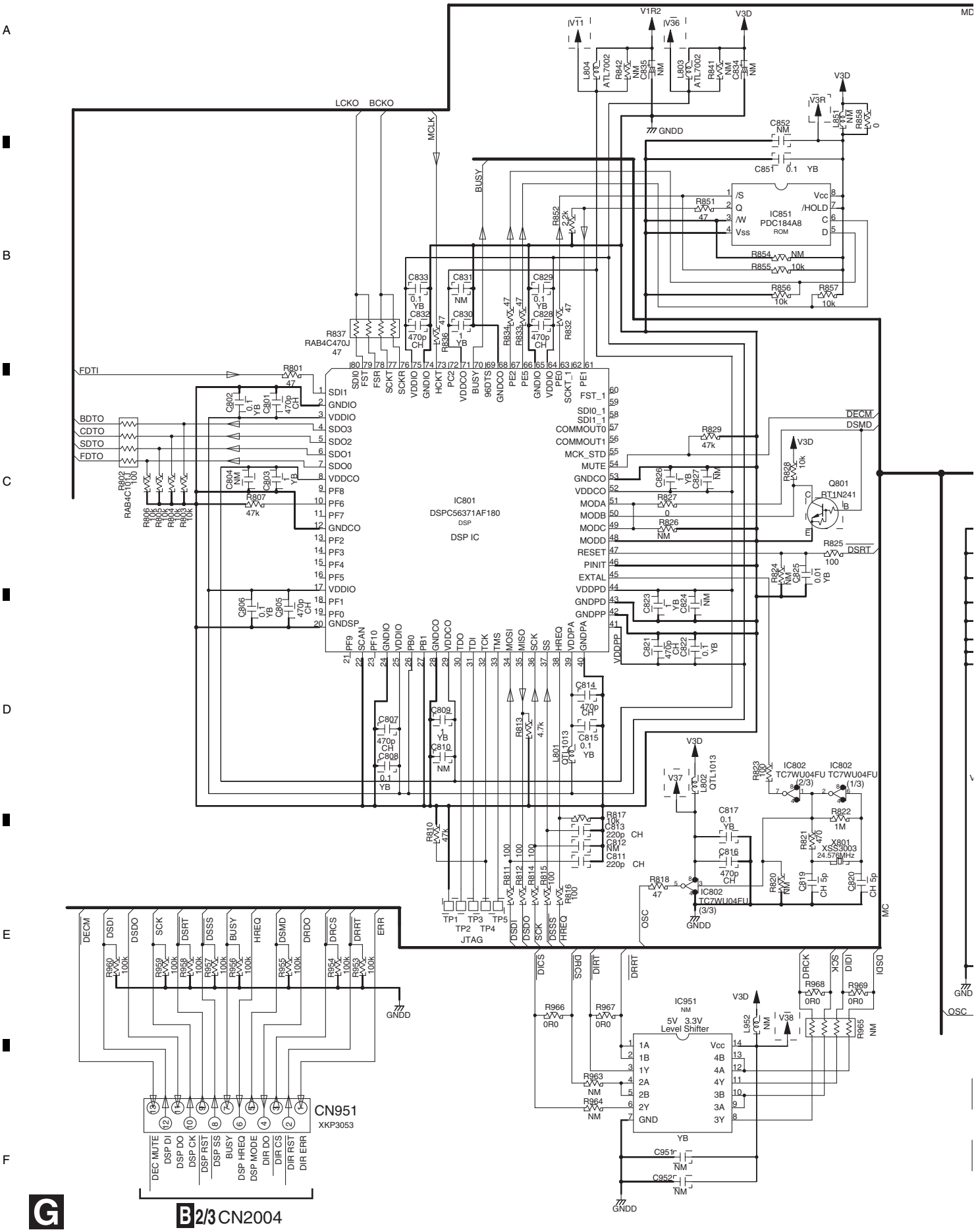

# G RHTS DSP ASSY (XWM3493)

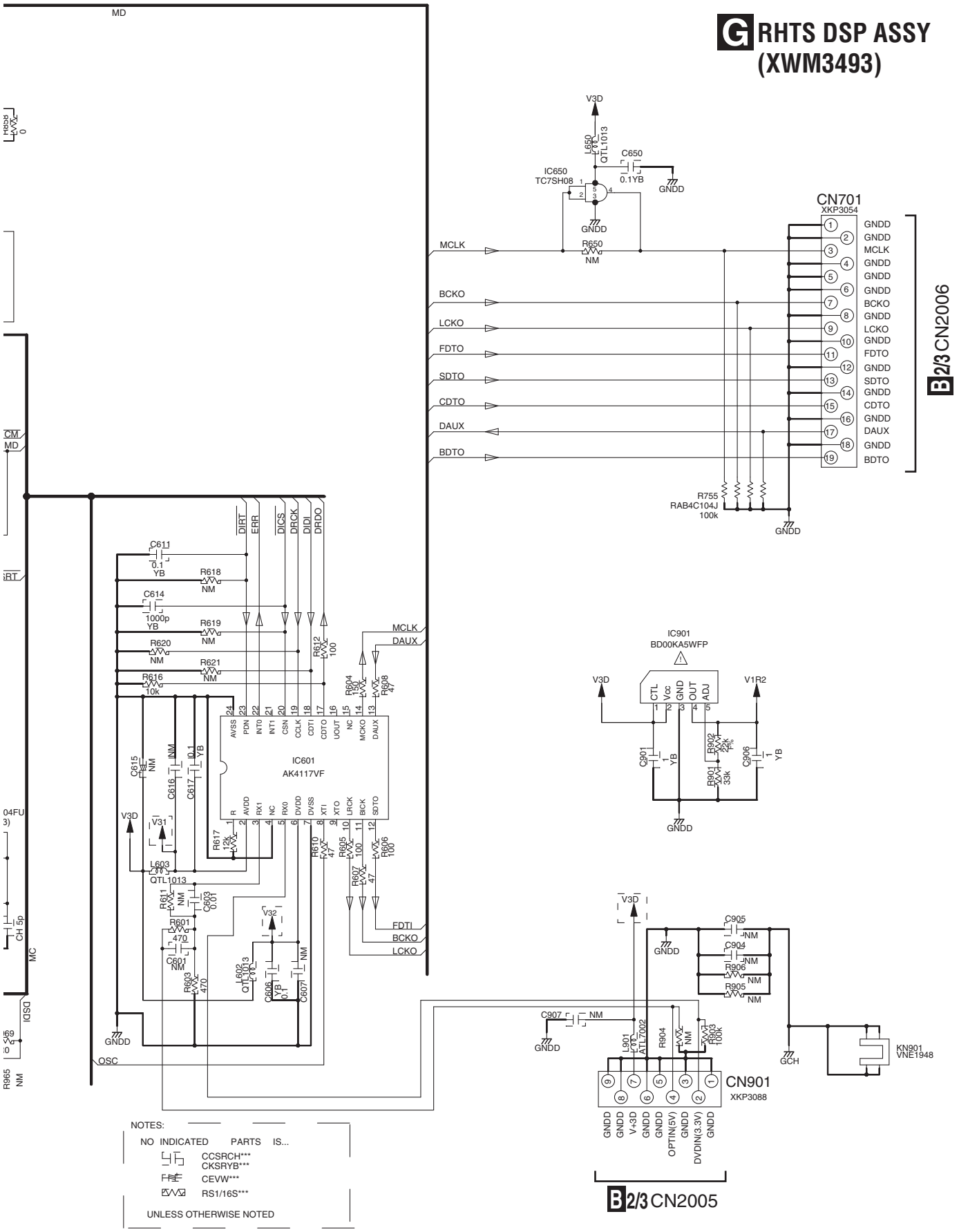

# 10.14 POWER SUPPLY UNIT(60W)

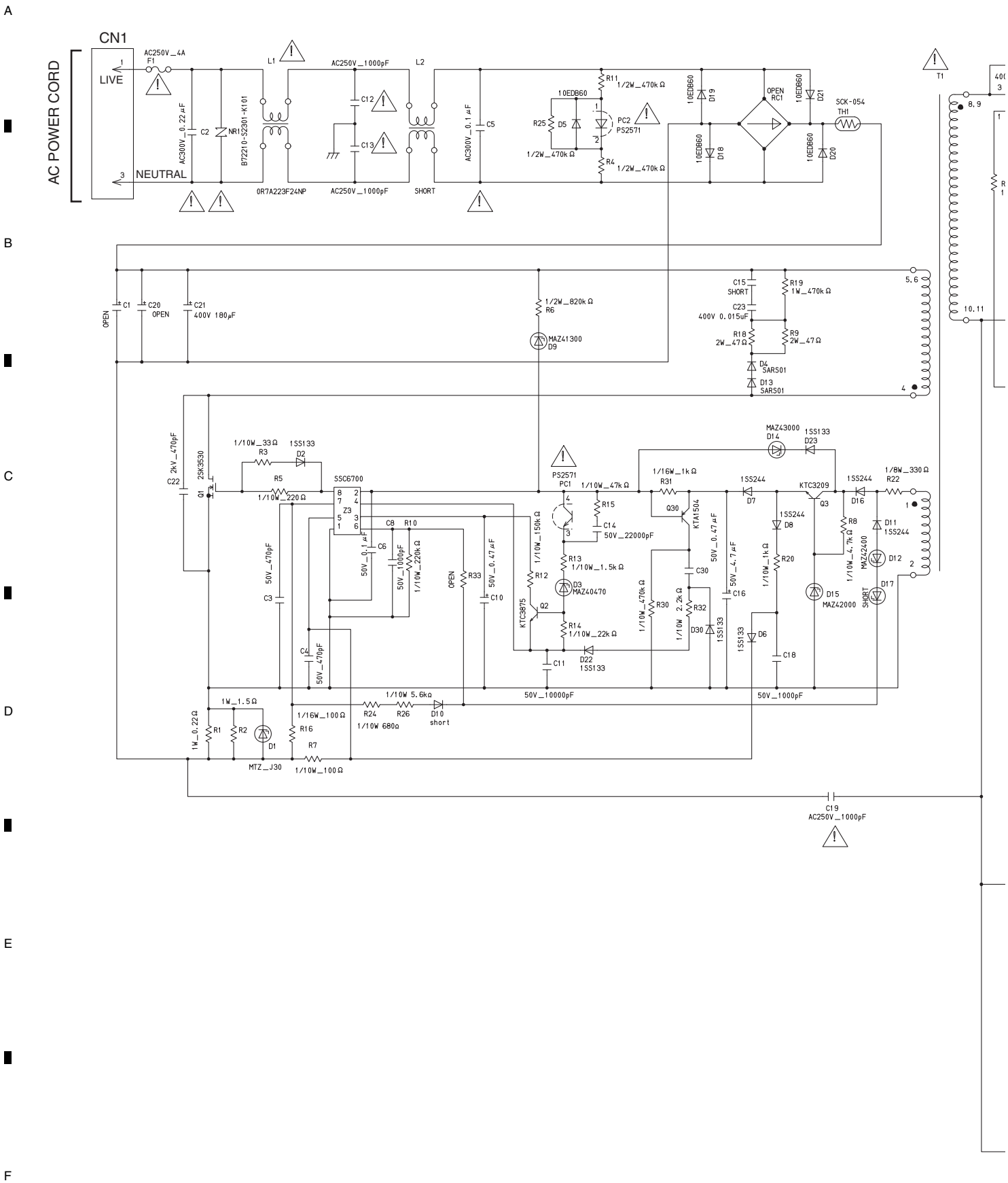

# H POWER SUPPLY UNIT (XV-DV590, XV-DV585:XWR3020)

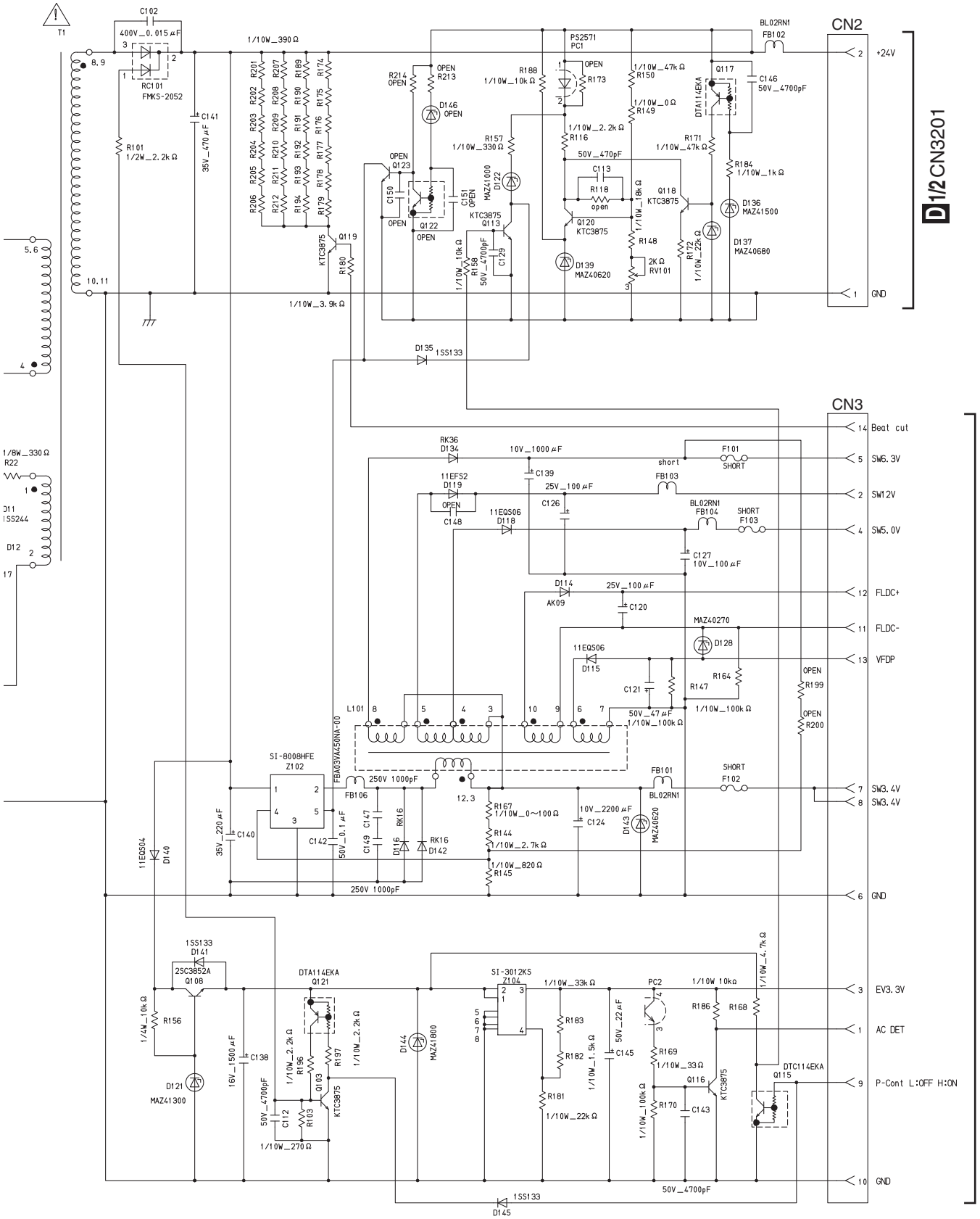

# 10.15 POWER SUPPLY UNIT(100W)

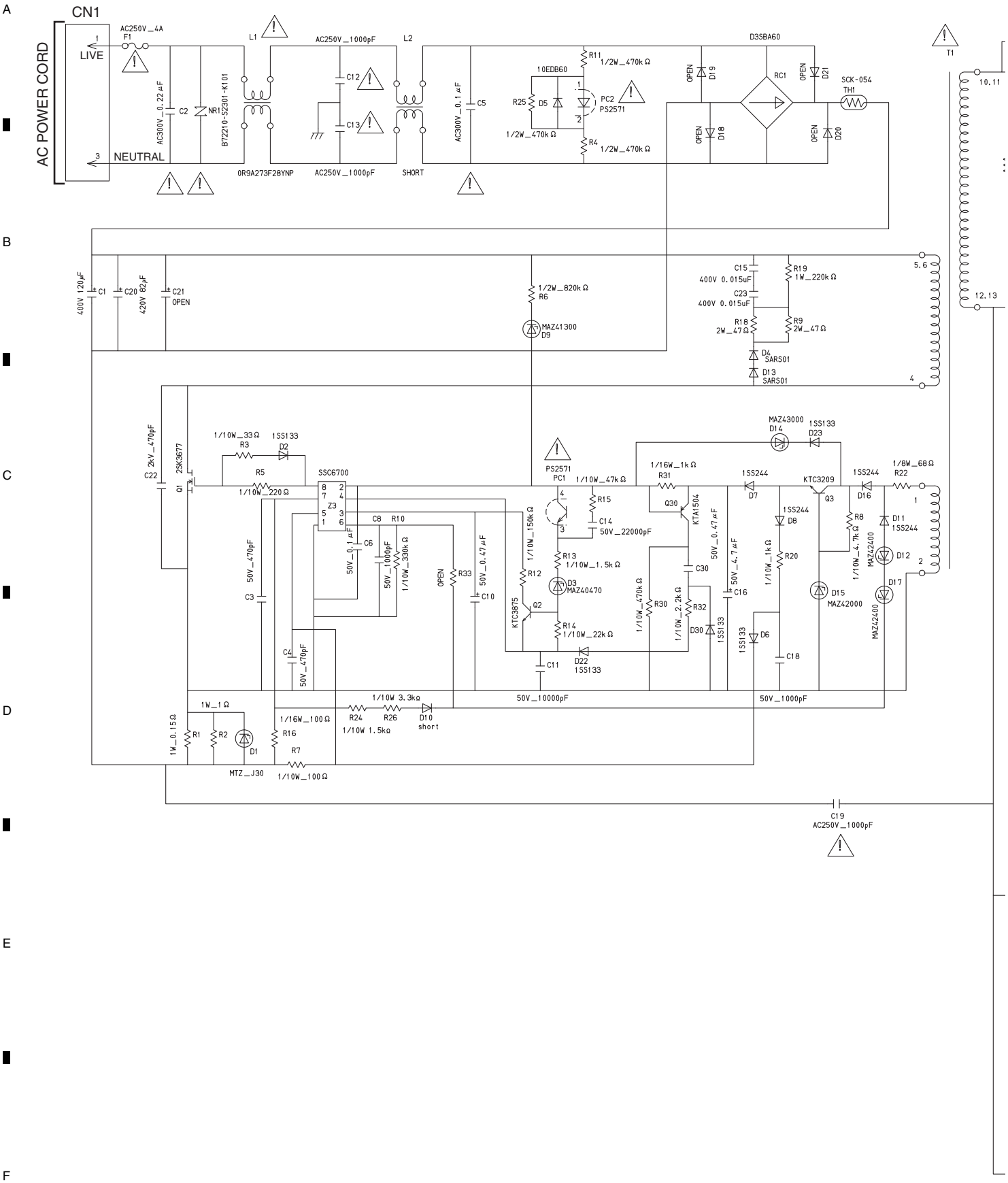

# H POWER SUPPLY UNIT
# (XV-DV30FS, XV-DV595K:XWR3021)

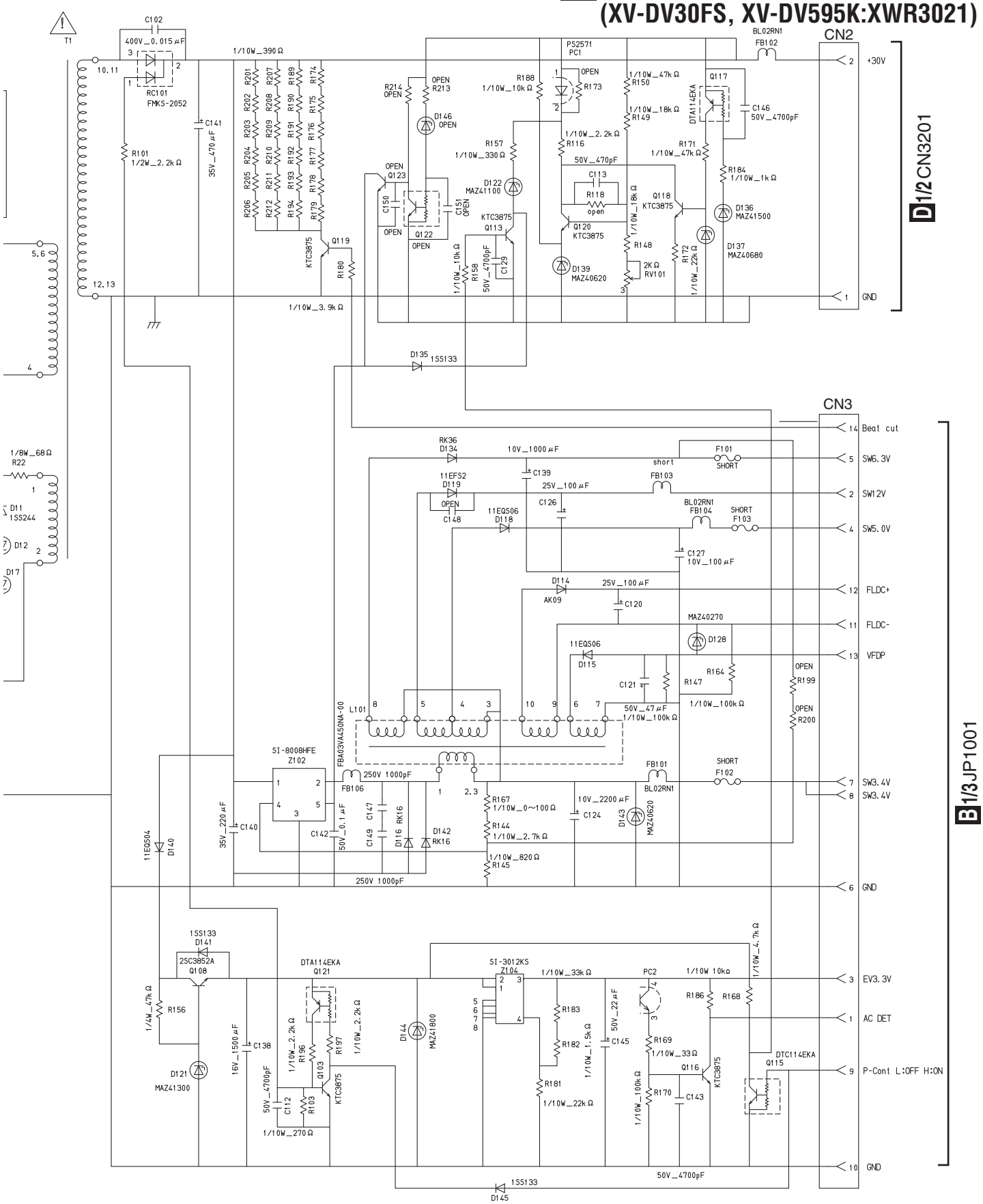

# 10.16 WAVEFORMS

Note : The encircled numbers denote measuring point in the schematic diagram.

## A 09 DVDM ASSY

**⓪ X201 [XTALO]**
V: 0.5 V/div. H: 10 ns/div.
It must be mesured by High-impedance probe.

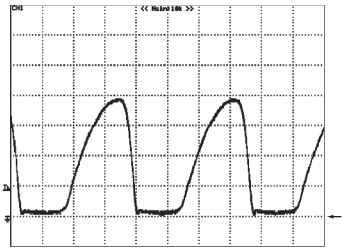


**⑤ IC201 - pin 215 [ASPDIF]**
V: 1 V/div. H: 200 ns/div.
It must be mesured by High-impedance probe.

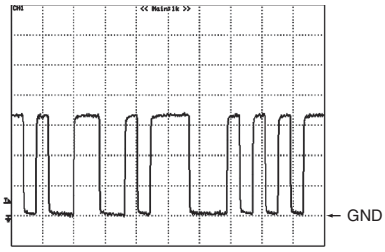


**⑩ IC401 - pin 18 [CbOUT]**
V: 0.5 V/div. H: 10 μs/div.
Playing DVD-REF-A1 Tr.2 Cp.19, Progressive output

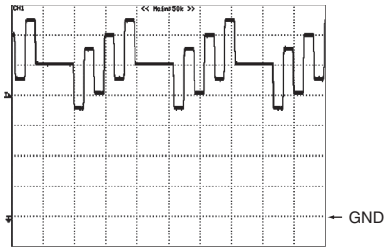


**① IC201 - pin 231 [ACLK]**
V: 0.5 V/div. H: 10 ns/div.
It must be mesured by High-impedance probe.

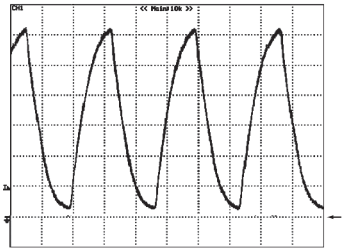


**⑥ IC401 - pin 23 [CVBSOUT]**
V: 0.5 V/div. H: 10 μs/div.
Playing DVD-REF-A1 Tr.2 Cp.1

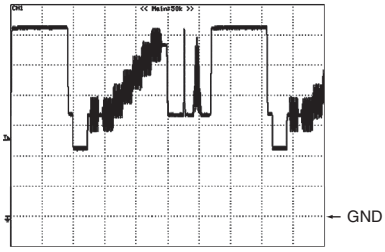


**⑪ IC401 - pin 16 [CrOUT]**
V: 0.5 V/div. H: 10 μs/div.
Playing DVD-REF-A1 Tr.2 Cp.19, Progressive output

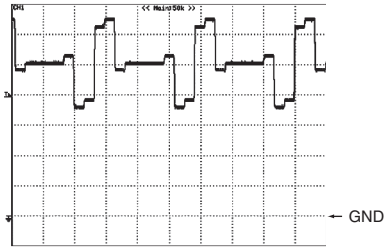


**② IC201 - pin 230 [ABCK]**
V: 0.5 V/div. H: 50 ns/div.
It must be mesured by High-impedance probe.

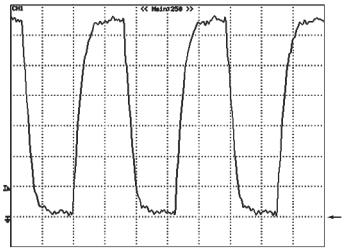


**⑦ IC401 - pin 21 [YOUT]**
V: 0.5 V/div. H: 10 μs/div.
Playing DVD-REF-A1 Tr.2 Cp.1

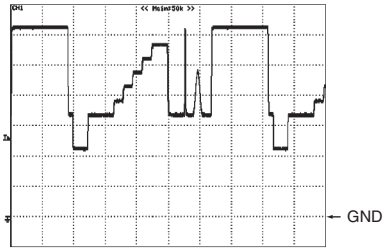


**⑫ IC201 - pin 38 [TROPEN]**
V: 2 V/div. H: 500 ms/div.
Tray closing

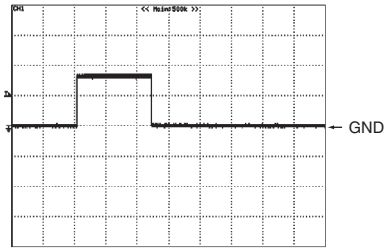


**③ IC201 - pin 227 [ALRCK]**
V: 1 V/div. H: 5 μs/div.
It must be mesured by High-impedance probe.

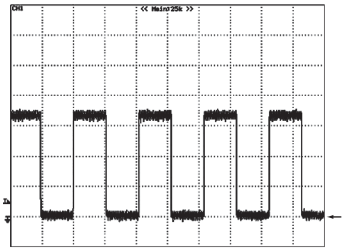


**⑧ IC401 - pin 26 [COUT]**
V: 0.5 V/div. H: 10 μs/div.
Playing DVD-REF-A1 Tr.2 Cp.1

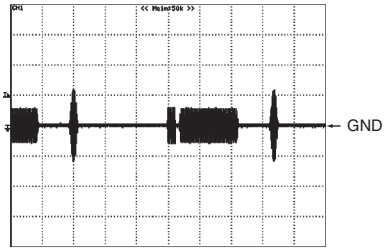


**⑬ IC201 - pin 202 [TRCLOSE]**
V: 2 V/div. H: 500 ms/div.
Tray opening

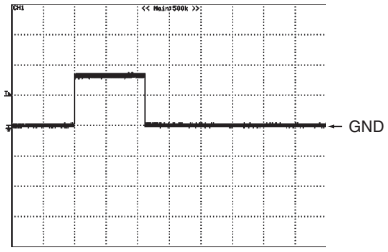


**④ IC201 - pin 226, 225, 223 [ASDATA0/1/2]**
V: 1 V/div. H: 500 ns/div.
It must be mesured by High-impedance probe.

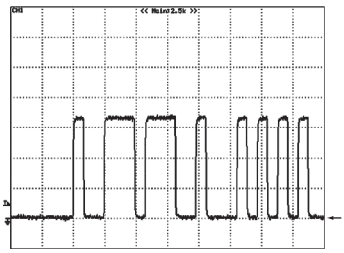


**⑨ IC401 - pin 20 [CYOUT]**
V: 0.5 V/div. H: 10 μs/div.
Playing DVD-REF-A1 Tr.2 Cp.19, Progressive output

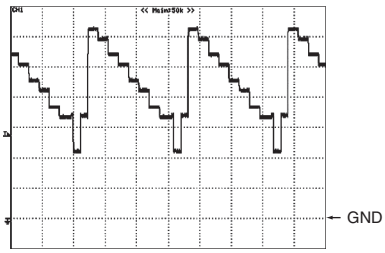

# D RHTS D-AMP ASSY

| ① IC3201, IC3301, IC3401 [PWM_M, PWM_P]<br>V: 1 V/div. H: 2 μsec/div. | ② IC3201, IC3301, IC3401 [OUT_A, B, C, D]<br>V: 5 V/div. H: 2 μsec/div. |
|---|---|
| 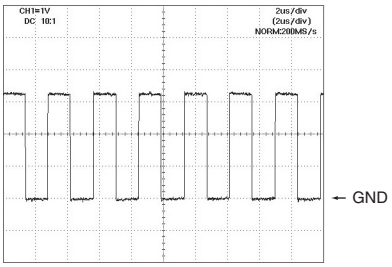 ← GND | 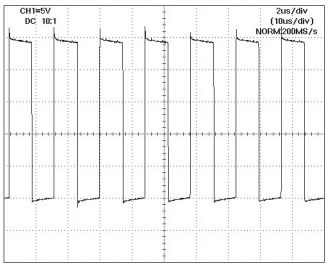 ← GND |

# 11. PCB CONNECTION DIAGRAM
## 11.1 09 DVDM and RHTS USB ASSYS

SIDE A

SIDE A

### NOTE FOR PCB DIAGRAMS :

1. The parts mounted on this PCB include all necessary parts for several destinations. For further information for respective destinations, be sure to check with the schematic diagram.

2. View point of PCB diagrams.

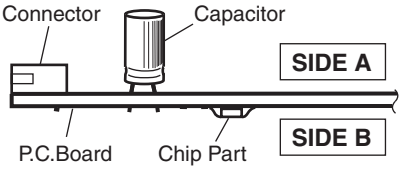


### A 09 DVDM ASSY

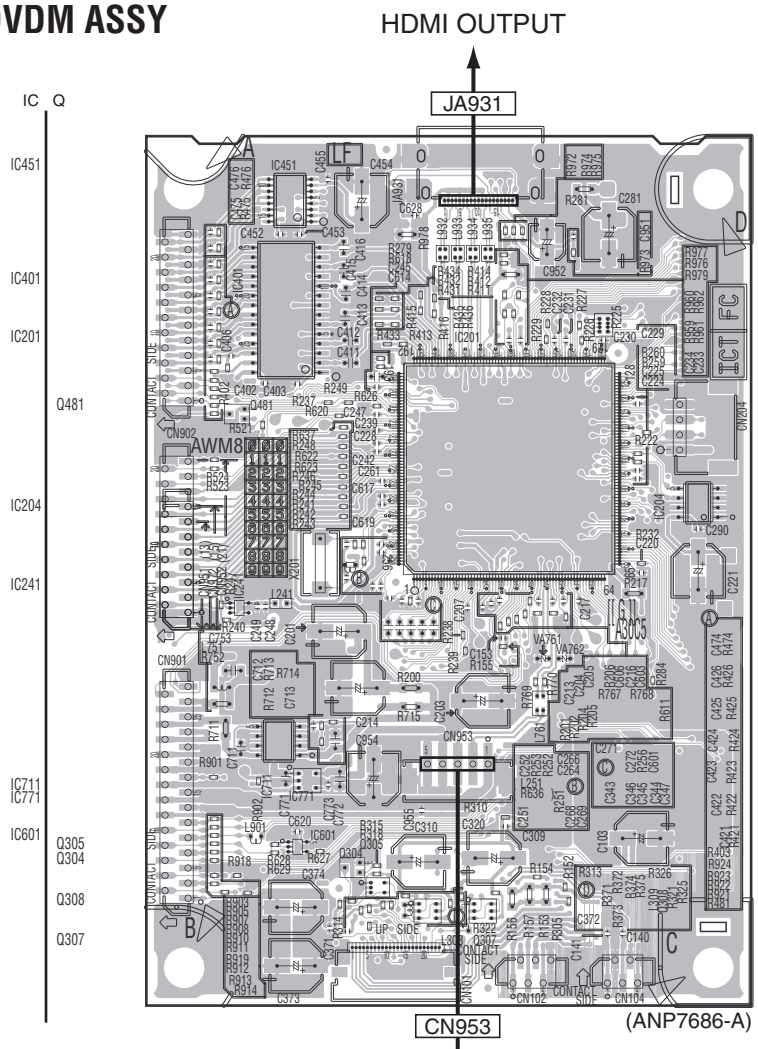


### C RHTS USB ASSY

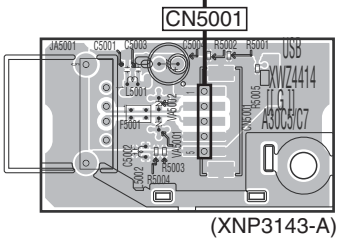

SIDE B

SIDE B

## A 09 DVDM ASSY

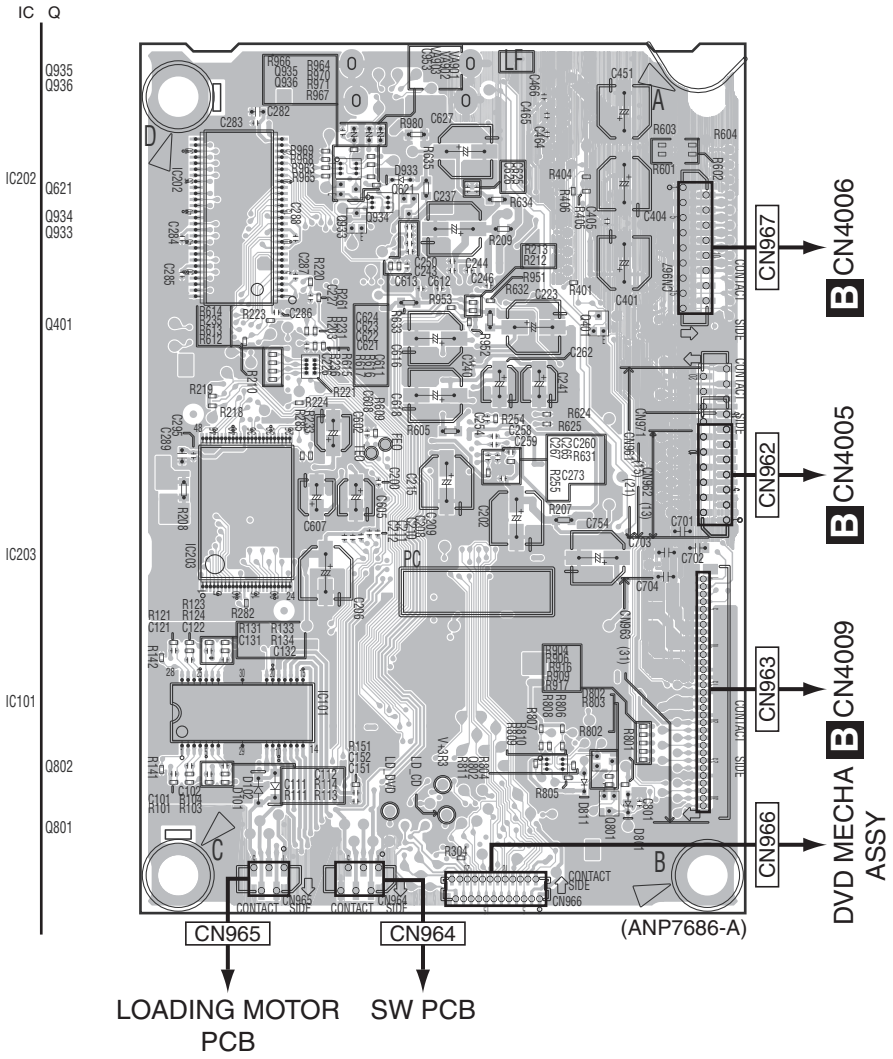


## C RHTS USB ASSY

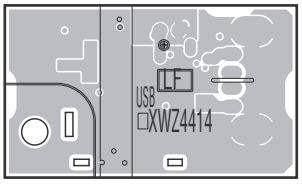


(XNP3143-A)

A C

A C

# 11.2 RHTS SYSMAIN ASSY

SIDE A

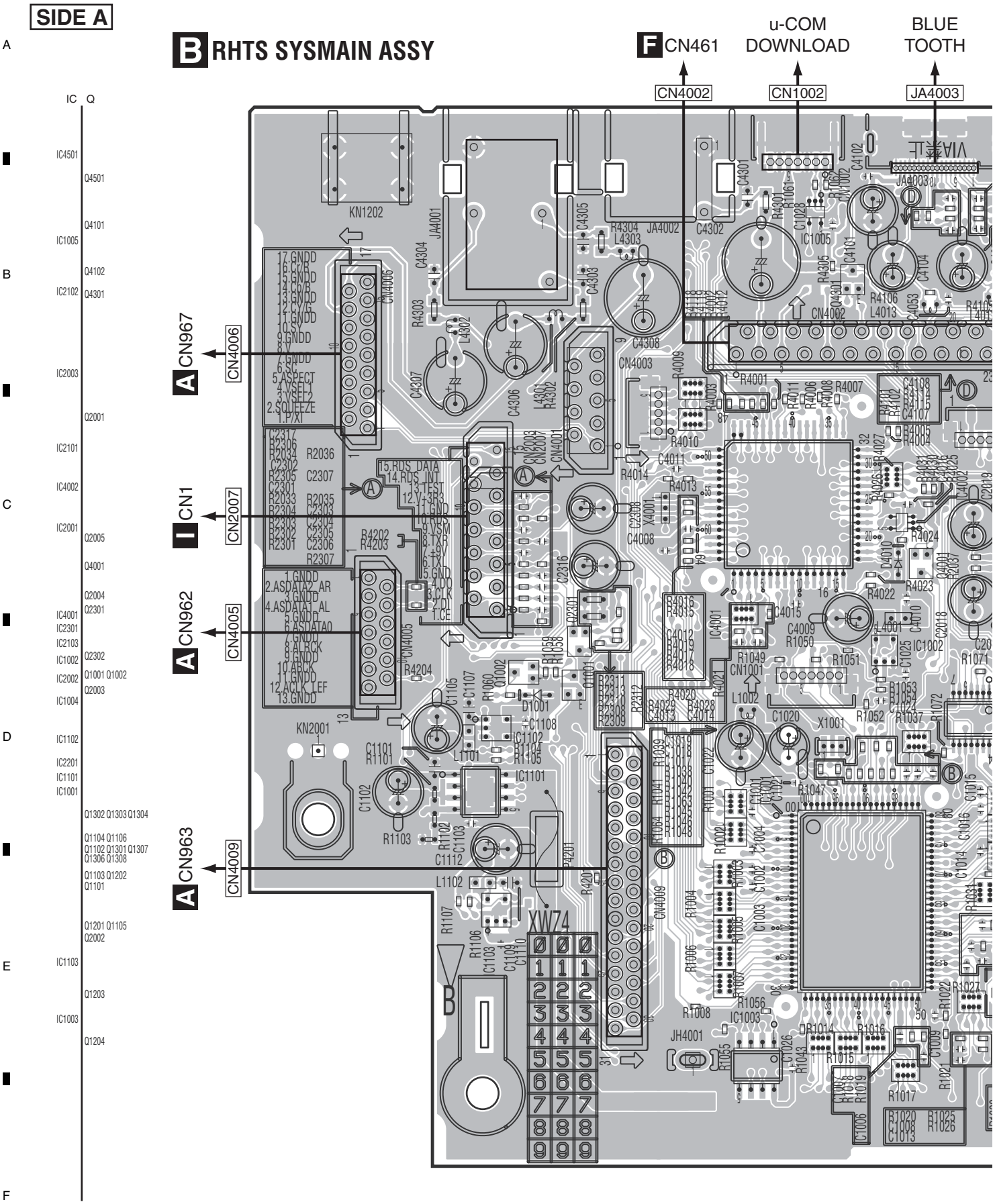

SIDE A

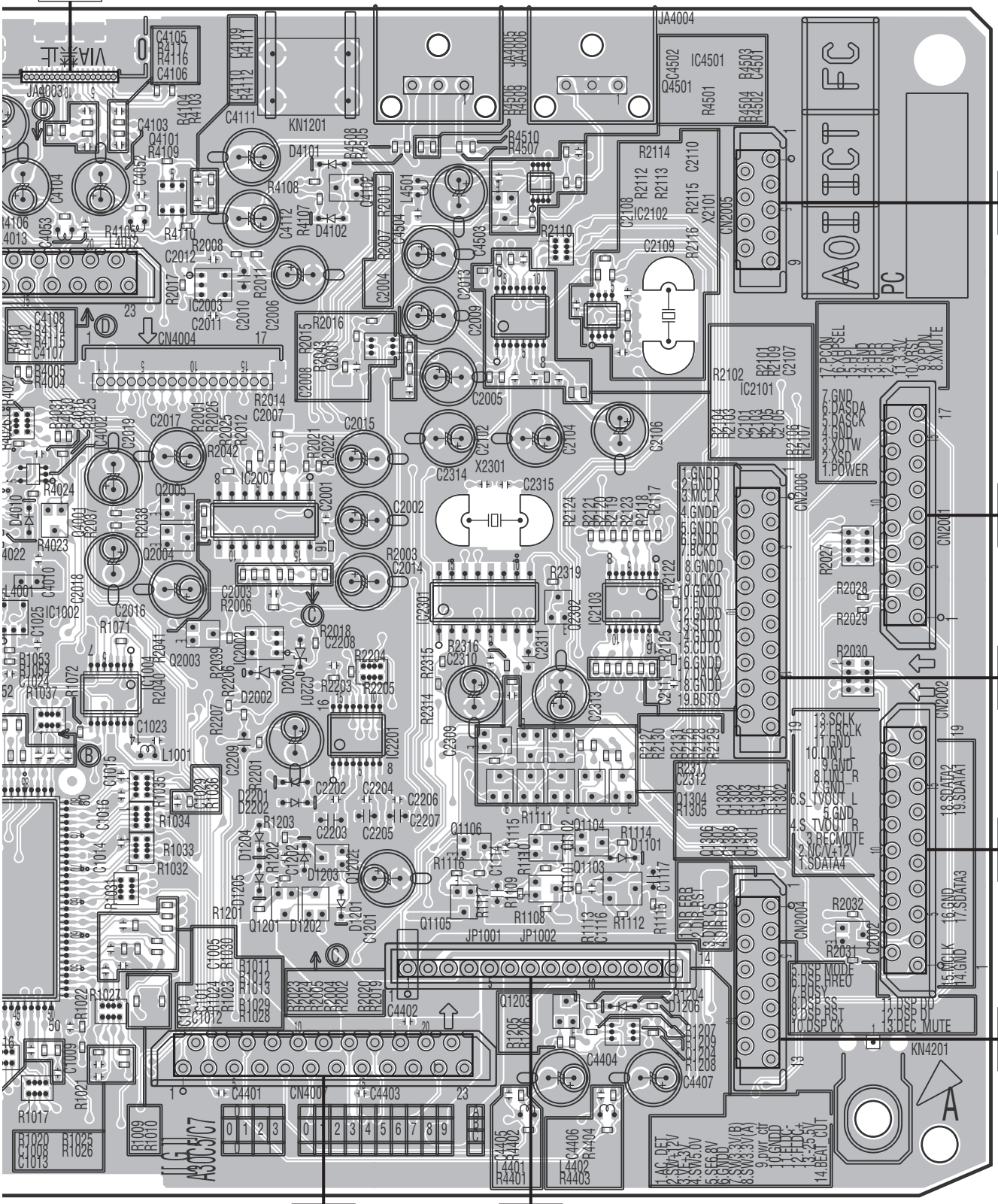
BLUE TOOTH
JA4003
JA4004
CN2005
G CN901
CN2001
D CN3101
CN2006
G CN701
CN2002
D CN3102
CN2004
G CN951
CN4007
E CN9401
JP1002
JP1001
H CN3
(XNP3143-A)
A30C3/07

SIDE B

# B RHTS SYSMAIN ASSY

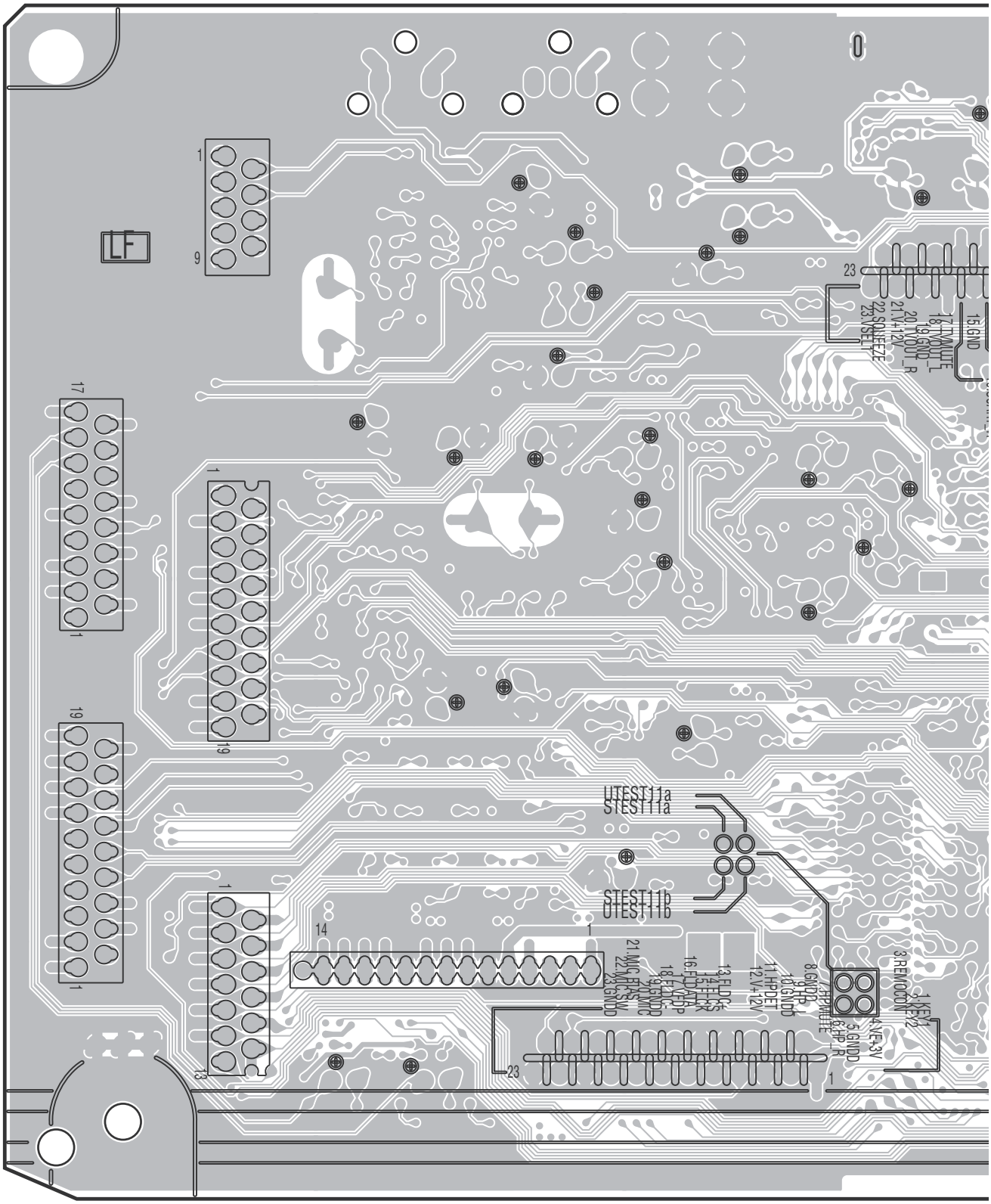


(XNP3143-A)

SIDE B

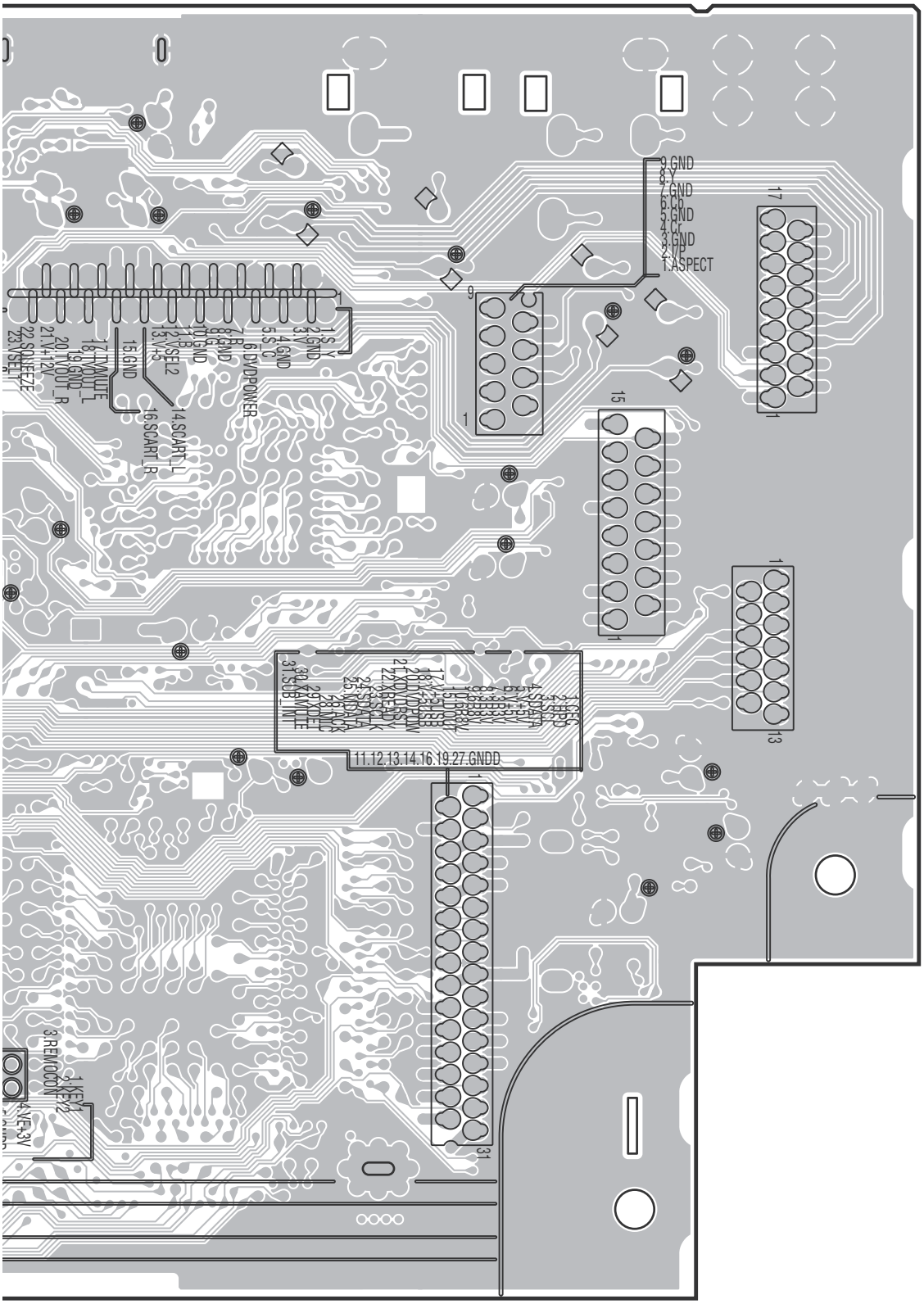
1.SY
2.GND
3.Y
4.GND
5.SC
6.DVDPOWER
7.R
8.GND
9.G
10.GND
11.B
12.VSEL2
13.VS
14.SCART_L
15.GND
16.SCART_R
17.TVMUTE
18.TVOUT_L
19.GND
20.TVOUT_R
21.V+12V
22.SQUEEZE
23.VSEL1
1.GND
2.Y
3.GND
4.Cb
5.GND
6.Cr
7.GND
8.VE
9.ASPECT
11.12.13.14.16.19.27.GNDD
31.SUB_IN
1.KEY1
2.KEY2
3.REMOCON
4.VE-3V

# 11.3 RHTS D-AMP ASSY

SIDE A

SIDE A

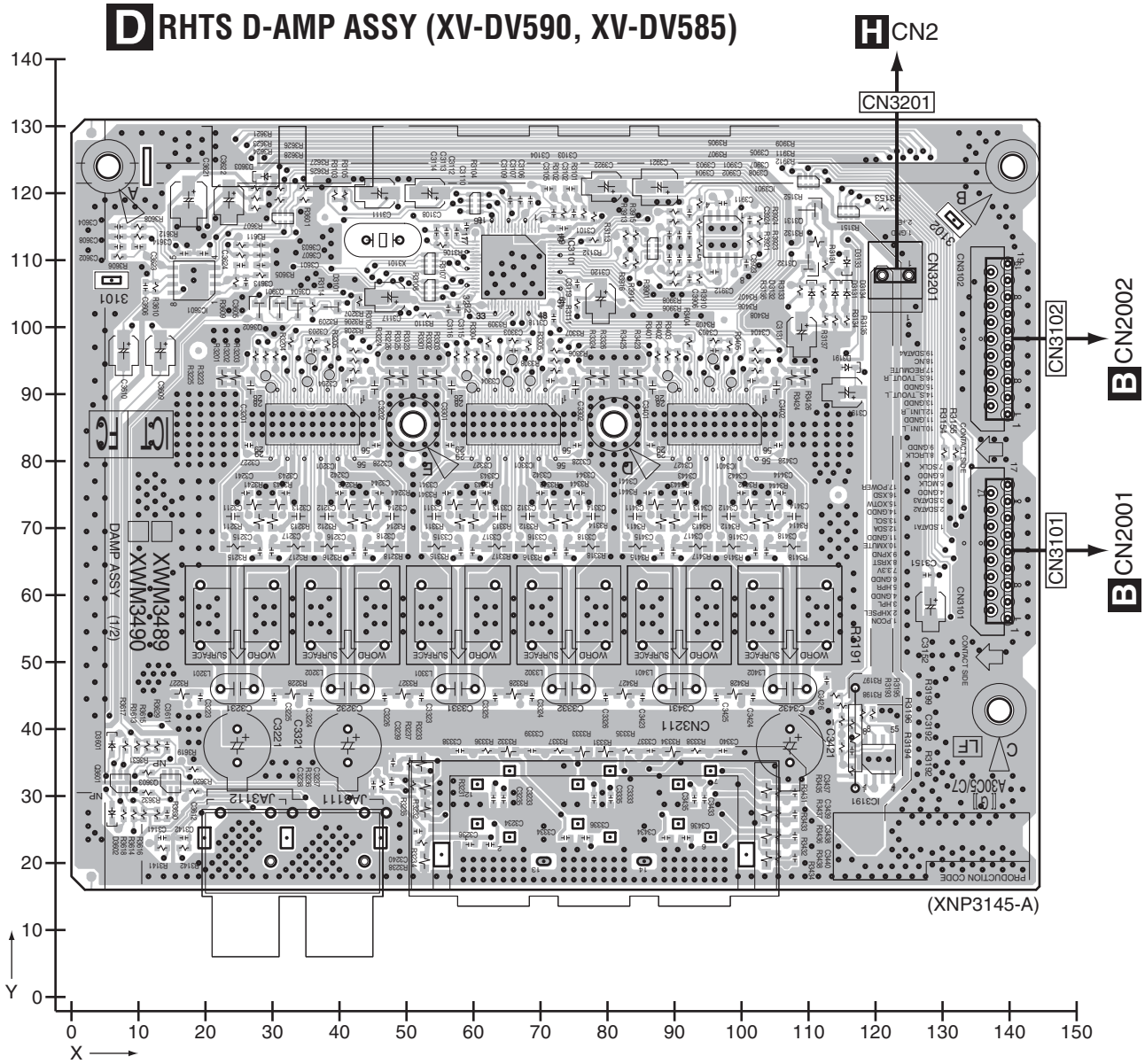

SIDE B

SIDE B

# D RHTS D-AMP ASSY (XV-DV590, XV-DV585)

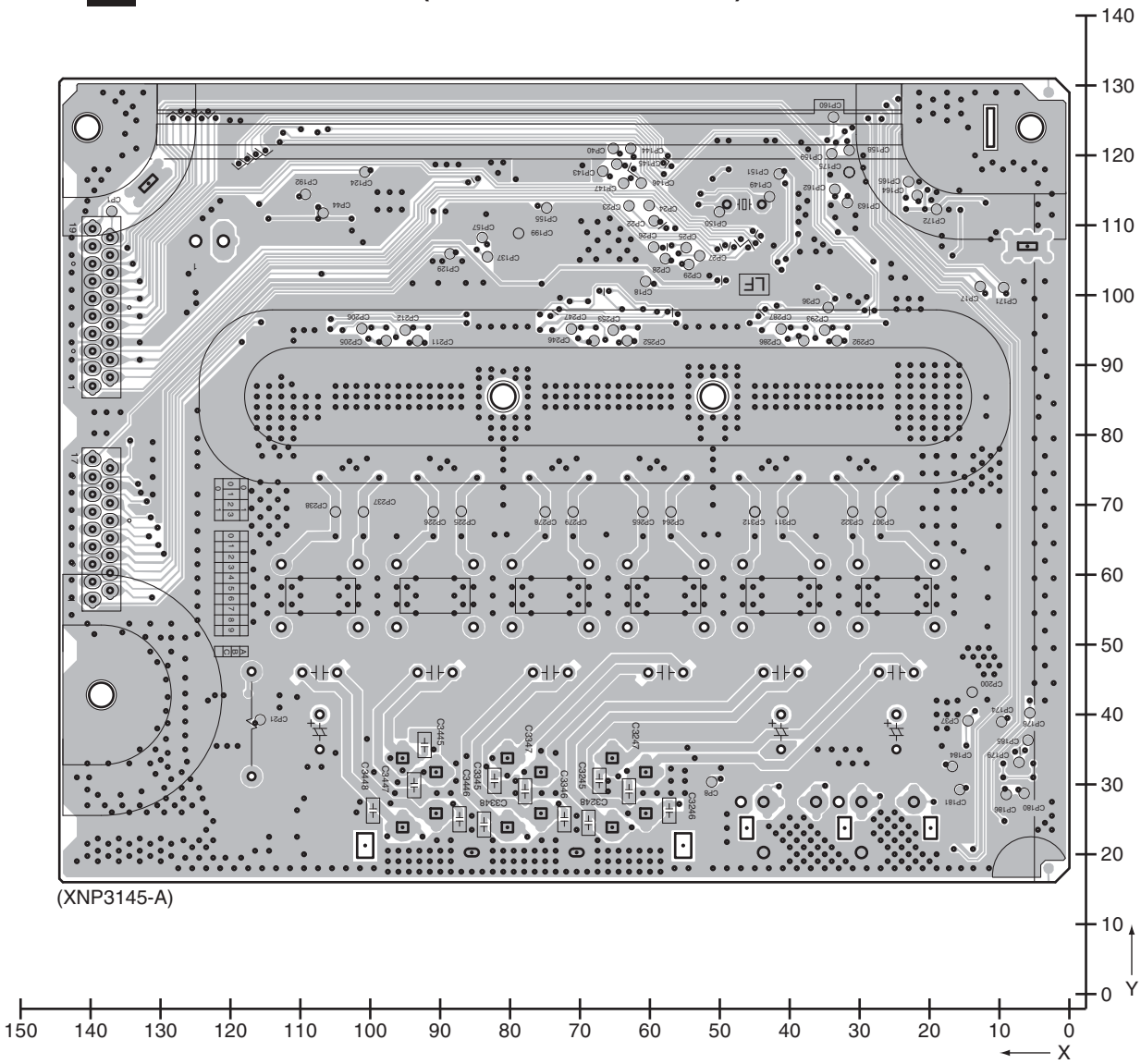


(XNP3145-A)

D

D

# 11.4 RHTS H-AMP ASSY

SIDE A

SIDE A

## D RHTS H-AMP ASSY (XV-DV30FS, XV-DV595K)

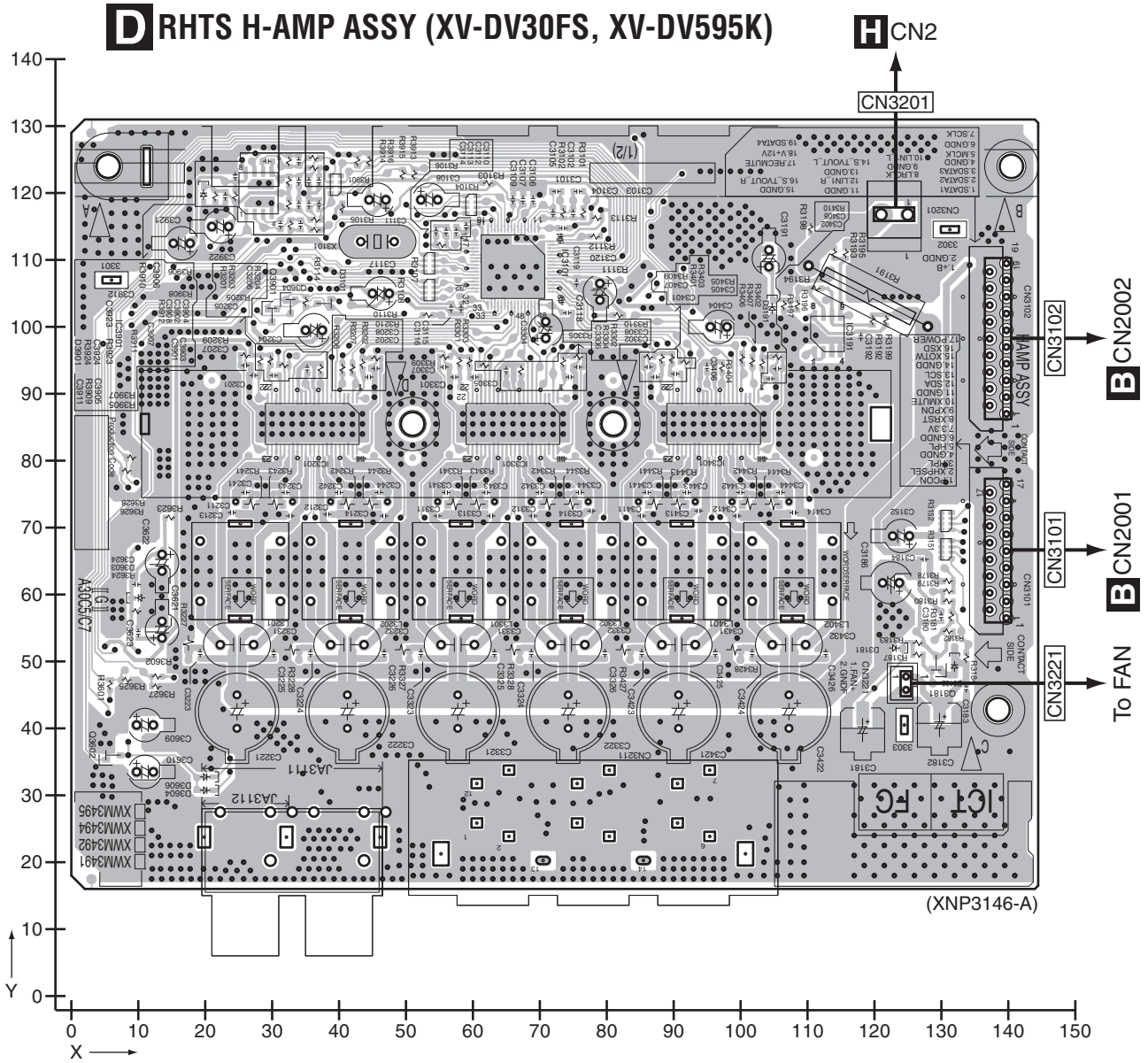

SIDE B

SIDE B

# D RHTS H-AMP ASSY (XV-DV30FS, XV-DV595K)

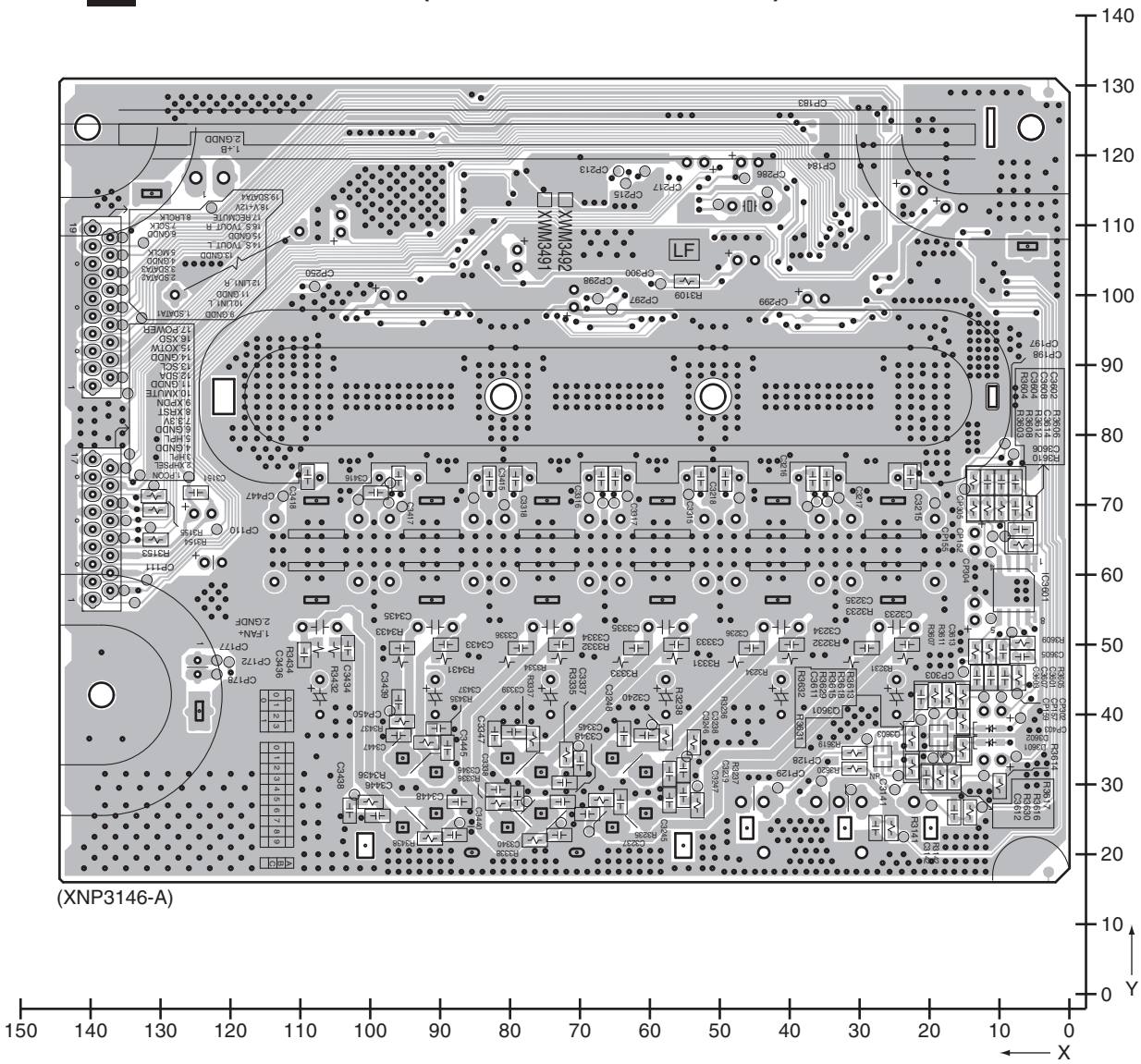

# 11.5 RHTS DISPLAY ASSY

**SIDE A**

## E RHTS DISPLAY ASSY

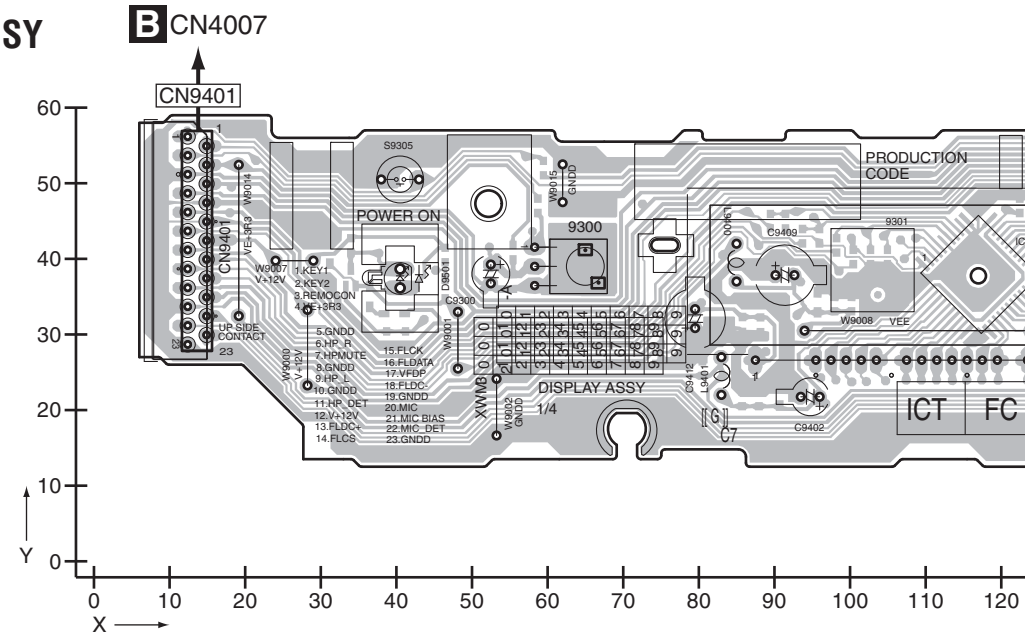


**SIDE B**

## E RHTS DISPLAY ASSY

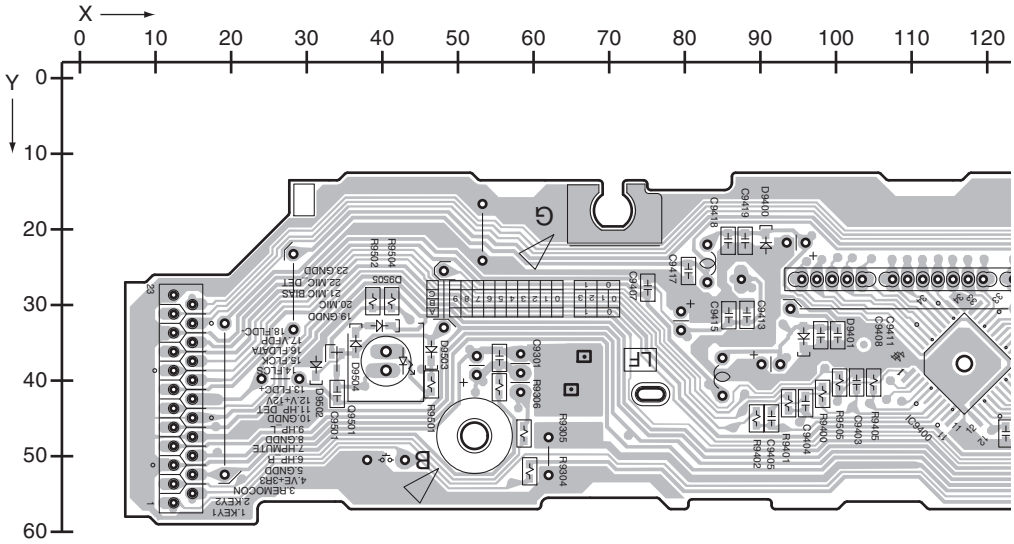

## SIDE A

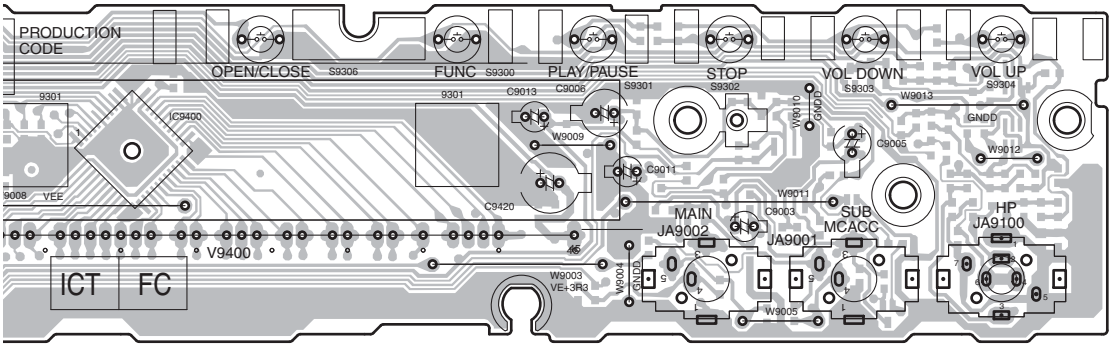


(XNP3144-B)

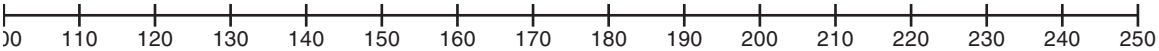


## SIDE B

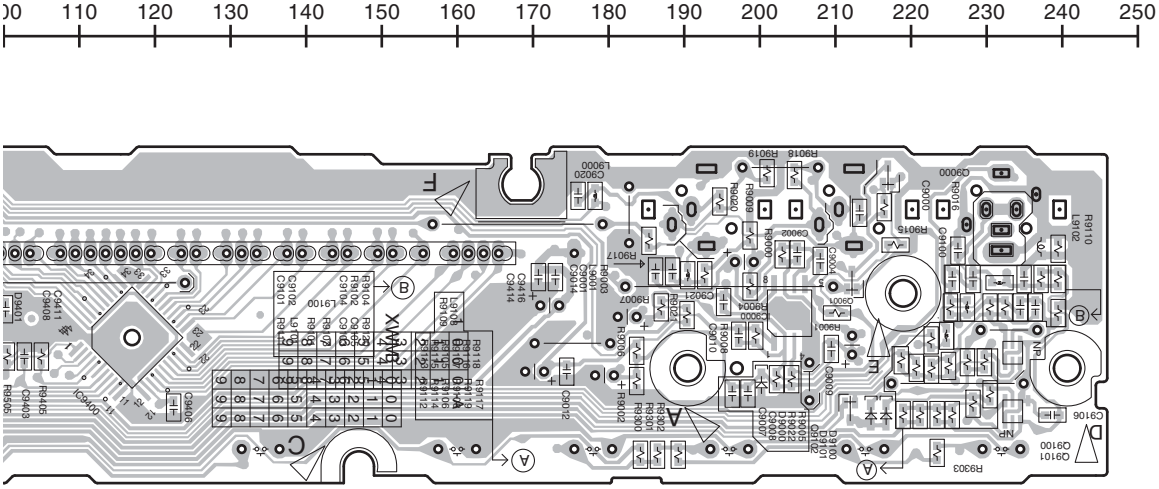


(XNP3144-B)

# 11.6 EUROSCART ASSY

SIDE A

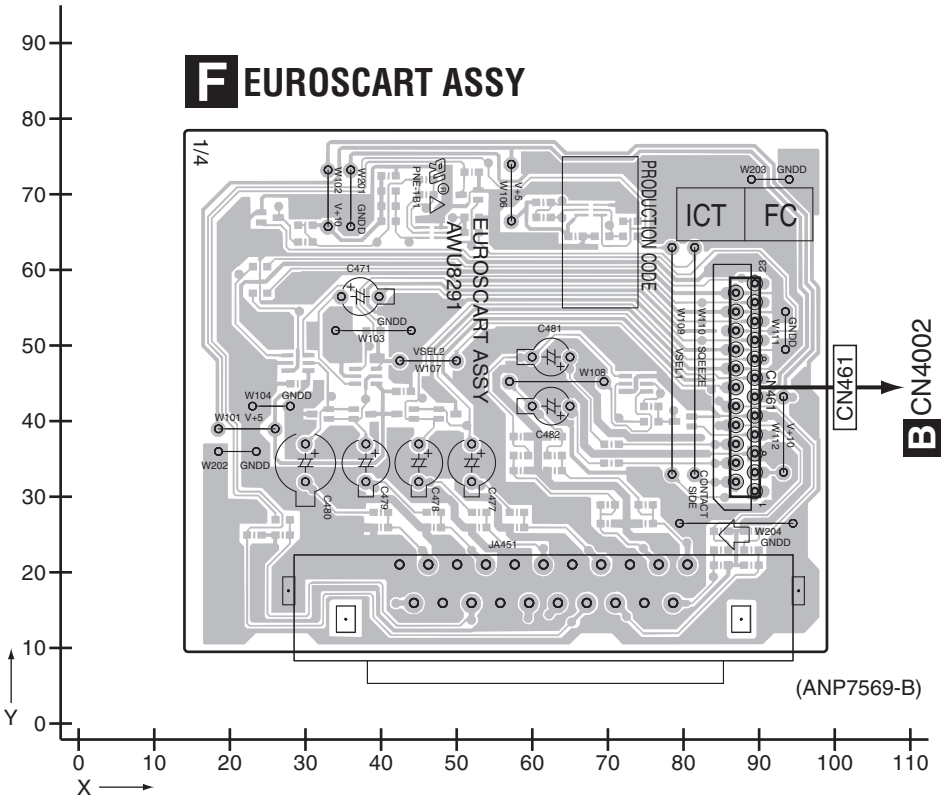


SIDE B

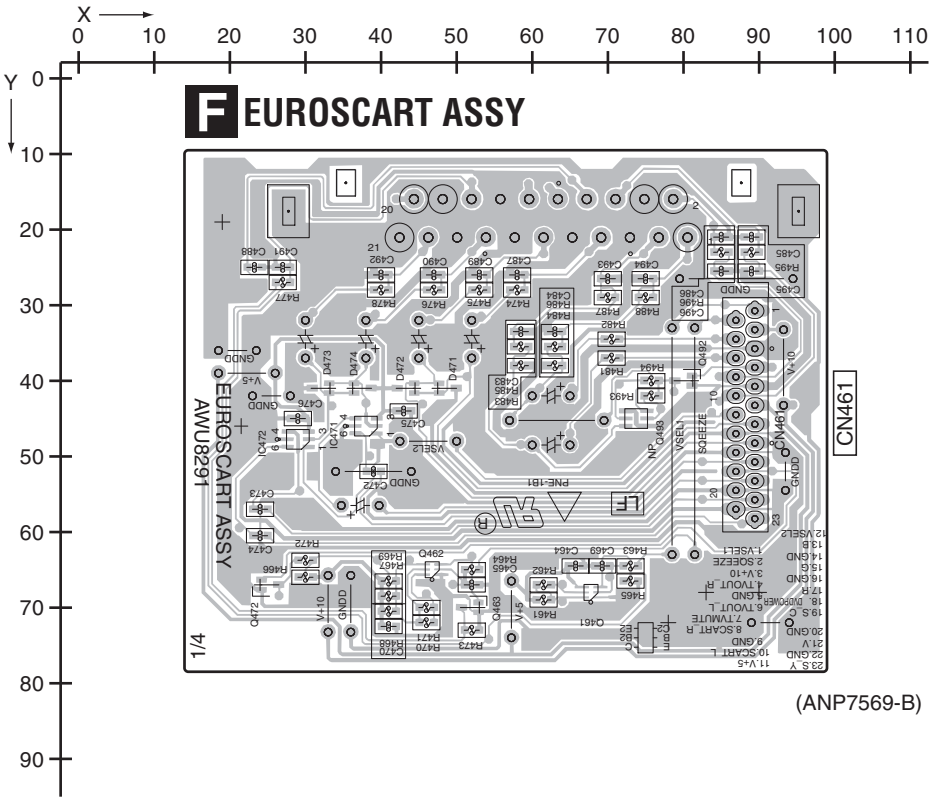

# 11.7 RHTS DSP ASSY

SIDE A

SIDE A

## G RHTS DSP ASSY

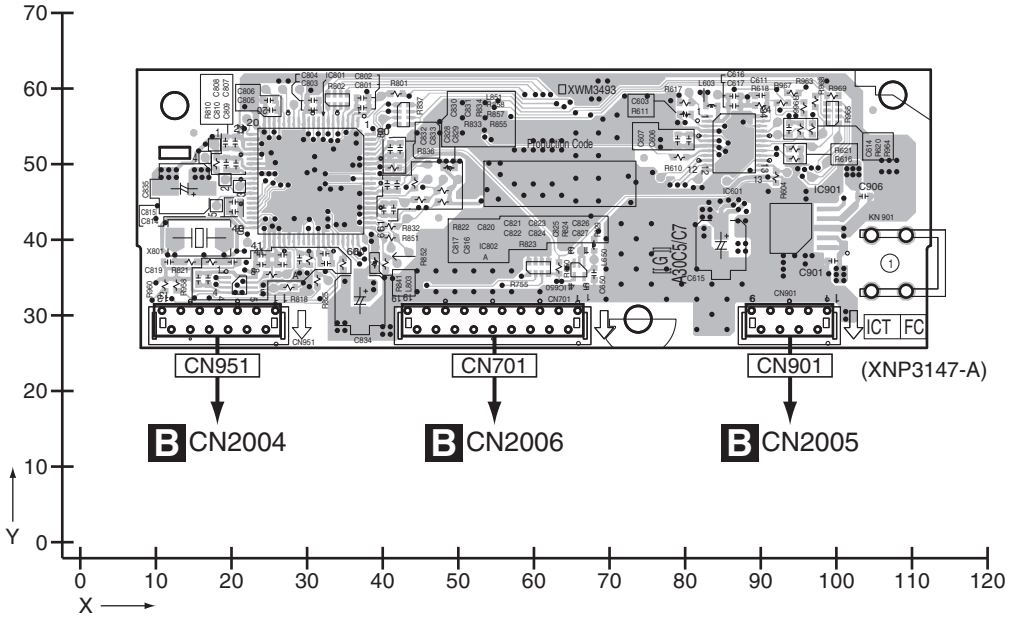


SIDE B

SIDE B

## G RHTS DSP ASSY

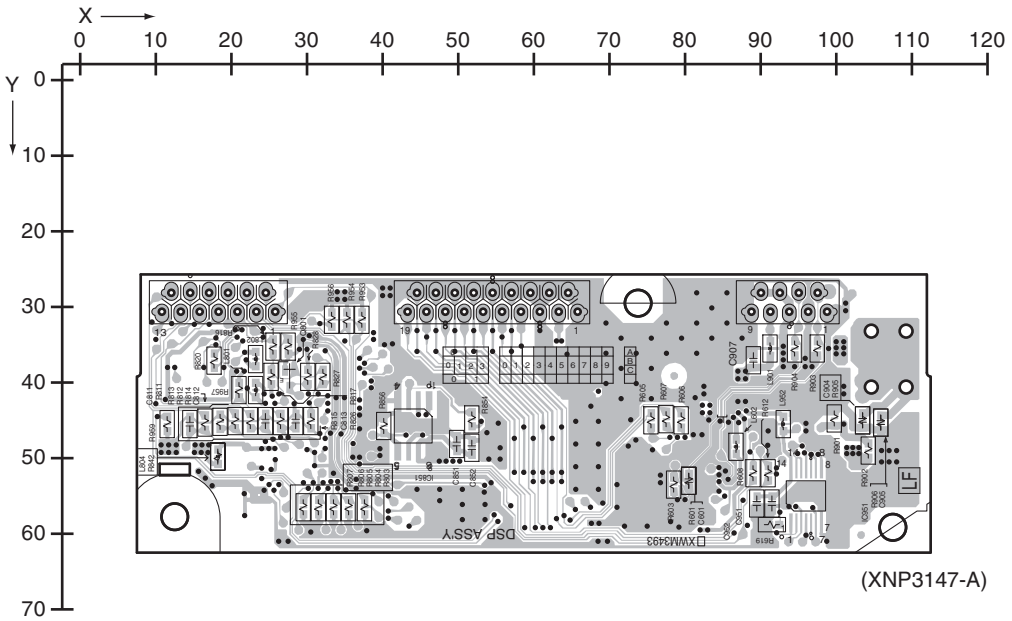


G

G

# 11.8 POWER SUPPLY UNIT

SIDE A

SIDE A

## H POWER SUPPLY ASSY

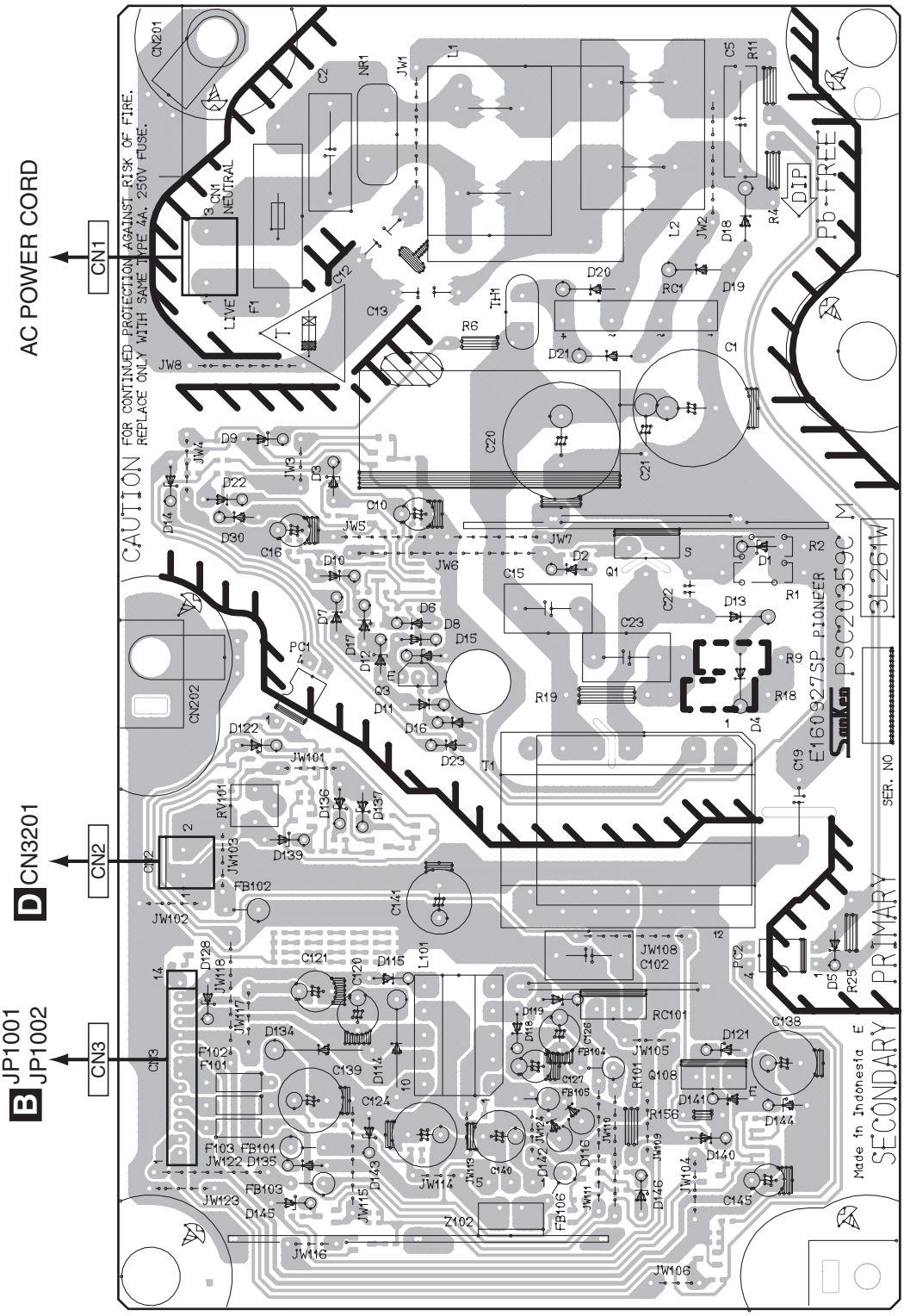

SIDE B

SIDE B

# H POWER SUPPLY ASSY

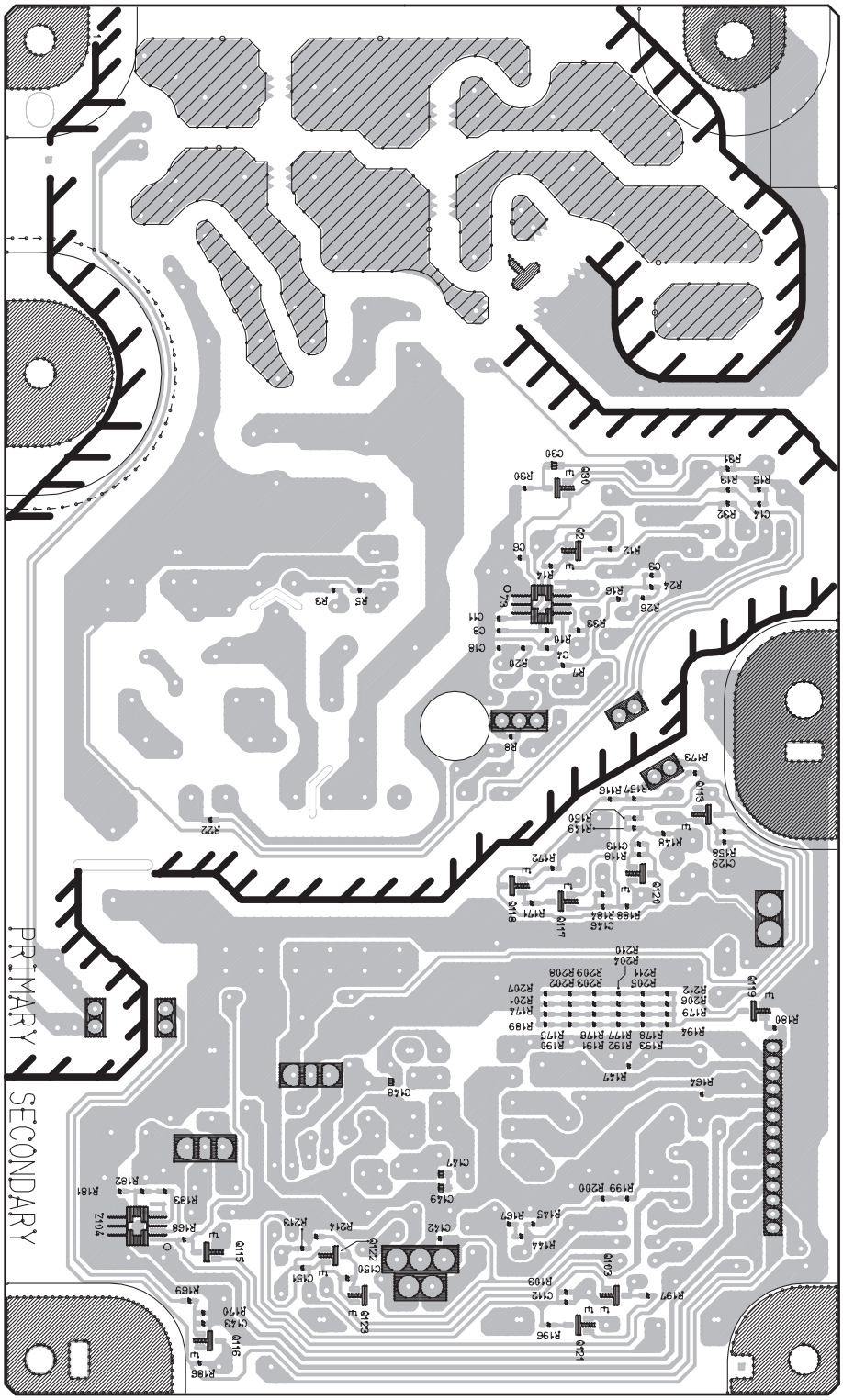

# 12. PCB PARTS LIST

*NOTES:* ● *Parts marked by "NSP" are generally unavailable because they are not in our Master Spare Parts List.*

● *The ⚠ mark found on some component parts indicates the importance of the safety factor of the part. Therefore, when replacing, be sure to use parts of identical designation.*

● *When ordering resistors, first convert resistance values into code form as shown in the following examples.*

*Ex.1 When there are 2 effective digits (any digit apart from 0), such as 560 ohm and 47 k ohm (tolerance is shown by J = 5%, and K = 10%).*

*560 Ω → 56 × $10^1$ → 561 ····· RD1/4PU 5 6 1 J*
*47 kΩ → 47 × $10^3$ → 473 ····· RD1/4PU 4 7 3 J*
*0.5 Ω → R50 ····· RN2H R 5 0 K*
*1 Ω → 1R0 ····· RS1P 1 R 0 K*

*Ex.2 When there are 3 effective digits (such as in high precision metal film resistors).*

*5.62 kΩ → 562 × $10^1$ → 5621 ····· RN1/4PC 5 6 2 1 F*

● *Meaning of the figures and others in the parentheses in the parts list.*

*Example) IC 301 is on the point (face A, 91 of x-axis, and 111 of y-axis) of the corresponding PC board.*
*IC 301 (A, 91, 111) IC NJM2068V*

## LIST OF ASSEMBLIES

| Mark | Symbol and Description | XV-DV590/YXJ5 | XV-DV585/YXJ5 | XV-DV30FS/YXJ5 | XV-DV595K/SXJ5 |
|---|---|---|---|---|---|
| NSP | 1..NHTS JACK ASSY | AWM8034 | AWM8034 | AWM8034 | AWM8034 |
| | 2..EUROSCART ASSY | AWU8291 | AWU8291 | AWU8291 | AWU8291 |
| | 1..09 DVDM ASSY | AWM8177 | AWM8177 | AWM8177 | AWM8134 |
| | 1..RHTS DISPLAY ASSY | XWM3487 | XWM3487 | XWM3488 | XWM3484 |
| | 1..RHTS D-AMP ASSY | XWM3489 | XWM3489 | Not used | Not used |
| | 1..RHTS H-AMP ASSY | Not used | Not used | XWM3495 | XWM3494 |
| | 1..RHTS DSP ASSY | XWM3493 | XWM3493 | XWM3493 | XWM3493 |
| | 1..RHTS MAIN ASSY | XWM3503 | XWM3502 | XWM3504 | XWM3507 |
| | 2..RHTS USB ASSY | XWZ4414 | XWZ4414 | XWZ4414 | XWZ4414 |
| | 2..RHTS SYSMAIN ASSY | XWZ4432 | XWZ4431 | XWZ4433 | XWZ4436 |
| ⚠ | 1..POWER SUPPLY UNIT | XWR3020 | XWR3020 | XWR3021 | XWR3021 |
| | 1..FM/AM TUNER UNIT | XXX3085 | XXX3085 | XXX3085 | XXX3085 |

## CONTRAST OF PCB ASSEMBLIES

### A 09 DVDM ASSY

AWM8177 and AWM8134 are constructed the same except for the following:

| Mark | Symbol and Description | AWM8177 | AWM8134 |
|---|---|---|---|
| | IC241 | Not used | TC7SH08FUS1 |
| | L241 | Not used | QTL1013 |
| | CN962 | Not used | VKN1472 |
| | R240-R242,R244-R246 | Not used | RS1/16SS330J |
| | R243 | Not used | RS1/16SS100J |
| | C248 | Not used | CKSSYB104K16 |
| | C249 | Not used | CCSSCH471J16 |

## PCB PARTS LIST FOR XV-DV590/YXJ5 UNLESS OTHER WISE NOTED

| Mark | No. | Description | Part No. |
|---|---|---|---|
| **A** | | **09 DVDM ASSY** | |
| | | **SEMICONDUCTORS** | |
| | IC 101 | | BA5984FP |
| | IC 201 | | MT1389FE/S-L |
| | IC 202 | | K4S641632N-LC75 |
| | IC 203 | | AYW7274 |
| | IC 204 | | S-24CS64A0I |

| Mark | No. | Description | Part No. |
|---|---|---|---|
| | IC 401 | | MM1758XF |
| | IC 601 | | TC7SH08FUS1 |
| | IC 711 | | MM1661JH |
| | IC 771 | | NJM2872BF05 |
| | Q 304,801 | | 2SC4081 |
| | Q 305 | | UM5K1N |
| | Q 307,308 | | HN1A01F |
| | Q 481,933 | | DTC114YUA |
| | Q 621 | | 2SK2034 |
| | Q 802 | | HN1A01FU |
| | Q 934 | | UMB1N |
| | D 101,102 | | RR264M-400 |
| | D 801 | | UDZS4R7(B) |
| | D 802 | | DAN202U |
| | D 811 | | 1SS352 |
| | D 933 | | UDZS5R1(B) |

**MISCELLANEOUS**

| | | | |
|---|---|---|---|
| | L 751 | INDUCTOR | CTF1395 |
| | L 761 | COIL | VTH1054 |
| | L 901 | INDUCTOR | CTF1334 |
| | L 932-935 | COIL | ATH7064 |
| | JA 931 | HDMI CONNECTOR | AKP7224 |
| | X 201 | CRYSTAL RESONATOR | VSS1172 |
| | CN 953 | CONNECTOR | AKM1276 |
| | CN 963 | 31P CONNECTOR | VKN1435 |
| | CN 964 | 06P CONNECTOR | VKN1574 |
| | CN 965 | 05P CONNECTOR | VKN1573 |
| | CN 966 | CONNECTOR | VKN2045 |
| | CN 967 | 17P CONNECTOR | VKN1577 |

**RESISTORS**

| | | | |
|---|---|---|---|
| | R 103,113,114,201 | | RS1/16SS1202F |
| | R 104 | | RS1/16SS1002F |
| | R 123,133 | | RS1/16SS3302F |
| | R 124,134 | | RS1/16SS2702F |
| | R 153,156,157 | | RS1/8SQ3R3J |
| | R 202 | | RS1/16SS8201F |
| | R 205,206 | | RS1/16SS1502F |
| | R 208,209,281,634 | | RS1/8SQ0R0J |
| | R 221,225 | | RAB4CQ330J |
| | R 279 | | RS1/16SS2201F |
| | R 411-416 | | RS1/16SS1500F |
| | R 617 | | RS1/16SS2701F |
| | R 636 | | RS1/10SR0R0J |
| | R 715,752,978-980 | | RS1/8SQ0R0J |
| | Other Resistors | | RS1/16SS###J |

**CAPACITORS**

| | | | |
|---|---|---|---|
| | C 103,373,401,404 | | CEVW101M16 |
| | C 151,200,204,205 | | CKSSYB104K16 |
| | C 152,153,210 | | CKSSYB222K50 |
| | C 201,202,223,237 | | CEVW221M4 |
| | C 203,206,215,309 | | CEVW470M16 |
| | C 207,208,213,216 | | CKSSYB104K16 |
| | C 209 | | CKSSYB153K16 |
| | C 211,212 | | CCSSCH271J50 |
| | C 217,220,224,225 | | CKSSYB104K16 |
| | C 226,240,283-288 | | CKSSYB103K16 |
| | C 227 | | CCSSCH221J50 |
| | C 228-234,239,243 | | CKSSYB104K16 |
| | C 241,602,607,952 | | CEVW100M16 |
| | C 242 | | CKSSYB152K50 |
| | C 244,246,247,250 | | CKSSYB104K16 |
| | C 245,282,289 | | CKSRYB105K10 |
| | C 251,252 | | CCSSCH100D50 |
| | C 254,267,295,608 | | CKSSYB102K50 |
| | C 258,259 | | CKSSYB473K16 |
| | C 260,261,264,266 | | CKSSYB104K16 |
| | C 262,605 | | CEVW4R7M16 |
| | C 265 | | CCSSCH220J50 |
| | C 268,271-273,290 | | CKSSYB104K16 |
| | C 269 | | CKSSYB333K10 |
| | C 281,618 | | CEVW221M4 |
| | C 310,616,627 | | CEVW470M16 |
| | C 343-347,412-414 | | CKSRYB105K10 |
| | C 371,372,402,405 | | CKSSYB104K16 |
| | C 406,601,603,606 | | CKSSYB104K16 |
| | C 411,415,416 | | CKSRYB104K16 |
| | C 611 | | CKSSYB562K25 |
| | C 612,613,617 | | CKSSYB104K16 |
| | C 614 | | CCSSCH101J50 |
| | C 619-621,623,625 | | CKSSYB104K16 |
| | C 622,624,626 | | CKSSYB102K50 |
| | C 628,773,801,951 | | CKSSYB104K16 |
| | C 711,771 | | CKSRYB105K10 |
| | C 712 | | CCSSCH471J16 |
| | C 713,772 | | CKSQYB225K10 |

## B RHTS SYSMAIN ASSY (XWZ4432)

**SEMICONDUCTORS**

| | | | |
|---|---|---|---|
| | IC 1001 | | AYW7271 |
| | IC 1002 | | PST8228N |
| | IC 1003 | | S-93C46BD0I-J8T1 |
| | IC 1004 | | TC74VHC125FTS1 |
| | IC 1005,4002 | | TC7SH08FUS1 |
| ⚠ | IC 1101 | | MM1665XH |
| | IC 1102 | | BD6538G |
| | IC 1103 | | AAT4618IGV-0.5-1 |
| | IC 2001 | | TC4052BFN |
| | IC 2002 | | TC4S66F |
| | IC 2101 | | AK5358AET |
| | IC 4001 | | PDC189A8 |
| | Q 1001,1201,4102 | | LTA124EUB |
| | Q 1002,4001 | | SSM3K15FU |
| | Q 1105,1203 | | LSA1576UB |
| | Q 1106,1202,1301-1304 | | LTC124EUB |
| | Q 1204 | | HN1C01FU |
| | Q 2001 | | HN1A01FU |
| | Q 2003-2005,4301 | | LTC124EUB |
| | Q 2301 | | LSC4081UB |
| | Q 4101 | | IMX9 |
| | D 1001 | | RB751V-40 |
| | D 1201,1204,1205 | | 1SS352 |
| | D 1202,1301 | | MC2846-11 |

**MISCELLANEOUS**

| | | | |
|---|---|---|---|
| | L 1101,1102 | CHIP SOLID INDUCTOR | ATL7002 |
| | L 4001 | CHIP SOLID INDUCTOR | QTL1013 |
| | L 4401,4402 | INDUCTOR | CTF1346 |
| | L 4501 | INDUCTOR | CTF1379 |

| Mark | No. | Description | Part No. |
|---|---|---|---|
| | JA 4002 | JACK | XKB3069 |
| | JA 4003 | CONNECTOR | CKS5712 |
| | JA 4004 | OPT. LINK IN | GP1FAV51RKBF |
| | KN 1201 | SCREW PLATE | VNE1948 |
| | X 1001 | CERAMIC RESONATOR (20 MHz) | VSS1186 |
| | X 4001 | CERAMIC RESONATOR (12 MHz) | VSS1216 |
| | CN 1002 | 07P CONNECTOR | RKN1048 |
| | CN 2001 | CONNECTOR | 9604S-17C |
| | CN 2002 | CONNECTOR | 9604S-19C |
| | CN 2004 | 13P PLUG | XKM3004 |
| | CN 2005 | 9P PLUG | XKM3008 |
| | CN 2006 | 19P PLUG | XKM3005 |
| | CN 2007 | CONNECTOR | 9604S-15C |
| | CN 4002,4007 | CONNECTOR | 9604S-23C |
| | CN 4006 | 17P CONNECTOR | VKN1248 |
| | CN 4009 | 31P CONNECTOR | VKN1262 |
| | JH 4001 | PCB BINDER | VEF1040 |
| | JP 1001 | CONNECTOR ASSY | PF14PG-C10 |

**RESISTORS**

| | | | |
|---|---|---|---|
| | R 1001-1007,1014-1017 | | RAB4CQ101J |
| | R 1027,1031,1033-1035 | | RAB4CQ101J |
| | R 1037,2110,4010,4020 | | RAB4CQ101J |
| | R 1101 | | RS1/10SR1001F |
| | R 1102 | | RS1/10SR2700F |
| | R 1103 | | RS1/10SR2701F |
| | R 2311 | | RS1/8SQ182J |
| | R 2313 | | RS1/8SQ152J |
| | R 4009 | | RAB4CQ104J |
| | R 4301 | | RS1/8SQ75R0F |
| | Other Resistors | | RS1/16SS###J |

**CAPACITORS**

| | | | |
|---|---|---|---|
| | C 1001,2306 | | CCSSCH101J50 |
| | C 1002,1003,1005 | | CKSSYB103K16 |
| | C 1006,2307,4402,4403 | | CKSSYB102K50 |
| | C 1007-1017,1019,1021 | | CKSSYB103K16 |
| | C 1020 | | CEAL1R0M50 |
| | C 1022,4009 | | CEAT101M10 |
| | C 1023,1026,1028,1103 | | CKSSYB104K10 |
| | C 1024,2001,2107,4011 | | CKSSYB103K16 |
| | C 1101,1107,1110,2209 | | CKSRYB105K10 |
| | C 1105,1112,1201,2009 | | CEAT100M50 |
| | C 1108,1109,2004,2008 | | CKSSYB104K10 |
| | C 2002 | | CEAT470M10 |
| | C 2005,4101,4404,4407 | | CEAT101M16 |
| | C 2006 | | CEAT221M6R3 |
| | C 2013-2019,2104,2106 | | CEAT100M50 |
| | C 2101,2103,2105,4008 | | CKSSYB104K10 |
| | C 2102 | | CEAT2R2M50 |
| | C 2308,2316 | | CEAT470M35 |
| | C 4010,4015,4016,4102 | | CKSSYB104K10 |
| | C 4013,4014 | | CCSSCH220J50 |
| | C 4052,4053,4109,4110 | | CCSSCH221J50 |
| | C 4111,4112 | | CEAT100M50 |
| | C 4302 | | CEAT102M6R3 |
| | C 4502,4504 | | CKSSYB104K10 |
| | C 4503 | | CEAT101M16 |

## B RHTS SYSMAIN ASSY (XWZ4431)

**SEMICONDUCTORS**

| | | | |
|---|---|---|---|
| | IC 1001 | | AYW7271 |
| | IC 1002 | | PST8228N |
| | IC 1003 | | S-93C46BD0I-J8T1 |
| | IC 1004 | | TC74VHC125FTS1 |
| | IC 1005,4002 | | TC7SH08FUS1 |
| ⚠ | IC 1101 | | MM1665XH |
| | IC 1102 | | BD6538G |
| | IC 1103 | | AAT4618IGV-0.5-1 |
| | IC 2001 | | TC4052BFN |
| | IC 2002 | | TC4S66F |
| | IC 2101 | | AK5358AET |
| | IC 4001 | | PDC189A8 |
| | Q 1001,1201,4102 | | LTA124EUB |
| | Q 1002,4001 | | SSM3K15FU |
| | Q 1105,1203 | | LSA1576UB |
| | Q 1106,1202,1301-1304 | | LTC124EUB |
| | Q 1204 | | HN1C01FU |
| | Q 2001 | | HN1A01FU |
| | Q 2003-2005,4301 | | LTC124EUB |
| | Q 2301 | | LSC4081UB |
| | Q 4101 | | IMX9 |
| | D 1001 | | RB751V-40 |
| | D 1201,1204,1205 | | 1SS352 |
| | D 1202,1301 | | MC2846-11 |

**MISCELLANEOUS**

| | | | |
|---|---|---|---|
| | L 1101,1102 | CHIP SOLID INDUCTOR | ATL7002 |
| | L 4001 | CHIP SOLID INDUCTOR | QTL1013 |
| | L 4401,4402 | INDUCTOR | CTF1346 |
| | L 4501 | INDUCTOR | CTF1379 |
| | JA 4002 | JACK | XKB3069 |
| | JA 4003 | CONNECTOR | CKS5712 |
| | JA 4004 | OPT. LINK IN | GP1FAV51RKBF |
| | KN 1201 | SCREW PLATE | VNE1948 |
| | X 1001 | CERAMIC RESONATOR (20 MHz) | VSS1186 |
| | X 4001 | CERAMIC RESONATOR (12 MHz) | VSS1216 |
| | CN 1002 | 07P CONNECTOR | RKN1048 |
| | CN 2001 | CONNECTOR | 9604S-17C |
| | CN 2002 | CONNECTOR | 9604S-19C |
| | CN 2004 | 13P PLUG | XKM3004 |
| | CN 2005 | 9P PLUG | XKM3008 |
| | CN 2006 | 19P PLUG | XKM3005 |
| | CN 2007 | CONNECTOR | 9604S-15C |
| | CN 4002,4007 | CONNECTOR | 9604S-23C |
| | CN 4006 | 17P CONNECTOR | VKN1248 |
| | CN 4009 | 31P CONNECTOR | VKN1262 |
| | JH 4001 | PCB BINDER | VEF1040 |
| | JP 1001 | CONNECTOR ASSY | PF14PG-C10 |

**RESISTORS**

| | | | |
|---|---|---|---|
| | R 1001-1007,1014-1017 | | RAB4CQ101J |
| | R 1027,1031,1033-1035 | | RAB4CQ101J |
| | R 1037,2110,4010,4020 | | RAB4CQ101J |
| | R 1101 | | RS1/10SR1001F |
| | R 1102 | | RS1/10SR2700F |
| | R 1103 | | RS1/10SR2701F |

| Mark | No. | Description | Part No. |
|---|---|---|---|
| | R 2311 | | RS1/8SQ182J |
| | R 2313 | | RS1/8SQ152J |
| | R 4009 | | RAB4CQ104J |
| | R 4301 | | RS1/8SQ75R0F |
| | Other Resistors | | RS1/16SS###J |

**CAPACITORS**

| | | | |
|---|---|---|---|
| | C 1001,2306 | | CCSSCH101J50 |
| | C 1002,1003,1005 | | CKSSYB103K16 |
| | C 1006,2307,4402,4403 | | CKSSYB102K50 |
| | C 1007-1017,1019,1021 | | CKSSYB103K16 |
| | C 1020 | | CEAL1R0M50 |
| | C 1022,4009 | | CEAT101M10 |
| | C 1023,1026,1028,1103 | | CKSSYB104K10 |
| | C 1024,2001,2107,4011 | | CKSSYB103K16 |
| | C 1101,1107,1110,2209 | | CKSRYB105K10 |
| | C 1105,1112,1201,2009 | | CEAT100M50 |
| | C 1108,1109,2004,2008 | | CKSSYB104K10 |
| | C 2002 | | CEAT470M10 |
| | C 2005,4101,4404,4407 | | CEAT101M16 |
| | C 2006 | | CEAT221M6R3 |
| | C 2013-2019,2104,2106 | | CEAT100M50 |
| | C 2101,2103,2105,4008 | | CKSSYB104K10 |
| | C 2102 | | CEAT2R2M50 |
| | C 2308,2316 | | CEAT470M35 |
| | C 4010,4015,4016,4102 | | CKSSYB104K10 |
| | C 4013,4014 | | CCSSCH220J50 |
| | C 4052,4053,4109,4110 | | CCSSCH221J50 |
| | C 4111,4112 | | CEAT100M50 |
| | C 4302 | | CEAT102M6R3 |
| | C 4502,4504 | | CKSSYB104K10 |
| | C 4503 | | CEAT101M16 |

## B RHTS SYSMAIN ASSY (XWZ4433)

**SEMICONDUCTORS**

| | | | |
|---|---|---|---|
| | IC 1001 | | AYW7271 |
| | IC 1002 | | PST8228N |
| | IC 1003 | | S-93C46BD0I-J8T1 |
| | IC 1004 | | TC74VHC125FTS1 |
| | IC 1005,4002 | | TC7SH08FUS1 |
| ⚠ | IC 1101 | | MM1665XH |
| | IC 1102 | | BD6538G |
| | IC 1103 | | AAT4618IGV-0.5-1 |
| | IC 2001 | | TC4052BFN |
| | IC 2101 | | AK5358AET |
| | IC 4001 | | PDC189A8 |
| | Q 1001,1201,4102 | | LTA124EUB |
| | Q 1002,4001 | | SSM3K15FU |
| | Q 1105,1203 | | LSA1576UB |
| | Q 1106,1202,1301-1304 | | LTC124EUB |
| | Q 1204 | | HN1C01FU |
| | Q 2001 | | HN1A01FU |
| | Q 2004,2005,4301 | | LTC124EUB |
| | Q 2301 | | LSC4081UB |
| | Q 4101 | | IMX9 |
| | D 1001 | | RB751V-40 |
| | D 1201,1204,1205 | | 1SS352 |
| | D 1202,1301 | | MC2846-11 |

**MISCELLANEOUS**

| | | | |
|---|---|---|---|
| | L 1101,1102 | CHIP SOLID INDUCTOR | ATL7002 |
| | L 4001 | CHIP SOLID INDUCTOR | QTL1013 |
| | L 4401,4402 | INDUCTOR | CTF1346 |
| | L 4501 | INDUCTOR | CTF1379 |
| | JA 4002 | JACK | XKB3069 |
| | JA 4003 | CONNECTOR | CKS5712 |
| | JA 4004 | OPT. LINK IN | GP1FAV51RKBF |
| | JA 4006 | OPT. LINK IN | GP1FAV51TK0F |
| | KN 1201 | SCREW PLATE | VNE1948 |
| | X 1001 | CERAMIC RESONATOR (20 MHz) | VSS1186 |
| | X 4001 | CERAMIC RESONATOR (12 MHz) | VSS1216 |
| | CN 1002 | 07P CONNECTOR | RKN1048 |
| | CN 2001 | CONNECTOR | 9604S-17C |
| | CN 2002 | CONNECTOR | 9604S-19C |
| | CN 2004 | 13P PLUG | XKM3004 |
| | CN 2005 | 9P PLUG | XKM3008 |
| | CN 2006 | 19P PLUG | XKM3005 |
| | CN 2007 | CONNECTOR | 9604S-15C |
| | CN 4002,4007 | CONNECTOR | 9604S-23C |
| | CN 4006 | 17P CONNECTOR | VKN1248 |
| | CN 4009 | 31P CONNECTOR | VKN1262 |
| | JH 4001 | PCB BINDER | VEF1040 |
| | JP 1001 | CONNECTOR ASSY | PF14PG-C10 |

**RESISTORS**

| | | | |
|---|---|---|---|
| | R 1001-1007,1014-1017 | | RAB4CQ101J |
| | R 1027,1031,1033-1035 | | RAB4CQ101J |
| | R 1037,2110,4010,4020 | | RAB4CQ101J |
| | R 1101 | | RS1/10SR1001F |
| | R 1102 | | RS1/10SR2700F |
| | R 1103 | | RS1/10SR2701F |
| | R 2311 | | RS1/8SQ182J |
| | R 2313 | | RS1/8SQ152J |
| | R 4009 | | RAB4CQ104J |
| | R 4301 | | RS1/8SQ75R0F |
| | Other Resistors | | RS1/16SS###J |

**CAPACITORS**

| | | | |
|---|---|---|---|
| | C 1001,2306 | | CCSSCH101J50 |
| | C 1002,1003,1007-1017 | | CKSSYB103K16 |
| | C 1006,2307,4402,4403 | | CKSSYB102K50 |
| | C 1019,1021,1024,2001 | | CKSSYB103K16 |
| | C 1020 | | CEAL1R0M50 |
| | C 1022,4009 | | CEAT101M10 |
| | C 1023,1026,1028,1103 | | CKSSYB104K10 |
| | C 1101,1107,1110 | | CKSRYB105K10 |
| | C 1105,1112,1201,2009 | | CEAT100M50 |
| | C 1108,1109,2004,2008 | | CKSSYB104K10 |
| | C 2002 | | CEAT470M10 |
| | C 2005,4101,4404,4407 | | CEAT101M16 |
| | C 2006 | | CEAT221M6R3 |
| | C 2013-2019,2104,2106 | | CEAT100M50 |
| | C 2101,2103,2105,4008 | | CKSSYB104K10 |
| | C 2102 | | CEAT2R2M50 |
| | C 2107,4011 | | CKSSYB103K16 |
| | C 2308,2316 | | CEAT470M35 |
| | C 4010,4015,4016,4102 | | CKSSYB104K10 |
| | C 4013,4014 | | CCSSCH220J50 |
| | C 4052,4053,4109,4110 | | CCSSCH221J50 |
| | C 4111,4112 | | CEAT100M50 |

| Mark | No. | Description | Part No. |
|---|---|---|---|
| | C 4302 | | CEAT102M6R3 |
| | C 4502,4504 | | CKSSYB104K10 |
| | C 4503 | | CEAT101M16 |

# B RHTS SYSMAIN ASSY (XWZ4436)

## SEMICONDUCTORS

| Mark | No. | Description | Part No. |
|---|---|---|---|
| | IC 1001 | | AYW7271 |
| | IC 1002 | | PST8228N |
| | IC 1003 | | S-93C46BD0I-J8T1 |
| | IC 1004 | | TC74VHC125FTS1 |
| | IC 1005,4002 | | TC7SH08FUS1 |
| ⚠ | IC 1101 | | MM1665XH |
| | IC 1102 | | BD6538G |
| | IC 1103 | | AAT4618IGV-0.5-1 |
| | IC 2001 | | TC4052BFN |
| | IC 2002 | | TC4S66F |
| | IC 2101,2201 | | AK5358AET |
| | IC 2103 | | TC74VHC157FTS1 |
| | IC 4001 | | PDC189A8 |
| | Q 1001,1201,4102 | | LTA124EUB |
| | Q 1002,4001 | | SSM3K15FU |
| | Q 1105,1203 | | LSA1576UB |
| | Q 1106,1202,1301-1304 | | LTC124EUB |
| | Q 1204 | | HN1C01FU |
| | Q 2001 | | HN1A01FU |
| | Q 2003-2005,4301 | | LTC124EUB |
| | Q 2301 | | LSC4081UB |
| | Q 4101 | | IMX9 |
| | D 1001 | | RB751V-40 |
| | D 1201,1204,1205 | | 1SS352 |
| | D 1202,1301 | | MC2846-11 |

## MISCELLANEOUS

| Mark | No. | Description | Part No. |
|---|---|---|---|
| | L 1101,1102 | CHIP SOLID INDUCTOR | ATL7002 |
| | L 4001 | CHIP SOLID INDUCTOR | QTL1013 |
| | L 4401,4402 | INDUCTOR | CTF1346 |
| | L 4501 | INDUCTOR | CTF1379 |
| | JA 4002 | JACK | XKB3069 |
| | JA 4003 | CONNECTOR | CKS5712 |
| | JA 4004 | OPT. LINK IN | GP1FAV51RKBF |
| | KN 1201 | SCREW PLATE | VNE1948 |
| | X 1001 | CERAMIC RESONATOR (20 MHz) | VSS1186 |
| | X 4001 | CERAMIC RESONATOR (12 MHz) | VSS1216 |
| | CN 1002 | 07P CONNECTOR | RKN1048 |
| | CN 2001 | CONNECTOR | 9604S-17C |
| | CN 2002 | CONNECTOR | 9604S-19C |
| | CN 2004 | 13P PLUG | XKM3004 |
| | CN 2005 | 9P PLUG | XKM3008 |
| | CN 2006 | 19P PLUG | XKM3005 |
| | CN 2007 | CONNECTOR | 9604S-15C |
| | CN 4002,4007 | CONNECTOR | 9604S-23C |
| | CN 4005 | 13P CONNECTOR | VKN1244 |
| | CN 4006 | 17P CONNECTOR | VKN1248 |
| | CN 4009 | 31P CONNECTOR | VKN1262 |
| | JH 4001 | PCB BINDER | VEF1040 |
| | JP 1001 | CONNECTOR ASSY | PF14PG-C10 |

## RESISTORS

| Mark | No. | Description | Part No. |
|---|---|---|---|
| | R 1001-1007,1014-1017 | | RAB4CQ101J |
| | R 1027,1031,1033-1035 | | RAB4CQ101J |
| | R 1037,2110,2205,4010 | | RAB4CQ101J |
| | R 1101 | | RS1/10SR1001F |
| | R 1102 | | RS1/10SR2700F |
| | R 1103 | | RS1/10SR2701F |
| | R 2311 | | RS1/8SQ182J |
| | R 2313 | | RS1/8SQ152J |
| | R 4009 | | RAB4CQ104J |
| | R 4020 | | RAB4CQ101J |
| | R 4301 | | RS1/8SQ75R0F |
| | Other Resistors | | RS1/16SS###J |

## CAPACITORS

| Mark | No. | Description | Part No. |
|---|---|---|---|
| | C 1001,2306 | | CCSSCH101J50 |
| | C 1002,1003,1005 | | CKSSYB103K16 |
| | C 1006,2307,4402,4403 | | CKSSYB102K50 |
| | C 1007-1017,1019,1021 | | CKSSYB103K16 |
| | C 1020 | | CEAL1R0M50 |
| | C 1022,4009 | | CEAT101M10 |
| | C 1023,1026,1028,1103 | | CKSSYB104K10 |
| | C 1024,2001,2107,2208 | | CKSSYB103K16 |
| | C 1101,1107,1110,2205 | | CKSRYB105K10 |
| | C 1105,1112,1201,2009 | | CEAT100M50 |
| | C 1108,1109,2004,2008 | | CKSSYB104K10 |
| | C 2002 | | CEAT470M10 |
| | C 2005,4101,4404,4407 | | CEAT101M16 |
| | C 2006 | | CEAT221M6R3 |
| | C 2013-2019,2104,2106 | | CEAT100M50 |
| | C 2101,2103,2105,2111 | | CKSSYB104K10 |
| | C 2102 | | CEAT2R2M50 |
| | C 2201 | | CEAT220M50 |
| | C 2203 | | CKSQYB225K10 |
| | C 2204,2206,4008,4010 | | CKSSYB104K10 |
| | C 2207,2209 | | CKSRYB105K10 |
| | C 2308,2316 | | CEAT470M35 |
| | C 4011 | | CKSSYB103K16 |
| | C 4013,4014 | | CCSSCH220J50 |
| | C 4015,4016,4102,4502 | | CKSSYB104K10 |
| | C 4052,4053,4109,4110 | | CCSSCH221J50 |
| | C 4111,4112 | | CEAT100M50 |
| | C 4302 | | CEAT102M6R3 |
| | C 4503 | | CEAT101M16 |
| | C 4504 | | CKSSYB104K10 |

# C RHTS USB ASSY

## MISCELLANEOUS

| Mark | No. | Description | Part No. |
|---|---|---|---|
| | JA 5001 | USB CONNECTOR | XKP3086 |
| | CN 5001 | CONNECTOR | AKM1276 |
| | VA 5001,5002 | SMD VARISTOR | AVRL161A3R3FTA |

## CAPACITORS

| Mark | No. | Description | Part No. |
|---|---|---|---|
| | C 5001,5003 | | CKSSYB104K10 |
| | C 5002 | | CKSSYB103K16 |
| | C 5004 | | CEAT221M6R3 |

# D RHTS D-AMP ASSY

## MISCELLANEOUS

| Mark | No. | Description | Part No. |
|---|---|---|---|
| | IC 3101 (A,66,109) | 8CH PWM PROCESSOR IC | TAS5508BPAG |
| | IC 3191 (A,121,36) | OP-AMP IC | BA10358F |

| Mark | No. | Description | Part No. |
|---|---|---|---|
| ⚠ | IC 3201 | (A,36,86) DIGITAL AMP IC | TAS5122DCA |
| ⚠ | IC 3301 | (A,66,86) DIGITAL AMP IC | TAS5122DCA |
| ⚠ | IC 3401 | (A,96,86) DIGITAL AMP IC | TAS5122DCA |
| | IC 3601 | (A,18,107) DUAL OP-AMP | NJM4565MD |
| | IC 3901 | (A,97,114) DUAL OP-AMP | NJM4565MD |
| | Q 3131 | (A,110,118) TRANSISTOR | 2SA1036K |
| | Q 3132 | (A,110,110) TRANSISTOR | LTC143EUB |
| | D 3101 | (A,39,103) DIODE | MC2846-11 |
| | D 3131 | (A,114,105) DIODE | UDZS18(B) |
| | D 3133 | (A,116,110) DIODE | 1SS352 |
| | D 3134 | (A,116,105) DIODE | UDZS15(B) |
| | D 3191 | (A,116,94) DIODE | UDZS3R3(B) |
| | D 3603 | (A,29,123) DIODE | UDZS12(B) |
| | L 3201 | (A,19,62) INDUCTORS | ATH7019 |
| | L 3202 | (A,36,62) INDUCTORS | ATH7019 |
| | L 3301 | (A,52,62) INDUCTORS | ATH7019 |
| | L 3302 | (A,69,62) INDUCTORS | ATH7019 |
| | L 3401 | (A,85,62) INDUCTORS | ATH7019 |
| | L 3402 | (A,102,62) INDUCTORS | ATH7019 |
| | JA 3112 | (A,33,15) JACK | XKB3062 |
| | X 3101 | (A,49,113) CRYSTAL (13.5 MHz) | ASS7062 |
| | CN 3101 | (A,140,57) CONNECTOR | 9604S-17C |
| | CN 3102 | (A,140,87) CONNECTOR | 9604S-19C |
| | CN 3201 | (A,125,108) PLUG | CKS-555 |
| | CN 3211 | (A,78,15) 6CH SPEAKER JACK(V0) | AKE7121 |
| | 3102 | (A,132,116) PCB BINDER | VEF1040 |
| | 3101 | (A,6,107) PCB BINDER | VEF1040 |

## RESISTORS

| Mark | No. | Description | Part No. |
|---|---|---|---|
| | R 3101 | (A,77,117) | RS1/10SR221J |
| | R 3102 | (A,74,117) | RS1/10SR221J |
| | R 3103 | (A,39,120) | RS1/10SR4R7J |
| | R 3104 | (A,60,119) | RAB4C221J |
| | R 3106 | (A,55,112) | RS1/10SR105J |
| | R 3107 | (A,54,110) | RAB4C470J |
| | R 3108 | (A,54,106) | RAB4C470J |
| | R 3111 | (A,76,104) | RS1/10SR220J |
| | R 3112 | (A,78,113) | RS1/10SR470J |
| | R 3113 | (A,78,117) | RS1/10SR3R3J |
| | R 3114 | (A,36,103) | RS1/10SR103J |
| | R 3131 | (A,113,109) | RS1/10SR473J |
| | R 3132 | (A,111,113) | RS1/8SQ123J |
| | R 3133 | (A,112,106) | RS1/10SR102J |
| | R 3134 | (A,114,101) | RS1/10SR222J |
| | R 3135 | (A,116,101) | RS1/10SR102J |
| | R 3141 | (A,14,22) | RS1/10SR331J |
| | R 3142 | (A,17,22) | RS1/10SR331J |
| | R 3151 | (A,116,117) | RAB4C103J |
| | R 3152 | (A,110,122) | RAB4C222J |
| ⚠ | R 3191 | (A,117,31) RESISTOR (0.1OHM,2W) | ACN7112 |
| | R 3192 | (A,117,34) | RS1/10SR1502F |
| | R 3193 | (A,118,42) | RS1/10SR1502F |
| | R 3194 | (A,115,37) | RS1/10SR1003F |
| | R 3195 | (A,120,42) | RS1/10SR1003F |
| | R 3196 | (A,115,41) | RS1/10SR2201F |
| | R 3197 | (A,114,45) | RS1/10SR1002F |
| ⚠ | R 3199 | (A,117,41) | RS1/10SR8R2J |
| | R 3204 | (A,33,98) | RS1/10SR221J |
| | R 3205 | (A,38,97) | RS1/10SR103J |
| | R 3206 | (A,42,95) | RS1/10SR101J |
| | R 3207 | (A,42,97) | RS1/10SR473J |
| | R 3208 | (A,42,94) | RS1/10SR472J |
| ⚠ | R 3211 | (A,28,71) RESISTOR (2.7 OHM) | ACN7148 |
| ⚠ | R 3212 | (A,42,71) RESISTOR (2.7 OHM) | ACN7148 |
| ⚠ | R 3213 | (A,30,71) RESISTOR (2.7 OHM) | ACN7148 |
| ⚠ | R 3214 | (A,44,71) RESISTOR (2.7 OHM) | ACN7148 |
| | R 3215 | (A,25,67) | RS1/4SA1R5J |
| | R 3216 | (A,39,67) | RS1/4SA1R5J |
| | R 3217 | (A,34,67) | RS1/4SA1R5J |
| | R 3218 | (A,48,67) | RS1/4SA1R5J |
| | R 3223 | (A,25,93) | RS1/8SQ821J |
| | R 3224 | (A,48,93) | RS1/8SQ821J |
| | R 3225 | (A,23,93) | RS1/8SQ821J |
| | R 3226 | (A,50,93) | RS1/8SQ821J |
| ⚠ | R 3227 | (A,17,45) | RS1/8SQ3R3J |
| ⚠ | R 3228 | (A,33,45) | RS1/8SQ3R3J |
| | R 3231 | (A,53,31) | RS1/8SQ472J |
| | R 3232 | (A,53,28) | RS1/8SQ472J |
| | R 3233 | (A,52,35) | RS1/8SQ472J |
| | R 3234 | (A,53,20) | RS1/8SQ472J |
| ⚠ | R 3235 | (A,51,32) | RS1/10SR1R0J |
| ⚠ | R 3236 | (A,46,32) | RS1/10SR1R0J |
| ⚠ | R 3237 | (A,51,35) | RS1/10SR1R0J |
| ⚠ | R 3238 | (A,52,23) | RS1/10SR1R0J |
| ⚠ | R 3241 | (A,27,74) | RS1/8SQ180J |
| ⚠ | R 3242 | (A,41,74) | RS1/8SQ180J |
| ⚠ | R 3243 | (A,31,74) | RS1/8SQ180J |
| ⚠ | R 3244 | (A,45,74) | RS1/8SQ180J |
| | R 3304 | (A,62,98) | RS1/10SR221J |
| | R 3305 | (A,68,97) | RS1/10SR103J |
| | R 3306 | (A,72,95) | RS1/10SR101J |
| | R 3307 | (A,72,97) | RS1/10SR473J |
| | R 3308 | (A,72,94) | RS1/10SR472J |
| ⚠ | R 3311 | (A,58,71) RESISTOR (2.7 OHM) | ACN7148 |
| ⚠ | R 3312 | (A,72,71) RESISTOR (2.7 OHM) | ACN7148 |
| ⚠ | R 3313 | (A,60,71) RESISTOR (2.7 OHM) | ACN7148 |
| ⚠ | R 3314 | (A,74,71) RESISTOR (2.7 OHM) | ACN7148 |
| | R 3315 | (A,55,67) | RS1/4SA1R5J |
| | R 3316 | (A,69,67) | RS1/4SA1R5J |
| | R 3317 | (A,64,67) | RS1/4SA1R5J |
| | R 3318 | (A,78,67) | RS1/4SA1R5J |
| | R 3323 | (A,55,93) | RS1/8SQ821J |
| | R 3324 | (A,78,93) | RS1/8SQ821J |
| | R 3325 | (A,53,93) | RS1/8SQ821J |
| | R 3326 | (A,80,93) | RS1/8SQ821J |
| ⚠ | R 3327 | (A,50,45) | RS1/8SQ3R3J |
| ⚠ | R 3328 | (A,66,45) | RS1/8SQ3R3J |
| | R 3331 | (A,80,37) | RS1/8SQ472J |
| | R 3332 | (A,65,37) | RS1/8SQ472J |
| | R 3333 | (A,76,37) | RS1/8SQ472J |
| | R 3334 | (A,90,37) | RS1/8SQ472J |
| ⚠ | R 3335 | (A,83,37) | RS1/10SR1R0J |
| ⚠ | R 3336 | (A,62,37) | RS1/10SR1R0J |
| ⚠ | R 3337 | (A,73,37) | RS1/10SR1R0J |
| ⚠ | R 3338 | (A,93,37) | RS1/10SR1R0J |
| ⚠ | R 3341 | (A,57,74) | RS1/8SQ180J |
| ⚠ | R 3342 | (A,71,74) | RS1/8SQ180J |
| ⚠ | R 3343 | (A,61,74) | RS1/8SQ180J |
| ⚠ | R 3344 | (A,75,74) | RS1/8SQ180J |

| Mark | No. | Description | Part No. |
|---|---|---|---|
| | R 3404 | (A,92,98) | RS1/10SR221J |
| | R 3405 | (A,98,97) | RS1/10SR103J |
| | R 3406 | (A,102,95) | RS1/10SR101J |
| | R 3407 | (A,102,97) | RS1/10SR473J |
| | R 3408 | (A,102,94) | RS1/10SR472J |
| ⚠ | R 3411 | (A,88,71) RESISTOR (2.7 OHM) | ACN7148 |
| ⚠ | R 3412 | (A,102,71) RESISTOR (2.7 OHM) | ACN7148 |
| ⚠ | R 3413 | (A,90,71) RESISTOR (2.7 OHM) | ACN7148 |
| ⚠ | R 3414 | (A,104,71) RESISTOR (2.7 OHM) | ACN7148 |
| | R 3415 | (A,85,67) | RS1/4SA1R5J |
| | R 3416 | (A,99,67) | RS1/4SA1R5J |
| | R 3417 | (A,94,67) | RS1/4SA1R5J |
| | R 3418 | (A,108,67) | RS1/4SA1R5J |
| | R 3423 | (A,85,93) | RS1/8SQ821J |
| | R 3424 | (A,108,93) | RS1/8SQ821J |
| | R 3425 | (A,83,93) | RS1/8SQ821J |
| | R 3426 | (A,110,93) | RS1/8SQ821J |
| ⚠ | R 3427 | (A,83,45) | RS1/8SQ3R3J |
| ⚠ | R 3428 | (A,99,45) | RS1/8SQ3R3J |
| | R 3431 | (A,104,31) | RS1/8SQ472J |
| | R 3432 | (A,104,24) | RS1/8SQ472J |
| | R 3433 | (A,104,27) | RS1/8SQ472J |
| | R 3434 | (A,104,21) | RS1/8SQ472J |
| ⚠ | R 3435 | (A,106,31) | RS1/10SR1R0J |
| ⚠ | R 3436 | (A,106,24) | RS1/10SR1R0J |
| ⚠ | R 3437 | (A,106,27) | RS1/10SR1R0J |
| ⚠ | R 3438 | (A,106,21) | RS1/10SR1R0J |
| ⚠ | R 3441 | (A,87,74) | RS1/8SQ180J |
| ⚠ | R 3442 | (A,101,74) | RS1/8SQ180J |
| ⚠ | R 3443 | (A,91,74) | RS1/8SQ180J |
| ⚠ | R 3444 | (A,105,74) | RS1/8SQ180J |
| | R 3601 | (A,32,116) | RAB4C472J |
| | R 3605 | (A,28,108) | RS1/10SR472J |
| | R 3606 | (A,7,111) | RS1/10SR472J |
| | R 3607 | (A,25,112) | RS1/10SR472J |
| | R 3608 | (A,10,115) | RS1/10SR472J |
| | R 3609 | (A,25,107) | RS1/10SR103J |
| | R 3610 | (A,13,106) | RS1/10SR103J |
| | R 3611 | (A,25,111) | RS1/10SR103J |
| | R 3612 | (A,10,114) | RS1/10SR103J |
| ⚠ | R 3621 | (A,28,121) | RS1/10SR8R2J |
| | R 3623 | (A,28,119) | RS1/10SR222J |
| | R 3901 | (A,87,112) | RAB4C472J |
| | R 3905 | (A,90,117) | RS1/10SR562J |
| | R 3906 | (A,90,107) | RS1/10SR562J |
| | R 3907 | (A,90,116) | RS1/10SR562J |
| | R 3908 | (A,90,108) | RS1/10SR562J |
| | R 3909 | (A,94,119) | RS1/10SR183J |
| | R 3910 | (A,94,107) | RS1/10SR183J |
| | R 3911 | (A,94,116) | RS1/10SR183J |
| | R 3912 | (A,94,112) | RS1/10SR183J |
| | R 3913 | (A,83,114) | RS1/10SR472J |
| | R 3914 | (A,84,110) | RS1/10SR472J |
| | R 3915 | (A,84,114) | RS1/10SR472J |
| | R 3916 | (A,83,110) | RS1/10SR472J |
| ⚠ | R 3921 | (A,101,113) | RS1/10SR8R2J |
| | R 3923 | (A,103,113) | RS1/10SR103J |
| | R 3924 | (A,103,116) | RS1/10SR103J |

**CAPACITORS**

| Mark | No. | Description | Part No. |
|---|---|---|---|
| | C 3101 | (A,74,115) | CKSRYB224K16 |
| | C 3102 | (A,75,117) | CKSRYB103K50 |
| | C 3103 | (A,75,121) | CKSRYB104K16 |
| | C 3104 | (A,71,121) | CKSRYB104K16 |
| | C 3105 | (A,72,117) | CKSRYB103K50 |
| | C 3106 | (A,69,119) | CKSRYB104K16 |
| | C 3107 | (A,67,119) | CKSRYB104K16 |
| | C 3108 | (A,54,120) | CEVW100M10 |
| | C 3109 | (A,66,119) | CKSRYB102K50 |
| | C 3110 | (A,59,115) | CKSRYB104K16 |
| | C 3111 | (A,46,120) | CEVW100M10 |
| | C 3112 | (A,58,114) | CKSRYB104K16 |
| | C 3113 | (A,56,114) | CCSRCH180J50 |
| | C 3114 | (A,55,114) | CCSRCH150J50 |
| | C 3115 | (A,58,103) | CKSRYB474K10 |
| | C 3116 | (A,56,103) | CKSRYB104K16 |
| | C 3117 | (A,48,105) | CEVW100M10 |
| | C 3118 | (A,72,101) | CKSRYB104K16 |
| | C 3119 | (A,76,107) | CKSRYB104K16 |
| | C 3120 | (A,79,104) | CEVW100M10 |
| | C 3141 | (A,14,24) | CCSRCH221J50 |
| | C 3142 | (A,17,24) | CCSRCH221J50 |
| | C 3151 | (A,128,63) | CKSRYB104K16 |
| | C 3192 | (A,117,37) | CKSRYB104K25 |
| | C 3201 | (A,27,91) | CKSQYB105K16 |
| | C 3202 | (A,45,91) | CKSQYB105K16 |
| | C 3203 | (A,36,97) | CKSRYB104K16 |
| | C 3204 | (A,42,92) | CKSRYB104K16 |
| | C 3211 | (A,24,72) | CKSQYB104K50 |
| | C 3212 | (A,38,72) | CKSQYB104K50 |
| | C 3213 | (A,34,72) | CKSQYB104K50 |
| | C 3214 | (A,48,72) | CKSQYB104K50 |
| | C 3215 | (A,28,67) | CKSRYB333K50 |
| | C 3216 | (A,42,67) | CKSRYB333K50 |
| | C 3217 | (A,30,67) | CKSRYB333K50 |
| | C 3218 | (A,44,67) | CKSRYB333K50 |
| | C 3221 | (A,25,40) ELECT. CAPACITOR | CEAT102M25 |
| | C 3223 | (A,19,45) | CKSRYB103K50 |
| | C 3224 | (A,36,45) | CKSRYB103K50 |
| | C 3225 | (A,30,45) | CKSRYB102K50 |
| | C 3226 | (A,47,45) | CKSRYB102K50 |
| | C 3227 | (A,27,82) | CKSRYB104K25 |
| | C 3228 | (A,46,82) | CKSRYB104K25 |
| | C 3231 | (A,27,46) | CFTLA474J50 |
| | C 3232 | (A,44,46) | CFTLA474J50 |
| | C 3233 | (A,65,30) | CKSRYB104K25 |
| | C 3234 | (A,63,23) | CKSRYB104K25 |
| | C 3235 | (A,63,30) | CKSRYB104K25 |
| | C 3236 | (A,60,23) | CKSRYB104K25 |
| | C 3237 | (A,48,32) | CKSRYB103K50 |
| | C 3238 | (A,45,32) | CKSRYB103K50 |
| | C 3239 | (A,48,35) | CKSRYB103K50 |
| | C 3240 | (A,52,25) | CKSRYB103K50 |
| | C 3241 | (A,26,75) | CKSRYB331K50 |
| | C 3242 | (A,40,75) | CKSRYB331K50 |
| | C 3243 | (A,32,75) | CKSRYB331K50 |
| | C 3244 | (A,46,75) | CKSRYB331K50 |
| | C 3301 | (A,57,91) | CKSQYB105K16 |
| | C 3302 | (A,75,91) | CKSQYB105K16 |
| | C 3303 | (A,66,97) | CKSRYB104K16 |

| Mark | No. | Description | Part No. |
|---|---|---|---|
| | C 3304 | (A,72,92) | CKSRYB104K16 |
| | C 3311 | (A,54,72) | CKSQYB104K50 |
| | C 3312 | (A,68,72) | CKSQYB104K50 |
| | C 3313 | (A,64,72) | CKSQYB104K50 |
| | C 3314 | (A,78,72) | CKSQYB104K50 |
| | C 3315 | (A,58,67) | CKSRYB333K50 |
| | C 3316 | (A,72,67) | CKSRYB333K50 |
| | C 3317 | (A,60,67) | CKSRYB333K50 |
| | C 3318 | (A,74,67) | CKSRYB333K50 |
| | C 3321 | (A,41,40) ELECT. CAPACITOR | CEAT102M25 |
| | C 3323 | (A,52,45) | CKSRYB103K50 |
| | C 3324 | (A,69,45) | CKSRYB103K50 |
| | C 3325 | (A,63,45) | CKSRYB102K50 |
| | C 3326 | (A,80,45) | CKSRYB102K50 |
| | C 3327 | (A,57,82) | CKSRYB104K25 |
| | C 3328 | (A,76,82) | CKSRYB104K25 |
| | C 3331 | (A,60,46) | CFTLA474J50 |
| | C 3332 | (A,77,46) | CFTLA474J50 |
| | C 3333 | (A,81,30) | CKSRYB104K25 |
| | C 3334 | (A,74,24) | CKSRYB104K25 |
| | C 3335 | (A,78,30) | CKSRYB104K25 |
| | C 3336 | (A,77,24) | CKSRYB104K25 |
| | C 3337 | (A,87,37) | CKSRYB103K50 |
| | C 3338 | (A,58,37) | CKSRYB103K50 |
| | C 3339 | (A,69,37) | CKSRYB103K50 |
| | C 3340 | (A,97,37) | CKSRYB103K50 |
| | C 3341 | (A,56,75) | CKSRYB331K50 |
| | C 3342 | (A,70,75) | CKSRYB331K50 |
| | C 3343 | (A,62,75) | CKSRYB331K50 |
| | C 3344 | (A,76,75) | CKSRYB331K50 |
| | C 3401 | (A,87,91) | CKSQYB105K16 |
| | C 3402 | (A,105,91) | CKSQYB105K16 |
| | C 3403 | (A,96,97) | CKSRYB104K16 |
| | C 3404 | (A,102,92) | CKSRYB104K16 |
| | C 3411 | (A,84,72) | CKSQYB104K50 |
| | C 3412 | (A,98,72) | CKSQYB104K50 |
| | C 3413 | (A,94,72) | CKSQYB104K50 |
| | C 3414 | (A,108,72) | CKSQYB104K50 |
| | C 3415 | (A,88,67) | CKSRYB333K50 |
| | C 3416 | (A,102,67) | CKSRYB333K50 |
| | C 3417 | (A,90,67) | CKSRYB333K50 |
| | C 3418 | (A,104,67) | CKSRYB333K50 |
| | C 3421 | (A,107,40) ELECT. CAPACITOR | CEAT102M25 |
| | C 3423 | (A,85,45) | CKSRYB103K50 |
| | C 3424 | (A,102,45) | CKSRYB103K50 |
| | C 3425 | (A,96,45) | CKSRYB102K50 |
| | C 3426 | (A,113,47) | CKSRYB102K50 |
| | C 3427 | (A,87,82) | CKSRYB104K25 |
| | C 3428 | (A,106,82) | CKSRYB104K25 |
| | C 3431 | (A,93,46) | CFTLA474J50 |
| | C 3432 | (A,110,46) | CFTLA474J50 |
| | C 3433 | (A,95,30) | CKSRYB104K25 |
| | C 3434 | (A,89,24) | CKSRYB104K25 |
| | C 3435 | (A,93,30) | CKSRYB104K25 |
| | C 3436 | (A,92,24) | CKSRYB104K25 |
| | C 3437 | (A,108,31) | CKSRYB103K50 |
| | C 3438 | (A,108,24) | CKSRYB103K50 |
| | C 3439 | (A,108,27) | CKSRYB103K50 |
| | C 3440 | (A,108,21) | CKSRYB103K50 |
| | C 3441 | (A,86,75) | CKSRYB331K50 |
| | C 3442 | (A,100,75) | CKSRYB331K50 |
| | C 3443 | (A,92,75) | CKSRYB331K50 |
| | C 3444 | (A,106,75) | CKSRYB331K50 |
| | C 3601 | (A,28,109) | CCSRCH821J50 |
| | C 3602 | (A,7,112) | CCSRCH821J50 |
| | C 3603 | (A,28,112) | CCSRCH821J50 |
| | C 3604 | (A,7,115) | CCSRCH821J50 |
| | C 3605 | (A,26,107) | CCSRCH331J50 |
| | C 3606 | (A,11,106) | CCSRCH331J50 |
| | C 3607 | (A,28,111) | CCSRCH331J50 |
| | C 3608 | (A,7,114) | CCSRCH331J50 |
| | C 3621 | (A,18,119) | CEVW100M25 |
| | C 3622 | (A,24,119) | CEVW100M16 |
| | C 3623 | (A,17,111) | CKSRYB104K50 |
| | C 3624 | (A,20,111) | CKSRYB104K16 |
| | C 3901 | (A,91,114) | CCSRCH681J50 |
| | C 3902 | (A,91,110) | CCSRCH681J50 |
| | C 3903 | (A,89,114) | CCSRCH681J50 |
| | C 3904 | (A,89,110) | CCSRCH681J50 |
| | C 3905 | (A,92,117) | CCSRCH181J50 |
| | C 3906 | (A,92,107) | CCSRCH181J50 |
| | C 3907 | (A,92,114) | CCSRCH561J50 |
| | C 3908 | (A,92,110) | CCSRCH561J50 |
| | C 3921 | (A,88,121) | CEVW100M25 |
| | C 3922 | (A,80,121) | CEVW100M16 |
| | C 3923 | (A,101,110) | CKSRYB104K25 |
| | C 3924 | (A,101,116) | CKSRYB104K16 |

## D RHTS H-AMP ASSY (XWM3495)

### MISCELLANEOUS

| Mark | No. | Description | Part No. |
|---|---|---|---|
| | IC 3101 | (A,66,109) 8CH PWM PROCESSOR IC | TAS5508BPAG |
| | IC 3191 | (A,113,99) OP-AMP IC | BA10358F |
| ⚠ | IC 3301 | (A,66,86) DIGITAL AMP IC | TAS5342LDDV |
| ⚠ | IC 3401 | (A,96,86) DIGITAL AMP IC | TAS5342LDDV |
| | IC 3601 | (B,8,58) DUAL OP-AMP | NJM4565MD |
| | IC 3901 | (A,28,120) DUAL OP-AMP | NJM4565MD |
| | D 3101 | (A,38,104) DIODE | MC2846-11 |
| | D 3191 | (A,105,103) DIODE | UDZS3R3(B) |
| | D 3603 | (A,10,60) DIODE | UDZS6R2(B) |
| | L 3301 | (A,52,68) INDUCTOR | ATH7021 |
| | L 3401 | (A,85,68) INDUCTOR | ATH7021 |
| | L 3402 | (A,102,68) INDUCTOR | ATH7021 |
| | JA 3112 | JACK | XKB3062 |
| | X 3101 | (A,48,113) CRYSTAL (13.5 MHz) | ASS7062 |
| | CN 3101 | (A,140,57) CONNECTOR | 9604S-17C |
| | CN 3102 | (A,140,87) CONNECTOR | 9604S-19C |
| | CN 3201 | (A,125,117) PLUG | CKS-555 |
| | CN 3211 | (A,78,15) 3CH SPEAKER JACK(V0) | XKE3061 |
| | CN 3221 | (A,125,48) PLUG(2P) | KM200NA2 |
| | 3302 | (A,131,115) PCB BINDER | VEF1040 |
| | 3301 | (A,6,107) PCB BINDER | VEF1040 |
| | 3303 | (A,125,41) PCB BINDER | VEF1040 |

### RESISTORS

| Mark | No. | Description | Part No. |
|---|---|---|---|
| | R 3101 | (A,77,117) | RS1/10SR221J |
| | R 3102 | (A,74,117) | RS1/10SR221J |
| | R 3103 | (A,62,122) | RS1/10SR4R7J |

| Mark | No. | Description | Part No. |
|---|---|---|---|
| | R 3104 | (A,60,118) | RAB4C221J |
| | R 3106 | (A,55,112) | RS1/10SR105J |
| | R 3107 | (A,54,110) | RAB4C470J |
| | R 3108 | (A,54,106) | RAB4C101J |
| | R 3111 | (A,82,102) | RS1/10SR220J |
| | R 3112 | (A,78,114) | RS1/10SR470J |
| | R 3113 | (A,79,116) | RS1/10SR3R3J |
| ⚠ | R 3114 | (A,35,104) | RS1/10SR103J |
| | R 3141 | (B,26,24) | RS1/10SR331J |
| | R 3142 | (B,14,26) | RS1/10SR331J |
| | R 3151 | (A,131,67) | RAB4C103J |
| | R 3152 | (A,131,71) | RAB4C222J |
| | R 3178 | (A,131,62) | RS1/10SR270J |
| | R 3179 | (A,131,61) | RS1/10SR270J |
| | R 3180 | (A,131,59) | RS1/10SR270J |
| | R 3181 | (A,132,57) | RS1/10SR270J |
| | R 3182 | (A,131,55) | RS1/10SR220J |
| | R 3184 | (A,134,51) | RS1/10SR0R0J |
| ⚠ | R 3191 | (A,128,100) RESISTOR (0.1,3W) | XCN3002 |
| | R 3192 | (A,120,101) | RS1/10SR1502F |
| | R 3193 | (A,114,111) | RS1/10SR1502F |
| | R 3194 | (A,111,106) | RS1/10SR1003F |
| | R 3195 | (A,116,111) | RS1/10SR1003F |
| | R 3196 | (A,109,103) | RS1/10SR2201F |
| | R 3197 | (A,107,103) | RS1/10SR1002F |
| ⚠ | R 3199 | (A,122,101) | RS1/10SR8R2J |
| ⚠ | R 3301 | (A,58,95) | RS1/10SR100J |
| ⚠ | R 3302 | (A,74,95) | RS1/10SR100J |
| | R 3304 | (A,67,94) | RS1/10SR223J |
| | R 3305 | (A,62,94) | RS1/10SR221J |
| ⚠ | R 3309 | (A,56,96) | RS1/10SR100J |
| ⚠ | R 3310 | (A,76,96) | RS1/10SR100J |
| ⚠ | R 3327 | (A,50,52) | RS1/8SQ3R3J |
| ⚠ | R 3328 | (A,66,52) | RS1/8SQ3R3J |
| | R 3331 | (B,57,48) | RS1/8SQ472J |
| | R 3333 | (B,64,48) | RS1/8SQ472J |
| ⚠ | R 3335 | (B,72,34) | RS1/10SR1R0J |
| ⚠ | R 3337 | (B,77,37) | RS1/10SR1R0J |
| ⚠ | R 3341 | (A,57,74) | RS1/8SQ180J |
| ⚠ | R 3342 | (A,71,74) | RS1/8SQ180J |
| ⚠ | R 3343 | (A,61,74) | RS1/8SQ180J |
| ⚠ | R 3344 | (A,75,74) | RS1/8SQ180J |
| ⚠ | R 3401 | (A,88,95) | RS1/10SR100J |
| ⚠ | R 3402 | (A,103,95) | RS1/10SR100J |
| | R 3404 | (A,97,94) | RS1/10SR223J |
| | R 3405 | (A,92,95) | RS1/10SR221J |
| ⚠ | R 3409 | (A,86,96) | RS1/10SR100J |
| ⚠ | R 3410 | (A,106,96) | RS1/10SR100J |
| ⚠ | R 3427 | (A,83,52) | RS1/8SQ3R3J |
| ⚠ | R 3428 | (A,99,52) | RS1/8SQ3R3J |
| | R 3431 | (B,90,48) | RS1/8SQ472J |
| | R 3432 | (B,105,49) | RS1/8SQ472J |
| | R 3433 | (B,96,48) | RS1/8SQ472J |
| | R 3434 | (B,108,49) | RS1/8SQ472J |
| ⚠ | R 3435 | (B,92,36) | RS1/10SR1R0J |
| ⚠ | R 3436 | (B,100,28) | RS1/10SR1R0J |
| ⚠ | R 3437 | (B,96,39) | RS1/10SR1R0J |
| ⚠ | R 3438 | (B,92,22) | RS1/10SR1R0J |
| ⚠ | R 3441 | (A,87,74) | RS1/8SQ180J |
| ⚠ | R 3442 | (A,101,74) | RS1/8SQ180J |
| ⚠ | R 3443 | (A,91,74) | RS1/8SQ180J |
| ⚠ | R 3444 | (A,105,74) | RS1/8SQ180J |
| | R 3601 | (A,6,47) | RS1/10SR472J |
| | R 3602 | (A,13,48) | RS1/10SR472J |
| | R 3603 | (B,14,70) | RS1/10SR472J |
| | R 3604 | (B,14,73) | RS1/10SR472J |
| | R 3605 | (B,7,45) | RS1/10SR472J |
| | R 3606 | (B,6,70) | RS1/10SR472J |
| | R 3607 | (B,14,49) | RS1/10SR472J |
| | R 3608 | (B,12,70) | RS1/10SR472J |
| ⚠ | R 3609 | (B,7,50) | RS1/10SR103J |
| ⚠ | R 3610 | (B,7,64) | RS1/10SR103J |
| ⚠ | R 3611 | (B,12,49) | RS1/10SR103J |
| ⚠ | R 3612 | (B,10,70) | RS1/10SR103J |
| | R 3623 | (A,15,72) | RS1/10SR102J |
| | R 3901 | (A,40,121) | RAB4C472J |
| | R 3905 | (A,37,115) | RS1/10SR562J |
| | R 3906 | (A,36,125) | RS1/10SR562J |
| | R 3907 | (A,37,116) | RS1/10SR562J |
| | R 3908 | (A,36,124) | RS1/10SR562J |
| | R 3909 | (A,33,115) | RS1/10SR183J |
| | R 3910 | (A,33,125) | RS1/10SR183J |
| | R 3911 | (A,33,118) | RS1/10SR183J |
| | R 3912 | (A,33,122) | RS1/10SR183J |
| | R 3913 | (A,51,123) | RS1/10SR472J |
| | R 3914 | (A,43,125) | RS1/10SR472J |
| | R 3915 | (A,50,123) | RS1/10SR472J |
| | R 3916 | (A,45,125) | RS1/10SR472J |
| | R 3923 | (A,25,120) | RS1/10SR472J |
| | R 3924 | (A,22,120) | RS1/10SR472J |

## CAPACITORS

| | | | |
|---|---|---|---|
| | C 3101 | (A,74,115) | CKSRYB104K16 |
| | C 3102 | (A,75,117) | CKSRYB103K50 |
| | C 3103 | (A,76,120) | CKSRYB104K16 |
| | C 3104 | (A,73,120) | CKSRYB104K16 |
| | C 3105 | (A,72,117) | CKSRYB103K50 |
| | C 3106 | (A,69,119) | CKSRYB104K16 |
| | C 3107 | (A,68,119) | CKSRYB224K16 |
| | C 3108 | (A,52,119) | CEAT100M50 |
| | C 3109 | (A,66,119) | CKSRYB102K50 |
| | C 3110 | (A,59,115) | CKSRYB104K16 |
| | C 3111 | (A,47,119) | CEAT100M50 |
| | C 3112 | (A,58,114) | CKSRYB104K16 |
| | C 3113 | (A,56,114) | CCSRCH180J50 |
| | C 3114 | (A,55,114) | CCSRCH150J50 |
| | C 3115 | (A,58,103) | CKSRYB104K16 |
| | C 3116 | (A,57,103) | CKSRYB224K16 |
| | C 3117 | (A,48,105) | CEAT100M50 |
| | C 3118 | (A,74,102) | CKSRYB104K16 |
| | C 3119 | (A,76,107) | CKSRYB224K16 |
| | C 3120 | (A,79,107) | CEAT100M50 |
| | C 3141 | (B,28,24) | CCSRCH221J50 |
| | C 3142 | (B,17,26) | CCSRCH221J50 |
| | C 3151 | (B,125,72) | CKSRYB104K50 |
| | C 3186 | (A,124,62) | CEAT221M16 |
| | C 3192 | (A,118,99) | CKSRYB104K50 |
| | C 3301 | (A,57,93) | CKSRYB104K16 |
| | C 3302 | (A,75,93) | CKSRYB104K16 |

| Mark | No. | Description | Part No. |
|---|---|---|---|
| | C 3305 | (A,60,93) | CKSRYB104K16 |
| | C 3306 | (A,65,94) | CKSRYB104K16 |
| | C 3307 | (A,56,94) | CKSRYB104K16 |
| | C 3308 | (A,76,94) | CKSRYB104K16 |
| | C 3311 | (A,55,72) | CKSRYB104K50 |
| | C 3312 | (A,69,72) | CKSRYB104K50 |
| | C 3313 | (A,63,72) | CKSRYB104K50 |
| | C 3314 | (A,78,73) | CKSRYB104K50 |
| | C 3315 | (B,53,74) | CKSRYB333K50 |
| | C 3316 | (B,67,74) | CKSRYB333K50 |
| | C 3317 | (B,65,74) | CKSRYB333K50 |
| | C 3318 | (B,79,74) | CKSRYB333K50 |
| | C 3321 | (A,58,45) ELECT. CAPACITOR | CEAT102M35 |
| | C 3322 | (A,74,45) ELECT. CAPACITOR | CEAT102M35 |
| | C 3323 | (A,52,51) | CKSRYB103K50 |
| | C 3324 | (A,69,51) | CKSRYB103K50 |
| | C 3325 | (A,63,51) | CKSRYB102K50 |
| | C 3326 | (A,80,51) | CKSRYB102K50 |
| | C 3331 | (A,60,53) | CFTLA474J2A |
| | C 3337 | (B,70,33) | CKSRYB103K50 |
| | C 3339 | (B,80,38) | CKSRYB103K50 |
| | C 3341 | (A,56,75) | CKSRYB331K50 |
| | C 3342 | (A,70,75) | CKSRYB331K50 |
| | C 3343 | (A,62,75) | CKSRYB331K50 |
| | C 3344 | (A,76,75) | CKSRYB331K50 |
| | C 3345 | (B,72,30) | CKSRYB104K50 |
| | C 3347 | (B,82,37) | CKSRYB104K50 |
| | C 3401 | (A,87,93) | CKSRYB104K16 |
| | C 3402 | (A,105,92) | CKSRYB104K16 |
| | C 3405 | (A,90,93) | CKSRYB104K16 |
| | C 3406 | (A,95,94) | CKSRYB104K16 |
| | C 3407 | (A,86,94) | CKSRYB104K16 |
| | C 3408 | (A,106,94) | CKSRYB104K16 |
| | C 3411 | (A,85,72) | CKSRYB104K50 |
| | C 3412 | (A,100,72) | CKSRYB104K50 |
| | C 3413 | (A,94,73) | CKSRYB104K50 |
| | C 3414 | (A,108,72) | CKSRYB104K50 |
| | C 3415 | (B,83,74) | CKSRYB333K50 |
| | C 3416 | (B,99,72) | CKSRYB333K50 |
| | C 3417 | (B,96,74) | CKSRYB333K50 |
| | C 3418 | (B,109,74) | CKSRYB333K50 |
| | C 3421 | (A,91,45) ELECT. CAPACITOR | CEAT102M35 |
| | C 3422 | (A,107,45) ELECT. CAPACITOR | CEAT102M35 |
| | C 3423 | (A,85,51) | CKSRYB103K50 |
| | C 3424 | (A,102,51) | CKSRYB103K50 |
| | C 3425 | (A,96,51) | CKSRYB102K50 |
| | C 3426 | (A,113,51) | CKSRYB102K50 |
| | C 3431 | (A,93,53) | CFTLA474J2A |
| | C 3432 | (A,110,53) | CFTLA474J2A |
| | C 3437 | (B,90,38) | CKSRYB103K50 |
| | C 3438 | (B,103,26) | CKSRYB103K50 |
| | C 3439 | (B,96,42) | CKSRYB103K50 |
| | C 3440 | (B,88,23) | CKSRYB103K50 |
| | C 3441 | (A,86,75) | CKSRYB331K50 |
| | C 3442 | (A,100,75) | CKSRYB331K50 |
| | C 3443 | (A,92,75) | CKSRYB331K50 |
| | C 3444 | (A,106,75) | CKSRYB331K50 |
| | C 3445 | (B,89,35) | CKSRYB104K50 |
| | C 3446 | (B,99,26) | CKSRYB104K50 |
| | C 3447 | (B,96,37) | CKSRYB104K50 |
| | C 3448 | (B,87,28) | CKSRYB104K50 |
| | C 3601 | (B,9,45) | CCSRCH821J50 |
| | C 3602 | (B,8,73) | CCSRCH821J50 |
| | C 3603 | (B,13,45) | CCSRCH821J50 |
| | C 3604 | (B,12,73) | CCSRCH821J50 |
| | C 3605 | (B,7,48) | CCSRCH331J50 |
| | C 3606 | (B,7,67) | CCSRCH331J50 |
| | C 3607 | (B,11,45) | CCSRCH331J50 |
| | C 3608 | (B,10,73) | CCSRCH331J50 |
| | C 3621 | (A,14,54) | CEAT100M50 |
| | C 3622 | (A,14,66) | CEAT100M50 |
| | C 3623 | (A,10,54) | CKSRYB104K50 |
| | C 3624 | (A,10,62) | CKSRYB104K16 |
| | C 3901 | (A,36,118) | CCSRCH681J50 |
| | C 3902 | (A,36,122) | CCSRCH681J50 |
| | C 3903 | (A,37,118) | CCSRCH681J50 |
| | C 3904 | (A,37,122) | CCSRCH681J50 |
| | C 3905 | (A,34,115) | CCSRCH181J50 |
| | C 3906 | (A,34,125) | CCSRCH181J50 |
| | C 3907 | (A,34,118) | CCSRCH561J50 |
| | C 3908 | (A,34,122) | CCSRCH561J50 |
| | C 3921 | (A,18,113) | CEAT100M50 |
| | C 3922 | (A,24,115) | CEAT100M50 |
| | C 3923 | (A,25,123) | CKSRYB104K16 |
| | C 3924 | (A,23,120) | CKSRYB104K16 |

## D RHTS H-AMP ASSY (XWM3494)

### MISCELLANEOUS

| Mark | No. | Description | Part No. |
|---|---|---|---|
| | IC 3101 | (A,66,109) 8CH PWM PROCESSOR IC | TAS5508BPAG |
| | IC 3191 | (A,113,99) OP-AMP IC | BA10358F |
| ⚠ | IC 3201 | (A,36,86) DIGITAL AMP IC | TAS5342LDDV |
| ⚠ | IC 3301 | (A,66,86) DIGITAL AMP IC | TAS5342LDDV |
| ⚠ | IC 3401 | (A,96,86) DIGITAL AMP IC | TAS5342LDDV |
| | IC 3601 | (B,8,58) DUAL OP-AMP | NJM4565MD |
| | IC 3901 | (A,28,120) DUAL OP-AMP | NJM4565MD |
| | D 3101 | (A,38,104) DIODE | MC2846-11 |
| | D 3191 | (A,105,103) DIODE | UDZS3R3(B) |
| | D 3603 | (A,10,60) DIODE | UDZS6R2(B) |
| | L 3201 | (A,19,68) INDUCTOR | ATH7021 |
| | L 3202 | (A,36,68) INDUCTOR | ATH7021 |
| | L 3301 | (A,52,68) INDUCTOR | ATH7021 |
| | L 3302 | (A,69,68) INDUCTOR | ATH7021 |
| | L 3401 | (A,85,68) INDUCTOR | ATH7021 |
| | L 3402 | (A,102,68) INDUCTOR | ATH7021 |
| | JA 3112 | JACK | XKB3062 |
| | X 3101 | (A,48,113) CRYSTAL (13.5 MHz) | ASS7062 |
| | CN 3101 | (A,140,57) CONNECTOR | 9604S-17C |
| | CN 3102 | (A,140,87) CONNECTOR | 9604S-19C |
| | CN 3201 | (A,125,117) PLUG | CKS-555 |
| | CN 3211 | (A,78,15) 6CH SPEAKER JACK(V0) | AKE7121 |
| | CN 3221 | (A,125,48) PLUG(2P) | KM200NA2 |
| | 3301 | (A,6,107) PCB BINDER | VEF1040 |
| | 3302 | (A,131,115) PCB BINDER | VEF1040 |
| | 3303 | (A,125,41) PCB BINDER | VEF1040 |

### RESISTORS

| Mark | No. | Description | Part No. |
|---|---|---|---|
| | R 3101 | (A,77,117) | RS1/10SR221J |

| Mark | No. | Description | Part No. |
|---|---|---|---|
| | R 3102 | (A,74,117) | RS1/10SR221J |
| | R 3103 | (A,62,122) | RS1/10SR4R7J |
| | R 3104 | (A,60,118) | RAB4C221J |
| | R 3106 | (A,55,112) | RS1/10SR105J |
| | R 3107 | (A,54,110) | RAB4C470J |
| | R 3108 | (A,54,106) | RAB4C101J |
| | R 3111 | (A,82,102) | RS1/10SR220J |
| | R 3112 | (A,78,114) | RS1/10SR470J |
| | R 3113 | (A,79,116) | RS1/10SR3R3J |
| ⚠ | R 3114 | (A,35,104) | RS1/10SR103J |
| | R 3141 | (B,26,24) | RS1/10SR331J |
| | R 3142 | (B,14,26) | RS1/10SR331J |
| | R 3151 | (A,131,67) | RAB4C103J |
| | R 3152 | (A,131,71) | RAB4C222J |
| | R 3178 | (A,131,62) | RS1/10SR270J |
| | R 3179 | (A,131,61) | RS1/10SR270J |
| | R 3180 | (A,131,59) | RS1/10SR270J |
| | R 3181 | (A,132,57) | RS1/10SR270J |
| | R 3182 | (A,131,55) | RS1/10SR220J |
| | R 3184 | (A,134,51) | RS1/10SR0R0J |
| ⚠ | R 3191 | (A,128,100) RESISTOR (0.1,3W) | XCN3002 |
| | R 3192 | (A,120,101) | RS1/10SR1502F |
| | R 3193 | (A,114,111) | RS1/10SR1502F |
| | R 3194 | (A,111,106) | RS1/10SR1003F |
| | R 3195 | (A,116,111) | RS1/10SR1003F |
| | R 3196 | (A,109,103) | RS1/10SR2201F |
| | R 3197 | (A,107,103) | RS1/10SR1002F |
| ⚠ | R 3199 | (A,122,101) | RS1/10SR8R2J |
| ⚠ | R 3201 | (A,28,95) | RS1/10SR100J |
| ⚠ | R 3202 | (A,44,95) | RS1/10SR100J |
| | R 3204 | (A,37,94) | RS1/10SR223J |
| | R 3205 | (A,32,94) | RS1/10SR221J |
| ⚠ | R 3209 | (A,26,96) | RS1/10SR100J |
| ⚠ | R 3210 | (A,46,95) | RS1/10SR100J |
| ⚠ | R 3227 | (A,18,53) | RS1/8SQ3R3J |
| ⚠ | R 3228 | (A,33,52) | RS1/8SQ3R3J |
| | R 3231 | (B,24,48) | RS1/8SQ472J |
| | R 3232 | (B,40,48) | RS1/8SQ472J |
| | R 3233 | (B,31,48) | RS1/8SQ472J |
| | R 3234 | (B,48,48) | RS1/8SQ472J |
| ⚠ | R 3235 | (B,67,28) | RS1/10SR1R0J |
| ⚠ | R 3236 | (B,54,36) | RS1/10SR1R0J |
| ⚠ | R 3237 | (B,53,27) | RS1/10SR1R0J |
| ⚠ | R 3238 | (B,58,37) | RS1/10SR1R0J |
| ⚠ | R 3241 | (A,27,74) | RS1/8SQ180J |
| ⚠ | R 3242 | (A,41,74) | RS1/8SQ180J |
| ⚠ | R 3243 | (A,31,74) | RS1/8SQ180J |
| ⚠ | R 3244 | (A,45,74) | RS1/8SQ180J |
| ⚠ | R 3301 | (A,58,95) | RS1/10SR100J |
| ⚠ | R 3302 | (A,74,95) | RS1/10SR100J |
| | R 3304 | (A,67,94) | RS1/10SR223J |
| | R 3305 | (A,62,94) | RS1/10SR221J |
| ⚠ | R 3309 | (A,56,96) | RS1/10SR100J |
| ⚠ | R 3310 | (A,76,96) | RS1/10SR100J |
| ⚠ | R 3327 | (A,50,52) | RS1/8SQ3R3J |
| ⚠ | R 3328 | (A,66,52) | RS1/8SQ3R3J |
| | R 3331 | (B,57,48) | RS1/8SQ472J |
| | R 3332 | (B,73,48) | RS1/8SQ472J |
| | R 3333 | (B,64,48) | RS1/8SQ472J |

| Mark | No. | Description | Part No. |
|---|---|---|---|
| | R 3334 | (B,81,48) | RS1/8SQ472J |
| ⚠ | R 3335 | (B,72,34) | RS1/10SR1R0J |
| ⚠ | R 3336 | (B,82,27) | RS1/10SR1R0J |
| ⚠ | R 3337 | (B,77,37) | RS1/10SR1R0J |
| ⚠ | R 3338 | (B,77,22) | RS1/10SR1R0J |
| ⚠ | R 3341 | (A,57,74) | RS1/8SQ180J |
| ⚠ | R 3342 | (A,71,74) | RS1/8SQ180J |
| ⚠ | R 3343 | (A,61,74) | RS1/8SQ180J |
| ⚠ | R 3344 | (A,75,74) | RS1/8SQ180J |
| ⚠ | R 3401 | (A,88,95) | RS1/10SR100J |
| ⚠ | R 3402 | (A,103,95) | RS1/10SR100J |
| | R 3404 | (A,97,94) | RS1/10SR223J |
| | R 3405 | (A,92,95) | RS1/10SR221J |
| ⚠ | R 3409 | (A,86,96) | RS1/10SR100J |
| ⚠ | R 3410 | (A,106,96) | RS1/10SR100J |
| ⚠ | R 3427 | (A,83,52) | RS1/8SQ3R3J |
| ⚠ | R 3428 | (A,99,52) | RS1/8SQ3R3J |
| | R 3431 | (B,90,48) | RS1/8SQ472J |
| | R 3432 | (B,105,49) | RS1/8SQ472J |
| | R 3433 | (B,96,48) | RS1/8SQ472J |
| | R 3434 | (B,108,49) | RS1/8SQ472J |
| ⚠ | R 3435 | (B,92,36) | RS1/10SR1R0J |
| ⚠ | R 3436 | (B,100,28) | RS1/10SR1R0J |
| ⚠ | R 3437 | (B,96,39) | RS1/10SR1R0J |
| ⚠ | R 3438 | (B,92,22) | RS1/10SR1R0J |
| ⚠ | R 3441 | (A,87,74) | RS1/8SQ180J |
| ⚠ | R 3442 | (A,101,74) | RS1/8SQ180J |
| ⚠ | R 3443 | (A,91,74) | RS1/8SQ180J |
| ⚠ | R 3444 | (A,105,74) | RS1/8SQ180J |
| | R 3601 | (A,6,47) | RS1/10SR472J |
| | R 3602 | (A,13,48) | RS1/10SR472J |
| | R 3603 | (B,14,70) | RS1/10SR472J |
| | R 3604 | (B,14,73) | RS1/10SR472J |
| | R 3605 | (B,7,45) | RS1/10SR472J |
| | R 3606 | (B,6,70) | RS1/10SR472J |
| | R 3607 | (B,14,49) | RS1/10SR472J |
| | R 3608 | (B,12,70) | RS1/10SR472J |
| ⚠ | R 3609 | (B,7,50) | RS1/10SR103J |
| ⚠ | R 3610 | (B,7,64) | RS1/10SR103J |
| ⚠ | R 3611 | (B,12,49) | RS1/10SR103J |
| ⚠ | R 3612 | (B,10,70) | RS1/10SR103J |
| | R 3623 | (A,15,72) | RS1/10SR102J |
| | R 3901 | (A,40,121) | RAB4C472J |
| | R 3905 | (A,37,115) | RS1/10SR562J |
| | R 3906 | (A,36,125) | RS1/10SR562J |
| | R 3907 | (A,37,116) | RS1/10SR562J |
| | R 3908 | (A,36,124) | RS1/10SR562J |
| | R 3909 | (A,33,115) | RS1/10SR183J |
| | R 3910 | (A,33,125) | RS1/10SR183J |
| | R 3911 | (A,33,118) | RS1/10SR183J |
| | R 3912 | (A,33,122) | RS1/10SR183J |
| | R 3913 | (A,51,123) | RS1/10SR472J |
| | R 3914 | (A,43,125) | RS1/10SR472J |
| | R 3915 | (A,50,123) | RS1/10SR472J |
| | R 3916 | (A,45,125) | RS1/10SR472J |
| | R 3923 | (A,25,120) | RS1/10SR472J |
| | R 3924 | (A,22,120) | RS1/10SR472J |

## CAPACITORS

| | | | |
|---|---|---|---|
| | C 3101 | (A,74,115) | CKSRYB104K16 |

| Mark | No. | Description | Part No. |
|---|---|---|---|
| C | 3102 | (A,75,117) | CKSRYB103K50 |
| C | 3103 | (A,76,120) | CKSRYB104K16 |
| C | 3104 | (A,73,120) | CKSRYB104K16 |
| C | 3105 | (A,72,117) | CKSRYB103K50 |
| C | 3106 | (A,69,119) | CKSRYB104K16 |
| C | 3107 | (A,68,119) | CKSRYB224K16 |
| C | 3108 | (A,52,119) | CEAT100M50 |
| C | 3109 | (A,66,119) | CKSRYB102K50 |
| C | 3110 | (A,59,115) | CKSRYB104K16 |
| C | 3111 | (A,47,119) | CEAT100M50 |
| C | 3112 | (A,58,114) | CKSRYB104K16 |
| C | 3113 | (A,56,114) | CCSRCH180J50 |
| C | 3114 | (A,55,114) | CCSRCH150J50 |
| C | 3115 | (A,58,103) | CKSRYB104K16 |
| C | 3116 | (A,57,103) | CKSRYB224K16 |
| C | 3117 | (A,48,105) | CEAT100M50 |
| C | 3118 | (A,74,102) | CKSRYB104K16 |
| C | 3119 | (A,76,107) | CKSRYB224K16 |
| C | 3120 | (A,79,107) | CEAT100M50 |
| C | 3141 | (B,28,24) | CCSRCH221J50 |
| C | 3142 | (B,17,26) | CCSRCH221J50 |
| C | 3151 | (B,125,72) | CKSRYB104K50 |
| C | 3186 | (A,124,62) | CEAT221M16 |
| C | 3192 | (A,118,99) | CKSRYB104K50 |
| C | 3201 | (A,27,93) | CKSRYB104K16 |
| C | 3202 | (A,45,93) | CKSRYB104K16 |
| C | 3205 | (A,30,93) | CKSRYB104K16 |
| C | 3206 | (A,35,94) | CKSRYB104K16 |
| C | 3207 | (A,26,94) | CKSRYB104K16 |
| C | 3208 | (A,46,94) | CKSRYB104K16 |
| C | 3211 | (A,24,72) | CKSRYB104K50 |
| C | 3212 | (A,38,72) | CKSRYB104K50 |
| C | 3213 | (A,33,72) | CKSRYB104K50 |
| C | 3214 | (A,47,72) | CKSRYB104K50 |
| C | 3215 | (B,23,74) | CKSRYB333K50 |
| C | 3216 | (B,37,74) | CKSRYB333K50 |
| C | 3217 | (B,35,74) | CKSRYB333K50 |
| C | 3218 | (B,49,74) | CKSRYB333K50 |
| C | 3221 | (A,25,45) ELECT. CAPACITOR | CEAT102M35 |
| C | 3222 | (A,41,45) ELECT. CAPACITOR | CEAT102M35 |
| C | 3223 | (A,19,51) | CKSRYB103K50 |
| C | 3224 | (A,36,51) | CKSRYB103K50 |
| C | 3225 | (A,30,51) | CKSRYB102K50 |
| C | 3226 | (A,47,51) | CKSRYB102K50 |
| C | 3231 | (A,27,53) | CFTLA474J2A |
| C | 3232 | (A,44,53) | CFTLA474J2A |
| C | 3237 | (B,69,26) | CKSRYB103K50 |
| C | 3238 | (B,55,32) | CKSRYB103K50 |
| C | 3239 | (B,55,29) | CKSRYB103K50 |
| C | 3240 | (B,61,37) | CKSRYB103K50 |
| C | 3241 | (A,26,75) | CKSRYB331K50 |
| C | 3242 | (A,40,75) | CKSRYB331K50 |
| C | 3243 | (A,32,75) | CKSRYB331K50 |
| C | 3244 | (A,46,75) | CKSRYB331K50 |
| C | 3245 | (B,64,28) | CKSRYB104K50 |
| C | 3246 | (B,57,32) | CKSRYB104K50 |
| C | 3247 | (B,57,28) | CKSRYB104K50 |
| C | 3248 | (B,64,37) | CKSRYB104K50 |
| C | 3301 | (A,57,93) | CKSRYB104K16 |

| Mark | No. | Description | Part No. |
|---|---|---|---|
| C | 3302 | (A,75,93) | CKSRYB104K16 |
| C | 3305 | (A,60,93) | CKSRYB104K16 |
| C | 3306 | (A,65,94) | CKSRYB104K16 |
| C | 3307 | (A,56,94) | CKSRYB104K16 |
| C | 3308 | (A,76,94) | CKSRYB104K16 |
| C | 3311 | (A,55,72) | CKSRYB104K50 |
| C | 3312 | (A,69,72) | CKSRYB104K50 |
| C | 3313 | (A,63,72) | CKSRYB104K50 |
| C | 3314 | (A,78,73) | CKSRYB104K50 |
| C | 3315 | (B,53,74) | CKSRYB333K50 |
| C | 3316 | (B,67,74) | CKSRYB333K50 |
| C | 3317 | (B,65,74) | CKSRYB333K50 |
| C | 3318 | (B,79,74) | CKSRYB333K50 |
| C | 3321 | (A,58,45) ELECT. CAPACITOR | CEAT102M35 |
| C | 3322 | (A,74,45) ELECT. CAPACITOR | CEAT102M35 |
| C | 3323 | (A,52,51) | CKSRYB103K50 |
| C | 3324 | (A,69,51) | CKSRYB103K50 |
| C | 3325 | (A,63,51) | CKSRYB102K50 |
| C | 3326 | (A,80,51) | CKSRYB102K50 |
| C | 3331 | (A,60,53) | CFTLA474J2A |
| C | 3332 | (A,77,53) | CFTLA474J2A |
| C | 3337 | (B,70,33) | CKSRYB103K50 |
| C | 3338 | (B,79,28) | CKSRYB103K50 |
| C | 3339 | (B,80,38) | CKSRYB103K50 |
| C | 3340 | (B,73,23) | CKSRYB103K50 |
| C | 3341 | (A,56,75) | CKSRYB331K50 |
| C | 3342 | (A,70,75) | CKSRYB331K50 |
| C | 3343 | (A,62,75) | CKSRYB331K50 |
| C | 3344 | (A,76,75) | CKSRYB331K50 |
| C | 3345 | (B,72,30) | CKSRYB104K50 |
| C | 3346 | (B,82,29) | CKSRYB104K50 |
| C | 3347 | (B,82,37) | CKSRYB104K50 |
| C | 3348 | (B,73,28) | CKSRYB104K50 |
| C | 3401 | (A,87,93) | CKSRYB104K16 |
| C | 3402 | (A,105,92) | CKSRYB104K16 |
| C | 3405 | (A,90,93) | CKSRYB104K16 |
| C | 3406 | (A,95,94) | CKSRYB104K16 |
| C | 3407 | (A,86,94) | CKSRYB104K16 |
| C | 3408 | (A,106,94) | CKSRYB104K16 |
| C | 3411 | (A,85,72) | CKSRYB104K50 |
| C | 3412 | (A,100,72) | CKSRYB104K50 |
| C | 3413 | (A,94,73) | CKSRYB104K50 |
| C | 3414 | (A,108,72) | CKSRYB104K50 |
| C | 3415 | (B,83,74) | CKSRYB333K50 |
| C | 3416 | (B,99,72) | CKSRYB333K50 |
| C | 3417 | (B,96,74) | CKSRYB333K50 |
| C | 3418 | (B,109,74) | CKSRYB333K50 |
| C | 3421 | (A,91,45) ELECT. CAPACITOR | CEAT102M35 |
| C | 3422 | (A,107,45) ELECT. CAPACITOR | CEAT102M35 |
| C | 3423 | (A,85,51) | CKSRYB103K50 |
| C | 3424 | (A,102,51) | CKSRYB103K50 |
| C | 3425 | (A,96,51) | CKSRYB102K50 |
| C | 3426 | (A,113,51) | CKSRYB102K50 |
| C | 3431 | (A,93,53) | CFTLA474J2A |
| C | 3432 | (A,110,53) | CFTLA474J2A |
| C | 3437 | (B,90,38) | CKSRYB103K50 |
| C | 3438 | (B,103,26) | CKSRYB103K50 |
| C | 3439 | (B,96,42) | CKSRYB103K50 |
| C | 3440 | (B,88,23) | CKSRYB103K50 |
| C | 3441 | (A,86,75) | CKSRYB331K50 |

| Mark | No. | Description | Part No. |
|---|---|---|---|
| C | 3442 | (A,100,75) | CKSRYB331K50 |
| C | 3443 | (A,92,75) | CKSRYB331K50 |
| C | 3444 | (A,106,75) | CKSRYB331K50 |
| C | 3445 | (B,89,35) | CKSRYB104K50 |
| C | 3446 | (B,99,26) | CKSRYB104K50 |
| C | 3447 | (B,96,37) | CKSRYB104K50 |
| C | 3448 | (B,87,28) | CKSRYB104K50 |
| C | 3601 | (B,9,45) | CCSRCH821J50 |
| C | 3602 | (B,8,73) | CCSRCH821J50 |
| C | 3603 | (B,13,45) | CCSRCH821J50 |
| C | 3604 | (B,12,73) | CCSRCH821J50 |
| C | 3605 | (B,7,48) | CCSRCH331J50 |
| C | 3606 | (B,7,67) | CCSRCH331J50 |
| C | 3607 | (B,11,45) | CCSRCH331J50 |
| C | 3608 | (B,10,73) | CCSRCH331J50 |
| C | 3621 | (A,14,54) | CEAT100M50 |
| C | 3622 | (A,14,66) | CEAT100M50 |
| C | 3623 | (A,10,54) | CKSRYB104K50 |
| C | 3624 | (A,10,62) | CKSRYB104K16 |
| C | 3901 | (A,36,118) | CCSRCH681J50 |
| C | 3902 | (A,36,122) | CCSRCH681J50 |
| C | 3903 | (A,37,118) | CCSRCH681J50 |
| C | 3904 | (A,37,122) | CCSRCH681J50 |
| C | 3905 | (A,34,115) | CCSRCH181J50 |
| C | 3906 | (A,34,125) | CCSRCH181J50 |
| C | 3907 | (A,34,118) | CCSRCH561J50 |
| C | 3908 | (A,34,122) | CCSRCH561J50 |
| C | 3921 | (A,18,113) | CEAT100M50 |
| C | 3922 | (A,24,115) | CEAT100M50 |
| C | 3923 | (A,25,123) | CKSRYB104K16 |
| C | 3924 | (A,23,120) | CKSRYB104K16 |

# E RHTS DISPLAY ASSY (XWM3487)

## MISCELLANEOUS

| Mark | No. | Description | Part No. |
|---|---|---|---|
| IC | 9000 | (B,204,35) DUAL OP-AMP | NJM4565MD |
| IC | 9400 | (B,117,38) FL DRIVER IC | PT6315 |
| Q | 9000 | (B,217,16) TRANSISTOR | LSA1576UB |
| Q | 9001 | (B,212,30) TRANSISTOR | LTC124EUB |
| Q | 9100 | (B,234,40) TRANSISTOR | IMX9 |
| Q | 9101 | (B,234,48) TRANSISTOR | IMX9 |
| Q | 9102 | (B,212,48) CHIP DIGITAL TRANS. | LTA124EUB |
| Q | 9501 | (B,34,38) TRANSISTOR | LSC4081UB |
| D | 9501 | (A,40,39) LED(BLUE) | NSPB320BS-6734 |
| D | 9503 | (B,47,36) DIODE | UDZS10(B) |
| D | 9504 | (B,37,35) DIODE | 1SS352 |
| D | 9505 | (B,40,33) DIODE | 1SS352 |
| L | 9000 | (B,178,19) INDUCTOR | CTF1306 |
| L | 9100 | (B,232,31) INDUCTOR | CTF1306 |
| L | 9101 | (B,228,34) INDUCTOR | CTF1306 |
| L | 9103 | (B,225,38) INDUCTOR | CTF1306 |
| L | 9400 | (A,85,37) AXIAL INDUCTOR | LAU100J |
| L | 9401 | (A,83,27) AXIAL INDUCTOR | LAU220J |
| JA | 9001 | (A,213,21) MIC JACK | XKN3018 |
| JA | 9100 | (A,232,21) MINITURE JACK | XKN3019 |
| V | 9400 | (A,88,27) FL TUBE | AAV7104 |
| S | 9300 | (A,158,53) SWITCH | VSG1024 |
| S | 9301 | (A,176,53) SWITCH | VSG1024 |
| S | 9302 | (A,194,53) SWITCH | VSG1024 |
| S | 9303 | (A,212,53) SWITCH | VSG1024 |
| S | 9304 | (A,230,53) SWITCH | VSG1024 |
| S | 9305 | (A,43,51) SWITCH | VSG1024 |
| S | 9306 | (A,132,53) SWITCH | VSG1024 |
| CN | 9401 | (A,12,56) CONNECTOR | 9607S-23F |
| | 9301 | FL SPACER | AEB7367 |
| | 9300 | (A,65,39) REMOTE RECEIVER UNIT | GP1UE274XKC1 |

## RESISTORS

| Mark | No. | Description | Part No. |
|---|---|---|---|
| R | 9000 | (B,203,27) | RS1/10SR473J |
| R | 9001 | (B,210,35) | RS1/10SR103J |
| R | 9002 | (B,184,44) | RS1/10SR332J |
| R | 9004 | (B,199,31) | RS1/10SR332J |
| R | 9006 | (B,184,40) | RS1/10SR332J |
| R | 9008 | (B,200,38) | RS1/10SR473J |
| R | 9015 | (B,218,26) | RS1/10SR682J |
| R | 9016 | (B,217,21) | RS1/10SR103J |
| R | 9017 | (B,185,25) | RS1/10SR272J |
| R | 9018 | (B,205,16) | RS1/10SR822J |
| R | 9019 | (B,201,16) | RS1/10SR682J |
| R | 9020 | (B,195,20) | RS1/10SR0R0J |
| R | 9021 | (B,190,35) | RS1/10SR0R0J |
| R | 9022 | (B,202,43) | RS1/10SR103J |
| R | 9101 | (B,231,34) | RS1/10SR680J |
| R | 9102 | (B,237,30) | RS1/10SR680J |
| R | 9103 | (B,233,34) | RS1/10SR680J |
| R | 9104 | (B,240,30) | RS1/10SR680J |
| R | 9105 | (B,223,42) | RS1/10SR680J |
| R | 9106 | (B,224,48) | RS1/10SR680J |
| R | 9107 | (B,225,42) | RS1/10SR680J |
| R | 9108 | (B,226,48) | RS1/10SR680J |
| R | 9109 | (B,223,38) | RS1/10SR680J |
| R | 9112 | (B,219,48) | RS1/10SR680J |
| R | 9113 | (B,219,41) | RS1/10SR680J |
| R | 9114 | (B,221,48) | RS1/10SR680J |
| R | 9115 | (B,221,42) | RS1/10SR680J |
| R | 9116 | (B,228,41) | RS1/10SR222J |
| R | 9117 | (B,231,45) | RS1/10SR222J |
| R | 9118 | (B,230,41) | RS1/10SR222J |
| R | 9119 | (B,228,47) | RS1/10SR222J |
| R | 9120 | (B,240,35) | RS1/10SR0R0J |
| R | 9300 | (B,184,53) | RS1/10SR222J |
| R | 9301 | (B,187,53) | RS1/10SR332J |
| R | 9302 | (B,189,53) | RS1/10SR562J |
| R | 9303 | (B,224,53) | RS1/10SR103J |
| R | 9304 | (B,60,52) | RS1/10SR222J |
| R | 9305 | (B,59,47) | RS1/10SR101J |
| R | 9306 | (B,55,41) | RS1/10SR470J |
| R | 9400 | (B,98,42) | RS1/10SR221J |
| R | 9401 | (B,94,43) | RS1/10SR221J |
| R | 9402 | (B,90,45) | RS1/10SR221J |
| R | 9405 | (B,105,40) | RS1/10SR823J |
| R | 9501 | (B,47,41) | RS1/10SR680J |
| R | 9502 | (B,39,30) | RS1/10SR560J |

## CAPACITORS

| Mark | No. | Description | Part No. |
|---|---|---|---|
| C | 9000 | (B,213,21) | CCSRCH101J50 |
| C | 9002 | (B,205,27) | CCSRCH220J50 |
| C | 9003 | (A,197,28) | CEJQ2R2M50 |
| C | 9006 | (A,181,43) | CEAL470M16 |

| Mark | No. | Description | Part No. |
|---|---|---|---|
| C | 9007 | (B,196,45) | CKSRYB104K16 |
| C | 9008 | (B,198,45) | CCSRCH101J50 |
| C | 9010 | (B,197,38) | CCSRCH820J50 |
| C | 9012 | (B,175,42) | CKSRYB104K16 |
| C | 9020 | (B,176,19) | CKSRYB223K50 |
| C | 9021 | (B,195,33) | CKSRYB104K16 |
| C | 9100 | (B,226,26) | CKSRYB103K50 |
| C | 9103 | (B,235,34) | CKSRYB473K25 |
| C | 9104 | (B,235,30) | CKSRYB473K25 |
| C | 9105 | (B,237,34) | CKSRYB102K50 |
| C | 9106 | (B,239,48) | CKSRYB102K50 |
| C | 9300 | (A,53,39) | CEJQ470M10 |
| C | 9301 | (B,56,37) | CKSRYB223K50 |
| C | 9402 | (A,96,22) | CEJQ470M10 |
| C | 9403 | (B,103,40) | CCSRCH221J50 |
| C | 9404 | (B,96,43) | CCSRCH221J50 |
| C | 9405 | (B,92,45) | CCSRCH221J50 |
| C | 9406 | (B,123,47) | CKSRYB103K50 |
| C | 9407 | (B,75,28) | CKSRYB223K50 |
| C | 9408 | (B,98,34) | CKSRYB223K50 |
| C | 9409 | (A,90,38) ELECTR. CAPACITOR | CEAL470M35 |
| C | 9417 | (B,81,26) | CKSRYB223K50 |
| C | 9418 | (B,86,22) | CKSRYB223K50 |
| C | 9420 | (A,171,34) ELECTR. CAPACITOR | CEAL470M35 |
| C | 9501 | (B,34,42) | CKSRYB103K25 |

## E RHTS DISPLAY ASSY (XWM3488)

### MISCELLANEOUS

| | | | |
|---|---|---|---|
| IC | 9400 | (B,117,38) FL DRIVER IC | PT6315 |
| Q | 9100 | (B,234,40) TRANSISTOR | IMX9 |
| Q | 9101 | (B,234,48) TRANSISTOR | IMX9 |
| Q | 9102 | (B,212,48) CHIP DIGITAL TRANS. | LTA124EUB |
| Q | 9501 | (B,34,38) TRANSISTOR | LSC4081UB |
| D | 9501 | (A,40,39) LED(BLUE) | NSPB320BS-6734 |
| D | 9503 | (B,47,36) DIODE | UDZS10(B) |
| D | 9504 | (B,37,35) DIODE | 1SS352 |
| D | 9505 | (B,40,33) DIODE | 1SS352 |
| L | 9100 | (B,232,31) INDUCTOR | CTF1306 |
| L | 9101 | (B,228,34) INDUCTOR | CTF1306 |
| L | 9103 | (B,225,38) INDUCTOR | CTF1306 |
| L | 9400 | (A,85,37) AXIAL INDUCTOR | LAU100J |
| L | 9401 | (A,83,27) AXIAL INDUCTOR | LAU220J |
| JA | 9100 | (A,232,21) MINITURE JACK | XKN3019 |
| V | 9400 | (A,88,27) FL TUBE | AAV7104 |
| S | 9300 | (A,158,53) SWITCH | VSG1024 |
| S | 9301 | (A,176,53) SWITCH | VSG1024 |
| S | 9302 | (A,194,53) SWITCH | VSG1024 |
| S | 9303 | (A,212,53) SWITCH | VSG1024 |
| S | 9304 | (A,230,53) SWITCH | VSG1024 |
| S | 9305 | (A,43,51) SWITCH | VSG1024 |
| S | 9306 | (A,132,53) SWITCH | VSG1024 |
| CN | 9401 | (A,12,56) CONNECTOR | 9607S-23F |
| | 9301 | FL SPACER | AEB7367 |
| | 9300 | (A,65,39) REMOTE RECEIVER UNIT | GP1UE274XKC1 |

### RESISTORS

| | | | |
|---|---|---|---|
| R | 9101 | (B,231,34) | RS1/10SR680J |
| R | 9102 | (B,237,30) | RS1/10SR680J |
| R | 9103 | (B,233,34) | RS1/10SR680J |
| R | 9104 | (B,240,30) | RS1/10SR680J |
| R | 9105 | (B,223,42) | RS1/10SR680J |
| R | 9106 | (B,224,48) | RS1/10SR680J |
| R | 9107 | (B,225,42) | RS1/10SR680J |
| R | 9108 | (B,226,48) | RS1/10SR680J |
| R | 9109 | (B,223,38) | RS1/10SR680J |
| R | 9112 | (B,219,48) | RS1/10SR680J |
| R | 9113 | (B,219,41) | RS1/10SR680J |
| R | 9114 | (B,221,48) | RS1/10SR680J |
| R | 9115 | (B,221,42) | RS1/10SR680J |
| R | 9116 | (B,228,41) | RS1/10SR222J |
| R | 9117 | (B,231,45) | RS1/10SR222J |
| R | 9118 | (B,230,41) | RS1/10SR222J |
| R | 9119 | (B,228,47) | RS1/10SR222J |
| R | 9120 | (B,240,35) | RS1/10SR0R0J |
| R | 9300 | (B,184,53) | RS1/10SR222J |
| R | 9301 | (B,187,53) | RS1/10SR332J |
| R | 9302 | (B,189,53) | RS1/10SR562J |
| R | 9303 | (B,224,53) | RS1/10SR103J |
| R | 9304 | (B,60,52) | RS1/10SR222J |
| R | 9305 | (B,59,47) | RS1/10SR101J |
| R | 9306 | (B,55,41) | RS1/10SR470J |
| R | 9400 | (B,98,42) | RS1/10SR221J |
| R | 9401 | (B,94,43) | RS1/10SR221J |
| R | 9402 | (B,90,45) | RS1/10SR221J |
| R | 9405 | (B,105,40) | RS1/10SR823J |
| R | 9501 | (B,47,41) | RS1/10SR680J |
| R | 9502 | (B,39,30) | RS1/10SR560J |

### CAPACITORS

| | | | |
|---|---|---|---|
| C | 9100 | (B,226,26) | CKSRYB103K50 |
| C | 9103 | (B,235,34) | CKSRYB473K25 |
| C | 9104 | (B,235,30) | CKSRYB473K25 |
| C | 9105 | (B,237,34) | CKSRYB102K50 |
| C | 9106 | (B,239,48) | CKSRYB102K50 |
| C | 9300 | (A,53,39) | CEJQ470M10 |
| C | 9301 | (B,56,37) | CKSRYB223K50 |
| C | 9402 | (A,96,22) | CEJQ470M10 |
| C | 9403 | (B,103,40) | CCSRCH221J50 |
| C | 9404 | (B,96,43) | CCSRCH221J50 |
| C | 9405 | (B,92,45) | CCSRCH221J50 |
| C | 9406 | (B,123,47) | CKSRYB103K50 |
| C | 9407 | (B,75,28) | CKSRYB223K50 |
| C | 9408 | (B,98,34) | CKSRYB223K50 |
| C | 9409 | (A,90,38) ELECTR. CAPACITOR | CEAL470M35 |
| C | 9417 | (B,81,26) | CKSRYB223K50 |
| C | 9418 | (B,86,22) | CKSRYB223K50 |
| C | 9420 | (A,171,34) ELECTR. CAPACITOR | CEAL470M35 |
| C | 9501 | (B,34,42) | CKSRYB103K25 |

## E RHTS DISPLAY ASSY (XWM3484)

### MISCELLANEOUS

| | | | |
|---|---|---|---|
| IC | 9000 | (B,204,35) DUAL OP-AMP | NJM4565MD |
| IC | 9400 | (B,117,38) FL DRIVER IC | PT6315 |
| Q | 9000 | (B,217,16) TRANSISTOR | LSA1576UB |
| Q | 9001 | (B,212,30) TRANSISTOR | LTC124EUB |
| Q | 9100 | (B,234,40) TRANSISTOR | IMX9 |

| Mark | No. | Description | Part No. |
|---|---|---|---|
| Q | 9101 | (B,234,48) TRANSISTOR | IMX9 |
| Q | 9102 | (B,212,48) CHIP DIGITAL TRANS. | LTA124EUB |
| Q | 9501 | (B,34,38) TRANSISTOR | LSC4081UB |
| D | 9501 | (A,40,39) LED(BLUE) | NSPB320BS-6734 |
| D | 9503 | (B,47,36) DIODE | UDZS10(B) |
| D | 9504 | (B,37,35) DIODE | 1SS352 |
| D | 9505 | (B,40,33) DIODE | 1SS352 |
| L | 9000 | (B,178,19) INDUCTOR | CTF1306 |
| L | 9001 | (B,191,30) INDUCTOR | CTF1306 |
| L | 9100 | (B,232,31) INDUCTOR | CTF1306 |
| L | 9101 | (B,228,34) INDUCTOR | CTF1306 |
| L | 9103 | (B,225,38) INDUCTOR | CTF1306 |
| L | 9400 | (A,85,37) AXIAL INDUCTOR | LAU100J |
| L | 9401 | (A,83,27) AXIAL INDUCTOR | LAU220J |
| JA | 9001 | (A,213,21) MIC JACK | XKN3018 |
| JA | 9002 | (A,193,21) MIC JACK | XKN3018 |
| JA | 9100 | (A,232,21) MINITURE JACK | XKN3019 |
| V | 9400 | (A,88,27) FL TUBE | AAV7104 |
| S | 9300 | (A,158,53) SWITCH | VSG1024 |
| S | 9301 | (A,176,53) SWITCH | VSG1024 |
| S | 9302 | (A,194,53) SWITCH | VSG1024 |
| S | 9303 | (A,212,53) SWITCH | VSG1024 |
| S | 9304 | (A,230,53) SWITCH | VSG1024 |
| S | 9305 | (A,43,51) SWITCH | VSG1024 |
| S | 9306 | (A,132,53) SWITCH | VSG1024 |
| CN | 9401 | (A,12,56) CONNECTOR | 9607S-23F |
| | 9301 | FL SPACER | AEB7367 |
| | 9300 | (A,65,39) REMOTE RECEIVER UNIT | GP1UE274XKC1 |

**RESISTORS**

| Mark | No. | Description | Part No. |
|---|---|---|---|
| R | 9000 | (B,203,27) | RS1/10SR473J |
| R | 9001 | (B,210,35) | RS1/10SR103J |
| R | 9002 | (B,184,44) | RS1/10SR332J |
| R | 9003 | (B,193,30) | RS1/10SR332J |
| R | 9004 | (B,199,31) | RS1/10SR332J |
| R | 9006 | (B,184,40) | RS1/10SR332J |
| R | 9008 | (B,200,38) | RS1/10SR473J |
| R | 9015 | (B,218,26) | RS1/10SR682J |
| R | 9016 | (B,217,21) | RS1/10SR103J |
| R | 9017 | (B,185,25) | RS1/10SR272J |
| R | 9018 | (B,205,16) | RS1/10SR822J |
| R | 9019 | (B,201,16) | RS1/10SR682J |
| R | 9021 | (B,190,35) | RS1/10SR0R0J |
| R | 9022 | (B,202,43) | RS1/10SR103J |
| R | 9101 | (B,231,34) | RS1/10SR680J |
| R | 9102 | (B,237,30) | RS1/10SR680J |
| R | 9103 | (B,233,34) | RS1/10SR680J |
| R | 9104 | (B,240,30) | RS1/10SR680J |
| R | 9105 | (B,223,42) | RS1/10SR680J |
| R | 9106 | (B,224,48) | RS1/10SR680J |
| R | 9107 | (B,225,42) | RS1/10SR680J |
| R | 9108 | (B,226,48) | RS1/10SR680J |
| R | 9109 | (B,223,38) | RS1/10SR680J |
| R | 9112 | (B,219,48) | RS1/10SR680J |
| R | 9113 | (B,219,41) | RS1/10SR680J |
| R | 9114 | (B,221,48) | RS1/10SR680J |
| R | 9115 | (B,221,42) | RS1/10SR680J |
| R | 9116 | (B,228,41) | RS1/10SR222J |
| R | 9117 | (B,231,45) | RS1/10SR222J |
| R | 9118 | (B,230,41) | RS1/10SR222J |
| R | 9119 | (B,228,47) | RS1/10SR222J |
| R | 9120 | (B,240,35) | RS1/10SR0R0J |
| R | 9300 | (B,184,53) | RS1/10SR222J |
| R | 9301 | (B,187,53) | RS1/10SR332J |
| R | 9302 | (B,189,53) | RS1/10SR562J |
| R | 9303 | (B,224,53) | RS1/10SR103J |
| R | 9304 | (B,60,52) | RS1/10SR222J |
| R | 9305 | (B,59,47) | RS1/10SR101J |
| R | 9306 | (B,55,41) | RS1/10SR470J |
| R | 9400 | (B,98,42) | RS1/10SR221J |
| R | 9401 | (B,94,43) | RS1/10SR221J |
| R | 9402 | (B,90,45) | RS1/10SR221J |
| R | 9405 | (B,105,40) | RS1/10SR823J |
| R | 9501 | (B,47,41) | RS1/10SR680J |
| R | 9502 | (B,39,30) | RS1/10SR560J |

**CAPACITORS**

| Mark | No. | Description | Part No. |
|---|---|---|---|
| C | 9000 | (B,213,21) | CCSRCH101J50 |
| C | 9001 | (B,189,29) | CCSRCH101J50 |
| C | 9002 | (B,205,27) | CCSRCH220J50 |
| C | 9003 | (A,197,28) | CEJQ2R2M50 |
| C | 9006 | (A,181,43) | CEAL470M16 |
| C | 9007 | (B,196,45) | CKSRYB104K16 |
| C | 9008 | (B,198,45) | CCSRCH101J50 |
| C | 9010 | (B,197,38) | CCSRCH820J50 |
| C | 9012 | (B,175,42) | CKSRYB104K16 |
| C | 9020 | (B,176,19) | CKSRYB223K50 |
| C | 9021 | (B,195,33) | CKSRYB104K16 |
| C | 9100 | (B,226,26) | CKSRYB103K50 |
| C | 9103 | (B,235,34) | CKSRYB473K25 |
| C | 9104 | (B,235,30) | CKSRYB473K25 |
| C | 9105 | (B,237,34) | CKSRYB102K50 |
| C | 9106 | (B,239,48) | CKSRYB102K50 |
| C | 9300 | (A,53,39) | CEJQ470M10 |
| C | 9301 | (B,56,37) | CKSRYB223K50 |
| C | 9402 | (A,96,22) | CEJQ470M10 |
| C | 9403 | (B,103,40) | CCSRCH221J50 |
| C | 9404 | (B,96,43) | CCSRCH221J50 |
| C | 9405 | (B,92,45) | CCSRCH221J50 |
| C | 9406 | (B,123,47) | CKSRYB103K50 |
| C | 9407 | (B,75,28) | CKSRYB223K50 |
| C | 9408 | (B,98,34) | CKSRYB223K50 |
| C | 9409 | (A,90,38) ELECTR. CAPACITOR | CEAL470M35 |
| C | 9417 | (B,81,26) | CKSRYB223K50 |
| C | 9418 | (B,86,22) | CKSRYB223K50 |
| C | 9420 | (A,171,34) ELECTR. CAPACITOR | CEAL470M35 |
| C | 9501 | (B,34,42) | CKSRYB103K25 |

## F EUROSCART ASSY

**MISCELLANEOUS**

| Mark | No. | Description | Part No. |
|---|---|---|---|
| IC | 471 | (B,38,46) VIDEO SW IC | MM1505XN |
| IC | 472 | (B,29,48) VIDEO SW IC | MM1507XN |
| Q | 461 | (B,68,68) CHIP TRANSISTOR | RT3WLMM |
| Q | 462 | (B,47,65) CHIP TRANSISTOR | RT3WLMM |
| Q | 463 | (B,52,70) DIGITAL TR(SC-70) | RT1P441M |
| Q | 472 | (B,25,67) TRANSISTOR | RT1N241M |
| Q | 492 | (B,80,40) DIGITAL TR(SC-70) | RT1P241M |
| Q | 493 | (B,74,45) TRANSISTOR | IMX9 |
| D | 471 | (B,49,41) DIODE | MC2846-11 |
| D | 472 | (B,43,41) DIODE | MC2848-11 |

| Mark | No. | Description | Part No. |
|---|---|---|---|
| D | 473 | (B,32,41) DIODE | MC2846-11 |
| D | 474 | (B,38,41) DIODE | MC2848-11 |
| JA | 451 | (A,62,8) CONNECTOR | XKB3054 |
| CN | 461 | (A,89,31) CONNECTOR | CKS3388 |

**RESISTORS**

| | | | |
|---|---|---|---|
| R | 461 | (B,62,69) | RS1/16S223J |
| R | 462 | (B,62,67) | RS1/16S122J |
| R | 463 | (B,73,65) | RS1/16S472J |
| R | 464 | (B,52,65) | RS1/16S472J |
| R | 465 | (B,73,67) | RS1/16S563J |
| R | 466 | (B,30,66) | RS1/16S103J |
| R | 467 | (B,41,69) | RS1/16S122J |
| R | 468 | (B,41,71) | RS1/16S122J |
| R | 469 | (B,41,67) | RS1/16S102J |
| R | 470 | (B,46,72) | RS1/16S821J |
| R | 471 | (B,46,70) | RS1/16S561J |
| R | 472 | (B,30,64) | RS1/16S223J |
| R | 473 | (B,52,73) | RS1/16S563J |
| R | 474 | (B,58,28) CHIP RESISTOR | RS1/16S75R0F |
| R | 475 | (B,53,28) CHIP RESISTOR | RS1/16S75R0F |
| R | 476 | (B,47,28) CHIP RESISTOR | RS1/16S75R0F |
| R | 477 | (B,27,27) CHIP RESISTOR | RS1/16S75R0F |
| R | 478 | (B,40,28) CHIP RESISTOR | RS1/16S75R0F |
| R | 481 | (B,71,37) | RS1/16S102J |
| R | 482 | (B,71,35) | RS1/16S102J |
| R | 483 | (B,59,38) | RS1/16S473J |
| R | 484 | (B,63,38) | RS1/16S473J |
| R | 485 | (B,59,36) | RS1/16S471J |
| R | 486 | (B,63,36) | RS1/16S471J |
| R | 493 | (B,76,42) | RS1/16S472J |
| R | 494 | (B,76,40) | RS1/16S472J |
| R | 495 | (B,89,23) | RS1/16S331J |
| R | 496 | (B,85,23) | RS1/16S331J |

**CAPACITORS**

| | | | |
|---|---|---|---|
| C | 464 | (B,66,65) | CKSRYB104K50 |
| C | 470 | (B,41,73) | CKSRYB104K50 |
| C | 471 | (A,35,57) | CEAT100M50 |
| C | 472 | (B,39,52) | CKSRYB104K50 |
| C | 473 | (B,24,57) | CKSRYB104K50 |
| C | 474 | (B,24,61) | CKSRYB104K50 |
| C | 475 | (B,43,44) | CKSRYB104K50 |
| C | 476 | (B,29,45) | CKSRYB104K50 |
| C | 477 | (A,52,37) ELECT. CAPACITOR | CEAT471M6R3 |
| C | 478 | (A,45,37) ELECT. CAPACITOR | CEAT471M6R3 |
| C | 479 | (A,38,37) ELECT. CAPACITOR | CEAT471M6R3 |
| C | 480 | (A,30,37) ELECT. CAPACITOR | CEAT102M6R3 |
| C | 481 | (A,65,49) | CEAT100M50 |
| C | 482 | (A,65,42) | CEAT100M50 |
| C | 483 | (B,59,34) | CCSRCH331J50 |
| C | 484 | (B,63,34) | CCSRCH331J50 |
| C | 485 | (B,89,21) | CCSRCH101J50 |
| C | 486 | (B,85,21) | CCSRCH101J50 |
| C | 487 | (B,58,26) | CCSRCH470J50 |
| C | 488 | (B,23,25) | CKSRYB104K50 |
| C | 489 | (B,53,26) | CCSRCH470J50 |
| C | 490 | (B,47,26) | CCSRCH470J50 |
| C | 491 | (B,27,25) | CCSRCH470J50 |
| C | 492 | (B,40,26) | CCSRCH470J50 |

## G RHTS DSP ASSY

**MISCELLANEOUS**

| | | | |
|---|---|---|---|
| IC | 601 | (A,87,53) DIR IC | AK4117VF |
| IC | 650 | (A,66,36) IC | TC7SH08FUS1 |
| IC | 801 | (A,31,48) DSP IC | DSPC56371AF180 |
| IC | 802 | (A,21,34) IC | TC7WU04FU |
| IC | 851 | (B,44,46) FLASH ROM IC | PDC184A8 |
| ⚠ IC | 901 | (A,95,42) LDO REGULATOR | BD00KA5WFP |
| Q | 801 | (B,28,40) TRANSISTOR | RT1N241M |
| L | 602 | (B,87,49) CHIP SOLID INDUCTOR | QTL1013 |
| L | 603 | (A,84,58) CHIP SOLID INDUCTOR | QTL1013 |
| L | 650 | (A,68,39) CHIP SOLID INDUCTOR | QTL1013 |
| L | 801 | (B,23,41) CHIP SOLID INDUCTOR | QTL1013 |
| L | 802 | (B,23,37) CHIP SOLID INDUCTOR | QTL1013 |
| L | 803 | (A,39,37) CHIP SOLID INDUCTOR | ATL7002 |
| L | 804 | (B,18,50) CHIP SOLID INDUCTOR | ATL7002 |
| L | 901 | (B,91,36) CHIP SOLID INDUCTOR | ATL7002 |
| KN | 901 | SCREW PLATE | VNE1948 |
| X | 801 | (A,16,40) CRYSTAL RESONATOR | XSS3003 |
| CN | 701 | (A,66,31) 19P SOCKET | XKP3054 |
| CN | 901 | (A,99,31) 9P SOCKET | XKP3088 |
| CN | 951 | (A,26,31) 13P SOCKET | XKP3053 |

**RESISTORS**

| | | | |
|---|---|---|---|
| R | 601 | (B,81,53) | RS1/10SR471J |
| R | 603 | (B,79,54) | RS1/10SR471J |
| R | 604 | (A,92,48) | RS1/10SR151J |
| R | 605 | (B,76,45) | RS1/10SR101J |
| R | 606 | (B,80,45) | RS1/10SR101J |
| R | 607 | (B,78,45) | RS1/10SR470J |
| R | 608 | (B,89,52) | RS1/10SR470J |
| R | 610 | (A,79,51) | RS1/10SR470J |
| R | 612 | (B,91,52) | RS1/10SR101J |
| R | 616 | (A,95,51) | RS1/10SR103J |
| R | 617 | (A,80,58) | RS1/10SR123J |
| R | 755 | (A,61,36) RESISTOR ARRAY | RAB4C104J |
| R | 801 | (A,42,59) | RS1/10SR470J |
| R | 802 | (A,34,59) | RAB4C101J |
| R | 803 | (B,38,57) | RS1/10SR103J |
| R | 804 | (B,36,57) | RS1/10SR103J |
| R | 805 | (B,34,57) | RS1/10SR103J |
| R | 806 | (B,32,57) | RS1/10SR103J |
| R | 807 | (B,30,57) | RS1/10SR473J |
| R | 810 | (A,18,50) | RS1/10SR473J |
| R | 811 | (B,17,45) | RS1/10SR101J |
| R | 812 | (B,21,45) | RS1/10SR101J |
| R | 813 | (B,19,45) | RS1/10SR472J |
| R | 814 | (B,23,45) | RS1/10SR101J |
| R | 815 | (B,27,45) | RS1/10SR101J |
| R | 816 | (B,26,35) | RS1/10SR101J |
| R | 817 | (B,25,39) | RS1/10SR103J |
| R | 818 | (A,28,34) | RS1/10SR470J |
| R | 821 | (A,15,37) | RS1/10SR471J |
| R | 822 | (A,17,37) | RS1/10SR105J |
| R | 823 | (A,25,35) | RS1/10SR101J |
| R | 825 | (A,31,35) | RS1/10SR101J |
| R | 827 | (B,32,39) | RS1/10SR0R0J |
| R | 828 | (B,30,39) | RS1/10SR103J |

| Mark | No. | Description | Part No. |
|---|---|---|---|
| | R 829 | (A,35,37) | RS1/10SR473J |
| | R 832 | (A,41,42) | RS1/10SR470J |
| | R 833 | (A,45,45) | RS1/10SR470J |
| | R 834 | (A,44,48) | RS1/10SR470J |
| | R 836 | (A,41,50) | RS1/10SR470J |
| | R 837 | (A,43,57) | RAB4C470J |
| | R 851 | (A,41,40) | RS1/10SR470J |
| | R 852 | (A,40,37) | RS1/10SR222J |
| | R 855 | (A,48,45) | RS1/10SR103J |
| | R 856 | (B,40,46) | RS1/10SR103J |
| | R 857 | (A,48,47) | RS1/10SR103J |
| | R 858 | (A,49,50) | RS1/10SR0R0J |
| | R 901 | (B,100,45) | RS1/10SR333J |
| | R 902 | (B,104,49) | RS1/10SR2202F |
| | R 903 | (B,98,36) | RS1/10SR104J |
| | R 953 | (B,37,32) | RS1/10SR104J |
| | R 954 | (B,35,32) | RS1/10SR104J |
| | R 955 | (B,28,35) | RS1/10SR104J |
| | R 956 | (B,33,32) | RS1/10SR104J |
| | R 957 | (B,21,41) | RS1/10SR104J |
| | R 958 | (A,13,34) | RS1/10SR104J |
| | R 959 | (B,12,46) | RS1/10SR104J |
| | R 960 | (A,11,34) | RS1/10SR104J |
| | R 966 | (A,96,57) | RS1/10SR0R0J |
| | R 967 | (A,93,58) | RS1/10SR0R0J |
| | R 968 | (A,97,58) | RS1/10SR0R0J |
| | R 969 | (A,100,59) | RS1/10SR0R0J |

**CAPACITORS**

| Mark | No. | Description | Part No. |
|---|---|---|---|
| | C 603 | (A,80,57) | CKSRYB103K50 |
| | C 606 | (A,81,53) | CKSRYB104K16 |
| | C 611 | (A,90,59) | CKSRYB104K16 |
| | C 614 | (A,94,55) | CKSRYB102K50 |
| | C 617 | (A,87,58) | CKSRYB104K16 |
| | C 650 | (A,68,35) | CKSRYB104K16 |
| | C 801 | (A,37,57) | CCSRCH471J50 |
| | C 802 | (A,37,59) | CKSRYB104K16 |
| | C 803 | (A,31,57) | CKSRYB105K6R3 |
| | C 805 | (A,25,57) | CCSRCH471J50 |
| | C 806 | (A,25,58) | CKSRYB104K16 |
| | C 807 | (A,21,53) | CCSRCH471J50 |
| | C 808 | (A,19,53) | CKSRYB104K16 |
| | C 809 | (A,21,50) | CKSRYB105K6R3 |
| | C 811 | (B,15,46) | CCSRCH221J50 |
| | C 813 | (B,29,45) | CCSRCH221J50 |
| | C 814 | (A,20,44) | CCSRCH471J50 |
| | C 815 | (A,20,45) | CKSRYB104K16 |
| | C 816 | (A,17,35) | CCSRCH471J50 |
| | C 817 | (A,16,35) | CKSRYB104K16 |
| | C 819 | (A,12,37) | CCSRCH5R0C50 |
| | C 820 | (A,20,37) | CCSRCH5R0C50 |
| | C 821 | (A,24,38) | CCSRCH471J50 |
| | C 822 | (A,24,37) | CKSRYB104K16 |
| | C 823 | (A,27,38) | CKSRYB105K6R3 |
| | C 825 | (A,29,37) | CKSRYB103K50 |
| | C 826 | (A,32,38) | CKSRYB105K6R3 |
| | C 828 | (A,40,44) | CCSRCH471J50 |
| | C 829 | (A,41,44) | CKSRYB104K16 |
| | C 830 | (A,41,47) | CKSRYB105K6R3 |
| | C 832 | (A,41,52) | CCSRCH471J50 |
| | C 833 | (A,42,52) | CKSRYB104K16 |
| | C 851 | (B,50,48) | CKSRYB104K16 |
| | C 901 | (A,100,37) | CKSRYB105K6R3 |
| | C 906 | (A,104,46) | CKSRYB105K6R3 |

## H POWER SUPPLY UNIT

POWER SUPPLY UNIT has no service part.

## I FM/AM TUNER UNIT

FM/AM TUNER UNIT has no service part.