Pioneer

Service Manual

ORDER NO.
RRV2505

STEREO DVD CASSETTE DECK RECEIVER

XV-VS800
XV-VS600

THIS MANUAL IS APPLICABLE TO THE FOLLOWING MODEL(S) AND TYPE(S).

Type	Model		Power Requirement	Region No.	The voltage can be converted by the following method.
	XV-VS800	XV-VS600			
DBDXJ	◯	◯	AC110-127V/220-230V/240V	3	With the voltage selector
DDXJRA	◯	–	AC110-127V/220-230V/240V	1	With the voltage selector
DDXJ/RB	◯	◯	AC110-127V/220-230V/240V	2	With the voltage selector
DDXJ/AR	◯	–	AC110-127V/220-230V/240V	4	With the voltage selector
DLXJ/NC	◯	◯	AC110-120V/220-230V/240V	3	With the voltage selector

● This service manual should be used together with the following manual(s):

Model No.	Order No.	Remarks
XR-A9800D/KUCXJ	RRV2329	

CONTENTS

1. SAFETY INFORMATION ····· 2
2. CONTRAST OF MISCELLANEOUS PARTS ····· 3
3. SCHEMATIC DIAGRAM ····· 12
4. PCB CONNECTION DIAGRAM ····· 22

PIONEER CORPORATION 4-1, Meguro 1-chome, Meguro-ku, Tokyo 153-8654, Japan
PIONEER ELECTRONICS SERVICE, INC. P.O. Box 1760, Long Beach, CA 90801-1760, U.S.A.
PIONEER EUROPE NV Haven 1087, Keetberglaan 1, 9120 Melsele, Belgium
PIONEER ELECTRONICS ASIACENTRE PTE. LTD. 253 Alexandra Road, #04-01, Singapore 159936

©PIONEER CORPORATION 2001

T – ZZK JULY 2001 Printed in Japan

1. SAFETY INFORMATION

This service manual is intended for qualified service technicians ; it is not meant for the casual do-it-yourselfer. Qualified technicians have the necessary test equipment and tools, and have been trained to properly and safely repair complex products such as those covered by this manual.
Improperly performed repairs can adversely affect the safety and reliability of the product and may void the warranty. If you are not qualified to perform the repair of this product properly and safely, you should not risk trying to do so and refer the repair to a qualified service technician.

LABEL CHECK

WARNING !

THE AEL (ACCESSIBLE EMISSION LEVEL) OF THE LASER POWER OUTPUT IS LESS THAN CLASS 1 BUT THE LASER COMPONENT IS CAPABLE OF EMITTING RADIATION EXCEEDING THE LIMIT FOR CLASS 1.
A SPECIALLY INSTRUCTED PERSON SHOULD DO SERVICING OPERATION OF THE APPARATUS.

LASER DIODE CHARACTERISTICS

FOR DVD :	MAXIMUM OUTPUT POWER : 5 mW
	WAVELENGTH : 655 nm
FOR CD :	MAXIMUM OUTPUT POWER : 5mW
	WAVELENGTH : 785 nm

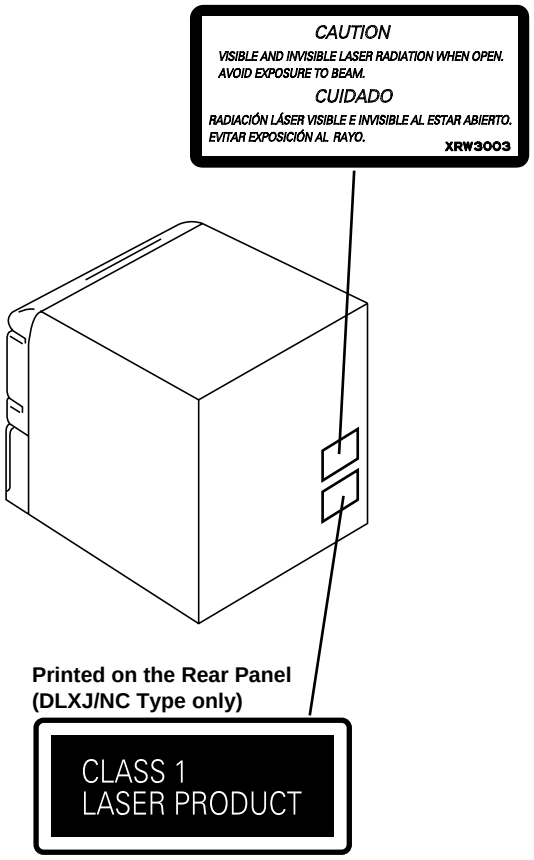

Additional Laser Caution

1. Inside detection switch (S201 on the SMEB assy) and loading-status detection switch (S9503 on the MOTOR assy) are detected by the microprocessor (IC11 in the DVDM assy).
   • To permit the laser diode to oscillate, it is required to set the inside detection switch for the inside position (S201 : ON) and to set the loading-status detection switch for the clamp position (the center terminal of S9503 is shorted to +5V). The 655 nm laser diode for DVD oscillation will continue if pin 19 of IC1 is shorted to +5V (fault condition) in the DVDM assy.
   The 785 nm laser diode for CD oscillates if pin 20 of IC1 is shorted to +5V in the DVDM assy.
   In the test mode ∗ , the laser diode oscillates when microprocessor detects a PLAY signal, or when the PLAY key is pressed (S5931 ON in the DISPLAY assy), with the above requirements satisfied.

2. When the cover is open, close viewing through the objective lens with the naked eye will cause exposure to the laser beam.

∗ : Refer to page 82 on the service manual RRV2329.

2. CONTRAST OF MISCELLANEOUS PARTS

NOTES:
- *Parts marked by "NSP" are generally unavailable because they are not in our Master Spare Parts List.*
- *The ⚠ mark found on some component parts indicates the importance of the safety factor of the part. Therefore, when replacing, be sure to use parts of identical designation.*
- *Screws adjacent to ▼ mark on product are used for disassembly.*
- *Reference Nos. indicate the pages and Nos. in the service manual for the base model.*
- *When ordering resistors, first convert resistance values into code form as shown in the following examples.*

Ex.1 When there are 2 effective digits (any digit apart from 0), such as 560 ohm and 47k ohm (tolerance is shown by J=5%, and K=10%).

560 → 56 x 10^1 → 561 ..... RD1/4PU[5][6][1]J
47k → 47 x 10^3 → 473 ..... RD1/4PU[4][7][3]J
0.5 → R50 ..... RN2H[R][5][0]K
1 → 1R0 ..... RS1P[1][R][0]K

Ex.2 When there are 3 effective digits (such as in high precision metal film resistors).

5.62k → 562 x 10^1 → 5621 ..... RN1/4PC[5][6][2][1]F

■ CONTRAST TABLE for XV-VS800

XV-VS800/DBDXJ, DDXJRA, DDXJ/RB, DDXJ/AR, DLXJ/NC and XR-A9800D/KUCXJ are constructed the same except for the following :

Ref. No.	Mark	Symbol and Description	Part No.						Remarks
			XR-A9800D /KUCXJ	XV-VS800 /DBDXJ	XV-VS800 /DDXJRA	XV-VS800 /DDXJ/RB	XV-VS800 /DDXJ/AR	XV-VS800 /DLXJ/NC	
		PCB ASSEMBLIES							
		MAIN ASSY	XWM3174	XWM3172	XWM3172	XWM3172	XWM3172	XWM3172	
P5- 1		└─ AF ASSY	XWZ3330	XWZ3322	XWZ3322	XWZ3322	XWZ3322	XWZ3322	
		COMPLEX ASSY	XWM3178	AWM7618	AWM7618	AWM7618	AWM7618	AWM7618	
P5- 4		├─ PRIMARY ASSY	XWZ3332	XWZ3326	XWZ3326	XWZ3326	XWZ3326	XWZ3326	
P7- 1		└─ DISPLAY ASSY	XWZ3331	AWU7801	AWU7801	AWU7801	AWU7801	AWU7801	
		PACKING SECTION							
P3- 1	⚠	Power Cord	ADG7022	ADG1158	ADG1158	ADG1154	ADG1158	ADG1154	
P3- 5		Remote Control Unit	XZN3109	XZN3110	XZN3110	XZN3110	XZN3110	XZN3110	
P3- 9		Front Pad	XHA3020	XHA3030	XHA3030	XHA3030	XHA3030	XHA3030	
P3-10		Rear Pad	XHA3021	XHA3031	XHA3031	XHA3031	XHA3031	XHA3031	
P3-11		Packing Case	XHD3144	XHD3280	XHD3280	XHD3280	XHD3291	XHD3281	
P3-12	NSP	Warranty Card	ARY7045	Not used	Not used	Not used	Not used	Not used	
P3-14		Operating Instructions (English/French)	XRE3036	Not used	Not used	Not used	Not used	Not used	
		Operating Instructions (English/Chinese)	Not used	XRE3052	Not used	Not used	Not used	XRE3052	
		Operating Instructions (English)	Not used	Not used	XRB3010	XRB3010	Not used	Not used	
		Operating Instructions (English/Spanish)	Not used	Not used	Not used	Not used	XRE3053	Not used	
	⚠	Power Cord	Not used	Not used	Not used	Not used	XDG3009	Not used	
	⚠	Power-cord Plug Conversion Adapter	Not used	XKM3002	Not used	Not used	XKM3002	Not used	Accessories
		Caution Sheet	XRH3004	Not used	Not used	Not used	XRH3002	Not used	
		Region Label	Not used	Not used	VRW1708	VRW1701	Not used	Not used	For Packing Case
		Caution Sheet AR	Not used	Not used	Not used	Not used	XRH3002	Not used	Accessories
		EXTERIOR SECTION							
P5-12	⚠	Power Transformer (T1) (AC120V)	XTS3042	Not used	Not used	Not used	Not used	Not used	
P5-12	⚠	Power Transformer (T1) (AC110-127V/220-230V/240V)	Not used	XTS3055	XTS3055	XTS3055	XTS3055	XTS3055	
P5-13	⚠	Fuse (FU1 : 6.3A)	REK1085	Not used	Not used	Not used	Not used	Not used	
P5-13	⚠	Fuse (FU1 : T5A)	Not used	AEK1061	AEK1061	AEK1061	AEK1061	AEK1061	
P5-25		Rear Panel	XNC3065	XNC3131	XNC3131	XNC3131	XNC3131	XNC3132	
P5-38		Tray Cap	XAK3157	XAK3236	XAK3236	XAK3236	XAK3236	XAK3236	
		Tray Panel DVD	Not used	XAK3251	XAK3251	XAK3251	XAK3251	XAK3251	For Tray Cap
P5-41	NSP	Fuse Card	AAX2374	Not used	Not used	Not used	Not used	Not used	
P5-42	NSP	Getter	XAX3175	XAX3271	XAX3271	XAX3271	XAX3271	XAX3271	
P5-43		65 Label	ARW7050	Not used	Not used	Not used	Not used	Not used	
	⚠	Fuse (FU2, FU3 : T3.15A)	Not used	AEK1059	AEK1059	AEK1059	AEK1059	AEK1059	*1
	NSP	Name Label	Not used	Not used	XAL3101	XAL3101	XAL3101	Not used	*2
	NSP	Region Label	Not used	Not used	XAX3183	XAX3184	XAX3185	Not used	For Rear Panel
		Caution Label	Not used	XRW3003	XRW3003	XRW3003	XRW3003	XRW3003	*3

Ref. No.	Mark	Symbol and Description	Part No.						Remarks
			XR-A9800D /KUCXJ	XV-VS800 /DBDXJ	XV-VS800 /DDXJRA	XV-VS800 /DDXJ/RB	XV-VS800 /DDXJ/AR	XV-VS800 /DLXJ/NC	
	NSP	SISIR Label	Not used	Not used	Not used	Not used	Not used	XAX3280	For Rear Panel
		Rear Sheet	AED7037	Not used	Not used	Not used	Not used	Not used	
		FRONT PANEL SECTION							
P7-8		GND Plate C	XNG3047	Not used	Not used	Not used	Not used	Not used	
P7-8		GND Plate A	Not used	XNG3030	XNG3030	XNG3030	XNG3030	XNG3030	
P7-18		Volume Knob	XAA3013	XAA3022	XAA3022	XAA3022	XAA3022	XAA3022	
P7-21		FUNC Button L	XAD3061	XAD3118	XAD3118	XAD3118	XAD3118	XAD3118	No.8
		FUNC Cap L	Not used	XAK3247	XAK3247	XAK3247	XAK3247	XAK3247	No.7
P7-22		FUNC Button R	XAD3051	XAD3112	XAD3112	XAD3112	XAD3112	XAD3112	No.10
		FUNC Cap R	Not used	XAK3248	XAK3248	XAK3248	XAK3248	XAK3248	No.9
P7-23		FUNC Frame L	XAD3052	Not used	Not used	Not used	Not used	Not used	
P7-24		FUNC Frame R	XAD3053	Not used	Not used	Not used	Not used	Not used	
P7-25		DVD ENT Button	XAD3056	XAD3110	XAD3110	XAD3110	XAD3110	XAD3110	No.12
P7-26		Display Panel	XAK3135	XAK3259	XAK3259	XAK3259	XAK3259	XAK3259	
P7-27		EQ Panel	XAK3150	Not used	Not used	Not used	Not used	Not used	
		SC Panel	Not used	XAK3268	XAK3268	XAK3268	XAK3268	XAK3268	No.26
		SC Panel Assy	Not used	XXG3090	XXG3090	XXG3090	XXG3090	XXG3090	No.13
P7-28		JOG Lens	XAK3152	XAK3243	XAK3243	XAK3243	XAK3243	XAK3243	No.23
P7-29		V Lens	XAK3153	XAK3237	XAK3237	XAK3237	XAK3237	XAK3237	
P7-33		FL Cover	XAK3164	XAK3239	XAK3239	XAK3239	XAK3239	XAK3239	
P7-34		Cover Sheet L	XAK3184	Not used	Not used	Not used	Not used	Not used	
P7-35		Cover Sheet R	XAK3185	Not used	Not used	Not used	Not used	Not used	
		LED Barrier	Not used	XEC3022	XEC3022	XEC3022	XEC3022	XEC3022	No.24
P7-36		Power Button	XAD3044	XAD3102	XAD3102	XAD3102	XAD3102	XAD3102	No.17
P7-37		CD Button	XAD3045	XAD3104	XAD3104	XAD3104	XAD3104	XAD3104	No.19
P7-38		SC Button	XAD3060	Not used	Not used	Not used	Not used	Not used	
		SC Button L	Not used	XAD3105	XAD3105	XAD3105	XAD3105	XAD3105	No.29
		SC Cap L	Not used	XAK3241	XAK3241	XAK3241	XAK3241	XAK3241	No.27
		SC Button R	Not used	XAD3106	XAD3106	XAD3106	XAD3106	XAD3106	No.30
		SC Cap R	Not used	XAK3267	XAK3267	XAK3267	XAK3267	XAK3267	No.28
		ASES Button	Not used	XAD3114	XAD3114	XAD3114	XAD3114	XAD3114	No.20
		Timer Button	Not used	XAD3115	XAD3115	XAD3115	XAD3115	XAD3115	No.21
P7-39		SC Button L	XAD3047	Not used	Not used	Not used	Not used	Not used	
		Audio Button	Not used	XAD3107	XAD3107	XAD3107	XAD3107	XAD3107	No.14
P7-40		SC Button R	XAD3049	Not used	Not used	Not used	Not used	Not used	
		Visual Button	Not used	XAD3108	XAD3108	XAD3108	XAD3108	XAD3108	No.15
P7-41		DOLBY Button	XAD3054	XAD3121	XAD3121	XAD3121	XAD3121	XAD3121	No.11
P7-42		Sub Panel	XAK3203	XAK3271	XAK3271	XAK3271	XAK3271	XAK3271	No.6
P7-43		Standby Lens	XAK3151	XAK3240	XAK3240	XAK3240	XAK3240	XAK3240	No.18
P7-44		Deck Lens L	XAK3159	XAK3249	XAK3249	XAK3249	XAK3249	XAK3249	No.3
P7-45		Deck Lens R	XAK3160	XAK3250	XAK3250	XAK3250	XAK3250	XAK3250	No.5
P7-46		JOG Conductor	XAK3165	XAK3244	XAK3244	XAK3244	XAK3244	XAK3244	No.22
P7-47		Deck Door_L	XAN3022	XAN3037	XAN3037	XAN3037	XAN3037	XAN3037	No.2
P7-48		Deck Door_R	XAN3026	XAN3038	XAN3038	XAN3038	XAN3038	XAN3038	No.4
P7-49		Front Panel	XMB3027	XMB3058	XMB3058	XMB3058	XMB3058	XMB3058	No.1
P7-50		DV Button L	XAD3057	Not used	Not used	Not used	Not used	Not used	
P7-51		DV Button R	XAD3059	Not used	Not used	Not used	Not used	Not used	
P7-52	NSP	Front Panel ASSY	XXG3066	XXG3086	XXG3086	XXG3086	XXG3086	XXG3086	
		O/C Button	Not used	XAD3103	XAD3103	XAD3103	XAD3103	XAD3103	No.16
		Spacer	XEB3012	Not used	Not used	Not used	Not used	Not used	
		Spacer	XEB3013	Not used	Not used	Not used	Not used	Not used	
		Cushion Spacer	XEB3015	Not used	Not used	Not used	Not used	Not used	
		Cushion Spacer	XEB3016	Not used	Not used	Not used	Not used	Not used	
		Cushion Spacer	XEB3017	Not used	Not used	Not used	Not used	Not used	
		Spacer	XEC3014	Not used	Not used	Not used	Not used	Not used	
		Spacer	XEC3019	Not used	Not used	Not used	Not used	Not used	

Notes : For PCB ASSEMBLIES, Refer to “CONTRAST OF PCB ASSEMBLIES” and “3. SCHEMATIC DIAGRAM”.
The numbers in the remarks column correspond to the numbers on the “ FRONT PANEL ASSY ”.
*1 Refer to “3. SCHEMATIC DIAGRAM”. *2 Stick Name Label on the Rear Panel. *3 Refer to “LABEL CHECK”.

■ CONTRAST TABLE for XV-VS600

XV-VS600/DBDXJ, DDXJ/RB, DLXJ/NC and XR-A9800D/KUCXJ are constructed the same except for the following :

Ref. No.	Mark	Symbol and Description	Part No. XR-A9800D /KUCXJ	XV-VS600 /DBDXJ	XV-VS600 /DDXJ/RB	XV-VS600 /DLXJ/NC	Remarks
		PCB ASSEMBLIES					
		MAIN ASSY	XWM3174	AWM7605	AWM7605	AWM7605	
P5- 1		├─ AF ASSY	XWZ3330	AWU7789	AWU7789	AWU7789	
P5- 2		└─ SECONDARY ASSY	XWZ3323	XWZ3317	XWZ3317	XWZ3317	
		COMPLEX ASSY	XWM3178	AWM7617	AWM7617	AWM7617	
P5- 3		├─ REAR AMP ASSY	XWZ3325	XWZ3319	XWZ3319	XWZ3319	
P5- 4		├─ PRIMARY ASSY	XWZ3332	XWZ3320	XWZ3320	XWZ3320	
P7- 1		└─ DISPLAY ASSY	XWZ3331	AWU7800	AWU7800	AWU7800	
		PACKING SECTION					
P3- 1	⚠	Power Cord	ADG7022	ADG1158	ADG1158	ADG1154	
P3- 5		Remote Control Unit	XZN3109	XZN3108	XZN3108	XZN3108	
P3- 9		Front Pad	XHA3020	XHA3030	XHA3030	XHA3030	
P3-10		Rear Pad	XHA3021	XHA3031	XHA3031	XHA3031	
P3-11		Packing Case	XHD3144	XHD3277	XHD3277	XHD3278	
P3-12	NSP	Warranty Card	ARY7045	Not used	Not used	Not used	
P3-14		Operating Instructions (English/French)	XRE3036	Not used	Not used	Not used	
		Operating Instructions (English/Chinese)	Not used	XRE3052	Not used	XRE3052	
		Operating Instructions (English)	Not used	Not used	XRB3010	Not used	
	⚠	Power-cord Plug Conversion Adapter	Not used	XKM3002	Not used	Not used	
		Region Label	Not used	Not used	VRW1701	Not used	For Packing Case
		Caution Sheet	XRH3004	Not used	Not used	Not used	Accessories
		EXTERIOR SECTION					
P5-12	⚠	Power Transformer (T1) (AC120V)	XTS3042	Not used	Not used	Not used	
P5-12	⚠	Power Transformer (T1) (AC110-127V/220-230V/240V)	Not used	XTS3039	XTS3039	XTS3039	
P5-13	⚠	Fuse (FU1 : 6.3A)	REK1085	Not used	Not used	Not used	
P5-13	⚠	Fuse (FU1 : T5A)	Not used	AEK1061	AEK1061	AEK1061	
P5-15		Power Bracket	XNG3033	Not used	Not used	Not used	
P5-25		Rear Panel	XNC3065	XNC3128	XNC3128	XNC3129	
P5-26		SEC Holder	XMR3013	XMR3014	XMR3014	XMR3014	
P5-38		Tray Cap	XAK3157	XAK3236	XAK3236	XAK3236	
		Tray Panel DVD	Not used	XAK3251	XAK3251	XAK3251	
P5-41	NSP	Fuse Card	AAX2374	Not used	Not used	Not used	
P5-42	NSP	Getter	XAX3175	XAX3269	XAX3269	XAX3269	
P5-43		65 Label	ARW7050	Not used	Not used	Not used	
P5-44	NSP	$M Mecha. DVD (5ch)	XXA3019	Not used	Not used	Not used	
P5-44	NSP	$M Mecha. DVD (2ch)	Not used	XXA3018	XXA3018	XXA3018	
	⚠	Fuse (FU2, FU3 : T3.15A)	Not used	AEK1059	AEK1059	AEK1059	*1
	NSP	Name Label	Not used	Not used	XAL3099	Not used	*2
	NSP	Region Label	Not used	Not used	XAX3184	Not used	For Rear Panel
		Caution Label	Not used	XRW3003	XRW3003	XRW3003	*3
	NSP	SISIR Label	Not used	Not used	Not used	XAX3279	For Rear Panel
		Rear Sheet	AED7037	Not used	Not used	Not used	
		FRONT PANEL SECTION					
P7-8		GND Plate C	XNG3047	Not used	Not used	Not used	
P7-8		GND Plate A	Not used	XNG3030	XNG3030	XNG3030	
P7-18		Volume Knob	XAA3013	XAA3022	XAA3022	XAA3022	
P7-21		FUNC Button L	XAD3061	XAD3118	XAD3118	XAD3118	No.8
		FUNC Cap L	Not used	XAK3247	XAK3247	XAK3247	No.7
P7-22		FUNC Button R	XAD3051	XAD3112	XAD3112	XAD3112	No.10
		FUNC Cap R	Not used	XAK3248	XAK3248	XAK3248	No.9
P7-23		FUNC Frame L	XAD3052	Not used	Not used	Not used	
P7-24		FUNC Frame R	XAD3053	Not used	Not used	Not used	
P7-25		DVD ENT Button	XAD3056	XAD3110	XAD3110		No.12
P7-26		Display Panel	XAK3135	XAK3238	XAK3238	XAK3238	
P7-27		EQ Panel	XAK3150	Not used	Not used	Not used	
		SC Panel	Not used	XAK3268	XAK3268	XAK3268	No.26
		SC Panel Assy	Not used	XXG3090	XXG3090	XXG3090	No.13
P7-28		JOG Lens	XAK3152	XAK3243	XAK3243	XAK3243	No.23

Ref. No.	Mark	Symbol and Description	Part No.				Remarks
			XR-A9800D /KUCXJ	XV-VS600 /DBDXJ	XV-VS600 /DDXJ/RB	XV-VS600 /DLXJ/NC	
P7-29		V Lens	XAK3153	XAK3237	XAK3237	XAK3237	
P7-33		FL Cover	XAK3164	XAK3239	XAK3239	XAK3239	
P7-34		Cover Sheet L	XAK3184	Not used	Not used	Not used	
P7-35		Cover Sheet R	XAK3185	Not used	Not used	Not used	
		LED Barrier	Not used	XEC3022	XEC3022	XEC3022	No.24
P7-36		Power Button	XAD3044	XAD3102	XAD3102	XAD3102	No.17
P7-37		CD Button	XAD3045	XAD3104	XAD3104	XAD3104	No.19
P7-38		SC Button	XAD3060	Not used	Not used	Not used	
		SC Button L	Not used	XAD3105	XAD3105	XAD3105	No.29
		SC Cap L	Not used	XAK3241	XAK3241	XAK3241	No.27
		SC Button R	Not used	XAD3106	XAD3106	XAD3106	No.30
		SC Cap R	Not used	XAK3267	XAK3267	XAK3267	No.28
		ASES Button	Not used	XAD3114	XAD3114	XAD3114	No.20
		Timer Button	Not used	XAD3115	XAD3115	XAD3115	No.21
P7-39		SC Button L	XAD3047	Not used	Not used	Not used	
		Audio Button	Not used	XAD3107	XAD3107	XAD3107	No.14
P7-40		SC Button R	XAD3049	Not used	Not used	Not used	
		Visual Button	Not used	XAD3108	XAD3108	XAD3108	No.15
P7-41		DOLBY Button	XAD3054	XAD3121	XAD3121	XAD3121	No.11
P7-42		Sub Panel	XAK3203	XAK3246	XAK3246	XAK3246	No.6
P7-43		Standby Lens	XAK3151	XAK3240	XAK3240	XAK3240	No.18
P7-44		Deck Lens L	XAK3159	XAK3249	XAK3249	XAK3249	No.3
P7-45		Deck Lens R	XAK3160	XAK3250	XAK3250	XAK3250	No.5
P7-46		JOG Conductor	XAK3165	XAK3244	XAK3244	XAK3244	No.22
P7-47		Deck Door_L	XAN3022	XAN3037	XAN3037	XAN3037	No.2
P7-48		Deck Door_R	XAN3026	XAN3038	XAN3038	XAN3038	No.4
P7-49		Front Panel	XMB3027	XMB3058	XMB3058	XMB3058	No.1
P7-50		DV Button L	XAD3057	Not used	Not used	Not used	
P7-51		DV Button R	XAD3059	Not used	Not used	Not used	
P7-52	NSP	Front Panel ASSY	XXG3066	XXG3080	XXG3080	XXG3080	
		O/C Button	Not used	XAD3103	XAD3103	XAD3103	No.16
		Spacer	XEB3012	Not used	Not used	Not used	
		Spacer	XEB3013	Not used	Not used	Not used	
		Cushion Spacer	XEB3015	Not used	Not used	Not used	
		Cushion Spacer	XEB3016	Not used	Not used	Not used	
		Cushion Spacer	XEB3017	Not used	Not used	Not used	
		Spacer	XEC3014	Not used	Not used	Not used	
		Spacer	XEC3019	Not used	Not used	Not used	

Notes : For PCB ASSEMBLIES, Refer to “CONTRAST OF PCB ASSEMBLIES” and “3. SCHEMATIC DIAGRAM”.
The numbers in the remarks column correspond to the numbers on the “ FRONT PANEL ASSY ”.
*1 Refer to “3. SCHEMATIC DIAGRAM”. *2 Stick Name Label on the Rear Panel. *3 Refer to “LABEL CHECK”.

■ CONTRAST OF $M MECHA. DVD

XXA3018 and XXA3019 are constructed the same except for the following :

Ref. No.	Mark	Symbol and Description	Part No.		Remarks
			XXA3019 (XR-A9800D)	XXA3018 (XV-VS600)	
P5-10		CONNECT ASSY (6CH)	XWX3023	Not used	
P5-10		CONNECT ASSY (2CH)	Not used	XWX3019	
P5-14		25P Flexible Cable	XDD3046	Not used	
P5-14		15P Flexible Cable	Not used	XDD3049	
P5-18		30P Flexible Cable	XDD3044	Not used	
P5-18		16P Flexible Cable	Not used	XDD3043	
P5-21		7P Flexible Cable/30V	XDD3053	ADD7197	
P5-23		DVD Base	XNG3034	ANG7262	
P5-24		DVD Shield	XNK3006	ANK7066	
P5-55		21P Flexible Cable	XDD3052	Not used	
P5-55		7P Flexible Cable	Not used	XDD3045	

Notes : For PCB ASSEMBLIES, Refer to “PCB PARTS LIST”, “3. SCHEMATIC DIAGRAM” and “4. PCB CONNECTION DIAGRAM”.

■ FRONT PANEL ASSY

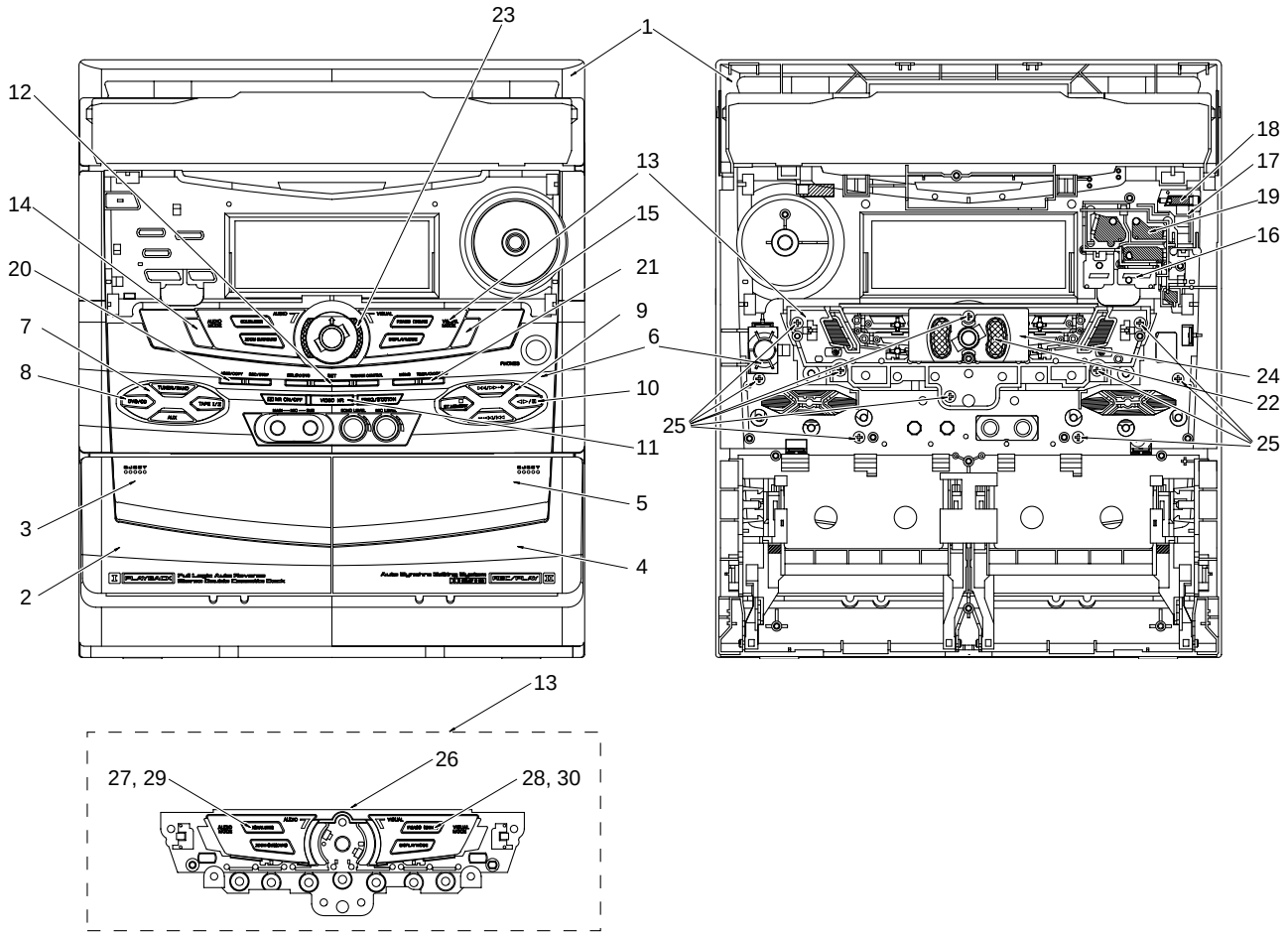

(1) FRONT PANEL ASSY PARTS LIST

Mark	No.	Description	Part No.
	1	Front Panel	XMB3058
	2	Deck Door_L	XAN3037
	3	Deck Lens L	XAK3249
	4	Deck Door_R	XAN3038
	5	Deck Lens R	XAK3250
	6	Sub Panel	See Contrast table (2)
	7	FUNC Cap L	XAK3247
	8	FUNC Button L	XAD3118
	9	FUNC Cap R	XAK3248
	10	FUNC Button R	XAD3112
	11	DOLBY Button	XAD3121
	12	CD ENT Button	XAD3110
	13	SC Panel Assy	XXG3090
	14	Audio Button	XAD3107
	15	Visual Button	XAD3108

Mark	No.	Description	Part No.
	16	O/C Button	XAD3103
	17	Power Button	XAD3102
	18	Standby Lens	XAK3240
	19	CD Button	XAD3104
	20	ASES Button	XAD3114
	21	Timer Button	XAD3115
	22	JOG Conductor	XAK3244
	23	JOG Lens	XAK3243
	24	LED Barrier	XEC3022
	25	Screw	BPZ30P100FZK
	26	SC Panel	XAK3268
	27	SC Cap L	XAK3241
	28	SC Cap R	XAK3267
	29	SC Button L	XAD3105
	30	SC Button R	XAD3106

(2) CONTRAST TABLE

XV-VS600 and XV-VS800 are constructed the same except for the following :

Mark	No.	Symbol and Description	Part No.		Remarks
			XV-VS800	XV-VS600	
	6	Sub Panel	XAK3271	XAK3246	

■ CONTRAST OF PCB ASSEMBLIES

I F AF ASSY

XWZ3322, AWU7789 and XWZ3330 are constructed the same except for the following :

Mark	Symbol and Description	Part No.			Remarks
		XWZ3330	XWZ3322	AWU7789	
⚠	IC3301	STK407-070B	STK407-070B	STK407-090B	
⚠	IC3305, IC3306 (5A)	AEK7019	AEK7019	Not used	
⚠	IC3305, IC3306 (7A)	Not used	Not used	AEK7021	
	IC3835	Not used	M65847AFP	M65847AFP	
⚠	Q3351	IRFI9Z34G	IRFI9Z34G	IRF9540A	
⚠	Q3352	IRFIZ34G	IRFIZ34G	IRF540A	
	Q3803	Not used	2SD1858X	2SD1858X	
	D3002	1SS133	1SS133	Not used	
	D3803	Not used	MTZJ5.6B	MTZJ5.6B	
	F2201, F2202	RTF1209	XTF3002	XTF3002	
	L3065 CHIP BEAD	VTL1081	VTL1081	Not used	
	L3065	Not used	Not used	LCTB4R7K1608	
	C3011, C3012	Not used	Not used	CEAT100M50	
	C3042, C3991	CKSRYB103K50	CKSRYB103K50	Not used	
	C3045, C3046, C3091	CEAT100M50	CEAT100M50	CEAT101M16	
	C3623, C3624	CKSRYB471K50	CKSRYB471K50	Not used	
	C3625	CEAT330M16	CEAT330M16	Not used	
	C3815	Not used	CEAT100M50	CEAT100M50	
	C3816, C3819	Not used	CEAT470M16	CEAT470M16	
	C3817	Not used	CKSRYB473K16	CKSRYB473K16	
	C3818	Not used	CCSRCH101J50	CCSRCH101J50	
	C3828–C3830	Not used	CKSRYB683K16	CKSRYB683K16	
	C3831	Not used	CKSRYB102K50	CKSRYB102K50	
	C3832	Not used	CKSRYB122K50	CKSRYB122K50	
	C3833–C3836	Not used	CKSRYB103K50	CKSRYB103K50	
	C3837	Not used	CCSRCH471J50	CCSRCH471J50	
	C3838	Not used	CKSRYB472K50	CKSRYB472K50	
	C3839, C3840	Not used	CKSRYB224K10	CKSRYB224K10	
	C3842, C3843	Not used	CEAT2R2M50	CEAT2R2M50	
	C3858	CEAT100M50	Not used	Not used	
	C3890	Not used	CKSRYB822K50	CKSRYB822K50	
	R3010	RS1/16S822J	RS1/16S822J	RS1/16S472J	
	R3026	RD1/4PU822J	RD1/4PU822J	RD1/4PU472J	
	R3619, R3620	RD1/4LMF100J	RD1/4LMF100J	RD1/2LMF100J	
	R3627	RS1/16S471J	RS1/16S471J	Not used	
	R3831	Not used	RD1/4PU102J	RD1/4PU102J	
	R3832–R3834	Not used	RS1/16S102J	RS1/16S102J	
	R3835, R3839	Not used	RS1/16S682J	RS1/16S682J	
	R3836, R3837	Not used	RS1/16S472J	RS1/16S472J	
	R3838, R3846	Not used	RS1/16S153J	RS1/16S153J	
	R3840–R3842, R3844, R3845	Not used	RS1/16S103J	RS1/16S103J	
	R3843	Not used	RS1/16S562J	RS1/16S562J	
	R3855	Not used	RS1/16S680J	RS1/16S680J	
	CN3601 4P SPEAKER TERMINAL	AKE7018	XKE3004	AKE7018	
	CN3603 9P JUMPER CONNECTOR	KPE9	KPE9	Not used	
	CN5104 30P FFC CONNECTOR	HLEM30R-1	HLEM30R-1	Not used	
	CN5104 16P FFC CONNECTOR	Not used	Not used	HLEM16R-1	
	JA3441 2P PIN JACK	Not used	Not used	VKB1060	
	JA3991 HEADPHONE JACK	XKN3009	XKN3009	AKN-056	
	SCREW	Not used	Not used	BBZ30P140FMC	
	MICA SHEET	Not used	Not used	XEE3003	
	FET BRACKET	Not used	Not used	XNG3016	

KF REAR AMP ASSY

XWZ3319 and XWZ3325 are constructed the same except for the following :

Mark	Symbol and Description	Part No.		Remarks
		XWZ3325	XWZ3319	
⚠	IC3401	STK402-230	Not used	
	Q3401–Q3404	2SD2114K	Not used	
	Q3405, Q3410	DTA124EK	Not used	
	Q3406–Q3409, Q3411–Q3413, Q3415	2SC2412K	Not used	
	Q3414, Q3471, Q3472	2SA1037K	Not used	
	D3425, D3426, D3471, D3472	1SS355	Not used	
	D3403–D3406, D3408, D3427, D3428	1SS133	Not used	
	D3409	MTZJ12C	Not used	
	D3429	MTZJ4.7B	Not used	
	L3401–L3403 AF CHOKE COIL	ATH-133	Not used	
	L3404 CHIP BEAD	VTL1081	Not used	
	RY3401, RY3402	ASR7017	Not used	
	C3401–C3403	CEANP2R2M50	Not used	
	C3404–C3406	CKSRYB222K50	Not used	
	C3407–C3409	CCSRCH221J50	Not used	
	C3410–C3412	CEANP100M35	Not used	
	C3413–C3415	CCSRCJ3R0C50	Not used	
	C3416, C3417, C3431	CEAT101M50	Not used	
	C3419	CEATR47M50	Not used	
	C3420	CEAT101M10	Not used	
	C3421	CEAT100M50	Not used	
	C3422, C3471, C3472	CCSRCH100D50	Not used	
	C3423, C3424, C3429	CKSRYB103K50	Not used	
	C3425–C3428	CKSRYF104Z25	Not used	
	C3432	CEAT221M16	Not used	
	R3401–R3404	RS1/16S332J	Not used	
	R3405–R3408	RS1/16S102J	Not used	
	R3409–R3411	RS1/10S273J	Not used	
	R3412	RS1/10S104J	Not used	
	R3413–R3415	RS1/16S563J	Not used	
	R3416–R3418	RS1/10S561J	Not used	
	R3419–R3421	RD1/4PU563J	Not used	
	R3422	RS1/10S223J	Not used	
	R3424	RS1/16S102J	Not used	
	R3425–R3428	RS1/10S823J	Not used	
	R3429, R3430, R3432	RS1/10S153J	Not used	
	R3433	RS1/16S273J	Not used	
	R3434, R3475, R3476	RS1/10S392J	Not used	
	R3435	RS1/16S104J	Not used	
	R3436–R3437, R3439, R3440	RS1/16S223J	Not used	
	R3438	RS1/16S103J	Not used	
	R3441	RS1/16S224J	Not used	
	R3442–R3444	RD1/4LMF100J	Not used	
	R3445–R3447	RS1/16S100J	Not used	
	R3448	RS3LMF102J	Not used	
	R3449	RD1/4PU681J	Not used	
	R3471–R3473	RS1LMFR22J	Not used	
	R3477–R3478	RD1/4MUF101J	Not used	
	R3474	RS1/16S0R0J	Not used	
	CN3401 1P PIN JACK	AKB7042	Not used	
	CN3404 FFC CONNECTOR 25P	HLEM25R-1	Not used	
	CN3404 FFC CONNECTOR 15P	Not used	HLEM15R-1	
	J3401 JUMPER WIRE	D15A09-100-2651	Not used	
	JA3403 AUDIO 3P PIN JACK	XKB3007	Not used	
	J3409 JUMPER WIRE	DB018NT0	Not used	
	9P CABLE HOLDER	51063-0905	51063-1105	
	11P CABLE HOLDER	51063-1105	Not used	

MF DISPLAY ASSY

AWU7801, AWU7800 and XWZ3331 are constructed the same except for the following :

Mark	Symbol and Description	Part No.			Remarks
		XWZ3331	AWU7801	AWU7800	
	IC3931	Not used	M65855FP	M65855FP	
	IC5601	HEF4794BT	HEF4794BT	Not used	
	Q5822–Q5824, Q5827	Not used	Not used	DTC143EK	
	D3931	Not used	MTZJ5.1B	MTZJ5.1B	
	D5592	1SS133	Not used	Not used	
	D5593	1SS133	1SS133	Not used	
	D5595	1SS181	1SS181	Not used	
	D5601-D5608, D5622	SLP3118C51H	SLR-343MC(NPQ)	SLR-343MC(NPQ)	
	D5610, D5611, D5615, D5616, D5904	SLP3118C51H	SLR-343MC(NPQ)	SLR-343MC(NPQ)	
	D5612, D5614	SLP6118C51H	SLR-343DC(NPQ)	SLR-343DC(NPQ)	
	D5617	SLP6118C51H	Not used	Not used	
	D5618	SLP3118C51H	Not used	Not used	
	D5619, D5620, D5903	SLP9118C51H	SLR-343VC(NPQ)	SLR-343VC(NPQ)	
	D5621	SLP6118C51H	SLR-343MC(NPQ)	SLR-343MC(NPQ)	
	D5902	SLP7118C51H	SLR-343PC(KLM)	SLR-343PC(KLM)	
	S5911–S5913, S5915–S5940	XSG3001	ASG1051	ASG1051	
	L3921, L3922 CHIP BEAD	VTL1081	VTL1081	Not used	
	L3931	Not used	LCTB100K2125	LCTB100K2125	
	C3931, C3934, C3940	Not used	CKSRYB103K50	CKSRYB103K50	
	C3932	Not used	CEJAR47M50	CEJAR47M50	
	C3933	Not used	CEJQ220M10	CEJQ220M10	
	C3935	Not used	CKSRYB473K16	CKSRYB473K16	
	C3937	Not used	CEJA4R7M50	CEJA4R7M50	
	C3938	Not used	CKSRYB472K50	CKSRYB472K50	
	C3939	Not used	CKSRYB123K50	CKSRYB123K50	
	C3942	Not used	CKSRYF104Z25	CKSRYF104Z25	
	C3943	Not used	CEJQ101M10	CEJQ101M10	
	C5601	CCSRCH101J50	CCSRCH101J50	Not used	
	C5603, C5604	CCSRCH100D50	CCSRCH100D50	Not used	
	R3931	Not used	RS1/16S472J	RS1/16S472J	
	R3932, R3937, R3938	Not used	RS1/16S123J	RS1/16S123J	
	R3933	Not used	RS1/16S153J	RS1/16S153J	
	R3934	Not used	RS1/16S124J	RS1/16S124J	
	R3935	Not used	RS1/16S822J	RS1/16S822J	
	R3936	Not used	RS1/16S103J	RS1/16S103J	
	R3939	RS1/16S0R0J	Not used	Not used	
	R3940	Not used	RD1/4PU121J	RD1/4PU121J	
	R5590, R5984, R5985, R5987, R5990	RS1/16S473J	RS1/16S473J	Not used	
	R5591	RS1/16S152J	RS1/16S152J	Not used	
	R5610	Not used	Not used	RS1/16S0R0J	
	R5619	RS1/16S221J	RS1/16S221J	Not used	
	R5620, R5621, R5626	RS1/16S102J	RS1/16S102J	Not used	
	R5986, R5988, R5989	RS1/16S103J	RS1/16S103J	Not used	
	R9901, R9902	Not used	RS1/16S101J	RS1/16S101J	
	VR3931 (10kΩ-B)	Not used	XCS3002	XCS3002	
	CN5502 FFC CONNECTOR 21P	52492-2120	52492-2120	Not used	
	CN5502 FFC CONNECTOR 7P	Not used	Not used	52492-0720	

JF SECONDARY ASSY

XWZ3317 and XWZ3323 are constructed the same except for the following :

Mark	Symbol and Description	Part No.		Remarks
		XWZ3323	XWZ3317	
⚠	C33, C34 (4700µF/80V)	ACH7071	Not used	
⚠	C33, C34 (4700µF/71V)	Not used	XCH3001	

LF PRIMARY ASSY

XWZ3326, XWZ3320 and XWZ3332 are constructed the same except for the following :

Mark	Symbol and Description	Part No.			Remarks
		XWZ3332	XWZ3326	XWZ3320	
⚠	S1 VOLTAGE SELECTOR	Not used	XKX3001	XKX3001	
⚠	R1 (2.2MΩ/ 1/2W)	RCN1080	Not used	Not used	
⚠	AN1 1P AC INLET	XKP3042	XKP3041	XKP3041	
⚠	CN2 4P VH CONNECTOR	Not used	B4P7-VH	B4P7-VH	
	H3–H6 FUSE CLIP	Not used	AKR7001	AKR7001	

● PCB PARTS LIST for XV-VS600

GF CONNECT ASSY (2CH)

SEMICONDUCTORS

Mark	No.	Description	Part No.
	IC8202		LA7137M
	IC8203		NJM78L08A
	IC8301		PCM1716E
	IC8201		TA7302P
	Q8203, Q8204		2PB709A
	Q8205, Q8206		2SD2114K
	Q8302		DTA124EK
	Q8201		DTC114YK
	Q8301		DTC124EK
	Q8202		PDTA124EK
	D8304, D8305		1SS355

COILS AND FILTERS

Mark	No.	Description	Part No.
	L8201		LCTA470J2520
	L8241–L8245	CHIP BEADS	VTL1081
	L8103	CHIP BEADS	VTL1095
	L8205	CHIP SOLID INDUCTOR	VTL1145

CAPACITORS

Mark	No.	Description	Part No.
	C8104		CCSRCH101J50
	C8105, C8106, C8109, C8110, C8316		CCSRCH221J50
	C8201		CCSRCH390J50
	C8111		CEAT102M10
	C8311, C8312		CEJA100M16
	C8209, C8210, C8217, C8226, C8227		CEJA101M10
	C8235		CEJA101M10
	C8212, C8223		CEJA331M6R3
	C8302, C8305, C8306, C8309		CEJA470M10
	C8317		CEJQ470M10
	C8301, C8315		CGCYX104K25
	C8101, C8232, C8233, C8304		CKSRYB103K50
	C8202–C8206, C8208, C8211		CKSRYB104K16
	C8213, C8214, C8216, C8221, C8222		CKSRYB104K16
	C8228, C8236, C8237, C8308		CKSRYB104K16
	C8313, C8314		CKSRYB681K50

RESISTORS

Mark	No.	Description	Part No.
	All Resistors		RS1/16S□□□J

OTHERS

Mark	No.	Description	Part No.
	CN8202	4P MINI DIN SOCKET	AKP7008
	JA8203	OPTICAL LINK OUT	GP1F32T
	CN8105	FFC CONNECTOR 15P	HLEM15S-1
	CN8103	FFC CONNECTOR 16P	HLEM16S-1
	CN8104	FFC CONNECTOR 7P	HLEM7S-1
	JA8201	1P PIN JACK	VKB1063
	CN8106	7P FFC CONNECTOR	VKN1183
	CN8102	27P FFC CONNECTOR	VKN1203
	CN8107	7P FFC CONNECTOR	VKN1211
	CN8101	32P FFC CONNECTOR	VKN1263
	KN8301	EARTH METAL FITTING	VNF1084
	S8201	SLIDE SWITCH	VSH1020

3. SCHEMATIC DIAGRAM

3.1 CONNECT ASSY (2CH) for XV-VS600

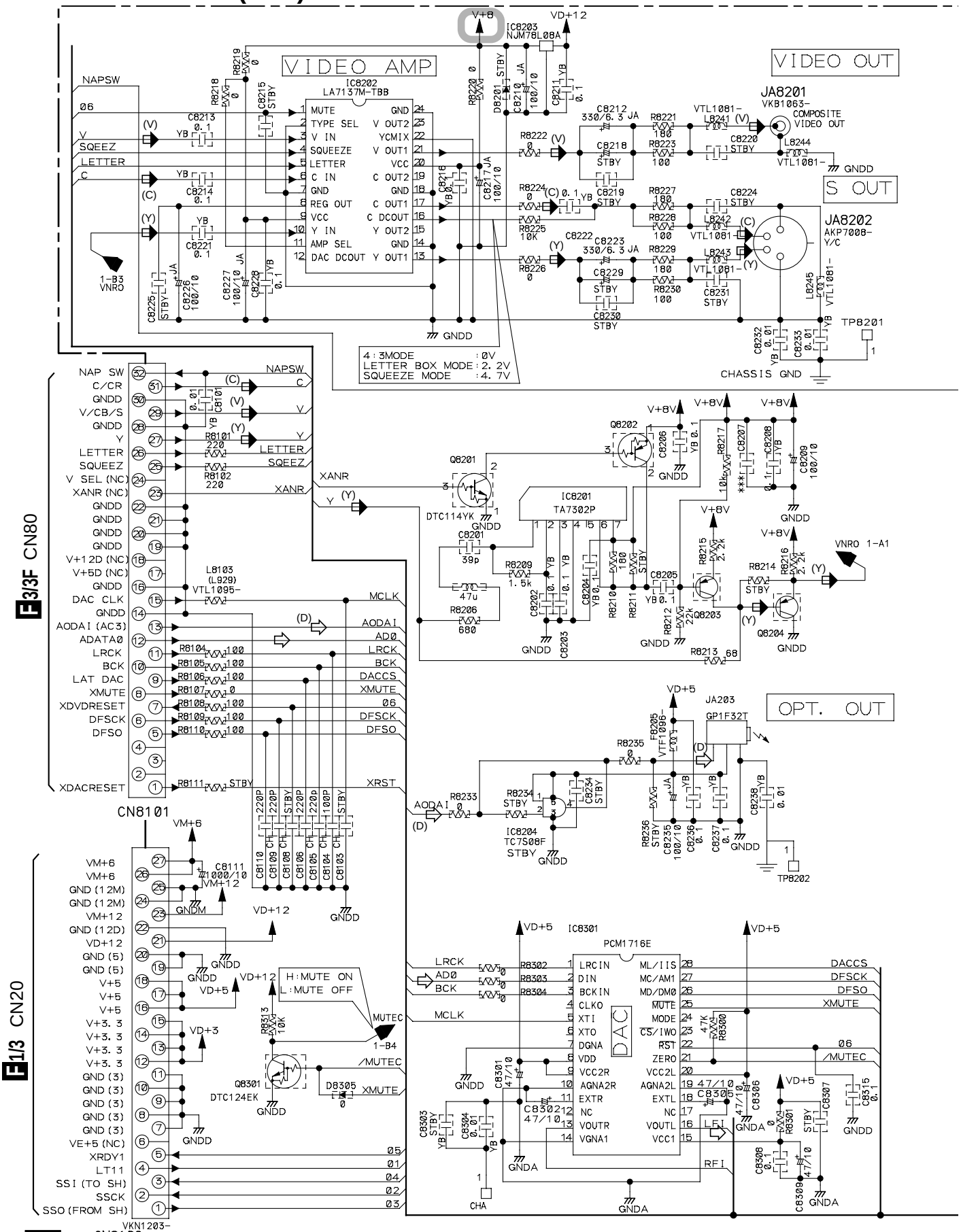

Note : When ordering service parts, be sure to refer to "EXPLODED VIEWS and PARTS LIST" or "PCB PARTS LIST"

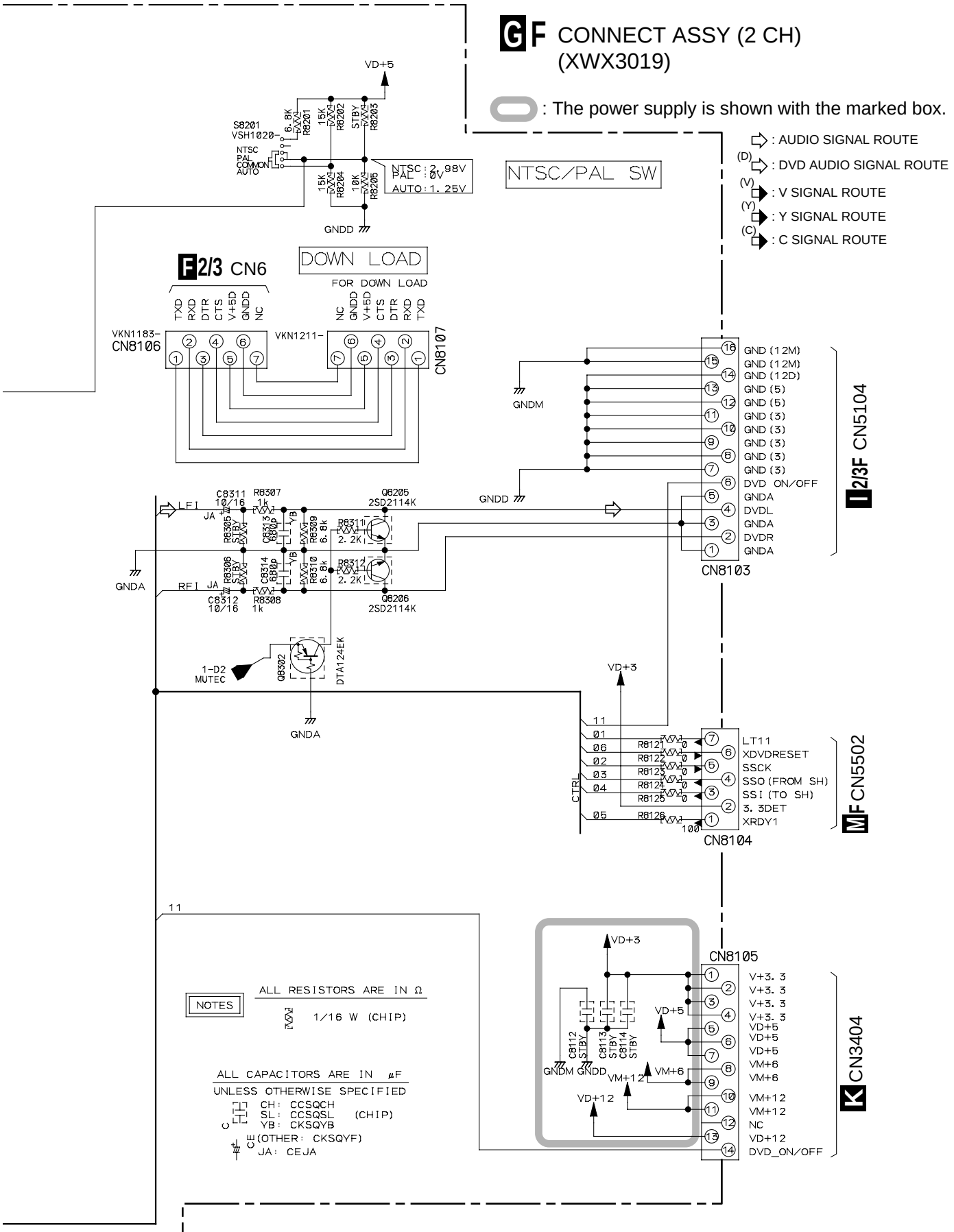

3.2 AF (2/3) ASSY

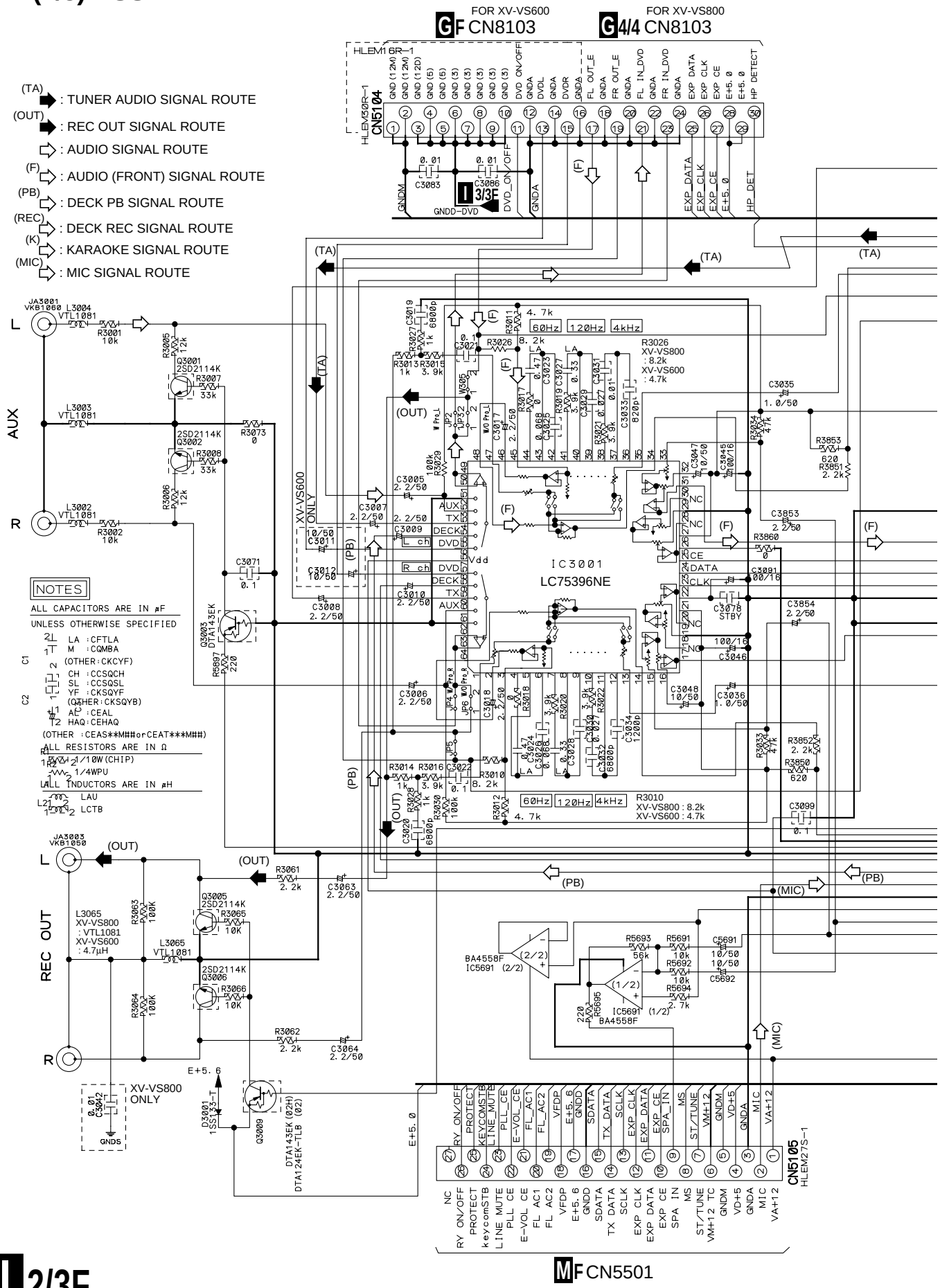
FOR XV-VS600
GF CN8103
FOR XV-VS800
G4/4 CN8103
(TA) : TUNER AUDIO SIGNAL ROUTE
(OUT) : REC OUT SIGNAL ROUTE
: AUDIO SIGNAL ROUTE
(F) : AUDIO (FRONT) SIGNAL ROUTE
(PB) : DECK PB SIGNAL ROUTE
(REC) : DECK REC SIGNAL ROUTE
(K) : KARAOKE SIGNAL ROUTE
(MIC) : MIC SIGNAL ROUTE
CN5104
HLEM16R-1
HLEM30R-1
I 3/3F
GNDD-DVD
AUX
REC OUT
IC3001
LC75396NE
XV-VS600 ONLY
XV-VS800 ONLY
NOTES
ALL CAPACITORS ARE IN μF
UNLESS OTHERWISE SPECIFIED
ALL RESISTORS ARE IN Ω
ALL INDUCTORS ARE IN μH
CN5105
HLEM27S-1
MF CN5501

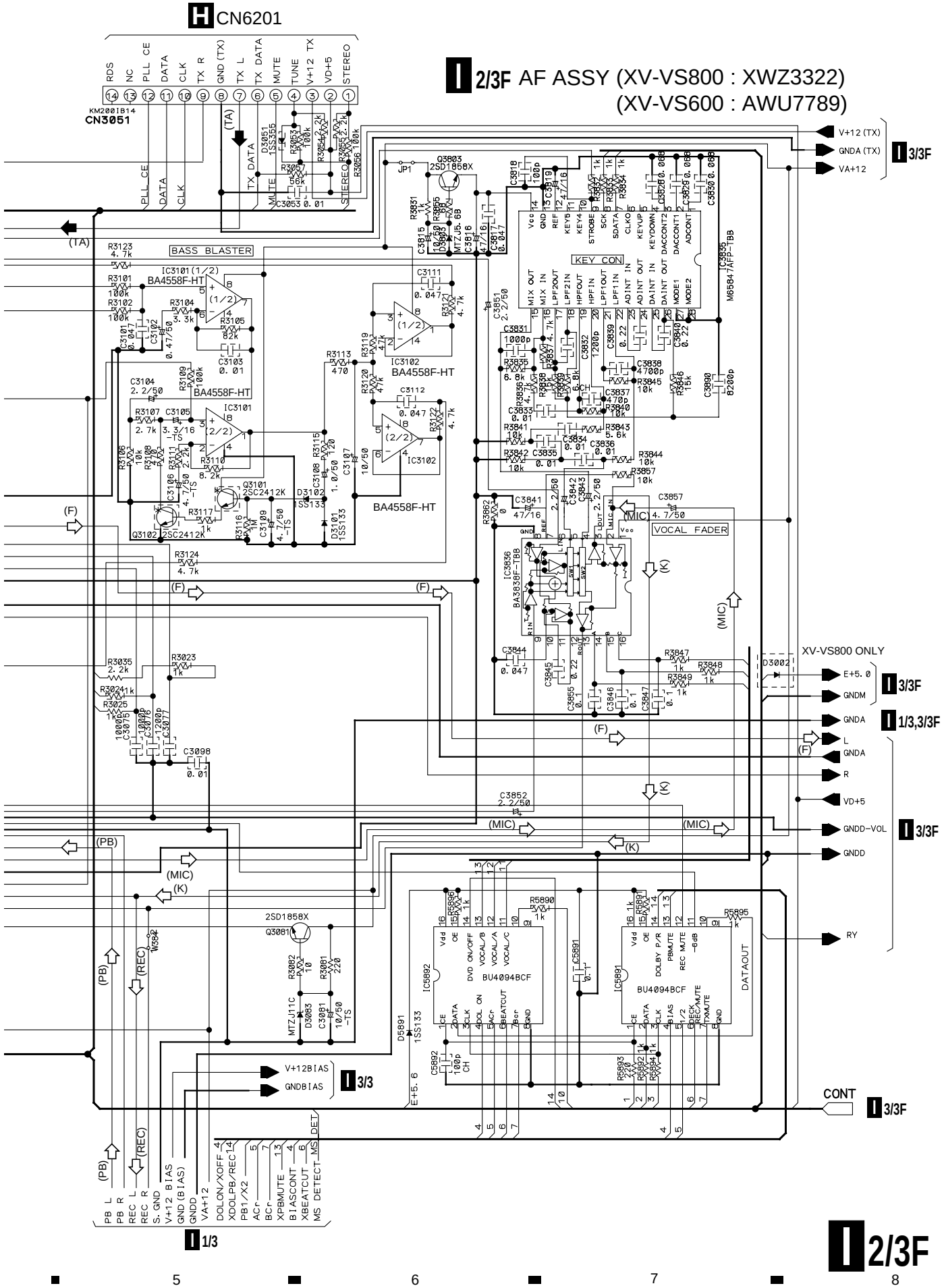
H CN6201
I 2/3F AF ASSY (XV-VS800 : XWZ3322)
(XV-VS600 : AWU7789)
CN3051
BASS BLASTER
KEY CON
VOCAL FADER
XV-VS800 ONLY
V+12 (TX)
GNDA (TX)
VA+12
E+5.0
GNDM
GNDA
L
R
VD+5
GNDD-VOL
GNDD
RY
CONT
V+12BIAS
GNDBIAS
PB L
PB R
REC L
REC R
S. GND
V+12 BIAS
GND (BIAS)
GNDD
VA+12
DOLON/XOFF
XDOLPB/REC
PB1/X2
ACr
BCr
XPBMUTE
BIASCONT
XBEATCUT
MS DETECT
I 3/3F
I 1/3,3/3F
I 3/3
I 1/3
I 2/3F

3.3 AF (3/3) and SECONDARY ASSYS

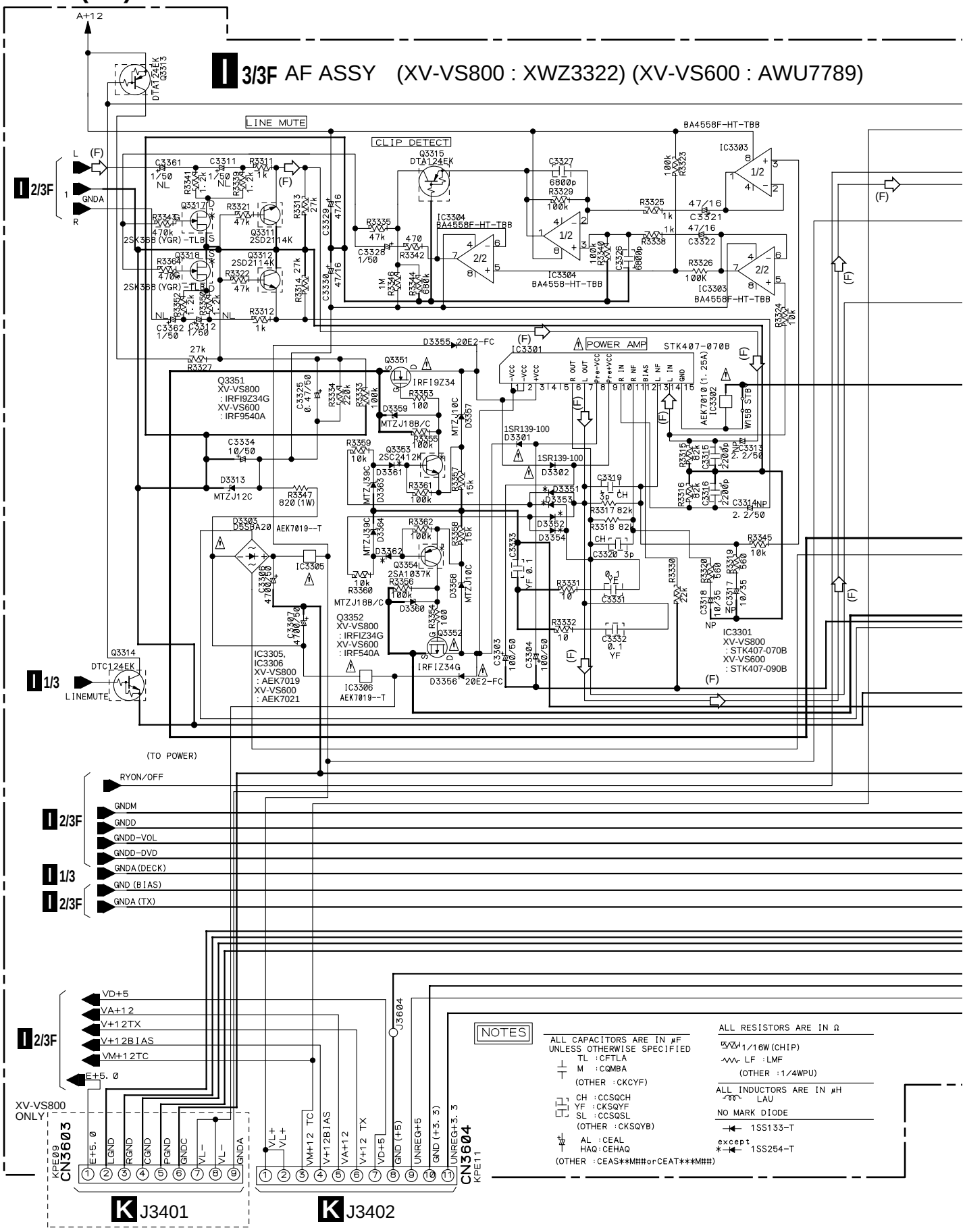

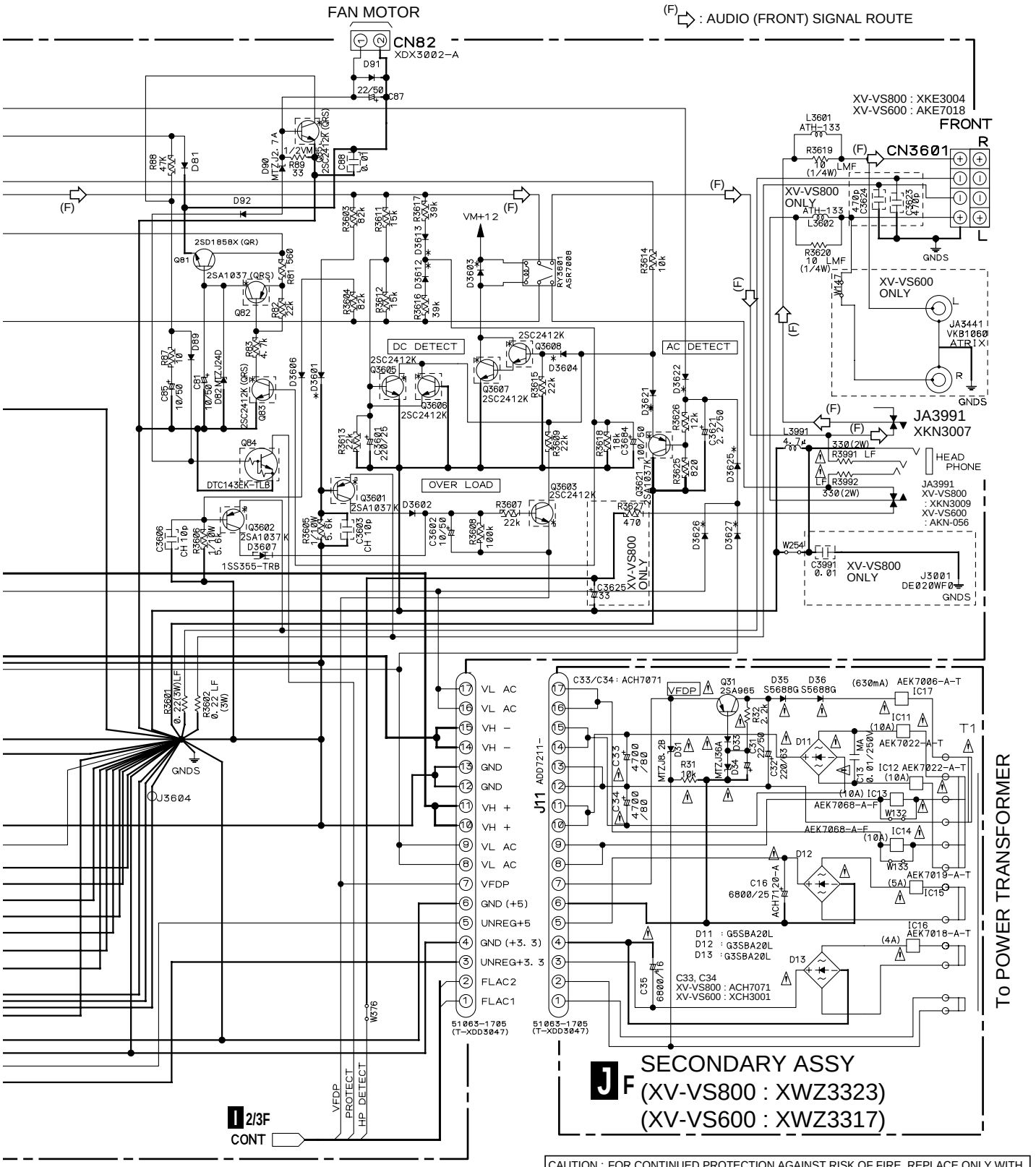

CAUTION : FOR CONTINUED PROTECTION AGAINST RISK OF FIRE. REPLACE ONLY WITH SAME TYPE NO. 4911.25 MFD, BY LITTELFUSE INC. FOR IC3302 (AEK7010).

CAUTION : FOR CONTINUED PROTECTION AGAINST RISK OF FIRE. REPLACE ONLY WITH SAME TYPE NO. 491005 MFD, BY LITTELFUSE INC. FOR IC15, IC3305 AND IC3306 (AEK7019).

CAUTION : FOR CONTINUED PROTECTION AGAINST RISK OF FIRE. REPLACE ONLY WITH SAME TYPE NO. 491.630 MFD, BY LITTELFUSE INC. FOR IC17 (AEK7006).

CAUTION : FOR CONTINUED PROTECTION AGAINST RISK OF FIRE. REPLACE ONLY WITH SAME TYPE NO. 491004 MFD, BY LITTELFUSE INC. FOR IC16 (AEK7018).

CAUTION : FOR CONTINUED PROTECTION AGAINST RISK OF FIRE. REPLACE ONLY WITH SAME TYPE NO. 491010 MFD, BY LITTELFUSE INC. FOR IC11 AND IC12 (AEK7022).

CAUTION : FOR CONTINUED PROTECTION AGAINST RISK OF FIRE. REPLACE ONLY WITH SAME TYPE NO. 491010F MFD, BY LITTELFUSE INC. FOR IC13 AND IC14 (AEK7068).

3.4 PRIMARY ASSY

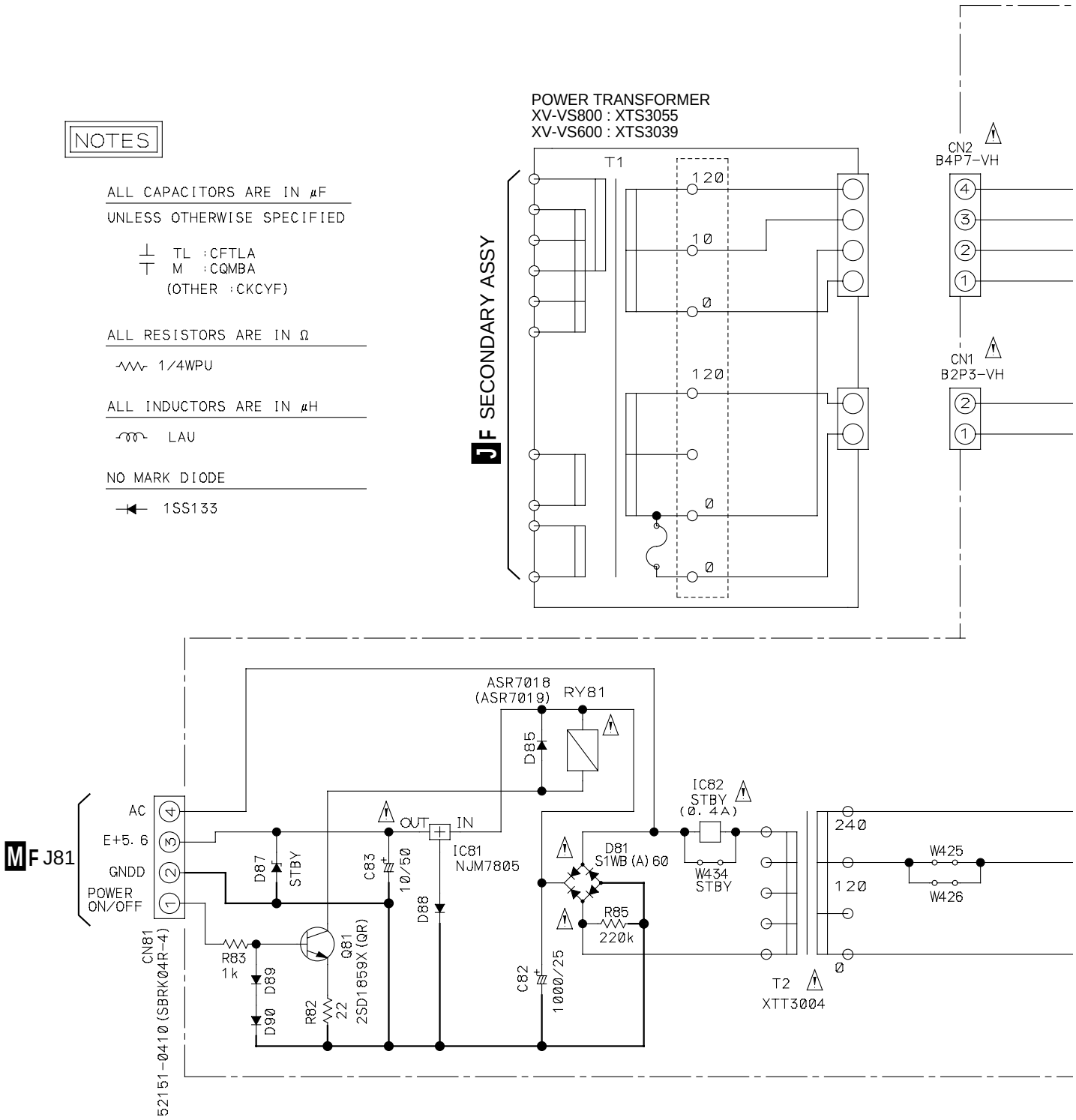

A

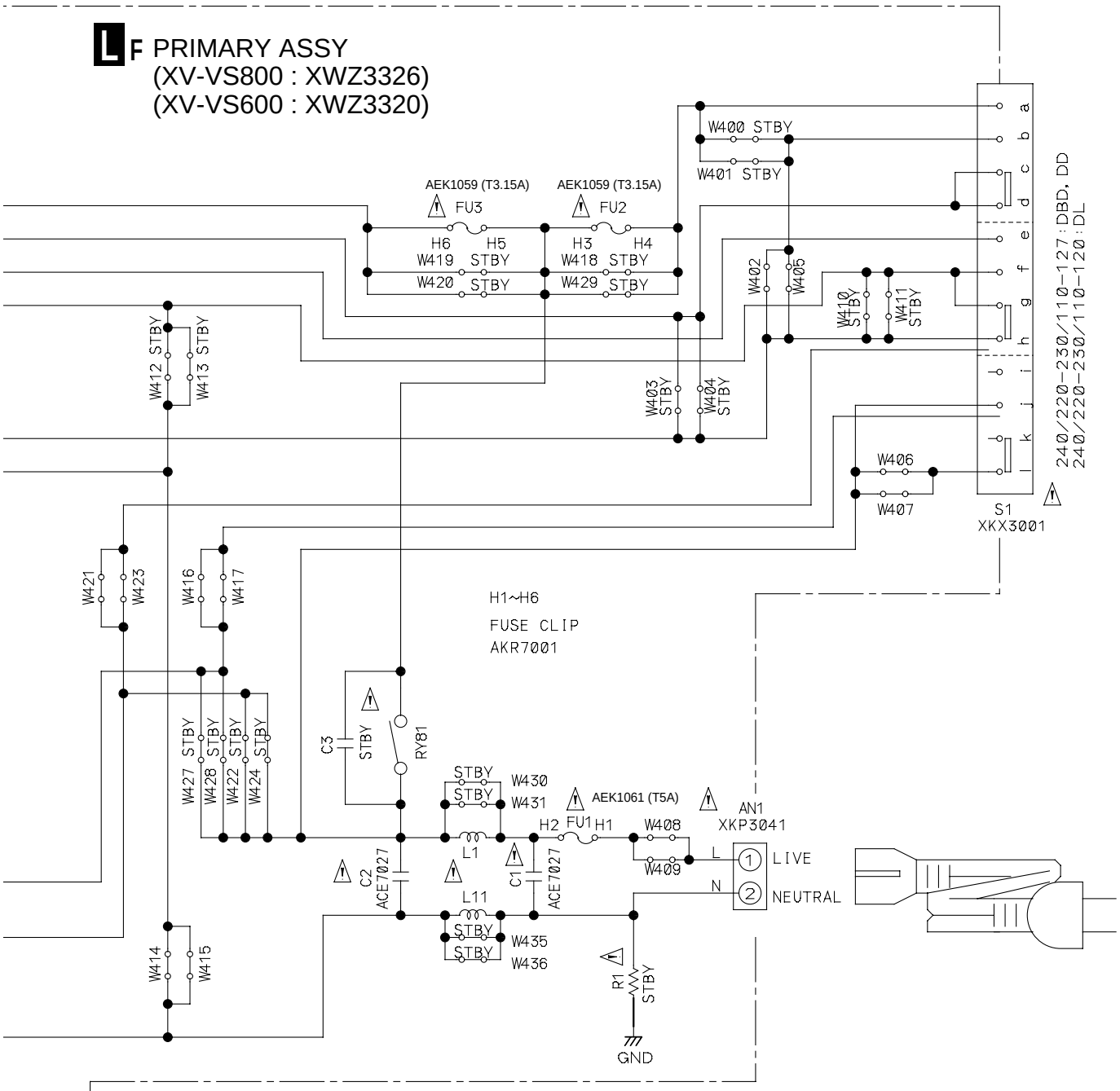

B

C

D

• NOTE FOR FUSE REPLACEMENT

CAUTION - FOR CONTINUED PROTECTION AGAINST RISK OF FIRE.
REPLACE WITH SAME TYPE AND RATINGS ONLY.

3.5 DISPLAY and BLUE LED ASSYS

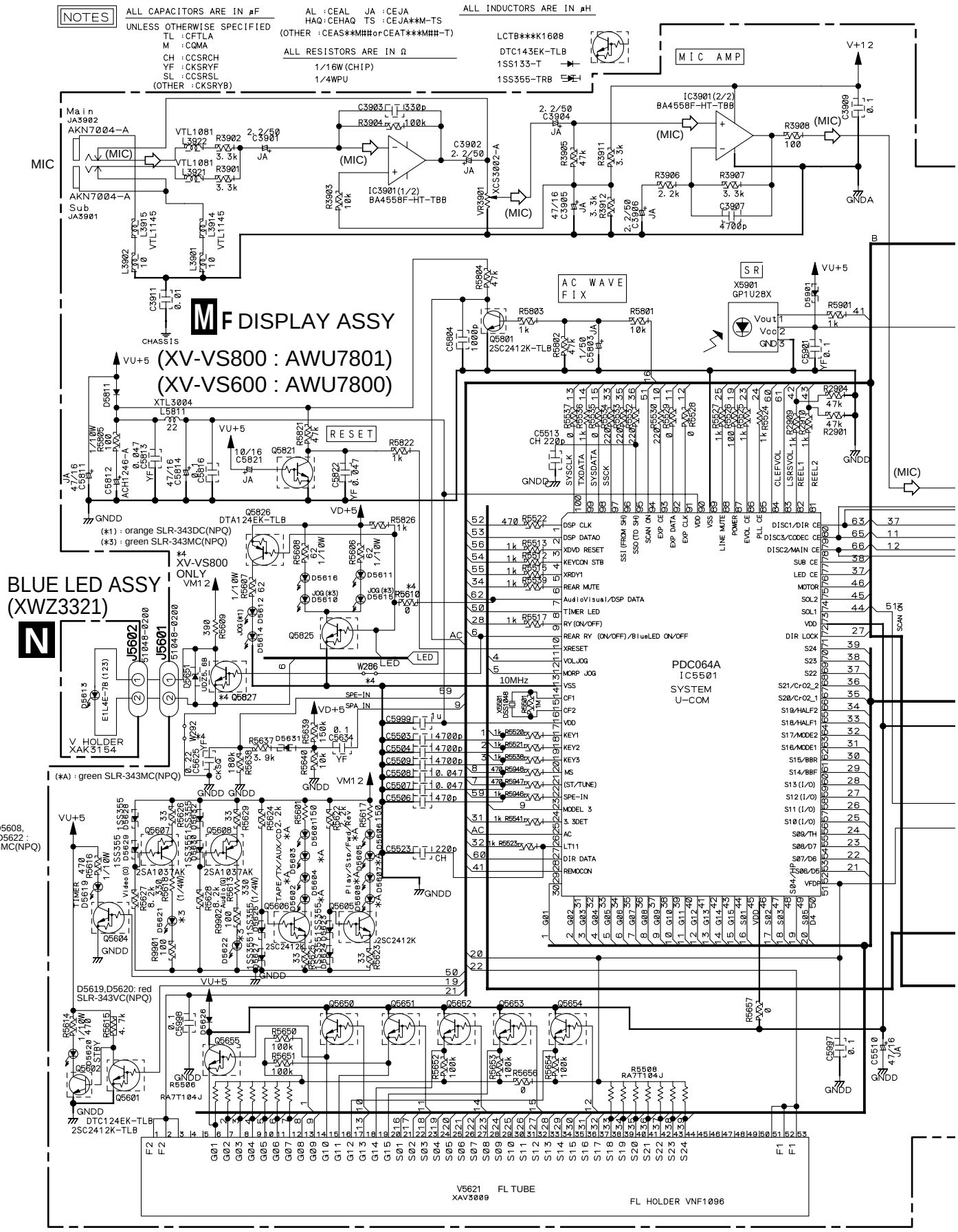

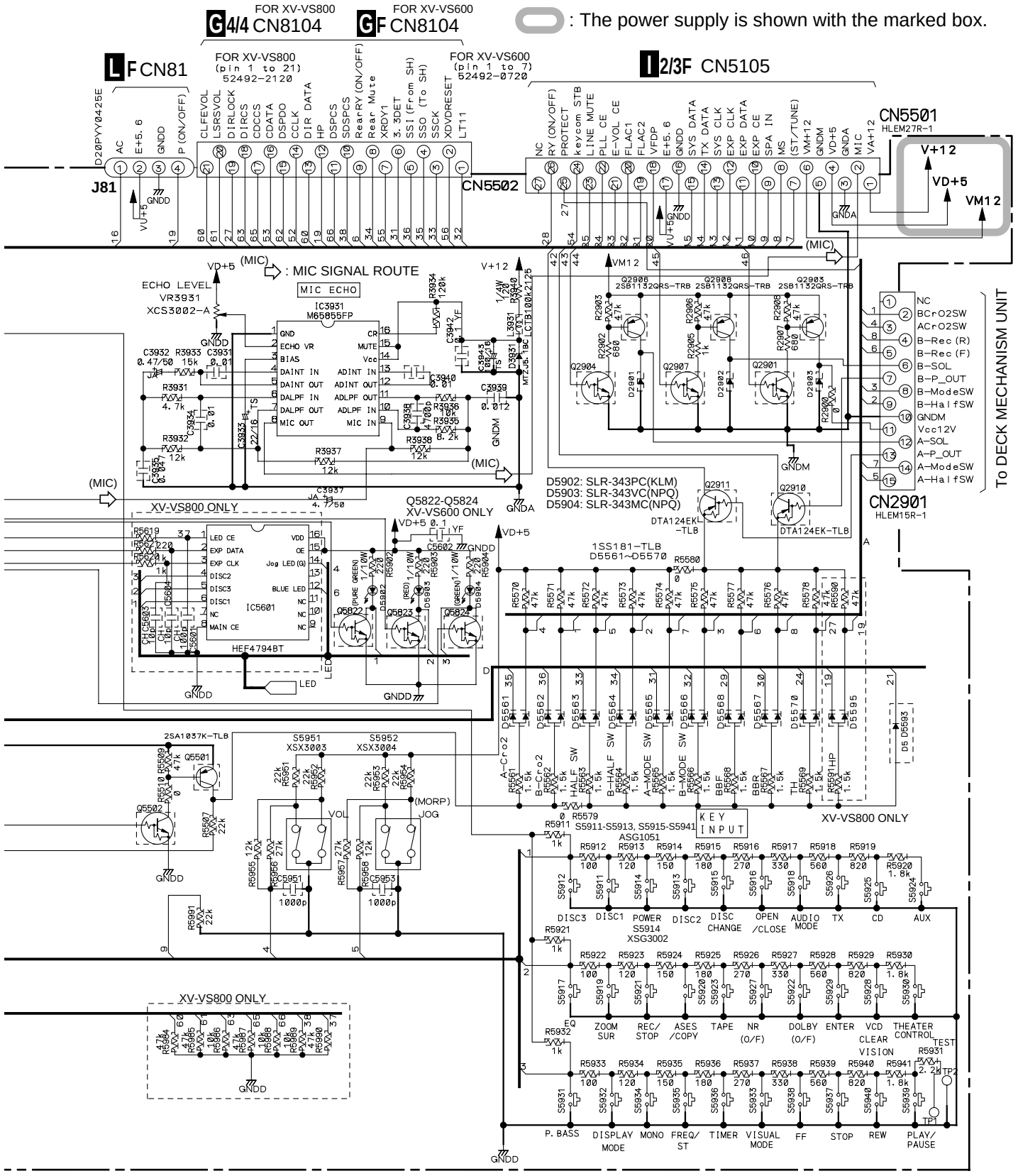

S5911 : DISC 1
S5912 : DISC 3
S5913 : DISC 2
S5914 : STANDBY/ON
S5915 : DISC CHANGE
S5916 : OPEN/CLOSE
S5917 : EQUALIZER
S5918 : AUDIO MODE
S5919 : ZOOM SURROUND
S5920 : ASES/COPY
S5921 : REC/STOP
S5922 : DOLBY/DTS
S5923 : TAPE I/II
S5924 : AUX
S5925 : DVD/CD
S5926 : TUNER BAND
S5927 : NR ON/OFF
S5928 : VIDEO NR
S5929 : SET
S5930 : THEATER CONTROL
S5931 : P.BASS(DEMO)
S5932 : DISPLAY MODE
S5933 : VISUAL MODE
S5934 : MONO
S5935 : FREQ/STATION
S5936 : TIMER/CLOCK ADJ
S5937 : ■ (STOP/ST.MEMORY)
S5938 : ►►I/►►• + (TUNING+)
S5939 : ◄► /II (PLAY/PAUSE)
S5940 : – •◄◄/I◄◄ (TUNING–)
S5951 : VOLUME UP/DPWN
S5952 : JOG dial

4. PCB CONNECTION DIAGRAM

4.1 CONNECT ASSY (2CH) for XV-VS600

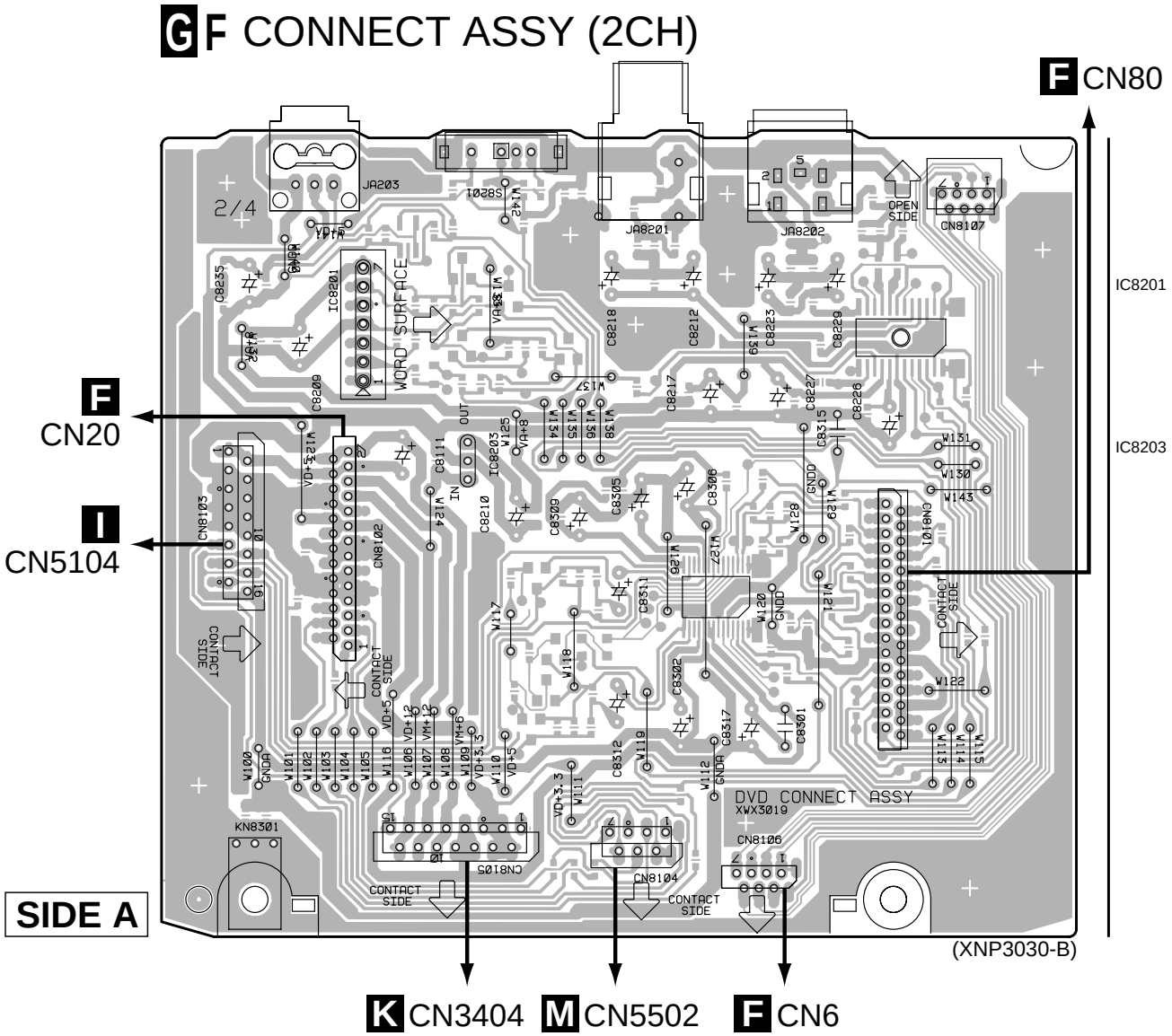

GF CONNECT ASSY (2CH)

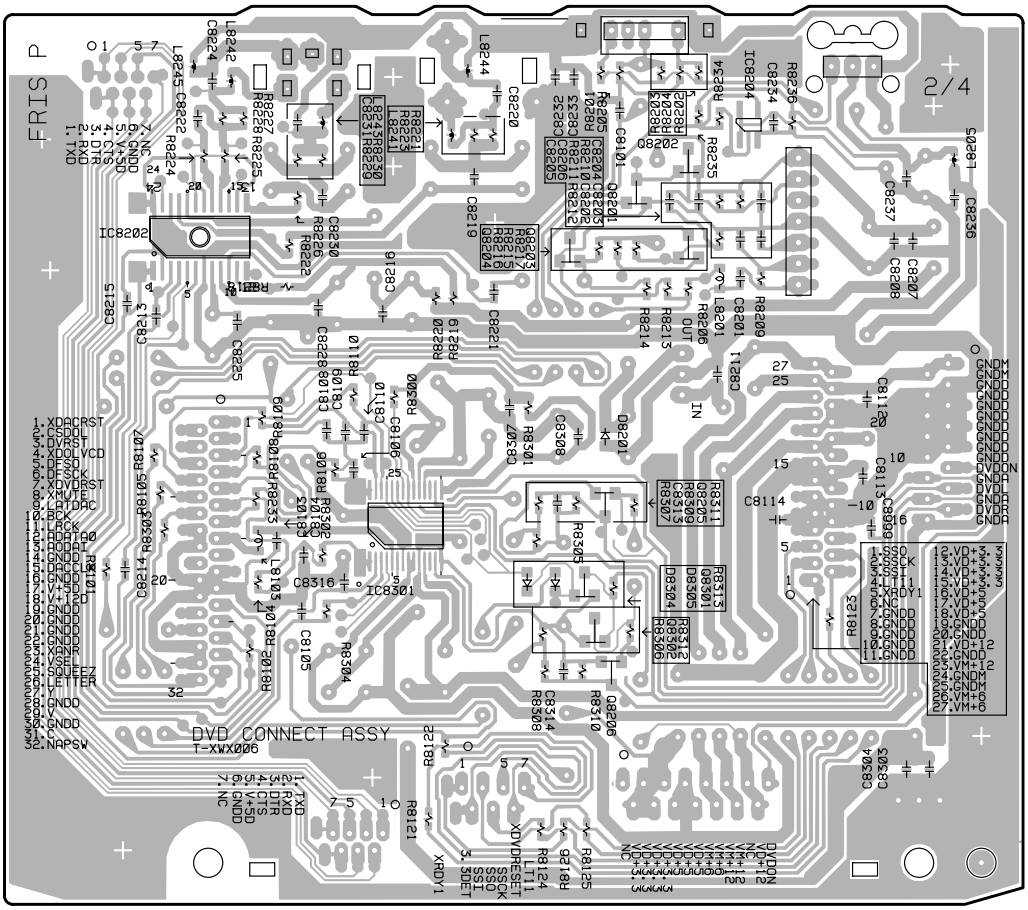

SIDE B

(XNP3030-B)