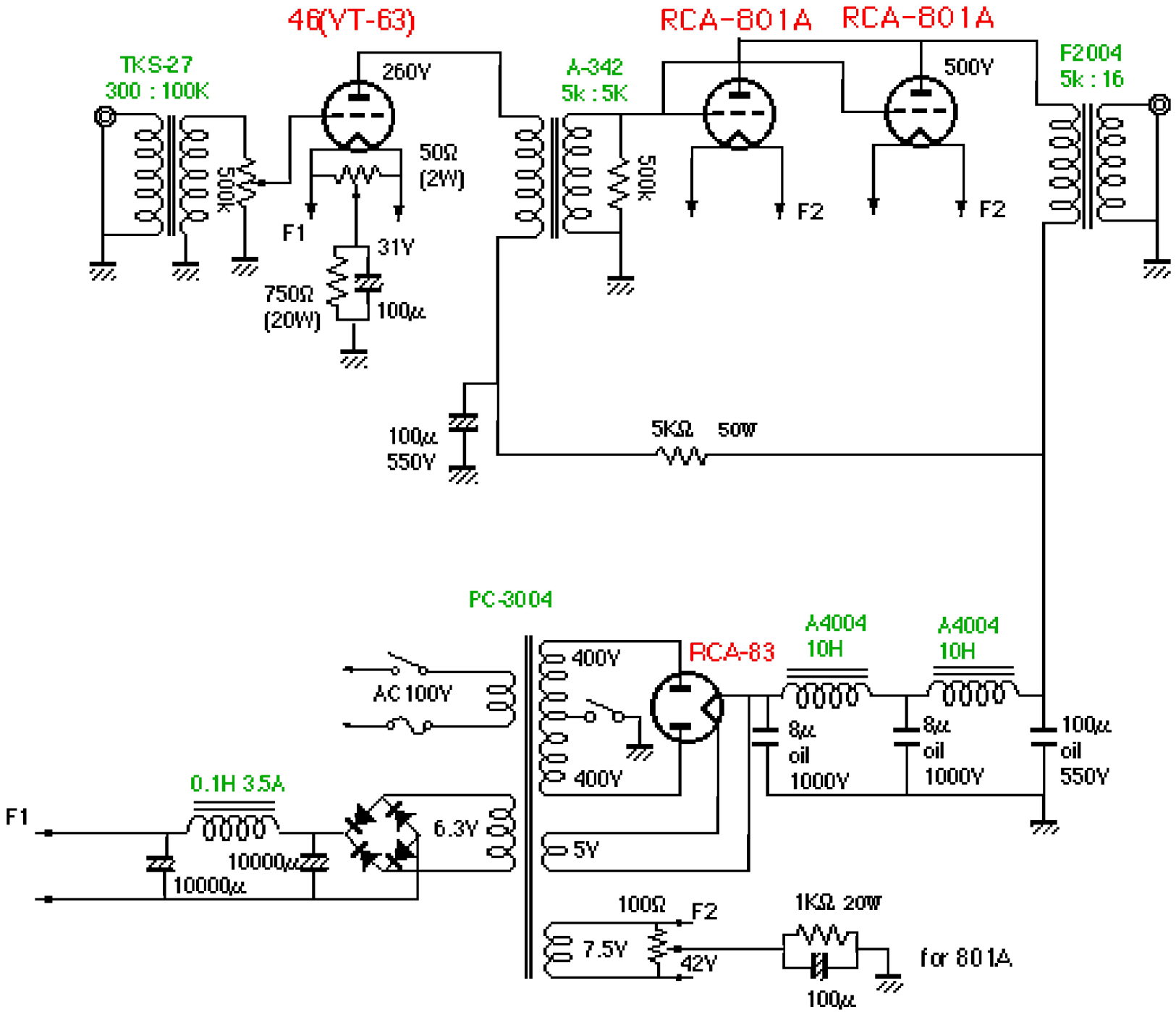46 / RCA-801A parallel SE power amplifier
April 1984