REPLACEMENT PARTS

BEFORE REPLACING PARTS, READ THE FOLLOWING:

Approved Substitute Stock Numbers - Before ordering stock numbers in the part list, look for an approved substitute stock number in the current Price Schedule. This will minimize your service time and avoid ordering parts you already have in stock.

PRODUCT SAFETY NOTE: Components marked with a critical safety symbol have special characteristics important to safety. Before replacing any of these components, carefully read the PRODUCT SAFETY NOTICE in the basic service data. Do not degrade the safety of the set through improper servicing. Although assemblies as a whole may not be marked with a critical safety symbol , replacement of assemblies with other assemblies not approved may result in a safety hazard.

⚠ Critical Safety Symbol

• Not Eligible For Warranty

Warranty Status of Assemblies and Parts - All assemblies and components shown in this part list are eligible for warranty exchange or replacement except those with a dot shown to the left of the Description. Assemblies and components with a dot to the left of the Description are NOT eligible for warranty exchange or replacement.

Warranty replacement of cabinet parts requires the approval of a Thomson Consumer Electronics Field Service Manager.

Warranty Status and Specifications of assemblies and components are subject to change without notice. Consult the TCE Parts Pricing Microfiche for the latest warranty status information.

@NOTE: When ordering components that are listed more than once in this part list, always adhere to the serial number application guidelines given in the description column. If a serial number application guideline is not given, always select the component with a value, rating, other specification or identification marking(s) that match those of the corresponding component in the instrument you are servicing.

RTD218

AUDIO

Symbol	Stock	Drawing	Description
B410	268579	SCB006030-6010	FERRITE 600 OHM
B411	268579	SCB006030-6010	FERRITE 600 OHM
B412	268579	SCB006030-6010	FERRITE 600 OHM
B413	268579	SCB006030-6010	FERRITE 600 OHM
B418	268579	SCB006030-6010	FERRITE 600 OHM
B420	268579	SCB006030-6010	FERRITE 600 OHM
B451	268579	SCB006030-6010	FERRITE 600 OHM
B461	268579	SCB006030-6010	FERRITE 600 OHM
B462	268579	SCB006030-6010	FERRITE 600 OHM
B463	268579	SCB006030-6010	FERRITE 600 OHM
B901	268579	SCB006030-6010	FERRITE 600 OHM
B902	268579	SCB006030-6010	FERRITE 600 OHM
B903	268579	SCB006030-6010	FERRITE 600 OHM
BR901	268703	RHD208010-0010	BRIDGE KBU8B 8A 100V UL
C419	264416	PRE039570-1000	CAP ELECT 10 UF 50V 20% 85C
C420	264416	PRE039570-1000	CAP ELECT 10 UF 50V 20% 85C
C421	264419	PRE039540-1010	CAP ELECT 100UF 16V 20% 85C
C422	264442	PXL456470-1040	CHIP CAP 0.1 UF 50V 10%
C423	264442	PXL456470-1040	CHIP CAP 0.1 UF 50V 10%
C424	264419	PRE039540-1010	CAP ELECT 100UF 16V 20% 85C
C431	268709	PXL456470-4710	CHIP CAP 470 PF 50V 10%
C432	268709	PXL456470-4710	CHIP CAP 470 PF 50V 10%
C436	264442	PXL456470-1040	CHIP CAP 0.1 UF 50V 10%
C445	268692	PRE039530-1010	ELECT 100UF 10V 20%
C446	268692	PRE039530-1010	ELECT 100UF 10V 20%
C449	264416	PRE039570-1000	CAP ELECT 10 UF 50V 20% 85C
C450	264416	PRE039570-1000	CAP ELECT 10 UF 50V 20% 85C
C455	268714	PXL456470-1020	CHIP CAP 0.001 UF 50V 10%
C456	268714	PXL456470-1020	CHIP CAP 0.001 UF 50V 10%
C500	264336	PZL439670-4740	CHIP CAP 0.47 UF 50V +80-20%
C502	264336	PZL439670-4740	CHIP CAP 0.47 UF 50V +80-20%
C503	264336	PZL439670-4740	CHIP CAP 0.47 UF 50V +80-20%
C504	264336	PZL439670-4740	CHIP CAP 0.47 UF 50V +80-20%
C508	268712	PRE039570-4700	ELECT 47UF 50V 20%
C509	268712	PRE039570-4700	ELECT 47UF 50V 20%
C512	268713	PRL048570-2240	CAP 2.2 UF 50V 20
C513	268713	PRL048570-2240	CAP 2.2 UF 50V 20
C514	268718	PXL456470-224Z	CHIP CAP 0.22UF 50V 10%
C515	268718	PXL456470-224Z	CHIP CAP 0.22UF 50V 10%
C520	268713	PRL048570-2240	CAP 2.2 UF 50V 20
C521	268713	PRL048570-2240	CAP 2.2 UF 50V 20
C524	268215	PZL4564A4-1040	CHIP CAP 0.1UF/100V X7R +/-10%
C525	268215	PZL4564A4-1040	CHIP CAP 0.1UF/100V X7R +/-10%
C526	268215	PZL4564A4-1040	CHIP CAP 0.1UF/100V X7R +/-10%
C530	268215	PZL4564A4-1040	CHIP CAP 0.1UF/100V X7R +/-10%
C532	268717	PXL456470-153Z	CHIP CAP 0.015 UF 50V 10%
C534	268717	PXL456470-153Z	CHIP CAP 0.015 UF 50V 10%
C538	268716	PXL456470-3310	CHIP CAP 330PF 50V 10%
C539	268716	PXL456470-3310	CHIP CAP 330PF 50V 10%

REPLACEMENT PARTS (Continued)

Symbol	Stock	Drawing	Description
C542	268715	PXL410370-6800	CHIP CAP ;68 PF 50V 5
C544	268714	PXL456470-1020	CHIP CAP 0.001 UF 50V 10%
C545	268714	PXL456470-1020	CHIP CAP 0.001 UF 50V 10%
C548	268694	PRM0373A0-1530	MYLAR 0.015 UF 100V 5%
C549	268694	PRM0373A0-1530	MYLAR 0.015 UF 100V 5%
C556	264442	PXL456470-1040	CHIP CAP 0.1 UF 50V 10%
C557	264442	PXL456470-1040	CHIP CAP 0.1 UF 50V 10%
C558	268719	PYL4564A0-2210	CHIP CAP 220PF 100V 10% X7R 08
C559	268719	PYL4564A0-2210	CHIP CAP 220PF 100V 10% X7R 08
C560	268719	PYL4564A0-2210	CHIP CAP 220PF 100V 10% X7R 08
C561	268719	PYL4564A0-2210	CHIP CAP 220PF 100V 10% X7R 08
C566	268693	PRL048470-225Z	CAP 2.2U 50V 10% PB<100
C567	268693	PRL048470-225Z	CAP 2.2U 50V 10% PB<100
C574	268698	PRN1263A0-4740	METAL 0.47 UF 100V 5
C575	268698	PRN1263A0-4740	METAL 0.47 UF 100V 5
C578	268727	PVE099562-1020	ELECT 1000UF 35V 20% 105C
C579	268727	PVE099562-1020	ELECT 1000UF 35V 20% 105C
C904	268691	PRD2396M0-1030	DISC 0.01UF 500V +80-20%
C905	268691	PRD2396M0-1030	DISC 0.01UF 500V +80-20%
C906	268701	PVE099570-3320	ELECT 3300UF/50V 20% 105
C907	268701	PVE099570-3320	ELECT 3300UF/50V 20% 105
C908	264442	PXL456470-1040	CHIP CAP 0.1 UF 50V 10%
C909	264442	PXL456470-1040	CHIP CAP 0.1 UF 50V 10%
C910	264416	PRE039570-1000	CAP ELECT 10 UF 50V 20% 85C
C911	264416	PRE039570-1000	CAP ELECT 10 UF 50V 20% 85C
C912	264419	PRE039540-1010	CAP ELECT 100UF 16V 20% 85C
C913	264419	PRE039540-1010	CAP ELECT 100UF 16V 20% 85C
C914	264442	PXL456470-1040	CHIP CAP 0.1 UF 50V 10%
C915	264442	PXL456470-1040	CHIP CAP 0.1 UF 50V 10%
C916	264421	PRE039540-2210	CAP ELECT 220 UF 16V 20% 85C
C917	264421	PRE039540-2210	CAP ELECT 220 UF 16V 20% 85C
C918	264442	PXL456470-1040	CHIP CAP 0.1 UF 50V 10%
C919	264442	PXL456470-1040	CHIP CAP 0.1 UF 50V 10%
C920	264442	PXL456470-1040	CHIP CAP 0.1 UF 50V 10%
CIRCUIT	268689	APE302151-0002	RX AUDIO PCB ASSY
CN10	266654	CCN200000-0106	CONNECTOR 6 PIN PITCH=2.0MM
CN11	264265	CCN200000-0104	CONNECTOR 4 PIN PITCH=2.0MM
CN13	268708	CCN396020-0103	CONNECTOR 3 PIN CL3962WVO
CN501	268706	CJS004101-0040	SPK JACK 4P BLK-GRY-BLK-BLU
F901	268705	KSA020630-0120	FUSE 6.3A 250V SLOW (WALTER
F902	268705	KSA020630-0120	FUSE 6.3A 250V SLOW (WALTER

Symbol	Stock	Drawing	Description
IC500	268687	RCI008921-0001	IC 24 PIN TDA8921TH HSOP24 PHI
L500	268690	SAB005001-1000	BEAD; 3.5X8.3X0.76MM 10UH
L501	268690	SAB005001-1000	BEAD; 3.5X8.3X0.76MM 10UH
L502	268690	SAB005001-1000	BEAD; 3.5X8.3X0.76MM 10UH
L503	268690	SAB005001-1000	BEAD; 3.5X8.3X0.76MM 10UH
L508	268702	SIN103U01-2200	INDUCTOR 22UH 20% 6A
L509	268702	SIN103U01-2200	INDUCTOR 22UH 20% 6A
L516	268710	SCB000001-0001	CHIP BEAD 4PIN L8.1XW5.73XH3M
L517	268710	SCB000001-0001	CHIP BEAD 4PIN L8.1XW5.73XH3M
P1	270201	CCH200080-0432	HOUSING 16X2 PIN H4.45XW4XP2MM
Q401	264345	RCN201623-0001	XISTR NPN HFE:200-400 L6
Q407	264344	RCP200733-0001	XISTR PNP 2SA812 HFE:200~400
Q408	264345	RCN201623-0001	XISTR NPN HFE:200-400 L6
Q409	268697	RAN202878-0001	XISTR NPN 2SC2878-A (TE2,.M)
Q410	268697	RAN202878-0001	XISTR NPN 2SC2878-A (TE2,.M)
Q411	264344	RCP200733-0001	XISTR PNP 2SA812 HFE:200~400
Q901	268696	RAN201815-0001	XISTR NPN 2SC1815-GR TOSHIBA
Q902	268695	RAP201015-0001	XISTR PNP 2SA1015-GR TOSHIBA
Q903	264344	RCP200733-0001	XISTR PNP 2SA812 HFE:200~400
Q921	268731	RHM120006-2001	FET STP12PF06 TO-220 ST 12A 60
Q922	264345	RCN201623-0001	XISTR NPN HFE:200-400 L6
Q923	264345	RCN201623-0001	XISTR NPN HFE:200-400 L6
Q924	264345	RCN201623-0001	XISTR NPN HFE:200-400 L6
Q925	264345	RCN201623-0001	XISTR NPN HFE:200-400 L6
Q931	268726	RHM160006-1001	FET STP16NF06 TO-220 ST 16A 60
Q932	264344	RCP200733-0001	XISTR PNP 2SA812 HFE:200~400
Q933	264344	RCP200733-0001	XISTR PNP 2SA812 HFE:200~400
R315	264281	QCF165030-2230	CHIP RES. 22K OHM 1/16W 5%
R316	264268	QCF165030-0000	CHIP RES. 0 OHM JUMP WIRE
R402	268576	QCF165030-2240	CHIP RES. 220K OHM 1/16 W 5%
R403	264269	QCF165030-1220	CHIP RES. 1.2K OHM 1/16W 5%
R420	264306	QCF165030-2210	CHIP RES. 220 OHM 1/16W 5%
R421	264269	QCF165030-1220	CHIP RES. 1.2K OHM 1/16W 5%
R422	264269	QCF165030-1220	CHIP RES. 1.2K OHM 1/16W 5%
R423	268730	QCF165030-2020	CHIP RES. 2K OHM 1/16 W 5%
R424	268730	QCF165030-2020	CHIP RES. 2K OHM 1/16 W 5%
R435	264306	QCF165030-2210	CHIP RES. 220 OHM 1/16W 5%
R436	264277	QCF165030-1030	CHIP RES. 10K OHM 1/16W 5%
R437	264281	QCF165030-2230	CHIP RES. 22K OHM 1/16W 5%
R438	264277	QCF165030-1030	CHIP RES. 10K OHM 1/16W 5%

REPLACEMENT PARTS (Continued)

Symbol	Stock	Drawing	Description
R439	268576	QCF165030-2240	CHIP RES. 220K OHM 1/16 W 5%
R441	264273	QCF165030-4720	CHIP RES. 4.7K OHM 1/16W 5 %
R442	264273	QCF165030-4720	CHIP RES. 4.7K OHM 1/16W 5 %
R443	264290	QCF165030-1010	CHIP RES. 100 OHM 1/16W 5%
R444	264290	QCF165030-1010	CHIP RES. 100 OHM 1/16W 5%
R445	268576	QCF165030-2240	CHIP RES. 220K OHM 1/16 W 5%
R446	268576	QCF165030-2240	CHIP RES. 220K OHM 1/16 W 5%
R453	264291	QCF165030-1040	CHIP RES. 100K OHM 1/16W 5%
R454	264291	QCF165030-1040	CHIP RES. 100K OHM 1/16W 5%
R461	264271	QCF165030-1020	CHIP RES. 1K OHM 1/16W 5%
R462	264271	QCF165030-1020	CHIP RES. 1K OHM 1/16W 5%
R471	264281	QCF165030-2230	CHIP RES. 22K OHM 1/16W 5%
R472	268577	QCF165030-4710	CHIP RES. 470 OHM 1/16 W 5%
R473	264268	QCF165030-0000	CHIP RES. 0 OHM JUMP WIRE
R474	264268	QCF165030-0000	CHIP RES. 0 OHM JUMP WIRE
R476	264286	QCF165030-4730	CHIP RES. 47K OHM 1/16W 5 %
R477	264308	QCF165030-3310	CHIP RES. 330 OHM 1/16W 5%
R478	266712	QCF165030-1520	SMD RES. 1.5K OHM 1/16 W 5%
R479	268577	QCF165030-4710	CHIP RES. 470 OHM 1/16 W 5%
R500	264271	QCF165030-1020	CHIP RES. 1K OHM 1/16W 5%
R501	264271	QCF165030-1020	CHIP RES. 1K OHM 1/16W 5%
R502	264286	QCF165030-4730	CHIP RES. 47K OHM 1/16W 5 %
R504	268723	QCF165030-3030	CHIP RES. 30K OHM 1/16 W 5%
R506	264277	QCF165030-1030	CHIP RES. 10K OHM 1/16W 5%
R507	264277	QCF165030-1030	CHIP RES. 10K OHM 1/16W 5%
R508	264277	QCF165030-1030	CHIP RES. 10K OHM 1/16W 5%
R509	264277	QCF165030-1030	CHIP RES. 10K OHM 1/16W 5%
R512	264268	QCF165030-0000	CHIP RES. 0 OHM JUMP WIRE
R513	264268	QCF165030-0000	CHIP RES. 0 OHM JUMP WIRE
R518	268699	QCF04501Z-5190	CHIP RES. 5.1 OHM 1/4W 5%
R519	268699	QCF04501Z-5190	CHIP RES. 5.1 OHM 1/4W 5%
R520	268699	QCF04501Z-5190	CHIP RES. 5.1 OHM 1/4W 5%
R521	268699	QCF04501Z-5190	CHIP RES. 5.1 OHM 1/4W 5%
R530	268700	QCF02521Z-2200	CHIP RES. 22 OHM 1/2W 5%
R531	268700	QCF02521Z-2200	CHIP RES. 22 OHM 1/2W 5%
R901	268724	QCF045010-3300	CHIP RES. 33 OHM 1/4 W 5%
R902	268724	QCF045010-3300	CHIP RES. 33 OHM 1/4 W 5%
R903	268721	QCF045010-4720	CHIP RES. 4.7K OHM 1/4 W 5%
R904	268721	QCF045010-4720	CHIP RES. 4.7K OHM 1/4 W 5%
R905	264283	QCF165030-3330	CHIP RES. 33K OHM 1/16W 5%
R906	264276	QCF165030-8220	CHIP RES. 8.2K OHM 1/16W 5 %
R907	264271	QCF165030-1020	CHIP RES. 1K OHM 1/16W 5%
R908	264274	QCF165030-5620	CHIP RES. 5.6K OHM 1/16W 5%
R921	266643	QCF045010-3320	RES. 3.3K OHM 1/4 W 5% CF
R922	268721	QCF045010-4720	CHIP RES. 4.7K OHM 1/4 W 5%
R923	268722	QCF045010-4730	CHIP RES. 47K OHM 1/4 W 5%
R924	268720	QCF045010-1030	CHIP RES. 10K OHM 1/4 W 5%
R925	268729	QCF045010-6810	CHIP RES. 680 OHM 1/4 W 5%
R926	268728	QCF045010-3310	CHIP RES. 330 OHM 1/4 W 5%
R931	266643	QCF045010-3320	RES. 3.3K OHM 1/4 W 5% CF
R932	268721	QCF045010-4720	CHIP RES. 4.7K OHM 1/4 W 5%
R933	268722	QCF045010-4730	CHIP RES. 47K OHM 1/4 W 5%
R934	268720	QCF045010-1030	CHIP RES. 10K OHM 1/4 W 5%
R935	268729	QCF045010-6810	CHIP RES. 680 OHM 1/4 W 5%
R936	268728	QCF045010-3310	CHIP RES. 330 OHM 1/4 W 5%
SW2	268704	MSW001007-0010	DIP SWITCH 3 POS 6 PIN BLK R.A
U403	268711	RCI004558-0001	IC 8 PIN JRC4558M JRC
ZD500	264495	RAZ005006-0020	DIODE ZENR 5.6-5.9V 0.5W
ZD901	268688	RAZ005012-0020	DIODE ZENR 12.6-13.1V 0.5W
ZD902	268688	RAZ005012-0020	DIODE ZENR 12.6-13.1V 0.5W
ZD903	264487	RAZ005004-0020	DIODE ZENR 3.8-4.0V 0.5W
ZD903	270217	RAZ005004-1020	DIODE ZENR 3.8-4.0V 0.5W
ZD921	264494	RAZ005024-0020	DIODE ZENR 23.6-24.7V 0.5W
ZD931	264494	RAZ005024-0020	DIODE ZENR 23.6-24.7V 0.5W
ZD931	270218	RAZ005024-1020	DIODE ZENR 23.6-24.7V 0.5W PB<

CONTROL PCB

C701	264323	PXL410370-1010	CHIP CAP 100 PF 50V 5% NPO
C702	264323	PXL410370-1010	CHIP CAP 100 PF 50V 5% NPO
C703	264442	PXL456470-1040	CHIP CAP 0.1 UF 50V 10%
C704	264442	PXL456470-1040	CHIP CAP 0.1 UF 50V 10%
C705	264442	PXL456470-1040	CHIP CAP 0.1 UF 50V 10%
C706	264442	PXL456470-1040	CHIP CAP 0.1 UF 50V 10%
C707	264442	PXL456470-1040	CHIP CAP 0.1 UF 50V 10%
C708	268222	PRE839570-1000	COND ELECT 10UF 50V 20% P=5.0
C709	268223	PRE839540-1010	COND ELECT 100UF 16V 20% 85C M
C710	268223	PRE839540-1010	COND ELECT 100UF 16V 20% 85C M
C711	268223	PRE839540-1010	COND ELECT 100UF 16V 20% 85C M
C712	264329	PXL410370-2210	CHIP CAP 220 PF 50V 5% NPO
C713	264376	PXL410370-1500	CHIP CAP 15 PF 50V 5%
C714	264376	PXL410370-1500	CHIP CAP 15 PF 50V 5%

REPLACEMENT PARTS (Continued)

Symbol	Stock	Drawing	Description
C715	264376	PXL410370-1500	CHIP CAP 15 PF 50V 5%
C716	264318	PXL410370-2200	CHIP CAP 22 PF 50V 5%
C717	264318	PXL410370-2200	CHIP CAP 22 PF 50V 5%
C721	268222	PRE839570-1000	COND ELECT 10UF 50V 20% P=5.0
CIRCUIT	268235	APE201461-0003	CONTROL PCB ASSY
D701	264339	RCD114148-0011	DIODE CHIP BAV16W/IN4148W
D702	264339	RCD114148-0011	DIODE CHIP BAV16W/IN4148W
D703	264339	RCD114148-0011	DIODE CHIP BAV16W/IN4148W
DP701	266625	KLV000034-0010	FLOUR.DISPL SM51T SAMSUNG
IC701	266669	RCI008056-0001	IC 18 PIN CTM8B56EP SOP
IC702	264443	RCI006311-0001	IC 52 PIN PT6311(PTC)
Q701	264344	RCP200733-0001	XISTR PNP 2SA812 HFE:200~400
Q702	264344	RCP200733-0001	XISTR PNP 2SA812 HFE:200~400
Q703	264344	RCP200733-0001	XISTR PNP 2SA812 HFE:200~400
Q704	264344	RCP200733-0001	XISTR PNP 2SA812 HFE:200~400
R701	264277	QCF165030-1030	CHIP RES. 10K OHM 1/16W 5%
R702	264277	QCF165030-1030	CHIP RES. 10K OHM 1/16W 5%
R703	264277	QCF165030-1030	CHIP RES. 10K OHM 1/16W 5%
R704	264277	QCF165030-1030	CHIP RES. 10K OHM 1/16W 5%
R705	264277	QCF165030-1030	CHIP RES. 10K OHM 1/16W 5%
R706	264277	QCF165030-1030	CHIP RES. 10K OHM 1/16W 5%
R707	264277	QCF165030-1030	CHIP RES. 10K OHM 1/16W 5%
R708	264277	QCF165030-1030	CHIP RES. 10K OHM 1/16W 5%
R709	264277	QCF165030-1030	CHIP RES. 10K OHM 1/16W 5%
R710	264277	QCF165030-1030	CHIP RES. 10K OHM 1/16W 5%
R711	264277	QCF165030-1030	CHIP RES. 10K OHM 1/16W 5%
R712	264277	QCF165030-1030	CHIP RES. 10K OHM 1/16W 5%
R713	264277	QCF165030-1030	CHIP RES. 10K OHM 1/16W 5%
R714	264277	QCF165030-1030	CHIP RES. 10K OHM 1/16W 5%
R715	264277	QCF165030-1030	CHIP RES. 10K OHM 1/16W 5%
R716	264277	QCF165030-1030	CHIP RES. 10K OHM 1/16W 5%
R717	264277	QCF165030-1030	CHIP RES. 10K OHM 1/16W 5%
R718	264271	QCF165030-1020	CHIP RES. 1K OHM 1/16W 5%
R719	264271	QCF165030-1020	CHIP RES. 1K OHM 1/16W 5%
R720	264271	QCF165030-1020	CHIP RES. 1K OHM 1/16W 5%
R721	264398	QCF165030-5610	CHIP RES. 560 OHM 1/16W 5 %
R722	264398	QCF165030-5610	CHIP RES. 560 OHM 1/16W 5 %
R723	264277	QCF165030-1030	CHIP RES. 10K OHM 1/16W 5%
R724	264291	QCF165030-1040	CHIP RES. 100K OHM 1/16W 5%
R725	264281	QCF165030-2230	CHIP RES. 22K OHM 1/16W 5%
R726	264273	QCF165030-4720	CHIP RES. 4.7K OHM 1/16W 5 %
R727	264290	QCF165030-1010	CHIP RES. 100 OHM 1/16W 5%
R728	264290	QCF165030-1010	CHIP RES. 100 OHM 1/16W 5%
R729	264290	QCF165030-1010	CHIP RES. 100 OHM 1/16W 5%
R730	264290	QCF165030-1010	CHIP RES. 100 OHM 1/16W 5%
R731	264291	QCF165030-1040	CHIP RES. 100K OHM 1/16W 5%
R732	264273	QCF165030-4720	CHIP RES. 4.7K OHM 1/16W 5 %
R733	264271	QCF165030-1020	CHIP RES. 1K OHM 1/16W 5%
R734	268221	QCF015020-0000	CHIP RES. 0 OHM JUMP WIRE
R738	264277	QCF165030-1030	CHIP RES. 10K OHM 1/16W 5%
R739	264271	QCF165030-1020	CHIP RES. 1K OHM 1/16W 5%
SN701	264450	RHO001356-2002	SENSOR 2.4V 56.7KHZ MIM
TA701	266641	MVW006002-0010	TACT SWITCH L5.85MM TS6601VB
TA702	266641	MVW006002-0010	TACT SWITCH L5.85MM TS6601VB
TA703	266641	MVW006002-0010	TACT SWITCH L5.85MM TS6601VB
TA704	266641	MVW006002-0010	TACT SWITCH L5.85MM TS6601VB
TA705	266641	MVW006002-0010	TACT SWITCH L5.85MM TS6601VB
TA706	266641	MVW006002-0010	TACT SWITCH L5.85MM TS6601VB
TA707	266641	MVW006002-0010	TACT SWITCH L5.85MM TS6601VB
VR701	266642	MSW005012-0110	ROTARY ENCODER EC121102F2B-HA1
XL701	264449	JQC023102-4550	CRYSTAL 4.5000MHZ
XL701	268224	JQC052103-4550	CRYSTAL 4.5000MHZ HC-49/S +/-2
ZD701	264341	RCZ005006-0011	CHIP ZENER 5.6V 5% 0.5W

INSTRUMENT

AC CORD	266717	VPA1K4252-0010	LINE CORD 2P 2150MM POLARIZ
AC CORD	268258	VPA105991-0010	LINE CORD 3P 1980MM BLK SPT-2
ANTENNA	268255	VTA400001-1060	FM ANTENNA 1600 MM 75 OHM MALE
ANTENNA	268252	VTA400002-0010	TRANSMITTER LOOP ANT W/2P 2.5M
BACK	268274	GSE200116-0201 ●	BACK 500W W/YUV SECC T=0.8MM
BASE	268264	BPB300059-0002	RECEIVER BTM CAB. ABS () FOR U
BASE	268262	BPH300039-0001	RECEIVER ANT BASE ABS 102.56X2
BEAD	266702	SFB001001-0200	BEAD FERIT OD25XID15XH10MM
BEAD	266703	SFB002001-0040	BEAD FERIT OD19.5XID9.5XH31+4M
BOTTOM	268254	GSE200115-0101	BOTTOM CAB SECC T=0.8MM (UL)
BRACKET	266701	GSE200118-0001	LOADER BRACKET
BRACKET	270206	GSE100468-0101	BRACKET SECC T=1.0MM
BRACKET	270207	GSE100478-0001	BRACKET-A SECC T=1.0MM
BRACKET	266686	BPH200018-0001	FAN BRACKET

REPLACEMENT PARTS (Continued)

Symbol	Stock	Drawing		Description
BRACKET	266700	GSE200117-0001		FRONT BRACKET
CABLE	268249	VHW117AAA-0090		TRANSMITTER COAXIAL CABLE 1P 9
CABLE	270224	VRC101008-1020		RCA CABLE 1500MM OD2.6MM BLK P
CABLE	268265	VHW117AAA-0050		RECEIVER COAXIAL CABLE 1P 50MM
CABLE	266639	VFL801245-2600		WIRE 8PIN 260MM
CABLE	270223	VFL7K1246-300		LAT CABLE 7P 300MM 246826 BLK
CABLE	266640	VFL601245-1200		D/WIRE 6PIN 120MM
CABLE	266715	VFL501244-2600		CON/WIRE 5PIN 260MM
CABLE	266705	VFC240110-1800		CABLE 24PIN 180MM
CABLE	266704	VFC130330-1200		CABLE 13PIN 120MM
CABLE	268266	VWA311014-0057		RECEIVER CON/WIRE 3P 180MM 161
CABLE	266716	VFL601244-2200		WIRE 6PIN 220MM
CABLE	268225	VFL401255-2000		CON/WIRE 4P 200MM 246826 RAINB
CIRCUIT	268261	TPS280360-0001	●	POWER SUPPLY 8 O/P 360W PS-835
CIRCUIT	268725	APE302390-0001		ANT PCB ASSY (RX)
COVER	268661	GTP300003-1001	●	MODEM COVER TIN L57.3XW49.6XH7
COVER	270200	BPQ500143-0102	●	TOP COVER HIPS L135XW20.8MM L
COVER	270209	GTP300003-0001	●	MODEM COVER TIN PLATE 57.8X57.
COVER	268241	BPV300015-0001	●	RECEIVER R-COVER ABS 235X218X3
COVER	268270	BPV300014-0002	●	RECEIVER L-COVER ABS () FOR UL
DOOR	268268	BPD300021-0001		RECEIVER ID SW DOOR ABS 21.5X1
DOOR	266713	BPD200022-0001		DOOR
DVD MECH	266621	ASL261603-1102		DVD MECHANISM
FAN	266697	FAN021203-0004		DC FAN 12V 70MA KD1205PFS
FOOT	268267	DUF003006-0001		RECEIVER FOOT RUBBER DIA15.9XH
FRONT CA	268256	BPF200036-0202	●	FRONT CAB HIPS 94V0
HOLDER	268269	GSE300139-0001		RECEIVER ID SW HOLDER SECC T=1
KNOB	266689	BPK218036-0001		POWER KNOB
KNOB	266688	BPK208037-0001		VOLUME KNOB
KNOB	266687	BPK208036-0001		FUNCTION KNOB
LEFT CAB	268257	BPS201002-0002	●	LEFT CAB HIPS 94V0
LENS	268236	BPN200043-0004		DOOR LENS ARCYLIC
LENS	268245	BPN200045-0001		STANDBY LENS MILKY ABS
LENS	268237	BPN300051-0001		RECEIVER LENS LEFT PC 88.5X5.5
LENS	268238	BPN300053-0001		RECEIVER LENS MIDDLE PC 50X5.5
LENS	268260	BPN210044-0004		POWER KEY LENS
LENS	268275	BPN200042-0002		DISPLAY LENS ARCYLIC
LENS	268244	BPN200044-0002		SIDE LENS ARCYLIC

Symbol	Stock	Drawing		Description
MAGNET	268253	GMA500001-0001		TRANSMITTER MAGNET
REMOTE	266719	WIR241001-CL07		REMOTE CONTROL 41 KEYS
RIGHT CA	268243	BPS211002-0002	●	RIGHT CAB HIPS 94V0
SPEAKER	270205	ESW20A001-0607		"SUB100W PASSIVE WOOFER TX ""
SPEAKER	270204	ESB20C501-0603		SAT.75WX2+100WX1+50WX2 DR3612
SWITCH	268242	MSW008003-0010		RECEIVER SW ROCKER SOLTEAM OR
TOP CAB	268248	BPC200005-0101	●	TOP CAB (BPC200005-0001 MODIFY
TRANS	268239	TTI312010-0017		RECEIVER POWER TRANS 120V 60HZ
TRANS	268240	TTI312010-0012		RECEIVER POWER TRANS 120V 60HZ
TRAY	270208	GSE100542-0001		ANTENNA TRAY SECC L100XW85XT1.
TUNER	268273	WTP000011-0010		TUNER PACK KST-ML011MAO-30 KWA

LED

C100	268621	PWL410370-1010	CHIP CAP 100 PF 50V 5%
C101	268621	PWL410370-1010	CHIP CAP 100 PF 50V 5%
C16	268656	PWL456470-1030	CHIP CAP 10000 PF 50V 10%
C18	268656	PWL456470-1030	CHIP CAP 10000 PF 50V 10%
C2	268618	PWL410370-3900	CHIP CAP 39 PF 50V 5%
C20	268635	PWL410870-3390	CHIP CAP 3.3 PF 50V 0.25 PF
C21	268656	PWL456470-1030	CHIP CAP 10000 PF 50V 10%
C26	268656	PWL456470-1030	CHIP CAP 10000 PF 50V 10%
C28	268590	PWL410870-2790	CHIP CAP 2.7 PF 50V 0.25 PF
C29	268656	PWL456470-1030	CHIP CAP 10000 PF 50V 10%
C3	268618	PWL410370-3900	CHIP CAP 39 PF 50V 5%
C30	268595	PZL439630-2260	CHIP CAP 22 UF 10V 20%
C32	268623	PWL426430-1040	CHIP CAP 0.1UF 10V 10%
C34	268656	PWL456470-1030	CHIP CAP 10000 PF 50V 10%
C35	268656	PWL456470-1030	CHIP CAP 10000 PF 50V 10%
C36	268656	PWL456470-1030	CHIP CAP 10000 PF 50V 10%
C37	268656	PWL456470-1030	CHIP CAP 10000 PF 50V 10%
C38	268656	PWL456470-1030	CHIP CAP 10000 PF 50V 10%
C4	268656	PWL456470-1030	CHIP CAP 10000 PF 50V 10%
C42	268656	PWL456470-1030	CHIP CAP 10000 PF 50V 10%
C43	268656	PWL456470-1030	CHIP CAP 10000 PF 50V 10%
C46	268581	PXL439640-1050	CHIP CAP 1 UF 16V +80-20%
C47	268656	PWL456470-1030	CHIP CAP 10000 PF 50V 10%
C48	268656	PWL456470-1030	CHIP CAP 10000 PF 50V 10%
C5	268656	PWL456470-1030	CHIP CAP 10000 PF 50V 10%
C50	268670	PWL456470-2210	CHIP CAP 220 PF 50V 10%
C51	268619	PWL410370-2000	CHIP CAP 20 PF 50V 5%
C54	268631	PWL410370-4700	CHIP CAP 47 PF 50V 5%
C55	268631	PWL410370-4700	CHIP CAP 47 PF 50V 5%
C56	268593	PYL439640-2250	CHIP CAP 2.2UF 16V +80-20%
C57	268581	PXL439640-1050	CHIP CAP 1 UF 16V +80-20%
C6	268656	PWL456470-1030	CHIP CAP 10000 PF 50V 10%
C68	268656	PWL456470-1030	CHIP CAP 10000 PF 50V 10%
C69	268656	PWL456470-1030	CHIP CAP 10000 PF 50V 10%

REPLACEMENT PARTS (Continued)

Symbol	Stock	Drawing	Description
C7	268656	PWL456470-1030	CHIP CAP 10000 PF 50V 10%
C71	268594	PZL439640-1060	CHIP CAP 10 UF 16V +80-20%
C72	268623	PWL426430-1040	CHIP CAP 0.1UF 10V 10%
C73	268590	PWL410870-2790	CHIP CAP 2.7 PF 50V 0.25 PF
C74	268674	PWL410370-3310	CHIP CAP 330 PF 50V 5%
C75	268594	PZL439640-1060	CHIP CAP 10 UF 16V +80-20%
C76	268623	PWL426430-1040	CHIP CAP 0.1UF 10V 10%
C77	268590	PWL410870-2790	CHIP CAP 2.7 PF 50V 0.25 PF
C78	268674	PWL410370-3310	CHIP CAP 330 PF 50V 5%
C79	266683	PXL456470-3330	SMD CAP 0.033 UF 50V 10%
C8	268656	PWL456470-1030	CHIP CAP 10000 PF 50V 10%
C80	266683	PXL456470-3330	SMD CAP 0.033 UF 50V 10%
C81	268649	PWL410870-1590	CHIP CAP 1.5 PF 50V +/-0.25PF
C82	268590	PWL410870-2790	CHIP CAP 2.7 PF 50V 0.25 PF
C83	268649	PWL410870-1590	CHIP CAP 1.5 PF 50V +/-0.25PF
C84	268635	PWL410870-3390	CHIP CAP 3.3 PF 50V 0.25 PF
C85	268636	PWL410370-1500	CHIP CAP 15 PF 50V 5%
C87	268636	PWL410370-1500	CHIP CAP 15 PF 50V 5%
C9	268656	PWL456470-1030	CHIP CAP 10000 PF 50V 10%
CIRCUIT	268657	APE302152-4002	RX LED PCB ASSY HAND INSERT
L1	268633	SCN049A00-4720	INDUCTOR 4.7NH 0.3NH 300MA SM
L11	268653	SCN049A00-1200	INDUCTOR 1.2NH 0.3NH 300MA SM
L12	268653	SCN049A00-1200	INDUCTOR 1.2NH 0.3NH 300MA SM
L2	268633	SCN049A00-4720	INDUCTOR 4.7NH 0.3NH 300MA SM
L3	268633	SCN049A00-4720	INDUCTOR 4.7NH 0.3NH 300MA SM
L4	268633	SCN049A00-4720	INDUCTOR 4.7NH 0.3NH 300MA SM
L7	268663	JCT303002-0010	CHIP EMI FILTER 0.22UF 6.3V 2A
L9	268675	QCF161030-1100	CHIP RES. 110 OHM 1/16W 1%
LED901	268654	KED250003-0070	LED 3 DIA RED/GREEN 3P LENS:WA
LED902	268655	KED300003-0050	LED 3 DIA ORANGE 2P LENS:WATER
Q1	268650	RCN000640-0001	XISTR NPN BFP640 SOT343 INFINE
R11	268585	QCF161240-0000	CHIP RES. 0 OHM 1/16W JUMP WIR
R62	268583	QCF161240-2432	CHIP RES. 24.3K OHM 1/16W 1%
R63	268668	QCF161240-5100	CHIP RES. 510 OHM 1/16W 1%
R64	268668	QCF161240-5100	CHIP RES. 510 OHM 1/16W 1%
R65	268584	QCF161240-1101	CHIP RES. 1.1K OHM 1/16W 1%
R68	268585	QCF161240-0000	CHIP RES. 0 OHM 1/16W JUMP WIR
R69	268604	QCF161240-3902	CHIP RES. 39K OHM 1/16W 1%
R70	268585	QCF161240-0000	CHIP RES. 0 OHM 1/16W JUMP WIR
R78	268589	QCF161240-4701	CHIP RES. 4.7K OHM 1/16W 1%
R80	268575	QCF161030-0000	CHIP RES. 0 OHM 1/16 W 1%
R81	268676	QCF161240-1002	CHIP RES. 10K OHM 1/16W 1%
R82	268671	QCF161240-4993	CHIP RES. 499K 1/16W 1%
R83	268673	QCF161240-3303	CHIP RES. 330K OHM 1/16W 1%
R84	268575	QCF161030-0000	CHIP RES. 0 OHM 1/16 W 1%
R85	268676	QCF161240-1002	CHIP RES. 10K OHM 1/16W 1%
R86	268664	QCF161240-4703	CHIP RES. 470K OHM 1/16W 1%
R87	268582	QCF161240-6653	CHIP RES. 665K OHM 1/16W 1%
R89	268651	QCF161240-1509	CHIP RES. 15 OHM 1/16W 1%
R90	268652	QCF161240-2002	CHIP RES. 20K OHM 1/16W 1%
R91	268634	QCF161240-1009	CHIP RES. 10 OHM 1/16W 1%
R92	268585	QCF161240-0000	CHIP RES. 0 OHM 1/16W JUMP WIR
RB11	270222	VFL411246-2100	CON/WIRE 4P 210MM 246826 BLK
U1	268672	RCI000110-0002	IC 80 PIN GPA110 LGA G-PLUS
U3	268669	RCI003000-0001	IC 5 PIN GP3000 SOT-25 G-PLUS
U4	268601	RCI001174-0002	IC 8 PIN TC1174VUA MSOP MICRO
U5	268601	RCI001174-0002	IC 8 PIN TC1174VUA MSOP MICRO
X1	268665	JCQ047020-4060	CHIP CRYST 40 MHZ 5PPM 20PF

MAIN CBA

Symbol	Stock	Drawing	Description
C101	264419	PRE039540-1010	CAP ELECT 100UF 16V 20% 85C
C102	264419	PRE039540-1010	CAP ELECT 100UF 16V 20% 85C
C103	264419	PRE039540-1010	CAP ELECT 100UF 16V 20% 85C
C104	264419	PRE039540-1010	CAP ELECT 100UF 16V 20% 85C
C105	264442	PXL456470-1040	CHIP CAP 0.1 UF 50V 10%
C106	264442	PXL456470-1040	CHIP CAP 0.1 UF 50V 10%
C107	264442	PXL456470-1040	CHIP CAP 0.1 UF 50V 10%
C108	264442	PXL456470-1040	CHIP CAP 0.1 UF 50V 10%
C109	264442	PXL456470-1040	CHIP CAP 0.1 UF 50V 10%
C110	264442	PXL456470-1040	CHIP CAP 0.1 UF 50V 10%
C111	264442	PXL456470-1040	CHIP CAP 0.1 UF 50V 10%
C112	264442	PXL456470-1040	CHIP CAP 0.1 UF 50V 10%
C113	266647	PXL410370-8210	CAP 820 PF 50V 5%
C114	264442	PXL456470-1040	CHIP CAP 0.1 UF 50V 10%
C115	264442	PXL456470-1040	CHIP CAP 0.1 UF 50V 10%
C116	264442	PXL456470-1040	CHIP CAP 0.1 UF 50V 10%
C117	264442	PXL456470-1040	CHIP CAP 0.1 UF 50V 10%
C118	264442	PXL456470-1040	CHIP CAP 0.1 UF 50V 10%
C119	264442	PXL456470-1040	CHIP CAP 0.1 UF 50V 10%
C120	264442	PXL456470-1040	CHIP CAP 0.1 UF 50V 10%
C121	264442	PXL456470-1040	CHIP CAP 0.1 UF 50V 10%
C122	264442	PXL456470-1040	CHIP CAP 0.1 UF 50V 10%
C123	264442	PXL456470-1040	CHIP CAP 0.1 UF 50V 10%
C124	264442	PXL456470-1040	CHIP CAP 0.1 UF 50V 10%
C125	264442	PXL456470-1040	CHIP CAP 0.1 UF 50V 10%
C126	264442	PXL456470-1040	CHIP CAP 0.1 UF 50V 10%

REPLACEMENT PARTS (Continued)

Symbol	Stock	Drawing	Description
C127	266648	PXL456470-4720	CAP 0.0047UF 50V 10%
C128	264442	PXL456470-1040	CHIP CAP 0.1 UF 50V 10%
C129	264442	PXL456470-1040	CHIP CAP 0.1 UF 50V 10%
C130	264442	PXL456470-1040	CHIP CAP 0.1 UF 50V 10%
C131	264442	PXL456470-1040	CHIP CAP 0.1 UF 50V 10%
C132	264442	PXL456470-1040	CHIP CAP 0.1 UF 50V 10%
C133	264442	PXL456470-1040	CHIP CAP 0.1 UF 50V 10%
C134	264442	PXL456470-1040	CHIP CAP 0.1 UF 50V 10%
C136	264442	PXL456470-1040	CHIP CAP 0.1 UF 50V 10%
C137	264442	PXL456470-1040	CHIP CAP 0.1 UF 50V 10%
C138	264442	PXL456470-1040	CHIP CAP 0.1 UF 50V 10%
C139	264442	PXL456470-1040	CHIP CAP 0.1 UF 50V 10%
C140	266709	PXL410370-6810	CAP 680 PF 50V 5%
C141	266709	PXL410370-6810	CAP 680 PF 50V 5%
C142	266709	PXL410370-6810	CAP 680 PF 50V 5%
C143	266709	PXL410370-6810	CAP 680 PF 50V 5%
C144	264323	PXL410370-1010	CHIP CAP 100 PF 50V 5% NPO
C145	264324	PXL410370-1020	CHIP CAP 1000 PF 50V 5% NPO
C146	264324	PXL410370-1020	CHIP CAP 1000 PF 50V 5% NPO
C147	264324	PXL410370-1020	CHIP CAP 1000 PF 50V 5% NPO
C148	264324	PXL410370-1020	CHIP CAP 1000 PF 50V 5% NPO
C149	264324	PXL410370-1020	CHIP CAP 1000 PF 50V 5% NPO
C150	264324	PXL410370-1020	CHIP CAP 1000 PF 50V 5% NPO
C151	264419	PRE039540-1010	CAP ELECT 100UF 16V 20% 85C
C152	264331	PXL410370-4710	CHIP CAP 470 PF 50V 5% NPO
C153	264331	PXL410370-4710	CHIP CAP 470 PF 50V 5% NPO
C154	266710	PXL456470-2240	SMD CAP 0.22UF 50V 10%
C155	270211	PXL456470-1610	CHIP CAP 160PF 50V 10%
C156	264441	PXL456470-1030	CHIP CAP 0.01 UF 50V 10%
C157	266624	PRE039540-1000	D ELECT 10UF 16V 20%
C160	266624	PRE039540-1000	D ELECT 10UF 16V 20%
C161	266624	PRE039540-1000	D ELECT 10UF 16V 20%
C162	266624	PRE039540-1000	D ELECT 10UF 16V 20%
C163	266624	PRE039540-1000	D ELECT 10UF 16V 20%
C164	264442	PXL456470-1040	CHIP CAP 0.1 UF 50V 10%
C165	264441	PXL456470-1030	CHIP CAP 0.01 UF 50V 10%
C166	266664	PXL456470-6820	CAP 0.0068 UF 50V 10%
C167	264320	PXL410370-3300	CHIP CAP 33 PF 50V 5% NPO
C168	264320	PXL410370-3300	CHIP CAP 33 PF 50V 5% NPO
C169	264320	PXL410370-3300	CHIP CAP 33 PF 50V 5% NPO
C170	270212	PXL456470-4730	CHIP CAP 0.047 UF 50V 10%
C171	266683	PXL456470-3330	SMD CAP 0.033 UF 50V 10%
C174	270212	PXL456470-4730	CHIP CAP 0.047 UF 50V 10%
C175	264334	PXL410370-5610	CHIP CAP 560 PF 50V 5% NPO
C176	264331	PXL410370-4710	CHIP CAP 470 PF 50V 5% NPO
C177	264331	PXL410370-4710	CHIP CAP 470 PF 50V 5% NPO
C178	264321	PXL410370-4700	CHIP CAP 47 PF 50V 5% NPO
C179	266684	PXL439570-1050	SMD CAP 1UF 50V 20%
C180	266684	PXL439570-1050	SMD CAP 1UF 50V 20%
C181	266684	PXL439570-1050	SMD CAP 1UF 50V 20%
C182	264381	PXL456470-1530	CHIP CAP 0.015 UF 50V 10%
C183	264441	PXL456470-1030	CHIP CAP 0.01 UF 50V 10%
C184	266648	PXL456470-4720	CAP 0.0047UF 50V 10%
C185	266648	PXL456470-4720	CAP 0.0047UF 50V 10%
C186	268204	PRE939540-4790	COND ELECT 4.7 UF 16V 20%
C187	266664	PXL456470-6820	CAP 0.0068 UF 50V 10%
C188	268232	PXL410370-2400	CHIP CAP 24 PF 50V 5%
C189	268216	PXL410870-109Z	CHIP CAP 1PF 50V +-0.25PF 06
C189	268232	PXL410370-2400	CHIP CAP 24 PF 50V 5%
C191	264318	PXL410370-2200	CHIP CAP 22 PF 50V 5%
C192	264318	PXL410370-2200	CHIP CAP 22 PF 50V 5%
C193	264318	PXL410370-2200	CHIP CAP 22 PF 50V 5%
C194	264331	PXL410370-4710	CHIP CAP 470 PF 50V 5% NPO
C195	264331	PXL410370-4710	CHIP CAP 470 PF 50V 5% NPO
C196	264331	PXL410370-4710	CHIP CAP 470 PF 50V 5% NPO
C197	264331	PXL410370-4710	CHIP CAP 470 PF 50V 5% NPO
C198	264331	PXL410370-4710	CHIP CAP 470 PF 50V 5% NPO
C199	264331	PXL410370-4710	CHIP CAP 470 PF 50V 5% NPO
C200	264331	PXL410370-4710	CHIP CAP 470 PF 50V 5% NPO
C201	264331	PXL410370-4710	CHIP CAP 470 PF 50V 5% NPO
C202	264331	PXL410370-4710	CHIP CAP 470 PF 50V 5% NPO
C203	264331	PXL410370-4710	CHIP CAP 470 PF 50V 5% NPO
C214	264321	PXL410370-4700	CHIP CAP 47 PF 50V 5% NPO
C215	264321	PXL410370-4700	CHIP CAP 47 PF 50V 5% NPO
C216	264321	PXL410370-4700	CHIP CAP 47 PF 50V 5% NPO
C219	264442	PXL456470-1040	CHIP CAP 0.1 UF 50V 10%
C220	264442	PXL456470-1040	CHIP CAP 0.1 UF 50V 10%
C221	264442	PXL456470-1040	CHIP CAP 0.1 UF 50V 10%
C222	264442	PXL456470-1040	CHIP CAP 0.1 UF 50V 10%
C223	264442	PXL456470-1040	CHIP CAP 0.1 UF 50V 10%
C224	264442	PXL456470-1040	CHIP CAP 0.1 UF 50V 10%
C225	264442	PXL456470-1040	CHIP CAP 0.1 UF 50V 10%
C226	264442	PXL456470-1040	CHIP CAP 0.1 UF 50V 10%
C227	264442	PXL456470-1040	CHIP CAP 0.1 UF 50V 10%
C228	264442	PXL456470-1040	CHIP CAP 0.1 UF 50V 10%
C229	264442	PXL456470-1040	CHIP CAP 0.1 UF 50V 10%
C230	264442	PXL456470-1040	CHIP CAP 0.1 UF 50V 10%
C231	264442	PXL456470-1040	CHIP CAP 0.1 UF 50V 10%
C232	264442	PXL456470-1040	CHIP CAP 0.1 UF 50V 10%
C233	264442	PXL456470-1040	CHIP CAP 0.1 UF 50V 10%
C234	264442	PXL456470-1040	CHIP CAP 0.1 UF 50V 10%
C235	264442	PXL456470-1040	CHIP CAP 0.1 UF 50V 10%
C236	264442	PXL456470-1040	CHIP CAP 0.1 UF 50V 10%
C237	264442	PXL456470-1040	CHIP CAP 0.1 UF 50V 10%
C238	264442	PXL456470-1040	CHIP CAP 0.1 UF 50V 10%
C239	264442	PXL456470-1040	CHIP CAP 0.1 UF 50V 10%
C240	264442	PXL456470-1040	CHIP CAP 0.1 UF 50V 10%
C241	264442	PXL456470-1040	CHIP CAP 0.1 UF 50V 10%
C242	264442	PXL456470-1040	CHIP CAP 0.1 UF 50V 10%
C243	264442	PXL456470-1040	CHIP CAP 0.1 UF 50V 10%

REPLACEMENT PARTS (Continued)

Symbol	Stock	Drawing	Description
C245	264419	PRE039540-1010	CAP ELECT 100UF 16V 20% 85C
C252	264442	PXL456470-1040	CHIP CAP 0.1 UF 50V 10%
C254	264442	PXL456470-1040	CHIP CAP 0.1 UF 50V 10%
C256	264375	PXL4103705090	CHIP CAP 5PF 50V 5%
C259-T	270210	PRD113370-6800	COND DISC 68 PF 50V 5%
C301	264419	PRE039540-1010	CAP ELECT 100UF 16V 20% 85C
C302	264419	PRE039540-1010	CAP ELECT 100UF 16V 20% 85C
C303	266624	PRE039540-1000	D ELECT 10UF 16V 20%
C304	266624	PRE039540-1000	D ELECT 10UF 16V 20%
C305	266624	PRE039540-1000	D ELECT 10UF 16V 20%
C306	266624	PRE039540-1000	D ELECT 10UF 16V 20%
C310	266624	PRE039540-1000	D ELECT 10UF 16V 20%
C311	266624	PRE039540-1000	D ELECT 10UF 16V 20%
C312	266624	PRE039540-1000	D ELECT 10UF 16V 20%
C313	266624	PRE039540-1000	D ELECT 10UF 16V 20%
C314	264419	PRE039540-1010	CAP ELECT 100UF 16V 20% 85C
C318	268187	PRE039540-4710	COND ELECT 470 UF 16 V 2
C319	268187	PRE039540-4710	COND ELECT 470 UF 16 V 2
C320	268187	PRE039540-4710	COND ELECT 470 UF 16 V 2
C321	268187	PRE039540-4710	COND ELECT 470 UF 16 V 2
C322	264419	PRE039540-1010	CAP ELECT 100UF 16V 20% 85C
C323	266624	PRE039540-1000	D ELECT 10UF 16V 20%
C324	268187	PRE039540-4710	COND ELECT 470 UF 16 V 2
C325	266624	PRE039540-1000	D ELECT 10UF 16V 20%
C326	266624	PRE039540-1000	D ELECT 10UF 16V 20%
C327	268187	PRE039540-4710	COND ELECT 470 UF 16 V 2
C328	266624	PRE039540-1000	D ELECT 10UF 16V 20%
C329	264442	PXL456470-1040	CHIP CAP 0.1 UF 50V 10%
C330	264442	PXL456470-1040	CHIP CAP 0.1 UF 50V 10%
C331	264442	PXL456470-1040	CHIP CAP 0.1 UF 50V 10%
C332	264442	PXL456470-1040	CHIP CAP 0.1 UF 50V 10%
C333	264442	PXL456470-1040	CHIP CAP 0.1 UF 50V 10%
C334	264442	PXL456470-1040	CHIP CAP 0.1 UF 50V 10%
C335	264442	PXL456470-1040	CHIP CAP 0.1 UF 50V 10%
C336	264442	PXL456470-1040	CHIP CAP 0.1 UF 50V 10%
C337	266624	PRE039540-1000	D ELECT 10UF 16V 20%
C340	264442	PXL456470-1040	CHIP CAP 0.1 UF 50V 10%
C341	264442	PXL456470-1040	CHIP CAP 0.1 UF 50V 10%
C342	268187	PRE039540-4710	COND ELECT 470 UF 16 V 2
C343	264442	PXL456470-1040	CHIP CAP 0.1 UF 50V 10%
C344	264442	PXL456470-1040	CHIP CAP 0.1 UF 50V 10%
C345	264442	PXL456470-1040	CHIP CAP 0.1 UF 50V 10%
C346	264442	PXL456470-1040	CHIP CAP 0.1 UF 50V 10%
C347	264442	PXL456470-1040	CHIP CAP 0.1 UF 50V 10%
C348	264442	PXL456470-1040	CHIP CAP 0.1 UF 50V 10%
C350	264442	PXL456470-1040	CHIP CAP 0.1 UF 50V 10%
C351	264442	PXL456470-1040	CHIP CAP 0.1 UF 50V 10%
C352	264442	PXL456470-1040	CHIP CAP 0.1 UF 50V 10%
C353	264442	PXL456470-1040	CHIP CAP 0.1 UF 50V 10%
C354	264442	PXL456470-1040	CHIP CAP 0.1 UF 50V 10%
C355	264442	PXL456470-1040	CHIP CAP 0.1 UF 50V 10%
C356	264442	PXL456470-1040	CHIP CAP 0.1 UF 50V 10%
C357	264442	PXL456470-1040	CHIP CAP 0.1 UF 50V 10%
C358	264442	PXL456470-1040	CHIP CAP 0.1 UF 50V 10%
C359	264442	PXL456470-1040	CHIP CAP 0.1 UF 50V 10%
C360	264442	PXL456470-1040	CHIP CAP 0.1 UF 50V 10%
C361	264442	PXL456470-1040	CHIP CAP 0.1 UF 50V 10%
C362	264442	PXL456470-1040	CHIP CAP 0.1 UF 50V 10%
C363	264442	PXL456470-1040	CHIP CAP 0.1 UF 50V 10%
C364	264442	PXL456470-1040	CHIP CAP 0.1 UF 50V 10%
C366	264331	PXL410370-4710	CHIP CAP 470 PF 50V 5% NPO
C367	264331	PXL410370-4710	CHIP CAP 470 PF 50V 5% NPO
C368	264331	PXL410370-4710	CHIP CAP 470 PF 50V 5% NPO
C369	264331	PXL410370-4710	CHIP CAP 470 PF 50V 5% NPO
C372	264327	PXL410370-1510	CHIP CAP 150PF 50V 5% NPO
C373	264327	PXL410370-1510	CHIP CAP 150PF 50V 5% NPO
C374	264327	PXL410370-1510	CHIP CAP 150PF 50V 5% NPO
C375	264327	PXL410370-1510	CHIP CAP 150PF 50V 5% NPO
C380	264329	PXL410370-2210	CHIP CAP 220 PF 50V 5% NPO
C381	264329	PXL410370-2210	CHIP CAP 220 PF 50V 5% NPO
C382	264329	PXL410370-2210	CHIP CAP 220 PF 50V 5% NPO
C383	264329	PXL410370-2210	CHIP CAP 220 PF 50V 5% NPO
C384	264321	PXL410370-4700	CHIP CAP 47 PF 50V 5% NPO
C385	264321	PXL410370-4700	CHIP CAP 47 PF 50V 5% NPO
C386	264321	PXL410370-4700	CHIP CAP 47 PF 50V 5% NPO
C387	264321	PXL410370-4700	CHIP CAP 47 PF 50V 5% NPO
C394	266624	PRE039540-1000	D ELECT 10UF 16V 20%
C395	266624	PRE039540-1000	D ELECT 10UF 16V 20%
C396	264323	PXL410370-1010	CHIP CAP 100 PF 50V 5% NPO
C397	264323	PXL410370-1010	CHIP CAP 100 PF 50V 5% NPO
C398	264419	PRE039540-1010	CAP ELECT 100UF 16V 20% 85C
C399	264419	PRE039540-1010	CAP ELECT 100UF 16V 20% 85C
C400	264419	PRE039540-1010	CAP ELECT 100UF 16V 20% 85C
C401	264419	PRE039540-1010	CAP ELECT 100UF 16V 20% 85C
C402	264419	PRE039540-1010	CAP ELECT 100UF 16V 20% 85C
C403	264320	PXL410370-3300	CHIP CAP 33 PF 50V 5% NPO
C404	268187	PRE039540-4710	COND ELECT 470 UF 16 V 2
C405	264442	PXL456470-1040	CHIP CAP 0.1 UF 50V 10%
C406	264442	PXL456470-1040	CHIP CAP 0.1 UF 50V 10%
C407	264442	PXL456470-1040	CHIP CAP 0.1 UF 50V 10%
C408	264442	PXL456470-1040	CHIP CAP 0.1 UF 50V 10%
C409	264442	PXL456470-1040	CHIP CAP 0.1 UF 50V 10%
C410	264442	PXL456470-1040	CHIP CAP 0.1 UF 50V 10%
C411	264421	PRE039540-2210	CAP ELECT 220 UF 16V 20% 85C
C412	264421	PRE039540-2210	CAP ELECT 220 UF 16V 20% 85C
C413	264323	PXL410370-1010	CHIP CAP 100 PF 50V 5% NPO
C414	264323	PXL410370-1010	CHIP CAP 100 PF 50V 5% NPO

REPLACEMENT PARTS (Continued)

Symbol	Stock	Drawing	Description
C415	264323	PXL410370-1010	CHIP CAP 100 PF 50V 5% NPO
C416	264323	PXL410370-1010	CHIP CAP 100 PF 50V 5% NPO
C420	264442	PXL456470-1040	CHIP CAP 0.1 UF 50V 10%
C421	268204	PRE939540-4790	COND ELECT 4.7 UF 16V 20%
C423	264320	PXL410370-3300	CHIP CAP 33 PF 50V 5% NPO
C424	264320	PXL410370-3300	CHIP CAP 33 PF 50V 5% NPO
C427	264442	PXL456470-1040	CHIP CAP 0.1 UF 50V 10%
C434	264320	PXL410370-3300	CHIP CAP 33 PF 50V 5% NPO
C435	264320	PXL410370-3300	CHIP CAP 33 PF 50V 5% NPO
C436	264320	PXL410370-3300	CHIP CAP 33 PF 50V 5% NPO
C437	264320	PXL410370-3300	CHIP CAP 33 PF 50V 5% NPO
C438	264320	PXL410370-3300	CHIP CAP 33 PF 50V 5% NPO
C439	264320	PXL410370-3300	CHIP CAP 33 PF 50V 5% NPO
C440	264320	PXL410370-3300	CHIP CAP 33 PF 50V 5% NPO
C441	264320	PXL410370-3300	CHIP CAP 33 PF 50V 5% NPO
C442	264320	PXL410370-3300	CHIP CAP 33 PF 50V 5% NPO
C443	264320	PXL410370-3300	CHIP CAP 33 PF 50V 5% NPO
C444	264320	PXL410370-3300	CHIP CAP 33 PF 50V 5% NPO
C445	264320	PXL410370-3300	CHIP CAP 33 PF 50V 5% NPO
C446	264320	PXL410370-3300	CHIP CAP 33 PF 50V 5% NPO
C447	264320	PXL410370-3300	CHIP CAP 33 PF 50V 5% NPO
C448	264320	PXL410370-3300	CHIP CAP 33 PF 50V 5% NPO
C449	264320	PXL410370-3300	CHIP CAP 33 PF 50V 5% NPO
C450	264320	PXL410370-3300	CHIP CAP 33 PF 50V 5% NPO
C451	264320	PXL410370-3300	CHIP CAP 33 PF 50V 5% NPO
C452	264323	PXL410370-1010	CHIP CAP 100 PF 50V 5% NPO
C453	264323	PXL410370-1010	CHIP CAP 100 PF 50V 5% NPO
C454	264323	PXL410370-1010	CHIP CAP 100 PF 50V 5% NPO
C455	264323	PXL410370-1010	CHIP CAP 100 PF 50V 5% NPO
C456	264323	PXL410370-1010	CHIP CAP 100 PF 50V 5% NPO
C457	264323	PXL410370-1010	CHIP CAP 100 PF 50V 5% NPO
C461	264419	PRE039540-1010	CAP ELECT 100UF 16V 20% 85C
C462	264419	PRE039540-1010	CAP ELECT 100UF 16V 20% 85C
C463	264442	PXL456470-1040	CHIP CAP 0.1 UF 50V 10%
C464	264442	PXL456470-1040	CHIP CAP 0.1 UF 50V 10%
C465	264442	PXL456470-1040	CHIP CAP 0.1 UF 50V 10%
C466	264442	PXL456470-1040	CHIP CAP 0.1 UF 50V 10%
C467	264442	PXL456470-1040	CHIP CAP 0.1 UF 50V 10%
C468	264442	PXL456470-1040	CHIP CAP 0.1 UF 50V 10%
C469	264442	PXL456470-1040	CHIP CAP 0.1 UF 50V 10%
C470	264442	PXL456470-1040	CHIP CAP 0.1 UF 50V 10%
C471	264442	PXL456470-1040	CHIP CAP 0.1 UF 50V 10%
C472	264442	PXL456470-1040	CHIP CAP 0.1 UF 50V 10%
C473	264442	PXL456470-1040	CHIP CAP 0.1 UF 50V 10%
C474	264442	PXL456470-1040	CHIP CAP 0.1 UF 50V 10%
C475	264442	PXL456470-1040	CHIP CAP 0.1 UF 50V 10%
C476	264442	PXL456470-1040	CHIP CAP 0.1 UF 50V 10%
C477	264442	PXL456470-1040	CHIP CAP 0.1 UF 50V 10%
C478	264442	PXL456470-1040	CHIP CAP 0.1 UF 50V 10%
C479	264442	PXL456470-1040	CHIP CAP 0.1 UF 50V 10%
C480	264442	PXL456470-1040	CHIP CAP 0.1 UF 50V 10%
C481	264442	PXL456470-1040	CHIP CAP 0.1 UF 50V 10%
C502	264442	PXL456470-1040	CHIP CAP 0.1 UF 50V 10%
C504	264442	PXL456470-1040	CHIP CAP 0.1 UF 50V 10%
C506	264442	PXL456470-1040	CHIP CAP 0.1 UF 50V 10%
C508	264442	PXL456470-1040	CHIP CAP 0.1 UF 50V 10%
C510	264442	PXL456470-1040	CHIP CAP 0.1 UF 50V 10%
C512	264442	PXL456470-1040	CHIP CAP 0.1 UF 50V 10%
C513	264442	PXL456470-1040	CHIP CAP 0.1 UF 50V 10%
C514	264442	PXL456470-1040	CHIP CAP 0.1 UF 50V 10%
C515	264442	PXL456470-1040	CHIP CAP 0.1 UF 50V 10%
C516	264442	PXL456470-1040	CHIP CAP 0.1 UF 50V 10%
C517	264442	PXL456470-1040	CHIP CAP 0.1 UF 50V 10%
C518	264324	PXL410370-1020	CHIP CAP 1000 PF 50V 5% NPO
C519	264324	PXL410370-1020	CHIP CAP 1000 PF 50V 5% NPO
C521	264324	PXL410370-1020	CHIP CAP 1000 PF 50V 5% NPO
C522	266624	PRE039540-1000	D ELECT 10UF 16V 20%
C523	266624	PRE039540-1000	D ELECT 10UF 16V 20%
C524	264419	PRE039540-1010	CAP ELECT 100UF 16V 20% 85C
C526	264329	PXL410370-2210	CHIP CAP 220 PF 50V 5% NPO
C527	264323	PXL410370-1010	CHIP CAP 100 PF 50V 5% NPO
C528	264442	PXL456470-1040	CHIP CAP 0.1 UF 50V 10%
C529	264442	PXL456470-1040	CHIP CAP 0.1 UF 50V 10%
C530	264442	PXL456470-1040	CHIP CAP 0.1 UF 50V 10%
C531	264442	PXL456470-1040	CHIP CAP 0.1 UF 50V 10%
C532	264442	PXL456470-1040	CHIP CAP 0.1 UF 50V 10%
C533	264442	PXL456470-1040	CHIP CAP 0.1 UF 50V 10%
C534	264442	PXL456470-1040	CHIP CAP 0.1 UF 50V 10%
C535	264442	PXL456470-1040	CHIP CAP 0.1 UF 50V 10%
C536	264442	PXL456470-1040	CHIP CAP 0.1 UF 50V 10%
C537	264442	PXL456470-1040	CHIP CAP 0.1 UF 50V 10%
C538	264442	PXL456470-1040	CHIP CAP 0.1 UF 50V 10%
C539	264442	PXL456470-1040	CHIP CAP 0.1 UF 50V 10%
C540	264442	PXL456470-1040	CHIP CAP 0.1 UF 50V 10%
C541	264442	PXL456470-1040	CHIP CAP 0.1 UF 50V 10%
C542	264442	PXL456470-1040	CHIP CAP 0.1 UF 50V 10%
C543	264441	PXL456470-1030	CHIP CAP 0.01 UF 50V 10%
C544	264441	PXL456470-1030	CHIP CAP 0.01 UF 50V 10%
C545	264441	PXL456470-1030	CHIP CAP 0.01 UF 50V 10%
C546	264441	PXL456470-1030	CHIP CAP 0.01 UF 50V 10%
C547	264441	PXL456470-1030	CHIP CAP 0.01 UF 50V 10%
C548	264441	PXL456470-1030	CHIP CAP 0.01 UF 50V 10%
C549	264441	PXL456470-1030	CHIP CAP 0.01 UF 50V 10%
C550	264441	PXL456470-1030	CHIP CAP 0.01 UF 50V 10%
C551	268215	PZL4564A4-1040	CHIP CAP 0.1UF/100V X7R +/- 10%
C552	268215	PZL4564A4-1040	CHIP CAP 0.1UF/100V X7R +/- 10%
C553	268203	PEN1263A0-684Z	COND METAL 0.68UF 100V 5%
C554	268215	PZL4564A4-1040	CHIP CAP 0.1UF/100V X7R +/- 10%

REPLACEMENT PARTS (Continued)

Symbol	Stock	Drawing	Description
C555	268215	PZL4564A4-1040	CHIP CAP 0.1UF/100V X7R +/- 10%
C556	268215	PZL4564A4-1040	CHIP CAP 0.1UF/100V X7R +/- 10%
C557	268203	PEN1263A0-684Z	COND METAL 0.68UF 100V 5%
C558	268215	PZL4564A4-1040	CHIP CAP 0.1UF/100V X7R +/- 10%
C559	268215	PZL4564A4-1040	CHIP CAP 0.1UF/100V X7R +/- 10%
C560	264419	PRE039540-1010	CAP ELECT 100UF 16V 20% 85C
C561	268215	PZL4564A4-1040	CHIP CAP 0.1UF/100V X7R +/- 10%
C562	264337	PZL456470-1040	CHIP CAP 0.1UF 50V 10%
C563	264337	PZL456470-1040	CHIP CAP 0.1UF 50V 10%
C564	268215	PZL4564A4-1040	CHIP CAP 0.1UF/100V X7R +/- 10%
C565	268215	PZL4564A4-1040	CHIP CAP 0.1UF/100V X7R +/- 10%
C566	264337	PZL456470-1040	CHIP CAP 0.1UF 50V 10%
C567	264337	PZL456470-1040	CHIP CAP 0.1UF 50V 10%
C568	264337	PZL456470-1040	CHIP CAP 0.1UF 50V 10%
C569	264337	PZL456470-1040	CHIP CAP 0.1UF 50V 10%
C570	268215	PZL4564A4-1040	CHIP CAP 0.1UF/100V X7R +/- 10%
C571	268215	PZL4564A4-1040	CHIP CAP 0.1UF/100V X7R +/- 10%
C572	264337	PZL456470-1040	CHIP CAP 0.1UF 50V 10%
C573	264337	PZL456470-1040	CHIP CAP 0.1UF 50V 10%
C574	264337	PZL456470-1040	CHIP CAP 0.1UF 50V 10%
C575	264337	PZL456470-1040	CHIP CAP 0.1UF 50V 10%
C576	264337	PZL456470-1040	CHIP CAP 0.1UF 50V 10%
C577	264337	PZL456470-1040	CHIP CAP 0.1UF 50V 10%
C578	264432	PDE039570-1020	CAP ELECT 1000UF 50V 20% 85C
C579	264432	PDE039570-1020	CAP ELECT 1000UF 50V 20% 85C
C580	264432	PDE039570-1020	CAP ELECT 1000UF 50V 20% 85C
C581	270215	PZL456470-6810	CHIP CAP 680 PF 50V 10%
C582	270215	PZL456470-6810	CHIP CAP 680 PF 50V 10%
C583	270214	PZL439670-2240	CHIP CAP 0.22 UF 50V +80-20%
C584	270214	PZL439670-2240	CHIP CAP 0.22 UF 50V +80-20%
C585	270214	PZL439670-2240	CHIP CAP 0.22 UF 50V +80-20%
C586	270214	PZL439670-2240	CHIP CAP 0.22 UF 50V +80-20%
C587	268203	PEN1263A0-684Z	COND METAL 0.68UF 100V 5%
C588	268203	PEN1263A0-684Z	COND METAL 0.68UF 100V 5%
C589	266624	PRE039540-1000	D ELECT 10UF 16V 20%
C590	270213	PZL410470-4710	CHIP CAP 470 PF 50V 10%
C591	270213	PZL410470-4710	CHIP CAP 470 PF 50V 10%
C592	264432	PDE039570-1020	CAP ELECT 1000UF 50V 20% 85C
C593	268187	PRE039540-4710	COND ELECT 470 UF 16 V 2
C594	268187	PRE039540-4710	COND ELECT 470 UF 16 V 2
C595	268187	PRE039540-4710	COND ELECT 470 UF 16 V 2
CIRCUIT	268259	APE200690-0002 ●	MAIN PCB ASSY
CN101	264386	CHC050050-0824	CONNECTOR 24PIN PITCH=0.5
CN102	266654	CCN200000-0106	CONNECTOR 6 PIN PITCH=2.0MM
CN103	264245	CCN200000-0105	CONNECTOR 5 PIN PITCH=2.0MM
CN104	266636	VFL401245-0500	WIRE 4PIN 50MM
CN302	266637	VFL704312-0800	WIRE 7PIN 80MM
CN303	264243	CCN200000-0103	CONNECTOR 3 PIN PITCH=2.0MM
CN304	266638	VWA310060-0001	WIRE 4PIN 80MM
CN305	264248	CCN200000-0108	CONNECTOR 8 PIN PITCH=2.0MM
CN306	266655	CCH125030-2213	CONNECTOR 13P P1.25X2XH8MM 180
CN501	264431	CCN250000-0102	CONNECTOR B2B-XH-A 2 PIN
D101	264339	RCD114148-0011	DIODE CHIP BAV16W/IN4148W
D102	264339	RCD114148-0011	DIODE CHIP BAV16W/IN4148W
D103	264339	RCD114148-0011	DIODE CHIP BAV16W/IN4148W
D301	264339	RCD114148-0011	DIODE CHIP BAV16W/IN4148W
D302	264339	RCD114148-0011	DIODE CHIP BAV16W/IN4148W
D303	264339	RCD114148-0011	DIODE CHIP BAV16W/IN4148W
D501	264339	RCD114148-0011	DIODE CHIP BAV16W/IN4148W
D502	264339	RCD114148-0011	DIODE CHIP BAV16W/IN4148W
FB101	264343	SCB008050-6010	CHIP BEAD 600 OHM AT 100MHZ
FB102	264343	SCB008050-6010	CHIP BEAD 600 OHM AT 100MHZ
FB103	264343	SCB008050-6010	CHIP BEAD 600 OHM AT 100MHZ
FB115	264343	SCB008050-6010	CHIP BEAD 600 OHM AT 100MHZ
FB116	264343	SCB008050-6010	CHIP BEAD 600 OHM AT 100MHZ
FB117	264343	SCB008050-6010	CHIP BEAD 600 OHM AT 100MHZ
FB118	264343	SCB008050-6010	CHIP BEAD 600 OHM AT 100MHZ
FB301	264343	SCB008050-6010	CHIP BEAD 600 OHM AT 100MHZ
FB302	264343	SCB008050-6010	CHIP BEAD 600 OHM AT 100MHZ
FB304	264343	SCB008050-6010	CHIP BEAD 600 OHM AT 100MHZ
FB306	264343	SCB008050-6010	CHIP BEAD 600 OHM AT 100MHZ
FB307	264343	SCB008050-6010	CHIP BEAD 600 OHM AT 100MHZ
FB308	264343	SCB008050-6010	CHIP BEAD 600 OHM AT 100MHZ
FB309	264343	SCB008050-6010	CHIP BEAD 600 OHM AT 100MHZ
FB310	264401	SFB001001-0030	BEAD FERIT DIA3.5X6MM 100 OHM
FB311	264401	SFB001001-0030	BEAD FERIT DIA3.5X6MM 100 OHM
FB312	264401	SFB001001-0030	BEAD FERIT DIA3.5X6MM 100 OHM

REPLACEMENT PARTS (Continued)

Symbol	Stock	Drawing	Description
FB313	264401	SFB001001-0030	BEAD FERIT DIA3.5X6MM 100 OHM
FB314	264401	SFB001001-0030	BEAD FERIT DIA3.5X6MM 100 OHM
FB315	264401	SFB001001-0030	BEAD FERIT DIA3.5X6MM 100 OHM
FB316	264401	SFB001001-0030	BEAD FERIT DIA3.5X6MM 100 OHM
FB317	264401	SFB001001-0030	BEAD FERIT DIA3.5X6MM 100 OHM
FB318	264401	SFB001001-0030	BEAD FERIT DIA3.5X6MM 100 OHM
FB319	266708	SCB008050-1010	SMD BEAD 100 OHM AT 100MHZ
FB320	266708	SCB008050-1010	SMD BEAD 100 OHM AT 100MHZ
FB321	266708	SCB008050-1010	SMD BEAD 100 OHM AT 100MHZ
FB322	264343	SCB008050-6010	CHIP BEAD 600 OHM AT 100MHZ
FB323	264343	SCB008050-6010	CHIP BEAD 600 OHM AT 100MHZ
FB324	264343	SCB008050-6010	CHIP BEAD 600 OHM AT 100MHZ
FB325	266708	SCB008050-1010	SMD BEAD 100 OHM AT 100MHZ
FB326	266708	SCB008050-1010	SMD BEAD 100 OHM AT 100MHZ
FB327	264401	SFB001001-0030	BEAD FERIT DIA3.5X6MM 100 OHM
FB501	264343	SCB008050-6010	CHIP BEAD 600 OHM AT 100MHZ
FB502	264343	SCB008050-6010	CHIP BEAD 600 OHM AT 100MHZ
IC101	266673	RCI005868-0002	IC 28 PIN AM5868S
IC102	266674	RCI006603-0001	IC 64 PIN ES6603S LQFP
IC103	268197	RCI240002-0005	IC 8 PIN 24LLC02A SOP CERAMATE
IC103	268198	RCI024002-0004	IC 8 PIN SSC24A02 SOP CERAMATE
IC103	264349	RCI024002-0002	IC 8 PIN AT24C02N-10SI-2.7
IC104	268194	RCI641620-0001	IC 54 PIN HY57V641620HGT-6 4
IC104	268195	RCI641620-0002	IC 54 PIN HY57V641620HGT-55 1
IC104	268196	RCI641632-0001	IC 54.PIN K4S641632H-TC 75
IC105	264368	RCI000809-0003	IC 3 PIN IMP809SEUR-T SOT23
IC105	268191	RCI003403-0001	IC 3P CM3403-29ST 2.93V SOT-22
IC106	268190	RCI006698-0002	IC 208 PIN ES6698FD PQFP W/DTS
IC107	270220	RCI290160-0010	IC 48 PIN MX29LV160BBTC-70 TSO
IC107	270219	RCI290160-0009	IC 48 PIN MX29LV160ABTC-70 TSO
IC107	268199	AIC290160-C416	IC 48 PIN MX29LV160ABTC-70 MXI
IC108	264350	RCI740374-0002	IC 20 PIN 74HC374
IC109	264350	RCI740374-0002	IC 20 PIN 74HC374
IC111	268193	RCI740004-0001	IC 14 PIN TC74HC04AFN TOSHIBA
IC301	268218	RHI007806-0001	IC 3 PIN AN7806 MATSUSHITA
IC302	268189	RCI005342-1001	IC 16P CS5342-CZZ TSSOP CIRRUS
IC307	268188	RCI003541-0001	IC 8 PIN APA3541 SOP-8 HEADPH
IC308	264354	RCI004052-0001	IC 16 PIN TC4052BFN CHIP
IC308	268207	RCI004052-0002	IC 16 PIN CD4052BM SOIC TI
IC310	264363	RCI916433-0001	IC 3 PIN RT9164-33CLR
IC311	264363	RCI916433-0001	IC 3 PIN RT9164-33CLR
IC312	268205	RCI111700-0201	IC 3 PIN LD1117 ADJ SOT223 ST
IC501	266668	RCI000308-0002	IC 64 PIN STA308A TQFP ST
IC502	268192	RCI000506-0001	IC 36 PIN STA506 SO ST 60WX2
IC503	268192	RCI000506-0001	IC 36 PIN STA506 SO ST 60WX2
IC504	268192	RCI000506-0001	IC 36 PIN STA506 SO ST 60WX2
JK103	264428	CJC010004-3030	JACK RCA YEL = S-VIDEO
JK104	268217	CJT200001-0005	OPTICAL RECEIVER DLR1111
JK301	268227	CJE100002-0001	TEL.JACK 8P8C RJ-45
JK303	264246	CJR104101-0010	RCA JACK 4P WHT-WHT/RED-RED
JK501	268228	CJS008101-0050	SPK JACK 8P RD-WT-GRN-PUL/BKX4
JP101	268202	XJP220000-0001	WIRE BARE 22 GA TINNED
JP102	268202	XJP220000-0001	WIRE BARE 22 GA TINNED
JP103	268202	XJP220000-0001	WIRE BARE 22 GA TINNED
JP104	268202	XJP220000-0001	WIRE BARE 22 GA TINNED
JP105	268202	XJP220000-0001	WIRE BARE 22 GA TINNED
JP106	268202	XJP220000-0001	WIRE BARE 22 GA TINNED
L102	268201	SAN001600-2490	INDUCTOR 2.4 UH 10% AI
L104	266671	SCN023500-2490	INDUC 2.4 UH 5% SMD 0805
L105	266671	SCN023500-2490	INDUC 2.4 UH 5% SMD 0805
L106	266671	SCN023500-2490	INDUC 2.4 UH 5% SMD 0805
L107	266671	SCN023500-2490	INDUC 2.4 UH 5% SMD 0805
L108	266671	SCN023500-2490	INDUC 2.4 UH 5% SMD 0805
L301	264342	SCN023600-1000	CHIP INDUC 10 UH 10% SMD 0805
L302	264342	SCN023600-1000	CHIP INDUC 10 UH 10% SMD 0805
L501	268229	SIN002701-1000	INDUCTOR 10 UH 20% 8.5TS 2UEW
L502	268229	SIN002701-1000	INDUCTOR 10 UH 20% 8.5TS 2UEW
L503	268229	SIN002701-1000	INDUCTOR 10 UH 20% 8.5TS 2UEW
L504	268229	SIN002701-1000	INDUCTOR 10 UH 20% 8.5TS 2UEW
L505	268231	SIL217001-2700	COMMON MODE COIL 27UH 4P GOLD
L506	264240	SIL102001-2000	COIL 20UH D0.5MM 4PIN
L507	268231	SIL217001-2700	COMMON MODE COIL 27UH 4P GOLD
L508	264240	SIL102001-2000	COIL 20UH D0.5MM 4PIN

REPLACEMENT PARTS (Continued)

Symbol	Stock	Drawing	Description
L509	268230	SIN002701-1500	INDUCTOR 15UH 20% 11.5TS 2UEW
L510	268230	SIN002701-1500	INDUCTOR 15UH 20% 11.5TS 2UEW
L511	268230	SIN002701-1500	INDUCTOR 15UH 20% 11.5TS 2UEW
L512	268230	SIN002701-1500	INDUCTOR 15UH 20% 11.5TS 2UEW
Q101	266652	RCM203018-1001	FET 2SK3018 30V/0.1A SC-70 ROH
Q102	266652	RCM203018-1001	FET 2SK3018 30V/0.1A SC-70 ROH
Q103	264346	RCN005783-0001	XISTR NPN CM5783GR SOT23
Q104	264346	RCN005783-0001	XISTR NPN CM5783GR SOT23
Q105	268206	RCP201132-0003	XISTR PNP 2SB1132RT100 ROHM HF
Q106	268206	RCP201132-0003	XISTR PNP 2SB1132RT100 ROHM HF
Q106	267300	RCP201132-0001	TR XISTR PNP 2SB1132-T100
Q107	264344	RCP200733-0001	XISTR PNP 2SA812 HFE:200~400
Q302	264346	RCN005783-0001	XISTR NPN CM5783GR SOT23
Q304	264344	RCP200733-0001	XISTR PNP 2SA812 HFE:200~400
Q305	264346	RCN005783-0001	XISTR NPN CM5783GR SOT23
Q306	264346	RCN005783-0001	XISTR NPN CM5783GR SOT23
Q308	264346	RCN005783-0001	XISTR NPN CM5783GR SOT23
Q501	264346	RCN005783-0001	XISTR NPN CM5783GR SOT23
Q503	264344	RCP200733-0001	XISTR PNP 2SA812 HFE:200~400
R101	264280	QCF165030-1830	CHIP RES. 18K OHM 1/16W 5%
R102	264291	QCF165030-1040	CHIP RES. 100K OHM 1/16W 5%
R103	264291	QCF165030-1040	CHIP RES. 100K OHM 1/16W 5%
R104	264291	QCF165030-1040	CHIP RES. 100K OHM 1/16W 5%
R105	264279	QCF165030-1530	CHIP RES. 15K OHM 1/16W 5%
R106	264271	QCF165030-1020	CHIP RES. 1K OHM 1/16W 5%
R107	264271	QCF165030-1020	CHIP RES. 1K OHM 1/16W 5%
R108	264271	QCF165030-1020	CHIP RES. 1K OHM 1/16W 5%
R111	264296	QCF165030-1050	CHIP RES. 1M OHM 1/16W 5%
R112	264287	QCF165030-5630	CHIP RES. 56K OHM 1/16W 5%
R113	266660	QCF165030-8230	SMD RES. 82K OHM 1/16 W 5%
R114	264273	QCF165030-4720	CHIP RES. 4.7K OHM 1/16W 5 %
R116	264273	QCF165030-4720	CHIP RES. 4.7K OHM 1/16W 5 %
R117	264273	QCF165030-4720	CHIP RES. 4.7K OHM 1/16W 5 %
R118	264273	QCF165030-4720	CHIP RES. 4.7K OHM 1/16W 5 %
R119	264273	QCF165030-4720	CHIP RES. 4.7K OHM 1/16W 5 %
R120	264273	QCF165030-4720	CHIP RES. 4.7K OHM 1/16W 5 %
R121	264273	QCF165030-4720	CHIP RES. 4.7K OHM 1/16W 5 %
R122	264273	QCF165030-4720	CHIP RES. 4.7K OHM 1/16W 5 %
R123	264273	QCF165030-4720	CHIP RES. 4.7K OHM 1/16W 5 %
R126	264277	QCF165030-1030	CHIP RES. 10K OHM 1/16W 5%
R127	264277	QCF165030-1030	CHIP RES. 10K OHM 1/16W 5%
R128	264277	QCF165030-1030	CHIP RES. 10K OHM 1/16W 5%
R129	264277	QCF165030-1030	CHIP RES. 10K OHM 1/16W 5%
R130	264277	QCF165030-1030	CHIP RES. 10K OHM 1/16W 5%
R131	264277	QCF165030-1030	CHIP RES. 10K OHM 1/16W 5%
R132	264277	QCF165030-1030	CHIP RES. 10K OHM 1/16W 5%
R133	264278	QCF165030-1000	CHIP RES. 10 OHM 1/16W 5%
R134	264278	QCF165030-1000	CHIP RES. 10 OHM 1/16W 5%
R137	264273	QCF165030-4720	CHIP RES. 4.7K OHM 1/16W 5 %
R138	264273	QCF165030-4720	CHIP RES. 4.7K OHM 1/16W 5 %
R141	264393	QCF165030-1230	CHIP RES. 12K OHM 1/16W 5%
R142	266712	QCF165030-1520	SMD RES. 1.5K OHM 1/16 W 5%
R143	266712	QCF165030-1520	SMD RES. 1.5K OHM 1/16 W 5%
R144	264281	QCF165030-2230	CHIP RES. 22K OHM 1/16W 5%
R145	264281	QCF165030-2230	CHIP RES. 22K OHM 1/16W 5%
R146	264268	QCF165030-0000	CHIP RES. 0 OHM JUMP WIRE
R148	264268	QCF165030-0000	CHIP RES. 0 OHM JUMP WIRE
R150	264268	QCF165030-0000	CHIP RES. 0 OHM JUMP WIRE
R151	264284	QCF165030-3300	CHIP RES. 33 OHM 1/16W 5%
R152	264284	QCF165030-3300	CHIP RES. 33 OHM 1/16W 5%
R155	264268	QCF165030-0000	CHIP RES. 0 OHM JUMP WIRE
R156	264284	QCF165030-3300	CHIP RES. 33 OHM 1/16W 5%
R157	264284	QCF165030-3300	CHIP RES. 33 OHM 1/16W 5%
R159	264284	QCF165030-3300	CHIP RES. 33 OHM 1/16W 5%
R160	264268	QCF165030-0000	CHIP RES. 0 OHM JUMP WIRE
R161	264284	QCF165030-3300	CHIP RES. 33 OHM 1/16W 5%
R162	264284	QCF165030-3300	CHIP RES. 33 OHM 1/16W 5%
R163	264284	QCF165030-3300	CHIP RES. 33 OHM 1/16W 5%
R164	264268	QCF165030-0000	CHIP RES. 0 OHM JUMP WIRE
R165	264268	QCF165030-0000	CHIP RES. 0 OHM JUMP WIRE
R166	264284	QCF165030-3300	CHIP RES. 33 OHM 1/16W 5%
R167	264284	QCF165030-3300	CHIP RES. 33 OHM 1/16W 5%
R168	264407	QAF065000-3300	RES CF 33 OHM 1/6W 5%
R169	264305	QCF165030-1510	CHIP RES. 150 OHM 1/16W 5%
R171	264269	QCF165030-1220	CHIP RES. 1.2K OHM 1/16W 5%
R172	266672	QCF165030-5120	SMD RES. 5.1K OHM 1/16 W 5%
R173	264283	QCF165030-3330	CHIP RES. 33K OHM 1/16W 5%
R174	264275	QCF165030-6820	CHIP RES. 6.8K OHM 1/16W 5%
R175	264275	QCF165030-6820	CHIP RES. 6.8K OHM 1/16W 5%
R176	264275	QCF165030-6820	CHIP RES. 6.8K OHM 1/16W 5%
R177	264268	QCF165030-0000	CHIP RES. 0 OHM JUMP WIRE
R178	264272	QCF165030-3320	CHIP RES. 3.3K OHM 1/16W 5%
R179	264272	QCF165030-3320	CHIP RES. 3.3K OHM 1/16W 5%
R180	264272	QCF165030-3320	CHIP RES. 3.3K OHM 1/16W 5%
R181	264272	QCF165030-3320	CHIP RES. 3.3K OHM 1/16W 5%

REPLACEMENT PARTS (Continued)

Symbol	Stock	Drawing	Description
R182	264303	QCF165030-6830	CHIP RES. 68K OHM 1/16W 5 %
R183	266706	QCF165030-2030	SMD RES. 20K OHM 1/16 W 5%
R184	270216	QCF165030-3910	CHIP RES. 390 OHM 1/16 W 5%
R185	264268	QCF165030-0000	CHIP RES. 0 OHM JUMP WIRE
R186	264289	QCF165030-7500	CHIP RES. 75 OHM 1/16W 5%
R187	264289	QCF165030-7500	CHIP RES. 75 OHM 1/16W 5%
R188	264289	QCF165030-7500	CHIP RES. 75 OHM 1/16W 5%
R189	264289	QCF165030-7500	CHIP RES. 75 OHM 1/16W 5%
R190	264289	QCF165030-7500	CHIP RES. 75 OHM 1/16W 5%
R197	264278	QCF165030-1000	CHIP RES. 10 OHM 1/16W 5%
R200	264296	QCF165030-1050	CHIP RES. 1M OHM 1/16W 5%
R201	264327	PXL410370-1510	CHIP CAP 150PF 50V 5% NPO
R202	264277	QCF165030-1030	CHIP RES. 10K OHM 1/16W 5%
R301	264273	QCF165030-4720	CHIP RES. 4.7K OHM 1/16W 5 %
R302	264273	QCF165030-4720	CHIP RES. 4.7K OHM 1/16W 5 %
R303	264273	QCF165030-4720	CHIP RES. 4.7K OHM 1/16W 5 %
R304	264273	QCF165030-4720	CHIP RES. 4.7K OHM 1/16W 5 %
R305	264273	QCF165030-4720	CHIP RES. 4.7K OHM 1/16W 5 %
R306	264273	QCF165030-4720	CHIP RES. 4.7K OHM 1/16W 5 %
R307	264273	QCF165030-4720	CHIP RES. 4.7K OHM 1/16W 5 %
R308	264273	QCF165030-4720	CHIP RES. 4.7K OHM 1/16W 5 %
R309	264273	QCF165030-4720	CHIP RES. 4.7K OHM 1/16W 5 %
R310	264273	QCF165030-4720	CHIP RES. 4.7K OHM 1/16W 5 %
R311	264273	QCF165030-4720	CHIP RES. 4.7K OHM 1/16W 5 %
R312	264273	QCF165030-4720	CHIP RES. 4.7K OHM 1/16W 5 %
R313	264273	QCF165030-4720	CHIP RES. 4.7K OHM 1/16W 5 %
R314	264273	QCF165030-4720	CHIP RES. 4.7K OHM 1/16W 5 %
R315	264273	QCF165030-4720	CHIP RES. 4.7K OHM 1/16W 5 %
R316	264273	QCF165030-4720	CHIP RES. 4.7K OHM 1/16W 5 %
R317	264273	QCF165030-4720	CHIP RES. 4.7K OHM 1/16W 5 %
R318	264273	QCF165030-4720	CHIP RES. 4.7K OHM 1/16W 5 %
R319	264273	QCF165030-4720	CHIP RES. 4.7K OHM 1/16W 5 %
R320	264273	QCF165030-4720	CHIP RES. 4.7K OHM 1/16W 5 %
R321	264273	QCF165030-4720	CHIP RES. 4.7K OHM 1/16W 5 %
R322	264273	QCF165030-4720	CHIP RES. 4.7K OHM 1/16W 5 %
R323	264273	QCF165030-4720	CHIP RES. 4.7K OHM 1/16W 5 %
R324	264273	QCF165030-4720	CHIP RES. 4.7K OHM 1/16W 5 %
R337	264280	QCF165030-1830	CHIP RES. 18K OHM 1/16W 5%
R338	264280	QCF165030-1830	CHIP RES. 18K OHM 1/16W 5%
R339	264280	QCF165030-1830	CHIP RES. 18K OHM 1/16W 5%
R340	264280	QCF165030-1830	CHIP RES. 18K OHM 1/16W 5%
R341	264280	QCF165030-1830	CHIP RES. 18K OHM 1/16W 5%
R342	264280	QCF165030-1830	CHIP RES. 18K OHM 1/16W 5%
R343	264280	QCF165030-1830	CHIP RES. 18K OHM 1/16W 5%
R344	264280	QCF165030-1830	CHIP RES. 18K OHM 1/16W 5%
R355	264277	QCF165030-1030	CHIP RES. 10K OHM 1/16W 5%
R356	264277	QCF165030-1030	CHIP RES. 10K OHM 1/16W 5%
R357	264277	QCF165030-1030	CHIP RES. 10K OHM 1/16W 5%
R358	264268	QCF165030-0000	CHIP RES. 0 OHM JUMP WIRE
R360	264271	QCF165030-1020	CHIP RES. 1K OHM 1/16W 5%
R361	264271	QCF165030-1020	CHIP RES. 1K OHM 1/16W 5%
R362	264271	QCF165030-1020	CHIP RES. 1K OHM 1/16W 5%
R363	264271	QCF165030-1020	CHIP RES. 1K OHM 1/16W 5%
R364	264291	QCF165030-1040	CHIP RES. 100K OHM 1/16W 5%
R365	264291	QCF165030-1040	CHIP RES. 100K OHM 1/16W 5%
R366	268200	QCF165030-5190	CHIP RES. 5.1 OHM 1/16 W 5%
R367	264291	QCF165030-1040	CHIP RES. 100K OHM 1/16W 5%
R368	264271	QCF165030-1020	CHIP RES. 1K OHM 1/16W 5%
R369	264271	QCF165030-1020	CHIP RES. 1K OHM 1/16W 5%
R372	264291	QCF165030-1040	CHIP RES. 100K OHM 1/16W 5%
R375	264272	QCF165030-3320	CHIP RES. 3.3K OHM 1/16W 5%
R376	264272	QCF165030-3320	CHIP RES. 3.3K OHM 1/16W 5%
R377	264271	QCF165030-1020	CHIP RES. 1K OHM 1/16W 5%
R378	264291	QCF165030-1040	CHIP RES. 100K OHM 1/16W 5%
R379	264291	QCF165030-1040	CHIP RES. 100K OHM 1/16W 5%
R380	264291	QCF165030-1040	CHIP RES. 100K OHM 1/16W 5%
R381	264286	QCF165030-4730	CHIP RES. 47K OHM 1/16W 5 %
R382	264286	QCF165030-4730	CHIP RES. 47K OHM 1/16W 5 %
R385	264291	QCF165030-1040	CHIP RES. 100K OHM 1/16W 5%
R386	264291	QCF165030-1040	CHIP RES. 100K OHM 1/16W 5%
R392	264273	QCF165030-4720	CHIP RES. 4.7K OHM 1/16W 5 %
R396	264409	QAF065000-1030	RES CF 10K OHM 1/6W 5%
R397	264275	QCF165030-6820	CHIP RES. 6.8K OHM 1/16W 5%
R398	264275	QCF165030-6820	CHIP RES. 6.8K OHM 1/16W 5%
R399	264286	QCF165030-4730	CHIP RES. 47K OHM 1/16W 5 %
R400	264286	QCF165030-4730	CHIP RES. 47K OHM 1/16W 5 %

REPLACEMENT PARTS (Continued)

Symbol	Stock	Drawing	Description
R401	264286	QCF165030-4730	CHIP RES. 47K OHM 1/16W 5 %
R402	264286	QCF165030-4730	CHIP RES. 47K OHM 1/16W 5 %
R403	264286	QCF165030-4730	CHIP RES. 47K OHM 1/16W 5 %
R404	264286	QCF165030-4730	CHIP RES. 47K OHM 1/16W 5 %
R405	264297	QCF165030-2290	CHIP RES. 2.2 OHM 1/16W 5%
R406	264297	QCF165030-2290	CHIP RES. 2.2 OHM 1/16W 5%
R407	266711	QCF165030-4790	SMD RES. 4.7 OHM 1/16 W 5%
R408	266711	QCF165030-4790	SMD RES. 4.7 OHM 1/16 W 5%
R409	264403	QAF065000-4720	RES CF 4.7K OHM 1/6W 5%
R410	264273	QCF165030-4720	CHIP RES. 4.7K OHM 1/16W 5 %
R411	264273	QCF165030-4720	CHIP RES. 4.7K OHM 1/16W 5 %
R412	264273	QCF165030-4720	CHIP RES. 4.7K OHM 1/16W 5 %
R413	264273	QCF165030-4720	CHIP RES. 4.7K OHM 1/16W 5 %
R414	264273	QCF165030-4720	CHIP RES. 4.7K OHM 1/16W 5 %
R415	264273	QCF165030-4720	CHIP RES. 4.7K OHM 1/16W 5 %
R418	264410	QAF065000-4710	RES CF 470 OHM 1/6W 5%
R419	264410	QAF065000-4710	RES CF 470 OHM 1/6W 5%
R420	264284	QCF165030-3300	CHIP RES. 33 OHM 1/16W 5%
R421	268220	QCF085020-1010	CHIP RES. 100 OHM 1/8 W 5%
R423	268210	QCF015020-1510	CHIP RES. 150 OHM 1/10 W 5%
R429	264284	QCF165030-3300	CHIP RES. 33 OHM 1/16W 5%
R430	264284	QCF165030-3300	CHIP RES. 33 OHM 1/16W 5%
R431	264284	QCF165030-3300	CHIP RES. 33 OHM 1/16W 5%
R432	264284	QCF165030-3300	CHIP RES. 33 OHM 1/16W 5%
R433	264284	QCF165030-3300	CHIP RES. 33 OHM 1/16W 5%
R434	264284	QCF165030-3300	CHIP RES. 33 OHM 1/16W 5%
R435	264284	QCF165030-3300	CHIP RES. 33 OHM 1/16W 5%
R436	264284	QCF165030-3300	CHIP RES. 33 OHM 1/16W 5%
R437	264407	QAF065000-3300	RES CF 33 OHM 1/6W 5%
R438	264407	QAF065000-3300	RES CF 33 OHM 1/6W 5%
R439	264284	QCF165030-3300	CHIP RES. 33 OHM 1/16W 5%
R440	264407	QAF065000-3300	RES CF 33 OHM 1/6W 5%
R441	264284	QCF165030-3300	CHIP RES. 33 OHM 1/16W 5%
R442	264284	QCF165030-3300	CHIP RES. 33 OHM 1/16W 5%
R443	264284	QCF165030-3300	CHIP RES. 33 OHM 1/16W 5%
R444	264284	QCF165030-3300	CHIP RES. 33 OHM 1/16W 5%
R501	264286	QCF165030-4730	CHIP RES. 47K OHM 1/16W 5 %
R502	264268	QCF165030-0000	CHIP RES. 0 OHM JUMP WIRE
R503	264268	QCF165030-0000	CHIP RES. 0 OHM JUMP WIRE
R504	264281	QCF165030-2230	CHIP RES. 22K OHM 1/16W 5%
R505	264281	QCF165030-2230	CHIP RES. 22K OHM 1/16W 5%
R506	264277	QCF165030-1030	CHIP RES. 10K OHM 1/16W 5%
R507	264313	QCF045010-2000	CHIP RES. 20 OHM 1/4W 5%
R508	264313	QCF045010-2000	CHIP RES. 20 OHM 1/4W 5%
R509	268209	QCF045010-1500	CHIP RES. 15 OHM 1/4 W 5%
R510	264313	QCF045010-2000	CHIP RES. 20 OHM 1/4W 5%
R511	264277	QCF165030-1030	CHIP RES. 10K OHM 1/16W 5%
R512	264277	QCF165030-1030	CHIP RES. 10K OHM 1/16W 5%
R513	264313	QCF045010-2000	CHIP RES. 20 OHM 1/4W 5%
R514	268209	QCF045010-1500	CHIP RES. 15 OHM 1/4 W 5%
R515	264275	QCF165030-6820	CHIP RES. 6.8K OHM 1/16W 5%
R516	264281	QCF165030-2230	CHIP RES. 22K OHM 1/16W 5%
R517	264271	QCF165030-1020	CHIP RES. 1K OHM 1/16W 5%
R518	264409	QAF065000-1030	RES CF 10K OHM 1/6W 5%
R519	268219	QCF045010-3090	CHIP RES. 3 OHM 1/4 W 5%
R520	268219	QCF045010-3090	CHIP RES. 3 OHM 1/4 W 5%
R521	268219	QCF045010-3090	CHIP RES. 3 OHM 1/4 W 5%
R522	268219	QCF045010-3090	CHIP RES. 3 OHM 1/4 W 5%
R523	264314	QCF045010-4790	CHIP RES. 4.7 OHM 1/4W 5%
R524	264314	QCF045010-4790	CHIP RES. 4.7 OHM 1/4W 5%
R525	266680	QAF025000-1010	RESISTOR 100 OHM 1/2 W 5%
R526	266681	QAF025000-1510	RES 150 OHM 1/2 W 5% CF
R528	264268	QCF165030-0000	CHIP RES. 0 OHM JUMP WIRE
R529	264268	QCF165030-0000	CHIP RES. 0 OHM JUMP WIRE
R530	264314	QCF045010-4790	CHIP RES. 4.7 OHM 1/4W 5%
R531	264314	QCF045010-4790	CHIP RES. 4.7 OHM 1/4W 5%
R532	264275	QCF165030-6820	CHIP RES. 6.8K OHM 1/16W 5%
R548	264268	QCF165030-0000	CHIP RES. 0 OHM JUMP WIRE
R549	264268	QCF165030-0000	CHIP RES. 0 OHM JUMP WIRE
R550	264268	QCF165030-0000	CHIP RES. 0 OHM JUMP WIRE
R551	264268	QCF165030-0000	CHIP RES. 0 OHM JUMP WIRE
RA101	264294	QCP015081-3300	RES ARRAY 33 OHMX4 1/10W 5%
RA102	264294	QCP015081-3300	RES ARRAY 33 OHMX4 1/10W 5%
RA103	264294	QCP015081-3300	RES ARRAY 33 OHMX4 1/10W 5%
RA105	264293	QCP015081-1000	RES ARRAY 10 OHMX4 1/10W 5%
RA106	264293	QCP015081-1000	RES ARRAY 10 OHMX4 1/10W 5%
RA107	264293	QCP015081-1000	RES ARRAY 10 OHMX4 1/10W 5%
RA108	264294	QCP015081-3300	RES ARRAY 33 OHMX4 1/10W 5%
XL101	266667	JQC021000-2760	CRYSTAL 27 MHZ HC-49US
ZD102	264340	RCZ005007-0021	CHIP ZENER 7.5V 5% 0.5W
ZD103	264340	RCZ005007-0021	CHIP ZENER 7.5V 5% 0.5W
ZD104	264340	RCZ005007-0021	CHIP ZENER 7.5V 5% 0.5W
ZD105	264340	RCZ005007-0021	CHIP ZENER 7.5V 5% 0.5W
ZD106	264340	RCZ005007-0021	CHIP ZENER 7.5V 5% 0.5W
ZD107	264340	RCZ005007-0021	CHIP ZENER 7.5V 5% 0.5W
ZD108	264340	RCZ005007-0021	CHIP ZENER 7.5V 5% 0.5W
ZD109	264340	RCZ005007-0021	CHIP ZENER 7.5V 5% 0.5W
ZD110	264340	RCZ005007-0021	CHIP ZENER 7.5V 5% 0.5W
ZD111	270221	RCZ005007-Z021	CHIP ZENER 7.5V 5% 0.5W (F1) S
ZD111	264340	RCZ005007-0021	CHIP ZENER 7.5V 5% 0.5W

REPLACEMENT PARTS (Continued)

Symbol	Stock	Drawing	Description
ZD301	264341	RCZ005006-0011	CHIP ZENER 5.6V 5% 0.5W
ZD302	264341	RCZ005006-0011	CHIP ZENER 5.6V 5% 0.5W
ZD303	264341	RCZ005006-0011	CHIP ZENER 5.6V 5% 0.5W
RECEIVER			
C1	268630	PBE039522-1010	CHIP 100 UF 6.3V 20%
C10	264442	PXL456470-1040	CHIP CAP 0.1 UF 50V 10%
C11	268581	PXL439640-1050	CHIP CAP 1 UF 16V +80-20%
C12	264441	PXL456470-1030	CHIP CAP 0.01 UF 50V 10%
C13	264442	PXL456470-1040	CHIP CAP 0.1 UF 50V 10%
C14	264442	PXL456470-1040	CHIP CAP 0.1 UF 50V 10%
C15	264441	PXL456470-1030	CHIP CAP 0.01 UF 50V 10%
C16	268581	PXL439640-1050	CHIP CAP 1 UF 16V +80-20%
C17	264442	PXL456470-1040	CHIP CAP 0.1 UF 50V 10%
C18	264441	PXL456470-1030	CHIP CAP 0.01 UF 50V 10%
C19	268581	PXL439640-1050	CHIP CAP 1 UF 16V +80-20%
C2	268581	PXL439640-1050	CHIP CAP 1 UF 16V +80-20%
C20	264442	PXL456470-1040	CHIP CAP 0.1 UF 50V 10%
C21	264441	PXL456470-1030	CHIP CAP 0.01 UF 50V 10%
C213	268581	PXL439640-1050	CHIP CAP 1 UF 16V +80-20%
C214	264442	PXL456470-1040	CHIP CAP 0.1 UF 50V 10%
C215	264442	PXL456470-1040	CHIP CAP 0.1 UF 50V 10%
C216	264442	PXL456470-1040	CHIP CAP 0.1 UF 50V 10%
C22	268581	PXL439640-1050	CHIP CAP 1 UF 16V +80-20%
C220	268594	PZL439640-1060	CHIP CAP 10 UF 16V +80-20%
C222	264442	PXL456470-1040	CHIP CAP 0.1 UF 50V 10%
C23	264442	PXL456470-1040	CHIP CAP 0.1 UF 50V 10%
C230	264441	PXL456470-1030	CHIP CAP 0.01 UF 50V 10%
C232	268630	PBE039522-1010	CHIP 100 UF 6.3V 20%
C235	264442	PXL456470-1040	CHIP CAP 0.1 UF 50V 10%
C236	264442	PXL456470-1040	CHIP CAP 0.1 UF 50V 10%
C237	264442	PXL456470-1040	CHIP CAP 0.1 UF 50V 10%
C238	264442	PXL456470-1040	CHIP CAP 0.1 UF 50V 10%
C24	264441	PXL456470-1030	CHIP CAP 0.01 UF 50V 10%
C240	264442	PXL456470-1040	CHIP CAP 0.1 UF 50V 10%
C242	264442	PXL456470-1040	CHIP CAP 0.1 UF 50V 10%
C25	268581	PXL439640-1050	CHIP CAP 1 UF 16V +80-20%
C26	264442	PXL456470-1040	CHIP CAP 0.1 UF 50V 10%
C27	264441	PXL456470-1030	CHIP CAP 0.01 UF 50V 10%
C28	264442	PXL456470-1040	CHIP CAP 0.1 UF 50V 10%
C29	264442	PXL456470-1040	CHIP CAP 0.1 UF 50V 10%
C3	264441	PXL456470-1030	CHIP CAP 0.01 UF 50V 10%
C30	264442	PXL456470-1040	CHIP CAP 0.1 UF 50V 10%
C38	264323	PXL410370-1010	CHIP CAP 100 PF 50V 5% NPO
C39	264323	PXL410370-1010	CHIP CAP 100 PF 50V 5% NPO
C4	264442	PXL456470-1040	CHIP CAP 0.1 UF 50V 10%
C40	264323	PXL410370-1010	CHIP CAP 100 PF 50V 5% NPO
C41	264323	PXL410370-1010	CHIP CAP 100 PF 50V 5% NPO
C42	264319	PXL410370-1000	CHIP CAP 10 PF 50V 5%
C43	264319	PXL410370-1000	CHIP CAP 10 PF 50V 5%
C44	264319	PXL410370-1000	CHIP CAP 10 PF 50V 5%
C45	264319	PXL410370-1000	CHIP CAP 10 PF 50V 5%
C46	268662	PBE039522-4700	CHIP 47 UF 6.3V 20%
C47	268662	PBE039522-4700	CHIP 47 UF 6.3V 20%
C48	268662	PBE039522-4700	CHIP 47 UF 6.3V 20%
C49	264442	PXL456470-1040	CHIP CAP 0.1 UF 50V 10%
C5	264442	PXL456470-1040	CHIP CAP 0.1 UF 50V 10%
C50	268581	PXL439640-1050	CHIP CAP 1 UF 16V +80-20%
C51	264442	PXL456470-1040	CHIP CAP 0.1 UF 50V 10%
C52	268581	PXL439640-1050	CHIP CAP 1 UF 16V +80-20%
C53	264442	PXL456470-1040	CHIP CAP 0.1 UF 50V 10%
C6	268632	PXL410370-2000	CHIP CAP 20 PF 50V 5%
C7	268632	PXL410370-2000	CHIP CAP 20 PF 50V 5%
C8	264323	PXL410370-1010	CHIP CAP 100 PF 50V 5% NPO
C9	264323	PXL410370-1010	CHIP CAP 100 PF 50V 5% NPO
CIRCUIT	268683	APE302100-0001	RECEIVER PCB ASSY
J1	270203	CCP200080-6240	CHIP HEAD 20X2P L4+2.2+XP2MM W
J2	270202	CCP200070-6232	CHIP HEAD 16X2P L2+2.2XP2MM W/
L10	268677	SCB012061-3010	CHIP BEAD 300 OHM 25% AT 100 M
L11	268645	SCB004020-3010	CHIP BEAD 300 OHM 25% AT 100MH
L12	268645	SCB004020-3010	CHIP BEAD 300 OHM 25% AT 100MH
L14	268645	SCB004020-3010	CHIP BEAD 300 OHM 25% AT 100MH
L16	268645	SCB004020-3010	CHIP BEAD 300 OHM 25% AT 100MH
L19	268645	SCB004020-3010	CHIP BEAD 300 OHM 25% AT 100MH
L27	268645	SCB004020-3010	CHIP BEAD 300 OHM 25% AT 100MH
L30	268645	SCB004020-3010	CHIP BEAD 300 OHM 25% AT 100MH
L300	268221	QCF015020-0000	CHIP RES. 0 OHM JUMP WIRE
L301	268646	SCB008050-2020	FERRITE 2KOHM 100MHZ
L302	268627	SCB008050-3010	CHIP BEAD 300 OHM 25% AT 100MH
L31	264442	PXL456470-1040	CHIP CAP 0.1 UF 50V 10%
L32	264268	QCF165030-0000	CHIP RES. 0 OHM JUMP WIRE
L33	268646	SCB008050-2020	FERRITE 2KOHM 100MHZ
L34	268639	SCB006030-3011	CHIP BEAD 300 OHM 100MHZ 10% M
L35	268639	SCB006030-3011	CHIP BEAD 300 OHM 100MHZ 10% M
L36	268639	SCB006030-3011	CHIP BEAD 300 OHM 100MHZ 10% M
L5	268663	JCT303002-0010	CHIP EMI FILTER 0.22UF 6.3V 2A
L6	268663	JCT303002-0010	CHIP EMI FILTER 0.22UF 6.3V 2A
R1	264273	QCF165030-4720	CHIP RES. 4.7K OHM 1/16W 5 %
R100	264278	QCF165030-1000	CHIP RES. 10 OHM 1/16W 5%
R102	268679	QCF161030-4999	CHIP RES. 49.9 OHM 1/16W 1%
R104	268679	QCF161030-4999	CHIP RES. 49.9 OHM 1/16W 1%

REPLACEMENT PARTS (Continued)

Symbol	Stock	Drawing	Description
R106	268679	QCF161030-4999	CHIP RES. 49.9 OHM 1/16W 1%
R108	268679	QCF161030-4999	CHIP RES. 49.9 OHM 1/16W 1%
R12	268680	QCF161030-9090	CHIP RES. 909 OHM 1/16W 1%
R14	268680	QCF161030-9090	CHIP RES. 909 OHM 1/16W 1%
R17	268680	QCF161030-9090	CHIP RES. 909 OHM 1/16W 1%
R19	268680	QCF161030-9090	CHIP RES. 909 OHM 1/16W 1%
R20	268659	QCF015030-2220	CHIP RES. 2.2K OHM 1/10W 5%
R30	268680	QCF161030-9090	CHIP RES. 909 OHM 1/16W 1%
R31	264278	QCF165030-1000	CHIP RES. 10 OHM 1/16W 5%
R4	268659	QCF015030-2220	CHIP RES. 2.2K OHM 1/10W 5%
R42	268624	QCP165031-3300	CHIP ARRAY 33 OHMX4 1/16W 5%
R51	268624	QCP165031-3300	CHIP ARRAY 33 OHMX4 1/16W 5%
R52	264273	QCF165030-4720	CHIP RES. 4.7K OHM 1/16W 5 %
R53	268624	QCP165031-3300	CHIP ARRAY 33 OHMX4 1/16W 5%
R54	264278	QCF165030-1000	CHIP RES. 10 OHM 1/16W 5%
R56	268624	QCP165031-3300	CHIP ARRAY 33 OHMX4 1/16W 5%
R57	264278	QCF165030-1000	CHIP RES. 10 OHM 1/16W 5%
R58	268642	QCP065080-4720	CHIP ARRAY 4.7K OHM 1/16W 5%
R59	268642	QCP065080-4720	CHIP ARRAY 4.7K OHM 1/16W 5%
R60	264273	QCF165030-4720	CHIP RES. 4.7K OHM 1/16W 5 %
R61	268642	QCP065080-4720	CHIP ARRAY 4.7K OHM 1/16W 5%
R77	268681	QCF161030-1002	CHIP RES. 10K OHM 1/16W 1 %
R80	268684	QCF161030-4991	CHIP RES. 4.99K 1/16W 1%
R82	268682	QCF161030-1001	CHIP RES. 1K OHM 1/16 W 1%
R83	268658	QCF161030-3001	CHIP RES. 3K OHM 1/16W 1%
R84	268682	QCF161030-1001	CHIP RES. 1K OHM 1/16 W 1%
R85	268658	QCF161030-3001	CHIP RES. 3K OHM 1/16W 1%
R88	268681	QCF161030-1002	CHIP RES. 10K OHM 1/16W 1 %
R90	268684	QCF161030-4991	CHIP RES. 4.99K 1/16W 1%
R92	268682	QCF161030-1001	CHIP RES. 1K OHM 1/16 W 1%
R93	268658	QCF161030-3001	CHIP RES. 3K OHM 1/16W 1%
R94	268682	QCF161030-1001	CHIP RES. 1K OHM 1/16 W 1%
R95	268658	QCF161030-3001	CHIP RES. 3K OHM 1/16W 1%
R99	264278	QCF165030-1000	CHIP RES. 10 OHM 1/16W 5%
U2	268647	RCI000112-0002	IC 80 PIN GPA112 LGA G-PLUS
U3	268648	RCI002354-0001	IC 8 PIN OPA2354AIDDA MSOP T
U4	268648	RCI002354-0001	IC 8 PIN OPA2354AIDDA MSOP T
U5	268660	RCI780153-0004	IC 14 PIN EM78P153SN SOP ELAN
U7	268685	RCI004341-0001	IC 16 PIN

Symbol	Stock	Drawing	Description
X1	268626	JCQ048000-2461	CHIP CRYST 24.576 MHZ 8PPM <10
SMPS			
BR1	N/S/P	RD-AP0104029A	BRG 600V 6A GBU606 LITON
C102	N/S/P	MD-AP9201019A	C.ELE 470UF 200V M 25*30 DWF
C103	N/S/P	MD-AP9201019A	C.ELE 470UF 200V M 25*30 DWF
C104	0		C.MEF 1.8UF 400V K 22.5
C105	N/S/P	RD-AP0401092Y	C.DIS 4700PF 1KV K Y5P 5T
C106	N/S/P	RD-AP04051740	C.ELE 100UF 10V M 5*11 5T 105C
C107	N/S/P	RD-AP04051740	C.ELE 100UF 10V M 5*11 5T 105C
C108	N/S/P	RD-AP0401092Y	C.DIS 4700PF 1KV K Y5P 5T
C109	N/S/P	RD-AP0405074G	C.ELE 47UF 35V M 6.3*11 LZG 5T
C110	N/S/P	RD-AP0404176I	C.ELE 1000UF 10V M 8*20 PW 5T
C112	N/S/P	RD-AP0104140H	R.CF 1K 1/4W J 1206
C113	N/S/P	RD-AP0309107L	C.MON 0.1UF 100V M Y5V 5T
C114	N/S/P	RD-AP0305129O	C.MON 0.01UF 50V K X7R 1206
C115	N/S/P	RD-AP0305129O	C.MON 0.01UF 50V K X7R 1206
C117	N/S/P	RD-AP0401092Y	C.DIS 4700PF 1KV K Y5P 5T
C201	N/S/P	RD-AP0309107L	C.MON 0.1UF 100V M Y5V 5T
C202	N/S/P	RD-AP0309107L	C.MON 0.1UF 100V M Y5V 5T
C203	N/S/P	RD-AP0404176I	C.ELE 1000UF 10V M 8*20 PW 5T
C204	N/S/P	RD-AP0405062A	C.ELE 1000UF 50V M 13*30 KF
C205	N/S/P	RD-AP0405062A	C.ELE 1000UF 50V M 13*30 KF
C206	N/S/P	RD-AP0309107L	C.MON 0.1UF 100V M Y5V 5T
C207	N/S/P	RD-AP0309107L	C.MON 0.1UF 100V M Y5V 5T
C208	N/S/P	RD-AP04051740	C.ELE 100UF 10V M 5*11 5T 105C
C209	N/S/P	RD-AP0309107L	C.MON 0.1UF 100V M Y5V 5T
C210	N/S/P	RD-AP04051740	C.ELE 100UF 10V M 5*11 5T 105C
C211	N/S/P	RD-AP04051740	C.ELE 100UF 10V M 5*11 5T 105C
C212	N/S/P	RD-AP0404021E	C.ELE 220UF 35V M 8*15 LZP 5T
C213	N/S/P	RD-AP0404021E	C.ELE 220UF 35V M 8*15 LZP 5T
C214	N/S/P	RD-AP0309107L	C.MON 0.1UF 100V M Y5V 5T
C215	N/S/P	RD-AP0305129O	C.MON 0.01UF 50V K X7R 1206
C216	N/S/P	RD-AP0404176I	C.ELE 1000UF 10V M 8*20 PW 5T
C217	N/S/P	RD-AP0404176I	C.ELE 1000UF 10V M 8*20 PW 5T
C218	N/S/P	RD-AP0404021E	C.ELE 220UF 35V M 8*15 LZP 5T
C219	N/S/P	RD-AP0403132C	C.ELE 100UF 25V M 6.3*11 RLP 5
C220	N/S/P	RD-AP0403132C	C.ELE 100UF 25V M 6.3*11 RLP 5
C221	N/S/P	RD-AP0309107L	C.MON 0.1UF 100V M Y5V 5T
C222	N/S/P	RD-AP0305129O	C.MON 0.01UF 50V K X7R 1206

REPLACEMENT PARTS (Continued)

Symbol	Stock	Drawing	Description
C223	N/S/P	RD-AP04051740	C.ELE 100UF 10V M 5*11 5T 105C
C224	N/S/P	RD-AP04051740	C.ELE 100UF 10V M 5*11 5T 105C
C225	N/S/P	RD-AP04051740	C.ELE 100UF 10V M 5*11 5T 105C
C226	N/S/P	RD-AP0305129O	C.MON 0.01UF 50V K X7R 1206
C227	N/S/P	RD-AP0305129O	C.MON 0.01UF 50V K X7R 1206
C233	N/S/P	RD-AP0305129O	C.MON 0.01UF 50V K X7R 1206
C234	N/S/P	RD-AP04051740	C.ELE 100UF 10V M 5*11 5T 105C
CL20	0		CHOKE T106-52 50UH+-10%
CN1	N/S/P	RD-AP0401051A	WAFER SP 4P 3.96 BT
CN2	N/S/P	RD-AP0401050A	WAFER SP 7P 2.5 BT
CN3	N/S/P	RD-AP0401049A	WAFER SP 6P 2.0 BT
CN4	N/S/P	RD-AP0401099A	WAFER SP 4P2C 3.96 BT
CX1	N/S/P	RD-AP0208184C	C.MEX 0.68UF 275V K 22.5 KNB15
CX2	N/S/P	RD-AP0404106G	C.MEX 0.1UF 275V K 15 MKP
CY1	N/S/P	RD-AP0208183J	C.DIS 220PF 400V K B 10 CD
CY4	N/S/P	RD-AP0208183J	C.DIS 220PF 400V K B 10 CD
D101	N/S/P	RD-AP9901025A	DIO 75V 0.2A BAS32L LL34
D102	N/S/P	RD-AP9901025A	DIO 75V 0.2A BAS32L LL34
D103	N/S/P	RD-AP0401015C	DIO 1000V 1A UF1007 DO41
D104	N/S/P	RD-AP9812004A	DIO 200V 2A BYV27-200
D105	N/S/P	RD-AP0401015C	DIO 1000V 1A UF1007 DO41
D106	N/S/P	RD-AP0401015C	DIO 1000V 1A UF1007 DO41
D107	N/S/P	RD-AP9811119A	DIO 1000V 1A GL41M LL41
D201	N/S/P	RD-AP9312111B	DIO 200V 20A BYW51-200 TO220
D202	N/S/P	RD-AP9312111B	DIO 200V 20A BYW51-200 TO220
D203	N/S/P	RD-AP0401015C	DIO 1000V 1A UF1007 DO41
D204	N/S/P	RD-AP9812004A	DIO 200V 2A BYV27-200
D205	N/S/P	RD-AP9912093B	DIO 60V 5A SB560 DO201AD
D206	N/S/P	RD-AP0401015C	DIO 1000V 1A UF1007 DO41
D207	N/S/P	RD-AP0207132D	DIO 200V 1A UF4003 DO41
D208	N/S/P	RD-AP9811040A	DIO 50V 1A SB150 DO41
D209	N/S/P	RD-AP0401015C	DIO 1000V 1A UF1007 DO41
D210	N/S/P	RD-AP9901025A	DIO 75V 0.2A BAS32L LL34
D211	N/S/P	RD-AP0204035B	DIO 75V 0.2A 1N4148 DO35
D212	N/S/P	RD-AP0204035B	DIO 75V 0.2A 1N4148 DO35
D213	N/S/P	RD-AP9901025A	DIO 75V 0.2A BAS32L LL34
D214	N/S/P	RD-AP9901025A	DIO 75V 0.2A BAS32L LL34
D215	N/S/P	RD-AP9901025A	DIO 75V 0.2A BAS32L LL34
D216	N/S/P	RD-AP9901025A	DIO 75V 0.2A BAS32L LL34
D217	N/S/P	RD-AP0207132D	DIO 200V 1A UF4003 DO41
D218	N/S/P	RD-AP0207132D	DIO 200V 1A UF4003 DO41
D219	N/S/P	RD-AP0104140H	R.CF 1K 1/4W J 1206
D221	N/S/P	RD-AP9901025A	DIO 75V 0.2A BAS32L LL34
F1	N/S/P	RD-AP0111072A	FUSE SB 7A 125V GST-A
L1	0		CHOKE TR25*12.5*13 13MH +-25%
L2	0		CHOKE TRR25*12.5*13 15MH 25%
L202	N/S/P	RD-AP0403197A	CHOKE DR6.5*8 4UH+-15%
L203	N/S/P	RD-AP0404056A	CHOKE DR6.5*8 0.8UH+-15%
L204	N/S/P	RD-AP0403164A	CHOKE DR6.5*8 16UH+-15%
MOV1	N/S/P	RD-AP9908119B	ABSORBER 300V 4500A TVR14471KS
Q101	0		TRX NPN 400V 12A E13009 TO220
Q102	0		TRX NPN 400V 12A E13009 TO220
Q103	0		MFET P 30V 2A 0.08 FDN360P SSO
Q201	N/S/P	RD-AP0104119A	TRX PNP 120V 0.8A KTA1023Y TO9
Q202	N/S/P	RD-AP9806042A	TRX NPN 50V 0.15A 2SC1815 TO92
Q203	N/S/P	RD-AP9806067A	TRX PNP 50V 0.15A 2SA1015 TO92
Q204	N/S/P	RD-AP9806042A	TRX NPN 50V 0.15A 2SC1815 TO92
Q205	N/S/P	RD-AP9902014B	TRX NPN 50V 0.15A KSC1815 TO92
Q206	N/S/P	RD-AP9902014B	TRX NPN 50V 0.15A KSC1815 TO92
Q207	N/S/P	RD-AP9806042A	TRX NPN 50V 0.15A 2SC1815 TO92
Q209	N/S/P	RD-AP0401110A	TRXPNP-40V0.2AMMBT3906LT1STO23
R101	N/S/P	RD-AP0104140H	R.CF 1K 1/4W J 1206
R102	N/S/P	RD-AP0104140H	R.CF 1K 1/4W J 1206
R103	N/S/P	RD-AP0104140H	R.CF 1K 1/4W J 1206
R104	N/S/P	RD-AP0104140H	R.CF 1K 1/4W J 1206
R105	N/S/P	RD-AP0105054K	R.MO 100 2W J F78
R107	N/S/P	RD-AP0104140H	R.CF 1K 1/4W J 1206
R108	N/S/P	RD-AP0104140H	R.CF 1K 1/4W J 1206
R109	N/S/P	RD-AP0104140H	R.CF 1K 1/4W J 1206
R110	N/S/P	RD-AP0104140H	R.CF 1K 1/4W J 1206
R112	N/S/P	RD-AP0104140H	R.CF 1K 1/4W J 1206
R113	N/S/P	RD-AP0104140H	R.CF 1K 1/4W J 1206
R114	N/S/P	RD-AP0104140H	R.CF 1K 1/4W J 1206
R115	N/S/P	RD-AP0105054K	R.MO 100 2W J F78
R116	N/S/P	RD-AP0102080M	R.CF 10 1/2W J
R119	N/S/P	RD-AP0104140H	R.CF 1K 1/4W J 1206
R120	N/S/P	RD-AP0102080M	R.CF 10 1/2W J
R121	N/S/P	RD-AP0104140H	R.CF 1K 1/4W J 1206
R123	N/S/P	RD-AP0104140H	R.CF 1K 1/4W J 1206
R124	N/S/P	RD-AP0106023Q	R.MO 220K 1W(S) J M77
R201	N/S/P	RD-AP0102080M	R.CF 10 1/2W J
R202	N/S/P	RD-AP0104140H	R.CF 1K 1/4W J 1206
R202	N/S/P	RD-AP0104140H	R.CF 1K 1/4W J 1206
R204	N/S/P	RD-AP0104140H	R.CF 1K 1/4W J 1206
R205	N/S/P	RD-AP0102080M	R.CF 10 1/2W J
R206	N/S/P	RD-AP0104140H	R.CF 1K 1/4W J 1206
R207	N/S/P	RD-AP0104140H	R.CF 1K 1/4W J 1206
R208	N/S/P	RD-AP0104140H	R.CF 1K 1/4W J 1206
R209	N/S/P	RD-AP0104140H	R.CF 1K 1/4W J 1206
R210	N/S/P	RD-AP0104140H	R.CF 1K 1/4W J 1206
R211	N/S/P	RD-AP0104140H	R.CF 1K 1/4W J 1206

REPLACEMENT PARTS (Continued)

Symbol	Stock	Drawing	Description
R212	N/S/P	RD-AP0104140H	R.CF 1K 1/4W J 1206
R213	N/S/P	RD-AP0104140H	R.CF 1K 1/4W J 1206
R215	N/S/P	RD-AP0104140H	R.CF 1K 1/4W J 1206
R216	N/S/P	RD-AP0104140H	R.CF 1K 1/4W J 1206
R217	N/S/P	RD-AP0104140H	R.CF 1K 1/4W J 1206
R218	N/S/P	RD-AP0104140H	R.CF 1K 1/4W J 1206
R219	N/S/P	RD-AP0104140H	R.CF 1K 1/4W J 1206
R220	N/S/P	RD-AP0104140H	R.CF 1K 1/4W J 1206
R221	N/S/P	RD-AP0104140H	R.CF 1K 1/4W J 1206
R222	N/S/P	RD-AP0104140H	R.CF 1K 1/4W J 1206
R224	N/S/P	RD-AP0104140H	R.CF 1K 1/4W J 1206
R225	N/S/P	RD-AP0104140H	R.CF 1K 1/4W J 1206
R226	N/S/P	RD-AP0102080M	R.CF 10 1/2W J
R227	N/S/P	RD-AP0104140H	R.CF 1K 1/4W J 1206
R228	N/S/P	RD-AP0104140H	R.CF 1K 1/4W J 1206
R229	N/S/P	RD-AP0104140H	R.CF 1K 1/4W J 1206
R230	N/S/P	RD-AP0104140H	R.CF 1K 1/4W J 1206
R231	N/S/P	RD-AP0104140H	R.CF 1K 1/4W J 1206
R232	N/S/P	RD-AP0104140H	R.CF 1K 1/4W J 1206
R233	N/S/P	RD-AP0104140H	R.CF 1K 1/4W J 1206
R234	N/S/P	RD-AP0104140H	R.CF 1K 1/4W J 1206
R235	N/S/P	RD-AP0104140H	R.CF 1K 1/4W J 1206
R236	N/S/P	RD-AP0102079J	R.MF 15K 1/8W F 3.3
R237	N/S/P	RD-AP0104140H	R.CF 1K 1/4W J 1206
R238	N/S/P	RD-AP0104140H	R.CF 1K 1/4W J 1206
R239	N/S/P	RD-AP0104140H	R.CF 1K 1/4W J 1206
R240	N/S/P	RD-AP0104140H	R.CF 1K 1/4W J 1206
R242	N/S/P	RD-AP0104140H	R.CF 1K 1/4W J 1206
R243	N/S/P	RD-AP0104140H	R.CF 1K 1/4W J 1206
R244	N/S/P	RD-AP0104140H	R.CF 1K 1/4W J 1206
R245	N/S/P	RD-AP0104140H	R.CF 1K 1/4W J 1206
R246	N/S/P	RD-AP0104140H	R.CF 1K 1/4W J 1206
R247	N/S/P	RD-AP0104140H	R.CF 1K 1/4W J 1206
R249	N/S/P	RD-AP0102080M	R.CF 10 1/2W J
R250	N/S/P	RD-AP0104140H	R.CF 1K 1/4W J 1206
R251	N/S/P	RD-AP0104140H	R.CF 1K 1/4W J 1206
R252	N/S/P	RD-AP0104140H	R.CF 1K 1/4W J 1206
R255	N/S/P	RD-AP0102080M	R.CF 10 1/2W J
R257	N/S/P	RD-AP0104140H	R.CF 1K 1/4W J 1206
R258	N/S/P	RD-AP0104140H	R.CF 1K 1/4W J 1206
R260	N/S/P	RD-AP0104140H	R.CF 1K 1/4W J 1206
RT1	N/S/P	RD-AP9508067C	R.TH NTC 2.5 L 10D 5A
SW1	N/S/P	RD-AP0204160A	JUMPER 0.8D BT TAPING
T1	0		XFMR S8351-1E ER35
T2	0		XFMR S8351-1E EEL16
T3	0		XFMR S8351-1E EEL19
U1	0		IC PWM 16P KA7500C DIP
U202	N/S/P	RD-AP9802072A	IC REF 3P TL431ACLP (+-1%) TI
U3	N/S/P	RD-AP0304211J	IC PHO 4P LTV-817-PRC 200-400
U4	N/S/P	RD-AP0401094A	IC PWM SW 4P KA5L0380R TO220F
U5	N/S/P	RD-AP0304211J	IC PHO 4P LTV-817-PRC 200-400
W1	N/S/P	RD-AP0006099F	JUMPER 0.5D BT RUCH
W10	N/S/P	RD-AP0006099F	JUMPER 0.5D BT RUCH
W11	N/S/P	RD-AP0006099F	JUMPER 0.5D BT RUCH
W12	N/S/P	RD-AP0006099F	JUMPER 0.5D BT RUCH
W13	N/S/P	RD-AP0006099F	JUMPER 0.5D BT RUCH
W14	N/S/P	RD-AP0006099F	JUMPER 0.5D BT RUCH
W15	N/S/P	RD-AP0006099F	JUMPER 0.5D BT RUCH
W16	N/S/P	RD-AP0104140H	R.CF 1K 1/4W J 1206
W17	N/S/P	RD-AP0104140H	R.CF 1K 1/4W J 1206
W18	N/S/P	RD-AP0006099F	JUMPER 0.5D BT RUCH
W19	N/S/P	RD-AP0006099F	JUMPER 0.5D BT RUCH
W2	N/S/P	RD-AP0006099F	JUMPER 0.5D BT RUCH
W20	N/S/P	RD-AP0104140H	R.CF 1K 1/4W J 1206
W21	N/S/P	RD-AP0006099F	JUMPER 0.5D BT RUCH
W22	N/S/P	RD-AP0104140H	R.CF 1K 1/4W J 1206
W23	N/S/P	RD-AP0104140H	R.CF 1K 1/4W J 1206
W24	N/S/P	RD-AP0006099F	JUMPER 0.5D BT RUCH
W25	N/S/P	RD-AP0006099F	JUMPER 0.5D BT RUCH
W29	N/S/P	RD-AP0006099F	JUMPER 0.5D BT RUCH
W3	N/S/P	RD-AP0104140H	R.CF 1K 1/4W J 1206
W4	N/S/P	RD-AP0104140H	R.CF 1K 1/4W J 1206
W5	N/S/P	RD-AP0104140H	R.CF 1K 1/4W J 1206
W7	N/S/P	RD-AP0006099F	JUMPER 0.5D BT RUCH
W8	N/S/P	RD-AP0006099F	JUMPER 0.5D BT RUCH
W9	N/S/P	RD-AP0006099F	JUMPER 0.5D BT RUCH
ZD10	0		Z.D 0.5W 22V TZMC22 SOD
ZD20	0		Z.D 1/2W 3.3V 5% BZV55-C3V3 SM
ZD20	N/S/P	RD-AP0406116R	Z.D 1/2W 32.2-33.6V HZ33-2
ZD20	N/S/P	RD-AP0303012F	Z.D 1W 5.1V 5% 1N4733A
ZD20	N/S/P	RD-AP0110078I	Z.D 1/2W 6.2V 5% 1N5234B
ZD20	0		Z.D 0.5W 7.5V TZMC7V5 SOD

STANDBY POWER

CIRCUIT	268226	APE201462-0002	STANDBY PCB ASSY
JK701	268213	CJM035006-3010	PHONE JACK D3.5 5P NATURAL COL
LD701	266651	KED200003-2010	3 DIA RED ROUND LEAD 10MM
RB705	268214	VSW3G5452-4000	CON/CABLE 3P 400MM 285430X2C G
ST SW	268212	MRW106002-1020	TACT SWITCH
TA708	268211	MAW106001-0011	TACT SW H=5MM 160GF PLASTIC

TRANSMITTER

B1	268579	SCB006030-6010	FERRITE 600 OHM
B10	268579	SCB006030-6010	FERRITE 600 OHM
B11	268579	SCB006030-6010	FERRITE 600 OHM
B12	268579	SCB006030-6010	FERRITE 600 OHM
B13	268579	SCB006030-6010	FERRITE 600 OHM
B14	268579	SCB006030-6010	FERRITE 600 OHM
B15	268579	SCB006030-6010	FERRITE 600 OHM
B16	268579	SCB006030-6010	FERRITE 600 OHM

REPLACEMENT PARTS (Continued)

Symbol	Stock	Drawing	Description
B17	268579	SCB006030-6010	FERRITE 600 OHM
B18	268579	SCB006030-6010	FERRITE 600 OHM
B19	268579	SCB006030-6010	FERRITE 600 OHM
B2	268579	SCB006030-6010	FERRITE 600 OHM
B3	268579	SCB006030-6010	FERRITE 600 OHM
B4	268579	SCB006030-6010	FERRITE 600 OHM
B5	268579	SCB006030-6010	FERRITE 600 OHM
B6	268579	SCB006030-6010	FERRITE 600 OHM
B7	268579	SCB006030-6010	FERRITE 600 OHM
B8	268579	SCB006030-6010	FERRITE 600 OHM
B9	268579	SCB006030-6010	FERRITE 600 OHM
C1	264319	PXL410370-1000	CHIP CAP 10 PF 50V 5%
C1	268591	PWL410370-2210	CHIP CAP 220 PF 50V 5%
C10	264319	PXL410370-1000	CHIP CAP 10 PF 50V 5%
C100	268621	PWL410370-1010	CHIP CAP 100 PF 50V 5%
C101	268621	PWL410370-1010	CHIP CAP 100 PF 50V 5%
C11	264319	PXL410370-1000	CHIP CAP 10 PF 50V 5%
C12	268620	PWL456440-1030	CHIP CAP 10000 PF 16V 10%
C12	264441	PXL456470-1030	CHIP CAP 0.01 UF 50V 10%
C13	268621	PWL410370-1010	CHIP CAP 100 PF 50V 5%
C13	268581	PXL439640-1050	CHIP CAP 1 UF 16V +80-20%
C14	264441	PXL456470-1030	CHIP CAP 0.01 UF 50V 10%
C14	268620	PWL456440-1030	CHIP CAP 10000 PF 16V 10%
C15	268620	PWL456440-1030	CHIP CAP 10000 PF 16V 10%
C15	268594	PZL439640-1060	CHIP CAP 10 UF 16V +80-20%
C16	264442	PXL456470-1040	CHIP CAP 0.1 UF 50V 10%
C16	268620	PWL456440-1030	CHIP CAP 10000 PF 16V 10%
C17	264376	PXL410370-1500	CHIP CAP 15 PF 50V 5%
C18	268620	PWL456440-1030	CHIP CAP 10000 PF 16V 10%
C18	268581	PXL439640-1050	CHIP CAP 1 UF 16V +80-20%
C19	268581	PXL439640-1050	CHIP CAP 1 UF 16V +80-20%
C2	268619	PWL410370-2000	CHIP CAP 20 PF 50V 5%
C20	268622	PWL410370-1000	CHIP CAP 10 PF 50V 5%
C20	268594	PZL439640-1060	CHIP CAP 10 UF 16V +80-20%
C21	268581	PXL439640-1050	CHIP CAP 1 UF 16V +80-20%
C22	264441	PXL456470-1030	CHIP CAP 0.01 UF 50V 10%
C22	268622	PWL410370-1000	CHIP CAP 10 PF 50V 5%
C23	268620	PWL456440-1030	CHIP CAP 10000 PF 16V 10%
C23	264441	PXL456470-1030	CHIP CAP 0.01 UF 50V 10%
C24	268581	PXL439640-1050	CHIP CAP 1 UF 16V +80-20%
C25	268594	PZL439640-1060	CHIP CAP 10 UF 16V +80-20%
C26	268620	PWL456440-1030	CHIP CAP 10000 PF 16V 10%
C26	264441	PXL456470-1030	CHIP CAP 0.01 UF 50V 10%
C27	268632	PXL410370-2000	CHIP CAP 20 PF 50V 5%
C28	268620	PWL456440-1030	CHIP CAP 10000 PF 16V 10%
C28	268630	PBE039522-1010	CHIP 100 UF 6.3V 20%
C29	268594	PZL439640-1060	CHIP CAP 10 UF 16V +80-20%
C3	264319	PXL410370-1000	CHIP CAP 10 PF 50V 5%
C3	268618	PWL410370-3900	CHIP CAP 39 PF 50V 5%
C30	264441	PXL456470-1030	CHIP CAP 0.01 UF 50V 10%
C31	268581	PXL439640-1050	CHIP CAP 1 UF 16V +80-20%
C31	268621	PWL410370-1010	CHIP CAP 100 PF 50V 5%
C32	268581	PXL439640-1050	CHIP CAP 1 UF 16V +80-20%
C33	268620	PWL456440-1030	CHIP CAP 10000 PF 16V 10%
C33	264442	PXL456470-1040	CHIP CAP 0.1 UF 50V 10%
C34	264442	PXL456470-1040	CHIP CAP 0.1 UF 50V 10%
C35	268594	PZL439640-1060	CHIP CAP 10 UF 16V +80-20%
C36	268632	PXL410370-2000	CHIP CAP 20 PF 50V 5%
C38	264442	PXL456470-1040	CHIP CAP 0.1 UF 50V 10%
C38	268620	PWL456440-1030	CHIP CAP 10000 PF 16V 10%
C39	264442	PXL456470-1040	CHIP CAP 0.1 UF 50V 10%
C4	268632	PXL410370-2000	CHIP CAP 20 PF 50V 5%
C4	268618	PWL410370-3900	CHIP CAP 39 PF 50V 5%
C40	268595	PZL439630-2260	CHIP CAP 22 UF 10V 20%
C40	268637	PBE039552-4700	CHIP 47 UF 25V 20%
C405	264416	PRE039570-1000	CAP ELECT 10 UF 50V 20% 85C
C408	264416	PRE039570-1000	CAP ELECT 10 UF 50V 20% 85C
C409	264318	PXL410370-2200	CHIP CAP 22 PF 50V 5%
C41	268623	PWL426430-1040	CHIP CAP 0.1UF 10V 10%
C41	268637	PBE039552-4700	CHIP 47 UF 25V 20%
C410	264318	PXL410370-2200	CHIP CAP 22 PF 50V 5%
C413	264415	PRE039570-4790	CAP ELECT 4.7UF 50V 20% 85C
C414	264415	PRE039570-4790	CAP ELECT 4.7UF 50V 20% 85C
C42	264323	PXL410370-1010	CHIP CAP 100 PF 50V 5% NPO
C43	268581	PXL439640-1050	CHIP CAP 1 UF 16V +80-20%
C430	264416	PRE039570-1000	CAP ELECT 10 UF 50V 20% 85C
C431	264416	PRE039570-1000	CAP ELECT 10 UF 50V 20% 85C
C438	264319	PXL410370-1000	CHIP CAP 10 PF 50V 5%
C44	268581	PXL439640-1050	CHIP CAP 1 UF 16V +80-20%
C440	264319	PXL410370-1000	CHIP CAP 10 PF 50V 5%
C443	264442	PXL456470-1040	CHIP CAP 0.1 UF 50V 10%
C444	264442	PXL456470-1040	CHIP CAP 0.1 UF 50V 10%
C447	268614	PRE039530-2210	COND ELECT 220UF 10V 20%
C448	264419	PRE039540-1010	CAP ELECT 100UF 16V 20% 85C
C449	264442	PXL456470-1040	CHIP CAP 0.1 UF 50V 10%
C45	264323	PXL410370-1010	CHIP CAP 100 PF 50V 5% NPO
C45	268590	PWL410870-2790	CHIP CAP 2.7 PF 50V 0.25 PF
C46	264442	PXL456470-1040	CHIP CAP 0.1 UF 50V 10%
C461	264319	PXL410370-1000	CHIP CAP 10 PF 50V 5%
C462	264319	PXL410370-1000	CHIP CAP 10 PF 50V 5%
C463	264319	PXL410370-1000	CHIP CAP 10 PF 50V 5%
C47	264442	PXL456470-1040	CHIP CAP 0.1 UF 50V 10%
C471	264442	PXL456470-1040	CHIP CAP 0.1 UF 50V 10%
C472	264442	PXL456470-1040	CHIP CAP 0.1 UF 50V 10%
C48	268622	PWL410370-1000	CHIP CAP 10 PF 50V 5%
C48	264442	PXL456470-1040	CHIP CAP 0.1 UF 50V 10%
C49	268618	PWL410370-3900	CHIP CAP 39 PF 50V 5%
C494	264442	PXL456470-1040	CHIP CAP 0.1 UF 50V 10%
C5	268581	PXL439640-1050	CHIP CAP 1 UF 16V +80-20%
C50	268618	PWL410370-3900	CHIP CAP 39 PF 50V 5%

REPLACEMENT PARTS (Continued)

Symbol	Stock	Drawing	Description
C51	268615	PWL410870-3990	CHIP CAP 3.9 PF 50V 0.25 PF
C53	268615	PWL410870-3990	CHIP CAP 3.9 PF 50V 0.25 PF
C54	268616	PWL410870-4080	CHIP CAP 0.4 PF 50V 0.25PF
C56	268590	PWL410870-2790	CHIP CAP 2.7 PF 50V 0.25 PF
C57	268590	PWL410870-2790	CHIP CAP 2.7 PF 50V 0.25 PF
C58	268592	PWL410850-3080	CHIP CAP 0.3 PF 25V 0.25PF
C6	268590	PWL410870-2790	CHIP CAP 2.7 PF 50V 0.25 PF
C6	268632	PXL410370-2000	CHIP CAP 20 PF 50V 5%
C60	268581	PXL439640-1050	CHIP CAP 1 UF 16V +80-20%
C61	268590	PWL410870-2790	CHIP CAP 2.7 PF 50V 0.25 PF
C66	268631	PWL410370-4700	CHIP CAP 47 PF 50V 5%
C7	268620	PWL456440-1030	CHIP CAP 10000 PF 16V 10%
C7	268630	PBE039522-1010	CHIP 100 UF 6.3V 20%
C75	268593	PYL439640-2250	CHIP CAP 2.2UF 16V +80-20%
C76	268581	PXL439640-1050	CHIP CAP 1 UF 16V +80-20%
C77	268594	PZL439640-1060	CHIP CAP 10 UF 16V +80-20%
C8	268620	PWL456440-1030	CHIP CAP 10000 PF 16V 10%
C84	268594	PZL439640-1060	CHIP CAP 10 UF 16V +80-20%
C85	268623	PWL426430-1040	CHIP CAP 0.1UF 10V 10%
C86	268590	PWL410870-2790	CHIP CAP 2.7 PF 50V 0.25 PF
C87	268617	PWL410340-3310	CHIP CAP 330 PF 16V 5%
C88	268594	PZL439640-1060	CHIP CAP 10 UF 16V +80-20%
C89	268623	PWL426430-1040	CHIP CAP 0.1UF 10V 10%
C9	268594	PZL439640-1060	CHIP CAP 10 UF 16V +80-20%
C90	268590	PWL410870-2790	CHIP CAP 2.7 PF 50V 0.25 PF
C901	264418	PRE039540-4700	CAP ELECT 47UF 16V 20% 85C
C902	268608	PVE039540-1020	COND ELECT 1000 UF 16V 20% 85`
C903	264442	PXL456470-1040	CHIP CAP 0.1 UF 50V 10%
C904	264442	PXL456470-1040	CHIP CAP 0.1 UF 50V 10%
C905	264442	PXL456470-1040	CHIP CAP 0.1 UF 50V 10%
C906	264442	PXL456470-1040	CHIP CAP 0.1 UF 50V 10%
C907	264442	PXL456470-1040	CHIP CAP 0.1 UF 50V 10%
C908	268614	PRE039530-2210	COND ELECT 220UF 10V 20%
C91	268617	PWL410340-3310	CHIP CAP 330 PF 16V 5%
C910	264442	PXL456470-1040	CHIP CAP 0.1 UF 50V 10%
C911	266624	PRE039540-1000	D ELECT 10UF 16V 20%
C912	264442	PXL456470-1040	CHIP CAP 0.1 UF 50V 10%
C913	268614	PRE039530-2210	COND ELECT 220UF 10V 20%
C914	266624	PRE039540-1000	D ELECT 10UF 16V 20%
C915	264442	PXL456470-1040	CHIP CAP 0.1 UF 50V 10%
C92	268581	PXL439640-1050	CHIP CAP 1 UF 16V +80-20%
CIRCUIT	268578	APE302141-0002	TX AUDIO PCB ASSY
CIRCUIT	268612	APE302142-0002	TX ID&CH PCB ASSY
CIRCUIT	268629	APE302110-0001 ●	TRANSMITTER PCB ASSY
CIRCUIT	268613	APE302410-0001	ANT PCB ASSY (TX)
CN1	268610	CCN250000-0109	CONNECTOR B9B-XH-A 9 PIN
CN3	264429	CCN200000-0107	CONNECTOR 7 PIN PITCH=2.0MM
D405	264339	RCD114148-0011	DIODE CHIP BAV16W/IN4148W
J2	270202	CCP200070-6232	CHIP HEAD 16X2P L2+2.2XP2MM W/

Symbol	Stock	Drawing	Description
L1	268221	QCF015020-0000	CHIP RES. 0 OHM JUMP WIRE
L1	268596	SCN049A00-5620	INDUCTOR 5.6NH 0.3NH 300MA SM
L10	268639	SCB006030-3011	CHIP BEAD 300 OHM 100MHZ 10% M
L11	268639	SCB006030-3011	CHIP BEAD 300 OHM 100MHZ 10% M
L12	268639	SCB006030-3011	CHIP BEAD 300 OHM 100MHZ 10% M
L13	268638	SCN023603-1500	INDUCTOR 15 UH 10% Q=30
L14	268638	SCN023603-1500	INDUCTOR 15 UH 10% Q=30
L15	268638	SCN023603-1500	INDUCTOR 15 UH 10% Q=30
L16	268638	SCN023603-1500	INDUCTOR 15 UH 10% Q=30
L17	268677	SCB012061-3010	CHIP BEAD 300 OHM 25% AT 100 M
L18	268677	SCB012061-3010	CHIP BEAD 300 OHM 25% AT 100 M
L19	268677	SCB012061-3010	CHIP BEAD 300 OHM 25% AT 100 M
L2	268596	SCN049A00-5620	INDUCTOR 5.6NH 0.3NH 300MA SM
L20	268677	SCB012061-3010	CHIP BEAD 300 OHM 25% AT 100 M
L21	268575	QCF161030-0000	CHIP RES. 0 OHM 1/16 W 1%
L22	268646	SCB008050-2020	FERRITE 2KOHM 100MHZ
L23	268627	SCB008050-3010	CHIP BEAD 300 OHM 25% AT 100MH
L24	268646	SCB008050-2020	FERRITE 2KOHM 100MHZ
L26	268639	SCB006030-3011	CHIP BEAD 300 OHM 100MHZ 10% M
L27	268639	SCB006030-3011	CHIP BEAD 300 OHM 100MHZ 10% M
L28	268639	SCB006030-3011	CHIP BEAD 300 OHM 100MHZ 10% M
L29	268639	SCB006030-3011	CHIP BEAD 300 OHM 100MHZ 10% M
L3	268598	SCN049A00-1000	INDUCTOR 1NH +/-0.3NH 300MA S
L32	268639	SCB006030-3011	CHIP BEAD 300 OHM 100MHZ 10% M
L34	268639	SCB006030-3011	CHIP BEAD 300 OHM 100MHZ 10% M
L35	268639	SCB006030-3011	CHIP BEAD 300 OHM 100MHZ 10% M
L4	268663	JCT303002-0010	CHIP EMI FILTER 0.22UF 6.3V 2A
L6	268667	QCF161030-1500	CHIP RES. 150 OHM 1/16W 1%
L7	268639	SCB006030-3011	CHIP BEAD 300 OHM 100MHZ 10% M
L8	268639	SCB006030-3011	CHIP BEAD 300 OHM 100MHZ 10% M
L9	268639	SCB006030-3011	CHIP BEAD 300 OHM 100MHZ 10% M
LD901	268611	KED250003-0050	LED 3DIA RED/GREEN 3P P2.54 IV
Q3	268628	RCN003904-0005	XISTR NPN PMBT3904 SOT23 PHILI
Q3	268599	RCN003904-0002	XISTR NPN MMBT3904 SOT23 GENER
Q403	264345	RCN201623-0001	XISTR NPN HFE:200-400 L6

REPLACEMENT PARTS (Continued)

Symbol	Stock	Drawing	Description
Q902	264344	RCP200733-0001	XISTR PNP 2SA812 HFE:200~400
Q903	264345	RCN201623-0001	XISTR NPN HFE:200-400 L6
Q904	264345	RCN201623-0001	XISTR NPN HFE:200-400 L6
R1	268604	QCF161240-3902	CHIP RES. 39K OHM 1/16W 1%
R1	268642	QCP065080-4720	CHIP ARRAY 4.7K OHM 1/16W 5%
R10	264271	QCF165030-1020	CHIP RES. 1K OHM 1/16W 5%
R11	268603	QCF161240-2550	CHIP RES. 255 OHM 1/16W 1%
R12	268603	QCF161240-2550	CHIP RES. 255 OHM 1/16W 1%
R12	268678	QCF161030-7500	CHIP RES. 750 OHM 1/16W 1%
R13	268583	QCF161240-2432	CHIP RES. 24.3K OHM 1/16W 1%
R13	268678	QCF161030-7500	CHIP RES. 750 OHM 1/16W 1%
R14	264278	QCF165030-1000	CHIP RES. 10 OHM 1/16W 5%
R15	264278	QCF165030-1000	CHIP RES. 10 OHM 1/16W 5%
R16	268640	QCF161030-5101	CHIP RES. 5.1K OHM 1/16W 1%
R17	268641	QCF161030-5491	CHIP RES. 5.49K OHM 1/16W 1 %
R18	268575	QCF161030-0000	CHIP RES. 0 OHM 1/16 W 1%
R18	268584	QCF161240-1101	CHIP RES. 1.1K OHM 1/16W 1%
R19	264286	QCF165030-4730	CHIP RES. 47K OHM 1/16W 5 %
R2	268642	QCP065080-4720	CHIP ARRAY 4.7K OHM 1/16W 5%
R20	268624	QCP165031-3300	CHIP ARRAY 33 OHMX4 1/16W 5%
R21	268624	QCP165031-3300	CHIP ARRAY 33 OHMX4 1/16W 5%
R22	268624	QCP165031-3300	CHIP ARRAY 33 OHMX4 1/16W 5%
R23	264278	QCF165030-1000	CHIP RES. 10 OHM 1/16W 5%
R25	264277	QCF165030-1030	CHIP RES. 10K OHM 1/16W 5%
R26	268642	QCP065080-4720	CHIP ARRAY 4.7K OHM 1/16W 5%
R27	264286	QCF165030-4730	CHIP RES. 47K OHM 1/16W 5 %
R28	264273	QCF165030-4720	CHIP RES. 4.7K OHM 1/16W 5 %
R3	268642	QCP065080-4720	CHIP ARRAY 4.7K OHM 1/16W 5%
R30	264271	QCF165030-1020	CHIP RES. 1K OHM 1/16W 5%
R31	264271	QCF165030-1020	CHIP RES. 1K OHM 1/16W 5%
R32	264273	QCF165030-4720	CHIP RES. 4.7K OHM 1/16W 5 %
R33	264273	QCF165030-4720	CHIP RES. 4.7K OHM 1/16W 5 %
R34	264273	QCF165030-4720	CHIP RES. 4.7K OHM 1/16W 5 %
R35	264273	QCF165030-4720	CHIP RES. 4.7K OHM 1/16W 5 %
R38	268585	QCF161240-0000	CHIP RES. 0 OHM 1/16W JUMP WIR
R4	268642	QCP065080-4720	CHIP ARRAY 4.7K OHM 1/16W 5%
R405	268607	QCF165030-7520	CHIP RES. 7.5K OHM 1/16 W 5%
R406	268607	QCF165030-7520	CHIP RES. 7.5K OHM 1/16 W 5%
R407	264281	QCF165030-2230	CHIP RES. 22K OHM 1/16W 5%
R408	264281	QCF165030-2230	CHIP RES. 22K OHM 1/16W 5%
R410	264286	QCF165030-4730	CHIP RES. 47K OHM 1/16W 5 %
R413	264277	QCF165030-1030	CHIP RES. 10K OHM 1/16W 5%
R414	264277	QCF165030-1030	CHIP RES. 10K OHM 1/16W 5%
R415	268575	QCF161030-0000	CHIP RES. 0 OHM 1/16 W 1%
R416	268575	QCF161030-0000	CHIP RES. 0 OHM 1/16 W 1%
R433	264277	QCF165030-1030	CHIP RES. 10K OHM 1/16W 5%
R458	264276	QCF165030-8220	CHIP RES. 8.2K OHM 1/16W 5 %
R459	268575	QCF161030-0000	CHIP RES. 0 OHM 1/16 W 1%
R460	264277	QCF165030-1030	CHIP RES. 10K OHM 1/16W 5%
R461	264281	QCF165030-2230	CHIP RES. 22K OHM 1/16W 5%
R462	268576	QCF165030-2240	CHIP RES. 220K OHM 1/16 W 5%
R463	266712	QCF165030-1520	SMD RES. 1.5K OHM 1/16 W 5%
R464	264273	QCF165030-4720	CHIP RES. 4.7K OHM 1/16W 5 %
R465	264273	QCF165030-4720	CHIP RES. 4.7K OHM 1/16W 5 %
R466	268577	QCF165030-4710	CHIP RES. 470 OHM 1/16 W 5%
R468	264271	QCF165030-1020	CHIP RES. 1K OHM 1/16W 5%
R473	264290	QCF165030-1010	CHIP RES. 100 OHM 1/16W 5%
R474	264290	QCF165030-1010	CHIP RES. 100 OHM 1/16W 5%
R476	264275	QCF165030-6820	CHIP RES. 6.8K OHM 1/16W 5%
R478	264275	QCF165030-6820	CHIP RES. 6.8K OHM 1/16W 5%
R5	268642	QCP065080-4720	CHIP ARRAY 4.7K OHM 1/16W 5%
R56	268587	QCF161240-2009	CHIP RES. 20 OHM 1/16W 1%
R57	268587	QCF161240-2009	CHIP RES. 20 OHM 1/16W 1%
R58	268605	QCF161240-2000	CHIP RES. 200 OHM 1/16W 1%
R59	268586	QCF161240-1500	CHIP RES. 150 OHM 1/16W 1%
R6	268643	QCP015080-6820	CHIP RES ARRAY 6.8K OHMX4 1/10
R68	268585	QCF161240-0000	CHIP RES. 0 OHM 1/16W JUMP WIR
R7	268644	QCP065080-1000	CHIP ARRAY 10 OHM 1/16W 5%
R70	268588	QCF161240-1000	CHIP RES. 100 OHM 1/16W 1%
R71	268585	QCF161240-0000	CHIP RES. 0 OHM 1/16W JUMP WIR
R8	264278	QCF165030-1000	CHIP RES. 10 OHM 1/16W 5%
R85	268575	QCF161030-0000	CHIP RES. 0 OHM 1/16 W 1%
R86	268589	QCF161240-4701	CHIP RES. 4.7K OHM 1/16W 1%
R87	268582	QCF161240-6653	CHIP RES. 665K OHM 1/16W 1%
R88	268664	QCF161240-4703	CHIP RES. 470K OHM 1/16W 1%
R89	268589	QCF161240-4701	CHIP RES. 4.7K OHM 1/16W 1%
R9	268603	QCF161240-2550	CHIP RES. 255 OHM 1/16W 1%
R9	264275	QCF165030-6820	CHIP RES. 6.8K OHM 1/16W 5%
R90	268664	QCF161240-4703	CHIP RES. 470K OHM 1/16W 1%
R901	268575	QCF161030-0000	CHIP RES. 0 OHM 1/16 W 1%

REPLACEMENT PARTS (Continued)

Symbol	Stock	Drawing	Description
R902	268575	QCF161030-0000	CHIP RES. 0 OHM 1/16 W 1%
R903	268575	QCF161030-0000	CHIP RES. 0 OHM 1/16 W 1%
R904	268575	QCF161030-0000	CHIP RES. 0 OHM 1/16 W 1%
R905	268575	QCF161030-0000	CHIP RES. 0 OHM 1/16 W 1%
R906	264271	QCF165030-1020	CHIP RES. 1K OHM 1/16W 5%
R907	264278	QCF165030-1000	CHIP RES. 10 OHM 1/16W 5%
R908	264276	QCF165030-8220	CHIP RES. 8.2K OHM 1/16W 5 %
R909	264283	QCF165030-3330	CHIP RES. 33K OHM 1/16W 5%
R91	268582	QCF161240-6653	CHIP RES. 665K OHM 1/16W 1%
R93	268585	QCF161240-0000	CHIP RES. 0 OHM 1/16W JUMP WIR
R94	268585	QCF161240-0000	CHIP RES. 0 OHM 1/16W JUMP WIR
R95	268589	QCF161240-4701	CHIP RES. 4.7K OHM 1/16W 1%
R96	268575	QCF161030-0000	CHIP RES. 0 OHM 1/16 W 1%
RB2	270201	CCH200080-0432	HOUSING 16X2 PIN H4.45XW4XP2MM
SW1	268250	MSW001007-0020	TRANSMITTER DIP SWITCH 3 POS 6
SW2	268250	MSW001007-0020	TRANSMITTER DIP SWITCH 3 POS 6
TRANSM	268234	AFLTL8010-0002 ●	COMPLETE UNIT TRANSMITTER ASSY
U1	268666	JCT307001-0020	CHIP BAND PASS FILTER 5.15-5.8
U2	268625	RCI000112-0001	IC 68 PIN GPE112 LGA G-PLUS
U2	268600	RCI000110-0001	IC 56 PIN GPE110 LGA G-PLUS
U3	266679	RCI005333-0001	IC CS5333 16 PIN
U3	268597	SOT010001-0010	PICO BALUN 5.15-5.35GHZ FB850
U4	268602	RCI001101-0001	IC 16 PIN GP1101 MLF G-PLUS
U401	268580	RCI004580-0001	IC 8 PIN NJM4580M JRC SOP
U5	268732	RCI780153-0003	IC 14 PIN EM78P153SN SOP ELAN
U5	268601	RCI001174-0002	IC 8 PIN TC1174VUA MSOP MICRO
U6	268601	RCI001174-0002	IC 8 PIN TC1174VUA MSOP MICRO
U902	268609	RHI111733-0001	IC 3 PIN LD1117-3.3V TO220 UT
U903	268609	RHI111733-0001	IC 3 PIN LD1117-3.3V TO220 UT
X1	268665	JCQ047020-4060	CHIP CRYST 40 MHZ 5PPM 20PF
X5	268626	JCQ048000-2461	CHIP CRYST 24.576 MHZ 8PPM <10
ZD902	268606	RCZ005004-0020	CHIP ZENER 3.9V 5% 0.5W (G3) S

YUV

Symbol	Stock	Drawing	Description
C801	264376	PXL410370-1500	CHIP CAP 15 PF 50V 5%
C802	264376	PXL410370-1500	CHIP CAP 15 PF 50V 5%
C803	264376	PXL410370-1500	CHIP CAP 15 PF 50V 5%
CIRCUIT	266657	APE200740-0001	YUV PCB ASSY
FB801	264343	SCB008050-6010	CHIP BEAD 600 OHM AT 100MHZ
FB802	264343	SCB008050-6010	CHIP BEAD 600 OHM AT 100MHZ
FB803	264343	SCB008050-6010	CHIP BEAD 600 OHM AT 100MHZ
JK801	264436	CJR003301-0020	RCA JACK 3P RED/BLU/GRN AXIA
RB801	264265	CCN200000-0104	CONNECTOR 4 PIN PITCH=2.0MM

RTD218 CONTROL BOARD SCHEMATIC

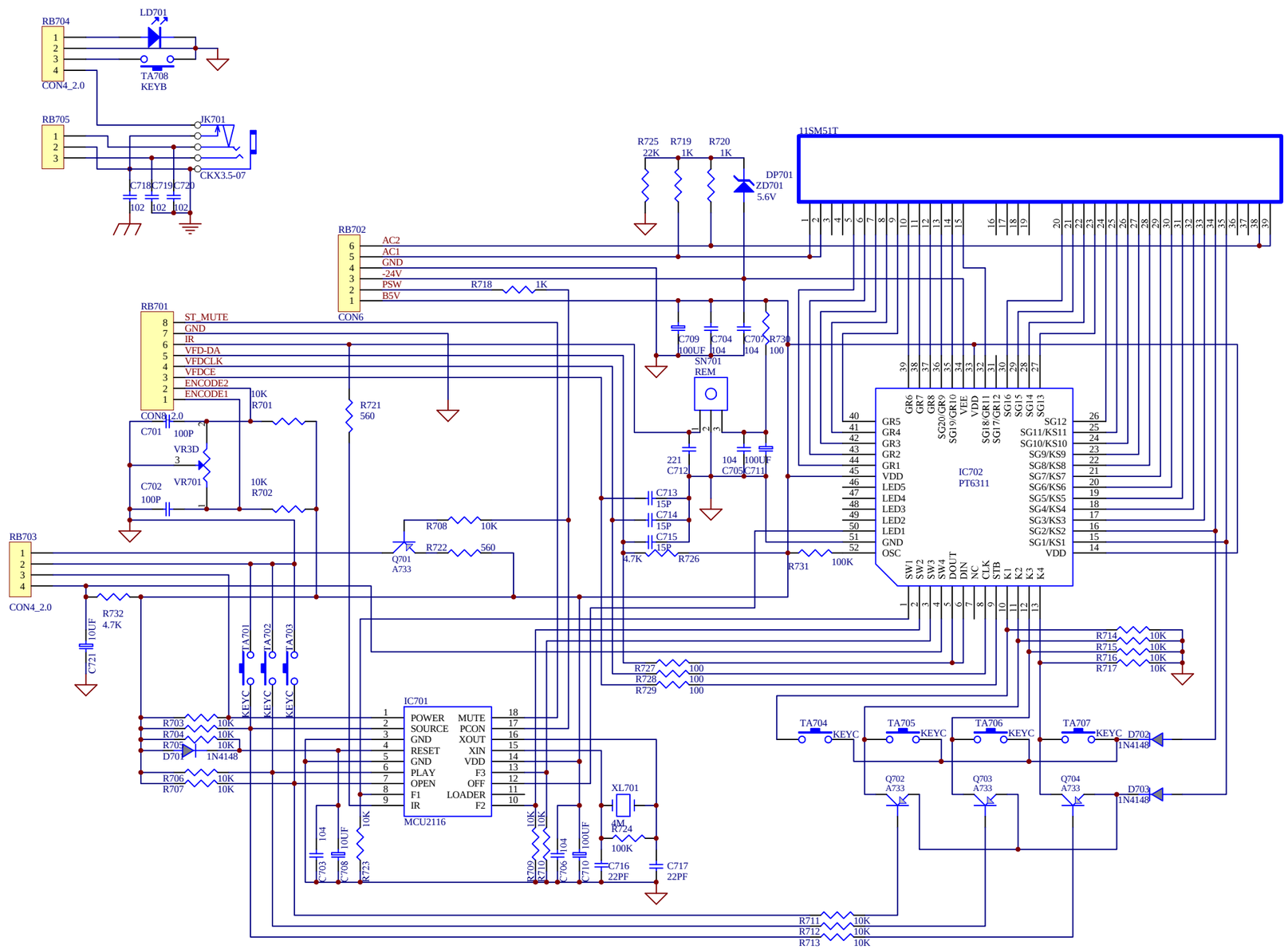

RTD218 AUDIO PROCESSING SCHEMATIC

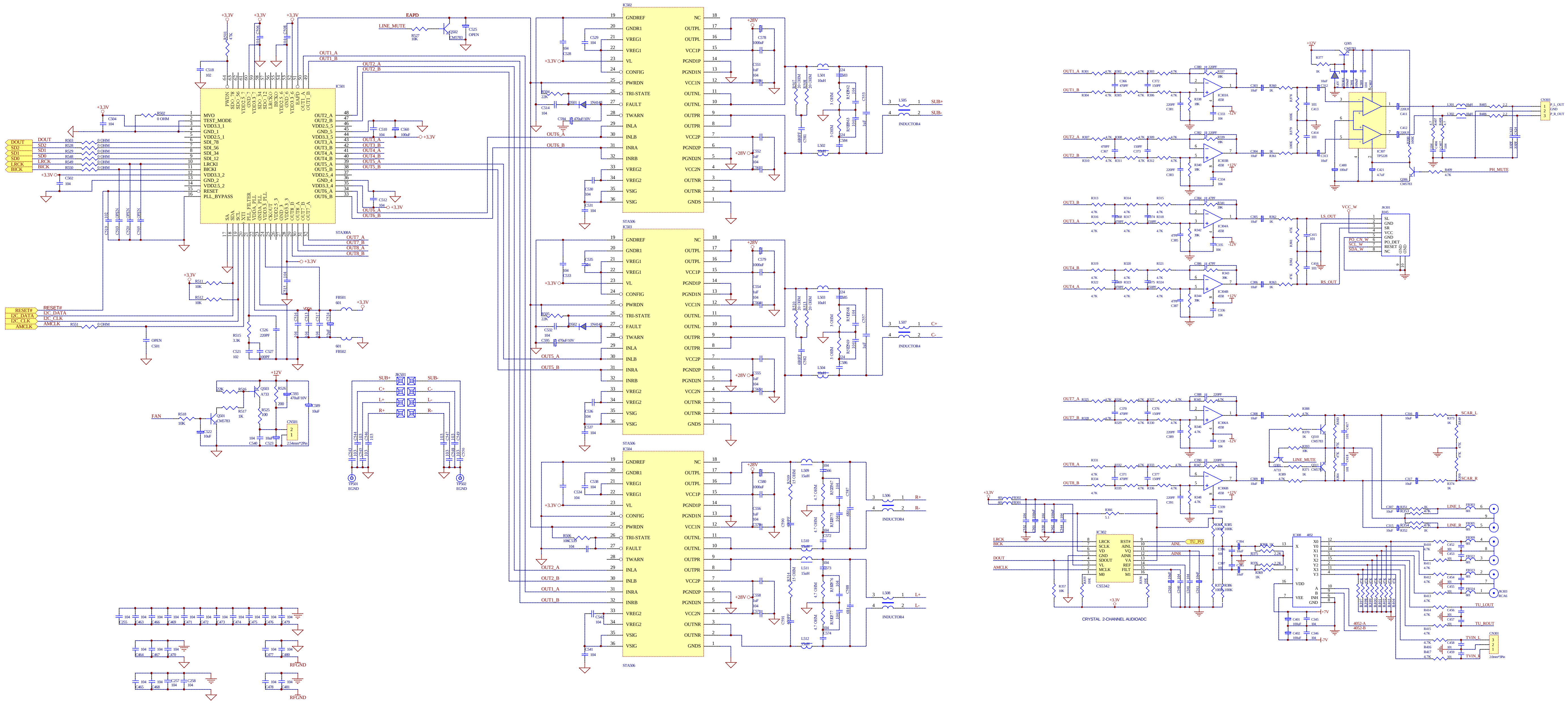

RTD218 MAIN DVD SCHEMATIC

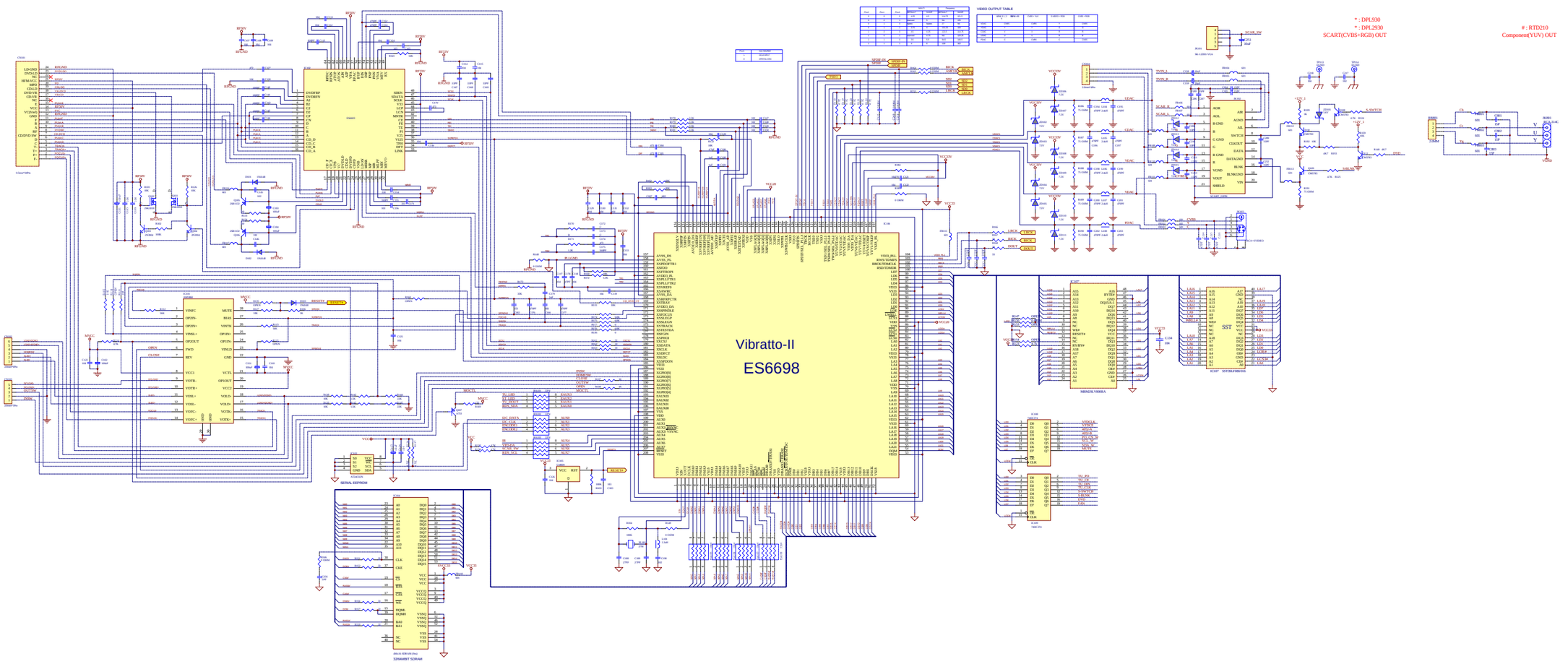

RTD218 MAIN SUB POWER/COAX SCHEMATIC

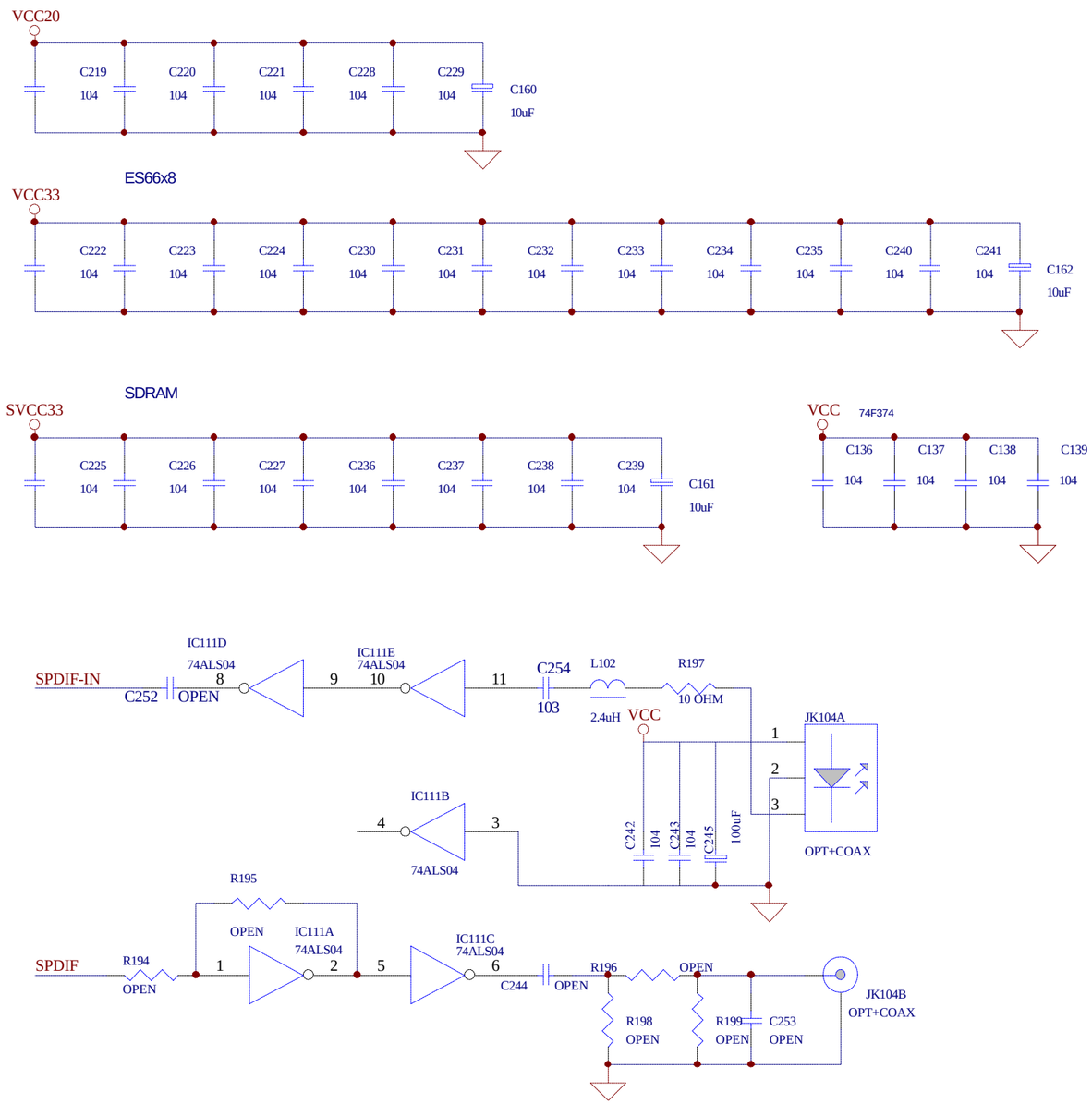

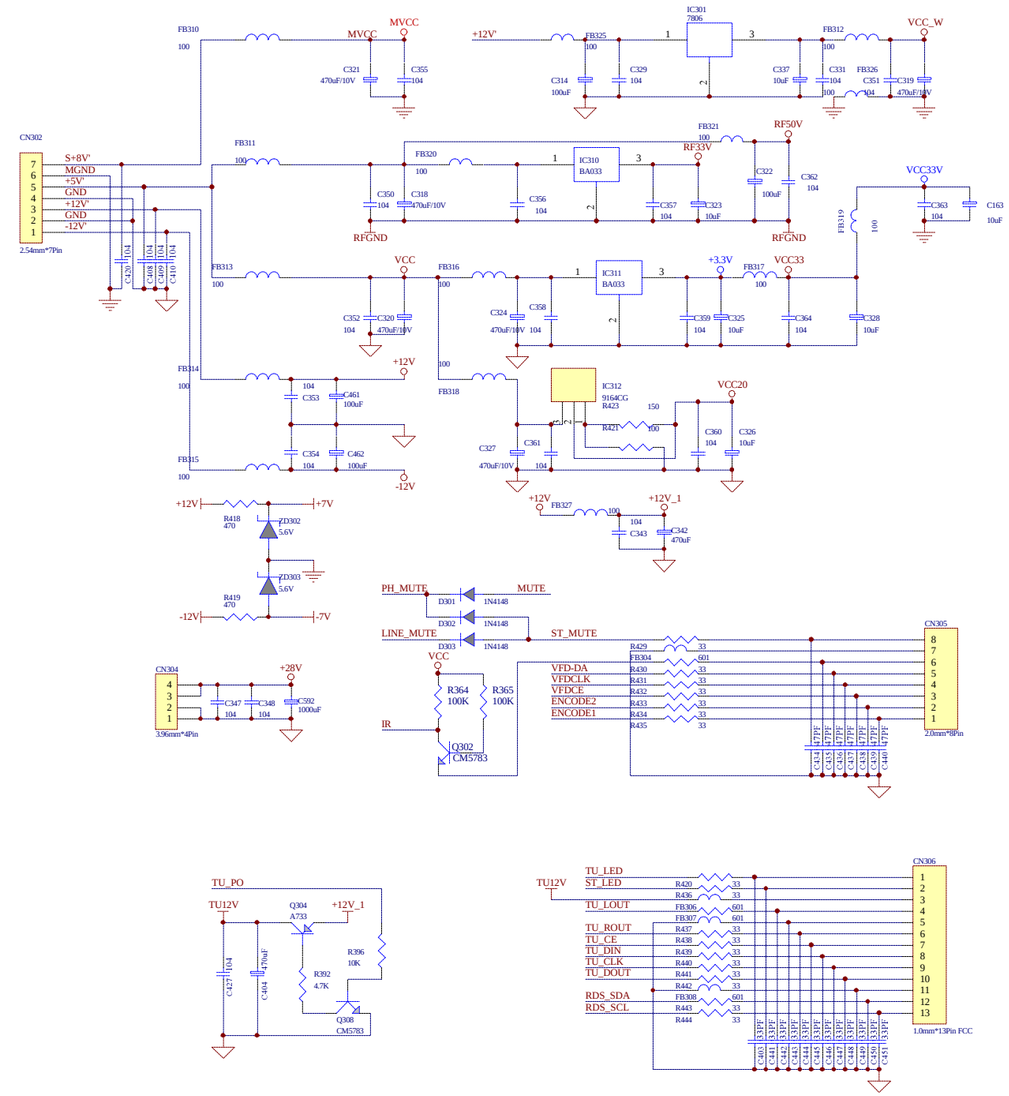

RTD218 RECEIVER AUDIO SCHEMATIC

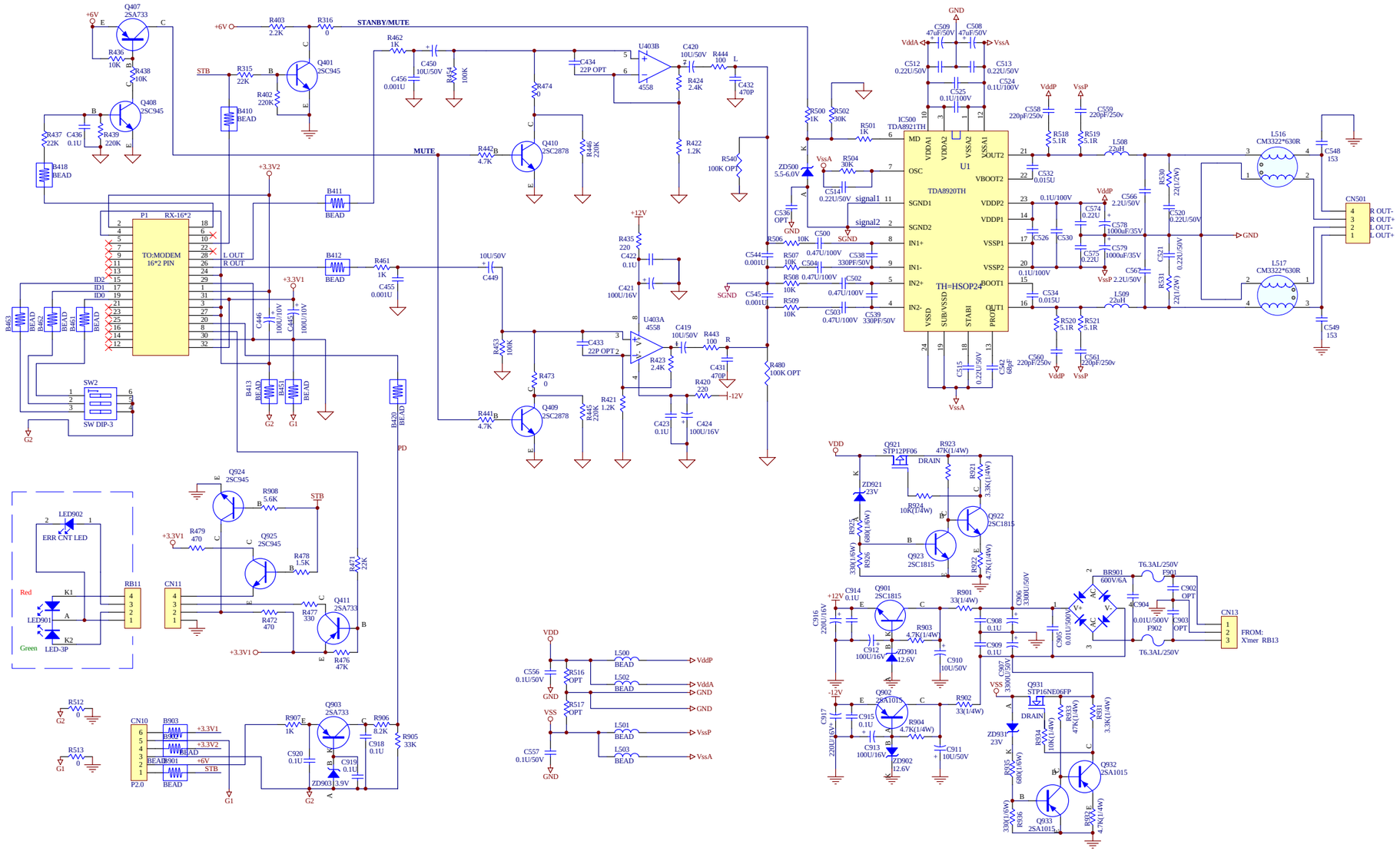

RTD218 RECEIVER SCHEMATIC (PG 1)

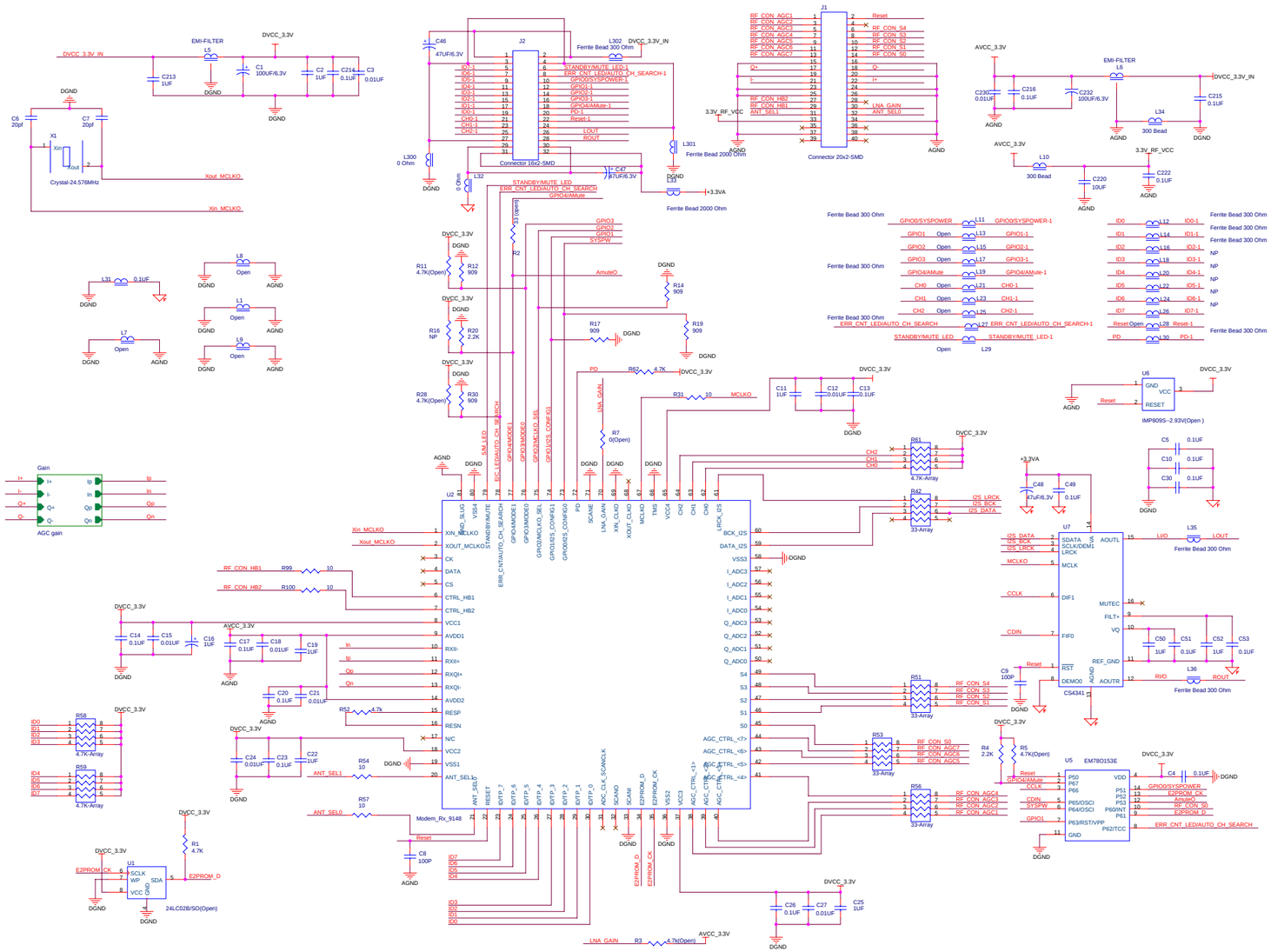

RTD218 RECEIVER SCHEMATIC (PG 2)

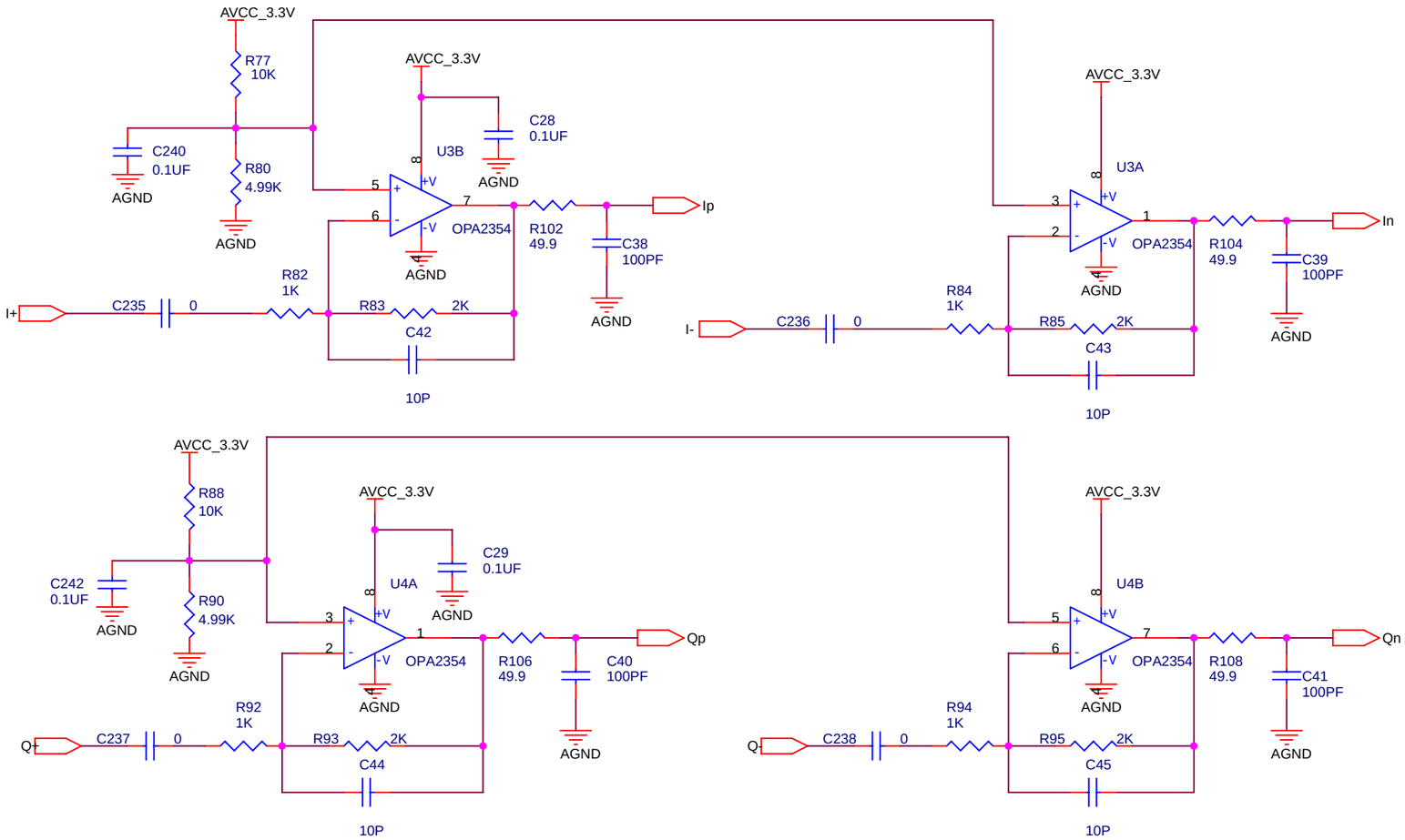

RTD218 RECEIVER RF SCHEMATIC

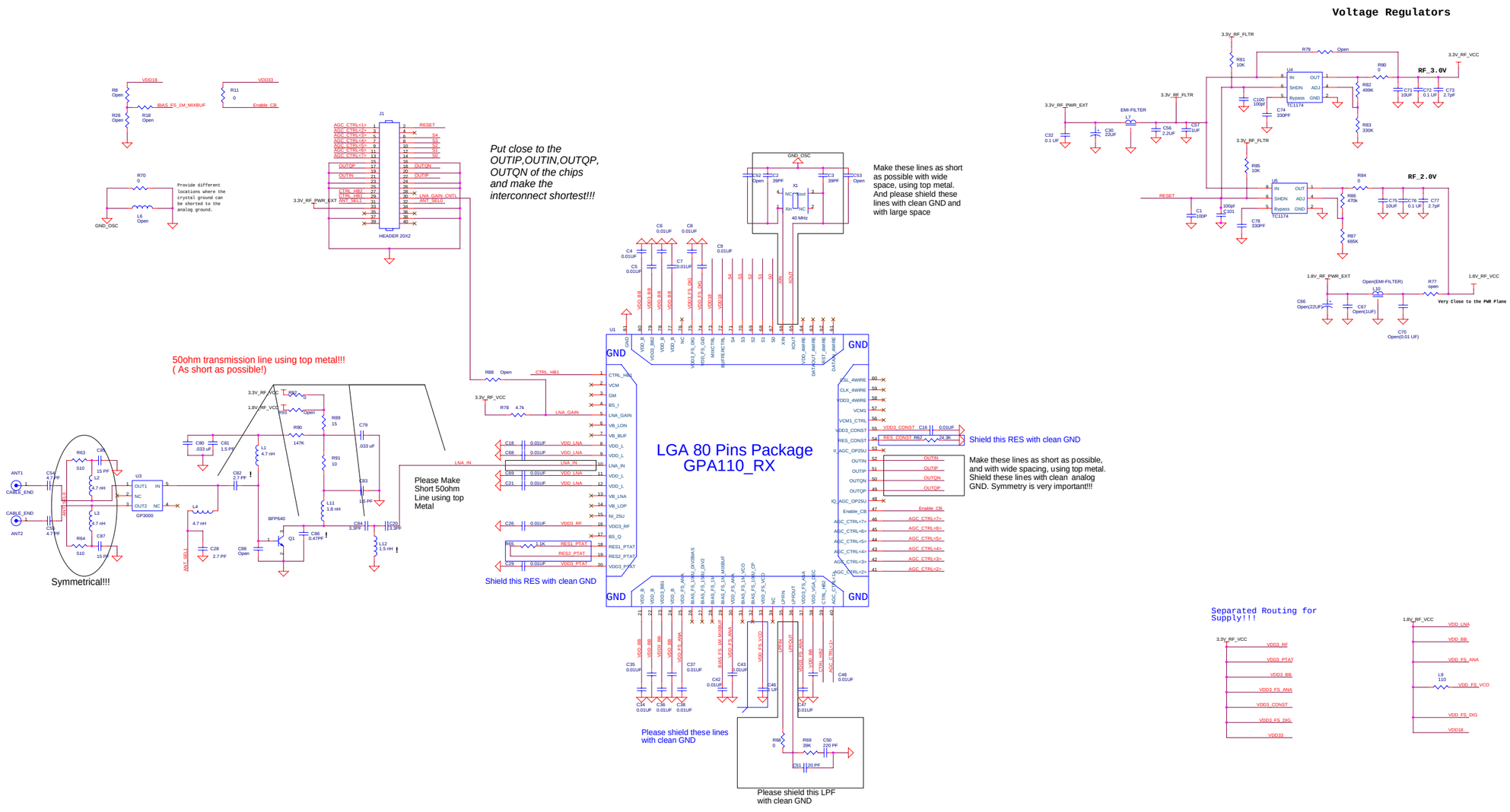

Please put all the decoupling capacitors close to the chip (with drawing line connection) as close as possible. The VDDs are the most important lines.

RTD218 SMPS Schematic

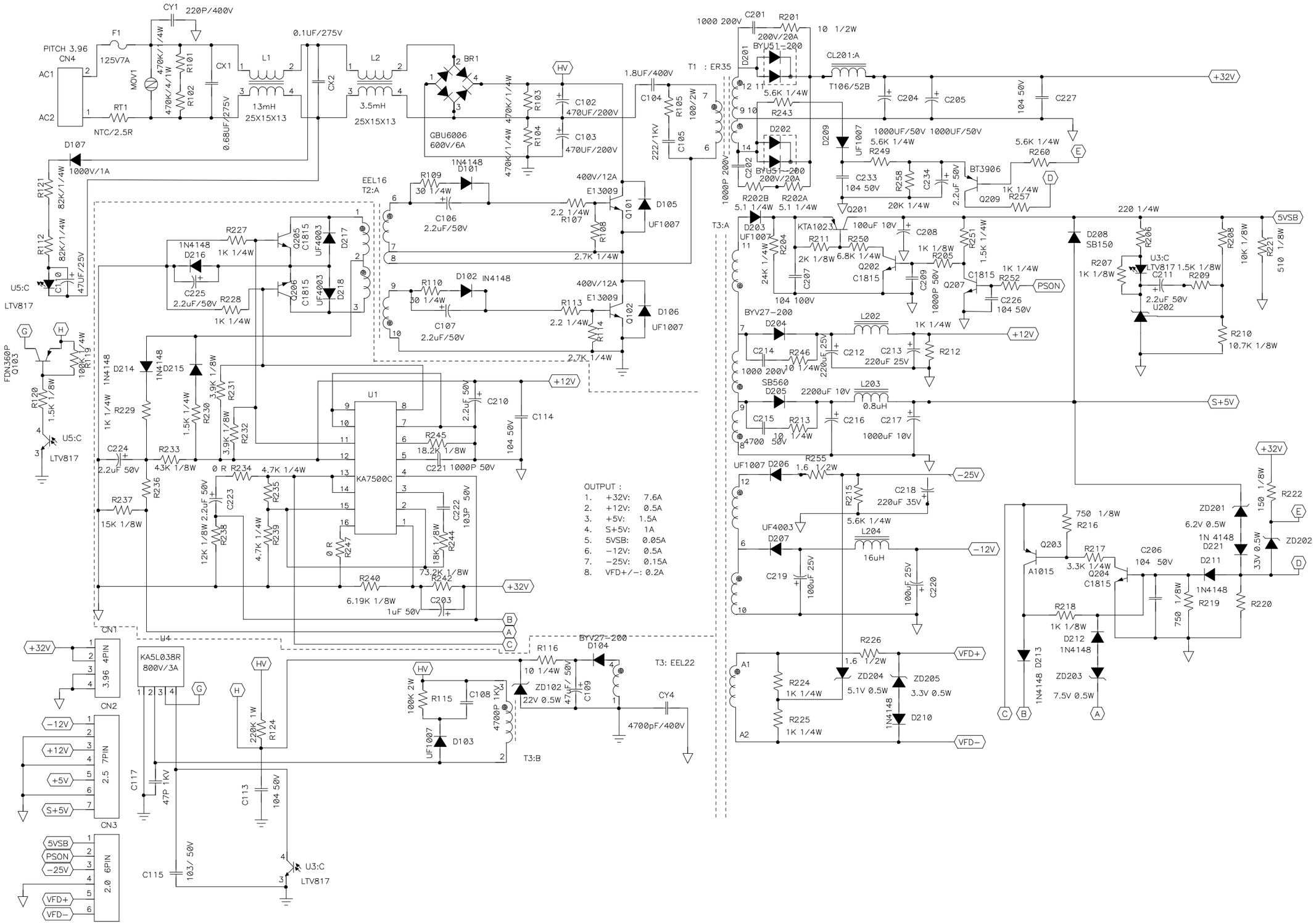

RTD218 TRANSMITTER SCHEMATIC

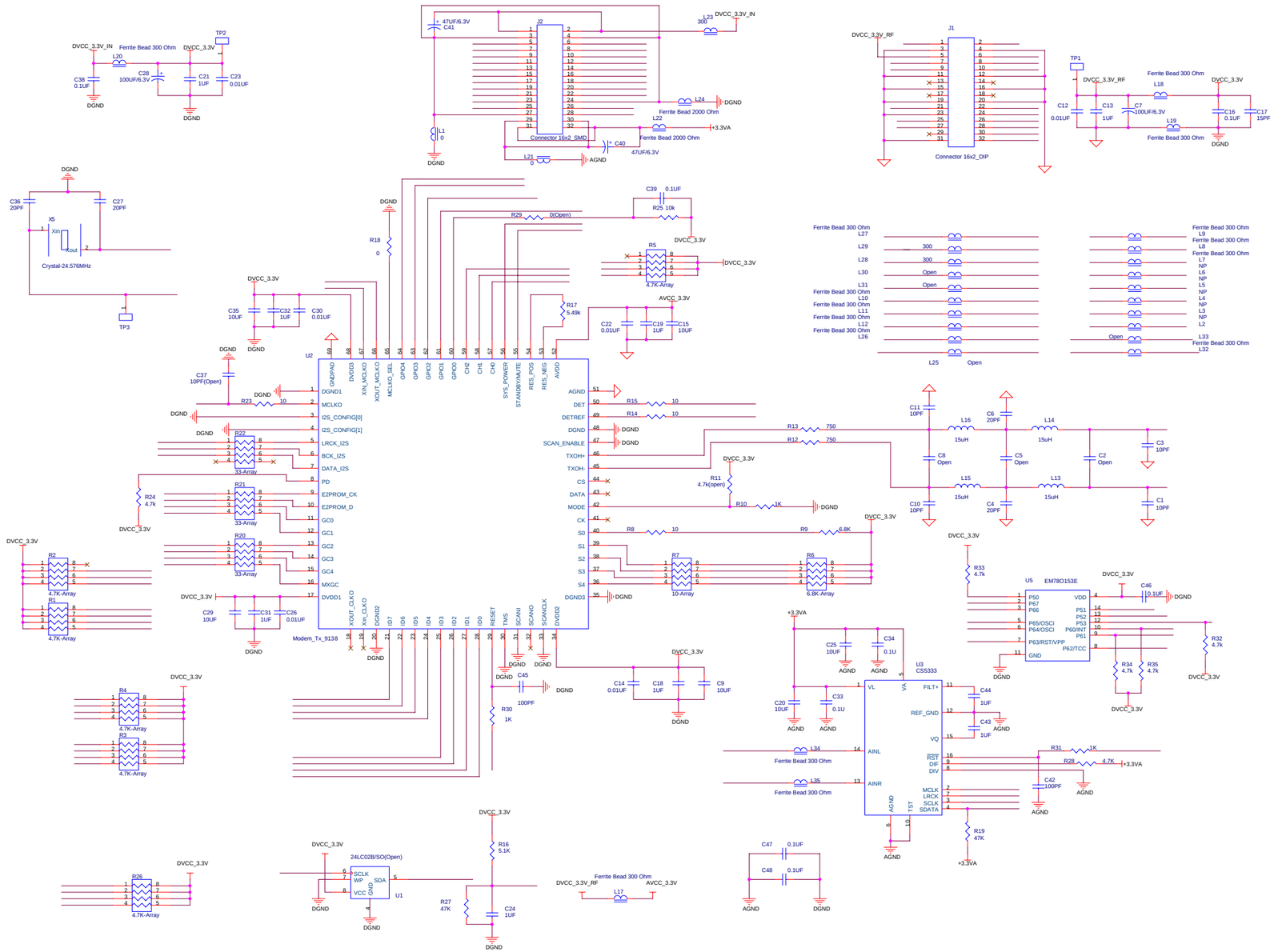

RTD218 TRANSMITTER AUDIO SCHEMATIC

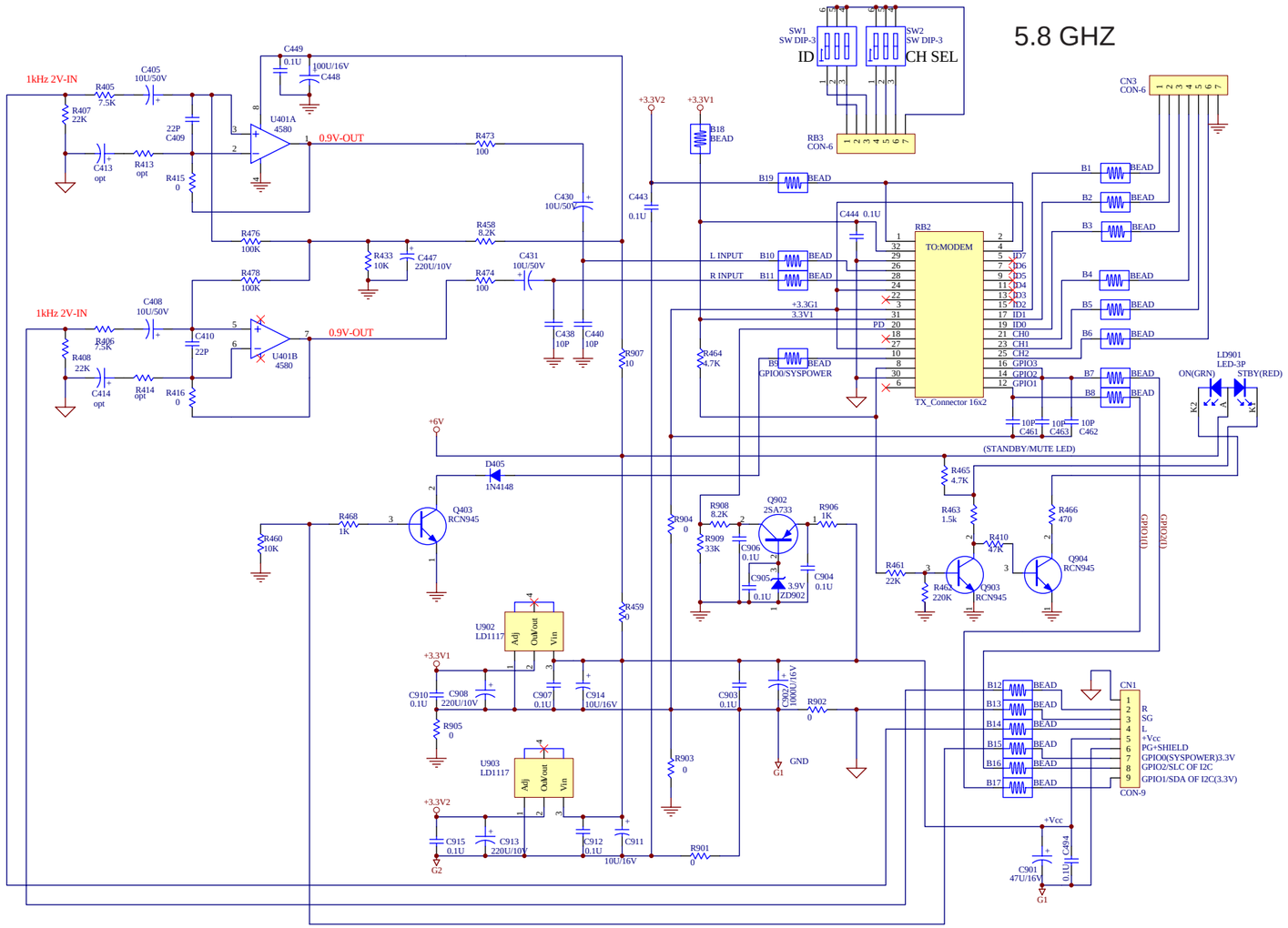

RTD218 TRANSMITTER RF SCHEMATIC (PG 1)

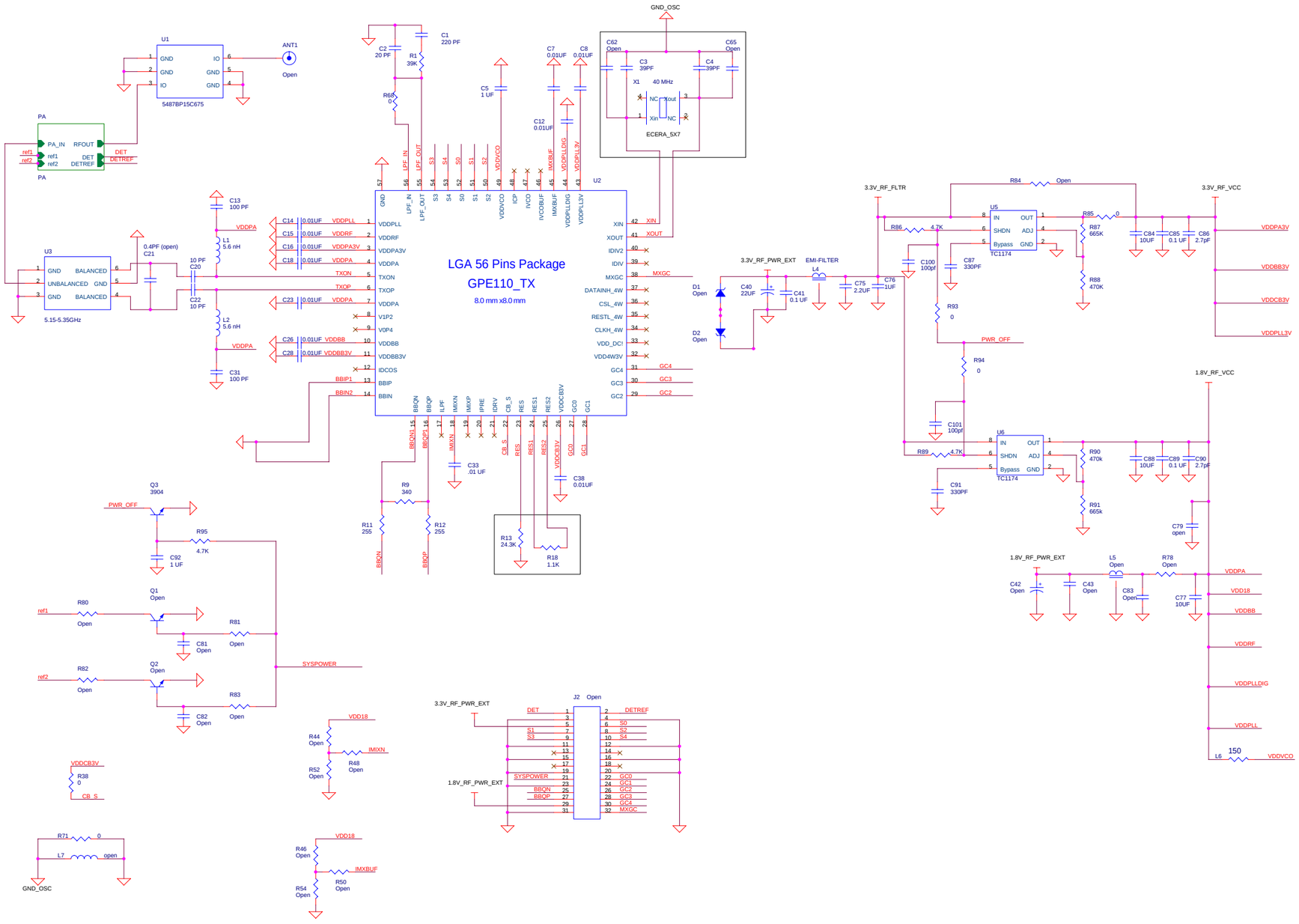

RTD218 TRANSMITTER RF SCHEMATIC (PG 2)

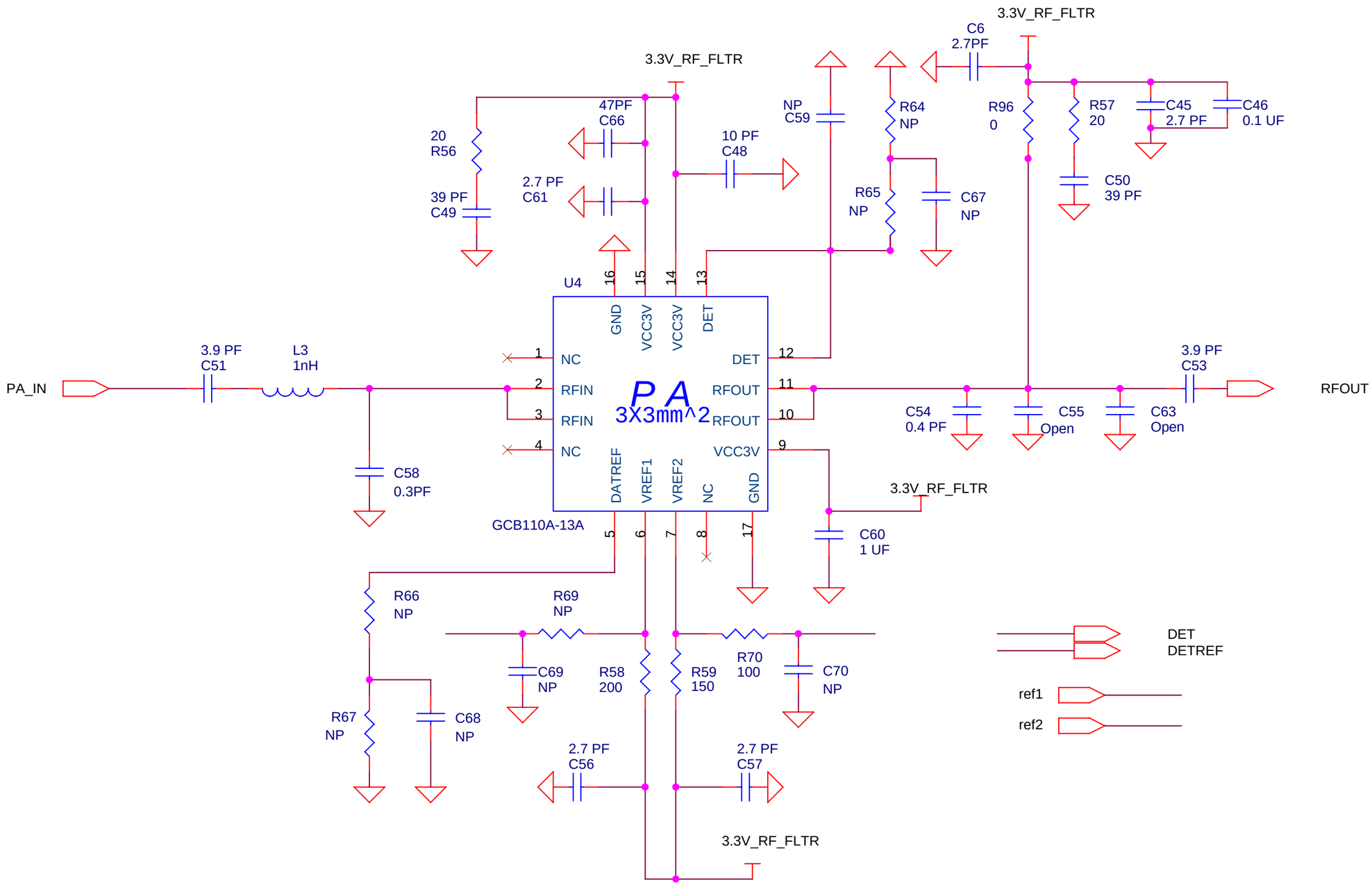

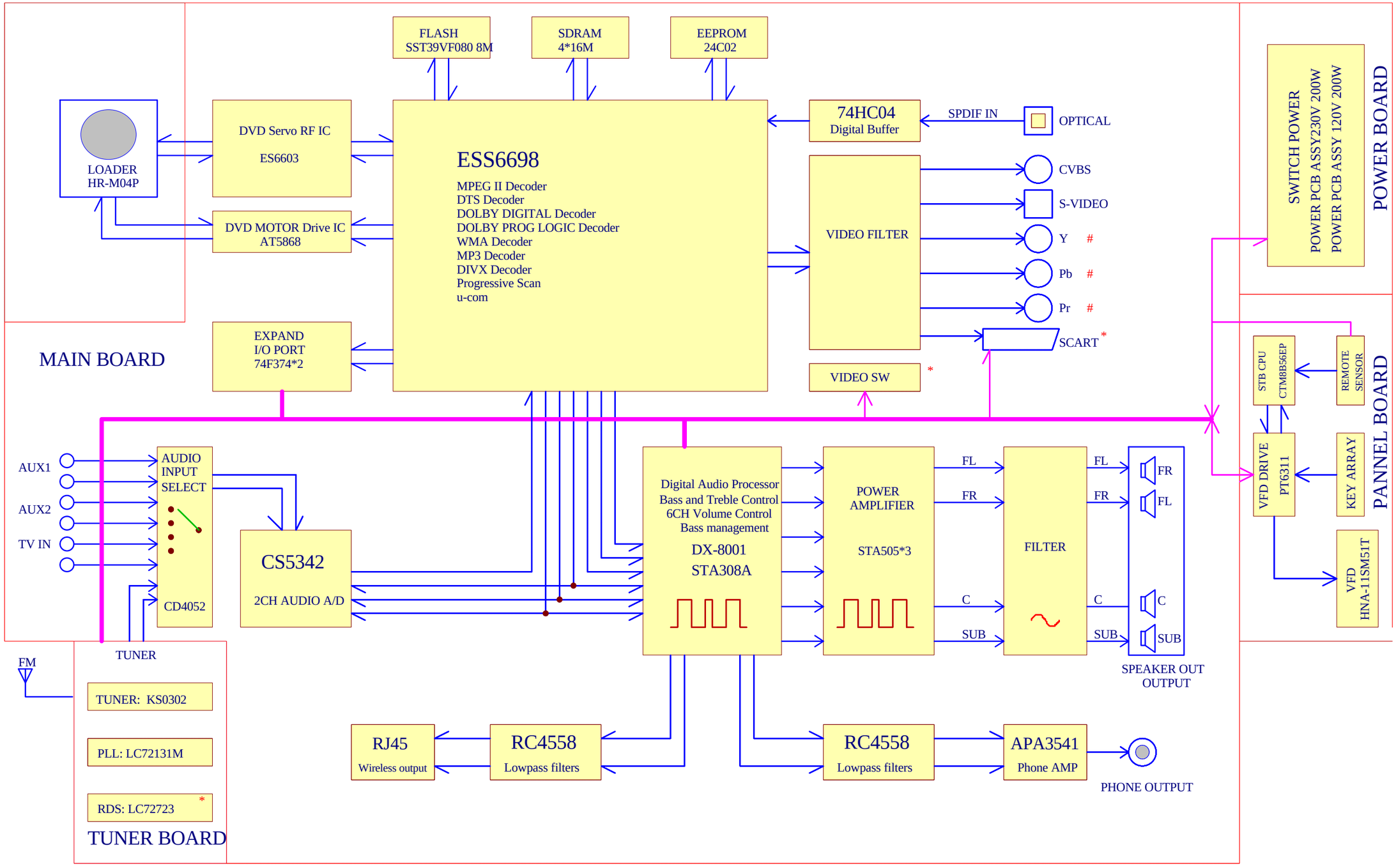

DPL930 / DPL2930 / RTD218 Block Diagram

RTD218 DVD EXPLODED VIEW

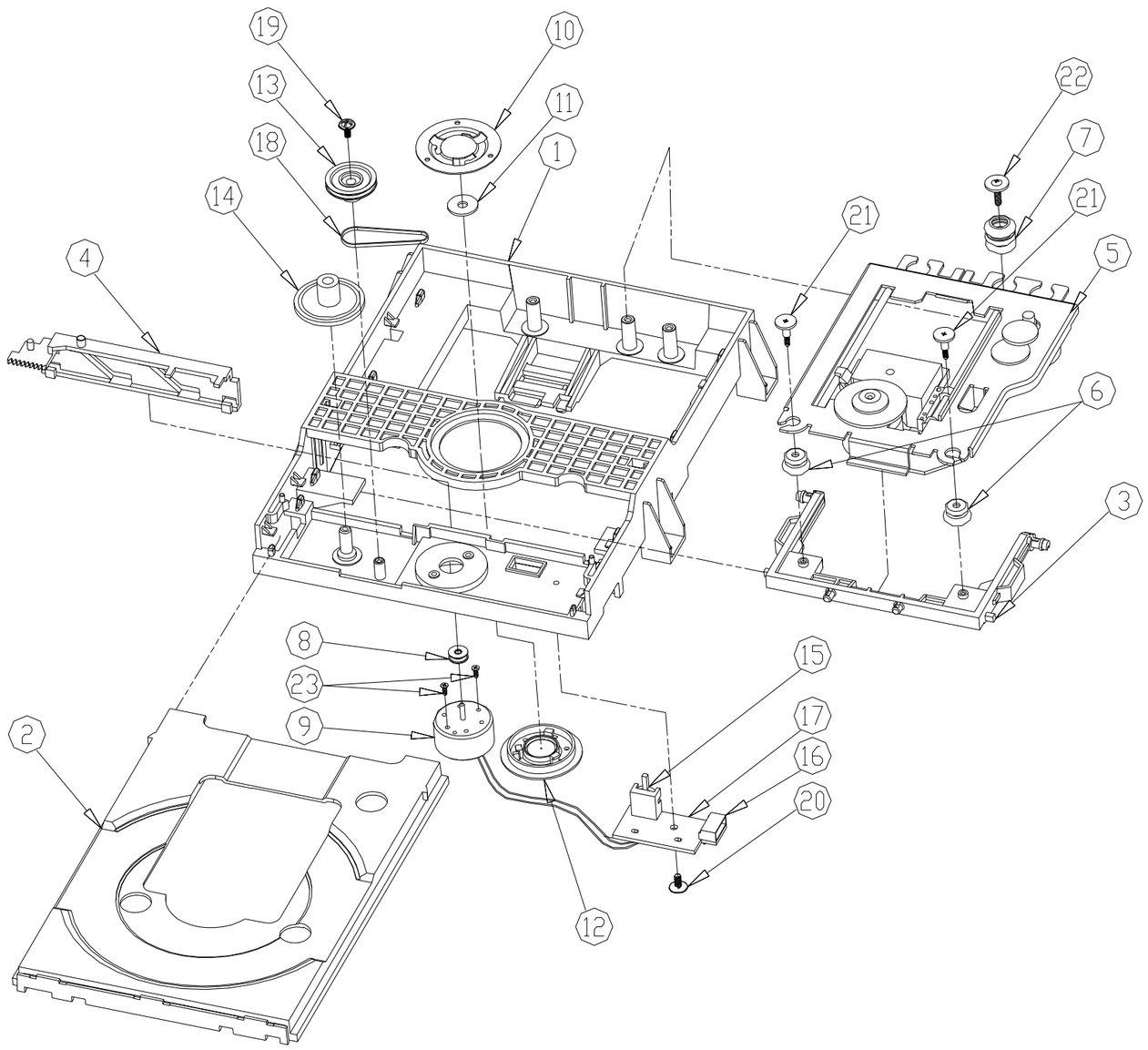

BILL OF MATERIALS				
ITEM	DESCRIPTION	PART NUMBER	MATERIAL	Q'TY
1	LOADER BASE	BPB206008-0001		1
2	LOADER TRAY	BPM206004-0001		1
3	FRAME	BPH206013-0001		1
4	CAM	BPH206012-0001		1
5	TRAVERSE	WVD500006-0001		1
6	FRONT DAMPER	DUF203601-0001		2
7	REAR DAMPER	DUF203600-0001		1
8	GEAR-G	BPG206006-0001		1
9	TRAY MOTOR	FMT020201-0001		1
10	CLAMPER TOP	GSE206004-0001		1
11	MAGNET	GMA260000-0001		1
12	CLAMPER DOWN	BPG206015-0001		1
13	GEAR PULLEY	BPG206014-0001		1
14	GEAR-TRAY	BPG206013-0001		1
15	LIMIT SWITCH	MSW007001-0020		1
16	CONNECTOR	CCN200000-0505		1
17	PCB	LVC260100-0001		1
18	BELT	BRW206003-0001		1
19	SCREW FOR GEAR PULLEY	HSW248004-1060		1
20	SCREW FOR PCB	HSP258004-1050		1
21	SCREW FOR FRONT DAMPER	HSD248004-1111		2
22	SCREW FOR REAR DAMPER	HSW250301-1080		1
23	SCREW FOR TRAY MOTOR	HSP243174-1042		2

RTD218 WIRING DIAGRAM

SEE PAGE 2 FOR CONNECTOR PINOUTS

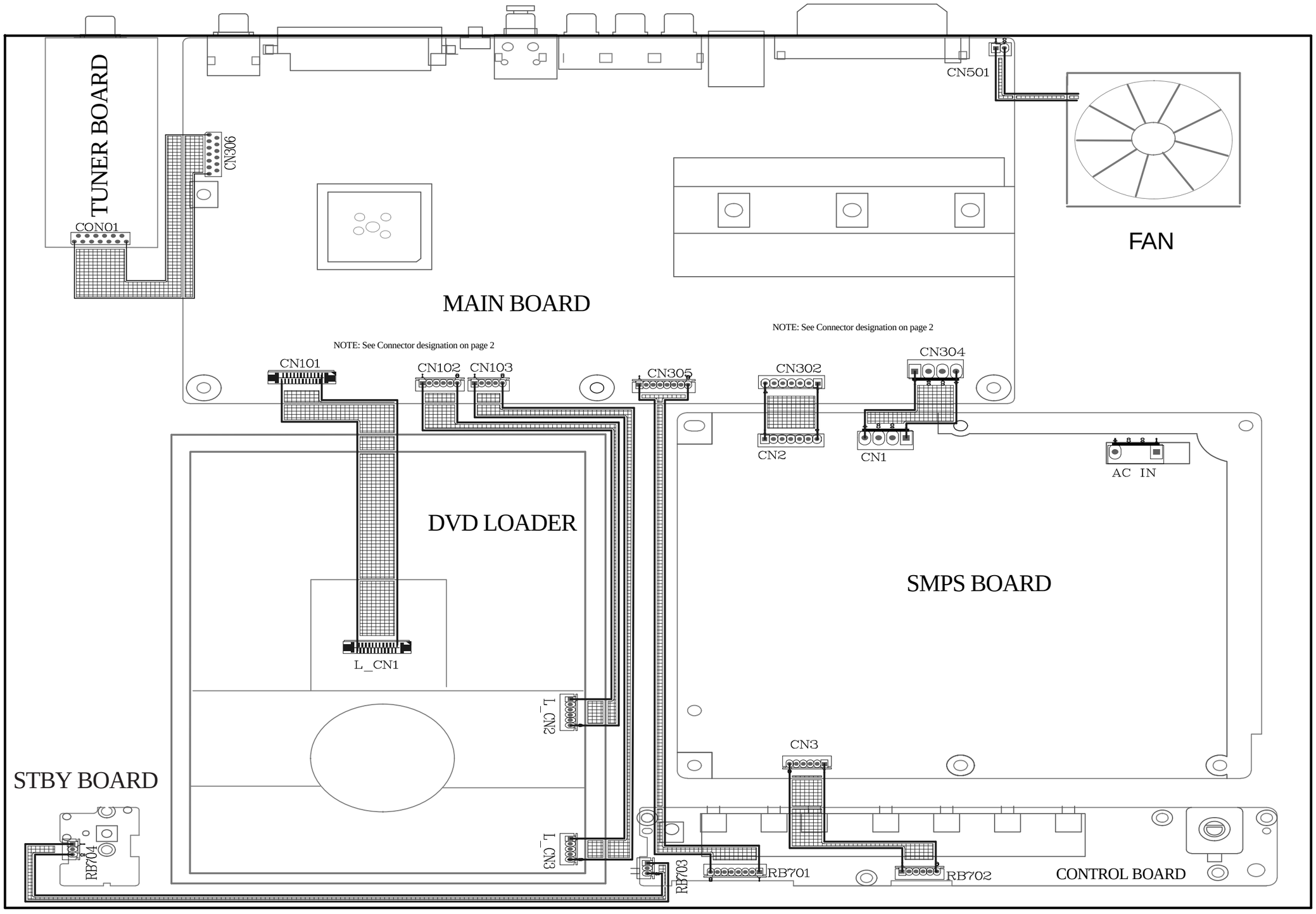
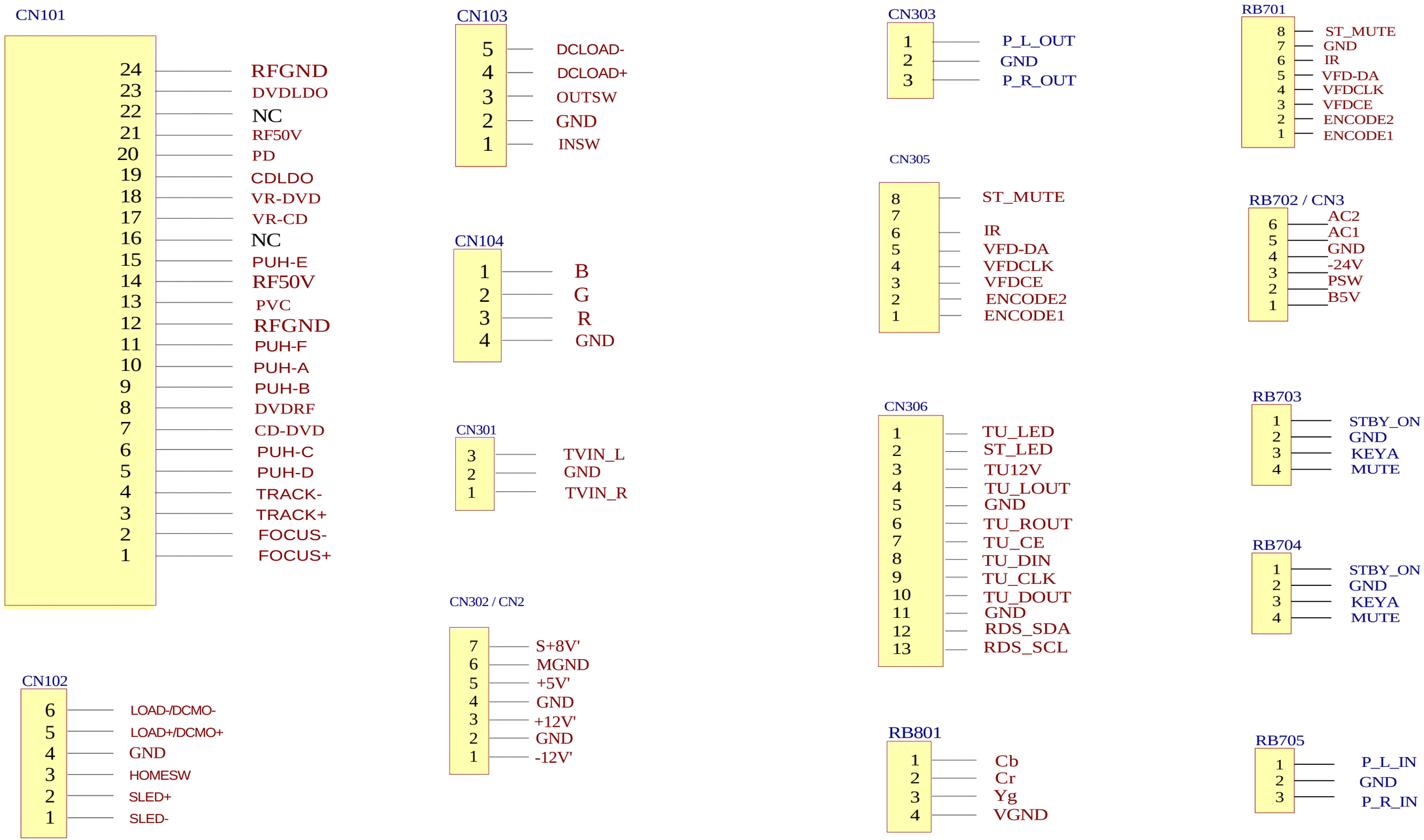
RTD218 CONNECTOR PINOUTS