RTD258 Front Schematic

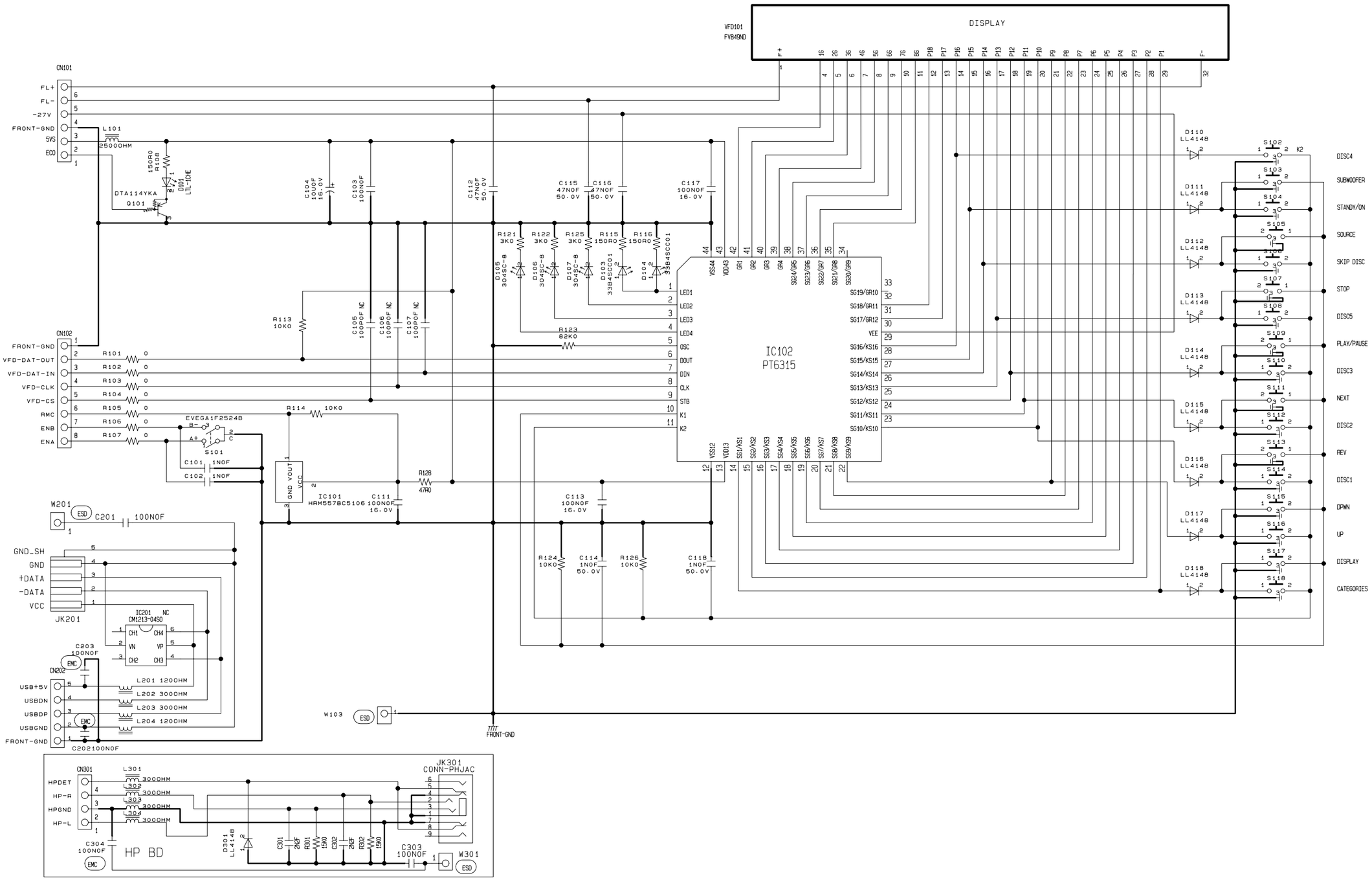

RTD258 Main Schematic (1 of 3)

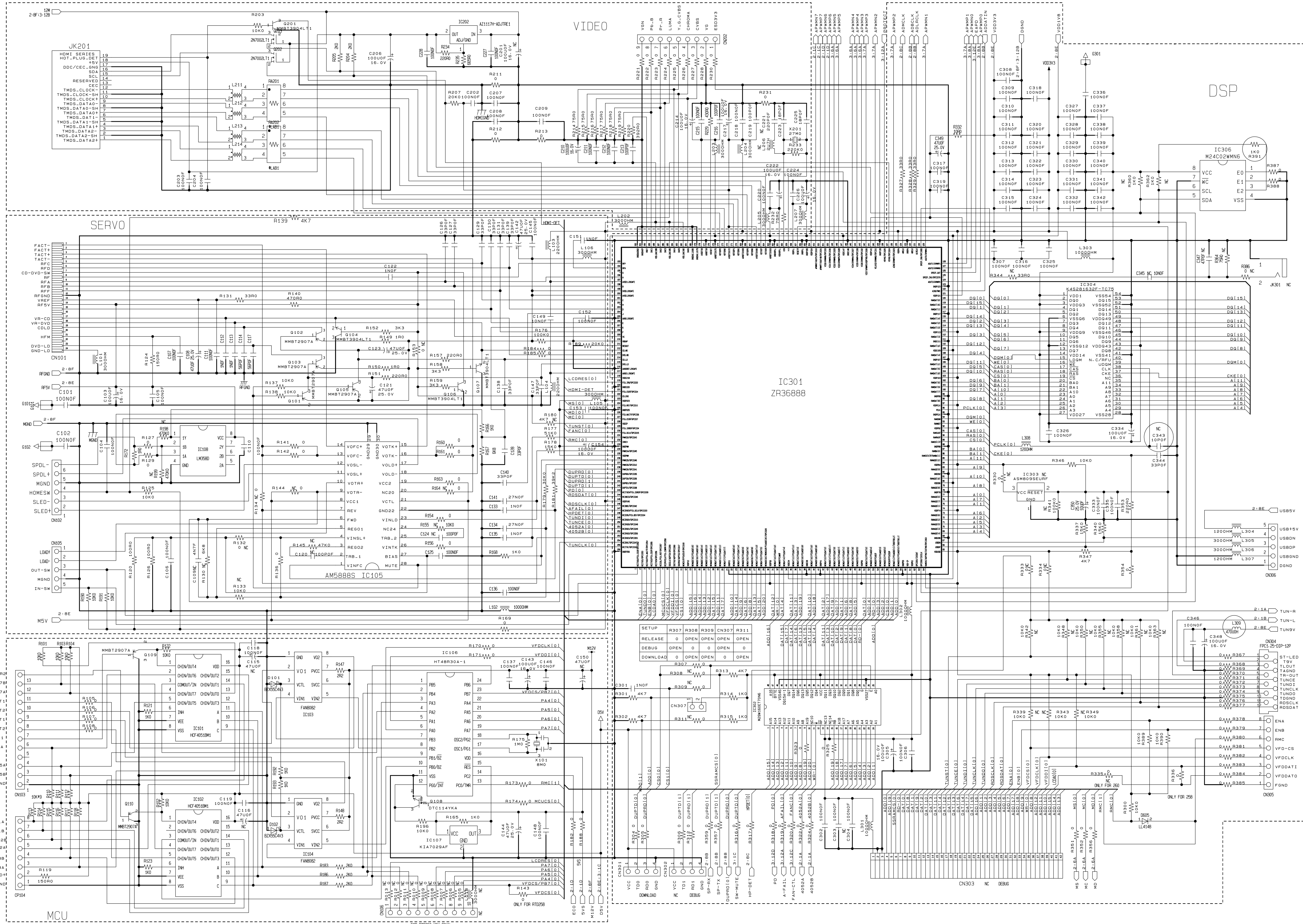

SETUP	R307	R308	R309	CN307	R311
RELEASE	0	OPEN	OPEN	OPEN	OPEN
DEBUG	OPEN	0	0	OPEN	0
DOWNLOAD	0	OPEN	OPEN	0	OPEN

RTD258 Main Schematic (2 of 3)

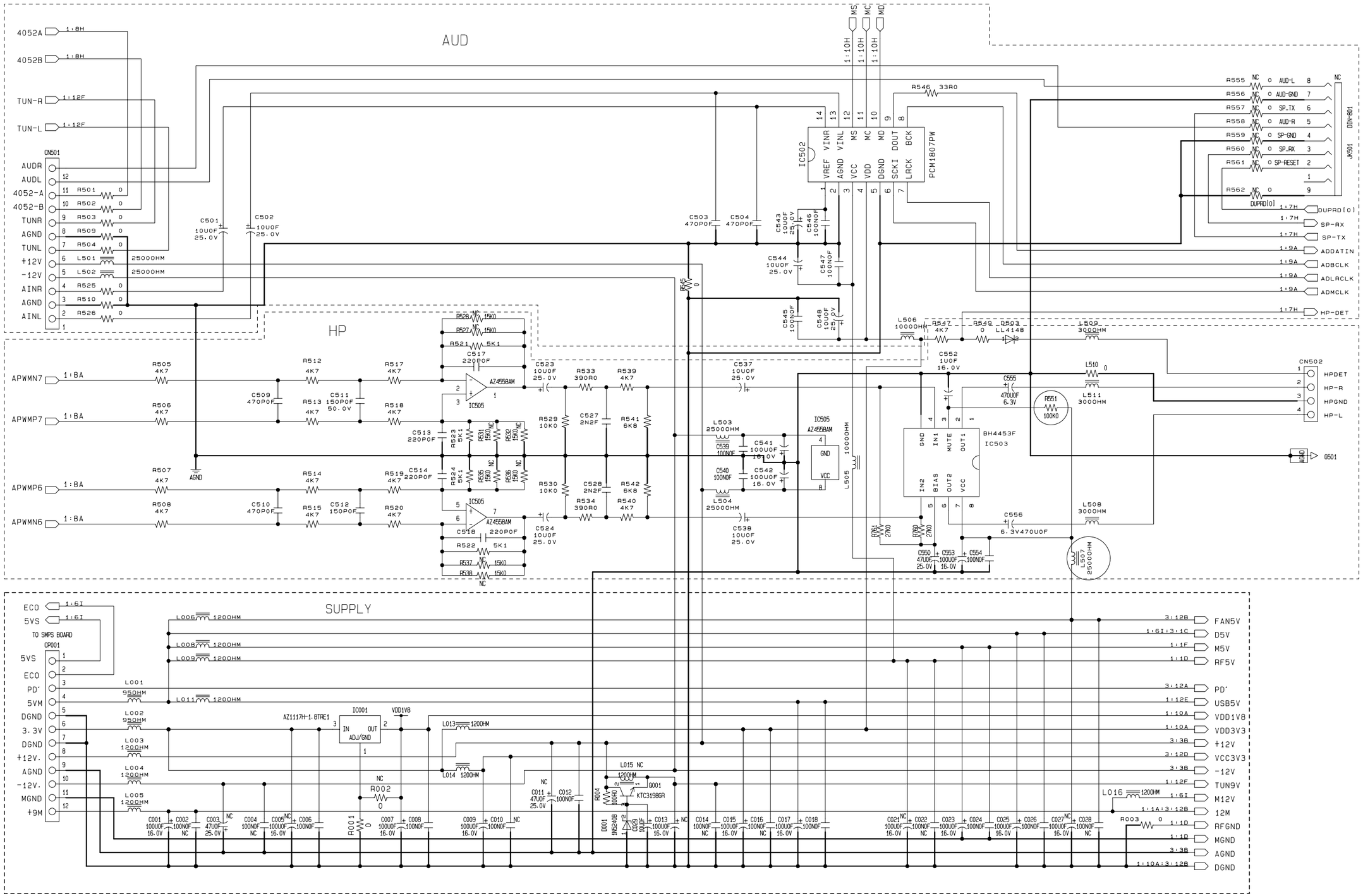

RTD258 Main Schematic (3 of 3)

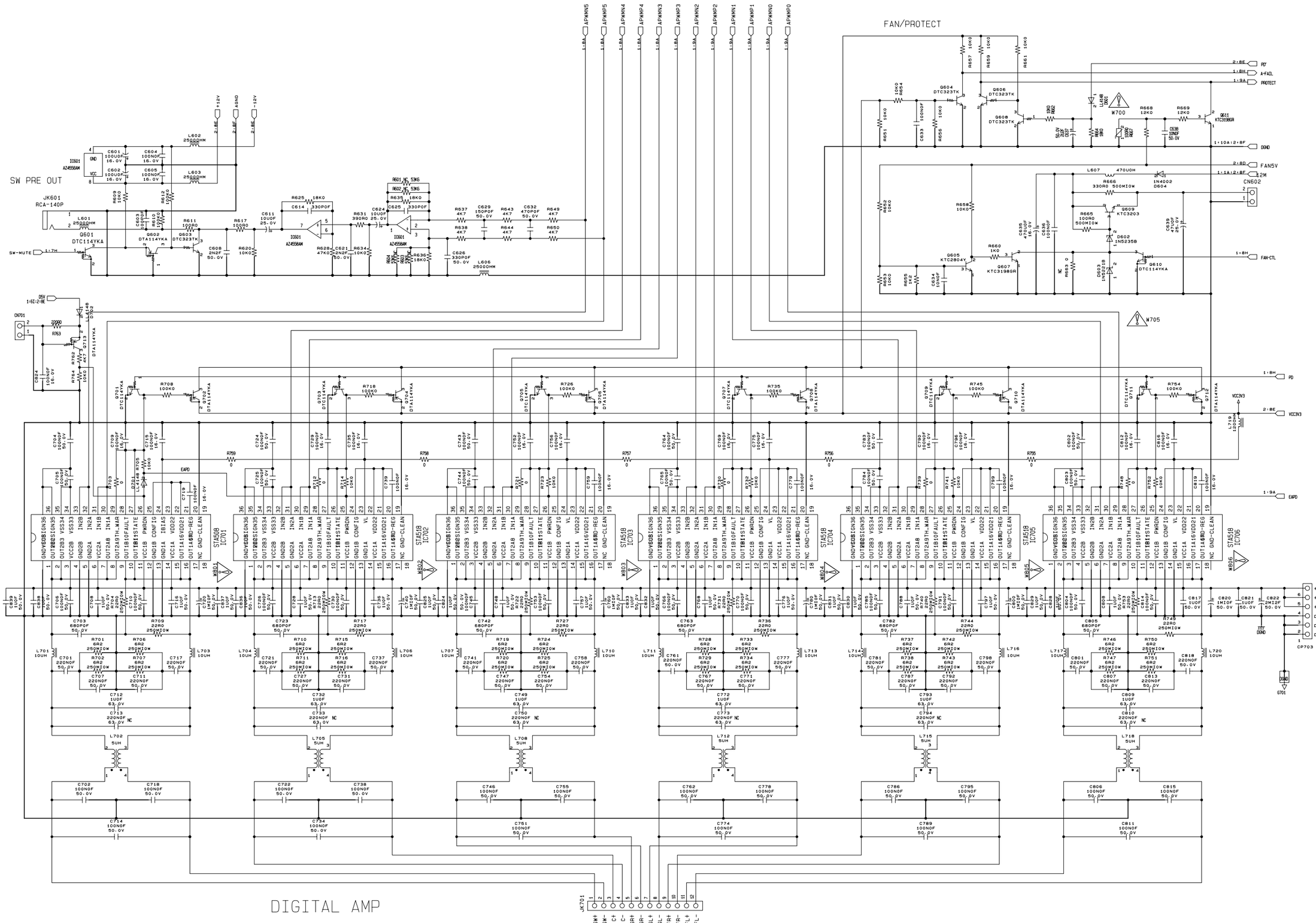

RTD258 I/O Schematic

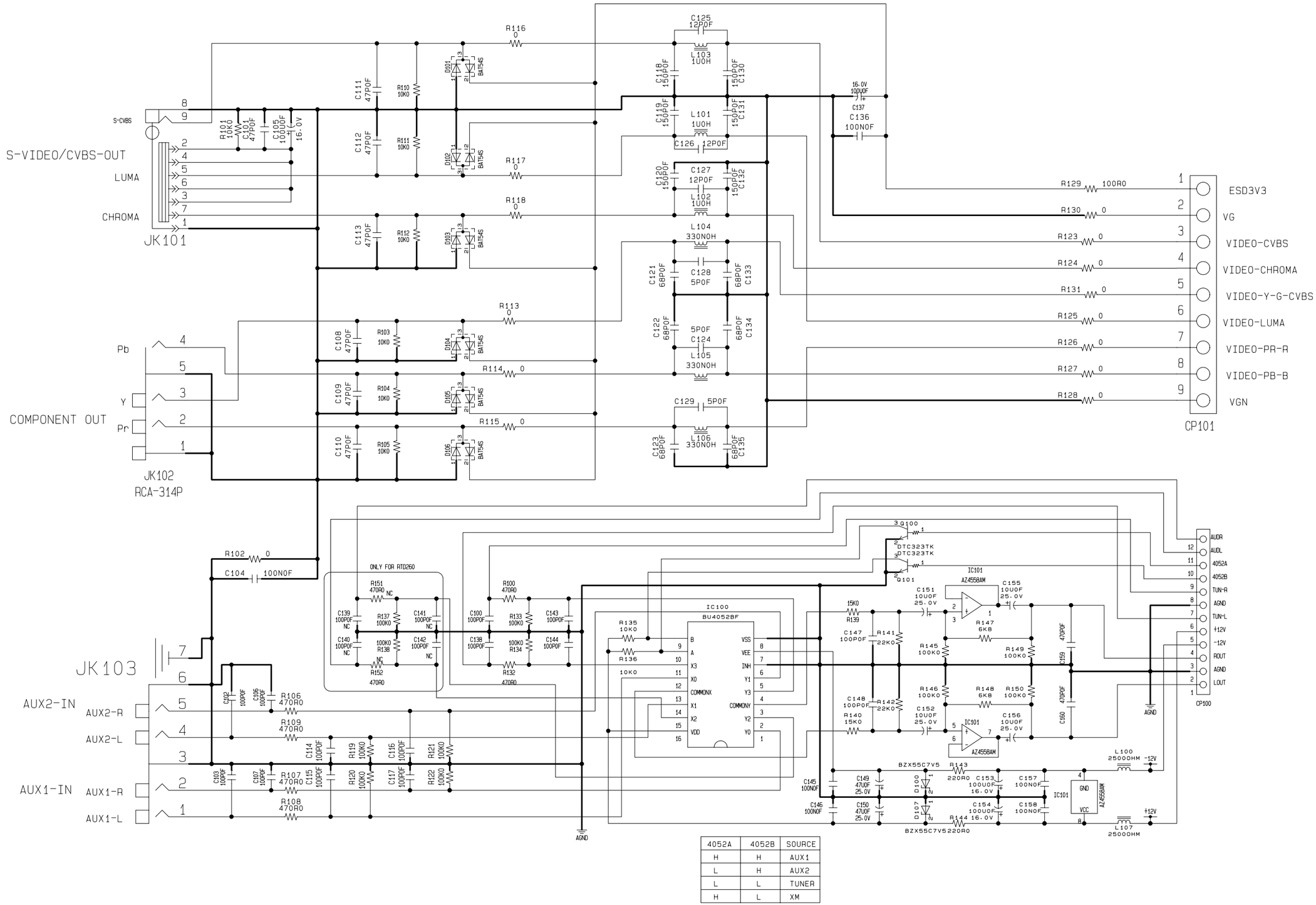

4052A	4052B	SOURCE
H	H	AUX1
L	H	AUX2
L	L	TUNER
H	L	XM
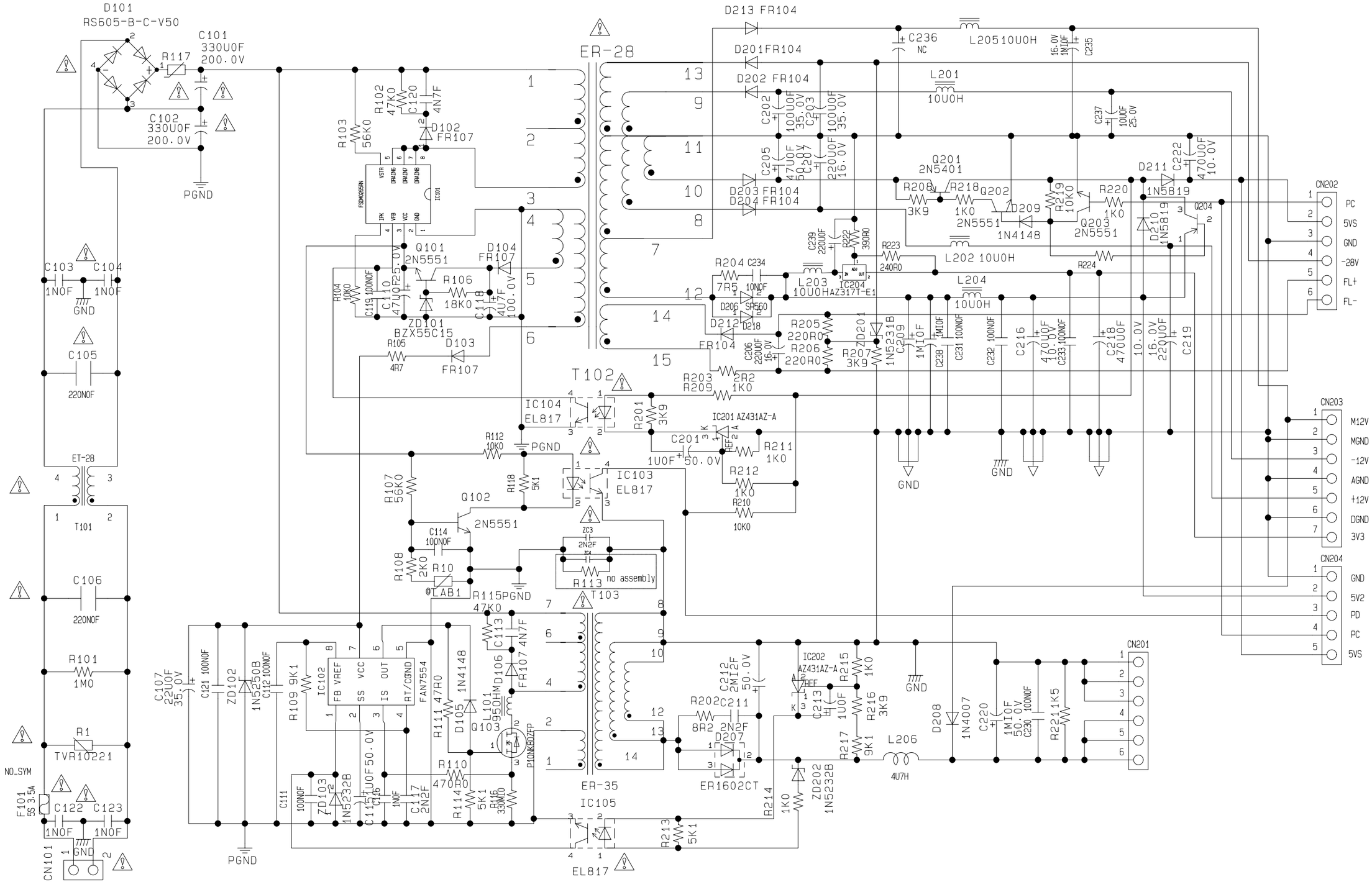
RTD258 SMPS Schematic