ROTEL®

RTC-965 is the same as the RSX except it does not have the internal amplifier.

RSX-965

SURROUND SOUND RECEIVER

Version 3 specific information is located at the end of this manual.

Technical Manual

TABLE OF CONTENTS

Chassis Layout 03
Specification 04
Adjustement 07
Wiring Diagram 10
Printed Circuit Boards 12
Schematic Diagram 26
PC Board Ass'y Parts List 57
Exploded View 68
Mechanical Ass'y Parts List 71

****PLEASE BE AWARE THAT SOME PAGE NUMBERS ARE MISSING FROM THIS MANUAL BUT THOSE THAT ARE MISSING WERE BLANK IN THE ORIGINAL****

THE ROTEL CO., LTD.

4F, BUNZAN-SHINSEN-BLDG 10-10, SHINSEN-CHO, SHIBUYAKU TOKYO JAPAN

NK 990301-1

Chassis Layout

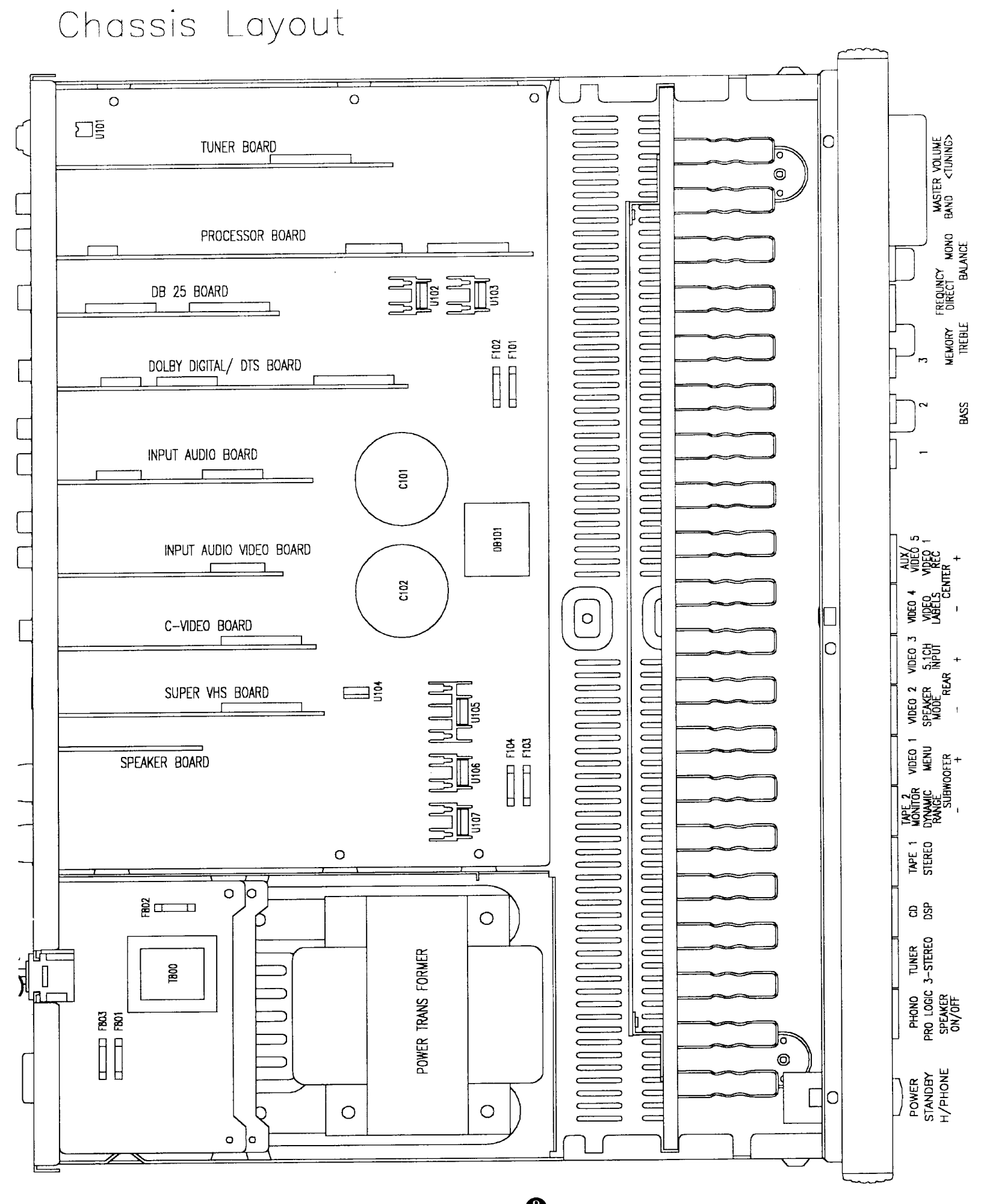

Specifications

AUDIO SECTION

Continuous Power Output(20-20kHz,<0.09%, 8ohms)	75watts/ch(all channel driven)
Total Harmonic Distortion	<0.09% at rated power
Intermoduration Distortion(60 Hz:7kHz)	<0.09% at rated power
Frequency Response (line levels)	10-70kHZ, ±3dB
Input Sensitivity / Impedance(line level)	200mV / 47kohms
Input Sensitivity / Impedance(phono input)	3.5mV / 47kohms
Tone Control - Bass / Treble	±8 dB at 100Hz / 10kHz
Signal to Noise Ratio (IHF "A" weighted)	92dB(Stereo), 70dB(Dolby Digital)

VIDEO SECTION

Frequency Response	3-10MHz, -3dB
Signal to Noise Ratio	45dB
Input Impedance	75 ohms
Output Impedance	75 ohms
Output Level	1volt

FM TUNER SECTION

Usable Sensitivity	14.2dBf
Signal to Noise Ratio(at65Bbf)	70dBf
Harmonic Distortion(at65Bbf)	0.3%
Stereo Separation(1kHz)	45dB
Output Level	550mV
Antenna Input	75 ohms unbalanced

AM TUNER SECTION

Sensitivity	500uV/m
Signal to Noise Ratio	40dB
Output Level	160 mV
Antenna	Loop Antenna

GENERAL

Power Requirements	115 Volts,60Hz or 230 Volts,50Hz
Power Consumption	400watts
Dimensions(W × H × D)	450 × 158 × 400mm 17 3/4" × 6 1/4" × 15 3/4"
Weight(net)	15 Kg/ 33lb

DOLBY DIGITAL SECTION

Measurements Conditions, unless otherwise noted: Input Function: Video4
Digital Input Mode: Auto
Speaker Mode : configuration 1, Configuration 2, Sub-Woofer:YES
Main Vol Position : 100mVrms Output Position
Trim Vol Position : All "0 dB"
Test Point : Pre - Out
-20dB= DOLBY TEST DVD VER 1.0(#29,30,31)
Test disc : DOLBY TEST DVD VERSION 1.0

DATE :

NO		DESCRIPTION		SIGNAL	INPUT	Track No	UNIT	LIMIT	NOMINAL	MEASUREMENT L	C	R	LS	RS	SW
★	1	Output Level Main Vol Level:69 Speaker Mode : configuration 1		1kHz	-20dBFS	30	mV	100±20	100±10						
				30Hz	-20dBFS	48	mV	320±40	320±20						
★	2	Output Level at MIN. VOL.,WTD "A"		1kHz	-20dBFS	30	mV	≤0.5	≤0.3						
				30Hz	-20dBFS	48	mV	≤0.5	≤0.3						
★	3	S/N Ratio	CCIR/ARM, 400Hz HPF WTD	1kHz	-20dBFS	34.35	dB	≤-65	≤-68						
★	4	Total Harmonic Distortion	Rated power output	1kHz	-20dBFS	30	%	≤0.3	≤0.2						
★	5	Channel Separation	L	1kHz	0dBFS	65	dB	All Channel except L/R/SW							
			C	1kHz	0dBFS	66	dB	≤-65	≤-70						
			R	1kHz	0dBFS	67	dB	L<- ->R							
			LS	1kHz	0dBFS	68	dB	≤-50	≤-55						
			RS	1kHz	0dBFS	69	dB	S/W<- ->Other CH							
			SW	1kHz	0dBFS	70	dB	≤-65	≤-70						
★	6	Frequency Response	Configuration1	30Hz(ref: 1kHz)	-20dBFS	48(43:ref)	dB	-5±1	-5						
				30Hz(ref: 1kHz)	-20dBFS	43,44,45,46, 47(43:ref)	dB	-15±1	-15						
				1kHz(ref: 1kHz)	-20dBFS	43(43:ref)	dB	±1	0						
			Configuration2	30Hz(ref: 1kHz)	-20dBFS	48(43:ref)	dB	+5±1	+5						
				30Hz(ref: 1kHz)	-20dBFS	44,46,47 (43:ref)	dB	-5±1	-5						
				1kHz(ref: 1kHz)	-20dBFS	43,44,45,46, 47(43:ref)	dB	±1	0						

DTS SECTION

Measurements conditions, unless otherwise noted: Input Function: Video4
Digital Input Mode: Auto
Speaker Mode : configuration 1, Configuration 2, Sub-Woofer:YES
Main Vol Position : 100mVrms Output Position
Trim Vol Position : All "0 dB"
Test Point : Pre - Out
-20dB= Consumer Product evaluation test disc(#16,21)
Test disc : Consumer Product evaluation test disc

										MEASUREMENT					
NO		DESCRIPTION		SIGNAL	INPUT	Track No	UNIT	LIMIT	NOMINAL	L	C	R	LS	RS	SW
★	1	Output Level Main Vol Level:69		1kHz	-20dBFS	21	mV	100±20	100±10						
				30Hz	-20dBFS	16	mV	100±20	100±10						
★	2	Output Level at MIN. VOL.,WTD "A"		1kHz	-20dBFS	21	mV	≤0.5	≤0.3						
				30Hz	-20dBFS	16	mV	≤0.5	≤0.3						
★	3	S/N Ratio	CCIR/ARM,WTD	1kHz	-20dBFS	2(ref:21)	dB	≤-65	≤-68						
★	4	Total Harmonic Distortion	Rated power output	1kHz	-20dBFS	32	%	≤0.3	≤0.2						
★	5	Channel Separation	L	1kHz	0dBFS	36	dB	All Channel except L/R/SW							
			C	1kHz	0dBFS	30	dB	≤-65	≤-70						
			R	1kHz	0dBFS	27	dB	L<-->R							
			LS	1kHz	0dBFS	28	dB	≤-50	≤-55						
			RS	1kHz	0dBFS	29	dB	S/W<-->Other CH							
			SW	1kHz	0dBFS	31	dB	≤-65	≤-70						
★	6	Frequency Response	Ref:30Hz	20Hz-300Hz sweep	-20dBFS	16	dB	±1	±0.5						
			Ref:1kHz	20Hz-20kHz sweep	-20dBFS	21	dB	±1	±0.5						

◀ HOW to ADJUST RSX-965 ▶

■ FM

* Necessary measurement equipment

RDS/STEREO Multipexer	1 unit
FM/AM Signal Generator	1 unit
Audio Signal Analyzer	1 unit
Oscilloscope	1 unit
Digital Volt Meter (DVM)	1 unit

(A) Center adjust

◈ RDS/STEREO Multiplexer Setting
- MODE : MONO
- Audio Frequency : 1KHz

◈ FM Signal Generator Setting
- Deviation : 75KHz
- Radio Frequency : 98.1MHz
- Output Level : 66dB

◈ RSX-965 Setting
- FM Frequency : 98.1MHz
- FM MODE : MONO

① Turn FM Signal Generator Modulation on
② Connect DVM (+)(−) terminals to both ends of resistor R726 and measure the volt.
③ Make this measured volt '0' by adjusting T704(FM-DET-A Coil). (The adjustment should be within ±2mV.)
④ After this adjustment, measure THD(Total Harmonic Distortion) with Audio Signal Generator.
⑤ Adjust THD to minimum point with T705(FM-DET-B Coil). (THD should be within 0.5%)

(B) Channel Separation adjust

◈ RDS/STEREO Multiplexer Setting
- MODE : STEREO (ONLY L-CH or R-CH Signal OUT)
- Audio Frequency : 1KHz

◈ FM Signal Generator Setting
- Deviation : 75KHz
- Radio Frequency : 98.1MHz
- Output Level : 66dB

◈ RSX-965 Setting
- FM Frequency : 98.1MHz
- FM MODE : STEREO

① Turn FM Signal Generator Modulation on after modulating only L-CH or R-CH at STEREO Multiplexer.
② Confirm if 'STEREO'indicator is lighted on on the display
③ Measure output level via Audio Signal Analyzer and make the level as standard.
④ Turn FM Signal Generator Modulation on after modulating only R-CH or L-CH at STEREO Multiplexer.
⑤ Measure output level via Audio Signal Analyzer (measure per a "dB")
⑥ Adjust output level to minimum position with VR702. (lower than −40dB)

(C) TUNED Level adjust

◈ RDS/STEREO Multiplexer Setting
- MODE : STEREO
- Audio Frequency : 1KHz

◈ FM Signal Generator Setting
- Deviation : 75KHz
- Radio Frequency : 98.1MHz
- Output Level : 26dB

◈ RSX-965 Setting
- FM Frequency : 98.1MHz
- FM MODE : STEREO

① Turn FM Signal Generator Modulation 'ON' (confirm if output level is 26dB)
② Adjust VR702 up to the moment where 'STEREO' & 'TUNED' indicator turns OFF & ON again.
③ Confirm if 'STEREO' & 'TUNED' turns OFF when decreasing the output level slowly from 26dB to 25dB, 24dB ~~~.
(Repeat the above ②~③ if not OFF in lower than 24dB.)
④ Push RSX-965's TUNE UP or DOWN button "long" at Signal Generator Output Level 26dB and start Auto search
Confirm if search stops at FM Frequency 98.1MHz.
(Examine both of High Freq.→ 98.1MHz search , Low Freq.→ 98.1MHz search)

■ AM

* Necessary measurement equipment :

AM Signal Generator	1 unit
Audio Signal Analyzer	1 unit
DUMMY	1 unit
Oscilloscope	1 unit
Digital Volt Meter (DVM)	1 unit

(A) VT adjust

◈ AM Signal Generator Setting

① Adjust AM Frequency of RSX-965 to 520KHz.

② Connect (-) terminal of DVM with GND (or chassis) and connect (+) terminal with Jumper J704 (VT CHECK) and mesaure voltage. (Low Freq. VT)

③ Adjust VT to 1.2V with T702(AM-OSC Coil).

* In case of RDS/ASIA version, AM freq. range is 522KHz ~ 1611KHz. So, adjust as below.
at 522KHz, VT = 1.0V (Low Freq. VT)

(B) Output Level adjust

◈ AM Signal Generator Setting
- Modulation : 30%
- Audio Frequency : 400Hz
- Radio Frequency : 1000KHz
- Output Level : 84dB

◈ RSX-965 Setting
- AM Frequency : 600KHz

① Turn AM Signal Generator Modulation ON

② Adjust RSX-965 AM Freq. to 600KHz and measure output level with Audio Signal analyzer.

③ Adjust output level to maximum point with T701 (AM-ANT).

④ Adjust AM Signal Generator & RSX-965 AM Freq. to 1400KHz and measure output level.

⑤ Adjust output level to maximum point with TC701 (WHITE Trimmer).

⑥ Repeat above ②~⑤ steps 2~3 times until adjusting to best output level.

⑦ Adjust AM Signal Generator & RSX-965 AM Freq. to 1000KHz and measure output level.

⑧ Adjust level to maximum position with T703 (AM-IFT).

* In case of RDS/ASIA version, AM Freq. Step is 9KHz. So, change the standard freq. as below.
520KHz → 522KHz ,
1400KHz → 1404KHz ,
1000KHz→ 999KHz,

(C) TUNED Level adjust

◈ AM Signal Generator Setting
- Modulation : 30%
- Audio Frequency : 400Hz
- Radio Frequency : 1000KHz
- Output Level : 84dB

◈ RSX-965 Setting
- AM Frequency : 1000KHz

① Turn AM Signal Generator Modulation ON (Make sure if Output level is 84dB)

② Adjust VR701 (AM-ADJ) up to the moment where 'TUNED' indicator tunrs turns OFF & ON again.

③ Confirm if 'TUNED' turns OFF when decreasing the output level of AM Signal Generator slowly from 84dB to 80dB.

④ Push RSX-965's TUNE UP or DOWN button "long" at AM Signal Generator Output Level 84dB and start Auto search
Confirm if search stops at AM Frequency 1000KHz.
(Check with both of High Freq.→ 1000KHz search , Low Freq.→ 1000KHz search)

* In case of RDS/ASIA version, AM Freq. Step is 9KHz.
So, check above steps with 999KHz instead of 1000KHz.

WIRING DI

FRONT B,D
- ** CN601 – CP808(POWER)
- ** CN602 – FPC101(MAIN)

SPEAKER B,D
- ** CP807 – CN807(POWER)
- ** CP809 – CN809(HEADPHONE)
- ** CP810 – CN810(MAIN)
- ** CP811 – CN202(AMP)
- ** CP812 – CN203(AMP)

STANDBY B,D
- ** CP800 – AC CORD
- ** CP801 – CN801(POWER S/W)
- ** CP802 – TRANS
- ** CP804 – CN804(POWER)

POWER B,D
- ** CN804 – CP804(STANDBY)
- ** CN807 – CP807(SPEAKER)
- ** CP806 – TRANS
- ** CP808 – CN601(FRONT)

POWER S/W B,D
- ** CN801 – CP801(STANDBY)

HEADPHONE B,D
- ** CN809 – CP809(SPEAKER)

DB-25 B,D
- ** CP502 – CN501(PROCESS)
- ** CB601 – W112(MAIN)
- ** CB602 – W113(MAIN)

AMP B,D
- ** CP201 – CN502(PROCESS)
- ** CN202 – CP811(SPEAKER)
- ** CN203 – CP812(SPEAKER)
- ** CN204 – CP103(MAIN)
- ** CN205 – CP106(MAIN)

TUNER B,D
- ** CB701 – W108(MAIN)

PROCESS B,D
- ** CB501 – W501(MAIN)
- ** CB502 – W502(MAIN)
- ** CB503 – W503(MAIN)
- ** CN501 – CP502(PROCESS)
- ** CN502 – CP201(AMP)

DOLBY DIGTAL/DTS B,D
- ** CB901 – W801(MAIN)
- ** CB902 – W802(MAIN)
- ** CB903 – W803(MAIN)

INPUT AUDIO B,D
- ** CP301 – W119(MAIN)
- ** CP302 – W118(MAIN)

INPUT VIDEO B,D
- ** CP351 – W120(MAIN)

C-VIDEO B,D
- ** CN400 – W121(MAIN)

S-VIDEO B,D
- ** CN451 – W122(MAIN)

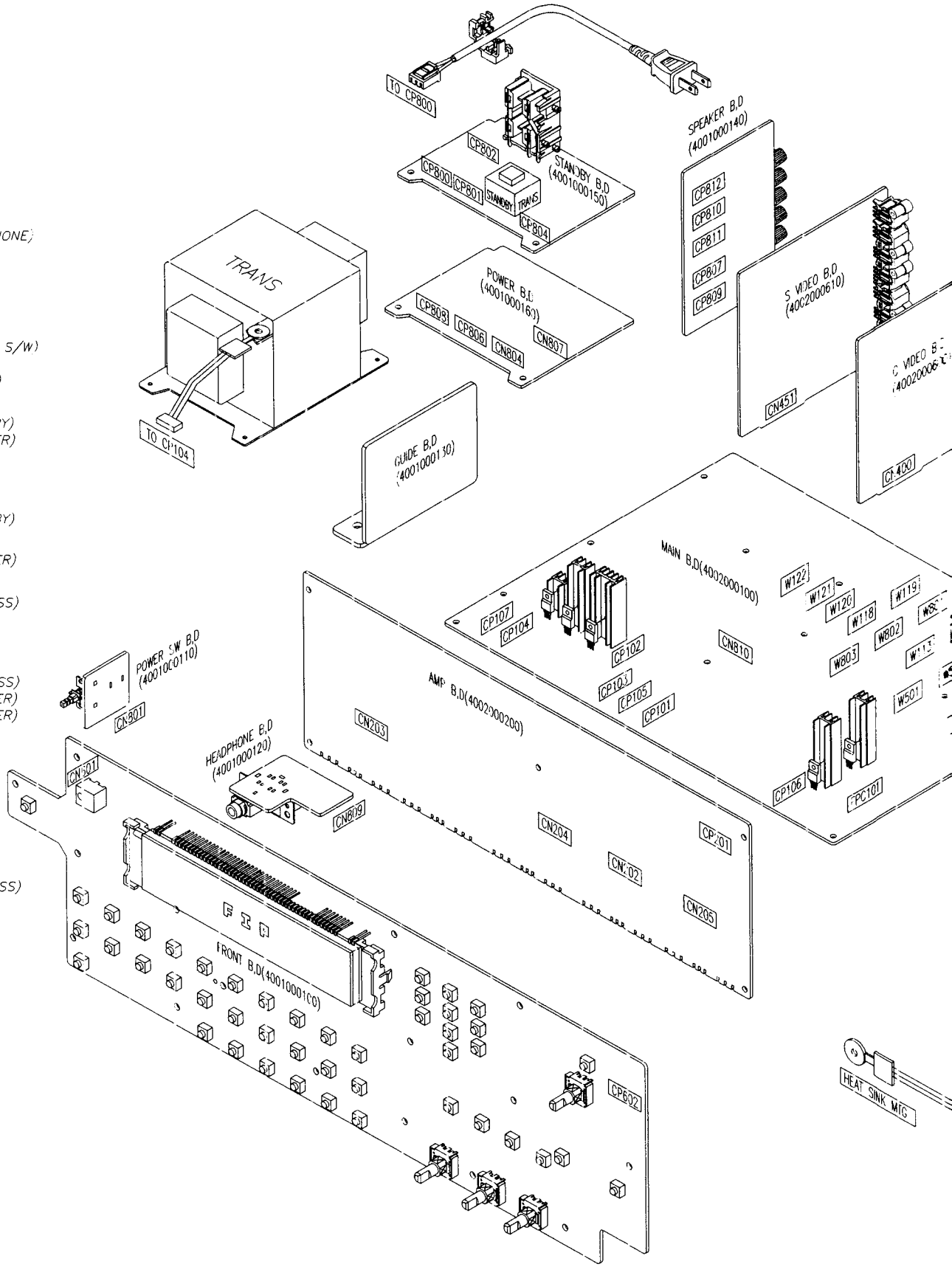

G DIAGRAM

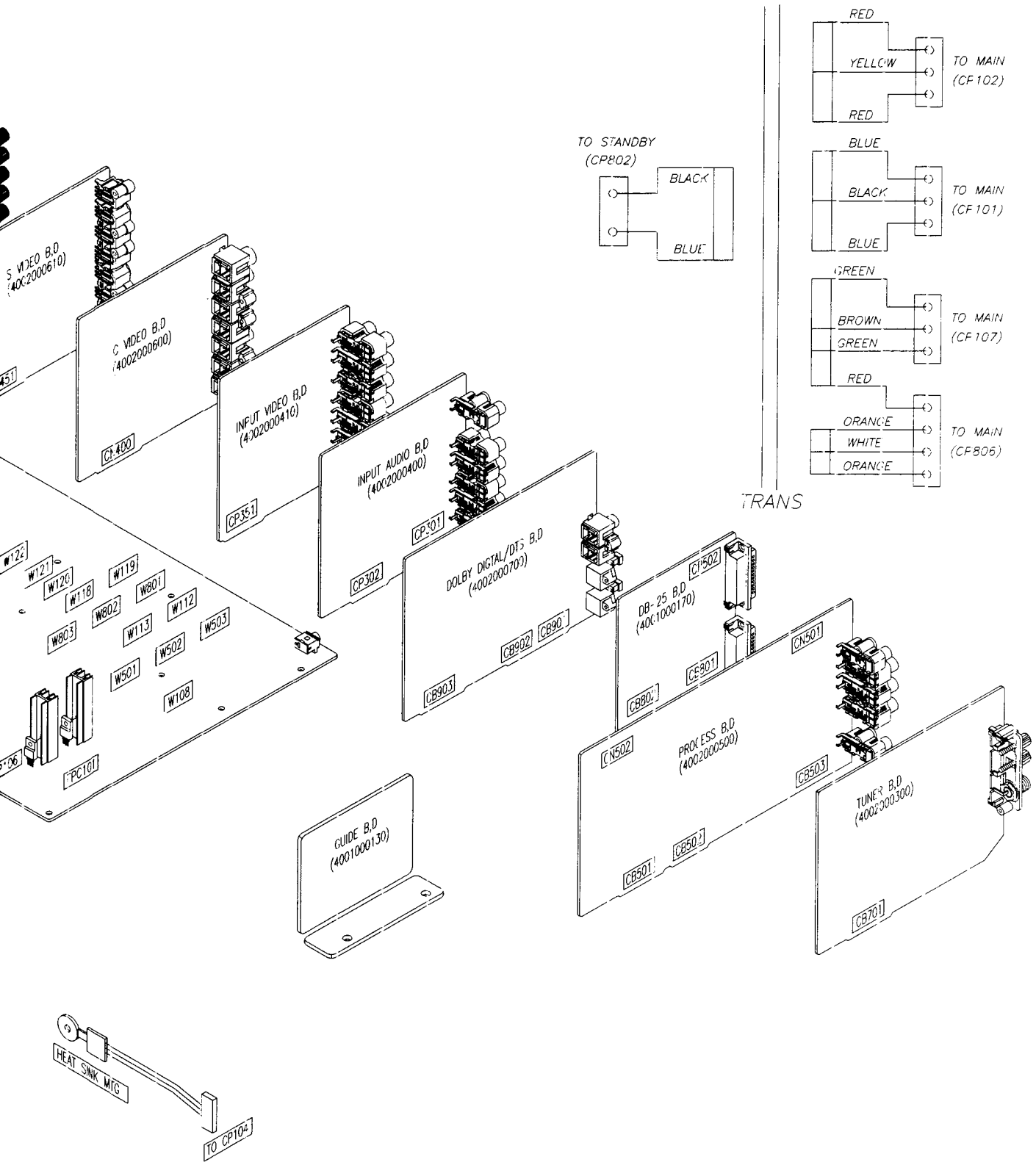
S VIDEO B.D
(4002000610)
C VIDEO B.D
(4002000600)
CN400
INPUT VIDEO B.D
(4002000410)
CP351
INPUT AUDIO B.D
(4002000400)
CP301
CP302
DOLBY DIGITAL/DTS B.D
(4002000700)
CB902
CB903
DB-25 B.D
(4001000170)
CN502
CB801
CB802
CN501
PROCESS B.D
(4002000500)
CB503
CN502
CB501
CB502
TUNER B.D
(4002000300)
CB701
GUIDE B.D
(4001000130)
W121
W120
W119
W118
W801
W802
W112
W803
W113
W503
W502
W501
W108
PC101
TO STANDBY
(CP802)
BLACK
BLUE
TRANS
RED
YELLOW
RED
TO MAIN
(CF102)
BLUE
BLACK
BLUE
TO MAIN
(CF101)
GREEN
BROWN
GREEN
TO MAIN
(CF107)
RED
ORANGE
WHITE
ORANGE
TO MAIN
(CF806)
HEAT SINK MTG
TO CP104

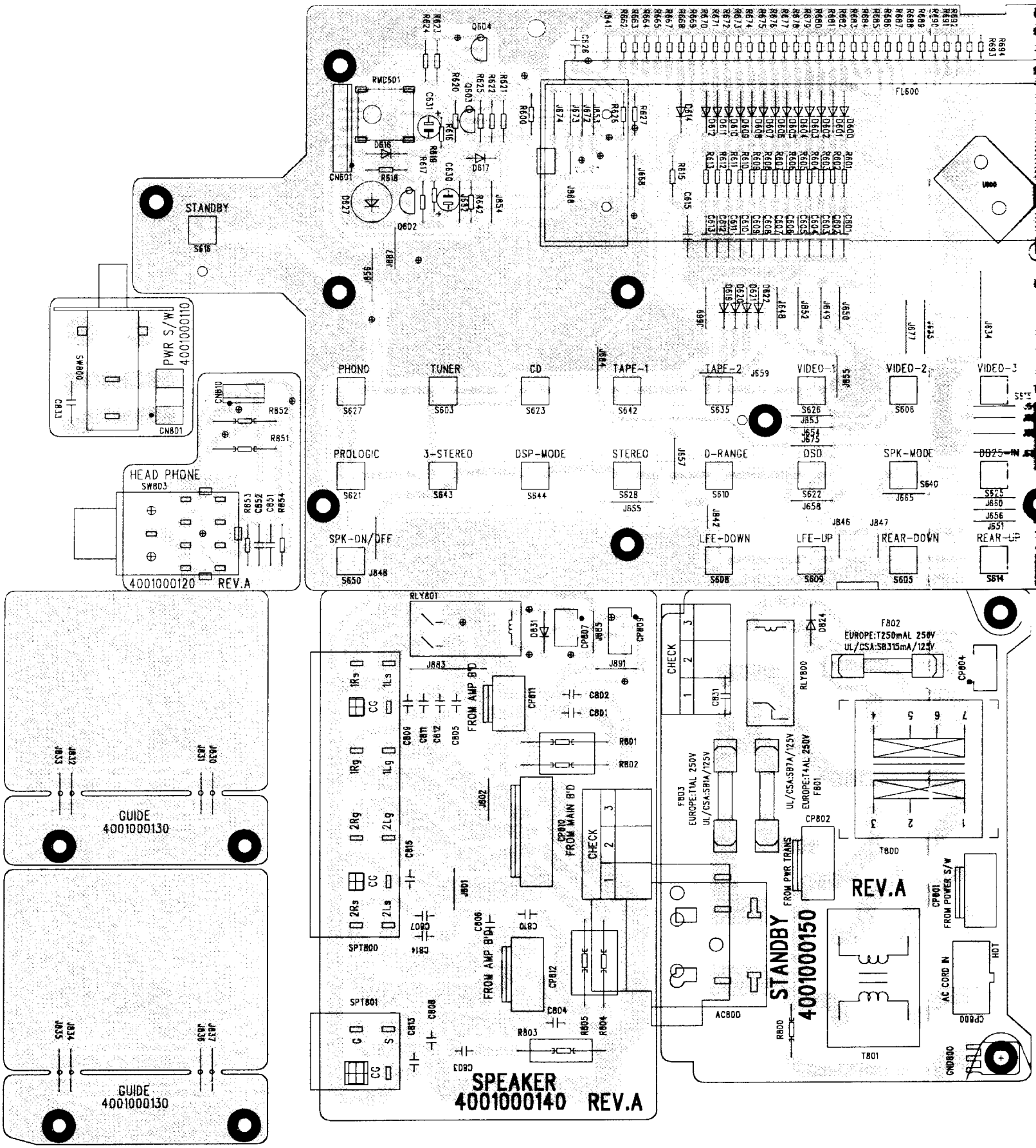
STANDBY
PWR S/W
4001000110
HEAD PHONE
4001000120 REV.A
PHONO
TUNER
CD
TAPE-1
TAPE-2
VIDEO-1
VIDEO-2
VIDEO-3
PROLOGIC
3-STEREO
DSP-MODE
STEREO
D-RANGE
DSD
SPK-MODE
SPK-ON/OFF
LFE-DOWN
LFE-UP
REAR-DOWN
REAR-UP
GUIDE
4001000130
GUIDE
4001000130
SPEAKER
4001000140 REV.A
STANDBY
4001000150
REV.A
FROM AMP B'D
FROM MAIN B'D
FROM PWR TRANS
FROM POWER S/W
AC CORD IN
CHECK
EUROPE:T250mAL 250V
UL/CSA:SB315mA/125V
EUROPE:T4AL 250V
UL/CSA:SB7A/125V
EUROPE:T1AL 250V
UL/CSA:SB1A/125V

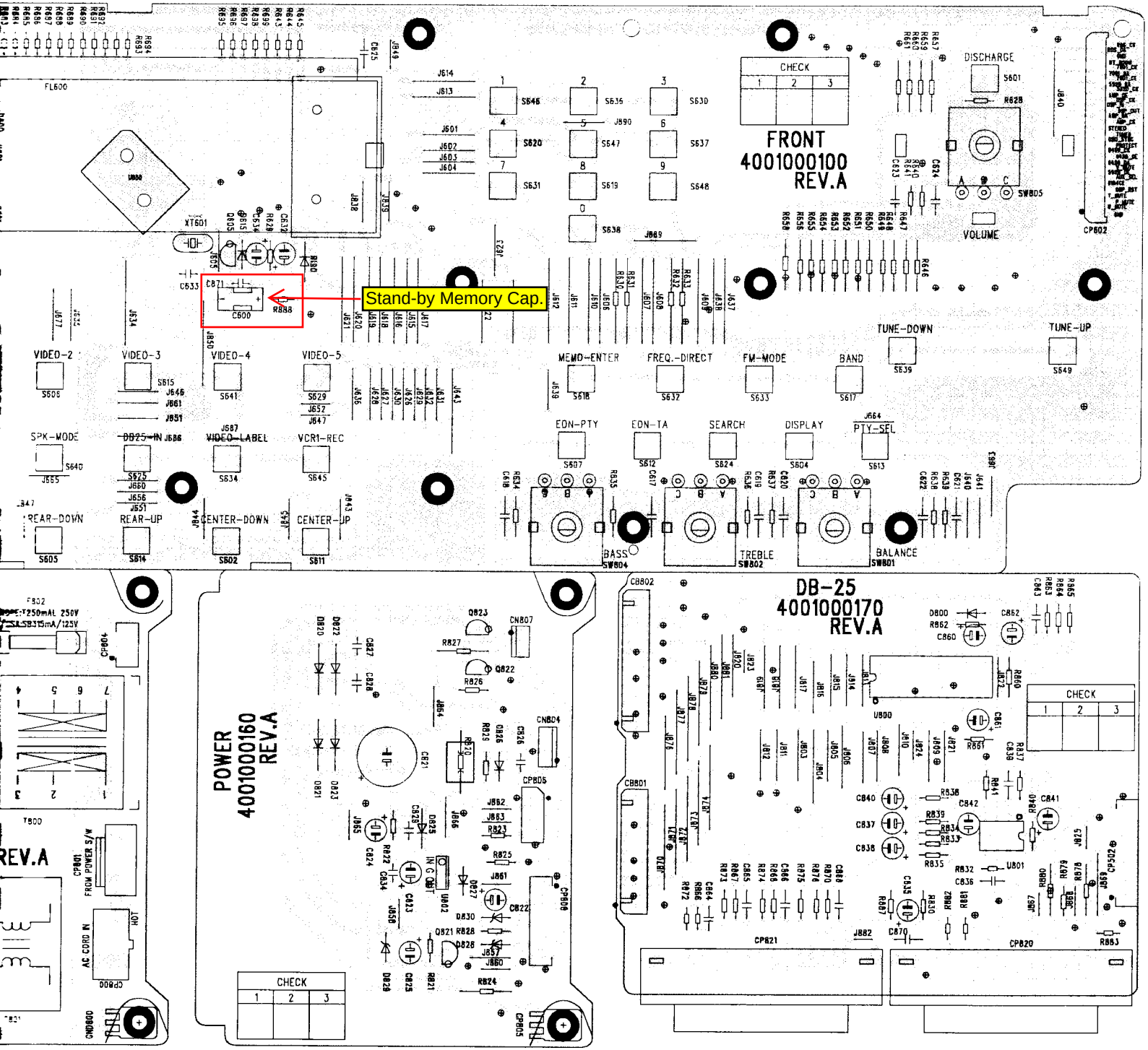
Stand-by Memory Cap.
FRONT
4001000100
REV.A
DB-25
4001000170
REV.A
POWER
4001000160
REV.A
CHECK
DISCHARGE
VOLUME
TUNE-DOWN
TUNE-UP
VIDEO-2
VIDEO-3
VIDEO-4
VIDEO-5
MEMO-ENTER
FREQ.-DIRECT
FM-MODE
BAND
SPK-MODE
DB25-IN
VIDEO-LABEL
VCR1-REC
EON-PTY
EON-TA
SEARCH
DISPLAY
PTY-SEL
REAR-DOWN
REAR-UP
CENTER-DOWN
CENTER-UP
BASS
TREBLE
BALANCE
AC CORD IN
FROM POWER S/W

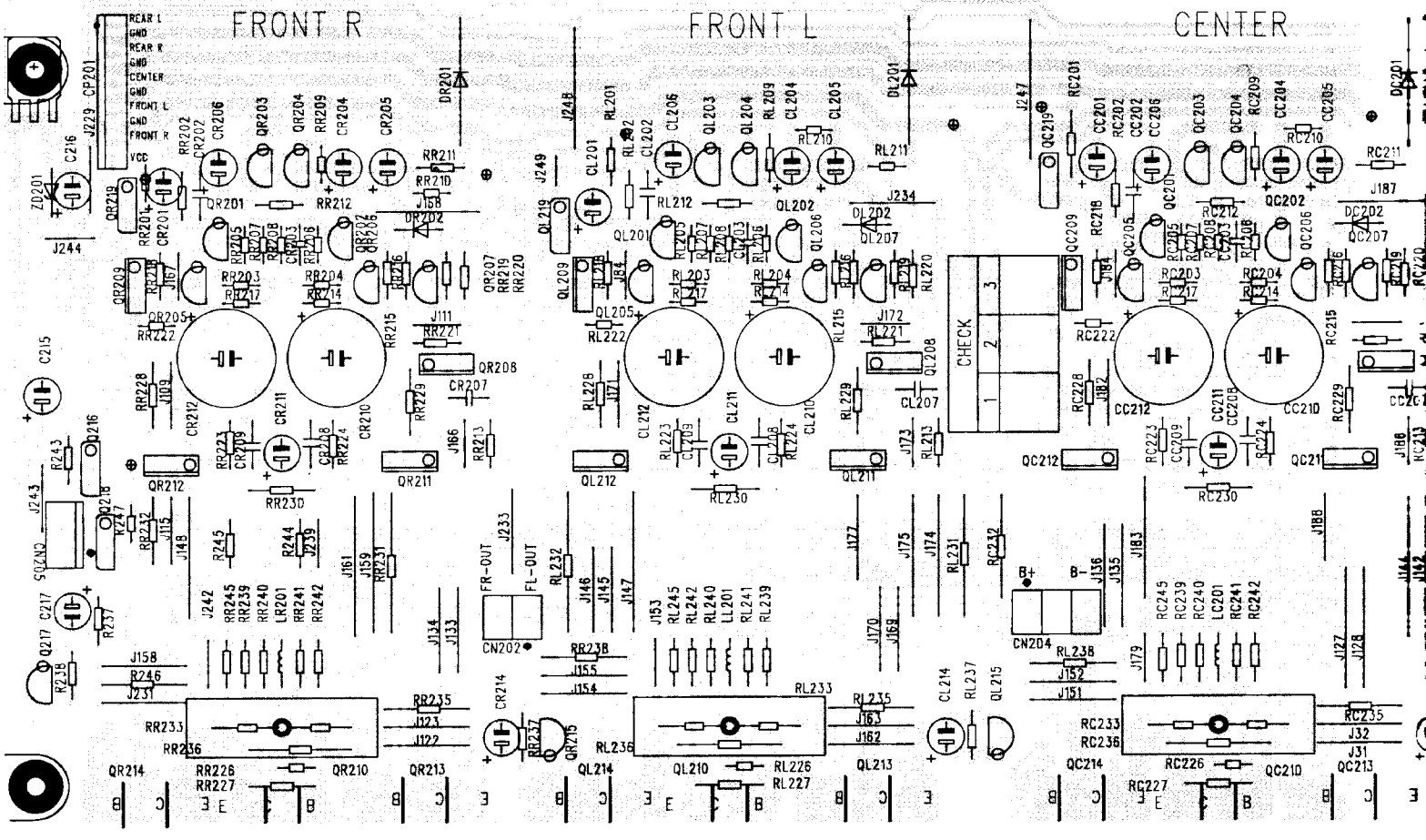
FRONT R
FRONT L
CENTER
REAR L
GND
REAR R
GND
CENTER
GND
FRONT L
GND
FRONT R
VCC
CHECK
FR-OUT
FL-OUT
B+
B-
CN202
CN204
SQZNO

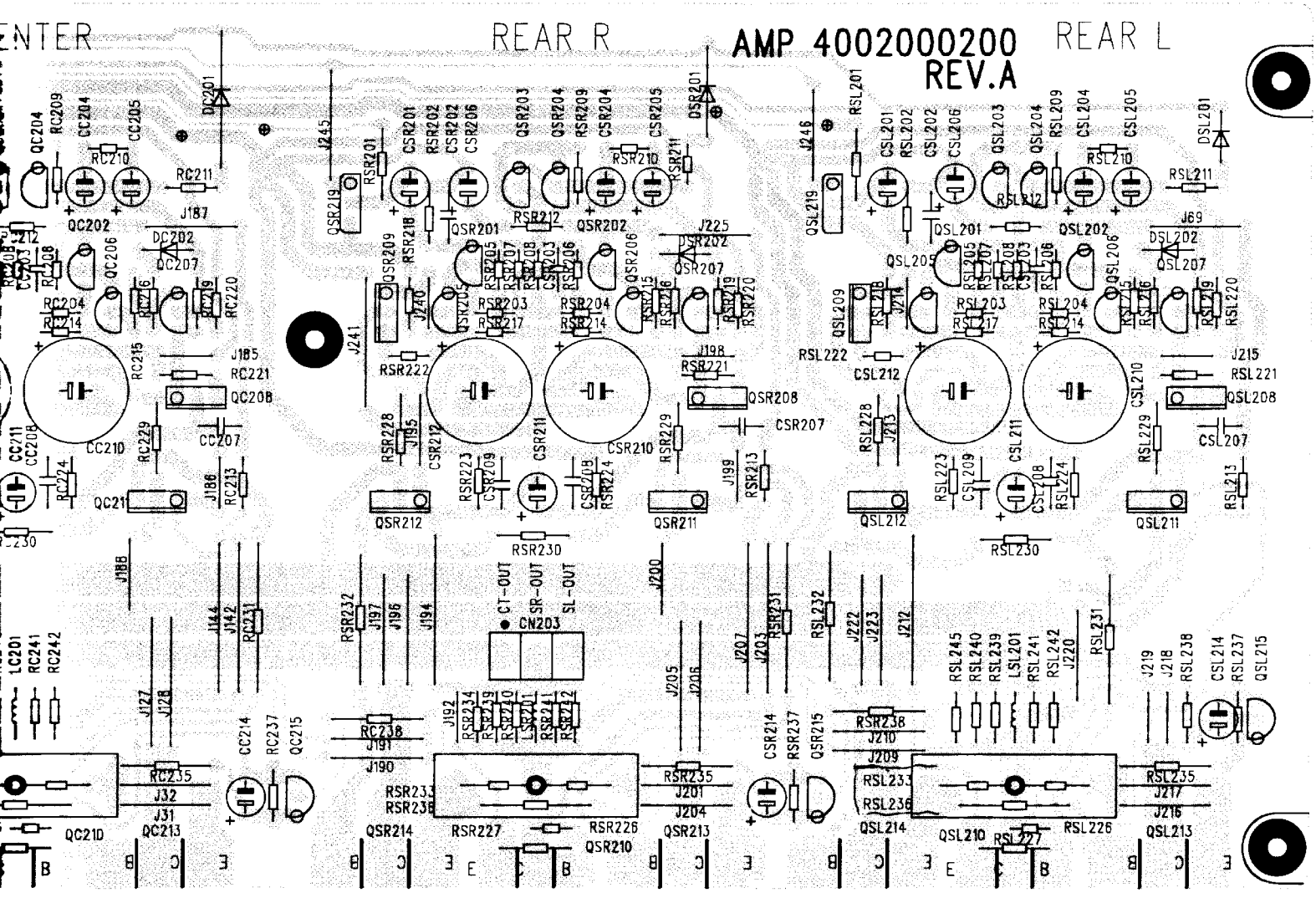
ENTER
REAR R
AMP 4002000200
REV.A
REAR L
CT-OUT
SR-OUT
SL-OUT
CN203

CHECK		
1	2	3

MAIN B'D
4002000100

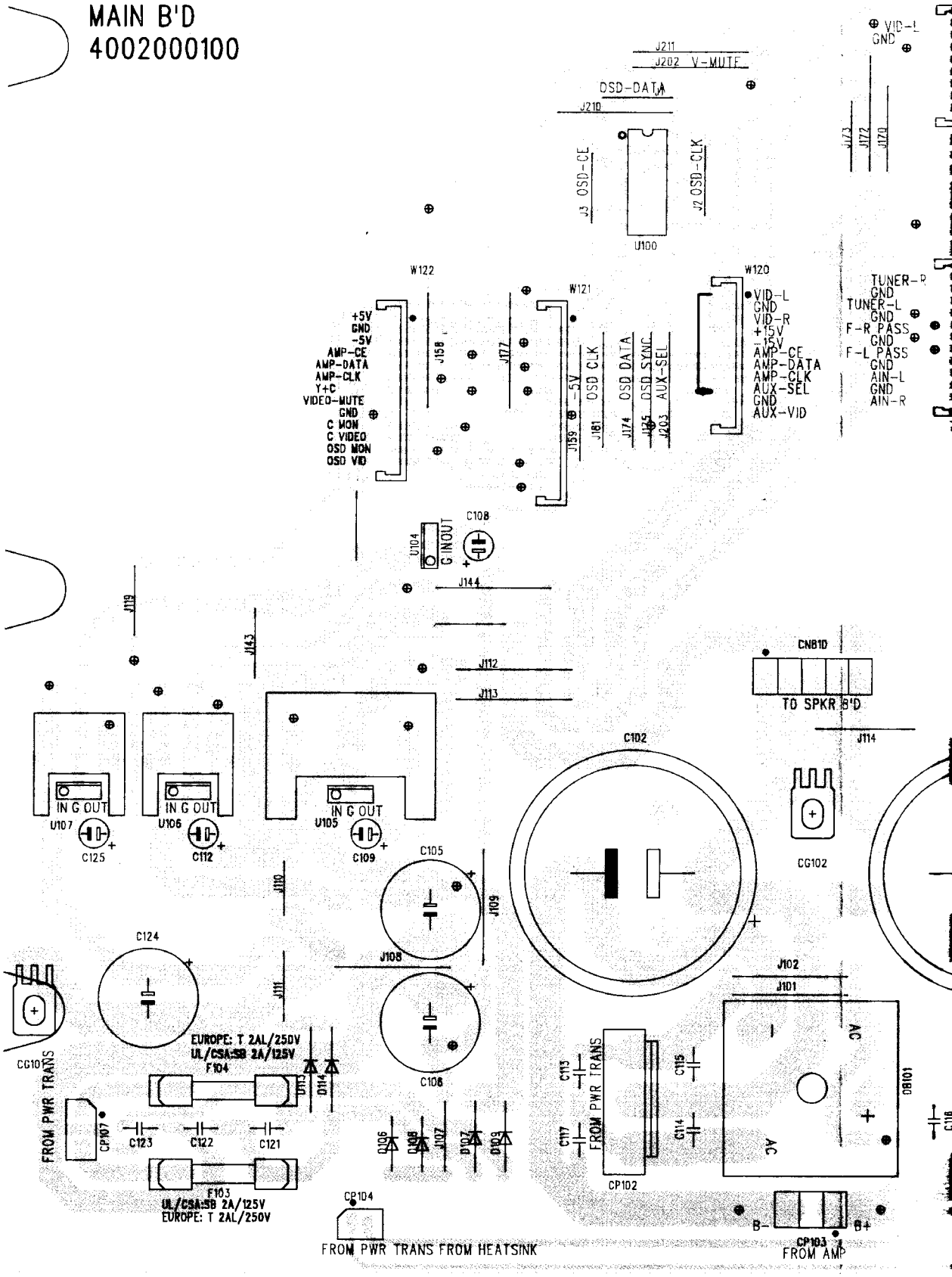

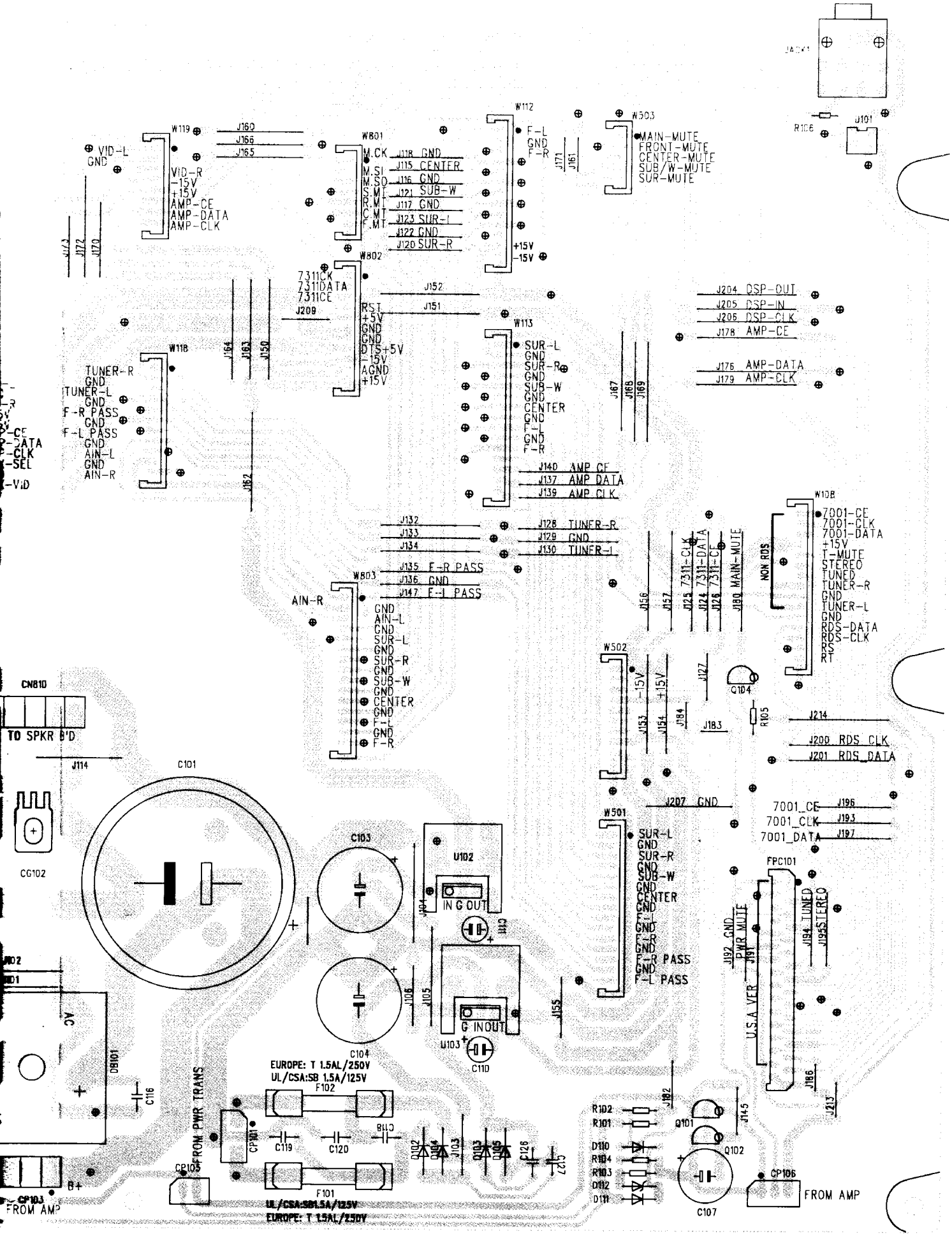
JACK1
R106
J101
W119
VID-L
GND
VID-R
-15V
+15V
AMP-CE
AMP-DATA
AMP-CLK
J160
J166
J165
W801
M.CK
M.SI
M.SO
S.MT
R.MT
C.MT
F.MT
J118 GND
J115 CENTER
J116 GND
J121 SUB-W
J117 GND
J123 SUR-L
J122 GND
J120 SUR-R
W112
F-L
GND
F-R
+15V
-15V
J171
J161
W503
MAIN-MUTE
FRONT-MUTE
CENTER-MUTE
SUB/W-MUTE
SUR-MUTE
J173
J172
J170
W802
7311CK
7311DATA
7311CE
J209
RST
+5V
GND
GND
DTS+5V
-15V
AGND
+15V
J152
J151
J204 DSP-OUT
J205 DSP-IN
J206 DSP-CLK
J178 AMP-CE
J176 AMP-DATA
J179 AMP-CLK
W113
SUR-L
GND
SUR-R
GND
SUB-W
GND
CENTER
GND
F-L
GND
F-R
J167
J168
J169
W118
TUNER-R
GND
TUNER-L
GND
F-R PASS
GND
F-L PASS
GND
AIN-L
GND
AIN-R
J164
J163
J150
J162
J140 AMP CE
J137 AMP DATA
J139 AMP CLK
J132
J133
J134
J128 TUNER-R
J129 GND
J130 TUNER-L
W803
J135 F-R PASS
J136 GND
J147 F-L PASS
AIN-R
GND
AIN-L
GND
SUR-L
GND
SUR-R
GND
SUB-W
GND
CENTER
GND
F-L
GND
F-R
J156
J157
J125 7311-CLK
J124 7311-DATA
J126 7311-CE
J180 MAIN-MUTE
NON RDS
W108
7001-CE
7001-CLK
7001-DATA
+15V
T-MUTE
STEREO
TUNED
TUNER-R
GND
TUNER-L
GND
RDS-DATA
RDS-CLK
RS
RT
W502
-15V
+15V
J153
J154
J184
J127
Q104
J183
R105
J214
J200 RDS CLK
J201 RDS DATA
J207 GND
7001_CE
7001_CLK
7001_DATA
J196
J193
J197
W501
SUR-L
GND
SUR-R
GND
SUB-W
GND
CENTER
GND
F-L
GND
F-R
GND
F-R PASS
GND
F-L PASS
FPC101
J192 GND
PWR MUTE
J191
J194 TUNED
J195 STEREO
U.S.A VER
J186
J213
CN810
TO SPKR B'D
J114
C101
CG102
C103
U102
IN G OUT
J104
C111
C104
U103
G IN OUT
C110
J106
J105
J155
J102
J101
AC
DB101
C116
EUROPE: T 1.5AL/250V
UL/CSA:SB 1.5A/125V
F102
FROM PWR TRANS
CP101
C119
C120
C118
D102
D104
J103
D103
D105
C126
C127
CP105
F101
UL/CSA:SB1.5A/125V
EUROPE: T 1.5AL/250V
B+
CP103
FROM AMP
R102
R101
D110
R104
R103
D112
D111
J182
Q101
Q102
J145
C107
CP106
FROM AMP

TUNER
400200300
REV.A
ANT1
ANT2
CHECK
1
2
3
LA1266
LA7304
BU1920F
LC7073
LM7001
DATA
CLOCK
DS
ARI
AM T/L
FM T/L
SEP.
VT
CT

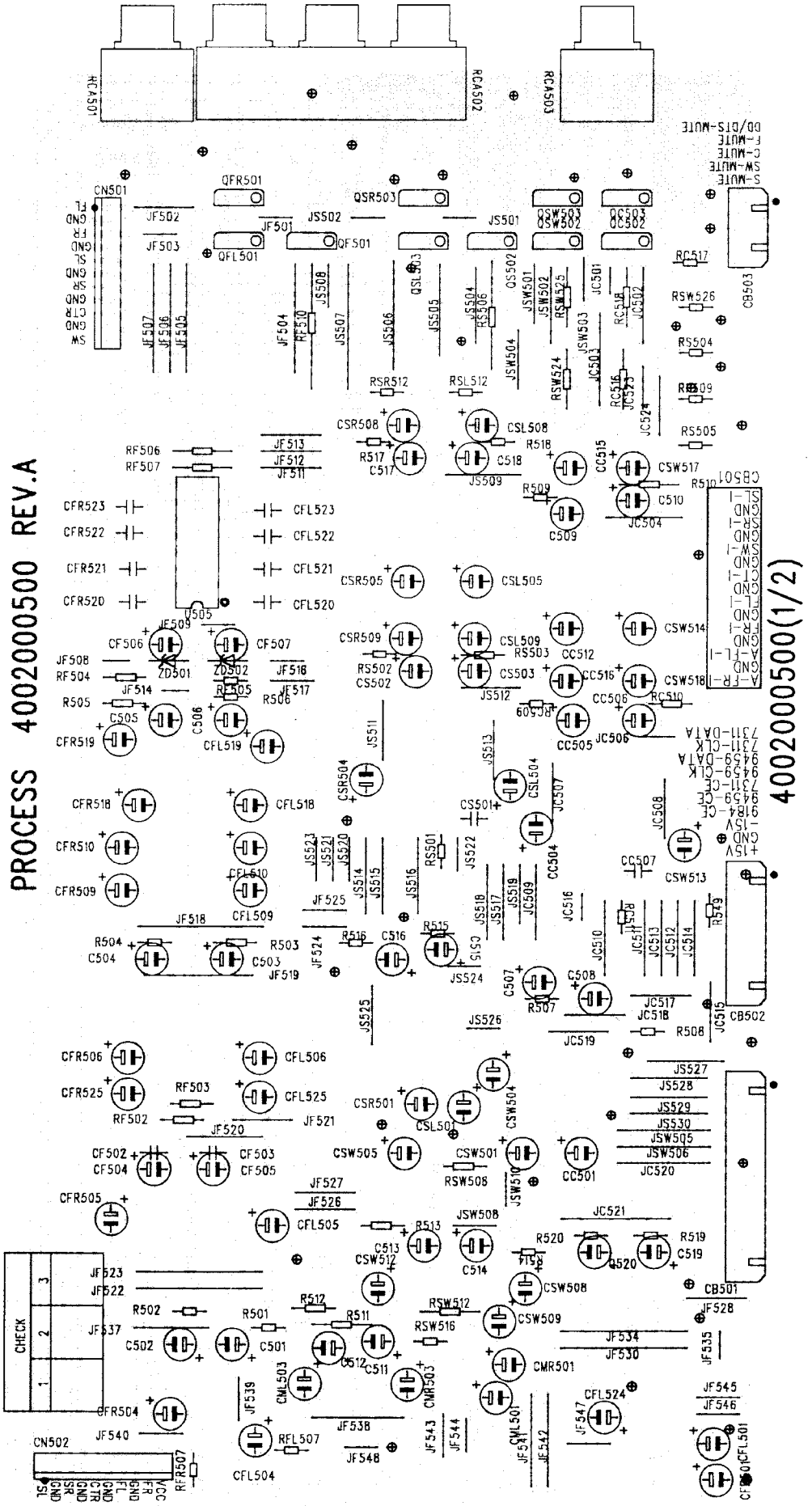
PROCESS 4002000500 REV.A
4002000500(1/2)
CN501
CN502
CB501
CB502
CB503
CHECK

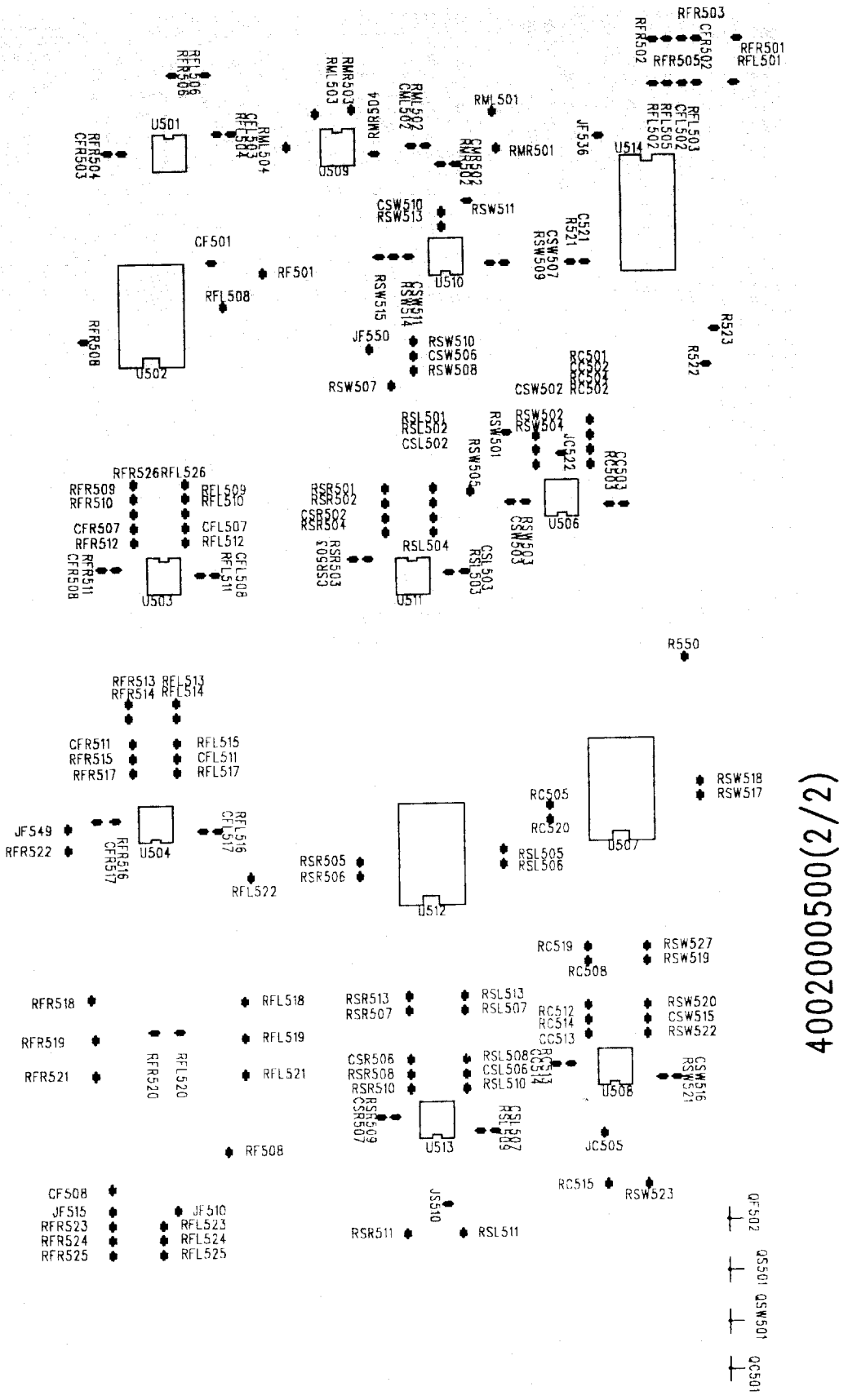

4002000500(2/2)

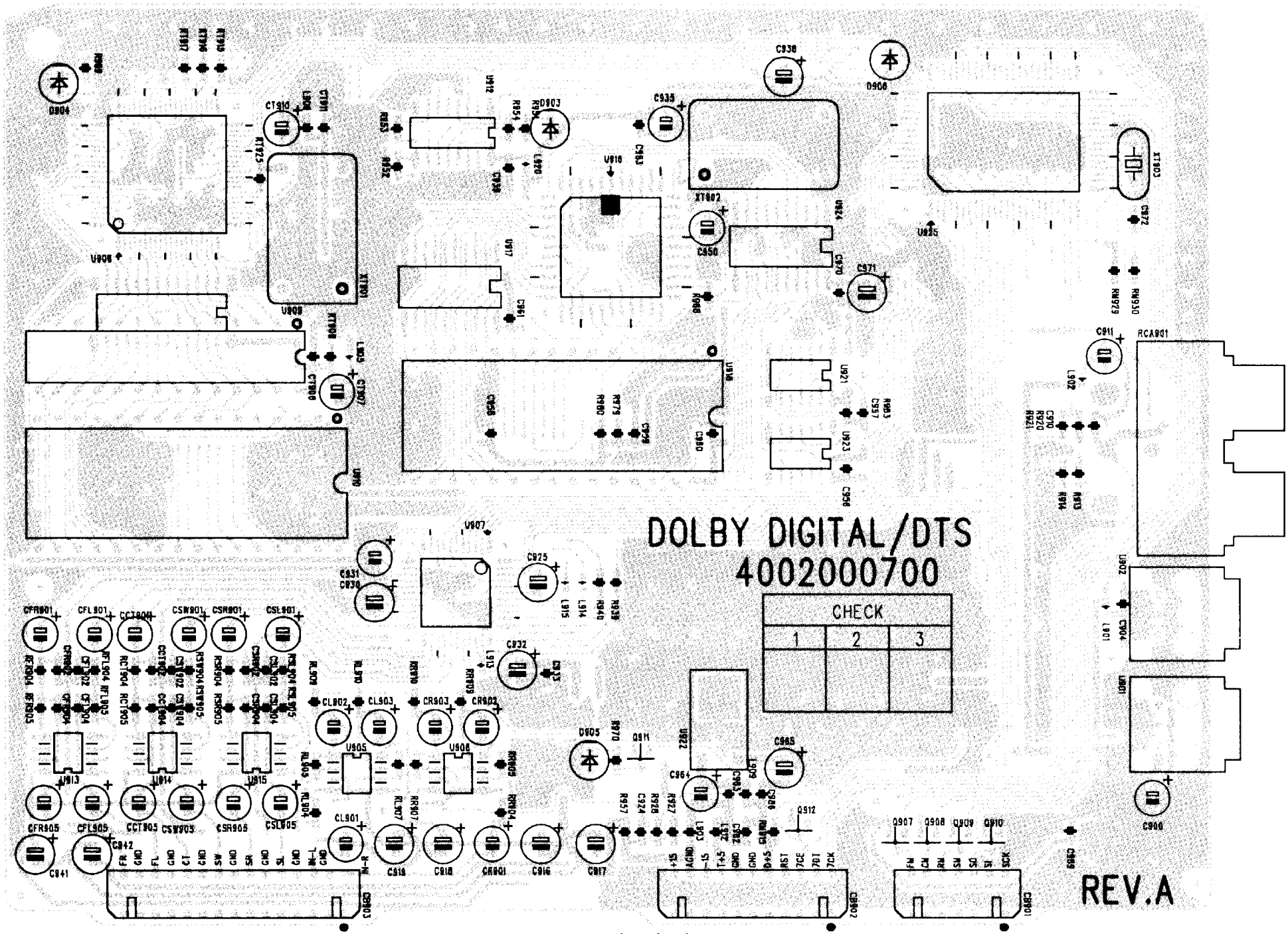

4002000700 (1/2)

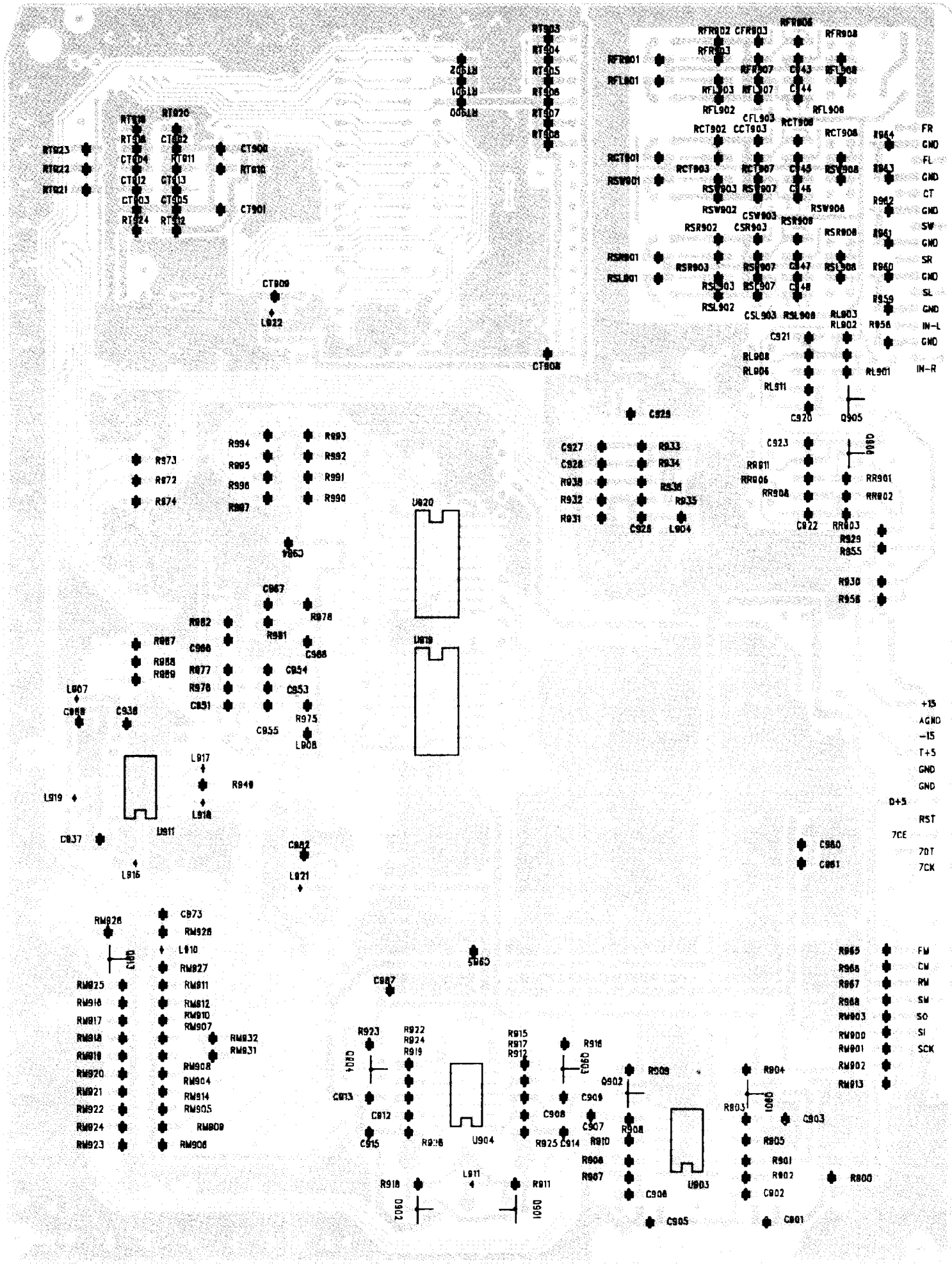

4002000700(2/2)

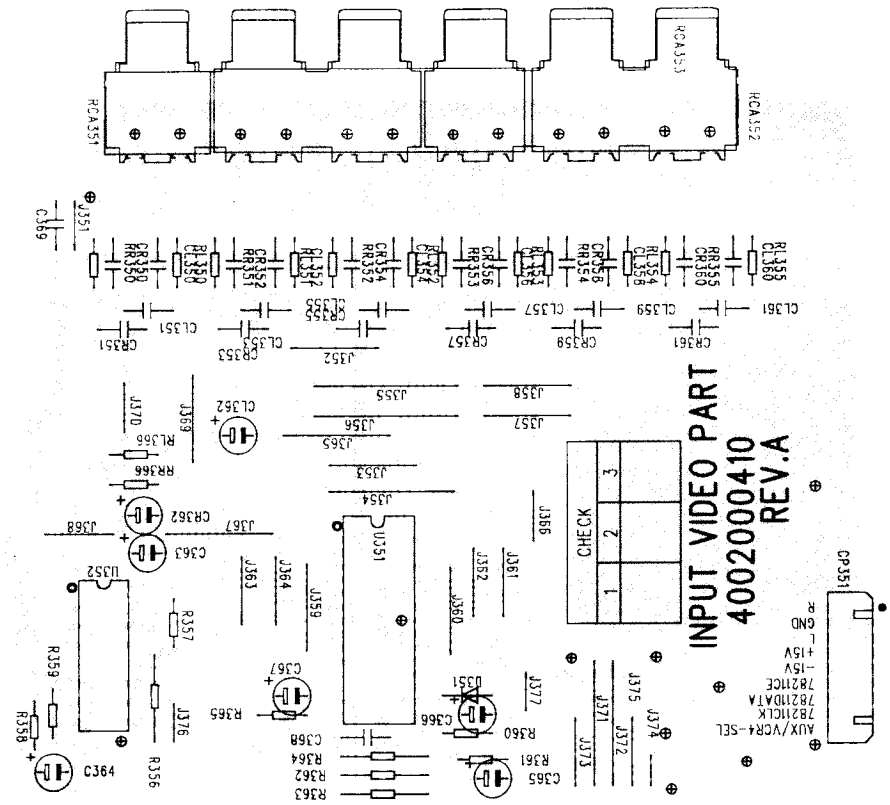
INPUT VIDEO PART
4002000410
REV.A
CHECK
1
2
3
CP351
AUX/VCR4-SEL
7821TCLK
7821TDATA
7821TCE
-15V
+15V
L
GND
R
RCA351
RCA352
RCA353
U551
U552
C364
C365
C366
C367
C368
C362
C363
R357
R359
R358
R356
R365
R360
R361
R362
R363
R364
D551

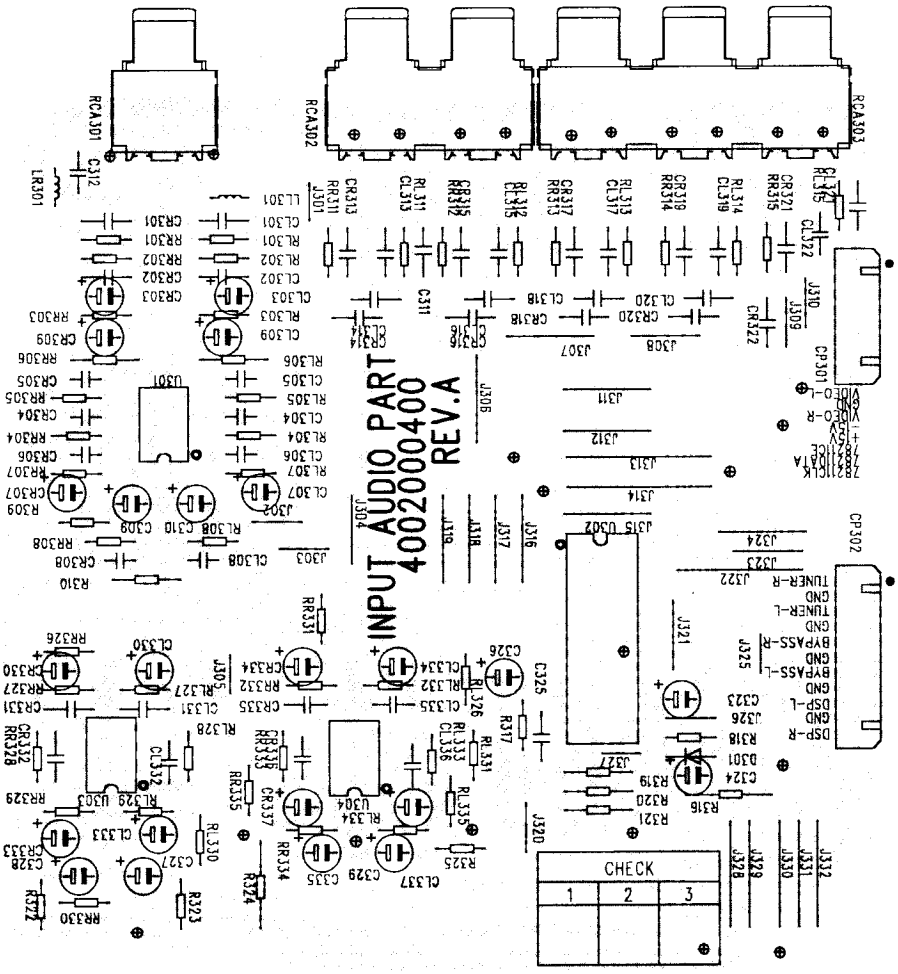
INPUT AUDIO PART
4002000400
REV.A
CHECK
1
2
3
CP301
VIDEO-L
VIDEO-R
+15V
-15V
7821TDATA
7821TCE
7821TCLK
CP302
TUNER-R
GND
TUNER-L
GND
GND
BYPASS-R
GND
BYPASS-L
GND
GND
DSP-L
GND
DSP-R
RCA301
RCA302
RCA303
U301
U302
U303
U304
U305
U306
U307
D301
C325
C326
C327
C328
C329
C330
C331
C332
C333
C334
C335
C337
R316
R318
R319
R320
R321
R323
R324
R325
R326
R327
R328
R329
R330
R310
LR301

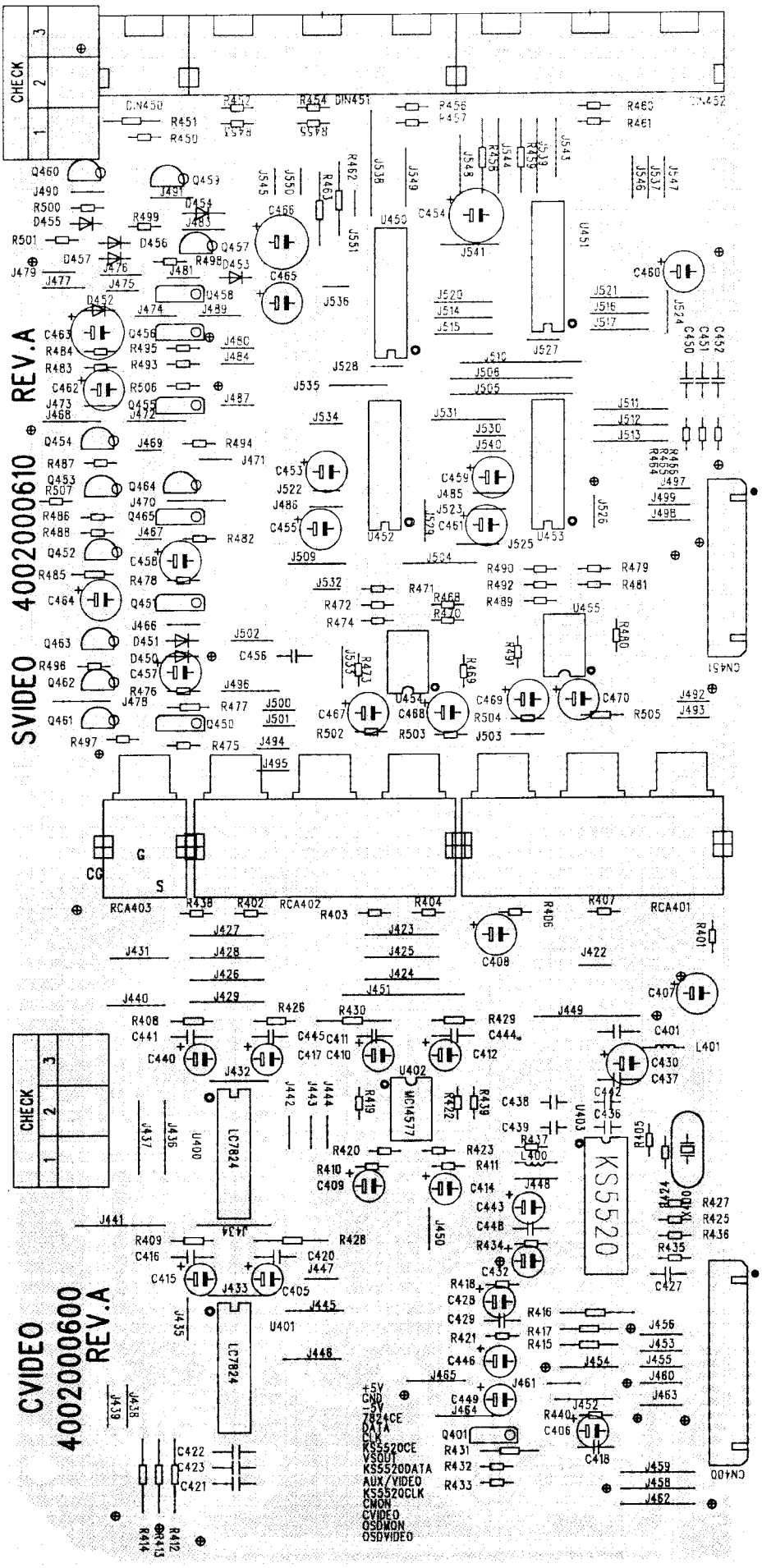
SVIDEO
4002000610
REV.A
CVIDEO
4002000600
REV.A
CHECK
CN451
CN400
RCA403
RCA402
RCA401
U451
U452
U453
U455
U454
U402
U400
U401
U403
LC7824
WC14577
KS5520
+5V
GND
-5V
7824CE
DATA
CLK
KS5520CE
VSOUT
KS5520DATA
AUX/VIDEO
KS5520CLK
CMON
CVIDEO
OSDMON
OSDVIDEO

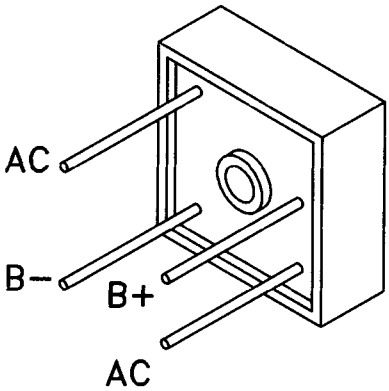

KBPC2504W

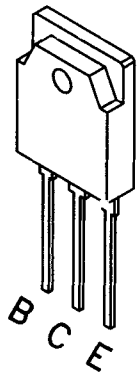

2SA1386A
2SC3519A

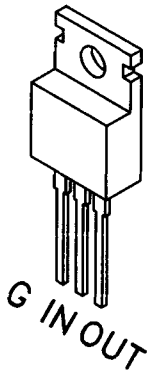

KIA7905
KIA7915

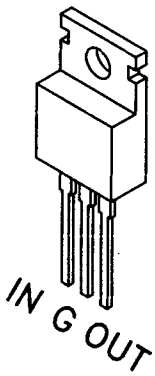

KIA7805
KIA7815

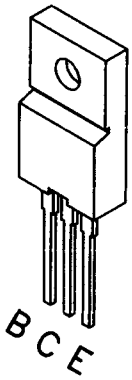

2SA1859A
2SC4883A

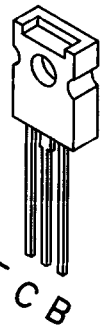

2SA1360
2SC3423

DTC323
DTA107
DTC107

KTC3198, KTA1268
BTKA1266, KTC3200

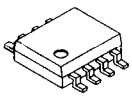

NJM5532F

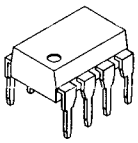

NJM5532M
MC14577

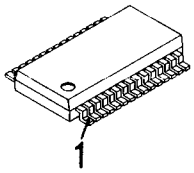

NJM7311

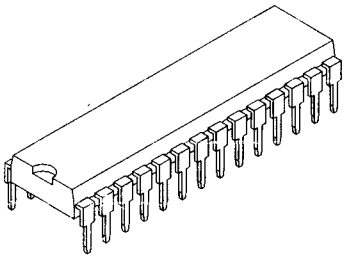

CY7C199

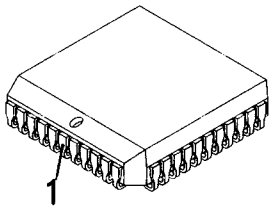

CS4923
CS4926

PART APPEARANCE

ROTEL			
MODEL NAME	RSX965		
BOARD NAME	Block Diagram		

BLOCK DIAGRAM

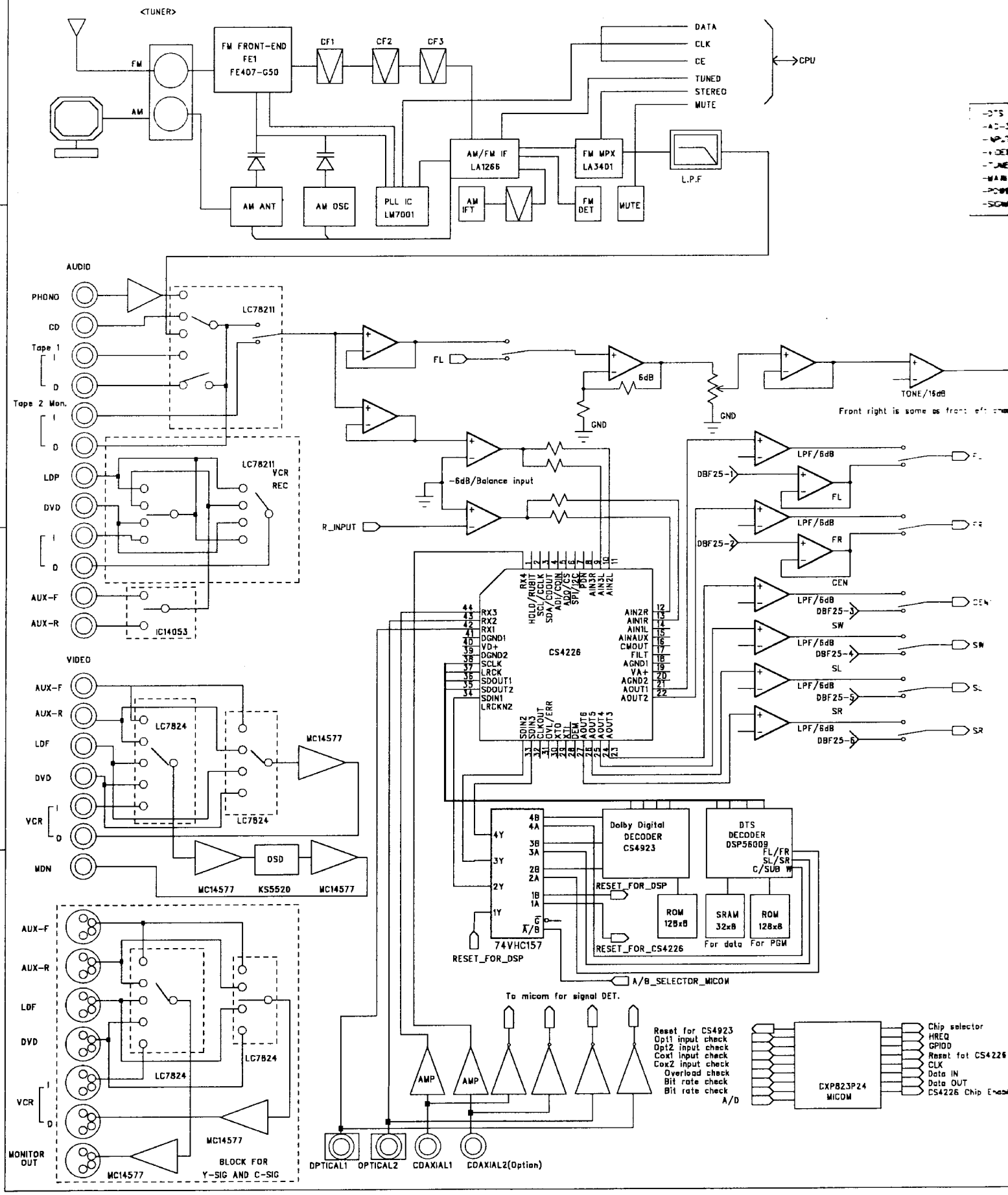

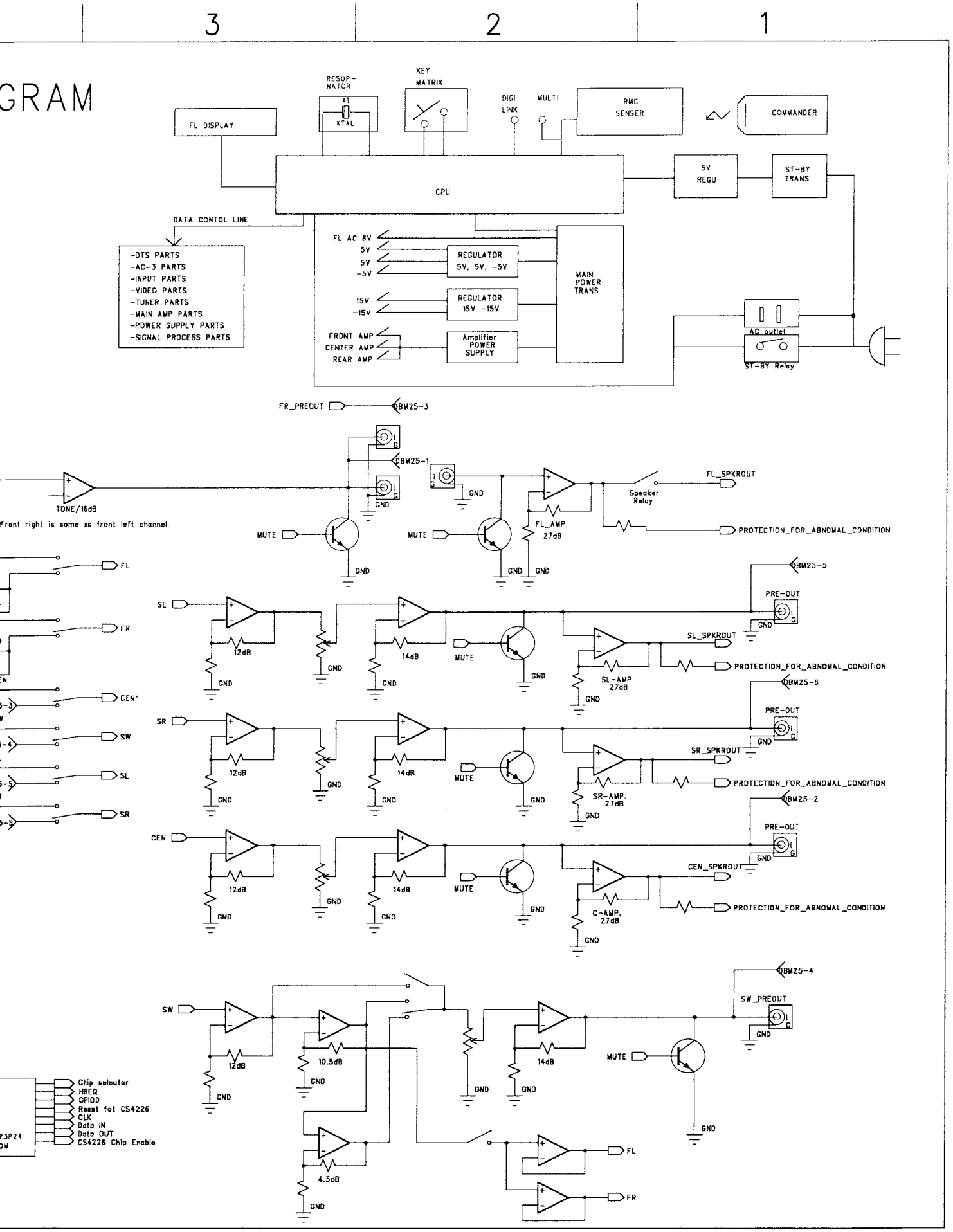
3
2
1
GRAM
FL DISPLAY
RESOP-NATOR
X1
XTAL
KEY MATRIX
DIGI LINK
MULTI
RMC SENSER
COMMANDER
CPU
5V REGU
ST-BY TRANS
DATA CONTOL LINE
-DTS PARTS
-AC-3 PARTS
-INPUT PARTS
-VIDEO PARTS
-TUNER PARTS
-MAIN AMP PARTS
-POWER SUPPLY PARTS
-SIGNAL PROCESS PARTS
FL AC 6V
5V
5V
-5V
REGULATOR 5V, 5V, -5V
15V
-15V
REGULATOR 15V -15V
FRONT AMP
CENTER AMP
REAR AMP
Amplifier POWER SUPPLY
MAIN POWER TRANS
AC outlet
ST-BY Relay
FR_PREOUT
BM25-3
BM25-1
TONE/16dB
Front right is same as front left channel.
GND
MUTE
FL_AMP. 27dB
Speaker Relay
FL_SPKROUT
PROTECTION_FOR_ABNOMAL_CONDITION
FL
FR
CEN
SW
SL
SR
BM25-5
PRE-OUT
SL_SPKROUT
SL-AMP 27dB
BM25-6
SR_SPKROUT
SR-AMP. 27dB
BM25-2
CEN_SPKROUT
C-AMP. 27dB
12dB
14dB
BM25-4
SW_PREOUT
10.5dB
4.5dB
Chip selector
HREQ
GPIOD
Reset fot CS4226
CLK
Data IN
Data OUT
CS4226 Chip Enable

ROTEL			
MODEL NAME	RSX965		
BOARD NAME	FRONT		

SCHEMATIC DIA

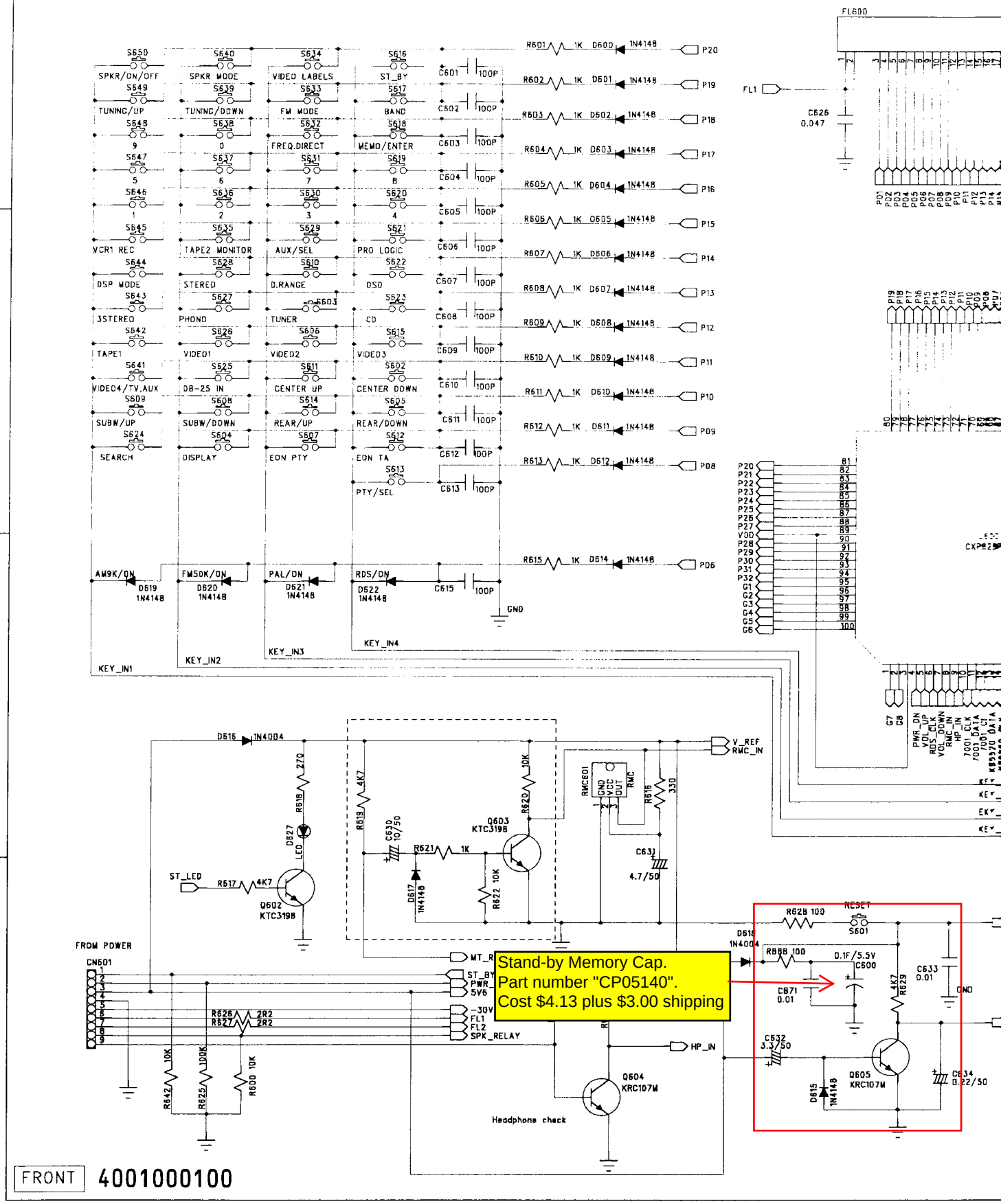

FRONT 4001000100

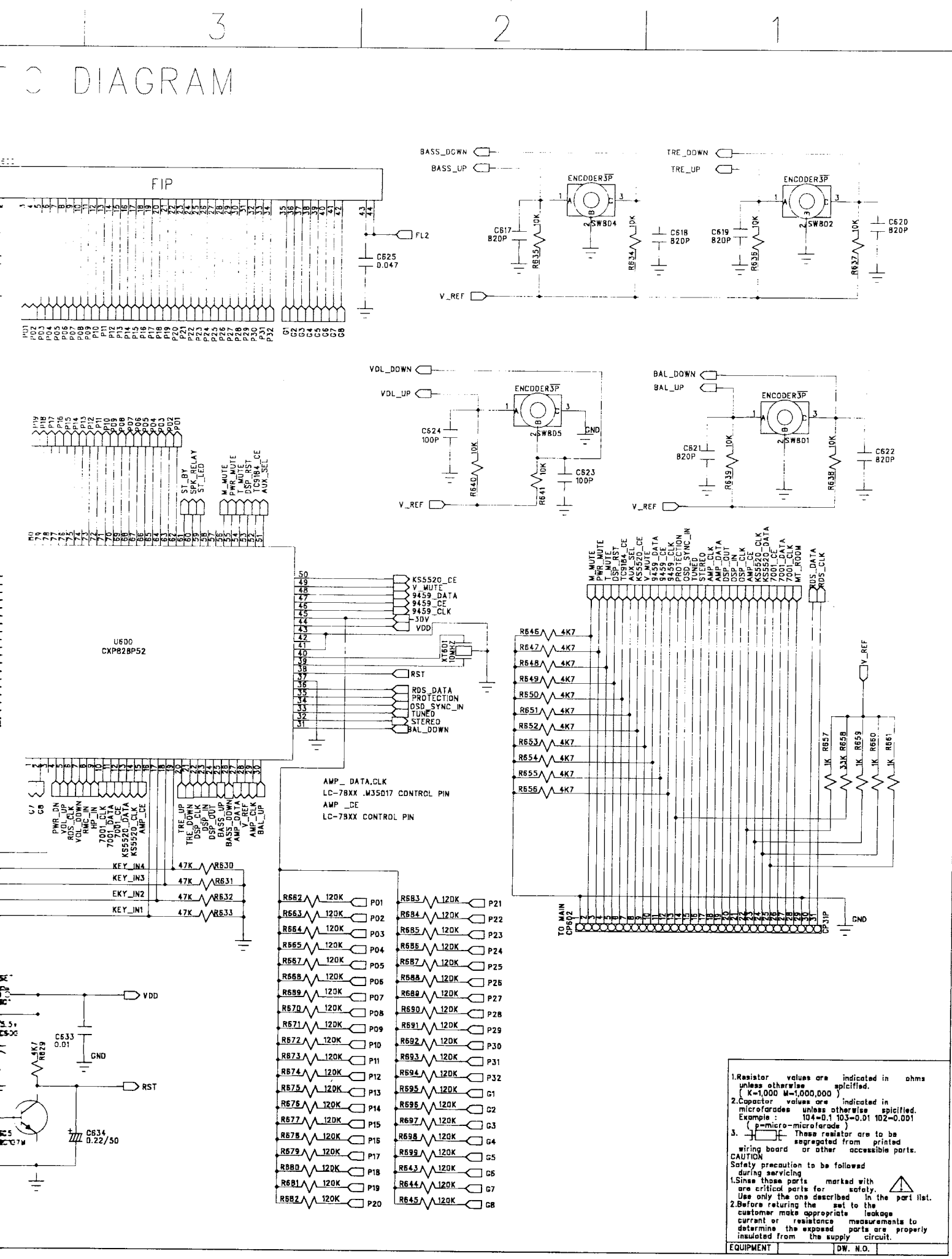
3
2
1
C DIAGRAM
FIP
FL2
C625
0.047
BASS_DOWN
BASS_UP
ENCODER3P
SW804
C617
820P
R635
10K
R634
10K
C618
820P
V_REF
TRE_DOWN
TRE_UP
SW802
C619
820P
R636
10K
R637
10K
C620
820P
VOL_DOWN
VOL_UP
SW805
C624
100P
R640
10K
R641
10K
C623
100P
GND
BAL_DOWN
BAL_UP
SW801
C621
820P
R639
10K
R638
10K
C622
820P
ST_BY
SPK_RELAY
ST_LED
M_MUTE
PWR_MUTE
T_MUTE
DSP_RST
TC9184_CE
AUX_SEL
U600
CXP82BP52
KS5520_CE
V_MUTE
9459_DATA
9459_CE
9459_CLK
3DV
VDD
XT601
10MHZ
RST
RDS_DATA
PROTECTION
OSD_SYNC_IN
TUNED
STEREO
BAL_DOWN
PWR_DN
VOL_UP
RDS_CLK
VOL_DOWN
AMP_IN
7001_CLK
7001_DATA
7001_CE
KS5520_DATA
KS5520_CLK
AMP_CE
TRE_UP
TRE_DOWN
DSP_CLK
DSP_OUT
BASS_UP
BASS_DOWN
AMP_DATA
V_REF
AMP_CLK
BAL_UP
AMP_ DATA,CLK
LC-78XX .M35017 CONTROL PIN
AMP _CE
LC-78XX CONTROL PIN
KEY_IN4
KEY_IN3
EKY_IN2
KEY_IN1
47K
R630
R631
R632
R633
VDD
C633
0.01
GND
4K7
R629
RST
C634
0.22/50
R646
R647
R648
R649
R650
R651
R652
R653
R654
R655
R656
4K7
M_MUTE
PWR_MUTE
T_MUTE
DSP_RST
TC9184_CE
AUX_SEL
KS5520_CE
V_MUTE
9459_DATA
9459_CE
9459_CLK
9459_CE
PROTECTION
OSD_SYNC_IN
TUNED
STEREO
AMP_CLK
AMP_DATA
DSP_OUT
DSP_IN
DSP_CLK
AMP_CE
KS5520_CLK
KS5520_DATA
7001_CE
7001_DATA
7001_CLK
MT_ROOM
RDS_DATA
RDS_CLK
V_REF
R657
1K
R658
33K
R659
1K
R660
1K
R661
1K
TO MAIN
CP602
CP31P
GND
R662
R663
R664
R665
R667
R668
R669
R670
R671
R672
R673
R674
R675
R676
R677
R678
R679
R680
R681
R682
120K
P01
P02
P03
P04
P05
P06
P07
P08
P09
P10
P11
P12
P13
P14
P15
P16
P17
P18
P19
P20
R683
R684
R685
R686
R687
R688
R689
R690
R691
R692
R693
R694
R695
R696
R697
R698
R699
R643
R644
R645
P21
P22
P23
P24
P25
P26
P27
P28
P29
P30
P31
P32
G1
G2
G3
G4
G5
G6
G7
G8
1.Resistor values are indicated in ohms unless otherwise spicified.
(K=1,000 M=1,000,000)
2.Capacitor values are indicated in microfarades unless otherwise spicified.
Example : 104=0.1 103=0.01 102=0.001
(p=micro-microfarade)
3. These resistor are to be segregated from printed wiring board or other accessible parts.
CAUTION
Safety precaution to be followed during servicing
1.Since those parts marked with are critical parts for safety. Use only the one described in the part list.
2.Before returing the set to the customer make appropriate leakage current or resistance measurements to determine the exposed parts are properly insulated from the supply circuit.
EQUIPMENT
DW. N.O.

ROTEL			
MODEL NAME	RSX965		
BOARD NAME	FRONT		

SCHEMATIC DIAG

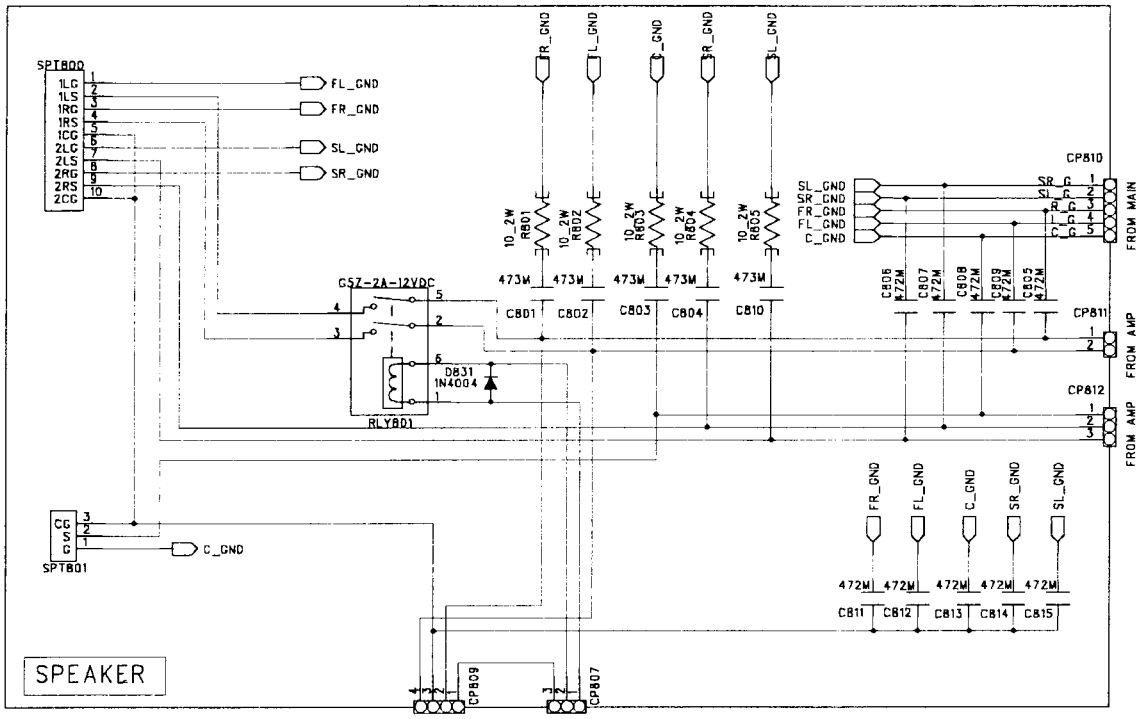

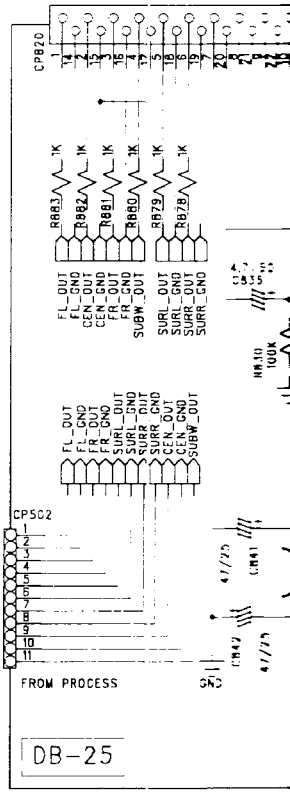

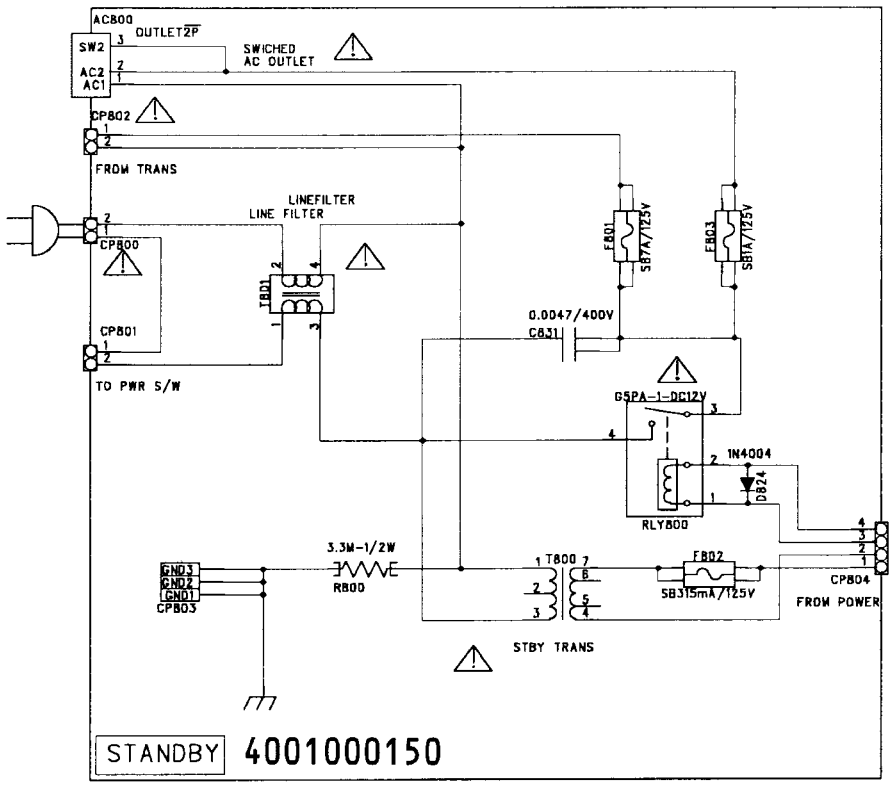

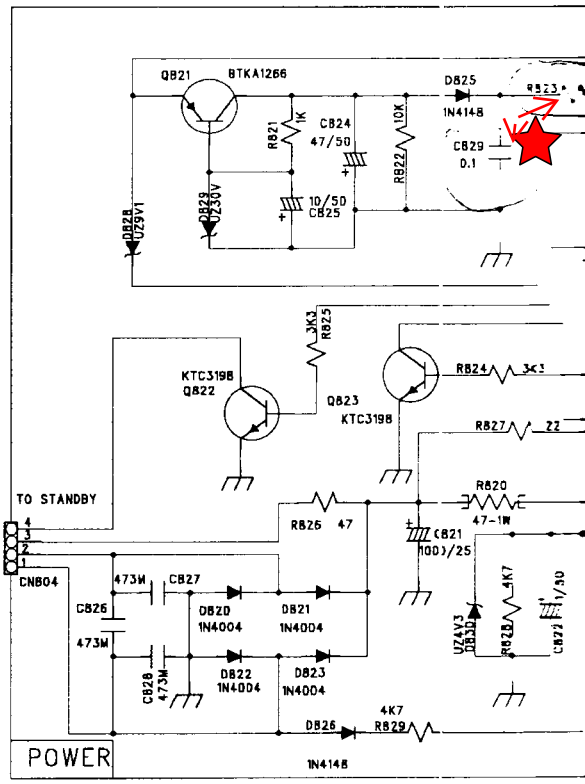

3 2 1

DIAGRAM

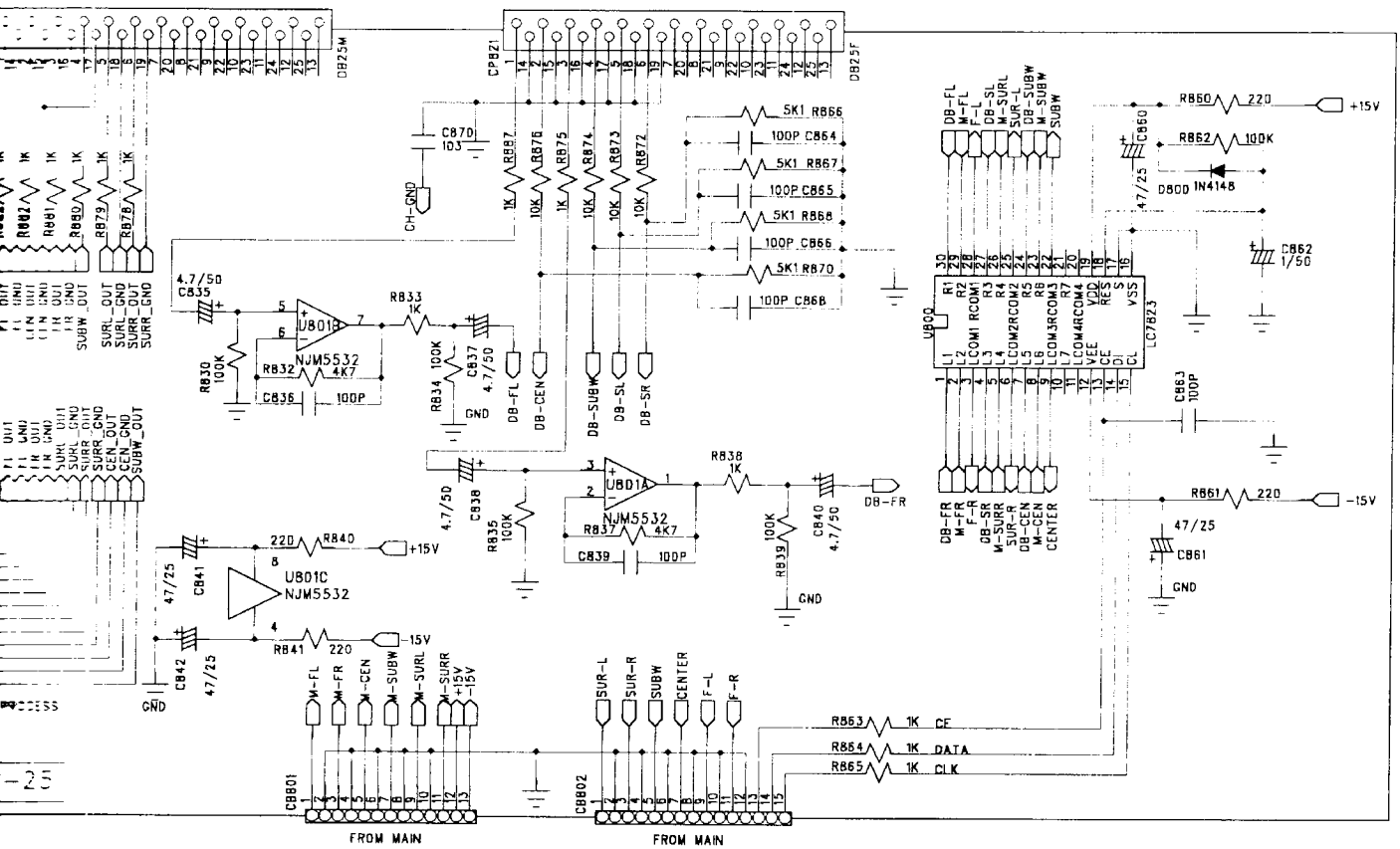
DB25M
CP821
DB25F
C870 103
CH-GND
R887 1K
R876 10K
R875 1K
R874 10K
R873 10K
R872 10K
5K1 R866
100P C864
5K1 R867
100P C865
5K1 R868
100P C866
5K1 R870
100P C868
DB-FL
M-FL
DB-CEN
M-CEN
DB-SL
M-SL
DB-SR
M-SR
DB-SUBW
M-SUBW
SUBW
R860 220
+15V
C860 47/25
R862 100K
D800 1N4148
C862 1/50
U800
LC7823
C863 100P
R861 220
-15V
C861 47/25
GND
DB-FR
M-FR
F-R
DB-SR
M-SURR
SUR-R
DB-CEN
M-CEN
CENTER
4.7/50 C835
U801B
NJM5532
R833 1K
R830 100K
R832 4K7
C836 100P
R834 100K
C837 4.7/50
GND
DB-FL
DB-CEN
DB-SUBW
DB-SL
DB-SR
4.7/50 C838
U801A
NJM5532
R838 1K
R835 100K
R837 4K7
C839 100P
R839 100K
C840 4.7/50
DB-FR
GND
220 R840
+15V
C841 47/25
U801C
NJM5532
R841 220
-15V
C842 47/25
GND
M-FL
M-FR
M-CEN
M-SUBW
M-SURL
M-SURR
+15V
-15V
SUR-L
SUR-R
SUBW
CENTER
F-L
F-R
R863 1K CE
R864 1K DATA
R865 1K CLK
CB801
CB802
FROM MAIN
FROM MAIN

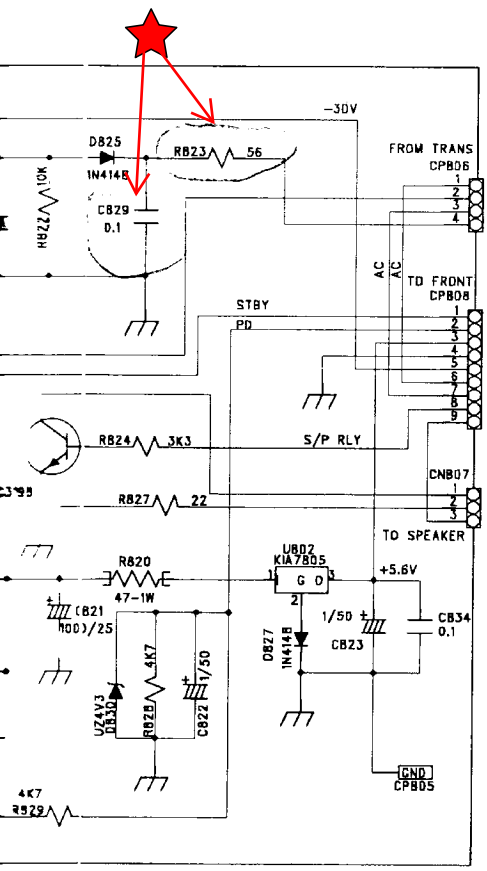
-30V
D825
1N4148
R823 56
R822 10K
C829 0.1
FROM TRANS
CP806
AC
AC
TO FRONT
CP808
STBY
PD
R824 3K3
S/P RLY
CN807
R827 22
TO SPEAKER
R820
47-1W
U802
KIA7805
G O I
+5.6V
C821 1000/25
1/50
C823
C834 0.1
D827
1N4148
UZ4V3
D830
R828 4K7
C822 1/50
GND
CP805
4K7
R829

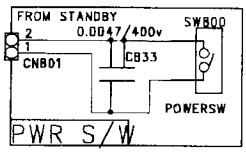
FROM STANDBY
CN801
0.0047/400v
C833
SW800
POWERSW
PWR S/W

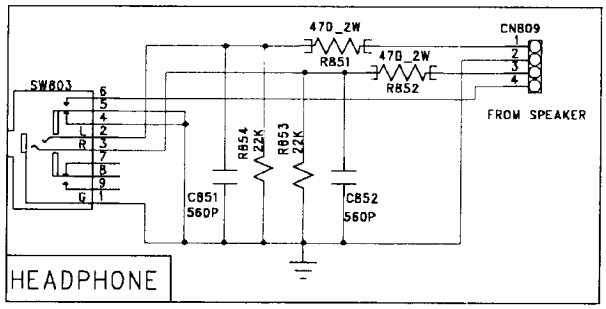
470_2W
R851
470_2W
R852
CN809
FROM SPEAKER
SW803
R854 22K
R853 22K
C851 560P
C852 560P
HEADPHONE

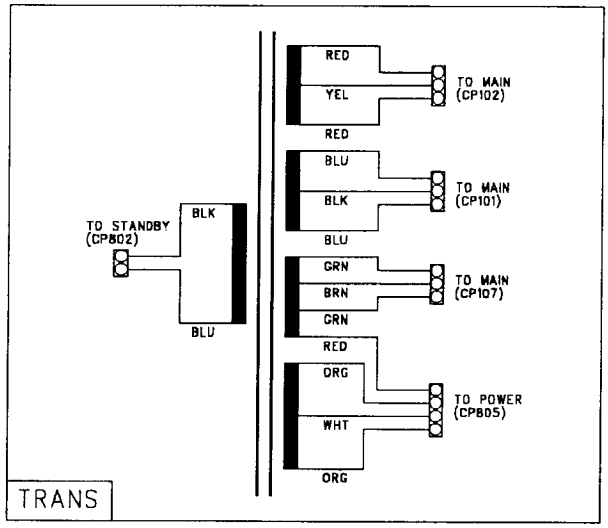
RED
YEL
TO MAIN (CP102)
RED
BLU
BLK
TO MAIN (CP101)
BLU
GRN
BRN
TO MAIN (CP107)
GRN
RED
ORG
WHT
TO POWER (CP805)
ORG
TO STANDBY (CP802)
BLK
BLU
TRANS

ROTEL			
MODEL NAME	RSX965		
BOARD NAME	AMP		

SCHEMATIC DIAG

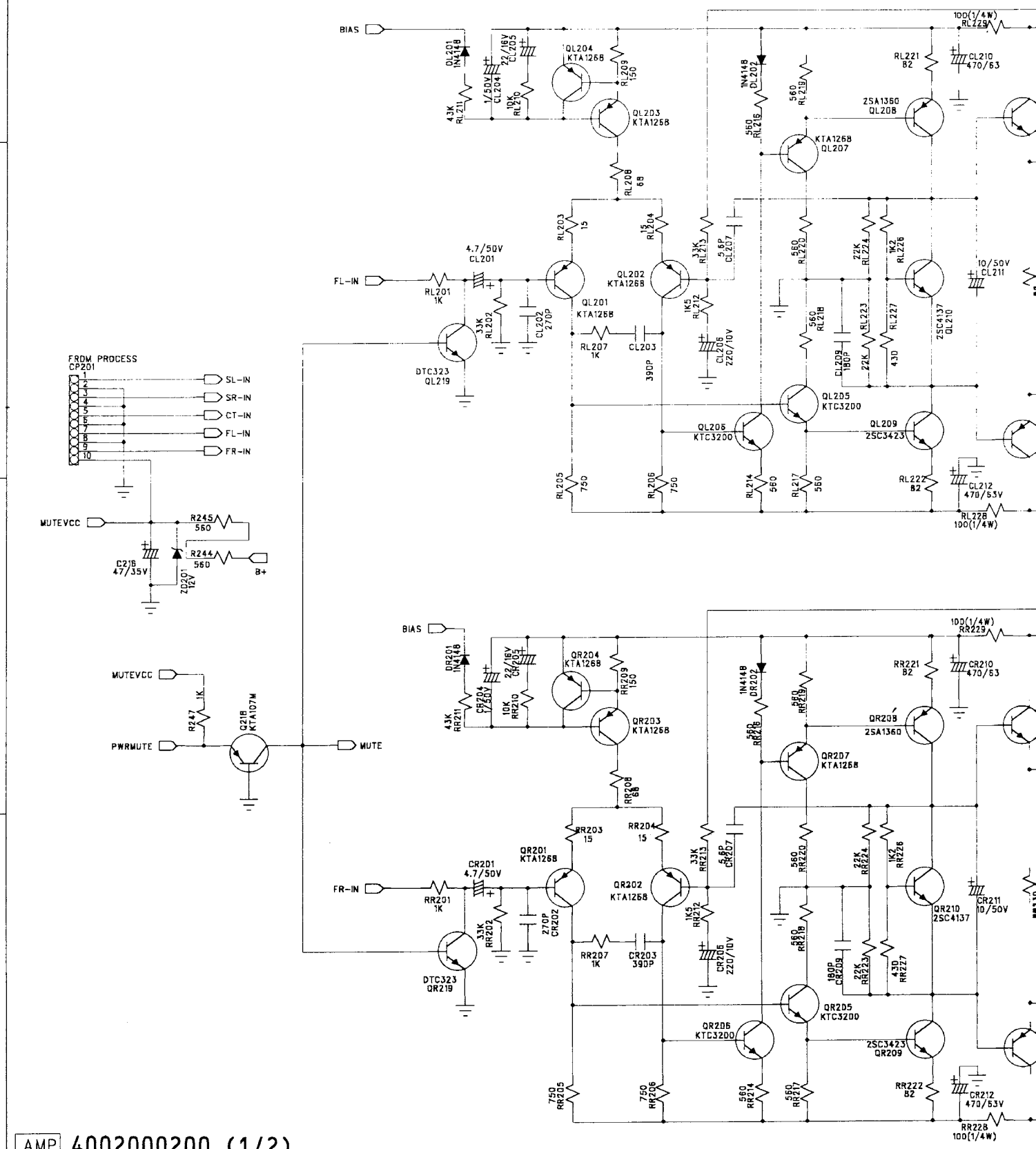

AMP 4002000200 (1/2)

3 2 1

TIC DIAGRAM

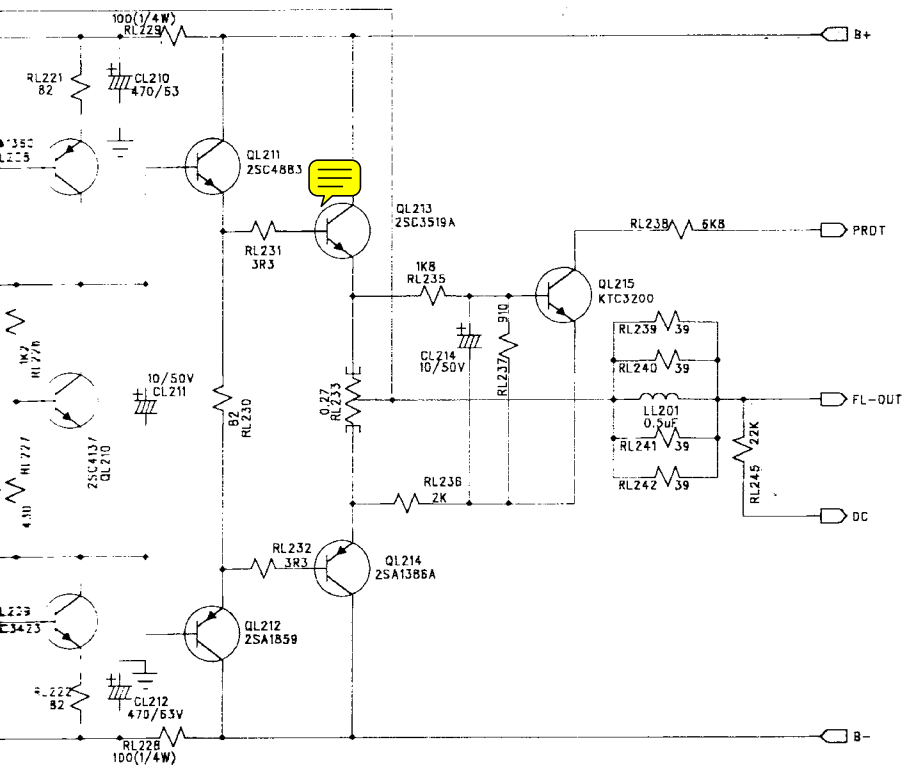

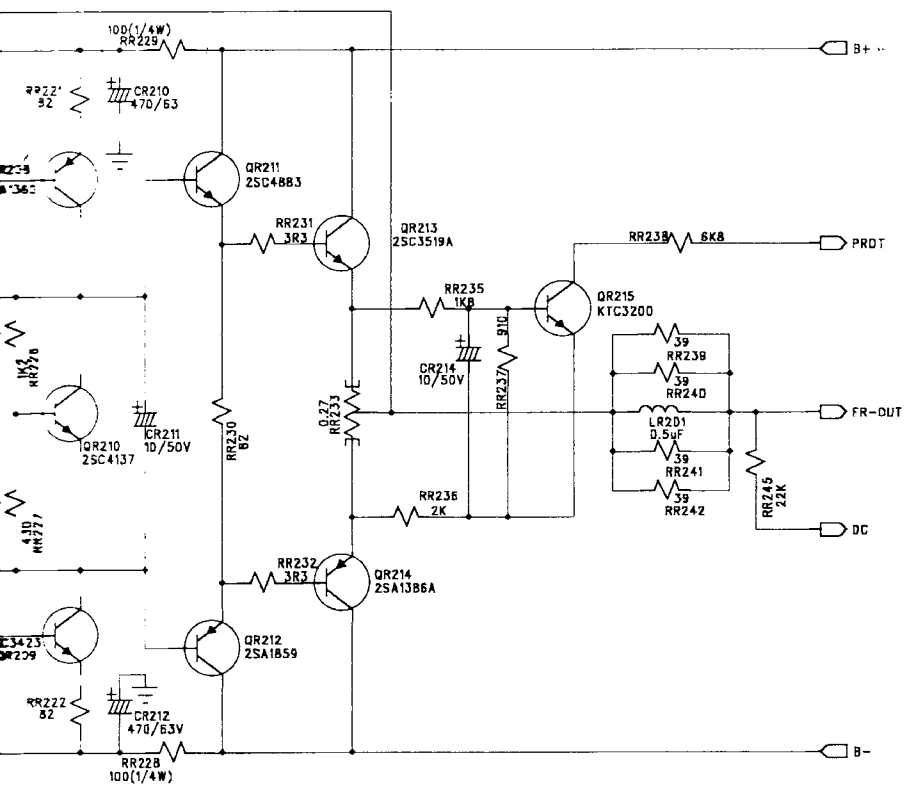

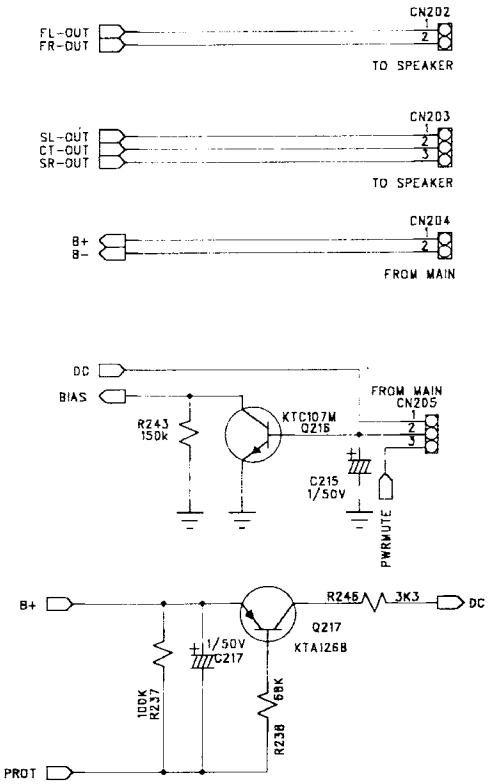

ROTEL			
MODEL NAME	RSX965		
BOARD NAME	AMP		

SCHEMATIC DIAGR

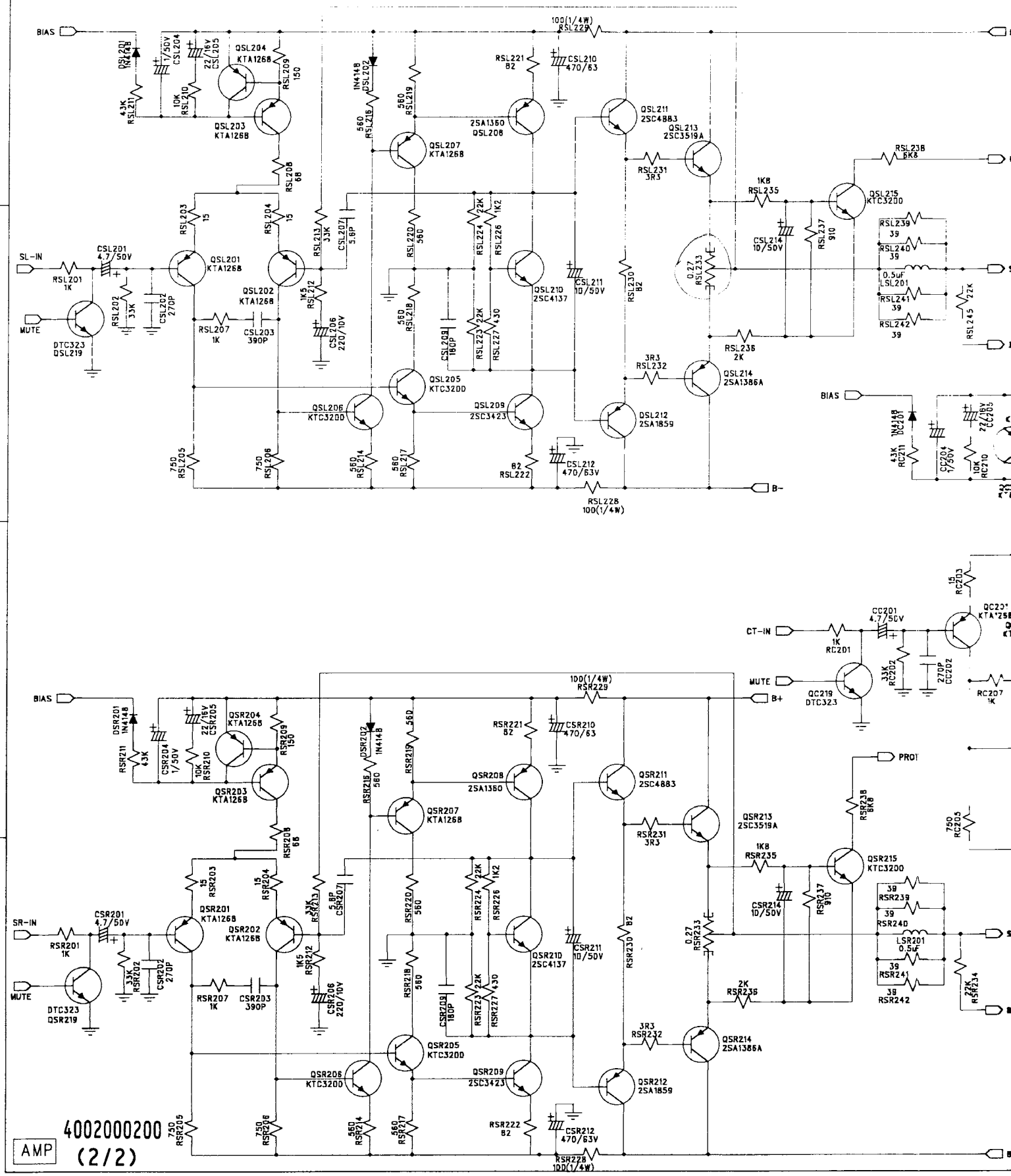

3 2 1

C DIAGRAM

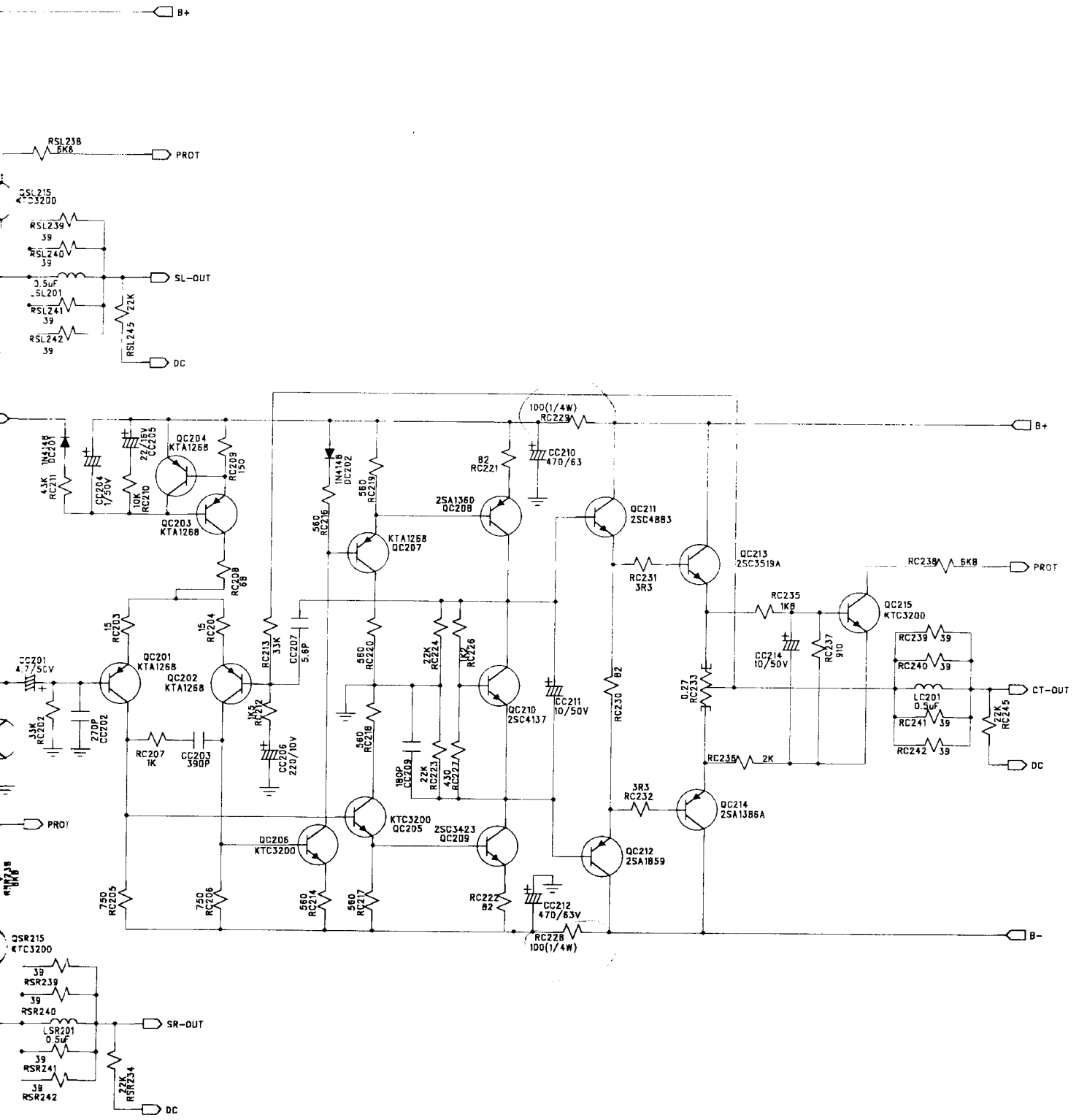

ROTEL			
MODEL NAME	RSX965		
BOARD NAME	MAIN		

SCHEMATIC DIA

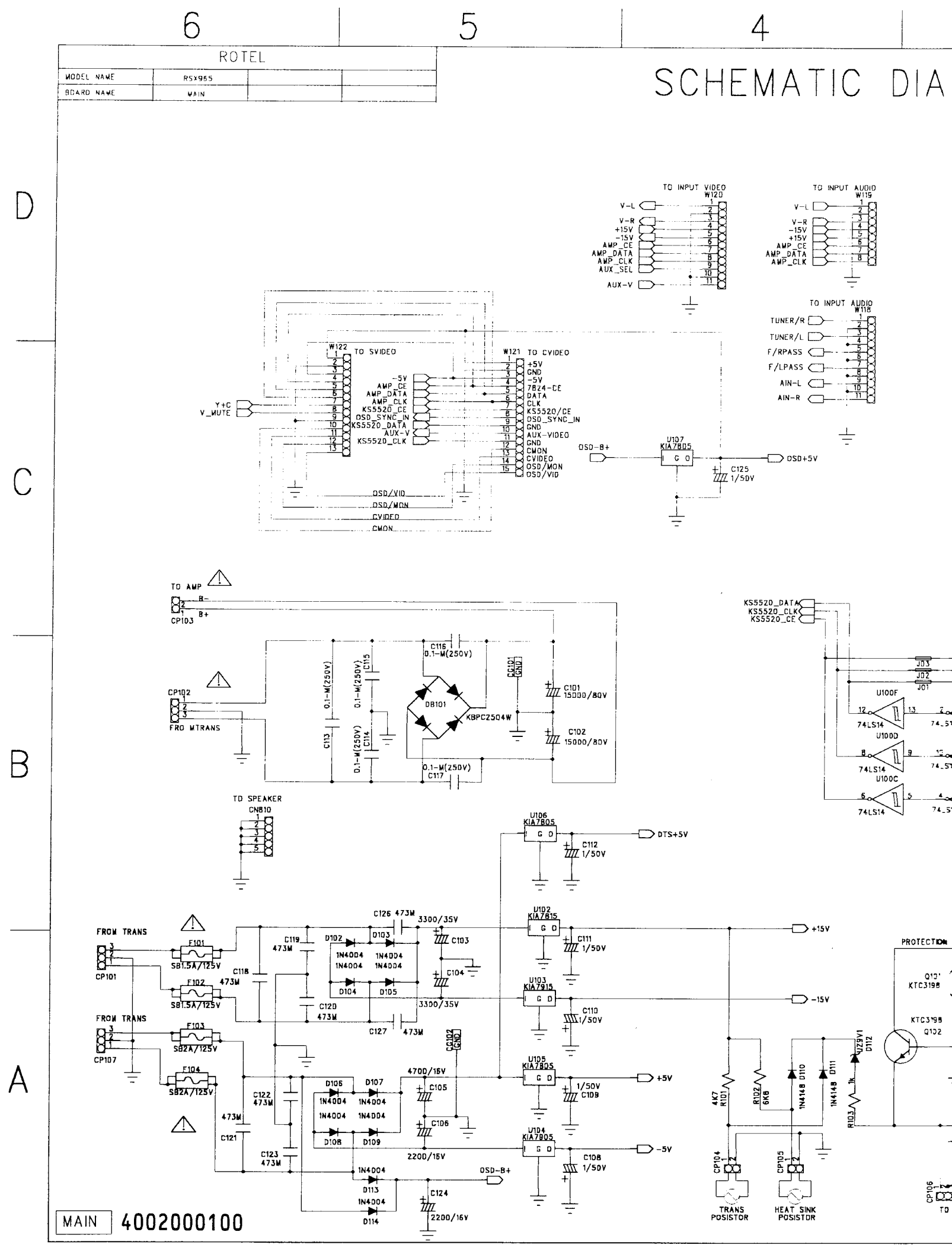

MAIN 4002000100

TIC DIAGRAM

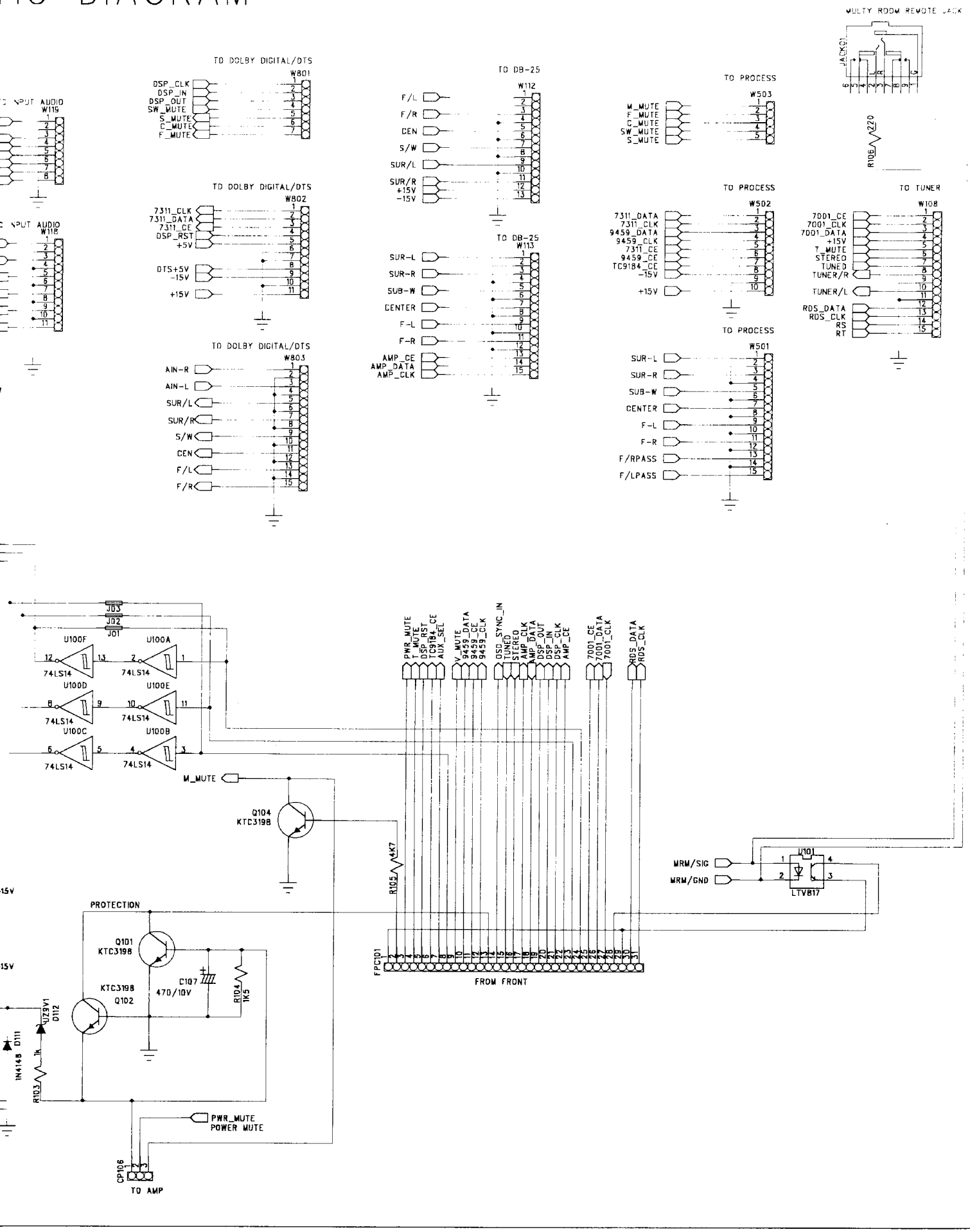
MULTY ROOM REMOTE JACK
JACK01
R106 220
TO DOLBY DIGITAL/DTS
W801
DSP_CLK
DSP_IN
DSP_OUT
SW_MUTE
S_MUTE
C_MUTE
F_MUTE
TO DOLBY DIGITAL/DTS
W802
7311_CLK
7311_DATA
7311_CE
DSP_RST
+5V
DTS+5V
-15V
+15V
TO DOLBY DIGITAL/DTS
W803
AIN-R
AIN-L
SUR/L
SUR/R
S/W
CEN
F/L
F/R
TO DB-25
W112
F/L
F/R
CEN
S/W
SUR/L
SUR/R
+15V
-15V
TO DB-25
W113
SUR-L
SUR-R
SUB-W
CENTER
F-L
F-R
AMP_CE
AMP_DATA
AMP_CLK
TO PROCESS
W503
W_MUTE
F_MUTE
C_MUTE
SW_MUTE
S_MUTE
TO PROCESS
W502
7311_DATA
7311_CLK
9459_DATA
9459_CLK
7311_CE
9459_CE
TC9184_CE
-15V
+15V
TO TUNER
W108
7001_CE
7001_CLK
7001_DATA
+15V
T_MUTE
STEREO
TUNED
TUNER/R
TUNER/L
RDS_DATA
RDS_CLK
RS
RT
TO PROCESS
W501
SUR-L
SUR-R
SUB-W
CENTER
F-L
F-R
F/RPASS
F/LPASS
J03
J02
J01
U100F
U100A
U100D
U100E
U100C
U100B
74LS14
PWR_MUTE
T_MUTE
DSP_RST
TC9184_CE
AUX_SEL
V_MUTE
9459_DATA
9459_CE
9459_CLK
DSO_SYNC_IN
TUNED
STEREO
AMP_CLK
AMP_DATA
DSP_OUT
DSP_IN
DSP_CLK
AMP_CE
7001_CE
7001_DATA
7001_CLK
RDS_DATA
RDS_CLK
M_MUTE
Q104
KTC3198
R105 4K7
MRM/SIG
MRM/GND
U101
LTV817
PROTECTION
Q101
KTC3198
KTC3198
Q102
C107
470/10V
R104
1K5
UZ9V1
D112
1N4148
D111
R103
1K
FPC101
FROM FRONT
PWR_MUTE
POWER MUTE
CP106
TO AMP

ROTEL			
MODEL NAME	RSX965		
BOARD NAME	TUNER		

SCHEMATIC DIA

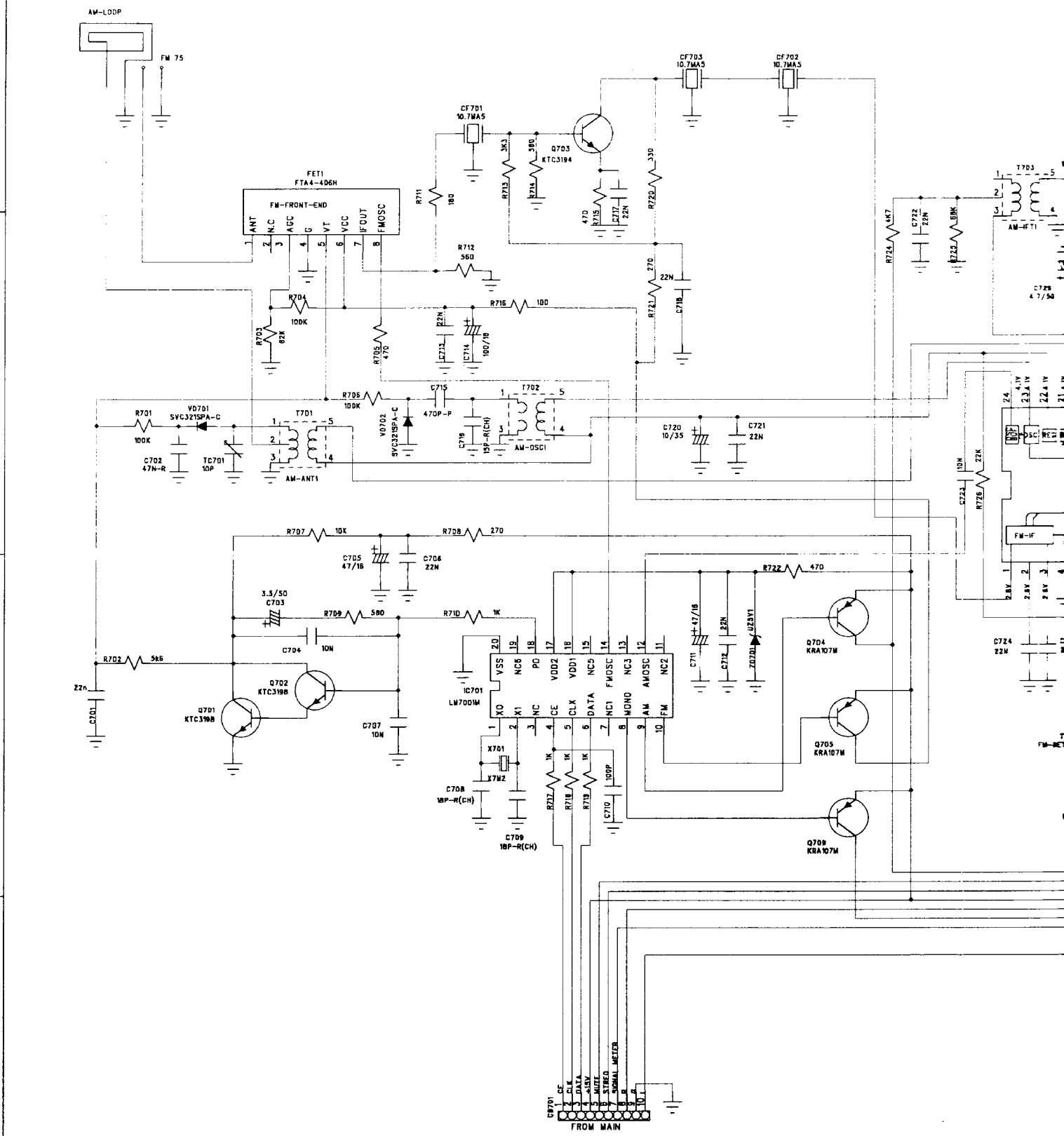

TUNER 4002000300

3 2 1

C DIAGRAM

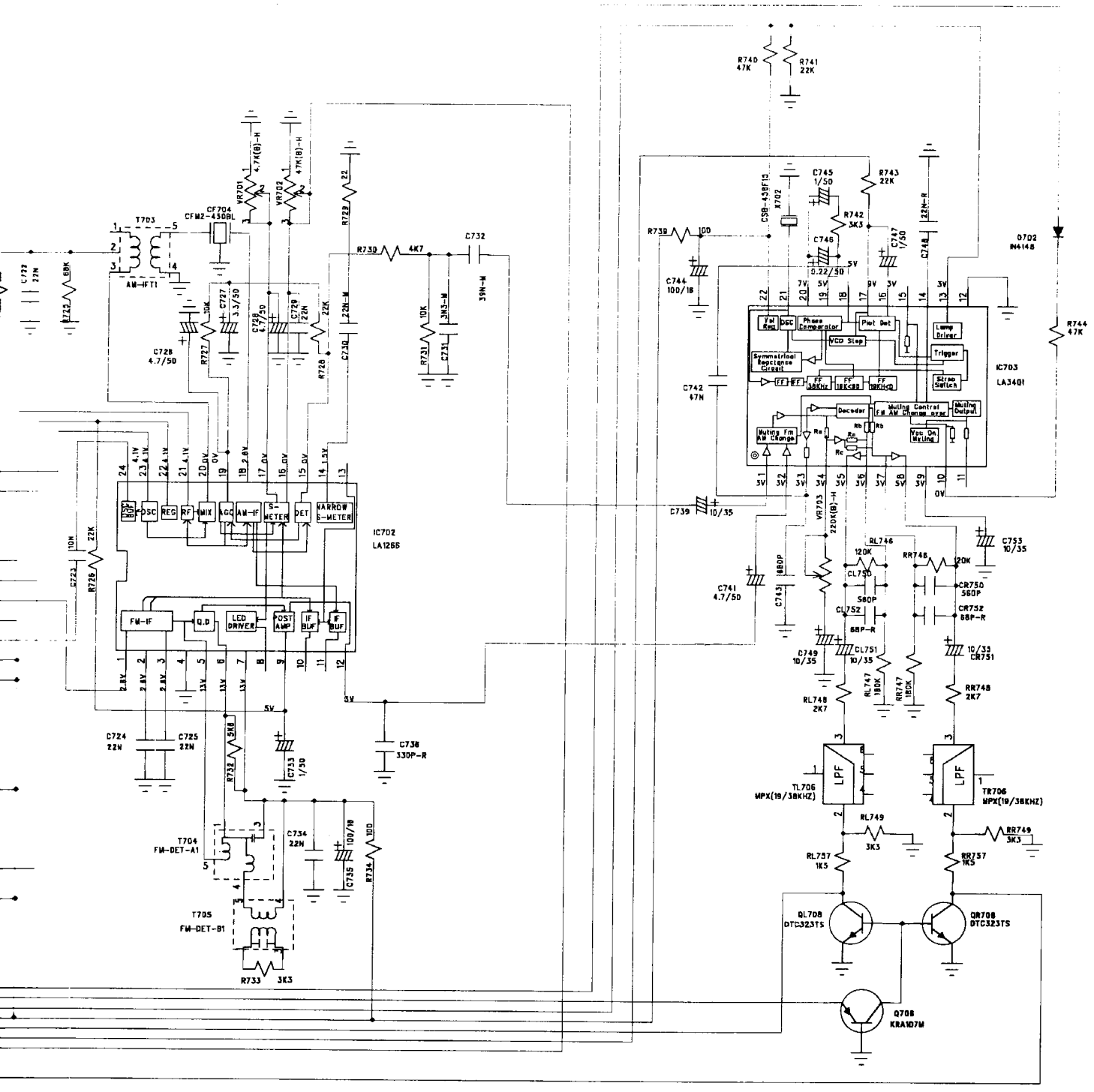

ROTEL			
MODEL NAME	RSX965		
BOARD NAME	PROCESS		

SCHEMATIC DIAG

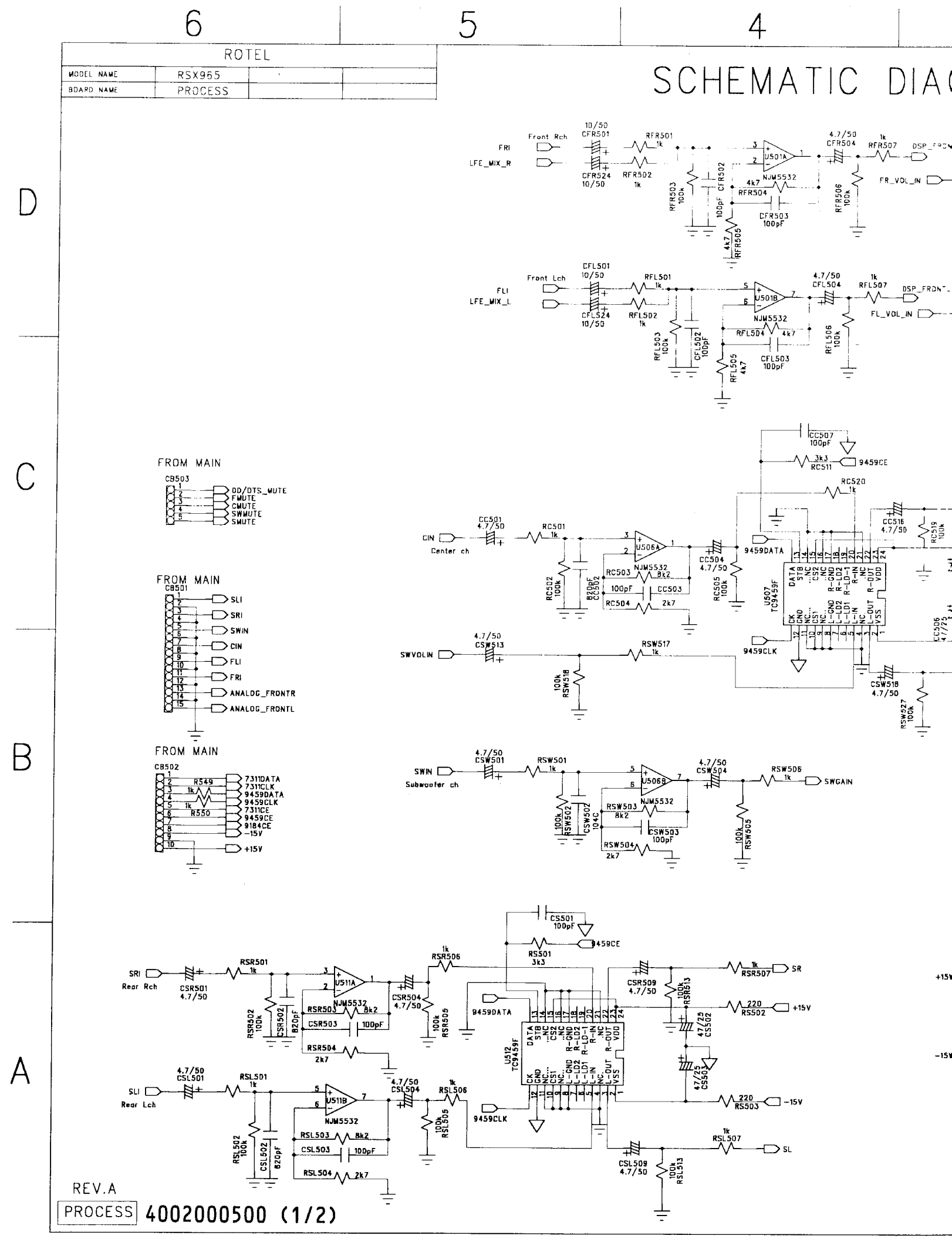

REV.A

PROCESS 4002000500 (1/2)

TIC DIAGRAM

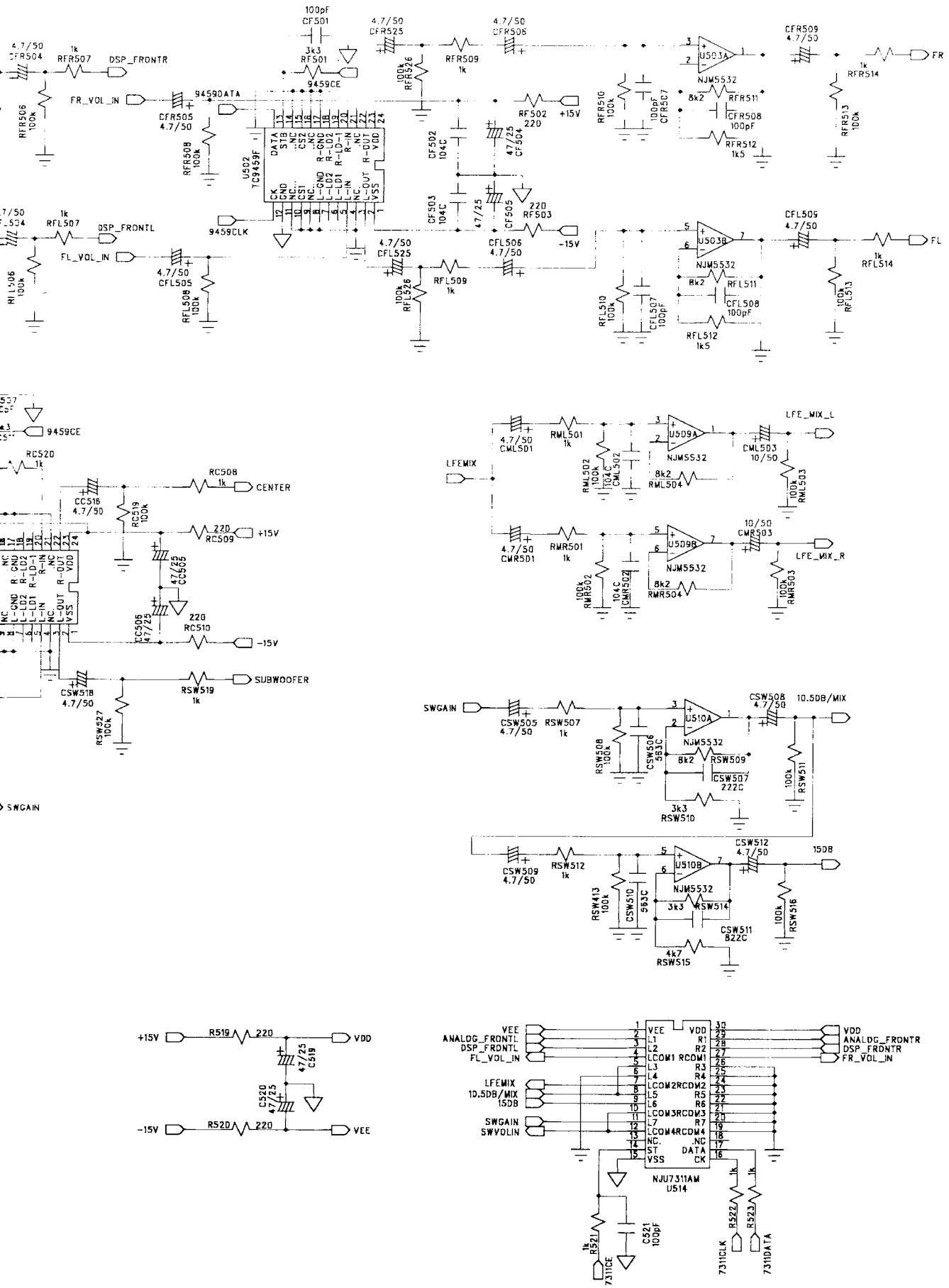
3
2
1
DSP_FRONTR
FR_VOL_IN
9459DATA
9459CE
9459CLK
DSP_FRONTL
FL_VOL_IN
U502 TC9459F
U503A
U503B
NJM5532
+15V
-15V
FR
FL
U509A
U509B
LFE_MIX_L
LFE_MIX_R
LFEMIX
CENTER
SUBWOOFER
SWGAIN
U510A
U510B
10.5DB/MIX
15DB
+15V
-15V
VDD
VEE
ANALOG_FRONTL
DSP_FRONTL
FL_VOL_IN
LFEMIX
10.5DB/MIX
15DB
SWGAIN
SWVOLIN
ANALOG_FRONTR
DSP_FRONTR
FR_VOL_IN
NJU7311AM
U514
7311CE
7311CLK
7311DATA

ROTEL			
MODEL NAME	RSX965		
BOARD NAME	PROCESS		

SCHEMATIC DIAG

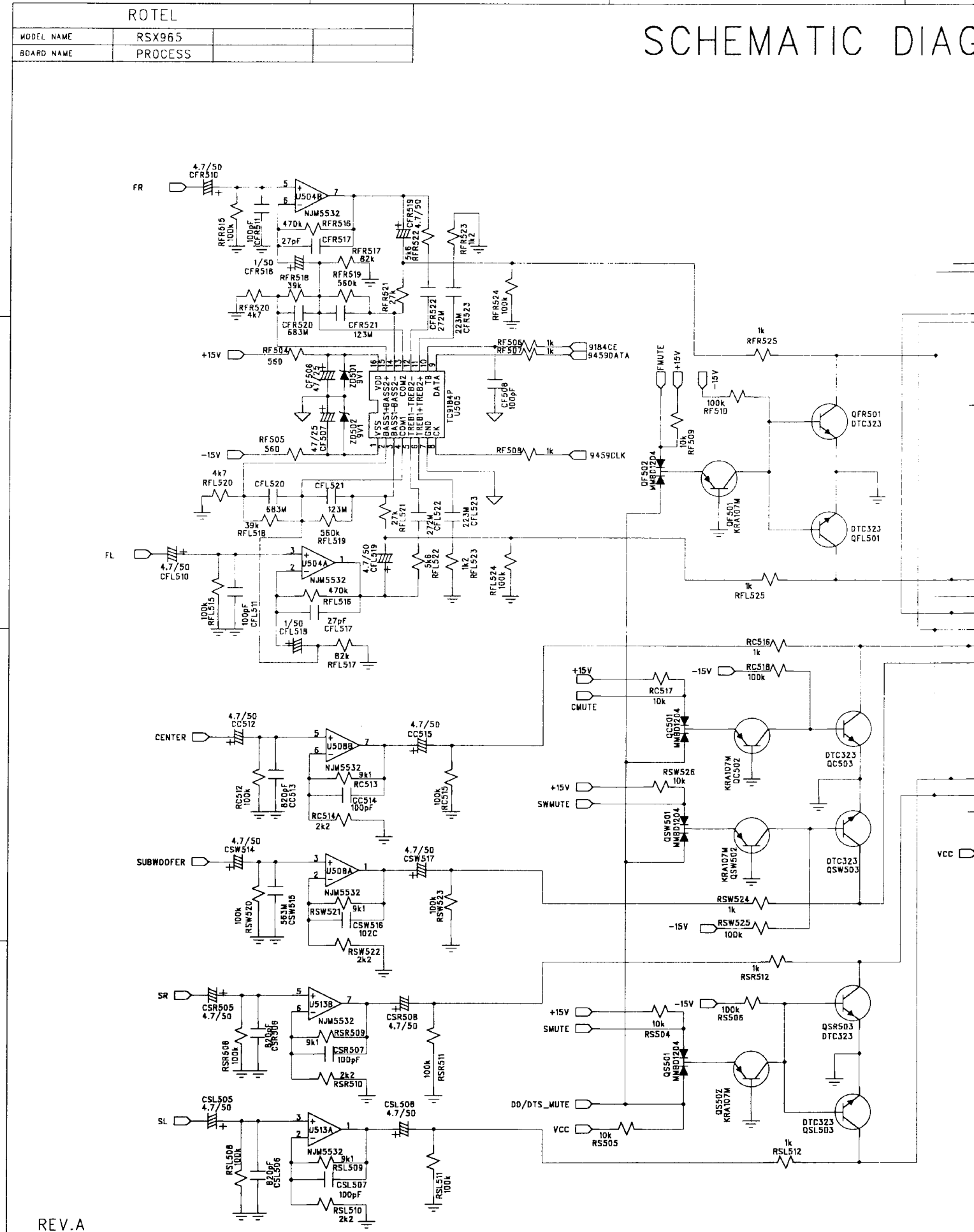

REV.A

PROCESS 4002000500 (2/2)

3 2 1

TIC DIAGRAM

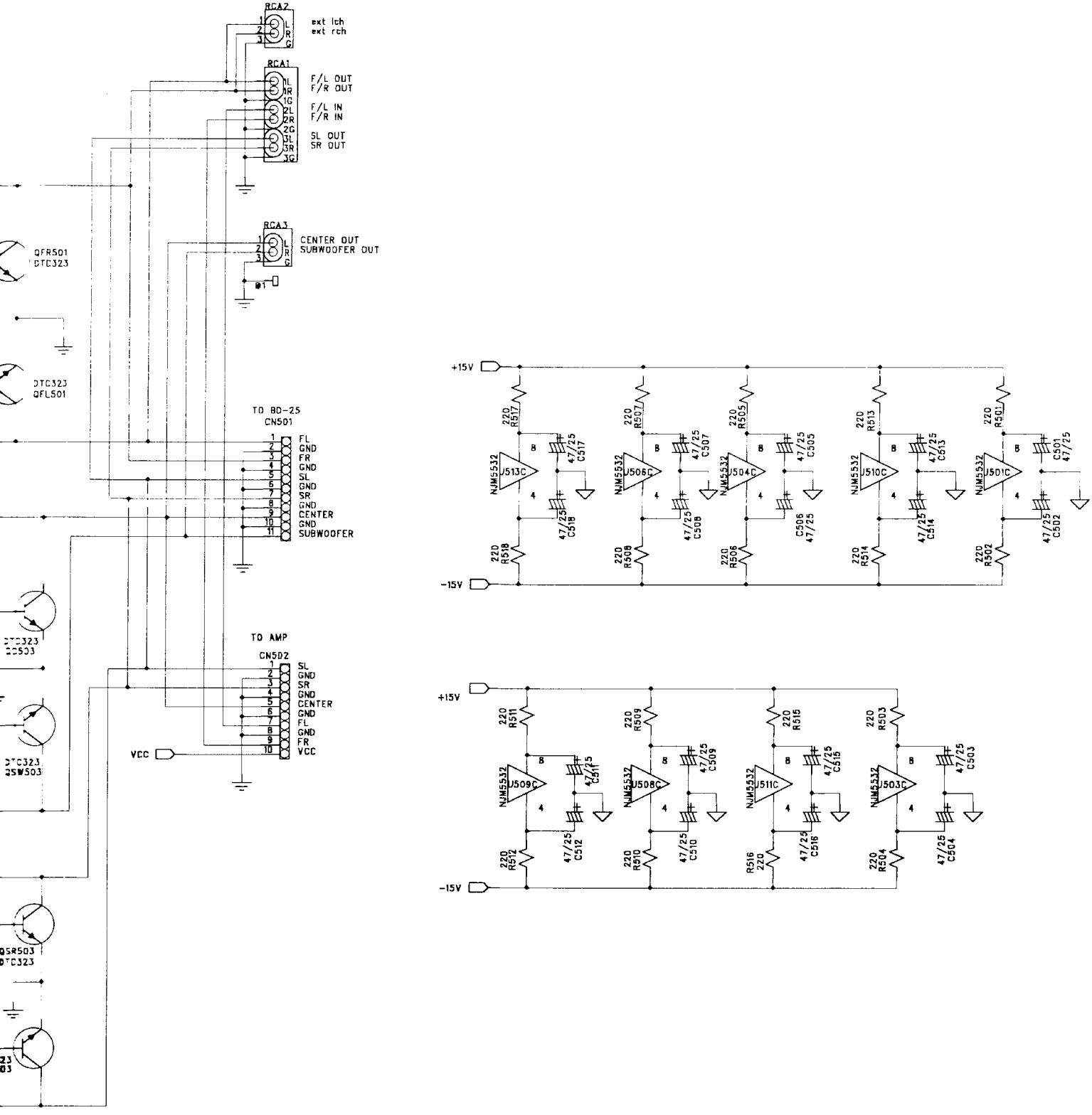

ROTEL			
MODEL NAME	RSX965		
BOARD NAME	DD/DTS		

SCHEMATIC DIAG

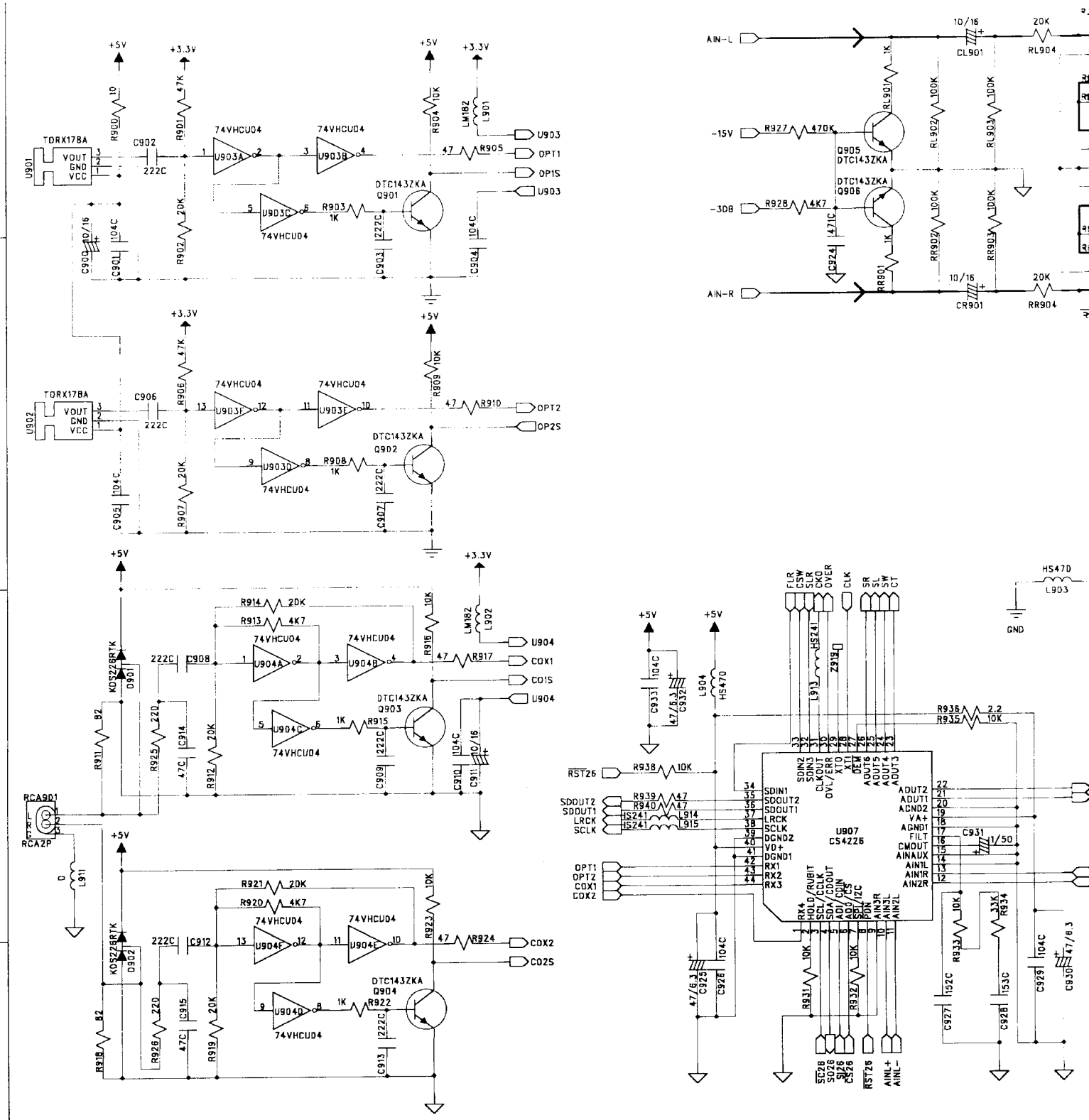

UNUSED		
R927	Q905	CT912
R928	Q906	
C924	L903	
RL901		
RR901		

DOLBY DIGITAL/DTS 4002000700 (1/3)

TIC DIAGRAM

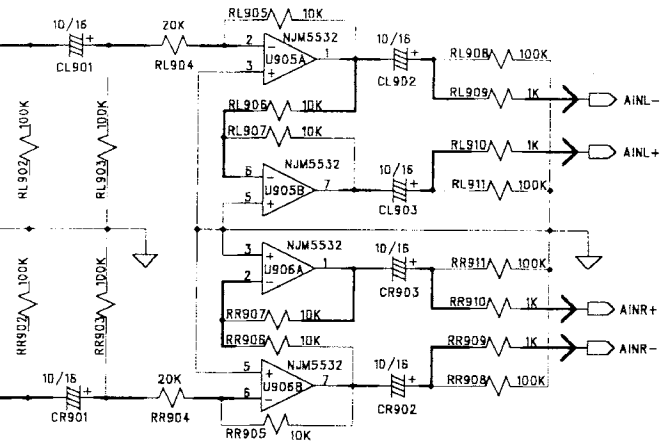
NJM5532
U905A
U905B
U906A
U906B
AINL-
AINL+
AINR+
AINR-

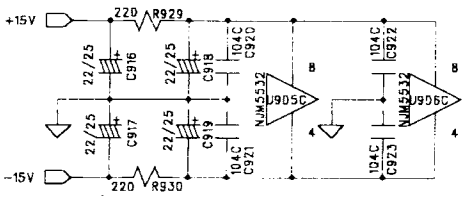
+15V
-15V
NJM5532
U905C
U906C

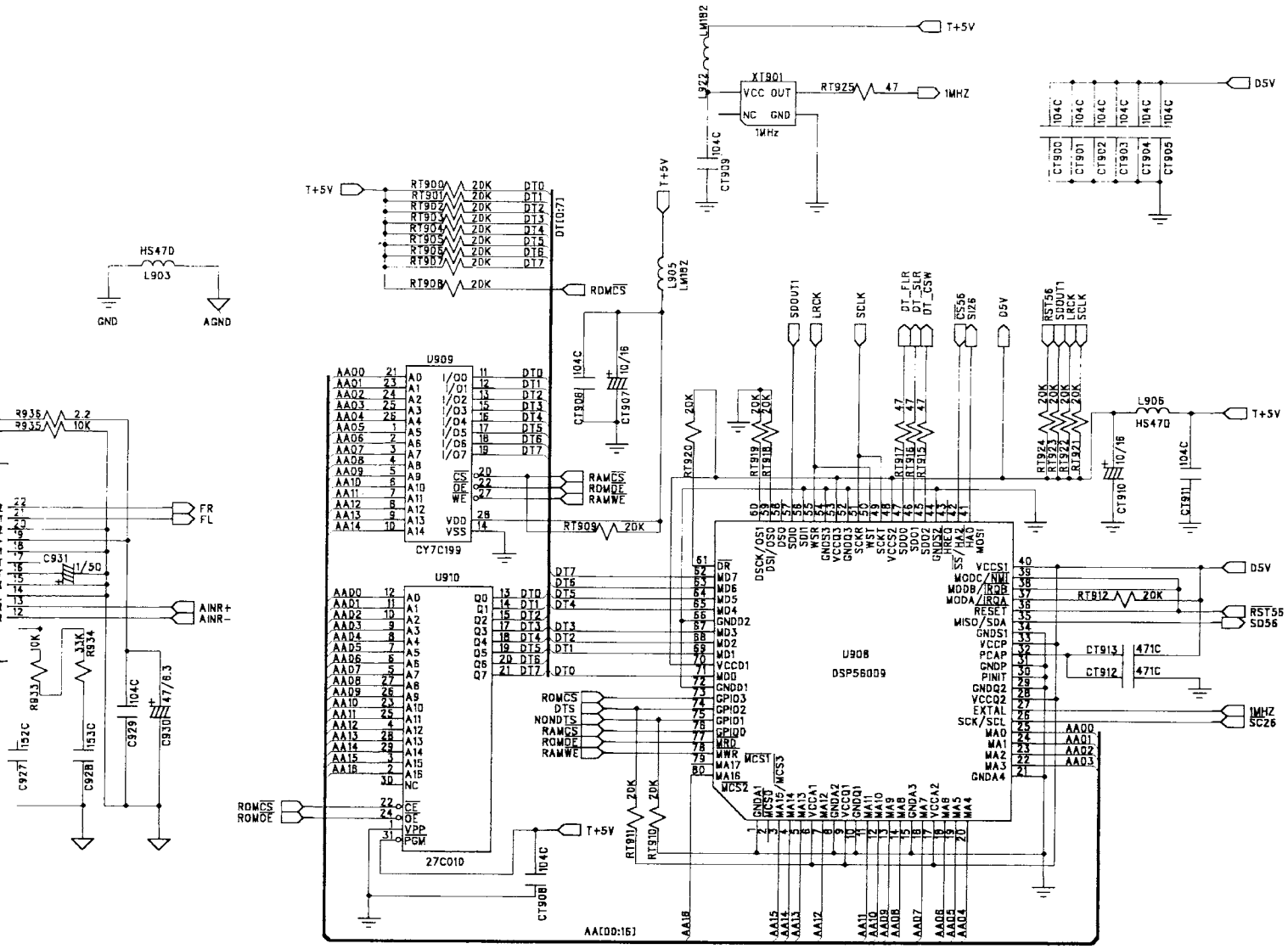
T+5V
XT901
VCC OUT
NC GND
1MHZ
D5V
HS470
L903
GND
AGND
U909
CY7C199
U910
27C010
U908
DSP56009
ROMCS
RAMCS
ROMOE
RAMWE
AA[00:16]

ROTEL			
MODEL NAME	RSX965		
BOARD NAME	DD/DTS		

SCHEMATIC DIAG

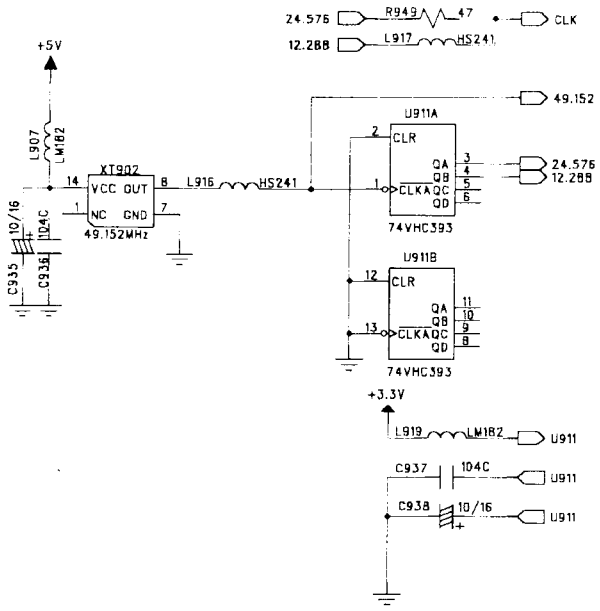

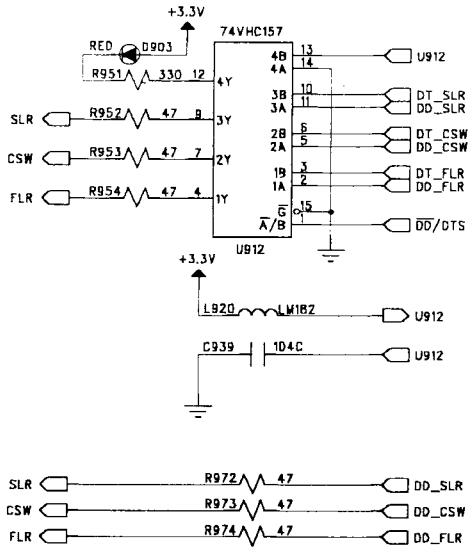

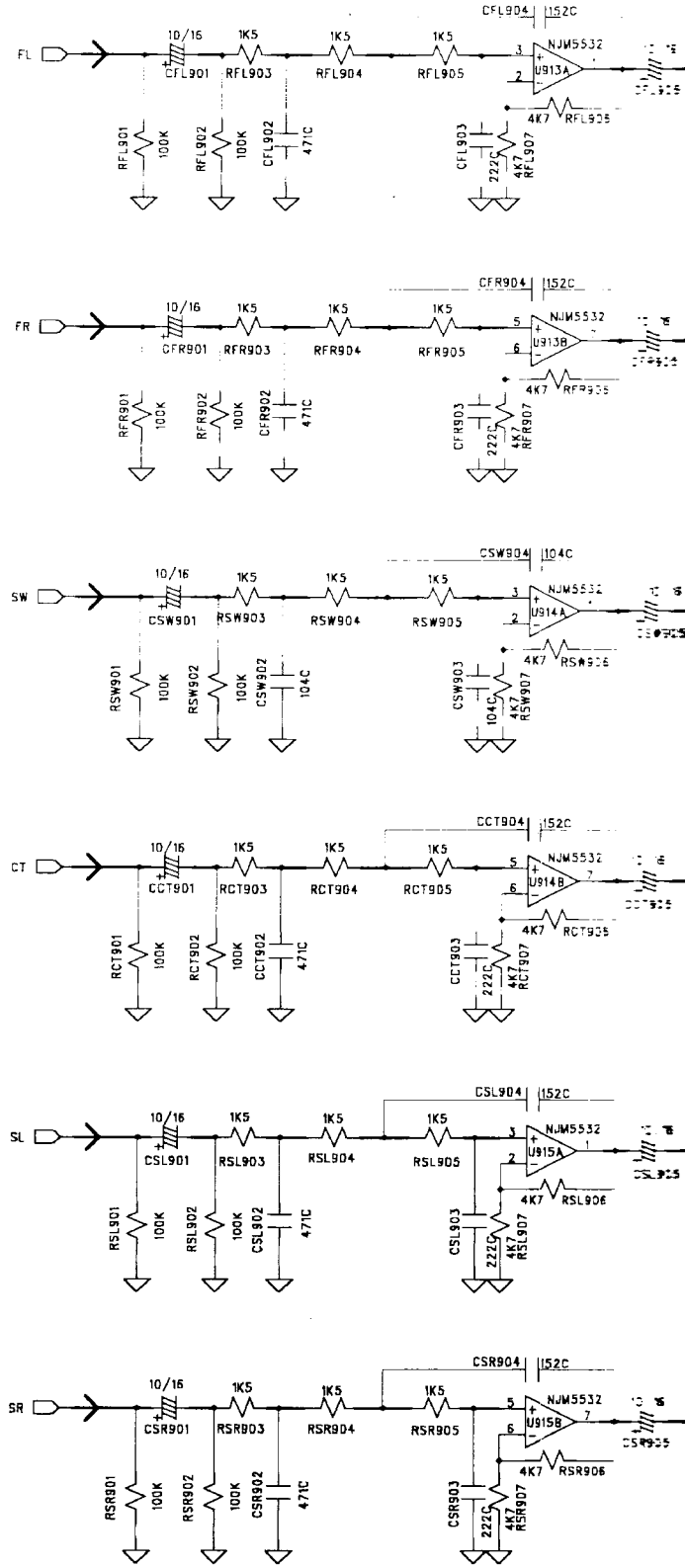

UNUSED			
R949	R957	RFL901	R951
R972	R958	RFR901	D903
R973	R959	RSW901	Q811
R974	R960	RCT901	R970
R965	R961	RSL901	D905
R966	R962	RSR901	R969
R967	R963		D904
R968	R964		

DOLBY DIGITAL/DTS 4002000700 (2/3)

3 2 1

IC DIAGRAM

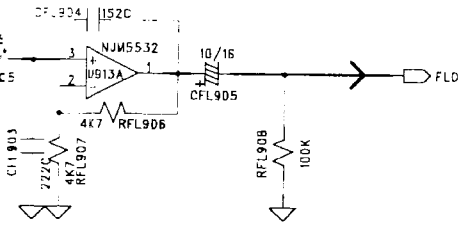

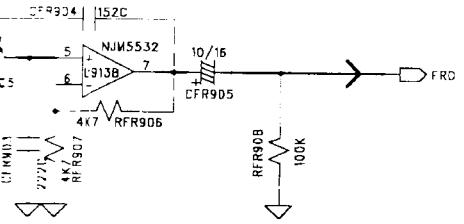

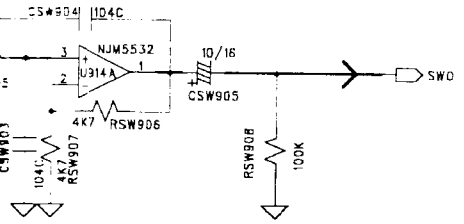

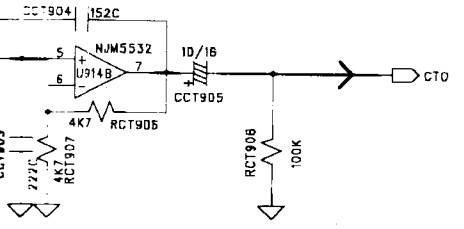

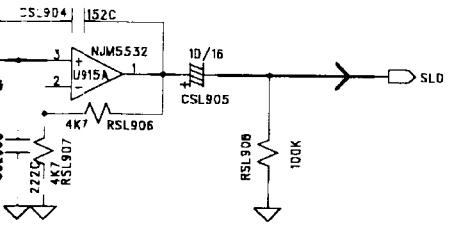

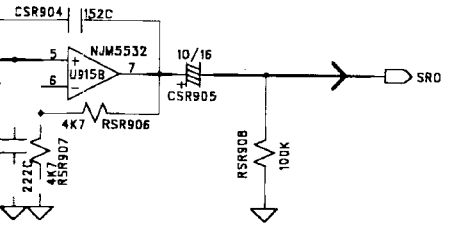

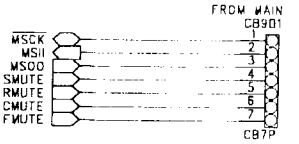

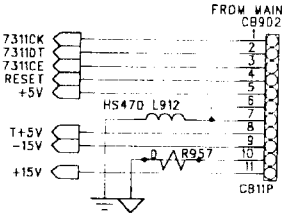

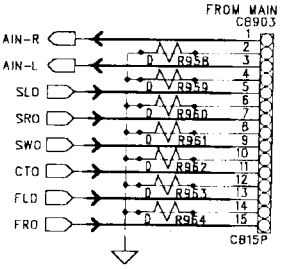

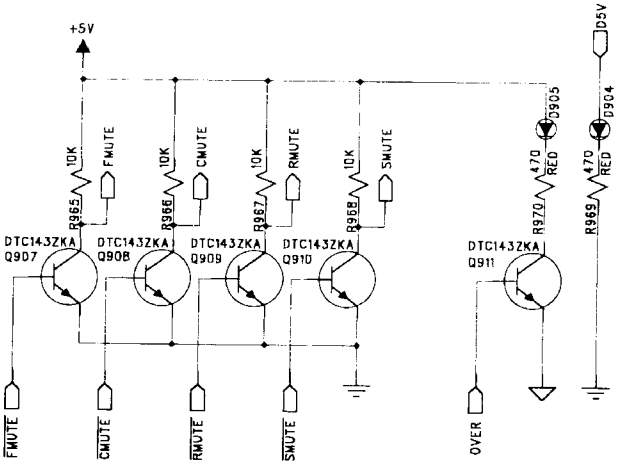

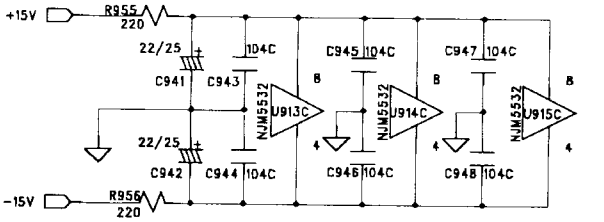

ROTEL			
MODEL NAME	RSX965		
BOARD NAME	DD/DTS		

SCHEMATIC DIA

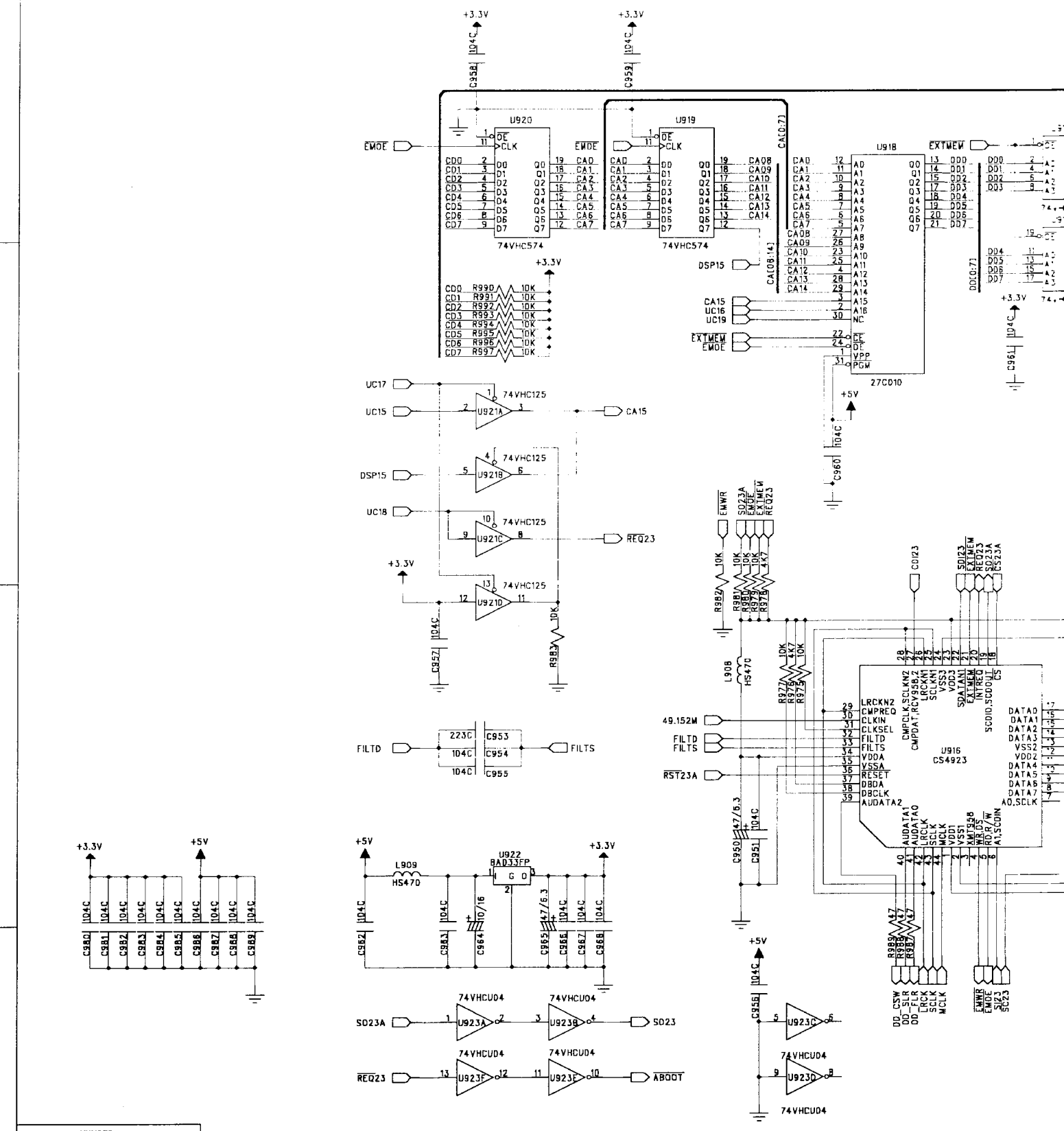

UNUSED		
C953		RM900
		RM902
		RM927
		RM929
	Q913	RM930
	RM928	RM931
	D906	RM932

DOLBY DIGITAL/DTS

4002000700 (3/3)

3 2 1

TIC DIAGRAM

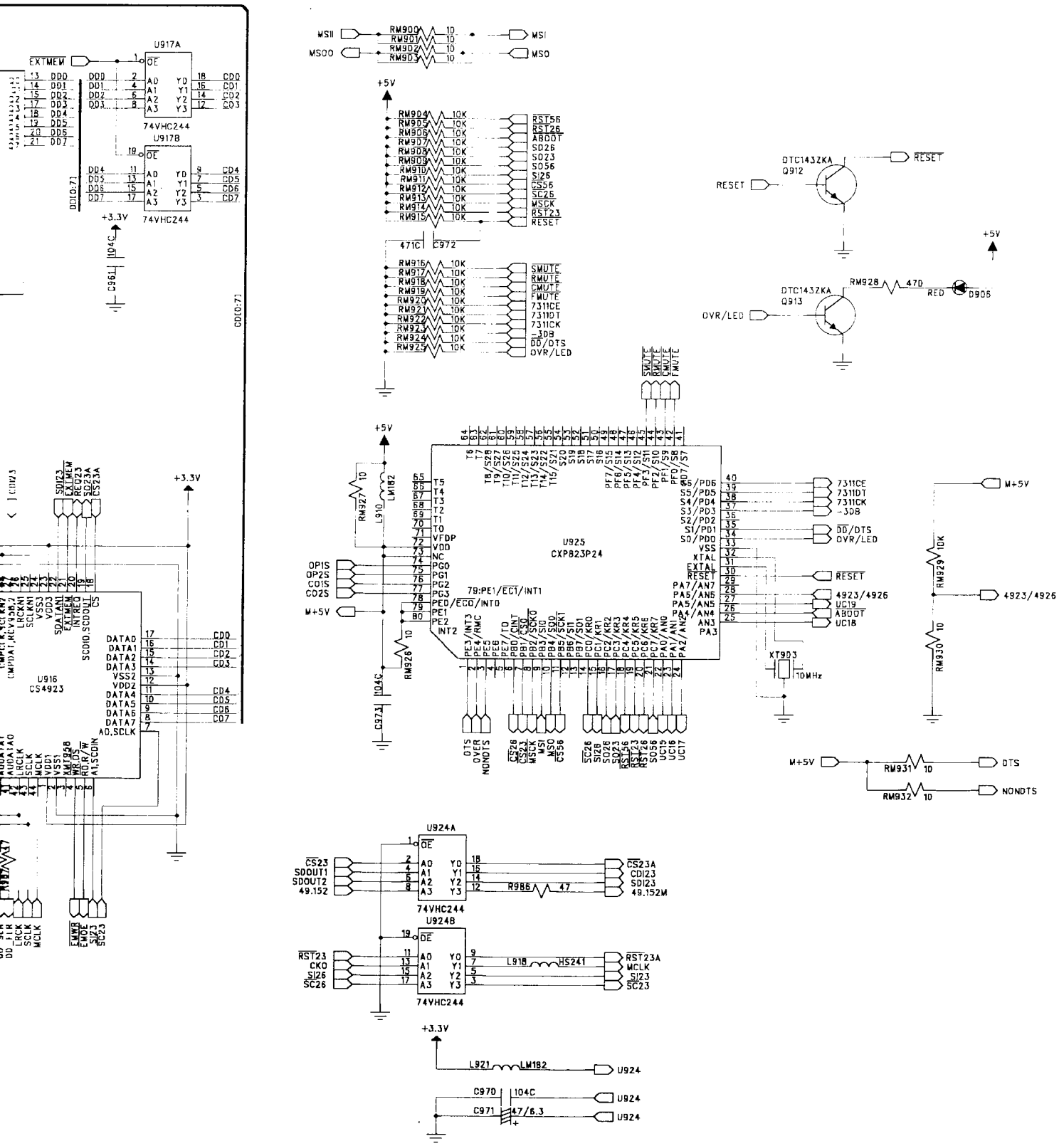

ROTEL			
MODEL NAME	RSX965		
BOARD NAME	INPUT		

SCHEMATIC DIAG

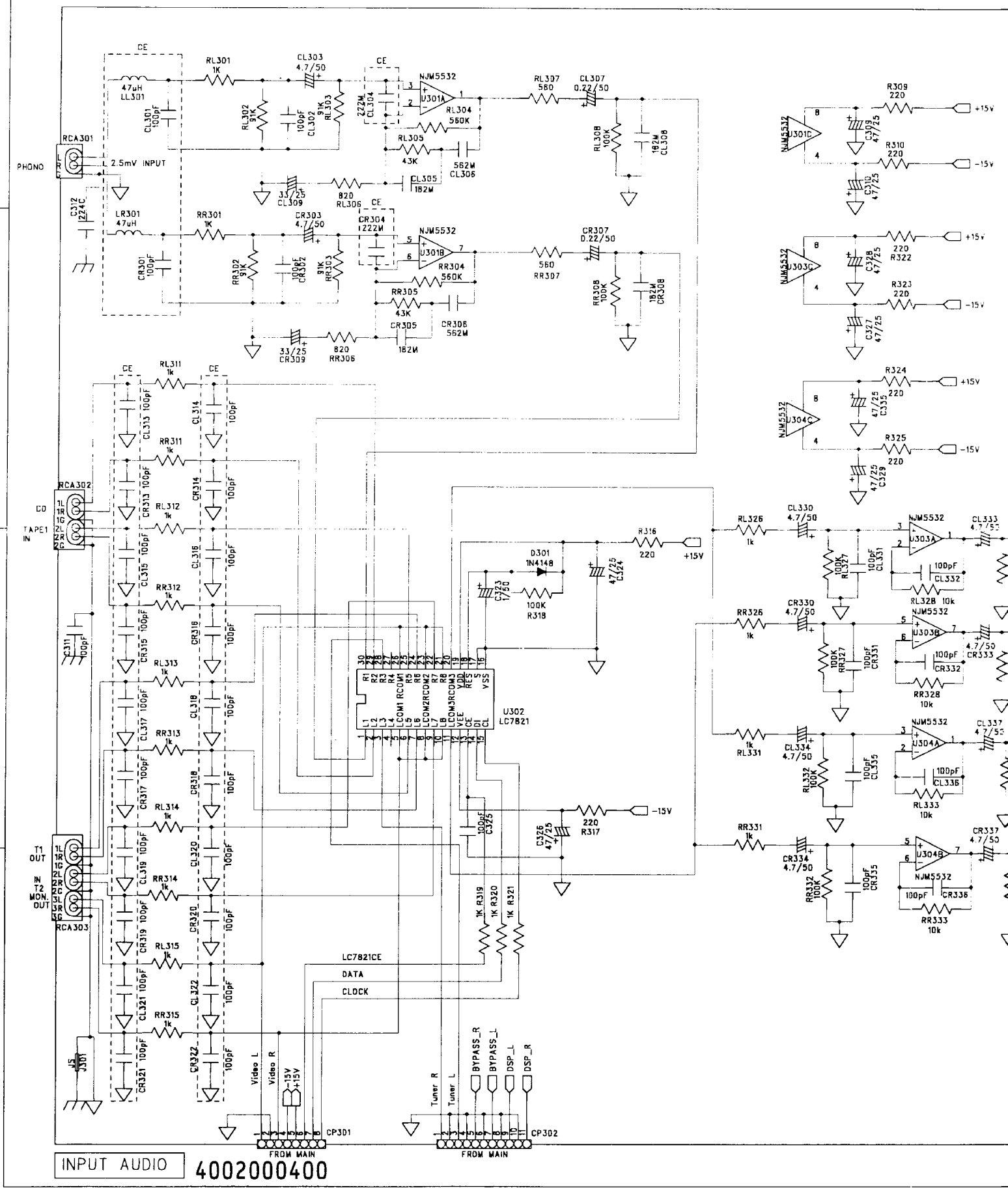

INPUT AUDIO 4002000400

3 2 1

IC DIAGRAM

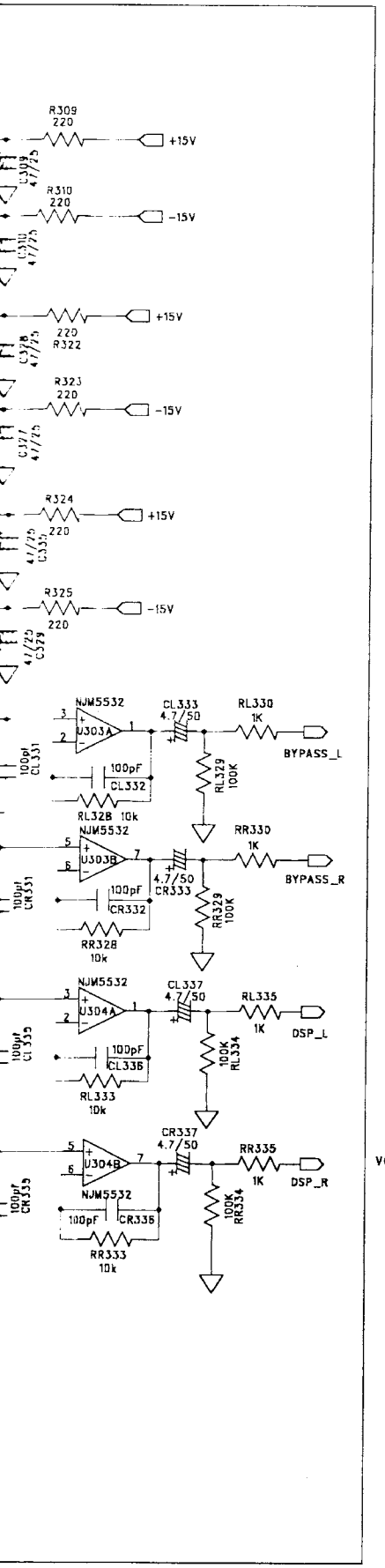

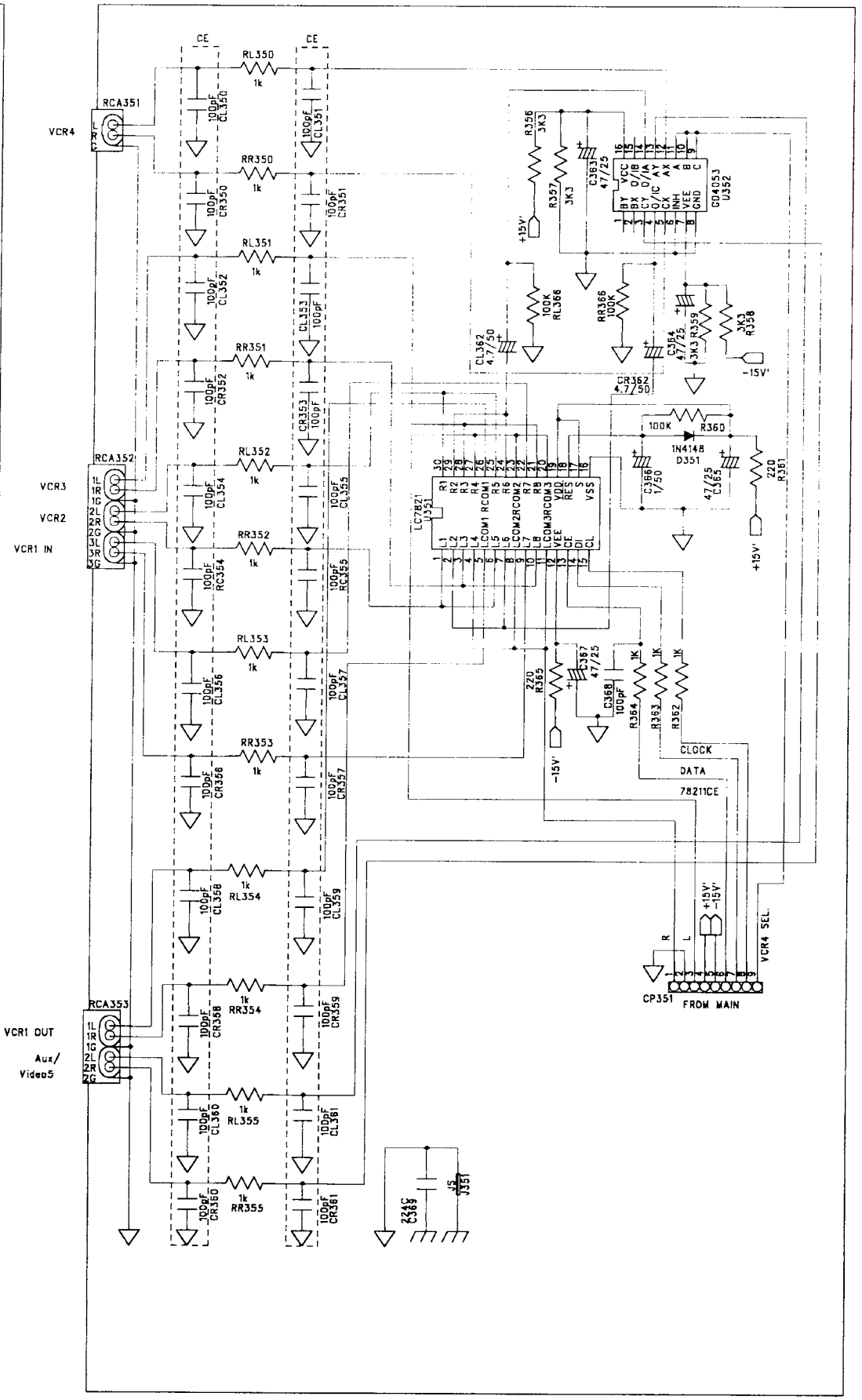

INPUT VIDEO 4002000410

ROTEL			
MODEL NAME	RSX955		
BOARD NAME	CVIDEO		

SCHEMATIC DIA

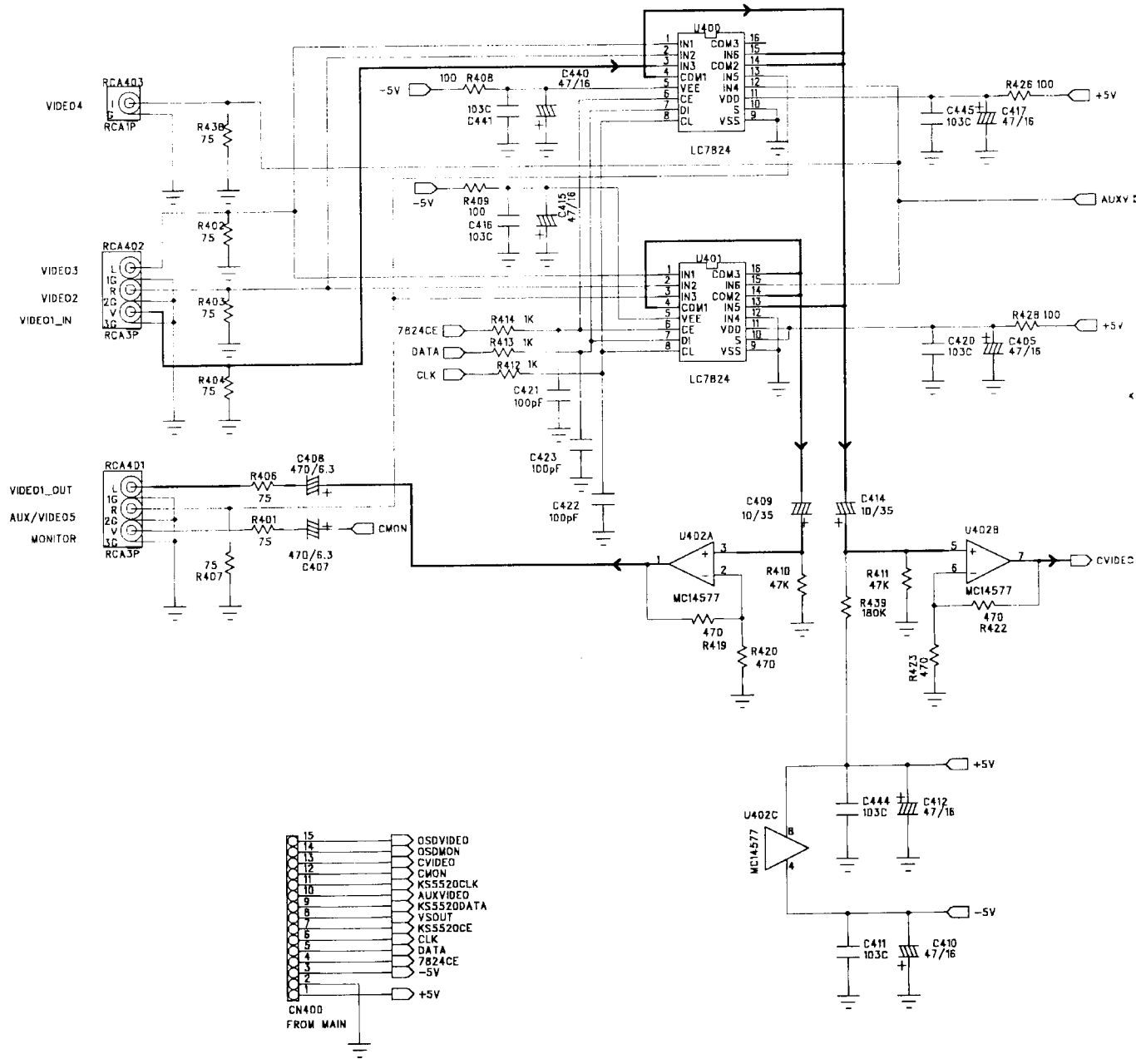

CVIDEO 4002000600

TIC DIAGRAM

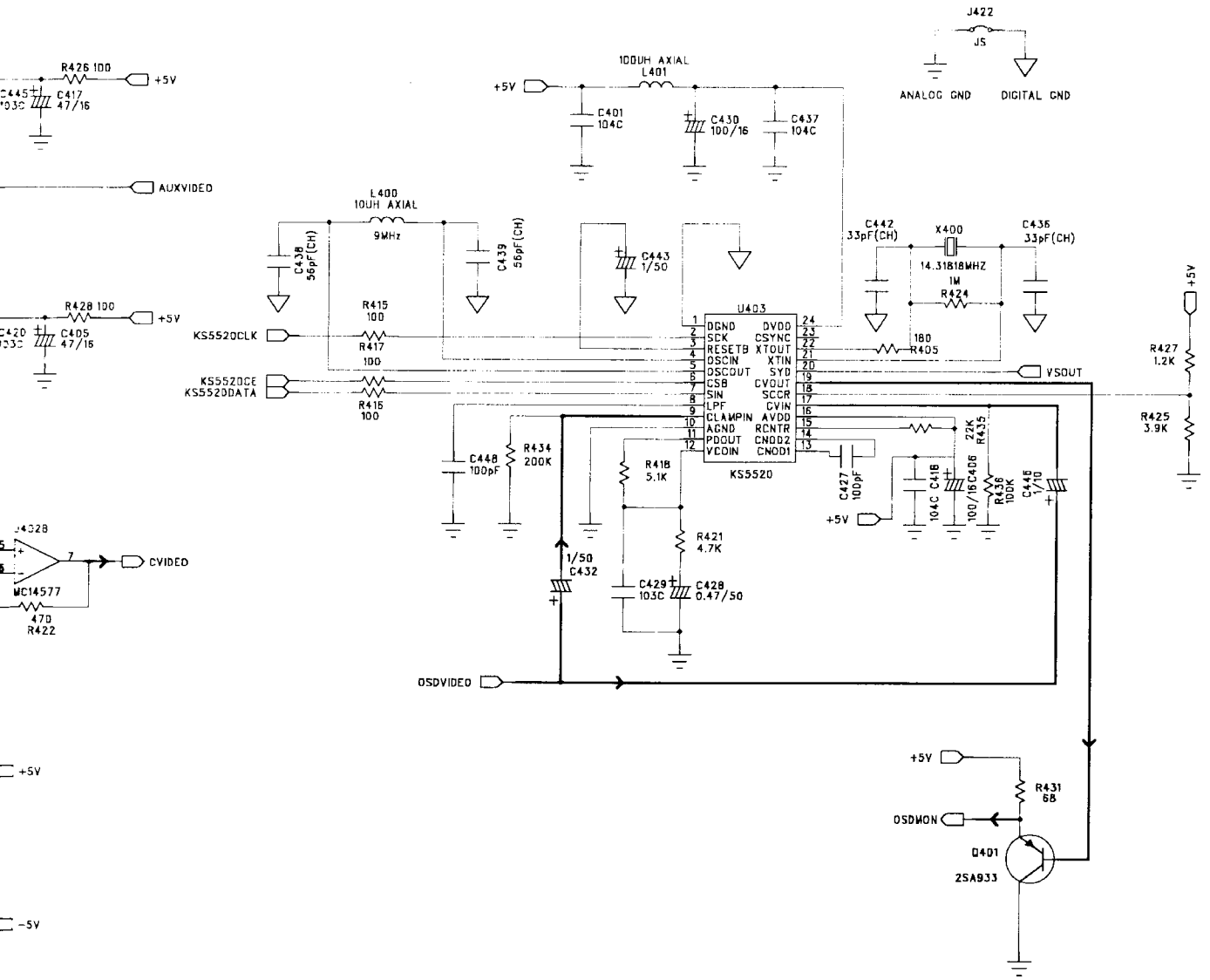
R426 100
+5V
C417 47/16
AUXVIDEO
R428 100
+5V
C405 47/16
J4028
CVIDEO
MC14577
470
R422
+5V
-5V
+5V
100UH AXIAL
L401
C401 104C
C430 100/16
C437 104C
J422
JS
ANALOG GND
DIGITAL GND
L400
10UH AXIAL
9MHz
C438 56pF(CH)
C439 56pF(CH)
C443 1/50
C442 33pF(CH)
X400
14.31818MHZ
C436 33pF(CH)
1M
R424
180
R405
U403
KS5520
DGND
SCK
RESETB
OSCIN
OSCOUT
CSB
SIN
LPF
CLAMPIN
AGND
PDOUT
VCOIN
DVDD
CSYNC
XTOUT
XTIN
SYD
CVOUT
SCCR
CVIN
AVDD
RCNTR
CNOD2
CNOD1
KS5520CLK
KS5520CE
KS5520DATA
R415 100
R417 100
R416 100
VSOUT
+5V
R427 1.2K
R425 3.9K
C448 100pF
R434 200K
R418 5.1K
R421 4.7K
C429 103C
C428 0.47/50
1/50 C432
C427 100pF
+5V
104C C418
100/16C406
22K R435
R436 100K
C445 1/10
OSDVIDEO
+5V
R431 68
OSDMON
Q401
2SA933

ROTEL			
MODEL NAME	RSX965		
BOARD NAME	SVIDEO		

SCHEMATIC DIA

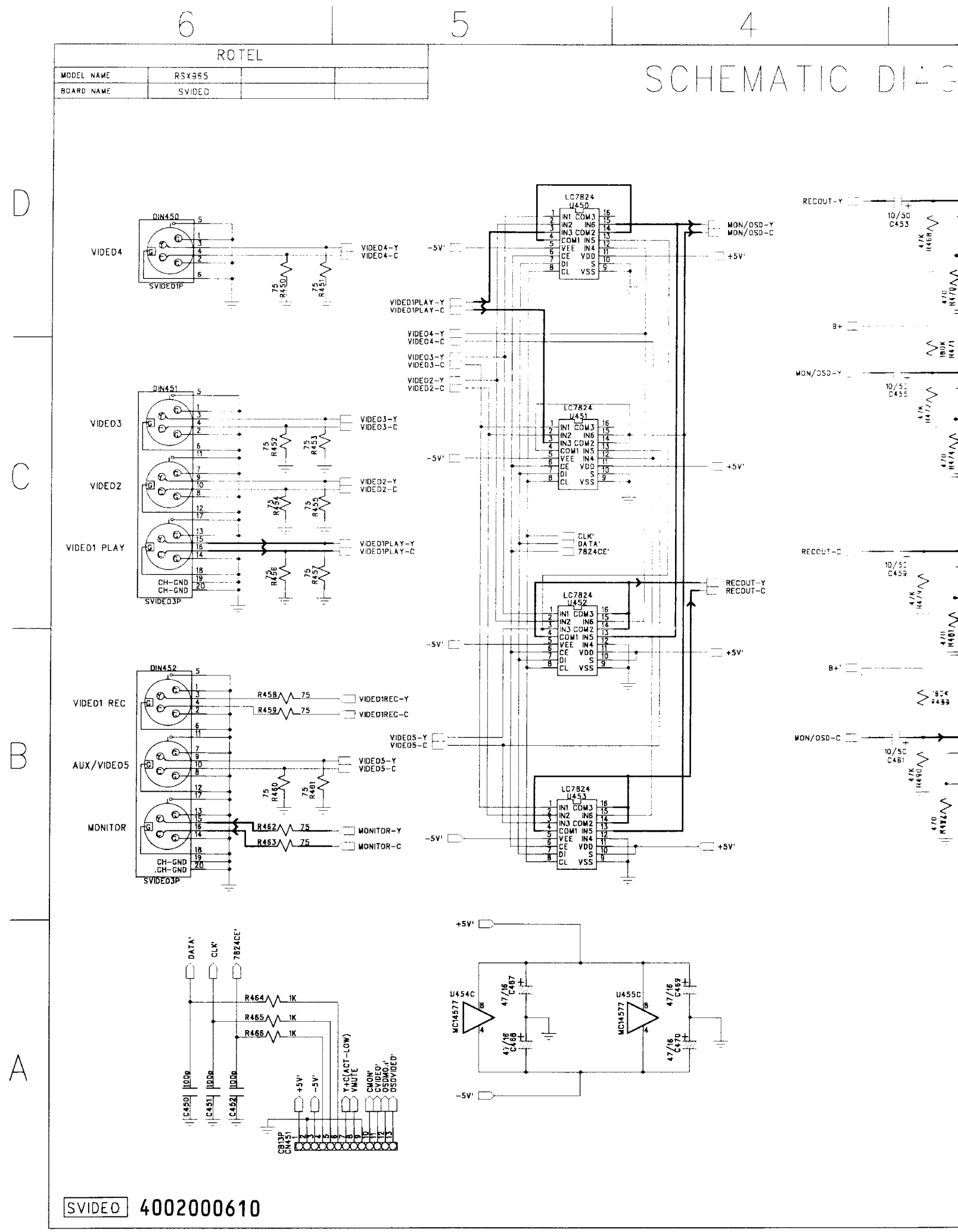

SVIDEO 4002000610

3 2 1

C DIAGRAM

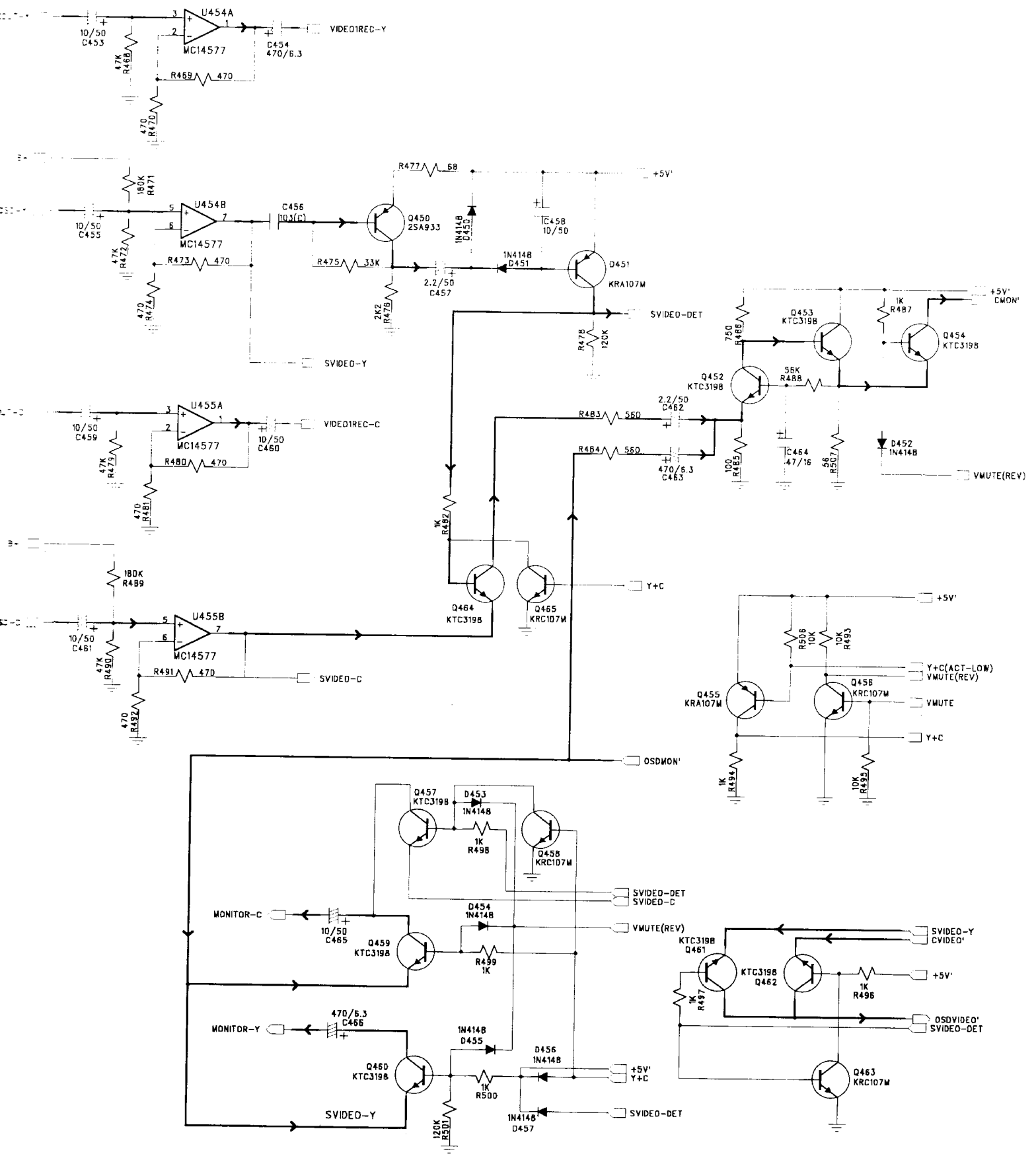

Parts List

SYMBOL	PART NO.	DISCRIPTION
	MAIN PCB ASSEMBLY	
	4002000100	PCB MAIN 330*247
C101-102	3419515382	CAP. E. AM 15000uF/80
C103-104	3409333262	CAP. E. SG 3300uF/35
C105	3409347232	CAP. E. SG 10000uF/16
C106	3409322232	CAP. E. SG 2200uF/16
C107	3479347121	CAP. E. SG 470uF/10
C108-112	3479310971	CAP. E. SG 1uF/50
C113-117	3679104257	CAP. MYLAR 0.1uF/250
C118-123	3679473120	CAP. MYLAR 0.047uF/100
C124	3409322232	CAP. E. SG 2200uF/16
C125	3479310971	CAP. E. SG 1uF/50
C126-127	3679473120	CAP. MYLAR 0.047uF/100
CN810	436505252166	CNT Assy
CP1-2	4235007410	PLATE GND
CP101	4428505710	CNT PLUG MO 5267-03
CP102	4428536103	CNT JE202B-1T-2(5-2)
CP103	4428536102	CNT JE202B-1T-2(3-2)
CP104-105	4428508210	CNT PLUG MO 5267-02
CP106-107	4428505710	CNT PLUG MO 5267-03
D102-109	2258128002	DIODE RECTIFIER 1N4004
D110,111	2058322101	DIODE 1N4148
D112	2258599919	DIODE ZENER UZ9V1
D113-114	2258128002	DIODE RECTIFIER 1N4004
DB101	2058100139	DIODE BRIDGE KBPC2504W
F101-102	5508102221	FUSE SB1.5A/125V
F101-102	5508302235	FUSE T1.5AL/250V
F103-104	5508102421	FUSE SB 2A/125V
F103-104	5508302435	FUSE T2AL/250V
FPC101	4426011029	CNT FPC PLUG ST 8370-291
FPC101	4426011031	CNT FPC PLUG ST 6210-031
JACK1	4438300110	JACK MINI
Q101-102	2208606105	TR NPN KTC3198BL
Q104	2208606105	TR NPN KTC3198BL
R101	3029472970	RES. MF 4.7K
R102	3029682970	RES. MF 6.8K
R103	3029102970	RES. MF 1K
R104	3029152970	RES. MF 1.5K
R105	3029472970	RES. MF 4.7K
R106	3029221970	RES. MF 220 1/5W J
U101	2408000136	OPTO. COUPLER LTV-817
U102	2168602109	IC REG. KIA7815
U103	2168602114	IC REG. KIA7915
U104	2168602112	IC REG. KIA7905
U105-107	2168602105	IC REG. KIA7805
W108	4428853110	CNT WAFER EL 8283-1012
W108	4428853115	CNT WAFER EL 8283-1512
W112	4428853113	CNT WAFER EL 8283-1312
W113	4428853115	CNT WAFER EL 8283-1512
W118	4428853111	CNT WAFER EL 8283-1112
W119	4428853108	CNT WAFER EL 8283-0812
W120	4428853109	CNT WAFER EL 8283-0912
W121	4428853115	CNT WAFER EL 8283-1512
W122	4428853113	CNT WAFER EL 8283-1312
W501	4428853115	CNT WAFER EL 8283-1512
W503	4428853105	CNT WAFER EL8283-0512
W801	4428853107	CNT WAFER EL 8283-0712
W802	4428853111	CNT WAFER EL 8283-1112
W803	4428853115	CNT WAFER EL 8283-1512
	FRONT PCB ASSEMBLY	
	4001000100	PCB FRONT B'd 440*247

SYMBOL	PART NO.	DISCRIPTION
U600	2138322100	IC CPU MAIN CXP828P60Q
C600	3439210415	CAP BACK-UP 0.1F/5.5V
C601-C613	3519101935	CAP C AXIAL 100pF/50V
C615	3519101935	CAP C AXIAL 100pF/50V
C617-622	3519821935	CAP C AXIAL 820pF/50V
C623-624	3519101935	CAP C AXIAL 100pF/50V
C625-626	3519473935	CAP C AXIAL 0.047uF/50V
C630	3479310071	CAP E SG 10uF/50V
C631	3479347971	CAP E SG 4.7uF/50V
C632	3479333971	CAP E SG 3.3uF/50V
C633	3509103530	CAP C RADIAL 0.01uF/50V
C634	3479322871	CAP E SG 0.22uF/50V
C871	3509103530	CAP C RADIAL 0.01uF/50V
CP602	4428011129	FPC PLUG AN 00-8370-297
CP602	4428011131	FPC PLUG AN 00-6216-031
CN601	436209453524	CTG 0945 S03, T03
D600-612	2058322101	DIODE 1N4148
D614-615	2058322101	DIODE 1N4148
D616	2258128002	DIODE 1N4004
D617	2258128002	DIODE 1N4004
D618	2258128002	DIODE 1N4004
D619	2058322101	DIODE 1N4148
D620	2058322101	DIODE 1N4148
D621	2058322101	DIODE 1N4148
D622	2058322101	DIODE 1N4148
D627	2371140711	LED SRV56URCF14
FL600	2328000302	FL DISPLAY SVR-08LM02
Q602	2208606105	TR NPN KTC3198
Q603	2208606105	TR NPN KTC3198
Q604,Q605	2238006100	TR NPN KRC107M
R600	3029103970	RES MF 10K 1/5W J
R601-613	3029102970	RES MF 1K 1/5W J
R615	3029102970	RES MF 1K 1/5W J
R616	3029330970	RES MF 330 1/5W J
R617	3029472970	RES MF 4K7 1/5W J
R618	3029271970	RES MF 270 1/5W J
R619	3029472970	RES MF 4K7 1/5W J
R620	3029103970	RES MF 10K 1/5W J
R621	3029102970	RES MF 1K 1/5W J
R622	3029103970	RES MF 10K 1/5W J
R623	3029103970	RES MF 10K 1/5W J
R624	3029472970	RES MF 4K7 1/5W J
R625	3029104970	RES MF 100K 1/5W J
R626-627	3029229970	RES MF 2.2 1/5W J
R628	3029101970	RES MF 100 1/5W J
R629	3029472970	RES MF 4K7 1/5W J
R630-633	3029473970	RES MF 47K 1/5W J
R634-642	3029103970	RES MF 10K 1/5W J
R643-645	3029124970	RES MF 120K 1/5W J
R646-656	3029472970	RES MF 4K7 1/5W J
R657	3029102970	RES MF 1K 1/5W J
R658	3029333970	RES MF 33K 1/5W J
R659-661	3029102970	RES MF 1K 1/5W J
R662-699	3029124970	RES MF 120K 1/5W J
R888	3029101970	RES MF 100 1/5W J
RMC601	2408000180	REMOTE SENSOR
S601-S650	4658000110	TACT SWICH
SW801,802,804	3218000210	ENCODER
SW805	3218000110	VOL ENCODER
XT601	3908101156	RESONATOR 10MHz
	HEADPHONE PCB ASSEMBLY	
	4001000120	PCB HEADPHONE B'd
C851-852	3519561935	CAP C AXIAL 560pF/50V

SYMBOL	PART NO.	DISCRIPTION
CN810	436204503524	CTG 0450 S05 T05 DL#26 2.0
R851-852	3029471570	RES MF 470 2W
R853-854	3029223970	RES MF 22K 1/5W J
SW803	4438000210	PHONEJACK 9P GOLD
	DB-25 PCB ASSEMBLY	
	4001000170	PCB DB-25 B'd
C835	3479347971	CAP E SG 4.7uF/50V
C836	3519101935	CAP C AXIAL 100pF/50V
C837	3479347971	CAP E SG 4.7uF/50V
C838	3479347971	CAP E SG 4.7uF/50V
C839	3519101935	CAP C AXIAL 100pF/50V
C840	3479347971	CAP E SG 4.7uF/50V
C841-842	3479347061	CAP E SG 47uF/25V
C860-861	3479347061	CAP E SG 47uF/25V
C862	3479310971	CAP E SG 1uF/50V
C863-6	3519101935	CAP C AXIAL 100pF/50V
C868	3519101935	CAP C AXIAL 100pF/50V
C870	3519103935	CAP C AXIAL 0.01uF/50V
CB801	4428 863213	CNT Housing 20-8283-1312-00-000
CB802	4428 863215	CNT Housing 20-8283-1512-00-000
CP502	4428517010	GIL-S-11P-S2T2-EF
CP820	4438600120	CNT DB25M
CP821	4438600110	CNT DB25F
D800	2058322101	DIODE 1N4148
R830	3029104970	RES MF 100K 1/5W J
R832	3029472970	RES MF 4K7 1/5W J
R833		JUMPER
R834-835	3029104970	RES MF 100K 1/5W J
R837	3029472970	RES MF 4K7 1/5W J
R838		JUMPER
R839	3029104970	RES MF 100K 1/5W J
R840-841	3029221970	RES MF 220 1/5W J
R860-861	3029221970	RES MF 220 1/5W J
R862	3029104970	RES MF 100K 1/5W J
R863-865	3029102970	RES MF 1K 1/5W J
R866-868	3029472970	RES MF 5K1 1/5W J
R870	3029472970	RES MF 5K1 1/5W J
R872-874	3029103970	RES MF 10K 1/5W J
R875	3029102970	RES MF 1K 1/5W J
R876	3029103970	RES MF 10K 1/5W J
R878-883	3029102970	RES MF 1K 1/5W J
R887	3029102970	RES MF 1K 1/5W J
U800	2168017140	IC LC7823
U801	2168220135	IC NJM5532D
	POWER SW PCB ASSEMBLY	
	4001000110	PCB POWER SW B'd
C833	3549472109	CAP C 0.0047uF/400VAC
CN801	436503402147	CTG 0240 201 210 DL#22 7.92
SW800	4628000110	POWER SW ICH
	POWER PCB ASSEMBLY	
	4001000160	PCB POWER B'd
C821	3419510242	CAP E SG 1000uF/25V
C822-823	3479310971	CAP E SG 1uF/50V
C824	3479347071	CAP E SG 47uF/50V
C825	3479310071	CAP E SG 10uF/50V
C826-8	3679473120	CAP MYLAR 0.047uF/100V
C829	3509104130	CAP C 0.1uF/50V

SYMBOL	PART NO.	DISCRIPTION
C834	3509104130	CAP C 0.1uF/50V
CN804	436204103524	CTG0410 S04 T04 DL#26 2.0
CN807	436203203524	CTG0320 S03 T03 DL#26 2.0
CP805	4235007410	PLATE GND
CP806	4428505610	CNT PLUG MO 5267-04
CP808	4428516110	CNT PLUG LG GIL-S3P-S2T2-EF
D820-823	2258128002	DIODE RECT. 1N4004
D825-827	2058322101	DIODE 1N4148
D828	2258599919	DIODE ZENER UZ 9V1
D829	2258599300	DIODE ZENER UZ 30V
D830	2258599439	DIODE ZENER UZ 4V3
Q821	2208206105	TR PNP BTKA1266
Q822-823	2208606105	TR NPN KTC3198
R820	3029470470	RES MF 47- 1W J
R821	3029102970	RES MF 1K 1/5W
R822	3029103970	RES MF 10K 1/5W
R823	3029560970	RES MF 56 1/5W
R824-825	3029332970	RES MF 3K3 1/5W
R826	3029470970	RES MF 47 1/5W
R827	3029220970	RES MF 22 1/5W J
R828-829	3029472970	RES MF 4K7 1/5W
U802	2168602105	IC REG KIA7805
	STANDBY PCB ASSEMBLY	
	4001000150	PCB STANDBY B'd
AC800	4448000110	AC OUTLET 2P
AC800	4448000210	AC OUTLET 1P
C831	3549472109	CAP C 0.0047uF/400VAC
CP800	4428537102	CNT PLUG MO 7.92
CP801-802	4428536102	CNT PLUG JE 7.92
CP804	4428516310	CNT PLUG LG GIL-S4P-S2T2-EF
D824	2285128002	DIODE RECT. 1N4004
F801	5508103321	FUSE SB7A/125V
F801	5508302935	FUSE T4AL/250V
F802	5508101421	FUSE SB315mA/125V
F802	5508301234	FUSE T250mAL/250V
F803	5508102021	FUSE SB1A/125V
F803	5508302035	FUSE T1AL/250V
GND800	4235007410	PLATE GND
R800	3029335380	RES MF 3M3 1/2W
RLY800	5528001640	RELAY G5PA-1 DC12V
T800	2828000037	X-FOR ST-BY 120V/60Hz
T800	2828000047	X-FOR ST-BY 230V/50Hz
T801	2648701170	FILTER EMI
	SPEAKER PCB ASSEMBLY	
	4001000140	PCB SPEAKER B'd
C801-804	3679473120	CAP MYLAR 0.047uF/100V
C805-809	3679472120	CAP MYLAR 0.0047uF/100V
C810	3679473120	CAP MYLAR 0.047uF/100V
C811-815	3679472120	CAP MYLAR 0.0047uF/100V
CP807	4428516210	CNT PLUG LG GIL-S3P-S2T2-EF
CP809	4428516310	CNT PLUG LG GIL-S4P-S2T2-EF
CP810	4428536005	CNT PLUG JE JE-202A-1T-5
CP811	4428536002	CNT PLUG JE JE-202A-1T-2
CP812	4428536003	CNT PLUG JE JE-202A-1T-3
D831	2258128002	DIODE RECT. 1N4004
R801-805	3029100570	RES MF 10R 2W
RLY801	5528001510	RELAY G5Z-2A
SPT800	4408100110	SPKER TERMINAL 8P
SPT801	4408100210	SPKER TERMINAL 8P

SYMBOL	PART NO.	DISCRIPTION
	AMPLIFIER PCB ASSEMBLY	
	4002000200	PCB AMPLIFIER B'd 330*247
C215	3479310971	CAP E SG 1uF/50V
C216	3479347061	CAP E SG 47uF/35V
C217	3479310971	CAP E SG 1uF/50V
CC,CL,CR,CSL,CSR201	3479347971	CAP E SG 4.7uF/50V
CC,CL,CR,CSL,CSR202	3519271935	CAP C AXIAL 270pF/50V
CC,CL,CR,CSL,CSR203	3919390935	CAP C AXIAL 390pF/50V
CC,CL,CR,CSL,CSR204	3479310971	CAP E SG 1uF/50V
CC,CL,CR,CSL,CSR205	3479322031	CAP E SG 22uF/16V
CC,CL,CR,CSL,CSR206	3479322121	CAP E SG 220uF/10V
CC,CL,CR,CSL,CSR207	3519569935	CAP C AXIAL 5.6pF/50V
CC,CL,CR,CSL,CSR209	3519181935	CAP C AXIAL 180pF/50V
CC,CL,CR,CSL,CSR210	3479347182	CAP E SG 470uF/63V
CC,CL,CR,CSL,CSR211	3479310071	CAP E SG 10uF/50V
CC,CL,CR,CSL,CSR212	3479347182	CAP E SG 470uF/63V
CC,CL,CR,CSL,CSR214	3479310071	CAP E SG 10uF/50V
CNT201	4428 516 910	GS 10P WAFER
CNT202	436503122167	CNT JE 2P 7.92mm 120mm
CNT203	436503252166	CNT JE 3P 3.96mm 250mm
CNT204	436502402166	CNT JE 3P 3.96mm 400mm
CNT205	436103163525	CNT MO 3P 2.5mm 160mm
DC201-202	2058322101	DIODE 1N4148
DL201-202	2058322101	DIODE 1N4148
DR201-202	2058322101	DIODE 1N4148
DSL201-202	2058322101	DIODE 1N4148
DSR201-202	2058322101	DIODE 1N4148
LC,L,R,SL,SR201	2648601470	INDUCTOR 0.5uH
QC,QL,QR,QSL,QSR209	2008607106	TR NPN 2SA3423
QC,QL,QR,QSL,QSR211	2028316100	TR NPN 2SC4883
QC,QL,QR,QSL,QSR212	2028016100	TR PNP 2SA1859
Q216	2238006100	TR NPN KRC107M
Q217	2208206104	TR PNP KTA1268
Q218	2238006103	TR PNP KRA107M
QC201-204	2208206104	TR PNP KTA1268
QL201-204	2208206104	TR PNP KTA1268
QR201-204	2208206104	TR PNP KTA1268
QSL201-204	2208206104	TR PNP KTA1268
QSR201-204	2208206104	TR PNP KTA1268
QC205-206	2208606108	TR NPN KTC3200
QL205-206	2208606108	TR NPN KTC3200
QR205-206	2208606108	TR NPN KTC3200
QSL205-206	2208606108	TR NPN KTC3200
QSR205-206	2208606108	TR NPN KTC3200
QC,QL,QR,QSL,QSR207	2208206104	TR PNP KTA1268
QC,QL,QR,QSL,QSR208	2008207101	TR PNP 2SA1360
QC,QL,QR,QSL,QSR215	2208606108	TR NPN KTC3200
QC,QL,QR,QSL,QSR219	2208622113	TR NPN DTC323
R237	3029104970	RES MF 100K 1/5W J
R238	3029683970	RES MF 68K 1/5W J
R243	3029154970	RES MF 150K 1/5W J
R244-245	3029152970	RES MF 1K5 1/5W J
R246	3029332970	RES MF 3K3 1/5W J
R247	3029102970	RES MF 1K 1/5W J
RC,RL,RR,SL,SR208	3029680970	RES MF 68 1/5W J
RC,RL,RR,RSL,RSR201	3029102970	RES MF 1K 1/5W J
RC,RL,RR,RSL,RSR202	3029333970	RES MF 33K 1/5W J
RC203-204	3029150970	RES MF 15 1/5W J
RL203-204	3029150970	RES MF 15 1/5W J
RR203-204	3029150970	RES MF 15 1/5W J
RSL203-204	3029150970	RES MF 15 1/5W J
RSR203-204	3029150970	RES MF 15 1/5W J
RC205-206	3029751970	RES MF 750 1/5W J
RL205-206	3029751970	RES MF 750 1/5W J
RR205-206	3029751970	RES MF 750 1/5W J
RSL205-206	3029751970	RES MF 750 1/5W J
RSR205-206	3029751970	RES MF 750 1/5W J
RC,RL,RR,RSL,RSR235	3029182970	RES MF 1K8 1/5W J
RC,RL,RR,RSL,RSR207	3029102970	RES MF 1K 1/5W J
RC,RL,RR,RSL,RSR209	3029151970	RES MF 150 1/5W J
RC,RL,RR,RSL,RSR210	3029103970	RES MF 10K 1/5W J
RC,RL,RR,RSL,RSR211	3029433970	RES MF 43K 1/5W J
RC,RL,RR,RSL,RSR212	3029152970	RES MF 1K5 1/5W J
RC,RL,RR,RSL,RSR213	3029333970	RES MF 33K 1/5W J
RC214-220	3029561970	RES MF 560 1/5W J
RL214-220	3029561970	RES MF 560 1/5W J
RR214-220	3029561970	RES MF 560 1/5W J
RSL214-220	3029561970	RES MF 560 1/5W J
RSR214-220	3029561970	RES MF 560 1/5W J
RC221-222	3029820970	RES MF 82 1/5W J
RL221-222	3029820970	RES MF 82 1/5W J
RR221-222	3029820970	RES MF 82 1/5W J
RSL221-222	3029820970	RES MF 82 1/5W J
RSR221-222	3029820970	RES MF 82 1/5W J
RC,RL,RR,RSL,RSR233	3059027763	RES MPR 0.27R 5W
RC223-224	3029223970	RES MF 22K 1/5W J
RL223-224	3029223970	RES MF 22K 1/5W J
RR223-224	3029223970	RES MF 22K 1/5W J
RSL223-224	3029223970	RES MF 22K 1/5W J
RSR223-224	3029223970	RES MF 22K 1/5W J
RC,RL,RR,RSL,RSR226	3029122970	RES MF 1K2 1/5W J
RC,RL,RR,RSL,RSR227	3029431970	RES MF 430 1/5W J
RC228-229	3069101270	RES MF 100 1/4W J
RL228-229	3069101270	RES MF 100 1/4W J
RR228-229	3069101270	RES MF 100 1/4W J
RSL228-229	3069101270	RES MF 100 1/4W J
RSR228-229	3069101270	RES MF 100 1/4W J
RC,RL,RR,RSL,RSR230	3029820970	RES MF 82 1/5W J
RC231-232	3029339970	RES MF 3.3 1/5W J
RL231-232	3029339970	RES MF 3.3 1/5W J
RR231-232	3029339970	RES MF 3.3 1/5W J
RSL231-232	3029339970	RES MF 3.3 1/5W J
RSR231-232	3029339970	RES MF 3.3 1/5W J
RC,RL,RR,RSL,RSR236	3029202970	RES MF 2K 1/5W J
RC,RL,RR,RSL,RSR237	3029971970	RES MF 910 1/5W J
RC,RL,RR,RSL,RSR238	3029682970	RES MF 6K8 1/5W J
RC239-242	3029390970	RES MF 39 1/5W J
RL239-242	3029390970	RES MF 39 1/5W J
RR239-242	3029390970	RES MF 39 1/5W J
RSL239-242	3029390970	RES MF 39 1/5W J
RSR239-242	3029390970	RES MF 39 1/5W J
RC244-245	3029561970	RES MF 560 1/5W J
RL244-245	3029561970	RES MF 560 1/5W J
RR244-245	3029561970	RES MF 560 1/5W J
RSL244-245	3029561970	RES MF 560 1/5W J
RSR244-245	3029561970	RES MF 560 1/5W J
RC,RL,RR,RSL,RSR245	3029223970	RES MF 22K 1/5W J
ZD201	2258599116	ZENER DIODE 12V
	DOLBY DIGITAL/ dts PCB ASSEMBLY	
	4002000700	PCB DTS B'd 243*164
C900	3479110031	CAP E SE 10uF/16V
C901	3536104122	CAP C CHIP 0.1uF/50V
C902-903	3536222122	CAP C CHIP 2200pF/50V
C904-905	3536104122	CAP C CHIP 0.1uF/50V
C906-909	3536222122	CAP C CHIP 2200pF/50V
C910	3536104122	CAP C CHIP 0.1uF/50V
C911	3479110031	CAP E SE 10uF/16V

SYMBOL	PART NO.	DISCRIPTION
C912-913	3536222122	CAP C CHIP 2200pF/50V
C914-915	3536470122	CAP C CHIP 47pF/50V
C916-919	3479122041	CAP E SE 22uF/25V
C920-923	3536104122	CAP C CHIP 0.1uF/50V
C925	3479147021	CAP E SE 47uF/6.3V
C926	3536104122	CAP C CHIP 0.1uF/50V
C927	3536152122	CAP C CHIP 1500pF/50V
C928	3536153122	CAP C CHIP 0.015uF/50V
C929	3536104122	CAP C CHIP 0.1uF/50V
C930	3479147021	CAP E SE 47uF/6.3V
C931	3479110971	CAP E SE 1uF/50V
C932	3479147021	CAP E SE 47uF/6.3V
C933	3536104122	CAP C CHIP 0.1uF/50V
C935	3479110031	CAP E SE 10uF/16V
C936-937	3536104122	CAP C CHIP 0.1uF/50V
C938	3479110031	CAP E SE 10uF/16V
C939	3536104122	CAP C CHIP 0.1uF/50V
C941-942	3479122041	CAP E SE 22uF/25V
C943-948	3536104122	CAP C CHIP 0.1uF/50V
C950	3479147021	CAP E SE 47uF/6.3V
C951	3536104122	CAP C CHIP 0.1uF/50V
C954-963	3536104122	CAP C CHIP 0.1uF/50V
C964	3479110031	CAP E SE 10uF/16V
C965	3479147021	CAP E SE 47uF/6.3V
C966-968	3536104122	CAP C CHIP 0.1uF/50V
C970	3536104122	CAP C CHIP 0.1uF/50V
C971	3479147021	CAP E SE 47uF/6.3V
C972	3536471122	CAP C CHIP 470pF/50V
C973	3536104122	CAP C CHIP 0.1uF/50V
C980-989	3536104122	CAP C CHIP 0.1uF/50V
CCT901	3479110031	CAP E SE 10uF/16V
CFL901	3479110031	CAP E SE 10uF/16V
CFR901	3479110031	CAP E SE 10uF/16V
CSL901	3479110031	CAP E SE 10uF/16V
CSR901	3479110031	CAP E SE 10uF/16V
CSW901	3479110031	CAP E SE 10uF/16V
CCT902	3536471122	CAP C CHIP 470pF/50V
CFL902	3536471122	CAP C CHIP 470pF/50V
CFR902	3536471122	CAP C CHIP 470pF/50V
CSL902	3536471122	CAP C CHIP 470pF/50V
CSR902	3536471122	CAP C CHIP 470pF/50V
CCT903	3536222122	CAP C CHIP 2200pF/50V
CFL903	3536222122	CAP C CHIP 2200pF/50V
CFR903	3536222122	CAP C CHIP 2200pF/50V
CSL903	3536222122	CAP C CHIP 2200pF/50V
CSR903	3536222122	CAP C CHIP 2200pF/50V
CCT904	3536152122	CAP C CHIP 1500pF/50V
CFL904	3536152122	CAP C CHIP 1500pF/50V
CFR904	3536152122	CAP C CHIP 1500pF/50V
CSR904	3536152122	CAP C CHIP 1500pF/50V
CSL904	3536152122	CAP C CHIP 1500pF/50V
CCT905	3479110031	CAP E SE 10uF/16V
CFL905	3479110031	CAP E SE 10uF/16V
CFR905	3479110031	CAP E SE 10uF/16V
CSL905	3479110031	CAP E SE 10uF/16V
CSR905	3479110031	CAP E SE 10uF/16V
CSW905	3479110031	CAP E SE 10uF/16V
CT900-909	3536104122	CAP C CHIP 0.1uF/50V
CT910	3479110031	CAP E SE 10uF/16V
CT911	3536104122	CAP C CHIP 0.1uF/50V
CT913	3536471122	CAP C CHIP 470pF/50V
CL901-903	3479110031	CAP E SE 10uF/16V
CR901-903	3479110031	CAP E SE 10uF/16V
CSW902-4	3536104122	CAP C CHIP 0.1uF/50V
D901,902	2257104100	DIODE CHIP KDS226RTK
L901-2	2648702140	BEAD 1608 LM182

SYMBOL	PART NO.	DISCRIPTION
L904	2648702141	BEAD 2012 HS470
L905	2648702140	BEAD 1608 LM182
L906	2648702141	BEAD 2012 HS470
L907	2648702140	BEAD 1608 LM182
L908-909	2648702141	BEAD 2012 HS470
L910	2648702140	BEAD 1608 LM182
L911	3099000170	RES CHIP 0 1/8W J
L912	2648702141	BEAD 2012 HS470
L913-918	2648702142	BEAD 1608 HS241
L919-922	2648702140	BEAD 1608 LM182
Q901-904	2207206001	TR NPN CHIP DTC143ZKA
Q907-910	2207206001	TR NPN CHIP DTC143ZKA
Q912	2207206001	TR NPN CHIP DTC143ZKA
R900	3099100170	RES CHIP 10 1/8W J
R901	3099473170	RES CHIP 47K 1/8W J
R902	3099203170	RES CHIP 20K 1/8W J
R903	3099102170	RES CHIP 1K 1/8W J
R904	3099103170	RES CHIP 10K 1/8W J
R905	3099470170	RES CHIP 47 1/8W J
R906	3099473170	RES CHIP 47K 1/8W J
R907	3099203170	RES CHIP 20K 1/8W J
R908	3099102170	RES CHIP 1K 1/8W J
R909	3099103170	RES CHIP 10K 1/8W J
R910	3099470170	RES CHIP 47 1/8W J
R911	3099820170	RES CHIP 82 1/8W J
R912	3099203170	RES CHIP 20K 1/8W J
R913	3099822170	RES CHIP 4K7 1/8W J
R914	3099103170	RES CHIP 20K 1/8W J
R915	3099102170	RES CHIP 1K 1/8W J
R917	3099470170	RES CHIP 47 1/8W J
R918	3099820170	RES CHIP 82 1/8W J
R919	3099203170	RES CHIP 20K 1/8W J
R920	3099822170	RES CHIP 4K7 1/8W J
R921	3099103170	RES CHIP 20K 1/8W J
R922	3099102170	RES CHIP 1K 1/8W J
R923	3099103170	RES CHIP 10K 1/8W J
R924	3099470170	RES CHIP 47 1/8W J
R925-926	3099221170	RES CHIP 220 1/8W J
R929-930	3099221170	RES CHIP 220 1/8W J
R931-933	3099103170	RES CHIP 10K 1/8W J
R934	3099333170	RES CHIP 33K 1/8W J
R935	3099103170	RES CHIP 10K 1/8W J
R936	3099229170	RES CHIP 2.2 1/8W J
R938	3099103170	RES CHIP 10K 1/8W J
R939-940	3099470170	RES CHIP 47 1/8W J
R952-954	3099470170	RES CHIP 47 1/8W J
R955-956	3099221170	RES CHIP 220 1/8W J
R975	3099103170	RES CHIP 10K 1/8W J
R976	3099472170	RES CHIP 4.7K 1/8W J
R977	3099103170	RES CHIP 10K 1/8W J
R978	3099472170	RES CHIP 4.7K 1/8W J
R979-980	3099103170	RES CHIP 10K 1/8W J
R981-982	3099103170	RES CHIP 10K 1/8W J
R983	3099103170	RES CHIP 10K 1/8W J
R986	3099470170	RES CHIP 47 1/8W J
R987-989	3099470170	RES CHIP 47 1/8W J
R990-997	3099103170	RES CHIP 10K 1/8W J
RCT902	3099104170	RES CHIP 100K 1/8W J
RFL902	3099104170	RES CHIP 100K 1/8W J
RFR902	3099104170	RES CHIP 100K 1/8W J
RSL902	3099104170	RES CHIP 100K 1/8W J
RSR902	3099104170	RES CHIP 100K 1/8W J
RSW902	3099104170	RES CHIP 100K 1/8W J
RCT903-905	3099152170	RES CHIP 1K5 1/8W J
RFL903-905	3099152170	RES CHIP 1K5 1/8W J
RFR903-905	3099152170	RES CHIP 1K5 1/8W J

Parts List

SYMBOL	PART NO.	DISCRIPTION
RSL903-905	3099152170	RES CHIP 1K5 1/8W J
RSR903-905	3099152170	RES CHIP 1K5 1/8W J
RSW903-905	3099152170	RES CHIP 1K5 1/8W J
RCT906-907	3099472170	RES CHIP 4.7K 1/8W J
RFL906-907	3099472170	RES CHIP 4.7K 1/8W J
RFR906-907	3099472170	RES CHIP 4.7K 1/8W J
RSL906-907	3099472170	RES CHIP 4.7K 1/8W J
RSR906-907	3099472170	RES CHIP 4.7K 1/8W J
RSW906-907	3099472170	RES CHIP 4.7K 1/8W J
RCT908	3099104170	RES CHIP 100K 1/8W J
RFL908	3099104170	RES CHIP 100K 1/8W J
RFR908	3099104170	RES CHIP 100K 1/8W J
RSL908	3099104170	RES CHIP 100K 1/8W J
RSR908	3099104170	RES CHIP 100K 1/8W J
RSW908	3099104170	RES CHIP 100K 1/8W J
RT900-912	3099203170	RES CHIP 20K 1/8W J
RT915-917	3099470170	RES CHIP 47 1/8W J
RT918-924	3099203170	RES CHIP 20K 1/8W J
RT925	3099470170	RES CHIP 47 1/8W J
RL,RR902-903	3099104170	RES CHIP 100K 1/8W J
RL,RR904	3099203170	RES CHIP 20K 1/8W J
RL,RR905-907	3099103170	RES CHIP 10K 1/8W J
RL,RR908	3099104170	RES CHIP 100K 1/8W J
RL,RR909-910	3099102170	RES CHIP 1K 1/8W J
RL,RR911	3099104170	RES CHIP 100K 1/8W J
RM901	3099100170	RES CHIP 10 1/8W J
RM903	3099100170	RES CHIP 10 1/8W J
RM904-925	3099103170	RES CHIP 10K 1/8W J
RM926	3099100170	RES CHIP 10 1/8W J
RM930	3099100170	RES CHIP 10 1/8W J
U901,902	2408218001	OPTO RCVR TORX178A
U903-904	2109001130	IC 74VHCU04
U905-906	2168220135	IC OP AMP CHIP NJM5532
U907	2139941001	IC AD/DA CONV. CS4226
U908	2139809001	IC 24-BIT DSP 56009
U909	2139402150	IC RAM CY7C199
U910	2138400130	IC EPROM 27C010
U911	2109001140	IC 74VHC393
U912	2109001100	IC 74VHC157
U913-915	2168220142	IC OP AMP CHIP NJM5532M
U916	2139941002	IC DD DECODER CS4923
U917	2109001110	IC 74VHC244
U918	2138400130	IC EPROM 27C010
U919-920	2109001150	IC 74VHC574
U921	2109001120	IC 74VHC125
U922	2168639100	IC REG BA033FP
U923	2109001130	IC 74VHCU04
U924	2109001110	IC 74VHC244
U925	2139322743	IC CXP823P24Q
XT901	3938131490	OSC 1MHz
XT902	3908101680	OSC 49.152MHz
XT903	3908101156	RESONATOR 10MHz
RCA901		
	ETC	
	2828000017	POWER TRANSFORMER 120V/60Hz
	2828000027	POWER TRANSFORMER 230V/50Hz
	436629301182	FPC CABLE 29P 300mm
	436631301182	FPC CABLE 31P 300mm
	PROCESSOR PCB ASSEMBLY	
	4002000500	PCB PROCESSOR 247*247

SYMBOL	PART NO.	DISCRIPTION
C501-520	3479347041	CAP. E. SG 47uF/25
C521	3536101122	CAP C CHIP 100pF/50
CB501	4428863215	CNT Housing 20-8283-1512-00-000
CB502	4428863210	CNT Housing 20-8283-1012-00-000
CB503	4428863205	CNT Housing 20-8283-0512-00-000
CC,CSL,CSR502	3536821122	CAP C CHIP 820pF/50
CC501	3479347971	CAP. E. SG 4.7uF/50
CC503	3536101122	CAP C CHIP 100pF/50
CC504	3479347971	CAP. E. SG 4.7uF/50
CC505-506	3479347041	CAP. E. SG 47uF/25
CC512	3479347971	CAP. E. SG 4.7uF/50
CC513	3536821122	CAP C CHIP 820pF/50
CC514	3536101122	CAP C CHIP 100pF/50
CC515-516	3479347971	CAP. E. SG 4.7uF/50
CF501	3536101122	CAP C CHIP 100pF/50
CF504-507	3479347041	CAP. E. SG 47uF/25
CF508	3536101122	CAP C CHIP 100pF/50
CFL,CFR501	3479310071	CAP. E. SG 10uF/50
CFL,CFR502-503	3536101122	CAP C CHIP 100pF/50
CFL,CFR504-6	3479347971	CAP. E. SG 4.7uF/50
CFL,CFR507-508	3536101122	CAP C CHIP 100pF/50
CFL,CFR509-10	3479347971	CAP. E. SG 4.7uF/50
CFL,CFR511	3536101122	CAP C CHIP 100pF/50
CFL,CFR517	3536270122	CAP C CHIP 27pF/50
CFL,CFR518	3479301071	CAP. E. SG 1uF/50
CFL,CFR519	3479347971	CAP. E. SG 4.7uF/50
CFL,CFR520	3679683120	CAP M RADIAL 683M
CFL,CFR521	3679123120	CAP M RADIAL 123M
CFL,CFR522	3679272120	CAP M RADIAL 272M
CFL,CFR523	3679223120	CAP M RADIAL 223M
CFL,CFR524	3479310071	CAP. E. SG 10uF/50
CFL,CFR525	3479347971	CAP. E. SG 4.7uF/50
CML501	3479347971	CAP. E. SG 4.7uF/50
CMR501	3479347971	CAP. E. SG 4.7uF/50
CSL501	3479347971	CAP. E. SG 4.7uF/50
CSR501	3479347971	CAP. E. SG 4.7uF/50
CSW501	3479347971	CAP. E. SG 4.7uF/50
CML,CMR,CSW502	3536104122	CAP C CHIP 104C
CML,CMR503	3479310071	CAP. E. SG 10uF/50
CN501	436211083524	CTG 1108 S11,T10 DL #26 2.0
CN502	436210107724	CTG 1010 S10,T10 DS #26 2.0
CS502-503	3479347041	CAP. E. SG 47uF/25
CSL,CSR,CSW503	3536101122	CAP C CHIP 100pF/50
CSL,CSR,CSW504-505	3479347971	CAP. E. SG 4.7uF/50
CSL,CSR507	3536101122	CAP C CHIP 100pF/50
CSL,CSR,CSW508-509	3479347971	CAP. E. SG 4.7uF/50
CSL,CSR506	3536821122	CAP C CHIP 820pF/50
CSW506	3536563122	CAP C CHIP 563C
CSW507	3536222122	CAP C CHIP 222C
CSW510	3536563122	CAP C CHIP 563C
CSW511	3536822122	CAP C CHIP 822C
CSW512-514	3479347971	CAP. E. SG 4.7uF/50
CSW515	3536563122	CAP C CHIP 563C
CSW516	3536102122	CAP C CHIP 102C
CSW517-518	3479347971	CAP. E. SG 4.7uF/50
JC,JF510	3099000170	CHIP RES. 0 1/8W
JC505	3099000170	CHIP RES. 0 1/8W
JC522	3099000170	CHIP RES. 0 1/8W
JF515	3099000170	CHIP RES. 0 1/8W
JF536	3099000170	CHIP RES. 0 1/8W
JF549	3099000170	CHIP RES. 0 1/8W
JF550	3099000170	CHIP RES. 0 1/8W
QC,QS,QSW501	2257103110	SILICON C Diodes KDS184RTK
QF502	2257103110	SILICON C Diodes KDS184RTK
QC,QS,QSW502,QF501	2238006103	PNP Transistor KRA107M
QFL501,QFR501	2238422100	NPN Transistor DTC323

SYMBOL	PART NO.	DISCRIPTION
QSL,QSR501,QC,QSW503	2238422100	NPN Transistor DTC323
R501-520	3029221970	RES. MF 220 1/5W J
R521-3	3099102170	CHIP RES. 1K 1/8W
R549	3029102970	RES. MF 1K 1/5W J
R550	3099102170	CHIP RES. 1K 1/8W
RC,RSL,RSR,RSW503	3099822170	CHIP RES. 8.2K 1/8W
RC,RSL,RSR,RSW504	3099272170	CHIP RES. 2.7K 1/8W
RC502	3099104170	CHIP RES. 100K 1/8W
RC505	3099104170	CHIP RES. 100K 1/8W
RC508	3099102170	CHIP RES. 1K 1/8W
RC509-10	3029221970	RES. MF 220 1/5W J
RC511	3029332970	RES. MF 3.3K 1/5W J
RC512	3099104170	CHIP RES. 100K 1/8W
RC513	3099912170	CHIP RES. 9.1K 1/8W
RC514	3099222170	CHIP RES. 2.2K 1/8W
RC515	3099104170	CHIP RES. 100K 1/8W
RC516	3029102970	RES. MF 1K 1/5W J
RC517	3029103970	RES. MF 10K 1/5W J
RF509	3029103970	RES. MF 10K 1/5W J
RS504	3029103970	RES. MF 10K 1/5W J
RSW526	3029103970	RES. MF 10K 1/5W J
RC519	3099104170	CHIP RES. 100K 1/8W
RC520	3099102170	CHIP RES. 1K 1/8W
RF,RS502-503	3029221970	RES. MF 220 1/5W J
RF501	3099332170	CHIP RES. 3.3K 1/8W
RF504-505	3029561970	RES. MF 560 1/5W J
RF506-507	3029102970	RES. MF 1K 1/5W J
RF508	3099102170	CHIP RES. 1K 1/8W
RF509	3029103970	RES. MF 10K 1/5W J
RFL,RFR501-502	3099102170	CHIP RES. 1K 1/8W
RFL,RFR503	3099104170	CHIP RES. 100K 1/8W
RFL,RFR504-505	3099472170	CHIP RES. 4.7K 1/8W
RFL,RFR506	3099104170	CHIP RES. 100K 1/8W
RFL,RFR508	3099104170	CHIP RES. 100K 1/8W
RFL,RFR509	3099102170	CHIP RES. 1K 1/8W
RFL,RFR510	3099104170	CHIP RES. 100K 1/8W
RFL,RFR511	3099822170	CHIP RES. 8.2K 1/8W
RFL,RFR513	3099104170	CHIP RES. 100K 1/8W
RFL,RFR514	3099102170	CHIP RES. 1K 1/8W
RFL,RFR515	3099104170	CHIP RES. 100K 1/8W
RFL,RFR516	3099474170	CHIP RES. 470K 1/8W
RFL,RFR517	3099823170	CHIP RES. 82K 1/8W
RFL,RFR518	3099393170	CHIP RES. 39K 1/8W
RFL,RFR519	3099564170	CHIP RES. 560K 1/8W
RFL,RFR520	3099472170	CHIP RES. 4.7K 1/8W
RFL,RFR521	3099273170	CHIP RES. 27K 1/8W
RFL,RFR522	3099562170	CHIP RES. 5.6K 1/8W
RFL,RFR523	3099122170	CHIP RES. 1.2K 1/8W
RFL,RFR524	3099104170	CHIP RES. 100K 1/8W
RFL,RFR525	3099102170	CHIP RES. 1K 1/8W
RFL,RFR526	3099104170	CHIP RES. 100K 1/8W
RFL507,RFR507	3029102970	RES. MF 1K 1/5W J
RML501	3099102170	CHIP RES. 1K 1/8W
RMR501	3099102170	CHIP RES. 1K 1/8W
RSL501	3099102170	CHIP RES. 1K 1/8W
RSR501	3099102170	CHIP RES. 1K 1/8W
RC501	3099102170	CHIP RES. 1K 1/8W
RML,RMR502-503	3099104170	CHIP RES. 100K 1/8W
RML,RMR504	3099822170	CHIP RES. 8.2K 1/8W
RS501	3029332970	RES. MF 3.3K 1/5W J
RS505	3029102970	RES. MF 1K 1/5W J
RSL,RSR,RSW502	3099104170	CHIP RES. 100K 1/8W
RSL,RSR,RSW505	3099104170	CHIP RES. 100K 1/8W
RSL,RSR,RSW508	3099104170	CHIP RES. 100K 1/8W
RSL,RSR,RSW511	3099104170	CHIP RES. 100K 1/8W
RSL,RSR,RSW512	3029102970	RES. MF 1K 1/5W J

SYMBOL	PART NO.	DISCRIPTION
RSL,RSR,RSW513	3099104170	CHIP RES. 100K 1/8W
RSL,RSR506-507	3099102170	CHIP RES. 1K 1/8W
RSL,RSR509	3099912170	CHIP RES. 9.1K 1/8W
RSL,RSR510	3099222170	CHIP RES. 2.2K 1/8W
RSW501	3099102170	CHIP RES. 1K 1/8W
RSW506	3029102970	RES. MF 1K 1/5W J
RSW507	3099102170	CHIP RES. 1K 1/8W
RSW509	3099822170	CHIP RES. 8.2K 1/8W
RSW510,	3099332170	CHIP RES. 3.3K 1/8W
RSW514	3099332170	CHIP RES. 3.3K 1/8W
RSW515	3099472170	CHIP RES. 4.7K 1/8W
RSW517	3099102170	CHIP RES. 1K 1/8W
RSW518	3099104170	CHIP RES. 100K 1/8W
RSW519	3099102170	CHIP RES. 1K 1/8W
RSW520	3099104170	CHIP RES. 100K 1/8W
RSW521	3099912170	CHIP RES. 9.1K 1/8W
RSW522	3099222170	CHIP RES. 2.2K 1/8W
RSW523	3099104170	CHIP RES. 100K 1/8W
RSW524	3029102970	RES. MF 1K 1/5W J
RSW526	3029103970	RES. MF 10K 1/5W J
RSW527	3099104170	CHIP RES. 100K 1/8W
U501	2168220142	IC OP AMP CHIP NJM5532M
U502	2138007120	IC TC9459F ELECTRONICS VR
U503-4	2168220142	IC OP AMP CHIP NJM5532M
U505	2138007130	IC TC9184P ELECTRONICS TONE
U506	2168220142	IC OP AMP CHIP NJM5532M
U507	2138007120	IC TC9459F ELECTRONICS VR
U508-511	2168220142	IC OP AMP CHIP NJM5532M
U512	2138007120	IC TC9459F ELECTRONICS VR
U513	2168220142	IC OP AMP CHIP NJM5532M
U514	2168020108	IC NJU7311AM ANALOG FUNC.SW.
ZD501-502	2258599919	DIODE ZENER UZ9V1
RCA501	4438100120	RCA JACK 2PIN(W,R)
RCA502	4438100320	RCA JACK 6PIN(WWW,RRR)
RCA503	4438100920	RCA JACK 2PIN(BLACK)
	C-VIDEO PCB ASSEMBLY	
	4002000600	PCB VIDEO 247*247
C401	3519104135	CAP. AXIAL. 0.1UF/50
C405	3479347021	CAP .E. SG 47UF/16
C406	3479310131	CAP .E. SG 100UF/16
C407-408	3479347111	CAP. E. SG 470/6.3
C409	3479310071	CAP. E. SG 10UF/50
C410	3479347021	CAP .E. SG 47UF/16
C411	3519103435	CAP. AXIAL. 0.01UF/50
C412	3479347021	CAP .E. SG 47UF/16
C414	3479310071	CAP. E. SG 10UF/50
C415	3479347021	CAP .E. SG 47UF/16
C416	3519103435	CAP. AXIAL. 0.01UF/50
C417	3479347021	CAP .E. SG 47UF/16
C418	3519104135	CAP. AXIAL. 0.1UF/50
C420	3519103435	CAP. AXIAL. 0.01UF/50
C421-423	3519101935	CAP. AXIAL. 100PF/50
C427	3519101935	CAP. AXIAL. 100PF/50
C428	3479347871	CAP. E. SG 0.47UF/50
C429	3519103435	CAP. AXIAL. 0.01UF/50
C430	3479347021	CAP .E. SG 47UF/16
C432	3479347971	CAP. E. SG 1UF/50
C436	3528330210	CAP. DISK. 33P-R(CH)
C437	3519104135	CAP. AXIAL. 0.1UF/50
C438-439	3528560210	CAP. DISK. 56P-R(CH)
C440	3479347021	CAP .E. SG 47UF/16
C441	3519103435	CAP. AXIAL. 0.01UF/50
C442	3528330210	CAP. DISK. 33P-R(CH)

SYMBOL	PART NO.	DISCRIPTION
C443	3479310971	CAP. E. SG 1UF/50
C444-445	3519103435	CAP. AXIAL. 0.01UF/50
C446	3479310971	CAP. E. SG 1UF/50
C448	3519101935	CAP. AXIAL. 100PF/50
CN400	4428863215	CNT Housing 20-8283-015
L400	2648610082	COIL. AXIAL. 10UH
L401	2648610182	COIL. AXIAL. 100UH
Q401	2208222106	TR PNP 2SA933
R401-404	3029750970	RES MF 75 1/5W J
R405	3029181970	RES MF 180 1/5W J
R406-407	3029750970	RES MF 75 1/5W J
R408-409	3029101970	RES MF 100 1/5W J
R410-411	3029473970	RES MF 47K 1/5W J
R412-414	3029102970	RES MF 1K 1/5W J
R415-417	3029101970	RES MF 100 1/5W J
R418	3029512970	RES MF 5.1K 1/5W J
R419-420	3029471970	RES MF 470 1/5W J
R421	3029472970	RES MF 4.7K 1/5W J
R422-423	3029471970	RES MF 470 1/5W J
R424	3029105970	RES MF 1M 1/5W J
R425	3029392970	RES MF 3.9K 1/5W J
R426	3029101970	RES MF 100 1/5W J
R427	3029122970	RES MF 1.2K 1/5W J
R428	3029101970	RES MF 100 1/5W J
R431	3029680970	RES MF 68 1/5W J
R434	3029204970	RES MF 200K 1/5W J
R435	3029223970	RES MF 22K 1/5W J
R436	3029104970	RES MF 100K 1/5W J
R438	3029750970	RES MF 75 1/5W J
R439	3029184970	RES MF 180K 1/5W J
U400-401	2168017141	IC LC7824
U402	2108499133	VIDEO AMP MC14577
U403	2168222113	OSD IC KS5520
X400	3908111610	X-TAL. 14.31818MHZ
X400	3908101000	X-TAL. 17.74475MHZ
RCA401,402	4438100520	RCA JACK 3PIN(YELLOW)
RCA403	4438100720	RCA JACK 1PIN(YELLOW)
	S-VIDEO PCB ASSEMBLY	
	4002000610	PCB VIDEO 247*247
C406	3479310121	CAP. E. SG100UF/16
C450-452	3519101935	CAP. AXIAL. 100PF/50
C453	3479310071	CAP. E. SG 10UF/50
C454	3479347111	CAP. E. SG 470/6.3
C455	3479310071	CAP. E. SG 10UF/50
C456	3519103435	CAP. AXIAL. 0.01UF/50
C457	3479322971	CAP. E. SG 2.2UF/50
C458-459	3479310071	CAP. E. SG 10UF/50
C460-461	3479310071	CAP. E. SG 10UF/50
C462	3479322971	CAP. E. SG 2.2UF/50
C463	3479347111	CAP. E. SG 470/6.3
C464	3479347021	CAP .E. SG 47UF/16
C465	3479310071	CAP. E. SG 10UF/50
C466	3479347111	CAP. E. SG 470/6.3
C467-470	3479347021	CAP .E. SG 47UF/16
CN451	4428863213	CNT Housing 20-8283-013
D450-457	2058322101	DIODE. 1N4148
Q450	2208222106	TR PNP 2SA933
Q451	2238006103	TR PNP KRA107M
Q452-454	2208606105	TR NPN KTC3198
Q455	2238006103	TR PNP KRA107M
Q456	2238006104	TR NPN KRC107M
Q457	2208606105	TR NPN KTC3198
Q458	2238006104	TR NPN KRC107M

SYMBOL	PART NO.	DISCRIPTION
Q459-462	2208606105	TR NPN KTC3198
Q463	2238006104	TR NPN KRC107M
Q464	2208606105	TR NPN KTC3198
Q465	2238006104	TR NPN KRC107M
R450-463	3029750970	RES MF 75 1/5W J
R464-466	3029102970	RES MF 1K 1/5W J
R468	3029473970	RES MF 47K 1/5W J
R469-470	3029471970	RES MF 470 1/5W J
R471	3029184970	RES MF 180K 1/5W J
R472	3029473970	RES MF 47K 1/5W J
R473-474	3029471970	RES MF 470 1/5W J
R475	3029333970	RES MF 33K 1/5W J
R476	3029222970	RES MF 2.2K 1/5W J
R477	3029680970	RES MF 68 1/5W J
R478	3029124971	RES MF 120K 1/5W J
R479	3029473970	RES MF 47K 1/5W J
R480-481	3029471970	RES MF 470 1/5W J
R482	3029102970	RES MF 1K 1/5W J
R483-484	3029561970	RES MF 560 1/5W J
R485	3029101970	RES MF 100 1/5W J
R486	3029751970	RES MF 750 1/5W J
R487	3029102970	RES MF 1K 1/5W J
R488	3029563971	RES MF 56K 1/5W J
R489	3029184970	RES MF 180K 1/5W J
R490,	3029473970	RES MF 47K 1/5W J
R491-492	3029471970	RES MF 470 1/5W J
R493	3029103970	RES MF 10K 1/5W J
R494	3029102970	RES MF 1K 1/5W J
R495	3029103970	RES MF 10K 1/5W J
R496-500	3029102970	RES MF 1K 1/5W J
R501	3029124970	RES MF 120K 1/5W J
R506	3029103970	RES MF 10K 1/5W J
R507	3029560970	RES MF 56 1/5W J
U450-453	2168017141	IC LC7824
U454-455	2108499133	VIDEO AMP MC14577
DIN450	4438100720	DIN JACK 1PIN, S-VHS
DIN451.452	4438100520	DIN JACK 3PIN, S-VHS
	INPUT PCB ASSEMBLY	
	40020004000	PCB INPUT B'd
C309-310	3479347041	CAP E SG 47uF/35V
C323	3479310971	CAP E SG 1uF/50V
C324	3479347041	CAP E SG 47uF/35V
C325	3519101935	CAP C AXIAL 100pF/50V
C326-329	3479347041	CAP E SG 47uF/25V
C335	3479347041	CAP E SG 47uF/25V
C363-365	3479347041	CAP E SG 47uF/25V
C366	3479310971	CAP E SG 1uF/50V
C367	3479347041	CAP E SG 47uF/25V
C368	3519101935	CAP C AXIAL 100pF/50V
CL,CR301-302	3519101935	CAP C AXIAL 100pF/50V
CL,CR303	3479347971	CAP E SG 4.7uF/50V
CL,CR304	3679222120	CAP MYLAR 0.0022uF/100V
CL,CR305	3679182120	CAP MYLAR 0.0018uF/100V
CL,CR306	3679562120	CAP MYLAR 0.0056uF/100V
CL,CR307	3479322871	CAP E SG 0.22uF/50V
CL,CR308	3679180120	CAP MYLAR 0.0018uF/100V
CL,CR309	3479333041	CAP E SG 33uF/35V
CL,CR313-322	3519101935	CAP C AXIAL 100pF/50V
CL,CR330	3479347971	CAP E SG 4.7uF/50V
CL,CR331-332	3519101935	CAP C AXIAL 100pF/50V
CL,CR333-334	3479347971	CAP E SG 4.7uF/50V
CL,CR335-336	3519101935	CAP C AXIAL 100pF/50V
CL,CR350-361	3519101935	CAP C AXIAL 100pF/50V

SYMBOL	PART NO.	DISCRIPTION
CL,CR362	3479347971	CAP E SG 4.7uF/50V
CP301	4428863208	CNT Housing 20-8283-0812-00-000
CP302	4428863211	CNT Housing 20-8283-1112-00-000
CP351	4428863209	CNT Housing 20-8283-0912-00-000
D301	2058322101	DIODE 1N4148
D351	2058322101	DIODE 1N4148
LL,LR301	2648647082	INDUCTOR 47uH
R309-310	3029221970	RES MF 220R 1/5W J
R316-317	3029221970	RES MF 220R 1/5W J
R318	3029104970	RES MF 100K 1/5W J
R319-321	3029102970	RES MF 1K 1/5W J
R322-325	3029221970	RES MF 220R 1/5W J
R356-359	3029332970	RES MF 3.3K 1/5W J
R360	3029104970	RES MF 100K 1/5W J
R361	3029221970	RES MF 220R 1/5W J
R362-364	3029102970	RES MF 1K 1/5W J
R365	3029221970	RES MF 220R 1/5W J
RL,RR301	3029102970	RES MF 1K 1/5W J
RL,RR302-303	3029913970	RES MF 91K 1/5W J
RL,RR304	3029564970	RES MF 560K 1/5W J
RL,RR305	3029433970	RES MF 43K 1/5W J
RL,RR306	3029821970	RES MF 820 1/5W J
RL,RR307	3029561970	RES MF 560 1/5W J
RL,RR308	3029104970	RES MF 100K 1/5W J
RL,RR311-315	3029102970	RES MF 1K 1/5W J
RL,RR326,330-331	3029102970	RES MF 1K 1/5W J
RL,RR327	3029104970	RES MF 100K 1/5W J
RL,RR328	3029103970	RES MF 10K 1/5W J
RL,RR329	3029104970	RES MF 100K 1/5W J
RL,RR332	3029104970	RES MF 100K 1/5W J
RL,RR333	3029103970	RES MF 10K 1/5W J
RL,RR334	3029104970	RES MF 100K 1/5W J
RL,RR335	3029102970	RES MF 1K 1/5W J
RL,RR350-355	3029102970	RES MF 1K 1/5W J
RL,RR366	3029104970	RES MF 100K 1/5W J
U301	2168220135	IC OPAMP NJM5532
U302	2168017132	IC ANALOG FUNCTION LC7821
U303-304	2168220135	IC OPAMP NJM5532
U351	2168017132	IC ANALOG FUNCTION LC7821
U352	2138001117	IC MULTIFLEX GD4053
RCA303,351,352	4438100320	RCA JACK 6PIN(WWW,RRR)
RCA302	4438100220	RCA JACK 4PIN(WW,RR)
RCA301	4438100120	RCA JACK 2PIN(W,R)
	TUNER PCB ASSEMBLY	
	4002000300	PCB TUNER 247*197
ANT1	4408000110	ANT TERMINAL(SCREW)
ANT1	4408000210	ANT TERMINAL(SCREW)
C701	3519223935	CAP. AXIAL. 0.022UF/50
C702	3519473935	CAP. AXIAL. 0.047UF/50
C703	3479333971	CAP. E. SG 3.3UF/50
C704	3519103935	CAP. AXIAL. 0.01UF/50
C705	3479347021	CAP .E. SG 47UF/16
C706	3519223935	CAP. AXIAL. 0.022UF/50
C707	3519103935	CAP. AXIAL. 0.01UF/50
C708-709	3528180210	CAP. DISK. 18P-R(CH)
C710	3519101935	CAP. AXIAL. 100PF/50
C711	3479347021	CAP .E. SG 47UF/16
C712-713	3519223935	CAP. AXIAL. 0.022UF/50
C714	3479310121	CAP. E. SG100UF/16
C715	3615471110	CAP. POLY 470P-P
C716	3528150210	CAP. DISK. 15P-R(CH)
C717-718	3519223935	CAP. AXIAL. 0.022UF/50
C720	3479310041	CAP. E. SG 10UF/35

SYMBOL	PART NO.	DISCRIPTION
C721-722	3519223935	CAP. AXIAL. 0.022UF/50
C723	3519103935	CAP. AXIAL. 0.01UF/50
C724-725	3519223935	CAP. AXIAL. 0.022UF/50
C726	3479347971	CAP. E. SG 4.7UF/50
C727	3479333971	CAP. E. SG 3.3UF/50
C728	3479347971	CAP. E. SG 4.7UF/50
C729	3519223935	CAP. AXIAL. 0.022UF/50
C730	3679223120	CAP. MALAY. 0.022UF/100
C731	3679339120	CAP. MALAY. 0.0033UF/100
C731	3679332120	CAP. MALAY. 0.0033UF/100
C732	3679393120	CAP. MALAY. 0.039UF/100
C733	3479310971	CAP. E. SG 1UF/50
C734	3519223935	CAP. AXIAL. 0.022UF/50
C735	3479310121	CAP. E. SG100UF/16
C736	3519331935	CAP. AXIAL. 330PF/50
C736	3519101935	CAP. AXIAL. 100PF/50
C737	3579820130	CAP. RADIAL. 82P
C738	3579101130	CAP. RADIAL. 100P
C739	3479310041	CAP. E. SG 10UF/35
C740	3519223935	CAP. AXIAL. 0.022UF/50
C741	3479347971	CAP. E. SG 4.7UF/50
C742	3519473935	CAP. AXIAL. 0.047UF/50
C743	3519681935	CAP. AXIAL. 680PF/50
C744	3479310121	CAP. E. SG100UF/16
C745	3479310971	CAP. E. SG 1UF/50
C746	3479322871	CAP. E. SG 0.22UF/50
C747	3479310971	CAP. E. SG 1UF/50
C748	3579223530	CAP. DISK. 22N-R
C749	3479310041	CAP. E. SG 10UF/35
C753	3479310041	CAP. E. SG 10UF/35
C754	3519271935	CAP. AXIAL. 270PF/50
C755-756	3479310041	CAP. E. SG 10UF/35
C757	3519104935	CAP. AXIAL. 0.1UF/50
C758-759	3579270130	CAP. RADIAL. 27P
CB701	4428 8632 10	Cnt Housing 20-8283-1012-00-000
CB701	4428 8632 15	Cnt Housing 20-8283-1512-00-000
CF701-703	3908011071	FM IF FILTER SFE10.7MA5
CF701-703	3908011011	FM IF FILTER SFE10.7MS3GH
CF704	3908001080	AM IF FILTER CFM2-450BL
CL,CR750	3519561935	CAP. AXIAL. 560PF/50
CL,CR750	3519221935	CAP. AXIAL. 220PF/50
CL,CR751	3479310041	CAP. E. SG 10UF/35
CL,CR752	3579680530	CAP. DISK. 68P-R
CL,CR752	3579100530	CAP. DISK. 10P-R
D702	2058322101	DIODE 1N4148
D703	2258599519	DIODE ZENER UZ5V1
FET1	3928001010	FRONT-END FTA4-575H
FET1	3928101870	FRONT-END FTA4-460H
U701	2138017136	IC LM7001
U702	2168017128	IC LA1266
U703	2168417120	IC LA3401
U704	2169202101	IC, C42BU1920F
L701	2648601430	COIL 20.8mH
Q701-702	2208606105	TR NPN KTC3198BL
Q703	2208406103	TR NPN KTC3194
Q704-706	2238006103	TR PNP KRA107M
Q707	2208606105	TR NPN KTC3198BL
Q709	2238006103	TR PNP KRA107M
QL,QR708	2238422100	TR NPN DTC323TS
R701	3029104970	RES. MF 100K 1/5W J
R702	3029562970	RES. MF 5.6K 1/5W J
R703	3029623970	RES. MF 62K 1/5W J
R704	3029104970	RES. MF 100K 1/5W J
R705	3029471970	RES. MF 470 1/5W J
R706	3029104970	RES. MF 100K 1/5W J
R707	3029103970	RES. MF 10K 1/5W J

Parts List

SYMBOL	PART NO.	DISCRIPTION
R708	3029271970	RES. MF 270 1/5W J
R709	3029561970	RES. MF 560 1/5W J
R710	3029102970	RES. MF 1K 1/5W J
R711	3029181970	RES. MF 180 1/5W J
R712	3029561970	RES. MF 560 1/5W J
R713	3029332970	RES. MF 3.3K 1/5W J
R714	3029561970	RES. MF 560 1/5W J
R715	3029471970	RES. MF 470 1/5W J
R716	3029101970	RES. MF 100 1/5W J
R717-719	3029102970	RES. MF 1K 1/5W J
R720	3029331970	RES. MF 330 1/5W J
R721	3029271970	RES. MF 270 1/5W J
R722	3029471970	RES. MF 470 1/5W J
R724	3029472970	RES. MF 4.7K 1/5W J
R725	3029683970	RES. MF 68K 1/5W J
R726	3029223970	RES. MF 22K 1/5W J
R726	3029473970	RES. MF 47K 1/5W J
R727	3029103970	RES. MF 10K 1/5W J
R728	3029223970	RES. MF 22K 1/5W J
R729	3029229970	RES. MF 22 1/5W J
R730	3029472970	RES. MF 4.7K 1/5W J
R731	3029103970	RES. MF 10K 1/5W J
R731	3029182970	RES. MF 1K8 1/5W J
R732	3029562970	RES. MF 5.6K 1/5W J
R733	3029332970	RES. MF 3.3K 1/5W J
R734	3029101970	RES. MF 100 1/5W J
R735	3029182970	RES. MF 1K8 1/5W J
R736	3029473970	RES. MF 47K 1/5W J
R737	3029220970	RES. MF 22 1/5W J
R738	3029102970	RES. MF 1K 1/5W J
R739	3029101970	RES. MF 100 1/5W J
R740	3029473970	RES. MF 47K 1/5W J
R741	3029223970	RES. MF 22K 1/5W J
R742	3029332970	RES. MF 3.3K 1/5W J
R743	3029223970	RES. MF 22K 1/5W J
R744	3029473970	RES. MF 47K 1/5W J
R750	3029681970	RES. MF 680 1/5W J
R756	3029225970	RES. MF 2.2M 1/5W J
RL,RR746	3029124970	RES. MF 120K 1/5W J
RL,RR747	3029184970	RES. MF 180K 1/5W J
RL,RR747	3029274970	RES. MF 270K 1/5W J
RL,RR748	3029272970	RES. MF 2.7K 1/5W J
RL,RR749	3029332970	RES. MF 3.3K 1/5W J
RL,RR749	3029332970	RES. MF 3.3K 1/5W J
RL,RR757	3029152970	RES. MF 1.5K 1/5W J
T701	2608201120	COIL AM-ANT1 M72N-K5643A
T702	2638201150	COIL AM-OSC1 A7MC-K111027X2
T703	2848001250	COIL AM-IFT1 7BR-K111027X2
T704	2828000100	COIL FM-DET-A1
T705	2828000110	COIL FM-DET-B1 292BCA-K5713
TC701	3838001000	TRIMMER 10P
TL,TR706	2658001050	COIL MPX LPF 253AGG-K5001-KR
VD701-702	2258817101	DIODE VARACTOR SVC321SPA-C
VR701	3248047253	VR,SEMI 4.7K(B)-H
VR702	3248047353	VR,SEMI 47K(B)-H
VR703	3248022453	VR,SEMI 220K(B)-H
X701	3908101030	X-TAL 7.2MHZ
X702	3938131600	RESONATOR CSB-456F15
X703	3908111690	X-TAL 4.332MHZ
ZD701	2258599519	DIODE ZENER UZ5V1

SYMBOL	PART NO.	DISCRIPTION

EXPLODE

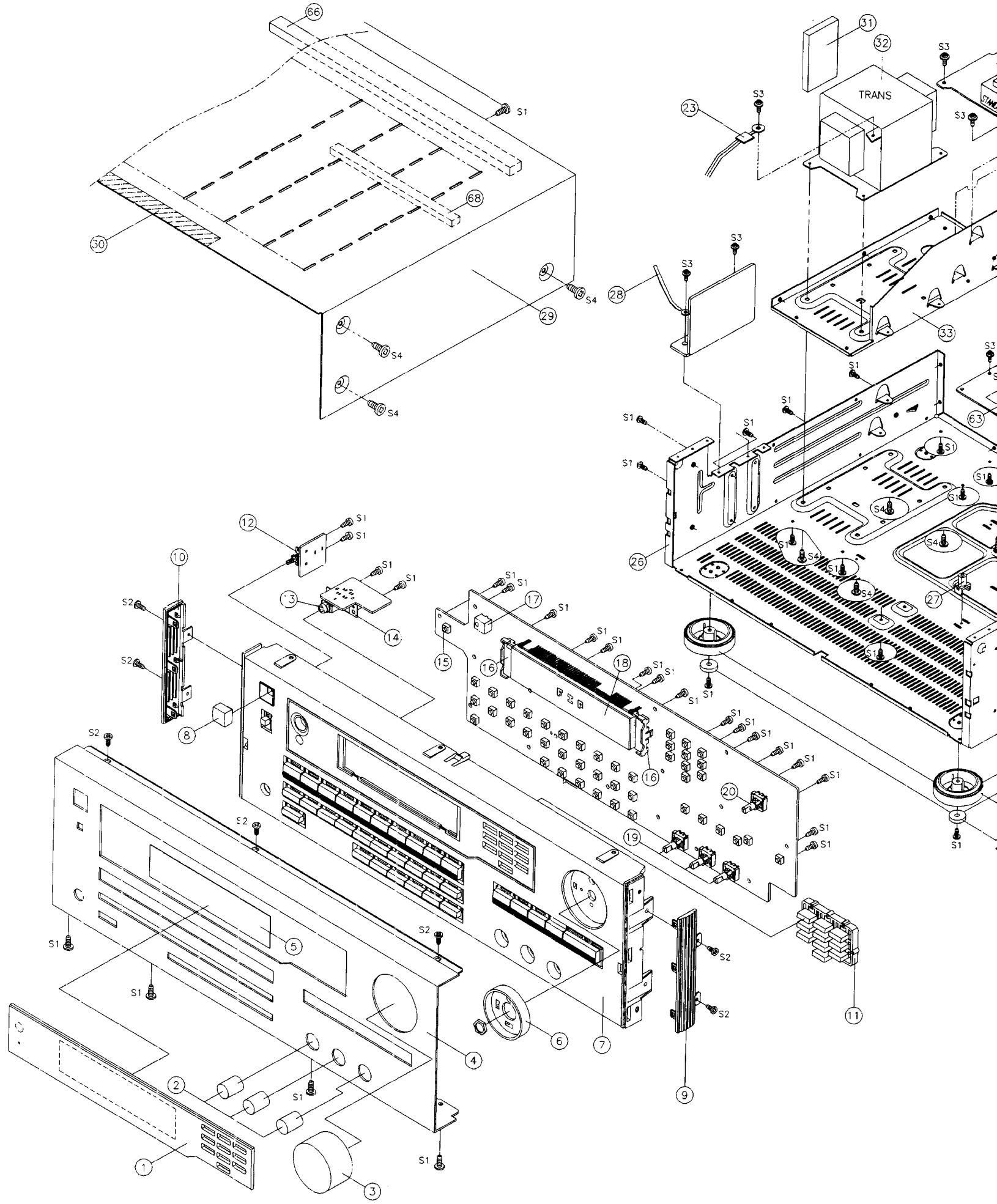
TRANS
S1
S2
S3
S4
1
2
3
4
5
6
7
8
9
10
11
12
13
14
15
16
17
18
19
20
23
26
27
28
29
30
31
32
33
63
66
68

LODED VIEW

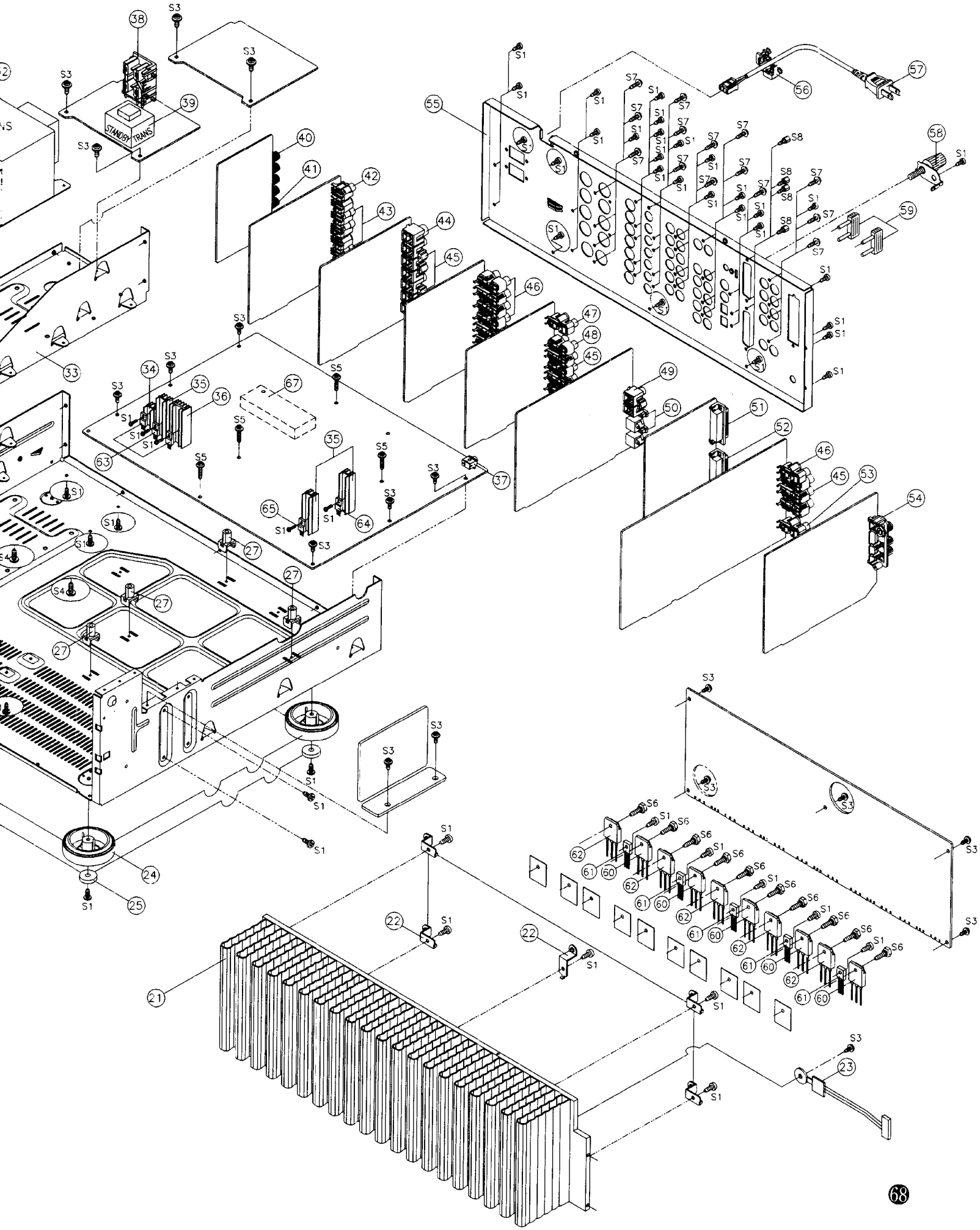

Parts List

NO.	PARTS NO.	DESCRIPTION
1	8553000111	WINDOW DISPLAY. ACRYL 3.0t
2	8645000211	KNOB ROTARY, AL A6063S-T5
3	8643000211	KNOB MAIN, AL A6063S-T5
4	8602000111	FRONT PANEL, AL A6063S-T5
5	8535000110	FILTER, ACRYL 1.0t
6	8545000311	BEZEL RING, ABS BLACK
7	8521000110	FRONT BODY, ABS BLACK
8	8545000110	POWER BUTTON, ABS BLACK
9	8523000120	SIDE CAP(RIGHT), ABS BLACK
10	8523000110	SIDE CAP(LEFT), ABS BLACK
11	8543000110	BUTTON 10KEY, ABS BLACK
12	4628000110	POWER SWITCH, TV-5
13	4438000210	PHONE JACK 9P(GOLD)
14	6505000210	PHONE BRAKET 0.6t
15	4658000110	TACT SWITCH
16	6515000110	HOLDER FIP, ABS BLACK
17	2408000180	REMOTE SENSOR
18	2328000302	FIP
19	3218000210	VR ROTARY, ENCODER
20	3218000110	VR MAIN, ENCODER
21	7502000110	POWER HEAT SINK, AL A6063S-T5
22	6505000110	BRAKET HEAT SINK, SECC1.0t
23	052438000183	ASS'Y POSISTOR
24	6133100110	FOOT, ABS BLACK
25	6715000110	BUMPON
26	6121600110	MAIN CHASSIS, SECC1.2t
27	6515000210	SPACER PCB, ABS BLACK
28	6528000210	CLAMP WIRE
29	6122000110	TOP COVER, VCM 0.95t
30	6715000210	SPONGE, 260X20X1t
31	6715000310	SPONGE, 50X40X5t
32	2828000017	POWER TRANS
33	6122600110	FRAME T/F, SECC 1.0t
34	7505000110	REG TR HEAT SINK(15X30), AL
35	7505000130	REG TR HEAT SINK(15X60), AL
36	7505000230	REG TR HEAT SINK(24X60), AL
37	4438300110	JACK RCA(MINI)
38	4448000110	AC OUTLET
39	2828000037	STANDBY TRANS
40	4408100110	SPEAKER TERMINAL 8P
41	4408100210	SPEAKER TERMINAL 2P
42	4438500110	RCA JACK 1P, S-VHS
43	4438500210	RCA JACK 3P, S-VHS
44	4438100720	RCA JACK 1P(Y), VIDEO
45	4438100520	RCA JACK 3P(Y), VIDEO
46	4438100320	RCA JACK 6P(WWW,RRR)
47	4438100120	RCA JACK 2P(W,R)
48	4438100220	RCA JACK 4P(WW,RR)
49	4438101020	RCA JACK 2P(B,B)
50	2408218001	OPTIC RCVR
51	4438600120	DB 25 CONNECTOR(MAIL)

NO.	PARTS NO.	DESCRIPTION
52	4438600110	DB 25 CONNECTOR(F-MAIL)
53	4438100920	RCA JACK 2P(B,B SUBWOOFER)
54	4408000110	ANT TERMINAL(SCREW)
55	6102000111	BACK CHASSIS, SECC1.0t
56	6518000110	CORD STOPPER,NYLON66 BLACK
57	4308000110	CORD AC POWER
58	4408200110	TERMINAL G.N.D
59	4428000110	JUMPER PLUG
60	2028416108	POWER TR A1386A
61	2008622110	REG TR C4137
62	2028416122	POWER TR C3519A
63	2168602105	REG TR KIA 7805P 8E
64	2168602109	REG TR KIA 7815P 8E
65	2168602114	REG TR KIA 7915P 8E
66	6715000420	SPONGE, 230x15x9t
67	6715000510	SPONGE, 90x40x12t
68	6715000430	SPONGE, 120x6x9t
		SCREW
S1	8109430083	SCREW #B BTT 3X8B
S2	8129430083	SCREW #2FTC 3X8B
S3	8159430061	SCREW #B WPTT 3X6Y
S4	8159440083	SCREW #WSAM 4X8B
S5	8159430181	SCREW #B WPTT 3X18Y
S6	8179430121	SCREW HEAT SINK
S7	8199430103	SCREW G.N.D
S8	8199930082	DB25 SCREW
		PACKING & LABELS
	9007000110	INSTRUCTION MANUAL
	9017000010	SERVICE MANUAL
	2608207360	AM ANT LOOP
	4348000110	FM ANT
	9087000010	WARRANTY CARD
	4428400110	MATCHING TRANS
	9705000110	POLY ABG
	9057000010	FUSE LABEL
	9057000020	GRAPHIC LABEL
	9722000110	CUSHION POLY
	9605000111	BOX CARTON(INNER)
	9625000111	BOX CARTON(OUT)
	9715000110	FILM SOFT PE

PCB Assembly (DIGITAL BOARD)

TOP SIDE

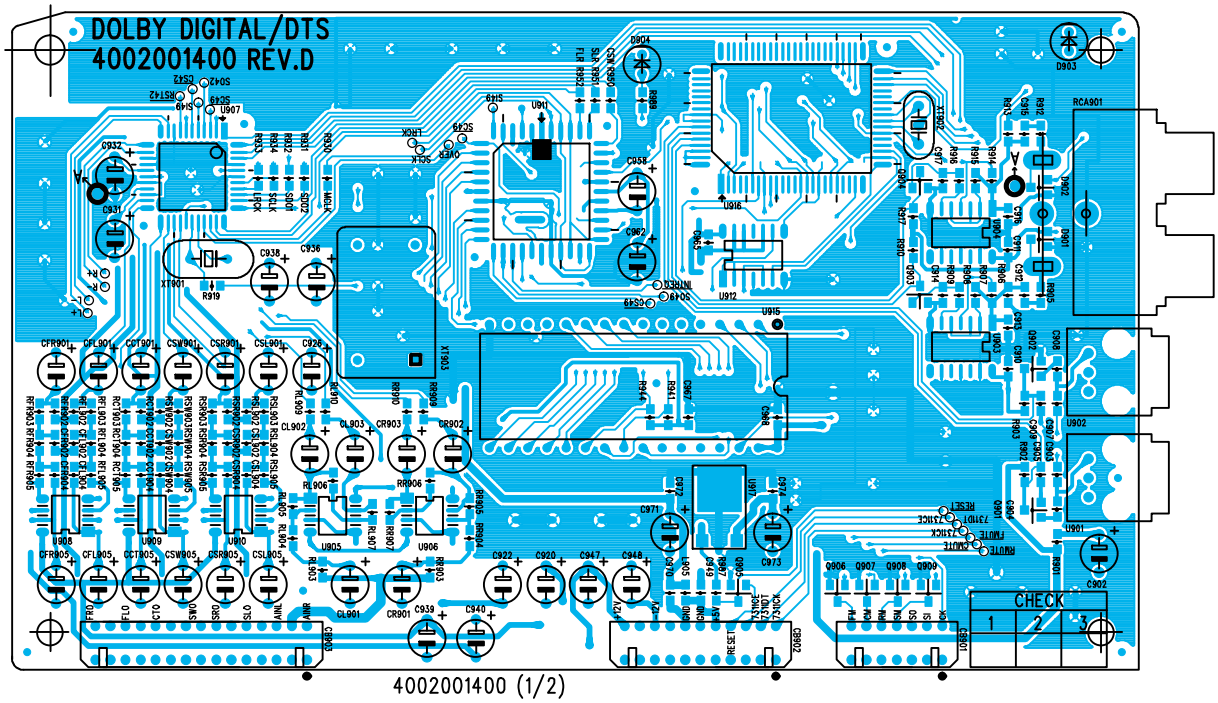

4002001400 (1/2)

4002001400 (2/2)

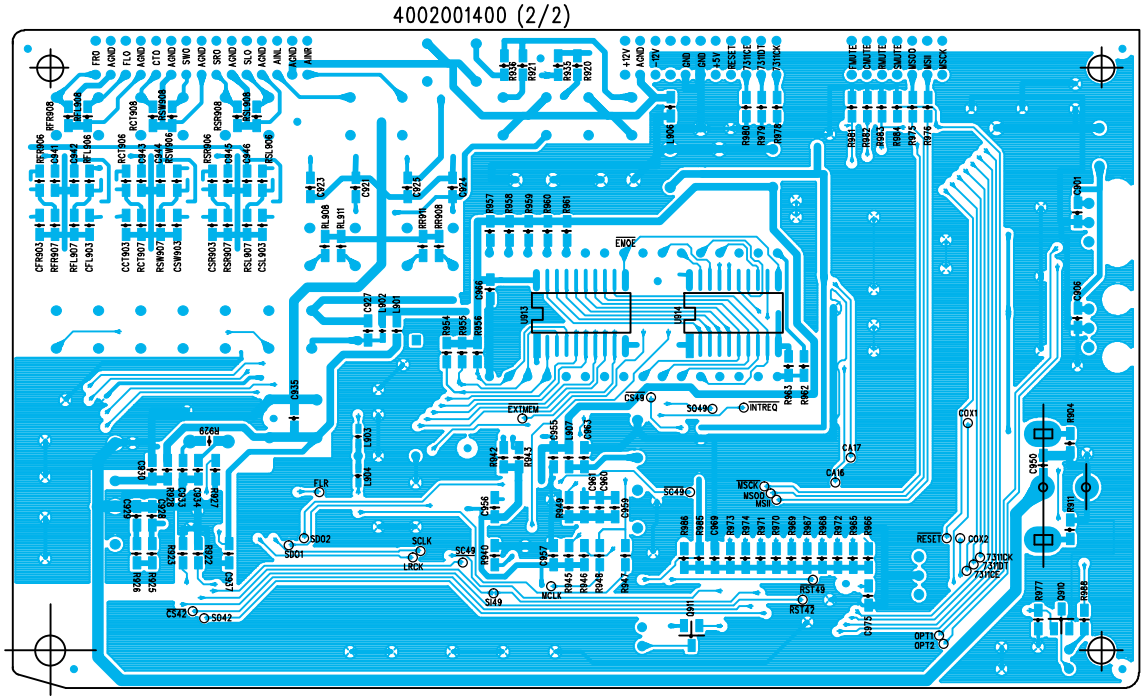

BOTTOM SIDE

PCB Assembly

4002000500(1/2)

PROCESSOR

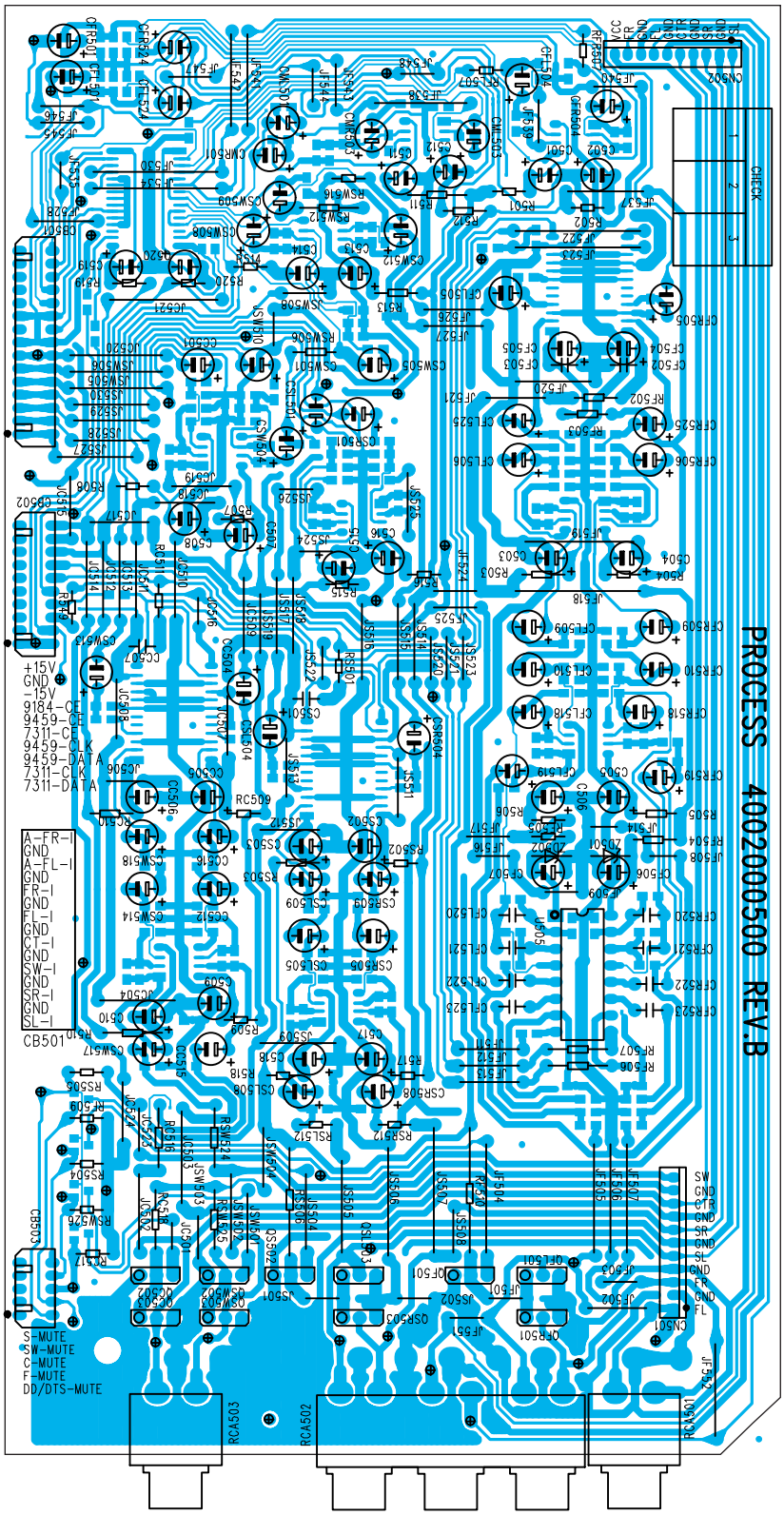

TOP SIDE VIEW

PCB Assembly

4002000500(2/2)

PROCESSOR

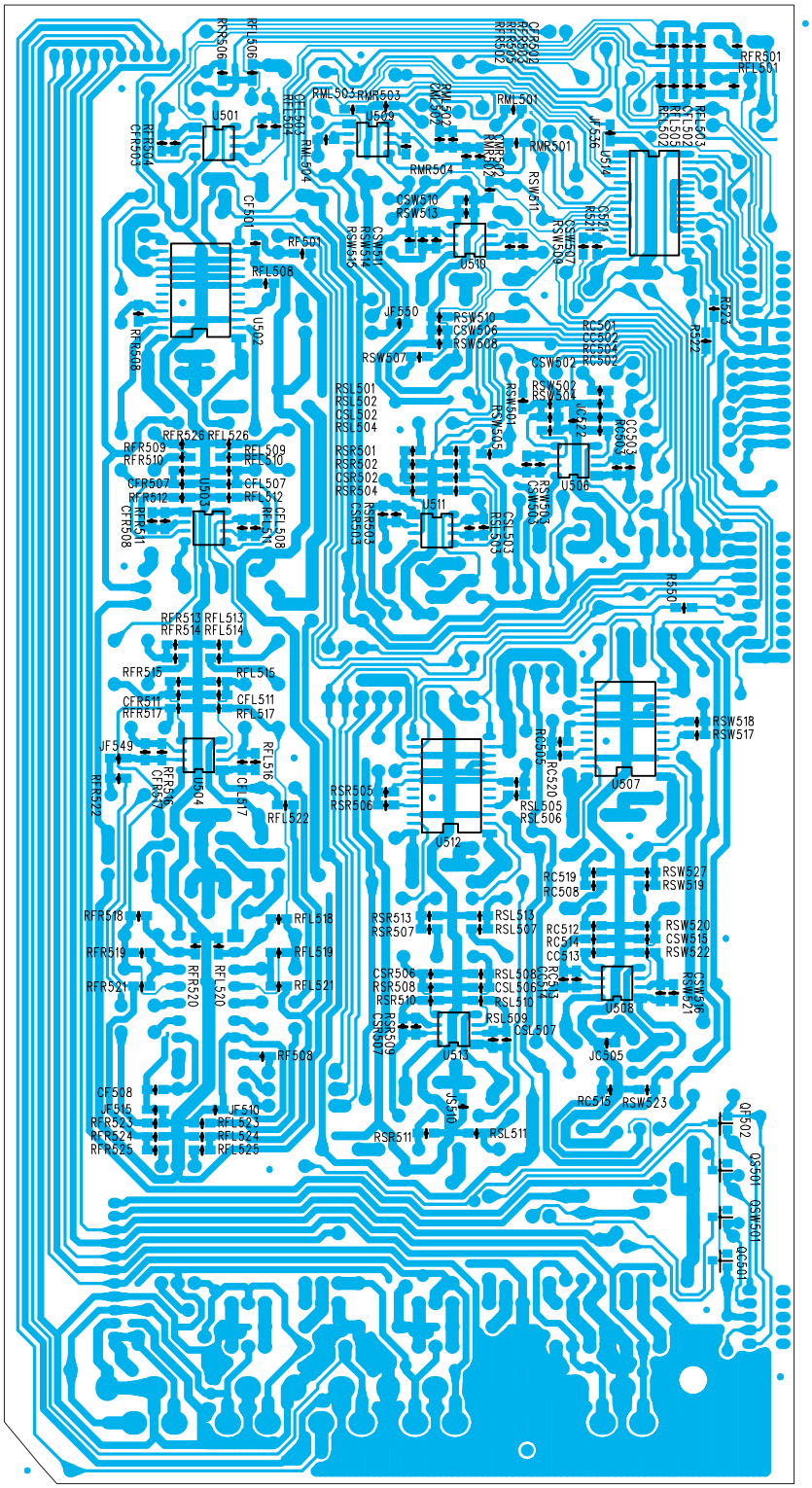

BOTTOM VIEW

Schematic Diagram

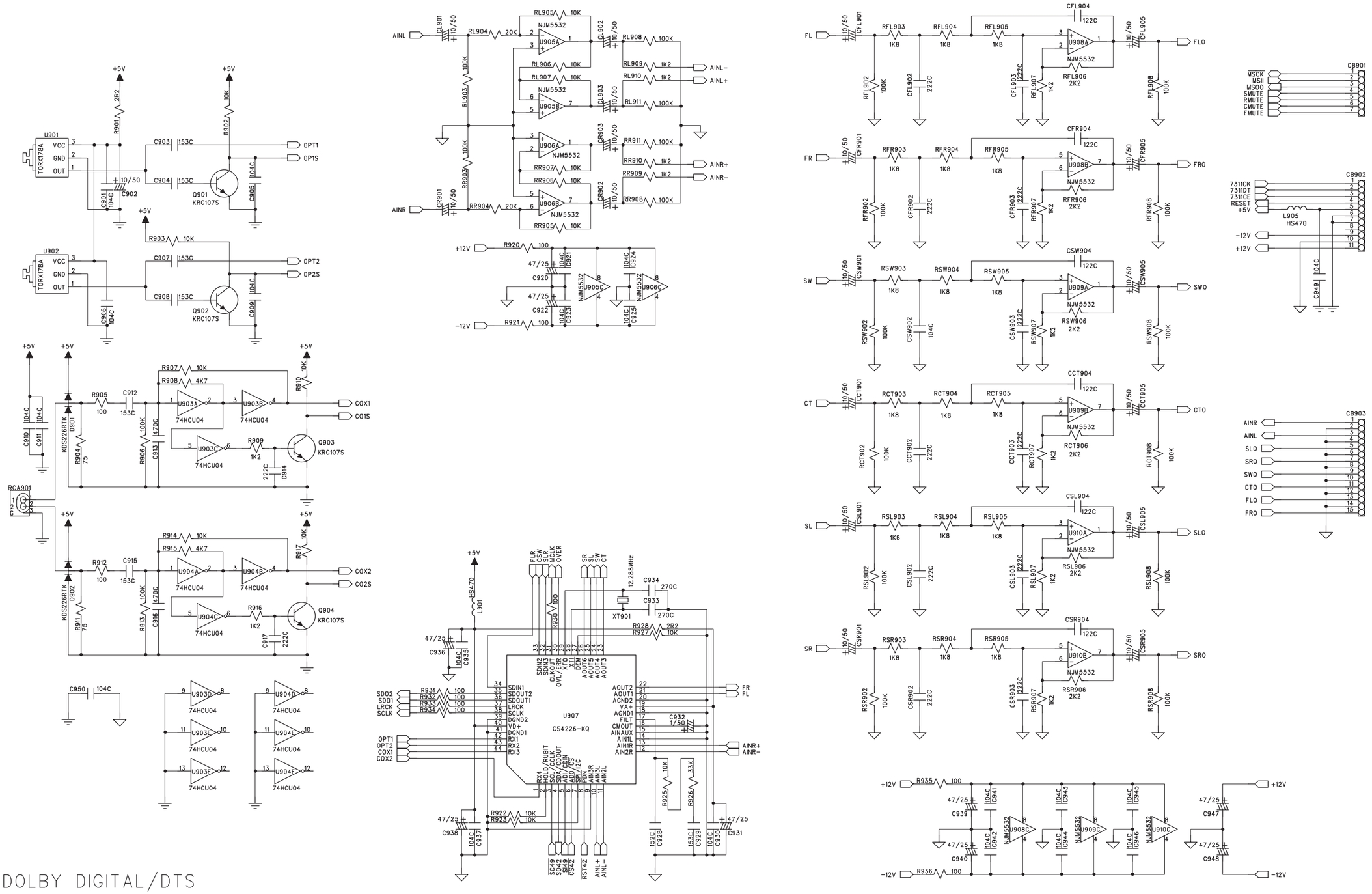

DOLBY DIGITAL/DTS
4002001400 REV.D (1/2)

Schematic Diagram

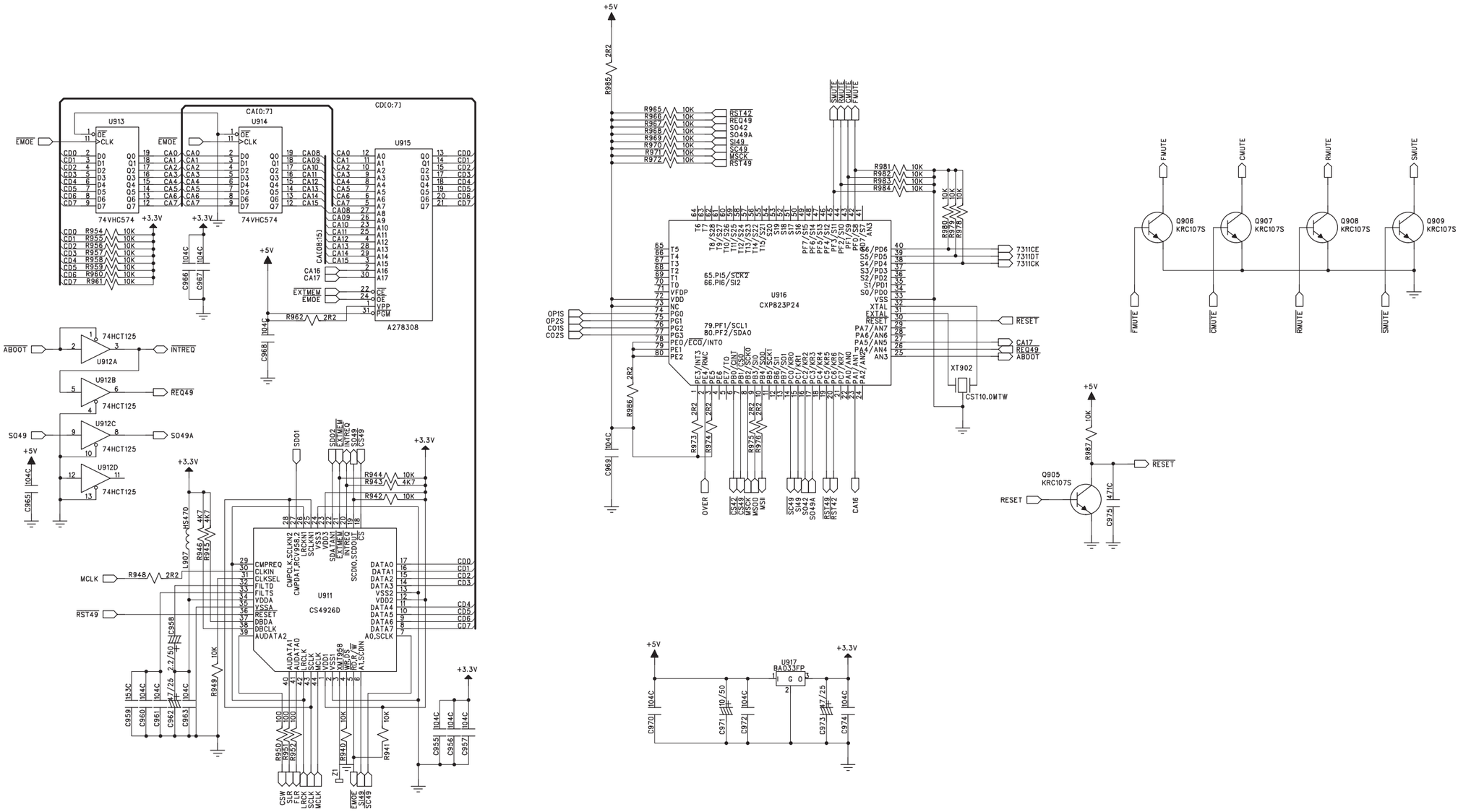

DOLBY DIGITAL/DTS
4002001400 REV.D (2/2)

Schematic Diagram

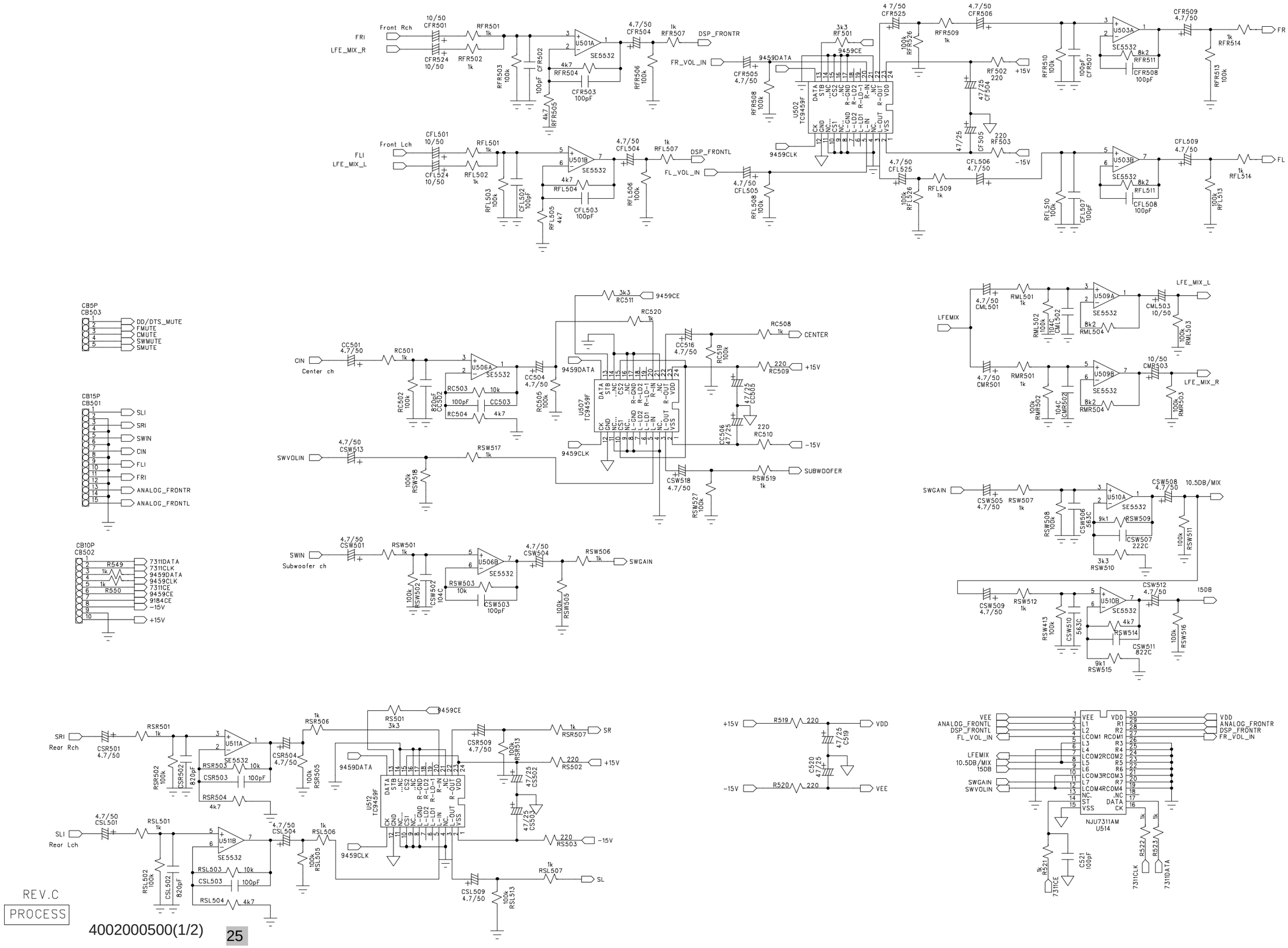

Schematic Diagram

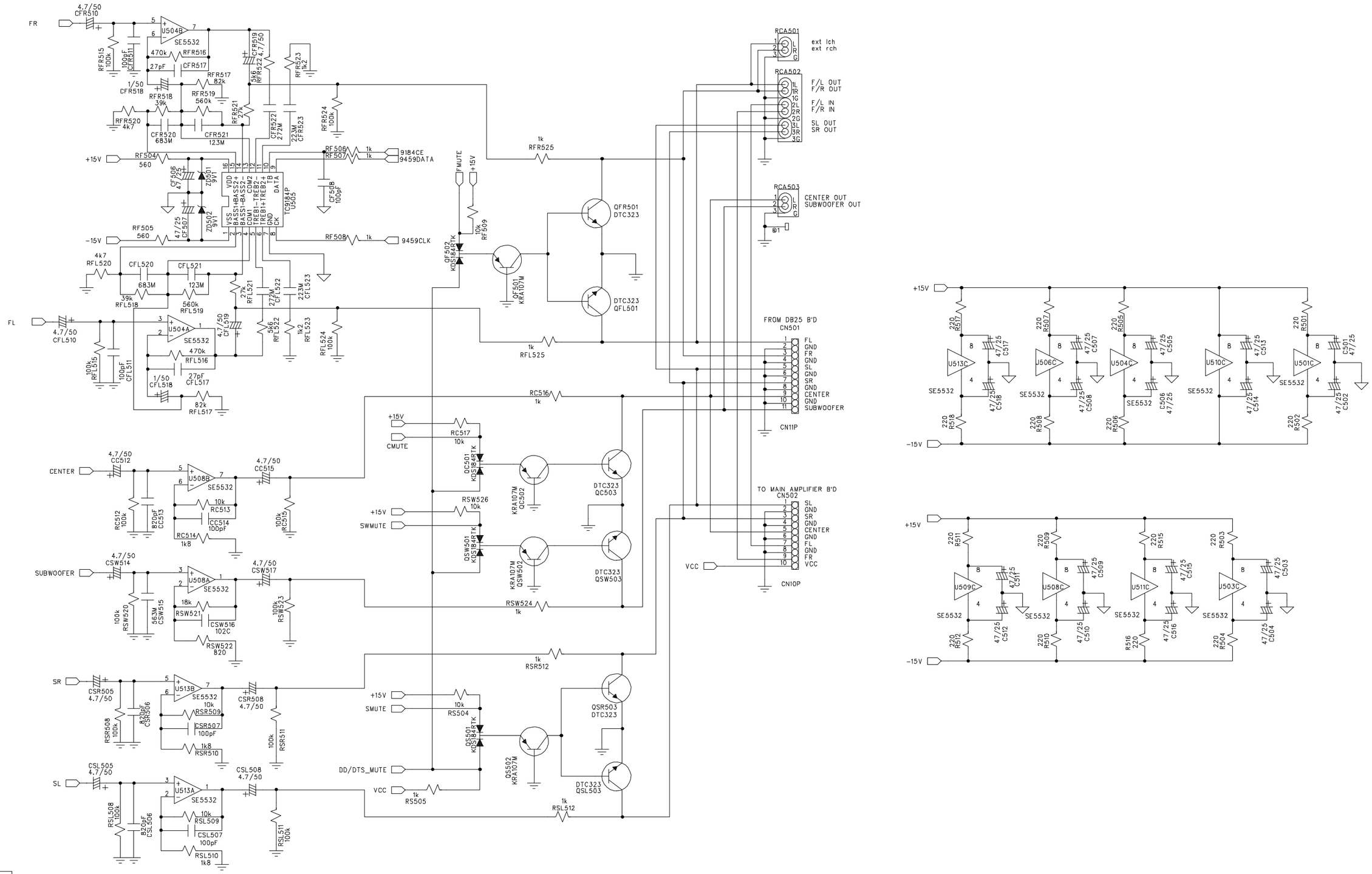

REV.C

PROCESS

4002000500 (2/2)