APR-2003

SERVICE MANUAL

US Model
AEP Model

SPECIFICATIONS

Tape & Reel size 6.25 mm (1/4") 5" Reel
Tape speed 19 cm/s (7 1/2 ips),
9.5 cm/s (3 3/4 ips)
Audio track width 2.1 m/m for each track
REC LEVEL 185 nwb/m at 0 dB
Time code track width
0.38 $^{+0.02}_{-0.03}$ mm
Time accuracy of audio & time code track
Less than 8 msec (at tape speed 19 cm/s)
LINE IN/MIC input (selectable) XLR type
Min input level
LINE: −10 dBs (−20 dBs – +20 dBs set by internal wiring)
MIC: −70 dBs. −50 dBs (at 20 dB ATT)
0 dBs = 0.775 V
Impedance LINE: 47 kilohm balanced
MIC: 10 kilohm balanced
DC POWER for MIC
DC 48 V (7 mA/CH) or
12 V (10 mA/CH) A-B with OFF switch
Time code input XLR type
Input level 0.5 – 5 Vp-p
Impedance 10 kilohm, balanced
Line output XLR type
Output level 0 dBs at 47 kilohm
Impedance 600 ohm unbalanced
EXT. NR Input & output TUCHEL 7-p type
Output level 0 dBs
Impedance 100 ohm unbalanced
Input level 0 dBs
Impedance 47 kilohm unbalanced

Monitor output (12V, 1kHz)
Built-in speaker (16 ohm)
500 mW
Headphones 1 mW (at 32 ohm)
Frequency response (AMPEX 456)
19 cm/s 30 – 15000Hz ±2dB
25 – 18000Hz ±3dB
9.5 cm/s 30 – 10000Hz ±2dB
Signal to Noise ratio (at 510nwb/m AMPEX 456)
19 cm/s More than 58 dB
61 dB ("A" WEIGHTED)
9.5 cm/s 57 dB
60 dB ("A" WEIGHTED)
Total harmonic distortion (1kHz, 510nwb/m, AMPEX 456)
19 cm/s Less than 2%
9.5 cm/s Less than 2.5%
Rec limiter characteristic
Suppressed 8 dB at +20 dB input
Warm-up time of power
Less than 1 sec
Erase efficiency (at 1kHz)
More than 70 dB

— Continued on page 2 —

AUDIO RECORDER
SONY®

Crosstalk (at 1kHz)		
Between audio track	More than 45 dB	
Audio track & time code track	80 dB	
Bias frequency	160 kHz	
Wow & Flutter	19 cm/s	±0.08% DIN, 0.05% WRMS NAB
	9.5 cm/s	±0.12% DIN, 0.08% WRMS NAB
Speed stability	19 cm/s & 9.5 cm/s	±0.3%
FF/RWD TIME	Approx. 60sec (185 m tape)	
TAPE COUNTER	3 digits mechanical	
Power		
Power supply voltage and current necessary	DC 10–14 V, 2 A	
Rechargeable battery (optional)	NP-1 (Battery life: More than 2H)	
Ac adaptor (optional)	AC-500, AC-500CE	
REC FWD Current	Approx. 700 mA (NP-1)	
	Approx. 750 mA (EXT. DC)	
FF/FWD Current	Approx. 700 mA (NP-1)	
	Approx. 750 mA (EXT. DC)	
Dimension	335(w) × 140(h) × 300(d) mm ($13\frac{1}{4} \times 5\frac{5}{8} \times 11\frac{7}{8}$")	
Weight	Approx. 6.7 kg (with NP-1)	

SPECIAL ADJUSTMENT

Remove the bottom panel of the APR-2003 by turning its screws to the left, exactly 90°.
For further details, refer to the service manual of the APR-2003.

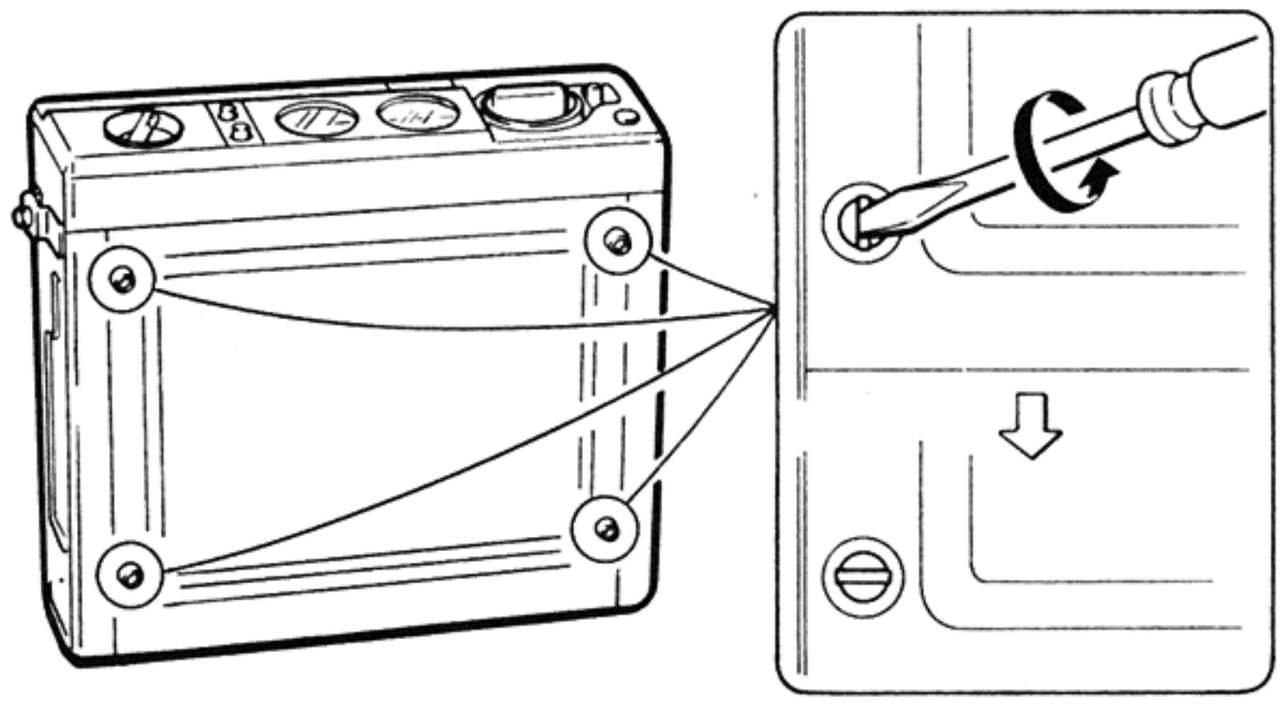

PIN ASSIGNMENT OF THE CONNECTORS

LINE IN/MIC (BALANCED)
(XLR-3-31)

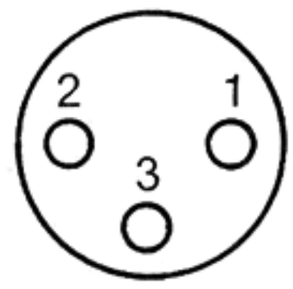

	US model	AEP model
1	GND	GND
2	COLD	HOT
3	HOT	COLD

LINE OUT (UNBALANCED)
(XLR-3-32)

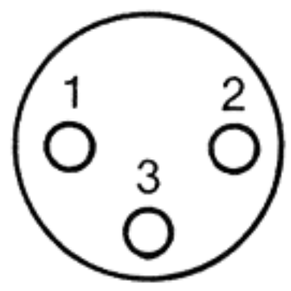

	US model	AEP model
1	GND	GND
2	GND	HOT
3	HOT	GND

TIME CODE IN (BALANCED)
(XLR-3-31)

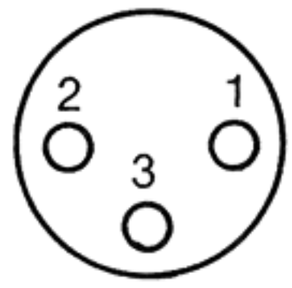

	US model	AEP model
1	GND	GND
2	COLD	HOT
3	HOT	COLD

EXT DC 12 V
(XLR-4-32)

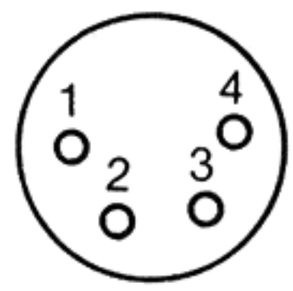

1	GND
2	N.C
3	N.C
4	+12 V

EXT NRS
(For recording)

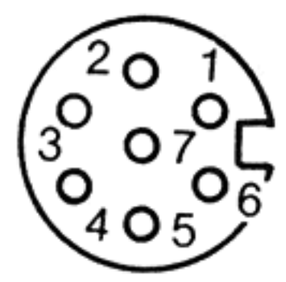

1	2 CH IN
2	GND
3	1 CH IN
4	GND
5	1 CH OUT
6	2 CH OUT
7	GND

SECTION 1
OUTLINE

1-1. FUNCTION OF CONTROLS

Each number in the text is keyed to the illustrations.

Front panel

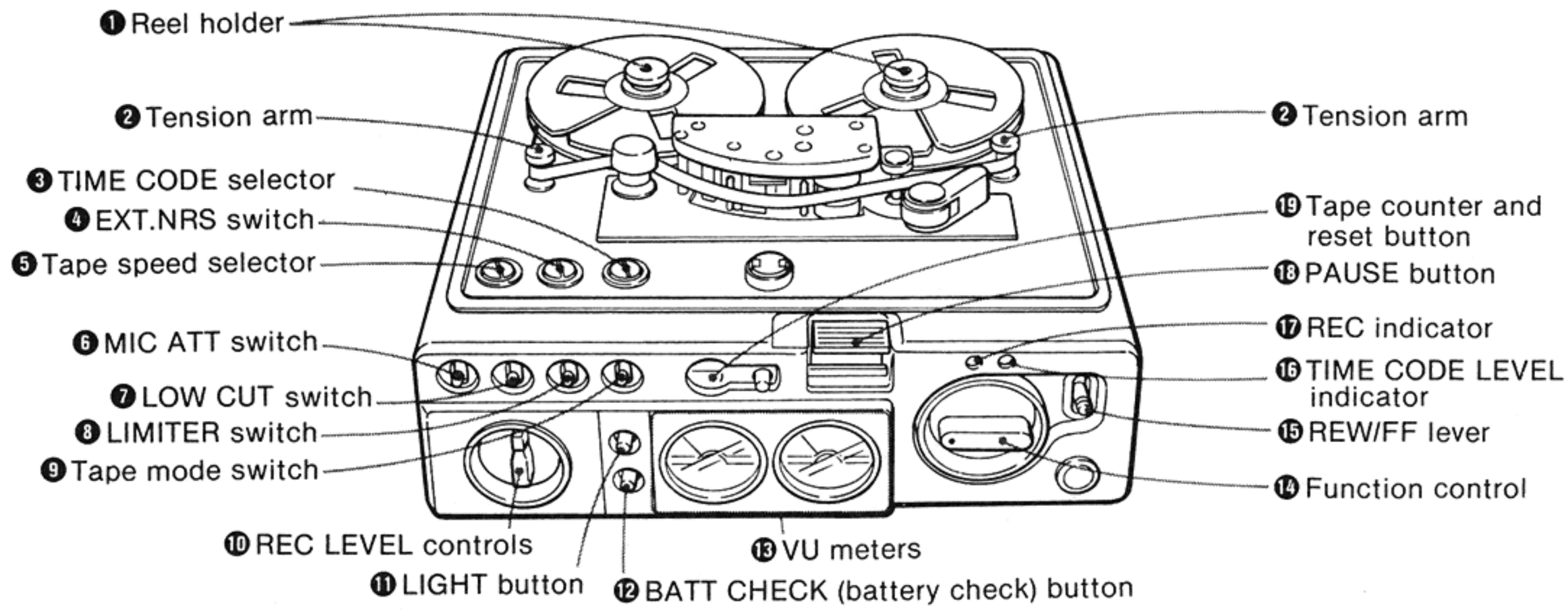

❶ Reel holders

❷ Tension arms

❸ TIME CODE selector
Normally, keep it at OFF.
For recording with the optional time code generator, set it to SMPTE/EBU. Time code recording can only be made when the tape speed selector is set to 19 cm/s ($7^1/_2$ ips).

❹ EXT. NRS switch
For recording with a noise reduction unit, set this switch to NRS (ON).
For recording without noise reduction system, set it to NORMAL (OFF). Recording cannot be made with this switch set to ON when a noise reduction unit is not connected to the EXT. NRS connector.

❺ Tape speed selector
Select a tape speed appropriate to the type of recording desierd (19 cm/s, $7^1/_2$ ips or 9.5 cm/s, $3^3/_4$ ips).

❻ MIC ATT (microphone attenuator) switch
Set this switch to ON to attenuate the microphone input level by 20 dB.

❼ LOW CUT switch
Set this switch to ON to attenuate frequencies lower than 100 Hz by 6 dB/oct.

❽ LIMITER switch
Normally, leave it OFF.
Set it to ON to maintain the reference recording level and to eliminate undesirable distortion. See page 15.

❾ Tape mode switch (TAPE/SOURCE)
Set it to TAPE for tape playback. While recording, set it to TAPE for tape monitoring, and set it to SOURCE for source monitoring.

❿ REC LEVEL controls
Varies the recording level. The outer knob controls CHANNEL 1 and the inner knob controls CHANNEL 2.

⓫ LIGHT button
Illuminates the VU meters as long as the button is pressed.

⓬ BATT CHECK (battery check) button
Keep pressed to check the battery condition during recording or playback. When the needle of the right VU meter registers outside the green zone, the battery should be recharged.

⓭ VU meters
Indicates the recording level when the tape mode switch is set to SOURCE. When the tape mode switch is set to TAPE, the meters indicate the playback level. (0 VU = 185 nwb/m (NAB))

⑭ Function control
Set to PLAY for playback and to STOP to stop the tape.
To record, push and turn towards REC.
To activate this control, the REW/FF lever ⑮ must be at stop position.

⑮ REW/FF lever
Set the lever to REW to rewind the tape. Pull the lever and push down to FF to advance the tape rapidly.
To activate this lever, the function control ⑭ must be set at STOP.

⑯ TIME CODE LEVEL indicator
Lights up when a correct input signal is fed from the TIME CODE IN connector.

⑰ REC indicator

⑱ PAUSE button
Depress this button to pause momentarily during playback or recording. To release, press it again.

⑲ Tape counter and reset button

Left side panel

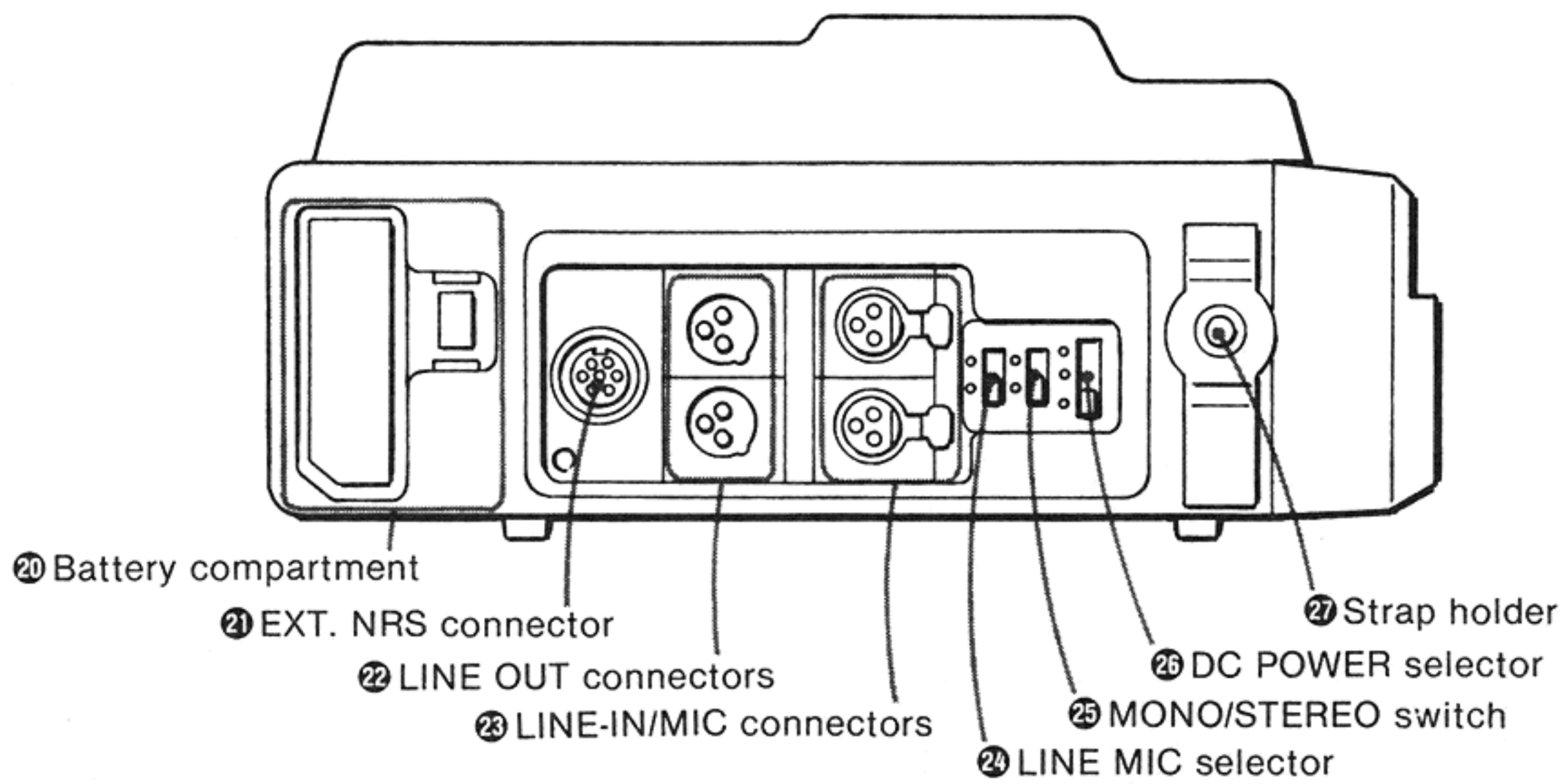

⑳ Battery compartment
Insert an optional rechageable battery pack Sony NP-1. See page 7.

㉑ EXT. NRS connector
(Tuchel type, 7-P)
Connect a noise reduction unit here to record with the Dolby A NR system. For connection, refer to page 14 and to the noise reduction unit's instruction manual.

㉒ LINE OUT connectors
(XLR-3-32, unbalanced)
Produce the line output signals.

㉓ LINE IN/MIC connectors
(XLR-3-31, balanced)
Receive either line input or microphone signals according to the LINE/MIC selector setting.

㉔ LINE/MIC selector
Selects the input source connected to the LINE IN/MIC connectors.

㉕ MONO/STEREO switch (for microphone)
Set it to STEREO for stereo recording with two microphones. Set it to MONO for monaural recording with one microphone, in which case, the microphone must be connected to the CHANNEL 1 connector.

㉖ DC POWER selector (for microphone)
Selects a setting to match the microphone's power requirements. LINE IN/MIC connectors can supply 12 V dc (10 mA/channel) or 48 V dc (7 mA/channel) to externally powered microphones. Set the DC POWER selector to the appropriate position when the tape recorder is in the stop mode, otherwise a click sound may be heard. Use the following settings.

48 V: For phantom powered condenser microphones.
OFF: For microphones requiring no external power.
12 V A-B: For microphones with an AB feed powering system.

> Set the DC POWER selector to 12 V A-B **only** for a microphone with an AB feed powering system. Otherwise, **the microphone may be damaged.**

㉗ Strap holder

Right side panel

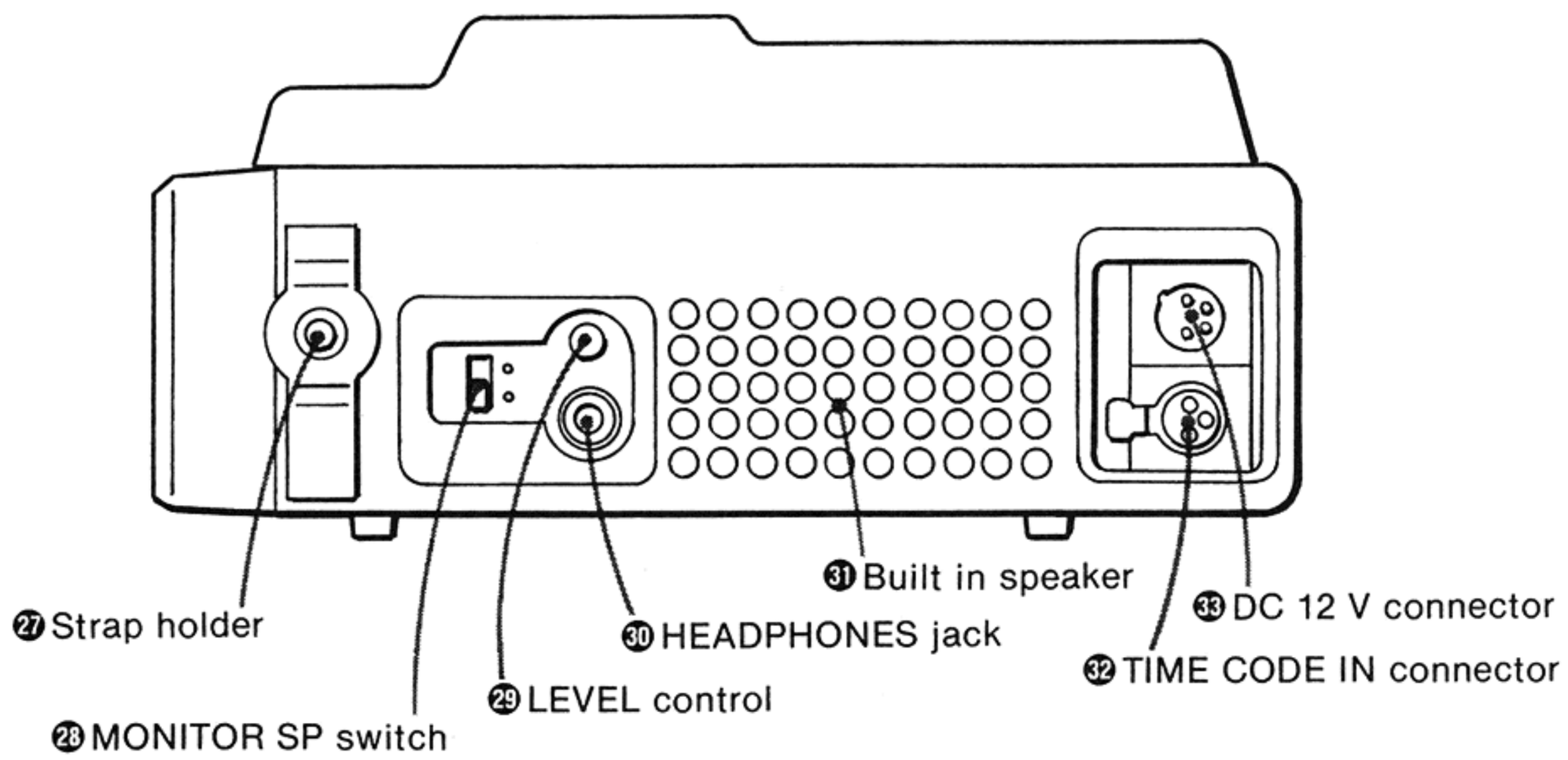

㉘ MONITOR SP switch
Set this switch to ON to monitor from the built-in speakers during recording and playback.
You can alter the volume of the built-in speaker by adjusting the LEVEL control.

㉙ LEVEL control
Varies the output level of the built-in speaker and the headphones. This control does not affect the VU meters or the output level of the LINE OUT connectors.

㉚ HEADPHONES jack
Accepts any low impedance stereo headphones. The output level can be varied with the LEVEL control. When the headphones are connected, the built-in speaker is automatically disconnected.

㉛ Built-in speaker

㉜ TIME CODE IN connector
(XLR-3-31, balanced)
Accepts an optional time code generator such as the Sony BVG-100. For connection, refer to page 13 and the time code generator's instruction manual.

㉝ DC 12 V connector
(XLR-4-32)
Must be used only with the Sony AC-500/AC-500CE optional ac power adaptor.

1-2. BLOCK DIAGRAM

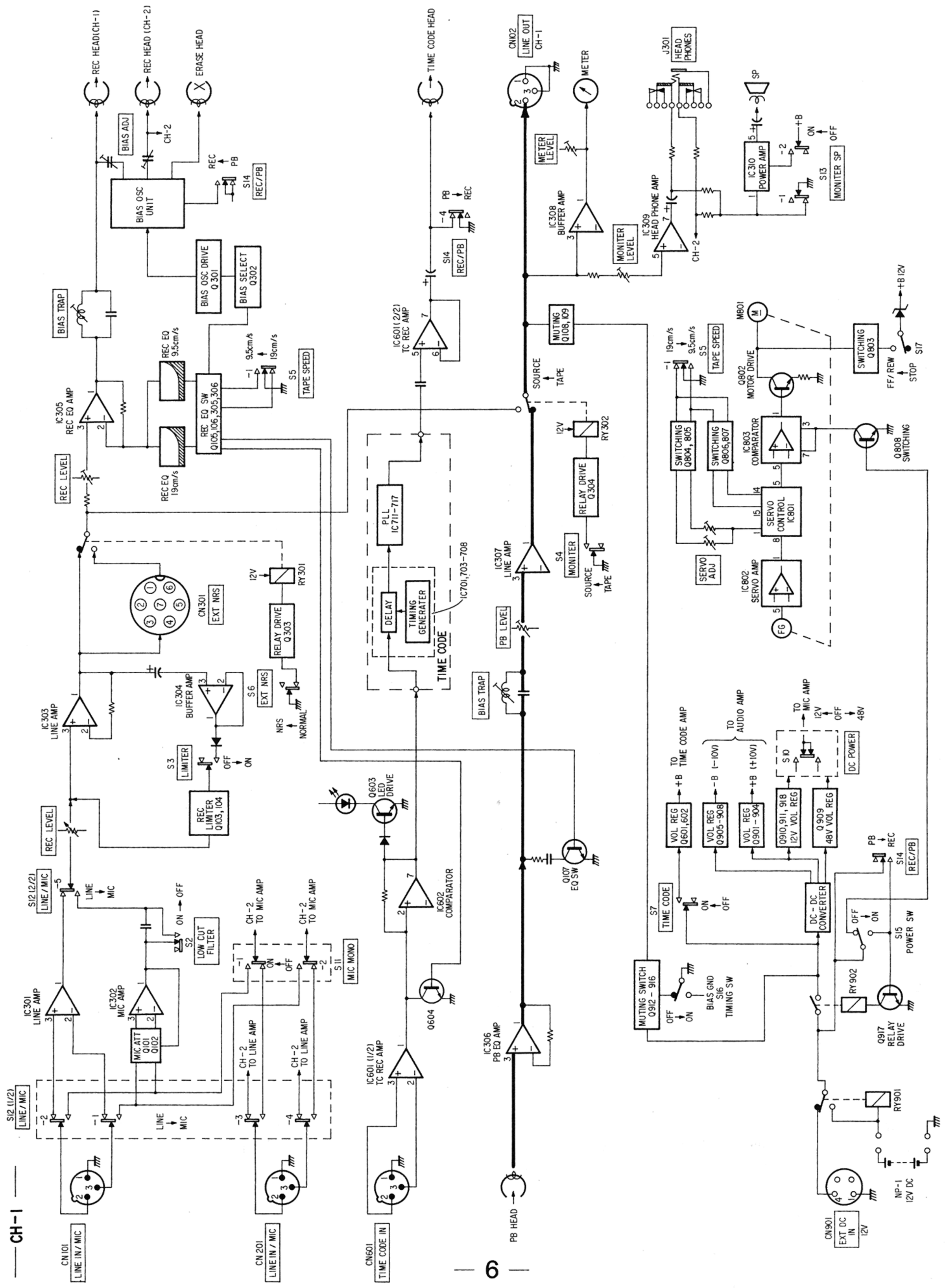

SECTION 2
DISASSEMBLY

Note: Follow the disassembly procedure in the numerical order given.

Reel Panel (B)/Front Cover/Right-Side/Left-Side

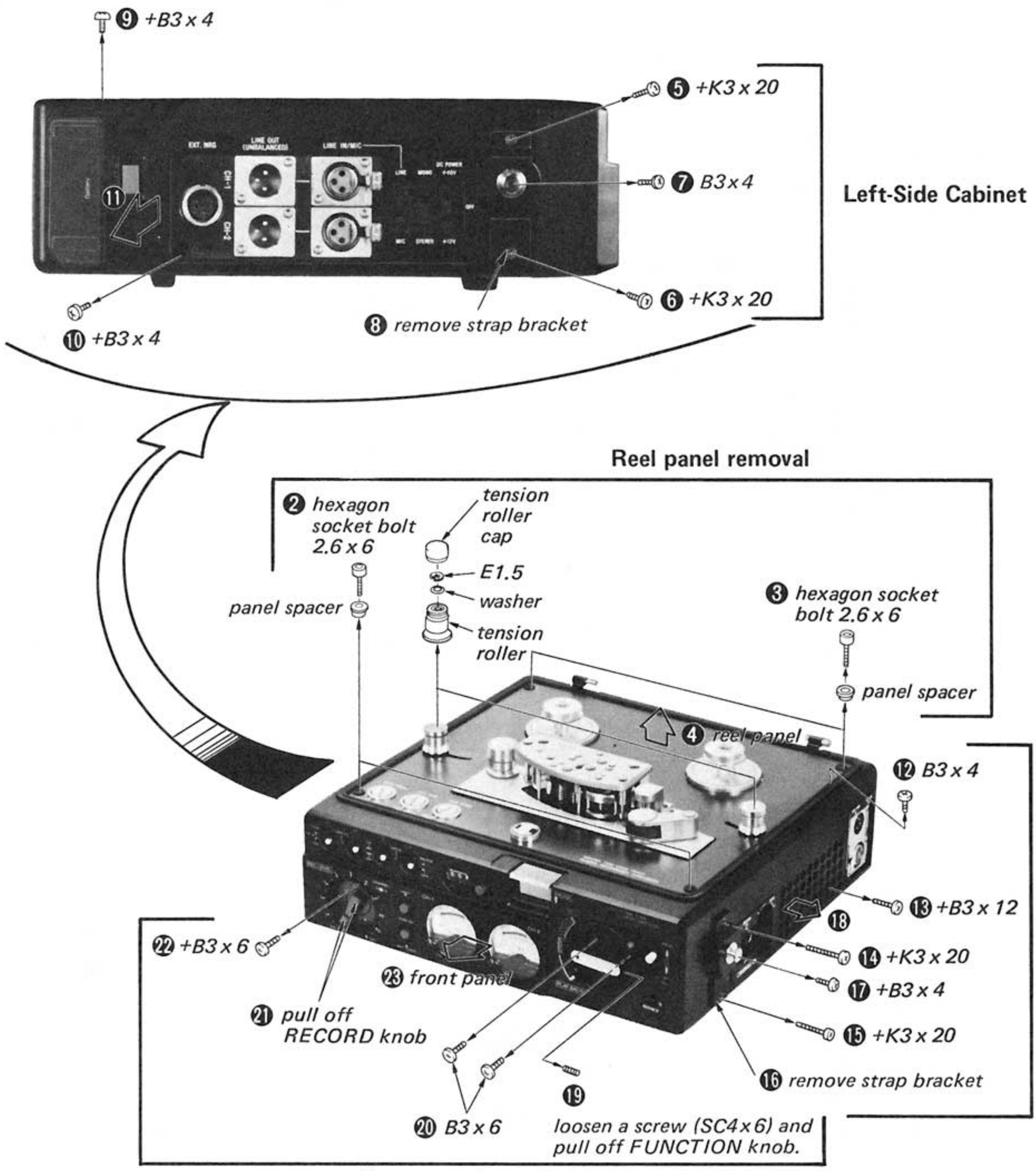

Back-Side Cabinet

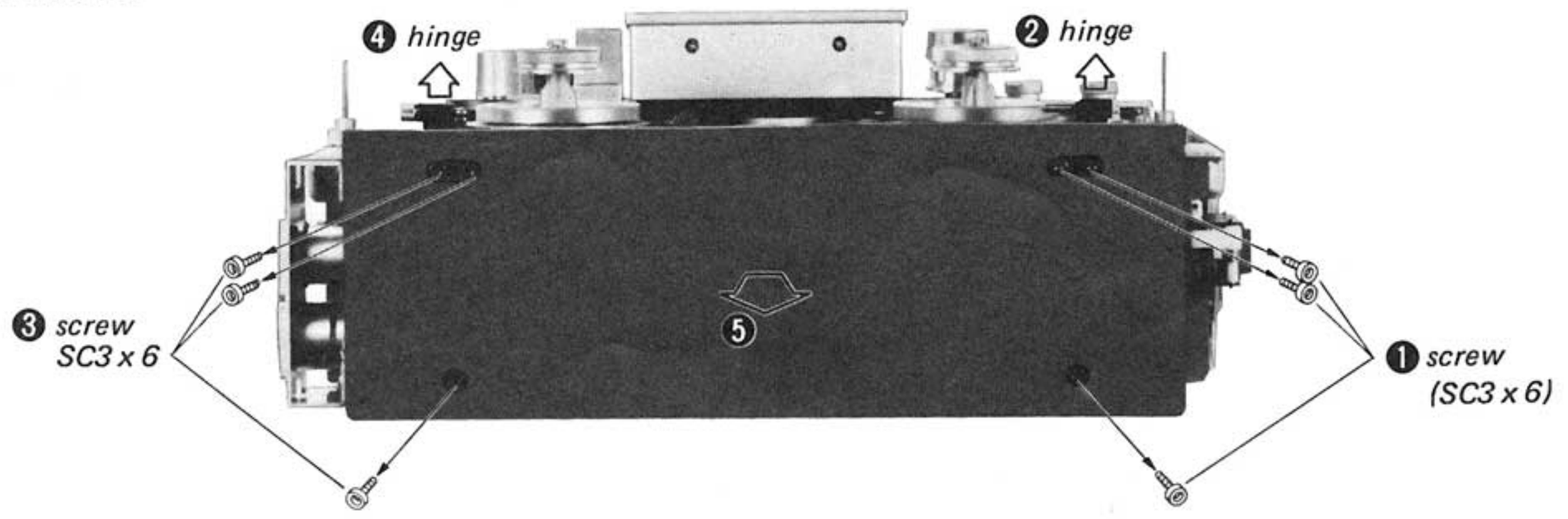

Base Ass'y

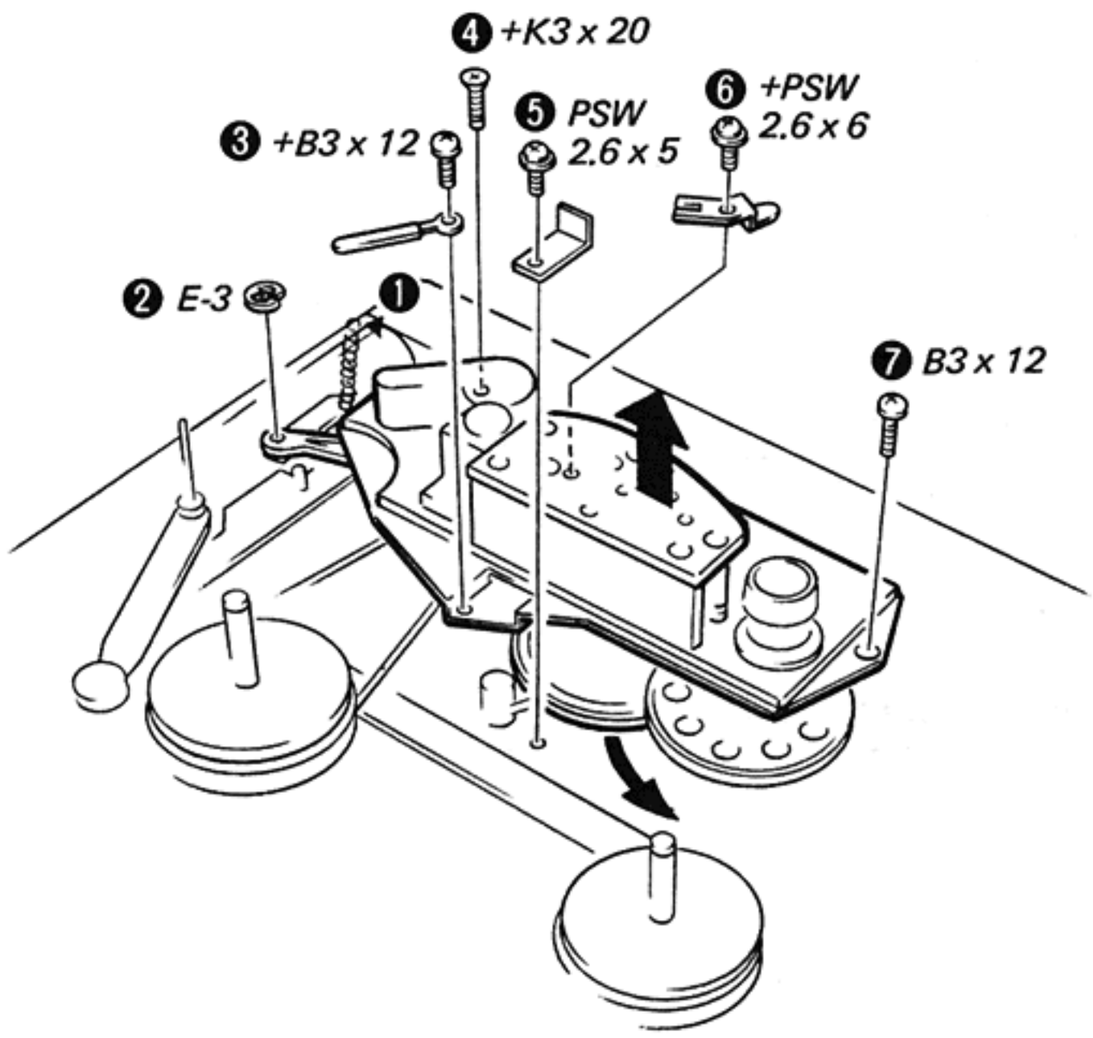

M801/Capstan Belt

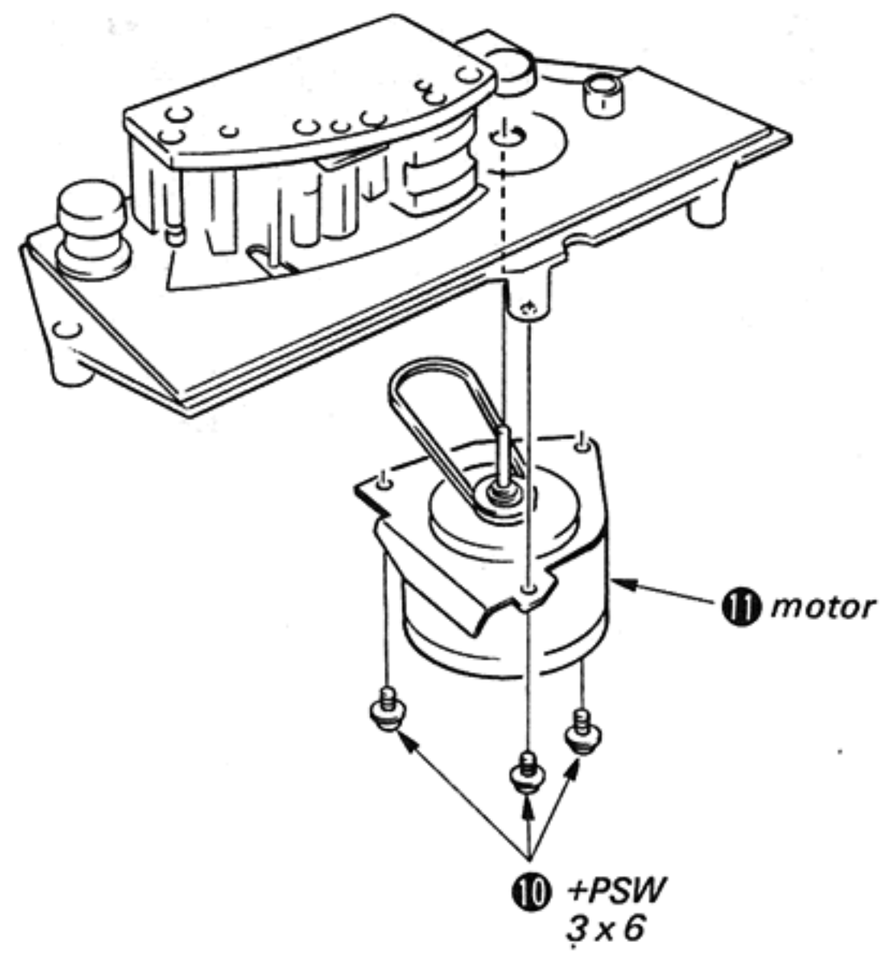

Take-up Reel Supply Reel

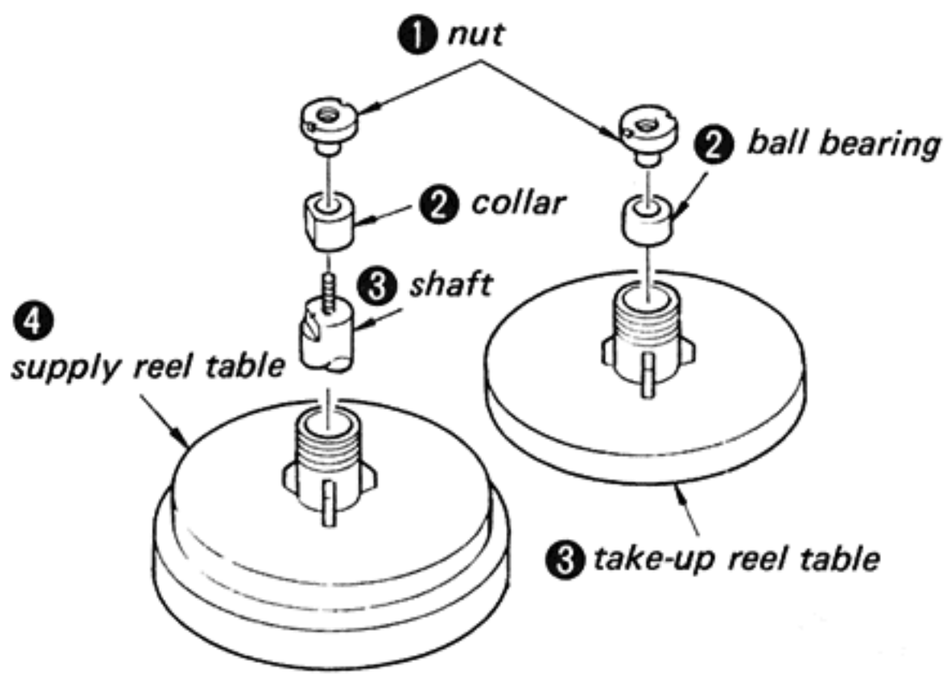

Servo Control Board

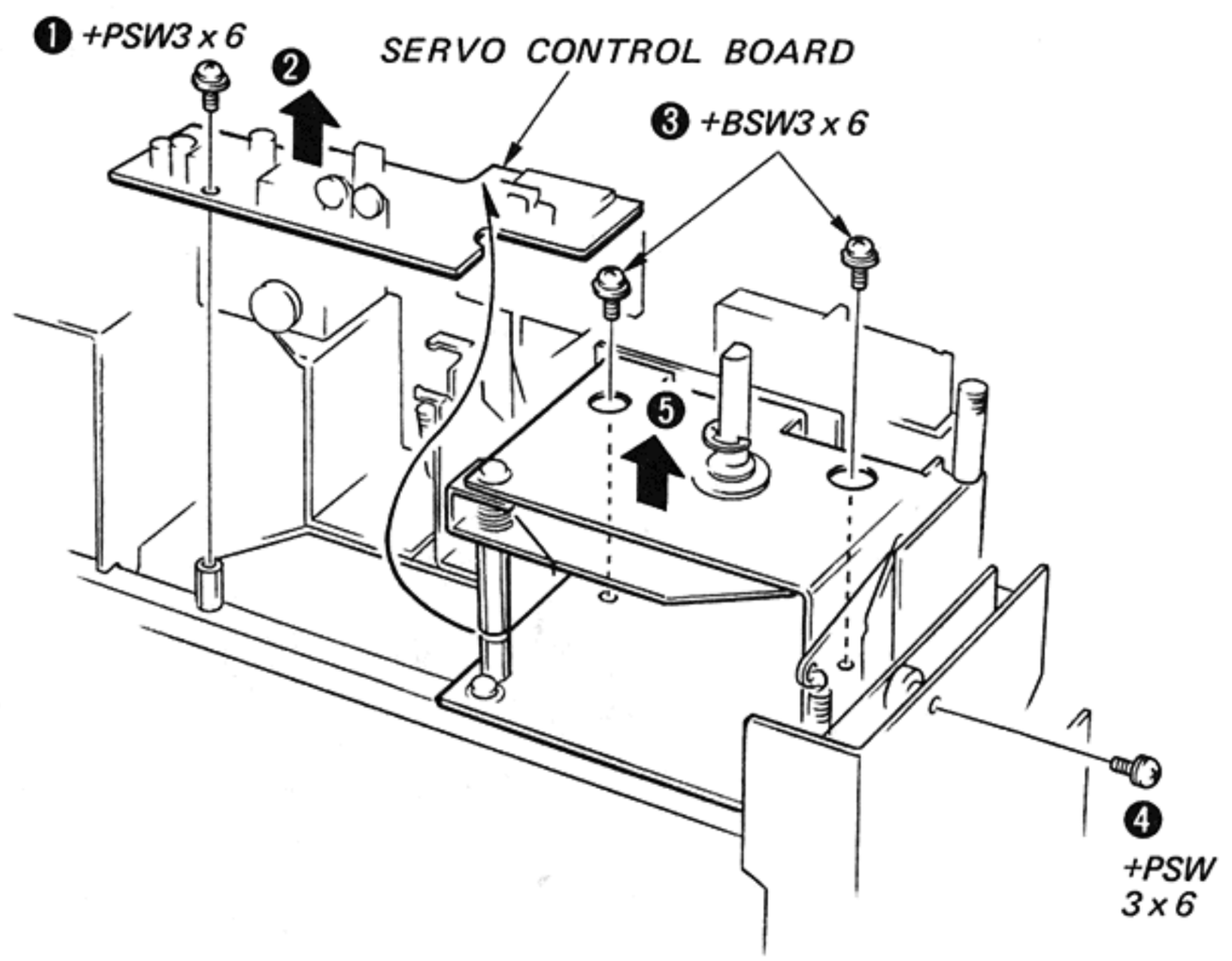

SECTION 3
ADJUSTMENTS

3-1. MECHANICAL ADJUSTMENTS

Forward and Fast Forward Back-Tension Adjustment
— Forward and Fast Forward Mode —

Wind the tape up twice or third on a five inches reel hub and pull the tape out as shown below. Change each spring hooking position to obtain the specifications.

Specification:

Forward Mode:	30 ~ 35 g (1.06 ~ 1.23 oz)
Fast Forward Mode:	8 ~ 12 g (0.28 ~ 0.42 oz)

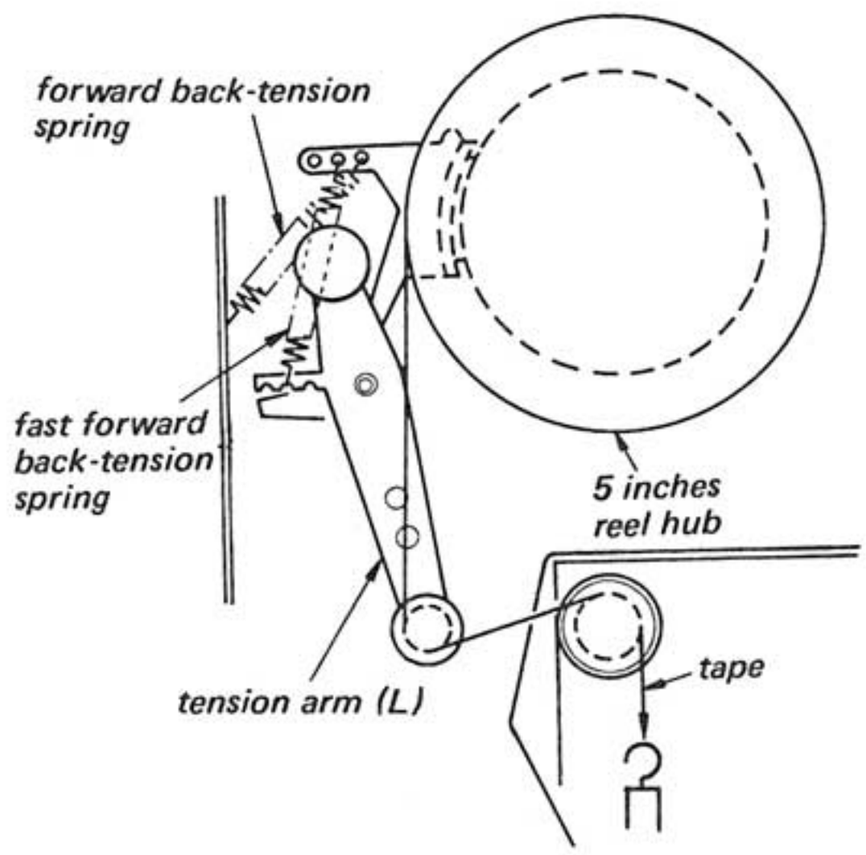

Rewind Idler Stopper Position Adjustment
— Stop Mode —

Push the idler (B) to contact with the flywheel. Adjust the screw (marked ★) to obtain the position of the idler arm and the idler stopper as shown below.

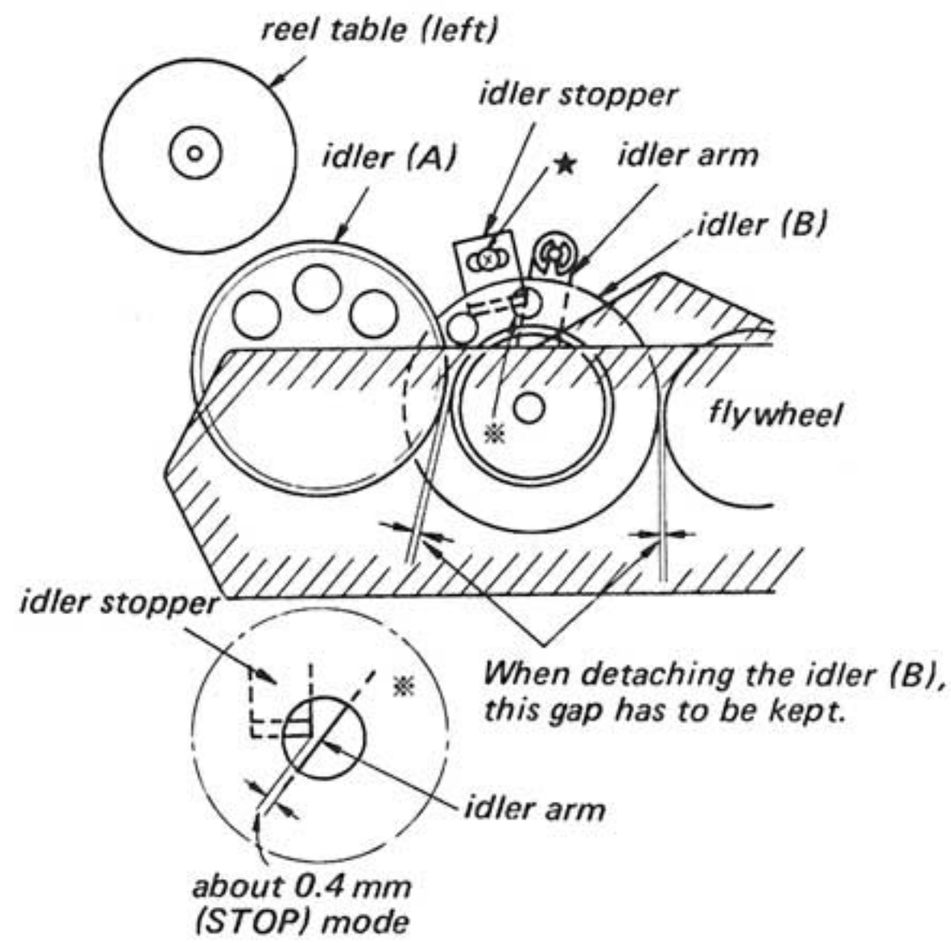

Tension Regulator Arm Position Adjustment

1. Place the tension roller shaft Ⓐ position as shown below.
2. Adjust two screws (marked ★) so that the tension arm sub-plate just contacts the tension regulator arm (Ⓑ position).

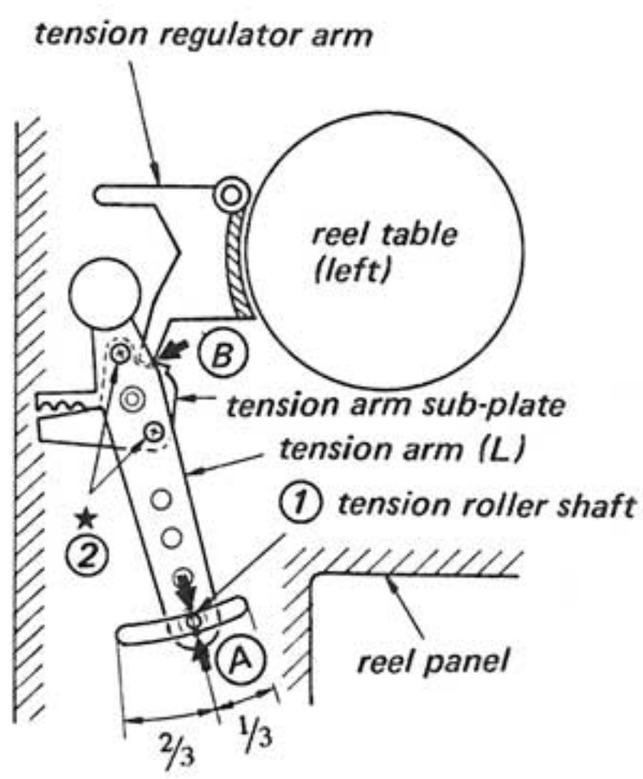

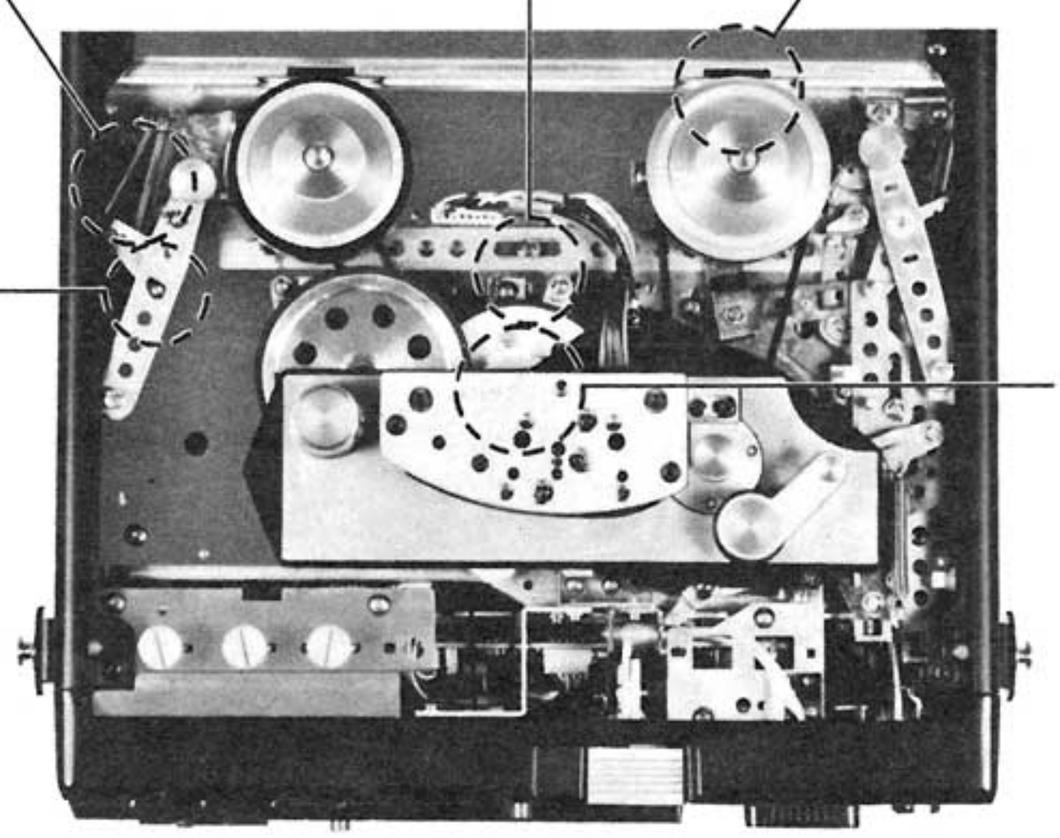

Tension Arm (R) Position Adjustment
– Forward Mode –

Adjust the screw to obtain the position of the tension arm (R) as shown below.

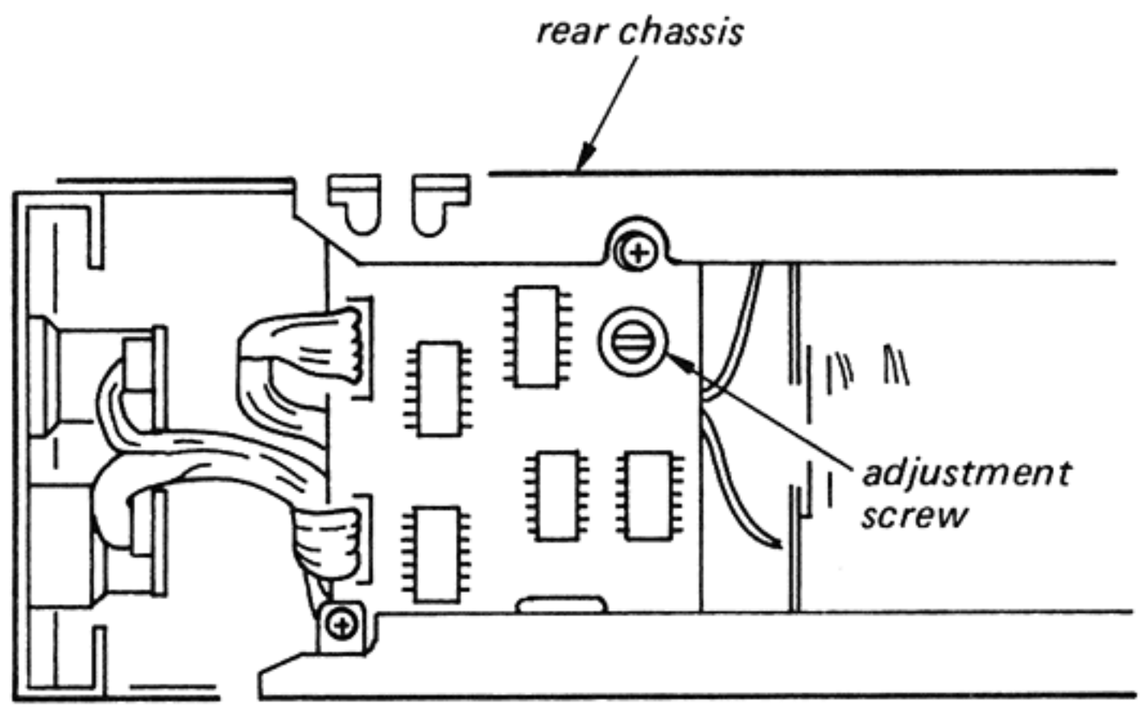

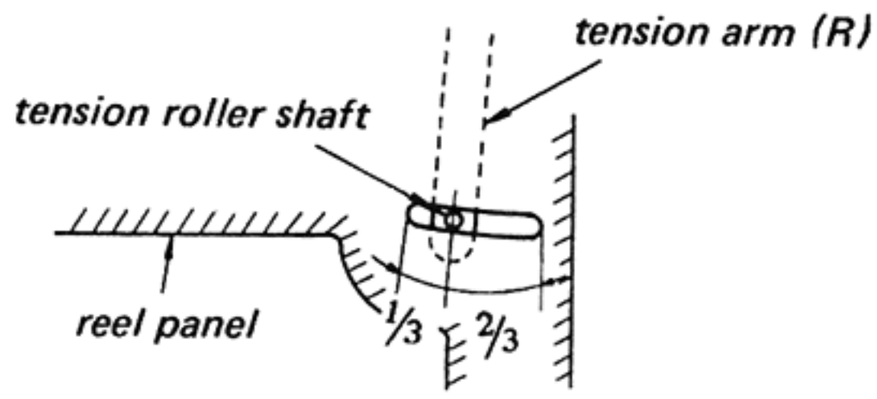

Rewind Torque Adjustment
– Rewind Mode –

Adjust the flat spring to obtain the specifications.

Reel	Rewind torque
Measuring reel	300 ~ 450 g·cm (4.1 ~ 6.1 oz·inch)
5 inches reel	150 ~ 270 g·cm (2.0 ~ 3.7 oz·inch)

Note: When measuring torque, move spring scale in arrow direction at about 10 cm/s (4 ips).

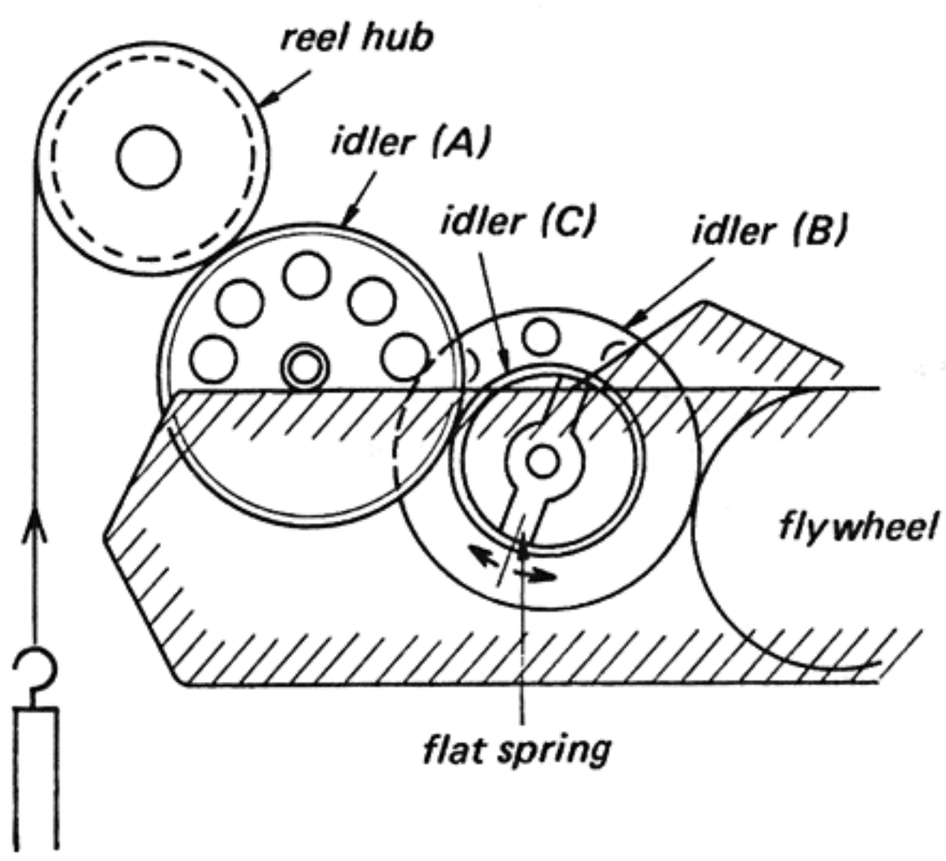

Capstan Housing Position Adjustment
– Forward and Pause Mode –

1. Loosen two hex-socket screws (marked ★).
2. Adjust the capstan housing position to obtain less than 550 mA.
3. After adjustment, apply locking compound to the screws.

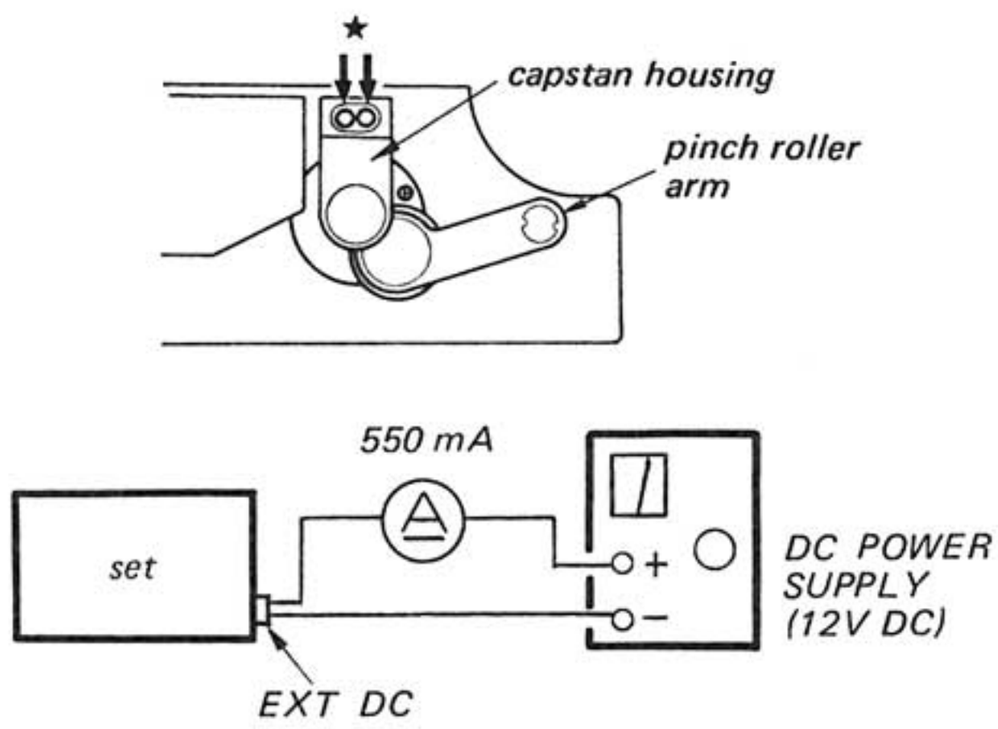

Playback Timing Switches (S15, 16) Adjustment
– Stop Mode –

1. Loosen a screw (marked ★) and adjust the switch position as shown below.
2. The actuator does not contact with these switches in forward mode.

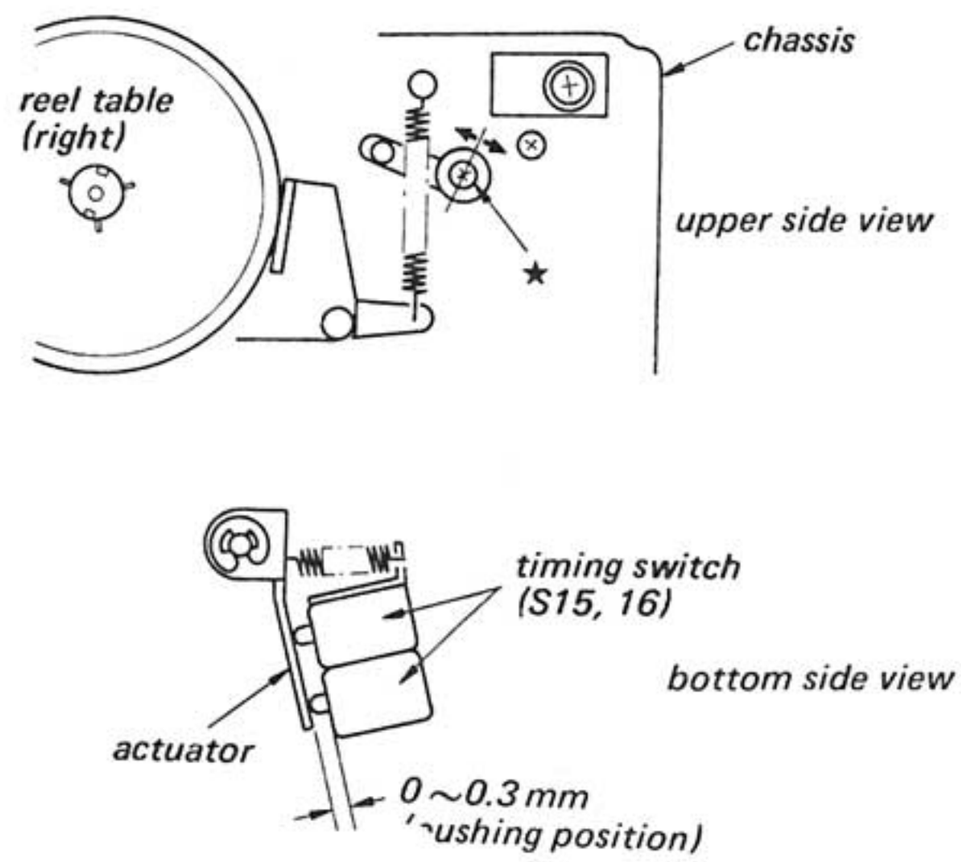

Pause Lever Adjustment

1. Put a 1.5 mm spacer into the gap ① and forward mode.
2. Setting in pause mode, adjust the screw ② so that the adjusting plate contacts the pause lever.

Specification:

The gap of the capstan and the pinch roller in pause mode: 0.5 ~ 1.5 mm (6/32 ~ 9/32 inches).

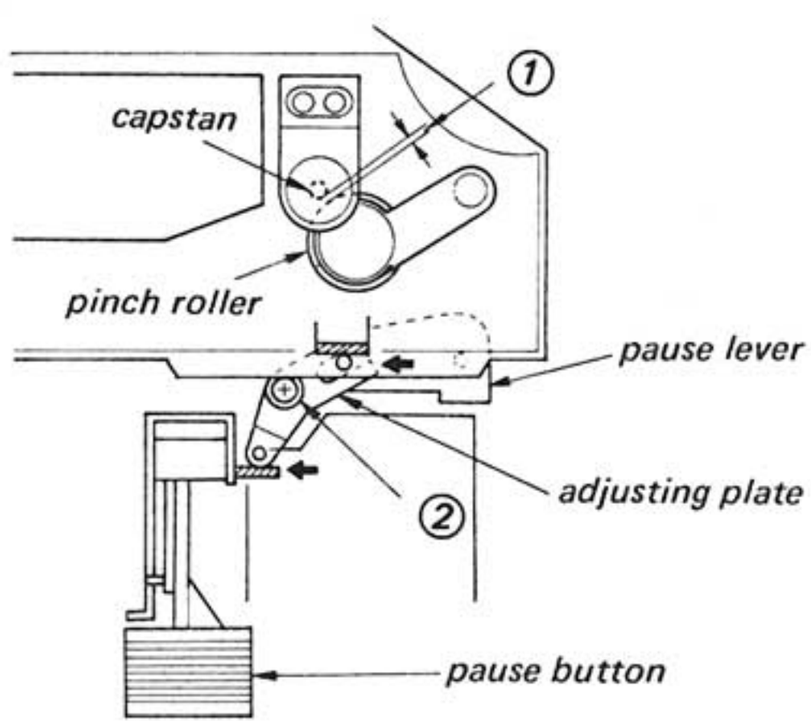

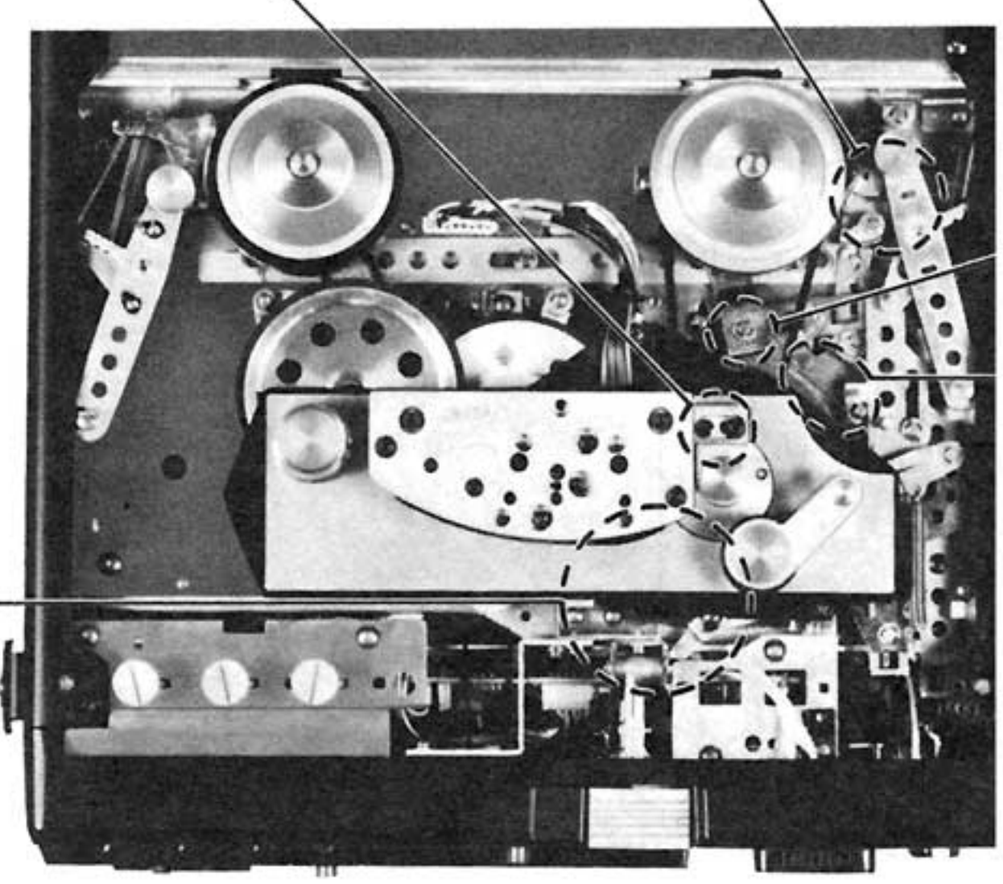

F·F Torque & REW Back Tension Adjustment

1. Wind tape up two or three times on a five inches reel hub as shown below.
2. Place the unit in FF mode.
   When winding up a torque meter at the speed of 10 – 20 cm/s adjust the position of the ★ marked screw so that the meter reads 200 – 350 g·cm.
3. Place the unit in rewind mode.
   When pulling a torque meter at the speed of approx. 10 – 20 cm/s, confirm that the meter reads 45 – 55 g·cm.

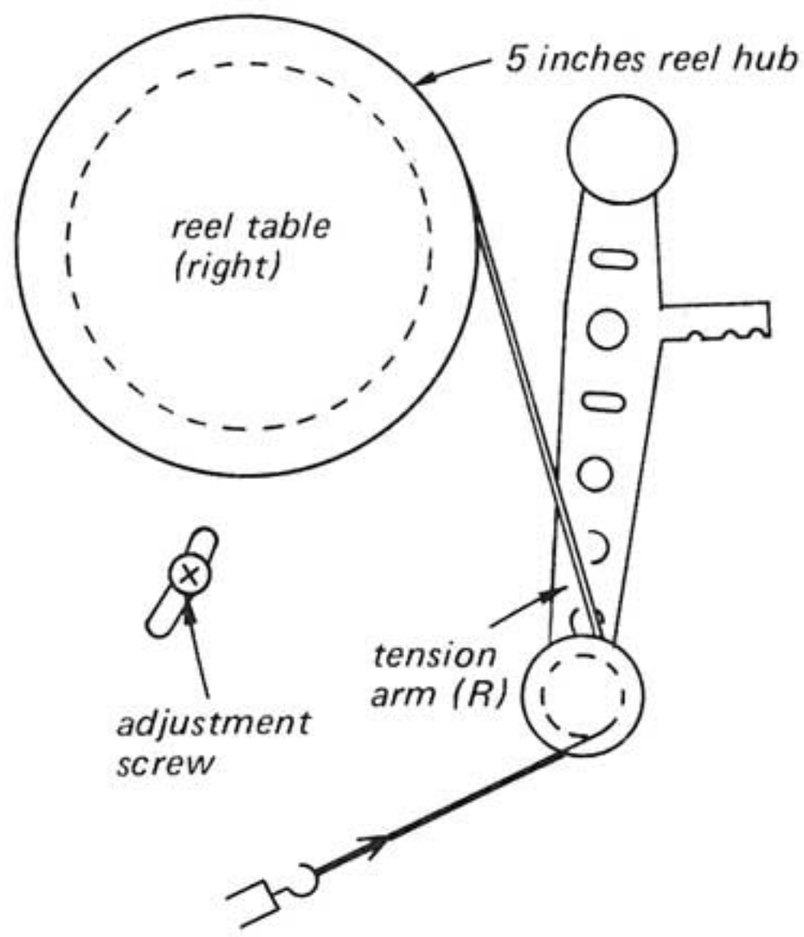

Fast Forward and Rewind Switch (S17) Position Adjustment

– Stop Mode –

Place the switch as shown below.

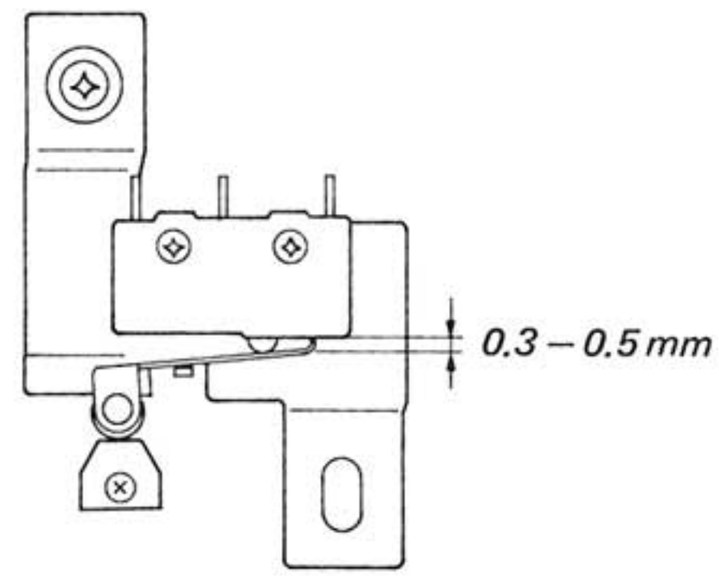

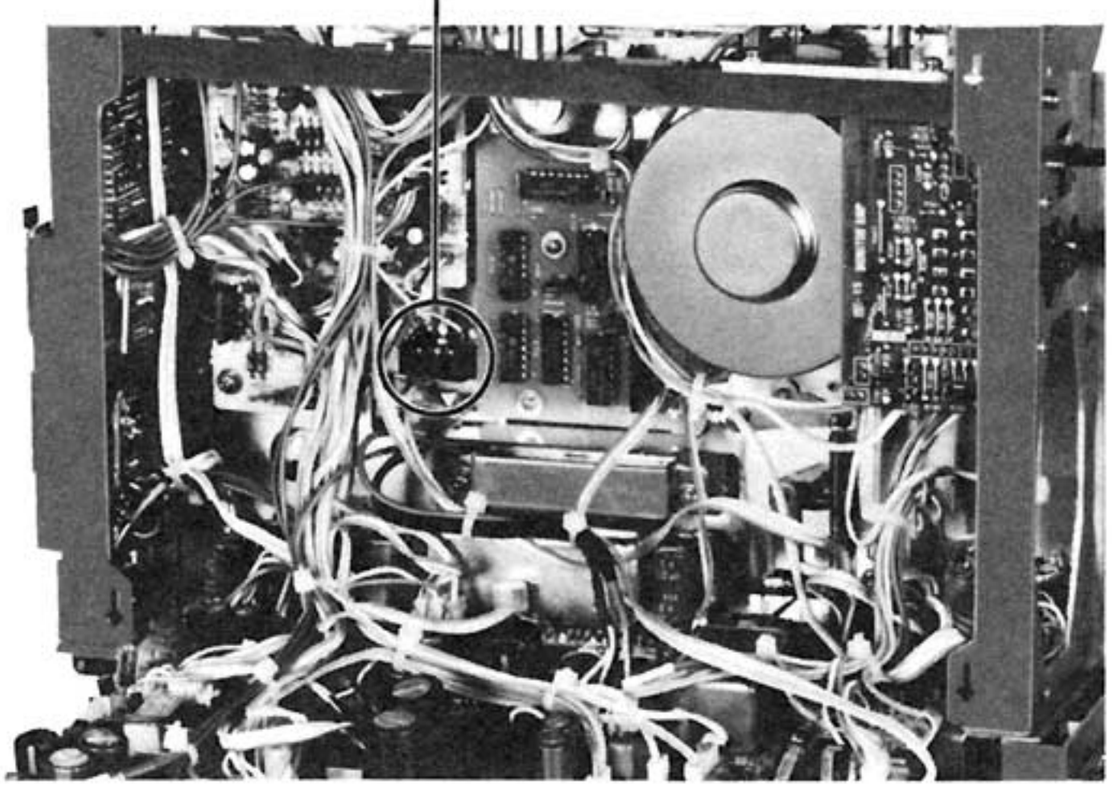

Static Electricity Prevention Adjustment

Place the unit in playback mode and adjust the screw (marked ★) to obtain the position of the belt and blash as shown below.

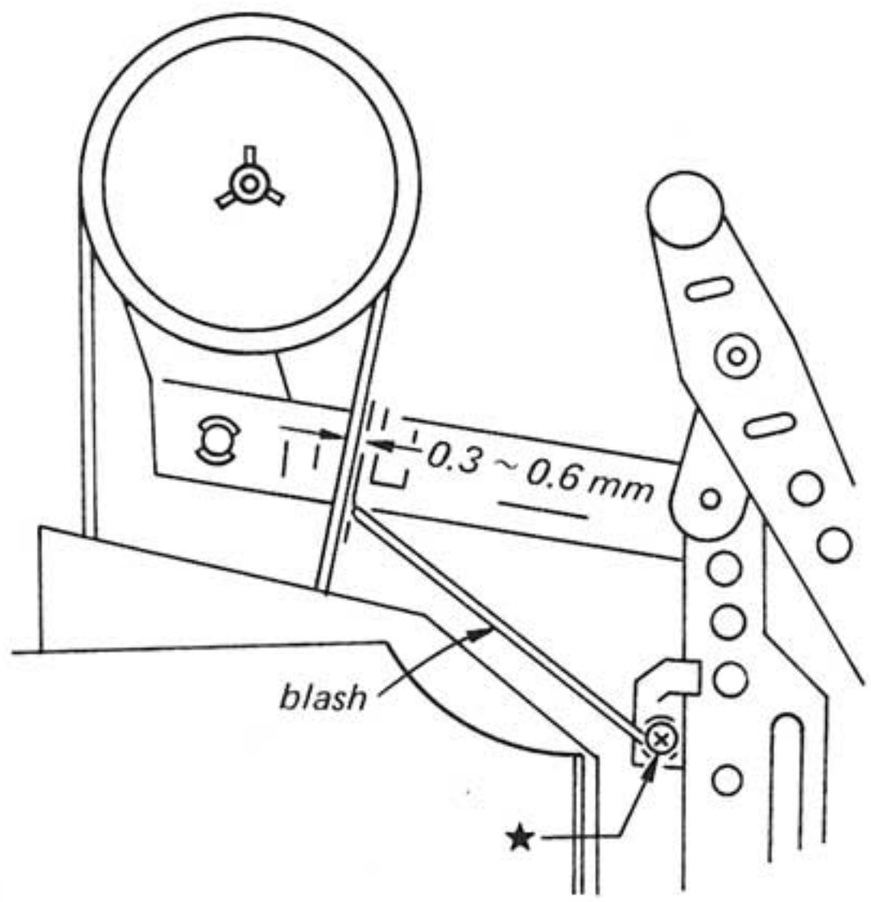

3-2. ELECTRICAL ADJUSTMENTS AND MEASUREMENTS

CAUTION

1. LINE IN connector's input level can be changed by resistance value of R126, 128, 226, 228.

Resistance (R126, 128, 226, 228)	Minimum input level
100 Ω	+20 dB
330 Ω	+10 dB
1 kΩ	0 dB
3.3 kΩ	-10 dB
10 kΩ	-20 dB

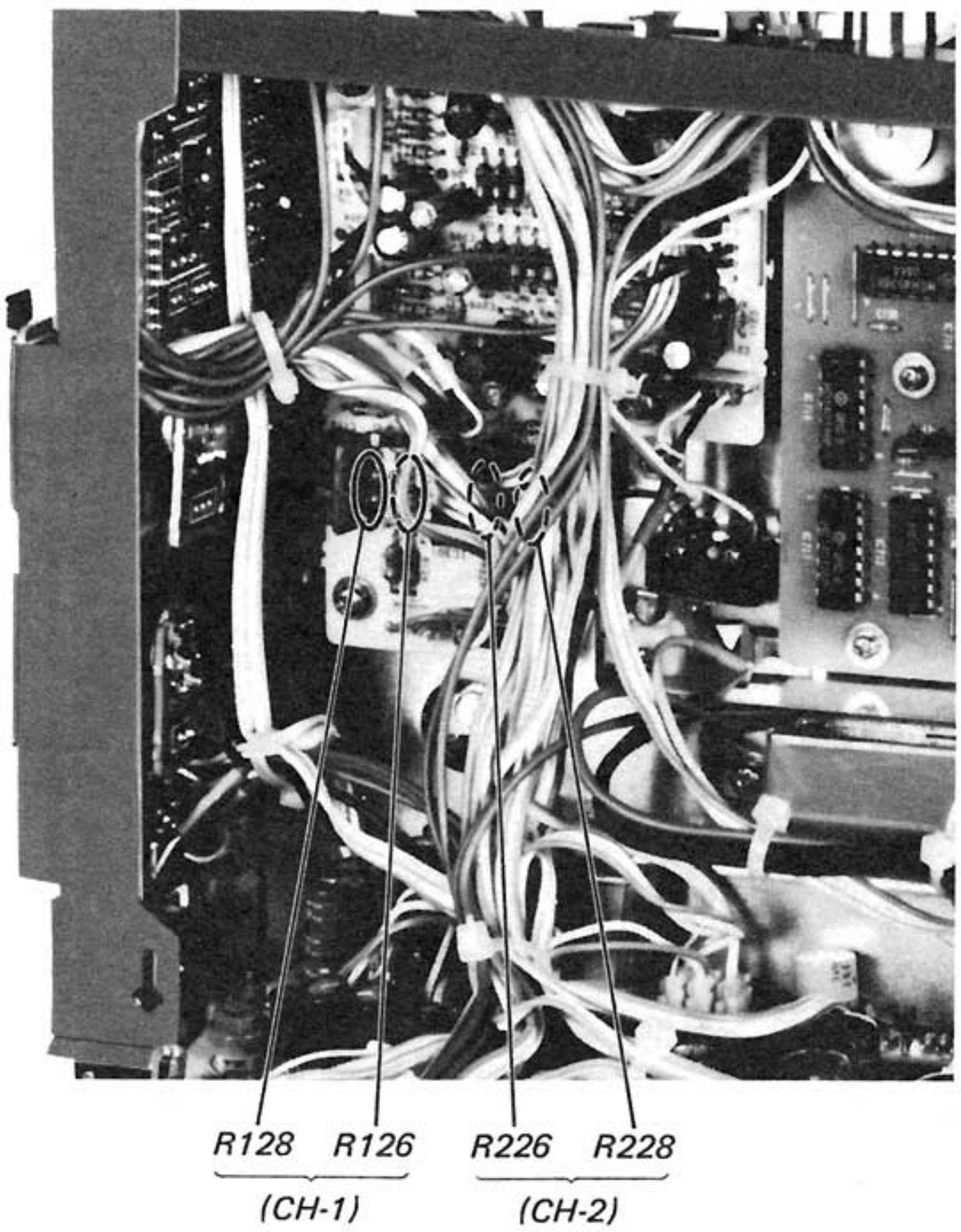

1. Record, Time Code and Playback Head preadjustments.

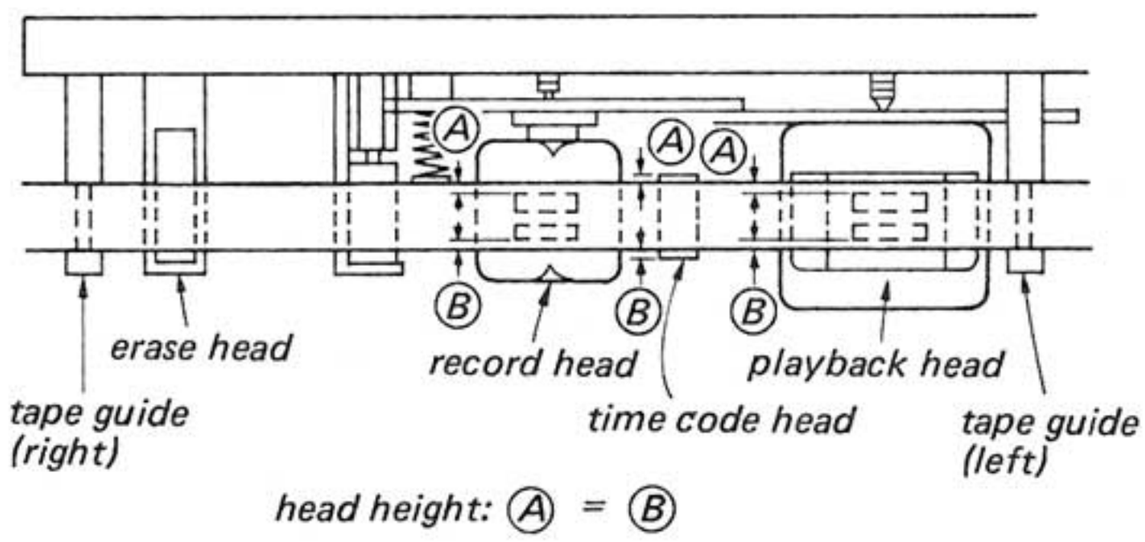

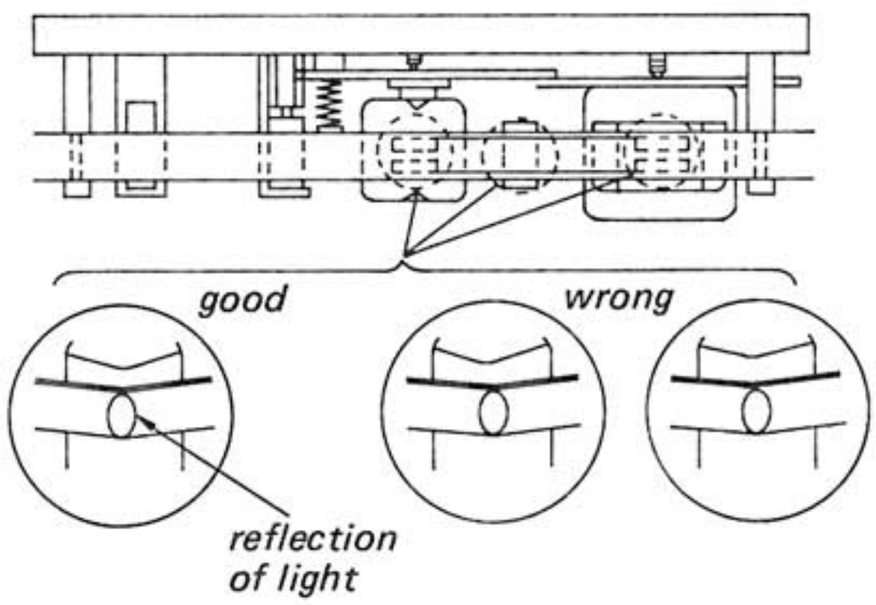

Procedure:

1. Tread the tape and place unit in playback mode at 19 cm/s (7½ ips).
2. Turn the record, playback and the time code head zenith adjusting screws as shown in the figure.
3. Loosen the tape a little by pushing the tension regulator arm pin in the direction of outside and them adjust playback head, record head and time code head zenith and lateral adjusting screws to obtain the reflection of light as shown.
   Lateral adjustment should be made by loose adjustment screws and move * marked screws in the direction of arrow and then tighten the screws.
4. Repeat steps 1-3 two or three times.

Adjustment Location:

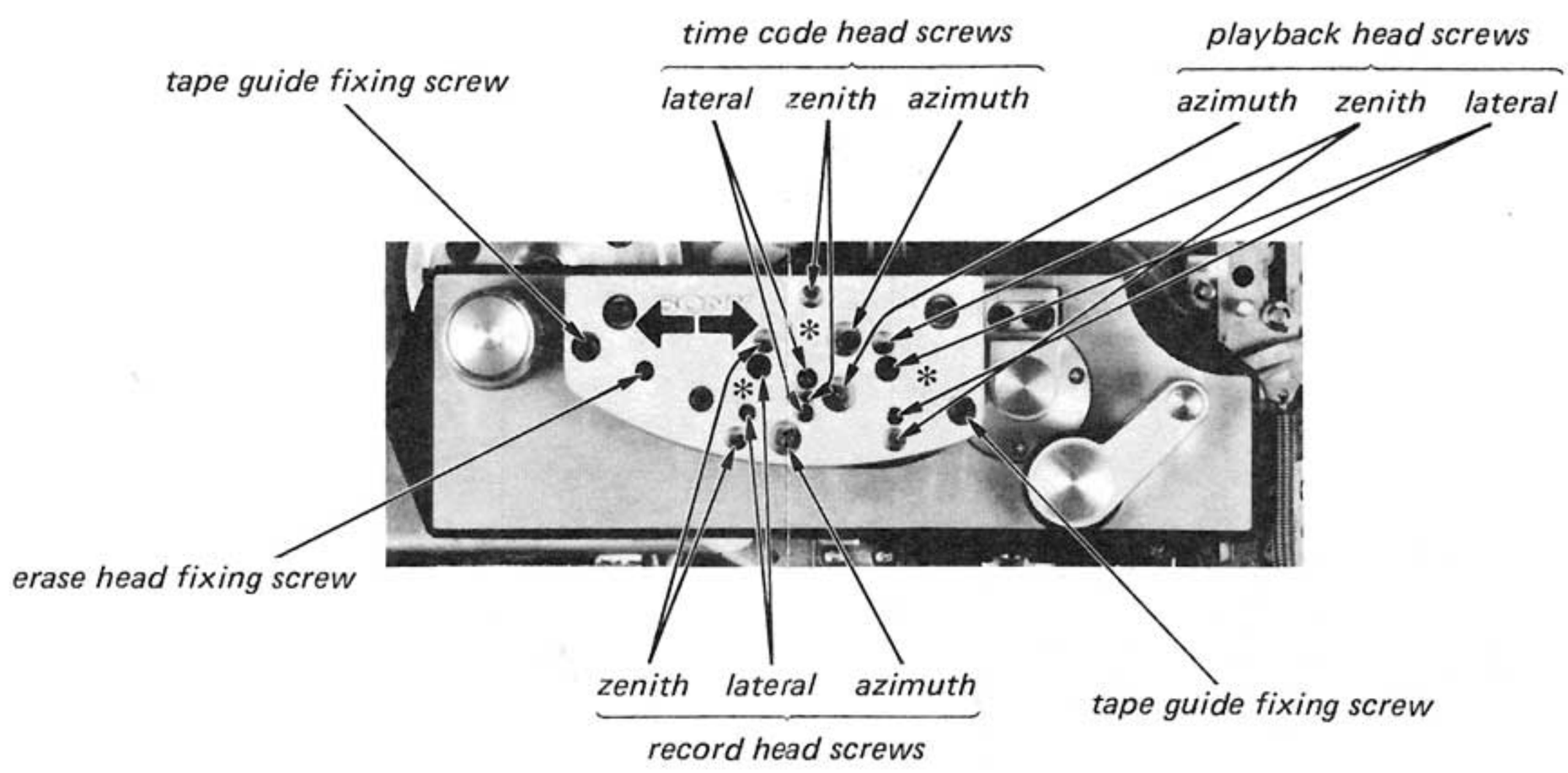

2. Servo Adjustment

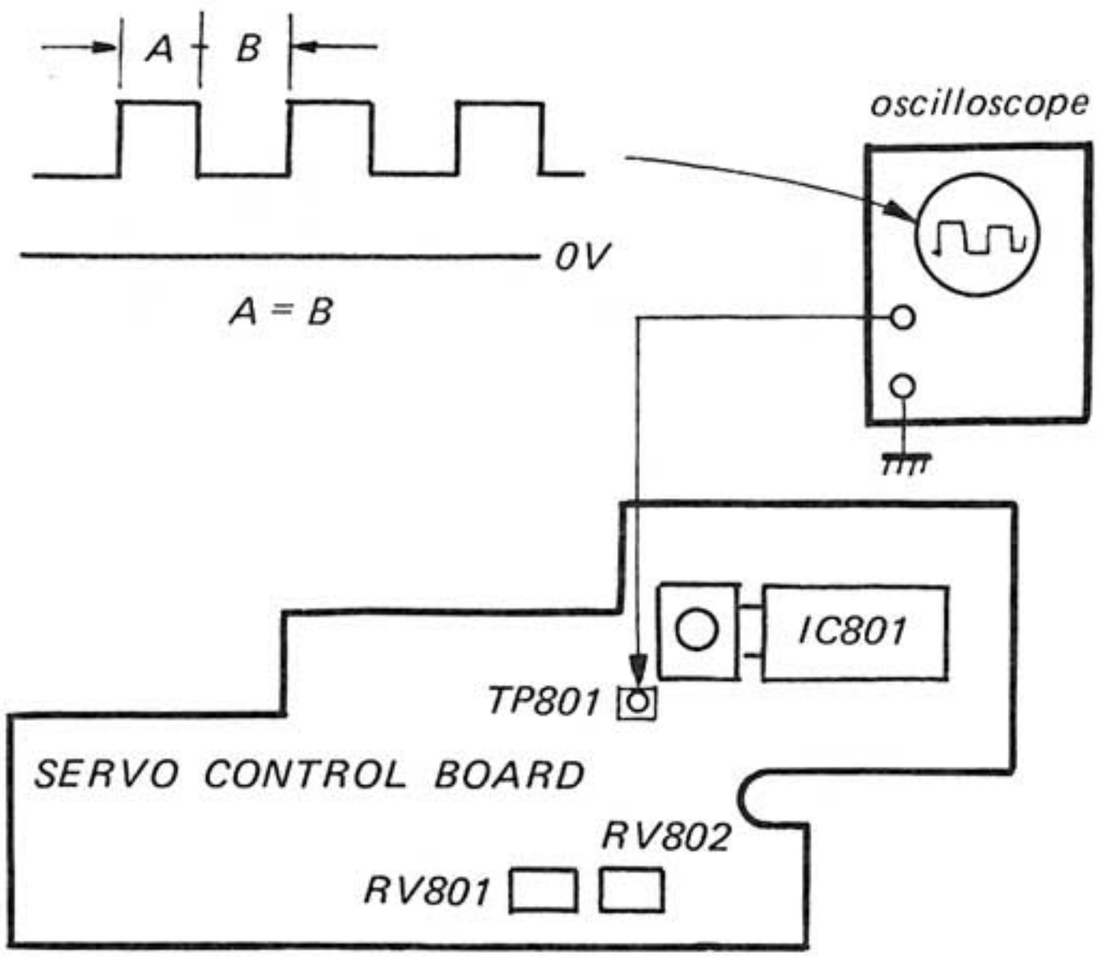

Procedure:

1. Thread the tape and place unit in playback mode at 19 cm/s ($7^1/_2$ ips).
2. Adjust RV802 for waveform on oscilloscopes.
3. Change the tape speed at 9.5 cm/s ($3^3/_4$ ips).
4. Adjust RV801 for waveform on oscilloscopes.

Adjustment Location:

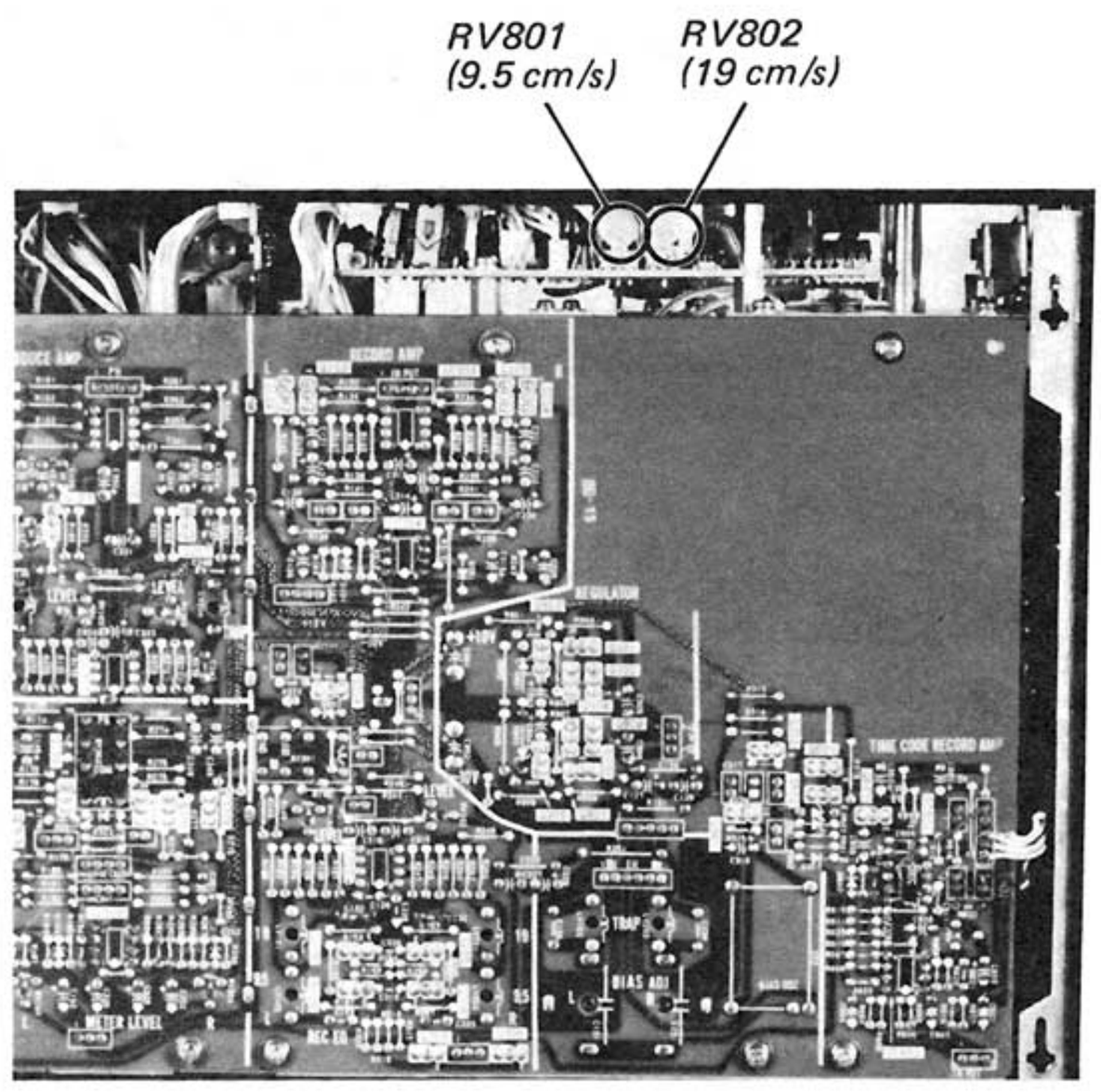

3. PB Trap Coil Adjustment

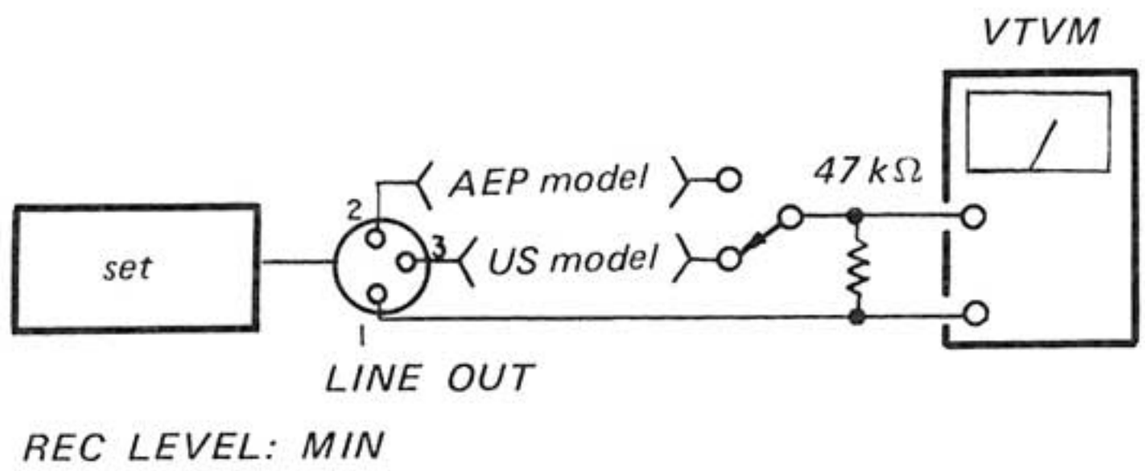

Procedure:

1. Place the unit in record mode without tape.
2. Adjust LV104 (CH-1), LV204 (CH-2) to obtain the minimum VTVM reading (less than –40 dB).

Adjustment Location:

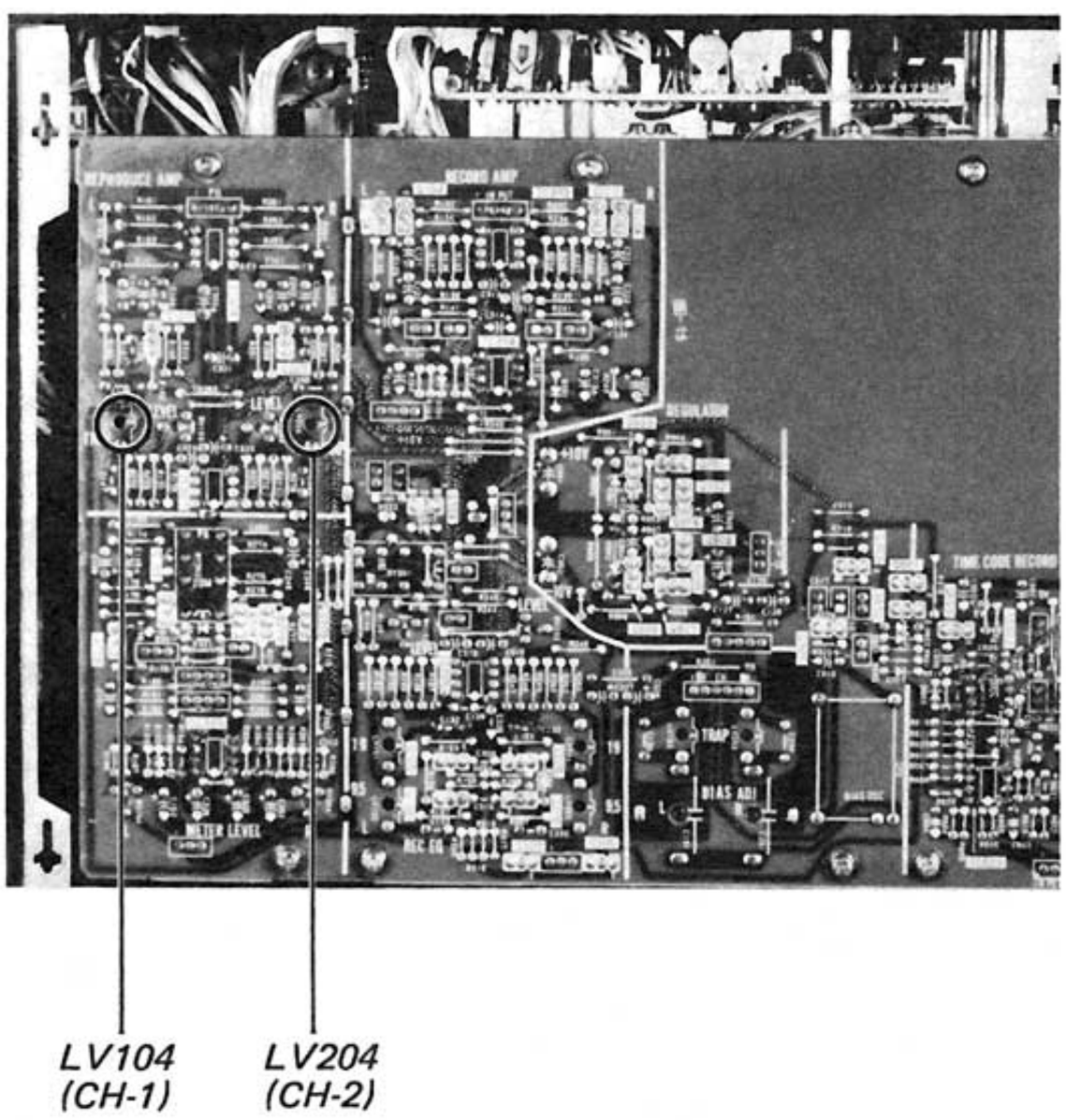

4. Playback Head Azimuth and Lateral Adjustment

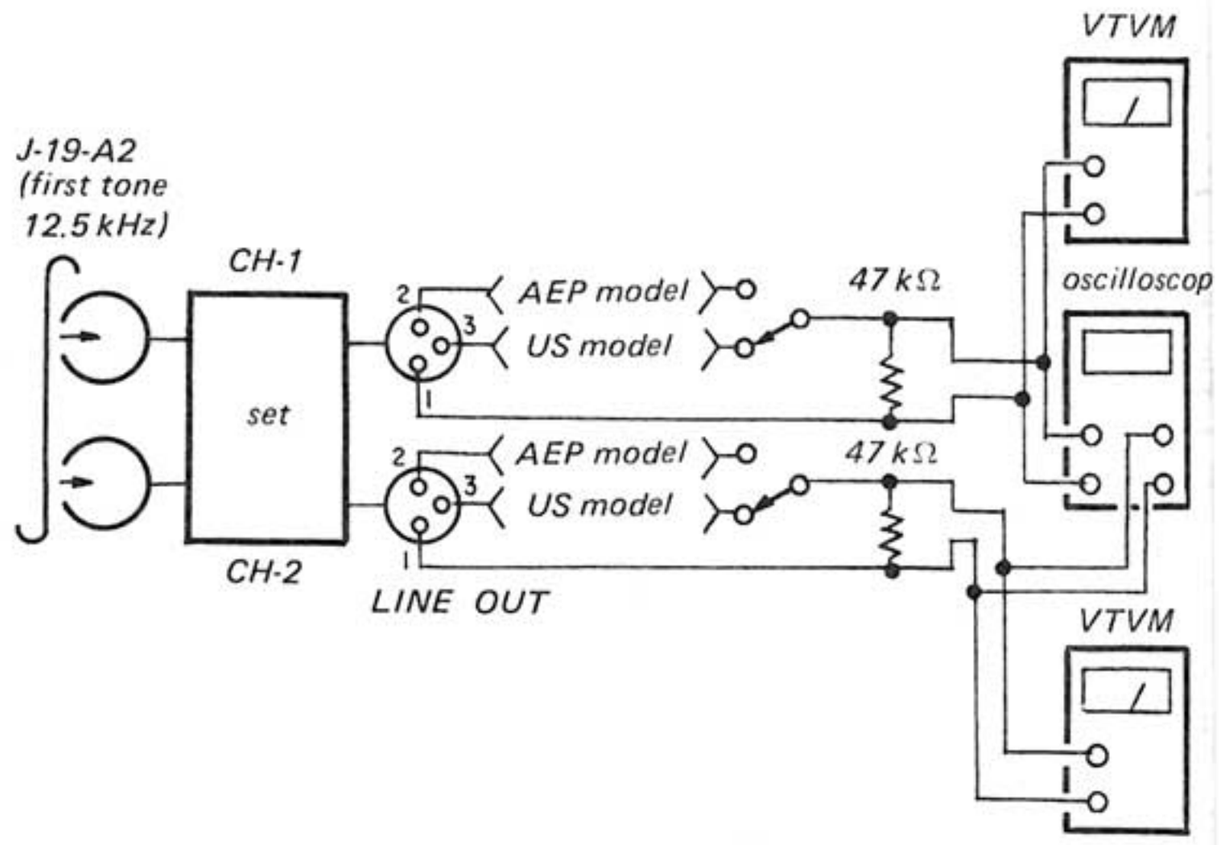

Procedure:

1. Place the unit in playback mode.
2. Adjust the azimuth-adjusting screw for maximum VTVM reading.
3. Loosen the two lateral-adjustment screws, hart a turn.
4. Side the * marked lateral screw in the direction of arrow in the figure for maximum VTVM reading, and then tighten the screws.

Adjust	Oscilloscope patterns
azimuth adjustment screw to obtain the in-phase pattern around the highest VTVM readings.	[Allowance] 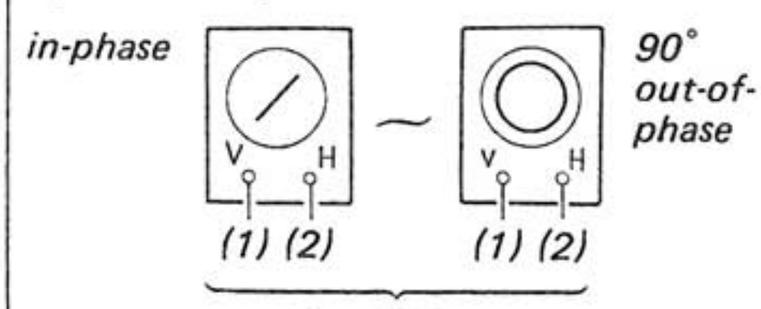 Level drop should be within 0.5 dB.

6. Repeat steps 2-5 two or three times.
7. Check the height of playback head.
8. After the adjustment, apply locking compound to the adjustment.

Adjustment Screw Positions:

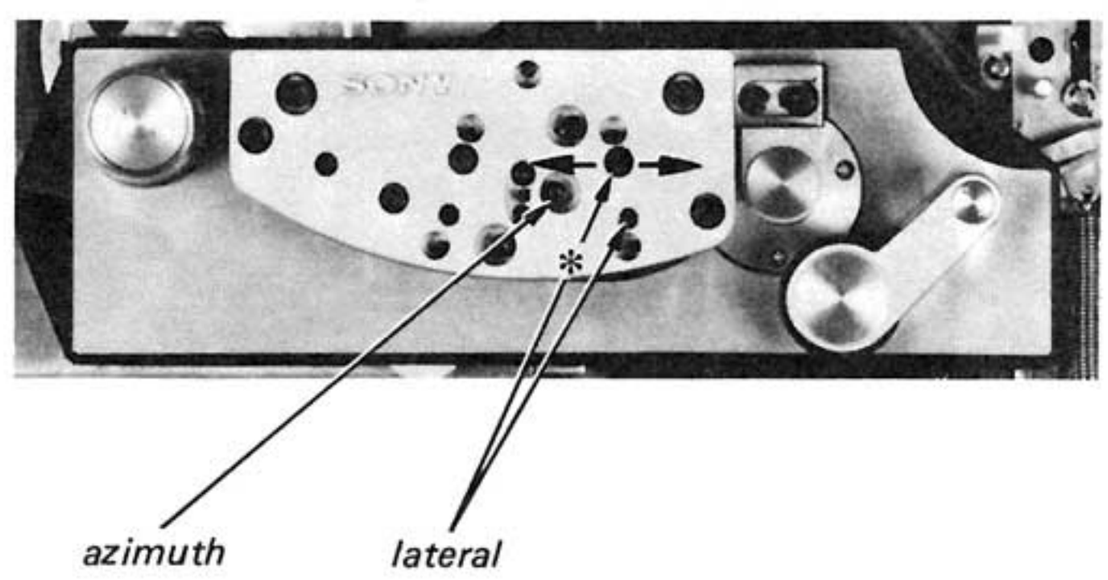

5. Playback Level Adjustment

Procedure:

1. Mode: playback

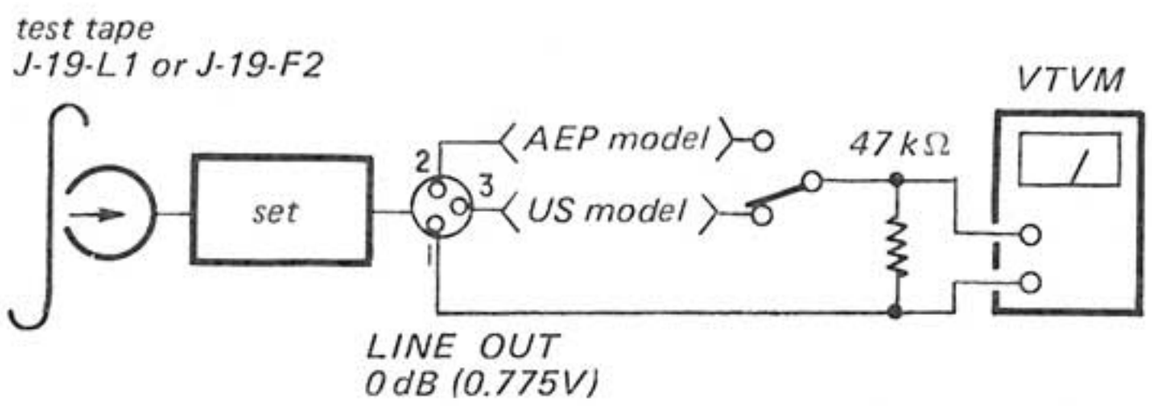

   Adjust RV103 (CH-1) and RV203 (CH-2) to obtain VTVM reading.

2. Assure that the LINE OUT level does not change when the mode is changed from playback to stop several times.

Specification:

LINE OUT level:	0 dB (0.775V)
Level difference between channels:	less than 0.5 dB

6. BIAS Trap Coil Adjustment (Do it provisional record bias adjustment, before this adjustment.)

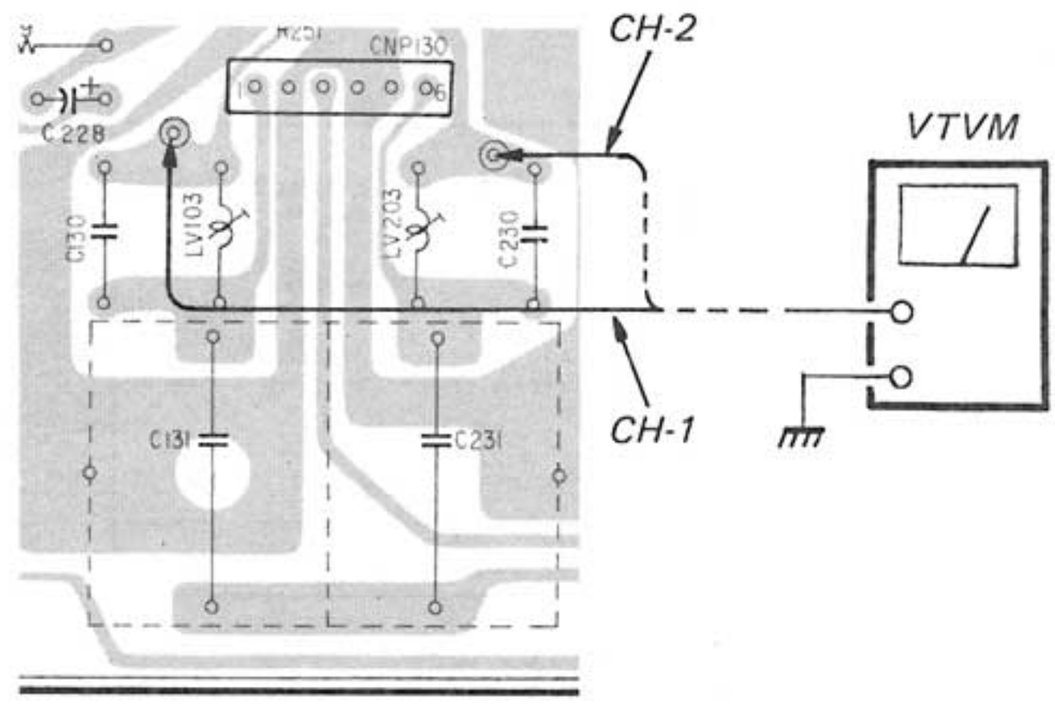

Procedure:

1. Place the unit in record mode without tape.
2. Adjust LV103 (CH-1), LV203 (CH-2) to obtain the minimum VTVM reading.

Adjustment Location:

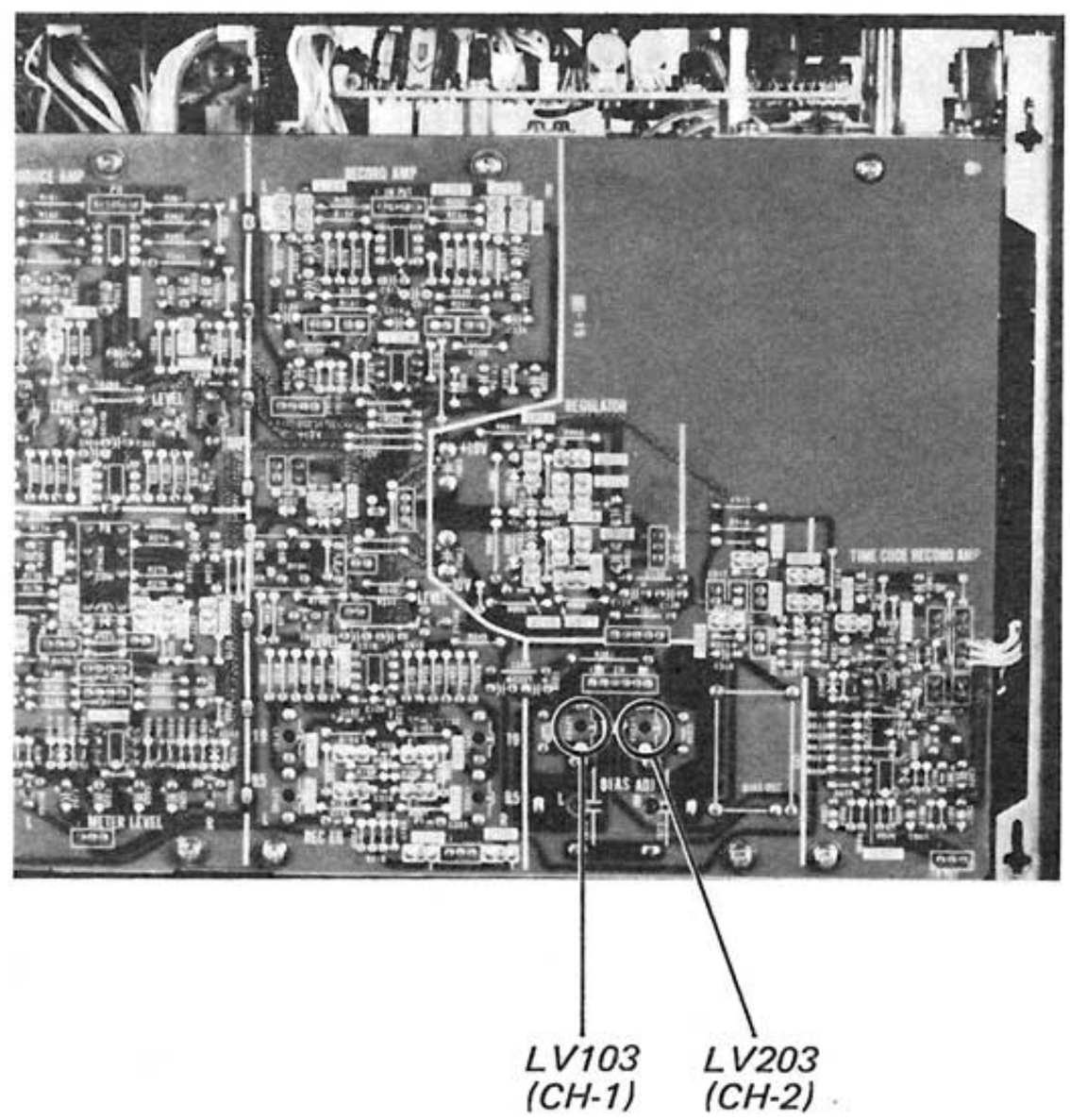

7. Record Head Azimuth Adjustment

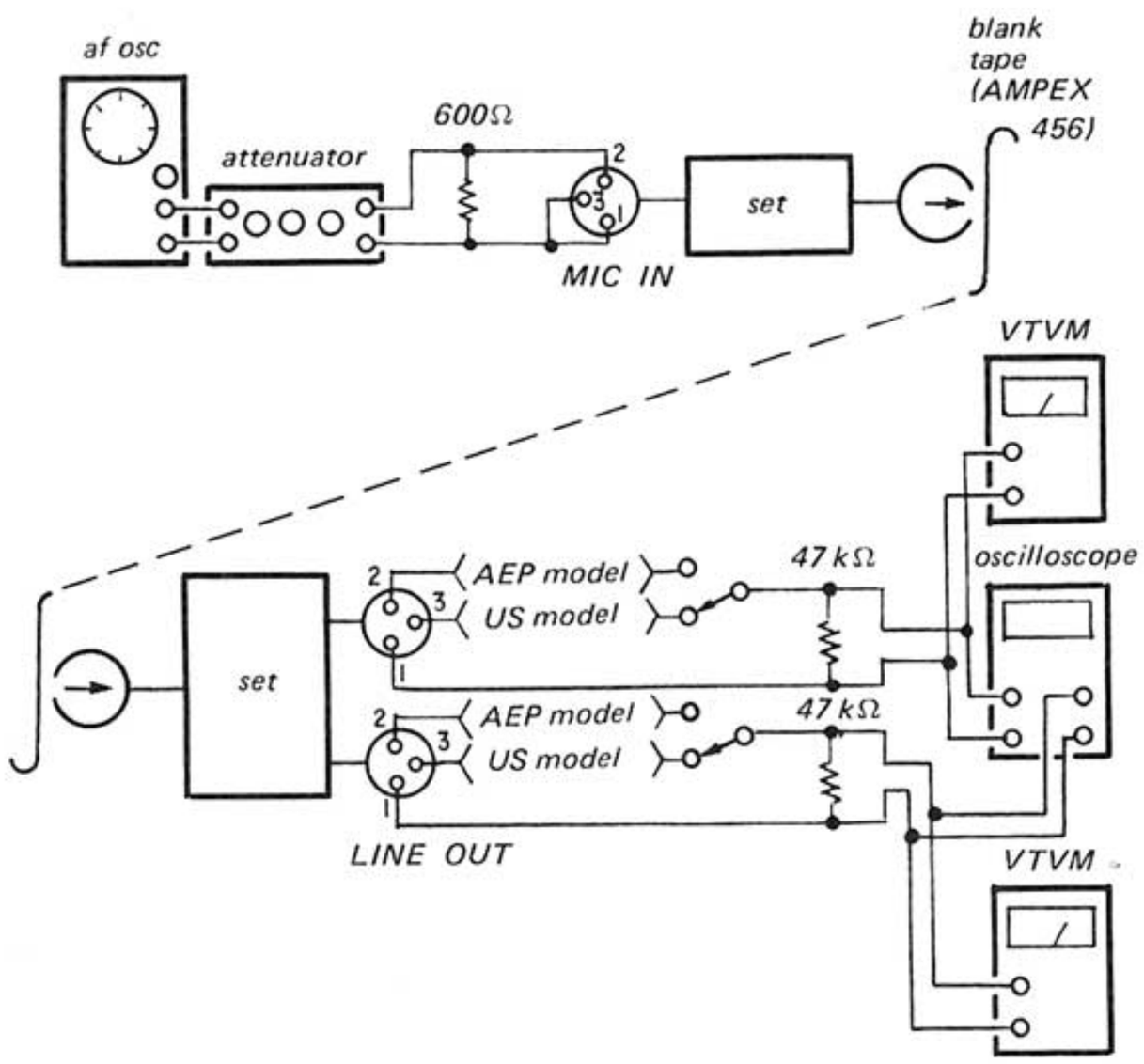

Adjustment Location:

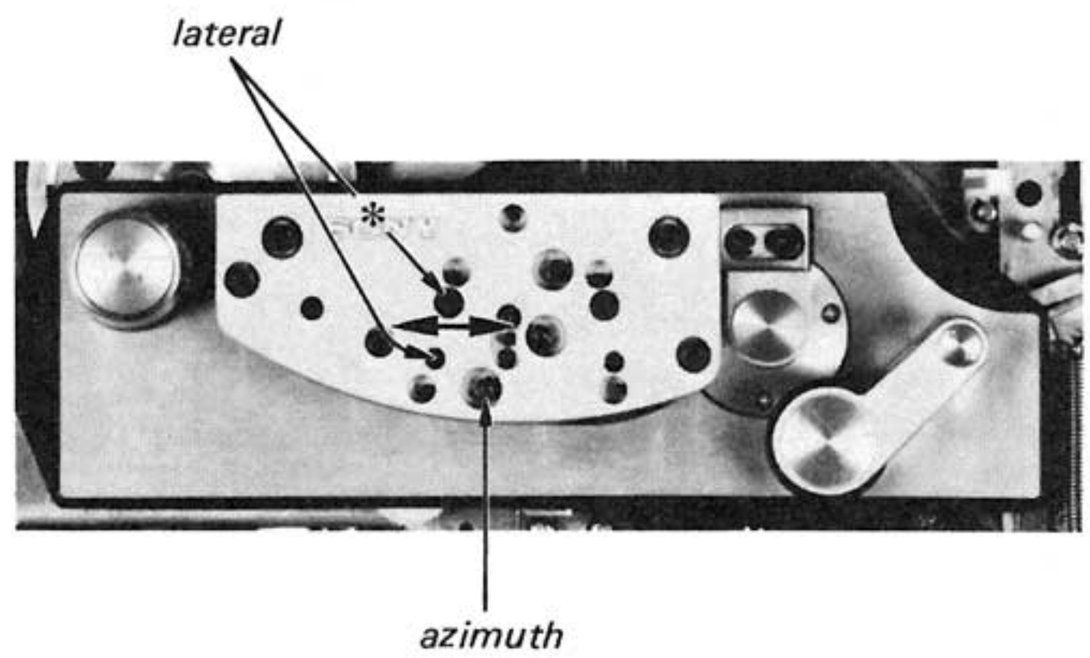

Procedure:

1. Apply 10 kHz, -80 dB (0.078 mV) signal to MIC IN.
2. Set the SOURCE/TAPE switch to TAPE.
3. Thread the blank tape (AMPEX 456) and place unit in record mode.
4. Adjust the azimuth-adjusting screw for maximum reading on two VTVMs.
5. Loosen two lateral-adjustment screws harf a turn.
6. Slide the * marked lateral screw in the direction in the figure for maximum VTVM reading, and them tighten the screws.
7.

Adjust	Oscilloscope patterns
azimuth adjustment screw to obtain the in-phase pattern around the highest VTVM readings.	[Allowance] in-phase (1) (2) ~ (1) (2) 90° out-of-phase Level drop should be within 0.5 dB.

8. Repeat the steps 4-5 two or three times.
9. Check the height of record head.
10. After the adjustment, apply locking compound to the adjustment screws.

8. Record Bias Adjustment

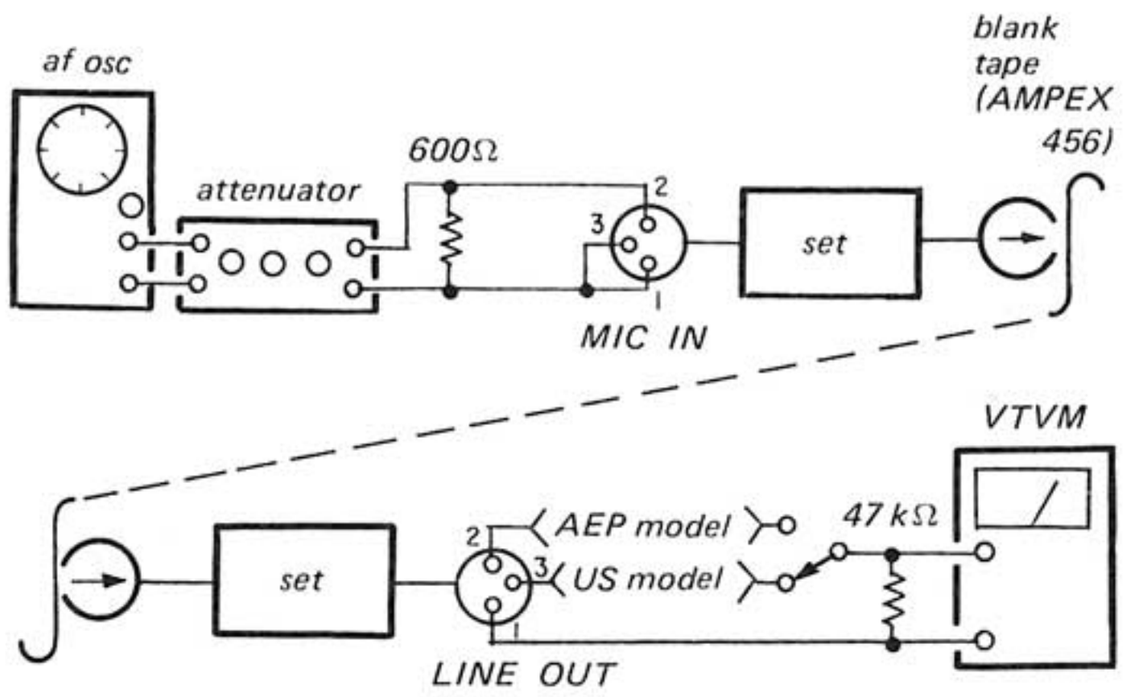

Procedure:

1. Thread the tape (AMPEX 456) and place unit in record mode at 19 cm/s (7½ ips).
2. Apply 1 kHz, -60 dB (0.775 mV) signal to MIC IN.
3. Set the TAPE/SOURCE switch to SOURCE.
4. Adjust the REC LEVEL knob for 0 dB (0.775V) VTVM reading.
5. Apply 10 kHz, -80 dB (0.078 mV) signal to MIC IN.
6. Set the TAPE/SOURCE switch to TAPE.
7. Turn the bias adjusting trimmer capacitors C131 (CH-1), C231 (CH-2) for maximum VTVM reading and them turn the capacitors clockwise so that VTVM reading drops 6 dB from the maximum value.

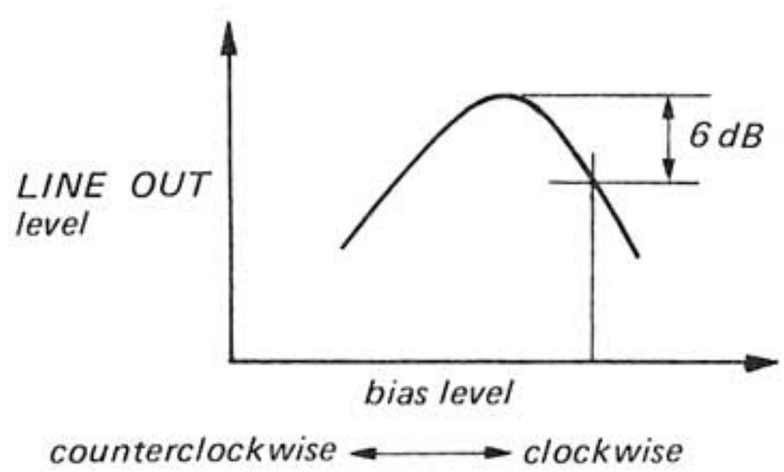

8. After the adjustment, perform bias trap coil adjustment on page 16.

Adjust Location:

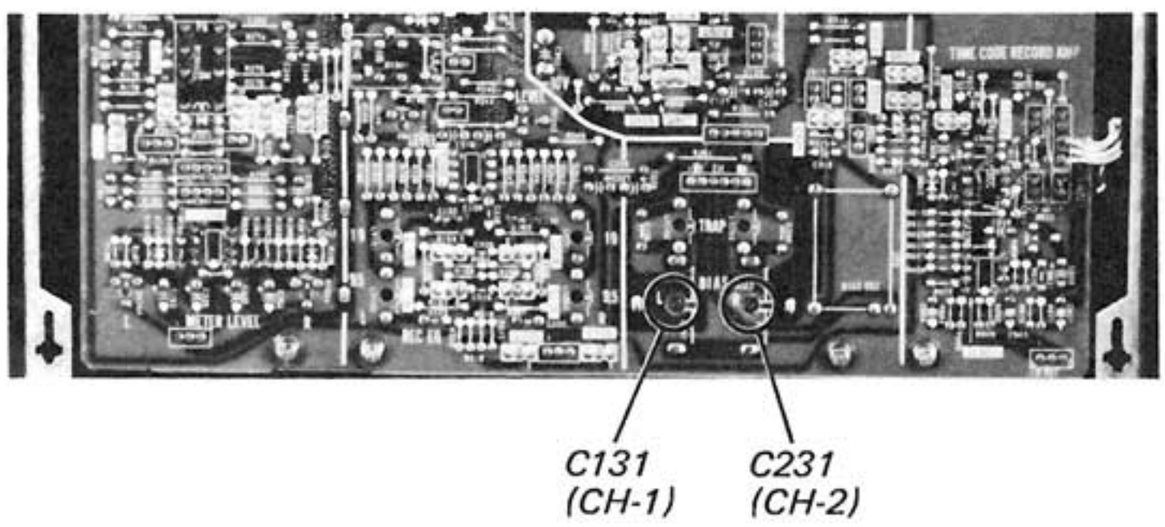

9. Record Level Adjustment

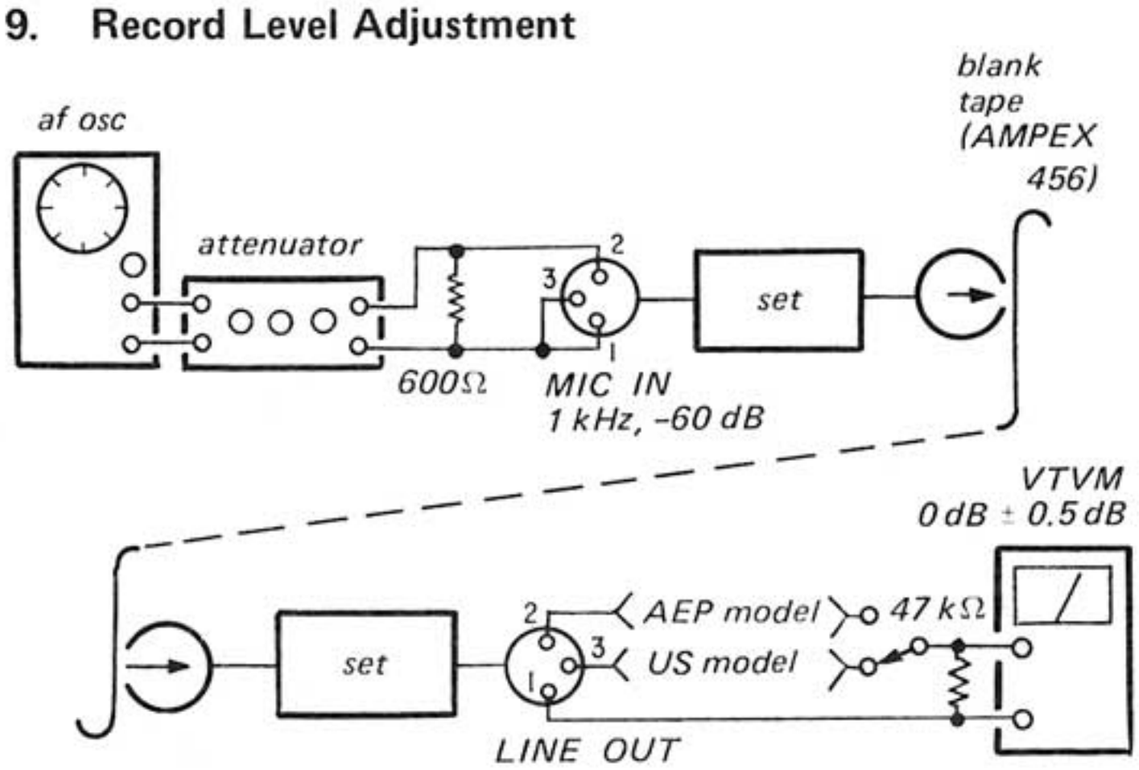

Procedure:

1. Apply 1 kHz, -60 dB signal to MIC IN and place unit in record mode.
2. Set the SOURCE/TAPE switch to SOURCE and adjust the REC LEVEL knob for 0 dB (0.775V) VTVM reading.
3. Set the SOURCE/TAPE switch to TAPE.
4. Adjust RV102 (CH-1), RV202 (CH-2) for 0 dB (0.775V) VTVM reading.

Adjustment Location:

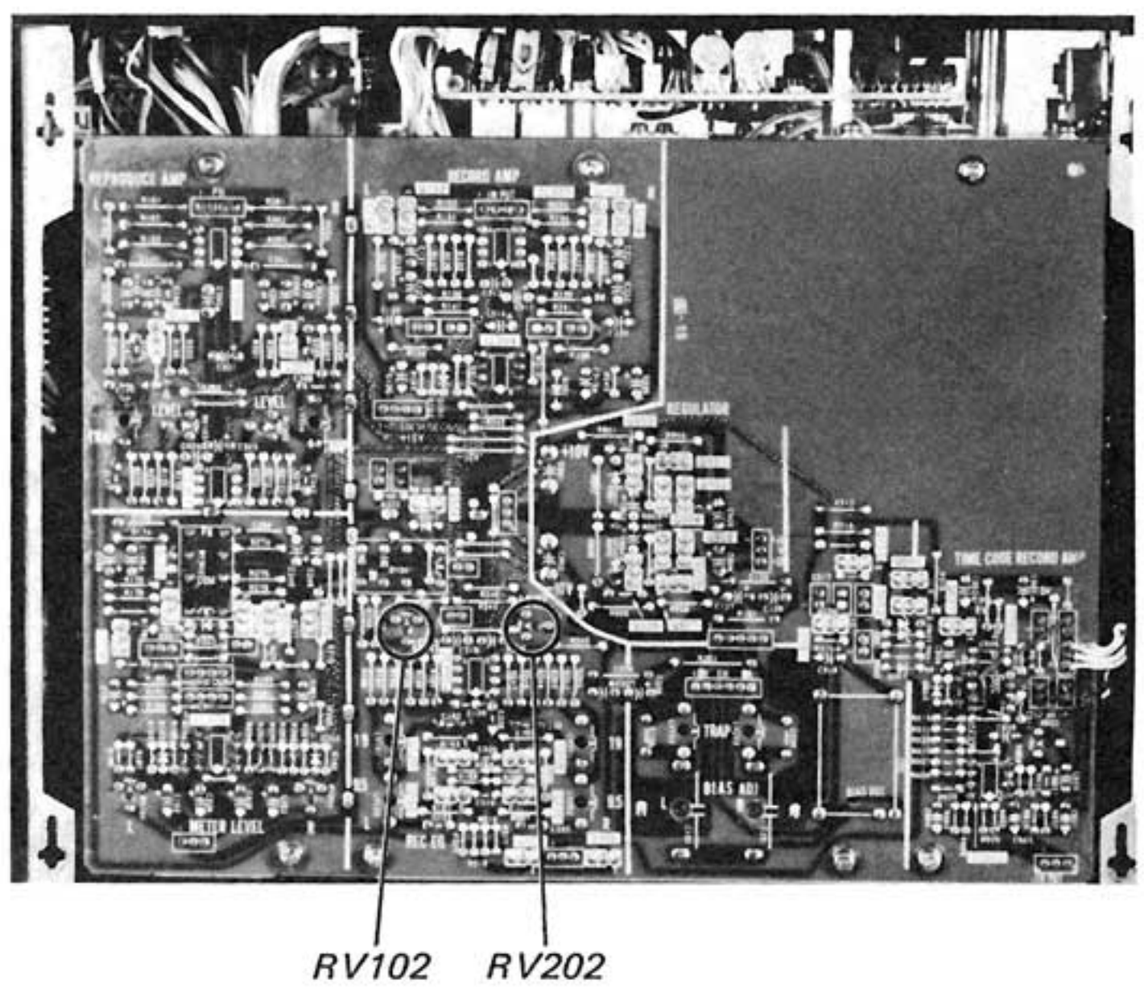

10. Record Equalizer Adjustment

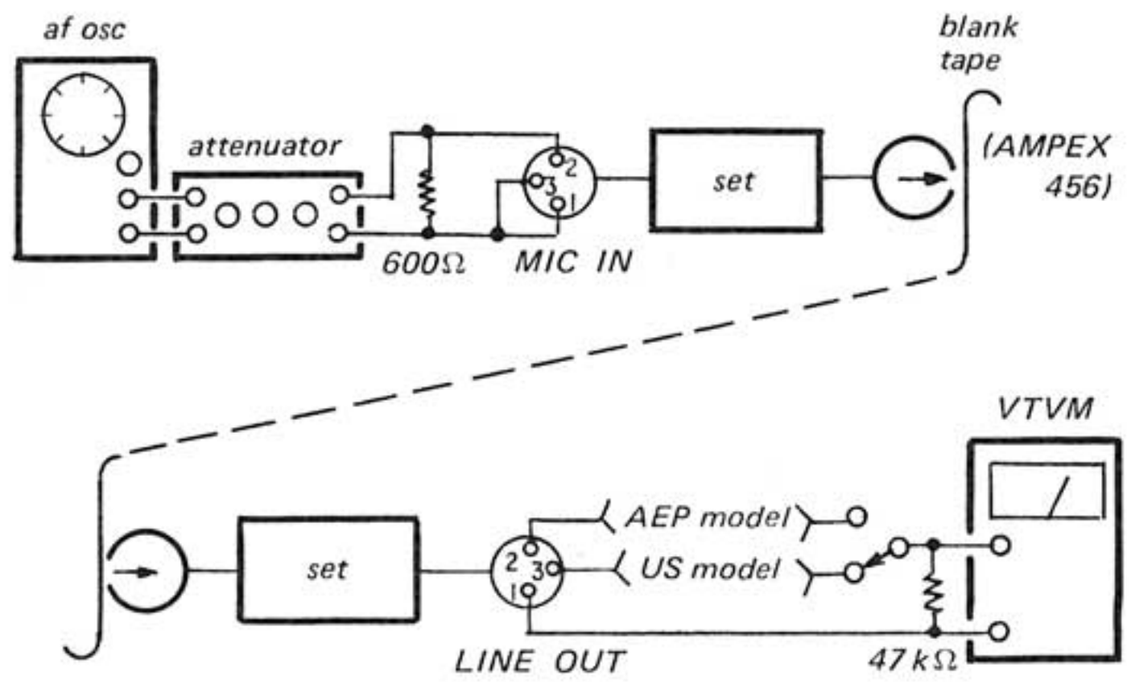

Procedure:

1. Thread the tape (AMPEX 456).
2. Apply 1 kHz, -80 dB (0.078 mV) signal to MIC IN and place unit in record mode.
3. Set the SOURCE/TAPE switch to SOURCE and TAPE SPEED switch at 19 cm/s (for 19 cm/s Equalizer Adjustment) or 9.5 cm/s (for 9.5 cm/s Equalizer Adjustment).
4. Set the SOURCE/TAPE switch to TAPE.
5. Feed 1 kHz and 23 kHz (for 19 cm/s Equalizer Adjustment) or 13 kHz (9.5 cm/s Equalizer Adjustment) signals of -80 dB (0.078 mV) to MIC IN.
   While recording these two signals adjust LV101 (CH-1 at 19 cm/s), LV201 (CH-2 at 19 cm/s) or LV102 (CH-1 at 9.5 cm/s), LV202 (CH-2 at 9.5 cm/s) to obtain same reading on the VTVM with two signals.
6.

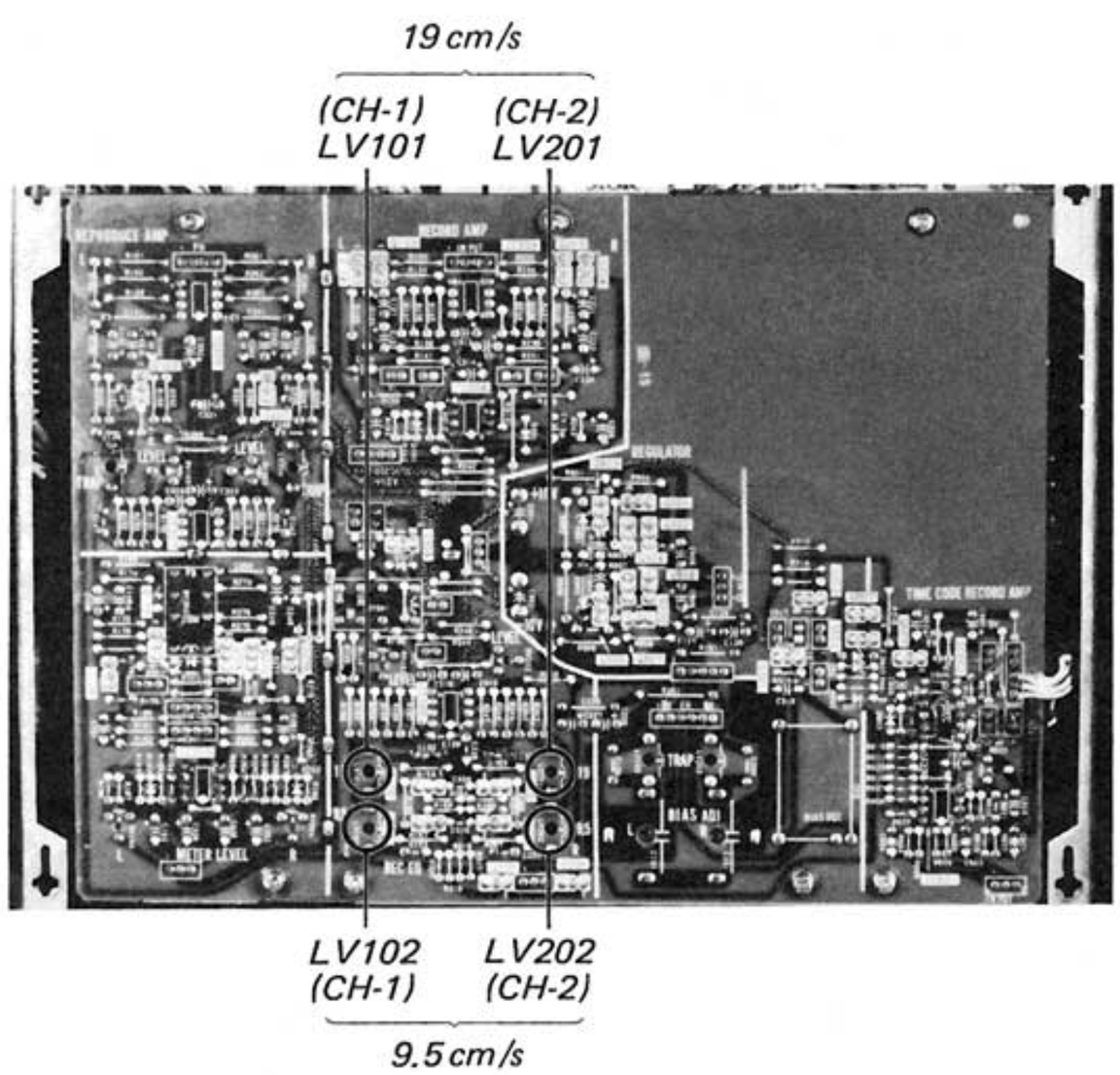

11. Time Code Head Azimuth Adjustment

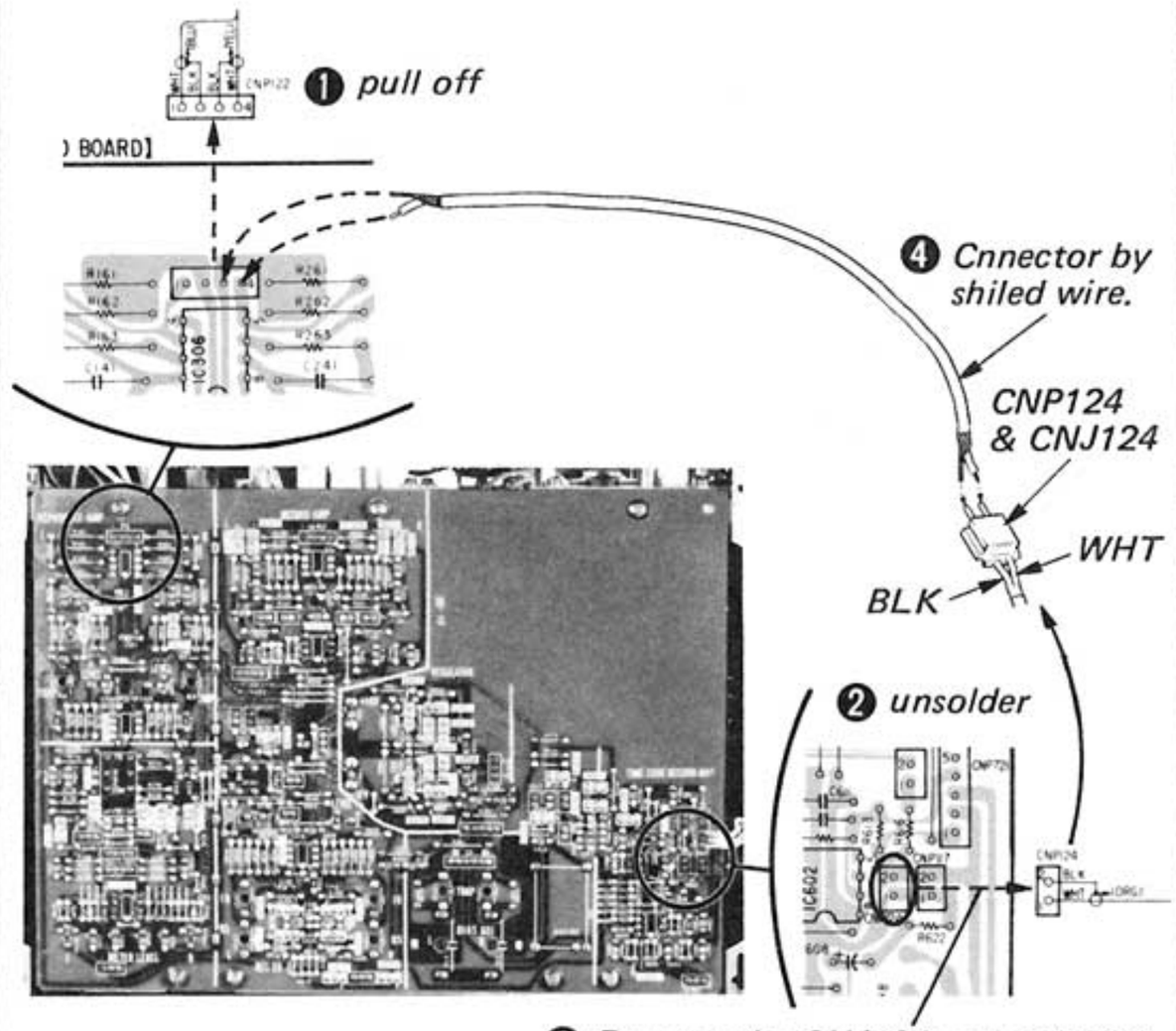

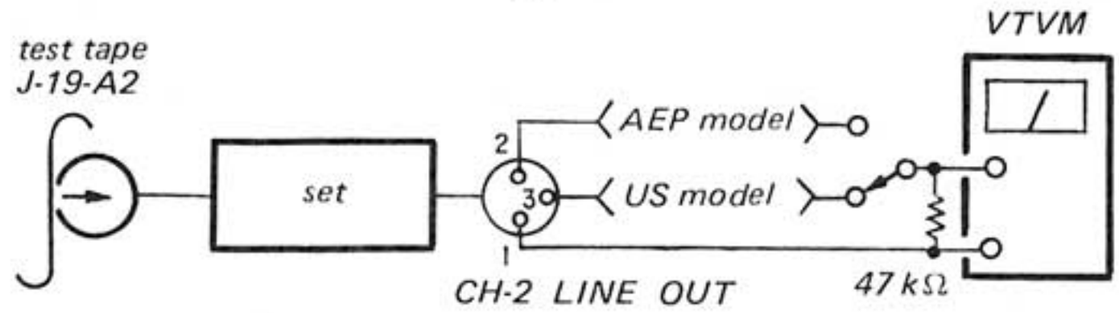

Procedure:

1. Make the procedures as shown in figure.
2. Place the unit in playback mode and adjust azimuth-adjusting screw for maximum VTVM reading.
3. Loosen the two lateral-adjustment screws, hart a turn.
4. Side the * marked lateral screw in the direction of arrow in the figure below for maximum VTVM reading, and then tighten the screws.
5. Repeat 2-4 two or three times.
6. Confirm that level drop is within 0.5 dB.
7. Change wire connection to its original position.
8. After the adjustment, apply looking compound to the adjustment screws.

Adjustment Screw Positions:

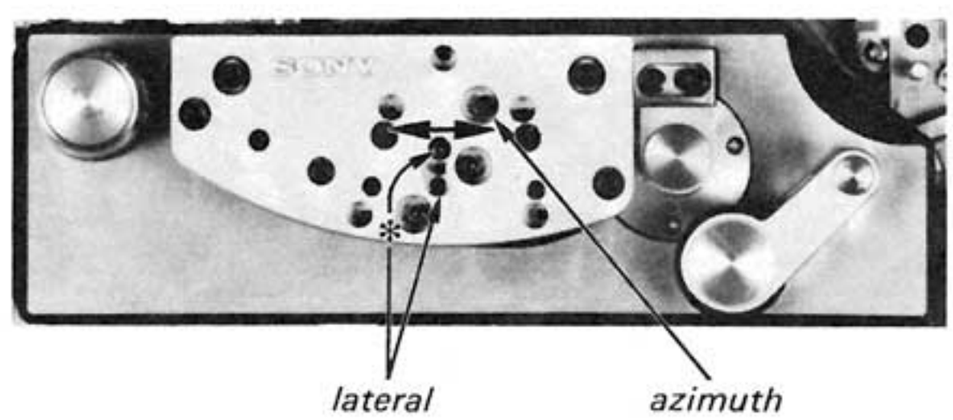

12. Time Code Head Height Adjustment

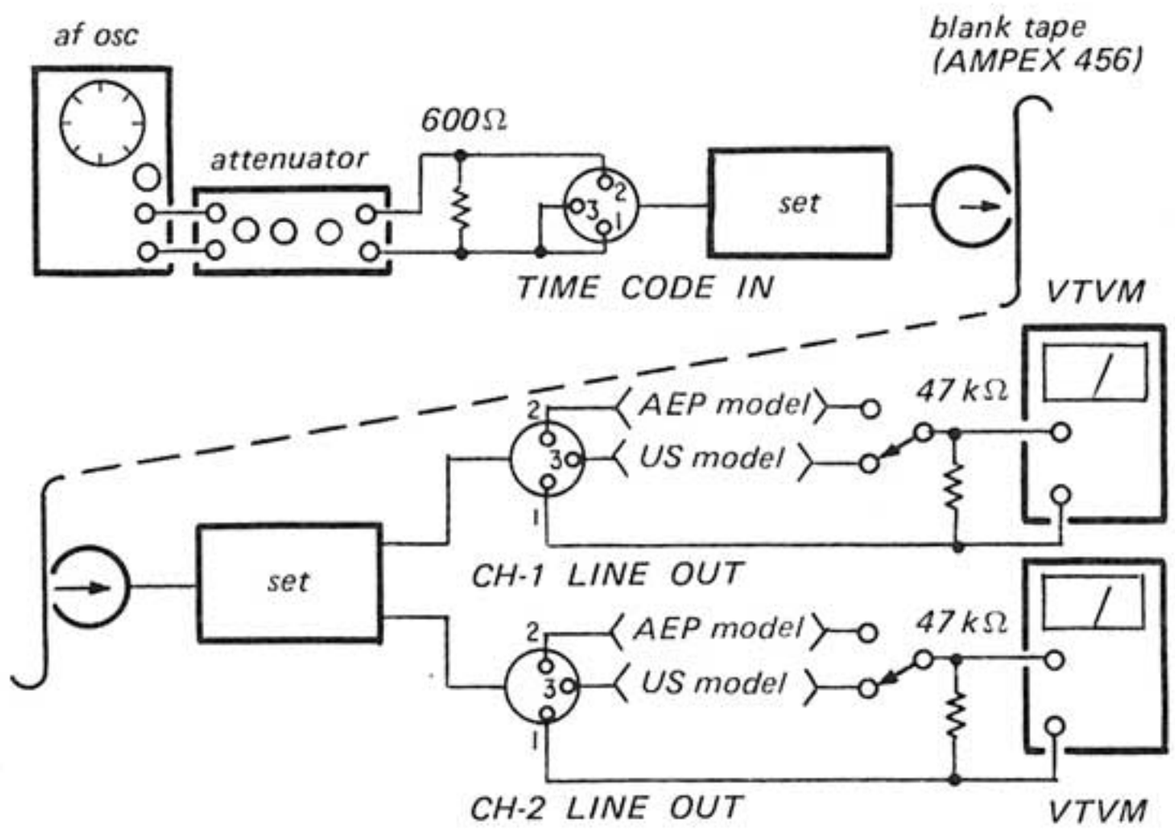

Procedure:

1. Apply 40 Hz 0 dB signal to TIME CODE IN and set SOURCE/TAPE switch to TAPE.
2. Thread the blank tape (AMPEX 456) and place the unit in record mode.
3. Turn the two zenith adjusting screws for same VTVM reading.
   Specification:
   between channels: less than 0.5 dB
4. After the adjustment, apply looking compound to the screws.

Adjustment Location:

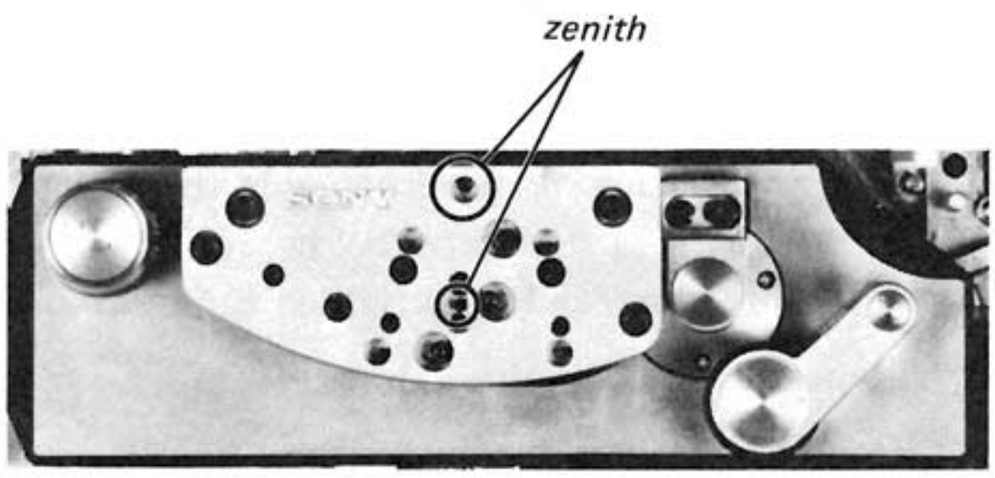

13 VU Meter Calibration

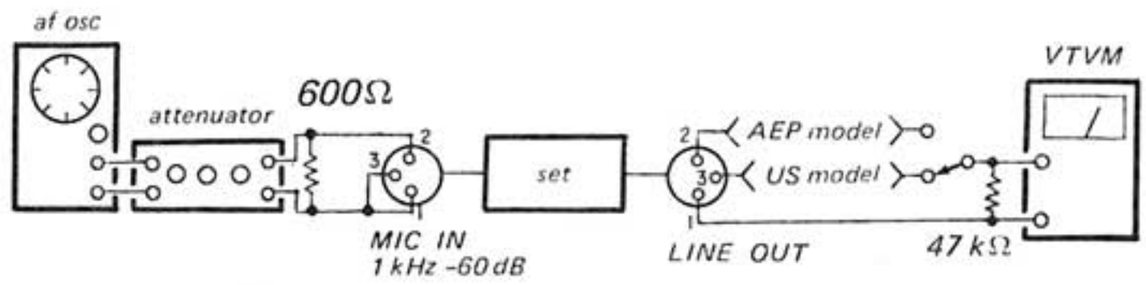

Procedure:

1. Place the unit in playback mode and set SOURCE/TAPE switch to SOURCE.
2. Apply 1 kHz, -60 dB (0.775 mV) signal to MIC IN.
3. Adjust the REC LEVEL knob for 0 dB (0.775V) VTVM reading.
4. Adjust RV104 (CH-1), RV204 (CH-2) to obtain 0 VU meter reading, shown in figure.

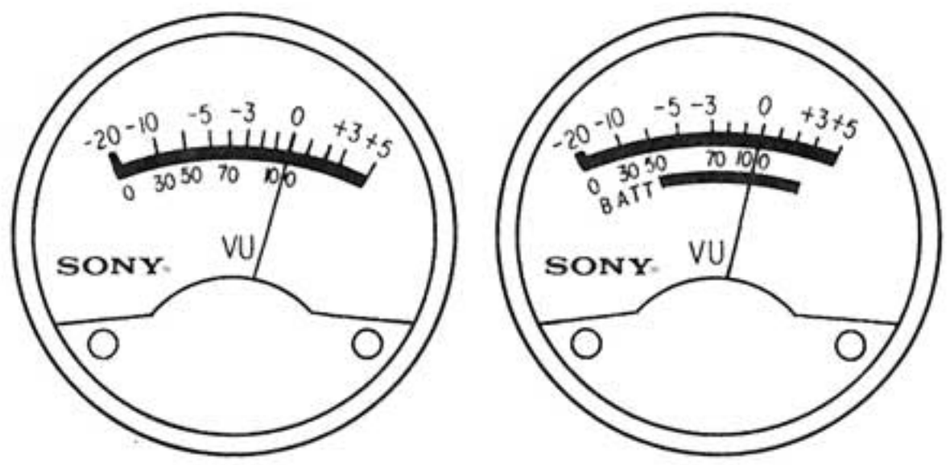

(CH-1) (CH-2)

Adjustment Location:

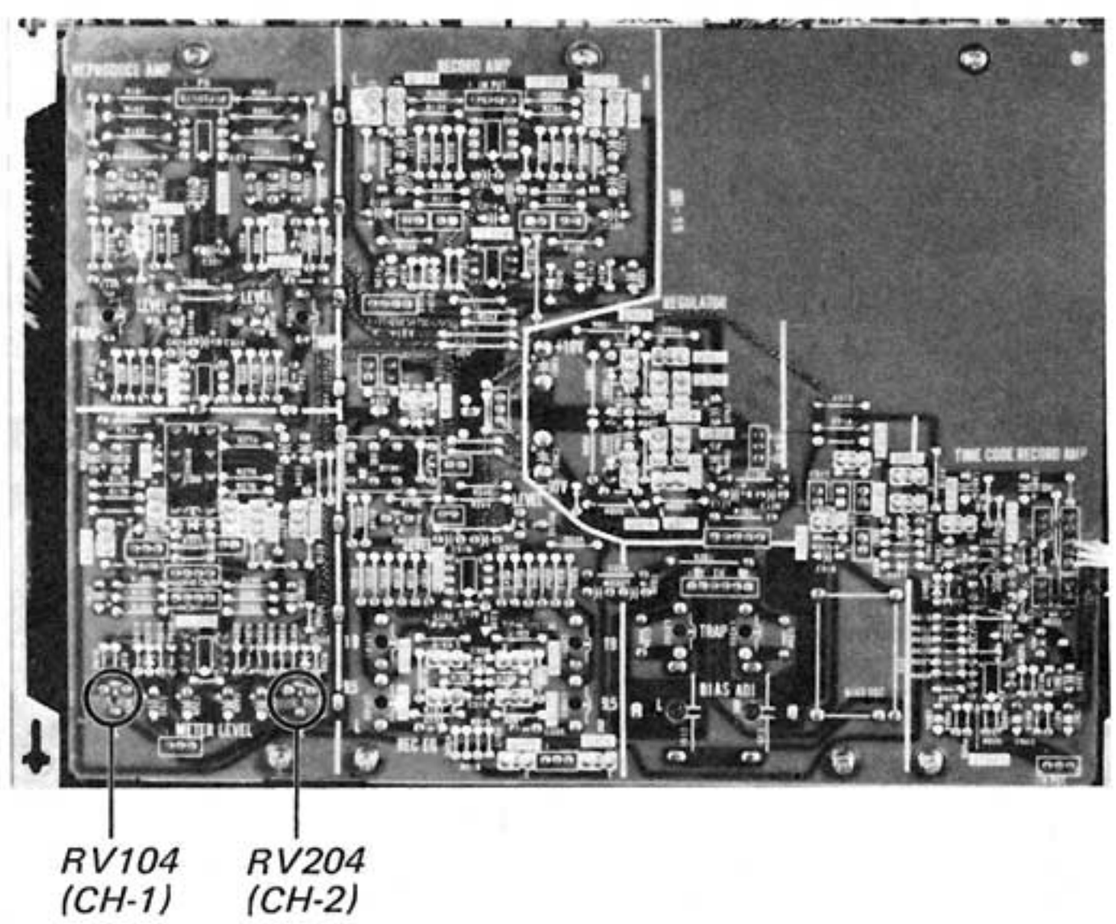

14. Battery Check Meter Calibration

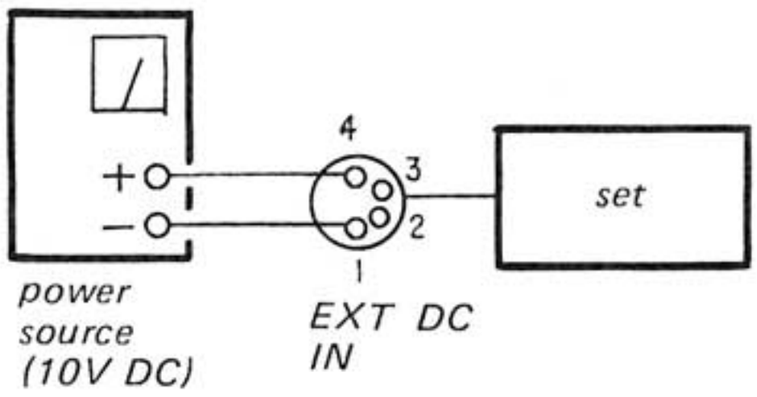

Procedure:

1. Apply 10V DC to EXT DC IN and place the unit in playback mode.
2. Push the BATT CHECK knob and adjust RV301 for the metter indication shown in figure.

Adjustment Location:

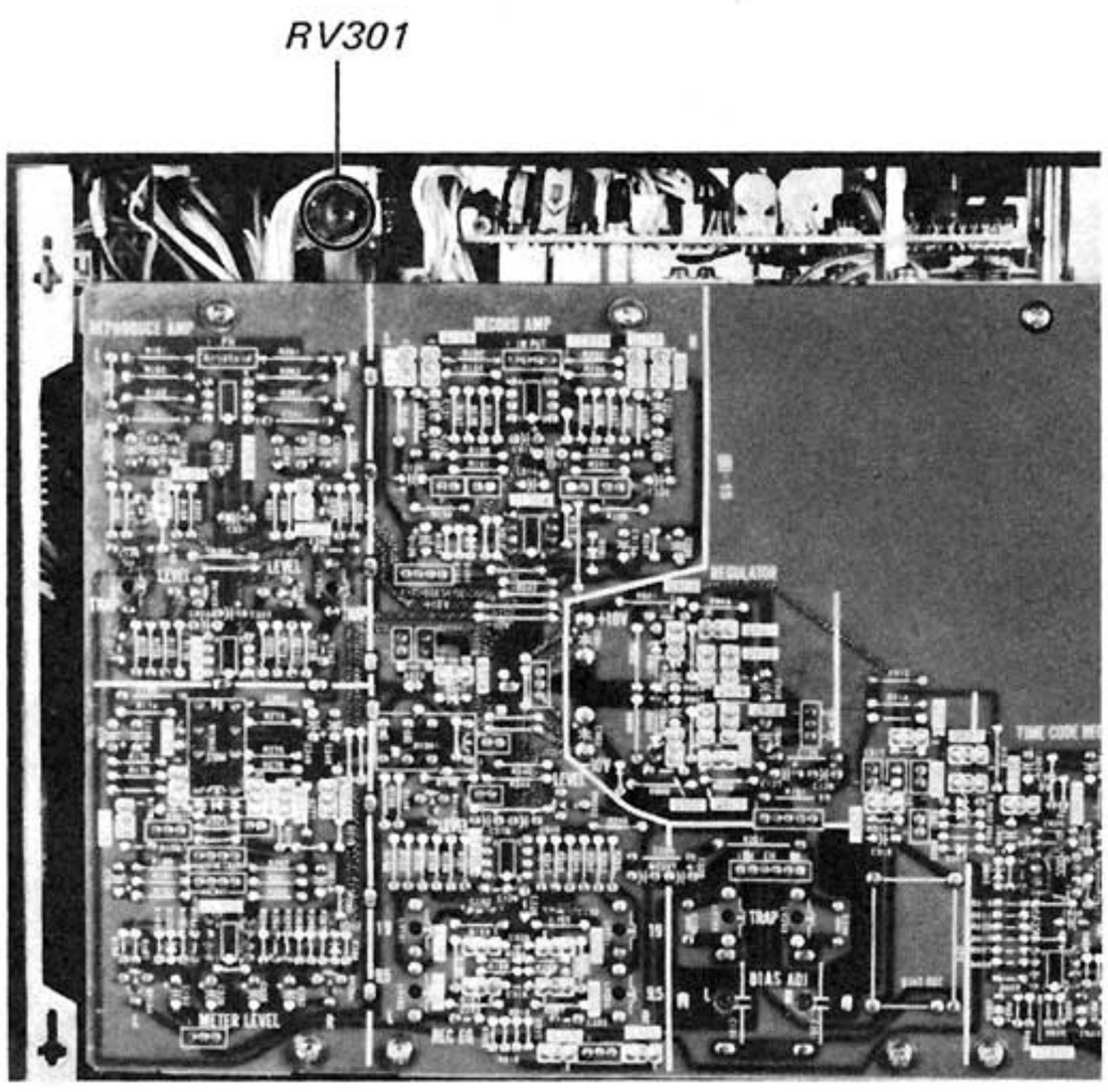

15. Wow and Speed Check

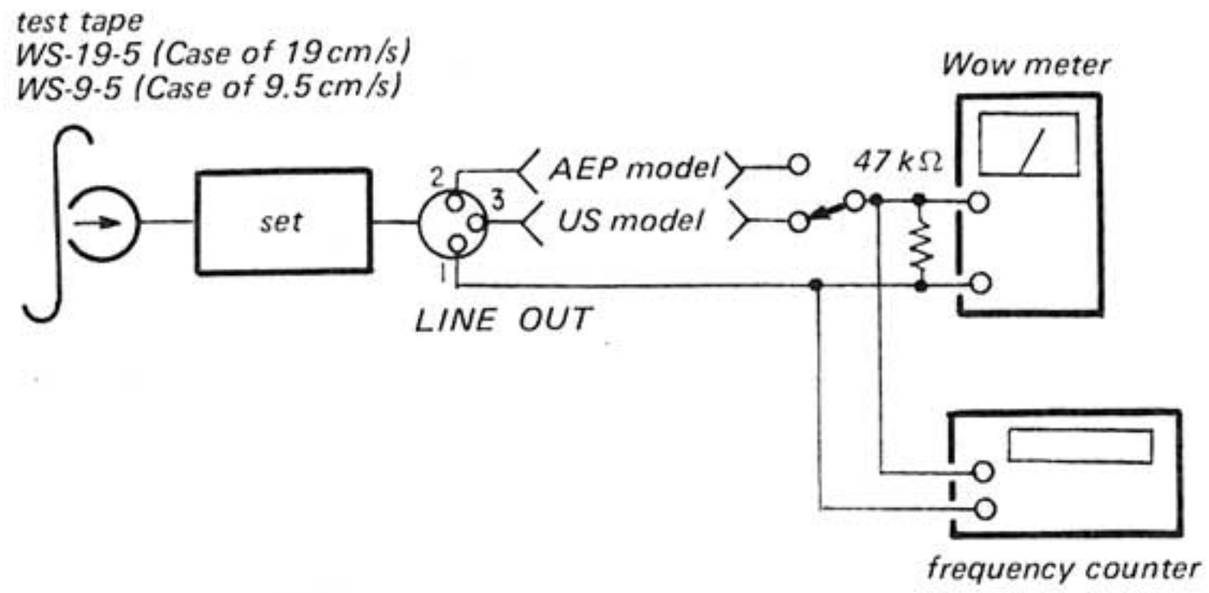

Procedure:

1. Thread the test tape and place the unit in playback mode.
2. Wow meter and frequency counter reading.

   Reference data:

   - Wow

Tape Speed	DIN	NRMS
19 cm/s	less than 0.07%	less than 0.04%
9.5 cm/s	less than 0.1%	less than 0.07%

   - Tape speed (mutual speed)
     2,994 ~ 3,006 Hz
     difference of tape top and end are within 5 Hz.

3. If correct reference data is not obtained, then check the Capstan Housing Position Adjustment.

PC BOARDS LAYOUTS

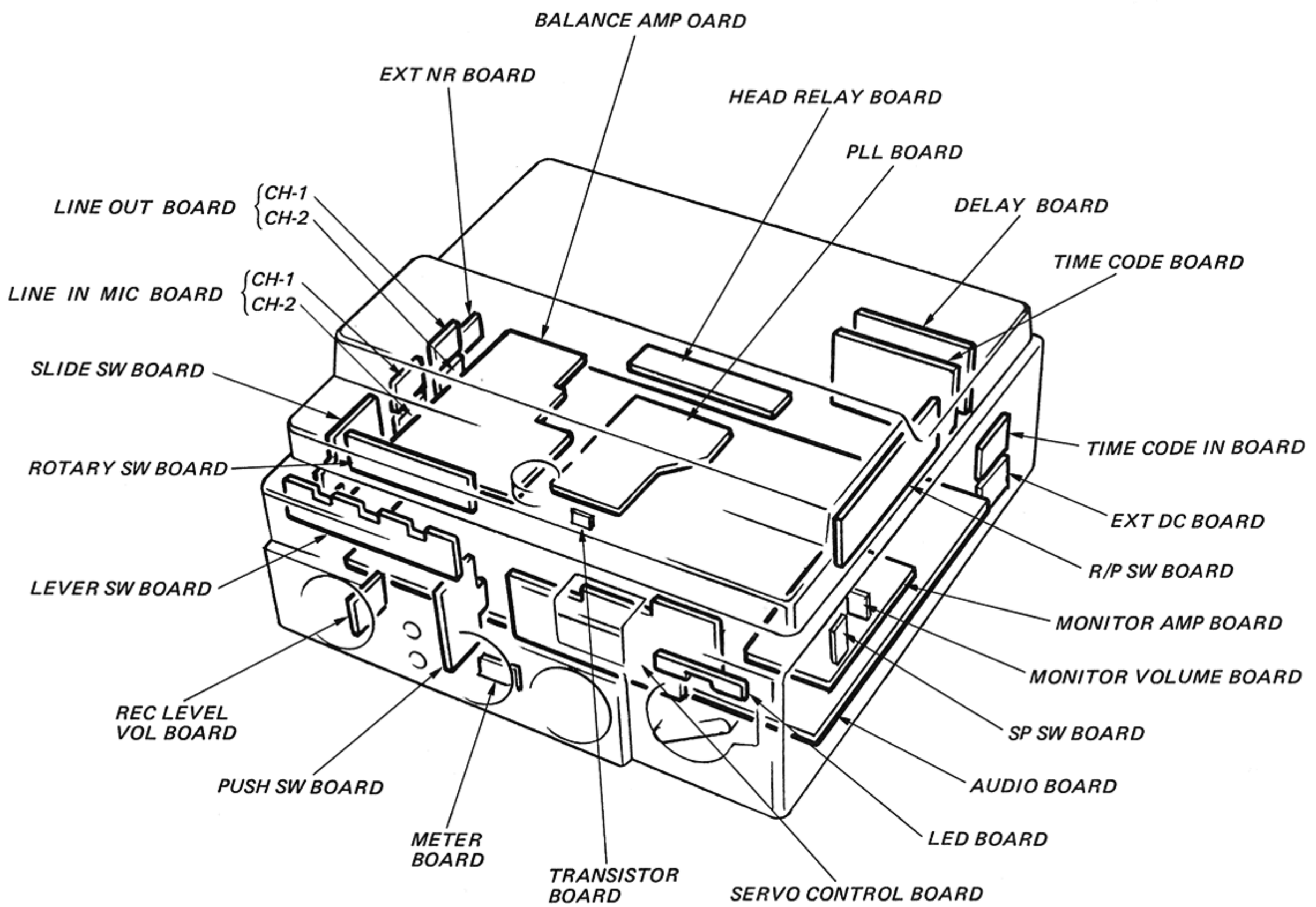

Semiconductor Lead Layouts

1SS202-1

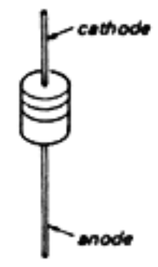

10E2

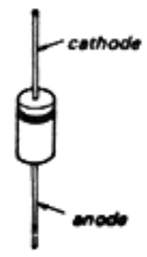

HZ6A3L
HZ6B2L
HZ7C1L
HZ9B1L

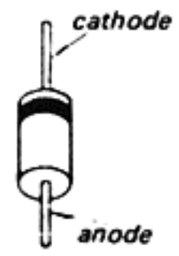

SLP24B

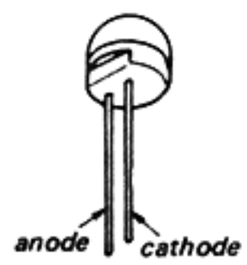

CX20197
LF353DP
LM311P
NE5532P
NJM2043D-D
NJM2904D
NJM4560D
UPC4558C

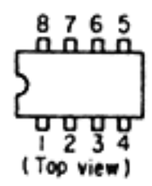

UPC575C2

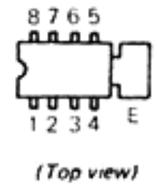

TC5504AP-3

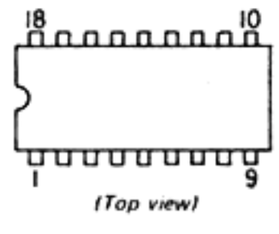

TC4011BP
TC4013BP
TC4069UBP
TC504013BP
UPD4011BC

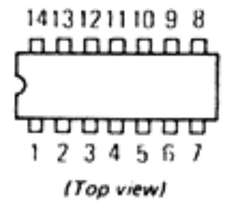

MC14046BCP
TC4040BP
TC4538BP
TC74HC4040P

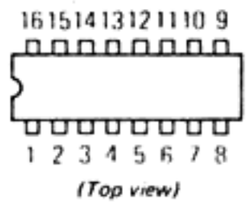

M5218L

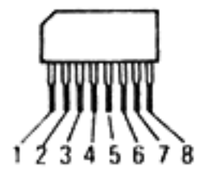

UPC78L05

2SK30A-0

2SC1345
2SC1775-A
2SC2878

2SC2603-F
DTA124XS
DTA144ES
DTC144ES

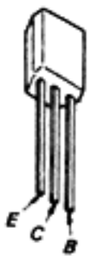

2SA1138
2SC2676

2SB548
2SD414
2SD809-K

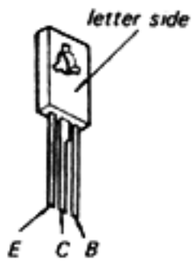

SECTION 4
DIAGRAMS

4-1. MOUNTING DIAGRAM (1)

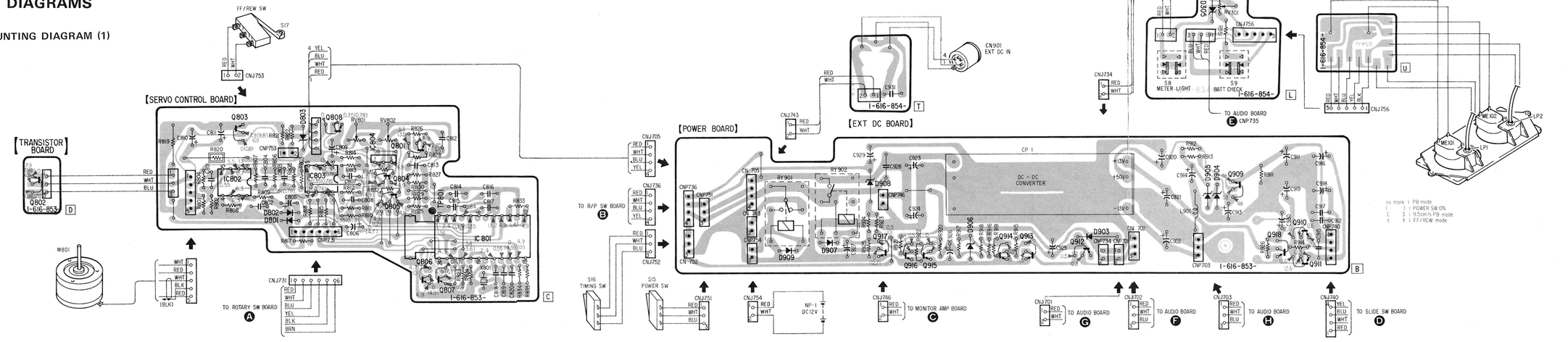

4-2. SCHEMATIC DIAGRAM (1)

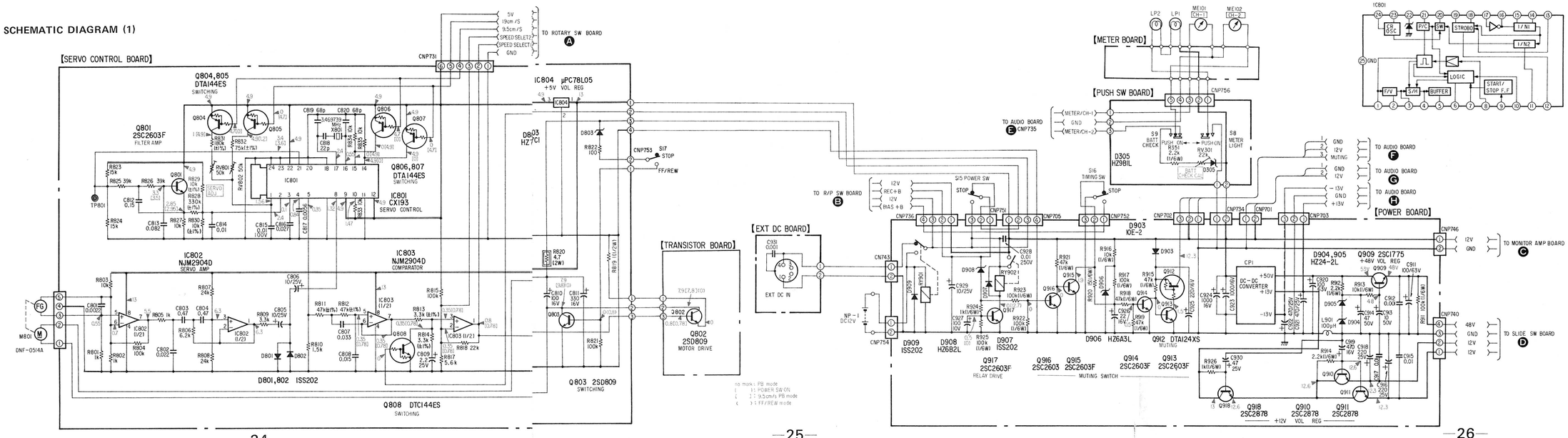

Note:

- Color code of sleeving over the end of the jacket.

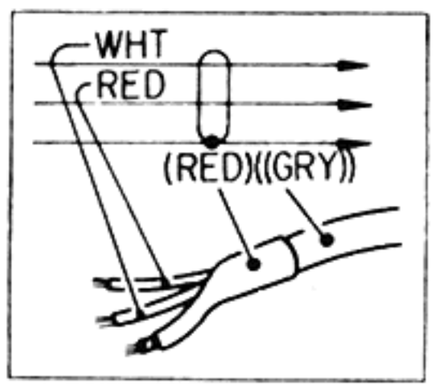

- o—— : parts extracted from the component side.

Note:

- All capacitors are in μF unless otherwise noted. pF: μμF 50WV or less are not indicated except for electrolytics and tantalums.
- All resistors are in Ω and 1/4 W or less unless otherwise specified.
- ⊟ : nonflammable resistor.
- ——— : B+ bus.
- – – – : B– bus.
- ▭ : adjustment for repair.
- Voltages are dc with respect to ground unless otherwise noted.
- Readings are taken under no-signal (detuned) conditions with a VOM (50 kΩ/V).
  no mark: PB mode
  ( ) : POWER SW on
  [ ] : 9.5 cm/s PB mode
  < > : FF/REW mode
- Voltage variations may be noted due to normal production tolerances.
- Power voltage is 12V and fed with regulated dc power supply from
  Voltages are dc with respect to ground in unless otherwise noted.
- Switches

Ref. No.	Switch	Position
S8	METER LIGHT	OFF
S9	BATT CHECK	OFF
S15	POWER	STOP
S16	TIMING	STOP
S17	FF/FRW	STOP

4-3. MOUNTING DIAGRAM (2)

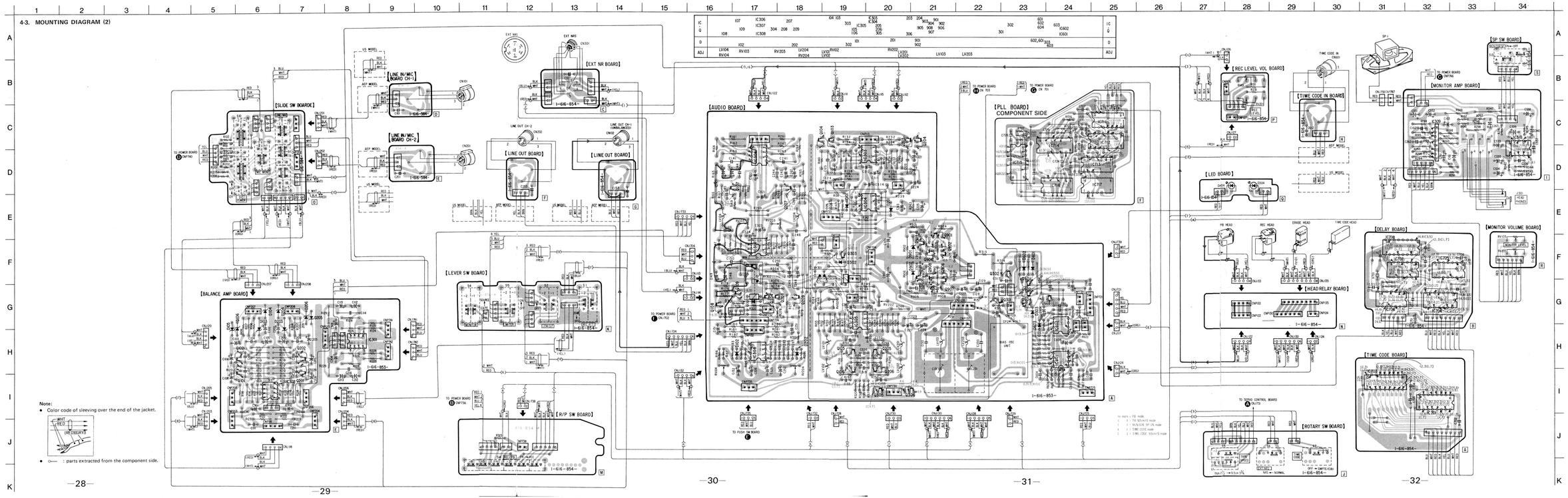

4-4. SCHEMATIC DIAGRAM (2)

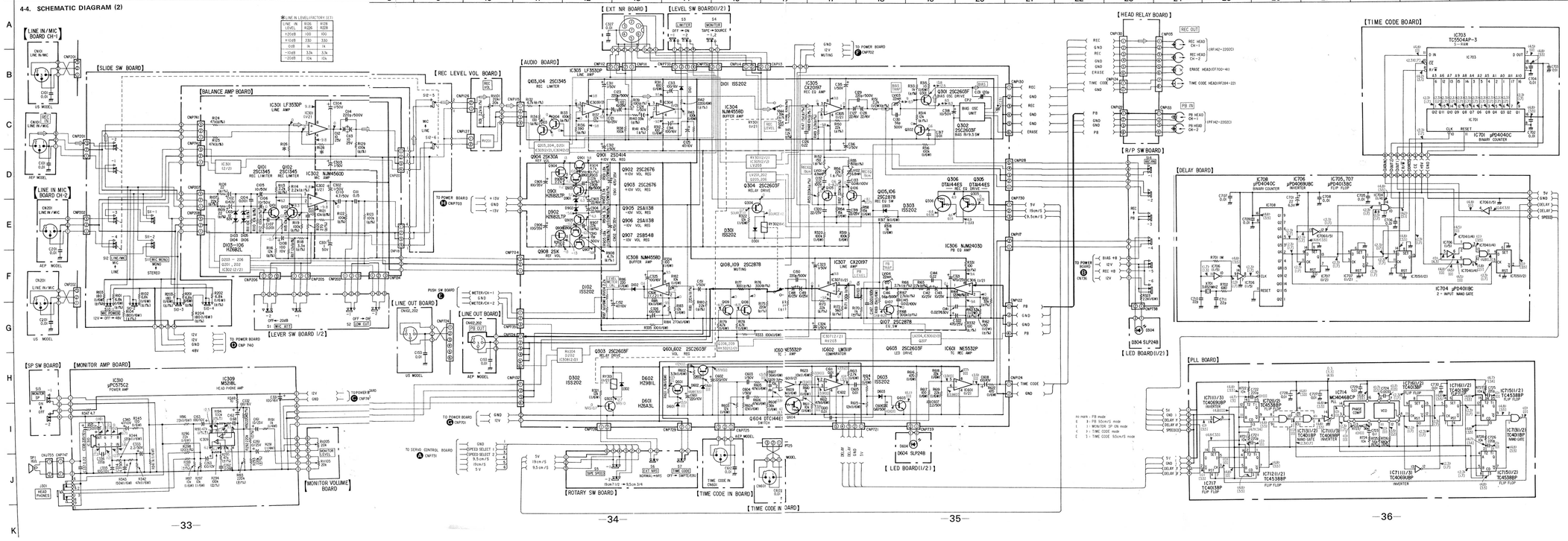
[LINE IN/MIC BOARD CH-1]
[LINE IN MIC BOARD CH-2]
[SLIDE SW BOARD]
[BALANCE AMP BOARD]
[REC LEVEL VOL BOARD]
[EXT NR BOARD]
[LEVEL SW BOARD(I/2)]
[AUDIO BOARD]
[HEAD RELAY BOARD]
[R/P SW BOARD]
[TIME CODE BOARD]
[DELAY BOARD]
[PLL BOARD]
[LEVER SW BOARD I/2]
[LINE OUT BOARD]
[SP SW BOARD]
[MONITOR AMP BOARD]
[MONITOR VOLUME BOARD]
[ROTARY SW BOARD]
[TIME CODE IN BOARD]
[LED BOARD(I/2)]
[LED BOARD(I/2)]
TO POWER BOARD
TO SERVO CONTROL BOARD
PUSH SW BOARD
US MODEL
AEP MODEL
IC303 LF3530P
IC304 NJM4558D
IC305 CX20197
IC306 NJM2403D
IC307 CX20197
IC308 NJM4558D
IC309 M5306L
IC602 LM311P
IC601 NE5532P
IC704 μPD4001BC
IC703 TC5504AP-3
IC701 μPD4040C
IC708 μPD4040C
IC706 μPD4069UBC
IC705, 707 μPD4013BC
IC714 MC14046BCP
IC717 TC4013BP
IC716(I/2) TC4013BP
IC715(I/2) TC4538BP
IC718(I/2) TC4538BP
IC719(I/2) TC4538BP
IC720(I/2) TC4538BP
IC721(I/2) TC4538BP
IC722(I/2) TC4538BP
IC723(I/2) TC4538BP
IC724(I/2) TC4538BP
IC725(I/2) TC4538BP
IC726(I/2) TC4538BP
IC727(I/2) TC4538BP
IC728(I/2) TC4538BP
IC729(I/2) TC4538BP
IC730(I/2) TC4538BP
IC731(I/2) TC4538BP
IC732(I/2) TC4538BP
IC733(I/2) TC4538BP
IC734(I/2) TC4538BP
IC735(I/2) TC4538BP
IC736(I/2) TC4538BP
IC737(I/2) TC4538BP

SECTION 5
EXPLODED VIEWS AND PARTS LIST

NOTE:
- The mechanical parts with no reference number in the exploded views are not supplied.
- Items marked " * " are not stocked since they are seldom required for routine service. Some delay should be anticipated when ordering these items.
- The construction parts of an assembled part are indicated with a collation number in the remark column.

The components identified by shading and mark ⚠ are critical for safety. Replace only with part number specified.

5-1.

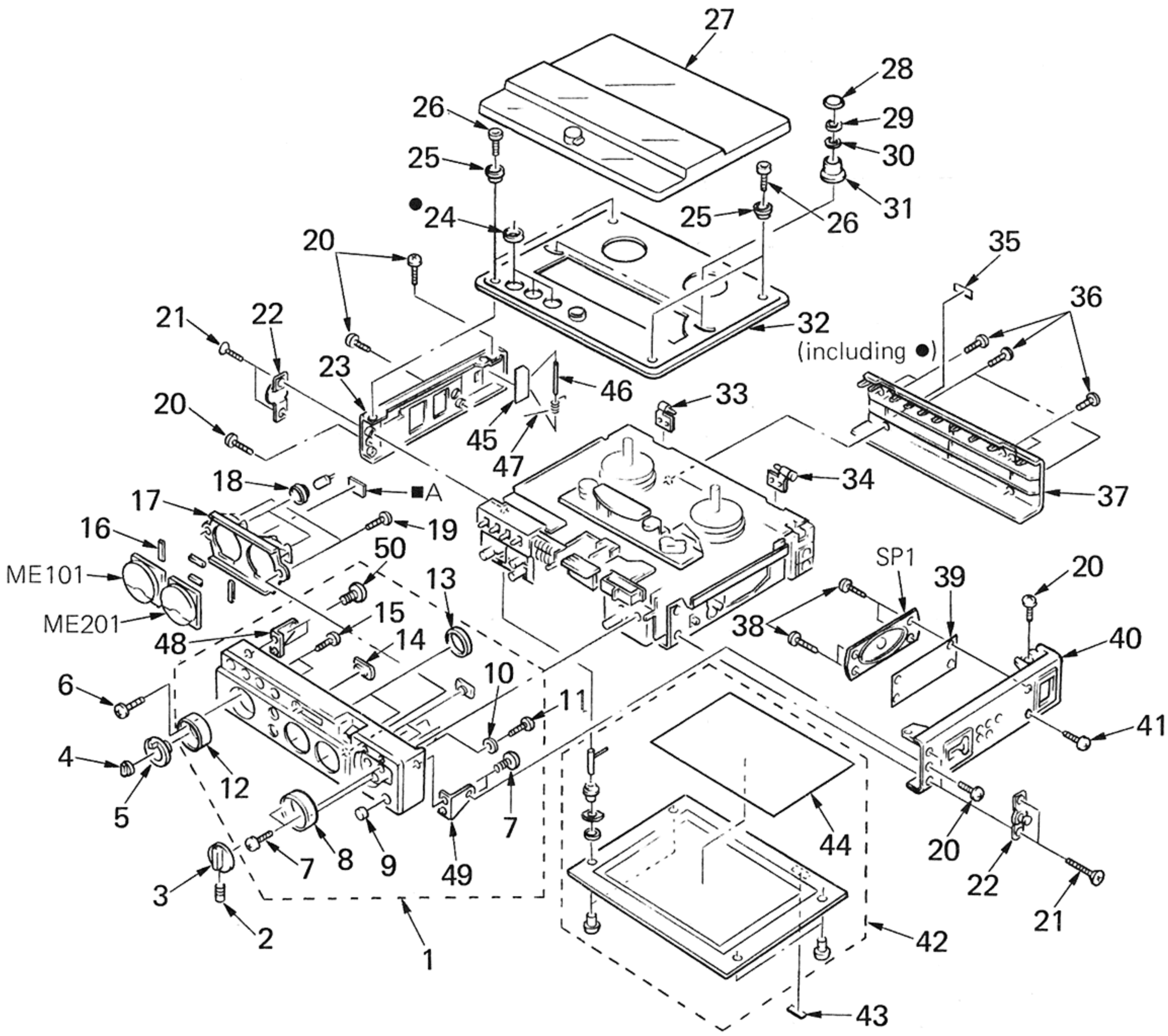

5-2.

No.	Part No.	Description	Remarks
1	*X-3542-652-5	COVER ASSY, FRONT	
2	7-683-247-31	SC 4X6, HEXAGON SOCKET	
3	X-3542-654-2	CONVERTER ASSY	
4	3-542-842-11	KNOB (CH-2), RECORD LEVEL	
5	3-542-843-11	KNOB (CH-1), RECORD LEVEL	
6	7-682-547-09	SCREW +B 3X6	
7	7-682-947-01	SCREW +PSW 3X6	
8	*3-542-723-11	ESCUTCHEON, SELECTOR	
9	X-3542-653-4	EMBLEM ASSY	
10	7-688-001-01	W 2, SMALL	
11	7-621-255-45	SCREW +P 2X6	
12	*3-542-722-11	ESCUTCHEON, CONTROL	
13	*3-542-721-11	ESCUTCHEON, METER	
14	3-542-720-00	WINDOW, COUNTER	
15	7-682-224-01	SCREW +K 2X4	
16	9-911-815-02	CUSHION	
17	*3-542-814-00	BRACKET, METER	
18	3-442-022-02	HOLDER, LAMP	
19	7-682-547-01	SCREW +B 3X6	
20	7-682-546-05	SCREW +B 3X4	
21	7-682-253-05	SCREW +K 3X20	
22	X-3542-659-0	BRACKET ASSY, STRAP	
23	X-3329-205-1	PLATE (LEFT) (B) ASSY, SIDE	
24	3-329-212-01	RING (B), ORNAMENTAL, KNOB	
25	3-542-830-11	SPACER, PANEL	
26	7-621-996-04	BOLT, HEXAGON SOCKET 2.6X6	
27	X-3329-209-1	PROTECTOR ASSY, DUST	
28	3-542-791-03	ROLLER (A), TENSION	
29	7-624-102-04	RING, RETAINING E-1.5	
30	3-701-437-01	WASHER	
31	X-3542-616-5	ROLLER (B) ASSY, TENSION	
32	X-3329-208-1	PANEL ASSY (B), REEL	
33	X-3542-668-0	HINGE (E) ASSY	
34	X-3542-658-0	HINGE (B) ASSY	
35	*3-329-201-01	LABEL, MODEL NUMBER	
36	7-683-403-04	BOLT, HEXAGON SOCKET 3X6	
37	3-542-875-11	PLATE, CABINET BOTTOM	
38	7-685-144-11	SCREW +P 3X5 TYPE2 NON-SLIT	
39	3-542-896-00	NET, SPEAKER	
40	X-3329-206-1	PLATE (RIGHT) (B) ASSY, SIDE	
41	7-682-550-05	SCREW +B 3X12	
42	X-3329-204-1	LID ASSY, REAR	
43	*3-329-901-01	LABEL, CAUTION, BOTTOM PLATE	
44	3-542-899-03	PLATE, REAR LID SHIELD	
45	2-362-388-21	LID, BATTERY	
46	2-362-324-00	SHAFT, BATTERY LID	
47	3-329-206-01	SPRING (A), TORSION	
48	*3-542-724-00	BRACKET (RIGHT), FRONT COVER	
49	*3-542-725-00	BRACKET (LEFT), FRONT COVER	
50	7-682-246-01	SCREW +K 3X5	
ME101	1-520-484-11	METER, LEVEL	
ME201	1-520-484-21	METER, LEVEL	
SP1	1-502-541-00	SPEAKER,CONE	

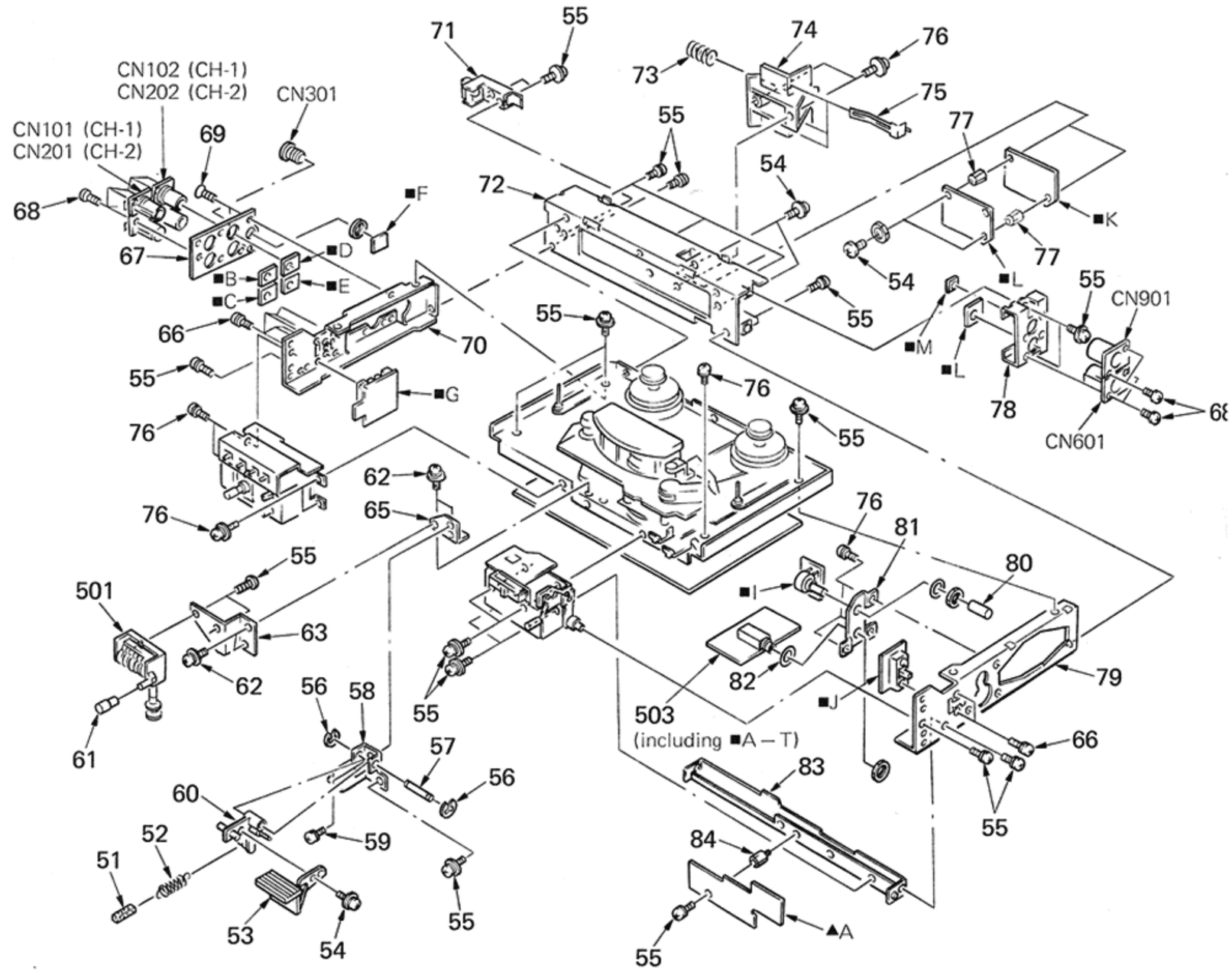

No.	Part No.	Description	Remarks
51	9-911-815-02	CUSHION	
52	4-812-471-XX	SPRING, TENSION	
53	3-542-847-11	KNOB	
54	7-621-759-65	+PSW, 2.6X8	
55	7-682-947-01	SCREW +PSW 3X6	
56	7-624-106-04	RING, RETAINING E-3	
57	*3-542-792-00	SHAFT, CONTROL LEVER	
58	*X-3542-637-0	HOLDER ASSY, BUTTON, PAUSE	
59	7-628-153-25	SCREW +PSW 2X6	
60	*X-3542-638-0	LEVER ASSY, INSTANT STOP DRIVE	
61	3-542-855-11	BUTTON, COUNTER RESET	
62	7-621-759-45	+PSW, 2.6X6	
63	*3-542-806-00	BRACKET, COUNTER	
65	*3-542-769-00	HOLDER, PAUSE BUTTON	
66	7-628-254-05	SCREW +PS 2.6X5	
67	*3-329-211-01	BRACKET (P), CONNECTOR	
68	7-621-259-32	SCREW +P 2.6X5	
69	7-621-559-38	SCREW +K 2.6X5	
70	*3-329-224-01	BRACKET (L), CONNECTOR	
71	X-3329-203-1	HOLDER (B) ASSY, KNOB	
72	*3-329-227-01	JOINT (B)	

No.	Part No.	Description	Remarks
73	2-362-385-00	SPRING, COMPRESSION	
74	3-329-223-01	CASE, BATTERY	
75	3-669-526-00	TERMINAL	
76	7-682-647-01	SCREW +PS 3X6	
77	*3-329-210-01	SPACER, PC BOARD	
78	*3-329-208-01	BRACKET, SOCKET	
79	*3-542-810-00	BRACKET (RIGHT), JACK	
80	3-542-845-00	KNOB, CONTROL	
81	*3-542-811-00	BRACKET, HEAD JACK	
82	*4-886-571-00	LUG, JACK	
83	*3-542-815-00	PLATE, REINFORCEMENT	
84	*4-870-206-00	SUPPORT, PC BOARD	
501	1-548-508-00	TIMER, TAPE	
503	*A-2056-299-A	MOUNTED PCB, SWITCH	
CN101	1-509-184-31	CONNECTOR (RECEPTACLE) 3P	
CN102	1-509-176-31	CONNECTOR (RECEPTACLE) 3P	
CN202	1-509-176-31	CONNECTOR (RECEPTACLE) 3P	
CN201	1-509-184-31	CONNECTOR (RECEPTACLE) 3P	
CN301	1-562-973-11	SOCKET, CONNECTOR 7P	
CN601	1-509-184-31	CONNECTOR (RECEPTACLE) 3P	
CN901	1-509-177-31	CONNECTOR (RECEPTACLE) 4P	

5-3.

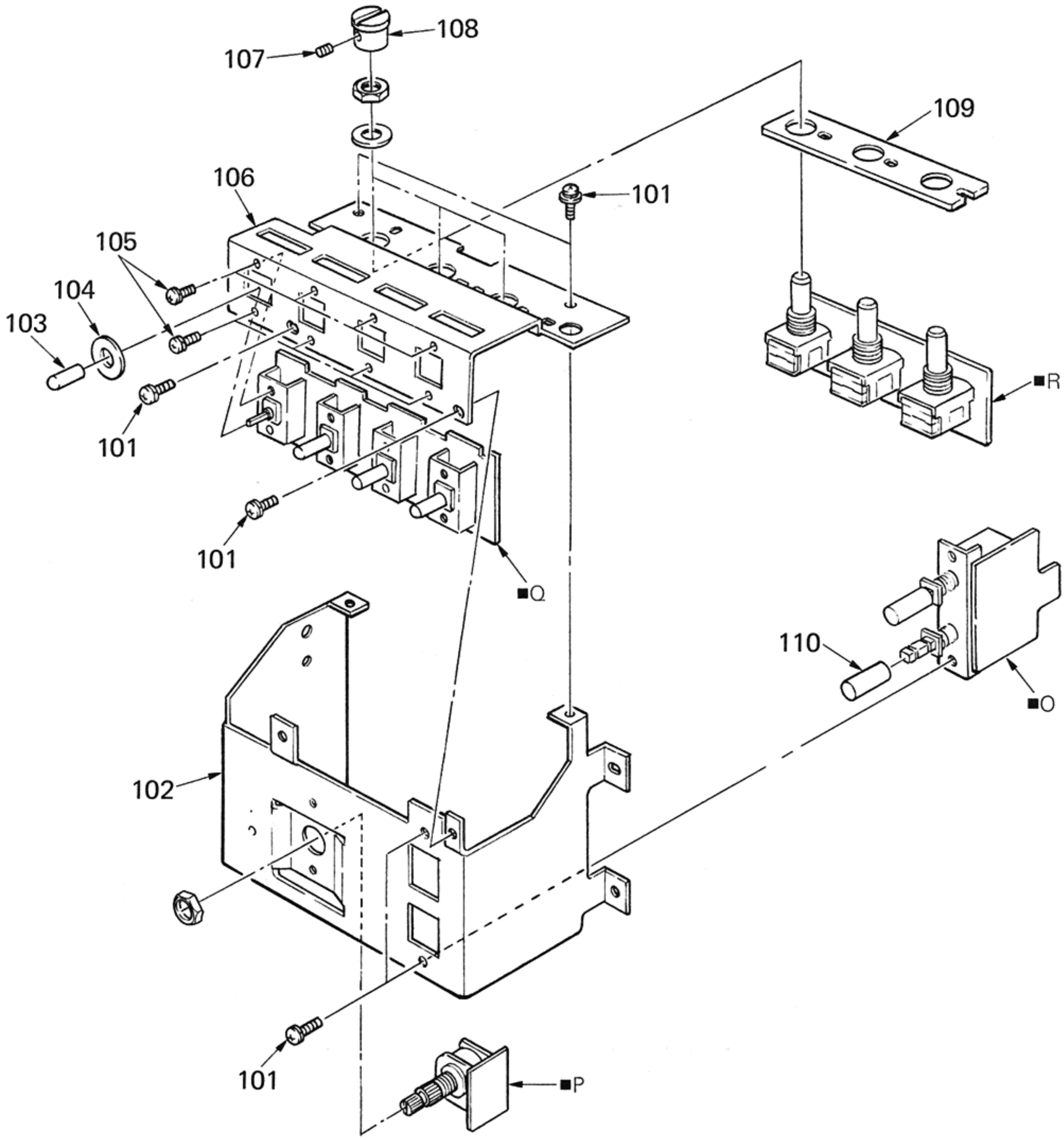

No.	Part No.	Description	Remarks
101	7-682-647-01	SCREW +PS 3X6	
102	*3-542-813-00	BRACKET (B), SWITCH	
103	3-329-215-01	KNOB, LEVER SWITCH	
104	3-533-938-00	CLOTH	
105	7-628-254-05	SCREW +PS 2.6X5	

No.	Part No.	Description	Remarks
106	*3-542-812-00	BRACKET (A), SWITCH	
107	7-683-237-31	SC 3X3, HEXAGON SOCKET	
108	3-329-217-01	KNOB, MODE SELECTION	
109	*3-329-209-01	SPACER (A)	
110	3-542-840-21	KNOB, RECORD MODE	

5-4.

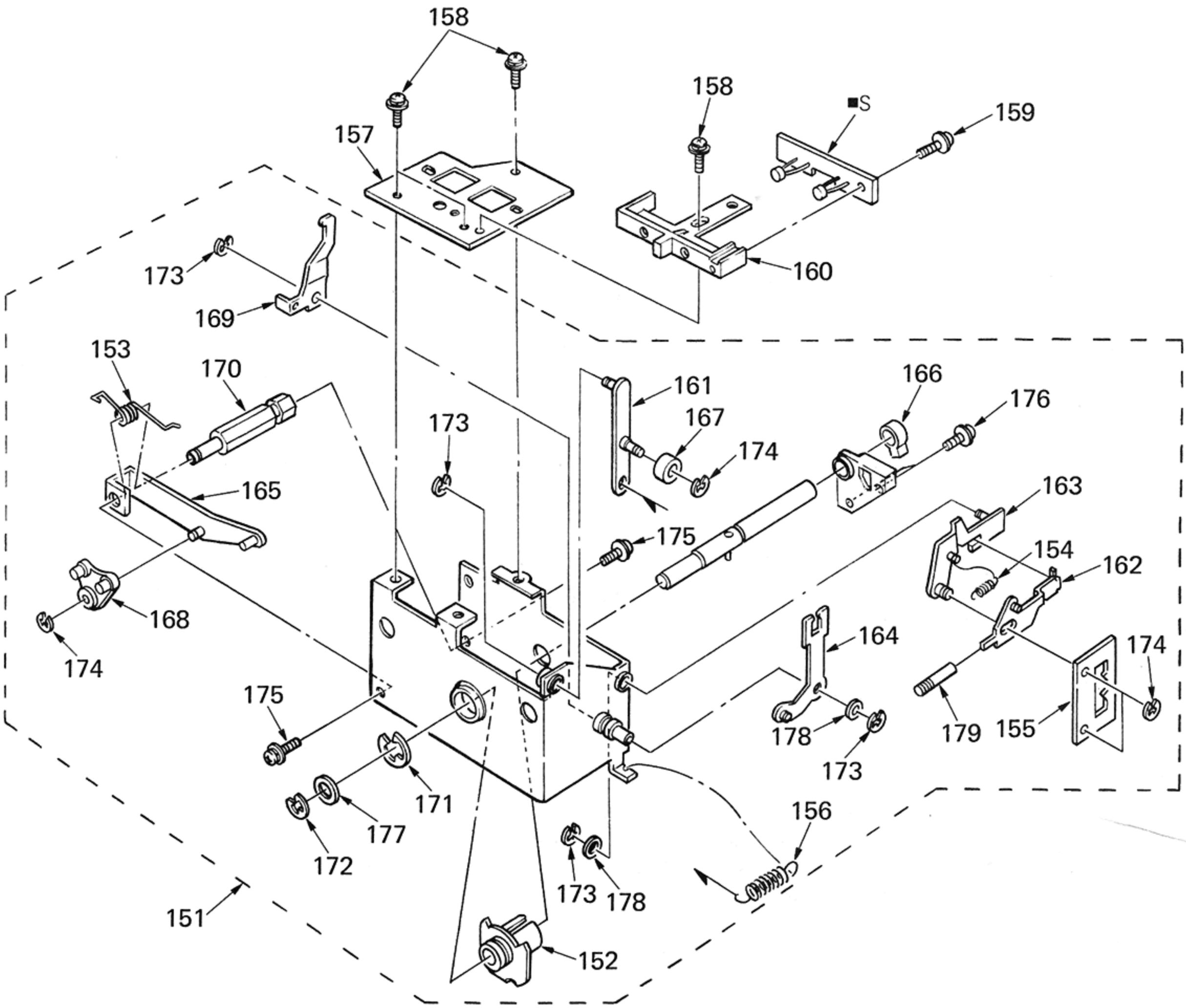

No.	Part No.	Description	Remarks
151	*X-3542-620-0	CONVERTER COMPLETE ASSY	
152	*3-542-644-00	CAM, SELECTOR	
153	3-542-648-00	SPRING	
154	3-542-649-00	SPRING, TENSION	
155	*3-542-800-00	PLATE, CLICK	
156	3-542-865-00	SPRING, TENSION	
157	*3-542-777-00	BRACKET, REC SWITCH	
158	7-621-759-45	+PSW, 2.6X6	
159	7-685-533-21	SCREW +BTP 2.6X6 TYPE2 SLIT	
160	*3-542-851-00	BRACKET, REC LAMP	
161	*X-3542-622-0	PLATE ASSY, LOCK, FF & REW	
162	*X-3542-623-0	LEVER (A) ASSY, CONTROL	
163	*X-3542-624-0	LEVER (B) ASSY, CONTROL	
164	*X-3542-625-0	LEVER A ASSY, FF & REW	
165	*X-3542-626-0	LEVER A ASSY, CONVERTER	

No.	Part No.	Description	Remarks
166	X-3542-627-0	SHAFT ASSY, CONTROL	
167	*3-542-643-00	ROLLER	
168	3-542-645-00	PIECE, CLICK	
169	*3-542-646-00	LEVER, FWD	
170	*3-542-647-00	SHAFT, SELECTOR CONTROL LEVER	
171	7-624-112-04	RETAINING, RING E-8	
172	7-624-109-04	RETAINING, RING E-5	
173	7-624-108-04	RING, RETAINING E-4	
174	7-624-106-04	RING, RETAINING E-3	
175	7-621-759-45	+PSW, 2.6X6	
176	7-621-759-85	+PSW, 2.6X12	
177	3-701-444-21	WASHER, 6	
178	3-701-443-11	WASHER, 5 (t=0.25)	
	3-701-443-21	WASHER, 5 (t=0.5)	
179	3-542-844-00	KNOB, FAST FORWARD CONTROL	

5-5.

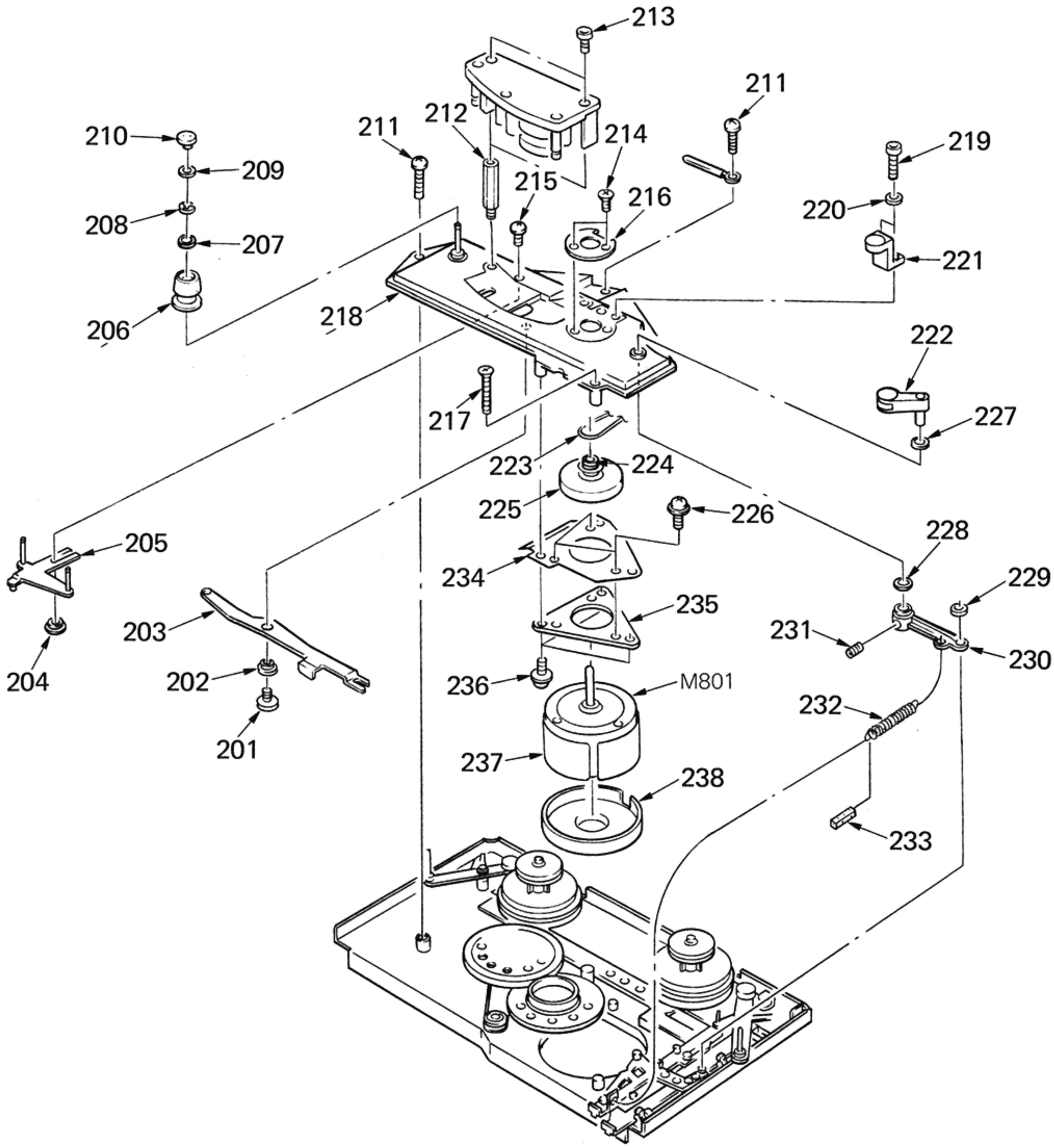

No.	Part No.	Description	Remarks
201	7-682-246-01	SCREW +K 3X5	
202	0 *3-542-775-00	BUSHING, SHIFTER PLATE	
203	1 *3-542-799-00	PLATE, SHIFTER FUNCTION	
204	3-542-776-00	BUSHING, SHIFTER GUIDE	
205	X-3542-619-2	PLATE ASSY, SHIFT, TAPE	
206	X-3542-634-0	ROLLER ASSY, GUIDE	
207	3-701-437-11	WASHER	
208	7-624-102-04	RING, RETAINING E-1.5	
209	3-701-447-21	WASHER, 10	
210	3-542-790-00	CAP, GUIDE ROLLER	
211	7-682-550-05	SCREW +B 3X12	
212	3-542-802-00	SUPPORT, HEAD BASE	
213	7-683-403-04	BOLT, HEXAGON SOCKET 3X6	
214	7-621-555-26	SCREW +K 2X4	
215	7-682-546-04	SCREW +B 3X5	
216	3-542-831-00	PLATE, BASE ORNAMENTAL	
217	7-682-253-05	SCREW +K 3X20	
218	1 *X-3329-207-1	BASE ASSY 6.88	
219	7-683-404-04	BOLT, HEXAGON SOCKET 3X8	
220	7-688-003-01	W 3, SMALL	

No.	Part No.	Description	Remarks
221	X-3542-639-0	HOUSING, METAL, CAPSTAN	
222	X-3542-640-0	ARM ASSY, PINCH ROLLER	
223	3-542-804-00	BELT, CAPSTAN	
224	3-542-898-00	NUT, WHEEL	
225	3-542-803-00	FLYWHEEL	
226	7-621-759-45	+PSW, 2.6X6	
227	3-701-443-21	WASHER, 5 (t=0.5)	
228	3-701-443-11	WASHER, 5 (t=0.25)	
229	7-624-106-04	RING, RETAINING E-3	
230	1 *3-542-778-00	LEVER, PINCH	
231	7-621-734-09	SET-SCT, HEX 2.6X3	
232	3-542-819-00	SPRING, TENSION	
233	9-911-815-02	CUSHION	
234	0 *3-329-221-01	PLATE, SHIELD, MOTOR	
235	1 *3-542-774-00	BRACKET, MOTOR	
236	7-682-947-01	SCREW +PSW 3X6	
237	0 *3-542-888-00	PLATE, SHIELD	
238	0 *3-542-887-00	CASE, MOTOR SHIELD	
M801	8-835-152-01	MOTOR, DC (DNF-0514A)	