Service Manual

Technics by Panasonic

TAPE RECORDER

Technics by Panasonic

SEMI-PROFESSIONAL 15 I.P.S. STEREO TAPE DECK 2-TRACK RECORDING & PLAYBACK, 4-TRACK PLAYBACK, 3 MOTORS

RS-1030US MECHANISM SERIES

MODEL RS-1030US

SPECIFICATIONS

Power Source:	120 volts, 60 Hz
Power Consumption:	160 W
Motors:	8/4 poles dual speed hysteresis synchronous motor (1) 6-pole induction motor (2)
Track System:	2-track, 2-channel recording/playback, 4-track, 2-channel playback
Recording System:	AC bias 180 kHz
Erasing System:	AC erase
Tape Speeds:	2 speeds, 7-1/2 ips. (19 cm/s) and 15 ips. (38 cm/s)
Maximum Reel Size:	10″ reel
Signal-to-noise Ratio:	More than 58 dB (15 ips. 2-track) More than 55 dB (7-1/2 ips. 4-track)
Fast Forward Time:	Less than 120 seconds for 10″ standard tape (2500 ft)
Rewind Time:	Less than 120 seconds for 10″ standard tape (2500 ft)
Frequency Response:	30～27,000 Hz ± 3 dB (15 ips.) 25～22,000 Hz ± 3 dB (7-1/2 ips.)
Wow & Flutter:	0.08% (15 ips.) 0.12% (7-1/2 ips.)
Inputs:	2-MIC (High) −68 dB (0.4 mV)/20 kΩ (Low) −73 dB (0.22 mV)/600 Ω 2-LINE IN −23 dB (70 mV)/180 kΩ
Outputs:	2-LINE OUT −6 dB (500 mV)/50 kΩ HEADPHONE 8Ω
Dimensions:	11″(W) × 23-1/4″(H) × 16-1/2″(D)
Weight:	71 lbs.

These specifications are subject to change in order to accommodate improvements in design.

MATSUSHITA ELECTRIC CORP. OF AMERICA Pan-Am Bldg., 200 Park Ave. New York, N.Y. 10017
MATSUSHITA ELECTRIC OF HAWAII, INC. 320 Waiakamilo Road, Honolulu, Hawaii 96817
MATSUSHITA ELECTRIC OF CANADA LTD. 40 Ronson Drive, Rexdale, Ont.

ORDER NO. ARD-7302016

www.hifiengine.com

LOCATION OF PARTS

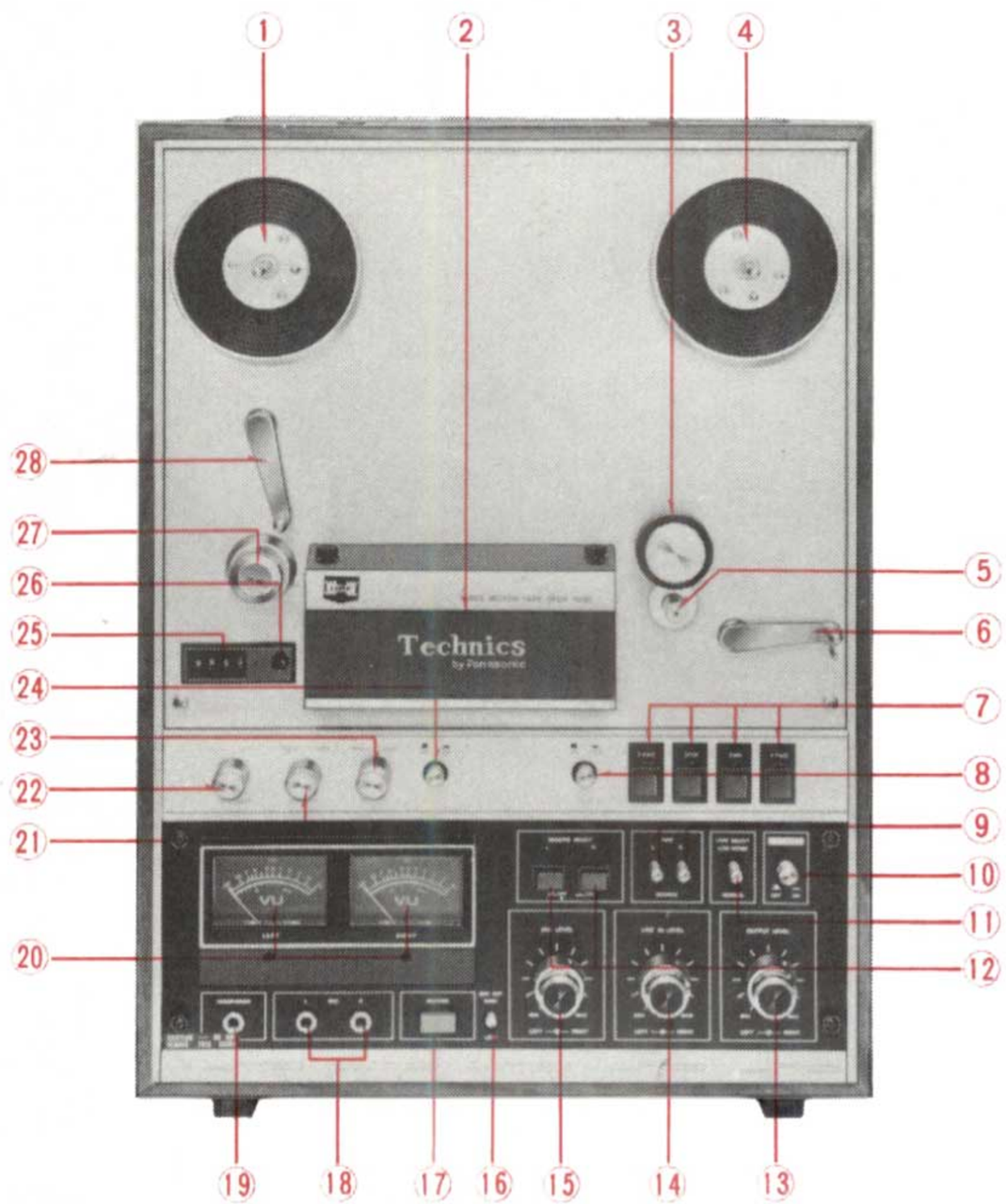

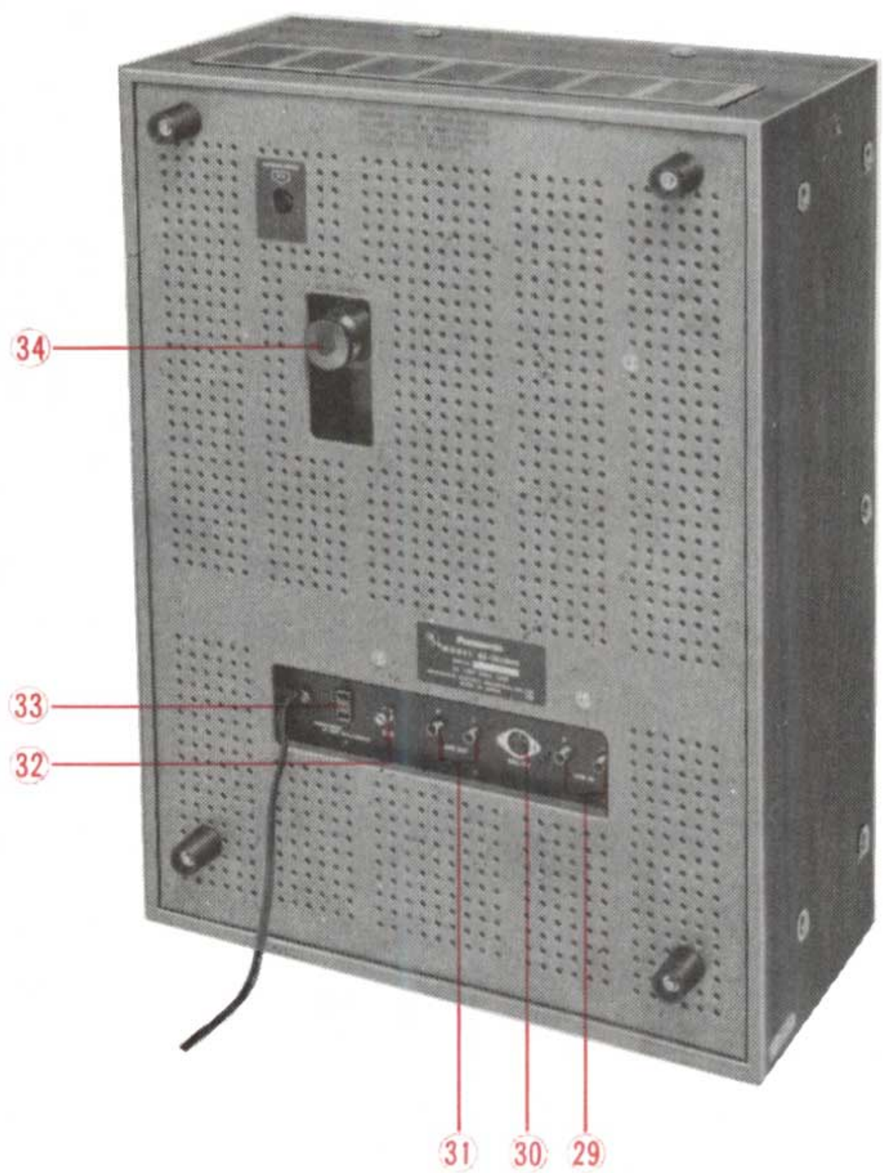

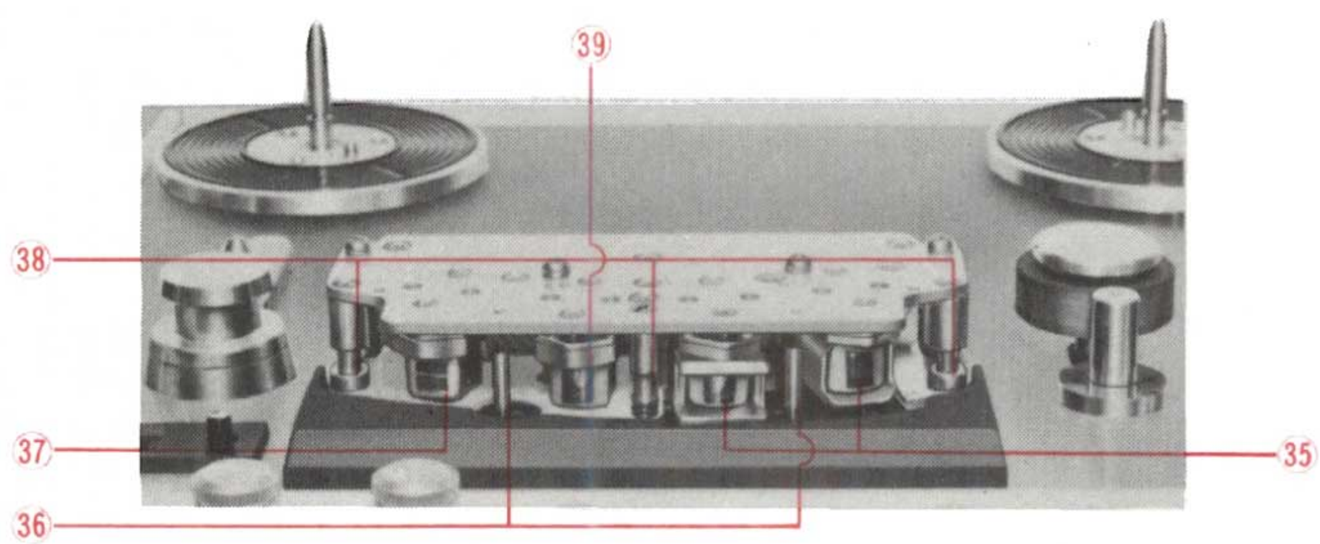

Fig. 1

① Supply reel table
② Head assembly housing
③ Pressure roller
④ Take up reel table
⑤ Capstan
⑥ Right tension arm/automatic shutoff swich
⑦ Operation buttons
⑧ Pause button
⑨ Tape/source selectors
⑩ Power switch
⑪ Tape selector
⑫ Record selectors
⑬ Output level controls
⑭ Line input level controls
⑮ Microphone input level controls
⑯ Microphone impeadance selector
⑰ Record button
⑱ Microphone jacks
⑲ Headphone jack
⑳ Level meters
㉑ 2/4-track selector
㉒ Tape speed selector
㉓ Tape tension selector (reel size select)
㉔ Editing button
㉕ Tape counter
㉖ Reset button
㉗ Impedance roller
㉘ Left tension arm
㉙ Line input jacks
㉚ Record/playback connector
㉛ Line output jacks
㉜ Ground terminal
㉝ Power outlet
㉞ Remote control jack
㉟ Playback heads
㊱ Tape shifters
㊲ Erase head
㊳ Tape guides
㊴ Record head

www.hifiengine.com

DISASSEMBLY INSTRUCTIONS

HOW TO REMOVE BACK BOARD AND BODY CASE

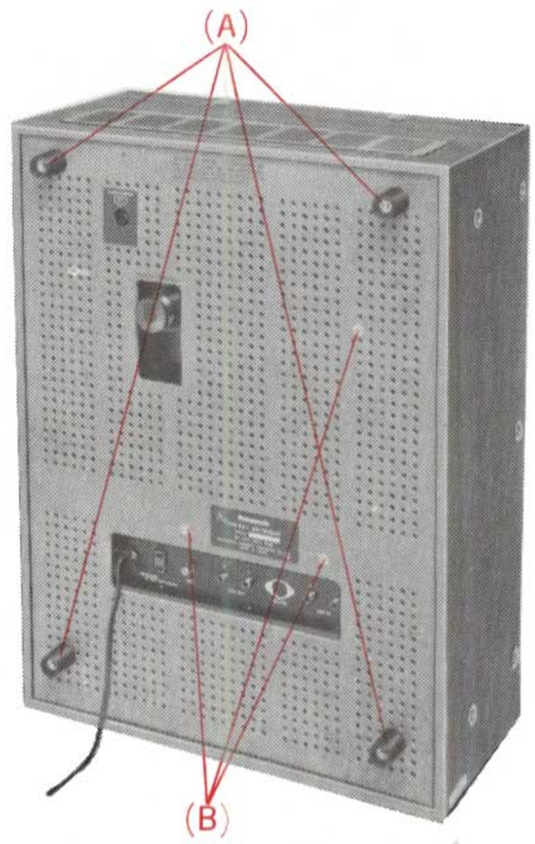

Fig. 2

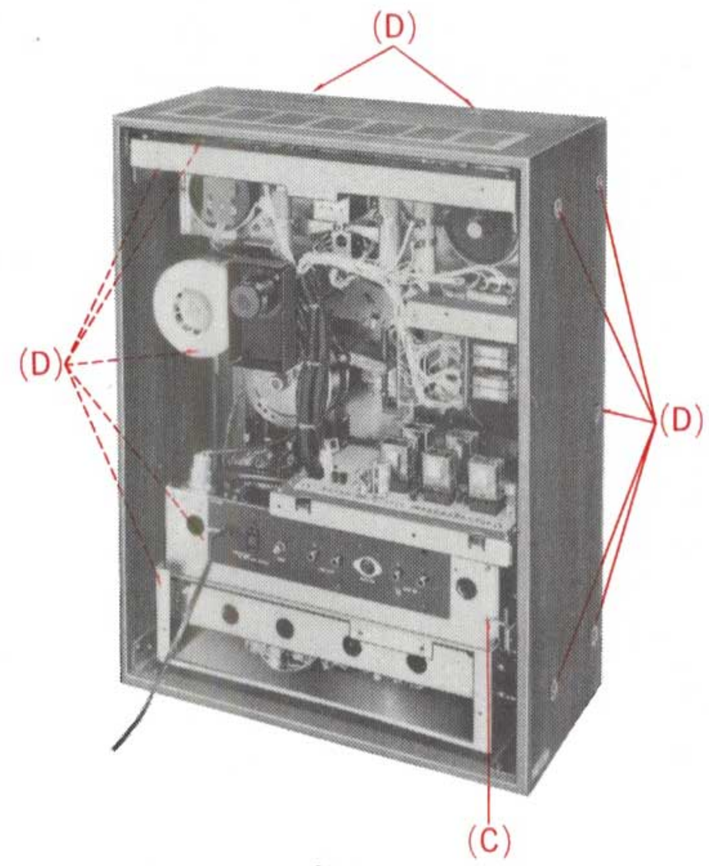

Fig. 3

1. Remove 4 screws in the rubber feet (A) and 3 back board holding screws (B).
2. Then back board can be removed.
3. Loosen 1 screw (C) then remove lug terminal.
4. Remove 12 body case holding screws (D).
5. Place the set with its panel side up and lift main body case slowly.
6. Then main body case can be removed.

HOW TO REMOVE FRONT PANEL AND HEAD COVER ASSEMBLY

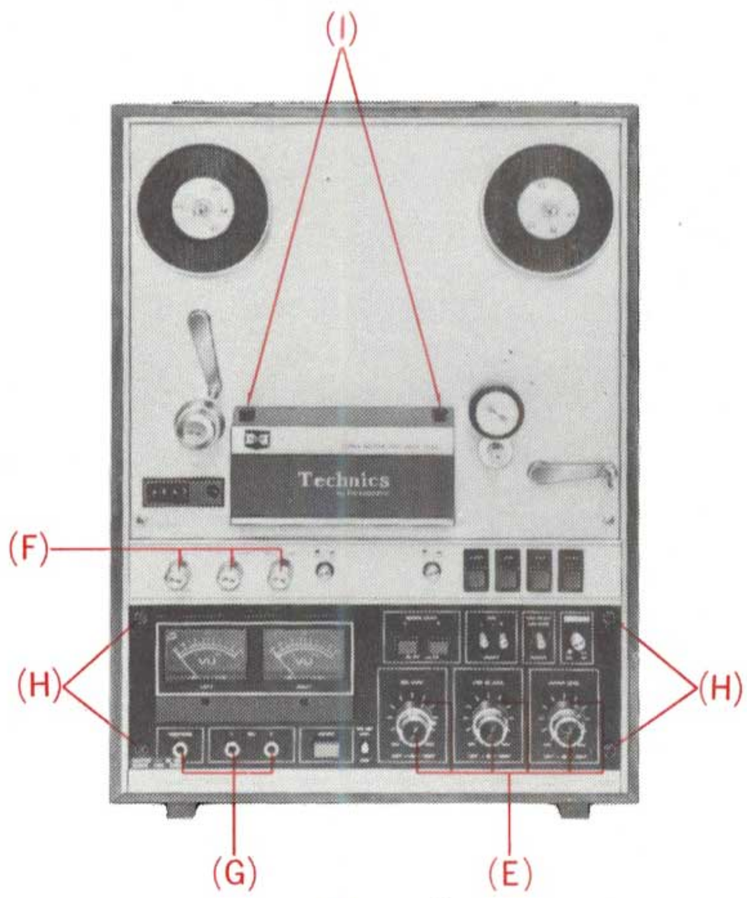

Fig. 4

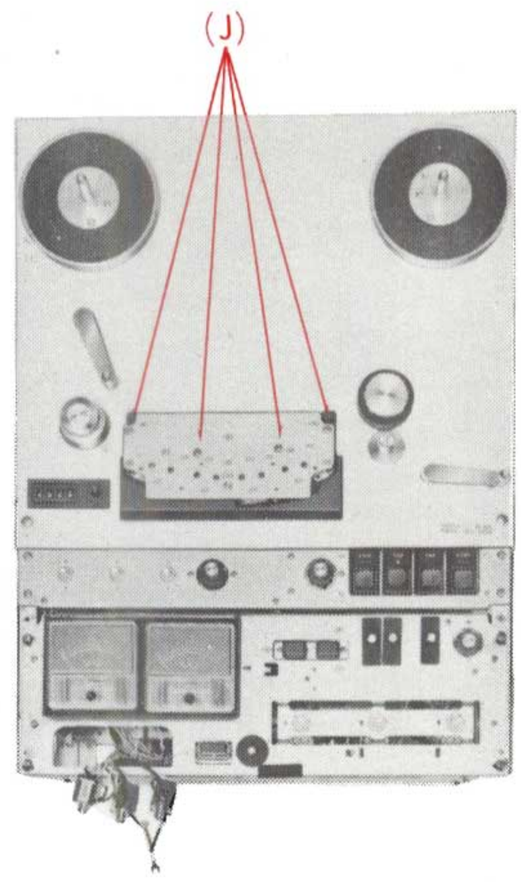

Fig. 5

1. Remove 6 volume knobs (E) and 3 selector knobs (F).
2. Remove 3 headphone and MIC jack holding nuts (G) (Using RP-8065 special tool).
3. Remove 4 front panel holding screws (H).
4. Then front panel can be removed.
5. Loosen 2 head cover holding screws (I), and then remove head cover.
6. Remove 4 head unit holding screws (J).
7. Then head cover assembly can be removed.

www.hifiengine.com

MECHANICAL ADJUSTMENTS

	ITEM	MODE	SPEC.	MEASUREMENT METHOD	ADJUSTMENT METHOD	REMARKS
1	Pressure of pressure roller adjustment.	FWD	3000±200 gr	Hook the spring scale to pressure roller lever with string and pull it in direction of the arrow shown in fig. 6.	Loosen the lock nut and adjust it by adjusting nut. After complete adjusting, lock again with lock nut. See fig. 8.	Measure the value at moment when the pressure roller moves away from the capstan. When adjusting, remove the power plug.
2	Brake torque adjustment.	Stop	200~250 gr	Place an empty 7″ reel of 4″ diameter hub with tension gauge as shown in fig. 7.	Adjust by hanging position of brake lever spring as shown in fig. 8.	Take care so that the string is not rubbing the reel flanges. When adjusting, remove the power plug.
3	Measurement of takeup tension.	FWD	90±10 gr (7″ reel) 190±15 gr (10″ reel)	Place an empty 7″ reel of 4″ diameter hub or 10″ reel with tension gauge onto right reel table as shown in fig. 7 and allow the counter-clockwise rotation of the reel to draw the string around the hub.	Adjust by sliding the terminal along the FWD takeup tension adjust VR 101 as shown in fig. 8.	Take care so that the string is not rubbing the reel flanges. When adjusting, remove the power plug. For 7″ reel, set the reel size select switch to small and for 10″ reel, to large position.
4	Measurement of back tension.	FWD	60±10 gr (7″ reel) 90±10 gr (10″ reel)	Place an empty 7″ reel of 4″ diameter hub or 10″ reel with tension gauge onto the left reel table as shown in fig. 7 and pull it in direction of arrow.	Adjust by sliding the terminal along the FWD back tension adjust VR 102 as shown in fig. 8.	Take care so that the string is not rubbing the reel flanges. When adjusting, remove the power plug. For 7″ reel, set the reel size select switch to small and for 10″ reel, to large position.
5	Measurement of F.FWD and F.RWD back tension.	F.FWD or F.RWD	20±5 gr	Place an empty 7″ reel of 4″ diameter hub with tension gauge onto left reel table (when adjusting F.FWD back tension) or right reel table (when that of F.RWD) as shown in fig. 7.	Adjust by sliding the terminal along the F.FWD and F.RWD back tension adjust VR 103 shown in fig. 8.	Take care so that the string is not rubbing the reel flanges. When adjusting, remove the power plug.
6	Measurement of 7-1/2ips./15ips. select delay time.	The mechanism is so designed that the tape stops completely and then restarts at the selected speed when tape speed is changed from 7-1/2 ips. to 15 ips. (or in the opposite way) during playback. Please so adjust VR104 that the time required for the tape to restart at the speed after selected will be 3 sec.				
7	Measurement of FWD select delay time.	The mechanism is so designed that the tape stops completely and then the next function follows when FAST FORWARD or FAST REWIND function is changed to FORWARD function. Please so adjust VR105 that FORWARD function starts 5 seconds after the FORWARD button is pressed during FAST FORWARD or FAST REWIND.				
8	Tape speed deviation.	FWD	±1%	Playback 3 kHz test tape (O-WBP) and read the frequency with the digital frequency counter.	—	—
9	Wow & flutter (RMS)	FWD	15 ips...0.1% 7-1/2 ips... 0.13%	Playback 3 kHz test tape. O-WBP (for 7-1/2 ips.) O-WAP (for 15 ips.)	—	—

www.hifiengine.com

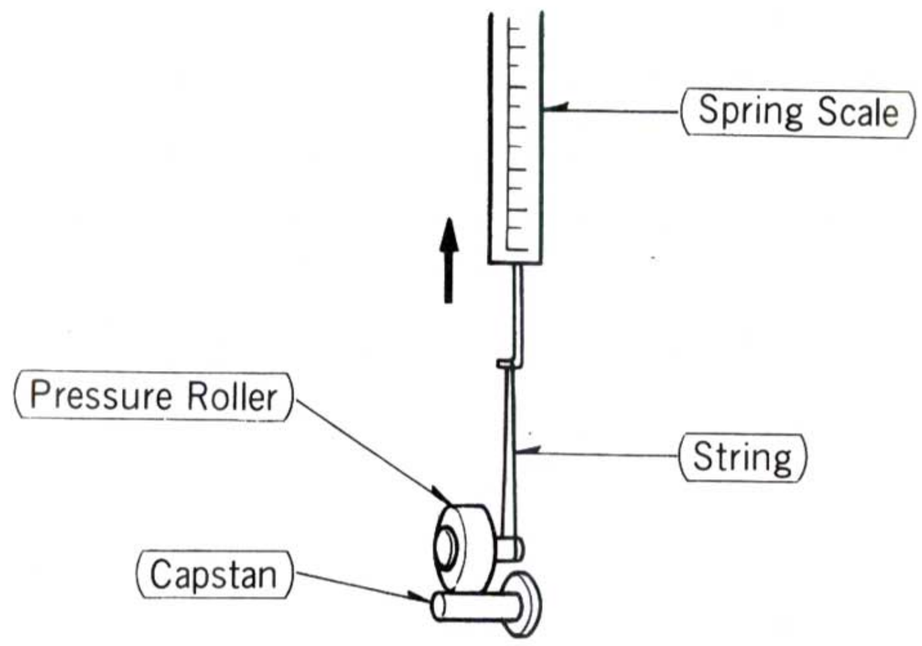

Fig. 6

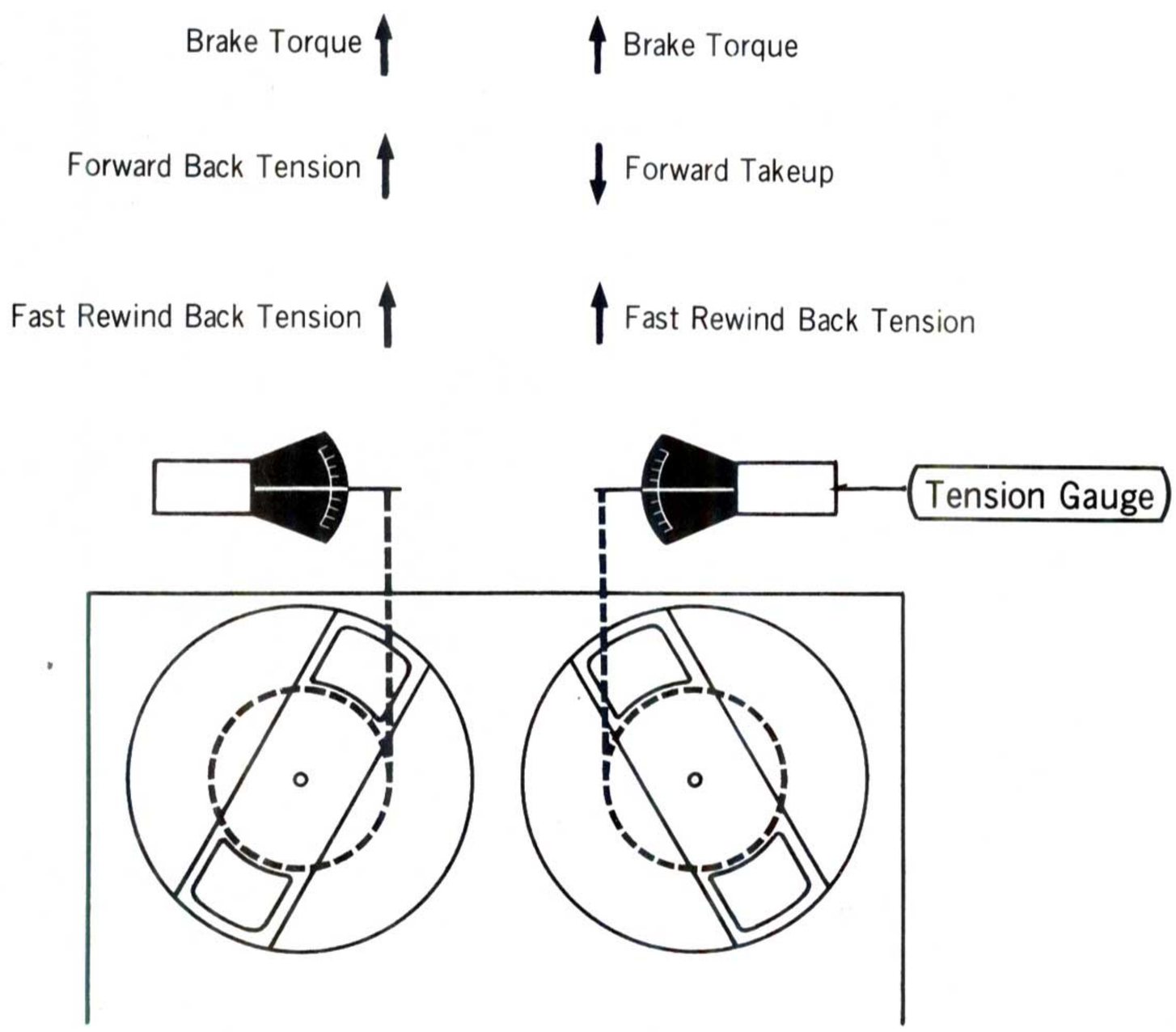

Fig. 7

NOTE:

For adjusting, prepair a 7″ empty reel with 4″ diameter hub, or 10″ empty reel, approx. 30″ of string and a tension gauge. Attach one side of the string to the anchor on the reel hub and the other to the tension gauge, and wind several turns of string on reel hub.

www.hifiengine.com

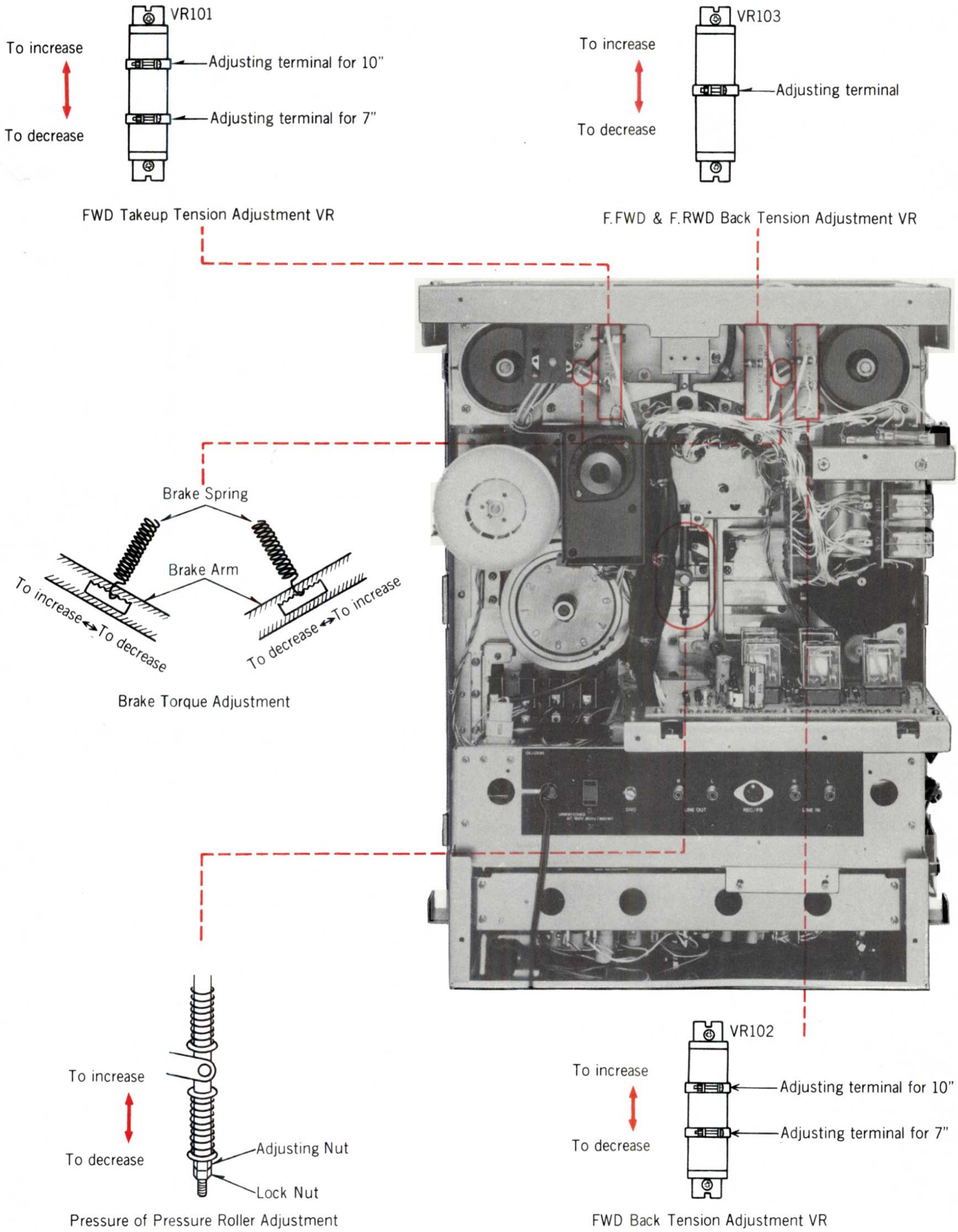

Fig. 8

www.hifiengine.com

TAPE GUIDE ADJUSTMENT

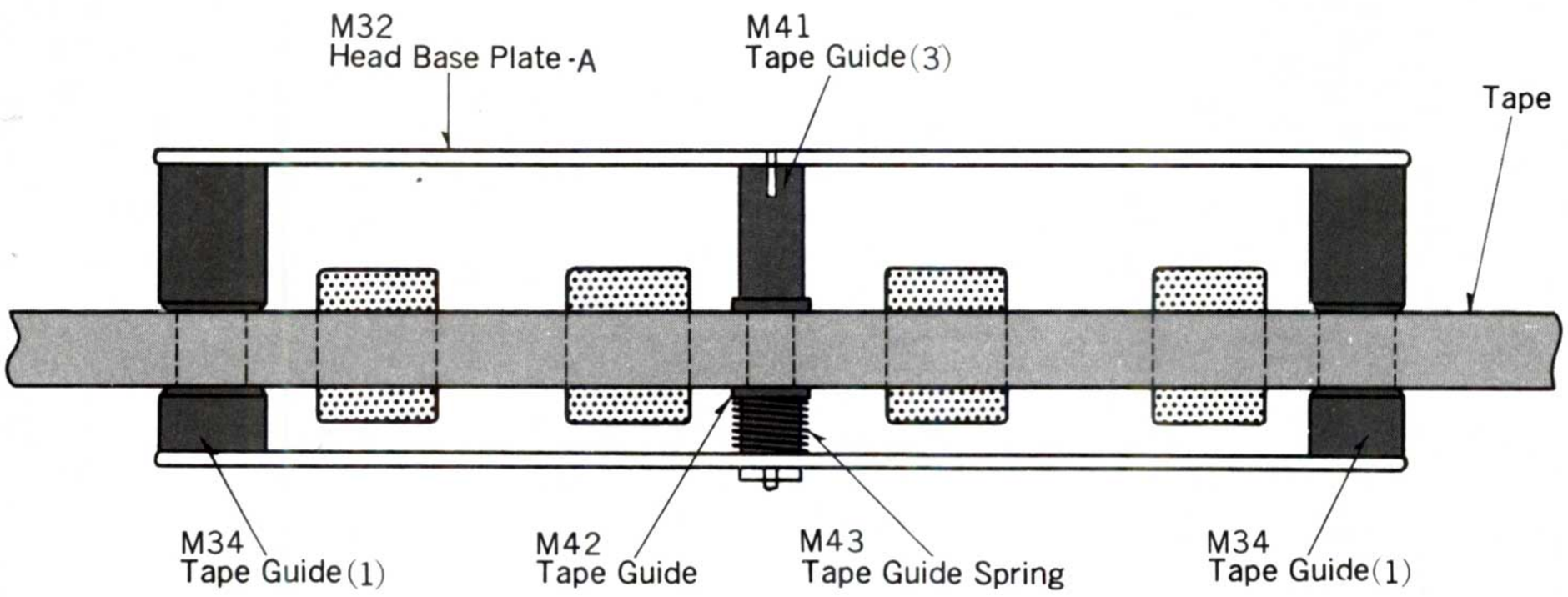

Fig. 9

1. Play a tape in the forward direction.
2. Turn screw boss M41, adjusting tape guide M42 to the same height as M34.
3. Make sure that the tape runs smoothly in forward mode.

HEAD ALIGNMENT

Thread a lenght of tape with the oxide removed across the heads and observe the position of the head cores. The erase head core should be above the edge of the tape by about the thickness of a pencil line.
Adjust each head height adjust screws (shown in fig. 10) so that the record head core, the playback head core and the playback head core (4-track) should be even with the top of the tape as shown in fig. 11.

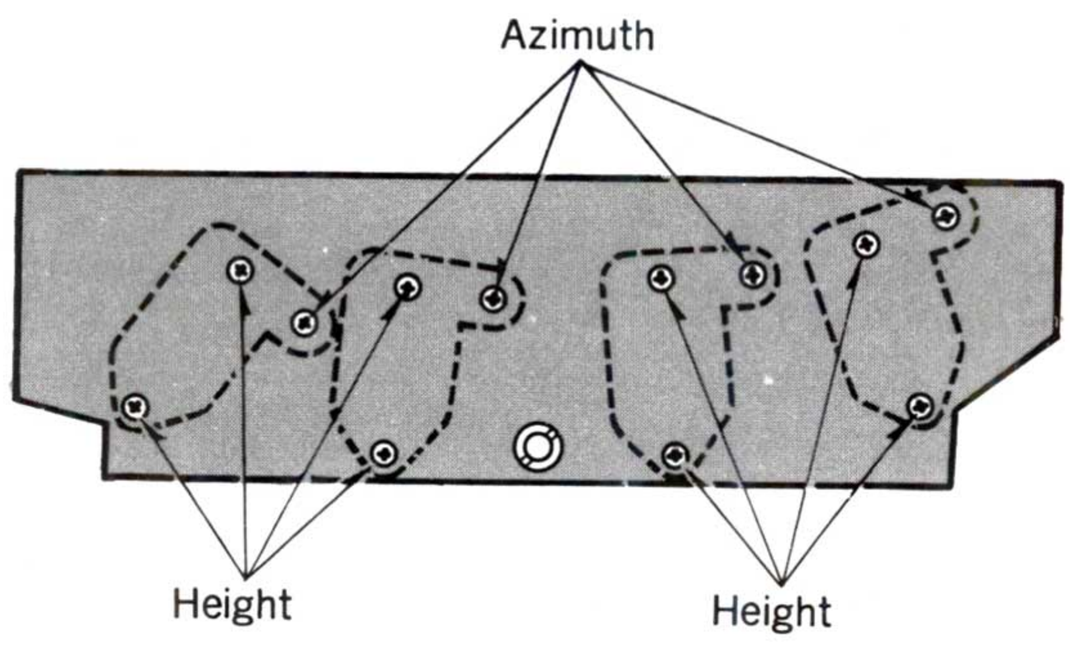

Fig. 10

www.hifiengine.com

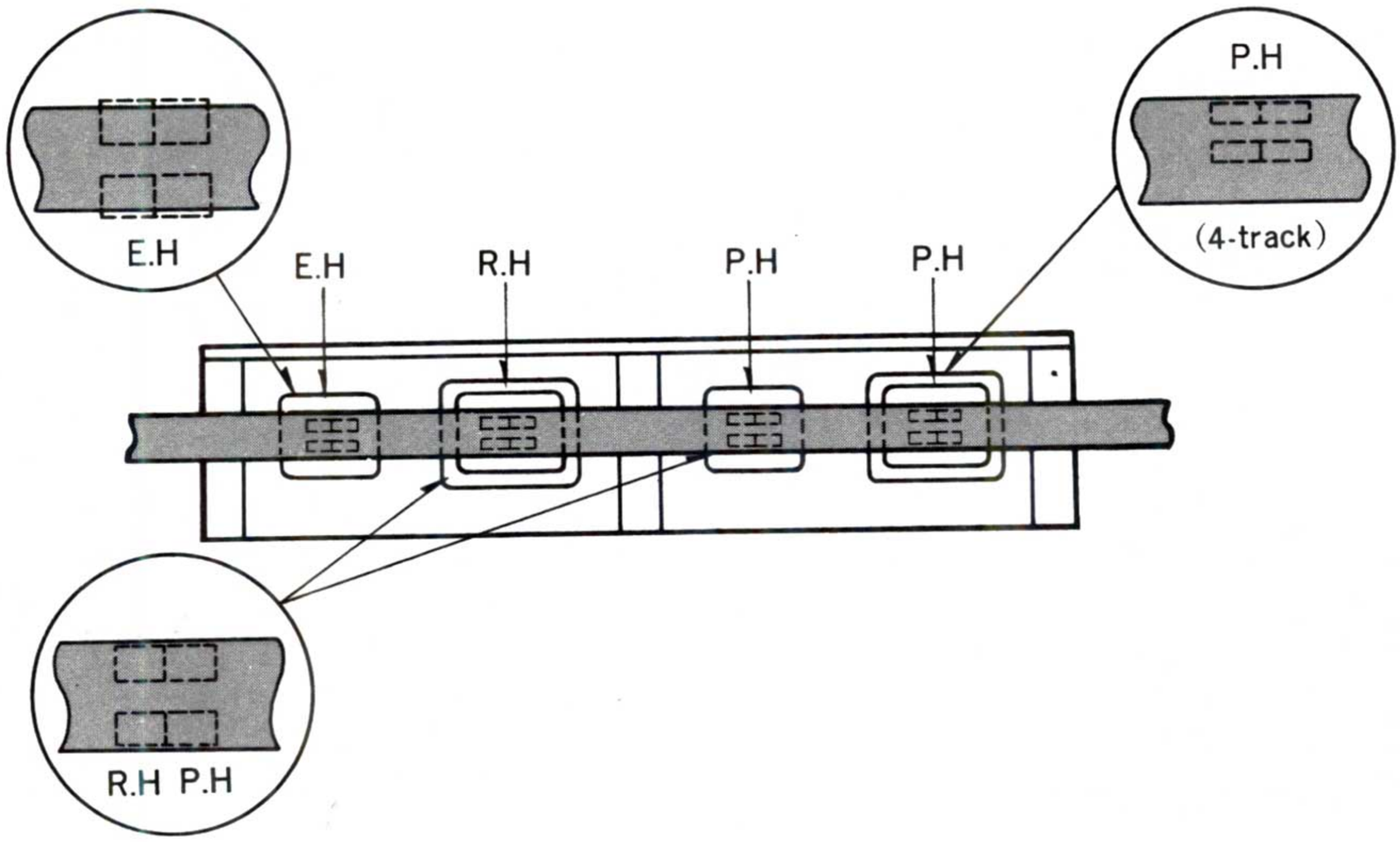

Fig. 11

PLAYBACK HEAD ANGLE ADJUSTMENT

1. Playback the tape at 7-1/2 ips. (19 cm/s) tape speed.
2. Connect a VTVM to the LINE OUT jack (Measure both channels alternately.).
3. Play a head angle adjusting tape (15 kHz, O-AA), and adjust the head azimuth adjusting screw shown in fig. 10 so that line output becomes maximum.
4. Adjust both channels alternately. If the output peak value is found deviated, adjust it to the middle of both channel peak values. (Fig. 12)
5. After adjustment, make sure of the head height according to item of head alignment preceding.
6. After adjustment, lock 3 adjusting screws with lacquer.

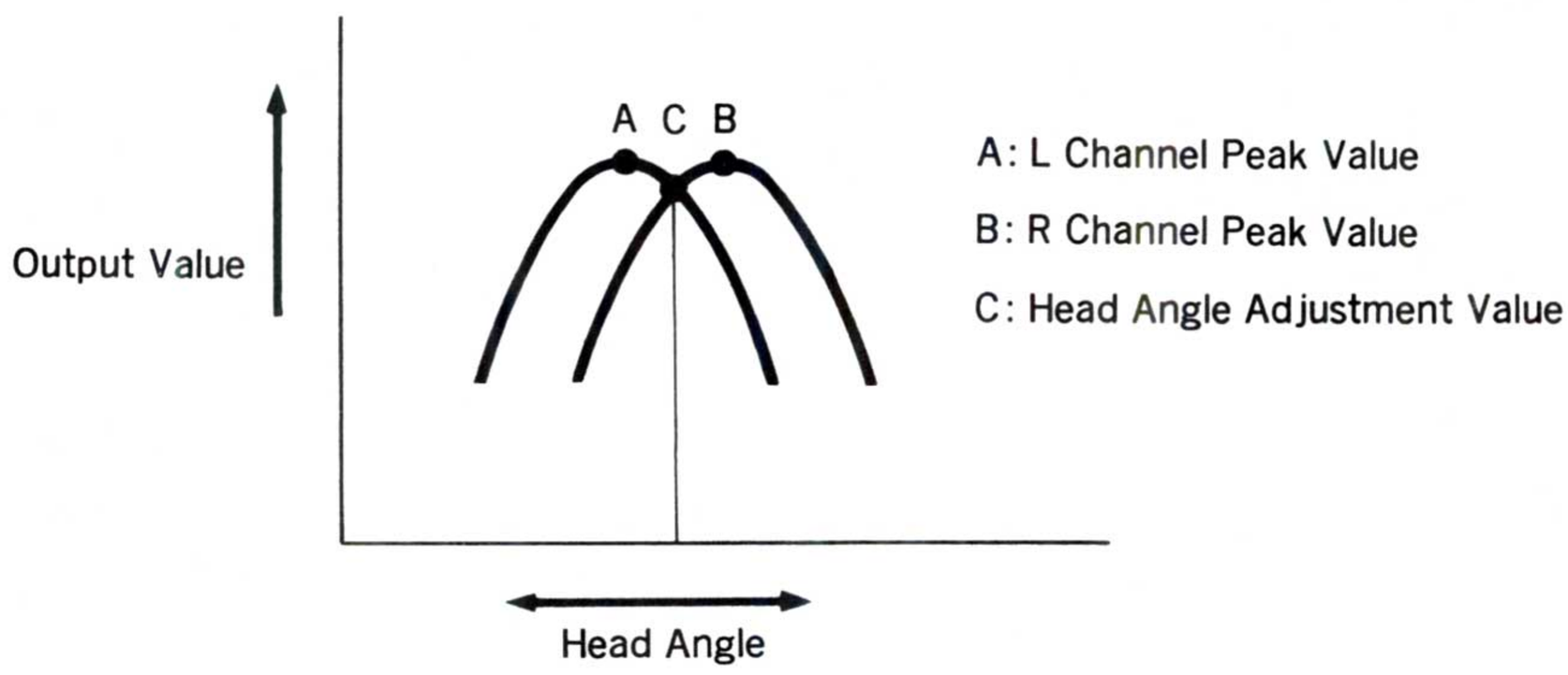

Fig. 12

www.hifiengine.com

RECORD HEAD ANGLE ADJUSTMENT

1. Adjust the record head angle after the playback head adjustment.
2. Supply output from oscillator through attenuator to LINE IN, and output from LINE OUT to the vacuum tube voltmeter. (refer to fig. 13)
3. With the recording level lower by 20 dB than the standard input level (−23 dB) and with 20 kHz frequency, place the unit into the recording mode.
4. Make a recording on a standard blank tape (0-RB-5) at 15 ips. (38 cm/s) tape speed.
5. Place the unit in the TAPE MONITOR mode and measure the output with the vacuum tube voltmeter.
6. Adjust the record head angle adjustment screw so that the vacuum tube voltmeter needle deflects to the maximum, like for playback head.
7. If the output peak value is found deviated, adjust it to the middle of both channel peak values (refer to fig. 12).
8. After adjustment, lock 3 adjusting screws with lacquer.
9. After adjusting all the heads, make sure that the tape runs stably.

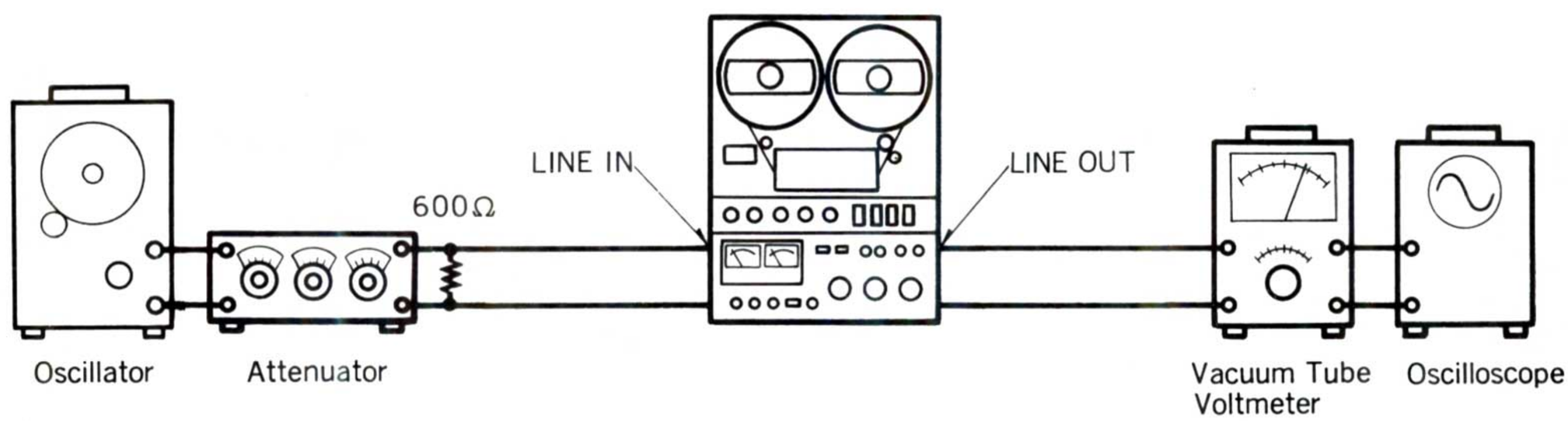

Fig. 13

www.hifiengine.com

AMPLIFIER ADJUSTMENTS

Measurements condition:

Power voltage...AC 120 V; 50/60 Hz

	ITEM	SIGNAL SOURCE CONNECTION	OUTPUT CONNECTION	MODE	ADJUSTMENT	SPEC.	REMARKS
1	Measurement of recording bias oscillation frequency.	——	Oscilloscope with AF OSC to both ends of R415. Shown in fig. 18. See fig. 14.	Record	——	185± 10 kHz	Adjust the AF OSC to obtain the circular and stationary Lissajous' pattern on the oscilloscope. The bias oscillation frequency is indicated by the scale of AF OSC.
2	Measurement & adjustment of recording bias current.	——	VTVM to both ends of R413 (for CH1), R414 (for CH2). Shown in fig. 18. See fig. 15.	Record	For normal tape: VR24 (CH1) VR26 (CH2)	28 mV	Set the tape selector to normal input level control to minimum. Refer to the method of overall frequency pesponse adjustment informed on page 12.
3	Measurement of recording level.	1 kHz MIC −73±2 dB LINE IN −23±2 dB DIN −37±2 dB	VTVM to both ends of R413 (for CH1), R414 (for CH2). Shown in fig. 18. See fig. 16.	Record	VR7 (for CH1) VR8 (for CH2)	2.8 mV	To obtain 280μA of recording current through the recording head. Stop the bias oscillation by unsoldering the wire (A) as shown on printed circuit board (page 16). Recording level control VR should be maximum.
4	Adjustment of recording level indicator.	The same as above.	——	Record	VR5 (for CH1) VR6 (for CH2)	0 VU on VU meter.	At 0.5 V of line output.
5	Measurement of erase current.	——	VTVM to both ends of R415. Shown in fig. 18. See fig. 17.	Record	——	0.14 V	Erase current (0.14A) $= \frac{\text{Voltage value (0.14 V)}}{\text{Resistance value (1}\Omega)}$
6	Adjustment of line output level.	Playback the test tape (O-FIP).	VTVM to line output jack.	Playback	For 2-track: VR13 (CH1) VR14 (CH2) For 4-track: VR15 (CH1) VR16 (CH2)	0.5 V	Playback level control should be maximum.
7	Adjustment of bias trap coil.	——	VTVM to TP1 (for CH1), and 2 (for CH2).	Record	L3 (for CH1) L4 (for CH2)	Minimum	Set input level to minimum. To adjust L3 and L4, use plastic adjusting driver.

www.hifiengine.com

	ITEM	SIGNAL SOURCE CONNECTION	OUTPUT CONNECTION	MODE	ADJUSTMENT	SPEC.	REMARKS
8	Adjustment of playback frequency response.	Playback the test tape. O-FIP (7-1/2 ips.) O-FKP (15 ips.)	VTVM to line output jack. See fig. 21.	Playback	7-1/2 ips. mode VR9 (for CH1) VR10 (for CH2) 15 ips. mode VR11 (for CH1) VR12 (for CH2)	See fig. 19, 20.	If the value is not in the tolerance at 20 kHz (at 15 ips.) or 15 kHz (at 7-1/2 ips.), adjust each variable resistors.
9	Adjustment of over all frequency responce.	See fig. 24.	VTVM to line output jack.	——	L1 (for CH1) L2 (for CH2)	See fig. 22, 23.	Use normal tape (scotch #202). If the values is not with in tolerence at 25 kHz (15 ips.), 20 kHz (7-1/2 ips.), adjust L1 or L2. Adjustment method is informed on page 12. Use plastic adjusting driver for adjustment of L1 and L2.

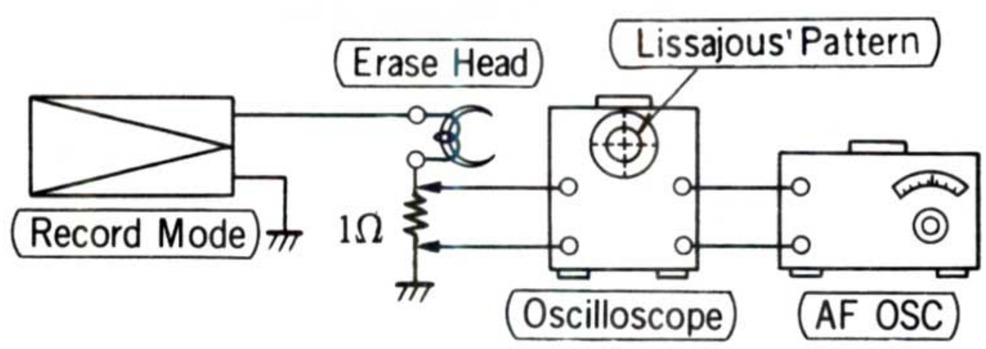

Fig. 14

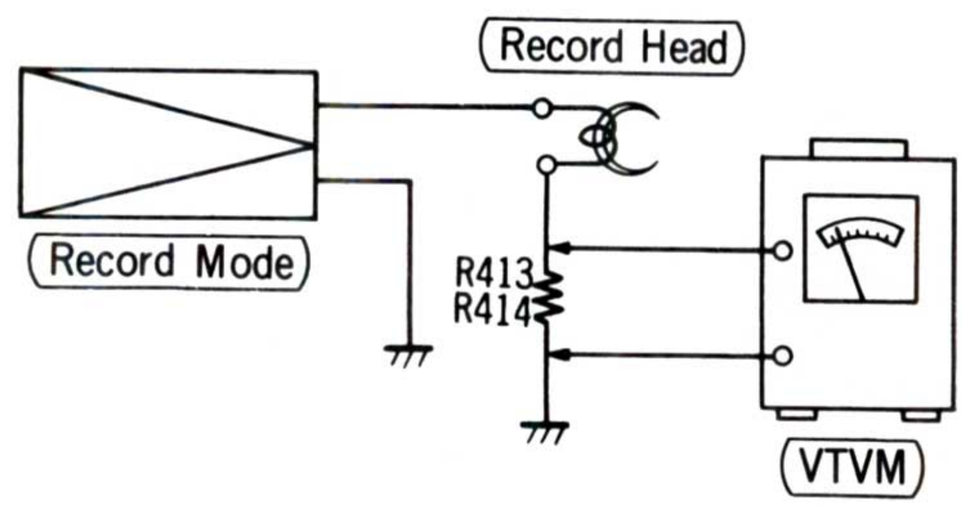

Fig. 15

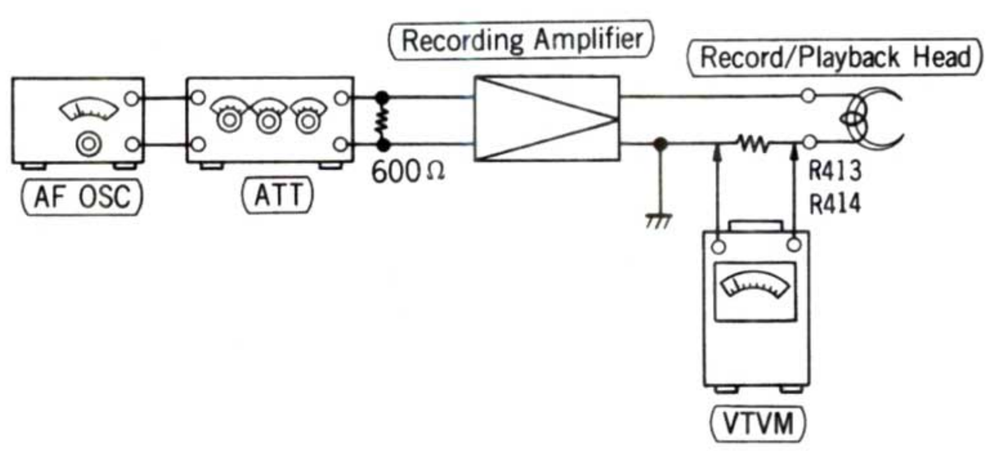

Fig. 16

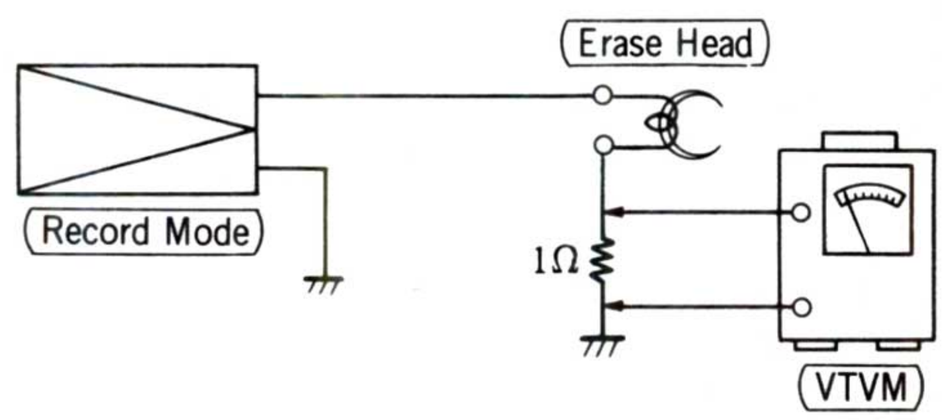

Fig. 17

www.hifiengine.com

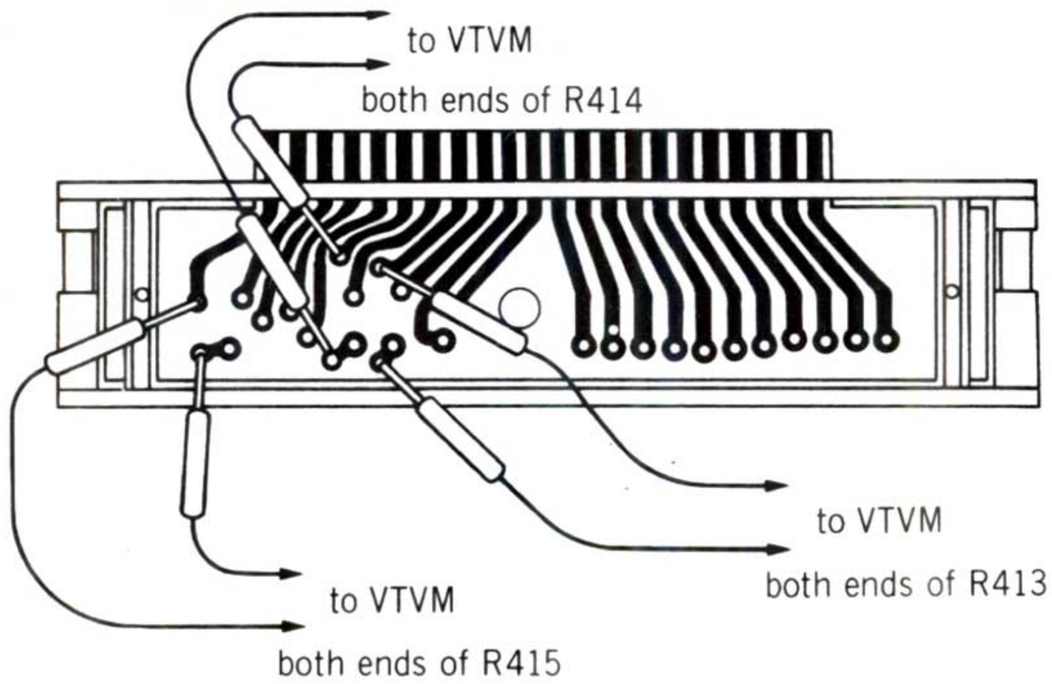

Fig. 18

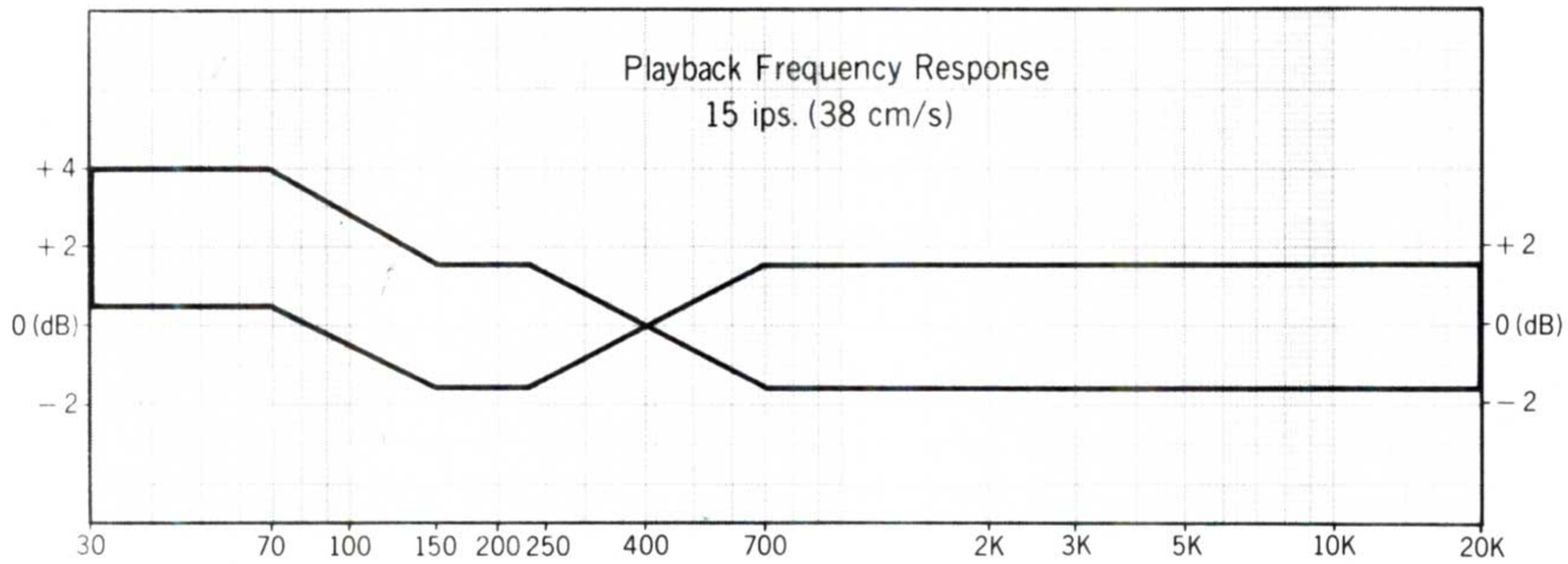

Fig. 19

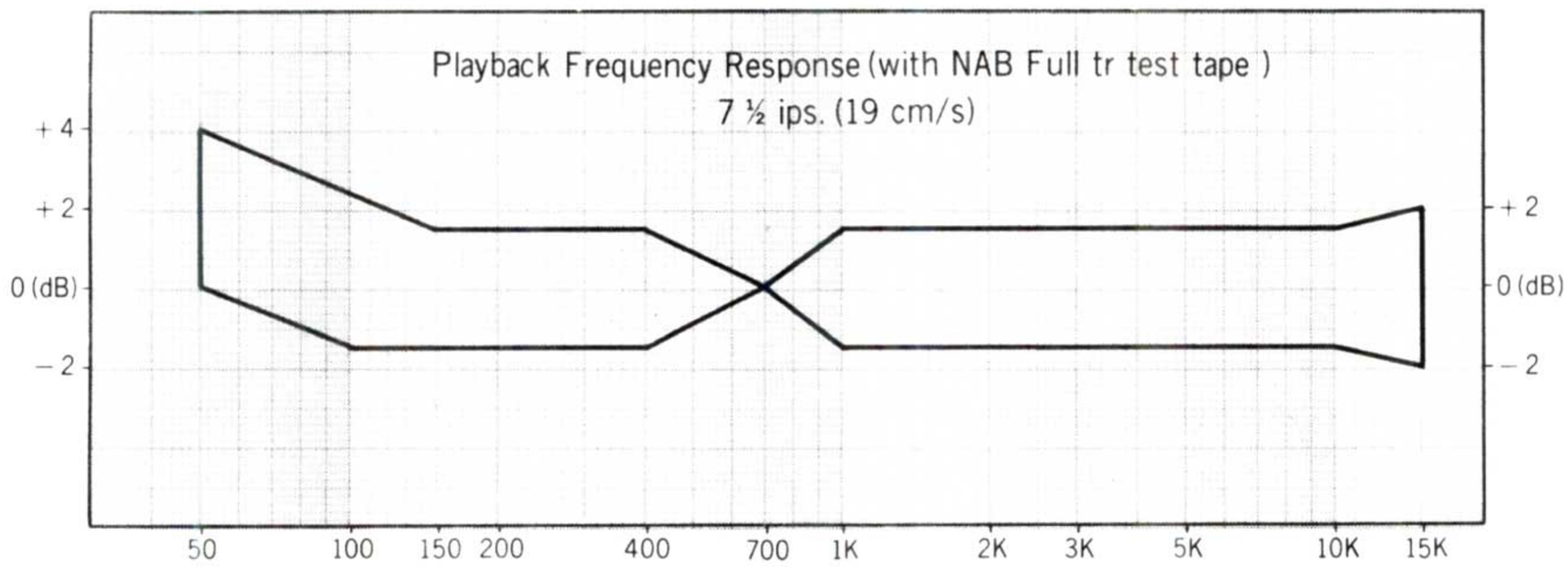

Fig. 20

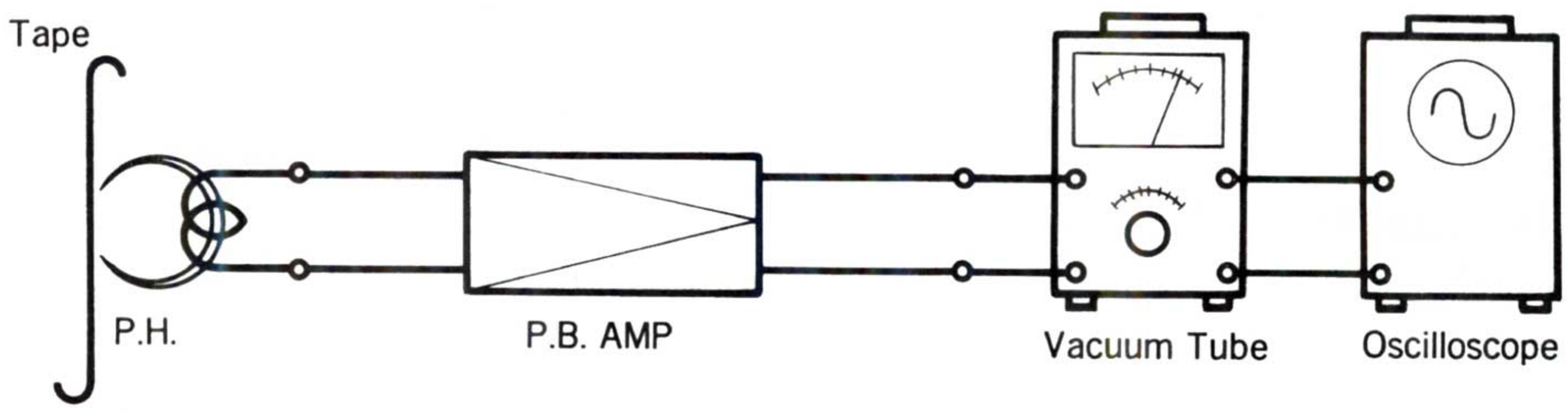

Fig. 21

www.hifiengine.com

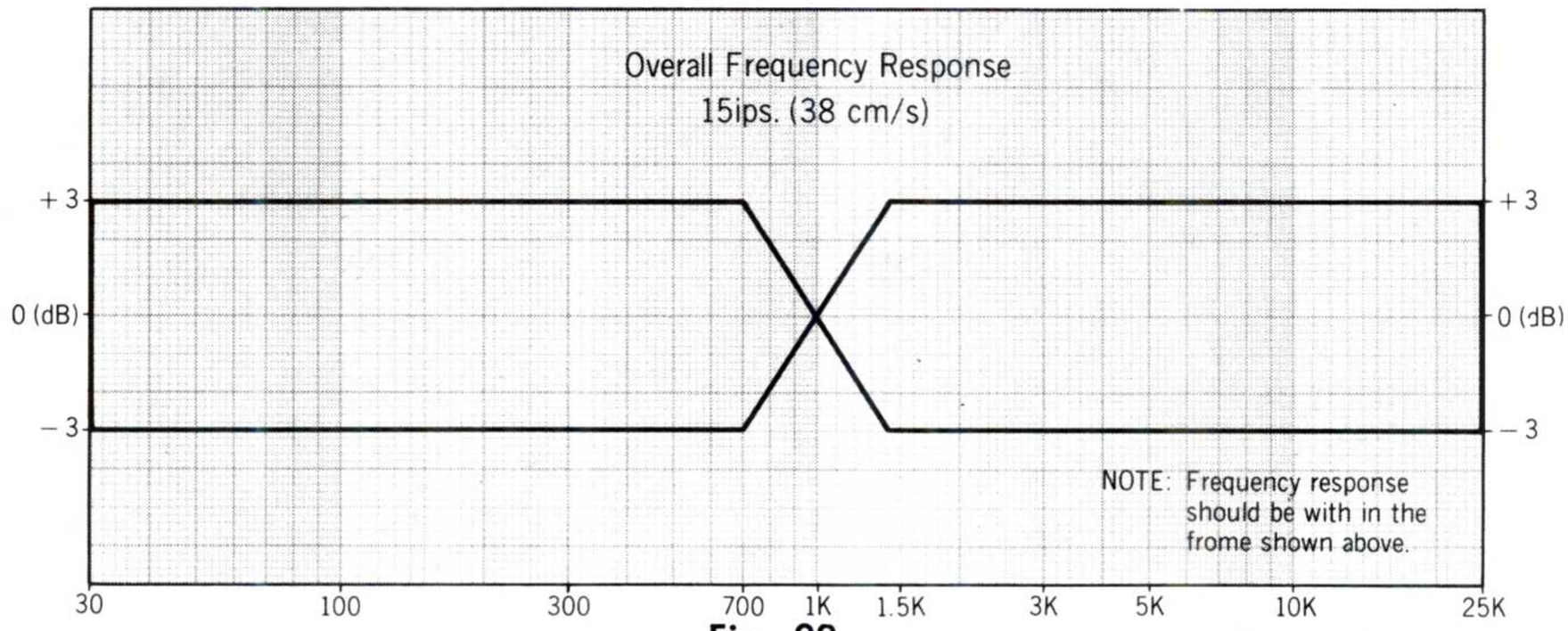

Fig. 22

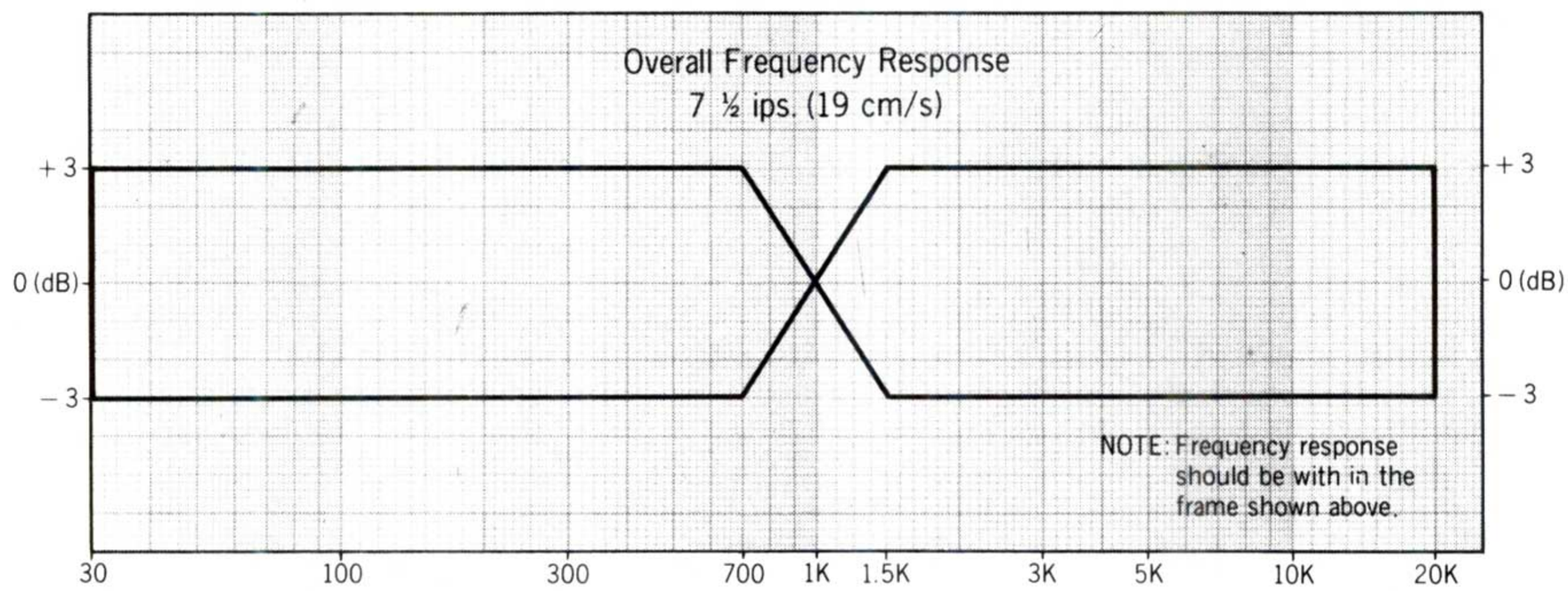

Fig. 23

METHOD OF MEASUREMENT (Overall Frequency Response)

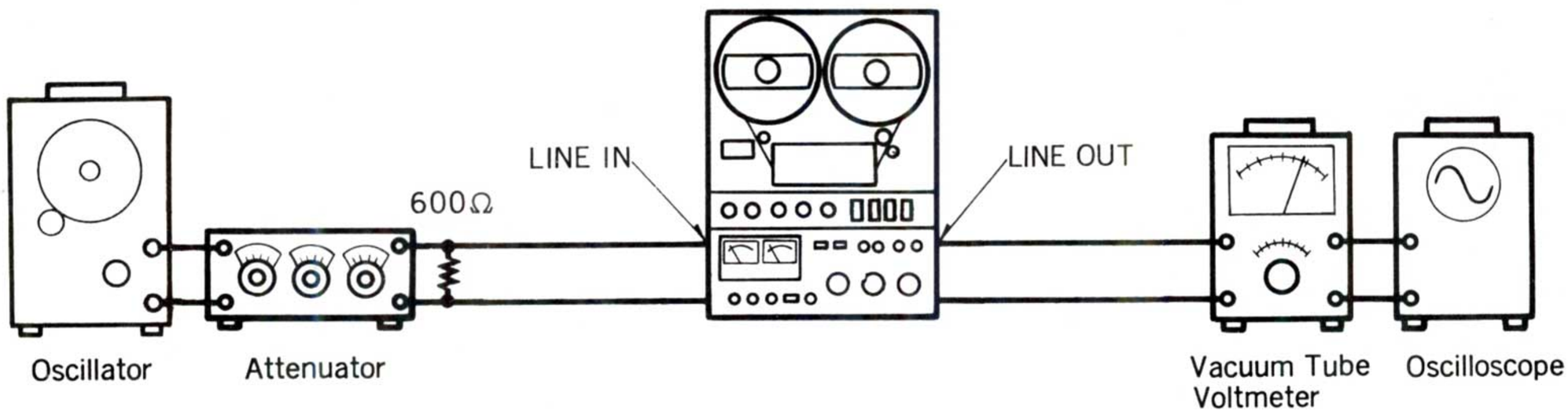

Fig. 24

1. Set the tape selector to normal position.
2. Apply input to LINE IN at a level lower by 20 dB than the level at which the VU meter indicates 0 VU and record 30 Hz~25 kHz (for 15 ips.), 30 Hz~20 kHz (for 7-1/2 ips.).
3. Playback the same tape and make sure that the reading of the VTVM satisfy the standard value, shown in fig. 22 and 23.
4. Thread the low noise tape (scotch #206 or #207).
5. Set the tape selector to low noise position.
6. Record and playback in the same way mentioned in step 2 and 3 above.
7. Adjust VR25 (CH1) and VR27 (CH1) so that the value at 25 kHz (15 ips.) is within the torelance shown in fig. 22.

www.hifiengine.com

HOW TO REMOVE IMPEDANCE ROLLER AND TENSION ARM

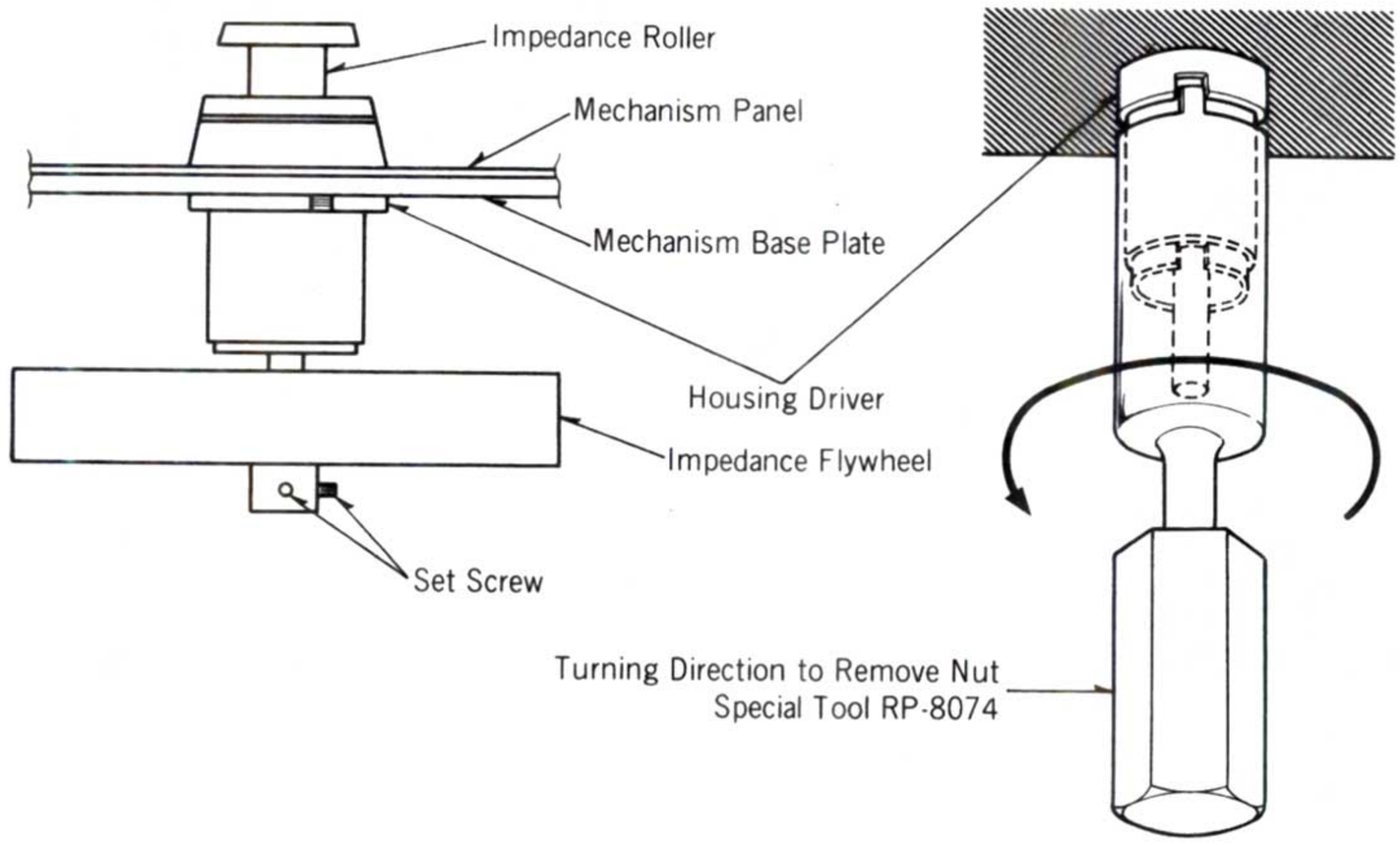

Fig. 25

1. Loosen 2 set screws with the hexagonal wrench, and remove the impedance flyweel.
2. Remove the housing driver with special tool (RP-8074) as shown in fig. 25.
3. Then impedance roller can be removed.

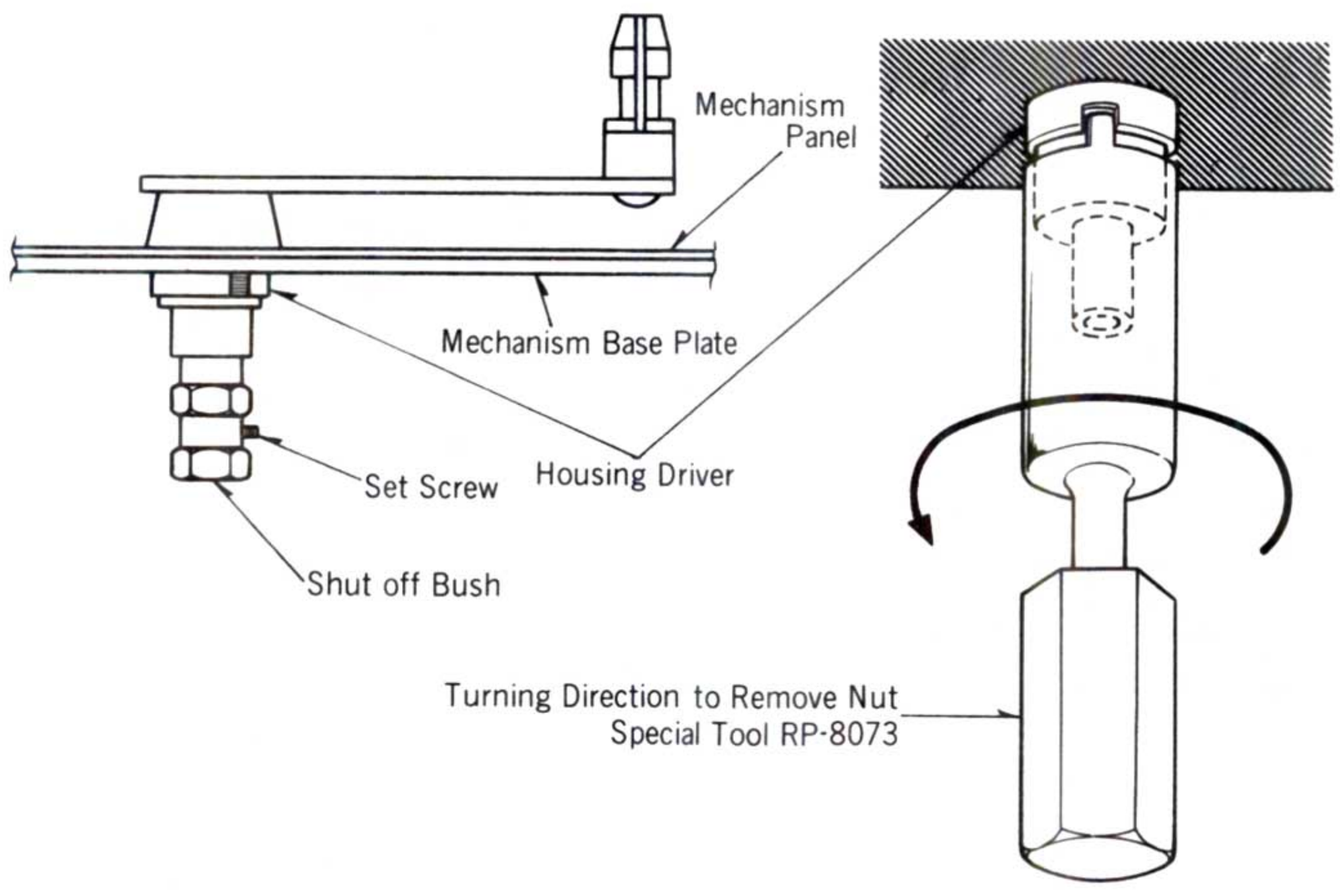

Fig. 26

1. Loosen the set screw with the hexagonal wrench, and remove the shut off bush.
2. Remove the housing driver with special tool (RP-8073) as shown in fig. 26.
3. Then tension arm can be removed.

www.hifiengine.com

SCHEMATIC DIAGRAM MODEL RS-1030US

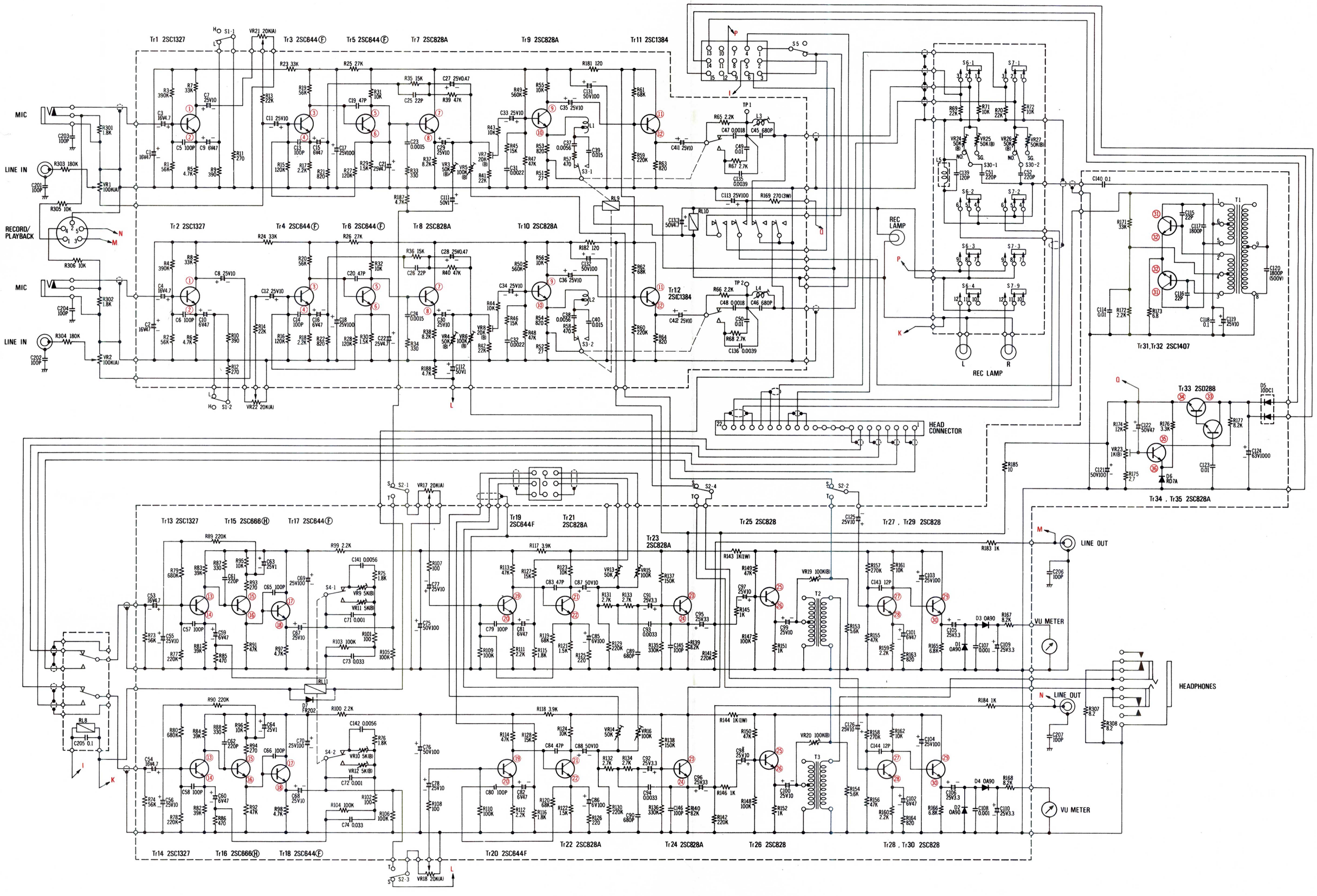

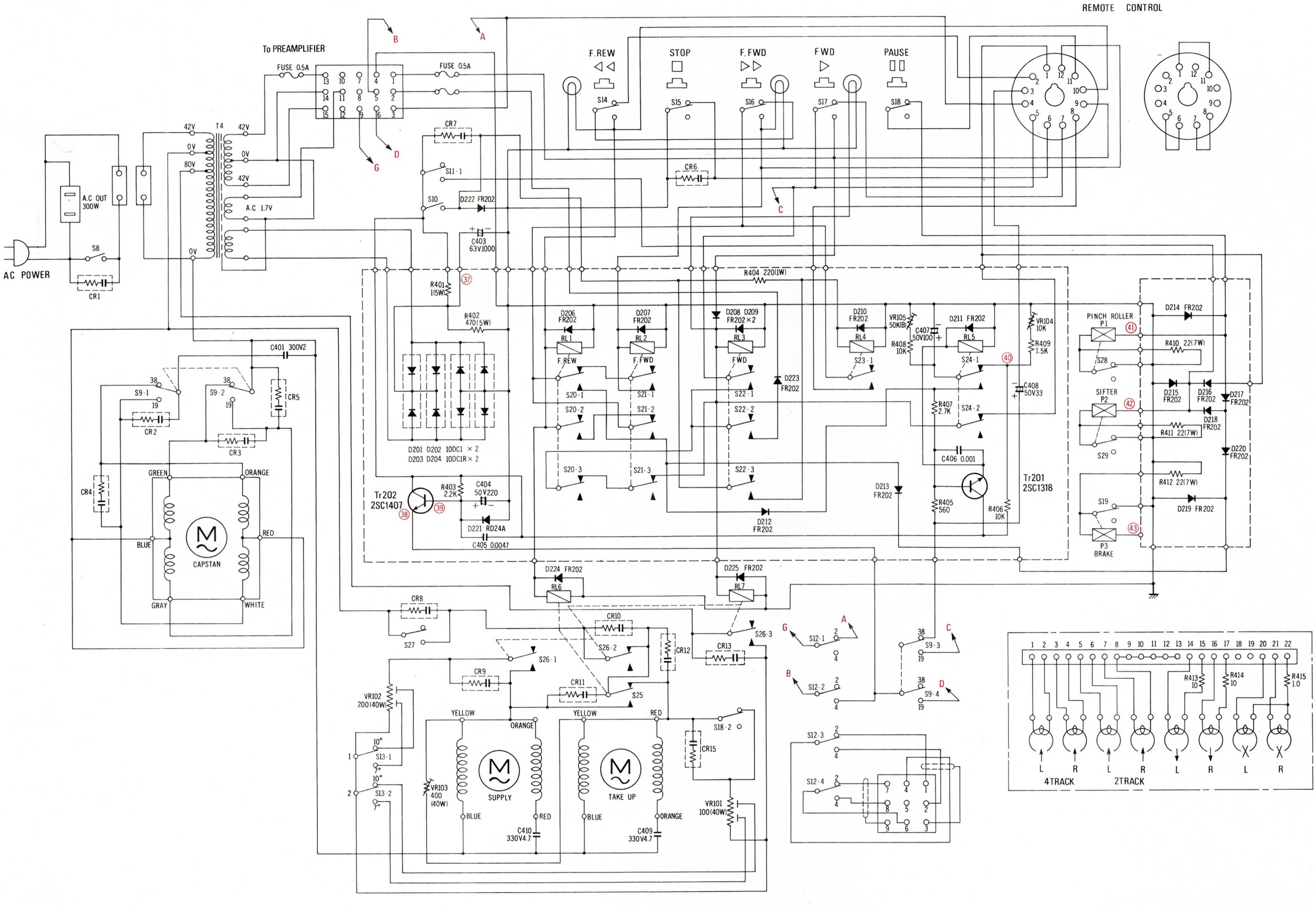
REMOTE CONTROL
To PREAMPLIFIER
FUSE 0.5A
FUSE 0.5A
F.REW
STOP
F.FWD
FWD
PAUSE
S14
S15
S16
S17
S18
T4
42V
0V
80V
42V
0V
42V
A.C 1.7V
0V
A.C OUT 300W
S8
AC POWER
CR1
CR7
S11-1
S10
D222 FR202
C403 63V1000
CR6
R401 1(5W)
R402 470(5W)
R404 220(1W)
D206 FR202
D207 FR202
D208 D209 FR202×2
D210 FR202
D211 FR202
D214 FR202
RL1
RL2
RL3
RL4
RL5
RL6
RL7
F.REW
F.FWD
FWD
S20-1
S20-2
S20-3
S21-1
S21-2
S21-3
S22-1
S22-2
S22-3
D223 FR202
S23-1
S24-1
S24-2
VR105 50K(B)
C407 50V100
R408 10K
R407 2.7K
C406 0.001
VR104 10K
R409 1.5K
C408 50V33
PINCH ROLLER P1
SIFTER P2
P3 BRAKE
S28
S29
S19
R410 22(7W)
R411 22(7W)
R412 22(7W)
D215 FR202
D216 FR202
D217 FR202
D218 FR202
D219 FR202
D220 FR202
C401 300V2
CR2
CR3
CR4
CR5
S9-1
S9-2
GREEN
ORANGE
BLUE
RED
GRAY
WHITE
CAPSTAN
D201 D202 10DC1 × 2
D203 D204 10DC1R × 2
Tr202 2SC1407
R403 2.2K
C404 50V220
D221 RD24A
C405 0.0047
D213 FR202
D212 FR202
R405 560
R406 10K
Tr201 2SC1318
CR8
S27
CR10
S26-1
S26-2
S26-3
CR12
CR13
CR9
CR11
S25
VR102 200(40W)
S13-1
S13-2
10″
7″
YELLOW
ORANGE
YELLOW
RED
S18-2
CR15
VR103 400 (40W)
SUPPLY
TAKE UP
BLUE
RED
BLUE
ORANGE
C410 330V4.7
C409 330V4.7
VR101 100(40W)
S12-1
S12-2
S12-3
S12-4
S9-3
S9-4
R413 10
R414 10
R415 1.0
L
R
L
R
L
R
L
R
4TRACK
2TRACK

STANDARD VOLTAGE CHART

Check Point	Voltage	Check Point	Voltage	Check Point	Voltage	Check Point	Voltage
①	+5.3 V	⑫	+19 V	㉓	+35 V	㉞	+36 V
②	+0.88 V	⑬	+16.8 V	㉔	+21 V	㉟	+37 V
③	+3.2 V	⑭	+2.94 V	㉕	+20 V	㊱	+6.7 V
④	+0.61 V	⑮	+17.6 V	㉖	+9.6 V	㊲	+27.7 V
⑤	+17 V	⑯	+9.8 V	㉗	+10.4 V	㊳	+22.1 V
⑥	+2.55 V	⑰	+19.9 V	㉘	+2.1 V	㊴	+22.6 V
⑦	+34 V	⑱	+19.2 V	㉙	+21 V	㊵	+10.4 V
⑧	+16.2 V	⑲	+3.4 V	㉚	+9.88 V	㊶	+16.2 V
⑨	+17.2 V	⑳	+0.94 V	㉛	+27.7 V	㊷	+17.2 V
⑩	+1.45 V	㉑	+17 V	㉜	+0.23 V	㊸	+15 V
⑪	+35 V	㉒	+2.69 V	㉝	+42.2 V		

NOTE: All measurements are under no signal conditions with volume at minimum position.
Use VTVM for voltage measurements.

NOTE:

1. S1-1, S1-2 ..... MIC impeadance select switch (shown in LOW position).
2. S2-1～S2-4..... Tape monitor switch (shown in SOURCE position).
3. S3-1～S3-4..... Equalizer select switch (Recording).
4. S4-1, S4-2 ..... Equalizer select switch (Playback).
5. S5 ..... Record switch.
6. S6-1～S6-4..... Record mode switch (LEFT).
7. S7-1～S7-4..... Record mode switch (RIGHT).
8. S8 ..... Power switch.
9. S9 ..... Tape speed select switch.
10. S10 ..... Shut off switch.
11. S11 ..... Reel motor off switch.
12. S12 ..... 2-track/4-track select switch.
13. S13 ..... Tape tension select switch.
14. S14 ..... Rewind switch.
15. S15 ..... Stop switch.
16. S16 ..... Fast forward switch.
17. S17 ..... Forward switch.
18. S18 ..... Pause switch.
19. S19 ..... Brake switch.
20. S20 ..... Rewind switch coupled with RY1.
21. S21 ..... Fast forward switch coupled with RY2.
22. S22 ..... Forward switch coupled with RY3.
23. S23 ..... Relay switch RY4.
24. S24 ..... Relay switch RY5.
25. S25 ..... Relay switch RY6.
26. S26 ..... Relay switch RY7.
27. S27 ..... Cooperating with brake.
28. S28 ..... Cooperating with P1.
29. S29 ..... Cooperating with P2.
30. S30-1, 30-2.....Tape select switch (shown in NORMAL position).
31. VR1, 2 ..... Line in level control.
32. VR3, 4 ..... Source level adjustment VR.
33. VR5, 6 ..... Level meter adjustment at source.
34. VR7, 8 ..... Recording level adjustment VR.
35. VR9, 10 ..... Playback equalizer adjustment VR (7-1/2 ips.).
36. VR11, 12 ..... Playback equalizer adjustment VR (15 ips.).
37. VR13, 14 ..... 2-track playback level adjustment VR.
38. VR15, 16 ..... 4-track playback level adjustment VR.
39. VR17, 18 ..... Output level control VR.
40. VR19, 20 ..... Level meter adjustment at tape.
41. VR21, 22 ..... MIC input level control VR.
42. VR23 ..... DC voltage adjustment VR.
43. VR24, 25 ..... Recording bias adjustment VR (LEFT).
44. VR26, 27 ..... Recording bias adjustment VR (RIGHT).
45. VR101 ..... Forward takeup tension adjustment VR.
46. VR102 ..... Forward back tension adjustment VR.
47. VR103 ..... FF/REW back tension adjustment VR.
48. VR104 ..... 7-1/2 ips./15 ips. select delay time adjustment VR.
49. VR105 ..... FF/REW → forward select delay time adjustment VR.
50. Resistors are ohms (Ω), 1/4 watt unless specified otherwise.
    K=1,000Ω.
51. Capacitors are microfarad (μF) unless specified otherurise.
    P=Pico-farads.
52. Encirculed numbers (○) show the checkpoints for voltage.
    The values are marked in the standard voltage chart.

www.hifiengine.com

CIRCUIT BOARD

RECORD CIRCUIT BOARD

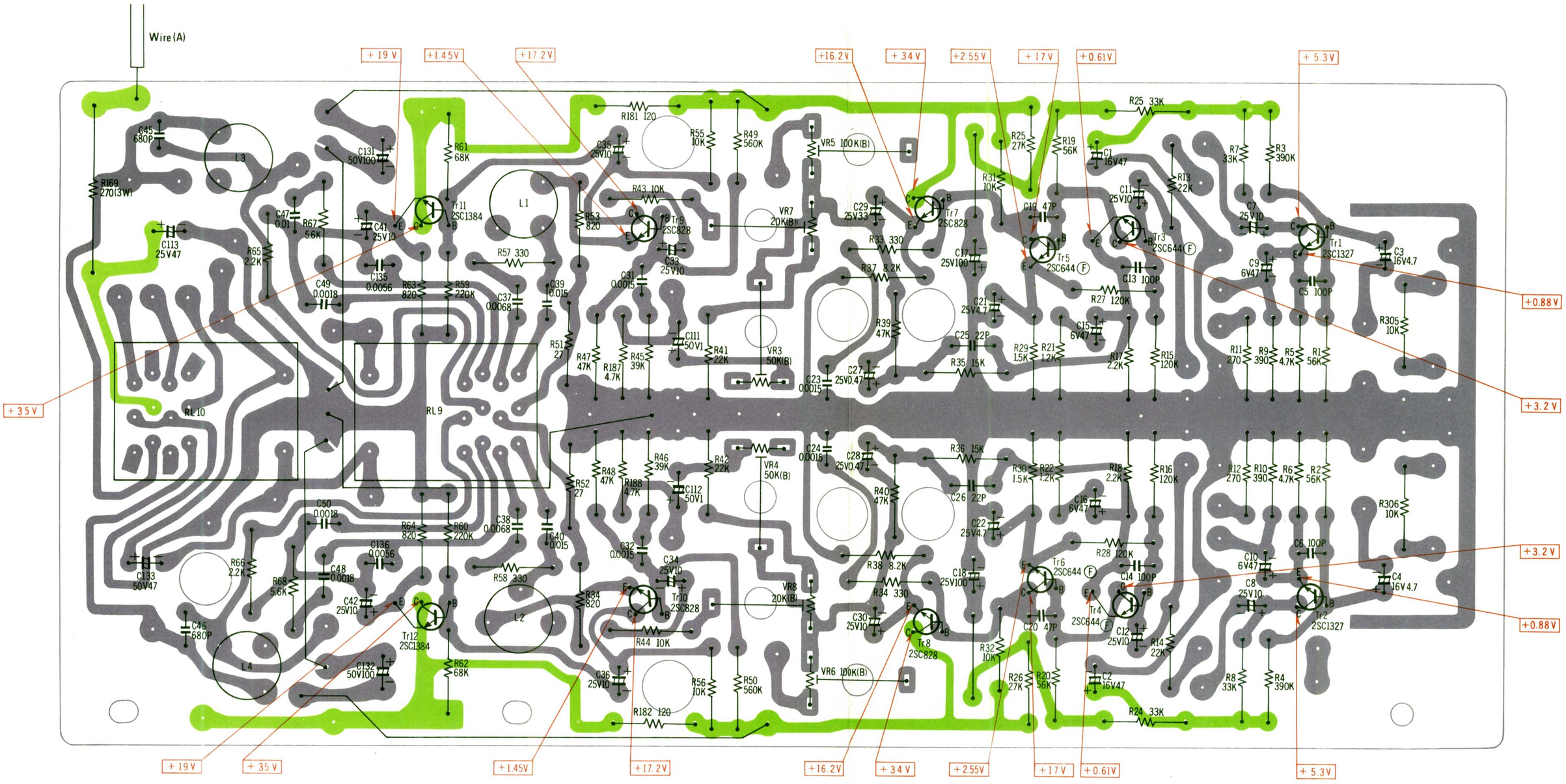

PLAYBACK CIRCUIT BOARD

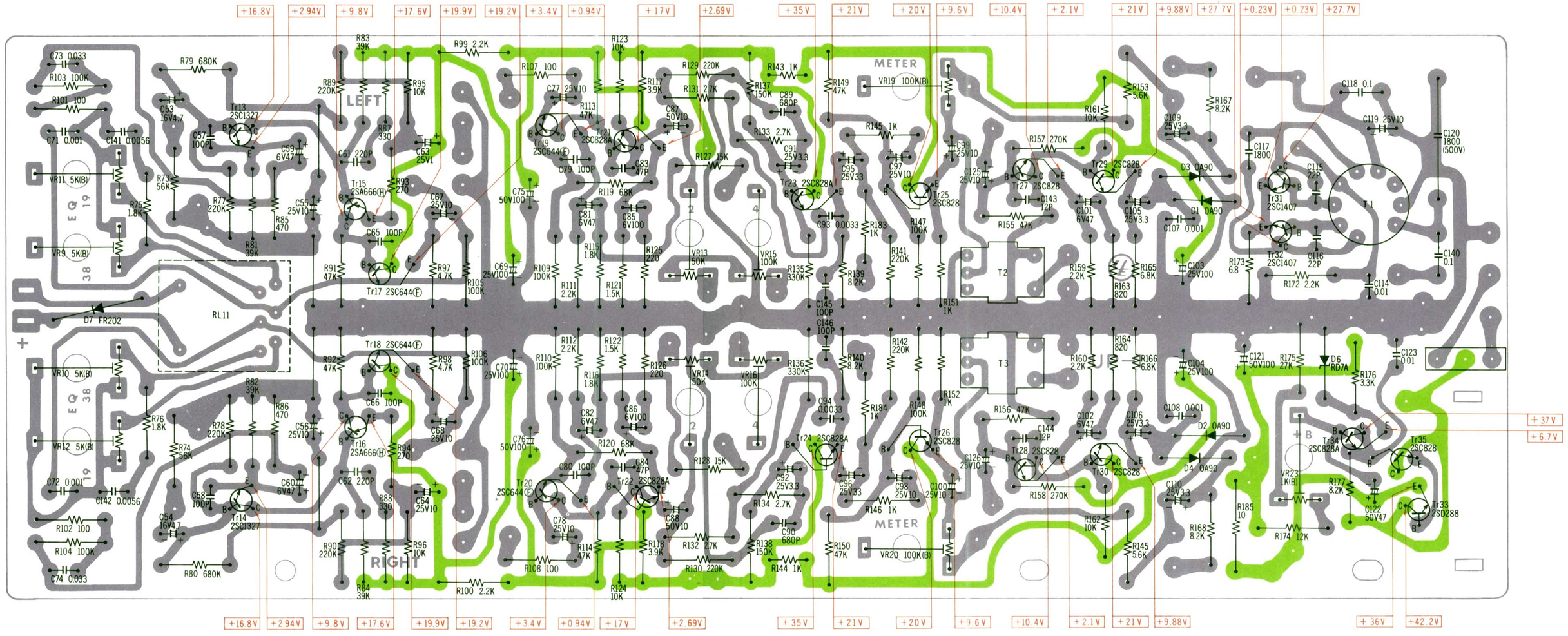

CONTROL CIRCUIT BOARD

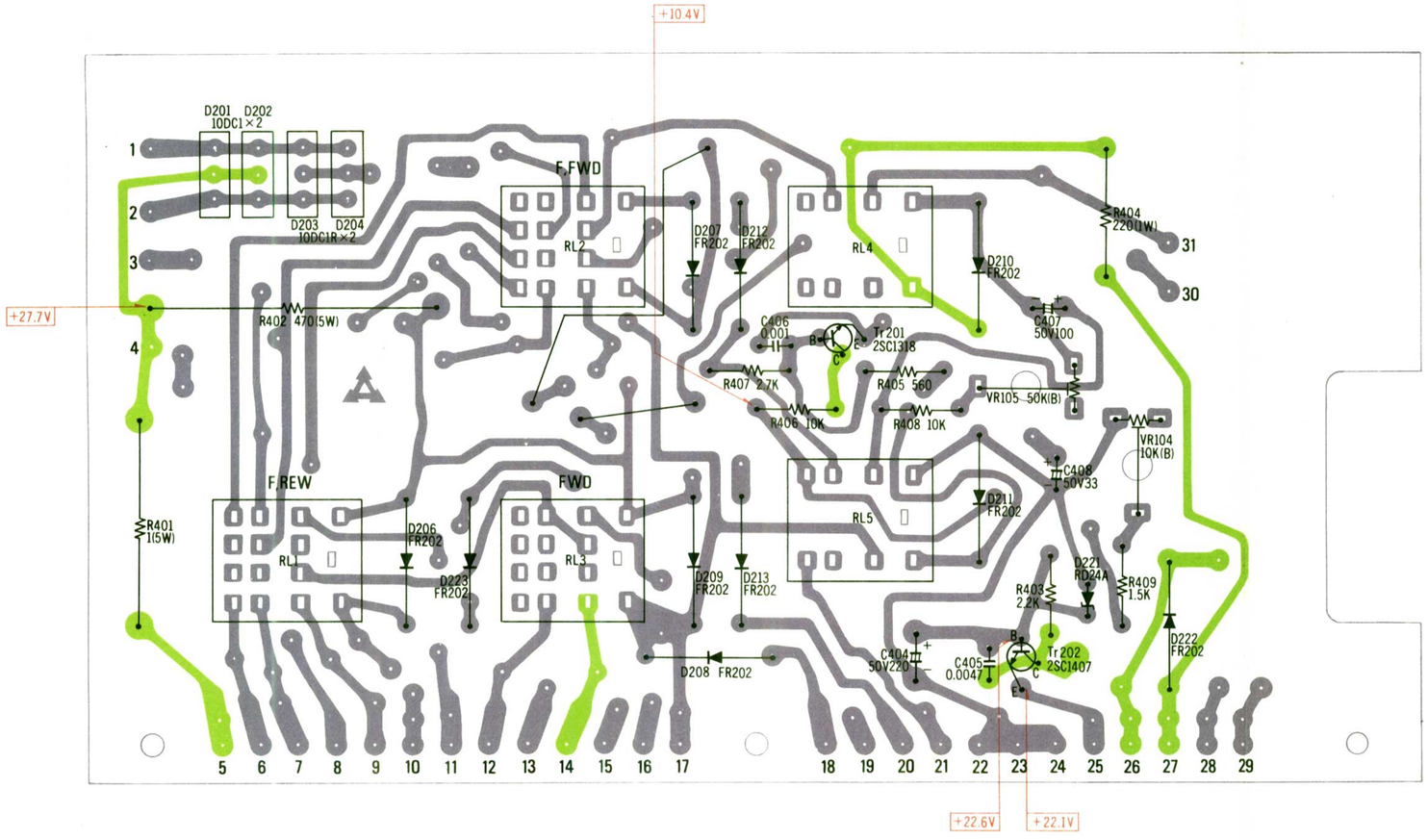

NOTE:

The circuit shown in green on the conductor is +B circuit.
Values indicated in ▭ are DC voltages between the chassis and electrical parts.

RECORD/PLAYBACK SELECT CIRCUIT BOARD

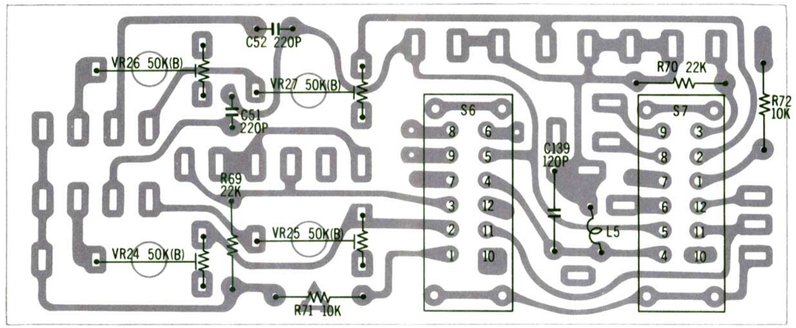

PLUNGER OPERATE CIRCUIT BOARD

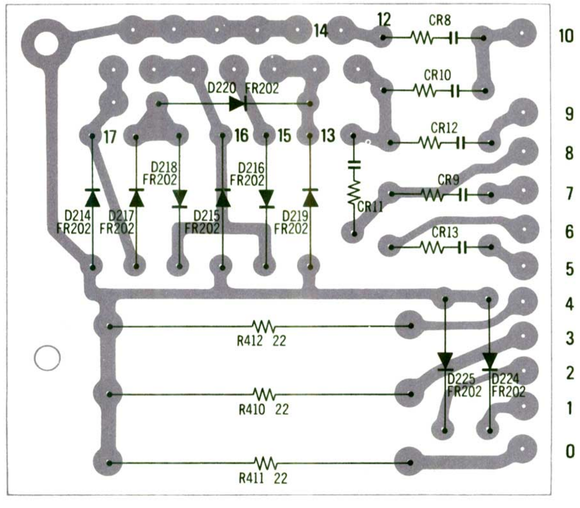

ELECTRICAL PARTS LOCATION

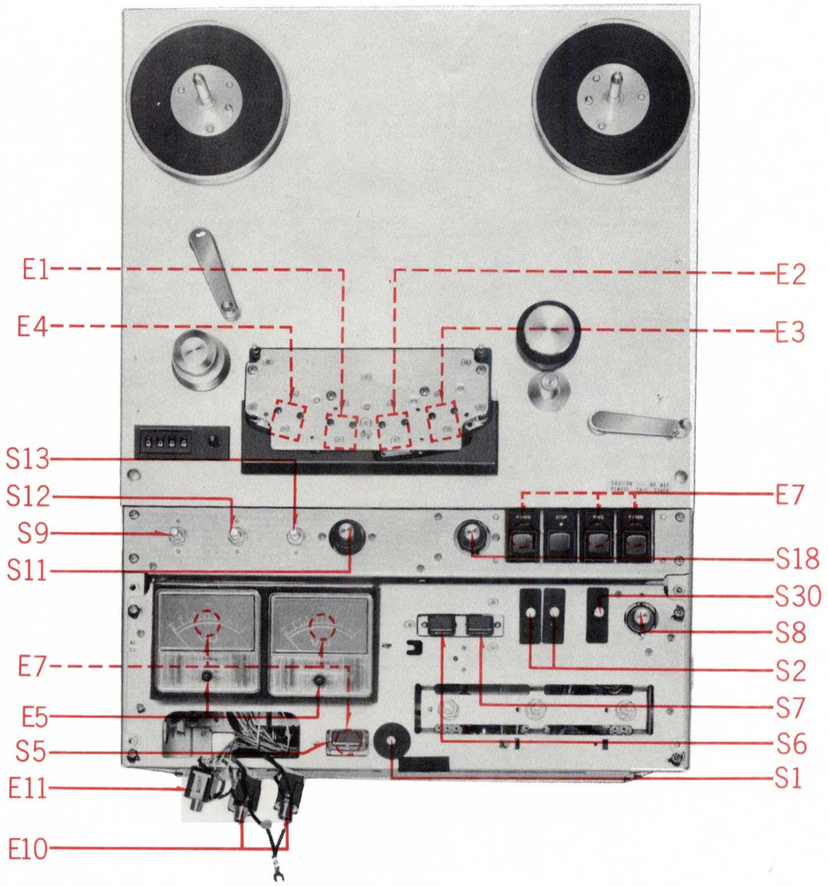

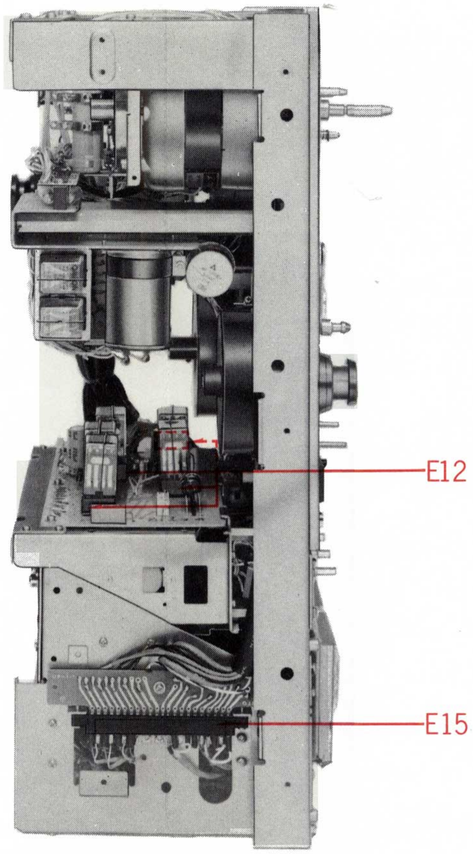

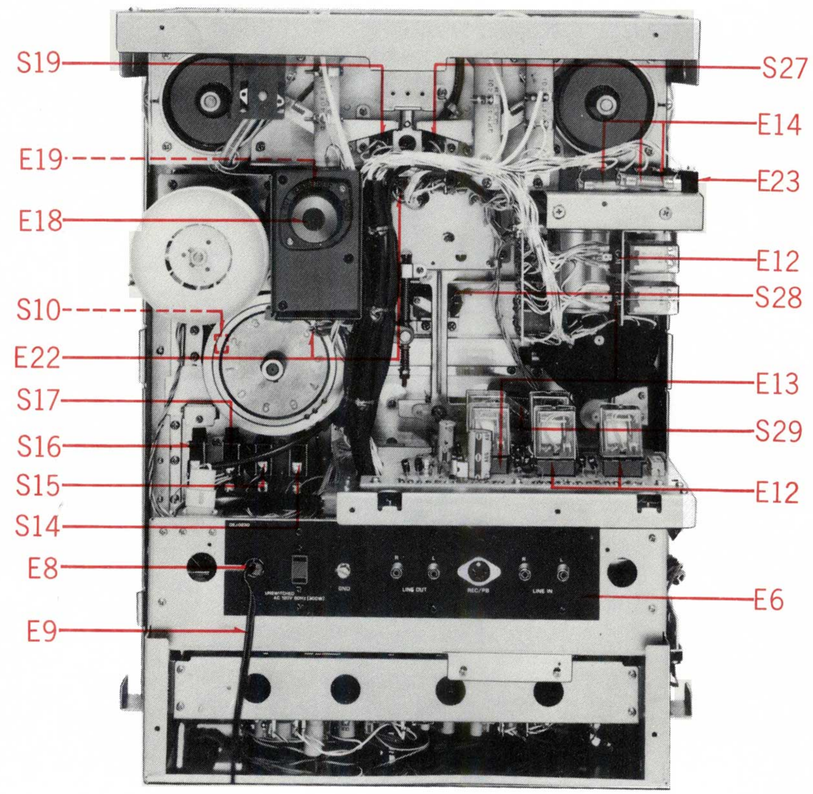

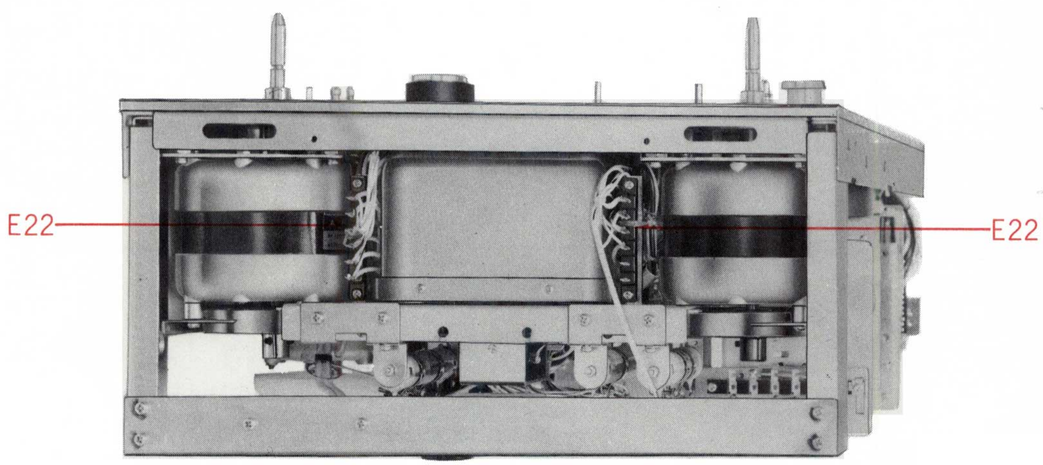

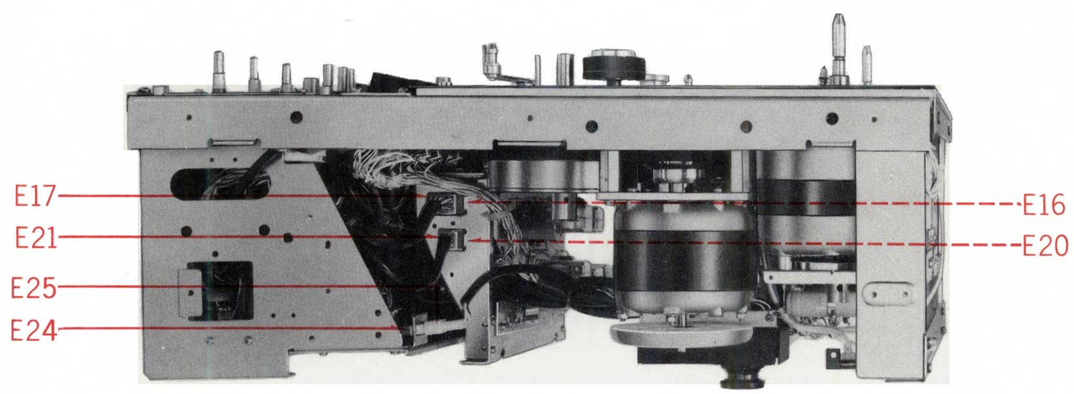

CABINET PARTS

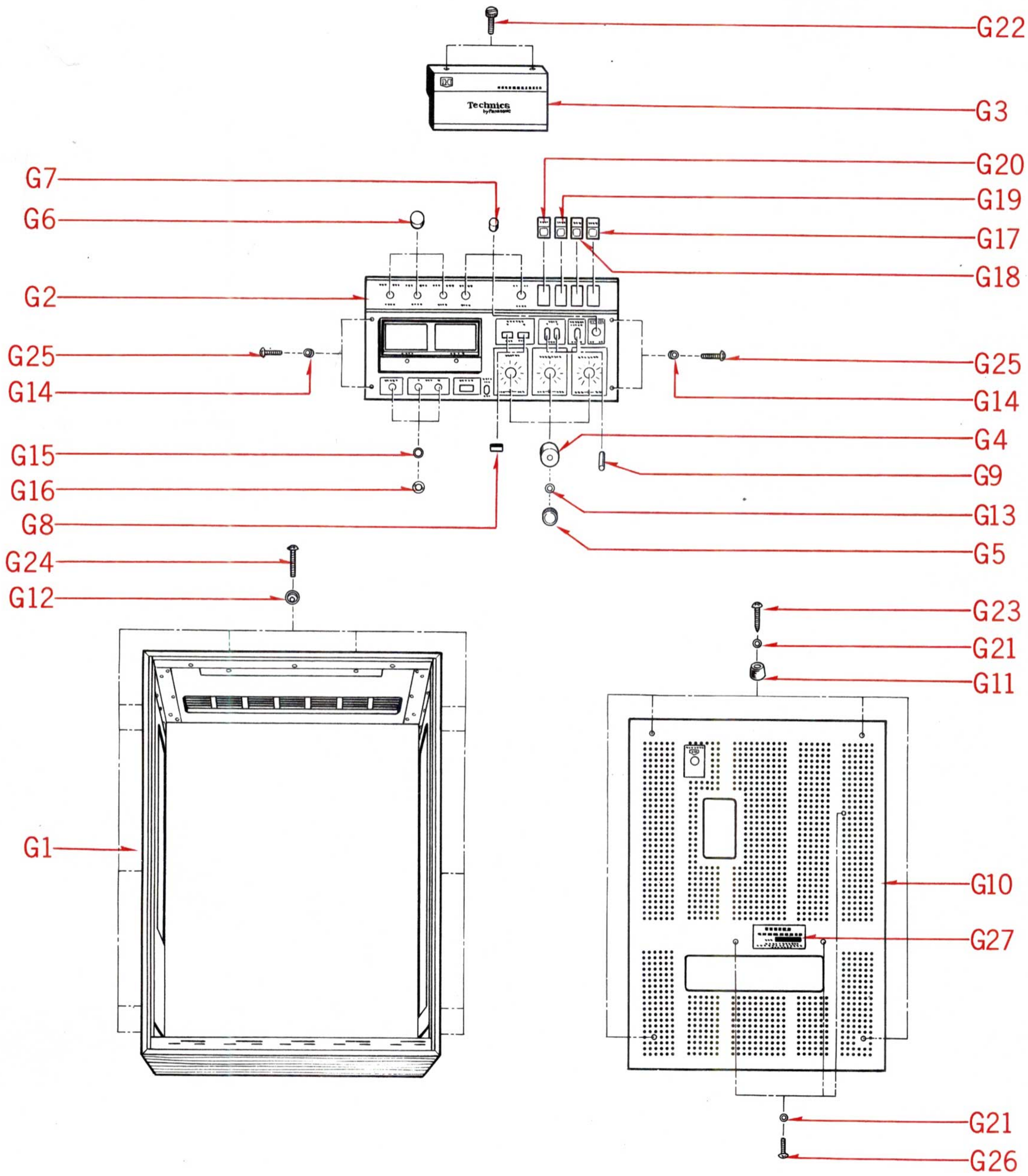

www.hifiengine.com

COMPONENT PACKING

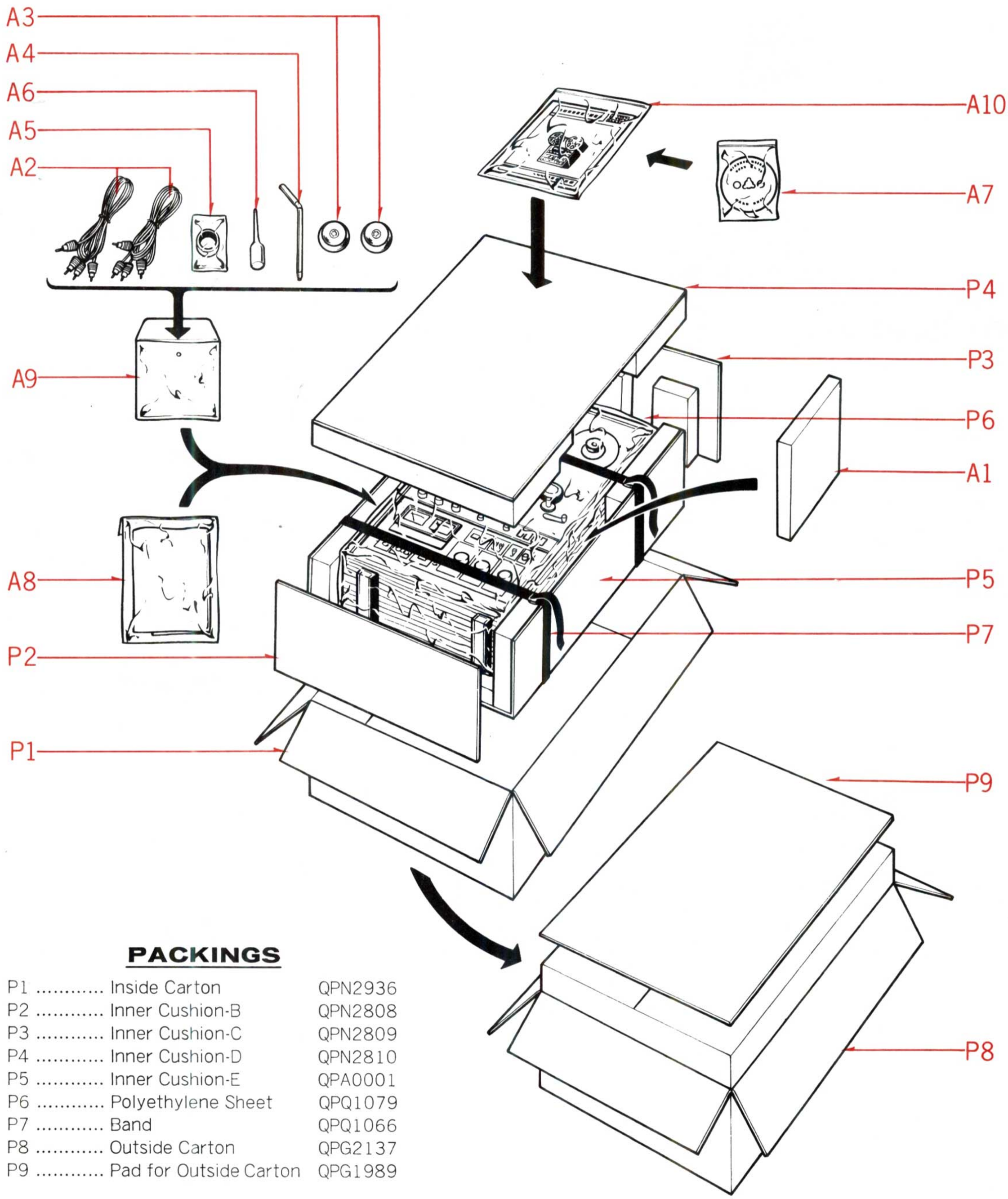

PACKINGS

P1	Inside Carton	QPN2936
P2	Inner Cushion-B	QPN2808
P3	Inner Cushion-C	QPN2809
P4	Inner Cushion-D	QPN2810
P5	Inner Cushion-E	QPA0001
P6	Polyethylene Sheet	QPQ1079
P7	Band	QPQ1066
P8	Outside Carton	QPG2137
P9	Pad for Outside Carton	QPG1989

www.hifiengine.com

EXPLODED VIEWS

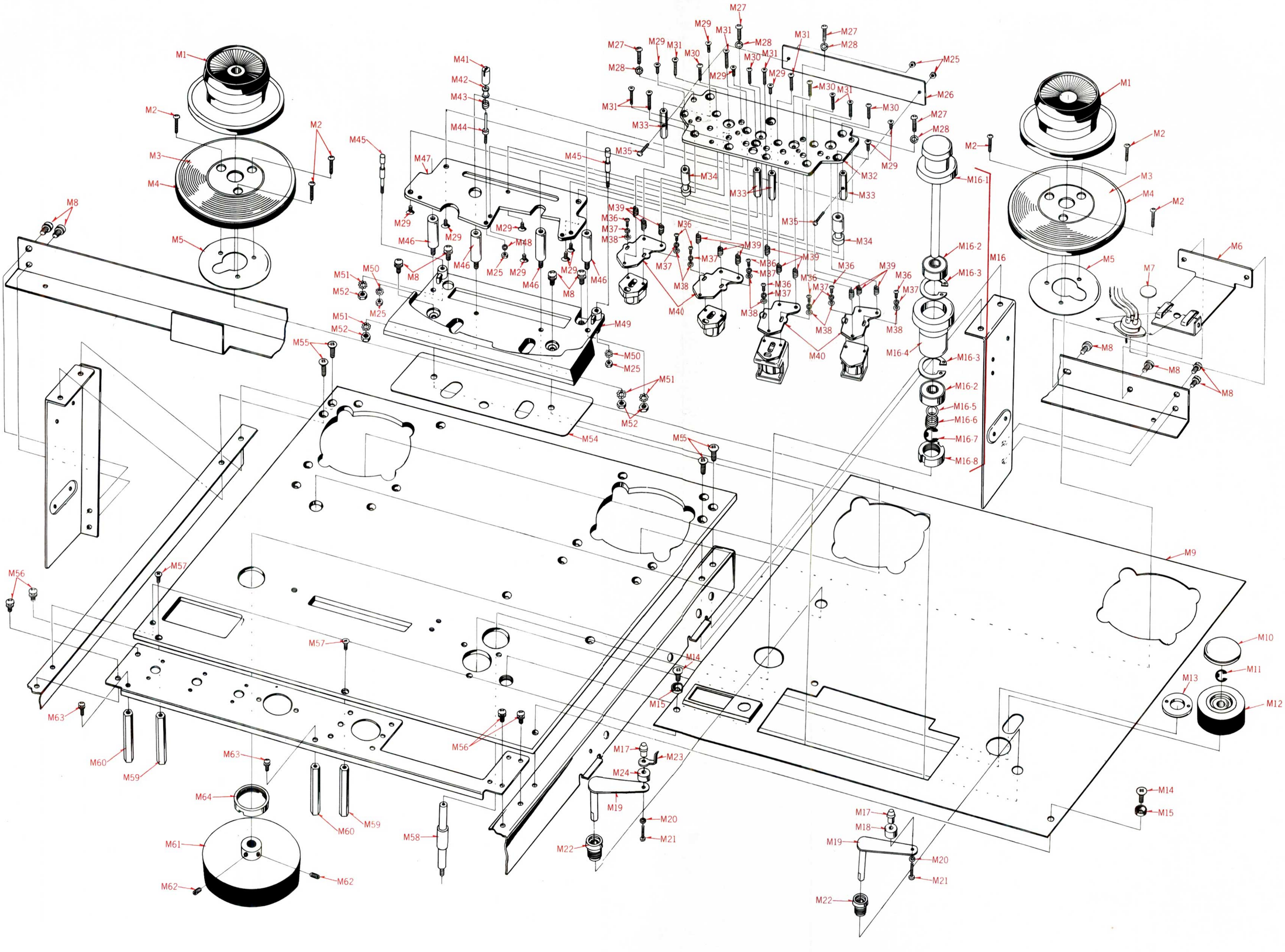

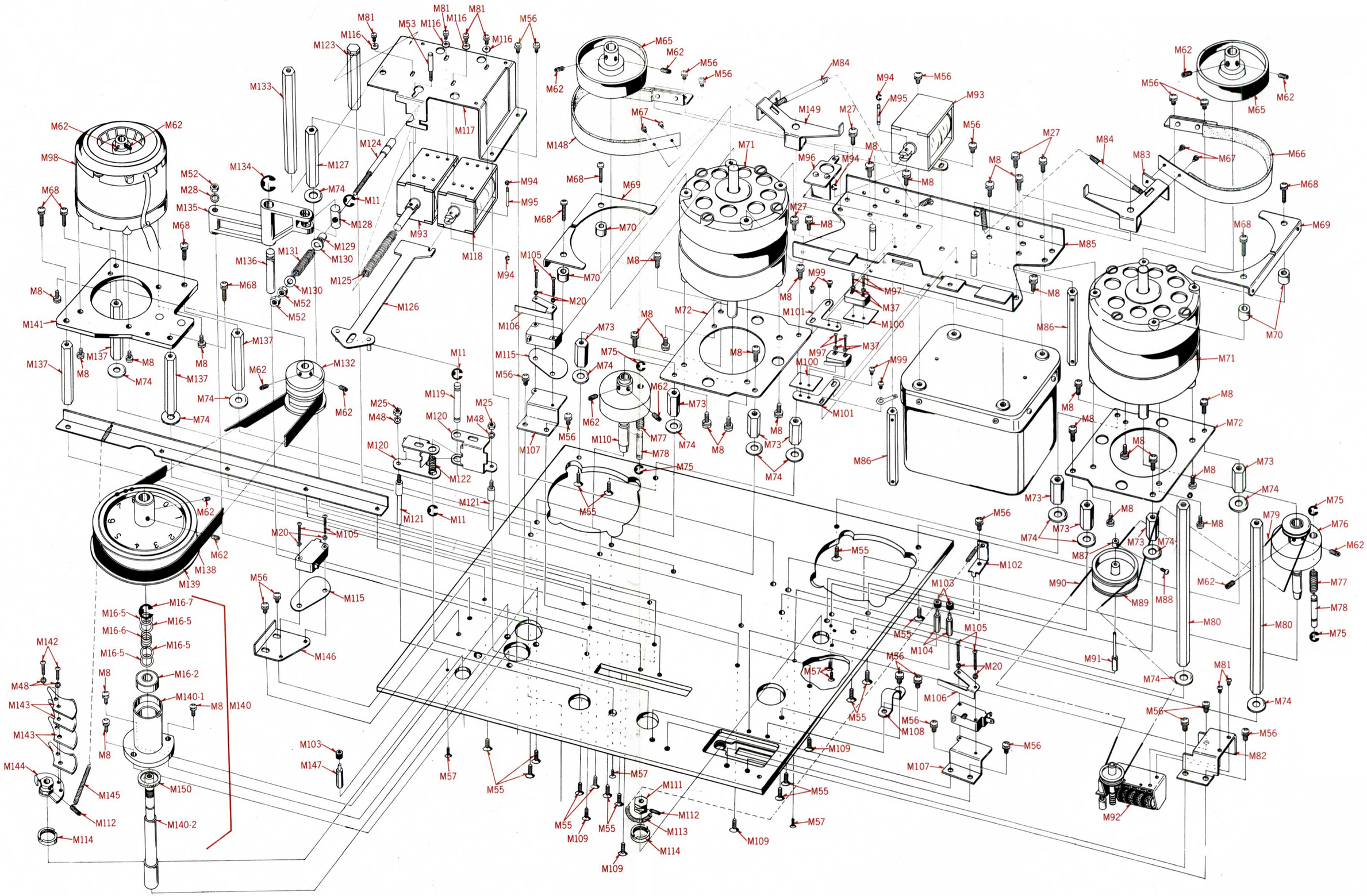

Printed in Japan

REPLACEMENT PARTS LIST
MODEL RS-1030US (PANASONIC)

RS-1030US

ATTENTIONS:

1. Be sure to make your orders of Replacement parts according to this List.
2. " ★ " indicates the New Parts.
3. "ISO" indicates the ISO Screw or Nut.

Ref. No.	Description	Part No.	Per Set (Pcs.)		Note
	MECHANICAL PARTS				
M1	Reel Holder Unit	QXQ0066S	2		★ ISO
M2	Screw ⊕3×10	XST3+10FCS	6		COMMON ISO
M3	Reel Table Sheet	QBG1361A	2		★
M4	Reel Table	QDR1060	2		★
M5	Reel Table Spacer	QMF1561	2		★
M6	Oil Cap Holding Plate	QMF1562A	1		★ ISO
M7	Felt	QBF1026	1		RS-715US, 714US
M8	Sems Screw ⊕4×10	XYN4+C10S	39		COMMON ISO
M9	Mecha. Panel	QGP1252	1		★
M10	Pressure Roller Cap	QGK2200	1		★
M11	Stop Ring E5ϕ	XUC5FT	4		COMMON
M12	Pressure Roller	QDP1107	1		RS-715US, 1000S
M13	Capstan Housing Cap	QGK2201	1		★
M14	Screw ⊕4×14	XSC4+14FCS	2		COMMON ISO
M15	Ornament Spacer	QWQ1132	2		RS-715US
M16	Impedance Assembly	QXP0401	1		★
M16-1	Impedance Roller	QXP0437	1		★
M16-2	Bearing	QMM1296	3		RS-715US
M16-3	Stop Ring E22ϕ	XUA22FP	2		★
M16-4	Impedance Housing	QMB1090	1		★
M16-5	Fiber Washer 8.2×12×1 t	QBK7020	5		★
M16-6	Bearing Spring	QBC1202	2		RS-715US

www.hifiengine.com

Ref. No.	Description	Part No.	Per Set (Pcs.)		Note
M16-7	Stop Ring E7ϕ	XUC7FT	2		COMMON
M16-8	Housing Driver-C	QHQ1179	1		★
M17	Tension Arm Guide	QMQ1148	2		★
M18	Bush (1)	QMB1093	1		★
M19	Tension Arm Unit	QXL0637	2		★
M20	Spring Washer 2.6ϕ	XWA26B	8		COMMON
M21	Screw ⊕2.6×14	XSN26+14FC	2		”
M22	Tension Arm Housing	QHQ0062	2		★
M23	Tape Retainer	QMF1550	1		★
M24	Bush (2)	QMB1094	1		★
M25	Nut 3ϕ	XNG3ES	7		COMMON ISO
M26	Head Terminal Cover	QMF1578	1		★
M27	Screw ⊕4×12	XSN4+12RS	8		COMMON ISO
M28	Spring Washer 4ϕ	XWA4B	5		COMMON
M29	Screw ⊕3×6	XSS3+6S	12		” ISO
M30	Screw ⊕2.6×10	XSN26+10	4		”
M31	Screw ⊕2.6×12	XSS26+12	8		”
M32	Head Base Plate-A	QMK1365S	1		★ ISO
M33	Head Base Plate Holding Pole	QMP1398S	4		★ ISO
M34	Tape Guide (1)	QMB1095	2		★
M35	Sems Screw ⊕3×12	XYN3+C12S	2		COMMON ISO
M36	Screw ⊕2×5	XSN2+5	8		”
M37	Spring Washer 2ϕ	XWA2B	12		”
M38	Flat Washer 2ϕ	XWG2	8		COMMON
M39	Head Spring	QBC1181	12		RS-715US
M40	Head Plate	QMZ1071	4		”
M41	Tape Guide (3)	QNQ1044	1		★
M42	Tape Guide	QAG1176	1		RS-715US
M43	Tape Guide Spring	QBC1205	1		★

www.hifiengine.com

Ref. No.	Description	Part No.	Per Set (Pcs.)		Note
M44	Tape Guide (2)	QMS2272S	1		★ ISO
M45	Head Cover Shaft	QMP1400	2		★
M46	Head Block Pole	QMP1399S	4		★ ISO
M47	Head Base Plate-B	QMK1366	1		★
M48	Spring Washer 3ϕ	XWA3B	5		COMMON
M49	Head Base Table	QMZ1094	1		★
M50	Lock Washer 3ϕ	XWC3	2		COMMON
M51	Lock Washer 4ϕ	XWC4	4		"
M52	Nut 4ϕ	XNG4ES	7		" ISO
M53	Plunger Connection Pin-A	QMN1555	1		★
M54	Head Shield Plate	QTS1208	1		★
M55	Screw ⊕4×16	XSS4+16S	19		COMMON ISO
M56	Sems Screw ⊕4×6	XYN4+C6S	24		" ISO
M57	Screw ⊕3×10	XSS3+10S	7		" ISO
M58	Pressure Roller Shaft	QMS2275S	1		★ ISO
M59	Pole (7)	QMP1426S	2		★ ISO
M60	Pole (5)	QMP1409S	2		★ ISO
M61	Impeadance Flywheel	QDW1060S	1		★ ISO
M62	Set Screw 4×6	XXE4D6S	16		COMMON ISO
M63	Sems Screw ⊕3×10	XYN3+C10S	2		COMMON ISO
M64	Housing Driver-A	QHQ1178	1		★
M65	Brake Pulley	QDP1475S	2		★ ISO
M66	Brake Angle Assembly-L	QXA0185	1		★
M67	Sems Screw ⊕3×4	XYN3+C4S	4		COMMON ISO
M68	Sems Screw ⊕4×16	XYN4+C16S	8		COMMON ISO
M69	Brake Band Guide Plate	QMF1554	2		★
M70	Spacer	QMP1325	4		★
M71	Reel Motor	6BC30B1L	2		★
M72	Torque Motor Plate	QMK1364	2		★

www.hifiengine.com

Ref. No.	Description	Part No.	Per Set (Pcs.)		Note
M73	Pole (1)	QMP1404S	8		★ ISO
M74	Pole Spacer	QMP1403	14		★
M75	Stop Ring E4ϕ	XUC4FT	4		COMMON
M76	Reel Table Shaft Assembly-L	QXP0400S	1		★ ISO
M77	Reel Table Spring	QBC1203	2		★
M78	Reel Table Pin	QMN1538	2		★
M79	Tape Counter Belt (2)	QDB0173	1		★
M80	Condenser Pole	QMP1411S	2		★ ISO
M81	Sems Screw ⊕3×6	XYN3+C6S	6		COMMON ISO
M82	Counter Angle	QMA1839	1		★
M83	Brake Lever-L	QML2411S	1		★ ISO
M84	Brake Spring	QXJ0050	2		RS-760S, 796US
M85	Brake Base Plate Assembly	QXK1394	1		★
M86	Terminal Holding Pole	QMP1427S	2		★ ISO
M87	Connection Pulley Holding Collar	QMP1401S	1		★ ISO
M88	Screw ⊕3×5	XSN3+5S	1		COMMON ISO
M89	Counter Connection Pulley	QDP1472	1		★
M90	Tape Counter Belt (1)	QDB0162	1		★
M91	Connection Pulley Shaft	QXS1019	1		★
M92	Tape Counter	QDC0056S	1		★ ISO
M93	Plunger-A	QME0137S	2		★ ISO
M94	Stop Ring E2.5ϕ	XUC25FT	4		COMMON
M95	Plunger Connection Pin-B	QMN1528	2		★
M96	Brake Release Lever Assembly	QXL0707	1		★
M97	Screw ⊖2×10	XSN2−10	4		COMMON
M98	Capstan Motor	48KSC30A3S	1		RS-715US ISO
M99	Sems Screw ⊕3×4	XYN3+C4S	4		COMMON ISO
M100	Shield Fiber	QBK1163	2		RS-276US
M101	Switch Holing Plate	QMF1575	2		★
M102	Spring Hook Plate	QMF1572	1		★

www.hifiengine.com

Ref. No.	Description	Part No.	Per Set (Pcs.)		Note
M103	Stop Rubber	QBG1368	3		★
M104	Stop Pole-A	QMP1425S	2		★ ISO
M105	Screw ⊕2.6×14	XSN26+14	6		COMMON
M106	Actuater	QML1544	2		RS-796US
M107	Switch Angle	QMA1849	2		★
M108	Cord Holder	QMF1574	1		★
M109	Screw ⊕4×10	XSS4+10S	4		COMMON ISO
M110	Reel Table Shaft Assembly-R	QXP0399S	1		★ ISO
M111	Shut off Bush	QMB1098S	1		★ ISO
M112	Set Screw 4×12	XXE4D12S	2		COMMON ISO
M113	Tension Spring-A	QBT1647	1		★
M114	Housing Driver-B	QHQ1180	2		★
M115	Micro Switch Washer	QBK1020	2		RS-796US
M116	Flat Washer 3ϕ	XWG3	4		COMMON
M117	Plunger Angle	QMA1838S	1		★ ISO
M118	Plunger-B	QME0138S	1		★ ISO
M119	Tape Shift Lever Shaft	QMS2274S	1		★ ISO
M120	Tape Shift Lever	QML2408	2		★
M121	Tape Shifter Shaft	QMS2273S	2		★ ISO
M122	Tape Shifter Spring	QBN1300	1		★
M123	Pole (3)	QMP1406S	1		★ ISO
M124	Pressure Roller Rod	QMR1251S	1		★ ISO
M125	Pressure Roller Spring-A	QBC1204	1		★
M126	Shifter Connection Lever	QXL0706	1		★
M127	Pole (4)	QMP1407S	1		★ ISO
M128	Pressure Roller Lever Shaft	QMS2277	1		★
M129	Pressure Roller Collar	QMP1412	1		★
M130	Flat Washer 4ϕ	XWG4E	2		COMMON
M131	Pressure Roller Spring-B	QBC1194	1		RS-715US
M132	Motor Pulley	QDP1480	1		★

www.hifiengine.com

Ref. No.	Description	Part No.	Per Set (Pcs.)		Note
M133	Pole (6)	QMP1424S	1		★ ISO
M134	Stop Ring E6ϕ	XUC6FT	1		COMMON
M135	Pressure Roller Lever	QML2405	1		★
M136	Pressure Roller Arm Shaft	QMS2278S	1		★ ISO
M137	Pole (2)	QMP1405S	4		★ ISO
M138	Capstan Belt	QDB0161	1		★
M139	Flywheel	QDW1055S	1		RS-715US
M140	Capstan Assembly	QXS1018	1		★
M140-1	Capstan Housing	QMB1089	1		★
M140-2	Capstan Shaft	QMS2266	1		★
M141	Motor Base Plate	QMK1363S	1		★ ISO
M142	Screw ⊕3×12	XSN3+12S	2		COMMON ISO
M143	Balance Weight	QMF1576	4		★
M144	Shut off Lever Assembly	QXL0708	1		★
M145	Tension Spring-B	QBT1322	1		RS-715US, 736US
M146	Micro Switch Angle	QMA1819	1		★
M147	Stop Pole-B	QMP1466S	1		★ ISO
M148	Brake Angle Assembly-R	QXA0184	1		★
M149	Brake Lever-R	QML2410S	1		★ ISO
M150	Capstan Felt	QBF1213	1		★
	RESISTORS				
R1, 2, 19, 20	Carbon Resistor 56 KΩ 1/4 W	ERD14TJ563	4		
R3, 4	" 390 KΩ 1/4 W	ERD14TJ394	2		
R5, 6	" 4.7 KΩ 1/4 W	ERD14TJ472	2		
R7, 8	" 33 KΩ 1/4 W	ERD14TJ333	2		
R9, 10	" 390Ω 1/4 W	ERD14TJ391	2		
R11, 12, 93, 94	Carbon Resistor 270Ω 1/4 W	ERD14TJ271	4		
R13, 14	" 22 KΩ 1/4 W	ERD14TJ223	2		
R15, 16, 27, 28	" 120 KΩ 1/4 W	ERD14TJ124	4		
R17, 18, 65, 66,	99, 100, 111, 112, 159, 160, 172, 403				
	" 2.2 KΩ 1/4 W	ERD14TJ222	12		

www.hifiengine.com

Ref. No.	Description			Part No.	Per Set (Pcs.)		Note
R21, 22, 53, 54,	63, 64, 163, 164						
	Carbon Resistor	820Ω	1/4 W	ERD14TJ821	8		
R23, 24	Carbon Resistor	33 KΩ	1/4 W	ERD14TJ333	2		
R25, 26	”	27 KΩ	1/4 W	ERD14TJ273	2		
R29, 30, 121, 122, 409	”	1.5 KΩ	1/4 W	ERD14TJ152	5		
R31, 32, 43, 44, 306, 406, 408	55, 56, 71, 72, 123, 124, 161, 162, 305,						
	”	10 KΩ	1/4 W	ERD14TJ103	16		
R33, 34, 87, 88	”	330Ω	1/4 W	ERD14TJ331	4		
R35, 36, 45, 46, 127, 128	Carbon Resistor	15 KΩ	1/4 W	ERD14TJ153	6		
R37, 38, 139, 1	40, 167, 168, 177						
	”	8.2 KΩ	1/4 W	ERD14TJ822	7		
R39, 40, 47, 48,	113, 114, 149, 150, 155, 156						
	”	47 KΩ	1/4 W	ERD14TJ473	4		
R41, 42, 69, 70	”	22 KΩ	1/4 W	ERD14TJ223	4		
R49, 50	”	560 KΩ	1/4 W	ERD14TJ564	2		
R51, 52	Carbon Resistor	27Ω	1/4 W	ERD14TJ270	2		
R57, 58, 85, 86	”	470Ω	1/4 W	ERD14TJ471	4		
R59, 60, 129, 130, 141, 142	”	220 KΩ	1/4 W	ERD14TJ224	6		
R61, 62, 119, 120	”	68 KΩ	1/4 W	ERD14TJ683	4		
R67, 68, 131, 1	32, 133, 134, 175, 407						
	”	2.7 KΩ	1/4 W	ERD14TJ272	8		
R73, 74	Carbon Resistor	56 KΩ	1/4 W	ERD14TJ563	2		
R75, 76, 115, 116, 301, 302	”	1.8 KΩ	1/4 W	ERD14TJ182	6		
R77, 78, 89, 90	”	220 KΩ	1/4 W	ERD14TJ224	4		
R79, 80	”	680 KΩ	1/4 W	ERD14TJ684	2		
R81, 82, 83, 84	”	39 KΩ	1/4 W	ERD14TJ393	4		
R91, 92	Carbon Resistor	47 KΩ	1/4 W	ERD14TJ473	2		
R95, 96	”	10 KΩ	1/4 W	ERD14TJ103	2		
R97, 98, 187, 188	”	4.7 KΩ	1/4 W	ERD14TJ472	4		
R101, 102, 107, 108	”	100Ω	1/4 W	ERD14TJ101	4		

www.hifiengine.com

Ref. No.	Description			Part No.	Per Set (Pcs.)		Note
R103, 104, 105, 106, 109, 110, 147, 148							
	Carbon Resistor	100 KΩ	1/4 W	ERD14TJ104	8		
R117, 118	Carbon Resistor	3.9 KΩ	1/4 W	ERD14TJ392	2		
R125, 126	"	220Ω	1/4 W	ERD14TJ221	2		
R131,132,133, 134,175,407	"	2.7 KΩ	1/4 W	ERD14TJ272	6		
R135, 136	"	330 KΩ	1/4 W	ERD14TJ334	2		
R137, 138	"	150 KΩ	1/4 W	ERD14TJ154	2		
R143, 144	Solid Resistor	1 KΩ	1 W	ERC1GK102	2		
R145,146,151, 152,183,184	Carbon Resistor	1 KΩ	1/4 W	ERD14TJ102	6		
R153, 154	"	5.6 KΩ	1/4 W	ERD14TJ562	2		
R157, 158	"	270 KΩ	1/4 W	ERD14TJ274	2		
R165, 166	"	6.8 KΩ	1/4 W	ERD14TJ682	2		
R169	Metal Oxide Resistor	270Ω	3 W	ERG3PSK271	1		
R171	Carbon Resistor	33 KΩ	1/4 W	ERD14TJ333	1		
R173	"	6.8Ω	1/4 W	ERD14TJ6R8	1		
R174	"	12 KΩ	1/4 W	ERD14TJ123	1		
R176	"	3.3 KΩ	1/4 W	ERD14TJ332	1		
R181, 182	Carbon Resistor	120Ω	1/4 W	ERD14TJ121	2		
R185	Solid Resistor	10Ω	1/2 W	ERC12GK100	1		
R303, 304	Carbon Resistor	180 KΩ	1/4 W	ERD14TJ184	2		
R307, 308	"	8.2Ω	1/4 W	ERD14TJ8R2	2		
R401	Non-Inflammable Resistor	1Ω	5 W	ERF5SK1R0	1		
R402	Non-Inflammable Resistor	470Ω	5 W	ERF5SK471	1		
R404	Solid Resistor	220Ω	1 W	ERC1GK221	1		
R405	Carbon Resistor	560Ω	1/4 W	ERD14TJ561	1		
R410,411,412	Non-Inflammable Resistor	22Ω	7 W	ERF7SK220	3		
R413, 414	Carbon Resistor	10Ω	1/4 W	ERD14TJ100	2		
R415	Wire-Wound Resistor	1Ω	1/2 W	ERM12PK1R0	1		

www.hifiengine.com

Ref. No.	Description		Part No.	Per Set (Pcs.)		Note
	VARIABLE RESISTORS					
VR1, 2	Variable Resistor	100 KΩ (A)	EVFF1AR23A15	2		RS-715US
VR3, 4, 104	Semi-fixed Variable Resistor	10 KΩ (B)	QVL01AA00B14	3		RS-275US
VR5, 6, 15, 16, 19, 20	”	100 KΩ (B)	QVL01AA00B15	6		”
VR7, 8	”	20 KΩ (B)	EVLS3AA00B24 (EVL42AA00B24)	2		RS-253S, 272US, 275US
VR9, 10, 11, 12	”	5 KΩ (B)	QVL01AA00B53	4		RS-272US, 277US
VR13,14,24,25, 26,27,105	Semi-fixed Variable Resistor	50 KΩ (B)	QVL01AA00B54	7		★
VR17,18,21,22	Variable Resistor	20 KΩ (A)	EVFF1AR23A24	4		RS-715US
VR23	Semi-fixed Variable Resistor	1 KΩ (B)	EVLS3AA00B13 (EVL42AA00B13)	1		RS-282S
VR101	”	100Ω	QRM40FS101	1		★
VR102	”	200Ω	QRM40FS201	1		★
VR103	Semi-fixed Variable Resistor	400Ω	QRM40GS401	1		★
	CAPACITORS					
C1, 2	Electrolytic Capacitor	47μF	ECEA16V47L	2		
C3, 4, 53, 54	Tantalum Capacitor	4.7μF	ECSZ16EF4R7	4		
C5, 6, 13, 14, 57, 58, 65, 66, 79, 80, 201, 202, 203, 204,206,207						
	Ceramic Capacitor	100 pF	ECCD1H101K	10		
C7, 8, 11, 12, 29, 30, 33, 34, 35, 36, 41, 42, 55, 56, 67, 68, 77, 78, 97, 98, 99, 100, 119, 125, 125, 126						
	Electrolytic Capacitor	10μF	ECEA25V10L	25		
C9, 10, 15, 16, 59, 60, 81, 82, 101, 102						
	”	47μF	ECEA6V47L	4		
C17,18,69,70, 103,104,113	Electrolytic Capacitor	100μF	ECEA25V100L	7		
C19, 20, 83, 84	Ceramic Capacitor	47 pF	ECCD1H470K	2		
C21, 22	Electrolytic Capacitor	4.7μF	ECEA25V4R7L	2		
C23, 24	Mylar Capacitor	0.0015μF	ECQM05152KZ	2		
C25, 26, 115, 116	Ceramic Capacitor	22 pF	ECCD1H220K	2		
C27, 28	Aluminum Capacitor	0.47μF	ECAG25ER47	2		
C31, 32	Mylar Capacitor	0.0022μF	ECQM05222KZ	2		
C37, 38, 141, 142	”	0.0056μF	ECQM05562KZ	4		

www.hifiengine.com

Ref. No.	Description		Part No.	Per Set (Pcs.)		Note
C39, 40	Mylar Capacitor	0.015μF	ECQM05153KZ	2		
C45,46,89,90	Styrol Capacitor	680 pF	ECQS1681KZ	2		
C47, 48	Mylar Capacitor	0.0018μF	ECQM05182KZ	2		
C49, 50, 114, 123	Mylar Capacitor	0.01μF	ECQM05103KZ	2		
C51,52,61,62	Styrol Capacitor	220 pF	ECQS1221KZ	4		
C63, 64, 111, 112	Electrolytic Capacitor	1μF	ECEA50V1L	4		
C71, 72, 107, 108	Mylar Capacitor	0.001μF	ECQM05102KZ	4		
C73, 74	Mylar Capacitor	0.033μF	ECQM05333KZ	2		
C75, 76, 121, 131,132,407	Electrolytic Capacitor	100μF	ECEA50V100L	6		
C85, 86	”	100μF	ECEA6V100L	2		
C87, 88	”	10μF	ECEA50V10L	2		
C91, 92, 105, 106,109,110	”	3.3μF	ECEA25V3R3L	6		
C93, 94	Mylar Capacitor	0.0033μF	ECQM05332KZ	2		
C95, 96	Electrolytic Capacitor	33μF	ECEA25V33L	2		
C117	Styrol Capacitor	1800 pF	ECQS1182JZ	1		
C118, 205	Mylar Capacitor	0.1μF	ECQM05104KZ	2		
C120	Styrol Capacitor	1800 pF	ECQS05182J	1		
C122, 133	Electrolytic Capacitor	47μF	ECEA50V47L	2		
C124, 403	”	1000μF	ECEM63R1000T	2		
C135, 136	Mylar Capacitor	0.0039μF	ECQM05392KZ	2		
C139	Styrol Capacitor	120 pF	ECQS5121K	1		
C140	Mylar Capacitor	0.1μF	ECQM05104MZ	1		
C143, 144	Ceramic Capacitor	12 pF	ECCD1H120K	2		
C401	Paper Capacitor	2μF	MP300V2U	1		
C404	Electrolytic Capacitor	220μF	ECEA50V220L	1		
C405	Mylar Capacitor	0.0047μF	ECQM05472KZ	1		
C406	”	0.001μF	ECQM05102KZ	1		
C408	Electrolytic Capacitor	33μF	ECEA50V33L	1		
C409, 410	Paper Capacitor	4.7μF	MP330V4R7U	2		

www.hifiengine.com

Ref. No.	Description	Part No.	Per Set (Pcs.)		Note
	COMBINATION PARTS				
CR1, 2, 3, 4, 5	CR Combination	QCR0001	5		RS-715US, 736US
CR6, 7, 8, 9, 10, 11, 12, 13, 14, 15					
	"	QCR0004	10		RS-715US
	TRANSISTORS				
Tr1, 2, 13, 14	Transistor	2SC1327	4		RS-276US
Tr3, 4, 5, 6, 17, 18, 19, 20	"	2SC644Ⓕ	8		RS-270US, 275US, 715US
Tr7, 8, 9, 10, 21, 22, 23, 24, 34, 35					
	"	2SC828A	10		"
Tr11, 12	"	2SC1384	2		★
Tr15, 16	"	2SA666Ⓗ	2		RS-261US, 262US
Tr25, 26, 27, 28, 29, 30	Transistor	2SC828 (R, S)	6		RS-270US, 275US, 715US
Tr31, 32, 202	"	2SC1407	3		RS-271US
Tr33	"	2SD288	1		★
Tr201	"	2SC1318	1		★
	DIODES & RECTIFIERS				
D1, 2, 3, 4	Diode	OA90Z	4		COMMON
D5, 201, 202	Silicon Rectifier	10DC1	3		RS-262US, 275US, 276US, 736US
D6	Diode	RD7A	1		RS-276US, 277US
D7, 206, 207, 208, 209, 210, 211, 212, 213, 214, 215, 216, 217, 218, 219, 220, 222, 223, 224, 225					
	"	FR202	20		RS-803US, 806US, 845US, 847US
D203, 204	Silicon Rectifier	10DC1R	2		RS-262US, 275US, 276US, 736US
D221	Diode	RD24A	1		★
	TRANSFORMERS				
T1	Osillator Transformer	QLB0140	1		RS-270US, 275US, 715US
T2, 3	Headphone Transformer	QLA0349	2		"
T4	Power Transformer	QLP0667	1		★

www.hifiengine.com

Ref. No.	Description	Part No.	Per Set (Pcs.)		Note
	COILS				
L1, 2	Peaking Coil	QLH2008	2		RS-270US, 715US, 736US
L3, 4	"	QLH2009	2		RS-715US, 736US
L5	Erase Dummy Coil	QLH9014	1		★
	SWITCHES				
S1	Slide Switch (MIC Impedance Selector)	QSS1166	1		★
S2	Lever Switch (Tape/Source Selector)	QST0021S	2		RS-715US ISO
S3	Equalizer Select Switch with RL9 (Recording)		(1)		
S4	Equalizer Select Switch with RL11 (Playback)		(1)		
S5	Push Switch (Record)	ESB508	1		RS-715US
S6, 7	Push Switch (Record Selector)	ESB512	2		RS-715US
S8	Push Switch (Power ON/OFF Switch)	QSW0123S	1		RS-296US ISO
S9	Rotary Switch (Tape Speed Selector)	ESRE262F20AU	1		RS-715US
S10	Micro Switch (Shut Off)	QSM0014	1		RS-715US, 770S
S11	Push Switch (Reel Motor Off)	ESB1133DDU	1		★
S12	Rotary Switch (2/4 Track Selector)	ESRE262F20B	1		★
S13	Rotary Switch (Tape Tension Selector)	ESRE022F20BU	1		★
S14, 15, 16, 17	Micro Switch	QSM0057	4		★
S18	Push Switch (Pause)	ESB1133DDU	1		★
S19	Micro Switch (Brake)	QSM0040A	1		RS-275US, 715US
S20	Relay Switch with RL1		(1)		
S21	Relay Switch with RL2		(1)		
S22	Relay Switch with RL3		(1)		
S23	Relay Switch with RL4		(1)		
S24	Relay Switch with RL5		(1)		
S25	Relay Switch with RL6		(1)		
S26	Relay Switch with RL7		(1)		
S27	Micro Switch	QSM0040A	1		RS-275US, 715US
S28, 29	"	QSM0014	2		RS-715US, 770S

www.hifiengine.com

Ref. No.	Description	Part No.	Per Set (Pcs.)		Note
S30	Lever Switch (Tape Selector)	QST0021S	1		RS-715US
	RELAYS				
RL1, 2, 3, 7	Relay	QSK0415	4		RS-715US
RL4, 5, 6	"	QSK0225	3		★
RL8, 11	"	QSK0223	2		RS-715US
RL9, 10	"	QSK0418	2		★
	ELECTRICAL PARTS				
E1	Record Head	WY321D	1		★
E2	Playback Head	WY320D	1		★
E3	"	WY470R	1		RS-714US, 715US
E4	Erase Head	WY230D	1		★
E5	VU Meter	QSL1013E	2		★
E6	Jack Board Assembly	QEJ0230	1		★
E7	Pilot Lamp	XAMQ7SU	6		RS-715US
E8	Cord Bushing	QTD1129	1		COMMON
E9	AC Power Cord	QFC1016A	1		"
E10	Jack	QJA0227	2		RS-715US, 736US
E11	Headphone Jack	QJA0228	1		RS-270US, 715US
E12	Relay Socket	QJS0735	4		RS-715US
E13	"	QJS0736	3		★
E14	Fuse 0.5 A	XBAQ0019	3		★
E15	22P Socket	QJS0126	1		★
E16	15P Connector Socket	QEE1163	1		★
E17	15P Connector Plug	QEE1155	1		★
E18	12P Plug	QJP0958	1		RS-275US, 715US
E19	12P Socket	QJS0508H	1		"
E20	9P Connector Socket	QEE1158	1		★
E21	9P Connector Plug	QEE1157	1		★
E22	6P Terminal Board	QJT6009	4		RS-261US, 262US, 263US

www.hifiengine.com

Ref. No.	Description	Part No.	Per Set (Pcs.)		Note
E23	6P Terminal Board	QJT6006	1		RS-715US
E24	3P Connector Socket	QEE1160	1		★
E25	3P Connector Plug	QEE1159	1		★
	CABINET PARTS				
G1	Body Case Assembly	QYW0001	1		★
G2	Front Panel Assembly	QYP0378S	1		★ ISO
G3	Head Cover Assembly	QYR0137S	1		★ ISO
G4	Volume Knob (A) Assembly	QYT0284S	3		★ ISO
G5	Volume Knob (B) Assembly	QYT0285S	3		★ ISO
G6	Select Knob Assembly	QYT0221AS	3		★ ISO
G7	Button Assembly	QYT0114A	3		RS-715US, 736US ISO
G8	Push Button	QGO4078	2		RS-715US
G9	Lever Knob	QGT3034AS	3		★ ISO
G10	Back Board Assembly	QKS5103	1		★
G11	Foot	QKA1053	4		RS-715US
G12	Washer	QWQ1131	12		"
G13	"	QBJ3259	3		★
G14	Accessory Washer	QBJ3205	4		RS-715US
G15	Jack Washer	QBJ3149	3		RS-715US, 736US
G16	Jack Nut	QNQ1033	3		COMMON
G17	Push Button (F. FWD)	QGO4102	1		★
G18	Push Button (FWD)	QGO4103	1		★
G19	Push Button (STOP)	QGO4104	1		★
G20	Push Button (F. RWD)	QGO4105	1		★
G21	Washer 4ϕ	XWG4	7		COMMON
G22	Screw	QHQ1181S	2		★ ISO
G23	Screw ⊕4×35	XSN4+35S	4		COMMON ISO
G24	Screw ⊕4×20	XSN4+20FNCS	12		" ISO
G25	Screw ⊕4×10	XSN4+10FZS	4		" ISO

www.hifiengine.com

Ref. No.	Description	Part No.	Per Set (Pcs.)		Note
G26	Screw ⊕4×8	XSN4+8S	3		★ ISO
G27	Name Plate	QGS1773	1		★
	ACCESSORIES				
A1	10″ Empty Reel	QFR10ETP	1		★
A2	Connection Cord-G	RP8125 (QEB0060P)	2		COMMON
A3	Reel Holder	QBG1030	2		”
A4	Head Cleaning Pen	QFQ1047	1		★
A5	Splicing Tape	QFS0002	1		COMMON
A6	Oiler	SPB5001	1		★
A7	Reel Adjustment Spacer	QYQ0252	2		★
A8	Dust Cover	QYC0167	1		★
A9	Accessory Bag	QFV0047	1		COMMON
A10	Instruction Book	QQT0500	1		★
	PACKINGS				
P1	Inside Carton	QPN2936	1		★
P2	Inner Cushion-B	QPN2808	1		★
P3	Inner Cushion-C	QPN2809	1		★
P4	Inner Cushion-D	QPN2810	1		★
P5	Inner Cushion-E	QPA0001	1		★
P6	Polyethylene Sheet	QPQ1079	1		★
P7	Band	QPQ1066	2		★
P8	Outside Carton	QPG2137	1		★
P9	Pad for Outside Carton	QPG1989	1		★

www.hifiengine.com