ORDER NO. ARD-7704034C

Service Manual

Cassette Tape Deck

RS-630TUS

Front Loading High Fidelity Cassette Deck
with Timer Stand-by Mechanism

RS-630U MECHANISM SERIES

Specifications (Catalog specifications for sales)

Power requirements:	AC; 120 V, 50/60 Hz (not necessary for conversion) Power consumption; 10 W
Motor:	1-electronic speed control motor
Track system:	4-track, 2-channel stereo recording and playback
Tape speed:	1-7/8 ips.
Wow and flutter:	0.09% (WRMS)
Frequency response:	CrO_2 tape; 30～16,000 Hz Normal tape; 30～14,000 Hz
Signal-to-noise ratio:	Dolby NR in; 63 dB (CrO_2 tape above 5 kHz) Dolby NR out; 50 dB (Normal tape) (signal level = 250 nWb/m)
Fast forward and rewind time:	Approx. 90 seconds with C-60 cassette tape
Input:	MIC; sensitivity 0.25 mV/applicable microphone impedance 600Ω～2 KΩ LINE; sensitivity 60 mV/input impedance 47 KΩ
Output:	LINE; output level 0.42 V/load impedance 50 KΩ over HEADPHONE; output level 60 mV/impedance 8Ω
Head:	2-head system 1-super alloy head for record/playback 1-ferrite head for erasure
Dimensions:	17-1/8"(W)×5-5/8"(H)×12-5/8"(D)
Weight:	17-1/2 lbs.

Specifications are subject to change without notice.

Technics
by Panasonic

Panasonic Company
Division of Matsushita Electric
Corporation of America
One Panasonic Way, Secaucus,
New Jersey 07094

Matsushita Electric of Hawaii, Inc.
320 Waiakamilo Road, Honolulu,
Hawaii 96817

LOCATION OF CONTROLS AND COMPONENTS

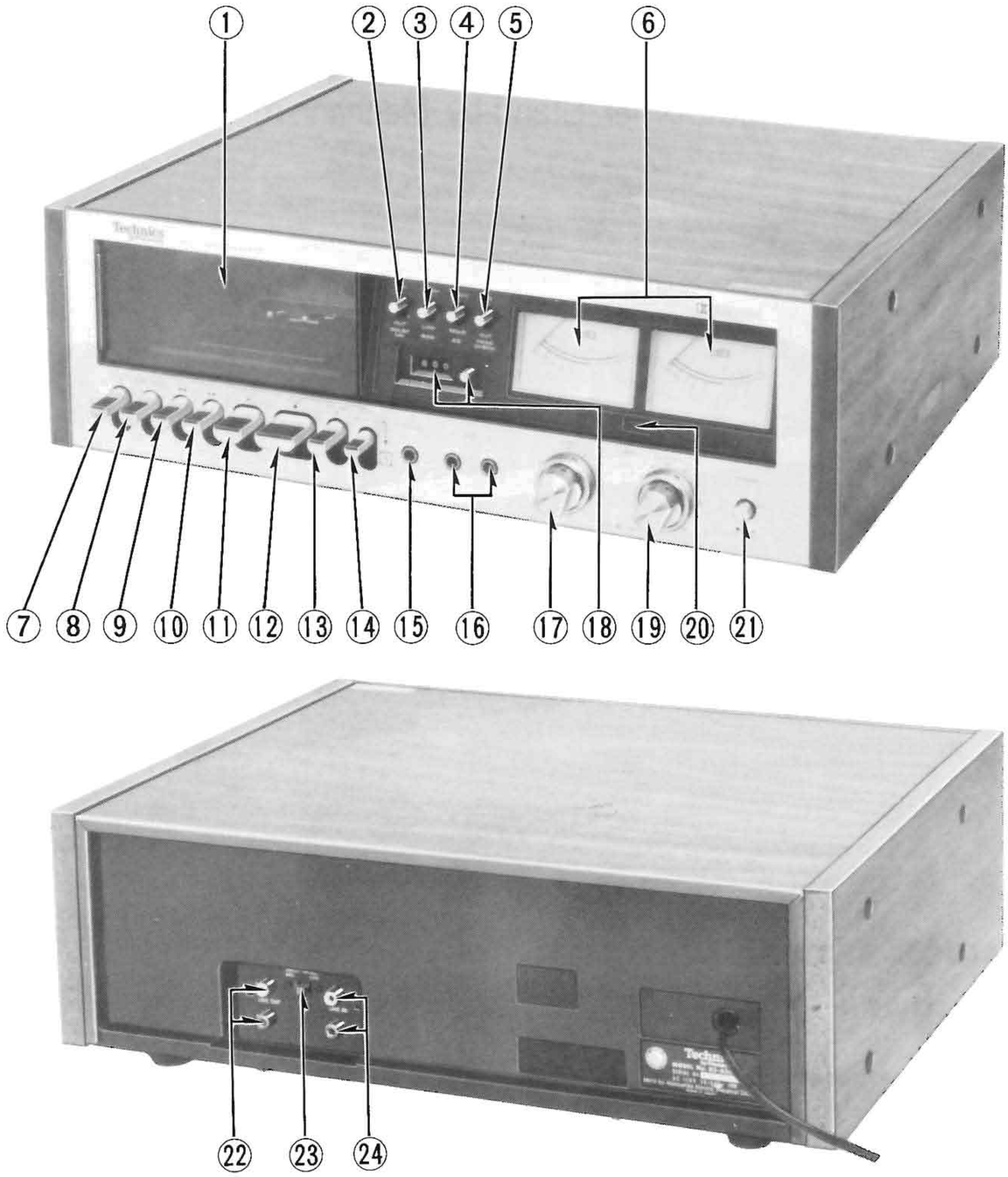

Fig. 1

① Cassette compartment door
② Dolby noise-reduction switch
③ Bias selector
④ Equalization selector
⑤ Peak-signal-check switch
⑥ Peak level/VU meters
⑦ Eject button
⑧ Record button
⑨ Rewind button
⑩ Fast forward button
⑪ Playback button
⑫ Stop button
⑬ Pause button
⑭ Timer stand-by button
⑮ Headphones jack
⑯ Microphone jacks
⑰ Input level controls
⑱ Tape counter and reset button
⑲ Output level controls
⑳ Recording indication lamp
㉑ Power switch
㉒ Line output jacks
㉓ Input selector
㉔ Line input jacks

※ Dolby is the trade mark of Dolby Laboratories Inc.

DISASSEMBLY INSTRUCTIONS

Fig. 2

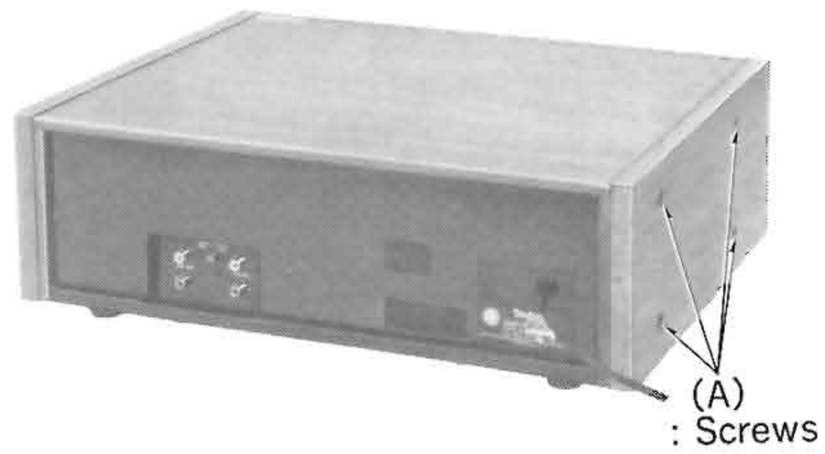

Fig. 3

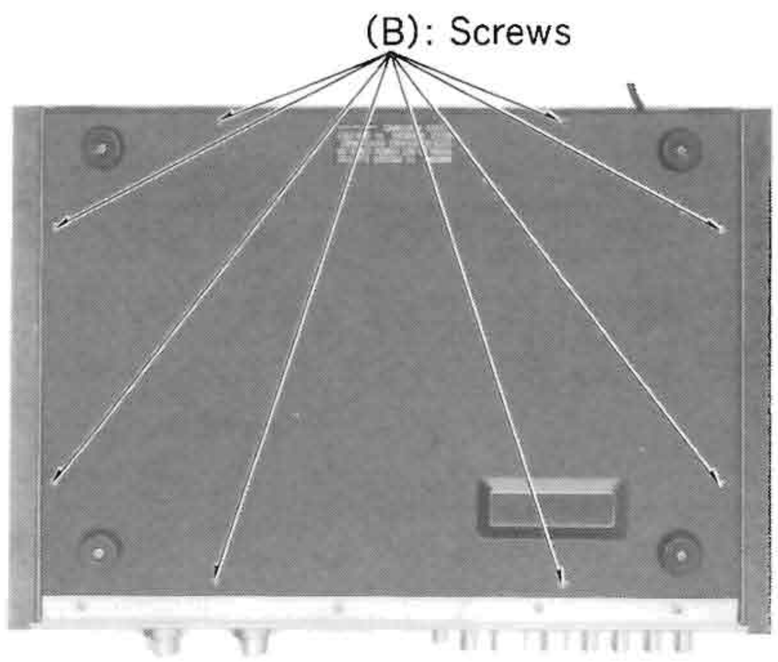

Fig. 4

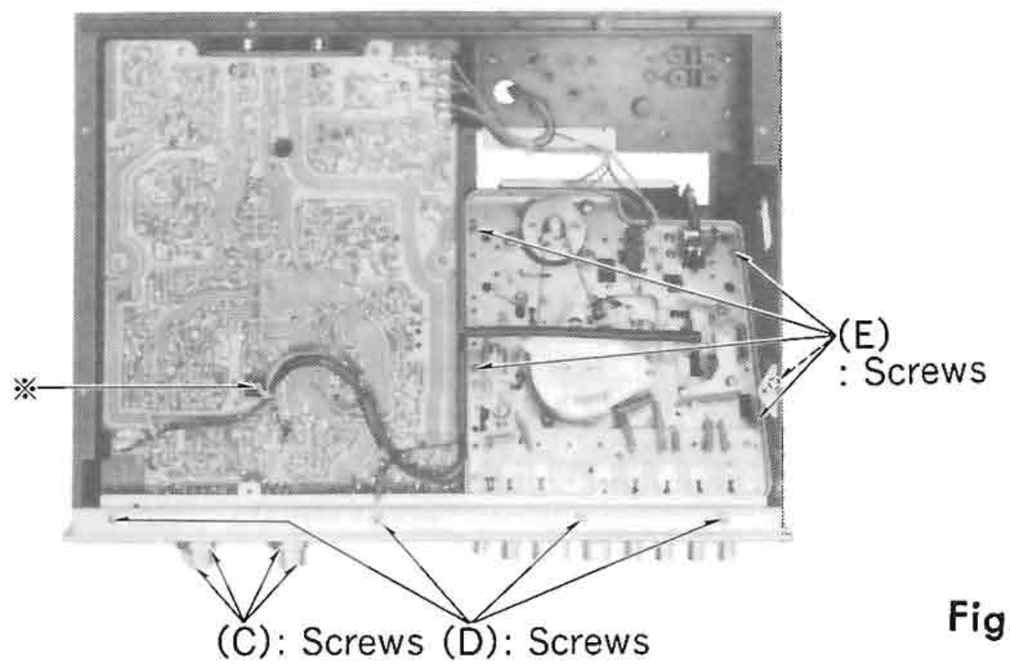

Fig. 5

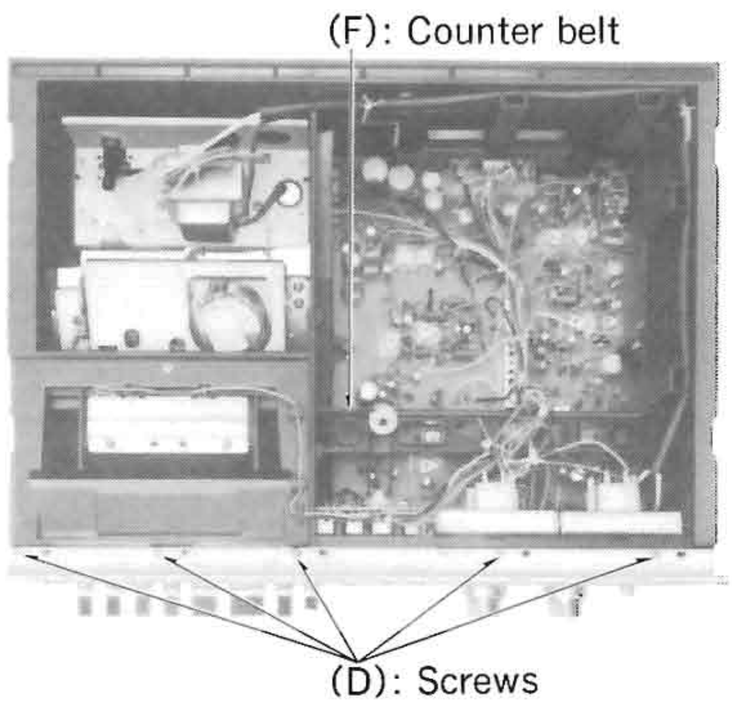

Fig. 6

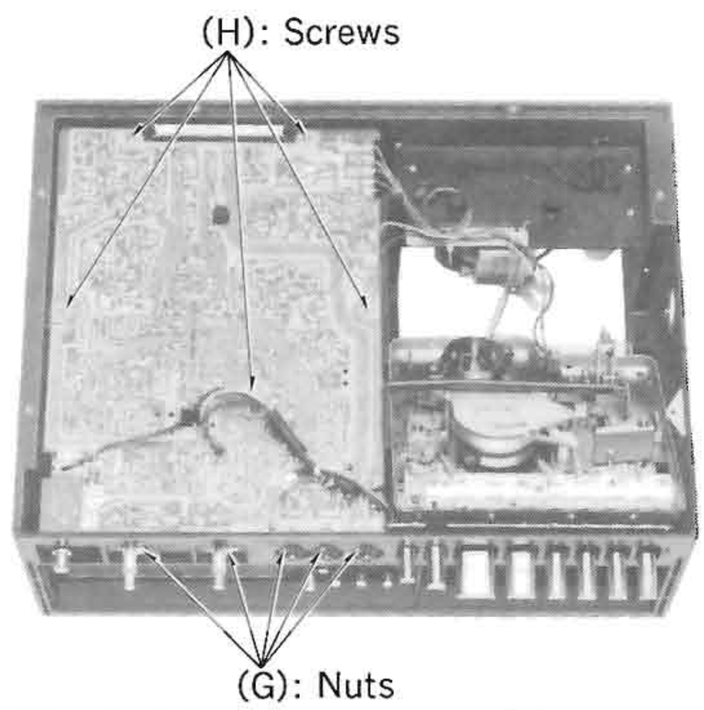

Fig. 7

Procedure	To remove ——.	Remove ——.	Pcs.	Shown in fig. ——.
1	Case cover	(A)	8	2, 3
1	Bottom cover	(B)	8	4
3	Front panel	(C), (D)	4, 9	5, 6
4	Mechanism	(E), (F)	5, 1	5, 6
4	Main circuit board	(G), (H),	5, 5	7

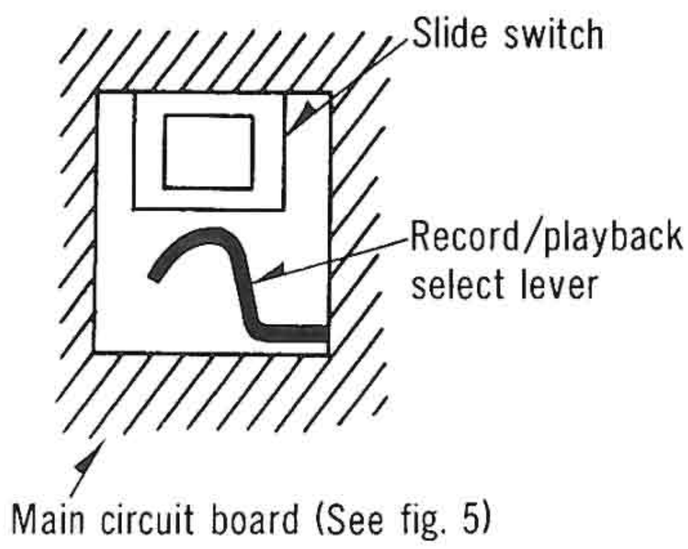

Fig. 8

※ When the main circuit board is installed, be sure that the slide switch and the record/playback select lever are placed in proper position. (See fig. 8)

ADJUSTMENTS

Before measuring and adjusting "Overall frequency response", "Overall distortion" and "Overall S/N ratio", confirm that the characteristics of 5 items below are within standard which have much relation to or influence on electrical performances above.

1. Head azimuth adjustment. 2. Bias current. 3. Playback gain. 4. Overall gain.
5. Playback frequency response.

I. TEST INSTRUMENTS

1. Prepare test instruments which are equivalent in accuracy to those shown below.
2. The test instruments should be inspected and corrected by specialists once every 6 months, because a long period of use without maintenance may increase errors in indication.
3. Warm-up the test instruments for 30 minutes and the set to be measured for 10 minutes before taking the measurements. If not, there may arise an error or difference between the initial value and the stabilized value measured after "aging".
4. Specifications of test instruments.

---

(1) Audio frequency oscillator

a. Oscillation frequency: 5 Hz ~ 500 kHz (5 ranges)
b. Frequency tolerance: ±(3% + 1 Hz)
c. Sine wave
* Output voltage: 5 Vrms ±10% (without load)
(at 25°C) 2.5 Vrms ±10% (with 600Ω load)
* Output frequency response: Within ±0.2 dB, 20 Hz ~ 20 kHz
Within ±0.5 dB, 5 Hz ~ 500 kHz
* Distortion factor: Not more than 0.05%, 200 Hz ~ 20 kHz
Not more than 0.5%, 5 Hz ~ 500 kHz
* Output impedance: 600Ω unbalanced, within ±15%
* Output attenuator: 0, 20 dB, Error: within ±0.2 dB
d. Temperature in use of set: Temperature = 0 ~ 40°C, Humidity = 90% or less

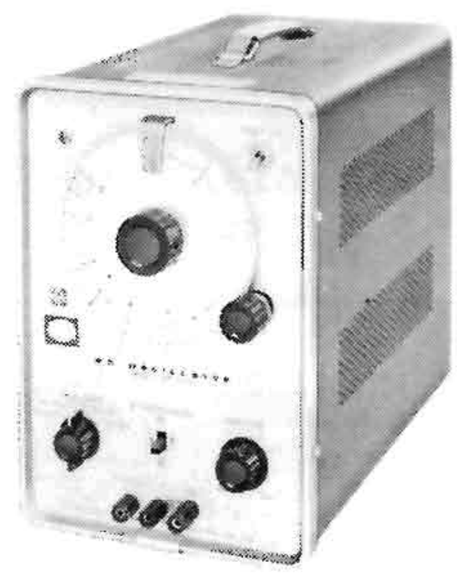

---

(2) Automatic-stop distortion meter (with vacuum tube voltmeter)

A. Distortion factor measurement
a. Frequency: 400 Hz, 1 kHz ±10%
(fundamental wave)
b. Measurement: 0.1 ~ 100% (6 ranges)
c. Input: 50 mV ~ 50 V
d. Fundamental wave attenuation: 60 dB or more
B. Level measurement
a. Measurement: 1 mV (−60 dB) ~ 30 V (30 dB) (9 ranges)
b. Frequency response: 20 Hz ~ 100 kHz ±0.3 dB
(1 kHz basis)
c. Input impedance: 1 MΩ ±10%, less than 50 pF
d. Error in indicated value: Within ±3% at 1 kHz
C. Output terminal
a. Frequency response: 10 Hz ~ 100 kHz ±1 dB
100 kHz ~ 1 MHz ±3 dB
b. Output voltage: 1 Vrms ±10% (1 kHz sine wave)

(3) Attenuator

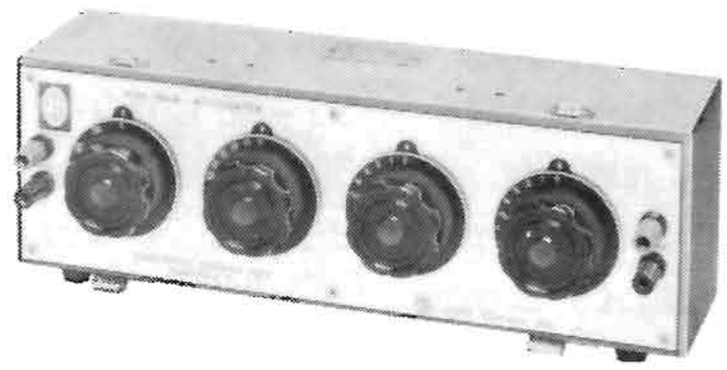

a. Input impedance:	600Ω unbalanced
b. Maximum attenuation:	121 dB
c. Minimum attenuation:	0.1 dB

---

(4) Oscilloscope

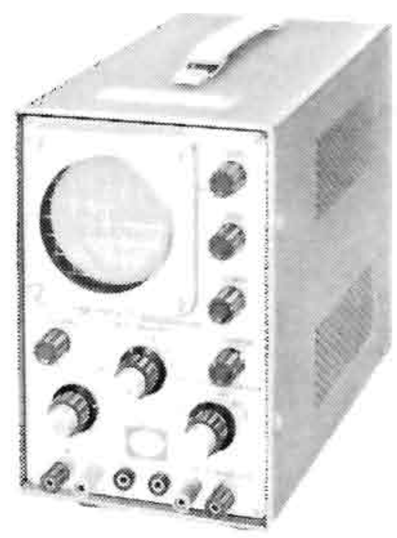

a. Cathode ray tube:	Effective ranges 8×8 cm
b. Vertical axis	
* Input sensitivity:	30 mV～30 V/cm
* Frequency band:	DC～2 MHz
* Transient time:	180 ns.
* Input impedance:	1 MΩ, 35 pF
c. Horizontal axis	
* Tuning range:	30 Hz～2 MHz
* Sweep time:	1μs～100 ms/cm
* External sweep:	1 Vp-p/cm or more

---

(5) Digital electronic counter

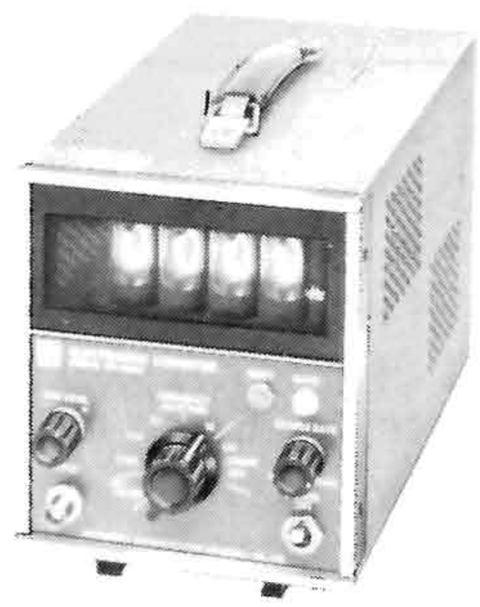

a. Number of figure:	4 (decimal system)
b. Input sensitivity:	100 mVrms
c. Input impedance:	1 MΩ, 40 pF
d. Frequency measurement range:	10 Hz～100 kHz
e. Counting time:	0.1, 1, 10 s

---

(6) Wow meter

a. Measured center frequency range:	3 kHz ±4%
b. Input level range:	30 mV～3 V
c. Input impedance:	About 50 KΩ unbalanced
d. Measurement:	0.01～3% (5 ranges)
e. Indicator error:	Maximum error in indicated value ±5% in each range.
f. Frequency response:	Conforming to weighting curve characteristics (WRMS), JIS C5551. Flat characteristics (RMS) 0.5～200 Hz, within −3 dB (4 Hz basis)
g. Meter indication system:	Effective value indication, conforming to JIS C5551.
h. Meter response characteristic:	About 5～7 sec.
i. Oscillation frequency:	3 frequencies (3 kHz, 3 kHz ±3%)
j. Temperature range:	0～40°C

II. MEASUREMENT CONDITIONS

1. Standard measurement conditions
   * Ambient temperature: 10～30°C (50～86°F)
   * Ambient humidity: 30～90% RH
   * Power voltage accuracy: ±3%
2. Position of tape recorder
   * When measuring, place the unit under test in a horizontal position.
3. Oscillator output voltage adjustment
   * Connect the equipments as shown in the following and adjust the oscillator output control knob for 1 V (f=1 kHz) through the attenuator while keeping the attenuator at 0 dB.
   * When supplying a signal to the tape recorder amplifier, adjust the input level using the attenuator.

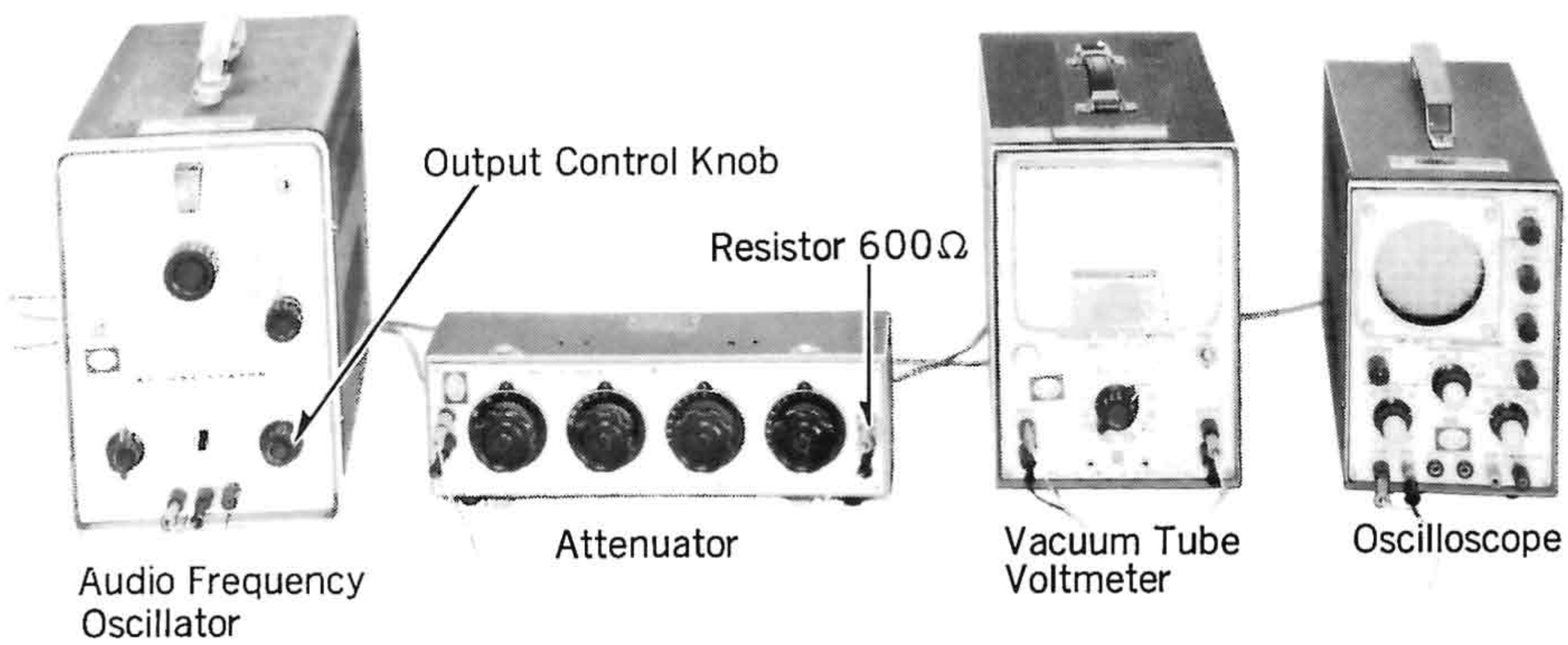

III. TEST TAPE

Test tape life

The more frequently the test tape is used, the more the tape characteristics will deteriorate (e.g. lowering of recorded level, worsening of frequency response particularly in high-frequency range, and an increase in wow due to tape elongation) until measured values become unreliable. Even in such a case when a tape is not used, but stored, for a long period of time, tape shows deterioration in performance because of self damagenetization due to storage conditions, etc.

Please refer to the tape life specification and use care not to use a tape longer than its rated life when servicing.

Frequence of use: Not more than 20 times for each tape length.

Storage period: Not more than 6 months.

※ Test tape

PARTS NO.	PARTS NAME	SPECIFICATIONS	REMARKS
C-FH	STANDARD REC. LEVEL & FREQ. RESPONSE TAPE	0dB, −10dB; 333Hz, 333Hz, 10kHz, 8kHz, 4kHz, 1kHz, 125Hz, 63Hz; 0dB: STANDARD REC. LEVEL (160pWb/mm)	5 TIMES REPETITIVE RECORDING TAPE SPEED: 1-7/8 IPS. (4.8 CM/S), FULL TRACK (10 MIN.)
C-WAT	WOW & TAPE SPEED TAPE	−10dB; 3kHz; 0dB: 250pWb/mm	TAPE SPEED: 1-7/8 IPS. (4.8 CM/S), FULL TRACK (45 MIN.)
C-AA	AZIMUTH TAPE	−10 dB; 6.3kHz; 0dB: 250pWb/mm	TAPE SPEED: 1-7/8 IPS. (4.8 CM/S), FULL TRACK (15 MIN.)
C-RA	REFERENCE BLANK TAPE (NORMAL)		UNRECORDED TAPE (20 MIN.)
C-RF	REFERENCE BLANK TAPE (CrO_2)		UNRECORDED TAPE (20 MIN.)

IV. MEASUREMENT & ADJUSTMENT METHOD

NOTE:

1. Make sure heads are clean.
2. Make sure capstan and pressure roller are clean.
3. Judgeable room temperature: 20±5°C (68±9°F)
4. Dolby NR switch: OUT
5. EQ. selector: 120μ
6. Bias selector: LOW
7. Peak check switch: OUT
8. Output level control: MAX.

ITEM	MEASUREMENT & ADJUSTMENT	REMARKS
Pressure of pressure roller Equipment: * Tension gauge (max. 500 gr) 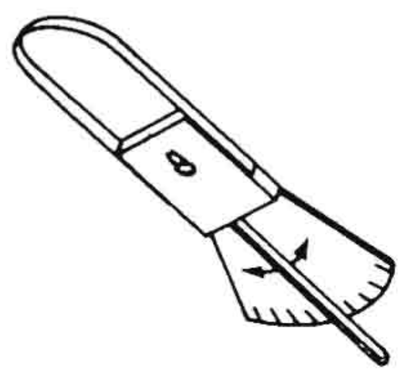	1. Place UNIT into playback mode. 2. Hook the tension gauge to pressure roller lever and pull it in the direction of the arrow as shown in fig. 9. 3. Measure the tension at the moment when the pressure roller moves away from the capstan. **Standard Value: 400±50 gr** **Adjustment method** Bend the part (A) of the pressure roller spring in either direction shown by the arrow until the correct pressure is attained.	* Playback mode 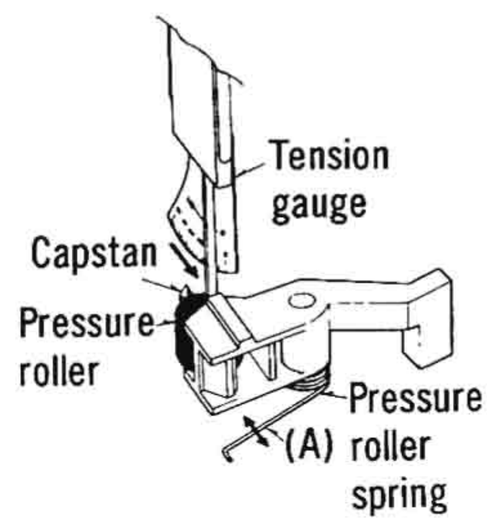 **Fig. 9**
Takeup tension Equipment: * Cassette torque meter (SRK-CT or RP8063)	1. Mount cassette torque meter on UNIT. 2. Place UNIT into playback mode and read takeup torque. 3. Measure several times and determine the mean value. **Standard Value: 55±15 gr-cm** If the measured value is not within standard, firstly clean the rotational parts of the mechanism with alcohol, and if it still is not within standard, make the following adjustment. **Adjustment method** Adjust by turning the plate spring attached in the takeup reel table (See fig. 10).	* Playback mode 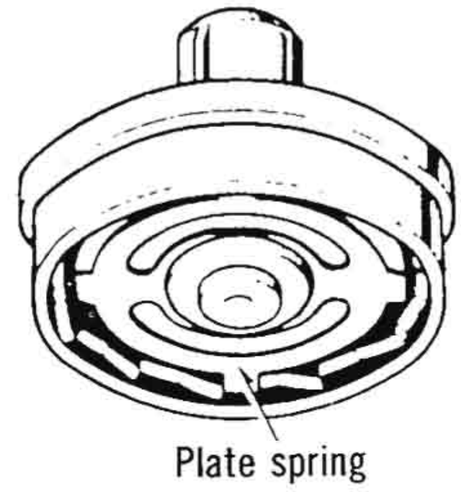 **Fig. 10**
Head azimuth adjustment Equipment: * VTVM * Oscilloscope * Test tape (azimuth)···C-AA	**Record/playback head adjustment** 1. Test equipment connection is shown below. 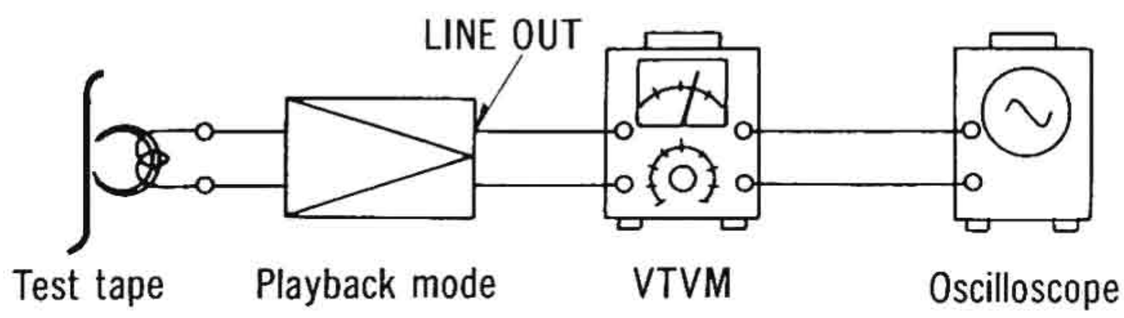 **Fig. 11** 2. Play azimuth tape (C-AA 6.3 kHz). 3. Adjust record/playback head angle adjustment screw (B) in fig. 12 so that output level at LINE OUT becomes maximum. 4. Measure both channels, and adjust levels for equal output. 5. After adjustment lock head adjustment screw with lacquer.	* Playback mode 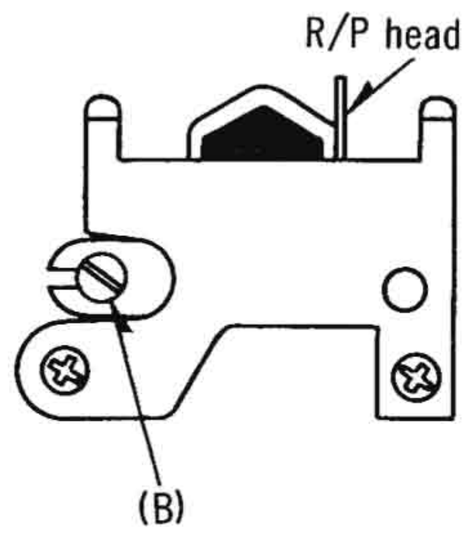 **Fig. 12**

ITEM	MEASUREMENT & ADJUSTMENT	REMARKS
Tape speed Equipment: * Digital electronic counter or frequency counter (RP8067) * Test tape···C-WAT	**Tape speed accuracy** 1. Test equipment connection is shown below. 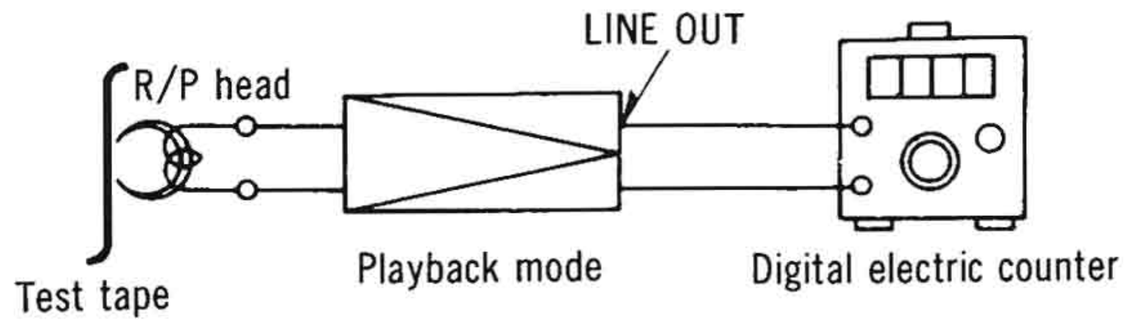 **Fig. 13** 2. Play test tape (C-WAT 3,000 Hz), and supply playback signal to frequency counter. 3. Measure this frequency. 4. On the basis of 3,000 Hz, determine value by following formula: $\text{Tape speed accuracy} = \left(\frac{f-3{,}000}{3{,}000} \times 100\right)\%$ where, f = measured value 5. Take measurement at middle section of tape. **Standard Value: ±1.5%** **Adjustment method** 1. Play the middle part of test tape. 2. Adjust the tape speed adjustment VR shown in fig. 28 so that frequency becomes 3,000 Hz. **Tape speed fluctuation** Make measurements in same manner as above (beginning, middle and end of tape), and determine difference between maximum and minimum values and calculate as follows: $\text{Tape speed fluctuation} = \left(\frac{f_1-f_2}{3{,}000} \times 100\right)\%$ f_1 = maximum value f_2 = minimum value **Standard Value: 1%**	* Playback mode
Wow and flutter Equipment: * Wow meter * Test tape···C-WAT	1. Test equipment connection is shown below. 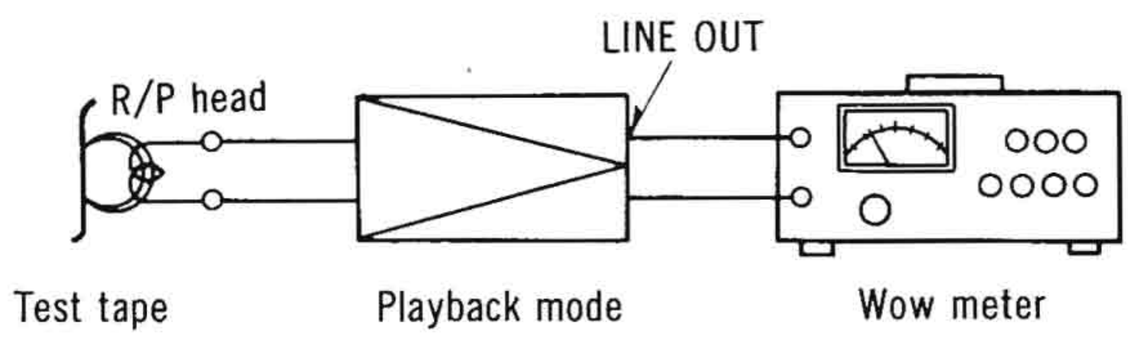 **Fig. 14** 2. Use wow test tape (3,000 Hz) and measure its playback signal on wow meter. 3. Wow and flutter is expressed in percentage and that measurement can be weighted by JIS network (WRMS). 4. Measure at middle section of test tape. **Standard Value: 0.12% (WRMS)**	* Playback mode

ITEM	MEASUREMENT & ADJUSTMENT	REMARKS
Playback frequency response Equipment: * VTVM * Oscilloscope * Test tape···C-FH	1. Test equipment connection is as same as "Head azimuth adjustment" but use the test tape (C-FH) instead of head azimuth tape (See fig. 11). 2. Place UNIT into playback mode. 3. Play frequency response test tape (C-FH). 4. Measure output level at 10kHz, 8kHz, 4kHz, 1kHz, 125Hz and 63Hz and compare each output level with standard frequency 333Hz, at LINE OUT. 5. Make measurement for both channels. 6. Make sure that the measured value is within the range specified in the frequency response chart. **Playback frequency response chart** 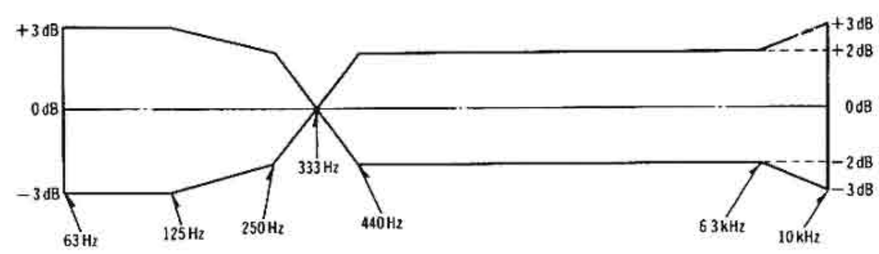 **Fig. 15** 7. If measured value is not in standard, adjust VR1 (L-CH), VR2 (R-CH) (See fig. 28 on page 14).	* Playback mode
Playback gain Equipment: * VTVM * Oscilloscope * Test tape···C-FH	1. Test equipment connection is shown in fig. 11. 2. Play standard recording level portion on test tape (C-FH 333Hz), and using VTVM measure the output level at LINE OUT jack. 3. Make measurement for both channels. **Standard Value: 0.42V (−7dB)** **Adjustment** 1. If measured value is not standard, adjust VR3 (L-CH), VR4 (R-CH) (See fig. 28 on page 14). 2. After adjustment, check "Playback frequency response" again.	* Playback mode
Playback S/N ratio Equipment: * VTVM * Oscilloscope * Test tape···C-FH * Empty cassette	1. Test equipment connection is shown in fig. 11. 2. Play standard recording level test tape (C-FH 333Hz) and read output level on VTVM. Refer to "Playback gain adjustment". 3. Place empty cassette (which has been cut) and play again. 4. Measure noise level at this time, using VTVM, and determine ratio of this level to test tape output signal voltage (333Hz). **Standard Value: Greater than 43dB** An example calculation is shown below. A: Es = playback output signal voltage of test tape (333Hz) B: En = playback output noise level Es = 0.42V (−7dB) En = 3.0mV (−50dB) $\text{S/N ratio} = \frac{Es}{En} = \frac{0.42V}{3.0mV} = 140$ $20 \log_{10} 140 = 43dB$ S/N ratio = Es(dB) − En(dB) = −7 − (−50) = 43dB	* Playback mode

ITEM	MEASUREMENT & ADJUSTMENT	REMARKS
Bias current Equipment: * VTVM * Oscilloscope	1. Test equipment connection is shown below. 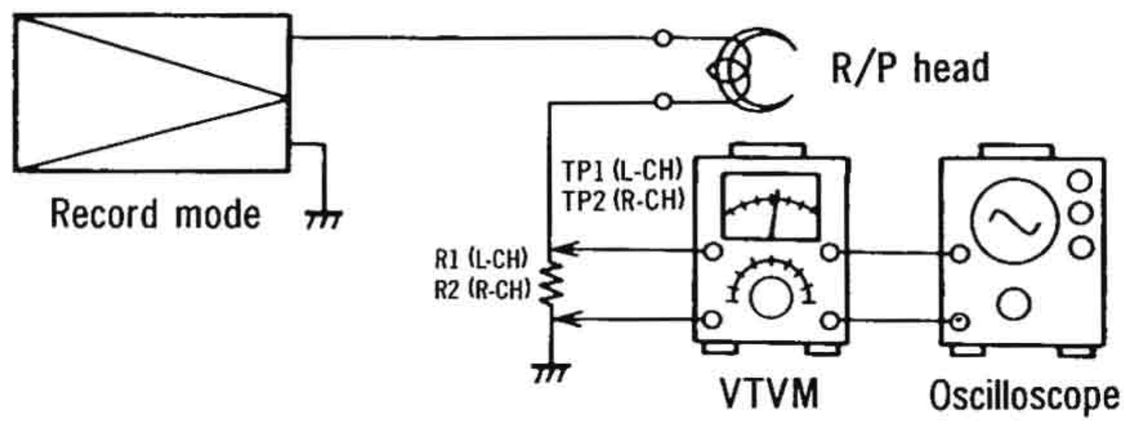 **Fig. 16** 2. Place UNIT into record mode, and bias selector to "LOW" (for normal tape). 3. Read voltage on VTVM and calculate bias current by following formula: $\text{Bias current (A)} = \frac{\text{Value read on VTVM (V)}}{10\,(\Omega)}$ **Standard Value: $0.5\,^{+0.25}_{-0.15}$ mA** 4. Adjust L5 (L-CH), and L6 (R-CH) (See adjustment part location on page 14). 5. Then changing the bias selector to "HIGH" confirm that bias current becomes the value shown below. **Standard Value: $0.6\,^{+0.25}_{-0.15}$ mA**	* Record mode * Be sure the ground end of the meter is connected to the ground end of the resistor. * When bias current is adjusted on one channel only, note that bias current on the other channel may vary.
Erase current Equipment: * VTVM * Oscilloscope * Resistor (1Ω)	1. Connect 1Ω resistor between ground side terminal of erase head and ground lead wire removed (See fig. 18). 2. Connect VTVM to both ends of 1Ω resistor. 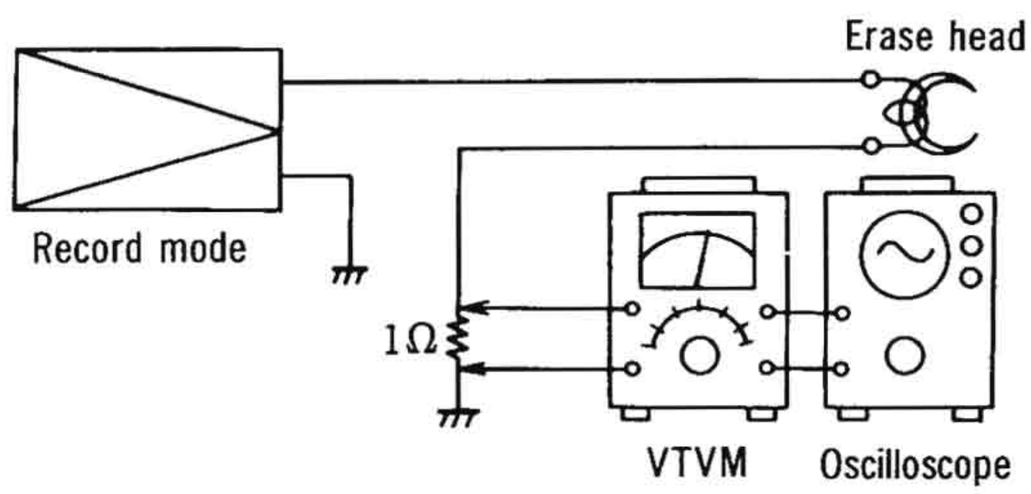 **Fig. 17** 3. Place UNIT into record mode and, measure voltage across the 1Ω resistor. 4. Determine erase current with the following formula: $\text{Erase current (A)} = \frac{\text{Voltage across 1}\Omega\text{ resistor (V)}}{1\,(\Omega)}$ **Standard Value: More than 70 mA**	* Record mode 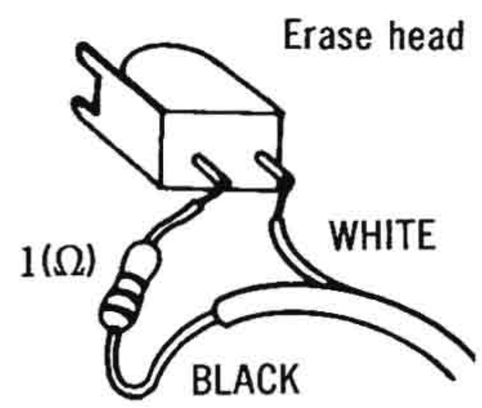 **Fig. 18**

ITEM	MEASUREMENT & ADJUSTMENT	REMARKS
Overall gain Equipment: * AF oscillator * VTVM * ATT * Oscilloscope * Test tape (reference blank tape) C-RA for Normal	1. Test equipment connection is shown in fig. 19. 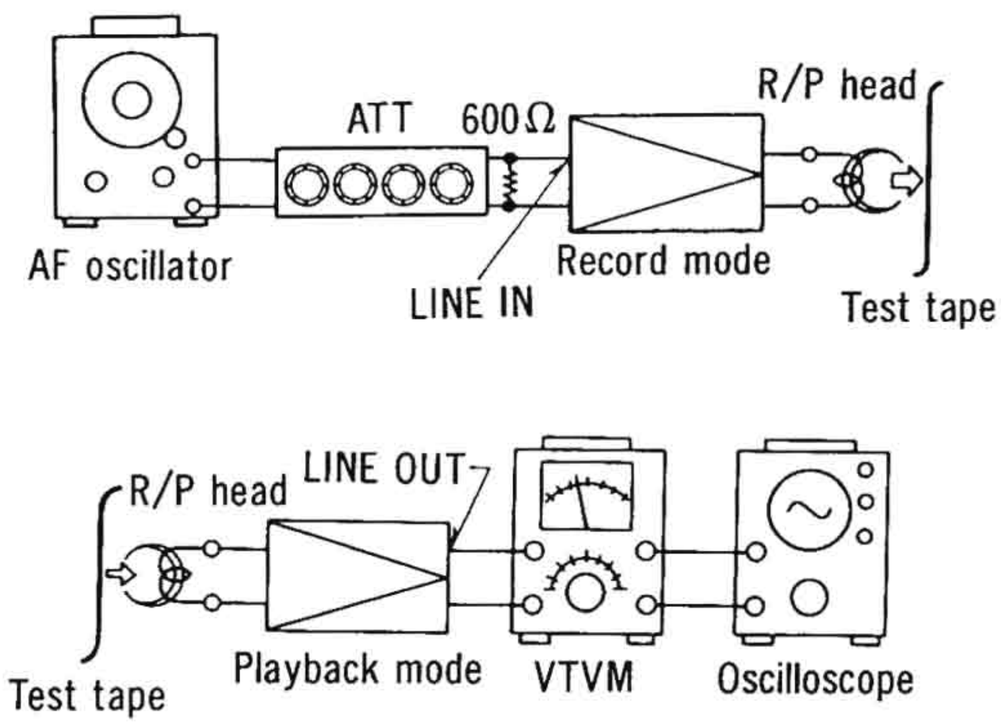 **Fig. 19** 2. Place UNIT into record mode. 3. Supply 1 kHz signal (−24 dB) from AF oscillator, through ATT, to LINE IN. 4. Adjust ATT until monitor level at LINE OUT becomes 0.42 V (−7 dB). 5. Using test tape (C-RA), make recording. 6. Playback recorded tape, and make sure the value at LINE OUT on VTVM becomes 0.42 V. 7. If measured value is not 0.42 V, adjust VR15 (L-CH), VR16 (R-CH) (See fig. 28 on page 14). 8. Repeat from step (2).	* Record/playback mode * LINE IN level control ···MAX * Input selector···LINE IN * Standard input level: MIC ····· −72 ± 3 dB LINE IN −24 ± 3 dB
Level meter Equipment: * VTVM * Oscilloscope * AF oscillator * ATT	**When there is no signal** 1. Turn off the power supply to the set. 2. Check whether the indication needles of the level meters are in the position shown in fig. 20. 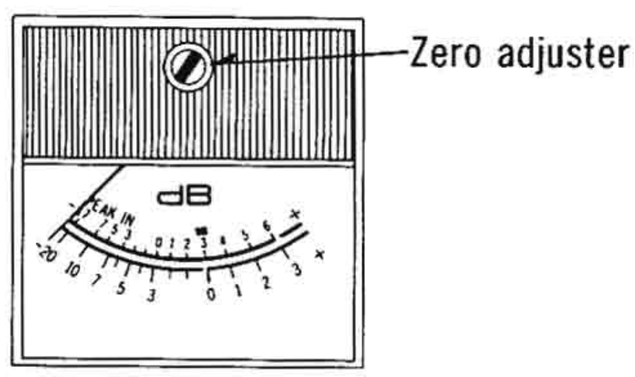 **Fig. 20** 3. If they deviate to the position shown above, adjust the zero adjuster. 4. Turn on the power supply to the set.	* Record mode

ITEM	MEASUREMENT & ADJUSTMENT	REMARKS
	When standard recording level is supplied. Test equipment connection are shown in fig. 21. 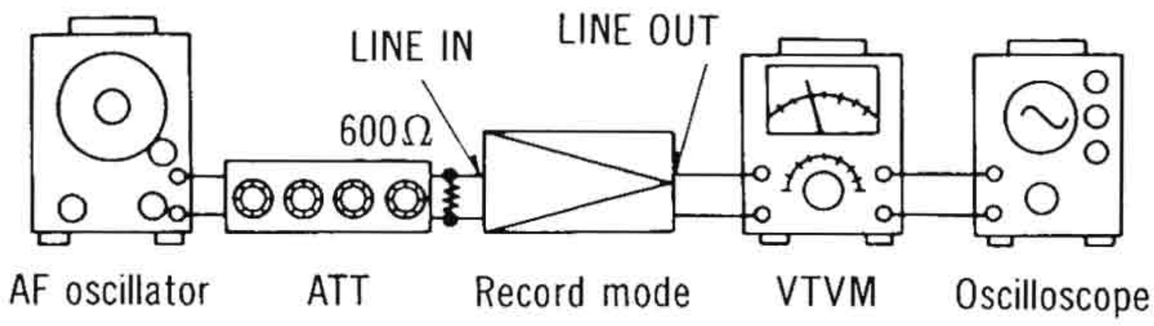 **Fig. 21** 5. Set the peak level check switch to the "IN" position. 6. Supply a 1 kHz signal from the AF oscillator, through the ATT, to the LINE IN Jack. 7. Adjust the ATT so that the monitor level at LINE OUT becomes 0.42 V. 8. Adjust VR13 (L-CH) and VR14 (R-CH) so that the VU meters indicate 0 VU. (See fig. 22). 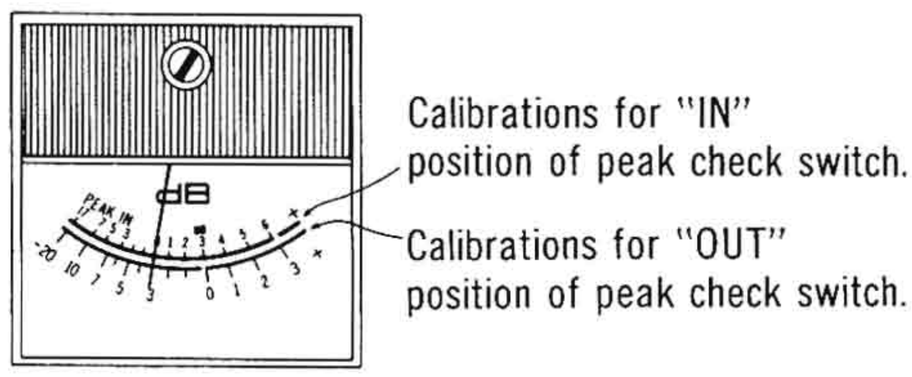 **Fig. 22** Balance of left and right level meters 9. Set the peak level check switch to the "OUT" position. 10. Then adjust VR18 for R-CH so that left and right VU meters show the same indication.	* Input selector···LINE IN
Overall distortion Equipment: * Distortion meter * AF oscillator * ATT * Oscilloscope * Test tape (reference blank tape) C-RA for Normal C-RF for CrO_2	1. Test equipment connection is shown in fig. 23. 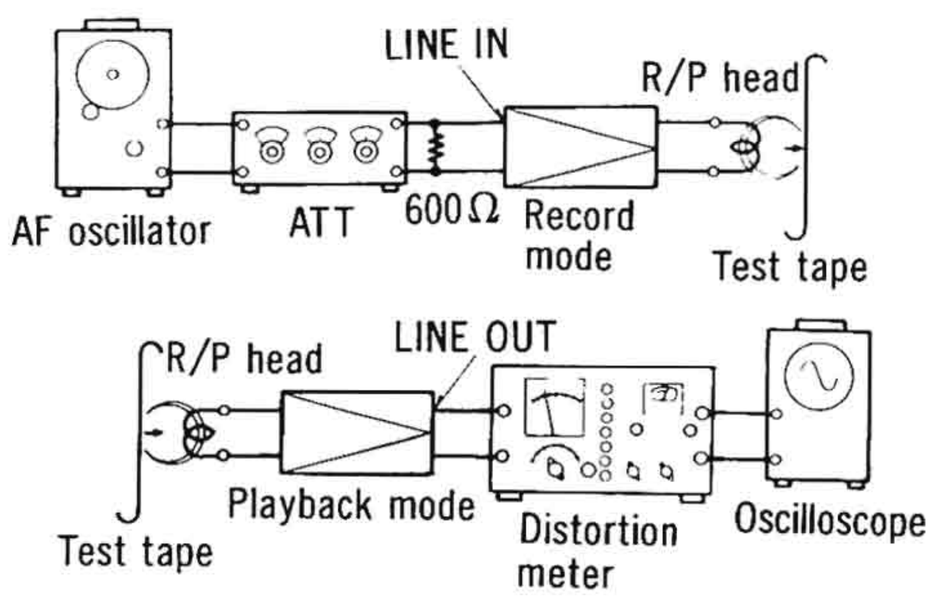 **Fig. 23** 2. Supply 1 kHz signal to LINE IN and adjust ATT so that output level at LINE OUT indicates 0.42 V (−7 dB). 3. Make recording. 4. Playback and measure distortion factor of output signal. 5. When the distortion factor does not satisfy the standard, check the bias current. When the bias current is lower than standard, distortion will increase. Care should be exercised in the adjustment because the bias current also has an influence on the overall frequency response. Refer to "The overall frequency response" and "The bias current adjustment". **Standard Value: Less than 2.3 % (Normal)** **Less than 3.3 % (CrO_2)**	* LINE IN level control ···MAX * Input selector···LINE IN

ITEM	MEASUREMENT & ADJUSTMENT	REMARKS
Overall frequency response Equipment: * VTVM * AF oscillator * ATT * Test tape (reference blank tape) C-RA for Normal C-RF for CrO_2	**Note:** Before measuring and adjusting, make sure of the playback frequency response (For the method of measurement, please refer to the playback frequency response). 1. Test equipment connection is shown in fig. 19. 2. Load reference blank test tape and place UNIT into record mode. 3. Supply 1 kHz signal from AF oscillator through ATT to LINE IN. 4. Adjust ATT so that input level is −20 dB below standard recording level (standard recording level = 0 VU). 5. At this time, LINE OUT level indicates 0.042 V. 6. Record each frequency 50 Hz, 100 Hz, 200 Hz, 700 Hz, 1 kHz, 1.5 kHz, 2 kHz, 4 kHz and 10 kHz (11 kHz for CrO_2) at the same level. 7. Playback and express in dB the difference between playback output level of each frequency based on playback output level of 1 kHz. 8. Make sure that the measured value is within the range specified in the overall frequency response chart. **Overall frequency response chart (Normal)** 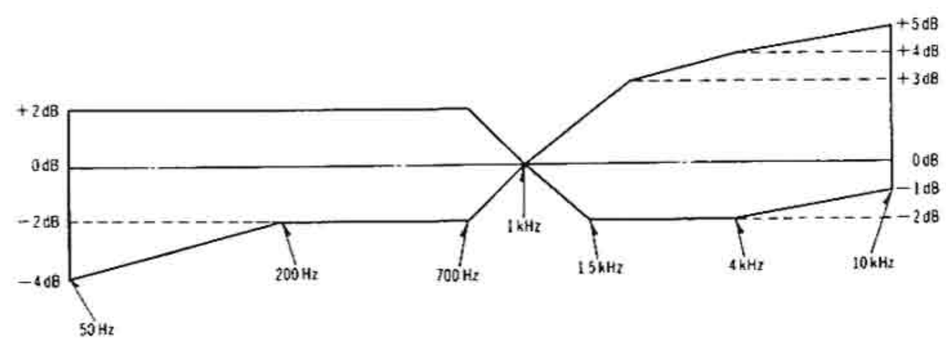 **Fig. 24**	* Record/playback mode * Record level control ···MAX * Use test tape C-RA * Input selector···LINE IN
	9. Set the bias selector to "HIGH" and EQ. selector to "70μ" position. 10. Measure as same as manner above. 11. Make sure that the measured value is within the range specified in the overall frequency response chart for CrO_2 tape below. **Overall frequency response chart (CrO_2)** 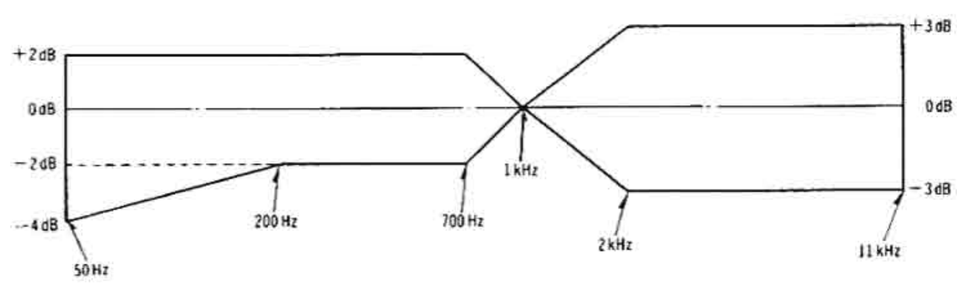 **Fig. 25**	* Use test tape C-RF
Overall frequency response adjustment (As a standard for adjustment)	1. When the frequency response between the middle- and high-frequency range becomes higher than the standard value, as shown by the solid line in figure 26, increase the bias current by turning L5 (L-CH), L6 (R-CH). 2. When it becomes lower, as shown by dotted line, reduce the bias current by turning L5 (L-CH), L6 (R-CH). **Note:** 1. For adjustment when the bias current is lower than the standard value 0.17 mA, use the procedure indicated in adjustment 2, because reducing the bias current beyond this point may worsen the distortion factor. 2. For the method of bias current measurement, refer to "Bias Current Adjustment" on page 9.	

ITEM	MEASUREMENT & ADJUSTMENT	REMARKS
	Adjustment 1-Using bias current 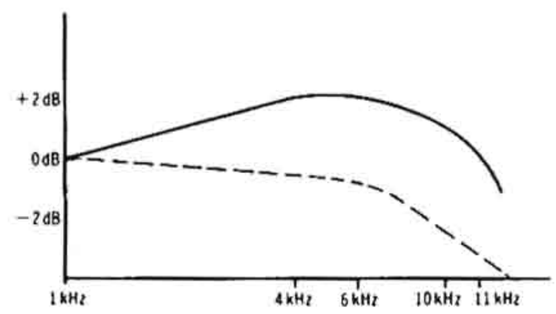 **Fig. 26** **Adjustment 2-Using the peaking coil for recording equalization** 1. When the frequency response is flat in the middle-frequency range and makes a sharp rise or drop in the high-frequency range, as shown in fig. 27, adjust by turning the peaking coil L3 (L-CH), L4 (R-CH) for normal tape recording equalization. 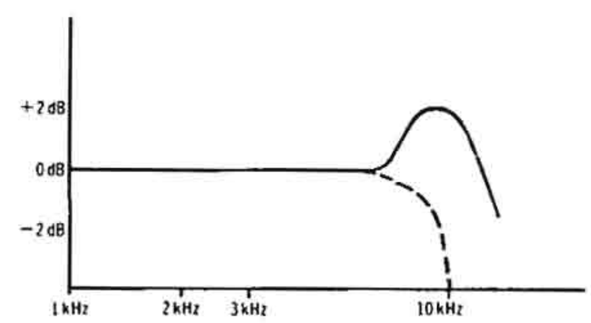 **Fig. 27**	
Overall S/N ratio Equipment: * VTVM * AF oscillator * ATT * Oscilloscope * Test tape (reference blank tape) ···C-RA	1. Test equipment connection is shown in fig. 19. 2. Supply 1kHz signal to LINE IN and adjust ATT so that output level at LINE OUT indicates 0.42V (−7dB). 3. Make recording. 4. Make another recording without supplying signal (disconnect input plug to LINE IN). 5. Rewind to recorded part and playback. 6. Measure output signal level and no signal level (noise), and determine the ratio in decibels (dB). 7. The value is different between "Playback S/N and overall S/N", but for decibel calculation refer to "Playback S/N measurement" on page 8. **Standard Value: Greater than 42dB (without NAB filter)**	* Record/playback mode * LINE IN level control ···MAX * Erase the tape with a bulk tape eraser. * Input selector···LINE IN
Dolby NR circuit Equipment: * VTVM * AF oscillator * ATT * Oscilloscope	1. Place UNIT into record mode, set the Dolby NR switch to OUT position and supply to LINE IN to obtain −34.5dB at TP3 (L-CH), TP4 (R-CH) (frequency 5kHz). 2. Confirm that the value at IN position is 8dB greater than the value at OUT position of Dolby NR switch. 3. When it is not in condition above, adjust as follows. 4. Set VR7 (L-CH), VR8 (R-CH) to maximum. 5. Set the Dolby NR switch to IN position. 6. At this time adjust VR9 (L-CH), VR10 (R-CH) so that the reading of VTVM become 10dB greater than the value in step (1) above. 7. Adjusting VR7 (L-CH), VR8 (R-CH), make the reading of VTVM become 2dB smaller than the value obtainted through the adjustment in step (6) above.	* Record mode * LINE IN level control ···MAX * Input selector···LINE IN

ADJUSTMENT PARTS LOCATION

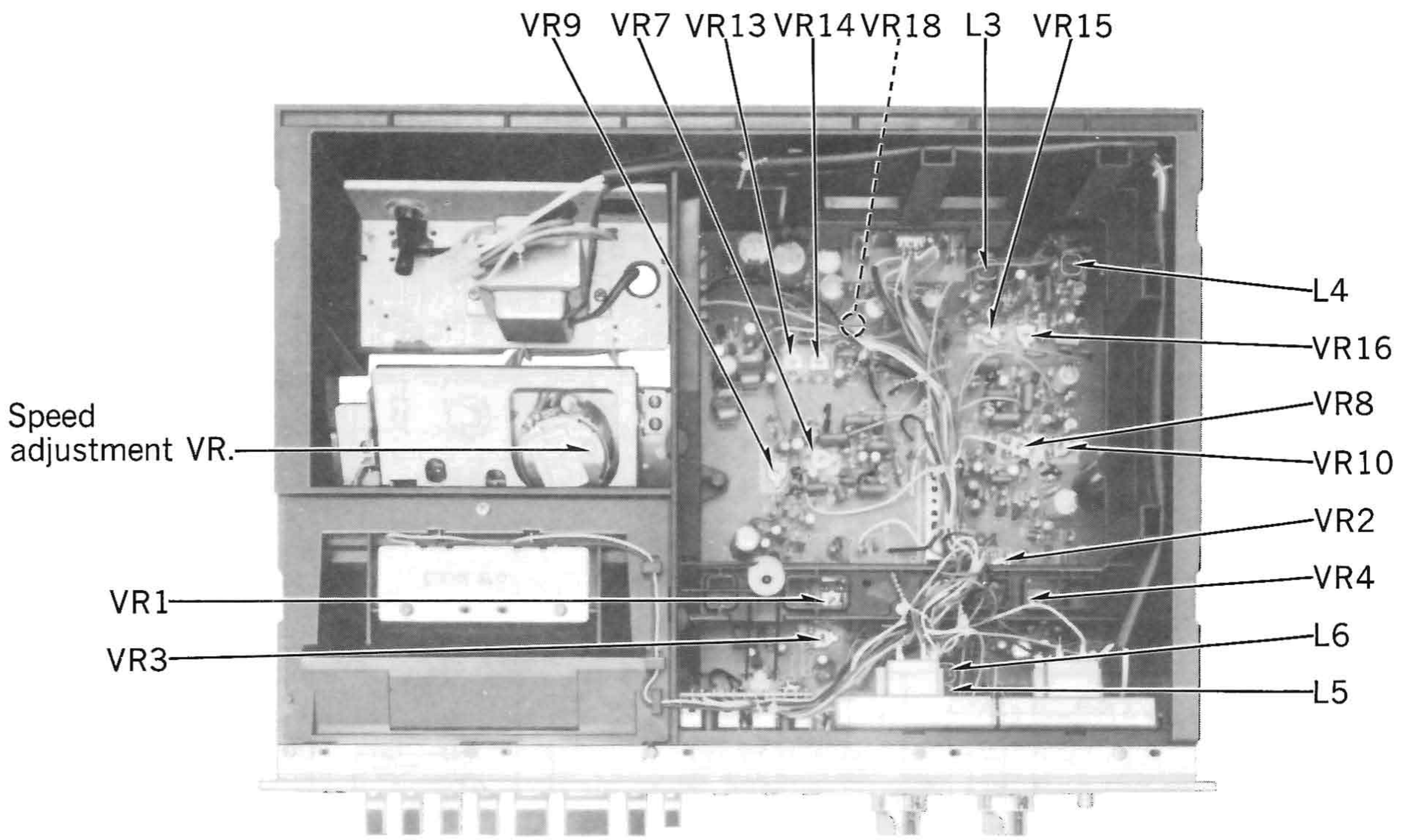

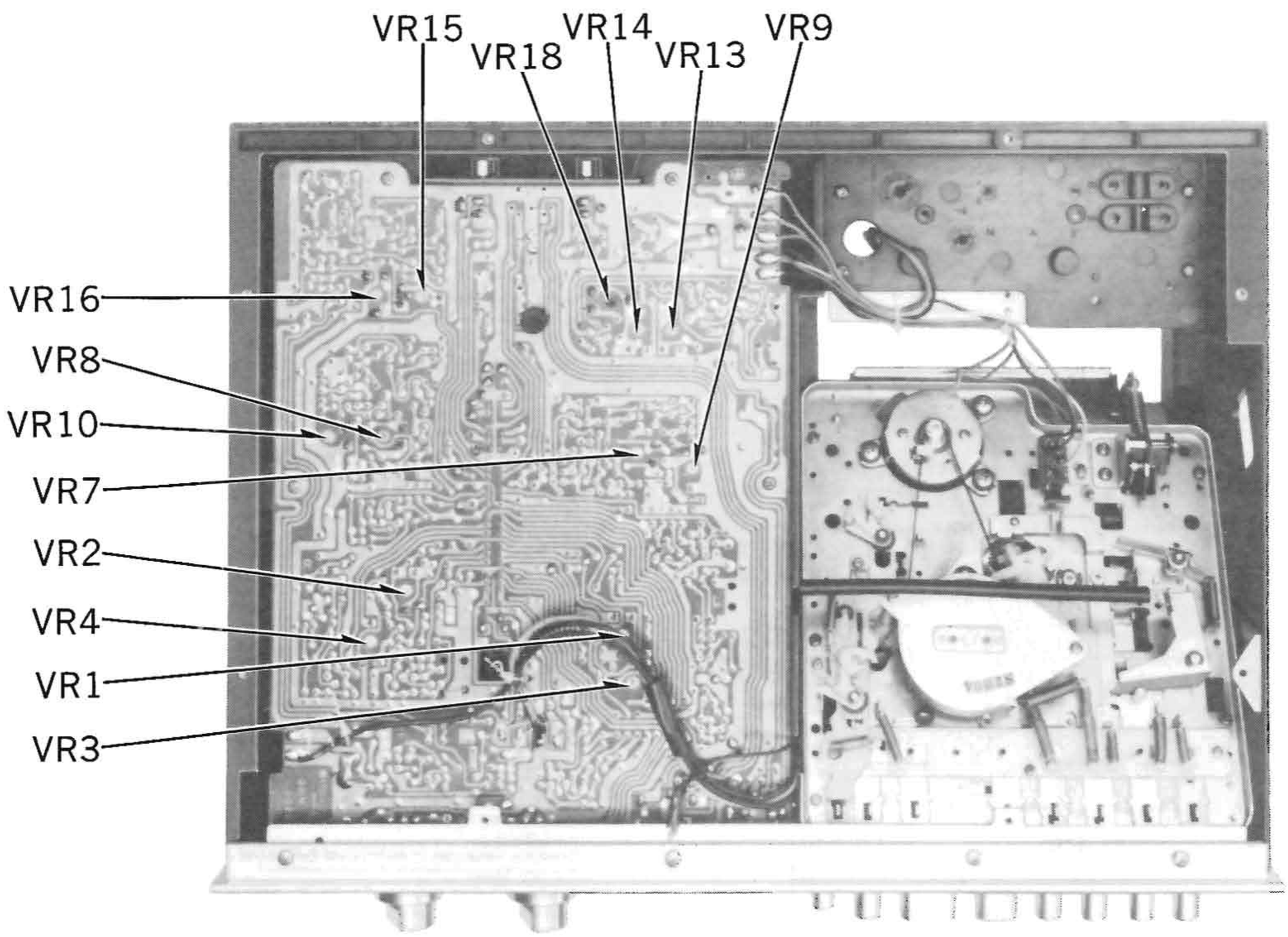

Fig. 28

SCHEMATIC DIAGRAM MODEL RS-630TUS

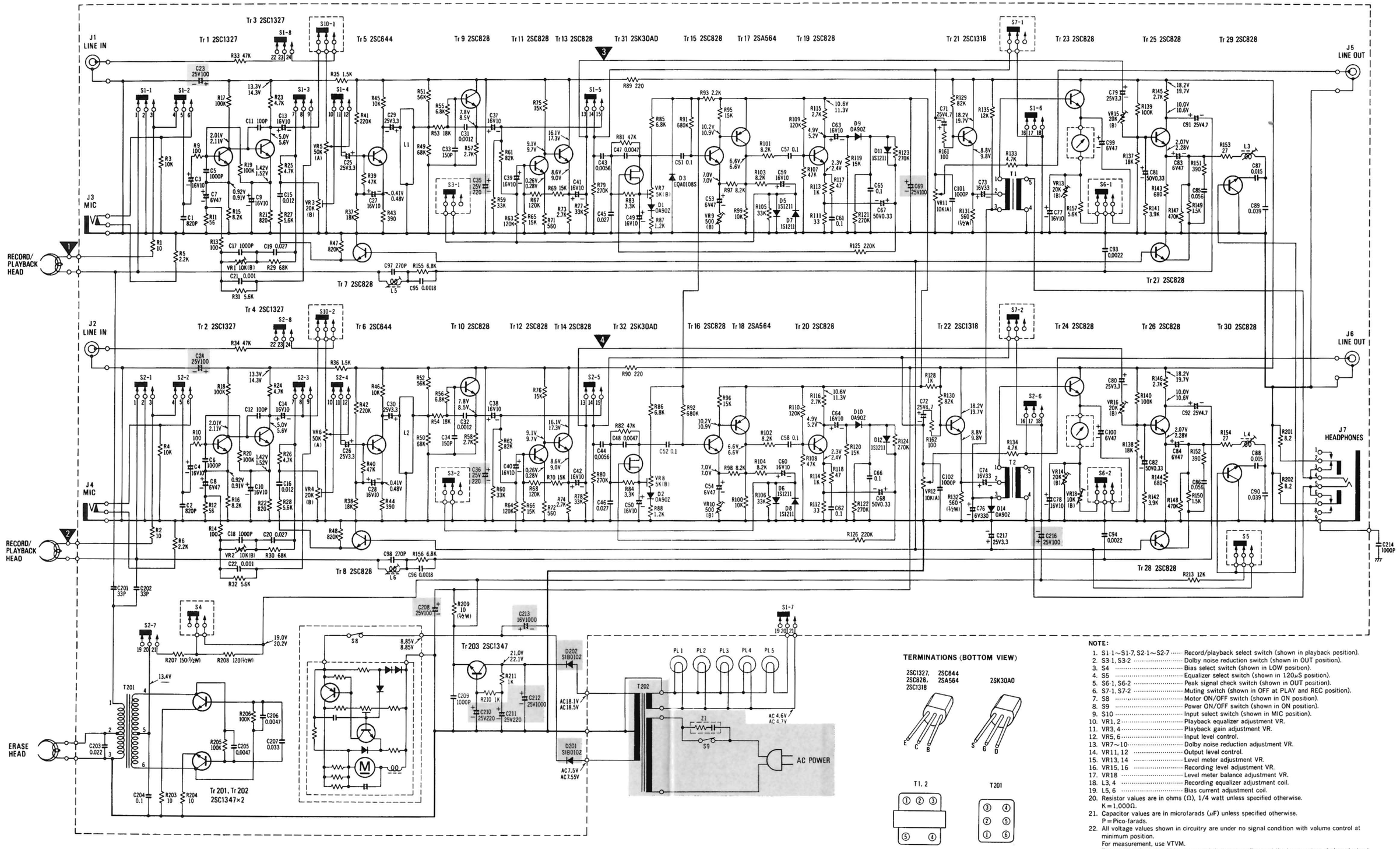

TERMINATIONS (BOTTOM VIEW)

NOTE:

1. S1-1～S1-7, S2-1～S2-7 ····· Record/playback select switch (shown in playback position).
2. S3-1, S3-2 ····· Dolby noise reduction switch (shown in OUT position).
3. S4 ····· Bias select switch (shown in LOW position).
4. S5 ····· Equalizer select switch (shown in 120μS position).
5. S6-1, S6-2 ····· Peak signal check switch (shown in OUT position).
6. S7-1, S7-2 ····· Muting switch (shown in OFF at PLAY and REC position).
7. S8 ····· Motor ON/OFF switch (shown in ON position).
8. S9 ····· Power ON/OFF switch (shown in ON position).
9. S10 ····· Input select switch (shown in MIC position).
10. VR1, 2 ····· Playback equalizer adjustment VR.
11. VR3, 4 ····· Playback gain adjustment VR.
12. VR5, 6 ····· Input level control.
13. VR7～10 ····· Dolby noise reduction adjustment VR.
14. VR11, 12 ····· Output level control.
15. VR13, 14 ····· Level meter adjustment VR.
16. VR15, 16 ····· Recording level adjustment VR.
17. VR18 ····· Level meter balance adjustment VR.
18. L3, 4 ····· Recording equalizer adjustment coil.
19. L5, 6 ····· Bias current adjustment coil.
20. Resistor values are in ohms (Ω), 1/4 watt unless specified otherwise.
    K=1,000Ω.
21. Capacitor values are in microfarads (μF) unless specified otherwise.
    P=Pico-farads.
22. All voltage values shown in circuitry are under no signal condition with volume control at minimum position.
    For measurement, use VTVM.
    The upper values should be measured during recording and the lower values during playback.
23. The mark (▼) shows test point. e.g. ▽=Test point 1.
24. Important safety notice.
    The shaded area on this schematic diagram incorporates special features important for safety. When servicing it is essential that only manufacturer's specified parts be used for the critical components in the shaded areas of the schematic.

CIRCUIT BOARD

MAIN CIRCUIT BOARD

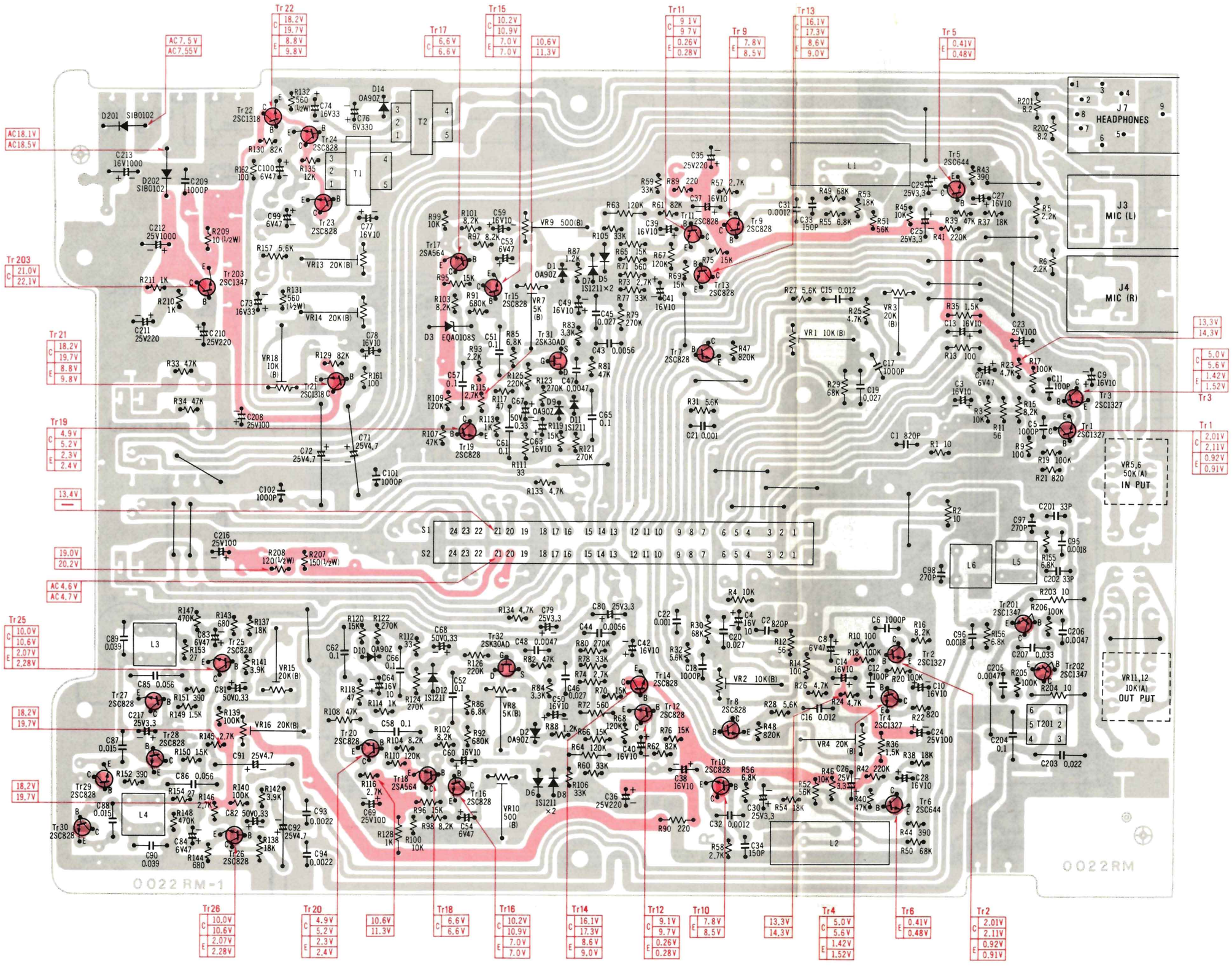

SWITCH CIRCUIT BOARD

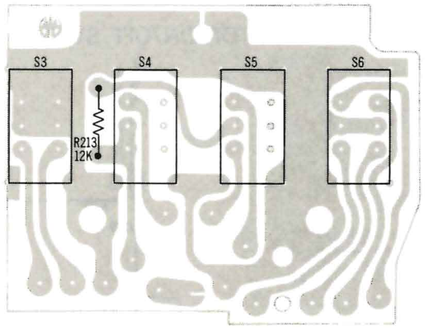

NOTE:
The circuit shown in red on the conductor is B circuit.
Values indicated in ▭ are DC voltage between the chassis and electrical parts.
The upper values should be measured during recording and the lower values during playback.

WIRING CONNECTION DIAGRAM MODEL RS-630TUS

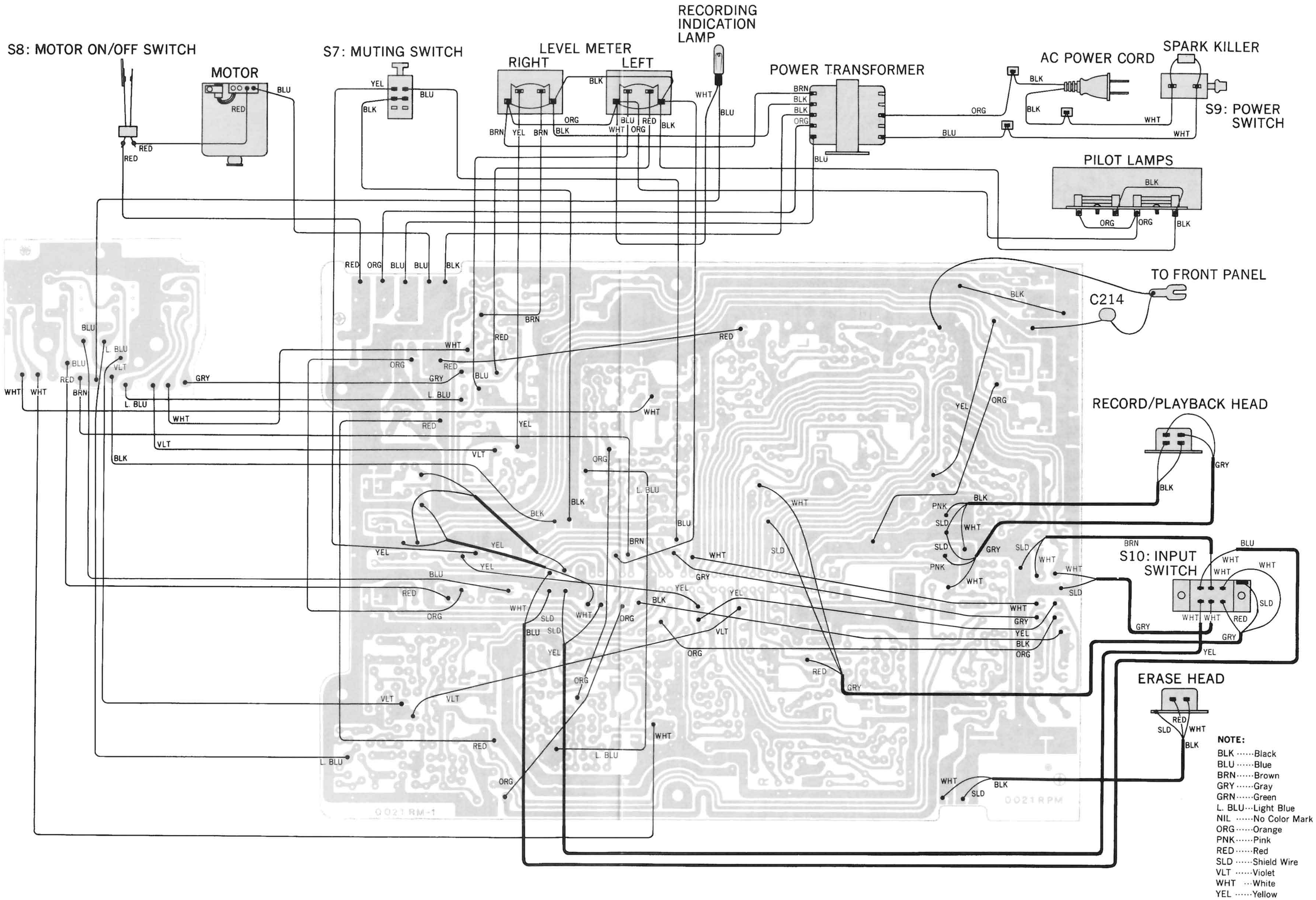

EXPLODED VIEWS

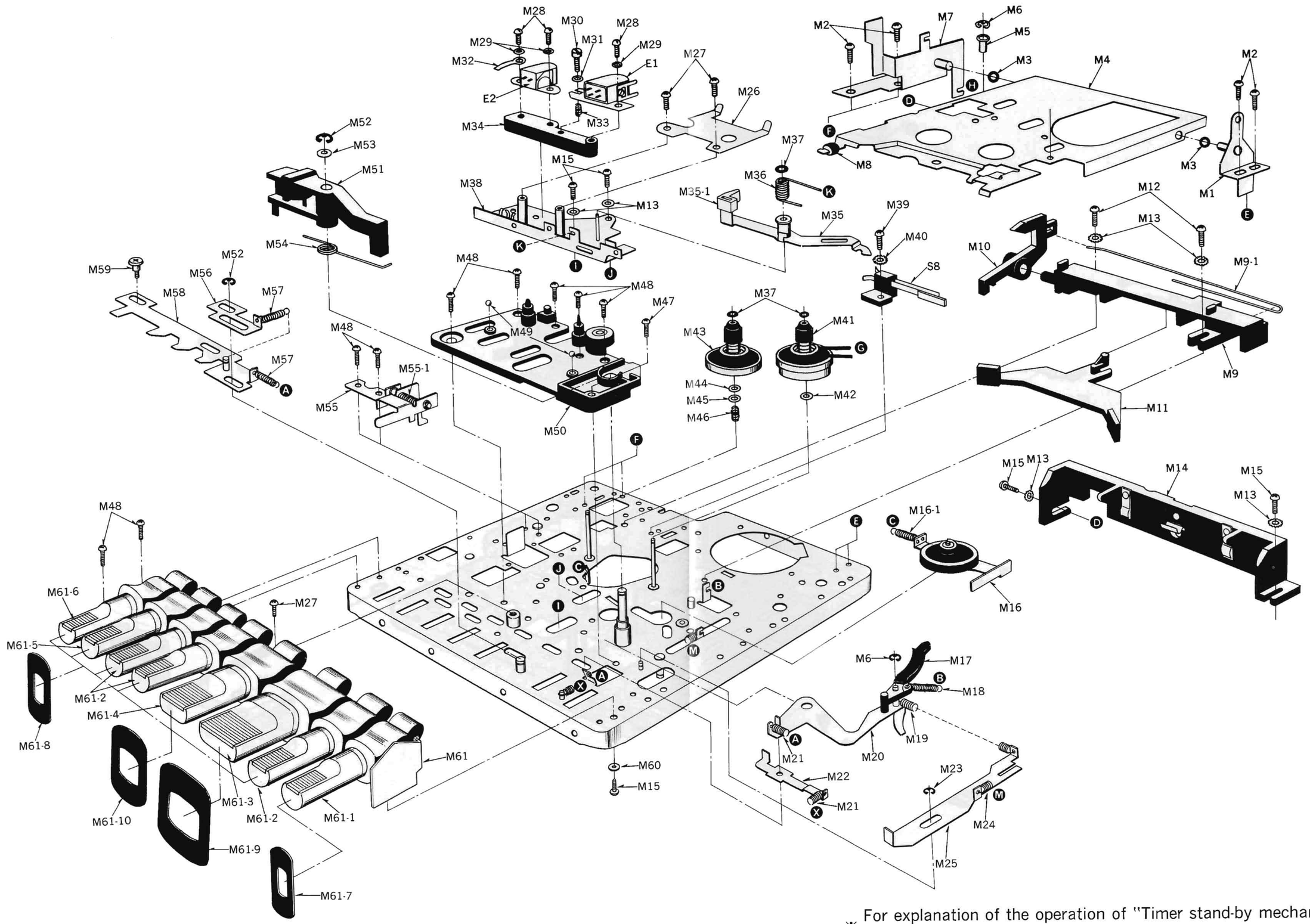

※ For explanation of the operation of "Timer stand-by mechanism", refer to the service manual of RS-615US.

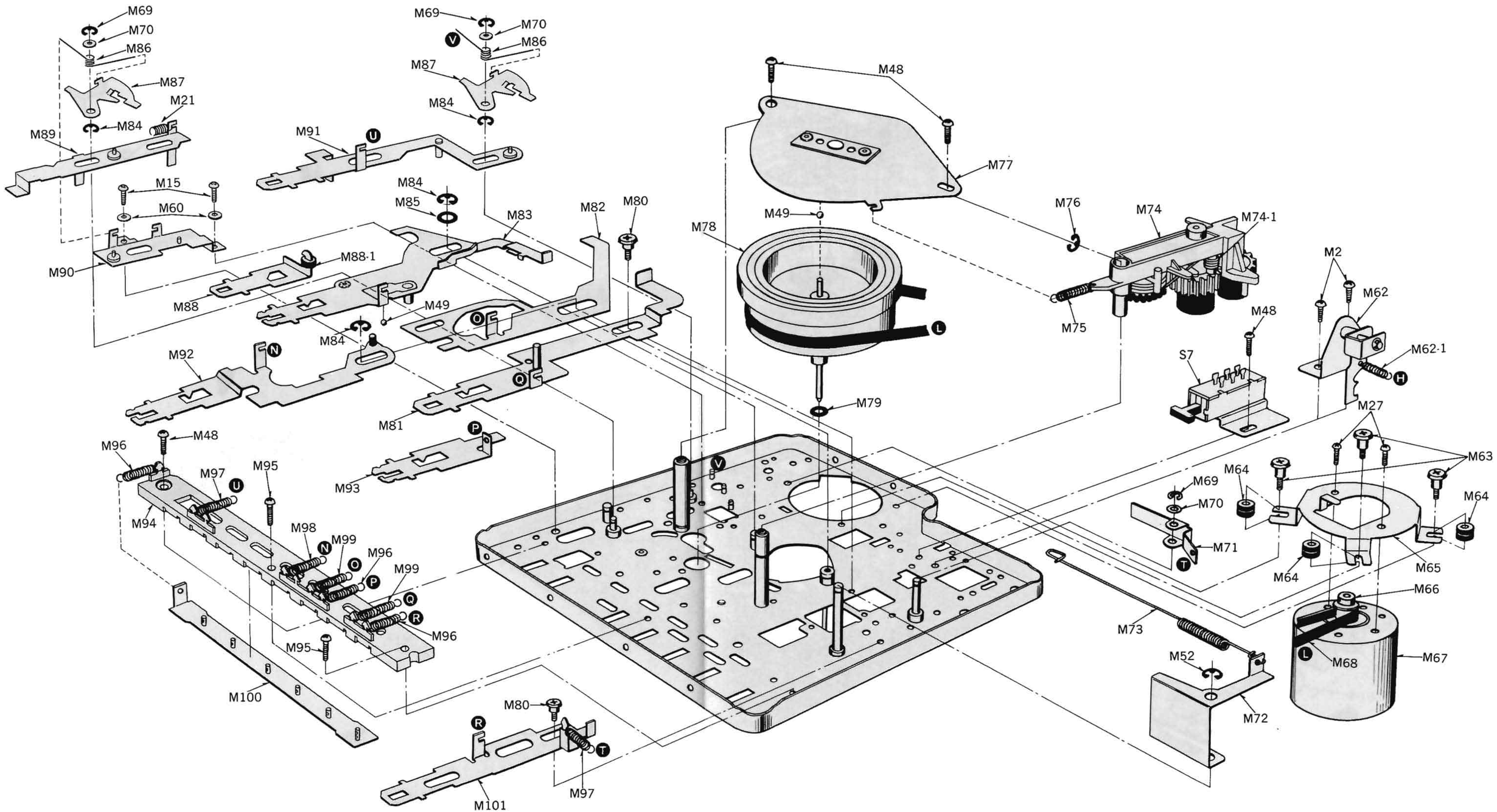
M69
M70
M86
M87
M21
M84
M89
M69
M70
M86
M87
M84
M91
M15
M60
M90
M84
M85
M83
M82
M80
M88·1
M88
M49
M84
M92
M81
M93
M48
M96
M97
M95
M94
M98
M99
M96
M99
M96
M95
M100
M80
M101
M97
M48
M77
M49
M78
M79
M76
M74
M74·1
M75
M48
S7
M2
M62
M62·1
M27
M63
M64
M69
M70
M71
M64
M65
M64
M66
M73
M52
M72
M68
M67

CABINET PARTS

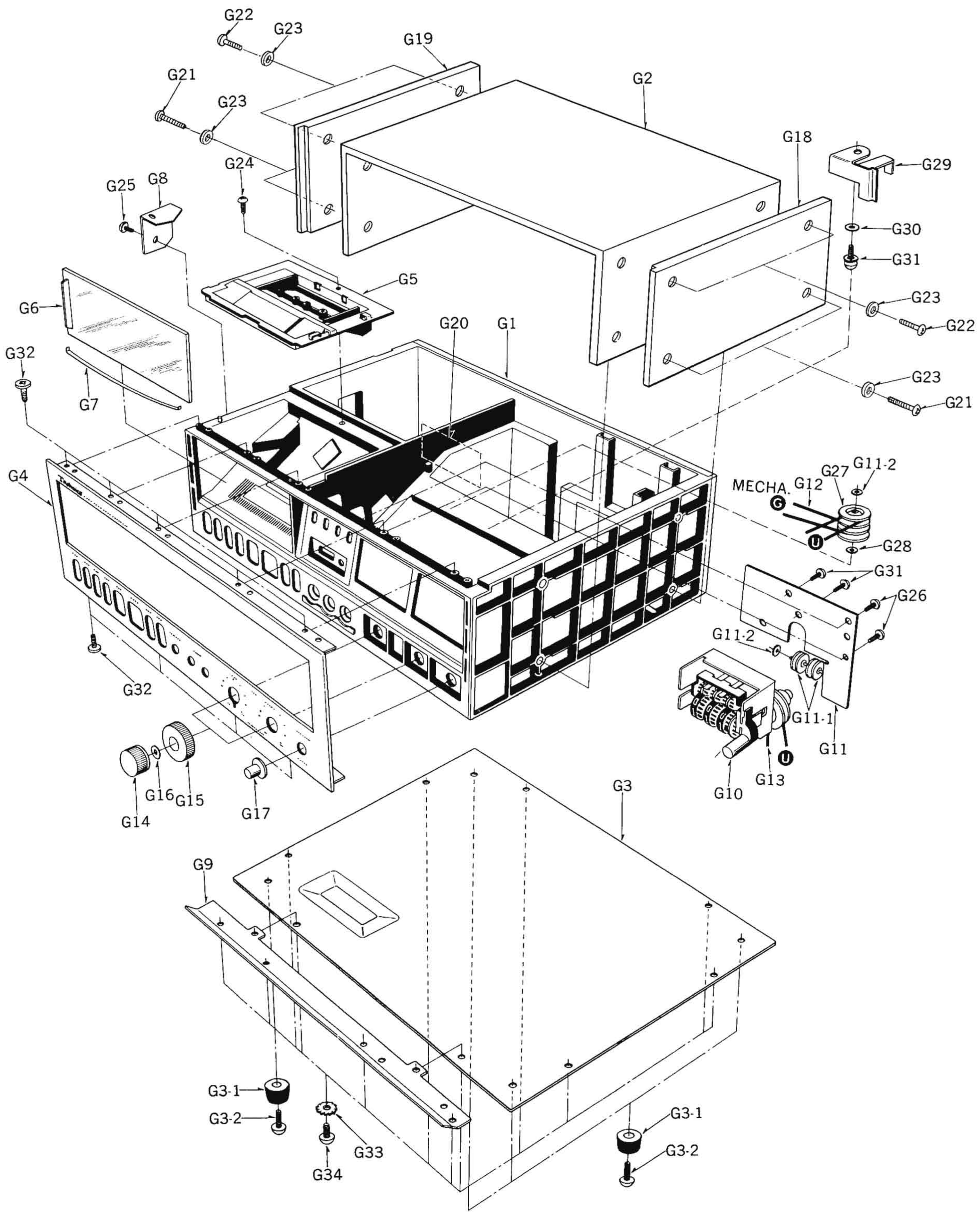

COMPONENT PACKING

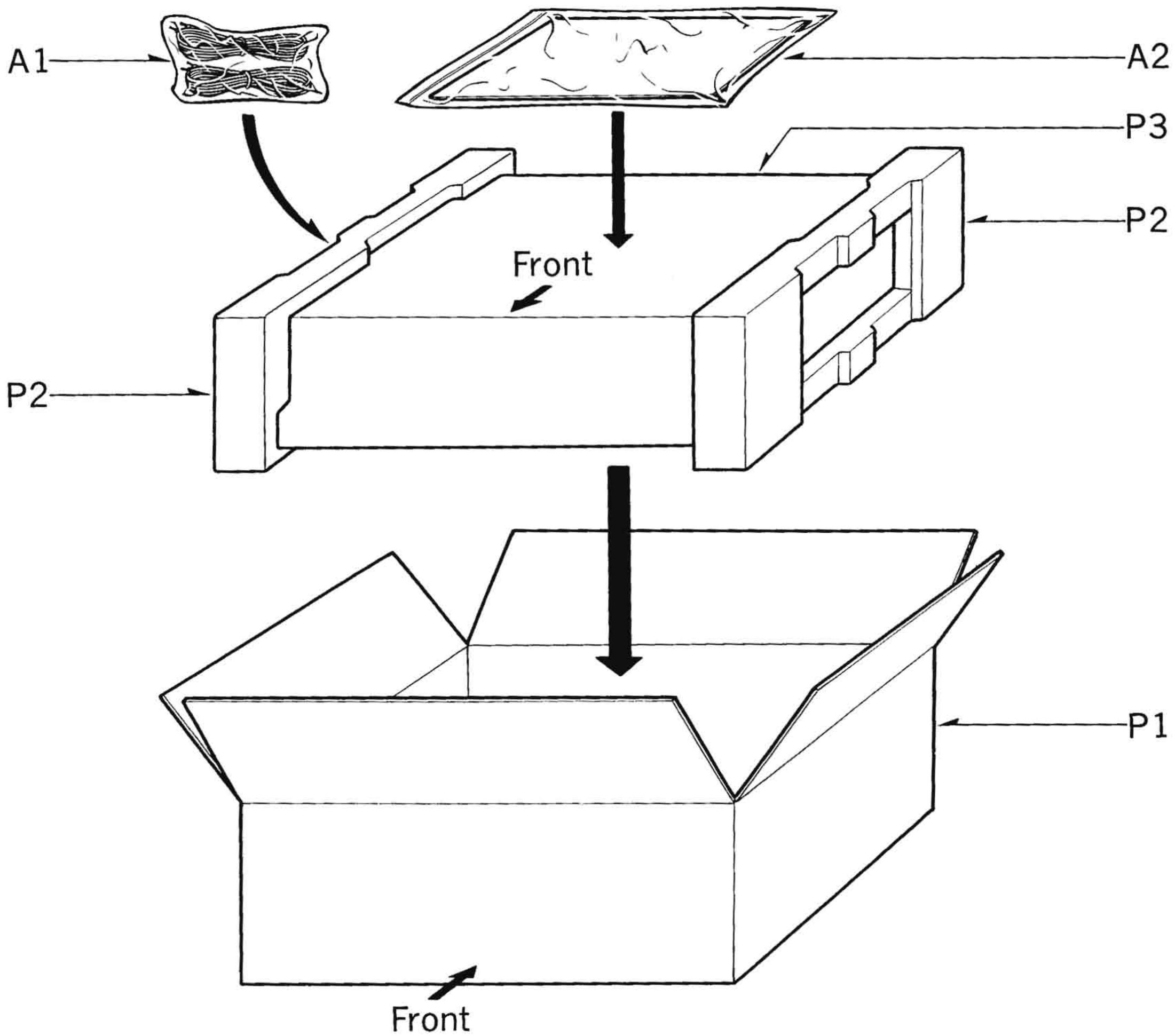

PACKINGS

P1	QPNM0012	Inside Carton
P2	QPAM0010	Inner Cushion
P3	XZB50X60A05	Dust Cover

Printed in Japan.

REPLACEMENT PARTS LIST

MODEL RS-630TUS Technics by Panasonic

ATTENTION:

Important safety notice.
Components identified by shaded area have special characteristics important for safety. When replacing any of these components use only manufacturer's specified parts.

RS-630TUS

Ref. No.		Part No.	Part Name & Description	Pcs/Set	Remarks
			MECHANICAL PARTS		
M1		QXA0292	Cassette Base Plate Holding Angle	1	RS-671US
M2		XTN3+8B	Tapping Screw ⊕3×8	6	COMMON
M3		QBW2019	Washer	2	RQ-218S
M4		QXK1713	Cassette Base Plate Assembly	1	RS-630US
M5		QDP1595	Roller	1	RS-671US
M6		XUC25FT	Stop Ring 2.5φ	2	COMMON
M7		QXA0465	Cassette Base Plate Holding Angle	1	RS-630US
M8		QBG1132	Cushion Rubber	1	〃
M9		QXT0004	Brake Holder	1	〃
M9-1		QBN1486	Brake Spring	1	〃
M10		QBJ1975B	Erase Safety Lever-B	1	RS-610US
M11		QBJ1941A	Brake	1	RS-260US
M12		XSN26+8	Screw ⊕2.6×8	2	COMMON
M13		XWC26B	Lock Washer	4	〃
M14		QXZ0044	Cassette Retainer Assembly	1	RS-630US
M15		XSN26+6	Screw ⊕2.6×6	2	COMMON
M16		QXLM008	Idler Lever Assembly	1	RS-263AUS
M16-1		QBT1558M	Idler Spring	1	〃
M17		QML3061	Auto-Stop Driving Pawl	1	
M18		QBT1489M	Auto-Stop Spring	1	RS-630US
M19		QBT1822M	Eject Lever Spring	1	
M20		QXL1046	Auto-Stop Driving Lever Assembly	1	
M21		QBT1558	Idler Spring	2	RS-630US
M22		QML3057	Timer Lever-A	1	
M23		XUC3FT	Stop Ring 3φ	1	COMMON
M24		QBT1536DM	Playback Lever Spring	1	RS-630US

Ref. No.		Part No.	Part Name & Description	Pcs/ Set	Remarks
M25		QML3058	Timer Lever-B	1	
M26		QMF1814	Cassette Holder	1	RS-630US
M27		XSN26+3	Screw ⊕2.6×3	3	COMMON
M28		XSN2+12	Screw ⊕2×12	3	〃
M29		XWA2B	Spring Washer	3	〃
M30		QHQ1199A	Screw for Head Adjustment	1	〃
M31		XWE2	Flat Washer 2φ	1	〃
M32		QTD1163	Cord Clamper	1	RQ-317S
M33		QBC1103A	Head Spring	1	RS-610US
M34		QBJ2087A	Head Spacer	1	〃
M35		QXL1048	Auto-Stop Detecting Lever Assembly	1	〃
M35-1		QBJ1538A	Auto-Stop Detecting Piece	1	RS-630US
M36		QBN1390	Auto-Stop Detecting Lever Spring	1	RS-610US
M37		QWQ1124	Snap Washer	3	RS-630US
M38		QXK1717	Head Base Plate Assembly	1	〃
M39		XSN2+5	Screw ⊕2×5	1	COMMON
M40		XWC2B	Lock Washer 2φ	1	〃
M41		QXD0050	Takeup Reel Table Assembly	1	RS-630US
M42		QBJ3220	Washer	1	RQ-309AS
M43		QXD0034	Supply Reel Table Assembly	1	RS-630US
M44		QBW2013	Washer	1	RS-263AUS
M45		QBW2012	〃	1	RQ-317S
M46		QBC1272	Back Tension Spring	1	RS-671US
M47		XYN26+C10	Screw with Washer ⊕2.6×10	3	COMMON
M48		XYN26+C6	Screw with Washer ⊕2.6×6	19	〃
M49		QDK1012	Steel Ball 2.5φ	4	RS-630US
M50		QXK1716	Upper Base Plate Assembly	1	〃
M51		QXLM010	Pressure Roller Assembly	1	RS-610US
M52		XUC3FT	Stop Ring 3φ	3	COMMON
M53		QBW2018	Washer	1	RS-671US
M54		QBN1389	Pressure Roller Spring	1	RS-610US
M55		QXL0991	Up Lever Assembly	1	RS-630US
M55-1		QBN1485	Up Lever Spring	1	〃
M56		QMR1411	Operation Lever-C	1	RS-610US
M57		QBT1558M	Idler Spring	1	〃

Ref. No.		Part No.	Part Name & Description	Pcs/ Set	Remarks
M58		QXR0179	Operation Rod Assembly	1	RS-630US
M59		QHQ1169	Step Screw	1	RS-620US
M60		XWA26B	Washer	1	COMMON
M61		QXB0445A	Push Button Assembly	1	
M61-1		QXB0483	Push Button (TIMER)	1	
M61-2		QXB0478	Push Button (REW, FF, PAUSE)	3	
M61-3		QXB0479	Push Button (STOP)	1	
M61-4		QXB0480	Push Button (PLAY)	1	
M61-5		QXB0481	Push Button (RECORD)	1	
M61-6		QXB0482	Push Button (EJECT)	1	
M61-7		QBG1566	Push Button Cover	1	
M61-8		QBG1541	〃	5	RS-630US
M61-9		QBG1543	〃	1	〃
M61-10		QBG1542	〃	1	〃
M62		QXL0990	Click Lever Assembly	1	〃
M62-1		QBT1817	Click Lever Spring	1	〃
M63		QMS1833	Step Screw	3	RS-610US
M64		QBG1055A	Motor Rubber Cushion	3	〃
M65		QMA1952A	Motor Angle	1	RS-260US
M66		QXP0347B	Motor Pulley Assembly	1	RS-263AUS
M66-1		XSN2+3	Screw ⊕2×3	1	COMMON
M67		QDM0981XPRB	Motor	1	RS-263AUS
M68		QDB0141	Capstan Belt	1	〃
M69		XUC2FT	Stop Ring 2φ	3	COMMON
M70		QBK7121	Fiber Washer	3	RS-610US
M71		QML2712	Eject Operation Lever	1	RS-630US
M72		QML2950	Record/Playback Lever	1	〃
M73		QBT1818	Record/Playback Spring	1	〃
M74		QXG1014E	Fast Wind Lever Assembly	1	RQ-309AS
M74-1		QBN1447A	Gear Lever Spring	1	RS-263AUS
M75		QBT1485M	Fast Forward Lever Spring	1	RS-610US
M76		XUC4FT	Stop Ring 4φ	1	COMMON
M77		QXH0095B	Flywheel Retainer	1	RS-610US
M78		QXF0115	Flywheel Assembly	1	RS-630US
M79		QBJ3221	Washer	1	RQ-301AS

Ref. No.		Part No.	Part Name & Description	Pcs/Set	Remarks
M80		QHQ1168	Step Screw	2	RS-610US
M81		QXL0828	Record Lever Assembly	1	〃
M82		QMR1307A	Fast Forward Lever Assembly	1	RS-260US
M83		QXRM0002A	Playback Lever Assembly	1	RS-610US
M84		XUC5FT	Stop Ring 5φ	3	COMMON
M85		QBK7130A	Fiber Washer	1	RS-630US
M86		QBN1271	Lock Spring	2	〃
M87		QML2379B	Lock Plate	2	〃
M88		QXR0241	Stop Rod Assembly	1	〃
M88-1		QBG1497A	Brake Rubber	1	RS-260US
M89		QXL1044	Timer Lever Assembly	1	
M90		QXA0547	Timer Angle Assembly	1	
M91		QXR0268	Pause Lever Assembly	1	
M92		QXR0002B	Fast Forward Rod Assembly	1	RS-630US
M93		QML1953A	Rewind Lever	1	〃
M94		QGG0050	Lever Guide	1	RS-610US
M95		XYN26+C10	Screw ⊕2.6×10	2	COMMON
M96		QBT1580M	Stop Lever Spring	3	RS-610US
M97		QBT1604M	Eject Lever-C Spring	2	〃
M98		QBT1536DMA	Playback Lever Spring	1	RS-460S
M99		QBT1486DM	Record Lever Spring	2	RS-610US
M100		QXH0227	Push Button Lock Plate	1	〃
M101		QMR1446	Eject Rod	1	
			RESISTORS		
R1, 2		ERD25TJ100	Carbon Resistor 10Ω 1/4W	2	
R3, 4		ERD25TJ103	〃 10KΩ 1/4W	2	
R5, 6		ERD25TJ222	〃 2.2KΩ 1/4W	2	
R9, 10		ERD25TJ101	〃 100Ω 1/4W	2	
R11, 12		ERD25TJ560	〃 56Ω 1/4W	2	
R13, 14		ERD25TJ101	〃 100Ω 1/4W	2	
R15, 16		ERD25TJ822	〃 8.2KΩ 1/4W	2	
R17, 18, 19, 20		ERD25TJ104	〃 100KΩ 1/4W	4	
R21, 22		ERD25TJ821	〃 820Ω 1/4W	2	
R23, 24, 25, 26		ERD25TJ472	〃 4.7KΩ 1/4W	4	

Ref. No.		Part No.	Part Name & Description	Pcs/ Set	Remarks
R27, 28		ERD25TJ562	Carbon Resistor 5.6KΩ 1/4W	2	
R29, 30		ERD25TJ683	〃 68KΩ 1/4W	2	
R31, 32		ERD25TJ562	〃 5.6KΩ 1/4W	2	
R33, 34		ERD25TJ473	〃 47KΩ 1/4W	2	
R35, 36		ERD25TJ152	〃 1.5KΩ 1/4W	2	
R37, 38		ERD25TJ183	〃 18KΩ 1/4W	2	
R39, 40		ERD25TJ473	〃 47KΩ 1/4W	2	
R41, 42		ERD25TJ224	〃 220KΩ 1/4W	2	
R43, 44		ERD25TJ391	〃 390Ω 1/4W	2	
R45, 46		ERD25TJ103	〃 10KΩ 1/4W	2	
R47, 48		ERD25TJ824	〃 820KΩ 1/4W	2	
R49, 50		ERD25TJ683	〃 68KΩ 1/4W	2	
R51, 52		ERD25TJ563	〃 56KΩ 1/4W	2	
R53, 54		ERD25TJ183	〃 18KΩ 1/4W	2	
R55, 56		ERD25TJ682	〃 6.8KΩ 1/4W	2	
R57, 58		ERD25TJ272	〃 2.7KΩ 1/4W	2	
R59, 60		ERD25TJ333	〃 33KΩ 1/4W	2	
R61, 62		ERD25TJ823	〃 82KΩ 1/4W	2	
R63, 64		ERD25TJ124	〃 120KΩ 1/4W	2	
R65, 66		ERD25TJ153	〃 15KΩ 1/4W	2	
R67, 68		ERD25TJ124	〃 120KΩ 1/4W	2	
R69, 70		ERD25TJ153	〃 15KΩ 1/4W	2	
R71, 72		ERD25TJ561	〃 560Ω 1/4W	2	
R73, 74		ERD25TJ272	〃 2.7KΩ 1/4W	2	
R75, 76		ERD25TJ153	〃 15KΩ 1/4W	2	
R77, 78		ERD25TJ333	〃 33KΩ 1/4W	2	
R79, 80		ERD25TJ274	〃 270KΩ 1/4W	2	
R81, 82		ERD25TJ473	〃 47KΩ 1/4W	2	
R83, 84		ERD25TJ332	〃 3.3KΩ 1/4W	2	
R85, 86		ERD25TJ682	〃 6.8KΩ 1/4W	2	
R87, 88		ERD25TJ122	〃 1.2KΩ 1/4W	2	
R89, 90		ERD25TJ221	〃 220Ω 1/4W	2	
R91, 92		ERD25TJ684	〃 680KΩ 1/4W	2	
R93		ERD25TJ222	〃 2.2KΩ 1/4W	1	
R95, 96		ERD25TJ153	〃 15KΩ 1/4W	2	

Ref. No.		Part No.	Part Name & Description	Pcs/ Set	Remarks
R97, 98		ERD25TJ822	Carbon Resistor 8.2KΩ 1/4W	2	
R99, 100		ERD25TJ103	〃 10KΩ 1/4W	2	
R101, 102, 103, 104					
		ERD25TJ822	〃 8.2KΩ 1/4W	4	
R105, 106		ERD25TJ333	〃 33KΩ 1/4W	2	
R107, 108		ERD25TJ473	〃 47KΩ 1/4W	2	
R109, 110		ERD25TJ124	〃 120KΩ 1/4W	2	
R111, 112		ERD25TJ330	〃 33Ω 1/4W	2	
R113, 114		ERD25TJ102	〃 1KΩ 1/4W	2	
R115, 116		ERD25TJ272	〃 2.7KΩ 1/4W	2	
R117, 118		ERD25TJ470	〃 47Ω 1/4W	2	
R119, 120		ERD25TJ153	〃 15KΩ 1/4W	2	
R121, 122, 123, 124					
		ERD25TJ274	〃 270KΩ 1/4W	4	
R125, 126		ERD25TJ224	〃 220KΩ 1/4W	2	
R128		ERD25TJ102	〃 1KΩ 1/4W	1	
R129, 130		ERD25TJ823	〃 82KΩ 1/4W	2	
R131, 132		ERD50TJ561	〃 560Ω 1/4W	2	
R133, 134		ERD25TJ472	〃 4.7KΩ 1/4W	2	
R135		ERD25TJ123	〃 12KΩ 1/4W	1	
R137, 138		ERD25TJ183	〃 18KΩ 1/4W	2	
R139, 140		ERD25TJ104	〃 100KΩ 1/4W	2	
R141, 142		ERD25TJ392	〃 3.9KΩ 1/4W	2	
R143, 144		ERD25TJ681	〃 680Ω 1/4W	2	
R145, 146		ERD25TJ272	〃 2.7KΩ 1/4W	2	
R147, 148		ERD25TJ474	〃 470KΩ 1/4W	2	
R149, 150		ERD25TJ152	〃 1.5KΩ 1/4W	2	
R151, 152		ERD25TJ391	〃 390Ω 1/4W	2	
R153, 154		ERD25TJ270	〃 27Ω 1/4W	2	
R155, 156		ERD25TJ682	〃 6.8KΩ 1/4W	2	
R157		ERD25TJ562	〃 5.6KΩ 1/4W	1	
R161, 162		ERD25TJ101	〃 100Ω 1/4W	2	
R201, 202		ERD25TJ8R2	〃 8.2Ω 1/4W	2	
R203, 204		ERD25TJ100	〃 10Ω 1/4W	2	
R205, 206		ERD25TJ104	〃 100KΩ 1/4W	2	

Ref. No.		Part No.	Part Name & Description	Pcs/ Set	Remarks
R207		ERD50TJ151	〃 150Ω 1/2W	1	
R208		ERD50TJ121	Carbon Resistor 120Ω 1/2W	1	
R209		ERD50TJ100	〃 10Ω 1/2W	1	
R210, 211		ERD25TJ102	〃 1KΩ 1/4W	2	
R213		ERD25TJ123	〃 12KΩ 1/4W	1	
			VARIABLE RESISTORS		
VR1, 2		EVLS3AA00B14	Semi-fixed Variable Resistor 10KΩ (B)	2	RS-610US
VR3, 4		EVLS3AA00B24	〃 20KΩ (B)	2	〃
VR5, 6		EWKN5AR20A54	Variable Resistor 50KΩ (A)	1	RS-671US
VR7, 8		EVLS3AA00B53	Semi-fixed Variable Resistor 5KΩ (B)	2	〃
VR9, 10		EVLS3AA00B52	〃 500Ω (B)	2	〃
VR11, 12		EWKN5AR20A14	Variable Resistor 10KΩ (A)	1	RS-630US
VR13, 14, 15, 16		EVLS3AA00B24	Semi-fixed Variable Resistor 20KΩ (B)	4	RS-610US
VR18		EVLS3AA00B14	〃 10KΩ (B)	1	〃
			CAPACITORS		
C1, 2		ECKD1H821KB	Ceramic Capacitor 820pF	2	
C3, 4		ECEA16Z10	Electrolytic Capacitor 10μF	2	
C5, 6		ECKD1H102KB	Ceramic Capacitor 1000pF	2	
C7, 8		ECEA16V47	Electrolytic Capacitor 47μF	2	
C9, 10		ECEA16V10	〃 10μF	2	
C11, 12		ECCD1H101K	Ceramic Capacitor 100pF	2	
C13, 14		ECEA16Z10	Electrolytic Capacitor 10μF	2	
C15, 16		ECQM05123KZ	Mylar Capacitor 0.012μF	2	
C17, 18		ECKD1H102KB	Ceramic Capacitor 1000pF	2	
C19, 20		ECQM05273KZ	Mylar Capacitor 0.027μF	2	
C21, 22		ECKD1H102KB	Ceramic Capacitor 0.001μF	2	
C23, 24		ECEA25V100	Electrolytic Capacitor 100μF	2	
C25, 26		ECEA50Z3R3	〃 3.3μF	2	
C27, 28		ECEA16V10	〃 10μF	2	
C29, 30		ECEA50V3R3	〃 3.3μF	2	
C31, 32		ECQM05122KZ	Mylar Capacitor 0.0012μF	2	
C33, 34		ECKD1H151KB	Ceramic Capacitor 150pF	2	
C35, 36		ECEA25V220	Electrolytic Capacitor 220μF	2	

Ref. No.		Part No.	Part Name & Description		Pcs/ Set	Remarks
C37, 38, 39, 40, 41, 42						
		ECEA16V10	Electrolytic Capacitor	10μF	6	
C43, 44		ECQM05562JZ	Mylar Capacitor	0.0056μF	2	
C45, 46		ECQM05273JZ	〃	0.027μF	2	
C47, 48		ECQM05472JZ	〃	0.0047μF	2	
C49, 50		ECEA16V10	Electrolytic Capacitor	10μF	2	
C51, 52		ECQM05104KZ	Mylar Capacitor	0.1μF	2	
C53, 54		ECEA16V47	Electrolytic Capacitor	47μF	2	
C57, 58		ECQM05104KZ	Mylar Capacitor	0.1μF	2	
C59, 60		ECEA16V10	Electrolytic Capacitor	10μF	2	
C61, 62		ECQM05104KZ	Mylar Capacitor	0.1μF	2	
C63, 64		ECEA16V10	Electrolytic Capacitor	10μF	2	
C65, 66		ECQM05104KZ	Mylar Capacitor	0.1μF	2	
C67, 68		ECEA50ZR33	Electrolytic Capacitor	0.33μF	2	
C69		ECEA25V100	〃	100μF	1	
C71, 72		ECEB35V4R7	〃	4.7μF	2	
C73, 74		ECEA16V33	〃	33μF	2	
C76		ECEA6V330	〃	330μF	1	
C77, 78		ECEA16V10	〃	10μF	2	
C79, 80		ECEA50V3R3	〃	3.3μF	2	
C81, 82		ECEA50ZR33	〃	0.33μF	2	
C83, 84		ECEA16V47	〃	47μF	2	
C85, 86		ECQM05563KZ	Mylar Capacitor	0.056μF	2	
C87, 88		ECQM05153KZ	〃	0.015μF	2	
C89, 90		ECQM05393KZ	〃	0.039μF	2	
C91, 92		ECEB35V4R7	Electrolytic Capacitor	4.7μF	2	
C93, 94		ECQM05222KZ	Mylar Capacitor	0.0022μF	2	
C95, 96		ECQM05182KZ	〃	0.0018μF	2	
C97, 98		ECQS1271KZ	Styrol Capacitor	270pF	2	
C99, 100		ECEA16V47	Electrolytic Capacitor	47μF	2	
C101, 102		ECKD1H102KB	Ceramic Capacitor	1000pF	2	
C201, 202		ECKD1H330K	〃	33pF	2	
C203		ECQM05223KZ	Mylar Capacitor	0.022μF	1	
C204		ECQM05104KZ	〃	0.1μF	1	
C205, 206		ECQM05472KZ	〃	0.0047μF	2	

Ref. No.		Part No.	Part Name & Description	Pcs/ Set	Remarks
C207		ECQM05333KZ	Mylar Capacitor 0.033μF	1	
C208		ECEA25V100	Electrolytic Capacitor 100μF	1	
C209		ECKD1H102KB	Ceramic Capacitor 1000pF	1	
C210, 211		ECEA25V220	Electrolytic Capacitor 220μF	2	
C212		ECEA25V1000	〃 1000μF	1	
C213		ECEA16V1000	〃 1000μF	1	
C214		ECKD1H102KB	Ceramic Capacitor 1000pF	1	
C216		ECEA25V100	Electrolytic Capacitor 100μF	1	
C217		ECEA50V3R3	〃 3.3μF	1	
			COMBINATION PART		
Z1		ECQJ0187A	Spark Killer	1	RQ-630US
			TRANSISTORS		
Tr1, 2, 3, 4		2SC1327	Transistor	4	RS-610US
Tr5, 6		2SC644	〃	2	〃
Tr7, 8, 9, 10, 11, 12, 13, 14, 15, 16					
		2SC828	〃	10	〃
Tr17, 18		2SA564	〃	2	〃
Tr19, 20		2SC828	〃	2	〃
Tr21, 22		2SC1318	〃	2	RS-676US
Tr23, 24, 25, 26, 27, 28, 29, 30					
		2SC828	〃	8	〃
Tr31, 32		2SK30AD	FET	2	〃
Tr201, 202, 203					
		2SC1347	Transistor	3	RS-610US
			DIODES & RECTIFIERS		
D1, 2		OA90Z	Diode	2	COMMON
D3		EQA0108S	〃	1	RS-263AUS
D5, 6, 7, 8		1S1211	〃	4	RS-610US
D9, 10		OA90Z	〃	2	COMMON
D11, 12		1S1211	〃	2	RS-610US
D14		OA90Z	〃	1	COMMON
D201, 202		SIB0102	Rectifier	2	RS-630US

Ref. No.		Part No.	Part Name & Description	Pcs/ Set	Remarks
			TRANSFORMERS		
T1, 2		QLT2D10A	Output Transformer	2	RS-671US
T201		QLB0158	Oscillator Transformer	1	〃
T202		QLPP7ELEU	Power Transformer	1	RS-630US
			COILS		
L1, 2		QLM9Z002W	MPX Filter Coil	2	RS-630US
L3, 4		QLQX0331W	Peaking Coil	2	RS-671US
L5, 6		QLQX1032W	Bias Trap Coil	2	RS-610US
			JACKS		
J1,2,5,6		Refer to E12	(Interlocked with Jack Board)	(1)	
J3, 4		QJA0237	Microphone Jack	2	RS-676US
J7		QJA0238	Headphone Jack	1	〃
			SWITCHES		
S1, 2		QSS1120	Slide Switch (Record/Playback Selector)	1	RS-282S
S3,4,5,6		QST2210H	Lever Switch (Dolby, Bias, Equalizer, Peak)	4	RS-630US
S7		QSS2209T	Slide Switch (Muting)	1	〃
S8		QSB0169M1	Leaf Switch (Motor ON/OFF)	1	RS-610US
S9		ESB1134SU	Push Switch (Power ON/OFF)	1	〃
S10		QSS1080	Slide Switch (Input)	1	RS-253S
			ELECTRICAL PARTS		
E1		WY436AD	Record/Playback Head	1	
E2		QWY2118	Erase Head	1	RS-610US
E3		QFC1201M	AC Power Cord	1	RS-275US
E4		XAMR9S	Pilot Lamp	2	RS-671US
E5		QTF1049A	Lamp Holder	2	RS-817S
E6		XAMQ22P200N	Pilot Lamp	1	〃
E7		QBG1222	Lamp Cover	1	〃
E8		QSL9005LNM	Level Meter	2	RS-630US
E9		QTD1129	Cord Bushing	1	RS-671US
E10		QNQ1051	Jack Nut	3	〃