ORDER NO. AD9204102A2

Service Manual

Simplified

Dolby NR-Equipped
Stereo Cassette Deck

Cassette Deck

RS-BX626

DOLBY B·C NR HX PRO

Colour

(K)...Black Type

Area

Suffix for Model No.	Area	Colour
(EB)	Great Britain.	(K)
(EG)	Germany and Italy./ Europe.	

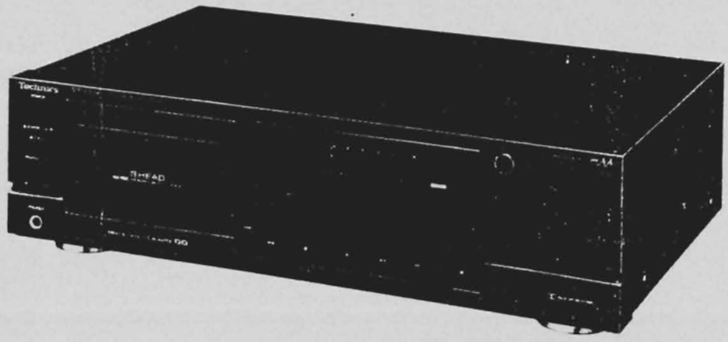

* Dolby noise reduction and HX Pro headroom extension manufactured under license from Dolby Laboratories Licensing Corporation. HX Pro originated by Bang and Olufsen. "DOLBY", the double-D symbol and "HX PRO" are trademarks of Dolby Laboratories Licensing Corporation.

- **Please file and use this Simplified manual together with the service manual for model No. RS-BX606, Order No. AD9106169C5.**
- **This service manual indicates the main differences between Original RS-BX606.**

■ CHANGE IN REPLACEMENT PARTS LIST (on pages 33, 35, 36.)

Notes:
- Mentioned in this parts list is only those different from Model No. RS-BX606 (EG). All other parts are the same as for RS-BX606 (EG).
- Important safety notice: Components identified by ⚠ mark have special characteristics important for safety. Furthermore, special parts which have purposes of fire-retardant (resistors), high-quality sound (capacitors), low-noise (resistors), etc. are used. When replacing any of components, be sure to use only manufacturer's specified parts shown in the parts list.

Ref. No.	Change of Part No.		Part Name & Description	Remarks
	RS-BX606 (EG)	➡ **RS-BX626 (EB, EG)**		
SENSOR(S)				
Z701	——	**RCDHC-278**	REMOTE SENSOR	Addition
SWITCH(ES)				
S971	RSH1A89ZB-U	**RSH1A89ZC-U**	MODE	
S972	RSH1A90YB-U	**RSH1A90YC-U**	HALF	
S973	RSH1A90YB-U	**RSH1A90YC-U**	ATS (CrO_2)	
S975	RSH1A90YB-U	**RSH1A90YC-U**	REC INHIBIT	
S976	RSH1A90YB-U	**RSH1A90YC-U**	ATS (Metal)	

Technics

Ref. No.	Change of Part No. RS-BX606 (EG)	➡ RS-BX626 (EB, EG)	Part Name & Description	Remarks
CONNECTOR(S)				
CN2PA, 2PB	RJS1A1703	RJS1A6603	CONNECTOR (3P)	
CN14	——	SJS50581BB	SOCKET (5P)	Addition
CN60A	RJS1A1704	RJS1A6604	CONNECTOR (4P)	
CN60B	RJS1A1705	RJS1A6605	CONNECTOR (5P)	
CP1	RJP3G18ZA	SJTD313	CONNECTOR (3P)	
CP3−6	RJT003K010M1	RJT003K010−1	CONNECTOR (10P)	
CP14	——	SJT30548BB1	CONNECTOR (5P)	Addition
CP16	RJT057W004	RJT057W004-1	CONNECTOR (4P)	
CP110	RJT057W004	RJT057W004-1	CONNECTOR (4P)	
FLAT CABLE(S)				
W5	RWJ0211220KQ	RWJ5711220KQ	FLAT CABLE (11P)	
W40	RWJ0204180KQ	RWJ5704180KQ	FLAT CABLE (4P)	
CAPACITORS				
C3, 4	ECEA0JK101	ECEA1AU101	E. CAPACITOR 10V, 100μF	
C327, 328	ECEA1EK100	ECEA1VKA100B	E. CAPACITOR 35V, 10μF	
C512	——	ECEA0JKA470B	E. CAPACITOR 6.3V, 47μF	Addition
CABINET AND CHASSIS				
5	XTBS3+8JFZ1		SCREW	Change of Pcs
7	RGR0128A-B1	RGR0128C-A	REAR PANEL	(EG)
		RGR0128C-B	REAR PANEL	(EB)
14	RFKGSBX606EB	RFKGSBX626EB	FRONT PANEL ASS'Y	
15	RMA0517	——	BRACKET, BOTTOM CHASSIS	Deletion
17	RMC0139	RMC0139-1	SHIELD PLATE, P. TRANSFORMER	
30	XTB3+10JFZ		SCREW	Change of Pcs
34	——	XTB3+12JFZ	SCREW	Addition
35	——	RMA0582	ANGLE, P. SUPPLY	Addition
PACKING MATERIAL				
P1	RPG0990	RPG1232	PACKING CASE	
P3	SPSD152	RPQ0164	ACCESSORIES PAD	
P4	SPP756	XZB52X60A01Z	PROTECTION COVER (UNIT)	
P5	——	SPB1061	PROTECTION BAG (F.B.)	Addition
P6	——	XZB24X34C04	PROTECTION BAG (F.B., ACC.)	Addition
ACCESSORIES				
A1	RFKSSBX606EG	RFKSSBX626EG	INSTRUCTION MANUAL ASS'Y	(EG)
		RQT1516-B	INSTRUCTION MANUAL	(EB)
A4	SFDAC05E03	RJA0019-1K	AC POWER SUPPLY CORD	(EG) ⚠
		SJA193	AC POWER SUPPLY CORD	(EB) ⚠
A5	SJP2249-3	SJP2276	STEREO CONNECTION CABLE	

■ PRINTED CIRCUIT BOARDS (on pages 16～18.)

RS-BX606

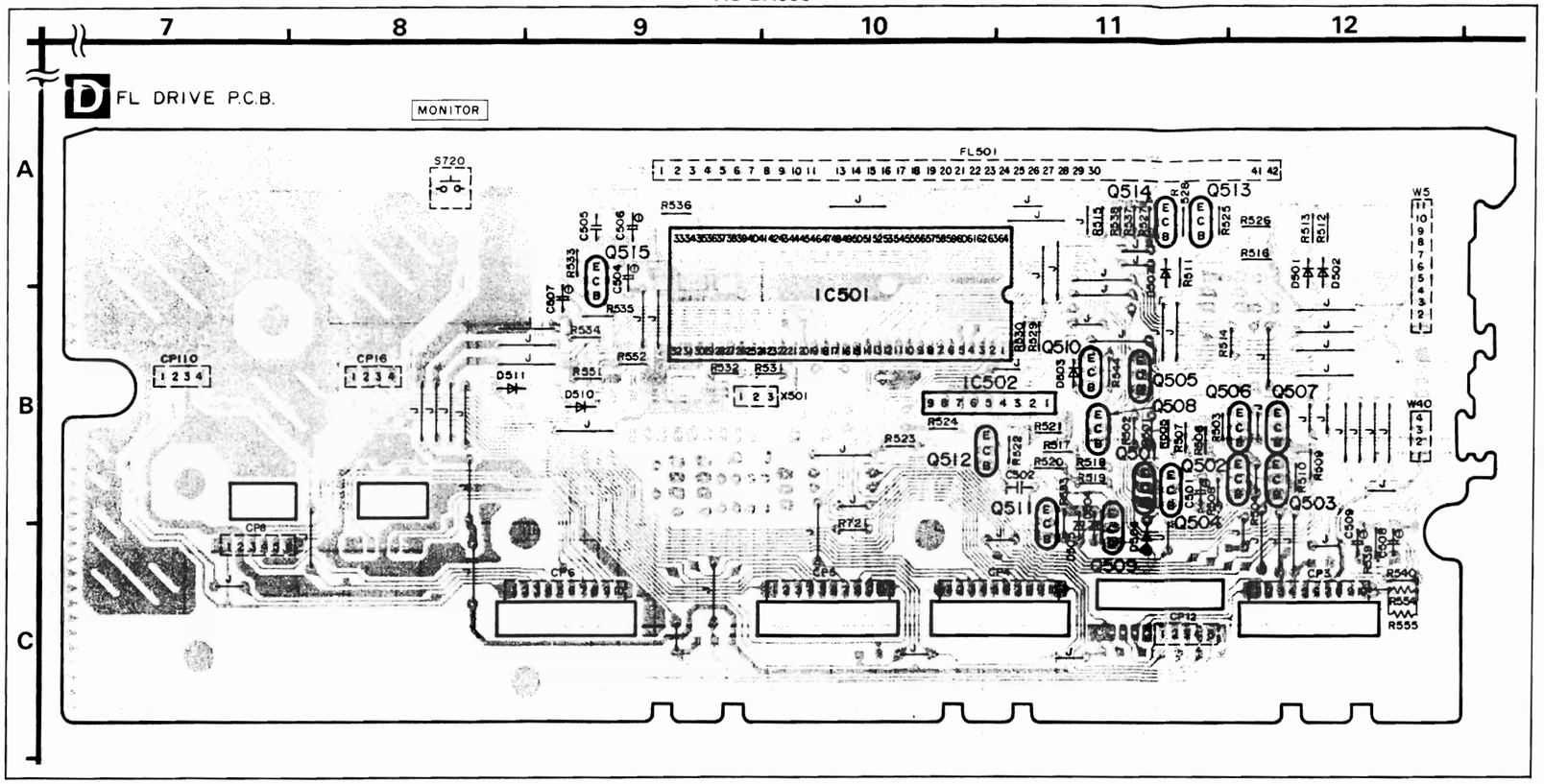

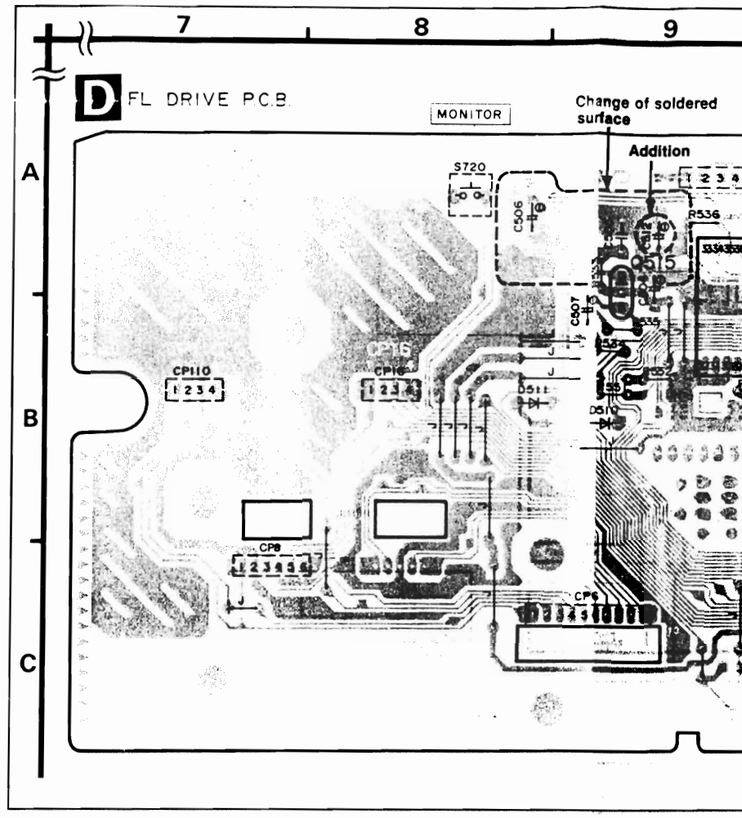

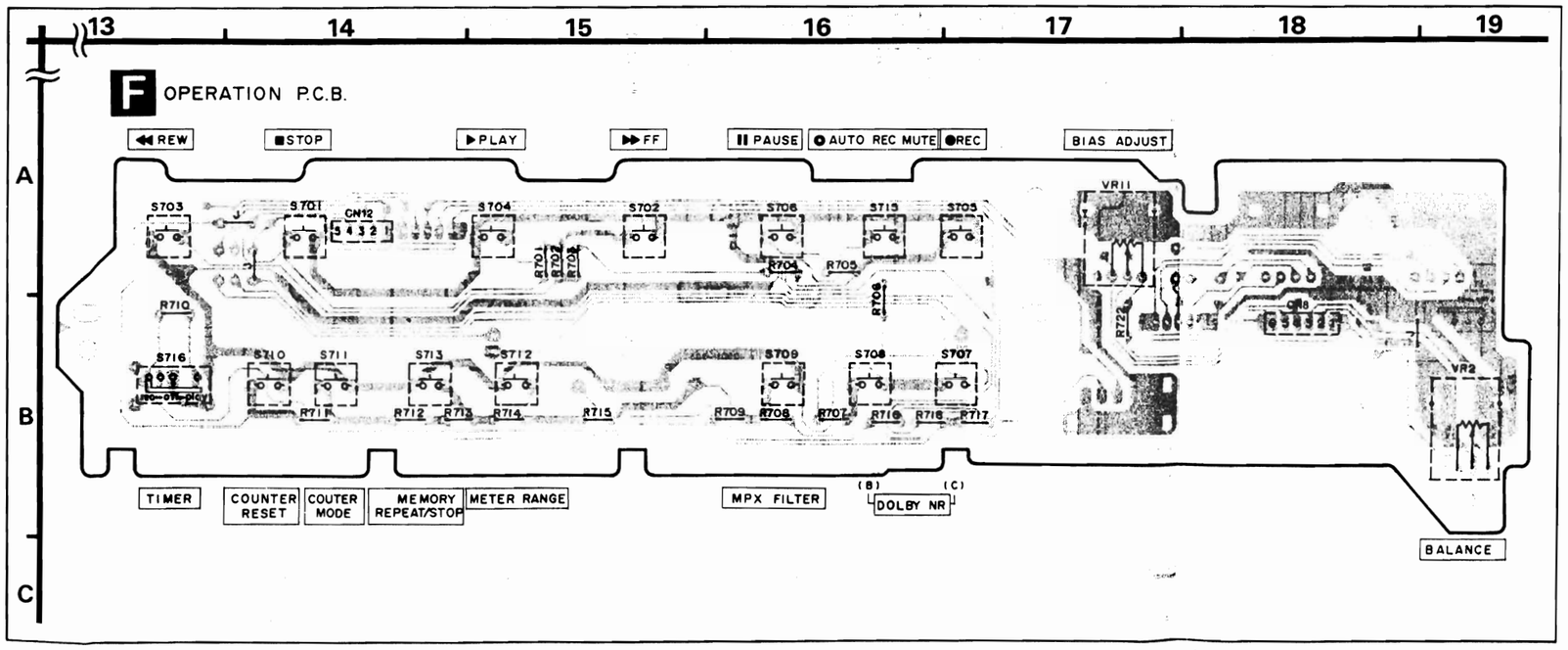

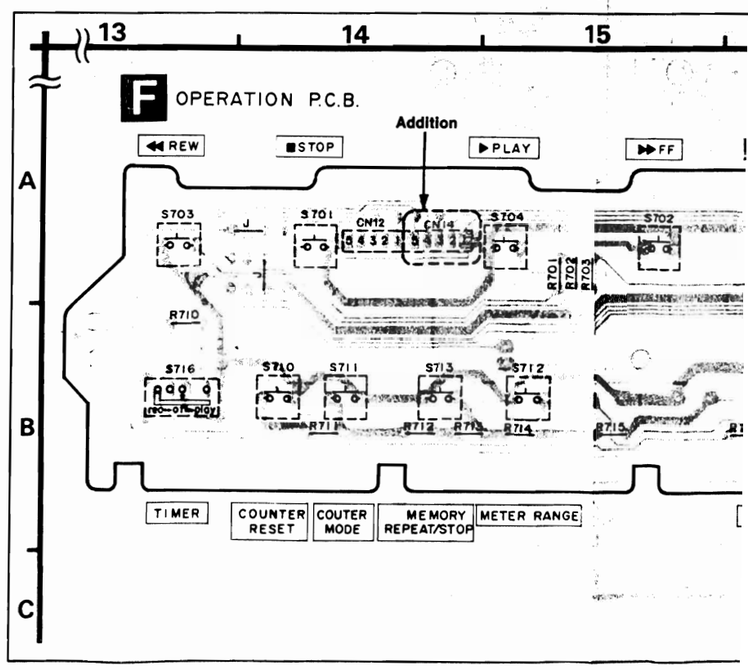

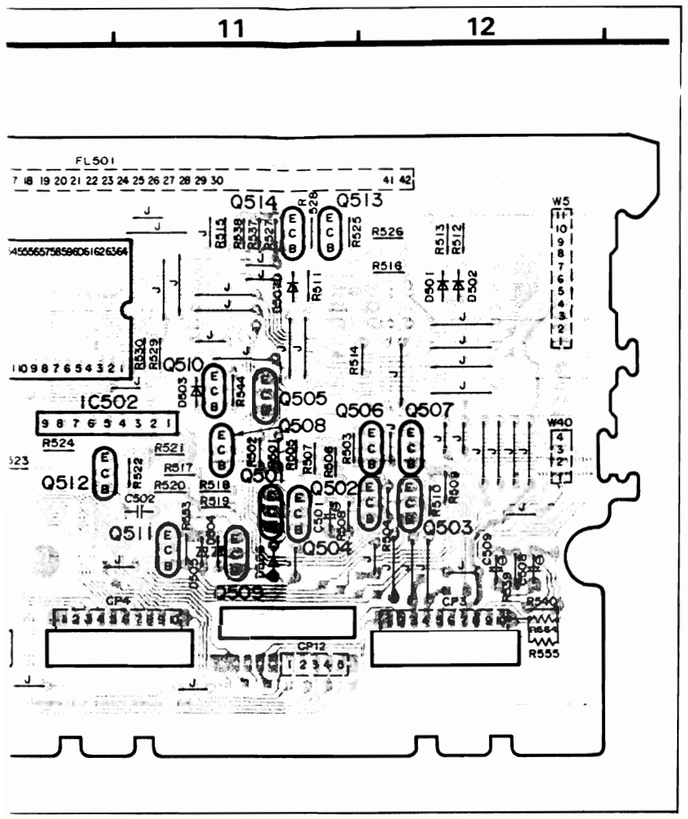
11
12
FL501
Q514
Q513
IC502
Q510
Q505
Q506
Q507
Q508
Q512
Q502
Q501
Q511
Q504
Q503
Q509

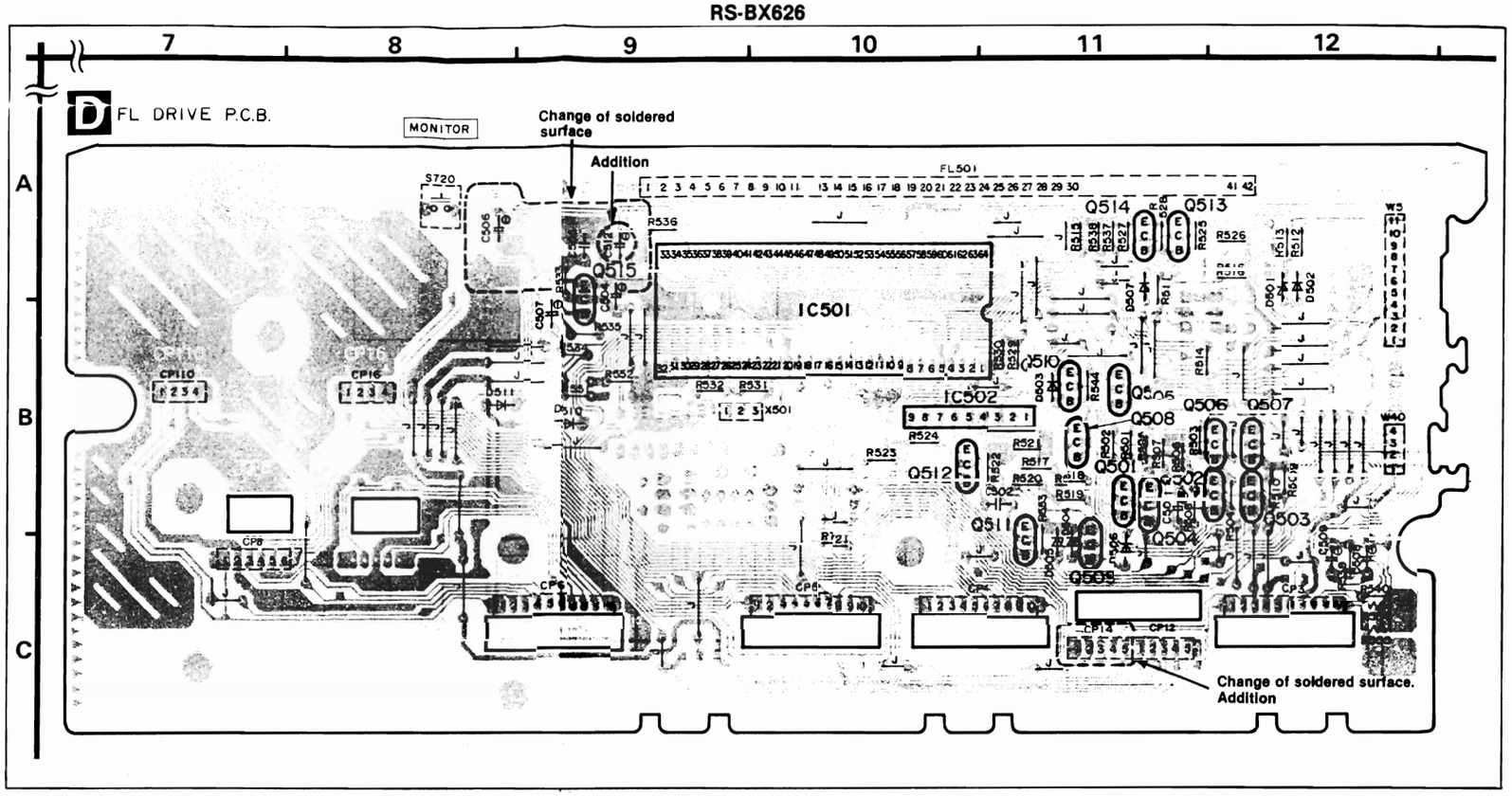
RS-BX626
7
8
9
10
11
12
D FL DRIVE P.C.B.
MONITOR
Change of soldered surface
Addition
A
B
C
FL501
IC501
IC502
Q514
Q513
Q510
Q505
Q506
Q507
Q508
Q512
Q502
Q501
Q511
Q504
Q503
Q509
Q515
Change of soldered surface.
Addition

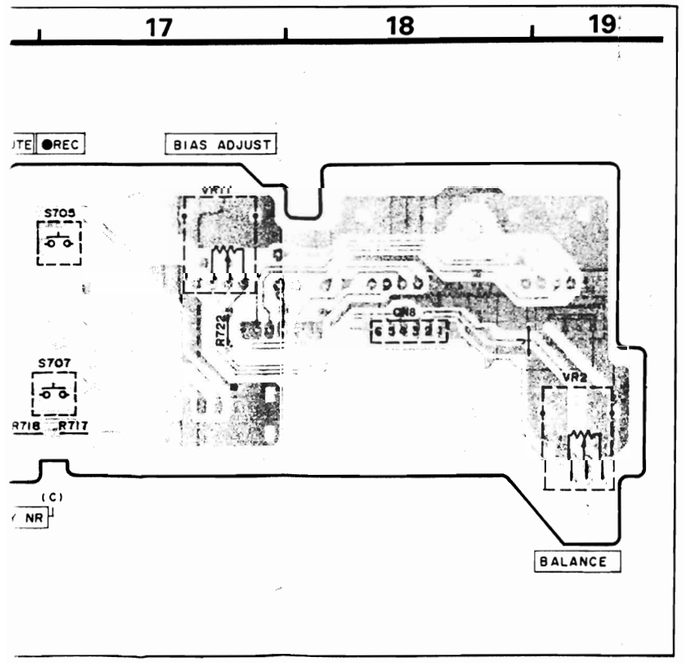
17
18
19
REC
BIAS ADJUST
S705
S707
VR2
BALANCE

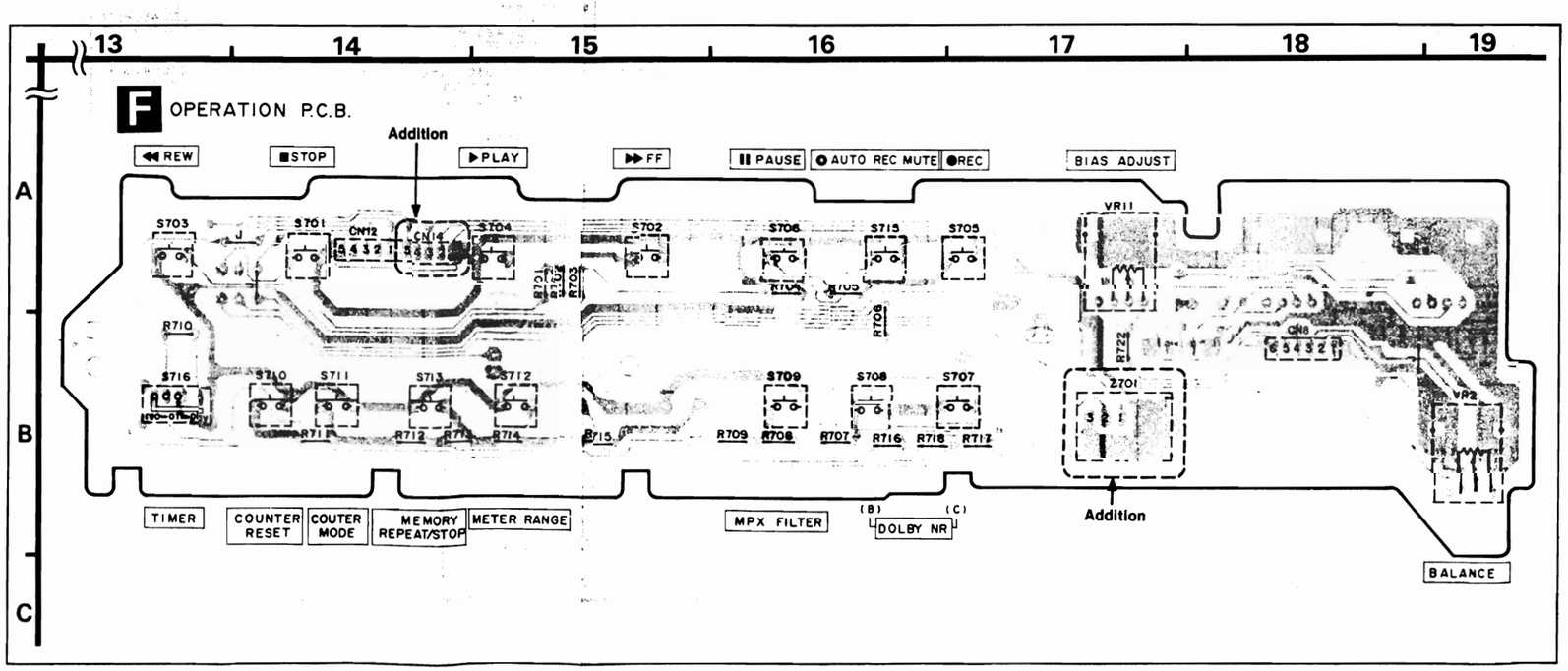
13
14
15
16
17
18
19
F OPERATION P.C.B.
Addition
REW
STOP
PLAY
FF
PAUSE
AUTO REC MUTE
REC
BIAS ADJUST
A
B
C
S703
S701
S704
S702
S706
S715
S705
S716
S710
S711
S713
S712
S709
S708
S707
VR11
VR2
Z701
TIMER
COUNTER RESET
COUTER MODE
MEMORY REPEAT/STOP
METER RANGE
MPX FILTER
DOLBY NR
Addition
BALANCE

■ SCHEMATIC DIAGRAM (on pages 23, 24.)

RS-BX606

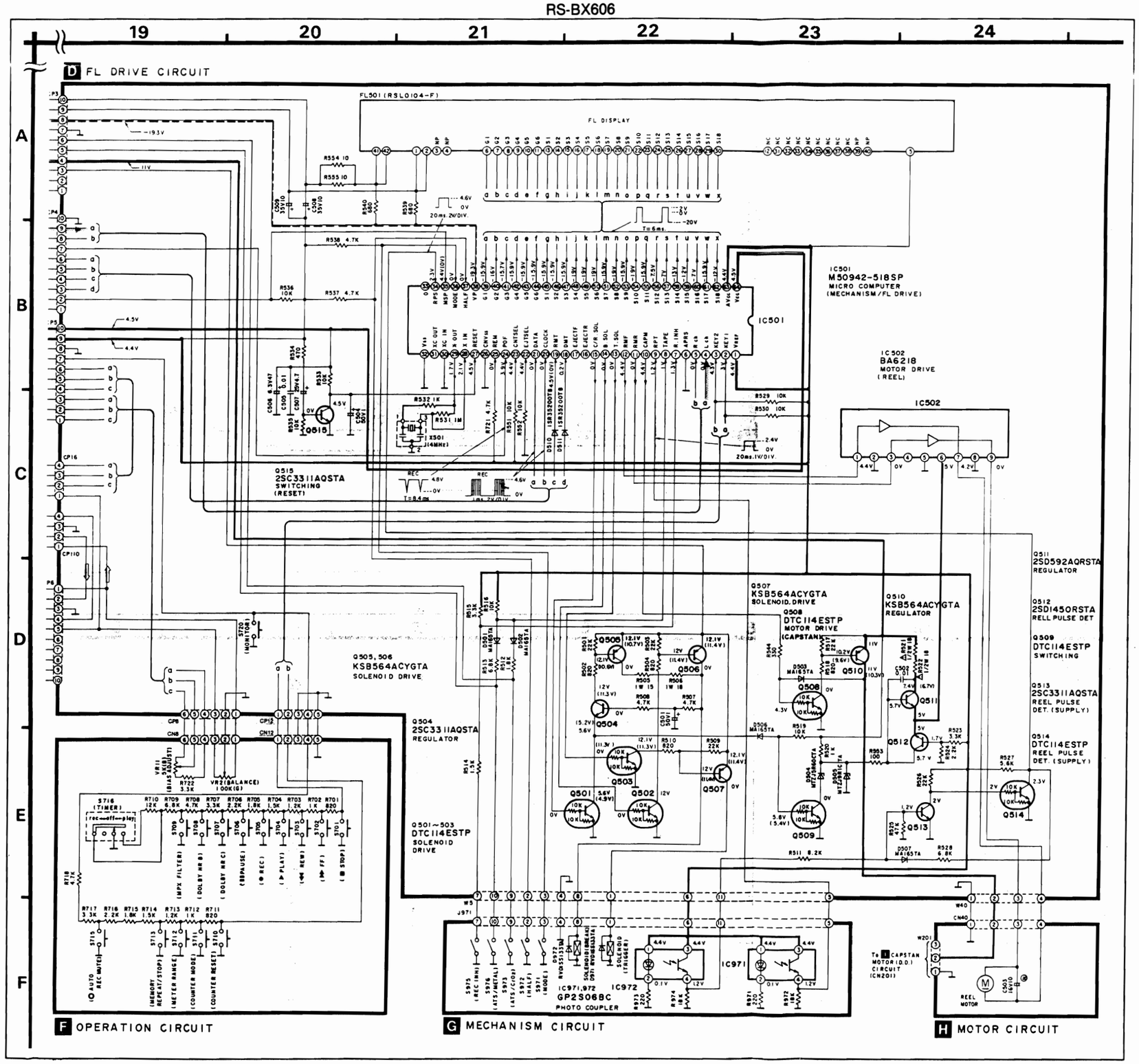

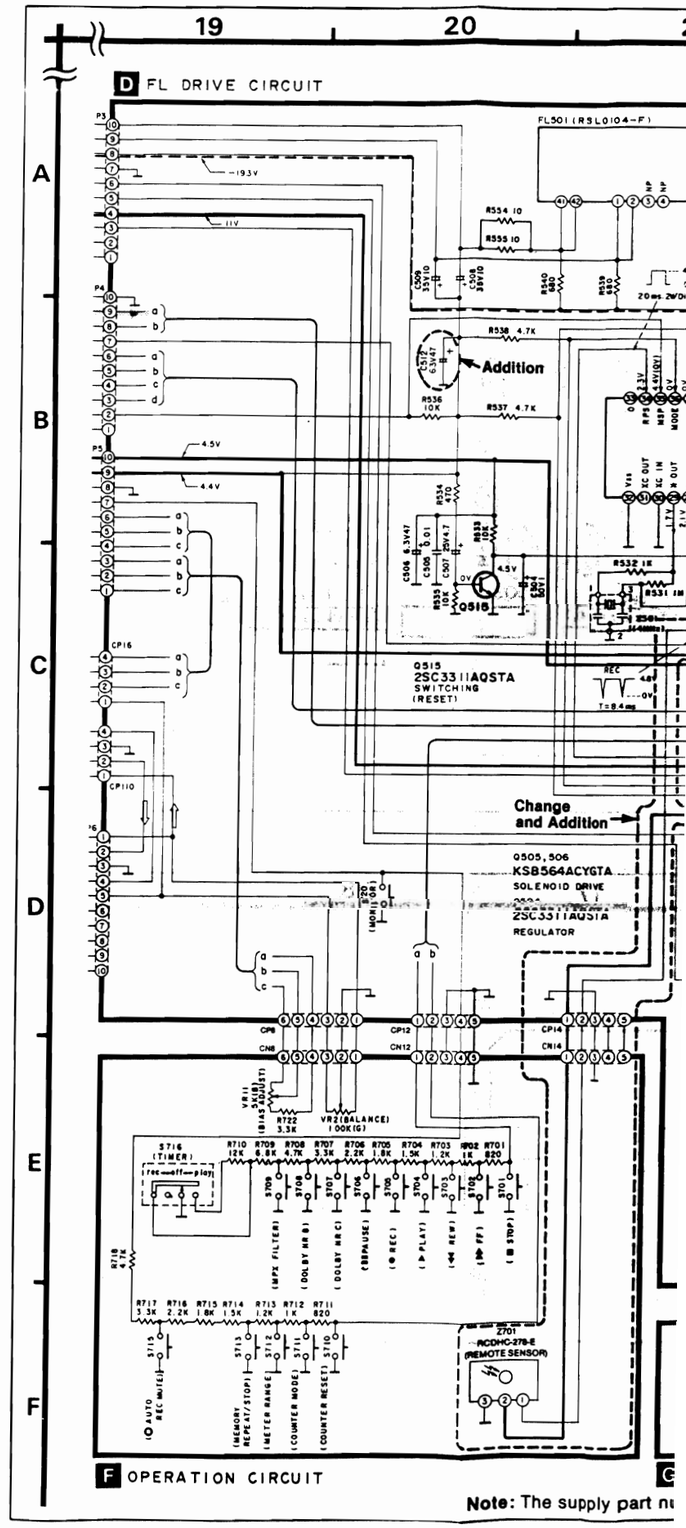

Note: The supply part nu

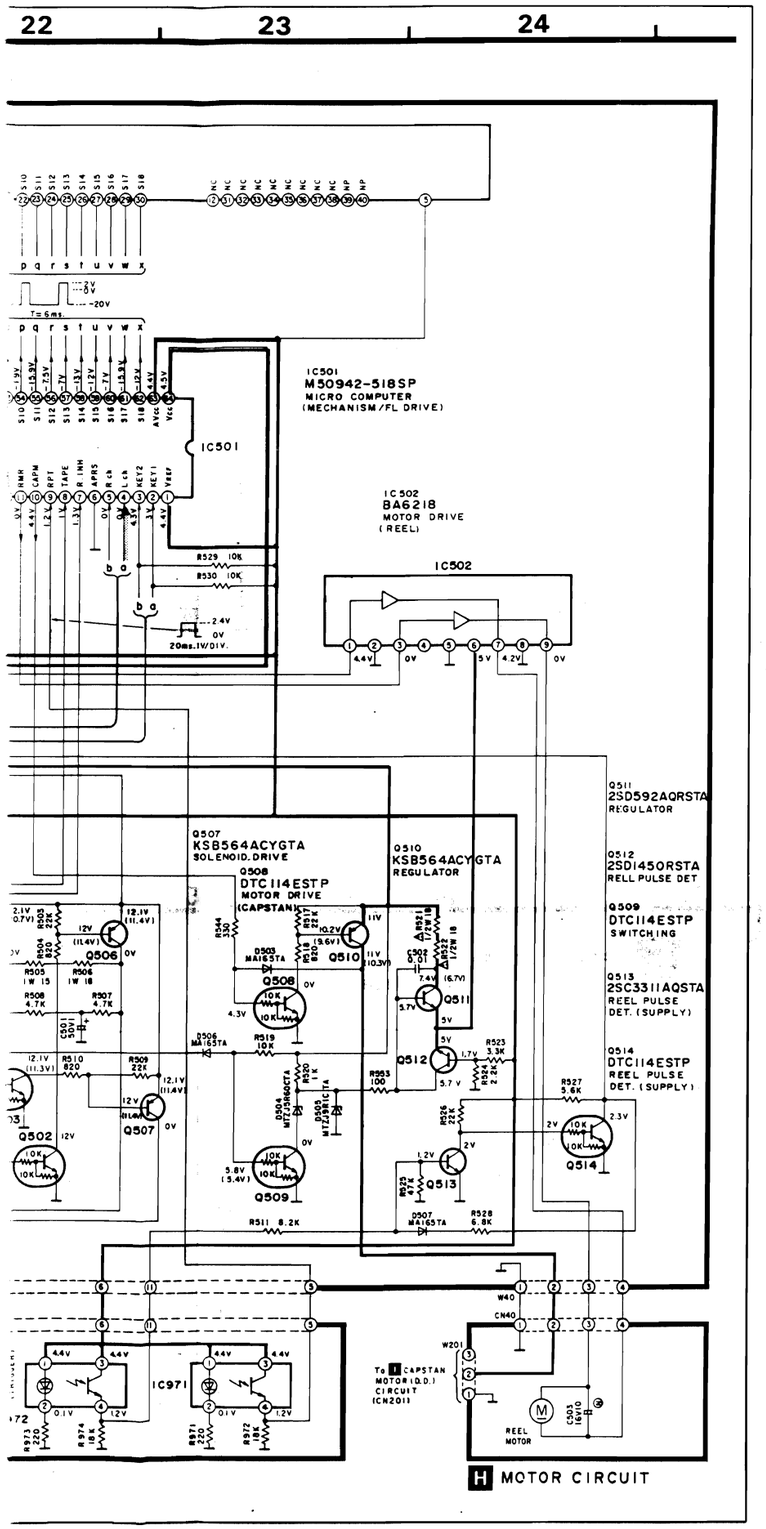

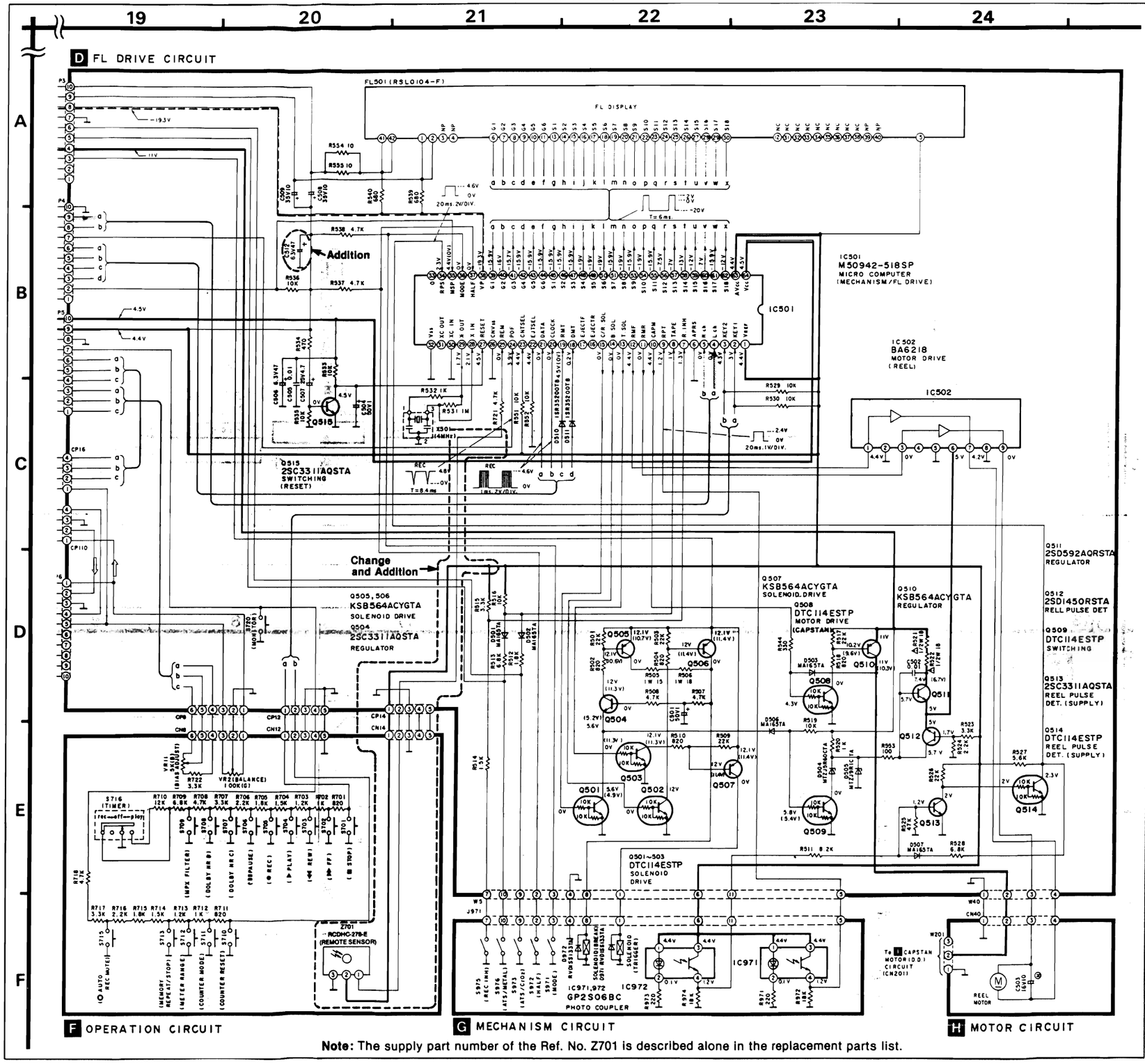

Note: The supply part number of the Ref. No. Z701 is described alone in the replacement parts list.

■ BLOCK DIAGRAM (on page 28.)

RS-BX606

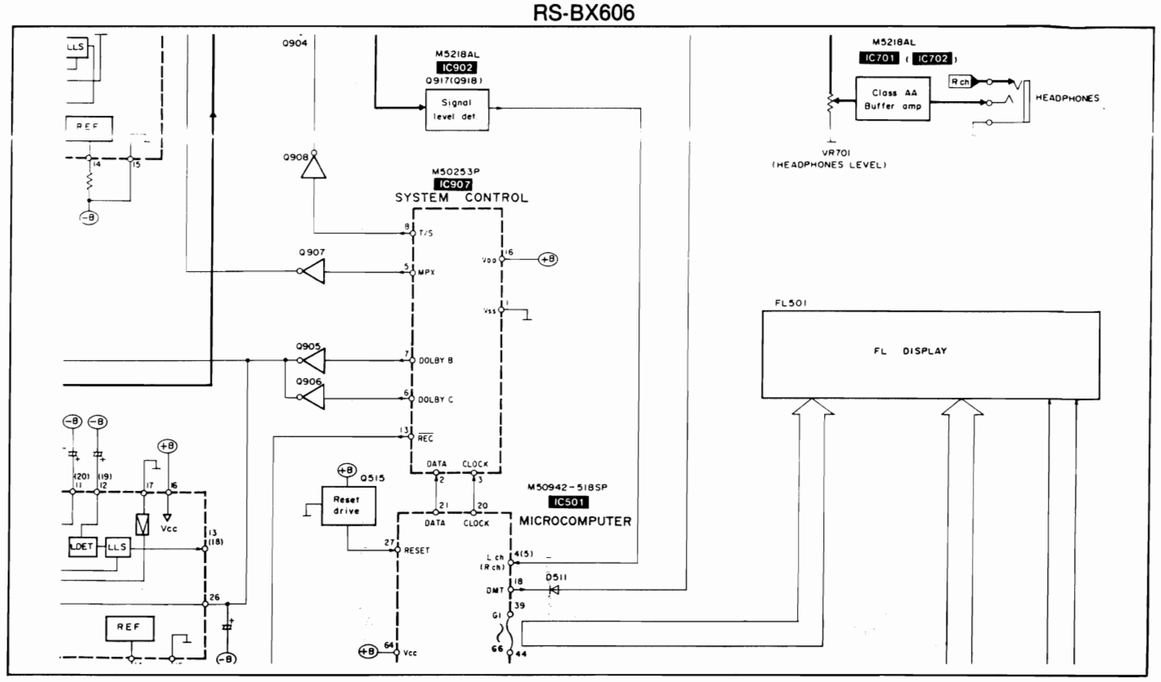

RS-BX626

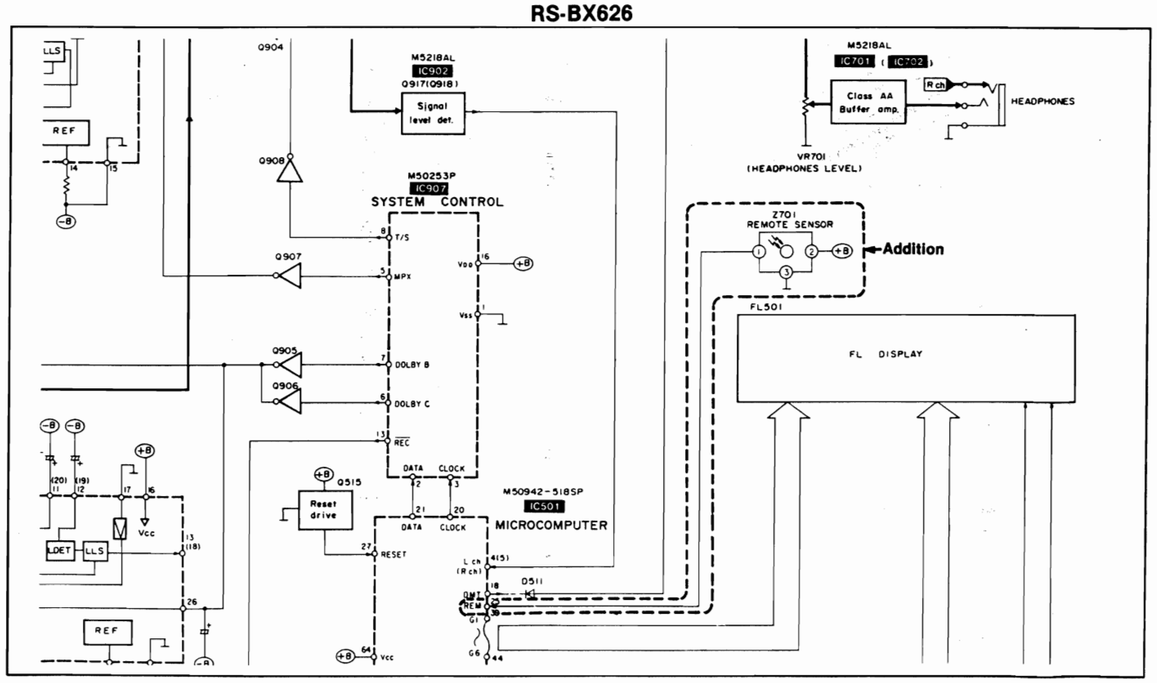

■ PACKAGING (on page 30.)

RS-BX606

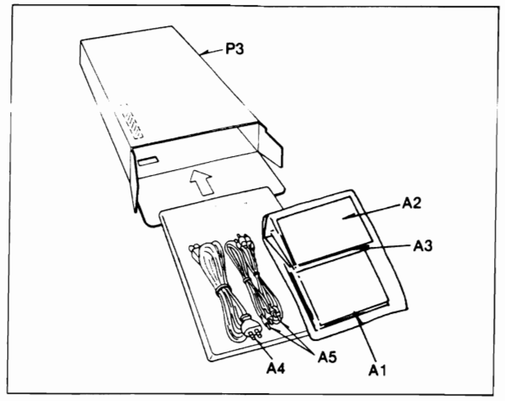

RS-BX626

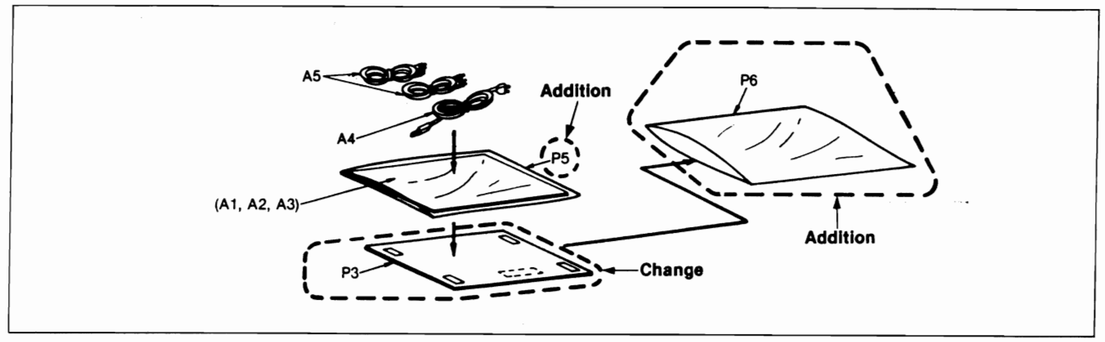

■ WIRING CONNECTION DIAGRAM (on page 31.)

RS-BX606

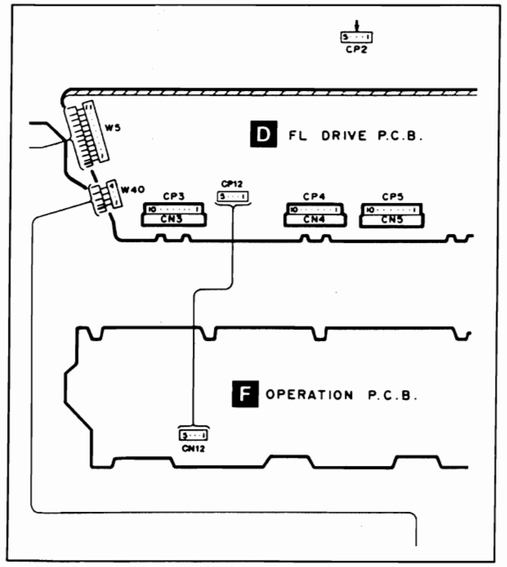

RS-BX626

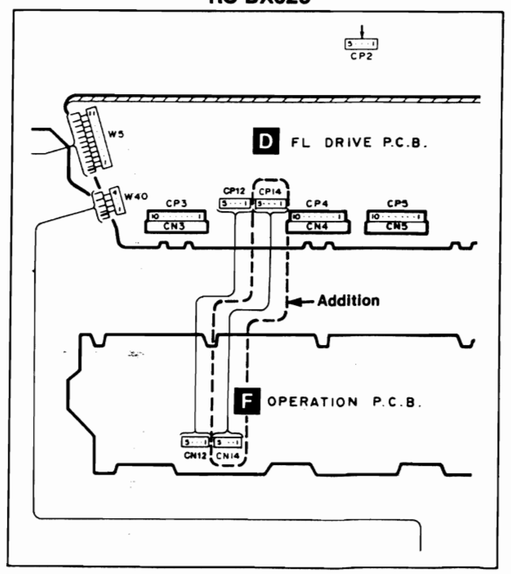

■ EXPLODED VIEW (on pages 37, 38)

RS-BX606

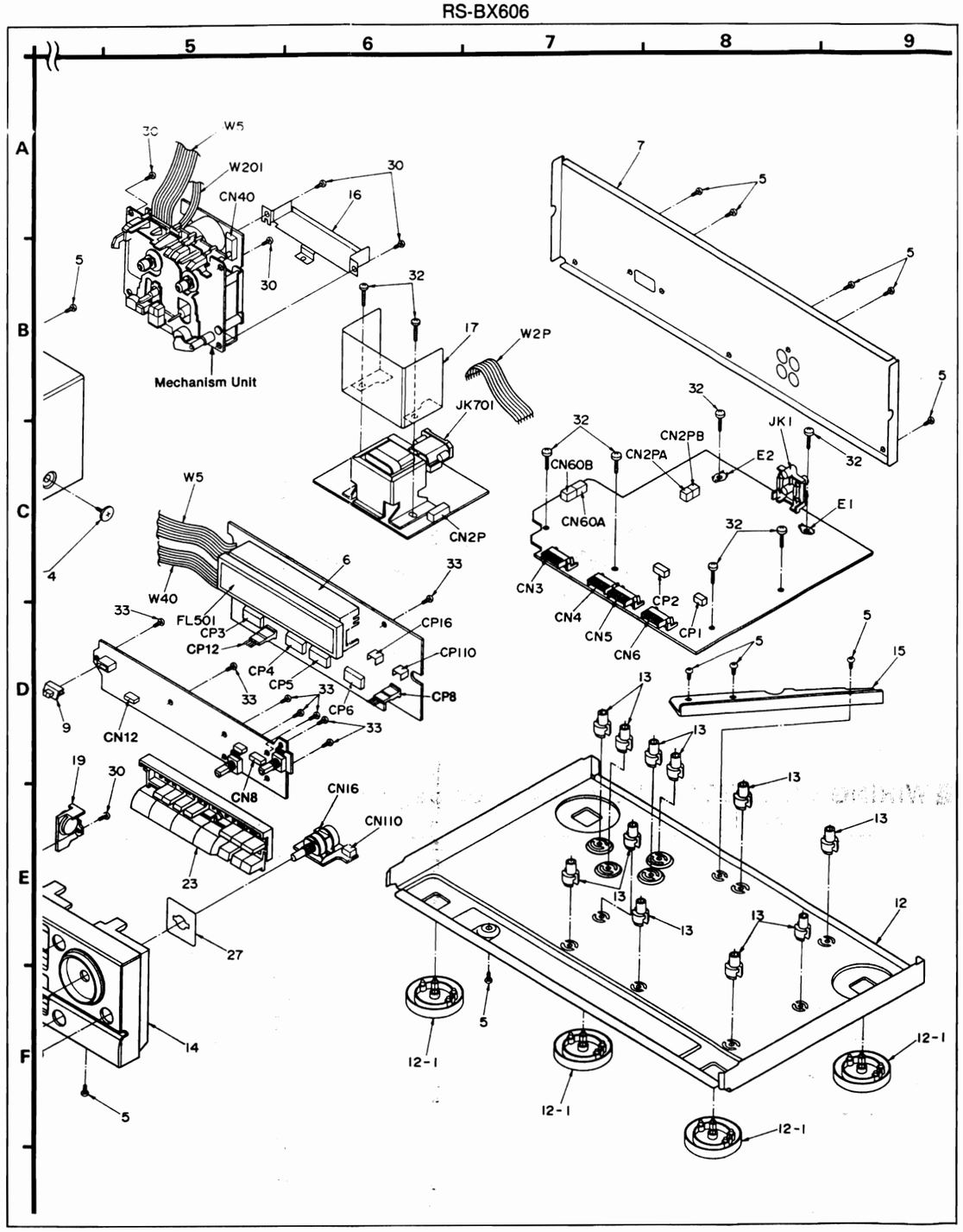

RS-BX626

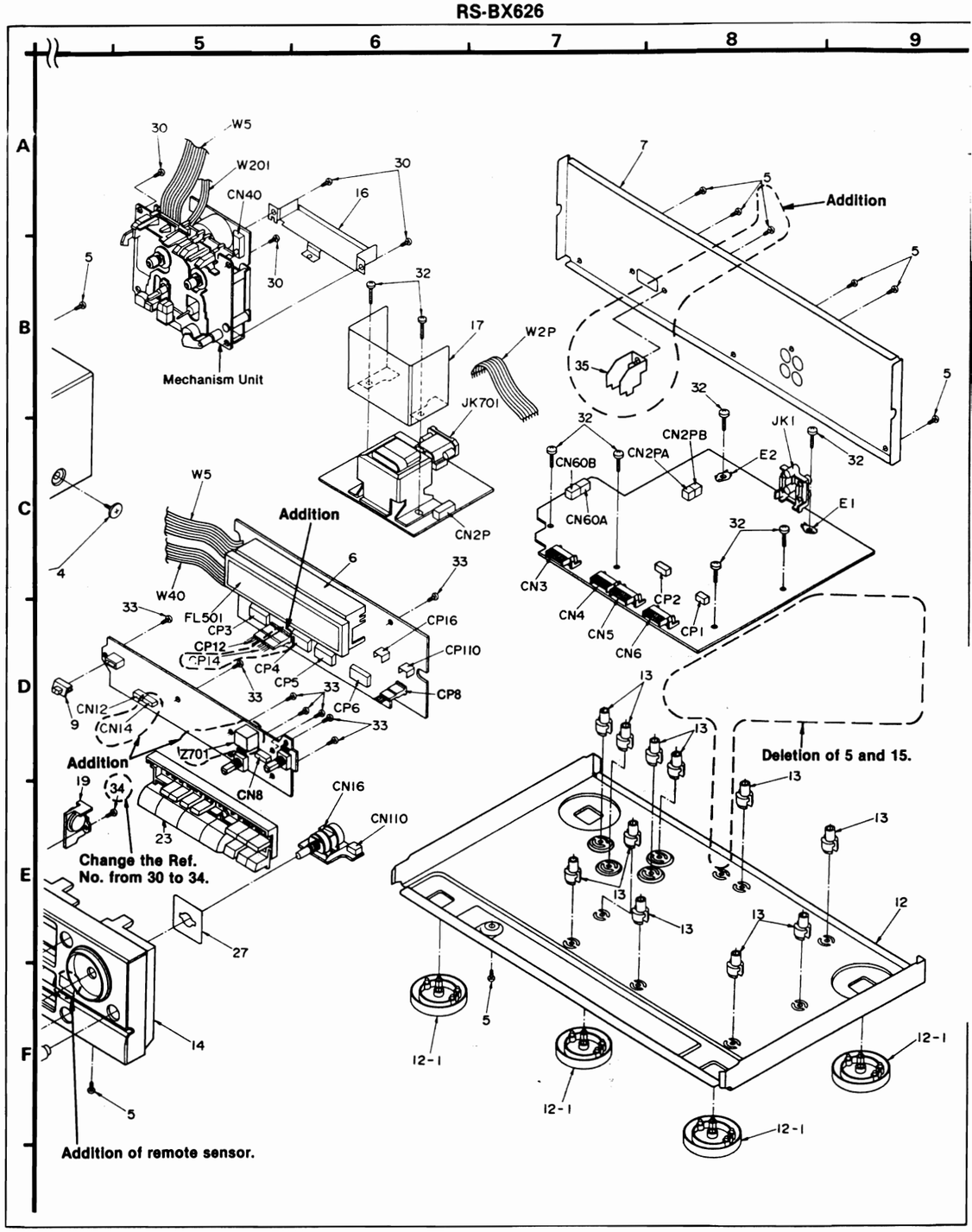

Printed in Japan
H920408600 SN/HH/TN

ORDER NO. AD9106169C5
A2

Service Manual

Cassette Deck

Dolby NR-Equipped
Stereo Cassette Deck

RS-BX606

DOLBY B·C NR HX PRO

Color

(K)...Black Type

Area

Country Code	Area	Color
(PP)	U.S.A./Canada.	(K)
(EB)	Great Britain.	
(EG)	F.R. Germany and Italy./Continental Europe.	

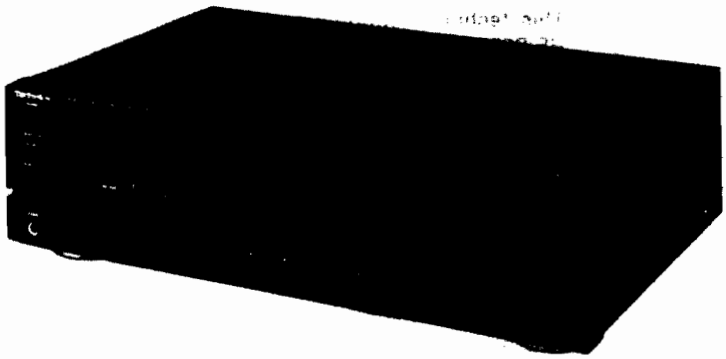

*HX Pro headroom extension originated by Bang Olufsen and manufactured under license from Dolby Laboratories Licensing Corporation.
"DOLBY", the double-D symbol, and "HX PRO" are trademarks of Dolby Laboratories Licensing Corporation.

RS-TR555 MECHANISM SERIES (AR350)

SPECIFICATIONS

■ CASSETTE DECK SECTION

Deck system	Stereo cassette deck
Track system	4-track, 2-channel
Recording system	AC bias
Bias frequency	80 kHz
Erasing system	AC erase
Heads	Recording head (Permalloy) × 1
	Playback head (Permalloy) × 1
	Erasing head (Double-gap ferrite) × 1
Motors	Capstan drive (Quartz DD motor) × 1
	Reel table drive (DC motor) × 1
Tape speed	4.8 cm/sec. (1-7/8 ips)
Wow and flutter	0.05% (WRMS)
For (EB, EG) areas only	±0.14% (DIN)
Fast forward and rewind time	Approx. 100 seconds with C-60 cassette tape
Frequency response (Dolby NR off)	
NORMAL	30 Hz~17 kHz, ±3 dB
For (PP) area	20 Hz~19 kHz
For others	20 Hz~18 kHz (DIN)
CrO_2	30 Hz~18 kHz, ±3 dB
For (PP) area	20 Hz~20 kHz
For others	20 Hz~19 kHz (DIN)
METAL	30 Hz~19 kHz, ±3 dB
For (PP) area	20 Hz~21 kHz
For others	20 Hz~20 kHz (DIN)
S/N (signal level=max recording leve, CrO_2 type tape)	
NR off	57 dB (A weighted)
Dolby B NR on	66 dB (CCIR)
Dolby C NR	74 dB (CCIR)
Input sensitivity and impedance	
LINE IN	600 mV/47 kΩ
Output voltage and impedance	
LINE OUT	400 mV/800 Ω
HEADPHONES	125 mV/(8 Ω) (Load impedance 8 Ω~600 Ω

■ GENERAL

Power consumption	20 W
Power supply	
For (PP) area	AC 60 Hz, 120 V
For others	AC 50 Hz/60 Hz, 230 V~240 V
Dimensions (W × H × D)	430 × 125 × 300 mm (16-15/16" × 4-15/16" × 11-13/16")
Weight	4.3 kg (9.46 lb.)

Note:
Specifications are subject to change without notice.
Weight and dimensions are approximate.

Technics

CONTENTS

	Page
SAFETY PRECAUTION	2
ACCESSORIES	2
CONNECTIONS	3
LOCATION OF CONTROLS	4~6
DISASSEMBLY INSTRUCTIONS	7~10
MEASUREMENT AND ADJUSTMENT METHODS	11~13
TERMINAL FUNCTION OF IC'S	14
PRINTED CIRCUIT BOARDS	15~18
SCHEMATIC DIAGRAM	19~26
TROUBLESHOOTING OF DIRECT DRIVE MOTOR	26
TERMINAL GUIDE OF IC'S, TRANSISTORS AND DIODES	26
BLOCK DIAGRAM	27, 28
INTERNAL CONNECTION OF FL	29, 30
PACKING	30
WIRING CONNECTION DIAGRAM	31
REPLACEMENT PARTS LIST	32, 33
RESISTORS & CAPACITORS	34, 35
REPLACEMENT PARTS LIST	36
EXPLODED VIEWS (Cabinet parts)	37, 38
EXPLODED VIEWS (Mechanical parts)	39, 40
REPLACEMENT PARTS LIST	41

※ TECHNICAL INFORMATION

This technical information is located on pp 45-51 of the RS-B555 Service Manual (Order No. AD6907231C5). Therefore, refer to that Service Manual. There is a few diferences in this schematic diagram. But this is the same as RS-B555 basically.

SAFETY PRECAUTION (This "safety precaution" is applied only in U.S.A.)

1. Before servicing, unplug the power cord to prevent an electric shock.
2. When replacing parts, use only manufacturer's recommended components for safety.
3. Check the condition of the power cord. Replace if wear or damage is evident.
4. After servicing, be sure to restore the lead dress, insulation barriers, insulation papers, shields, etc.
5. Before returning the serviced equipment to the customer, be sure to make the following insulation resistance test to prevent the customer from being exposed to a shock hazard.

• INSULATION RESISTANCE TEST

1. Unplug the power cord and short the two prongs of the plug with a jumper wire.
2. Turn on the power switch.
3. Measure the resistance value with ohmmeter between the jumpered AC plug and each exposed metal cabinet part, such as screwheads antenna, control shafts, handle brackets, etc. Equipment with antenna terminals should read between 3MΩ and 5.2MΩ to all exposed parts. (Fig. A) Equipment without antenna terminals should read approximately infinity to all exposed parts. (Fig. B)

Note: Some exposed parts may be isolated from the chassis by design. These will read infinity.

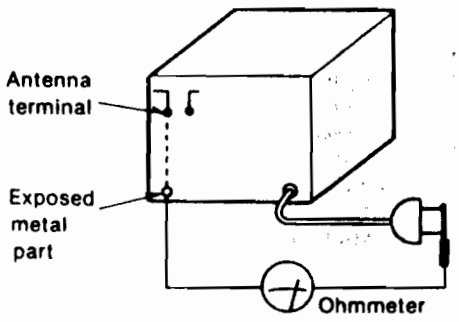

(Fig. A)
Resistance = 3MΩ—5.2MΩ

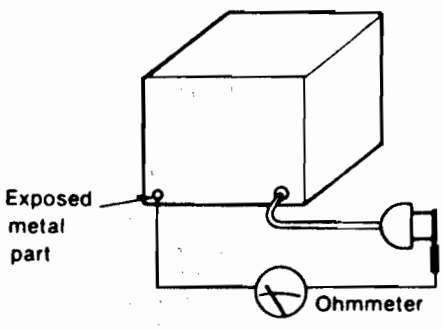

(Fig. B)
Resistance = Approx ∞

4. If the measurement is outside the specified limits, there is a possibility of a shock hazard. The equipment should be repaired and rechecked before it is returned to the customer.

ACCESSORIES

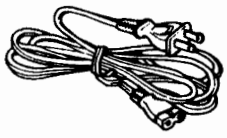

AC power supply cord
(SFDAC05E03) ..... (EG)
(SJA175) ..... (PP)
(SJA193) ..... (EB)
..... 1 pc.

Stereo connection cables
(SJP2249-3) ..... 2 pcs.

Note: Configuration of AC power supply cord differs according to area.

■ CONNECTIONS

Before making connections, be sure that the power to this unit and all other system components are turned off first.
See the operating instructions of the receiver or the compact disc player for details.

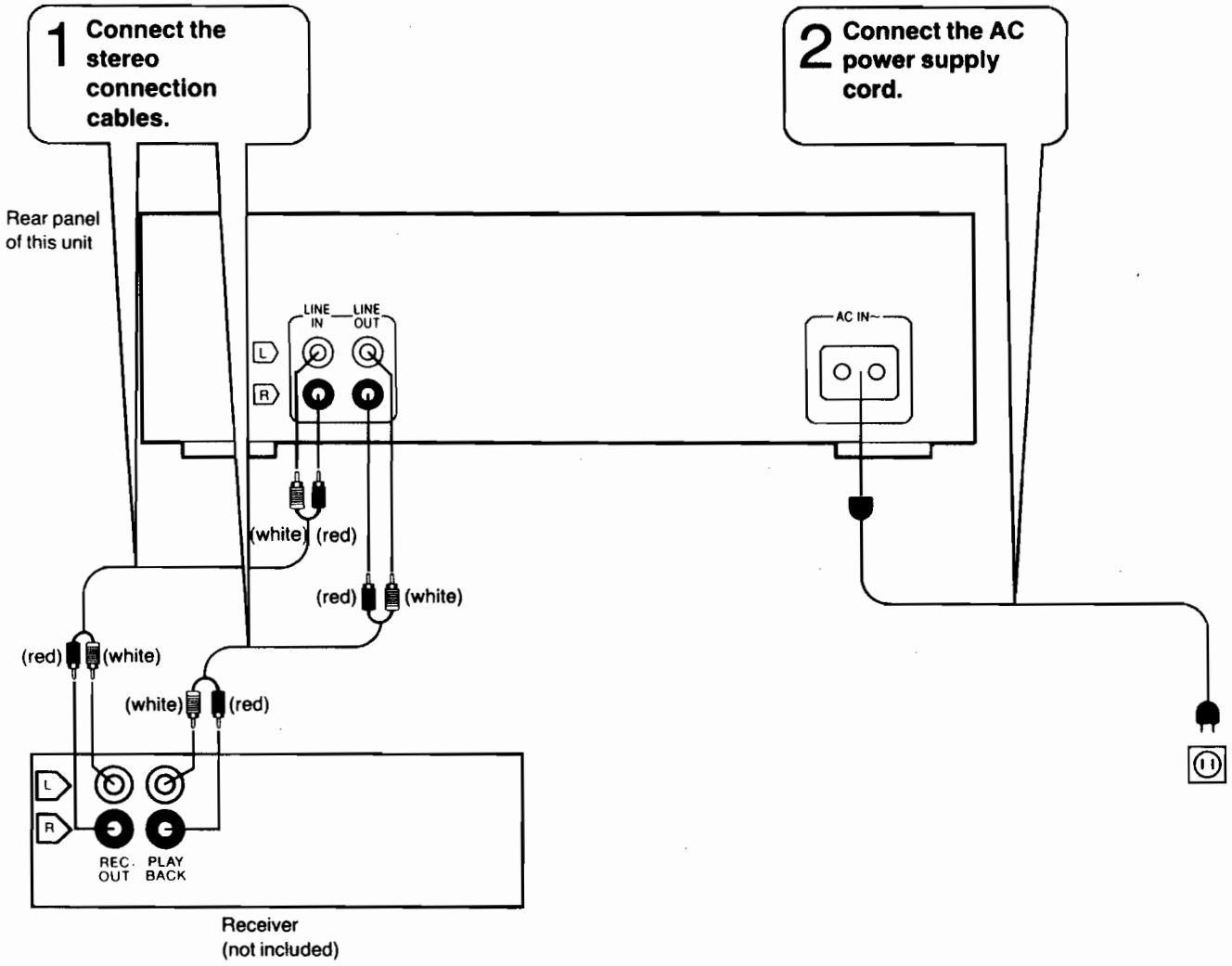

1 Connect the stereo connection cables (included) to the REC OUT and PLAYBACK terminals of the receiver.

2 Connect the power supply cord (included) to the household AC outlet.

For (EB) area

Cut off and dispose of the plug and replace with a suitable plug.

Fit a suitable plug to the AC power supply cord.

■ LOCATION OF CONTROLS

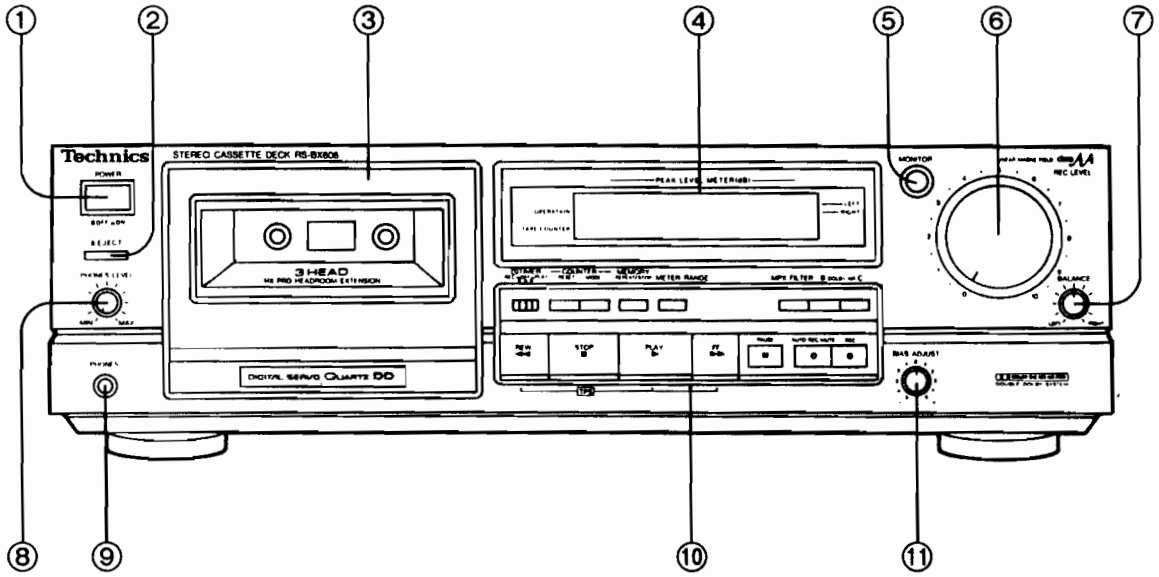

Control section

① **Power switch (POWER).....For PP area**
Press (▮_▬) to switch the power on.
Press again (▬_▮) to switch the power off.

Power "STANDBY ⏻/ON" switch...For others (POWER ▮ STANDBY ⏻ ▬ ON)
This switch switches ON and OFF the secondary circuit power only. The unit is in the "standby" condition when this switch is set to the STANDBY ⏻ position. Regardless of the switch setting, the primary circuit is always "live" as long as the power cord is connected to an electrical outlet.

② **Eject button (⏏ EJECT)**
This button is used to open the cassette holder.

③ **Cassette holder**

④ **Display section**
(See "Display section" on page 6.)

⑤ **Monitor switch (MONITOR)**
The monitor switch is used to select the sound source just prior to or just after recording.

"SOURCE" position:	Set to this position to monitor the sound to be recorded.
"TAPE" position:	Set to this position to monitor the sound just recorded.

⑥ **Recording-level control (REC LEVEL)**
This control is used to regulate the recording level.

⑦ **Recording-balance control (BALANCE)**
This control is used to balance the left and right sound levels during recording.

⑧ **Headphones volume control (PHONES LEVEL)**

⑨ **Headphones jack (PHONES)**

⑩ **Operation section**
(See "Operation section" on page 5.)

⑪ **Bias-adjustment control (BIAS ADJUST)**
The frequency response for each tape type can be equalized by using this control.

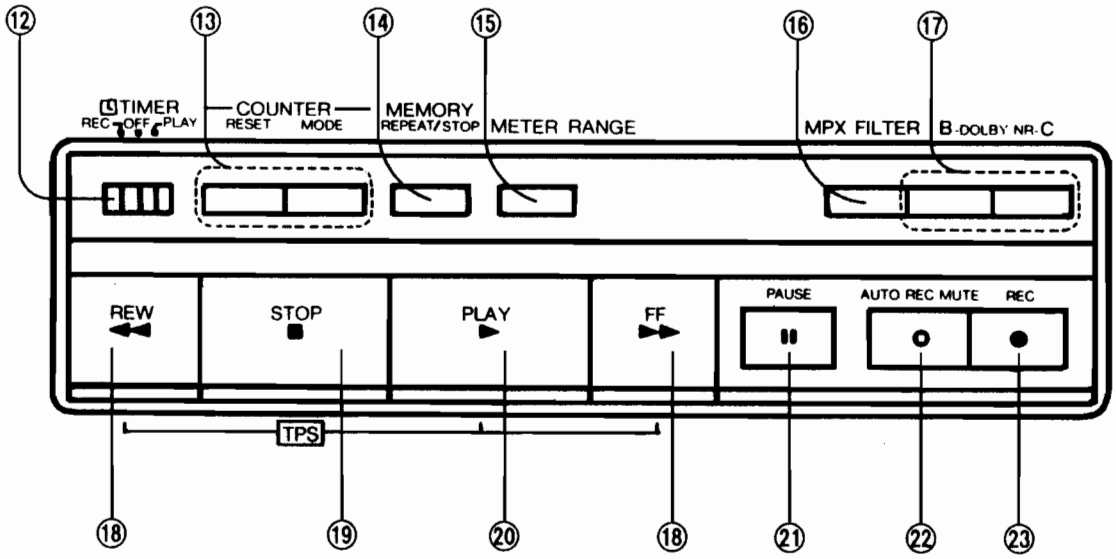

Operation section

⑫ Timer switch (TIMER)

This switch is used to automatically begin a tape recording or tape playback at a certain time, selected by an optional timer.

⑬ Counter buttons (COUNTER RESET/MODE)

RESET: This button can be used to reset the tape/linear counter indication to "000_"/"00.00".

MODE: This button can be used to select the tape/linear counter indication.

⑭ Memory-mode button (MEMORY REPEAT/STOP)

REPEAT: This button can be used to set this unit to the "A–B repeat" mode.

STOP: This button can be used to rewind the tape to the preset "0000" point when the rewind (◀◀) button is pressed.

⑮ Meter-range selector (METER RANGE)

This selector can be used to select the meter-range display of the input level meter.

⑯ Multiplex filter switch (MPX FILTER)

This prevents the Dolby circuit from operating in error when FM stereo broadcasts are recorded using the noise reduction function.

⑰ Dolby noise-reduction buttons (DOLBY NR)

These buttons are used to reduce the hissing noise heard from the tape. This unit is provided with both the B-type and C-type noise-reduction systems.

⑱ Rewind/fast-forward/search button (◀◀ REW, ▶▶ FF, TPS)

These TPS (Tape Program Search) buttons are used to advance or rewind the tape, or to easily and quickly search for the program's beginning on the tape.

⑲ Stop button (■ STOP)

This button is used to stop the tape movement.

⑳ Playback button (▶ PLAY)

This button can be used to start the playback or recording of the cassette.
(The tape will then begin moving in the left-to-right direction.)

㉑ Pause button (❚❚ PAUSE)

This button is used to temporarily stop the tape playback or recording of the deck.

㉒ Automatic-record-muting button (○ AUTO REC MUTE)

This button is used to tape a silent interval on the tape while recording is in progress.

㉓ Record button (● REC)

This button is used to set the deck to the recording stand-by mode.

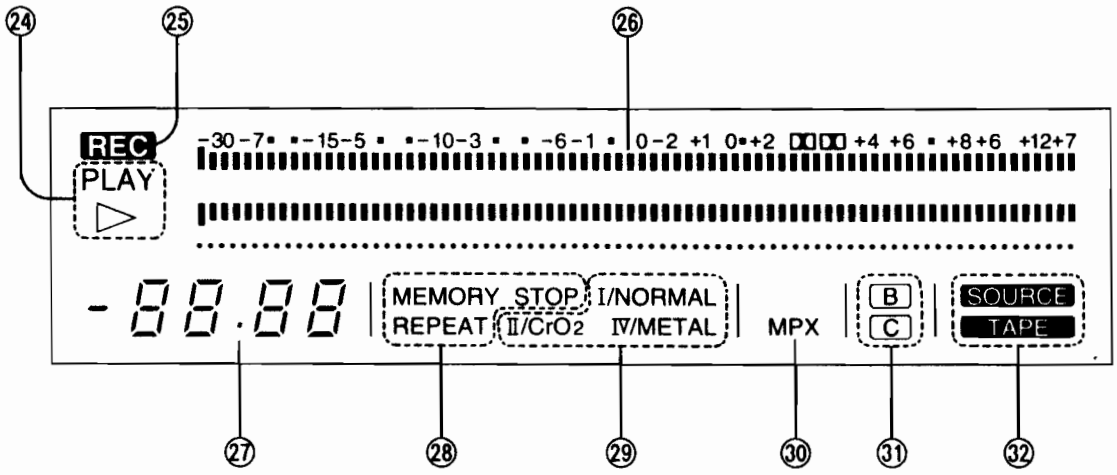

Display section

㉔ **Playback indicator (PLAY ▷)**
When this indicator illuminates steadily, it indicates that this unit is in the playback or recording mode.
When flashing, indicates that this unit is in the pause mode or in the recording stand-by mode.

㉕ **Recording indicator (REC)**
Illuminates to indicate that this unit is in the recording stand-by mode or is recording.

㉖ **Input level meter**
During playback, this meter indicates the level of the recorded sound.
During recording, it indicates the level being recorded, adjusted by the recording-level control.

㉗ **Tape/Linear counter**
Indicates the amount of tape movement or elapsed time.

㉘ **Memory-mode indicators (MEMORY REPEAT/MEMORY STOP)**
Each indicator illuminates to show which of the memory modes was set by the memory-mode button.

㉙ **Tape-select indicators (I/NORMAL, II/CrO₂, IV/METAL)**
The type of tape being used will be automatically detected. The corresponding indicator illuminates to show the tape type.

㉚ **Multiplex filter indicator (MPX)**
Illuminates to indicate that the multiplex filter is set to "on".

㉛ **Dolby noise-reduction indicators (B, C)**
Each indicator illuminates to show the type of Dolby noise-reduction system selected by pressing one of the Dolby noise-reduction buttons.

㉜ **Monitor indicators (SOURCE, TAPE)**
Each indicator illuminates to show the corresponding setting from the monitor switch.

DISASSEMBLY INSTRUCTIONS

"ATTENTION SERVICER"

Some chassis components may have sharp edges. Be careful when disassembling and servicing.

Ref. No. 1	Removal of the cabinet
Procedure 1	

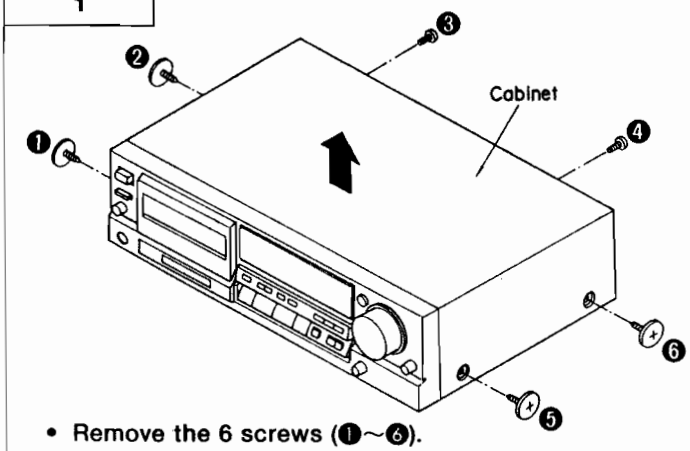

- Remove the 6 screws (❶~❻).

Ref. No. 2	Removal of the main P.C.B.
Procedure 1→2	

1. Remove the 5 screws (❶~❺).
2. Remove the rear panel from the projection of the bottom board ass'y.

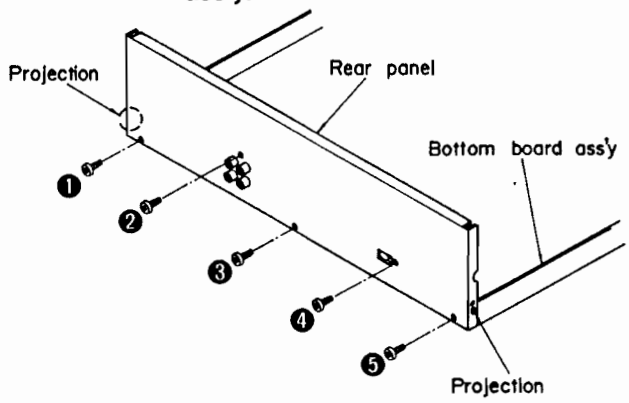

3. Remove the 6 screws (❻~⓫).
4. Remove the 2 connectors (CP1, CP2).
5. Remove the 2 flat cables (CN2P, CN60).
6. Remove the main P.C.B. in the direction of arrow.

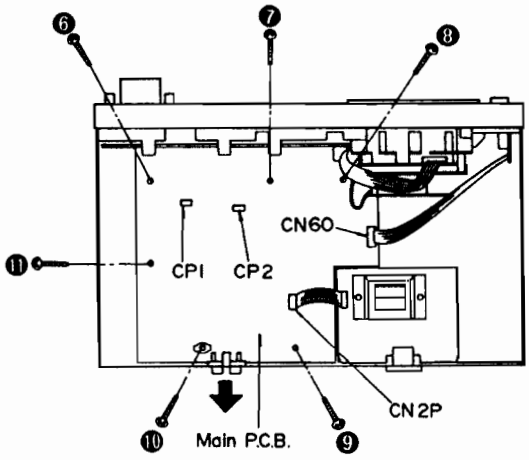

How to remove the flat cable

1. Lift the connector.
2. Pull out the flat cable.

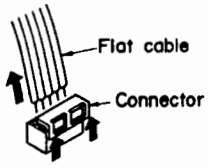

How to check the main P.C.B.

- When checking the soldered surfaces of main P.C.B. and replacing the parts, do as show.

1. Remove the 9 screws (❶, ❸, ❻~⓫) in above figure.
2. Remove the 6 screws (⓬~⓱).
3. Remove the front panel ass'y in the direction of arrow Ⓐ.
4. Remove the bottom board ass'y in the direction of arrow Ⓑ.
5. Reinstall the front panel ass'y to the main P.C.B.

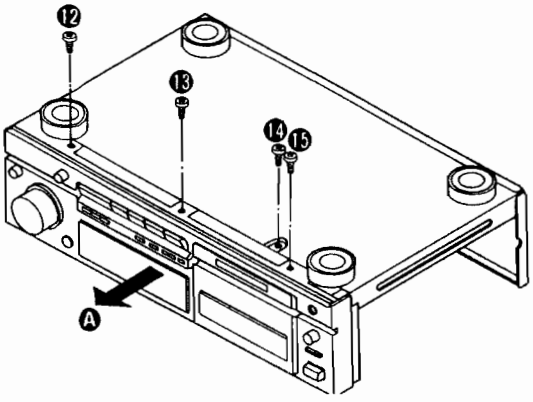

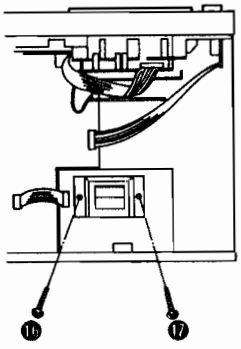

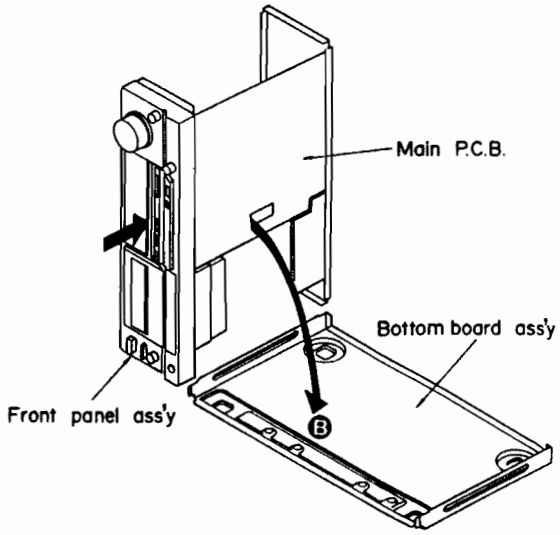

Ref. No. 3	Removal of the front panel ass'y

Procedure 1→3

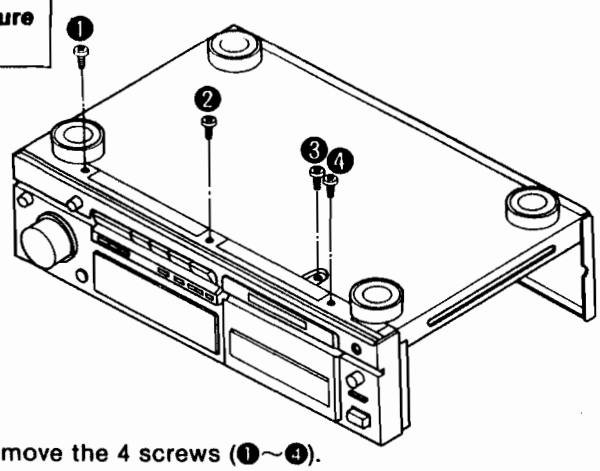

1. Remove the 4 screws (❶~❹).

2. Remove the 2 connectors (CP1, CP2).
3. Remove the 1 flat cable (CN60).

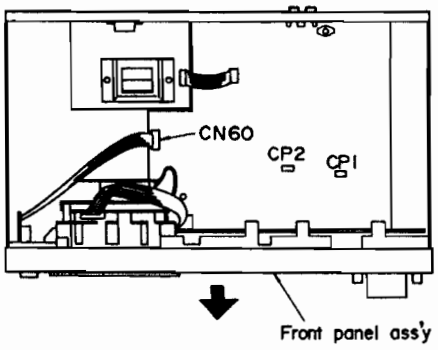

4. Remove the front panel ass'y in the direction of arrow.

Ref. No. 4	Removal of the FL drive P.C.B.

Procedure 1→3→4

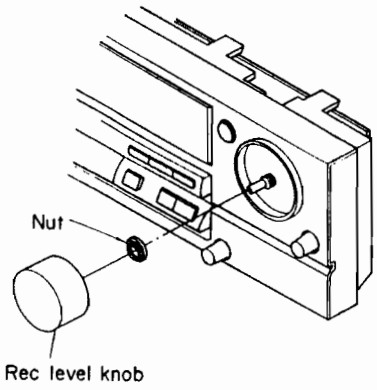

1. Pull out the rec level knob.
2. Remove the nut.

• Pull out the flat cable while pressing the connector.

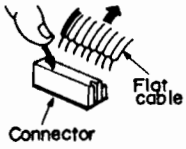

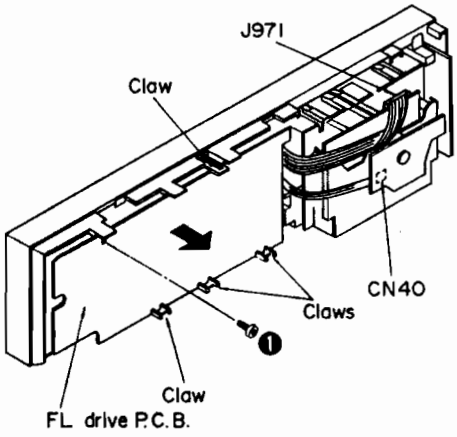

3. Remove the 2 flat cables (CN40, J971).
4. Remove the 1 screw (❶).
5. Release the 2 claws.
6. Remove the FL drive P.C.B. in the direction of arrow.

Ref. No. 5	Removal of the rec level P.C.B.

Procedure 1→3→4→5

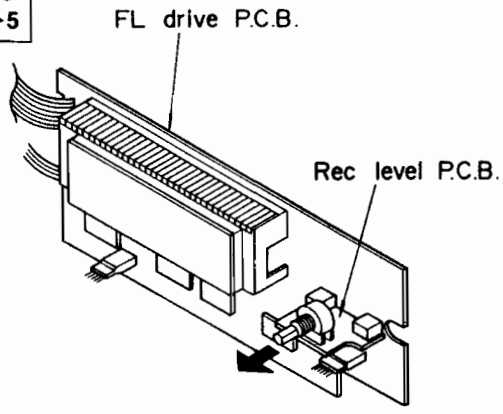

• Remove the rec level P.C.B. in the direction of arrow.

Ref. No. 6	Removal of the operation P.C.B.

Procedure 1→3→4→6

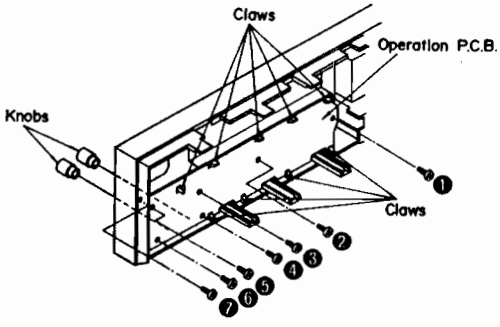

1. Pull out the 2 knobs.
2. Remove the 7 screws (❶~❼).
3. Release the 9 claws.

Ref. No. 7	Removal of the mechanism unit
Procedure 1→3→7	

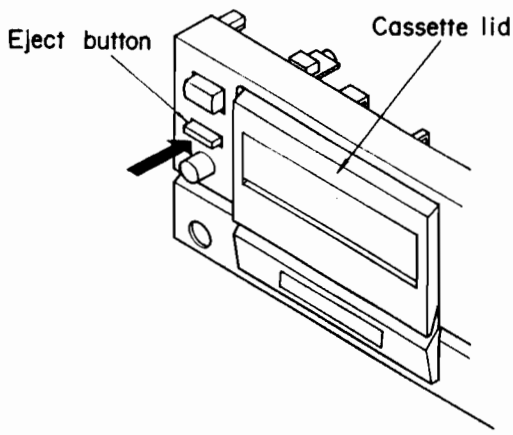

1. Push the eject button and open the cassette lid.

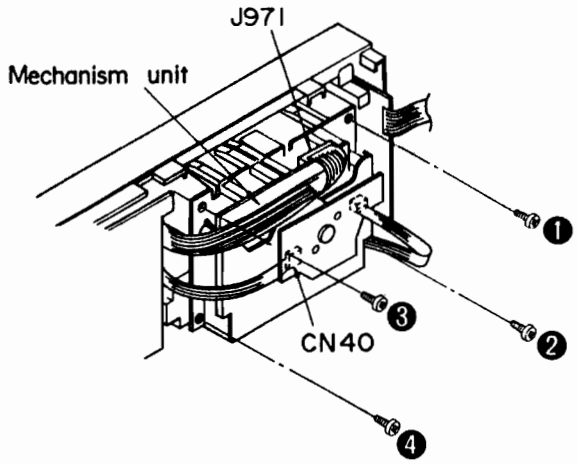

2. Remove the 2 flat cables (CN40, J971).
3. Remove the 4 screws (❶~❹).

Ref. No. 8	Removal of the damper gear ass'y
Procedure 1→3→7→8	

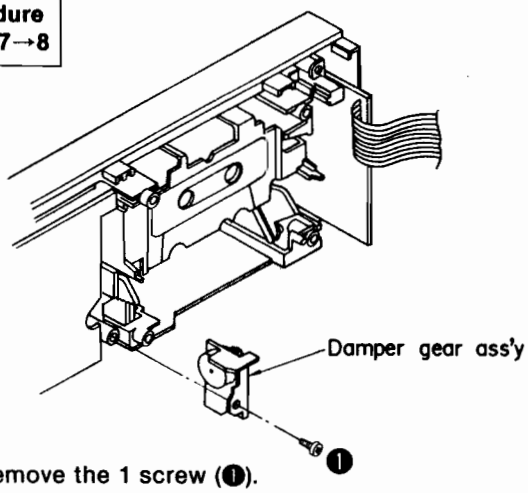

- Remove the 1 screw (❶).

Ref. No. 9	Removal of the cassette holder
Procedure 1→3→7→8→9	

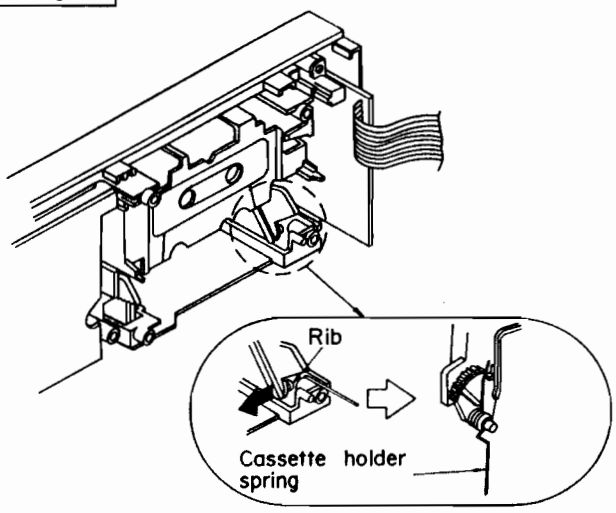

1. Remove the rib in the direction of arrow.
2. Remove the cassette holder spring.

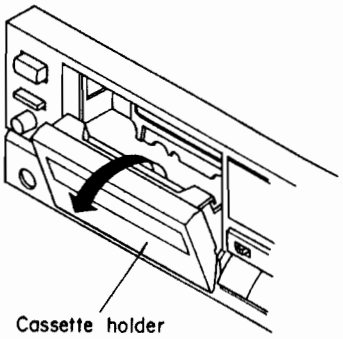

3. Pull out the cassette holder in the direction of arrow.

Ref. No. 10	Removal of the power switch P.C.B.
Procedure 1→3→10	

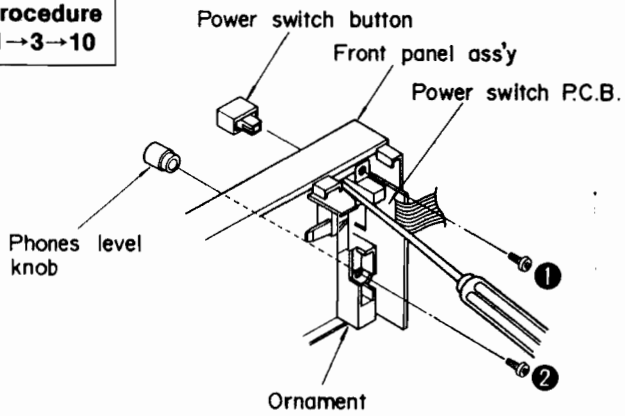

1. Remove the power switch button by pushing it from behind the front panel ass'y.
2. Pull out the phones level knob.
3. Remove the 2 screws (❶, ❷).
4. Remove the ornament.

Ref. No. 11	Removal of the eject lever and eject button
Procedure 1→3→10 →11	

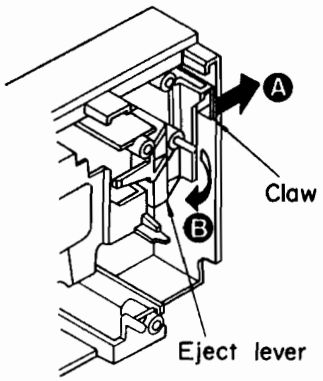

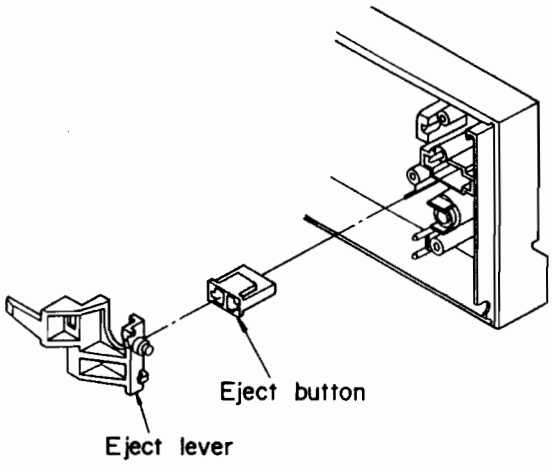

1. Push the claw in the direction of arrow Ⓐ.
2. Remove the eject lever in the direction of arrow Ⓑ.
3. Pull out the eject button.

Ref. No. 12	Removal of the motor P.C.B.
Procedure 1→3→12	

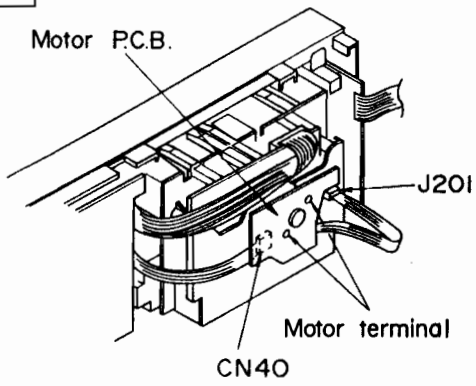

1. Remove the 2 flat cables (CN40, J201).
2. Unsolder the motor terminal.

Ref. No. 13	Removal of the power supply P.C.B.
Procedure 1→13	

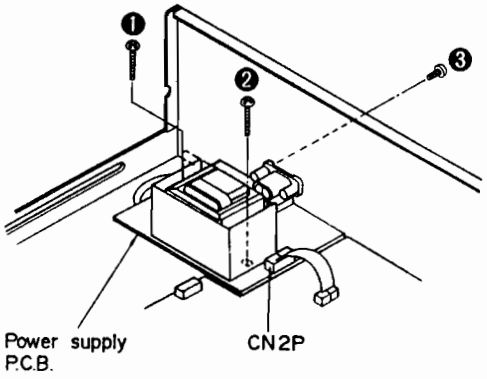

1. Remove the 1 flat cable (CN2P).
2. Remove the 3 screws (❶~❸).

Ref. No. 14	Removal of the cassette lid
Procedure 14	

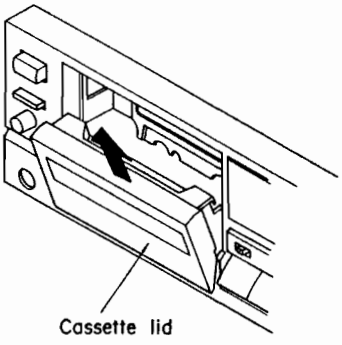

- Remove the cassette lid in the direction of arrow.

Ref. No. 15	Removal of the front ornament
Procedure 14→15	

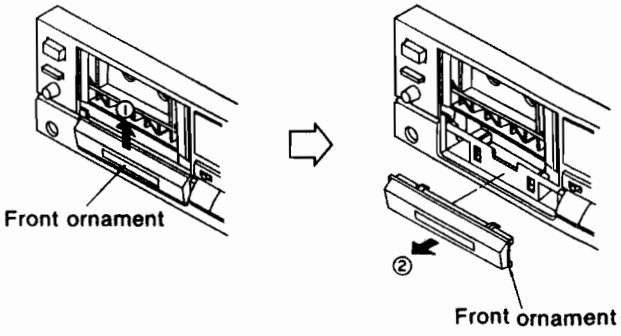

- Remove the front ornament in the direction of arrow ①, ②.

■ MEASUREMENT AND ADJUSTMENT METHODS

Measurement Condition

- Rec. level control; Maximum
- Timer switch; Off
- MPX filter switch: off
- Bias-adjustment VR: Center
- Dolby NR switch; Off
- Make sure heads are clean
- Make sure capstan and pressure roller are clean
- Judgeable room temperature 20±5°C (68±9°F)

Measuring Instrument

- EVM (Electronic Voltmeter)
- Oscilloscope
- Digital frequency counter
- AF oscillator
- ATT (Attenuator)
- Resistor (600Ω)

Test tape

- Head azimuth adjustment (8kHz, −20dB); QZZCFM
- Tape speed adjustment (3kHz, −10dB); QZZCWAT
- Playback frequency response (315Hz, 12.5kHz, 10kHz, 8kHz, 4kHz, 1kHz, 250Hz, 125Hz, 63Hz, −20dB); QZZCFM
- Playback gain adjustment (315Hz, 0dB); QZZCFM
- Overall frequency response, Overall gain adjustment
  Normal reference blank tape ; QZZCRA
  CrO_2 reference blank tape; QZZCRX
  Metal reference blank tape; QZZCRZ

• Adjustment Points

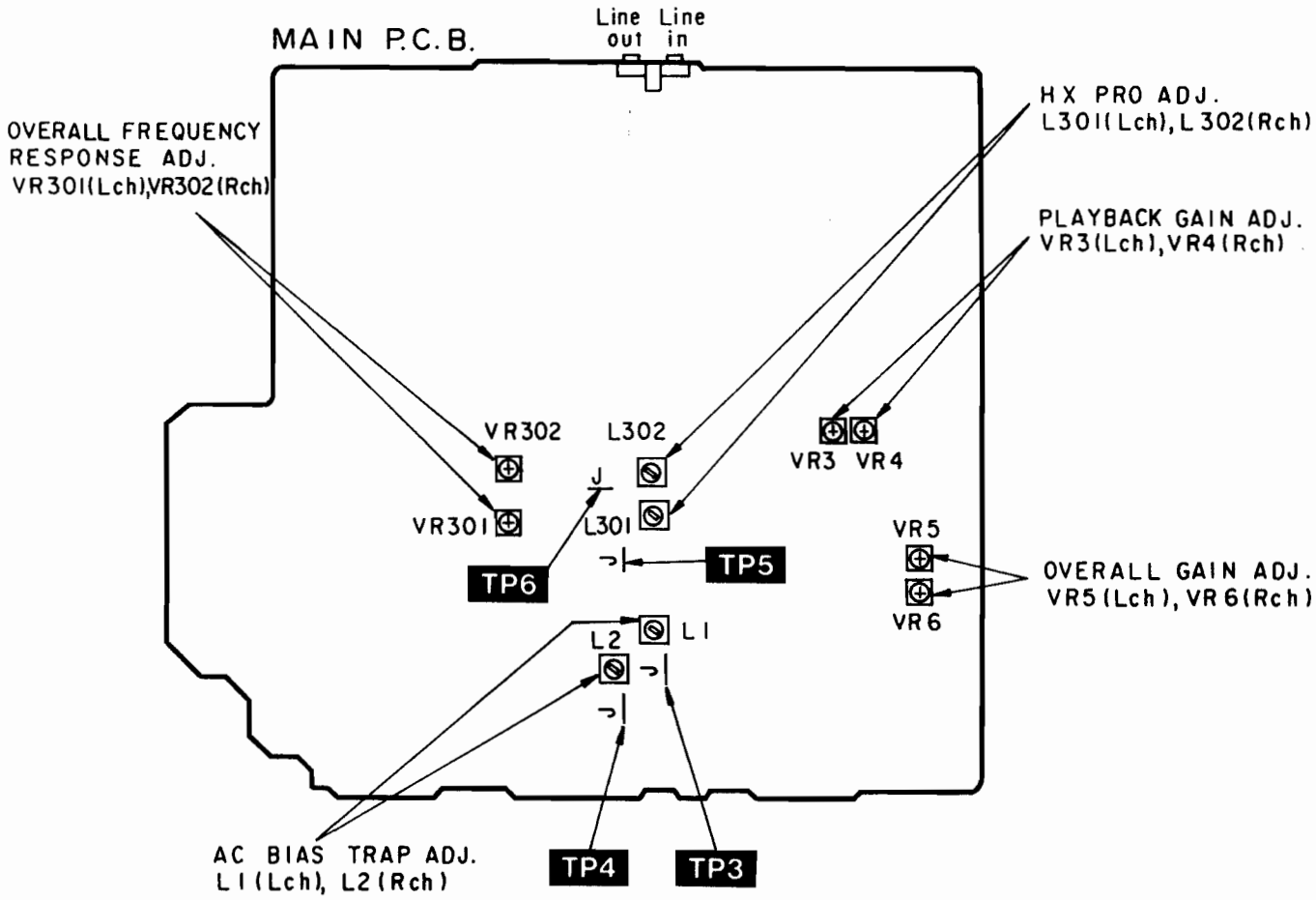

HEAD AZIMUTH ADJUSTMENT

1. Playback the azimuth adjusment portion (8 kHz, -20 dB) of the test tape (QZZCFM). Vary the azimuth adjusting screw until the output of the R-CH are maximized.
2. Perform the same adjustment in the play mode.
3. After the adjustment, apply screwlock to the azimuth adjusting screw.

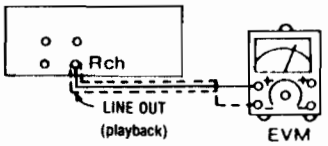

Fig.1

Fig.2

PLAYBACK GAIN ADJUSTMENT

1. Playback the gain adjusted portion (315 Hz, 0 dB) of the test tape (QZZCFM).
2. Adjust **VR3** (L-CH) and **VR4** (R-CH) so that the output is within the standard value.

Standard value: 0.4V±0.5dB

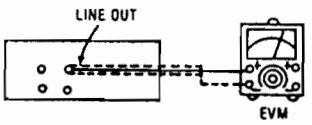

Fig. 3

PLAYBACK FREQUENCY RESPONSE

1. Playback the frequency response portion (315Hz, 12.5kHz~63Hz, −20dB) of the test tape (QZZCFM).
2. Assure that the frequency response is within the range shown in **Fig. 5** for both L-CH and R-CH.

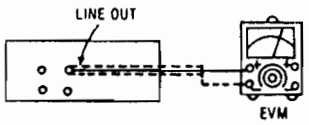

Fig. 4

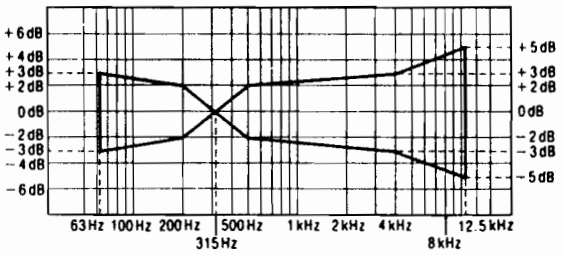

Fig. 5

AC BIAS TRAP ADJUSTMENT

1. Insert the Metal blank test tape (QZZCRZ) and set the unit to the Record mode.
2. Adjust **L1** (L-CH) [[**L2** (R-CH)]] so that the output voltage between **TP3** (**TP4**) and GND is less than the minimum value.

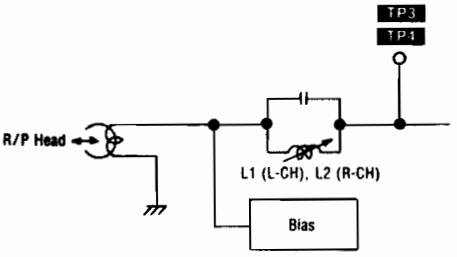

Fig. 6

HX PRO ADJUSTMENT

1. Insert the Metal blank tape (QZZCRZ) and set the unit to the Record Pause mode.
2. Connect a DC voltmeter across **TP5** (L-CH) and GND, **TP6** (R-CH) and GND.
3. Adjust **L301** (L-CH) and **L302** (R-CH)so that the output is the minimum value.

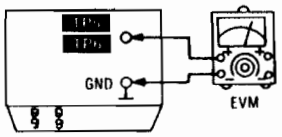

Fig. 7

OVERALL FREQUENCY RESPONSE

1. Insert the normal blank test tape (QZZCRA) and set the unit to the record pause mode.
2. Apply a reference input signal (1kHz, −24dB) through an attenuator.
3. Attenuate the signal by 20dB and adjust the frequency from 50Hz~10kHz.
4. Record the frequency sweep.
5. Playback the recorded signal and assure that it is within the range shown in **Fig. 8** in comparison to the reference frequency (1kHz).
6. If it is not within the standard range, adjust **VR301** (L-CH) and **VR302** (R-CH) so that the frequency level is within the standard range.
   - Level up in high frequency range .....Increase the bias current.
   - Level down in high frequency range...Decrease the bias current.
7. Repeat steps 2~6 above using the CrO_2 tape (QZZCRX) and the metal tape (QZZCRZ) increasing the frequency range to 12.5kHz (50Hz~12.5kHz).
8. Assure that the level is within the range shown in **Fig. 9**.

Normal Overall frequency response chart (NR OUT)

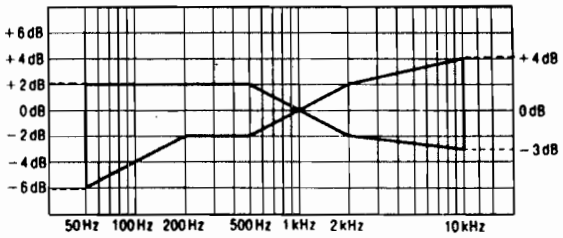

Fig. 8

CrO_2•Metal Overall frequency response chart (NR OUT)

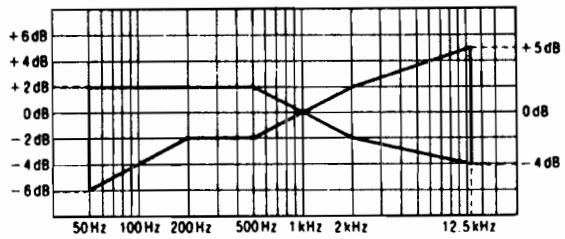

Fig. 9

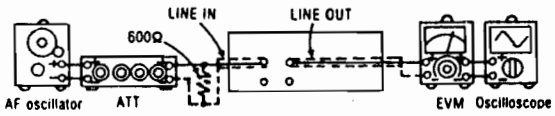

Fig. 10

OVERALL GAIN ADJUSTMENT

1. Insert the normal blank test tape (QZZCRA) and set the unit to the record pause mode.
2. Apply a reference input signal (1kHz, −24dB). Attenuate the output so that its level becomes 0.4V.
3. Record this input signal.
4. Playback the signal recorded in step 3 above, and assure that the output is within the standard value.
5. If it is not within the standard value, adjust **VR5** (L-CH) and **VR6** (R-CH).
6. Repeat the step 2~5 above until the output is within the standard value.

Standard value: 0.4V±0.5dB

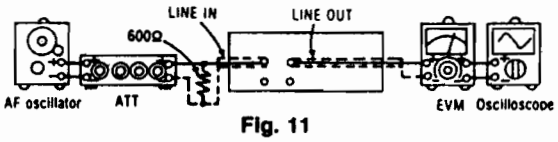

Fig. 11

■ TERMINAL FUNCTION OF IC'S

• IC501 (M50942-518SP): MICROCOMPUTER (This microcomputer is used for mechanical/FL DRIVE operation.)

Pin No.	Mark	I/O Division	Function
1	V_{REF}	I	A/D converter reference voltage (Connected to AV_{CC})
2	KEY1	I	Key switch input STOP, FF, REW, PLAY, REC, PAUSE, Dolby B, C, MPX, TPLAY, TREC
3	KEY2	I	Key switch input C-RESET, C-MODE, M-RANGE, MEMORY, ARM
4	MLCH	I	Lch indication level input
5	MRCH	I	Rch indication level input
6	APRS	I	Not used, connected to GND
7	R. INH	I	Rec. inh. switch input Rec. OK: 1.5V, NG: 5V
8	TAPE	I	ATS switch input Nor: 1.1V, CrO_2: 2.4V, Metal: 5V
9	RPT	I	Reel table (take up side) rotary det.
10	CAPM	O	Capstan motor ON/OFF control ON: "H", OFF: "L"
11	RMR	O	Reel motor ON/OFF control REW, R • TPS: "H", Others: "L"
12	RMF	O	Reel motor ON/OFF control (REC) PLAY, FF, F • TPS: "H", Others: "L"
13	T. SOL	O	Trigger solenoid ON/OFF control ON: "H", OFF: "L"
14	B. SOL	O	Brake solenoid ON/OFF control FF/REW/TPS: "H", Others: "L"
15	C/R SOL	O	Brake solenoid keep and reel motor speed select FF/REW/TPS: "H", Others: "L"
16	EJECT R	O	Not used
17	EJECT F	O	Not used
18	DMT	O	Line out muting control ON: "H", OFF: "L"
19	RMT	O	Rec amp muting control ON: "H", OFF: "L"

Pin No.	Mark	I/O Division	Function
20	CLOCK	O	Serial clock for amp, logic control ($\overline{MPX}$, $\overline{C}$, $\overline{B}$, T/$\overline{S}$)
21	DATA	O	Serial clock for amp, logic control ($\overline{MPX}$, $\overline{C}$, $\overline{B}$, T/$\overline{S}$)
22	EJTSEL	I	Model select terminal Always: "L"
23	CNTSEL	I	Model select terminal Always: "H"
24	POF	I	Power off det. OFF: "L"
25	REM	I	Not used
26	CNV_{SS}	I	Connected to V_{SS}
27	$\overline{RESET}$	I	Reset input Normal: "H", Reset: "L"
28	X_{IN}	I	Clock OSC terminal (4MHz)
29	X_{OUT}	O	
30	X_{CIN}	I	Not used, connected to V_{SS}
31	X_{COUT}	O	Not used
32	V_{SS}	I	GND terminal
33	ϕ	O	Not used
34	RPS	I	Reel table (supply side) rotary det.
35	MSP	I	TPS (MS) det. No signal: "H" signal ON: "L"
36	MODE	I	Mech. mode switch (REC) PLAY, TPS: "L" Others: "H"
37	HALF	I	Mech. Half switch ON: "L", OFF: "H"
38	V_P	I	Reference voltage terminal
39 ∫ 44	G1 ∫ G6	O	FL grid control signal
45 ∫ 62	S1 ∫ S18	O	FL segment control signal
63	AV_{CC}	I	Power supply terminal for A/D converter
64	V_{CC}	I	Power supply terminal for micro computer

■ PRINTED CIRCUIT BOARDS

A MAIN P.C.B.

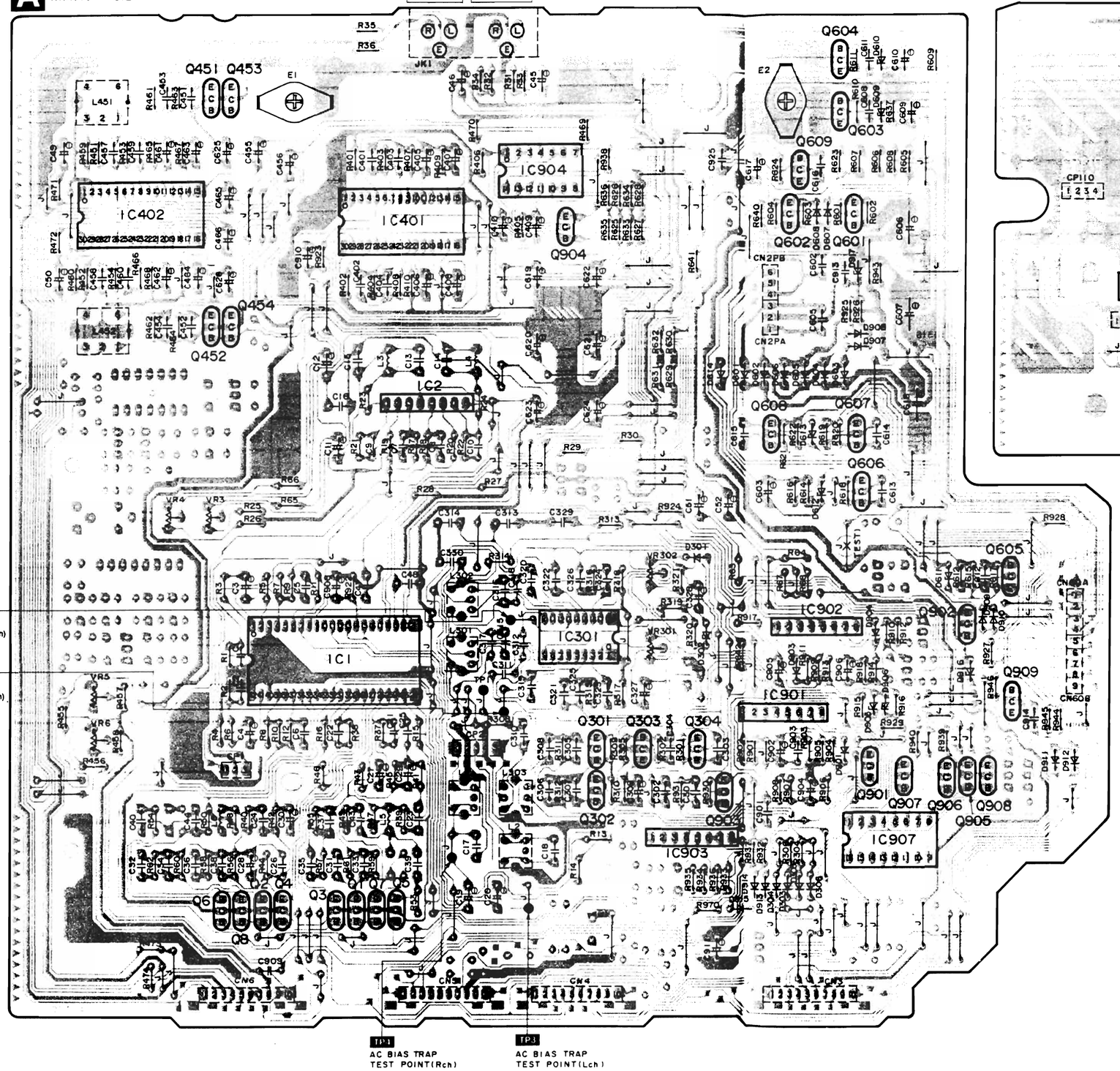

D FL DRIVE P.C.B.

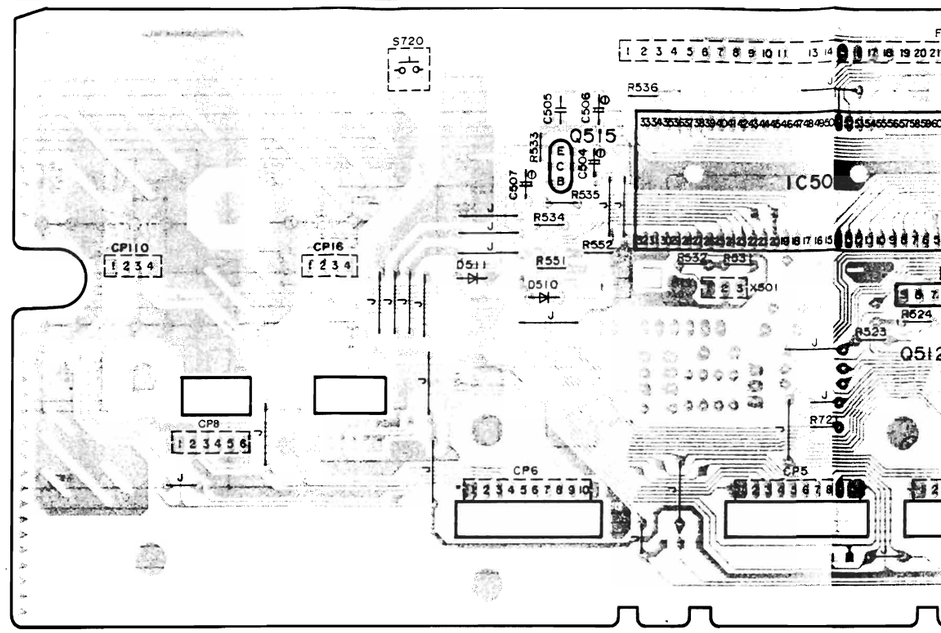

B POWER SUPPLY P.C.B.

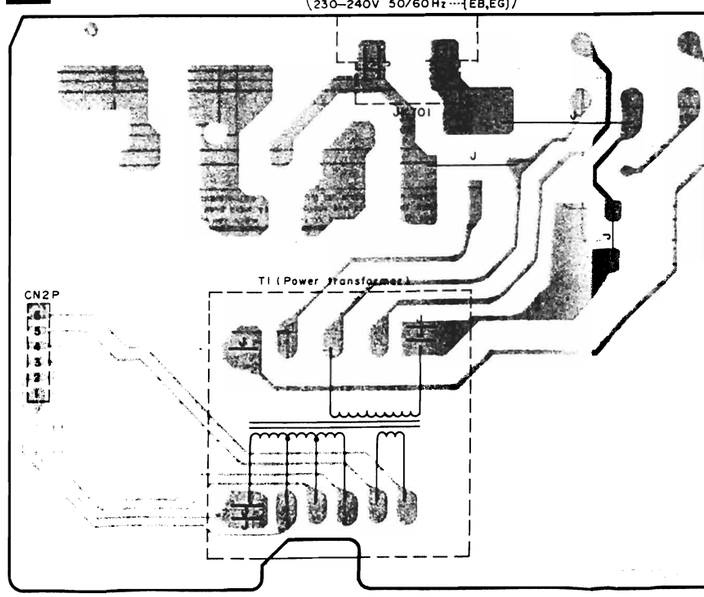

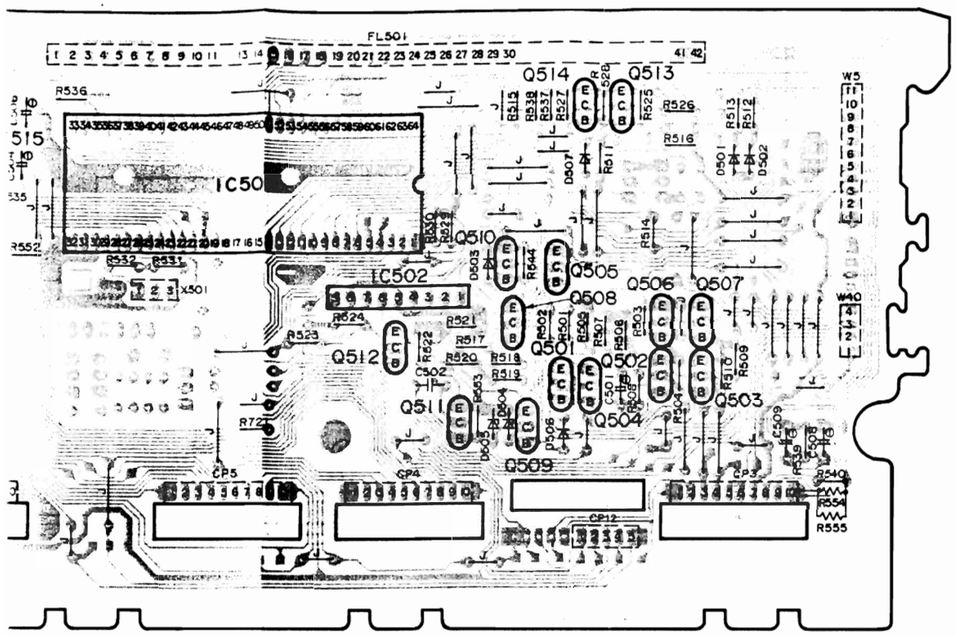

F OPERATION P.C.B.

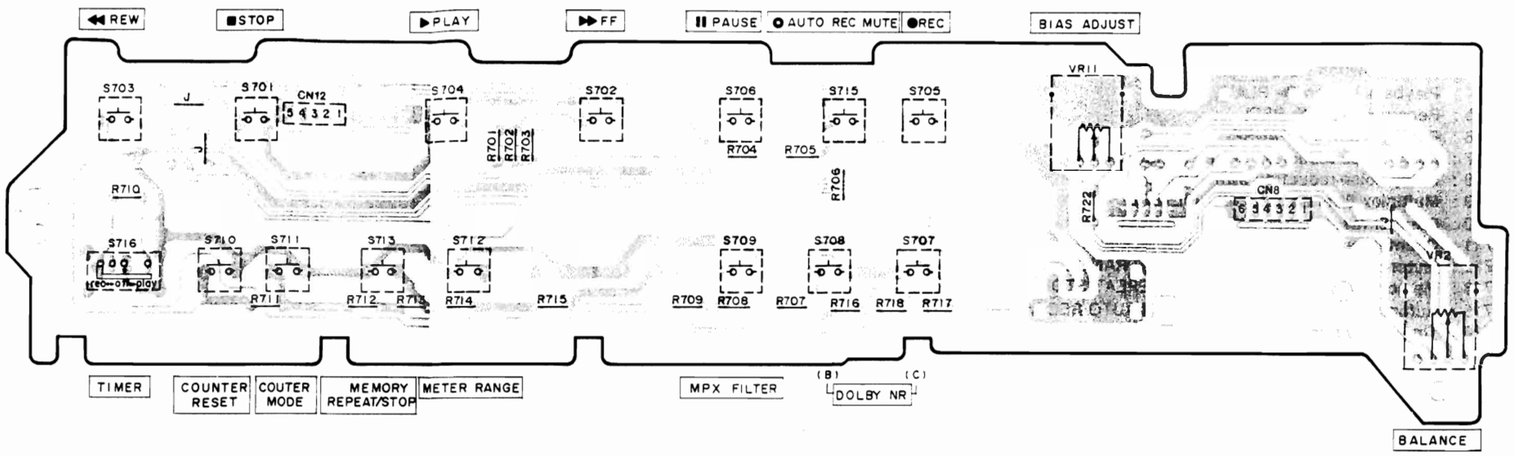

E REC LEVEL P.C.B.

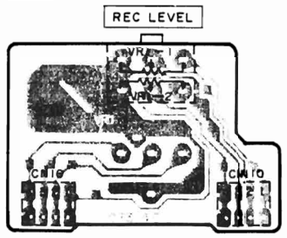

G MECHANISM P.C.B.

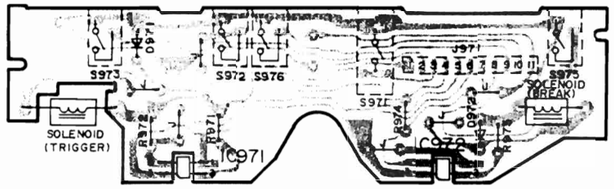

C POWER SWITCH P.C.B.

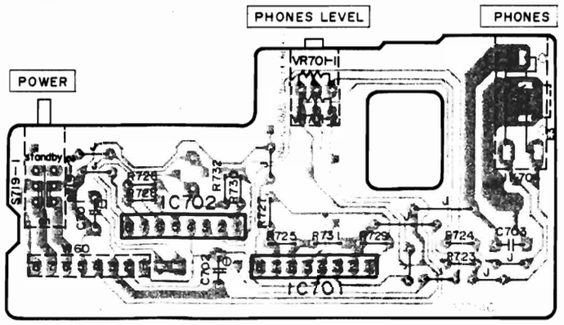

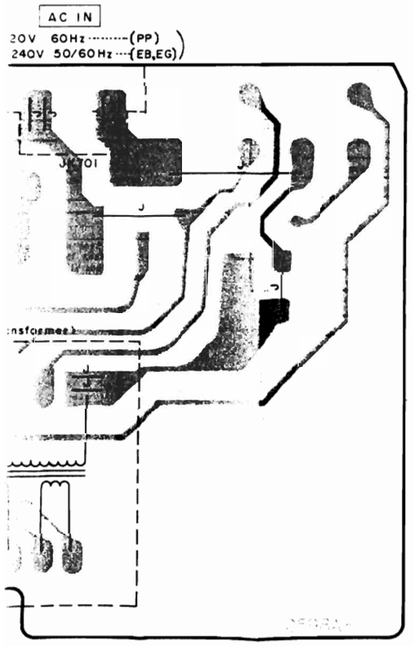

J FG P.C.B.

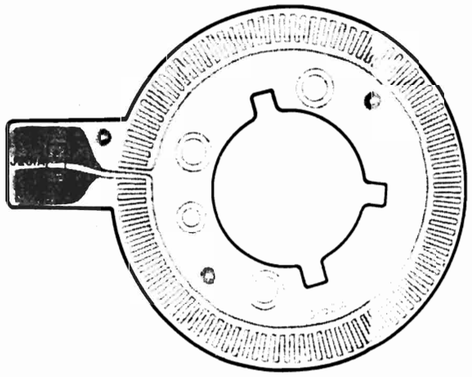

I CAPSTAN MOTOR (D.D) P.C.B.

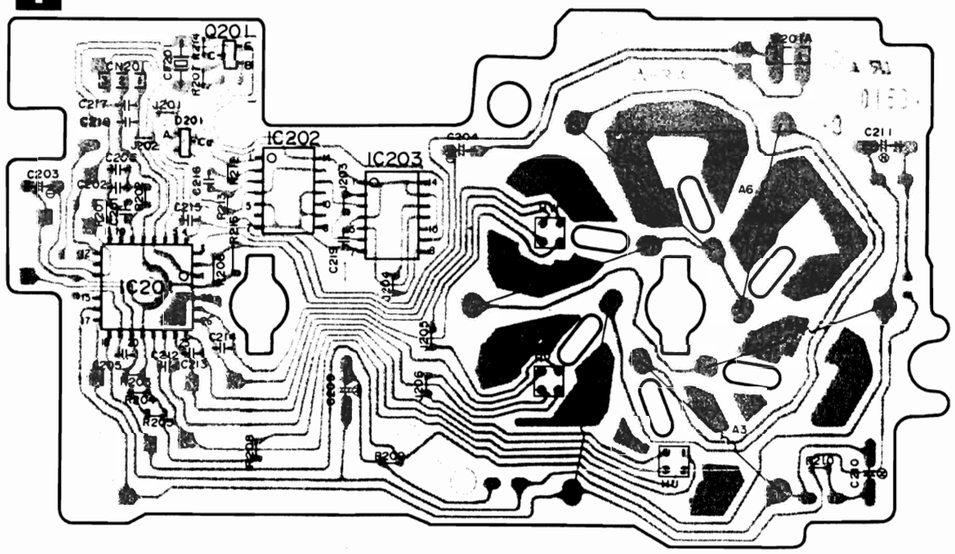

H MOTOR P.C.B.

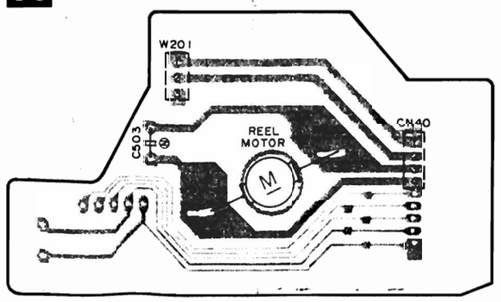

■ PRINTED CIRCUIT BOARDS

A MAIN P.C.B.

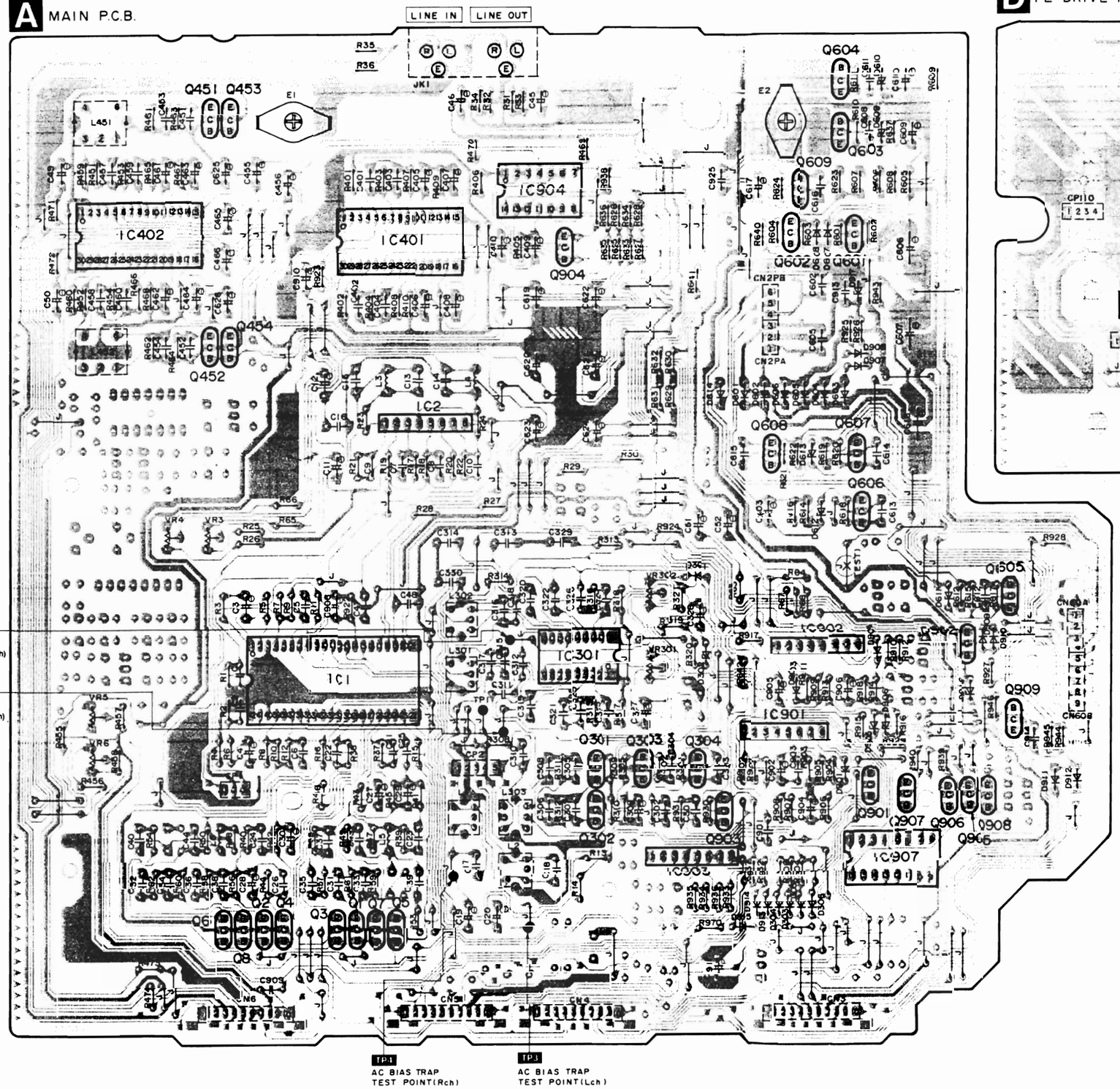

D FL DRIVE P.C.B.

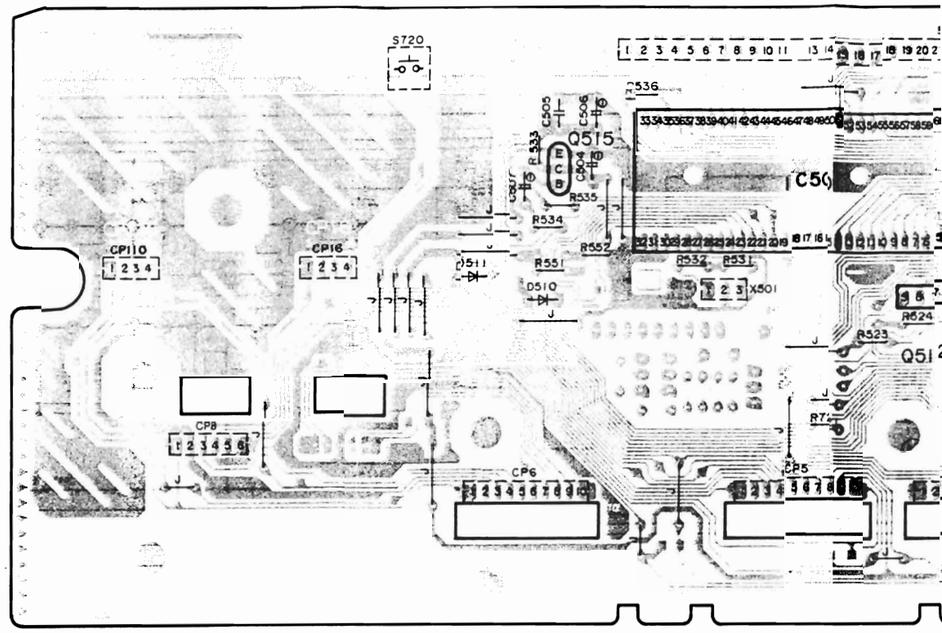

B POWER SUPPLY P.C.B.

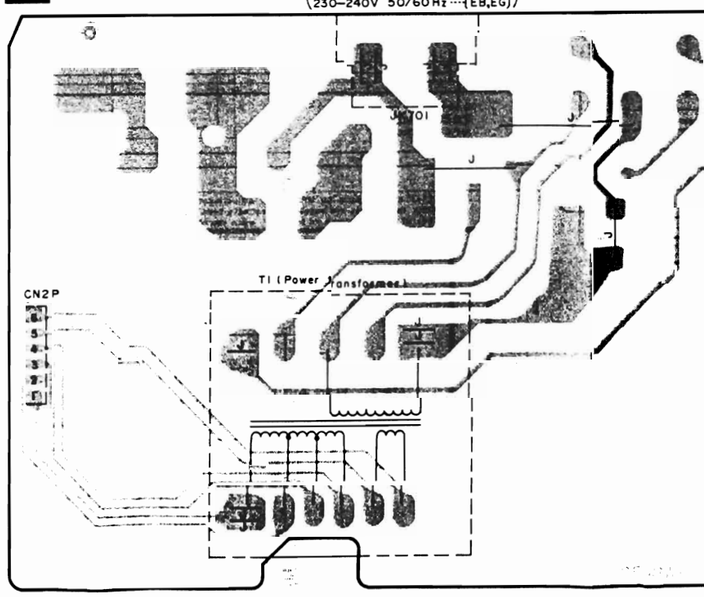

10 11 12 13 14 15 16 17 18 19

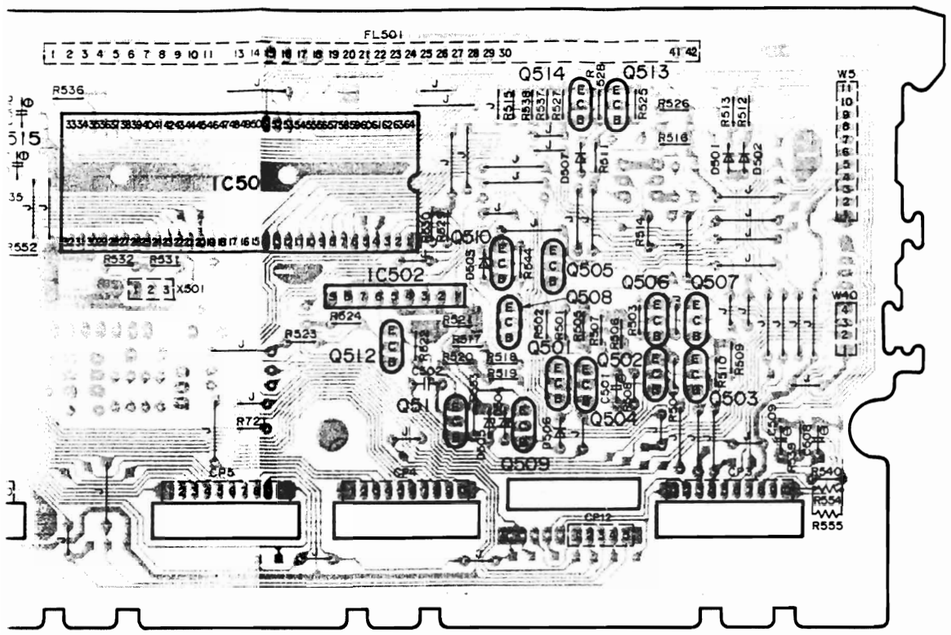

F OPERATION P.C.B.

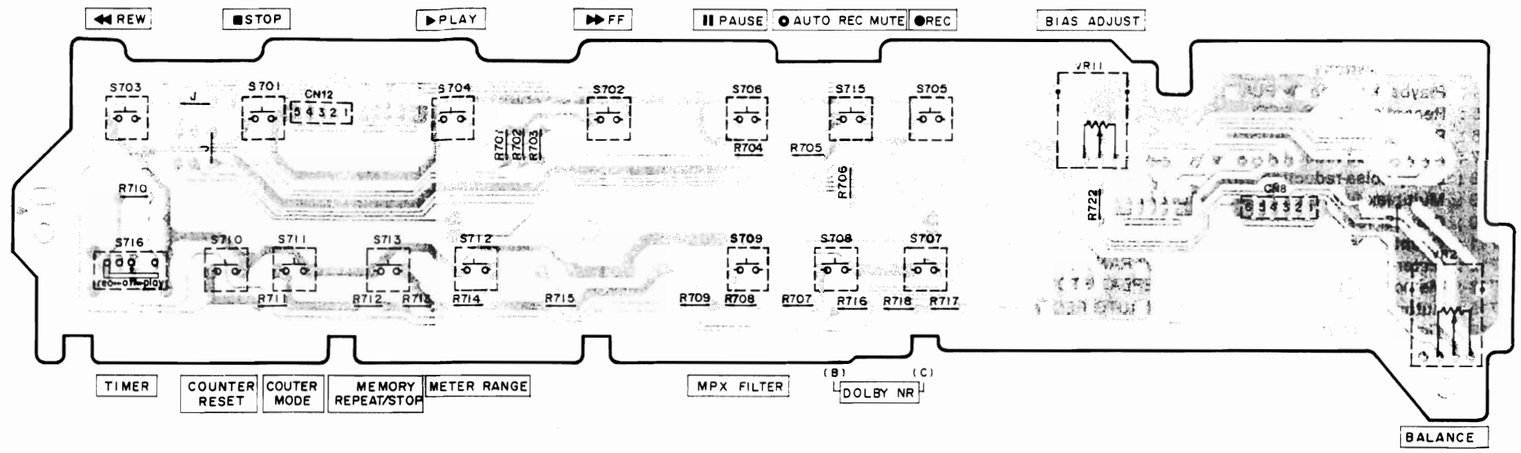

E REC LEVEL P.C.B.

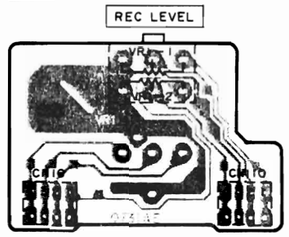

G MECHANISM P.C.B.

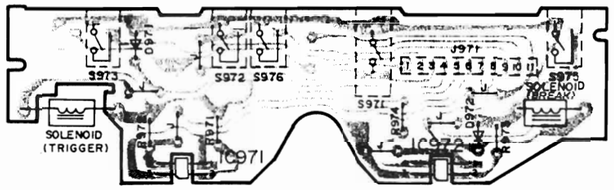

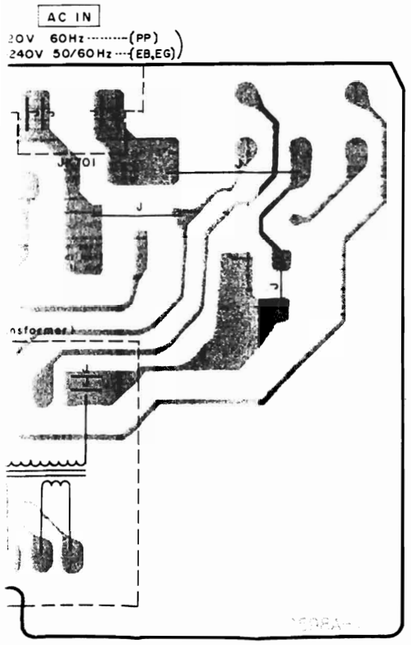

C POWER SWITCH P.C.B.

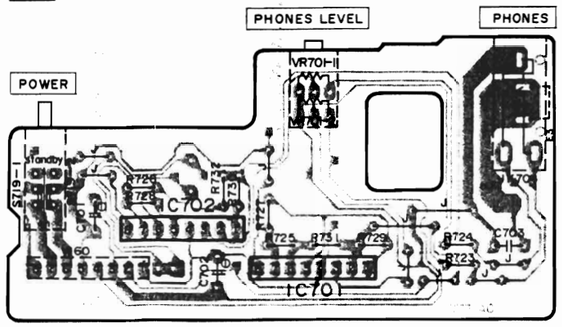

H MOTOR P.C.B.

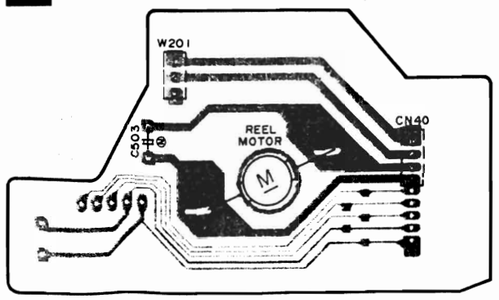

J FG P.C.B.

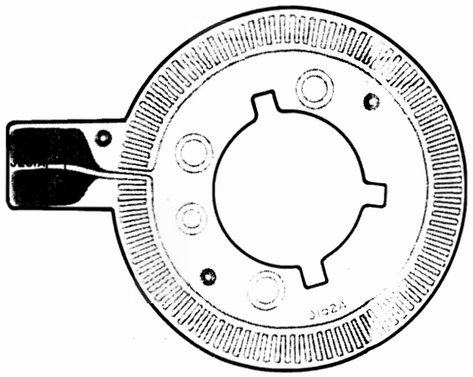

I CAPSTAN MOTOR (D.D) P.C.B.

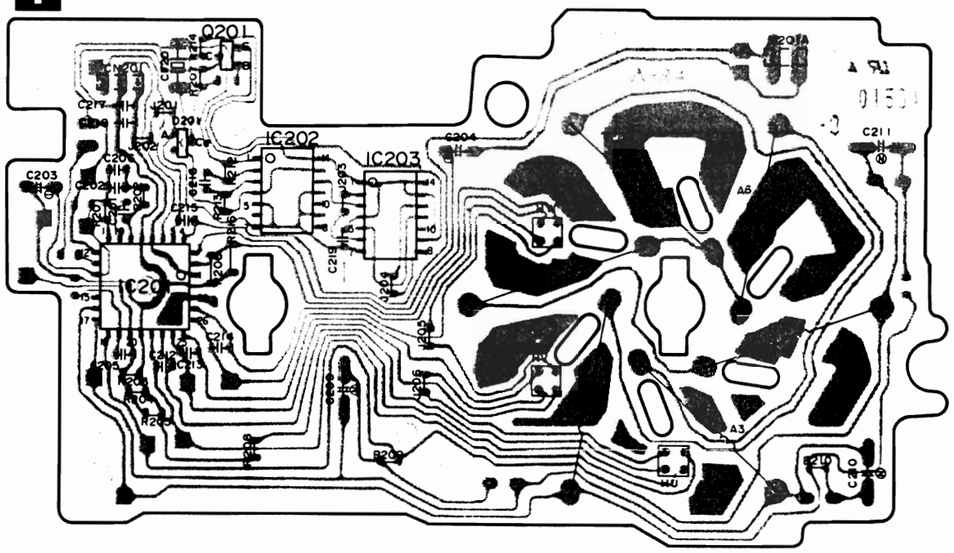

■ SCHEMATIC DIAGRAM (Parts list on pages 32~35.)

(This schematic diagram may be modified at any time with development of new technology.)

Notes:

- S701 : Stop switch (■ STOP).
- S702 : Fast-forward switch (TPS ▶▶).
- S703 : Rewind switch (◀◀ TPS).
- S704 : Playback switch (▶ PLAY).
- S705 : Record switch (● REC).
- S706 : Pause switch (❚❚ PAUSE).
- S707 : Dolby noise-reduction switch (Dolby NR; C).
- S708 : Dolby noise-reduction switch (Dolby NR; B).
- S709 : Multiplex filter switch (MPX FILTER).
- S710 : Counter reset switch (COUNTER RESET).
- S711 : Counter mode switch (COUNTER MODE).
- S712 : Meter-range selector switch (METER RANGE).
- S713 : Memory mode switch (MEMORY REPEAT/STOP).
- S715 : Automaitc-record-muting switch (● AUTO REC MUTE).
- S716 : Timer switch in "**off**" position (L TIMER).
- S719 : Power switch in "**on**" position (PP area: POWER/■ OFF ▲ ON, Others areas: POWER /■ standby ⏻ ▲ ON).
- S720 : Monitor switch (MONITOR).
- S971 : Mode switch in "**off**" position.
- S972 : Cassette half detection switch in "**off**" position.
- S973 : ATS (CrO_2) switch in "**off**" positon.
- S975 : Rec. inhibit switch in "**off**" position.
- S976 : ATS (Metal) switch in "**off**" position.
- Resistance are in ohms (Ω), 1/4 watt unless specified otherwise. 1K=1,000 (Ω), 1M=1,000k (Ω)
- Capacity are in micro-farads (μF) unless specified otherwise.
- All voltage values shown in circuitry are under no signal condition and playback mode with volume control at minimum position otherwise specified.
  ( )).....Voltage values at record mode.
  For measurement us EVM.
- Important safety notice
  Components identified by ⚠ mark have special characteristics important for safety.
  When replacing any of these components, use only manufacturer's specified parts
- (▬▬▬<+B>▬▬▬) indicates +B (bias).
- (▬▬▬<−B>▬▬▬) indicates −B (bias).
- (⟿) indicates the flow of the playback signal.
- (⟹) indicates the flow of the record signal.
- The supply part number is described alone in the replacement parts list.

Ref. No.	Production Part No.	Supply Part No.
IC2, 701, 702, 901, 902, 903	M5218AL	M5218L
IC203	SN74LS74AMEL	SN74LS74AM

∗ Caution !

IC and LSI are sensitive to static electricity.
Secondary trouble can be prevented by taking care during repair.

∗Cover the parts boxes made of plastics with aluminum foil.
∗Ground the soldering iron.
∗Put a conductive mat on the work table.
∗Do not touch the legs of IC or LSI with the fingers directly.

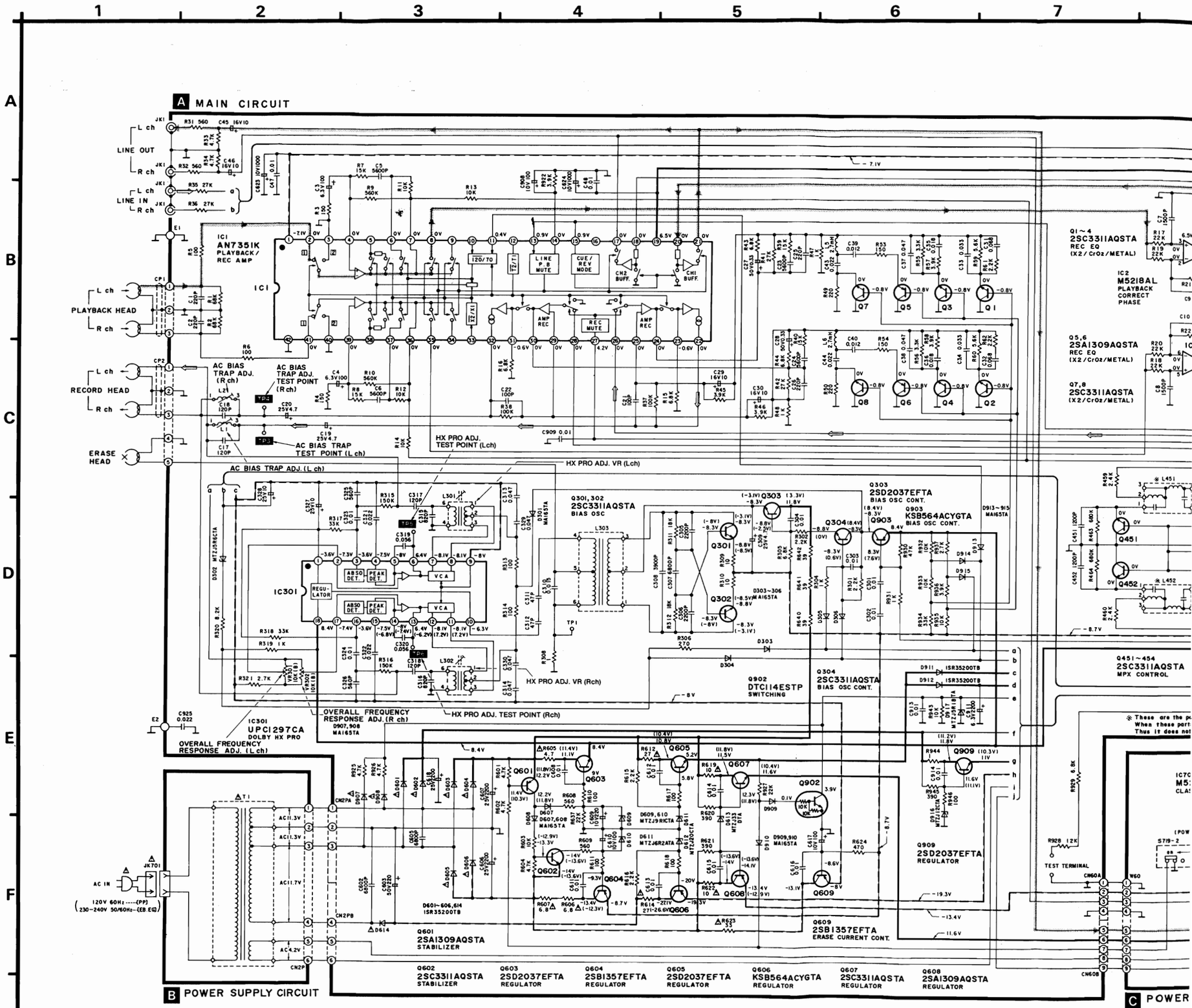

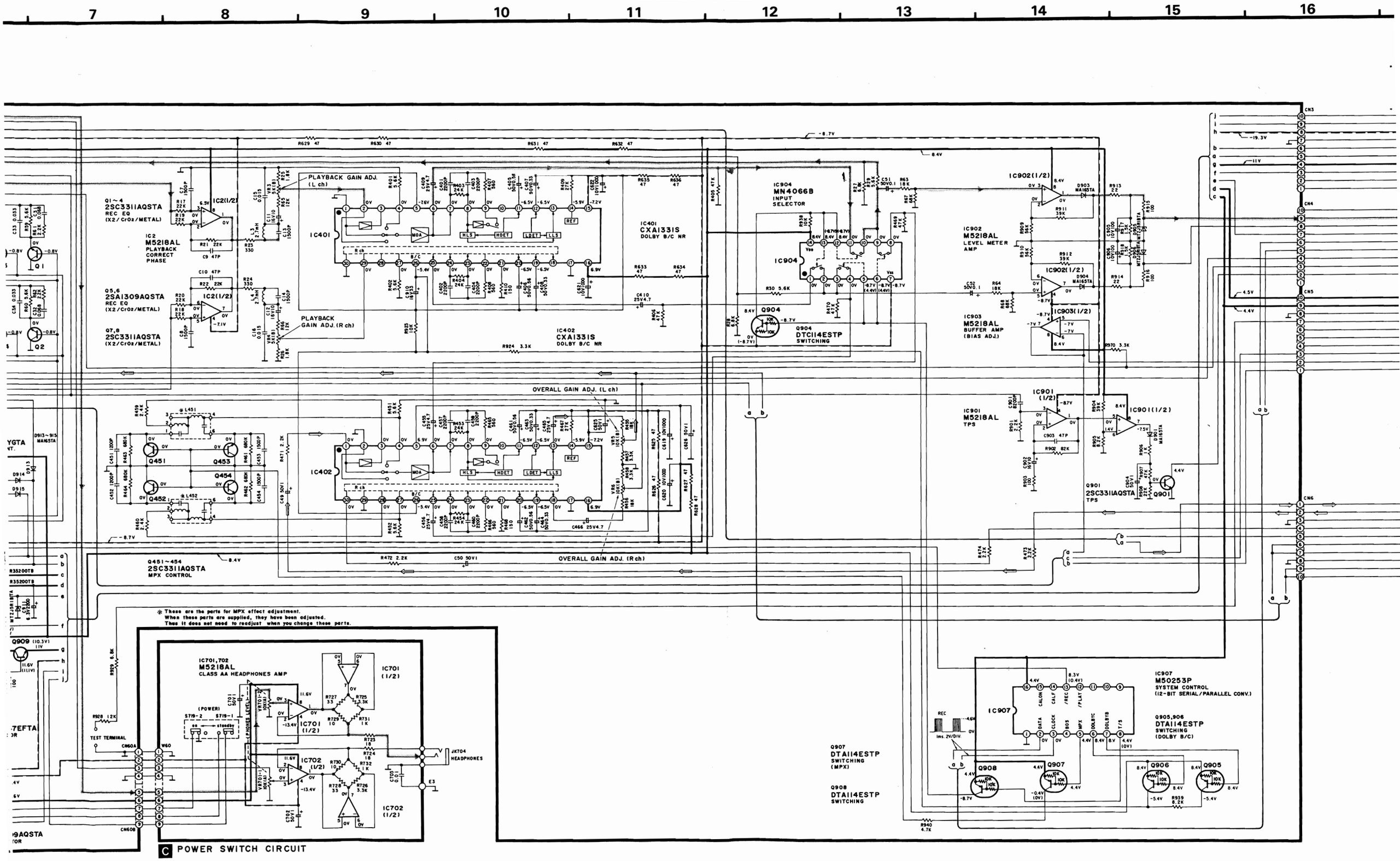
7
8
9
10
11
12
13
14
15
16
Q1~4
2SC3311AQSTA
REC EQ
(X2/CrO2/METAL)
IC2
M5218AL
PLAYBACK
CORRECT
PHASE
Q5,6
2SA1309AQSTA
REC EQ
(X2/CrO2/METAL)
Q7,8
2SC3311AQSTA
(X2/CrO2/METAL)
PLAYBACK GAIN ADJ.
(L ch)
PLAYBACK
GAIN ADJ. (R ch)
IC401
IC401
CXA1331S
DOLBY B/C NR
IC402
CXA1331S
DOLBY B/C NR
IC904
MN4066B
INPUT
SELECTOR
IC904
Q904
DTC114ESTP
SWITCHING
IC902(1/2)
IC902
M5218AL
LEVEL METER
AMP
IC903
M5218AL
BUFFER AMP
(BIAS ADJ.)
IC901
M5218AL
TPS
IC901(1/2)
Q901
2SC3311AQSTA
TPS
OVERALL GAIN ADJ. (L ch)
OVERALL GAIN ADJ. (R ch)
Q451
Q453
Q454
Q452
Q451~454
2SC3311AQSTA
MPX CONTROL
IC402
IC907
M50253P
SYSTEM CONTROL
(12-BIT SERIAL/PARALLEL CONV.)
Q905,906
DTA114ESTP
SWITCHING
(DOLBY B/C)
Q907
DTA114ESTP
SWITCHING
(MPX)
Q908
DTA114ESTP
SWITCHING
Q908
Q907
Q906
Q905
CN3
CN4
CN5
CN6
Q909 (10.3V)
11V
11.6V
(11V)
R35200TB
R35200TB
MTZ5.6B
6.8V
R929 6.8K
R928 12K
TEST TERMINAL
CN60A
W60
CN60B
IC701,702
M5218AL
CLASS AA HEADPHONES AMP
(POWER)
S719-2
S719-1
standby
PHONES LEVEL
IC701
(1/2)
IC702
(1/2)
JK704
HEADPHONES
E3
C
POWER SWITCH CIRCUIT

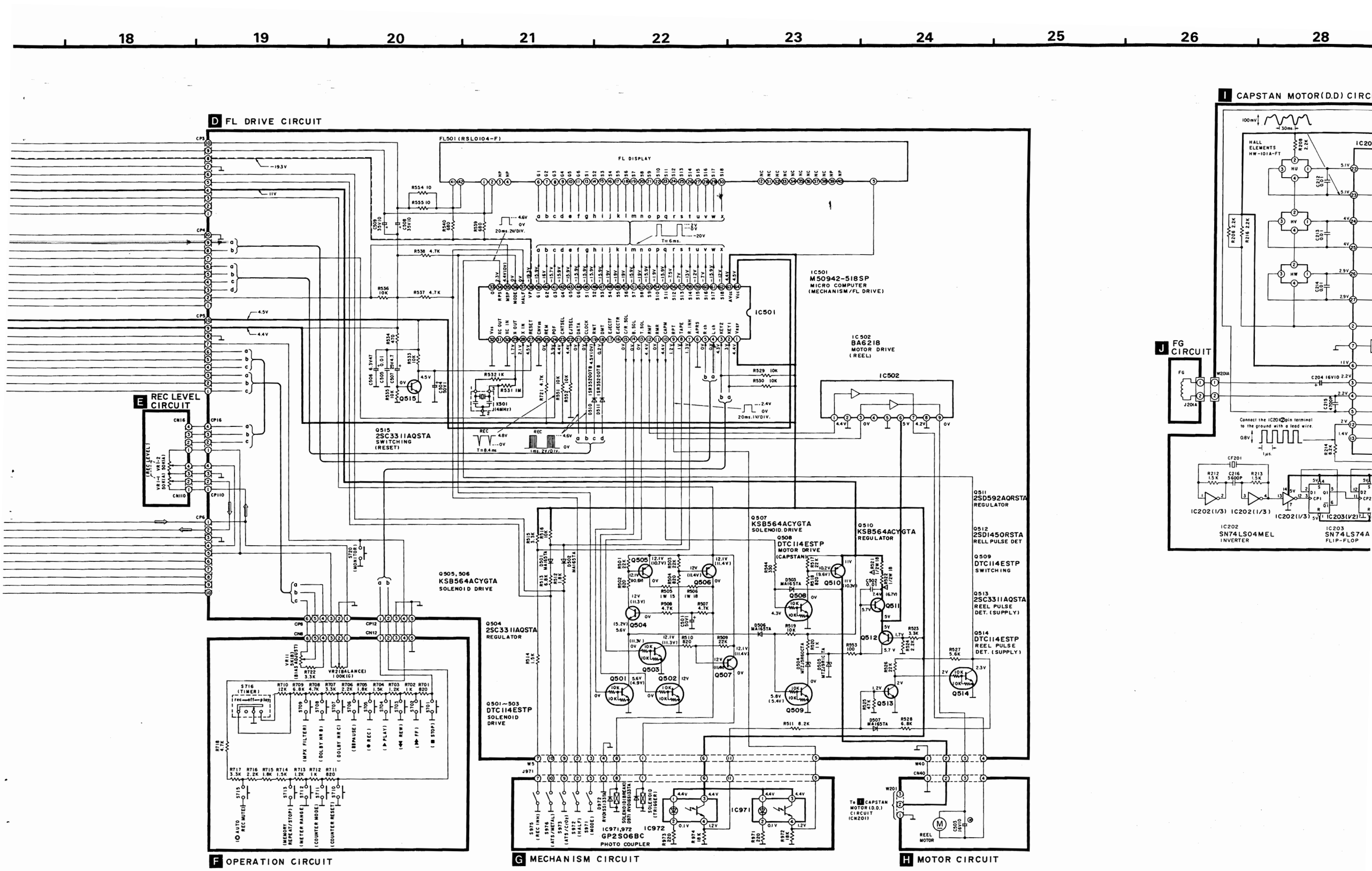
18
19
20
21
22
23
24
25
26
28
D FL DRIVE CIRCUIT
FL501 (RSL0104-F)
FL DISPLAY
IC501
M50942-518SP
MICRO COMPUTER
(MECHANISM/FL DRIVE)
IC502
BA6218
MOTOR DRIVE
(REEL)
Q515
2SC3311AQSTA
SWITCHING
(RESET)
X501
(4MHz)
E REC LEVEL CIRCUIT
(REC LEVEL)
Q505, 506
KSB564ACYGTA
SOLENOID DRIVE
Q504
2SC3311AQSTA
REGULATOR
Q501~503
DTC114ESTP
SOLENOID
DRIVE
Q507
KSB564ACYGTA
SOLENOID DRIVE
Q508
DTC114ESTP
MOTOR DRIVE
(CAPSTAN)
Q510
KSB564ACYGTA
REGULATOR
Q511
2SD592AQRSTA
REGULATOR
Q512
2SD1450RSTA
RELL PULSE DET
Q509
DTC114ESTP
SWITCHING
Q513
2SC3311AQSTA
REEL PULSE
DET. (SUPPLY)
Q514
DTC114ESTP
REEL PULSE
DET. (SUPPLY)
I CAPSTAN MOTOR(D.D) CIRC
HALL
ELEMENTS
HW-101A-FT
J FG CIRCUIT
IC202
SN74LS04MEL
INVERTER
IC203
SN74LS74A
FLIP-FLOP
F OPERATION CIRCUIT
G MECHANISM CIRCUIT
IC971,972
GP2S06BC
PHOTO COUPLER
IC971
IC972
H MOTOR CIRCUIT
REEL
MOTOR

26 28 29 30 31

I CAPSTAN MOTOR(D.D) CIRCUIT

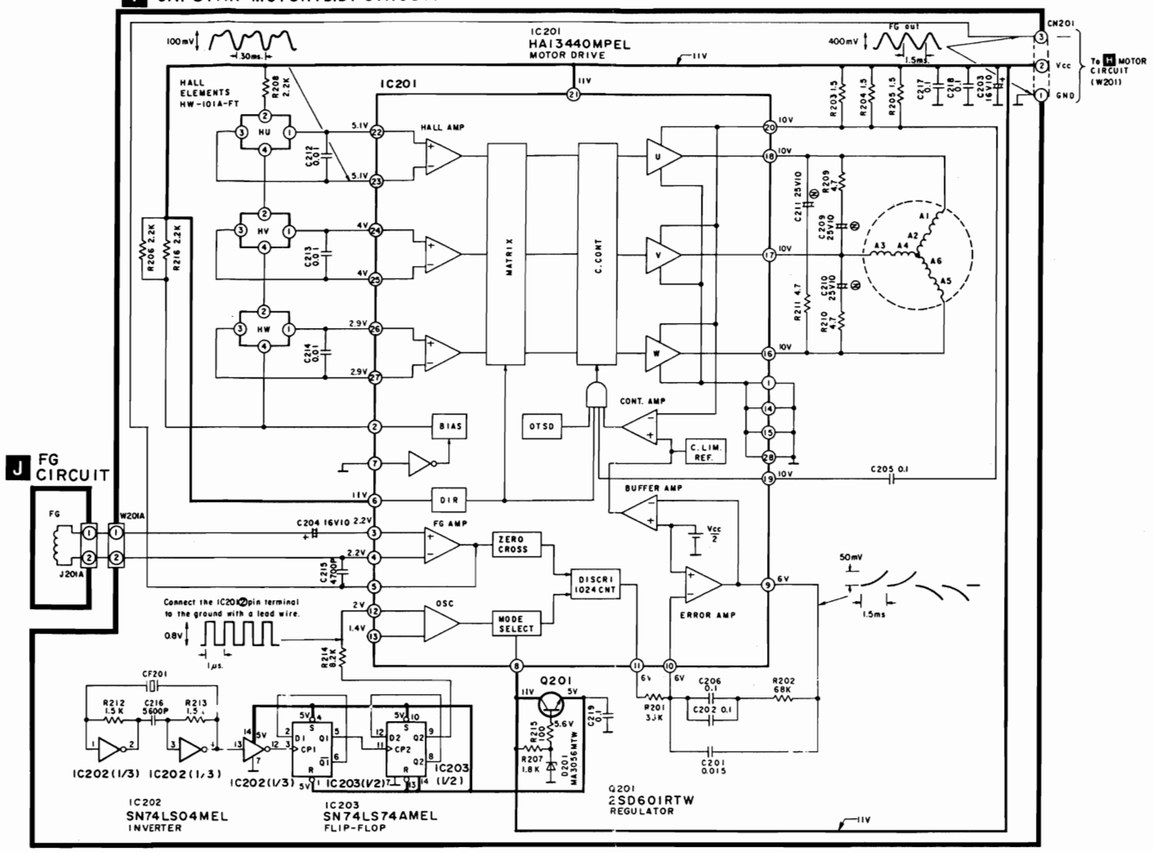

■ TROUBLESHOOTING OF DIRECT DRIVE MOTOR

• OUTLINE OF THE DIRECT DRIVE MOTOR SYSTEM

The capstan motor is actuated by the DD motor digital servo system. The FG pulse is generated after the detection of the zero crosspoint, and the reference signal generated from the quartz oscillator is compared with this FG pulse.
From this comparison, the accelerated and reduced speed pulses are generated, causing the driving coil to function.

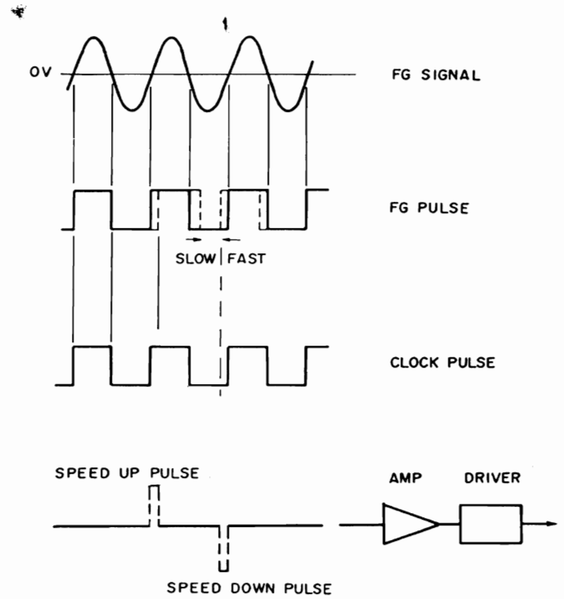

• TROUBLESHOOTING OF DIRECT DRIVE MOTOR

Problem	Possible Cause	Check Points
1. The motor does not rotate.	1. No power supply (+12V). 2. The Hall element has failed (Current does not flow). 3. The ceramic (or crystal) does not oscillate.	• Check the voltage applied to the connector. • Check the DC potential on IC201 pins ㉒~㉗. ∗Check the waveform of IC201 pin ⑫.
2. The motor does not rotate properly. (When pressed, it stops at certain angles. Sometimes it does not rotate even if power is ON.)	1. The coil is broken or not properly soldered. 2. Output of the Hall element is not proper.	∗Check the conductance of the coil. If normal, the resistances between IC201 pins ⑯~⑰, ⑰~⑱, ⑯~⑱ will reach 20 ohms. • Check the waveform of IC201 pins ㉒~㉗.
3. The motor is out of control.	1. The FG coil is broken.	• Check the waveform of IC201 pin ⑤. • Check if the FG coil is broken.
4. Abnormal wow.	1. Same as those described for problem 2.	

Note: Check the points marked with an asterisk (∗) by removing the DD motor control P.C.B. and then connecting IC201 pin ② to GND with a lead wire. (After the DD motor control P.C.B. is removed, current will start flowing through the coil, heating the IC.)

■ TERMINAL GUIDE OF IC'S, TRANSISTORS AND DIODES

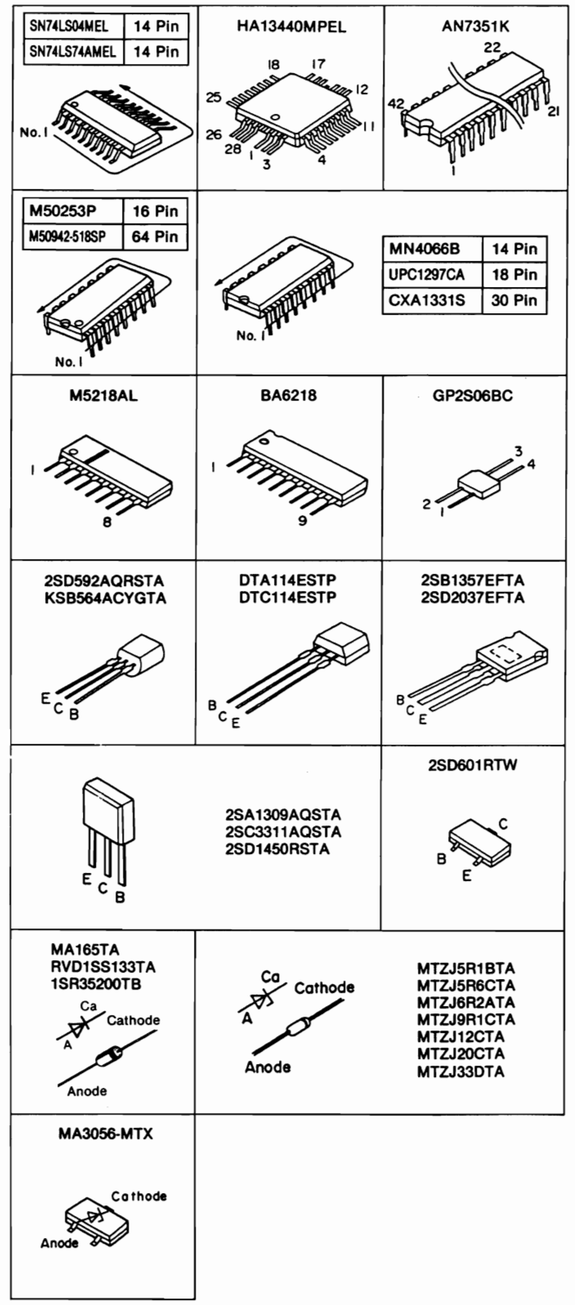

■ BLOCK DIAGRAM

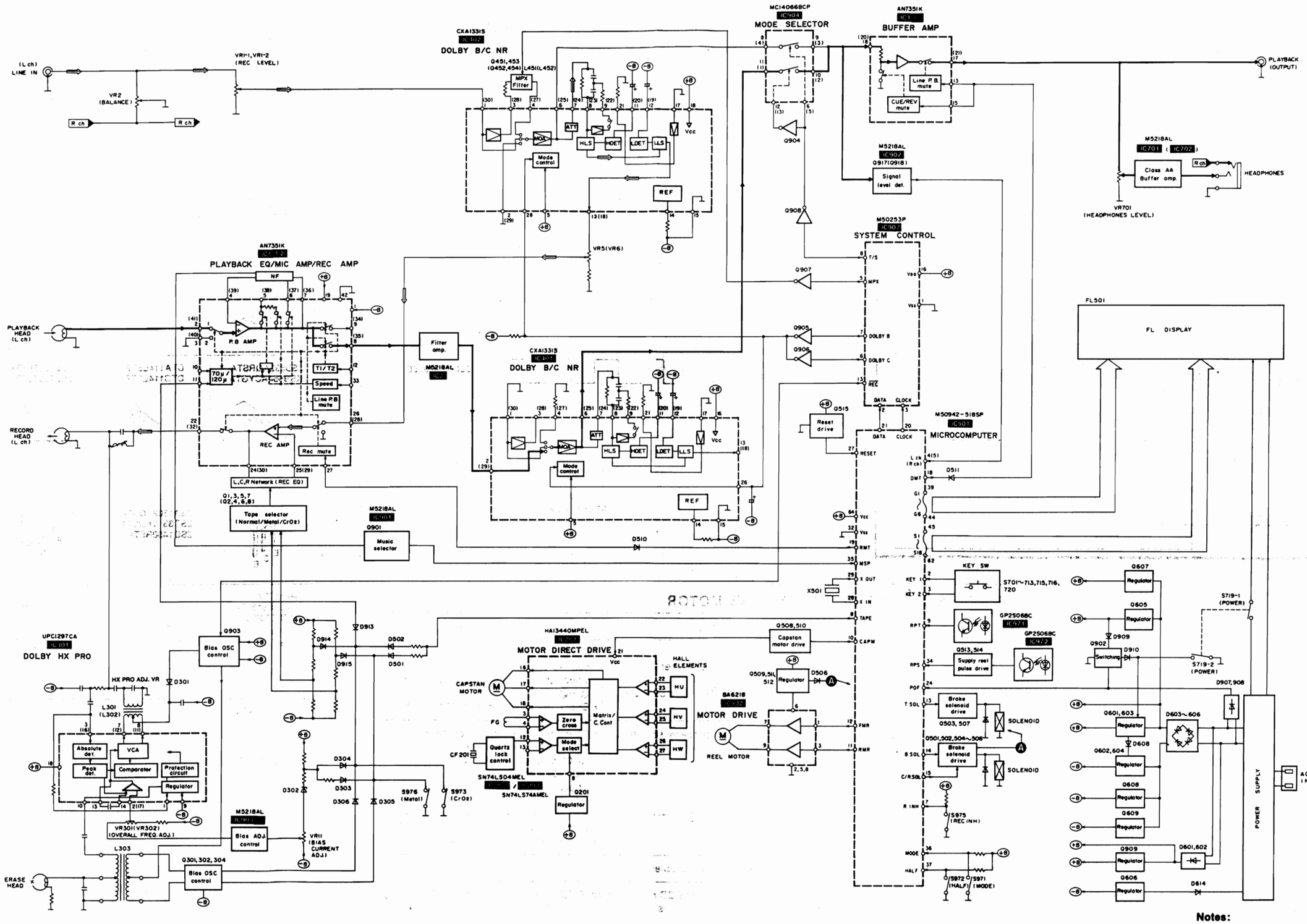

Notes:
- ⟶ Playback signal
- ⇒ Recording signal

■ INTE

• Anod

P1	
P2	
P3	
P4	
P5	
P6	
P7	
P8	
P9	
P10	
P11	
P12	
P13	
P14	
P15	
P16	
P17	
P18	
P19	

■ INTERNAL CONNECTION OF FL

• **Anode connection table**

	1G	2G	3G	4G	5G	6G
P1	S1	–	REC	–	–	–
P2	S2	–	PLAY	–	–	–
P3	–	–	▷	–	–	–
P4	B1	B1	–	–	–	–
P5	B2	B2	–	–	MEMORY	–
P6	B3	B3	–	–	REPEAT	–
P7	B4	B4	–	TAPE	STOP	–
P8	B5	B5	B	SOURCE	–	–
P9	B6	B6	C	–	I/NORMAL	–
P10	B7	B7	–	MPX	II/CrO2	–
P11	B8	B8	⬭	▯	IV/METAL	–
P12	B9	B9	a	a	a	a
P13	B10	B10	b	b	b	b
P14	B11	B11	f	f	f	f
P15	B12	B12	g	g	g	g
P16	B13	B13	c	c	c	c
P17	B14	B14	e	e	e	e
P18	B15	B15	d	d	d	d
P19	S3	S3	–	S3	S3	–

• **Grid connection diagram**

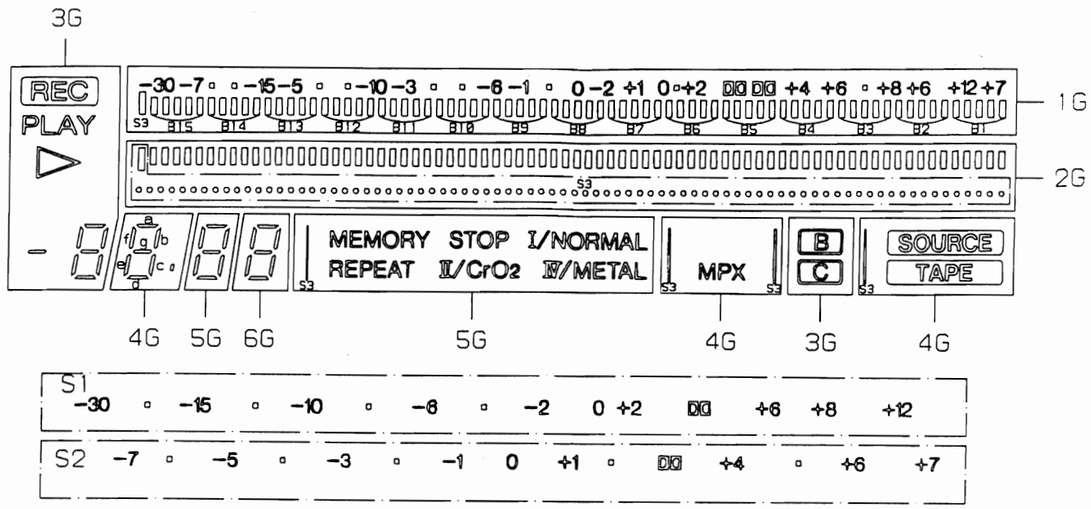

• **Pin connection**

PIN NO.	42	41	40	39	38	37	36	35	34	33	32	31	30	29	28	27	26	25	24	23	22	21	20	19	18	17	16	15	14	13	12	11	10	9	8	7	6	5	4	3	2	1
CONNECTION	F2	F2	NP	NP	NC	NC	NC	NC	NC	NC	NC	NC	P18	P17	P16	P15	P14	P13	P12	P11	P10	P9	P8	P7	P6	P5	P4	P3	P2	P1	NC	6G	5G	4G	3G	2G	1G	P19	NP	NP	F1	F1

1) F1, F2..... Filament
2) NP..... No pin
3) NC..... No connection
4) 1G~6G..... Grid

■ PACKING

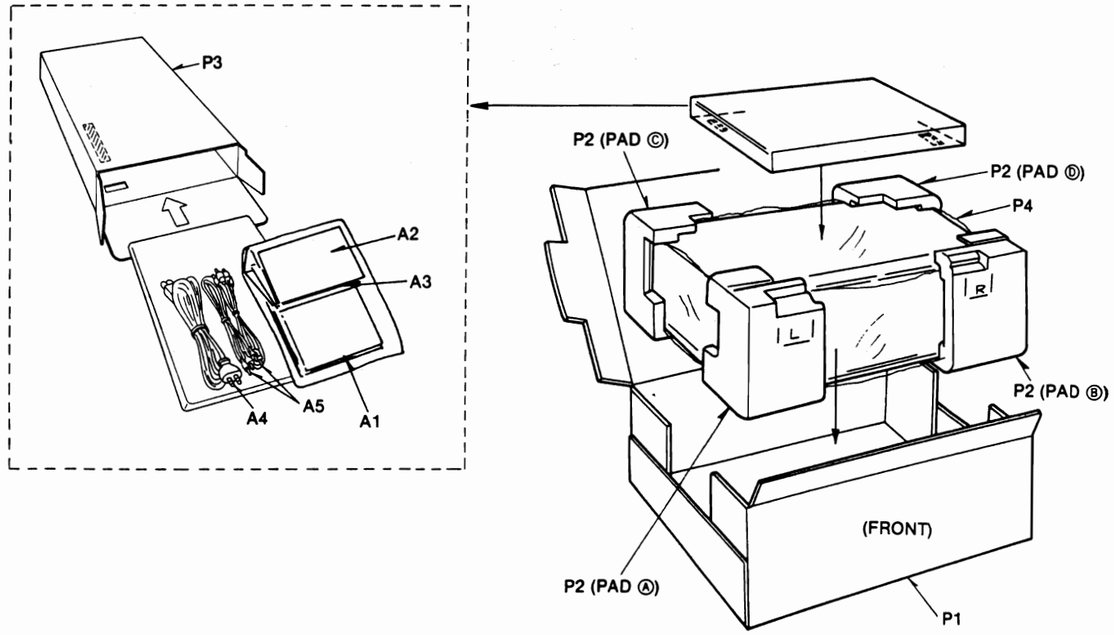

<PAD Ⓐ, Ⓑ, Ⓒ, Ⓓ Part No.: RPN0345-1>

WIRING CONNECTION DIAGRAM

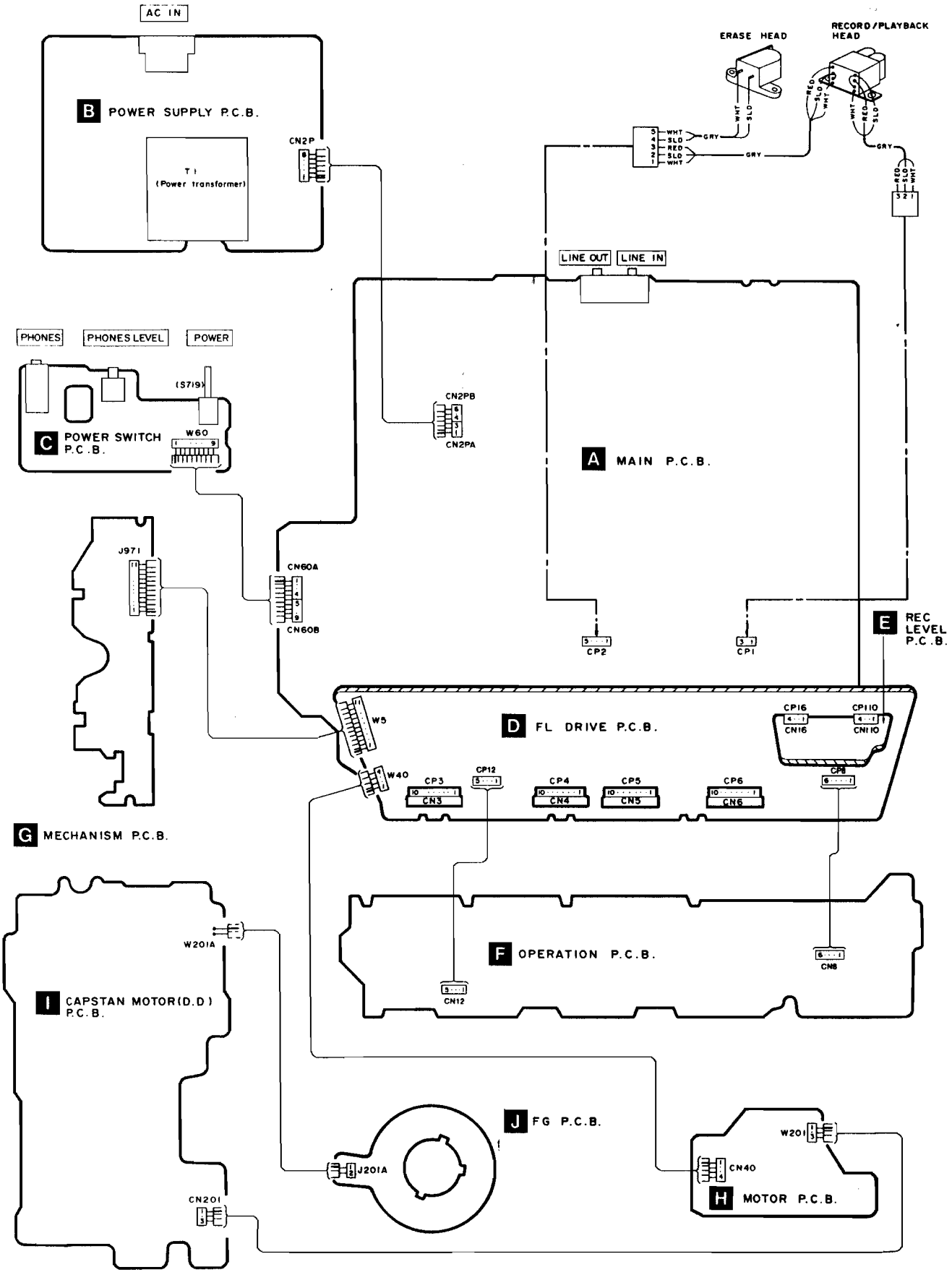

■ REPLACEMENT PARTS LIST

Notes : • Important safety notice:
Components identified by ⚠ mark have special characteristics important for safety. When replacing any of these components use only manufacturer's specified parts.
• The parenthesized indications in the Remarks columns specify the areas. (Refer to the cover page for area.)
Parts without these indications can be used for all areas.

Ref. No.	Part No.	Part Name & Description	Remarks
		INTEGRATED CIRCUIT(S)	
IC1	AN7351K	PLAYBACK/REC AMP	
IC2	M5218L	PLAYBACK CORRECT PHASE	
IC201	HA13440MPEL	MOTOR DRIVE	
IC202	SN74LS04MEL	INVERTER	
IC203	SN74LS74AM	FLIP-FLOP	
IC301	UPC1297CA	DOLBY HX PRO	
IC401, 402	CXA1331S	DOLBY B/C NR	
IC501	M50942-518SP	MICROCOMPUTER	
IC502	BA6218	REEL MOTOR DRIVE	
IC701, 702	M5218L	Class AA:H. P. AMP	
IC901	M5218L	TPS	
IC902	M5218L	LEVEL METER AMP	
IC903	M5218L	BUFFER AMP	
IC904	MN4066B	INPUT SELECTOR	
IC907	M50253P	SYSTEM CONTROL	
IC971, 972	GP2S06BC	PHOTO COUPLER	
		TRANSISTOR(S)	
Q1-4	2SC3311A-Q	TRANSISTOR	
Q5, 6	2SA1309A-R	TRANSISTOR	
Q7, 8	2SC3311A-Q	TRANSISTOR	
Q201	2SD601R	TRANSISTOR	
Q301, 302	2SC3311A-Q	TRANSISTOR	
Q303	2SD2037EFTA	TRANSISTOR	
Q304	2SC3311A-Q	TRANSISTOR	
Q451-454	2SC3311A-Q	TRANSISTOR	
Q501-503	DTC114ESTP	TRANSISTOR	
Q504	2SC3311A-Q	TRANSISTOR	
Q505-507	KSB564ACYGTA	TRANSISTOR	
Q508, 509	DTC114ESTP	TRANSISTOR	
Q510	KSB564ACYGTA	TRANSISTOR	
Q511	2SD592ANCQ	TRANSISTOR	
Q512	2SD1450RSTA	TRANSISTOR	
Q513	2SC3311A-Q	TRANSISTOR	
Q514	DTC114ESTP	TRANSISTOR	
Q515	2SC3311A-Q	TRANSISTOR	
Q601	2SA1309A-R	TRANSISTOR	
Q602	2SC3311A-Q	TRANSISTOR	
Q603	2SD2037EFTA	TRANSISTOR	
Q604	2SB1357EFTA	TRANSISTOR	
Q605	2SD2037EFTA	TRANSISTOR	
Q606	KSB564ACYGTA	TRANSISTOR	
Q607	2SC3311A-Q	TRANSISTOR	

Ref. No.	Part No.	Part Name & Description	Remarks
Q608	2SA1309A-R	TRANSISTOR	
Q609	2SB1357EFTA	TRANSISTOR	
Q901	2SC3311A-Q	TRANSISTOR	
Q902	DTC114ESTP	TRANSISTOR	
Q903	KSB564ACYGTA	TRANSISTOR	
Q904	DTC114ESTP	TRANSISTOR	
Q905-908	DTA114ESTP	TRANSISTOR	
Q909	2SD2037EFTA	TRANSISTOR	
		DIODE(S)	
D201	MA3056-MTX	DIODE	
D301	MA165	DIODE	
D302	MTZJ5R6CTA	DIODE	
D303-306	MA165	DIODE	
D501-503	MA165	DIODE	
D504	MTZJ5R6CTA	DIODE	
D505	MTZJ9R1CTA	DIODE	
D506, 507	MA165	DIODE	
D510, 511	1SR35200TB	DIODE	
D601-606	1SR35200TB	DIODE	⚠
D607, 608	MA165	DIODE	
D609, 610	MTZJ9R1CTA	DIODE	
D611	MTZJ6R2ATA	DIODE	
D612	MTZJ20CTA	DIODE	
D613	MTZJ33DTA	DIODE	
D614	1SR35200TB	DIODE	⚠
D901	MA165	DIODE	
D903, 904	MA165	DIODE	
D905, 906	MTZJ5R1BTA	DIODE	
D907, 908	MA165	DIODE	⚠
D909, 910	MA165	DIODE	
D911, 912	1SR35200TB	DIODE	
D913-915	MA165	DIODE	
D916	MTZJ12CTA	DIODE	
D917	MTZJ5R1BTA	DIODE	
D971, 972	RVD1SS133TA	DIODE	
		VARIABLE RESISTOR(S)	
VR1	EWGEPA024A54	REC. LEVEL CONTROL	
VR2	EVJ02SFA5G15	BALANCE CONTROL	
VR3, 4	EVNDXAA00B53	PLAYBACK GAIN ADJ.	
VR5, 6	EVNDXAA00B14	OVERALL GAIN ADJ.	
VR11	EVJ02KFA5B53	BIAS CURRENT ADJ.	
VR301, 302	EVNDXAA00B14	OVERALL FREQ. ADJ.	
VR701	EVU57A064A14	HEADPHONES CONTROL	

Ref. No.	Part No.	Part Name & Description	Remarks
		COIL(S)	
L1, 2	RLZ0003	COIL(AC BIAS TRAP ADJ.)	
L3-6	SLQX272-1YT	COIL	
L301, 302	SL09B1-Z	COIL(HX PRO ADJ.)	
L303	SL09B4-K	COIL	
L451, 452	QLM9Z10K	COIL	
		TRANSFORMER(S)	
T1	RTP1K4C008-V	POWER TRANSFORMER	(PP)⚠
T1	RTP1K4E014-V	POWER TRANSFORMER	(EB, EG)⚠
		OSILLATOR(S)	
CF201	RSXA3M74S01	CRYSTAL OSILLATOR	
		FILTER(S)	
X501	EF0GC4004A4	CERAMIC FILTER(4MHz)	
		DISPLAY TUBE(S)	
FL501	RSL0104-F	DISPLAY TUBE	
		SWITCH(ES)	
S701	EVQ21405R	STOP	
S702	EVQ21405R	FF	
S703	EVQ21405R	REW	
S704	EVQ21405R	PLAY	
S705	EVQ21405R	REC	
S706	EVQ21405R	PAUSE	
S707	EVQ21405R	DOLBY NR C	
S708	EVQ21405R	DOLBY NR B	
S709	EVQ21405R	MPX FILTER	
S710	EVQ21405R	COUNTER RESET	
S711	EVQ21405R	COUNTER MODE	
S712	EVQ21405R	METER RANGE	
S713	EVQ21405R	MEMORY(REPEAT/STOP)	
S715	EVQ21405R	AUTO REC MUTE	
S716	SSS166	TIMER	
S719	SSH1238	POWER	
S720	EVQ21405R	MONITOR(SOURCE/TAPE)	
S971	RSH1A89ZB-U	MODE	
S972	RSH1A90YB-U	HALF	
S973	RSH1A90YB-U	ATS	
S975	RSH1A90YB-U	REC INHIBIT	
S976	RSH1A90YB-U	ATS	
		CONNECTOR(S) AND SOCKET(S)	

Ref. No.	Part No.	Part Name & Description	Remarks
CN2P	SJT30643-V	CONNECTOR(6P)	
CN2PA	RJS1A1703	CONNECTOR(3P)	
CN2PB	RJS1A1703	CONNECTOR(3P)	
CN3-6	RJU003K010M1	SOCKET(10P)	
CN8	SJS50681BB	SOCKET(6P)	
CN12	SJS50581BB	SOCKET(5P)	
CN16	RJU057W004	SOCKET(4P)	
CN40	RJS4T7ZA	CONNECTOR(4P)	
CN60A	RJS1A1704	CONNECTOR(4P)	
CN60B	RJS1A1705	CONNECTOR(5P)	
CN110	RJU057W004	SOCKET(4P)	
CN201	RJS3T4ZA	CONNECTOR(3P)	
CP1	RJP3G18ZA	CONNECTOR(3P)	
CP2	RJP5G18ZA	CONNECTOR(5P)	
CP3-6	RJT003K010M1	CONNECTOR(10P)	
CP8	SJT30648BB1	CONNECTOR(6P)	
CP12	SJT30548BB1	CONNECTOR(5P)	
CP16	RJT057W004	CONNECTOR(4P)	
CP110	RJT057W004	CONNECTOR(4P)	
		JACK(S)	
JK1	SJF3069N	TERMINAL BOARD	
JK701	SJSD16	AC INLET	(PP)⚠
JK701	SJS9236	AC INLET	(EB, EG)⚠
JK704	SJJD19	JACK, HEADPHONES	
		FLAT CABLE(S)	
W2P	RWJ1806110QQ	FLAT CABLE(6P)	
W5	RWJ0211220KQ	FLAT CABLE(11P)	
W40	RWJ0204180KQ	FLAT CABLE(4P)	
W60	RWJ1809260KQ	FLAT CABLE(9P)	
W201	RWJ1803120KQ	FLAT CABLE(3P)	
		GND PART(S)	
E1, 2	SNE1004-1	GND PLATE	
E3	SUSD165	GND SPRING	

■ RESISTORS & CAPACITORS

Notes : • Capacity valuse are in microfarads (uF) unless specified otherwise, P=Pico-farads (pF) F=Farads (F)
• Resistance values are in ohms, unless specified otherwise, 1K=1,000(OHM) , 1M=1,000k(OHM)

Ref. No.	Part No.	Values & Remarks
		RESISTORS
R1, 2	ERDS2TJ683	1/4W 68K
R3, 4	ERDS2TJ151	1/4W 150
R5, 6	ERDS2TJ101	1/4W 100
R7, 8	ERDS2TJ153	1/4W 15K
R9, 10	ERDS2TJ564	1/4W 560K
R11-14	ERDS2TJ103	1/4W 10K
R15, 16	ERDS2TJ682T	1/4W 6.8K
R17-22	ERDS2TJ223	1/4W 22K
R23, 24	ERDS2TJ331	1/4W 330
R25, 26	ERDS2TJ182	1/4W 1.8K
R27, 28	ERDS2TJ682T	1/4W 6.8K
R29, 30	ERDS2TJ562	1/4W 5.6K
R31, 32	ERDS2TJ561	1/4W 560
R33, 34	ERDS2TJ472	1/4W 4.7K
R35, 36	ERDS2TJ273	1/4W 27K
R37, 38	ERDS2TJ104	1/4W 100K
R39, 40	ERDS2TJ153	1/4W 15K
R41, 42	ERDS2TJ273	1/4W 27K
R43, 44	ERDS2TJ682T	1/4W 6.8K
R45, 46	ERDS2TJ392T	1/4W 3.9K
R47, 48	ERDS2TJ102	1/4W 1K
R49, 50	ERDS2TJ221	1/4W 220
R53, 54	ERDS2TJ151	1/4W 150
R55, 56	ERDS2TJ332	1/4W 3.3K
R57, 58	ERDS2TJ392T	1/4W 3.9K
R59, 60	ERDS2TJ562	1/4W 5.6K
R61, 62	ERDS2TJ222	1/4W 2.2K
R63, 64	ERDS2TJ183T	1/4W 18K
R65, 66	ERDS2TJ123	1/4W 12K
R67, 68	ERDS2TJ683	1/4W 68K
R201	ERJ6GEYJ333V	1/10W 33K
R202	ERJ6GEYJ683V	1/10W 68K
R203-205	ERJ6GEYJ1R5V	1/10W 1.5
R206	ERJ8GEYJ222V	1/8W 2.2K
R207	ERJ6GEYJ182V	1/10W 1.8K
R208	ERJ6GEYJ222V	1/10W 2.2K
R209-211	ERJ6GEYJ4R7V	1/10W 4.7
R212, 213	ERJ6GEYJ152V	1/10W 1.5K
R214	ERJ6GEYJ822V	1/10W 8.2K
R215	ERJ6GEYJ101V	1/10W 100
R216	ERJ8GEYJ222V	1/8W 2.2K
R301, 302	ERDS2TJ222	1/4W 2.2K
R304	ERDS2TJ102	1/4W 1K
R305	ERDS2TJ682T	1/4W 6.8K
R306	ERDS2TJ271	1/4W 270
R308	ERDS2TJ1R0	1/4W 1.0

Ref. No.	Part No.	Values & Remarks
R309, 310	ERDS2TJ100	1/4W 10
R311, 312	ERDS2TJ183T	1/4W 18K
R313, 314	ERDS2TJ101	1/4W 100
R315, 316	ERDS2TJ154	1/4W 150K
R317, 318	ERDS2TJ333	1/4W 33K
R319	ERDS2TJ102	1/4W 1K
R320	ERDS2TJ822	1/4W 8.2K
R321	ERDS2TJ272T	1/4W 2.7K
R401, 402	ERDS2TJ562	1/4W 5.6K
R403, 404	ERDS2TJ243T	1/4W 24K
R405, 406	ERDS2TJ473	1/4W 47K
R407, 408	ERDS2TJ561	1/4W 560
R409	ERDS2TJ273	1/4W 27K
R410	ERDS2TJ151	1/4W 150
R451, 452	ERDS2TJ562	1/4W 5.6K
R453, 454	ERDS2TJ243T	1/4W 24K
R455, 456	ERDS2TJ183T	1/4W 18K
R457, 458	ERDS2TJ332	1/4W 3.3K
R459, 460	ERDS2TJ242	1/4W 2.4K
R461-464	ERDS2TJ684	1/4W 680K
R465, 466	ERDS2TJ561	1/4W 560
R467	ERDS2TJ273	1/4W 27K
R468	ERDS2TJ151	1/4W 150
R469, 470	ERDS2TJ473	1/4W 47K
R471-474	ERDS2TJ222	1/4W 2.2K
R501	ERDS2TJ223	1/4W 22K
R502	ERDS2TJ821	1/4W 820
R503	ERDS2TJ223	1/4W 22K
R504	ERDS2TJ821	1/4W 820
R505	ERG1SJ150E	1W 15
R506	ERG1SJ180E	1W 18
R507, 508	ERDS2TJ472	1/4W 4.7K
R509	ERDS2TJ223	1/4W 22K
R510	ERDS2TJ821	1/4W 820
R511	ERDS2TJ822	1/4W 8.2K
R512	ERDS2TJ182	1/4W 1.8K
R513	ERDS2TJ682T	1/4W 6.8K
R514	ERDS2TJ152	1/4W 1.5K
R515	ERDS2TJ332	1/4W 3.3K
R516	ERDS2TJ103	1/4W 10K
R517	ERDS2TJ223	1/4W 22K
R518	ERDS2TJ821	1/4W 820
R519	ERDS2TJ103	1/4W 10K
R520	ERDS2TJ102	1/4W 1K
R521, 522	ERDS1FVJ180T	1/2W 18 ⚠
R523	ERDS2TJ332	1/4W 3.3K
R524	ERDS2TJ222	1/4W 2.2K
R525	ERDS2TJ473	1/4W 47K
R526	ERDS2TJ223	1/4W 22K

Ref. No.	Part No.	Values & Remarks
R527	ERDS2TJ562	1/4W 5.6K
R528	ERDS2TJ682T	1/4W 6.8K
R529, 530	ERDS2TJ103	1/4W 10K
R531	ERDS2TJ105T	1/4W 1M
R532	ERDS2TJ102	1/4W 1K
R533	ERDS2TJ103	1/4W 10K
R534	ERDS2TJ471	1/4W 470
R535, 536	ERDS2TJ103	1/4W 10K
R537, 538	ERDS2TJ472	1/4W 4.7K
R539, 540	ERDS2TJ681	1/4W 680
R544	ERDS2TJ331	1/4W 330
R551, 552	ERDS2TJ103	1/4W 10K
R553	ERDS2TJ101	1/4W 100
R554, 555	ERDS2TJ100	1/4W 10
R601, 602	ERDS2TJ472	1/4W 4.7K
R603	ERDS2TJ103	1/4W 10K
R604	ERDS2TJ472	1/4W 4.7K
R605	ERD2FCVJ4R7T	1/4W 4.7 ⚠
R606, 607	ERD2FCVJ6R8T	1/4W 6.8 ⚠
R608, 609	ERDS2TJ561	1/4W 560
R610, 611	ERDS2TJ101	1/4W 100
R612	ERD2FCVG270T	1/4W 27 ⚠
R614	ERD2FCVG270T	1/4W 27 ⚠
R615, 616	ERDS2TJ222	1/4W 2.2K
R617, 618	ERDS2TJ101	1/4W 100
R619	ERD2FCVG100T	1/4W 10 ⚠
R620, 621	ERDS2TJ391	1/4W 390
R622	ERD2FCVG100T	1/4W 10 ⚠
R623	ERD2FCVG330T	1/4W 33 ⚠
R624	ERDS2TJ471	1/4W 470
R625-636	ERDS2TJ470	1/4W 47
R637	ERDS2TJ223	1/4W 22K
R640-642	ERG1SJ390E	1W 39
R701	ERDS2TJ821	1/4W 820
R702	ERDS2TJ102	1/4W 1K
R703	ERDS2TJ122	1/4W 1.2K
R704	ERDS2TJ152	1/4W 1.5K
R705	ERDS2TJ182	1/4W 1.8K
R706	ERDS2TJ222	1/4W 2.2K
R707	ERDS2TJ332	1/4W 3.3K
R708	ERDS2TJ472	1/4W 4.7K
R709	ERDS2TJ682T	1/4W 6.8K
R710	ERDS2TJ123	1/4W 12K
R711	ERDS2TJ821	1/4W 820
R712	ERDS2TJ102	1/4W 1K
R713	ERDS2TJ122	1/4W 1.2K
R714	ERDS2TJ152	1/4W 1.5K
R715	ERDS2TJ182	1/4W 1.8K
R716	ERDS2TJ222	1/4W 2.2K

Ref. No.	Part No.	Values & Remarks
R717	ERDS2TJ332	1/4W 3.3K
R718	ERDS2TJ472	1/4W 4.7K
R721	ERDS2TJ472	1/4W 4.7K
R722	ERDS2TJ332	1/4W 3.3K
R723, 724	ERDS2TJ180T	1/4W 18
R725, 726	ERDS2TJ332	1/4W 3.3K
R727, 728	ERDS2TJ330	1/4W 33
R729, 730	ERDS2TJ100	1/4W 10
R731, 732	ERDS2TJ102	1/4W 1K
R901	ERDS2TJ222	1/4W 2.2K
R902	ERDS2TJ823T	1/4W 82K
R903	ERDS2TJ101	1/4W 100
R904	ERDS2TJ393	1/4W 39K
R905	ERDS2TJ822	1/4W 8.2K
R906	ERDS2TJ102	1/4W 1K
R907	ERDS2TJ473	1/4W 47K
R908	ERDS2TJ223	1/4W 22K
R909, 910	ERDS2TJ563	1/4W 56K
R911, 912	ERDS2TJ393	1/4W 39K
R913, 914	ERDS2TJ220T	1/4W 22
R915, 916	ERDS2TJ101	1/4W 100
R917, 918	ERDS2TJ152	1/4W 1.5K
R922	ERDS2TJ392T	1/4W 3.9K
R923	ERDS2TJ103	1/4W 10K
R924	ERDS2TJ332	1/4W 3.3K
R925, 926	ERDS2TJ472	1/4W 4.7K
R927	ERDS2TJ223	1/4W 22K
R928	ERDS2TJ123	1/4W 12K
R929	ERDS2TJ682T	1/4W 6.8K
R930	ERDS2TJ473	1/4W 47K
R931	ERDS2TJ102	1/4W 1K
R932, 933	ERDS2TJ103	1/4W 10K
R934	ERDS2TJ333	1/4W 33K
R935	ERDS2TJ103	1/4W 10K
R936	ERDS2TJ392T	1/4W 3.9K
R937	ERDS2TJ272T	1/4W 2.7K
R938	ERDS2TJ103	1/4W 10K
R939	ERDS2TJ822	1/4W 8.2K
R940	ERDS2TJ472	1/4W 4.7K
R943	ERDS2TJ103	1/4W 10K
R944	ERDS2TJ1R0	1/4W 1.0
R945	ERDS2TJ391	1/4W 390
R946	ERDS2TJ101	1/4W 100
R970	ERDS2TJ332	1/4W 3.3K
R971	ERDS2TJ221	1/4W 220
R972	ERDS2TJ183T	1/4W 18K
R973	ERDS2TJ221	1/4W 220
R974	ERDS2TJ183T	1/4W 18K
		CHIP JUMPER(S)
J201-206	ERJ6GEY0R00V	CHIP JUMPER

Ref. No.	Part No.	Values & Remarks
		CAPACITORS
C1, 2	ECBT1H221KB5	50V 220P
C3, 4	ECEA0JK101	6.3V 100U
C5, 6	ECQB1H562JF3	50V 5600P
C7, 8	ECQB1H152JF3	50V 1500P
C9, 10	ECBT1H470J5	50V 47P
C11, 12	ECEA1CK100B	16V 10U
C13, 14	ECQB1H152JF3	50V 1500P
C15, 16	ECQB1H153JF3	50V 0.015U
C17, 18	ECQP1121JZ3	100V 120P
C19, 20	ECEA1EK4R7	25V 4.7U
C21, 22	ECBT1H101KB5	50V 100P
C23, 24	ECQB1H562JF3	50V 5600P
C25, 26	ECBT1H221KB5	50V 220P
C27, 28	ECEA1HKR33	50V 0.33U
C29, 30	ECEA1CK100B	16V 10U
C31, 32	ECQV1H683JZ3	50V 0.068U
C33, 34	ECQB1H333JF3	50V 0.033U
C35, 36	ECQB1H183JF3	50V 0.018U
C37, 38	ECQV1H473JZ3	50V 0.047U
C39, 40	ECQB1H123JF3	50V 0.012U
C43, 44	ECQB1H223JF3	50V 0.022U
C45, 46	ECEA1CK100B	16V 10U
C47, 48	ECKR1H103ZF5	50V 0.01U
C49, 50	ECEA1HK010B	50V 1U
C51, 52	ECEA1HK0R1	50V 0.1U
C201	ECUV1E153KBN	25V 0.015U
C202	ECUV1E104KBN	25V 0.1U
C203, 204	ECEV1CA100R	16V 10U
C205	ECUV1E104ZFN	25V 0.1U
C206	ECUV1E104KBN	25V 0.1U
C209-211	ECEV1EN100R	25V 10U
C212-214	ECUV1H103ZFN	50V 0.01U
C215	ECUV1H472ZFN	50V 4700P
C216	ECUV1E562KBN	25V 5600P
C217-219	ECUV1E104ZFN	25V 0.1U
C301-304	ECKR1H103ZF5	50V 0.01U
C305, 306	ECKW1H222KB5	50V 2200P
C307	ECKD1H682KB	50V 6800P
C308	ECKR1H392KB5	50V 3900P
C309	ECEA1EK4R7	25V 4.7U
C310	ECQP1153JZ	100V 0.015U
C311, 312	ECBT1H470J5	50V 47P
C313, 314	ECKR1H473ZF5	50V 0.047U
C315, 316	ECKR2H821KB5	500V 820P
C317, 318	ECBT1H121KB5	50V 120P
C319, 320	ECQV1H563JZ3	50V 0.056U
C321, 322	ECQB1H223JF3	50V 0.022U
C323, 324	ECQB1H103JF3	50V 0.01U
C325, 326	ECBT1H561KB5	50V 560P

Ref. No.	Part No.	Values & Remarks
C327, 328	ECEA1EK100	25V 10U
C329, 330	ECKR1H473ZF5	50V 0.047U
C401-404	ECQB1H222JF3	50V 2200P
C405, 406	ECEA1HUR56B	50V 0.56U
C407, 408	ECEA1HKR33	50V 0.33U
C409, 410	ECEA1EK4R7	25V 4.7U
C451, 452	ECKT1H122KB	50V 1200P
C453, 454	ECKD1H152KB	50V 1500P
C455, 456	ECEA1EK4R7	25V 4.7U
C457-460	ECQB1H222JF3	50V 2200P
C461, 462	ECEA1HUR56B	50V 0.56U
C463, 464	ECEA1HKR33	50V 0.33U
C465, 466	ECEA1EK4R7	25V 4.7U
C501	ECEA1HK010B	50V 1U
C502	ECBT1E103ZF	25V 0.01U
C503	ECEA1CN100SB	16V 10U
C504	ECEA1HK010B	50V 1U
C505	ECKR1H103ZF5	50V 0.01U
C506	ECEA0JU470B	6.3V 47U
C507	ECEA1EK4R7	25V 4.7U
C508, 509	ECEA1VK100B	35V 10U
C602	ECKR2H682PE	500V 6800P
C603	ECEA1HU221B	50V 220U
C605	ECKR2H682PE	500V 6800P
C606, 607	ECEA1EU222B	25V 2200U
C608	ECKR1H103ZF5	50V 0.01U
C609	ECEA1AU221	10V 220U
C610	ECEA1AU101	10V 100U
C611-616	ECKR1H103ZF5	50V 0.01U
C617	ECEA1AU101	10V 100U
C618	ECEA1EU222B	25V 2200U
C619-624	ECEA1AU102B	10V 1000U
C625, 626	ECEA1HK010B	50V 1U
C701, 702	ECEA1HK010B	50V 1U
C703	ECKR1H103ZF5	50V 0.01U
C901	ECQB1H822JF3	50V 8200P
C902	ECEA1CK100B	16V 10U
C903	ECBT1H470J5	50V 47P
C904	ECEA1HK010B	50V 1U
C905, 906	ECEA1AU101	10V 100U
C908	ECEA1AK101	10V 100U
C909	ECBT1E103ZF	25V 0.01U
C910	ECEA1CK330	16V 33U
C911	ECEA0JU222B	6.3V 2200U
C913, 914	ECKR1H103ZF5	50V 0.01U
C925	ECKT1H223ZF	50V 0.022U

REPLACEMENT PARTS LIST

Notes : • Important safety notice:
Components identified by ⚠ mark have special characteristics important for safety. When replacing any of these components use only manufacturer's specified parts.
• The parenthesized indications in the Remarks columns specify the areas. (Refer to the cover page for area.)
Parts without these indications can be used for all areas.

Ref. No.	Part No.	Part Name & Description	Remarks
		CABINET AND CHASSIS	
1	RKMD036-K	CABINET	
2	RYF0146A-K	CASSETTE LID	
3	RYQ0070-K	FRONT ORNAMENT	
4	SNE2129-1	SCREW	
5	XTBS3+8JFZ1	SCREW	
6	RMN0141	FL HOLDER	
7	RGR0128A-B1	REAR PANEL	(EG)
7	RGR0128A-C	REAR PANEL	(EB)
7	RGR0128A-G	REAR PANEL	(PP)
8	RGU0030	BUTTON, POWER SWITCH	
9	RGV0080-K	KNOB, TIMER	
10	RGW0033	KNOB, REC LEVEL	
11	RGW0110-K	KNOB, BALANCE/BIAS/PHONES	
12	RFKJSTR313PK	BOTTOM BOARD ASS'Y	
12-1	RKA0009-1	FOOT	Ref. No. 12-1 is included in Ref. No. 12.
13	RKQ0089	P. C. B. HOLDER	
14	RFKGSBX606EB	FRONT PANEL ASS'Y	(EB, EG)
14	RFKGSBX606PP	FRONT PANEL ASS'Y	(PP)
14-1	RKW0171A-K	TRANSPARENT PLATE	Ref. No. 14-1 is included in Ref. No. 14.
15	RMA0517	BRACKET, BOTTOM BOARD	
16	RMC0137	SHIELD PLATE, MECH UNIT	
17	RMC0139	SHIELD PLATE, P. TRANSFORMER	
18	RMN0140	ORNAMENT, HEADPHONES	
19	RFKNSDN7AK	DAMPER GEAR ASS'Y(L)	
20	RGK0405-K	ORNAMENT, OPERATION BUTTON	
21	RGK0407-A	ORNAMENT, MONITOR BUTTON	
22	RGU0130	BUTTON, EJECT	
23	RFKNSBX606EB	BUTTON ASS'Y, OPERATION	
24	RGU0620-K	BUTTON, MONITOR	
25	RKF0169A-K	CASSETTE HOLDER	
25-1	QBP2006A	TAPE PRESSURE SPRING	Ref. No. 25-1 is included in Ref. No. 25.
26	RMA0535	HOLDER ANGLE	
27	RMC0056-1	SHIELD PLATE, REC LEVEL	
28	RME0092	SPRING	
29	RML0086	EJECT LEVER	
30	XTB3+10JFZ	SCREW	
31	SNE4021-1	NUT	
32	XTB3+20JFZ	SCREW	
33	XTB3+8JFZ	SCREW	
		PACKING MATERIAL	
P1	RPG0990	CARTON BOX	(EB, EG)
P1	RPG0993	CARTON BOX	(PP)

Ref. No.	Part No.	Part Name & Description	Remarks
P2	RPN0345-1	PAD	
P3	SPSD152	ACCESSORIES BOX	
P4	SPP756	PROTECTION COVER	
		ACCESSORIES	
A1	RFKSSBX606EG	INSTRUCTION MANUAL ASS'Y	(EG)
A1	RQT1187-B	INSTRUCTION MANUAL	(EB)
A1	RQT1188-Y	INSTRUCTION MANUAL	(PP)
A2	RQA0013	WARRANTY CARD	(EB, EG)
A2	RQA0049	WARRANTY CARD	for CANADA
A2	SQX7179	WARRANTY CARD	(PP)
A3	RQCB0169	SERVICENTER LIST	(EB, EG)
A3	SQX9129-1	SERVICENTER LIST	(PP)
A3	SQX9131	SERVICENTER LIST	for CANADA
A4	SFDAC05E03	AC POWER SUPPLY CORD	(EG) ⚠
A4	SJA175	AC POWER SUPPLY CORD	(PP) ⚠
A4	SJA193	AC POWER SUPPLY CORD	(EB) ⚠
A5	SJP2249-3	STEREO CONNECTION CABLE	

REPLACEMENT PARTS LIST

Ref. No.	Part No.	Part Name & Description	Remarks
		MECHANISM PARTS LIST	
101	QHQ1361A	SCREW	
102	SJH96-1	E HEAD	
103	RHE5201ZA	SCREW	
104	RBR4CY009-C	R/P HEAD	
105	QBC1278A	HEAD SPRING	
106	RMX0014	SPACER	
107	RMR0184	HEAD SPACER	
108	XTN2+5F	SCREW	
109	REX0092-1	LEAD WIRE BLOCK	
110	RXR0009	REEL TABLE	
111	RUW139ZA	HEAD BASE SPRING	
112	RMA0047A-1	HEAD BASE	
113	RXQ0078	MAIN ROD ASS'Y	
114	RMM0012-2	EJECT ROD(L)	
115	RME0018-1	SPRING, EJECT ROD(L)	
116	RML0069-1	LEVER	
117	RME0020	BRAKE SPRING	
118	RML0040-2	BRAKE LEVER	
119	RUW142ZA	SPRING	
120	RXP0004	PINCH ROLLER ARM(F)	
120-1	RUW140ZC	SPRING, PINCH ROLLER ARM(F)	
121	RFKRSB555E-K	CHASSIS ASS'Y	
122	XTN26+7J	SCREW	
123	MMN-6F4RA88	REEL MOTOR	
124	XTN26+26F	SCREW	
125	RMA0048A	FLYWHEEL PLATE	
126	XTN2+3F	SCREW	
127	XSN26+3	SCREW	
128	RMR0141	THRUST BEARING	
129	RXG0009	IDLE GEAR ASS'Y	
130	RDG0034	REEL MOTOR GEAR	
131	RUB428ZE	MOVING IRON CORE	
132	RSJ0003	SOLENOID	
133	RXQ0011	BLAKE SOLENOID	
134	XTW2+8S	SCREW	
135	XTN26+4F	SCREW	
136	RDG0030	MAIN GEAR	
137	RXF0008	FLYWHEEL	
138	RML0037	TRIGGER LEVER	
139	RUW147ZA	TRIGGER LEVER SPRING	
140	RJS2T7ZA	CONNECTOR(2P), J201A	
141	RMQ0037	FG YOKE	
142	RXG0003	REEL TABLE GEAR	
143	RUQ112ZA	SPRING	
144	RUS609ZC	TAPE PRESSURE SPRING	
145	RUQ111ZB	SPRING	
146	RHE5204ZB	SCREW	
147	RJS11T7ZA	CONNECTOR(11P), J971	
148	REP0268C	STATER P.C.B. ASS'Y	

Ref. No.	Part No.	Part Name & Description	Remarks
149	REX0093-2	LEAD WIRE BLOCK	
150	XQN2+AF3	SCREW	
151	RWJ0202090XX	FLAT CABLE(2P), W201A	

Printed in Japan
H910612070 SN/HH/TN

■ EXPLODED VIEW

• Cabinet parts

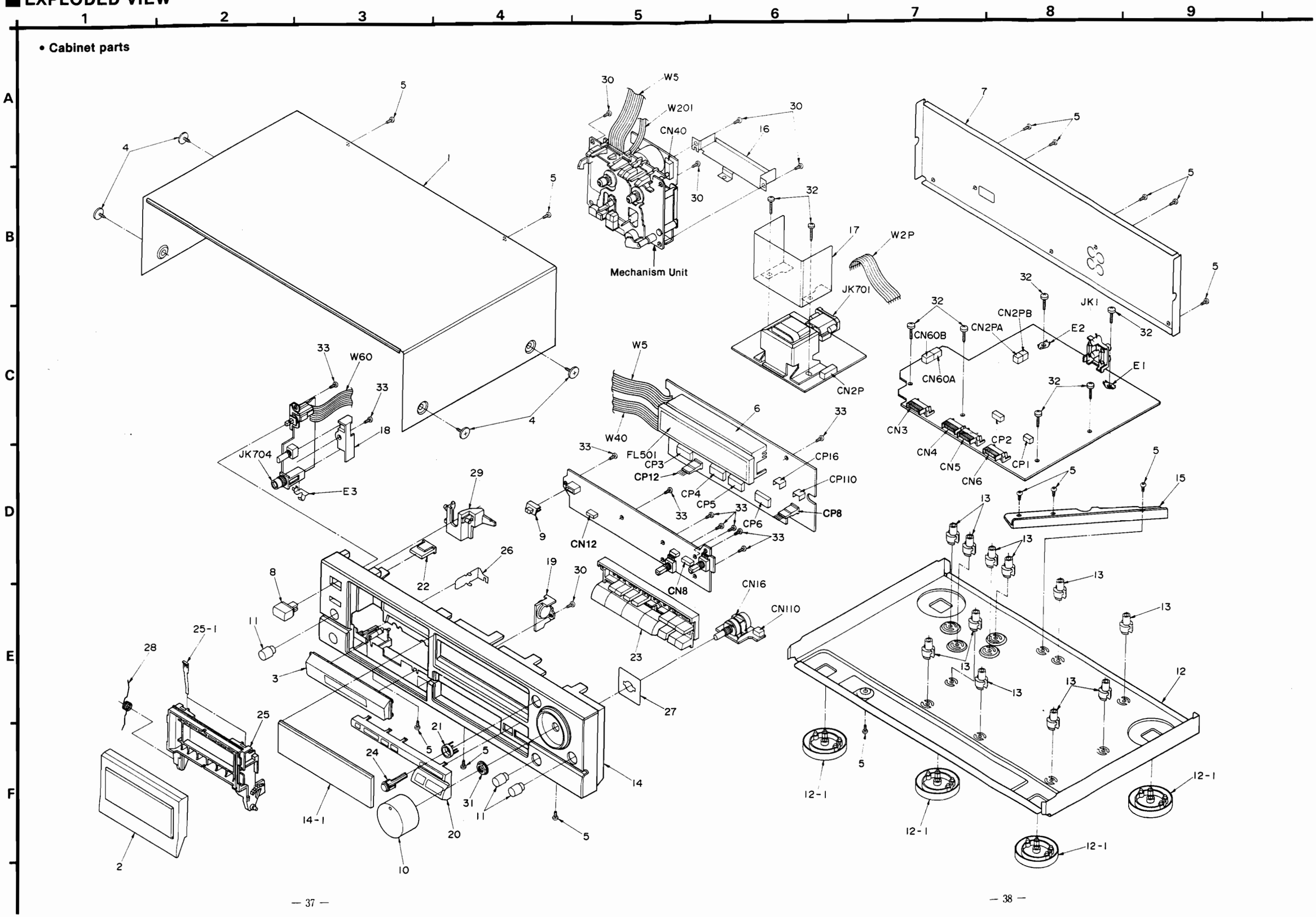

• **Mechanical parts**

(Top view)

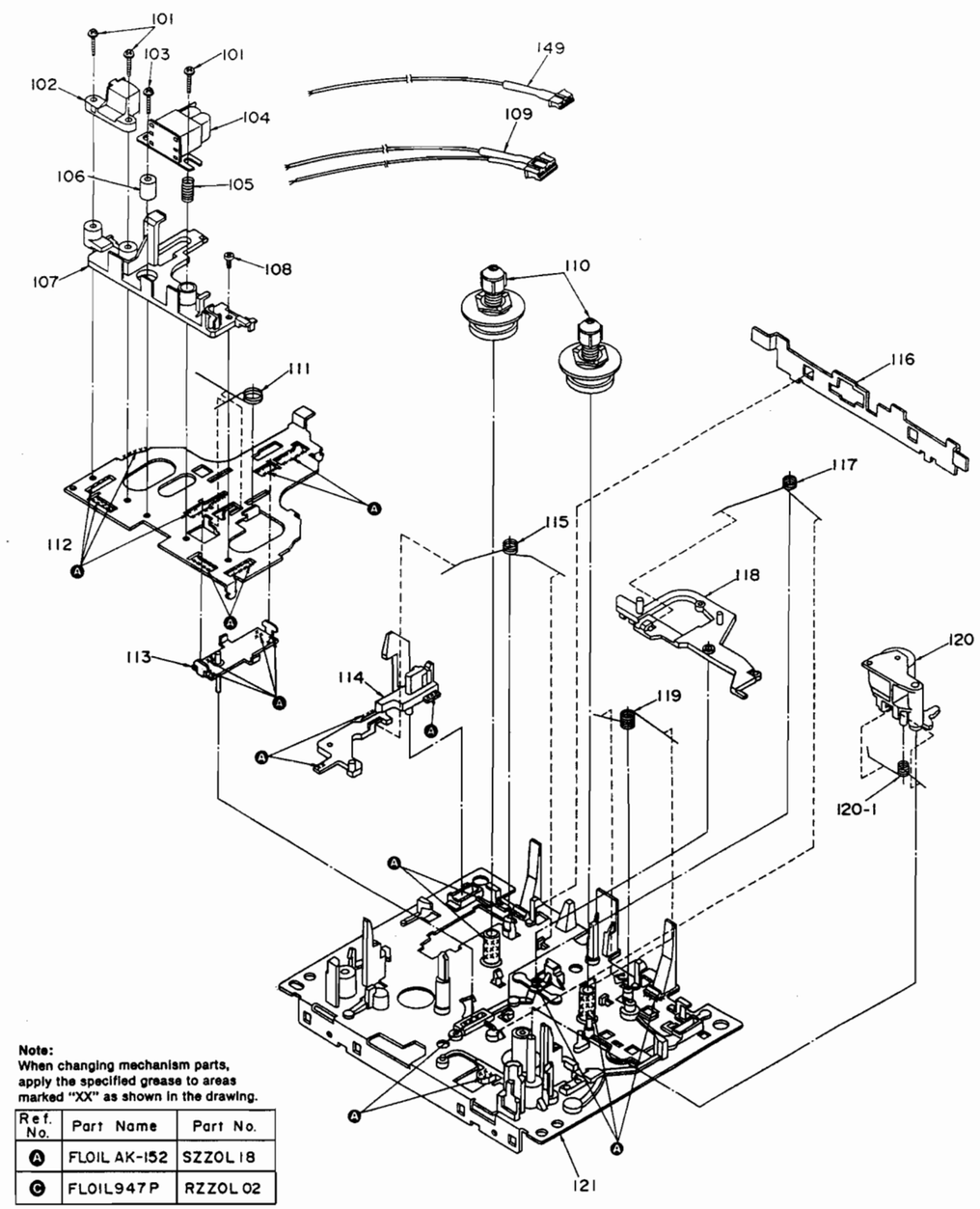

Note:
When changing mechanism parts, apply the specified grease to areas marked "XX" as shown in the drawing.

Ref. No.	Part Name	Part No.
Ⓐ	FLOIL AK-152	SZZOL18
Ⓒ	FLOIL947P	RZZOL02
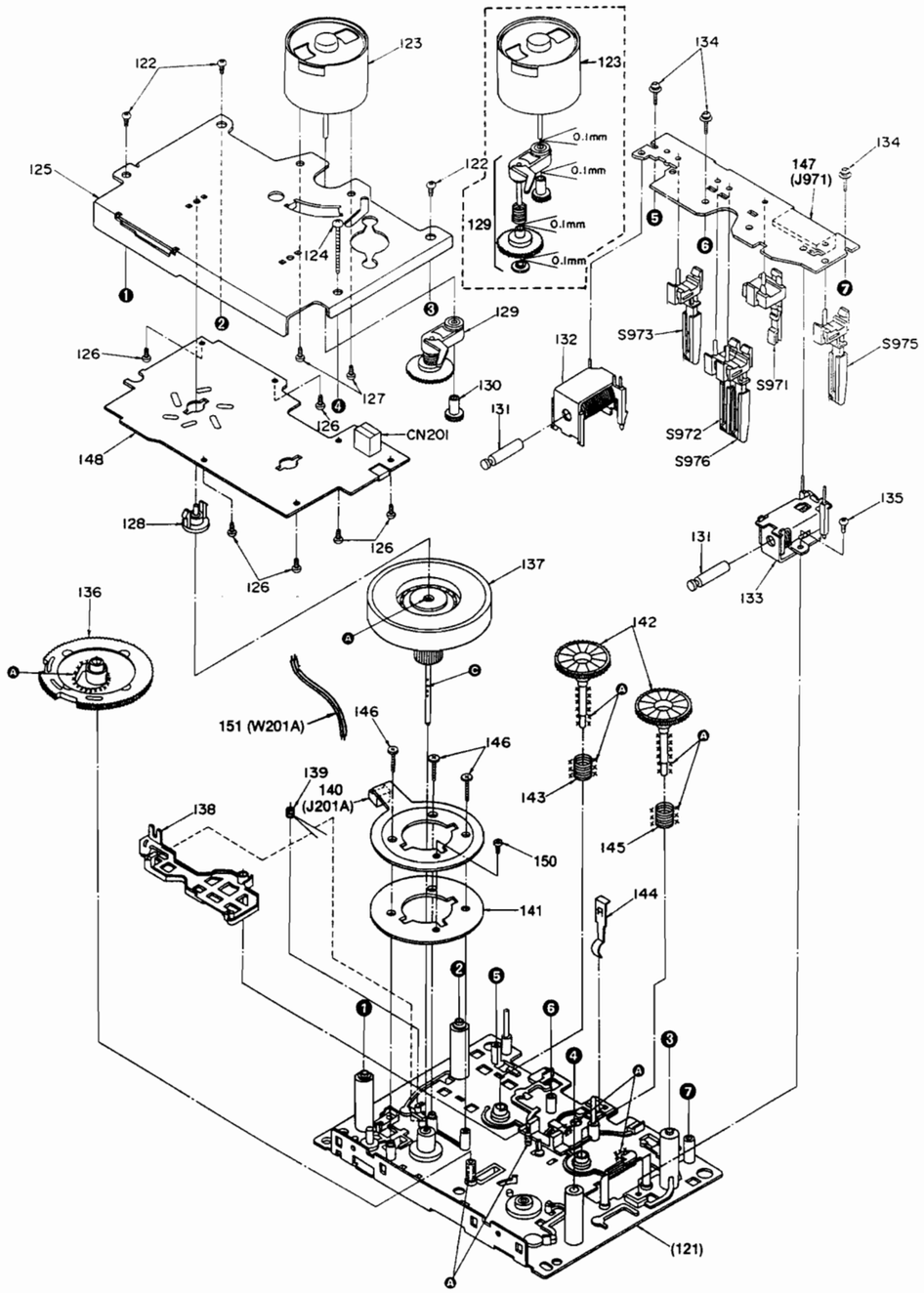
(Bottom view)