ORDER NO. AD9002019C9

Service Manual

Cassette Deck

Dolby NR-Equipped
Stereo Cassette Deck

RS-TR265

DOLBY B·C NR HX PRO

Color

(K)... Black Type

Area

Country Code	Area	Color
(E)	Continental Europe.	(K)
(EB)	Great Britain.	(K)
(EG)	F.R. Germany and Italy.	(K)
(GC)	Asia, Latin America, Middle Near East and Africa.	(K)
(GN)	Oceania.	(K)
(PX)	Far East-PX.	(K)

RS-TR165 MECHANISM SERIES: (AR300)

SPECIFICATIONS

■ CASSETTE DECK SECTION

Deck system Stereo cassette deck
Track system 4-track, 2-channel
Heads
(tape deck 1) Play Permalloy head
(tape deck 2) Rec/play Permalloy head
Erasing Double-gap ferrite head
Motors
(tape deck 1) Capstan/reel table drive DC servo motor
(tape deck 2) Capstan/reel table drive DC servo motor
Recording system AC bias
Bias frequency 80 kHz
Erasing system AC erase
Tape speed 4.8 cm/sec. (1-7/8 ips)
Frequency response (w/o Dolby NR)
NORMAL 20 Hz~16 kHz
20 Hz~15 kHz (DIN)
CrO_2 20 Hz~16 kHz
20 Hz~15 kHz (DIN)
METAL 20 Hz~18 kHz
20 Hz~17 kHz (DIN)
S/N (signal level = max recording level, CrO_2 type tape)
Dolby C NR on 74 dB (CCIR)
Dolby B NR on 66 dB (CCIR)
Dolby NR off 56 dB (A weighted)
Wow and flutter 0.07 % (WRMS)
±0.2 % (DIN)
Fast forward and rewind times
Approx. 110 seconds with C-60 cassette tape

Input sensitivity and impedance
LINE IN 60 mV/47 kΩ
Output voltage and impedance
LINE OUT 400 mV/800 Ω
HEADPHONES 30 mV/8 Ω
(8 Ω~600 Ω)

■ GENERAL

Power consumption 15 W
Power supply
For Great Britain and Oceania: AC 50/60 Hz, 240 V
For F.R. Germany, Italy and Continental Europe:
AC 50/60 Hz, 220 V
For others: AC 50/60 Hz, 110 V/127 V/220 V/240 V
Dimensions (W × H × D) 430 × 136 × 290 mm
(16-15/16" × 5-3/8" × 11-13/32")
Weight 4.8 kg (10.6 lb.)

Note:
Specifications are subject to change without notice.
Weight and dimensions are approximate.

* HX Pro headroom extension originated by Bang Olufsen and manufactured under license from Dolby Laboratories Licensing Corporation.
"DOLBY", the double-D symbol, and "HX PRO" are trademarks of Dolby Laboratories Licensing Corporation.

Technics

Matsushita Electric Industrial Co., Ltd.
Central P.O. Box 288, Osaka 530-91, Japan

Panasonic Tokyo Sales Department
Matsushita Electric Industrial Co., Ltd.
World Trade Center Bldg., 4-1, Hamamatsu-cho, 2-chome, Minato-ku, Tokyo 105, Japan

CONTENTS

	Page
CONNECTIONS	2
ACCESSORIES	2
LOCATION OF CONTROLS	3, 4
CONVENIENT FEATURES FOR RECORDING	5
TIMER RECORDING/PLAYBACK	5
DISASSEMBLY INSTRUCTIONS	6~9
MEASUREMENT AND ADJUSTMENT METHODES	10~12
TERMINAL FUNCTION OF IC'S	13, 14
PRINTED CIRCUIT BOARDS	15~18
SCHEMATIC DIAGRAM	19~25
TERMINAL GUIDE OF IC'S, TRANSISTORS AND DIODES	25
BLOCK DIAGRAM	26, 27
WIRING CONNECTION DIAGRAM	28
REPLACEMENT PARTS LIST	29, 30
MECHANICAL PARTS LOCATION (DECK 1)	31, 32
MECHANICAL PARTS LOCATION (DECK 2)	33, 34
CABINET PARTS LOCATION	35, 36
REPLACEMENT PARTS LIST (CABINET PARTS)	37, 38
REPLACEMENT PARTS LIST (ELECTRICAL PARTS)	39, 40
RESISTORS & CAPACITORS	41, 42

CONNECTIONS

Make connections in the numbered sequence by using the included cables.

1 Connect the stereo connection cables.

2 Connect the L-type cables.

3 Connect the AC power supply cord.

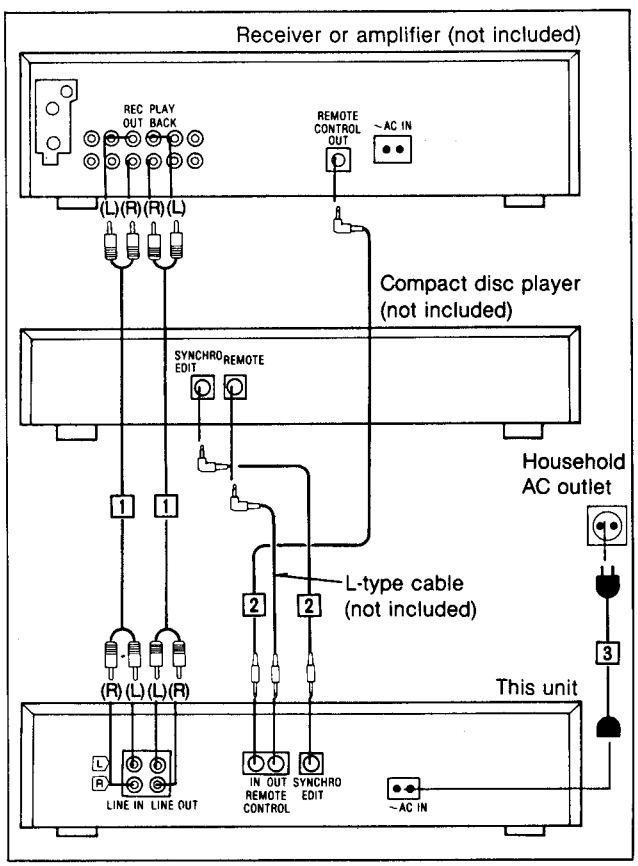

The illustration at the left shows an example of connections made when this unit is combined with a Technics hi-fi component system, and shows only the connections to be made to and from this unit in that combination.
Refer to the illustration together with the instructions provided below.

"REMOTE CONTROL IN" terminal

Make a connection from this terminal to the control terminal for a cassette deck with a Technics receiver or a Technics amplifier.
(For detailed information, refer to the operating instructions of the Technics receiver or the Technics amplifier.)

"REMOTE CONTROL OUT" terminal

Make a connection from this terminal to the "REMOTE INPUT" terminal of a Technics graphic equalizer or to the "REMOTE" terminal of a Technics compact disc player.
(For detailed information, refer to the operating instructions of the Technics graphic equalizer or the Technics compact disc player.)

"SYNCHRO EDIT" terminal

Make a connection from this terminal to a terminal that has the synchro-edit function of a Technics compact disc player.
Refer to page 5. (Contact your dealer for details.)

AC power supply cord (3)

The configuration of the AC outlet and AC power supply cord differs according to area.

For United Kingdom

Household AC outlet

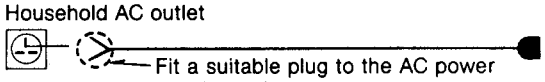

Fit a suitable plug to the AC power supply cord.

Placements hints

If this unit is placed near a receiver or a tuner, a "hum" noise may be heard during tape playback, recording, or AM reception of the receiver or the tuner.
If this occurs, leave as much space as possible between the units, or place them where there is the least amount of "hum".

ACCESSORIES

- Stereo connection cables 2
  (SJP2249-3)
- L-type cables 2
  (SJP2257T)
- AC power supply cord 1
  (SFDAC05E03: (E, EG)
  SJA193-1: (EB)
  SJA173-1: (GN)
  RJA0004: (GC, PX))
- AC plug adaptor 1
  (SJP9215: (GC, PX))

■LOCATION OF CONTROLS

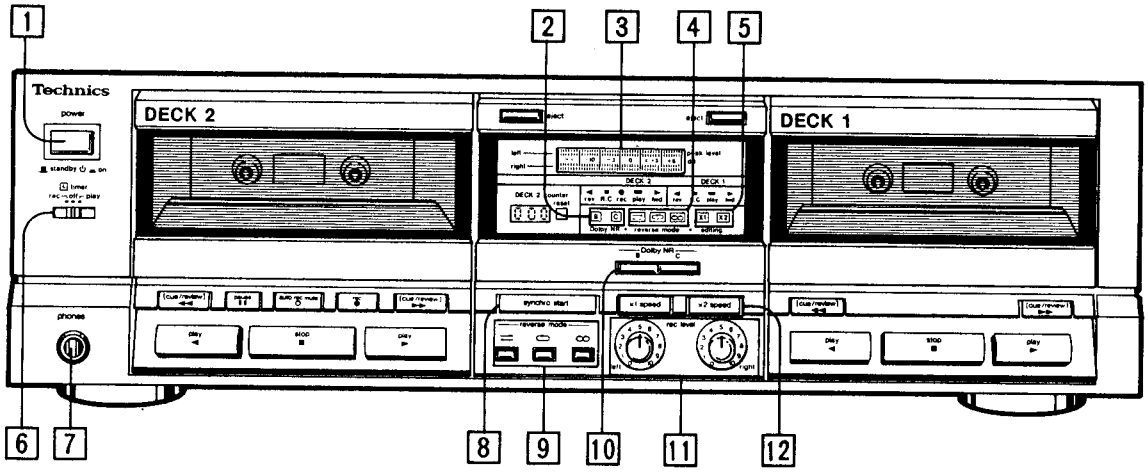

Controls common to both tape decks

1 Power "standby ⏻ /on" switch (power/■ standby ⏻ ▬ on)

This switch switches ON and OFF the secondary circuit power only. The unit is in the "standby" condition when this switch is set to the standby ⏻ position. Regardless of the switch setting, the primary circuit is always "live" as long as the power cord is connected to an electrical outlet.

2 Dolby noise-reduction indicators (B, C)

One of these indicators illuminates to show the type of Dolby noise-reduction system selected by pressing one of the Dolby noise-reduction buttons.

3 Input level meter (peak level)

During tape playback, this meter indicates the level of the recorded sound source.
During recording, it indicates the level to which the recording-level controls have been adjusted.

4 Reverse-mode indicators (⇄, ⊂⊃, ∞)

One of these indicators illuminates to show which of the reverse modes was selected by the reverse-mode selectors.

5 Edit-recording tape-speed indicators (×1, ×2)

One of these indicators illuminates to show which of the tape-to-tape recording speeds was selected by pressing one of the edit-recording tape-speed buttons.

6 Timer switch (L timer)

This switch is used to automatically begin a tape recording or tape playback at a certain time, selected by an optional timer. (Refer to page 5.)

7 Headphones jack (phones)

8 Synchro-start button (synchro start)

This button can be used to start a tape-to-tape recording, simultaneously starting tape deck 1 (the playback deck) and tape deck 2 (the recording deck).

9 Reverse-mode selectors (reverse mode)

These selectors can be used for selection of the reverse mode (for either playback or recording).

10 Dolby noise-reduction buttons (Dolby NR)

These buttons can be used to reduce the hiss noise that is characteristic of tape. This unit is provided with both the B-type and C-type noise-reduction systems.

11 Recording-level controls (rec level)

These controls can be used to regulate the recording level of tape deck 2.

12 Edit-recording tape-speed buttons (speed)

These buttons can be used to select the recording speed when a tape-to-tape recording is made.

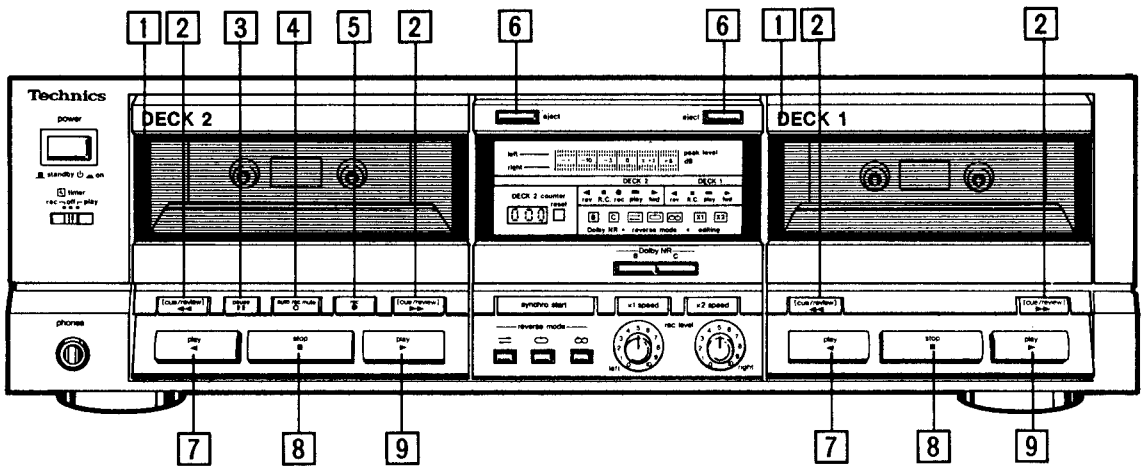

Controls applicable to tape deck 1 and/or 2

1 Cassette holder

2 Fast-forward/cue, rewind/review buttons (cue/review/▶▶/◀◀)

These buttons can be used to advance or rewind the tape. During playback these buttons are used to cue or review while listening to the contents at high speed. (Refer to page 8.)

3 Pause button (pause/❚❚)

This button can be used to temporarily stop the tape playback or recording of tape deck 2 only.

4 Automatic-record-muting button (auto rec mute/O)

This button can be used to make a silent interval on the tape being recorded on tape deck 2.

5 Record button (rec/●)

This button can be used to change tape deck 2 to the recording stand-by mode.

6 Eject button (eject)

This button can be used to open the cassette holder.

7 Reverse-side playback button (play/◀)

This button can be used to start the playback or recording (of tape deck 2 only) of side "B" of the cassette.
(The tape will then begin moving in the right-to-left direction.)

8 Stop button (stop/■)

This button can be used to stop tape movement.

9 Forward-side playback button (play/▶)

This button can be used to start the playback or recording (of tape deck 2 only) of side "A" of the cassette.
(The tape will then begin moving in the left-to-right direction.)

Indicators applicable only to deck 1 or 2

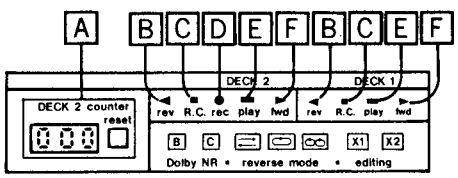

A Tape deck 2 counter/reset button (DECK 2 counter/reset)

This tape counter shows the amount of tape movement of the tape in tape deck 2.
The reset button can be used to reset the tape counter reading to "000".

B Reverse-side indicator (rev/◀)

Illuminates during playback or recording (of tape deck 2 only), to indicate that side "B" of the tape is being used.

C Remote-control indicator (R.C./■)

This indicator illuminates to indicate that this tape deck can now be controlled by the remote-control transmitter.

D Recording indicator (rec/●)

This indicator illuminates to indicate that tape deck 2 is in the recording stand-by mode, or is recording.

E Playback indicator (play/▬)

When this indicator illuminates steadily, it indicates that this tape deck is in the playback mode or the recording mode (of tape deck 2 only).
When it flashes continually, this is an indication that tape deck 2 is in the pause mode or the recording stand-by mode.

F Forward-side indicator (fwd/▶)

Illuminates during playback or recording (of tape deck 2 only), to indicate that side "A" of the tape is being used.

■CONVENIENT FEATURES FOR RECORDING

Compact disc synchro-edit-recording

When a Technics compact disc player with the compact disc synchro-edit function is used in combination with this unit, recordings can be made on side "A" and side "B" of the tape, without interruptions of tracks, in conjunction with the tape length.

Procedure for this unit

1. **Follow steps 1 through 9 in the section concerning recording.**

Procedure for the compact disc player

2. **Press the stop button.** (Disc play will stop.)
3. **Press the edit-tape-length button and specify the length of the tape to be used.**
   The tracks to be recorded to side "A" of the tape and those to be recorded to side "B" will then be automatically selected according to the tape's length.
4. **Press the play button.**
   The recording will start at the same time that play starts at the compact disc player.

For more detailed information, refer to the operating instructions of the Technics compact disc player to be used.

Notes:
- Recordings cannot be made on the leader tape (attached to each end of recording tape), so advance the tape slightly from its end before starting a recording. Also check to be sure that side A ("fwd") indicator is illuminated.
- If the CD program contents to be recorded on side "A" of the tape are shorter than the actual tape length, this unit will continue to record until it reaches the end of side "A", while the compact disc player switches to the pause mode. At the end of side "A", deck 2 automatically switches to side "B" and after few seconds the compact disc player will resume play.
- When canceling the synchro-edit recording mode, press the stop button on the compact disc player and then press the stop button on this unit. (To cancel mid-way through a performance, press the stop button on the compact disc player twice in succession.)

■TIMER RECORDING/PLAYBACK

If an audio timer (not included) is connected to this unit, recording of a radio broadcasts, or tape playback, will automatically begin at the preset time.
Timer recording or playback is also possible by using a tuner with a timer.
Connect the AC power cord of this unit to the power source outlet of the timer. (See the operating instructions of the timer for detailed information.)

Note:
Playback by one deck only can only be done by tape deck 2.

Timer recording (tape deck 2 only)

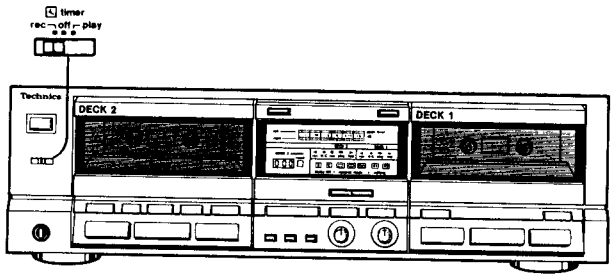

1 **Prepare for recording.**
Follow steps 1 through 9 of "Recording" on page 9. After adjusting the recording level, press the stop button.
Check the tape side ("A" or "B") to be recorded on to be sure it is correct.

2 **Set the timer to the desired recording-start time.**
(Switch the power of this unit to standby mode.)

3 **Set the timer switch to the "rec" position.**
(At the set time, the power will be switched ON and the broadcast will be recorded.)

■After setting the timer

Check to be sure that the power switch is set to the "on" position.

Timer playback

Series playback (tape deck 2 to tape deck 1) is also possible.

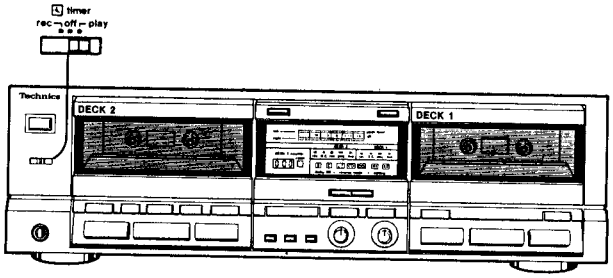

1 **Rewind the tape to the position from which you want playback to begin.**
Check the tape side ("A" or "B") to be played back to be sure it is correct.

2 **Set the timer to the desired playback-start time.**
(Switch the power of this unit to standby mode.)

3 **Set the timer switch to the "play" position.**
(At the set time, the power will be switched ON and the playback will begin.)

■After setting the timer

Check to be sure that the power switch is set to the "on" position.

■ DISASSEMBLY INSTRUCTIONS

"ATTENTION SERVICER"
Some chassis components may have sharp edges. Be careful when disassembling and servicing.

Ref. No. 1	Removal of the cabinet
Procedure 1	• Remove the 6 screws (❶~❻).

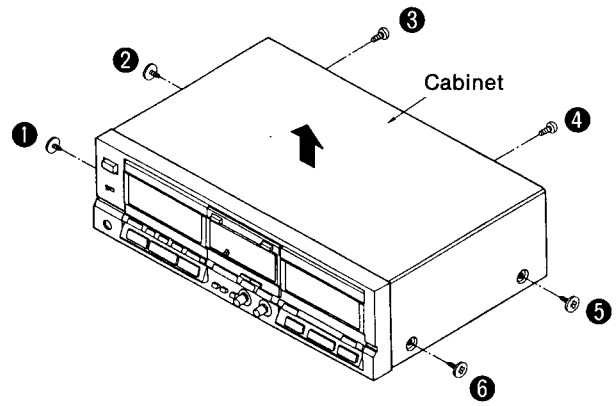

4. Remove the 6 screws (❽~⓭).
5. Remove the 2 connectors (CP1, CP2).
6. Remove the 8 flat cables (CN3, CN4, CN5, CN6, CN7, CN8, CN9, CN10).
7. Remove the main P.C.B. in the direction of the arrow.

How to remove the flat cable

Pull out the flat cable while pressing the connector and pull out the connector.

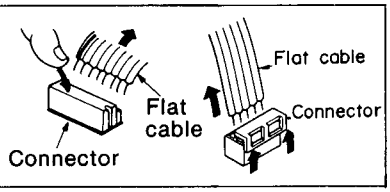

How to check the main P.C.B.

• When checking the soldered surfaces of main P.C.B. and replacing the parts, do as show.

1. Remove the 14 screws (❶, ❸, ❼~⓲).
2. Remove the front panel in the direction of the arrow Ⓐ.

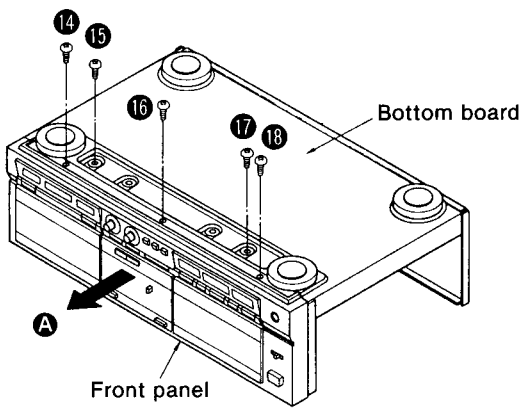

Ref. No. 2	Removal of the main P.C.B.
Procedure 1→2	1. Remove the 7 screws (❶~❼). 2. Remove the rear panel in the direction of the arrow.

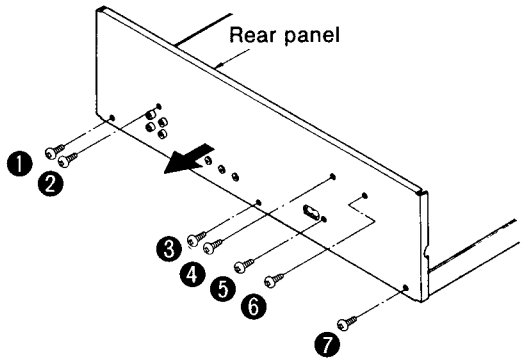

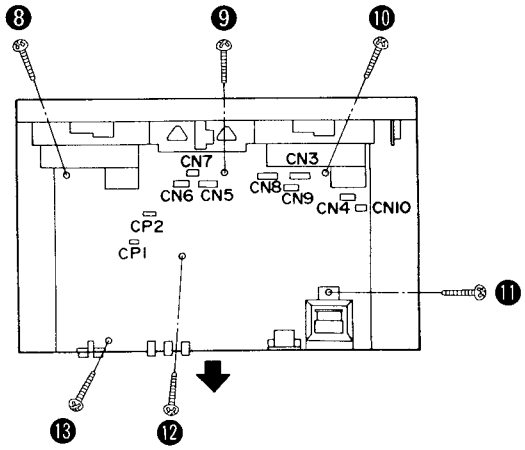

3. Remove the bottom board in direction of the arrow Ⓑ.
4. Reinstall the front panel to the main P.C.B.

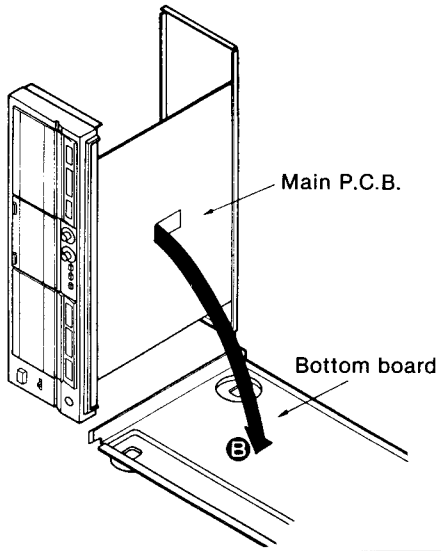

Ref. No. 3	Removal of the front panel ass'y
Procedure 1→3	1. Remove the 5 screws (❶~❺).

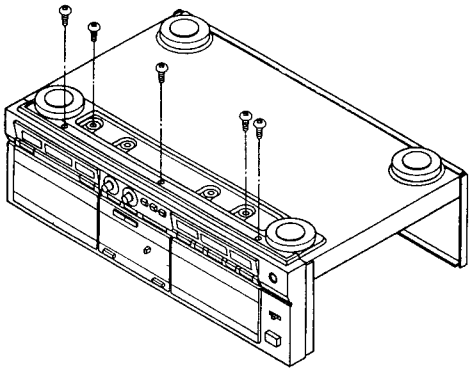

2. Remove the 2 connectors (CP1, CP2).
3. Remove the 8 flat cables (CN3, CN4, CN5, CN6, CN7, CN8, CN9, CN10).
4. Remove the front panel in the direction of the arrow.

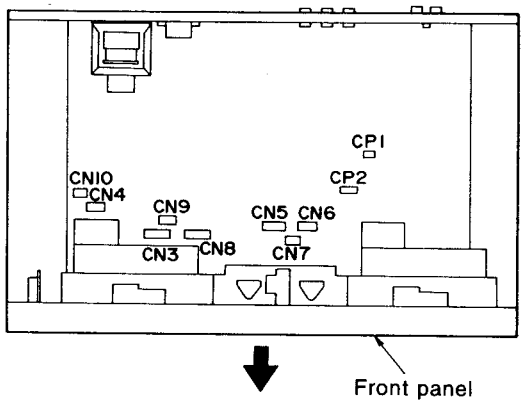

Ref. No. 4	Removal of the LED meter P.C.B.
Procedure 1→3→4	1. Remove the 3 screws (❶~❸). 2. Remove the meter P.C.B. in the direction of the arrow.

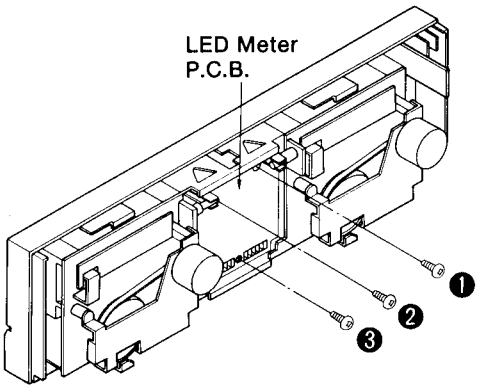

Ref. No. 6	Removal of the tape counter
Procedure 1→3→4→6	• Release the 3 claws.

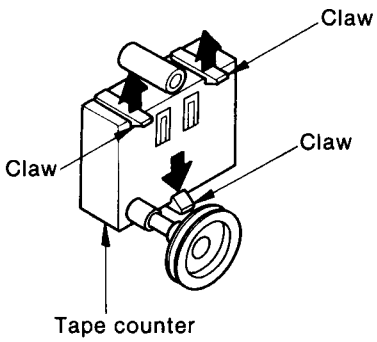

Ref. No. 5	Removal of the mechanism units
Procedure 1→3→4→5	• Mechanism unit (DECK 2) 1. Push the eject button. 2. Remove the 4 screws (❶~❹). 3. Remove the counter belt. • Mechanism unit (DECK 1) 1. Push the eject button. 2. Remove the 4 screws (❺~❽).

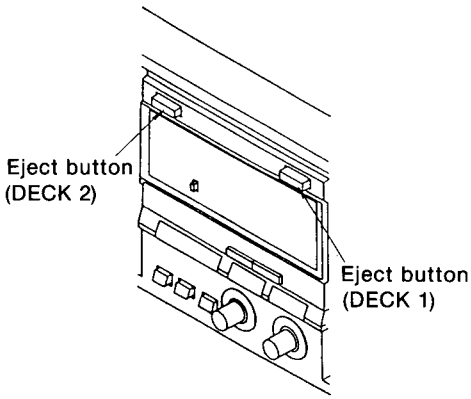

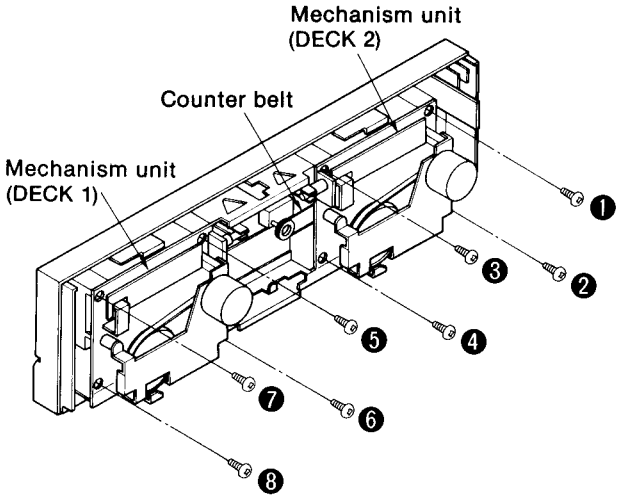

Ref. No. 11	Removal of the eject angle, eject buttons, and eject lever
Procedure 3→4→5→11	

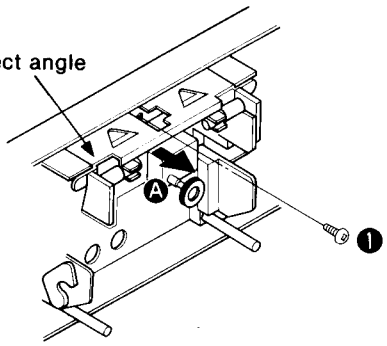

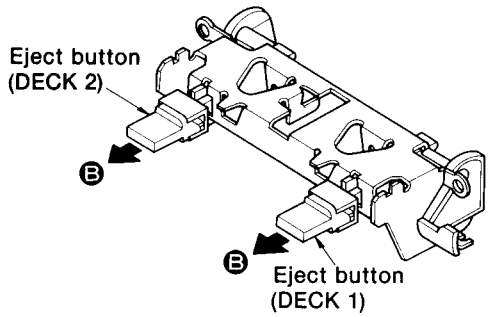

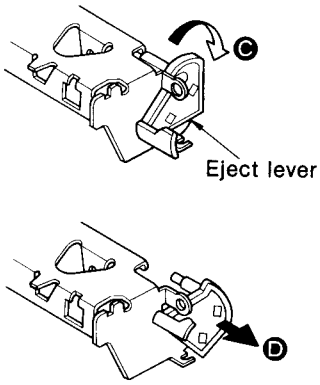

1. Remove the 1 screw (❶).
2. Pull out the eject angle in the direction of the arrow Ⓐ.
3. Pull out the eject buttons in the direction of the arrow Ⓑ.
4. Turn the eject lever in the direction of the arrow Ⓒ, and remove the eject lever in the direction of the arrow Ⓓ.

Ref. No. 12	Removal of the cassette holder (DECK 1 & DECK 2)
Procedure 5→8→12	

1. Remove the 2 screws (❶, ❷).
2. Remove the damper gear (L) and damper gear (R).
3. Remove the rib in the direction of the arrow.
4. Remove the cassette holder in the direction of the arrow.

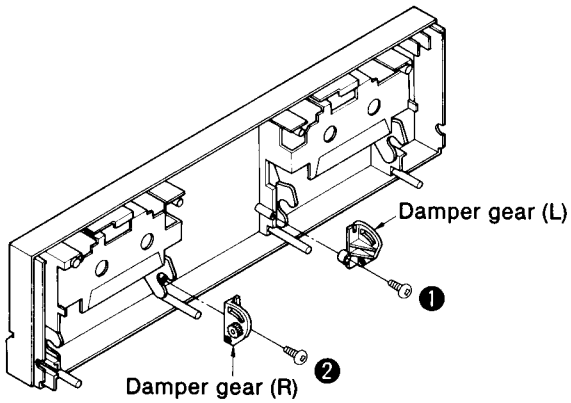

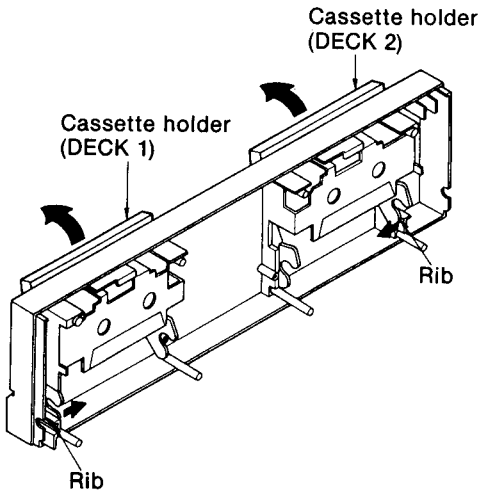

Ref. No. 13	Removal of the operation button ornament and edit button ornament
Procedure 9→10→12→13	

A. Removal of the operation button ornament (DECK 1, DECK 2).
1. Release the 14 claws.

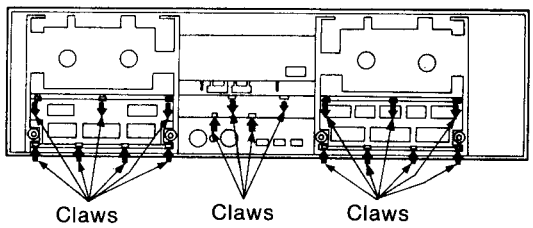

B. Removal of the edit button ornament.
1. Release the 4 claws.

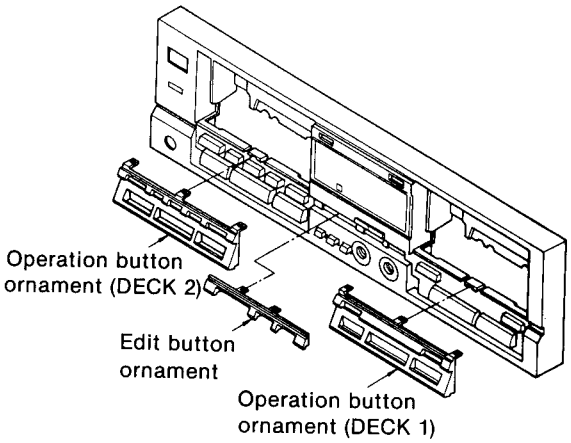

■ MEASUREMENT AND ADJUSTMENT METHODES

Measurement Condition

- Rec. level control; Maximum
- Timer switch; Off
- Reverse-mode selector switch; ⇄
- Edit-recording tape-speed selector; X1
- Dolby NR switch; Off
- Make sure heads are clean
- Make sure capstan and pressure roller are clean
- Judgeable room temperature 20±5℃ (68±9°F)

Measuring instrument

- EVM (Electronic Voltmeter)
- Oscilloscope
- Digital frequency counter
- AF oscillator
- ATT (Attenuator)
- DC voltmeter
- Resistor (600Ω)

Test tape

- Head azimuth adjustment (8kHz, −20dB); QZZCFM
- Tape speed adjustment (3kHz, −10dB); QZZCWAT
- Playback frequency response (315Hz, 12.5kHz, 10kHz, 8kHz, 4kHz, 1kHz, 250Hz, 125Hz, 63Hz, −20dB); QZZCFM
- Playback gain adjustment (315Hz, 0dB); QZZCFM
- Overall frequency response, Overall gain adjustment
  Normal reference blank tape ; QZZCRA
  CrO_2 reference blank tape; QZZCRX
  Metal reference blank tape; QZZCRZ

• Adjustment Points

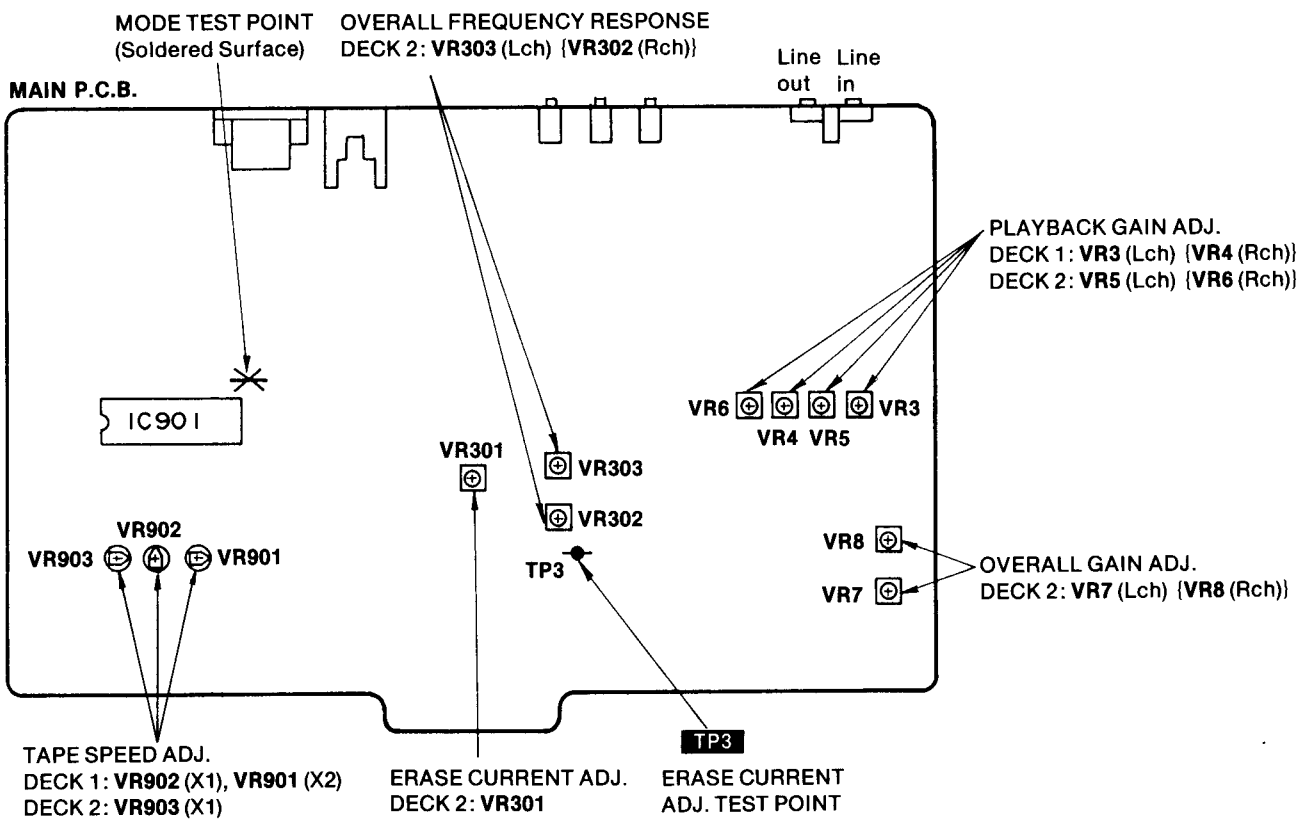

HEAD AZIMUTH ADJUSTMENT (DECK 2/1)

1. Playback the azimuth adjustment portion (8kHz, −20dB) of the test tape (QZZCFM). Vary the azimuth adjusting screw until the outputs of the L-CH and R-CH are maximized and the lissajous waveform, as illustrated, approaches 0 degrees.

Note: If L-CH and R-CH are not maximized at the same point, adjust to the point where the levels of each channel are maximized and equal.

2. Perform the same adjustment in the play mode.
3. After the adjustment, apply screwlock to the azimuth adjusting screw.

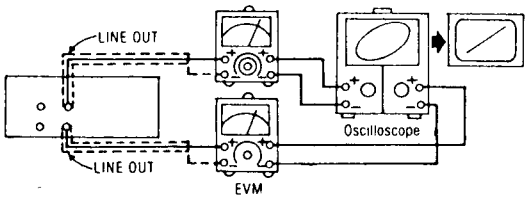

Fig. 1

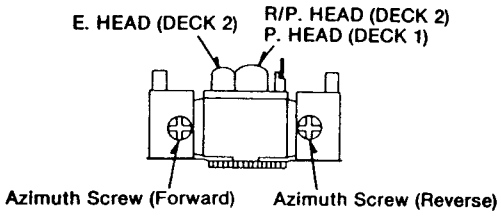

Fig. 2

TAPE SPEED ADJUSTMENT (DECK 2/1)

Normal speed

1. Shift the edit-recording tape-speed selector to "**X1**".
2. Playback the middle portion of the test tape (QZZCWAT).
3. Adjust Deck 1=**VR902** and Deck 2=**VR903** so that the output is within the standard value.

High speed

4. Shift the edit-recording tape speed switch to "**X2**".
5. Playback the middle portion of the test tape (QZZCWAT).
6. Adjust Deck 1=**VR901** so that the output is within the standard value.

Note: The Normal speed adjustment must be done before the High speed adjustment.

Standard value: 3000±15Hz (Normal), 6000±600Hz (High)

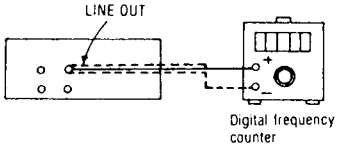

Fig. 3

PLAYBACK GAIN ADJUSTMENT (DECK 2/1)

1. Playback the gain adjusted portion (315Hz, 0dB) of the test tape (QZZCFM).
2. Adjust Deck 1=**VR3** (L-CH) [[**VR4** (R-CH)]] and Deck 2=**VR5** (L-CH) [[**VR6** (R-CH)]] so that the output is within the standard value.

Standard value: 0.4V±0.5dB

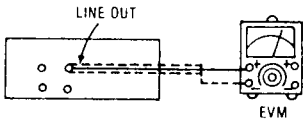

Fig. 4

PLAYBACK FREQUENCY RESPONSE (DECK 2/1)

1. Playback the frequency response portion (315Hz, 12.5kHz~63Hz, −20dB) of the test tape (QZZCFM).
2. Assure that the frequency response is within the range shown in **Fig. 6** for both L-CH and R-CH.

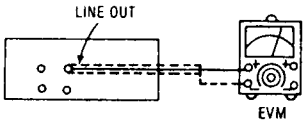

Fig. 5

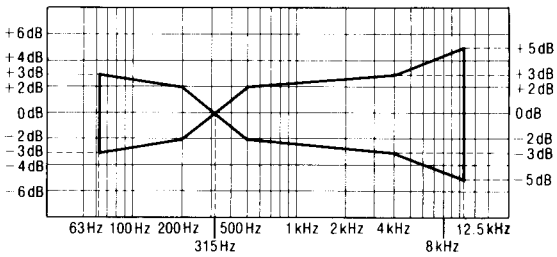

Fig. 6

ERASE CURRENT ADJUSTMENT (DECK 2)

1. Insert the Metal blank test tape (QZZCRZ) and set the unit to the Record Pause mode.
2. Adjust **VR301** so that the output between **TP3** and GND is within the standard value.

Standard value: 190±5mA (Metal)...EVM Reading: 190±5mV

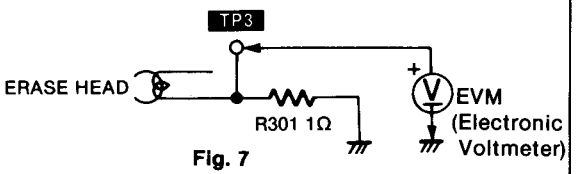

Fig. 7

OVERALL FREQUENCY RESPONSE (DECK 2)

1. Insert the Normal blank test tape (QZZCRA) and set the unit to the Record Pause mode.
2. Apply a reference input signal (1kHz, −24dB) through an attenuator.
3. Attenuate the signal by 20dB and adjust the frequency from 50Hz~10kHz.
4. Record the frequency sweep.
5. Playback the recorded signal and assure that it is within the range shown in **Fig. 8** in comparison to the reference frequency (1kHz).
6. If it is not within the standard range, adjust **VR303** (L-CH) and **VR302** (R-CH) so that the frequency level is within the standard range.
   - Level up in high frequency range .....Increase the bias current.
   - Level down in high frequency range ...Decrease the bias current.
7. Repeat steps 2~6 above using the CrO_2 tape (QZZCRX) and the Metal tape (QZZCRZ) increasing the frequency range to 12.5kHz (50Hz~12.5kHz).
8. Assure that the level is within the range shown in **Fig. 9**.

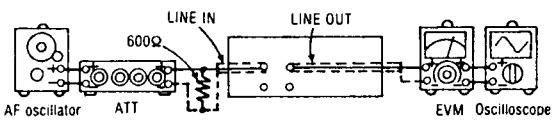

Fig. 10

Normal Overall frequency response chart (NR OUT)

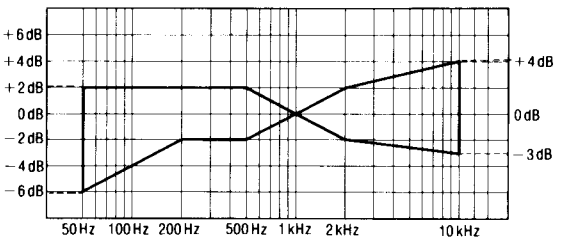

Fig. 8

CrO_2/Metal Overall frequency response chart (NR OUT)

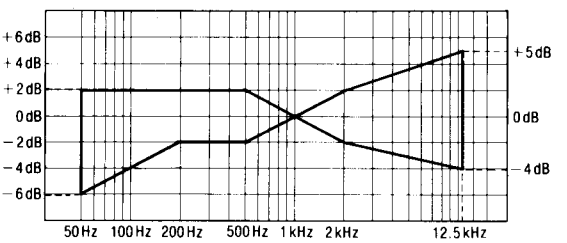

Fig. 9

OVERALL GAIN ADJUSTMENT (DECK 2)

1. Insert the Normal blank test tape (QZZCRA) and set the unit to the Record pause mode.
2. Apply a reference input signal (1kHz, −24dB). Attenuate the output so that its level becomes 0.4V.
3. Record this input signal.
4. Playback the signal recorded in step 3 above, and assure that the output is within the standard value.
5. If it is not within the standard value, adjust **VR7** (L-CH) and **VR8** (R-CH).
6. Repeat the step 2~5 above until the output is within the standard value.

Standard value: 0.4V±0.5dB

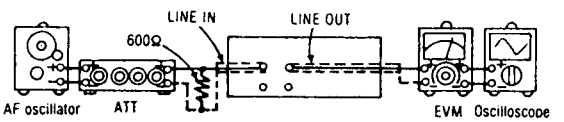

Fig. 11

■ TERMINAL FUNCTION OF IC's

• IC901 (M50746-145SP): MICROCOMPUTER

Pin No.	Mark	I/O Division	Function
1	Vcc	I	Power supply terminal
2	AV_{SS}	—	• Connected to V_{SS}
3	V_{REF}	I	Standard voltage terminal (5V)
4	CRM	O	CUE/REV mute signal • "L" level in muting is off mode. • "H" level in muting is on mode.
5	$\overline{\text{DIR 2}}$	O	Direction indicator signal of deck 2 • "L" level with forward mode. • "OPEN" with reverse mode.
6	MMT	O	Mater mute control signal • "L" level in muting is off mode. • "OPEN" when muting is on mode.
7	LMT	O	Line out mute signal (Not used, open)
8	RMT 2	O	Rec. amp. mute signal of deck 2 • "L" level in mute is off mode. • "H" level in mute is on mode.
9	DMT	O	Line out mute signal • "L" level in muting is off mode. • "OPEN" when muting is on mode.
10	REV 2	—	Connected to GND
11	REV 1	—	Connected to GND
12	KEY 2	I	Key switch scan (DECK 2: STOP, F.F., REW, F. PLAY, R. PLAY, REC., PAUSE, S. START, X2, X1, DOLBY NR)
13	KEY 1	I	Key switch scan (DECK 1: STOP, F.F., REW, PLAY,⇄,⊂⊃,∞)
14	$\overline{\text{PLAY 2}}$	O	Deck 2 Playback LED display/CUE, REV, LED display
15	$\overline{\text{PLAY 1}}$	O	Deck 1 Playback LED display/CUE, REV, LED display
16	$\overline{\text{ARM 2}}$	I	Auto Rec. mute terminal. "L"=KEY ON, "H"=KEY OFF
17	$\overline{\text{REC 1}}$	I	Not used.
18	$\overline{\text{REC 2}}$	O	Deck 2 Rec. mode LED display • "L" level in Deck 2 Rec. mode. • "H" level in other mode.
19	$\overline{\text{REM 2}}$	O	Deck 2 Remote control LED display • "L" level in LED on mode. • "H" level in LED off mode.
20	$\overline{\text{REM 1}}$	O	Deck 1 Remote control LED display • "L" level when LED is on mode. • "H" level when LED is off mode.
21	RENA	O	B side select signal to CD player, used during CD synchro editing mode.
22	SYNC	I	Synchro start signal input from CD player
23	RCS	I	Remote control serial data
24	TREC	I	Timer rec terminal
25	TPLAY	I	Timer play terminal
26	POF	I	Primary AC power detection terminal
27	CNV_{SS}	—	Connected to V_{SS}
28	$\overline{\text{RESET}}$	I	Reset terminal • "L" level when reset is on mode. • "L" → "H" level when reset is off mode.
29	XIN	I	Clock OSC terminal
30	XOUT	O	
31	φ	I	Not used, open.
32	V_{SS}	—	Connected to GND
33	$\overline{\text{TEST}}$	—	Test terminal
34	PWIN	I	Power ON/OFF switch input • "L" level with power ON • "H" level with power OFF
35	REEL 1	I	Deck 1 Rotation pulse signal of reel table

Pin No.	Mark	I/O Division	Function
36	REEL 2	I	Deck 2 Rotation pulse signal of reel table
37	RINH 2	I	Deck 2 Reverse Rec. Inh. switch select terminal
38	FINH 2	I	Deck 2 Forward Rec. Inh. switch select terminal
39	MODE 1	I	Deck 1 mechanism mode switch select termnal
40	HALF 1	I	Deck 1 cassette half detection switch • "L" level in half detection switch is on mode. • "H" level in half detection switch is off mode.
41	MPX	O	MPX filter IN/OUT control signal • "OPEN" with Dolby NR "IN" • "L" level with Dolby NR "OUT"
42	$\overline{T2}$	O	Deck 2 play select signal • "L" level with PLAY/CUE/REVIEW mode. • "H" level with any other mode.
43	$\overline{X2}$	O	X2 Speed LED display • "L" level when LED is on mode. • "OPEN" when other mode.
44	$\overline{X1}$	O	X1 Speed LED display • "L" level when LED is on mode. • "OPEN" when other mode.
45	T/S	I	Connected to GND
46	$\overline{C}$	O	Dolby C LED display • "L" level when LED is on mode. • "OPEN" when other mode.
47	$\overline{B}$	O	Dolby B LED display • "L" level when LED is on mode. • "OPEN" when other mode.
48	$\overline{ENC}$	O	Encode/Decode select signal • "L" level in encode mode. • "H" level in decode mode.
49	C/M	I	Deck 1 one-way mechanism select terminal (Connected to GND)
50	$\overline{PWOUT}$	O	Power ON/OFF output terminal
51	$\overline{SDATA}$	O	Serial data output (Not used, open)
52	P04 (∞)	O	Reverse mode (∞) LED display.
53	P03 (⇄)	O	Reverse mode (⇄) LED display.
54	P02 (⇄)	O	Reverse mode (⇄) LED display.
55	DIR 1	O	Direction indicator signal of deck 1 (Not used, open)
56	FINH 1	I	Deck 1 Forward Rec. Inh. switch select terminal
57	HSP 1	O	Deck 1 Motor speed control signal • "L" level when normal speed (X1). • "H" level when high speed (X2).
58	SOL 1	O	Deck 1 Solenoid control signal • "H" level when solenoid is on mode. • "L" level when solenoid is off mode.
59	MOTOR 1	O	Deck 1 Motor control signal • "H" level when motor is on mode. • "L" level when motor is off mode.
60	MODE 2	I	Deck 2 mechanism mode switch select terminal
61	HALF 2	I	Deck 2 cassette half detection switch • "L" level in half detection switch in on mode. • "H" level in half detection switch in off mode.
62	HSP 2	O	Deck 2 Motor speed control signal • "H" level when normal speed (X1). • "L" level when high speed (X2).
63	SOL 2	O	Deck 2 Solenoid control signal • "H" level when solenoid is on mode. • "L" level when solenoid is off mode.
64	MOTOR 2	O	Deck 2 Motor control signal • "H" level when motor is on mode. • "L" level when motor is off mode.

■ PRINTED CIRCUIT BOARDS

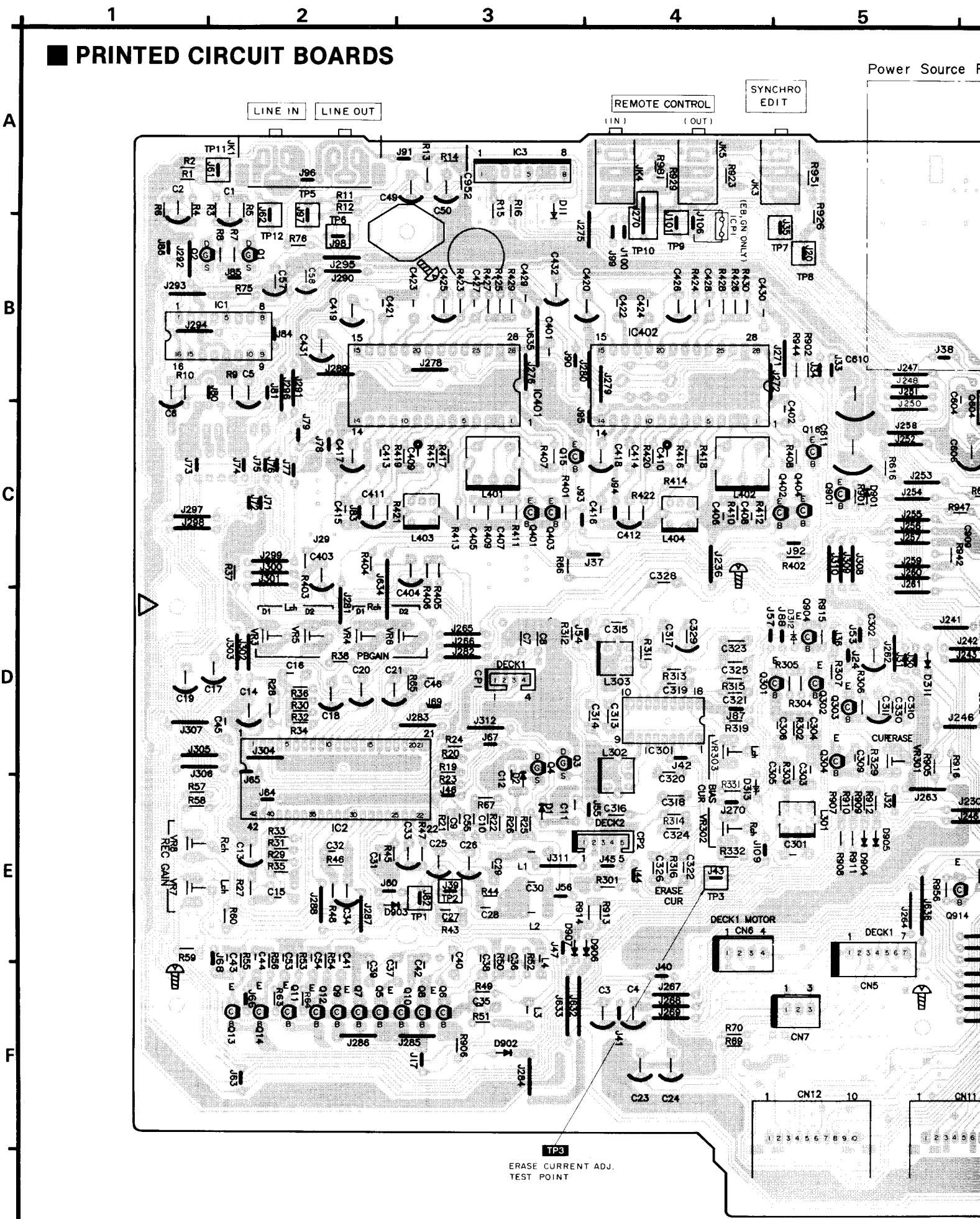

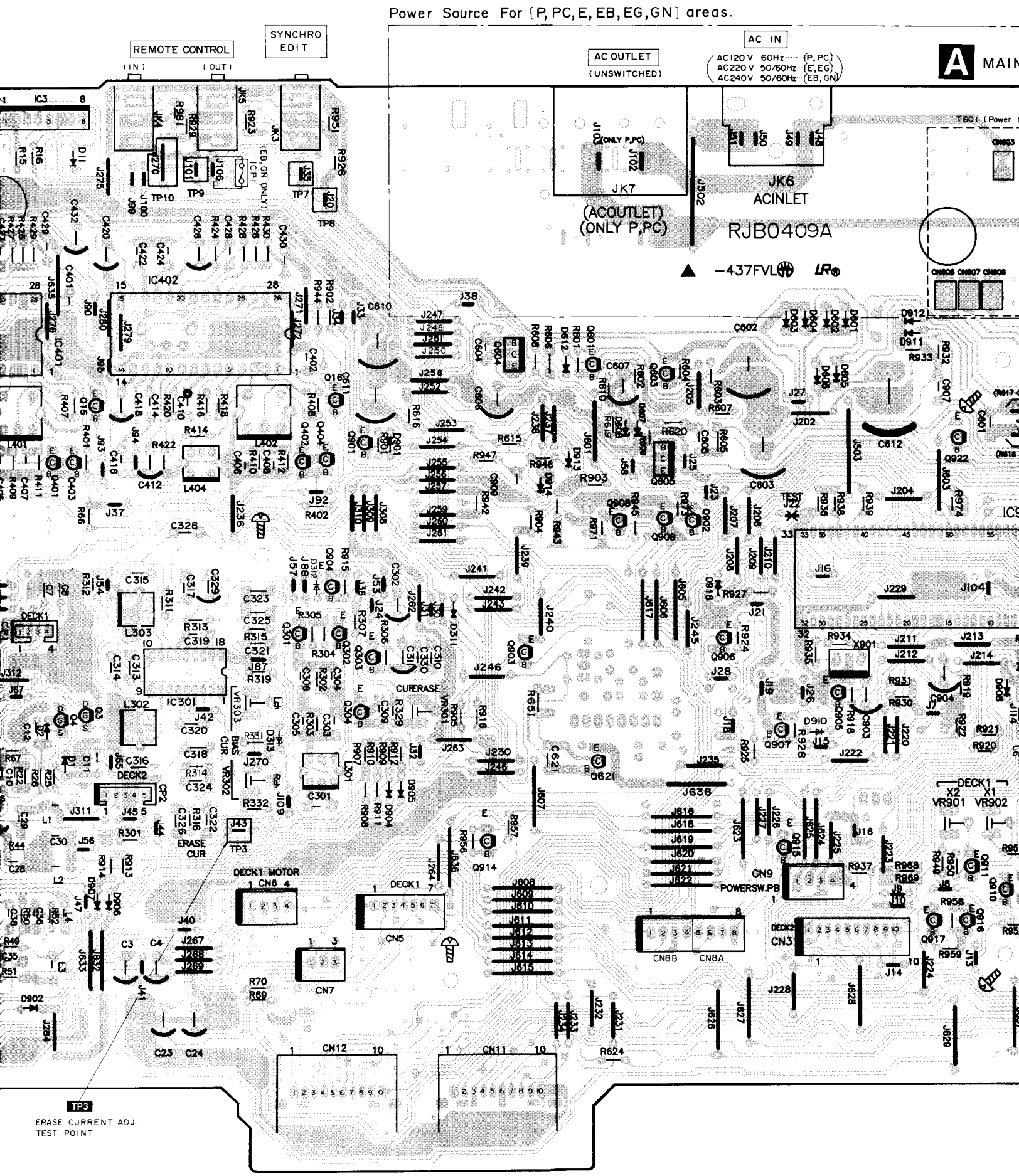
Power Source For [P, PC, E, EB, EG, GN] areas.
A MAIN
REMOTE CONTROL
(IN)
(OUT)
SYNCHRO EDIT
AC OUTLET
(UNSWITCHED)
AC IN
AC120V 60Hz (P, PC)
AC220V 50/60Hz (E, EG)
AC240V 50/60Hz (EB, GN)
JK7
(ACOUTLET)
(ONLY P,PC)
JK6
ACINLET
RJB0409A
-437FVL
T601 (Power
IC402
IC401
IC301
DECK1
DECK2
CUREASE
ERASE CUR
DECK1 MOTOR
CN6
CN5
CN7
CN12
CN11
CN9
POWERSW.PB
CN8B
CN8A
CN3
X2
X1
VR901
VR902
TP3
ERASE CURRENT ADJ
TEST POINT

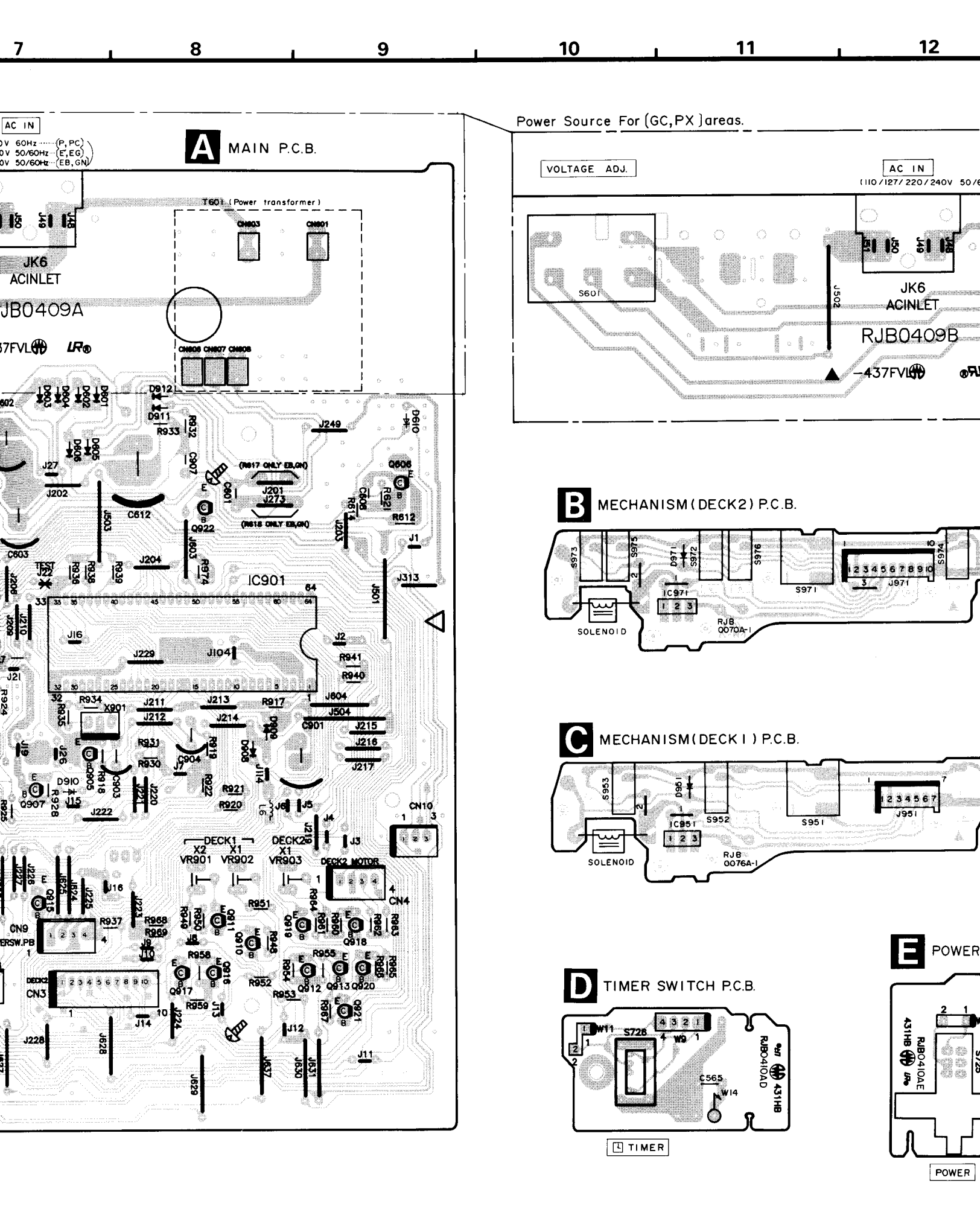
7
8
9
10
11
12
A MAIN P.C.B.
AC IN
T601 (Power transformer)
JK6
ACINLET
JB0409A
IC901
DECK1
DECK2
DECK2 MOTOR
CN9
CN3
CN4
CN10
Power Source For (GC,PX) areas.
VOLTAGE ADJ.
AC IN
(110/127/220/240V 50/6
S601
JK6
ACINLET
RJB0409B
B MECHANISM (DECK2) P.C.B.
SOLENOID
RJB 0070A-1
C MECHANISM (DECK1) P.C.B.
SOLENOID
RJB 0076A-1
D TIMER SWITCH P.C.B.
S728
C565
RJB0410AD
431HB
TIMER
E POWER
RJB0410AE
431HB
POWER

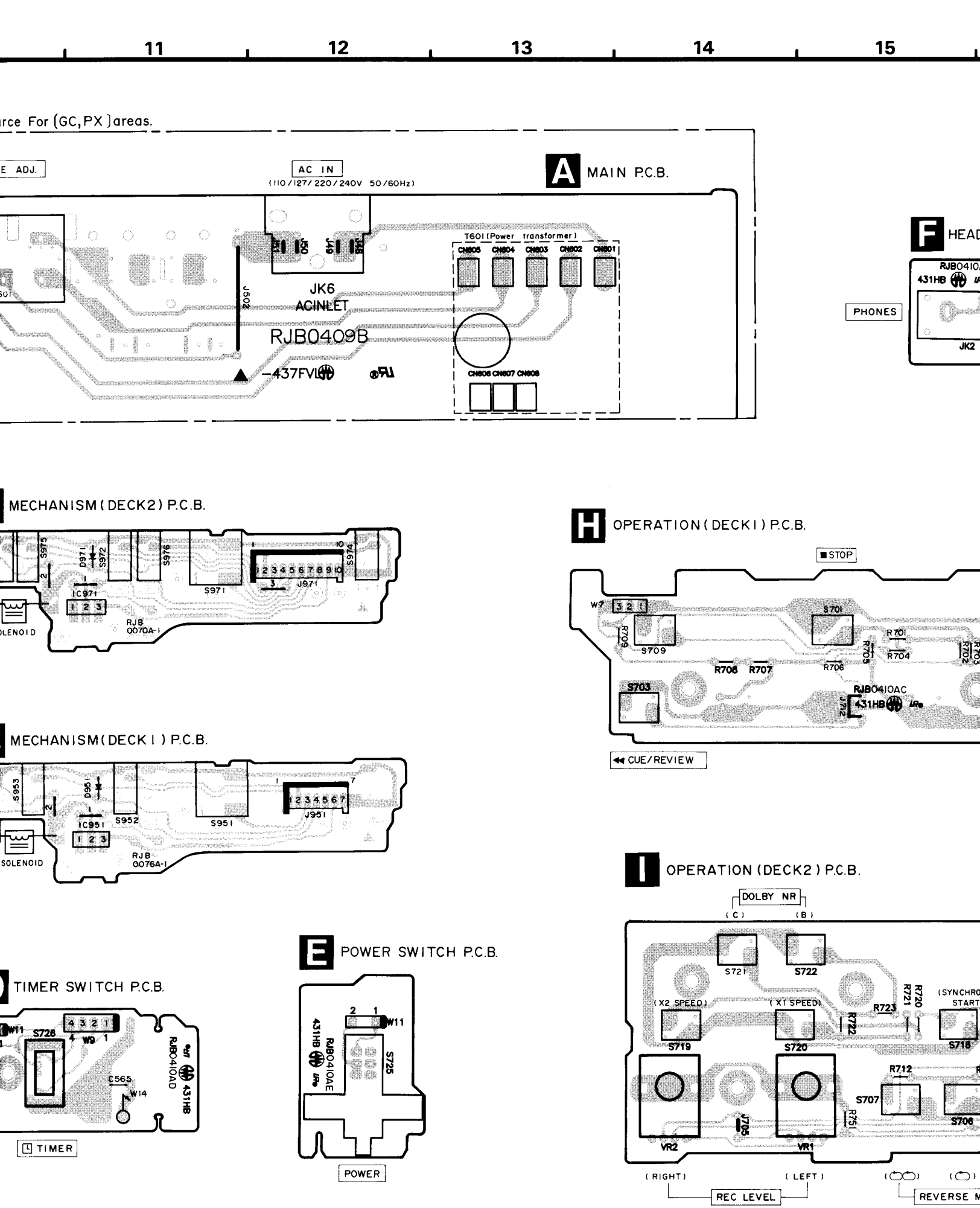
11
12
13
14
15
rce For (GC, PX) areas.
E ADJ.
AC IN
(110/127/220/240V 50/60Hz)
A MAIN P.C.B.
T601 (Power transformer)
CN605 CN604 CN603 CN602 CN601
J502
JK6
ACINLET
RJB0409B
-437FV
CN606 CN607 CN608
F HEAD
RJB0410
431HB
PHONES
JK2
MECHANISM (DECK2) P.C.B.
S975
D971
S972
S976
S974
S971
J971
IC971
RJB
0070A-1
OLENOID
H OPERATION (DECK1) P.C.B.
STOP
W7
S701
S709
R709
R701
R705
R704
R702
R708
R707
R706
S703
RJB0410AC
431HB
J712
CUE/REVIEW
MECHANISM (DECK1) P.C.B.
S953
D951
S952
S951
J951
IC951
RJB
0076A-1
SOLENOID
I OPERATION (DECK2) P.C.B.
DOLBY NR
(C)
(B)
S721
S722
(X2 SPEED)
(X1 SPEED)
R723
R722
R721
R720
(SYNCHRO START)
S719
S720
S718
R712
S707
S706
R751
J705
VR2
VR1
(RIGHT)
(LEFT)
REC LEVEL
REVERSE M
TIMER SWITCH P.C.B.
W11
S726
W9
C565
W14
RJB0410AD
431HB
TIMER
E POWER SWITCH P.C.B.
W11
S725
RJB0410AE
431HB
POWER

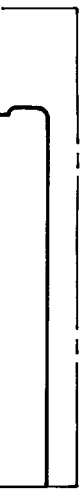

F HEADPHONES P.C.B.

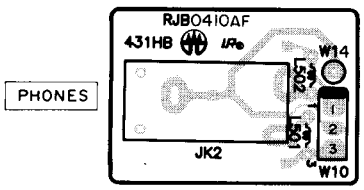

G LED METER P.C.B.

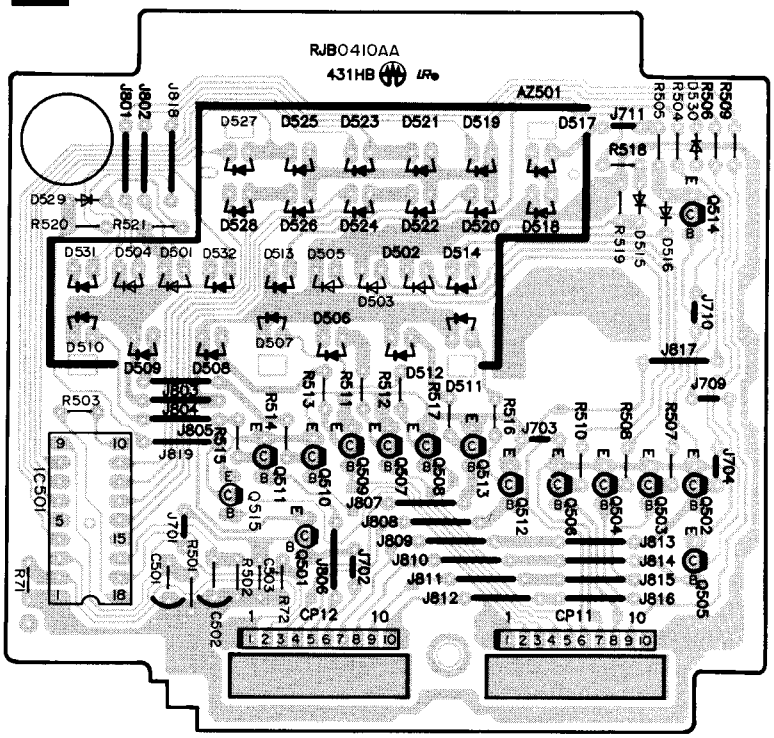

(DECK1) P.C.B.

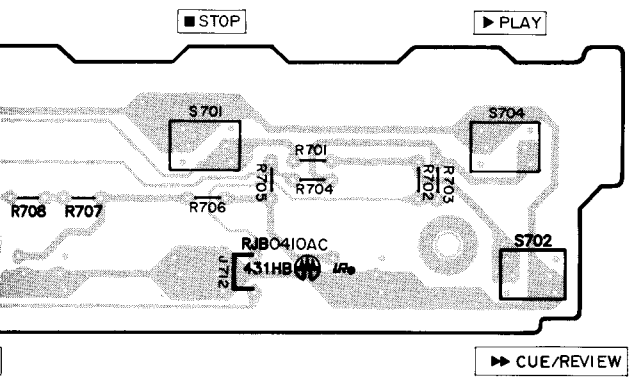

ATION (DECK2) P.C.B.

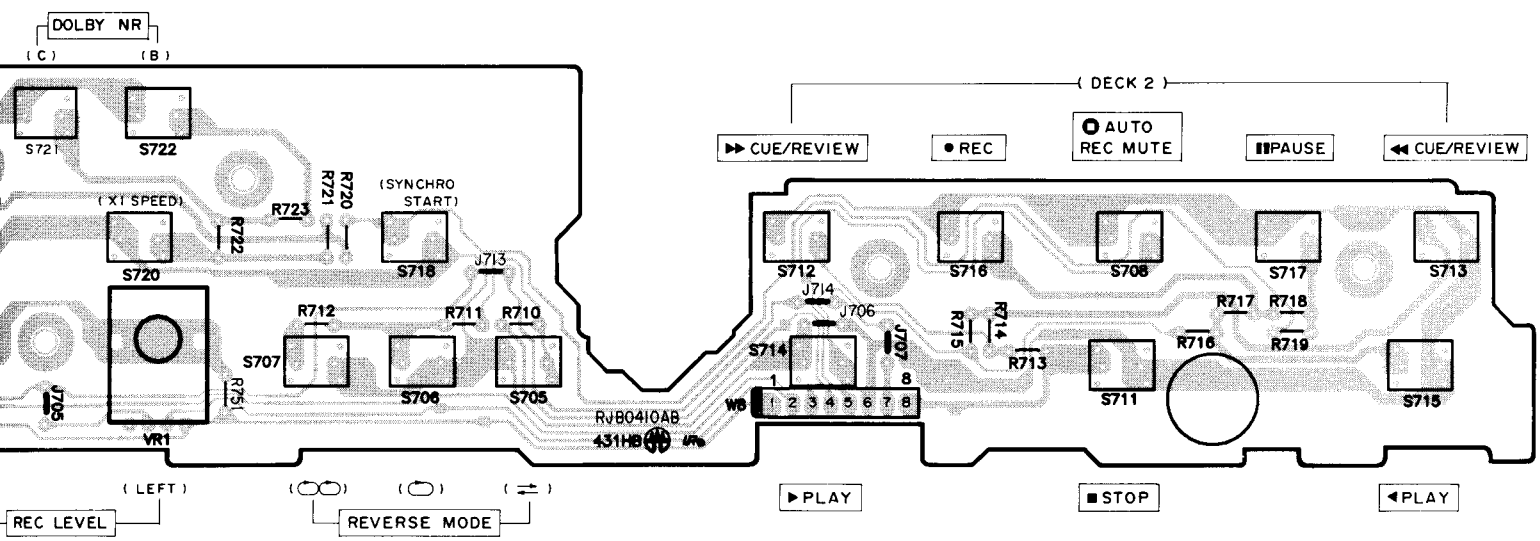

■ SCHEMATIC DIAGRAM

(Parts list on pages 39~42.)

(This schematic diagram may be modified at any time with development of new technology.)

Notes:

- S601: Voltage selector switch in "**240**" position. (110V ← 127V ← 220V ← 240V) ((GC, PX) areas)
- S701: DECK 1 Stop switch in "**off**" position.
- S702: DECK 1 F.F. switch in "**off**" position.
- S703: DECK 1 Rew. switch in "**off**" position.
- S704: DECK 1 For. Playback switch in "**off**" position.
- S705: Reverse mode switch (⇄) in "**off**" position.
- S706: Reverse mode switch (⊂⊃) in "**off**" position.
- S707: Reverse mode switch (∞) in "**off**" position.
- S708: DECK 2 Auto rec. mute switch in "**off**" position.
- S709: DECK 1 Rev. Playback switch in "**off**" position.
- S711: DECK 2 Stop switch in "**off**" position.
- S712: DECK 2 F.F. switch in "**off**" position.
- S713: DECK 2 Rew. switch in "**off**" position.
- S714: DECK 2 For. Playback switch in "**off**" position.
- S715: DECK 2 Rev. Playback switch in "**off**" position.
- S716: DECK 2 Record switch in "**off**" position.
- S717: DECK 2 Pause switch in "**off**" position.
- S718: Synchro-start switch in "**off**" position.
- S719: Editing tape speed selector (X2) in "**off**" position.
- S720: Editing tape speed selector (X1) in "**off**" position.
- S721: Dolby NR C switch in "**off**" position.
- S722: Dolby NR B switch in "**off**" position.
- S725: Power switch in "**on**" position.
- S726: Timer switch in "**off**" position.
- S951: DECK 1 Mode switch in "**off**" position.
- S952: DECK 1 Cassette half detection switch in "**off**" position.
- S953: DECK 1 ATS (CrO_2) switch in "**off**" position.
- S971: DECK 2 Mode switch in "**off**" position.
- S972: DECK 2 Cassette half detection switch in "**off**" position.
- S973: DECK 2 Rev. Rec Inhibit switch in "**off**" position.
- S974: DECK 2 For. Rec Inhibit switch in "**off**" position.
- S975: DECK 2 ATS (CrO_2) switch in "**off**" position.
- S976: DECK 2 ATS (Metal) switch in "**off**" position.
- Resistance are in ohms (Ω), 1/4 watt unless specified otherwise.
  1K=1,000 (Ω), 1M=1,000k (Ω)
- Capacity are in micro-farads (μF) unless specified otherwise.
- All voltage values shown in circuitry are under no signal condition and playback mode with volume control at minimum position otherwise specified.
  ( ).....Voltage values at record mode.
  For measurement us EVM.
- Important safety notice
  Components identified by ⚠ mark have special characteristics important for safety. When replacing any of these components, use only manufacturer's specified parts.
- (▬▬ <+B> ▬▬) indicates +B (bias).
- (▬▬ <−B> ▬▬) indicates −B (bias).
- (⋯⋯) indicates the flow of the playback signal.
- (⟹) indicates the flow of the record signal.

∗ Caution!

IC and LSI are sensitive to static electricity.
Secondary trouble can be prevented by taking care during repair.

∗ Cover the parts boxes made of plastics with aluminum foil.
∗ Ground the soldering iron.
∗ Put a conductive mat on the work table.
∗ Do not touch the legs of IC or LSI with the fingers directly.

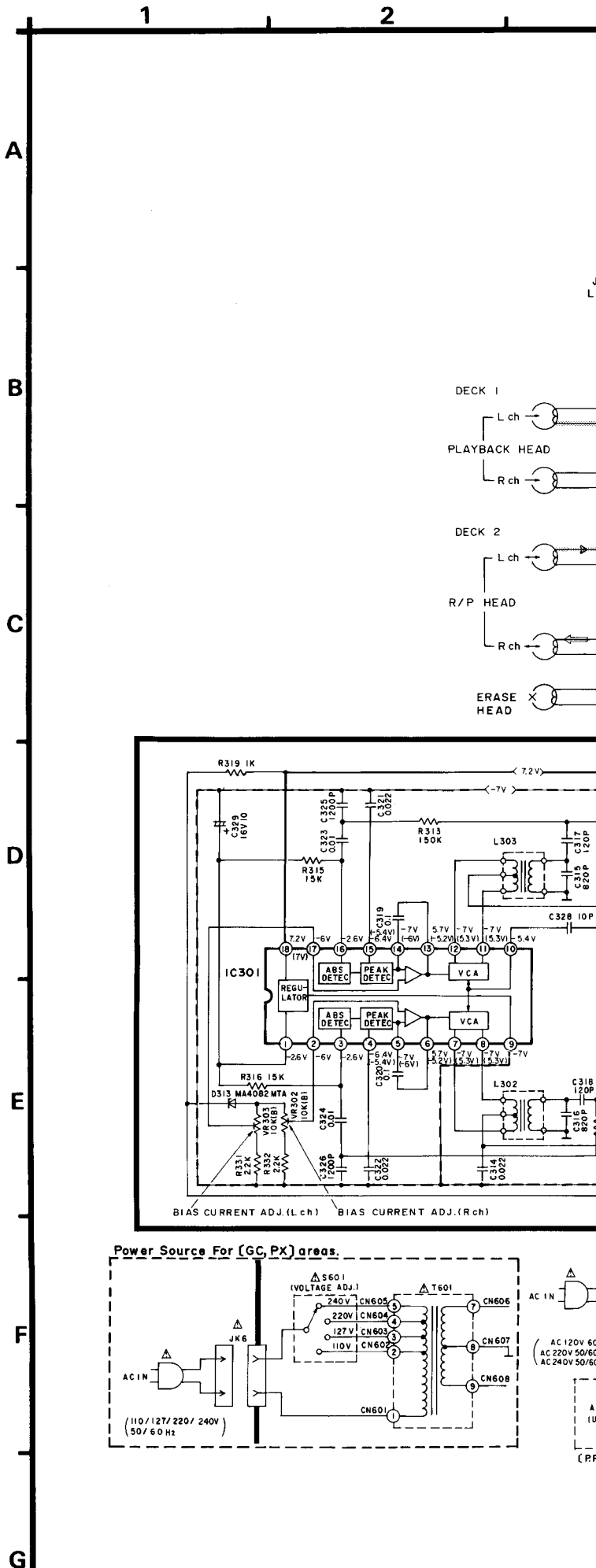

1 2 3 4 5

A MAIN CIRCUIT

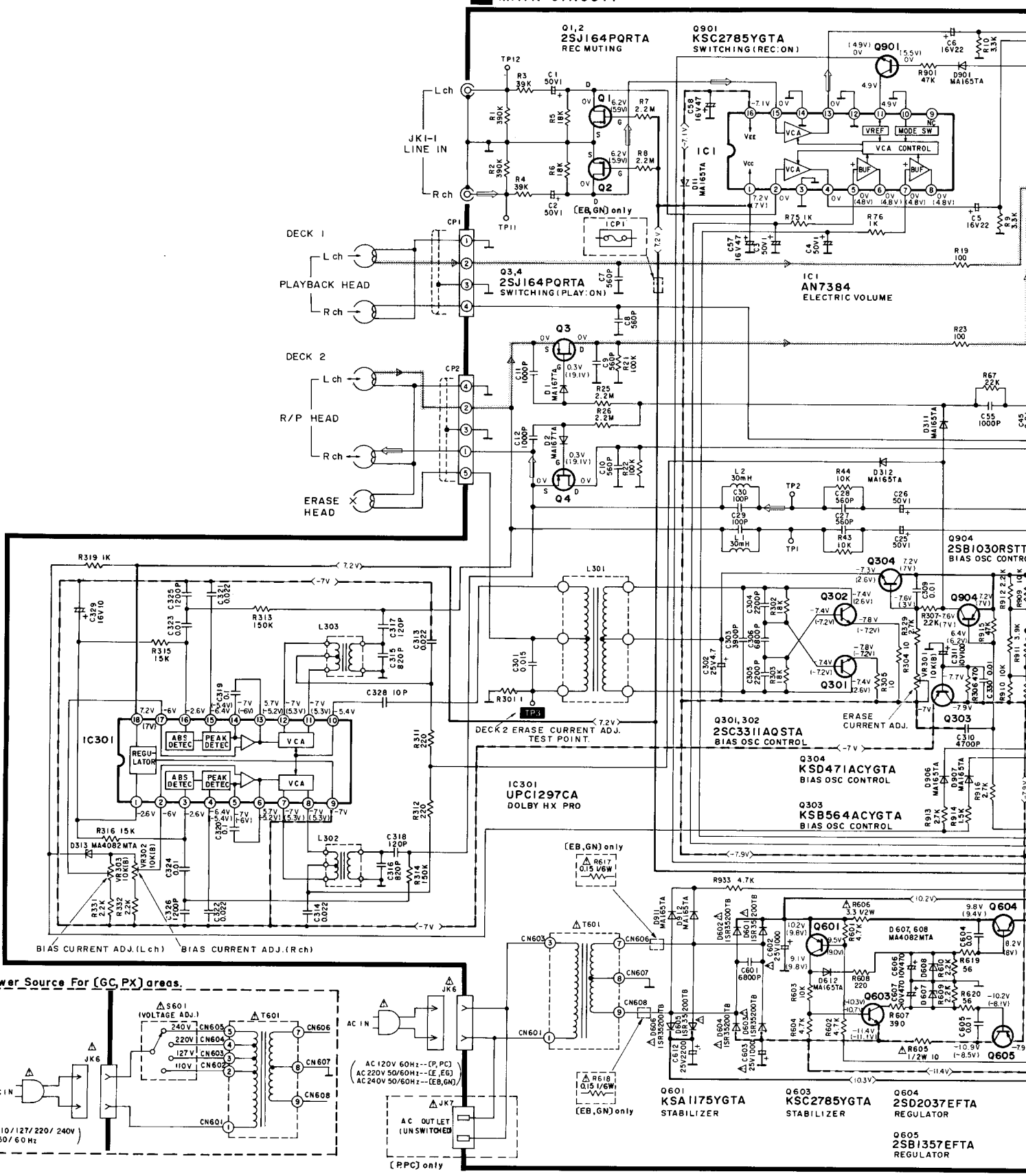

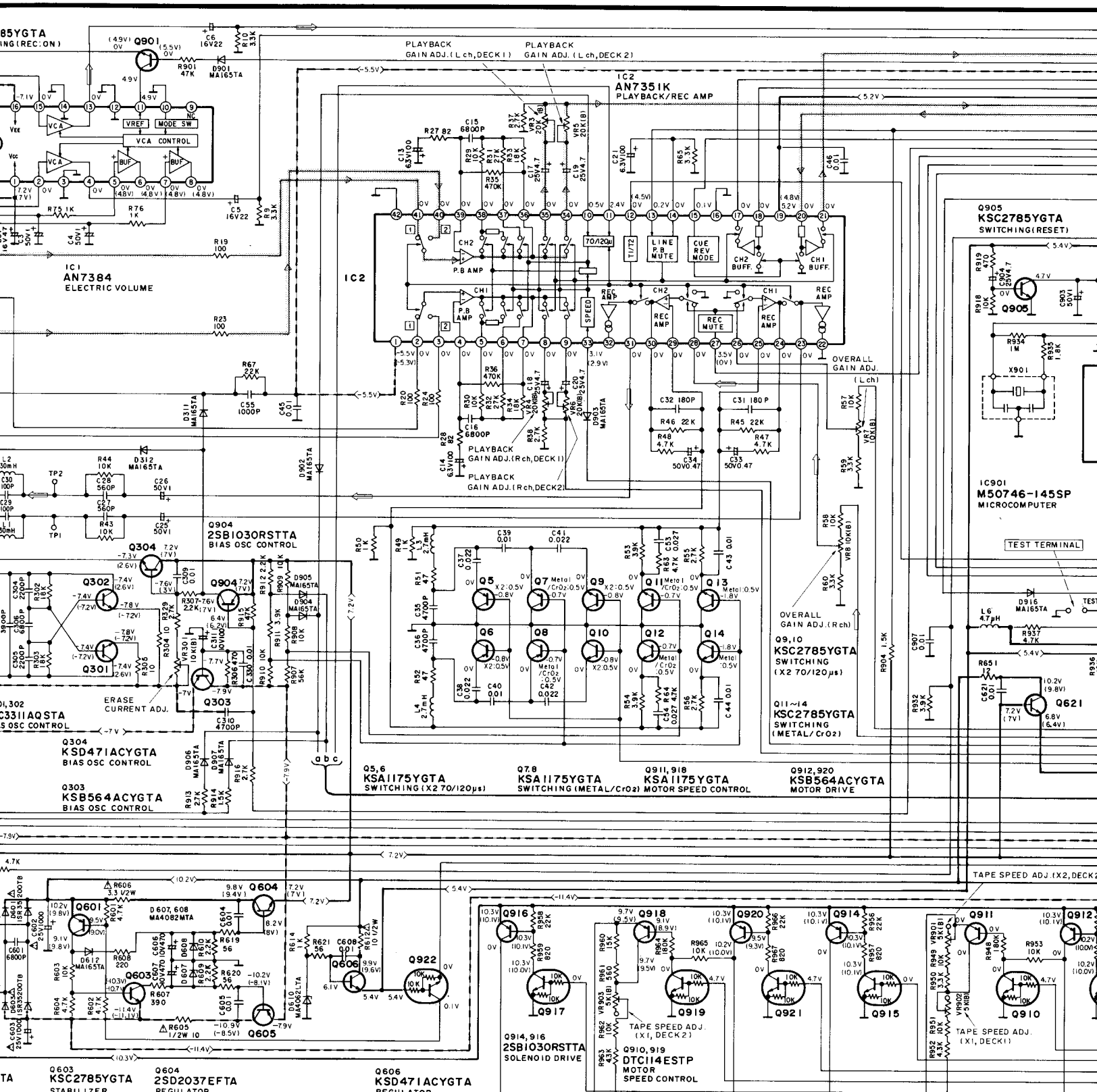
5
6
7
8
9
IC1
AN7384
ELECTRIC VOLUME
IC2
AN7351K
PLAYBACK/REC AMP
PLAYBACK GAIN ADJ.(L ch,DECK1)
PLAYBACK GAIN ADJ.(L ch,DECK2)
PLAYBACK GAIN ADJ.(R ch,DECK1)
PLAYBACK GAIN ADJ.(R ch,DECK2)
OVERALL GAIN ADJ. (L ch)
OVERALL GAIN ADJ.(R ch)
Q905
KSC2785YGTA
SWITCHING(RESET)
IC901
M50746-145SP
MICROCOMPUTER
TEST TERMINAL
Q904
2SB1030RSTTA
BIAS OSC CONTROL
Q304
KSD471ACYGTA
BIAS OSC CONTROL
Q303
KSB564ACYGTA
BIAS OSC CONTROL
ERASE CURRENT ADJ.
Q5,6
KSA1175YGTA
SWITCHING (X2 70/120μs)
Q7,8
KSA1175YGTA
SWITCHING (METAL/CrO2)
Q9,10
KSC2785YGTA
SWITCHING (X2 70/120μs)
Q11~14
KSC2785YGTA
SWITCHING (METAL/CrO2)
Q911,918
KSA1175YGTA
MOTOR SPEED CONTROL
Q912,920
KSB564ACYGTA
MOTOR DRIVE
TAPE SPEED ADJ.(X2,DECK2)
TAPE SPEED ADJ.(X1,DECK2)
TAPE SPEED ADJ.(X1,DECK1)
Q914,916
2SB1030RSTTA
SOLENOID DRIVE
Q910,919
DTC114ESTP
MOTOR SPEED CONTROL
Q915,917
DTC114ESTP
SOLENOID DRIVE
Q603
KSC2785YGTA
STABILIZER
Q604
2SD2037EFTA
REGULATOR
Q605
2SB1357EFTA
REGULATOR
Q606
KSD471ACYGTA
REGULATOR
Q922
DTC114ESTP
SWITCHING

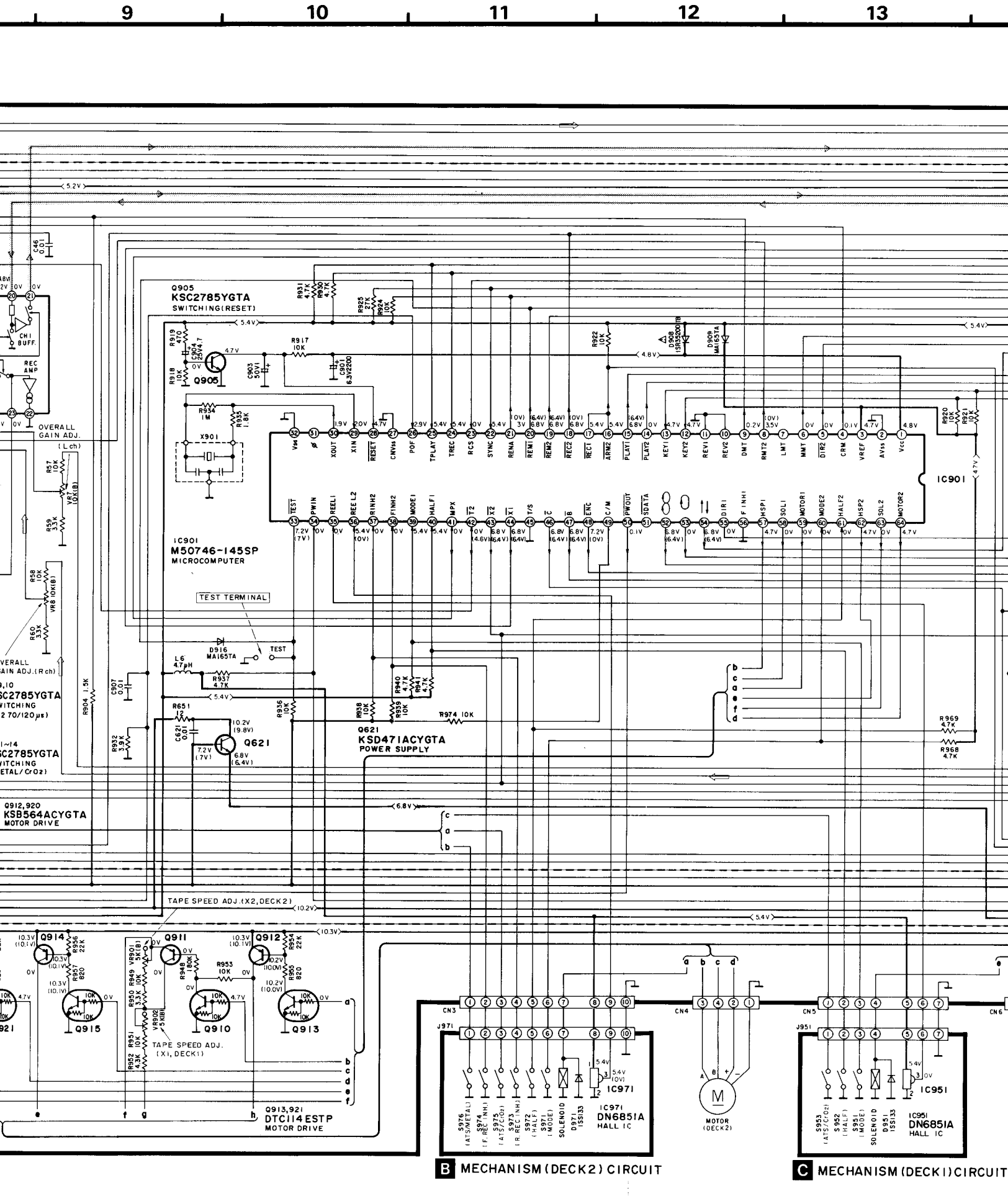
9
10
11
12
13
Q905
KSC2785YGTA
SWITCHING(RESET)
IC901
M50746-145SP
MICROCOMPUTER
TEST TERMINAL
Q621
KSD471ACYGTA
POWER SUPPLY
Q912,920
KSB564ACYGTA
MOTOR DRIVE
TAPE SPEED ADJ.(X2,DECK2)
TAPE SPEED ADJ.
(X1, DECK1)
Q913,921
DTC114ESTP
MOTOR DRIVE
OVERALL
GAIN ADJ.
(L ch)
OVERALL
GAIN ADJ.(R ch)
CH
BUFF.
REC
AMP
IC971
DN6851A
HALL IC
IC951
DN6851A
HALL IC
MOTOR
(DECK2)
B MECHANISM (DECK2) CIRCUIT
C MECHANISM (DECK1) CIRCUIT

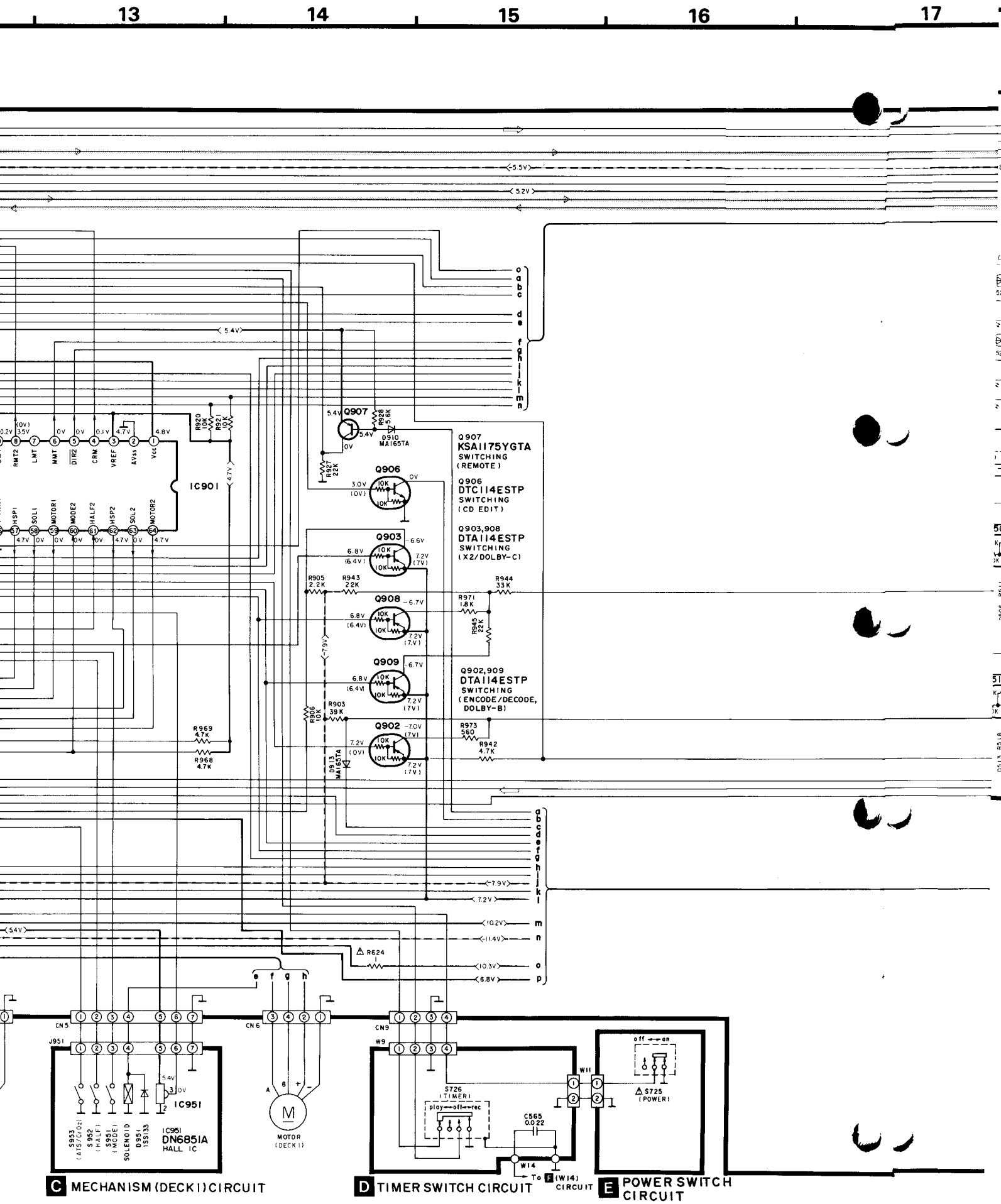
13
14
15
16
17
IC901
Q907
KSA1175YGTA
SWITCHING
(REMOTE)
Q906
DTC114ESTP
SWITCHING
(CD EDIT)
Q903,908
DTA114ESTP
SWITCHING
(X2/DOLBY-C)
Q902,909
DTA114ESTP
SWITCHING
(ENCODE/DECODE,
DOLBY-B)
Q903
Q908
Q909
Q902
D910
MA165TA
D913
MA165TA
R920
10K
R921
10K
R928
5.6K
R927
22K
R905
2.2K
R943
2.2K
R944
33K
R971
1.8K
R945
22K
R903
39K
R906
10K
R973
560
R942
4.7K
R969
4.7K
R968
4.7K
R624
RMT2
LMT
MMT
DIR2
CRM
VREF
AVss
Vcc
HSP1
SOL1
MOTOR1
MODE2
HALF2
HSP2
SOL2
MOTOR2
CN5
CN6
CN9
J951
W9
W11
W14
IC951
DN6851A
HALL IC
S953
(ATSF/CO2)
S952
(HALF)
S951
(MODE)
SOLENOID
D951
1SS133
MOTOR
(DECK1)
S726
(TIMER)
play off rec
C565
0.022
S725
(POWER)
off on
To F (W14)
CIRCUIT
C MECHANISM (DECK1) CIRCUIT
D TIMER SWITCH CIRCUIT
E POWER SWITCH
CIRCUIT

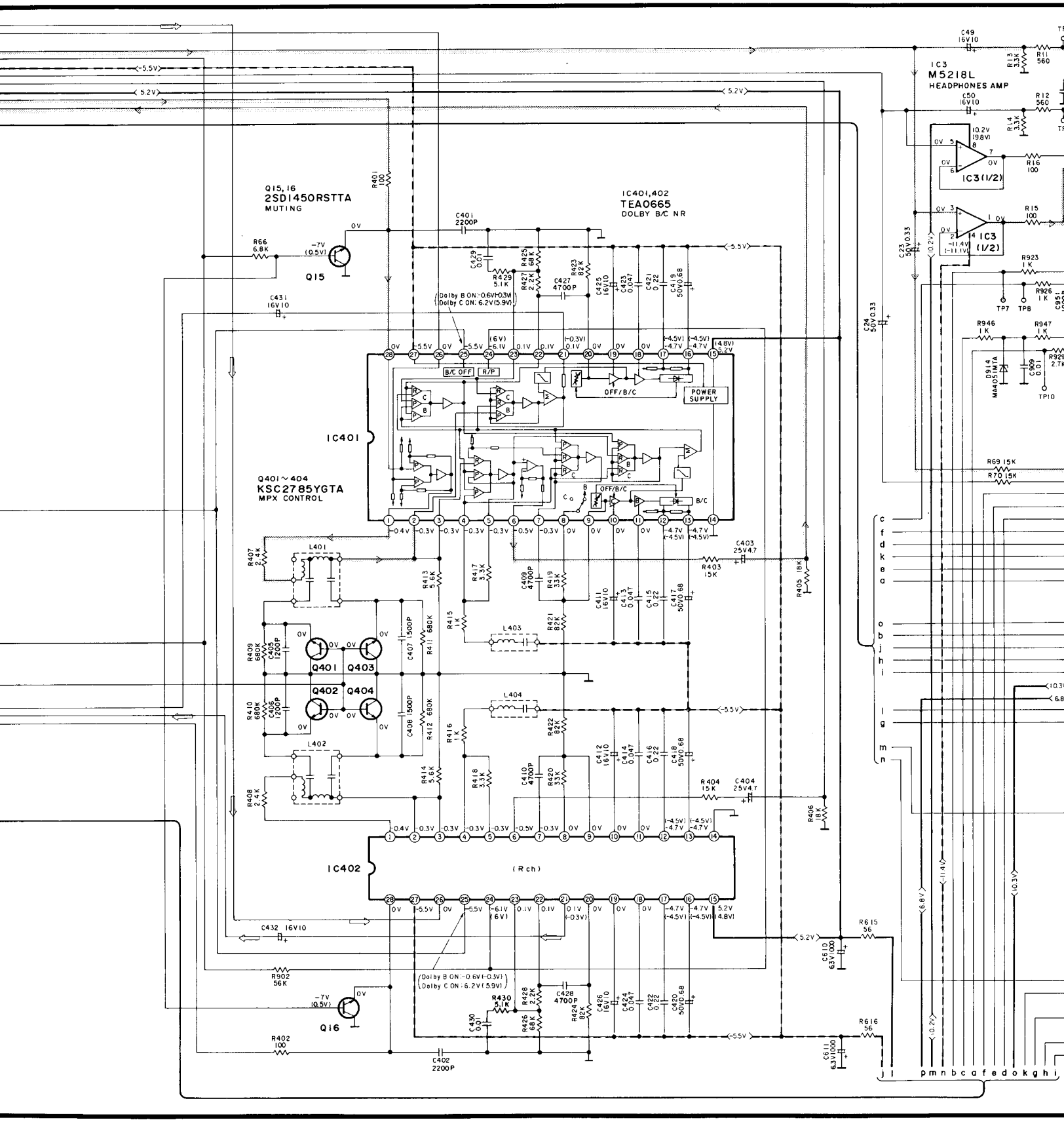
18
19
20
21
22
Q15, 16
2SD1450RSTTA
MUTING
IC401,402
TEA0665
DOLBY B/C NR
IC401
Q401~404
KSC2785YGTA
MPX CONTROL
IC402
(R ch)
IC3
M5218L
HEADPHONES AMP
IC3(1/2)
IC3 (1/2)
POWER SUPPLY
B/C OFF
R/P
OFF/B/C
B/C
Q15
Q16
Q401
Q402
Q403
Q404
L401
L402
L403
L404
Dolby B ON:-0.6V(-0.3V)
Dolby C ON: 6.2V(5.9V)
TP7
TP8
TP10

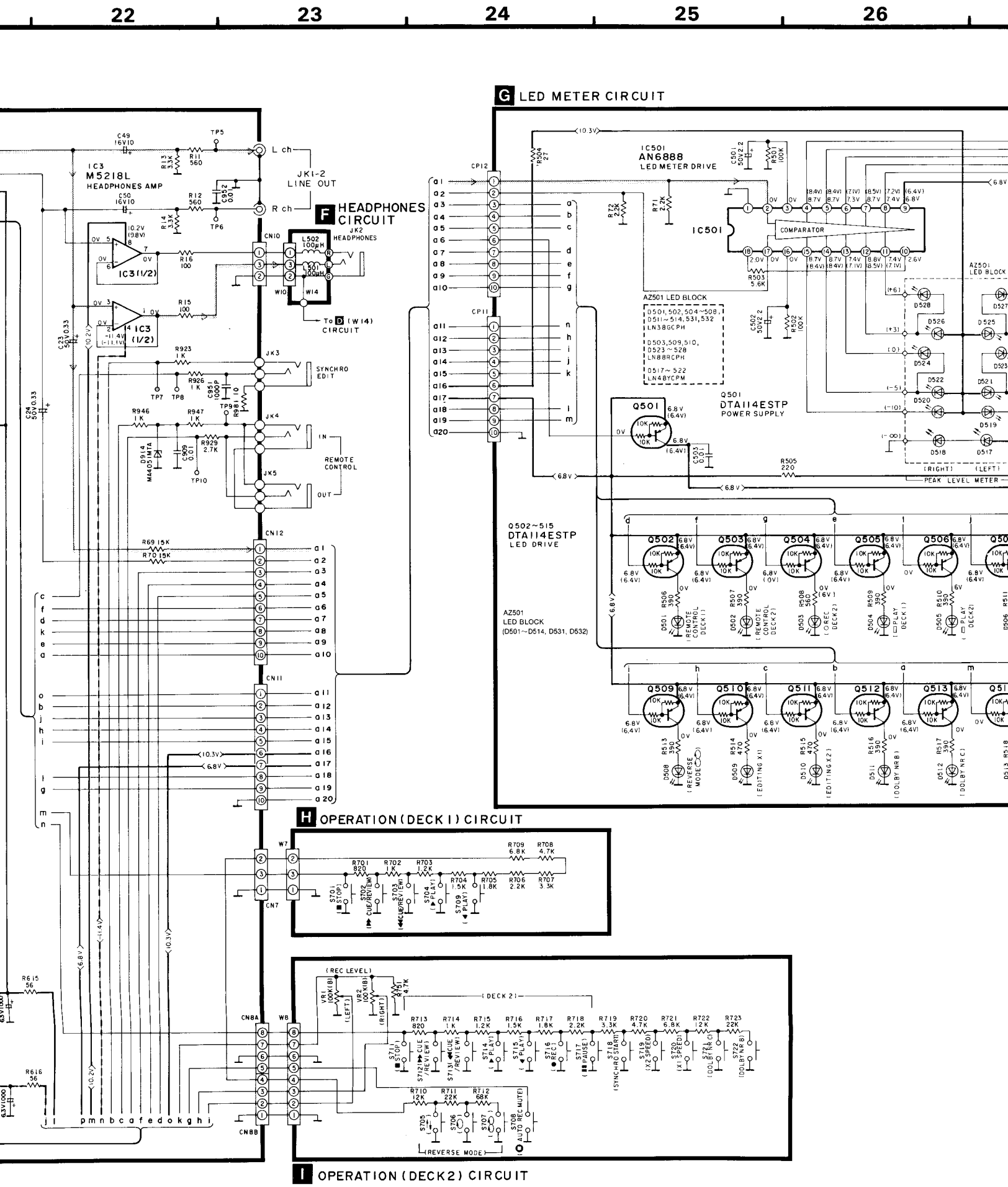
22
23
24
25
26
G LED METER CIRCUIT
F HEADPHONES CIRCUIT
H OPERATION (DECK 1) CIRCUIT
I OPERATION (DECK 2) CIRCUIT
IC3
M5218L
HEADPHONES AMP
IC3 (1/2)
IC3 (1/2)
JK1-2
LINE OUT
L ch
R ch
JK2
HEADPHONES
L502 100μH
L501 100μH
To D (W14) CIRCUIT
JK3
SYNCHRO EDIT
JK4
IN
REMOTE CONTROL
JK5
OUT
CN10
CN11
CN12
CN7
CN8A
CN8B
W7
W8
W10
W14
CP11
CP12
IC501
AN6888
LED METER DRIVE
COMPARATOR
AZ501 LED BLOCK
D501,502,504~508, D511~514,531,532 LN38GCPH
D503,509,510, D523~528 LN88RCPH
D517~522 LN48YCPM
Q501
DTA114ESTP
POWER SUPPLY
Q502~515
DTA114ESTP
LED DRIVE
AZ501
LED BLOCK
(D501~D514, D531, D532)
PEAK LEVEL METER
(RIGHT)
(LEFT)
(REC LEVEL)
(DECK 2)
(REVERSE MODE)

25 26 27 28

LED METER CIRCUIT

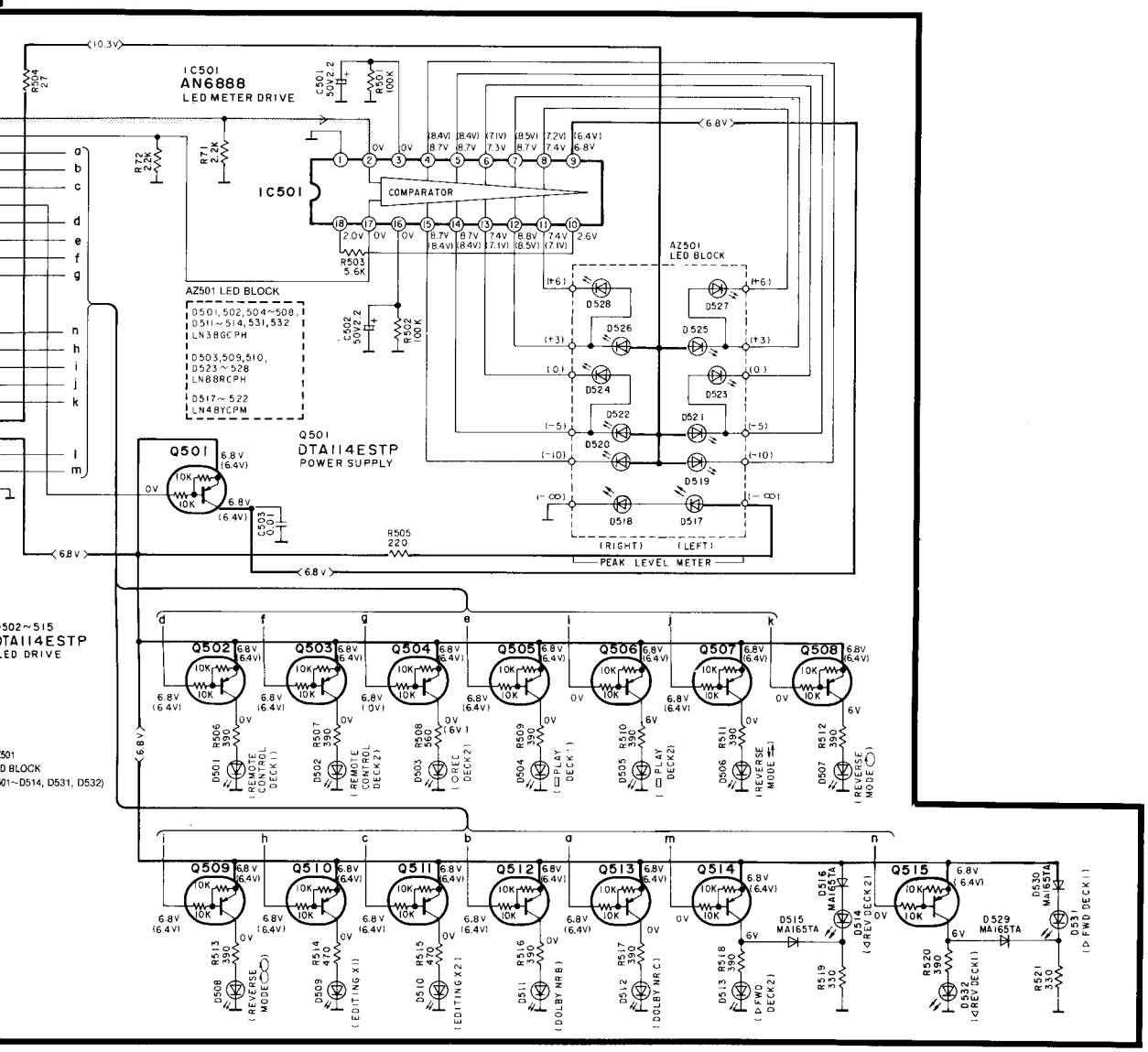

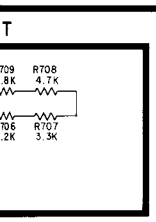

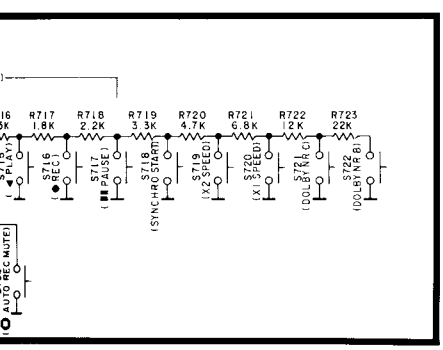

IT

■ TERMINAL
TRANS

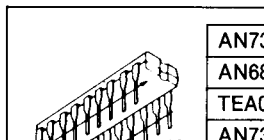

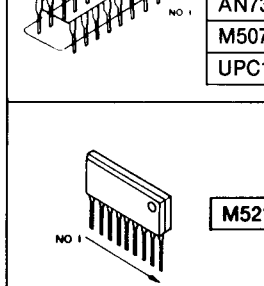

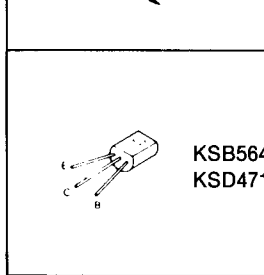

DTC114ESTP

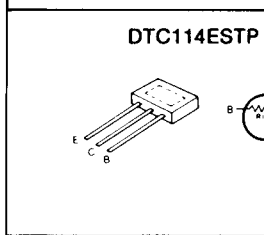

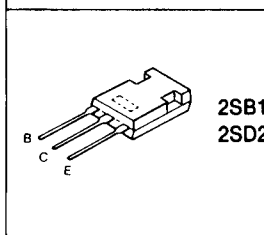

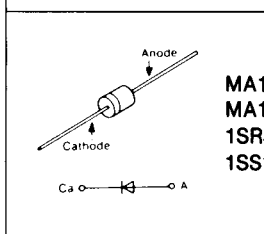

– LED BLOC

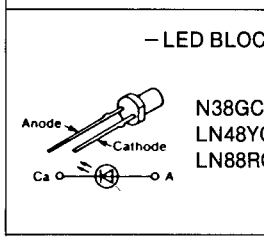

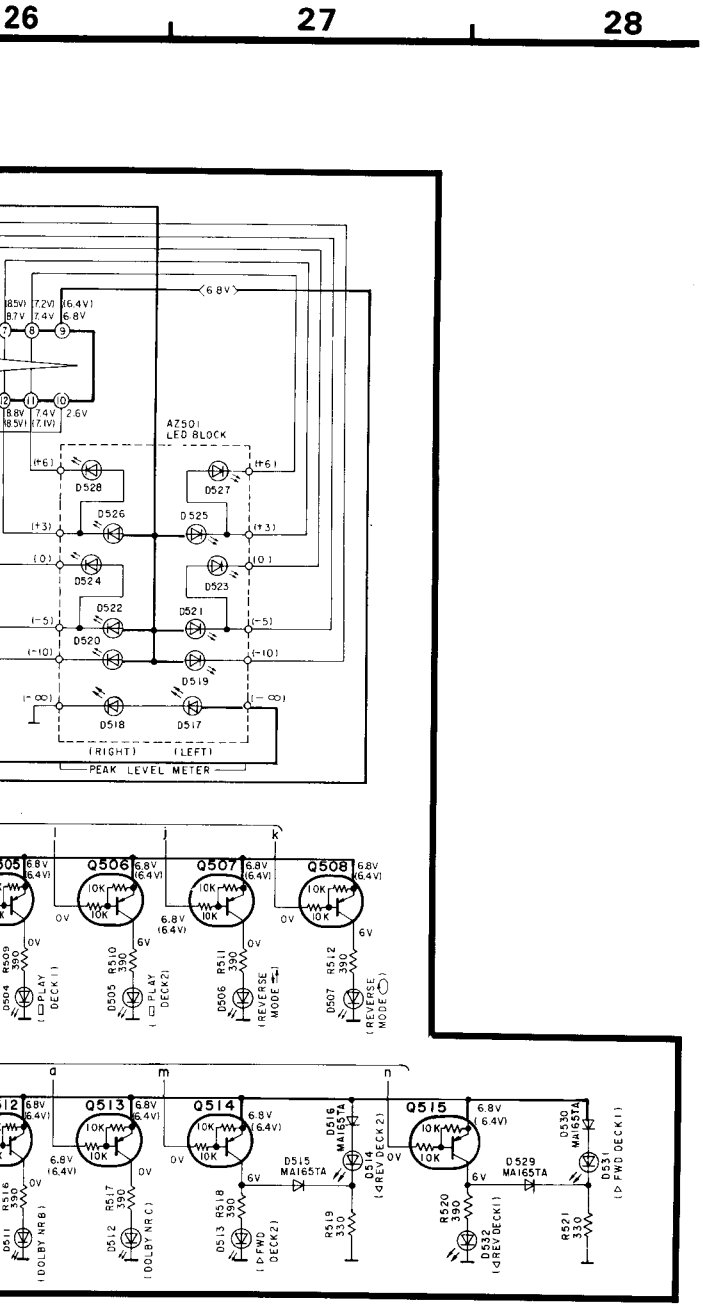

■ TERMINAL GUIDE OF IC's, TRANSISTORS AND DIODES

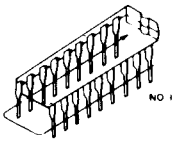

AN7384	16 Pin
AN6888	18 Pin
TEA0665	28 Pin
AN7351K	42 Pin
M50746-145SP	64 Pin
UPC1297CA	18 Pin

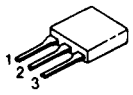

DN6851A	3 Pin

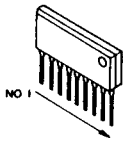

M5218L	8 Pin

2SJ164PQRTA

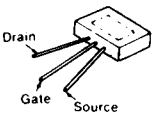

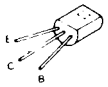

KSB564ACYGTA
KSD471ACYGTA

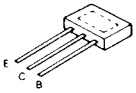

2SC3311AQSTA
2SD1450RSTTA
2SB1030RSTTA

DTC114ESTP

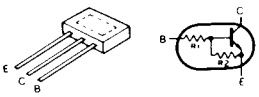

DTA114ESTP

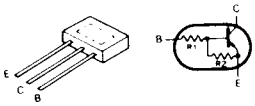

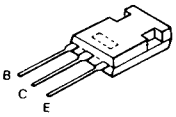

2SB1357EFTA
2SD2037EFTA

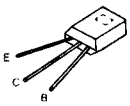

KSA1175YGTA
KSC2785YGTA

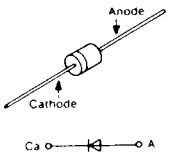

MA167TA
MA165TA
1SR35200TB
1SS133

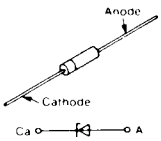

MA4062LTA
MA4082MTA
MA4051MTA

– LED BLOCK –

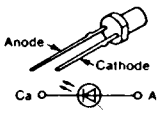

N38GCPH (GREEN)
LN48YCPM (AMBER)
LN88RCPH (ORANGE)

BLOCK DIAGRAM

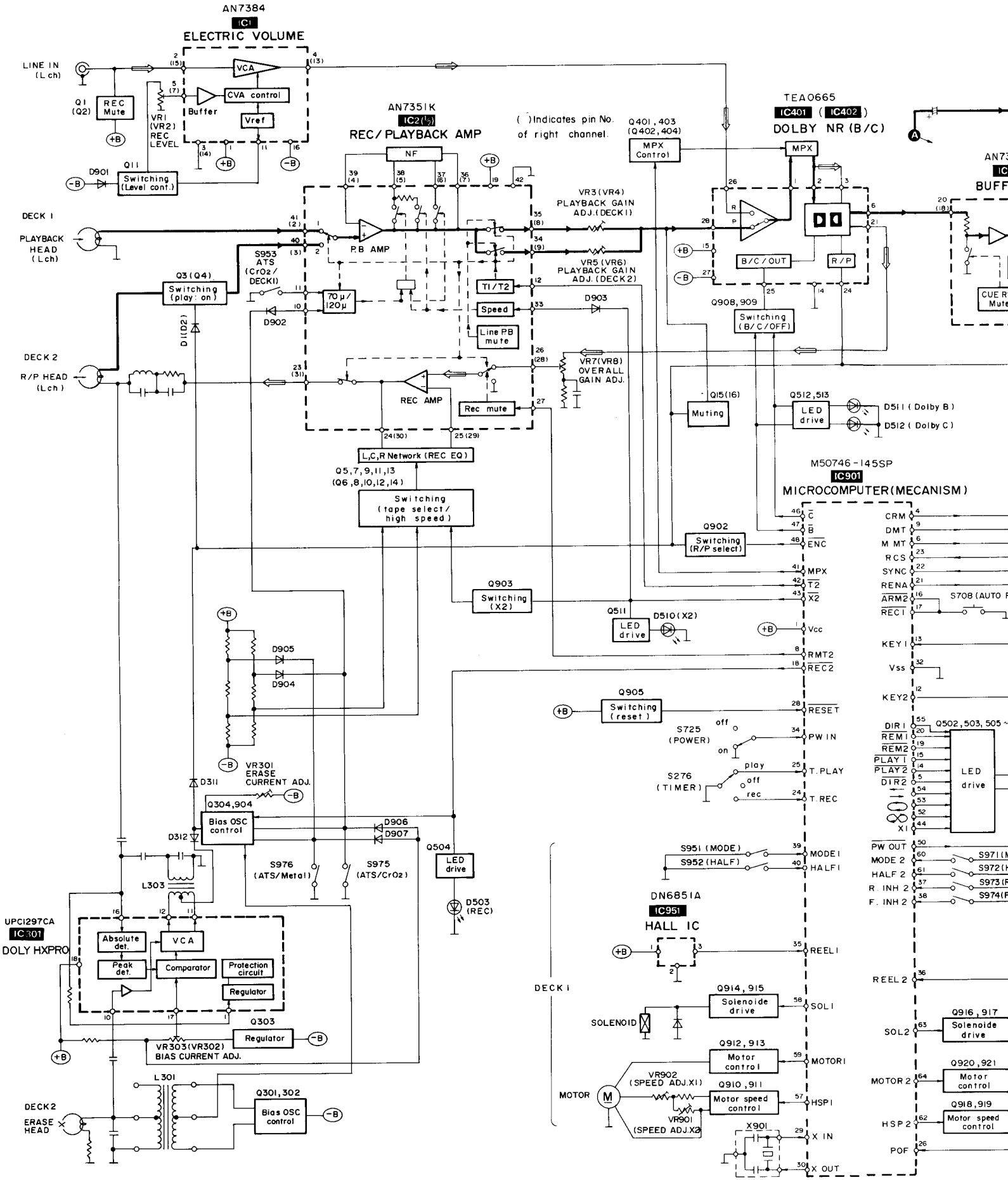

WIRING CONNECTION DIAG

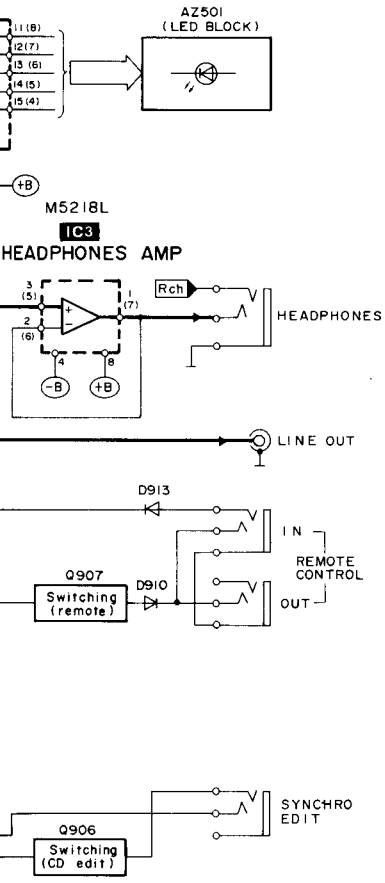

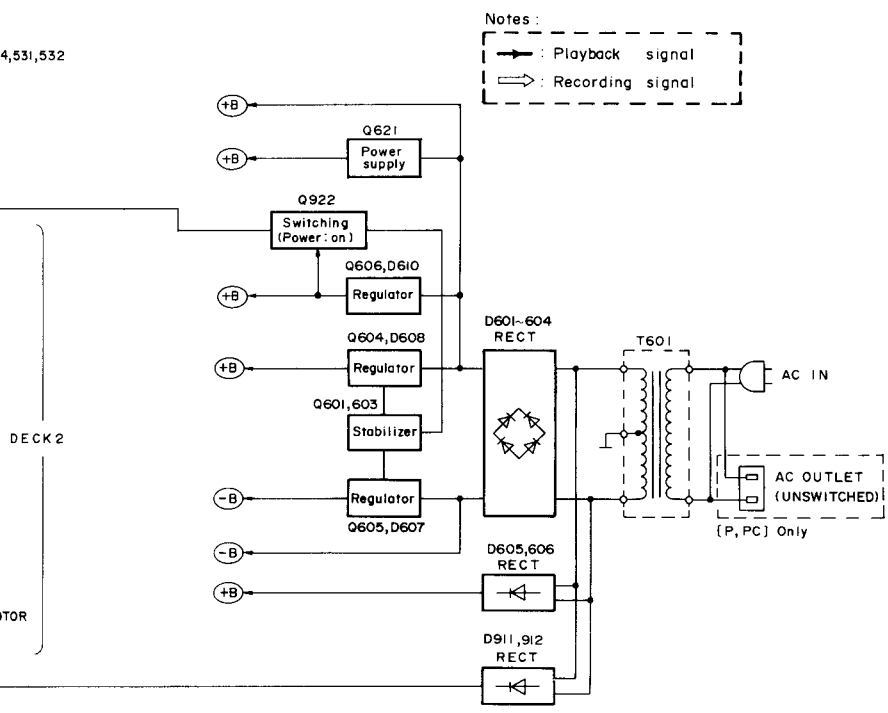

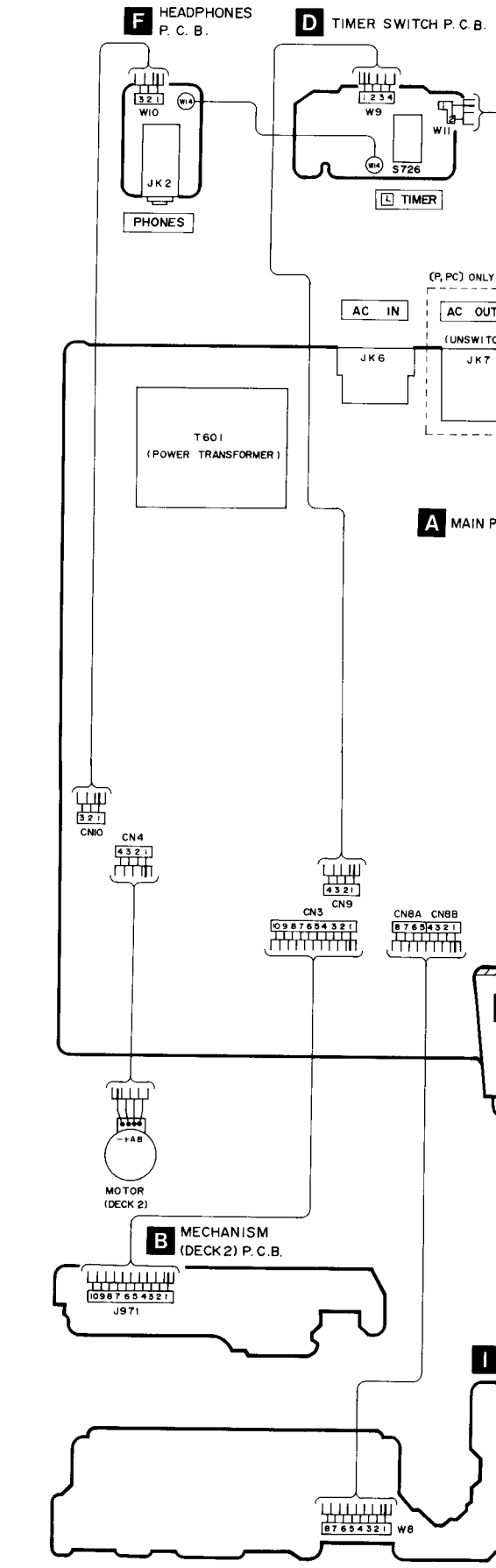

WIRING CONNECTION DIAGRAM

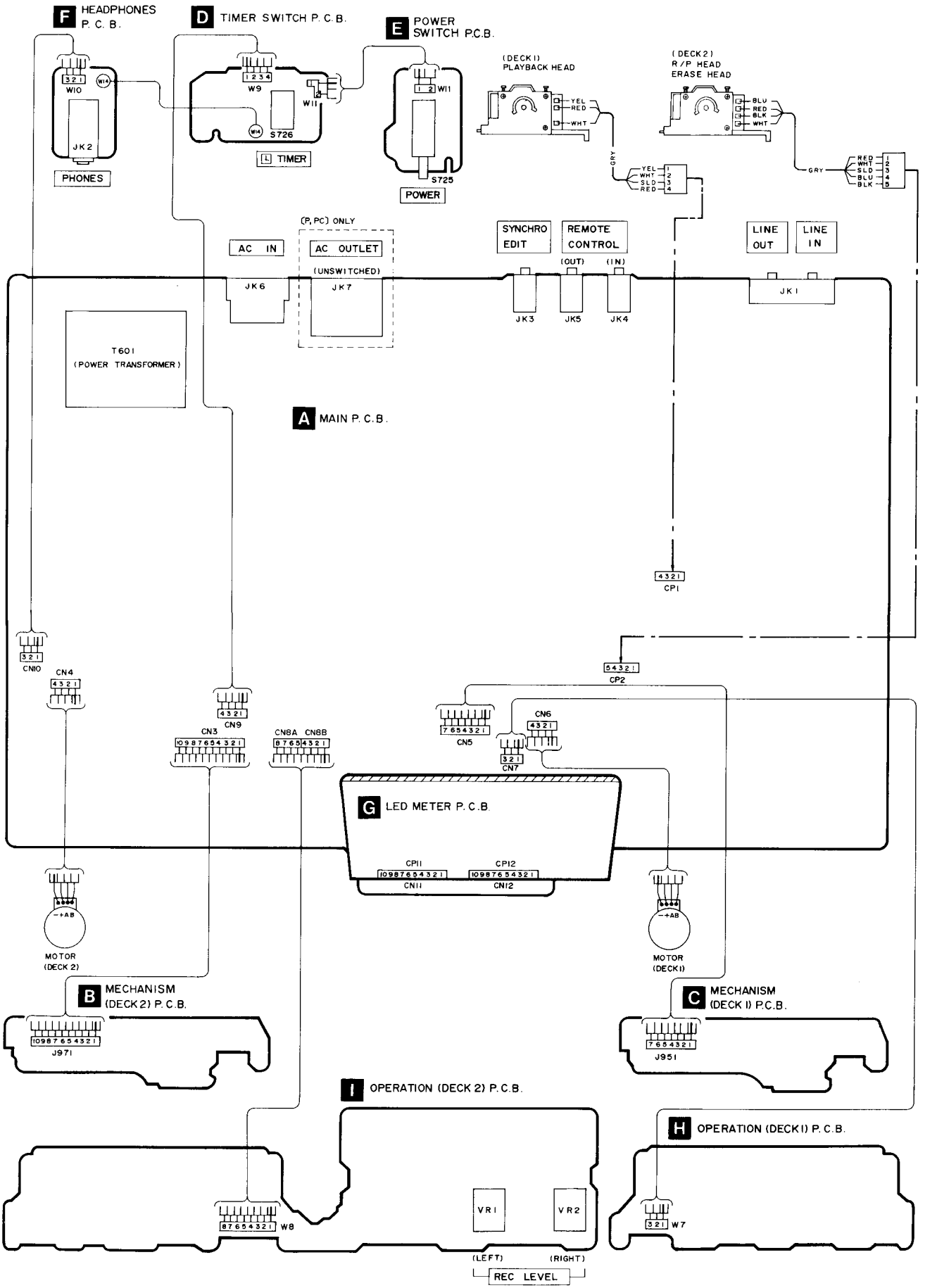

■ REPLACEMENT PARTS LIST

Ref. No.	Part No.	Part Name & Description	Remarks
		MECHANISM PARTS LIST	
DECK1			
101	RXQ0021	HEAD BLOCK (PLAYBACK)	
102	RUA793ZD	HEAD BASE	
103	RZLAR300	ROD	
103-1	RUW143Z	SPRING	
104	1UB0089ZA	ARM	
104-1	RUW148ZA	SPRING	
105	1DM0018ZA	REEL TABLE (R)	
106	1DM0017ZA	REEL TABLE (F)	
107	RUB502Z	LEVER	
108	RDG5772Z	GEAR	
109	RUB508ZA	BRAKE ROD	
110	RUB506Z	LEVER	
111	1UB0088ZA	ARM (R)	
111-1	RUW141Z	SPRING	
112	1UB0087ZA	ARM (F)	
112-1	RUW140Z	SPRING	
114	RNL1Z	DAMPER ARM	
115	RUB503Z	MAIN LEVER	
116	RZUSX980	CHASSIS	
117	RUW142ZA	SPRING	
118	RUD105Z	SPRING	
120	RUW139ZA	SPRING	
121	RFM133ZA	DC MOTOR	
122	1UE0015ZA	PLUNGER	
123	RUB428Z	MOVING IRON CORE	
124	RUL1030XA	ANGLE	
125	RMD5014Z	ANGLE	
126	RDG5927ZA	GEAR	
127	1DW0053ZB	FLYWHEEL (F)	
127-1	RNW139ZA	WASHER	
128	1DW0054ZB	FLYWHEEL (R)	
128-1	RNW138Z	WASHER	
129	1DG0006ZA	REEL TABLE GEAR	
130	RUB513Z	ARM	
131	1UB0091ZA	LEVER	
131-1	RUW146ZA	SPRING	
132	1DR0011ZA	MAIN PULLEY	
133	RDV90ZB	BELT	
134	RDG5769ZA	REEL TABLE GEAR	
135	RUQ10Z	SPRING	
136	RUW145ZA	SPRING	
137	1UB0090ZA	ROD	
137-1	RUB512Z	ROD	
138	RDG5773ZA	GEAR	
139	RUQ30Z	SPRING	
140	RUS609Z	TAPE PRESSURE SPRING	
141	RUB514Z	LEVER	
142	RUW147ZA	SPRING	

Ref. No.	Part No.	Part Name & Description	Remarks
143	RUB515Z	LEVER	
144	RUB509ZA	LEVER	
145	RDV108ZA	CAPSTAN BELT	
146	RUB541ZB	EJECT ROD (L)	
148	RUW167ZA	SPRING	
149	RHG3032Z	RUBBER CUSHION	
150	RNL180ZA	DAMPER ARM	
151	REX0061	LEAD WIRE BLOCK	
161	XTW2+6L	SCREW	
162	XTW2+8L	SCREW	
163	XTN26+7J	SCREW	
164	XTN26+16F	SCREW	
165	XTW2+8S	SCREW	
166	XYC2+JF16	SCREW	
167	QHQ1303	SCREW	
168	SJT30744-H	CONNECTOR (7P), J951	
169	XYN26+F6	SCREW	

Ref. No.	Part No.	Part Name & Description	Remarks
		MECHANISM PARTS LIST	
DECK2			
201	RXQ0019	HEAD BLOCK (REC./PLAYBACK)	
202	RUA793Z	HEAD BASE	
203	RZLAR300	ROD	
203-1	RUW143Z	SPRING	
204	1UB0089ZA	ARM	
204-1	RUW148ZA	SPRING	
205	1DM0018ZA	REEL TABLE (R)	
206	1DM0017ZA	REEL TABLE (F)	
207	RUB502Z	LEVER	
208	RDG5772Z	GEAR	
209	RUB508ZA	BRAKE ROD	
210	RUB506Z	LEVER	
211	1UB0088ZA	ARM (R)	
211-1	RUW141Z	SPRING	
212	1UB0087ZA	ARM (F)	
212-1	RUW140Z	SPRING	
213	RUB507Z	EJECT ROD (R)	
214	RNL1Z	DAMPER ARM	
215	RUB503Z	MAIN LEVER	
216	RZUSX980	CHASSIS	
217	RUW142ZA	SPRING	
218	RUD105Z	SPRING	
219	RUW144ZA	SPRING	
220	RUW139ZA	SPRING	
221	RFM133ZA	DC MOTOR	
222	1UE0015ZA	PLUNGER	
223	RUB428Z	MOVING IRON CORE	
224	RUL1030XA	ANGLE	
225	RMD5014Z	ANGLE	
226	RDG59277ZA	GEAR	
227	1DW0053ZB	FLYWHEEL (F)	
227-1	RNW139ZA	WASHER	
228	1DW0054ZB	FLYWHEEL (R)	
228-1	RNW138Z	WASHER	
229	1DG0006ZA	REEL TABLE GEAR	
230	RUB513Z	ARM	
231	1UB0091ZA	LEVER	
231-1	RUW146ZA	SPRING	
232	1DR0011ZA	MAIN PULLEY	
233	RDV90ZB	BELT	
234	RDG5769ZA	REEL TABLE GEAR	
235	RUQ10Z	SPRING	
236	RUW145ZA	SPRING	
237	1UB0090ZA	ROD	
237-1	RUB512Z	ROD	
238	RDG5773ZA	GEAR	
239	RUQ30Z	SPRING	
240	RUS609Z	TAPE PRESSURE SPRING	

Ref. No.	Part No.	Part Name & Description	Remarks
241	RUB514Z	LEVER	
242	RUW147ZA	SPRING	
243	RUB515Z	LEVER	
244	RUB509ZA	LEVER	
245	RDV108ZA	CAPSTAN BELT	
249	RHG3032Z	RUBBER CUSHION	
250	RNL180ZA	DAMPER ARM	
251	REX0059	LEAD WIRE BLOCK	
261	XTW2+6L	SCREW	
262	XTW2+8L	SCREW	
263	XTN26+7J	SCREW	
264	XTN26+16F	SCREW	
265	XTW2+8S	SCREW	
266	XYC2+JF16	SCREW	
267	QHQ1303	SCREW	
268	SJT31044-H	CONNECTOR (10P), J971	
269	XYN26+F6	SCREW	

■ MECHANICAL PARTS LOCATION

(DECK 1: Top View)

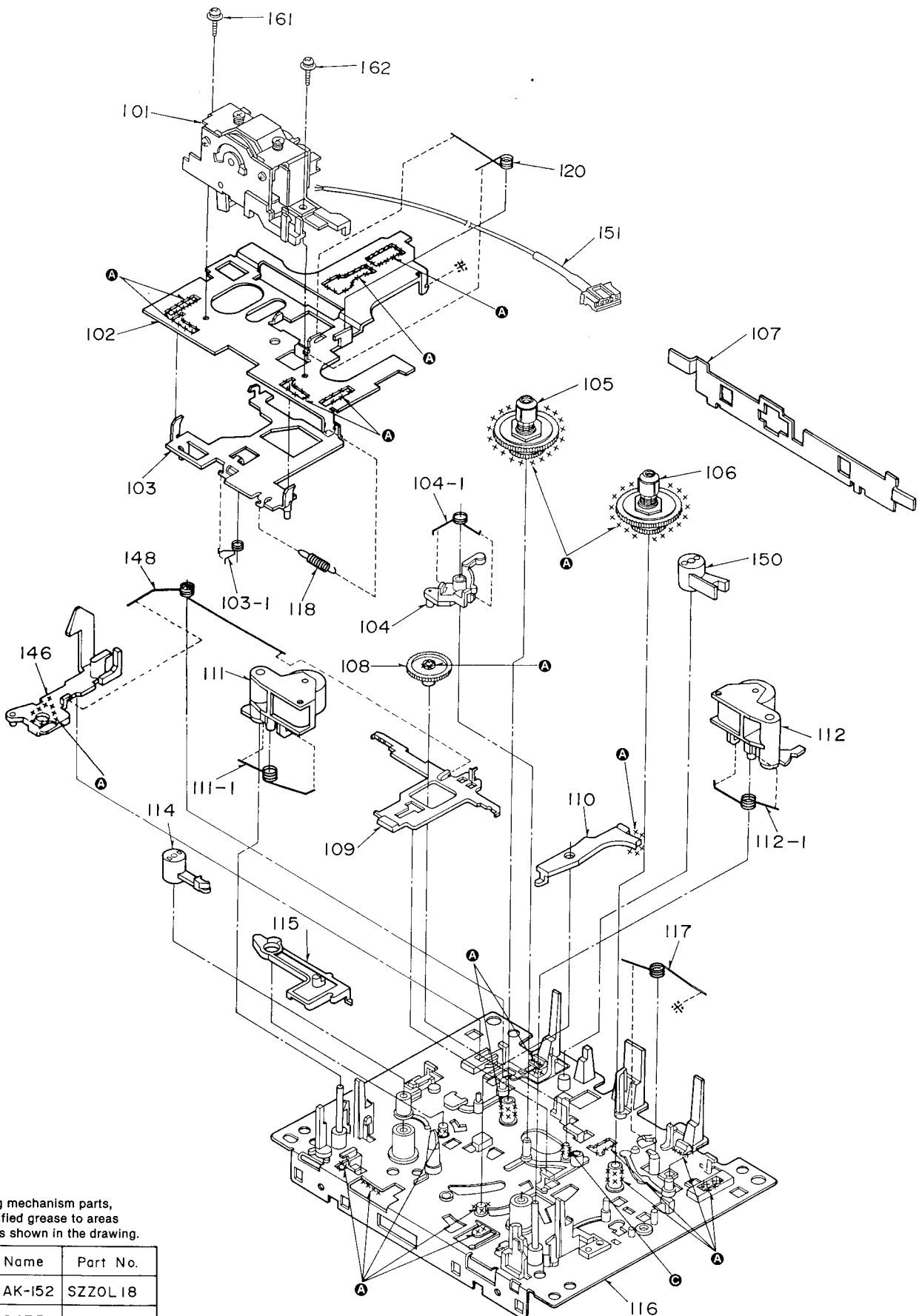

Note:
When changing mechanism parts, apply the specified grease to areas marked "XX" as shown in the drawing.

Ref. No.	Part Name	Part No.
Ⓐ	FLOIL AK-152	SZZOL18
Ⓒ	FLOIL947P	RZZOL02

(DECK 1: Bottom View)

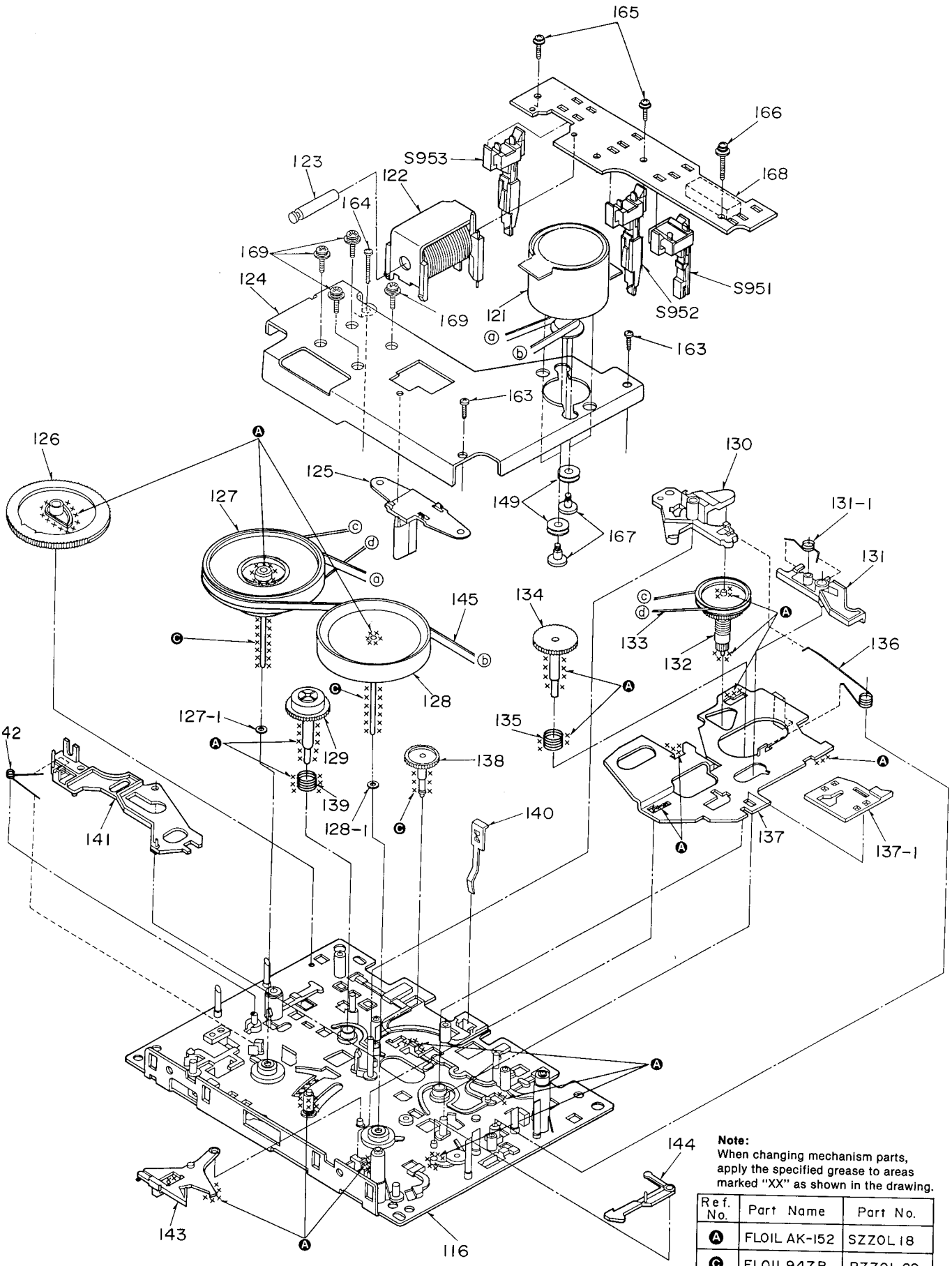

Note:
When changing mechanism parts, apply the specified grease to areas marked "XX" as shown in the drawing.

Ref. No.	Part Name	Part No.
A	FLOIL AK-152	SZZOL18
C	FLOIL947P	RZZOL02

■ MECHANICAL PARTS LOCATION

(DECK 2: Top View)

(DECK 2: B

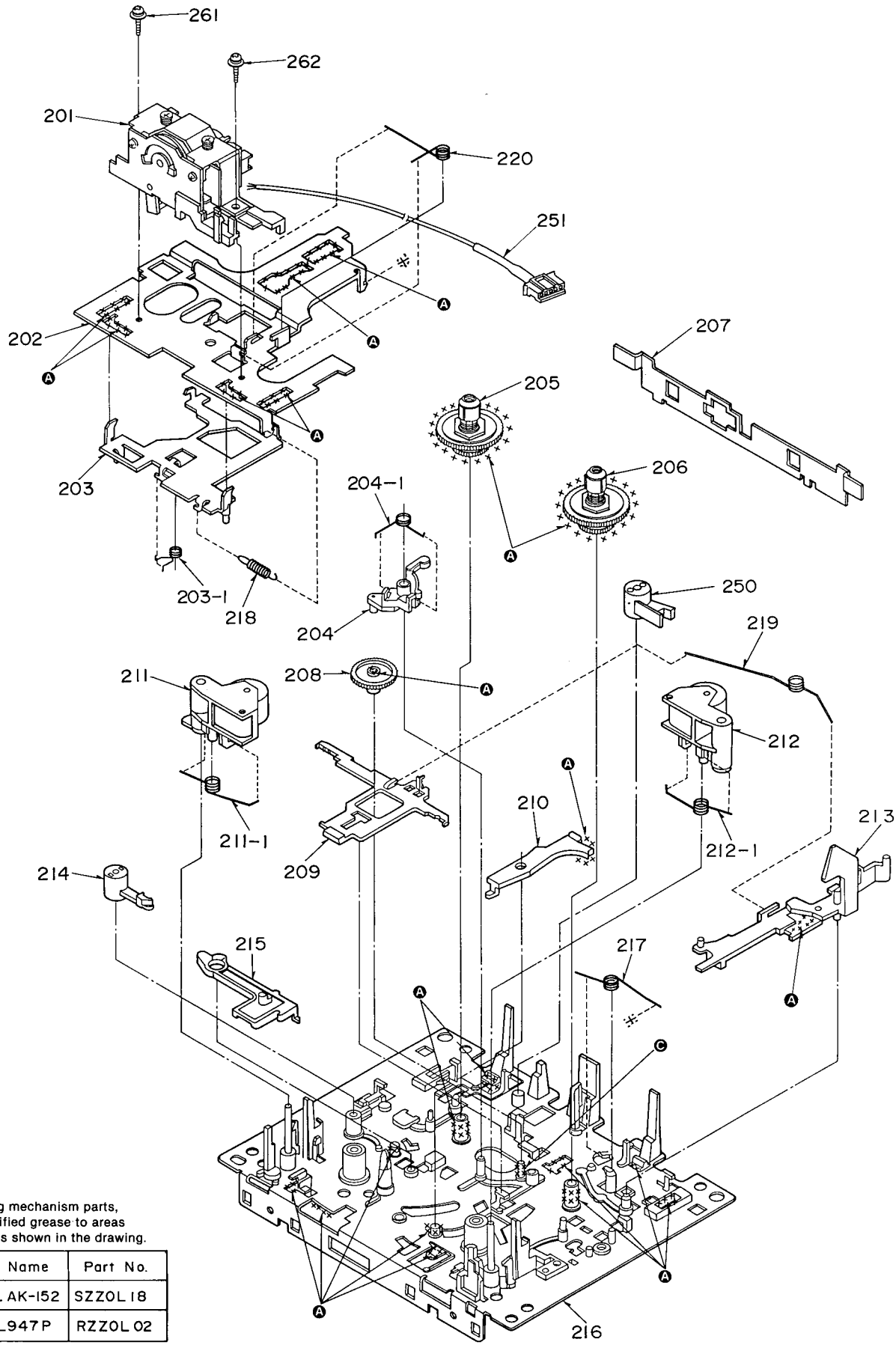

Note:
When changing mechanism parts, apply the specified grease to areas marked "XX" as shown in the drawing.

Ref. No.	Part Name	Part No.
Ⓐ	FLOIL AK-152	SZZOL 18
Ⓒ	FLOIL947P	RZZOL 02

(DECK 2: Bottom View)

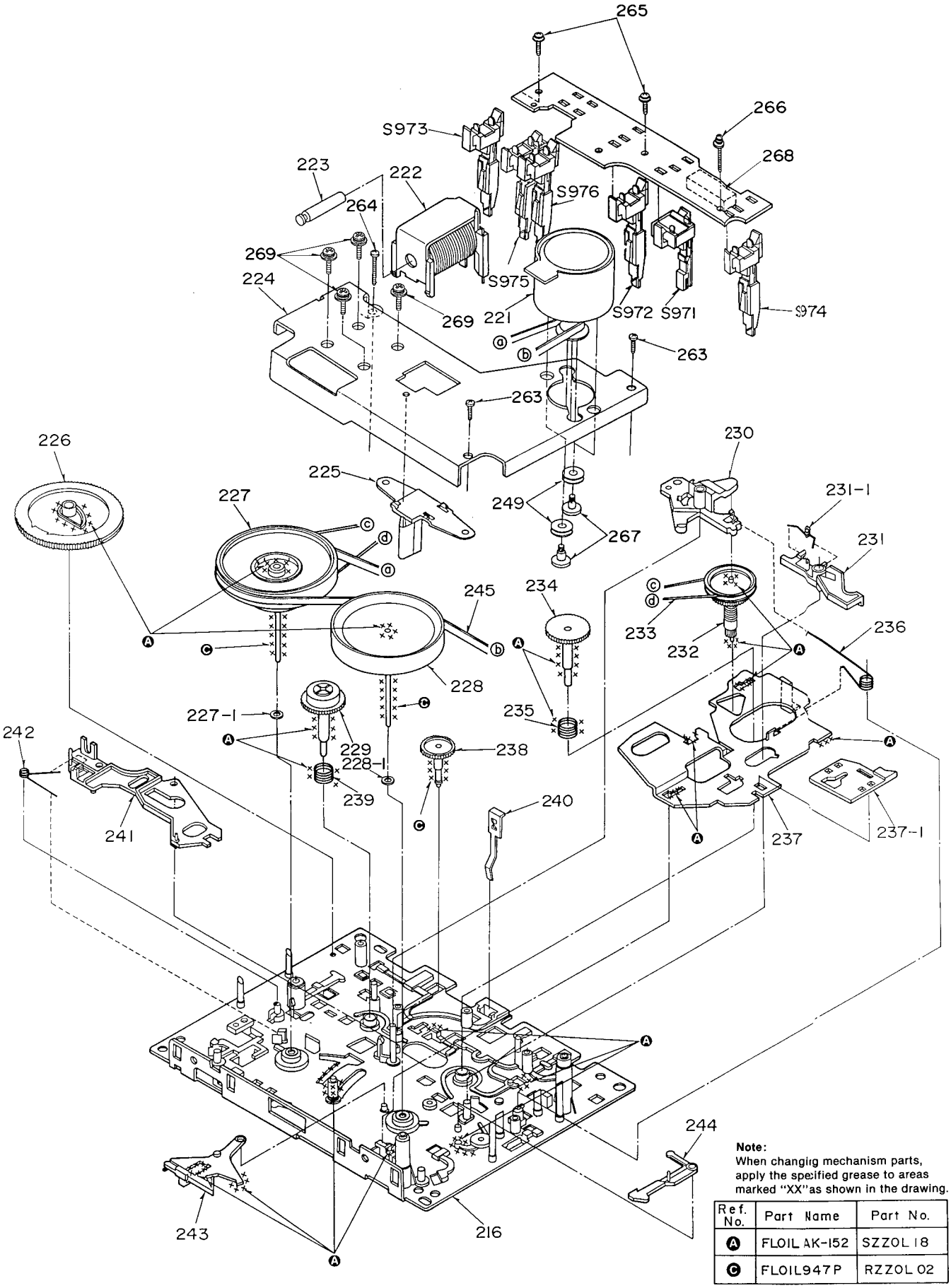

Note:
When changing mechanism parts, apply the specified grease to areas marked "XX" as shown in the drawing.

Ref. No.	Part Name	Part No.
Ⓐ	FLOIL AK-152	SZZOL 18
Ⓒ	FLOIL947P	RZZOL 02

■ CABINET PARTS LOCATION

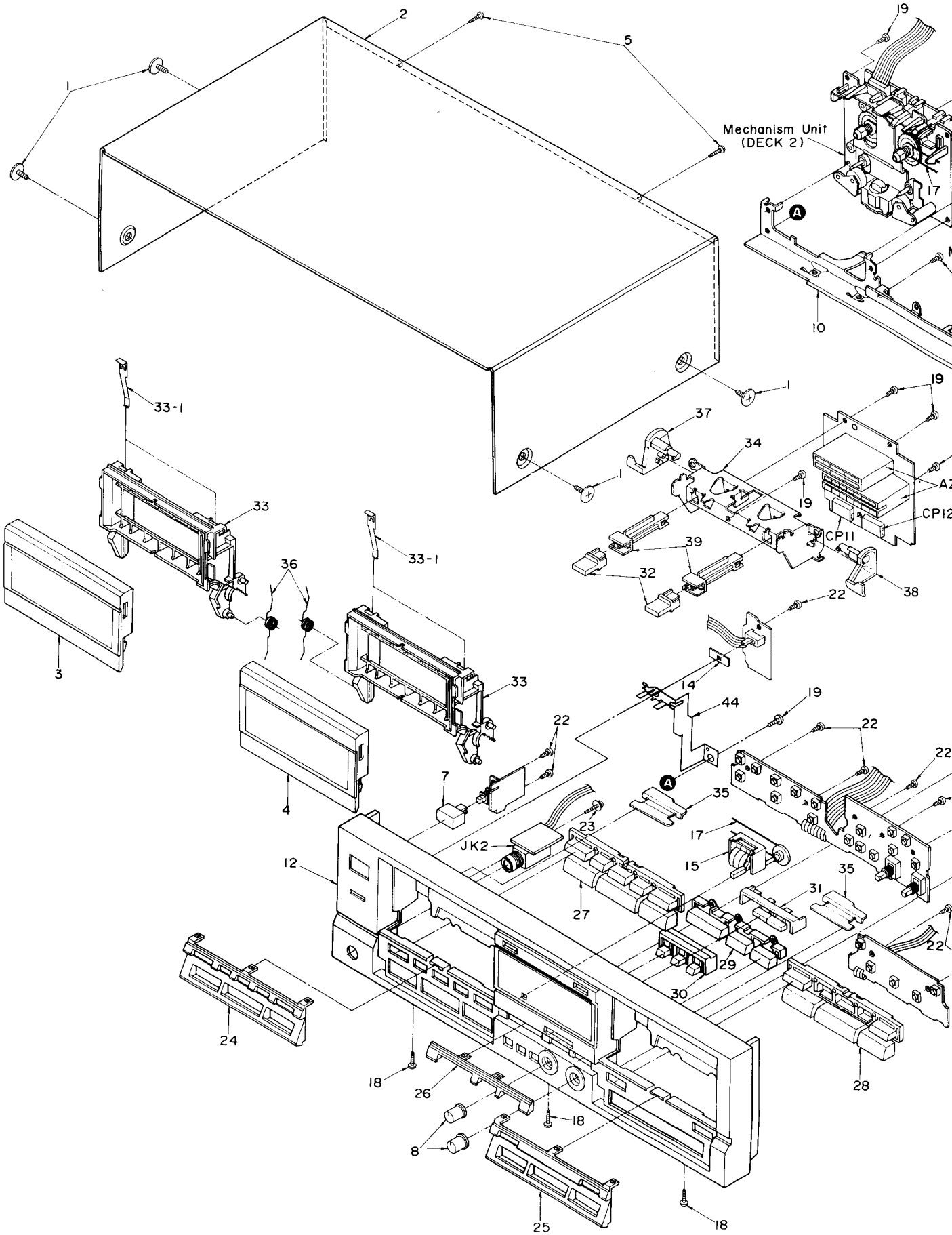

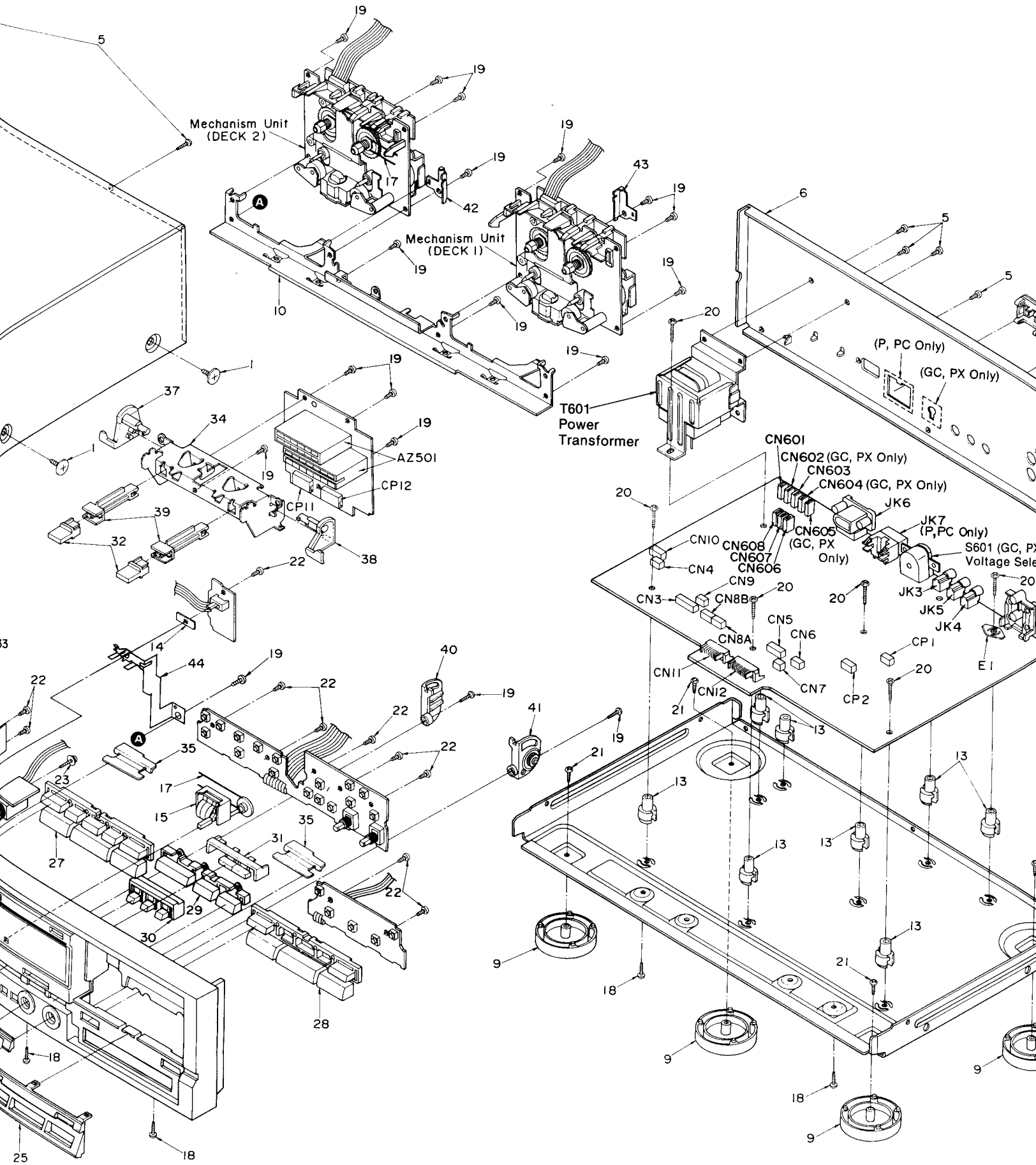
Mechanism Unit
(DECK 2)
Mechanism Unit
(DECK 1)
T601
Power
Transformer
(P, PC Only)
(GC, PX Only)
CN601
CN602 (GC, PX Only)
CN603
CN604 (GC, PX Only)
JK6
JK7
(P,PC Only)
CN605
(GC, PX
Only)
CN608
CN607
CN606
CN10
CN4
CN9
CN3
CN8B
CN8A
CN5
CN6
CN7
CN11
CN12
CP1
CP2
JK3
JK5
JK4
E1
S601 (GC, P
Voltage Sele
AZ501
CP11
CP12

■ REPLACEMENT PART

Notes : * Important safety notice:
Components identified by ⚠
components use only manufac
* The parenthesized indicatio
Parts without these indicat

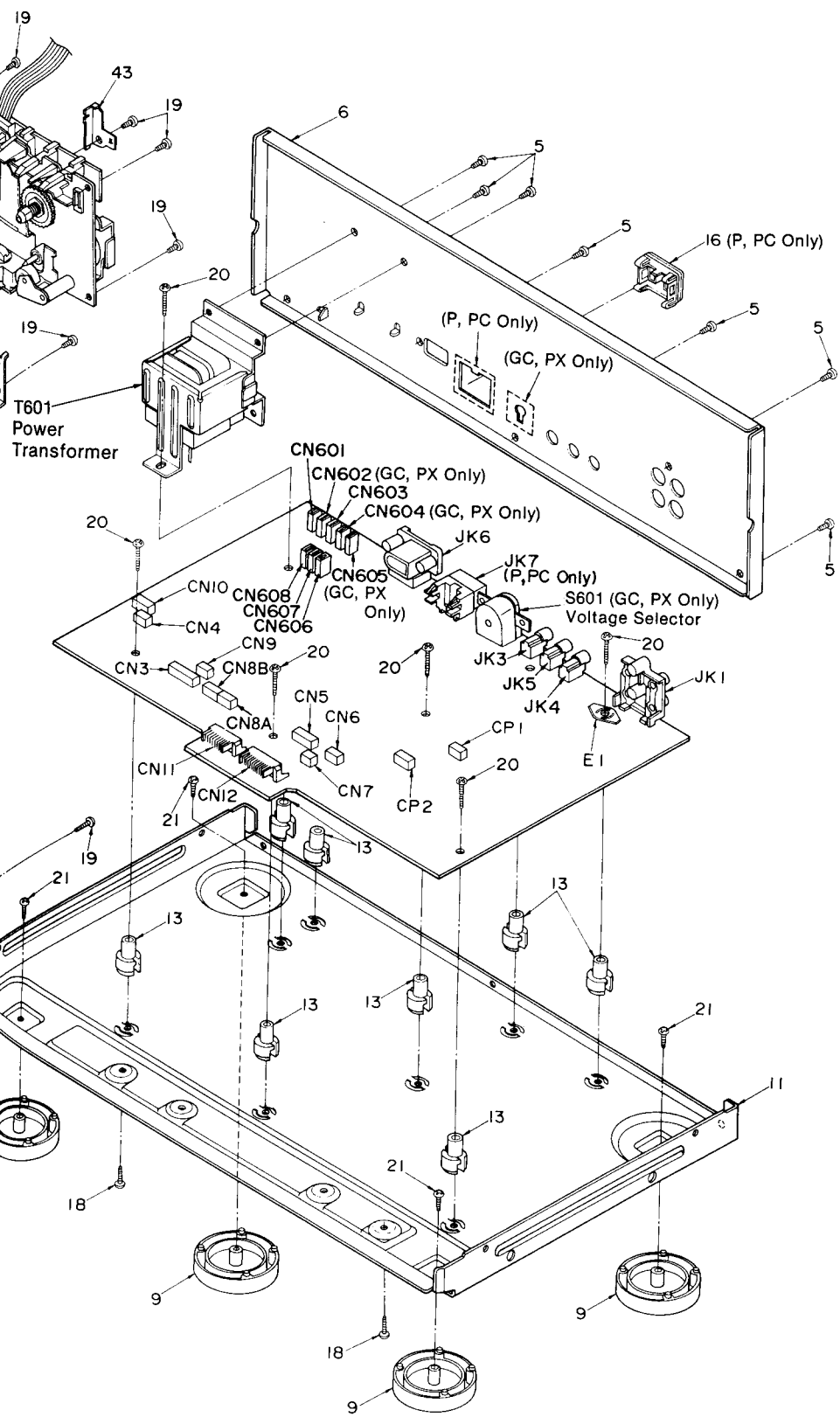

Ref. No.	Part No.	Part Name & Descript
		CABINET AND CHASSIS
1	SNE2129-1	SCREW
2	RKM0016-K1	CABINET
3	RYF0009N-K	CASSETTE LID (DECK 2)
4	RYF0009M-K	CASSETTE LID (DECK 1)
5	XTBS3+8JFZ1	SCREW
6	RGR0008A-I	REAR PANEL
6	RGR0008B-S	REAR PANEL
6	RGR0008B-Q	REAR PANEL
6	RGR0008B-R	REAR PANEL
6	RGR0008B-G	REAR PANEL
7	RGU0030	BUTTON, POWER
8	RGW0012	KNOB, REC. LEVEL
9	RKA0009-1	FOOT
10	RMA0050	BRACKET, MECHANISM
11	RMK0026-2	BOTTOM BOARD
12	RFKGSTR265EK	FRONT PANEL ASS'Y
12	RFKGSTR265PK	FRONT PANEL ASS'Y
13	SHE187-2	HOLDER
14	SHR6076	ORNAMENT
15	SJN32	TAPE COUNTER
16	SJS9331A	AC OUTLET COVER
17	SMQ20024	BELT, TAPE COUNTER
18	XTBS3+10JFZ1	SCREW
19	XTB3+10JFZ	SCREW
20	XTB3+20J	SCREW
21	XTB3+6J	SCREW
22	XTB3+8JFZ	SCREW
23	XTWS3+10Q	SCREW
24	RGK0049	ORNAMENT, BUTTON (DECK 2
25	RGK0075	ORNAMENT, BUTTON (DECK 1
26	RGK0051	ORNAMENT, EDIT BUTTON
27	RGU0064	BUTTON (DECK2)
28	RGU0136	BUTTON ASS'Y (DECK1)
29	RGU0066	BUTTON, EDIT
30	RGU0067	BUTTON, REVERSE
31	RGU0068	BUTTON, DOLBY
32	RGU0070	BUTTON, EJECT
33	RKF0020A-3	CASSETTE HOLDER
33-1	QBP2006A	SPRING, TAPE PRESSURE
34	RMA0051	EJECT ANGLE
35	RMA0052-1	BRACKET
36	RME0026	SPRING, CASSETTE HOLDER
37	RML0041	EJECT LEVER (L)
38	RML0042	EJECT LEVER (R)

■ REPLACEMENT PARTS LIST

Notes : * Important safety notice:
Components identified by ⚠ mark have special characteristics important for safety. When replacing any of these components use only manufacturer's specified parts.
* The parenthesized indications in the Remarks columns specify the areas. (Refer to the cover page for area.)
Parts without these indications can be used for all areas.

Ref. No.	Part No.	Part Name & Description	Remarks
		CABINET AND CHASSIS	
1	SNE2129-1	SCREW	
2	RKM0016-K1	CABINET	
3	RYF0009N-K	CASSETTE LID (DECK 2)	
4	RYF0009M-K	CASSETTE LID (DECK 1)	
5	XTBS3+8JFZ1	SCREW	
6	RGR0008A-1	REAR PANEL	(P, PC)
6	RGR0008B-S	REAR PANEL	(EG)
6	RGR0008B-Q	REAR PANEL	(E)
6	RGR0008B-R	REAR PANEL	(EB, GN)
6	RGR0008B-G	REAR PANEL	(GC, PX)
7	RGU0030	BUTTON, POWER	
8	RGW0012	KNOB, REC. LEVEL	
9	RKA0009-1	FOOT	
10	RMA0050	BRACKET, MECHANISM	
11	RMK0026-2	BOTTOM BOARD	
12	RFKGSTR265EK	FRONT PANEL ASS'Y	(E, EB, EG, GC, GN, PX)
12	RFKGSTR265PK	FRONT PANEL ASS'Y	(P, PC)
13	SHE187-2	HOLDER	
14	SHR6076	ORNAMENT	
15	SJN32	TAPE COUNTER	
16	SJS9331A	AC OUTLET COVER	(P, PC)
17	SMQ20024	BELT, TAPE COUNTER	
18	XTBS3+10JFZ1	SCREW	
19	XTB3+10JFZ	SCREW	
20	XTB3+20J	SCREW	
21	XTB3+6J	SCREW	
22	XTB3+8JFZ	SCREW	
23	XTWS3+10Q	SCREW	
24	RGK0049	ORNAMENT, BUTTON (DECK 2)	
25	RGK0075	ORNAMENT, BUTTON (DECK 1)	
26	RGK0051	ORNAMENT, EDIT BUTTON	
27	RGU0064	BUTTON (DECK2)	
28	RGU0136	BUTTON ASS'Y (DECK1)	
29	RGU0066	BUTTON, EDIT	
30	RGU0067	BUTTON, REVERSE	
31	RGU0068	BUTTON, DOLBY	
32	RGU0070	BUTTON, EJECT	
33	RKF0020A-3	CASSETTE HOLDER	
33-1	QBP2006A	SPRING, TAPE PRESSURE	
34	RMA0051	EJECT ANGLE	
35	RMA0052-1	BRACKET	
36	RME0026	SPRING, CASSETTE HOLDER	
37	RML0041	EJECT LEVER (L)	
38	RML0042	EJECT LEVER (R)	

Ref. No.	Part No.	Part Name & Description	Remarks
39	RMM0014	EJECT ROD	
40	RMR0153	DAMPER GEAR (L) ASS'Y	
41	RMR0154	DAMPER GEAR (R) ASS'Y	
42	RMA0113	DAMPER ANGLE (L)	
43	RMA0114	DAMPER ANGLE (R)	
44	RMC0078	EARTH PLATE	
		PACKING MATERIAL	
P1	RPG0404	CARTON BOX	(P, PX)
P1	RPG0403	CARTON BOX	(PC, E, EG, EB, GN, GC)
P2	RPN0296A	PAD, FRONT	
P2	RPN0296B	PAD, FRONT	
P3	RPN0296C	PAD, BACK	
P3	RPN0296D	PAD, BACK	
P4	SPSD152	PAD, ACCESSORIES	
		ACCESSORIES	
A1	RQF0433	INSTRUCTION MANUAL	(EG)
A1	RQF0431	INSTRUCTION MANUAL	(E)
A1	RQF0432	INSTRUCTION MANUAL	(EB)
A1	RQF0435	INSTRUCTION MANUAL	(GN)
A1	RQF0436	INSTRUCTION MANUAL	(P)
A1	RQF0437	INSTRUCTION MANUAL	(PC)
A1	RQF0434	INSTRUCTION MANUAL	(GC)
A1	RQF0683	INSTRUCTION MANUAL	(PX)
A1-1	RFKSSTR265E	INSTRUCTION MANUAL ASS'Y	(E)
A1-1	RFKSSTR265PC	INSTRUCTION MANUAL ASS'Y	(PC)
A1-1	RQT0357-B	INSTRUCTION MANUAL	(EB)
A1-1	RQT0358-D	INSTRUCTION MANUAL	(EG)
A1-1	RQT0359-G	INSTRUCTION MANUAL	(GC, GN)
A1-1	RQT0360-P	INSTRUCTION MANUAL	(P)
A1-1	RQT0571-M	INSTRUCTION MANUAL	(PX)
A1-2	RQA0013	WARRANTY CARD	(E, EB, EG)
A1-2	SQX7186	WARRANTY CARD	(GN)
A1-2	SQX7179	WARRANTY CARD	(P)
A1-2	SQX7183	WARRANTY CARD	(PC)
A1-2	SQX7071-1	WARRANTY CARD	(PX)
A1-3	RQCB0169	SERVICENTER LIST	(E, EB, EG, GC, GN)
A1-3	SQX9129-1	SERVICENTER LIST	(P)
A1-3	SQX9131	SERVICENTER LIST	(PC)
A2	SFDAC05E03	POWER CORD	(E, EG) ⚠
A2	SJA173-1	POWER CORD	(GN) ⚠
A2	SJA175	POWER CORD	(PC) ⚠
A2	SJA175-1	POWER CORD	(P) ⚠
A2	SJA193-1	POWER CORD	(EB) ⚠

Ref. No.	Part
A2	RJA0004
A3	SJP2249
A4	SJP2257
A5	SJP9215

Ref. No.	Part No.	Part Name & Description	Remarks
A2	RJA0004	POWER CORD	(GC, PX) ⚠
A3	SJP2249-3	CORD	
A4	SJP2257T	REMOTE CONTROL CORD	
A5	SJP9215	AC PLUG ADAPTOR	(GC, PX) ⚠

Ref. No.	Part No.	Part Name & Description	Remarks

REPLACEMENT PARTS LIST

Notes : * Important safety notice:
Components identified by ⚠ mark have special characteristics important for safety. When replacing any of these components use only manufacturer's specified parts.
* The parenthesized indications in the Remarks columns specify the areas. (Refer to the cover page for area.)
Parts without these indications can be used for all areas.

Ref. No.	Part No.	Part Name & Description	Remarks
		INTEGRATED CIRCUIT(S)	
IC1	AN7384	VOLUME CONTROL	
IC2	AN7351K	REC. /PLAYBACK AMP.	
IC3	M5218L	HEADPHONES AMP.	⚠
IC301	UPC1297CA	DOLBY HX PRO	
IC401, 402	TEA0665	DOLBY B-C NR	
IC501	AN6888	METER DRIVE	
IC901	M50746-145SP	MICROCOMPUTER	
IC951	DN6851A	HALL	
IC971	DN6851A	HALL	
		TRANSISTOR(S)	
Q1-4	2SJ164PQRTA	TRANSISTOR	
Q5-8	KSA1175YGTA	TRANSISTOR	
Q9-14	KSC2785YGTA	TRANSISTOR	
Q15, 16	2SD1450RSTTA	TRANSISTOR	
Q301, 302	2SC3311AQSTA	TRANSISTOR	
Q303	KSB564ACYGTA	TRANSISTOR	
Q304	KSD471ACYGTA	TRANSISTOR	
Q401-404	KSC2785YGTA	TRANSISTOR	
Q501-515	DTA114ESTP	TRANSISTOR	
Q601	KSA1175YGTA	TRANSISTOR	
Q603	KSC2785YGTA	TRANSISTOR	
Q604	2SD2037EFTA	TRANSISTOR	
Q605	2SB1357EFTA	TRANSISTOR	
Q606	KSD471ACYGTA	TRANSISTOR	
Q621	KSD471ACYGTA	TRANSISTOR	
Q901	KSC2785YGTA	TRANSISTOR	
Q902, 903	DTA114ESTP	TRANSISTOR	
Q904	2SB1030RSTTA	TRANSISTOR	
Q905	KSC2785YGTA	TRANSISTOR	
Q906	DTC114ESTP	TRANSISTOR	
Q907	KSA1175YGTA	TRANSISTOR	
Q908, 909	DTA114ESTP	TRANSISTOR	
Q910	DTC114ESTP	TRANSISTOR	
Q911	KSA1175YGTA	TRANSISTOR	
Q912	KSB564ACYGTA	TRANSISTOR	
Q913	DTC114ESTP	TRANSISTOR	
Q914	2SB1030RSTTA	TRANSISTOR	
Q915	DTC114ESTP	TRANSISTOR	
Q916	2SB1030RSTTA	TRANSISTOR	
Q917	DTC114ESTP	TRANSISTOR	
Q918	KSA1175YGTA	TRANSISTOR	
Q919	DTC114ESTP	TRANSISTOR	

Ref. No.	Part No.	Part Name & Description	Remarks
Q920	KSB564ACYGTA	TRANSISTOR	
Q921, 922	DTC114ESTP	TRANSISTOR	
		DIODE(S)	
D1, 2	MA167TA	DIODE	
D11	MA165TA	DIODE	
D311, 312	MA165TA	DIODE	
D313	MA4082MTA	DIODE	
D515, 516	MA165TA	DIODE	
D529, 530	MA165TA	DIODE	
D601-606	1SR35200TB	DIODE	⚠
D607, 608	MA4082MTA	DIODE	
D610	MA4062LTA	DIODE	
D612	MA165TA	DIODE	
D901-907	MA165TA	DIODE	
D908	1SR35200TB	DIODE	⚠
D909-913	MA165TA	DIODE	
D914	MA4051MTA	DIODE	
D916	MA165TA	DIODE	
D951	1SS133	DIODE	
D971	1SS133	DIODE	
		I. C, PROTECTOR(S)	
ICP1	SRUN10T	I. C, PROTECTOR	(EB, GN)
		VARIABLE RESISTOR(S)	
VR1, 2	EVJ02FF01B15	REC. LEVEL CONTROL	
VR3-6	EVNDXAA00B24	PLAYBACK GAIN ADJ.	
VR7, 8	EVNDXAA00B14	OVERALL GAIN ADJ.	
VR301	EVNDXAA00B14	ERASE CURRENT ADJ.	
VR302, 303	EVNDXAA00B14	OVERALL FREQ. ADJ.	
VR901-903	EVNDXAA00BS3	TAPE SPEED ADJ.	
		COIL(S)	
L1, 2	SLQX303-1KT	COIL	
L3, 4	SLQX272-1YT	COIL	
L6	ELEPK4R7KA	COIL	
L301	SL09B4-K	COIL	
L302, 303	SL09B1-K	COIL	
L401, 402	QLM9Z10K	COIL	
L403, 404	SLM1B8-K	COIL	
L501, 502	RLQZP101KT-Y	COIL	

Ref. No.	Part
T601	RTP1K4E
T601	RTP1K4B
T601	RTP1K4E
T601	RTP1K4C
X901	EFOGC40
S601	SSR187-
S701	EVQ2140
S702	EVQ2140
S703	EVQ2140
S704	EVQ2140
S705-707	EVQ2140
S708	EVQ2140
S709	EVQ2140
S711	EVQ2140
S712	EVQ2140
S713	EVQ2140
S714	EVQ2140
S715	EVQ2140
S716	EVQ2140
S717	EVQ2140
S718	EVQ2140
S719	EVQ2140
S720	EVQ2140
S721	EVQ2140
S722	EVQ2140
S725	SSH1230
S726	SSS180-
S951	RSH1A89
S952	RSH1A90
S953	RSH1A90
S971	RSH1A89
S972	RSH1A90
S973	RSH1A90
S974	RSH1A90
S975, 976	RSH1A90
AZ501	LN2815
CN3	SJSD100
CN4	RJS1A1

Ref. No.	Part No.	Part Name & Description	Remarks
		TRANSFORMER(S)	
T601	RTP1K4E003-V	POWER TRANSFORMER	(E, EG) ⚠
T601	RTP1K4B004-V	POWER TRANSFORMER	(EB, GN) ⚠
T601	RTP1K4E004-V	POWER TRANSFORMER	(GC, PX) ⚠
T601	RTP1K4C002-V	POWER TRANSFORMER	(P, PC) ⚠
		OSCILLATOR(S)	
X901	EFOGC4004T4	CERAMIC FILTER	
		SWITCH(ES)	
S601	SSR187-1	VOLTAGE SELECTOR	(GC, PX) ⚠
S701	EVQ21405R	STOP(DECK1)	
S702	EVQ21405R	F. F. (DECK1)	
S703	EVQ21405R	REW. (DECK1)	
S704	EVQ21405R	F. PLAYBACK(DECK1)	
S705-707	EVQ21405R	REVERSE MODE	
S708	EVQ21405R	AUTO REC MUTE(DECK2)	
S709	EVQ21405R	R. PLAYBACK(DECK1)	
S711	EVQ21405R	STOP(DECK2)	
S712	EVQ21405R	F. F. (DECK2)	
S713	EVQ21405R	REW. (DECK2)	
S714	EVQ21405R	F. PLAYBACK(DECK2)	
S715	EVQ21405R	R. PLAYBACK(DECK2)	
S716	EVQ21405R	REC. (DECK2)	
S717	EVQ21405R	PAUSE(DECK2)	
S718	EVQ21405R	SYNCHRO-START	
S719	EVQ21405R	X2 SPEED	
S720	EVQ21405R	X1 SPEED	
S721	EVQ21405R	DOLBY C NR	
S722	EVQ21405R	DOLBY B NR	
S725	SSH1230	POWER	⚠
S726	SSS180-1	TIMER	
S951	RSH1A89Z	MODE(DECK1)	
S952	RSH1A90Z	HALF(DECK1)	
S953	RSH1A90Z	ATS(DECK1)	
S971	RSH1A89Z	MODE(DECK2)	
S972	RSH1A90Z	HALF(DECK2)	
S973	RSH1A90Z	REC INH(R)(DECK2)	
S974	RSH1A90Z	REC INH(F)(DECK2)	
S975, 976	RSH1A90Z	ATS(DECK2)	
		LED BLOCK(S)	
AZ501	LN281517PT	LED BLOCK UNIT	(D501－D514, D517－D528, D531, D532)
		CONNECTOR(S)	
CN3	SJSD1005	CONNECTOR(10P)	
CN4	RJS1A1704	CONNECTOR(4P)	

Ref. No.	Part No.	Part Name & Description	Remarks
CN5	SJSD0705	CONNECTOR(7P)	
CN6	RJS1A1704	CONNECTOR(4P)	
CN7	RJS1A1703	CONNECTOR(3P)	
CN8A, CN8B	RJS1A1704	CONNECTOR(4P)	
CN9	RJS1A1704	CONNECTOR(4P)	
CN10	RJS1A1703	CONNECTOR(3P)	
CN11, 12	RJU003K010M1	SOCKET(10P)	
CN601	RJS1A1101	SOCKET(1P)	
CN602	RJS1A1101	SOCKET(1P)	(GC, PX)
CN603	RJS1A1101	SOCKET(1P)	
CN604, 605	RJS1A1101	SOCKET(1P)	(GC, PX)
CN606-608	RJS1A1101	SOCKET(1P)	
CP1	SJTD413	CONNECTOR(4P)	
CP2	SJTD513	CONNECTOR(5P)	
CP11, 12	RJT003K010M1	CONNECTOR(10P)	
		GND PART(S)	
E1	SNE1004-1	GND PLATE	
		JACK(S)	
JK1	SJF3069N	TERMINAL BOARD	
JK2	SJJ134B	JACK, HEADPHONES	
JK3	RJJ33T01	M3 JACK (BLACK)	
JK4, 5	RJJ33TR01	M3 JACK (RED)	
JK6	SJSD16	AC INLET	(GN, P, PC) ⚠
JK6	SJS9236	AC INLET	(E, EG, EB, GC, PX) ⚠
JK7	SJS9331B	AC OUTLET	(P, PC) ⚠

■ RESIS

Notes : *
*

Ref. No.	
R1, 2	ERD
R3, 4	ERD
R5, 6	ERD
R7, 8	ERD
R9, 10	ERD
R11, 12	ERD
R13, 14	ERD
R15, 16	ERD
R19, 20	ERD
R21, 22	ERD
R23, 24	ERD
R25, 26	ERD
R27, 28	ERD
R29, 30	ERD
R31, 32	ERD
R33, 34	ERD
R35, 36	ERD
R37, 38	ERD
R43, 44	ERD
R45, 46	ERD
R47, 48	ERD
R49, 50	ERD
R51, 52	ERD
R53, 54	ERD
R55, 56	ERD
R57, 58	ERD
R59, 60	ERD
R63, 64	ERD
R65	ERD
R66	ERD
R67	ERD
R69, 70	ERD
R71, 72	ERD
R75, 76	ERD
R301	ERD
R302, 303	ERD
R304, 305	ERD
R306	ERD
R307	ERD
R311, 312	ERD
R313, 314	ERD
R315, 316	ERD
R319	ERD
R329	ERD
R331, 332	ERD
R401, 402	ERD

RESISTORS & CAPACITORS

Notes : * Capacity valuse are in microfarads (uF) unless specified otherwise, P=Pico-farads(pF) F=Farads(F)
* Resistance values are in ohms, unless specified otherwise, 1K=1,000(OHM) , 1M=1,000k(OHM)

Ref. No.	Part No.	Values & Remarks
		RESISTORS
R1, 2	ERDS2TJ394T	1/4W 390K
R3, 4	ERDS2TJ393T	1/4W 39K
R5, 6	ERDS2TJ183T	1/4W 18K
R7, 8	ERDS2TJ225T	1/4W 2.2M
R9, 10	ERDS2TJ332T	1/4W 3.3K
R11, 12	ERDS2TJ561T	1/4W 560
R13, 14	ERDS2TJ332T	1/4W 3.3K
R15, 16	ERDS2TJ101T	1/4W 100
R19, 20	ERDS2TJ101T	1/4W 100
R21, 22	ERDS2TJ104T	1/4W 100K
R23, 24	ERDS2TJ101T	1/4W 100
R25, 26	ERDS2TJ225T	1/4W 2.2M
R27, 28	ERDS2TJ820T	1/4W 82
R29, 30	ERDS2TJ103T	1/4W 10K
R31, 32	ERDS2TJ273T	1/4W 27K
R33, 34	ERDS2TJ183T	1/4W 18K
R35, 36	ERDS2TJ474T	1/4W 470K
R37, 38	ERDS2TJ272T	1/4W 2.7K
R43, 44	ERDS2TJ103T	1/4W 10K
R45, 46	ERDS2TJ223T	1/4W 22K
R47, 48	ERDS2TJ472T	1/4W 4.7K
R49, 50	ERDS2TJ102T	1/4W 1K
R51, 52	ERDS2TJ470T	1/4W 47
R53, 54	ERDS2TJ392T	1/4W 3.9K
R55, 56	ERDS2TJ272T	1/4W 2.7K
R57, 58	ERDS2TJ103T	1/4W 10K
R59, 60	ERDS2TJ332T	1/4W 3.3K
R63, 64	ERDS2TJ472T	1/4W 4.7K
R65	ERDS2TJ332T	1/4W 3.3K
R66	ERDS2TJ682T	1/4W 6.8K
R67	ERDS2TJ223T	1/4W 22K
R69, 70	ERDS2TJ153T	1/4W 15K
R71, 72	ERDS2TJ222T	1/4W 2.2K
R75, 76	ERDS2TJ102T	1/4W 1K
R301	ERDS2TJ1R0T	1/4W 1.0
R302, 303	ERDS2TJ183T	1/4W 18K
R304, 305	ERDS2TJ100T	1/4W 10
R306	ERDS2TJ471T	1/4W 470
R307	ERDS2TJ222T	1/4W 2.2K
R311, 312	ERDS2TJ221T	1/4W 220
R313, 314	ERDS2TJ154T	1/4W 150K
R315, 316	ERDS2TJ153T	1/4W 15K
R319	ERDS2TJ102T	1/4W 1K
R329	ERDS2TJ272T	1/4W 2.7K
R331, 332	ERDS2TJ222T	1/4W 2.2K
R401, 402	ERDS2TJ101T	1/4W 100

Ref. No.	Part No.	Values & Remarks
R403, 404	ERDS2TJ153T	1/4W 15K
R405, 406	ERDS2TJ103T	1/4W 10K
R407, 408	ERDS2TJ242T	1/4W 2.4K
R409-412	ERDS2TJ684T	1/4W 680K
R413, 414	ERDS2TJ562T	1/4W 5.6K
R415, 416	ERDS2TJ102T	1/4W 1K
R417, 418	ERDS2TJ332T	1/4W 3.3K
R419, 420	ERDS2TJ333T	1/4W 33K
R421-424	ERDS2TJ823T	1/4W 82K
R425, 426	ERDS2TJ683T	1/4W 68K
R427, 428	ERDS2TJ222T	1/4W 2.2K
R429, 430	ERDS2TJ512T	1/4W 5.1K
R501, 502	ERDS2TJ104T	1/4W 100K
R503	ERDS2TJ562T	1/4W 5.6K
R504	ERDS2TJ270T	1/4W 27
R505	ERDS2TJ221T	1/4W 220
R506, 507	ERDS2TJ391T	1/4W 390
R508	ERDS2TJ561T	1/4W 560
R509-513	ERDS2TJ391T	1/4W 390
R514, 515	ERDS2TJ471T	1/4W 470
R516-518	ERDS2TJ391T	1/4W 390
R519	ERDS2TJ331T	1/4W 330
R520	ERDS2TJ391T	1/4W 390
R521	ERDS2TJ331T	1/4W 330
R601, 602	ERDS2TJ472T	1/4W 4.7K
R603	ERDS2TJ103T	1/4W 10K
R604	ERDS2TJ472T	1/4W 4.7K
R605	ERDS1FVJ100T	1/2W 10 (E, EG, GC,
		P, PC, PX) ⚠
R605	ERD2FCVG100T	1/4W 10 (EB, GN) ⚠
R606	ERDS1FVJ3R3T	1/2W 3.3 ⚠
R607	ERDS2TJ391T	1/4W 390
R608	ERDS2TJ221T	1/4W 220
R609, 610	ERDS2TJ222T	1/4W 2.2K
R612	ERDS1FVJ100T	1/2W 10 (E, EG, GC,
		P, PC, PX) ⚠
R612	ERD2FCVG100T	1/4W 10 (EB, GN) ⚠
R614	ERDS2TJ102T	1/4W 1K
R615, 616	ERDS2TJ560T	1/4W 56
R617, 618	ERQ16NKR15E	1/6W 0.15 (EB, GN) ⚠
R619-621	ERDS2TJ560T	1/4W 56
R624	ERDS2TJ1R0T	1/4W 1.0 ⚠
R651	ERDS1FVJ120T	1/2W 12 (E, EG, GC,
		P, PC, PX)
R651	ERD2FCVG120T	1/4W 12 (EB, GN)
R701	ERDS2TJ821T	1/4W 820
R702	ERDS2TJ102T	1/4W 1K
R703	ERDS2TJ122T	1/4W 1.2K
R704	ERDS2TJ152T	1/4W 1.5K

Ref. No.	Part No.	Values & Remarks
R705	ERDS2TJ182T	1/4W 1.8K
R706	ERDS2TJ222T	1/4W 2.2K
R707	ERDS2TJ332T	1/4W 3.3K
R708	ERDS2TJ472T	1/4W 4.7K
R709	ERDS2TJ682T	1/4W 6.8K
R710	ERDS2TJ123T	1/4W 12K
R711	ERDS2TJ223T	1/4W 22K
R712	ERDS2TJ683T	1/4W 68K
R713	ERDS2TJ821T	1/4W 820
R714	ERDS2TJ102T	1/4W 1K
R715	ERDS2TJ122T	1/4W 1.2K
R716	ERDS2TJ152T	1/4W 1.5K
R717	ERDS2TJ182T	1/4W 1.8K
R718	ERDS2TJ222T	1/4W 2.2K
R719	ERDS2TJ332T	1/4W 3.3K
R720	ERDS2TJ472T	1/4W 4.7K
R721	ERDS2TJ682T	1/4W 6.8K
R722	ERDS2TJ123T	1/4W 12K
R723	ERDS2TJ223T	1/4W 22K
R751	ERDS2TJ472T	1/4W 4.7K
R901	ERDS2TJ473T	1/4W 47K
R902	ERDS2TJ563T	1/4W 56K
R903	ERDS2TJ393T	1/4W 39K
R904	ERDS2TJ152T	1/4W 1.5K
R905	ERDS2TJ222T	1/4W 2.2K
R906	ERDS2TJ103T	1/4W 10K
R907	ERDS2TJ563T	1/4W 56K
R908-910	ERDS2TJ103T	1/4W 10K
R911	ERDS2TJ392T	1/4W 3.9K
R912	ERDS2TJ222T	1/4W 2.2K
R913	ERDS2TJ272T	1/4W 2.7K
R914	ERDS2TJ152T	1/4W 1.5K
R915	ERDS2TJ473T	1/4W 47K
R916	ERDS2TJ272T	1/4W 2.7K
R917, 918	ERDS2TJ103T	1/4W 10K
R919	ERDS2TJ471T	1/4W 470
R920-922	ERDS2TJ103T	1/4W 10K
R923	ERDS2TJ102T	1/4W 1K
R924	ERDS2TJ103T	1/4W 10K
R925	ERDS2TJ273T	1/4W 27K
R926	ERDS2TJ102T	1/4W 1K
R927	ERDS2TJ223T	1/4W 22K
R928	ERDS2TJ562T	1/4W 5.6K
R929	ERDS2TJ272T	1/4W 2.7K
R930, 931	ERDS2TJ472T	1/4W 4.7K
R932	ERDS2TJ392T	1/4W 3.9K
R933	ERDS2TJ472T	1/4W 4.7K
R934	ERDS2TJ105T	1/4W 1M
R935	ERDS2TJ182T	1/4W 1.8K

Ref. No.
R936
R937
R938, 939
R940-942
R943
R944
R945
R946, 947
R948
R949
R950
R951
R952
R953
R954
R955
R956
R957
R958
R959
R960
R961
R962
R963
R964
R965
R966
R967
R968, 969
R971
R973
R974
R981
C1-4
C5, 6
C7-10
C11, 12
C13, 14
C15, 16
C17-20
C21
C23, 24
C25, 26
C27, 28
C29, 30
C31, 32
C33, 34
C35, 36
C37, 38

Ref. No.	Part No.	Values & Remarks
R936	ERDS2TJ103T	1/4W 10K
R937	ERDS2TJ472T	1/4W 4.7K
R938, 939	ERDS2TJ103T	1/4W 10K
R940-942	ERDS2TJ472T	1/4W 4.7K
R943	ERDS2TJ223T	1/4W 22K
R944	ERDS2TJ333T	1/4W 33K
R945	ERDS2TJ223T	1/4W 22K
R946, 947	ERDS2TJ102T	1/4W 1K
R948	ERDS2TJ184T	1/4W 180K
R949	ERDS2TJ103T	1/4W 10K
R950	ERDS2TJ332T	1/4W 3.3K
R951	ERDS2TJ103T	1/4W 10K
R952	ERDS2TJ432	1/4W 4.3K
R953	ERDS2TJ103T	1/4W 10K
R954	ERDS2TJ223T	1/4W 22K
R955	ERDS2TJ821T	1/4W 820
R956	ERDS2TJ223T	1/4W 22K
R957	ERDS2TJ821T	1/4W 820
R958	ERDS2TJ223T	1/4W 22K
R959	ERDS2TJ821T	1/4W 820
R960	ERDS2TJ153T	1/4W 15K
R961	ERDS2TJ561T	1/4W 560
R962	ERDS2TJ103T	1/4W 10K
R963	ERDS2TJ432	1/4W 4.3K
R964	ERDS2TJ184T	1/4W 180K
R965	ERDS2TJ103T	1/4W 10K
R966	ERDS2TJ223T	1/4W 22K
R967	ERDS2TJ821T	1/4W 820
R968, 969	ERDS2TJ472T	1/4W 4.7K
R971	ERDS2TJ182T	1/4W 1.8K
R973	ERDS2TJ561T	1/4W 560
R974	ERDS2TJ103T	1/4W 10K
R981	ERDS2TJ100T	1/4W 10
		CAPACITORS
C1-4	ECEA1HK010B	50V 1U
C5, 6	ECEA1CK220B	16V 22U
C7-10	ECBT1H561KB5	50V 560P
C11, 12	ECBT1H102KB5	50V 1000P
C13, 14	ECEA0JU101B	6.3V 100U
C15, 16	ECQB1H682JZ3	50V 6800P
C17-20	ECEA1EK4R7B	25V 4.7U
C21	ECEA0JU101B	6.3V 100U
C23, 24	ECEA1HKR33B	50V 0.33U
C25, 26	ECEA1HK010B	50V 1U
C27, 28	ECBT1H561KB5	50V 560P
C29, 30	ECKD2H101KB	500V 100P
C31, 32	ECCD1H181K	50V 180P
C33, 34	ECEA1HKR47B	50V 0.47U
C35, 36	ECQB1H472JZ3	50V 4700P
C37, 38	ECQB1H223JZ3	50V 0.022U

Ref. No.	Part No.	Values & Remarks
C39, 40	ECQB1H103JZ3	50V 0.01U
C41, 42	ECQB1H223JZ3	50V 0.022U
C43, 44	ECQB1H103JZ3	50V 0.01U
C45, 46	ECKR1H103ZF5	50V 0.01U
C49, 50	ECEA1CK100B	16V 10U
C53, 54	ECQB1H273JZ3	50V 0.027U
C55	ECBT1H102KB5	50V 1000P
C57, 58	ECEA1CU470B	16V 47U
C301	ECQP1153JZ	50V 0.015U
C302	ECEA1EK4R7B	25V 4.7U
C303	ECKR1H392KB5	50V 3900P
C304, 305	ECFR1E222KAY	25V 2200P
C306	ECFR1E682KAY	25V 6800P
C309	ECKR1H103ZF5	50V 0.01U
C310	ECKD1H472KB	50V 4700P
C311	ECEA1AU221B	10V 220U
C313, 314	ECQB1H223JZ3	50V 0.022U
C315, 316	ECBT1H821KB5	50V 820P
C317, 318	ECCD1H121K	50V 120P
C319, 320	ECQV1H104JZ3	50V 0.1U
C321, 322	ECQB1H223JZ3	50V 0.022U
C323, 324	ECQB1H103JZ3	50V 0.01U
C325, 326	ECKD1H122KB	50V 1200P
C328	ECCR1H100K5	50V 10P
C329	ECEA1CK100B	16V 10U
C330	ECBT1E103ZF5	25V 0.01U
C401, 402	ECFR1E222KAY	25V 2200P
C403, 404	ECEA1EK4R7B	25V 4.7U
C405, 406	ECKD1H122KB	50V 1200P
C407, 408	ECKD1H152KB	50V 1500P
C409, 410	ECQB1H472JZ3	50V 4700P
C411, 412	ECEA1CK100B	16V 10U
C413, 414	ECQV1H473JZ3	50V 0.047U
C415, 416	ECQV1H224JZ3	50V 0.22U
C417-420	ECEA1HKR68B	50V 0.68U
C421, 422	ECQV1H224JZ3	50V 0.22U
C423, 424	ECQV1H473JZ3	50V 0.047U
C425, 426	ECEA1CK100B	16V 10U
C427, 428	ECQB1H472JZ3	50V 4700P
C429, 430	ECQB1H103JZ3	50V 0.01U
C431, 432	ECEA1CK100B	16V 10U
C501, 502	ECEA1HK2R2B	50V 2.2U
C503	ECKR1H103ZF5	50V 0.01U
C565	ECKR1H223ZF5	50V 0.022U
C601	ECKD2H682PE	500V 6800P
C602, 603	ECEA1EU102B	25V 1000U ⚠
C604, 605	ECKR1H103ZF5	50V 0.01U
C606, 607	ECEA1AU471B	10V 470U
C608	ECKR1H103ZF5	50V 0.01U
C610, 611	ECEA0JU102B	6.3V 1000U
C612	ECEA1EU222E	25V 2200U
C621	ECKR1H103ZF5	50V 0.01U

Ref. No.	Part No.	Values & Remarks
C901	ECEA0JU222B	6.3V 2200U
C903	ECEA1HK010B	50V 1U
C904	ECEA1EK4R7B	25V 4.7U
C907	ECKR1H103ZF5	50V 0.01U
C909	ECKR1H103ZF5	50V 0.01U
C951	ECBT1H102KB5	50V 1000P
C952	ECBT1E103ZF5	25V 0.01U

Printed in Japan
H900311000 XY/TN