Service Manual

Receiver

FM/MW/LW Stereo Receiver

SA-120L

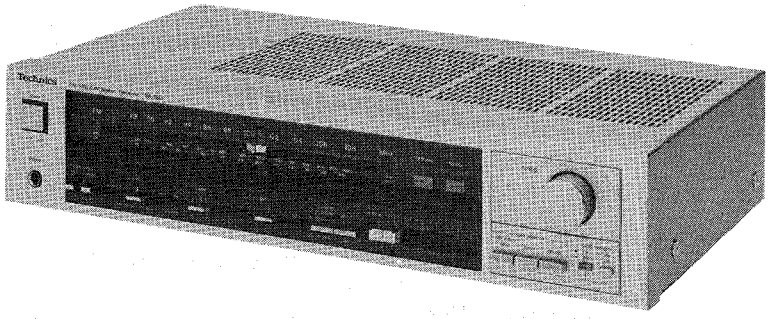

Color

(S) · · · · Silver Type
(K) · · · · Black Type

Color	Area
(S)	[EF] · · · · France
(S),(K)	[EK] · · · · United Kingdom
(S)	[EB] · · · · Belgium
(S),(K)	[EW] · · · · Switzerland

SPECIFICATIONS

(DIN 45 500)

■ AMPLIFIER SECTION

1 kHz continuous power output	
both channels driven	2 × 35W (8Ω)
Total harmonic distortion	
half power at 1 kHz	0.07% (8Ω)
Intermodulation distortion	
rated power at 60 Hz: 7 kHz=4:1, SMPTE, 8Ω	0.5%
Power bandwidth	
both channels driven, −3 dB	10 Hz~30 kHz (8Ω)
Damping factor	30 (8Ω)
Input sensitivity and impedance	
PHONO	2.5 mV/47kΩ
CD/VIDEO/AUX, TAPE	150 mV/18kΩ
PHONO maximum input voltage (1 kHz, RMS)	130 mV
S/N	
rated power (8Ω)	
PHONO	68 dB (IHF, A: 71 dB)
CD/VIDEO/AUX, TAPE	88 dB (IHF, A: 95 dB)
Frequency response	
PHONO	RIAA standard curve ±0.8 dB (30 Hz~15 kHz)
CD/VIDEO/AUX, TAPE	5 Hz~70 kHz (−3 dB)
Tone controls	
BASS	50 Hz, +10 dB~ −10 dB
TREBLE	20 kHz, +10 dB~ −10 dB
Output voltage	
REC OUT	150 mV
Channel balance, CD/VIDEO/AUX 250 Hz~6,300 Hz	±1 dB
Channel separation, CD/VIDEO/AUX	55 dB
Headphones output level and impedance	390 mV/330Ω
Load impedance	
MAIN or REMOTE	8Ω~16Ω
MAIN and REMOTE	8Ω~16Ω

■ FM TUNER SECTION

Frequency range	87.50~108.00 MHz
Sensitivity	
S/N 30 dB	1.9 μV (300Ω), 1.3 μV (75Ω)
S/N 26 dB	1.7 μV (300Ω), 1.2 μV (75Ω)
S/N 20 dB	1.5 μV (300Ω), 0.9 μV (75Ω)
IHF usable sensitivity	1.9 μV (IHF '58)
IHF 46 dB stereo quieting sensitivity	22 μV/75Ω
Total harmonic distortion	
MONO	0.15%
STEREO	0.3%
S/N	
MONO	60 dB (76 dB, IHF)
STEREO	58 dB (70 dB, IHF)
Frequency response	20 Hz~15 kHz, +1 dB~ −2 dB
Alternate channel selectivity ±400 kHz	60 dB
Capture ratio	1 dB
Image rejection at 98 MHz	40 dB
IF rejection at 98 MHz	60 dB
Spurious response rejection at 98 MHz	70 dB
AM suppression	50 dB
Stereo separation	
1 kHz	40 dB
10 kHz	30 dB
Carrier leak	
19 kHz	−33 dB (−35 dB, IHF)
38 kHz	−50 dB (−50 dB, IHF)
Channel balance (250 Hz~6,300 Hz)	±1.5 dB
Limiting point	1.2 μV
Bandwidth	
IF amplifier	180 kHz
FM demodulator	1,000 kHz
Antenna terminals	300Ω (balanced) 75Ω (unbalanced)

Technics

Matsushita Electric Trading Co., Ltd.
P.O. Box 288, Central Osaka Japan

■ AM TUNER SECTION

Frequency range	**MW**	525 ~ 1605 kHz
	LW	145 ~ 350 kHz
Sensitivity (S/N 20 dB)	**MW**	20 μV, 300 μV/m
	LW	45 μV
Selectivity	**MW at 1000 kHz**	27 dB
	LW at 250 kHz	30 dB
Image rejection	**MW at 100 kHz**	40 dB
	LW at 250 kHz	40 dB
IF rejection	**MW at 1000 kHz**	55 dB
	LW at 250 kHz	45 dB

■ GENERAL

Power consumption	180W
Power supply	
For United Kingdom	AC 50 Hz/60 Hz, 240V
For continental Europe	AC 50 Hz/60 Hz, 220V
Dimensions (W×H×D)	430 × 97 × 249 mm (16-15/16" × 3-13/16" × 9-13/16")
Weight	5.0 kg (11.0 lb.)

Specifications are subject to change without notice for further improvent.

■ CONTENTS

	Page
PROTECTION CIRCUITRY	2
BEFORE REPAIR AND ADJUSTMENT	2
LOCATION OF CONTROLS	3
DISASSEMBLY INSTRUCTIONS	4, 5
DIAL CORD INSTALLATION GUIDE	5
MEASUREMENTS AND ADJUSTMENTS	6, 7
RESISTORS & CAPACITORS	8, 11
REPLACEMENT PARTS LIST (Electrical Parts)	11
CIRCUIT BOARDS AND WIRING CONNECTION DIAGRAM	9, 10
BLOCK DIAGRAM	12, 13
SCHEMATIC DIAGRAM	14 ~ 19
TERMINAL GUIDE OF TRANSISTORS, DIODES AND IC'S	19
REPLACEMENT PARTS LIST (Cabinet and Chassis Parts)	20
EXPLODED VIEW	21, 22

■ PROTECTION CIRCUITRY

The protection circuitry may have operated if either of the following conditions is noticed:

- No sound is heard when the power is turned on.
- Sound stops during a performance.

The function of this circuitry is to prevent circuitry damage if, for example, the positive and negative speaker connection wires are "shorted", or if speaker systems with an impedance less than the indicated rated impedance of this unit are used.

If this occurs, follow the procedure outlines below:

1. Turn off the power.
2. Determine the cause of the problem and correct it.
3. Turn on the power once again after one minute.

Note

When the protection circuitry functions, the unit will not operate unless the power is first turned off and then on again.

■ BEFORE REPAIR AND ADJUSTMENT

1. Turn off the power supply and short-circuit both ends of the power supply capacitors (C701, C702, 4700μF) with a resistor (about 10Ω, 5W) to discharge the charged voltage. Do not short both ends of C701 and C702 with a screwdriver. It may damage the component.
2. Before turning on the power supply after completion of repair, slowly apply the primary voltage by using a power supply voltage controller to make sure that the consumed current is free of abnormality. The consumed current at 50Hz in no signal mode is shown below with respect to supply voltage 220V/240V.

Power supply voltage		**AC220V**	**AC240V**
Current consumed	50 Hz	50 ~ 150mA	40 ~ 120mA

■ LOCATION OF CONTROLS

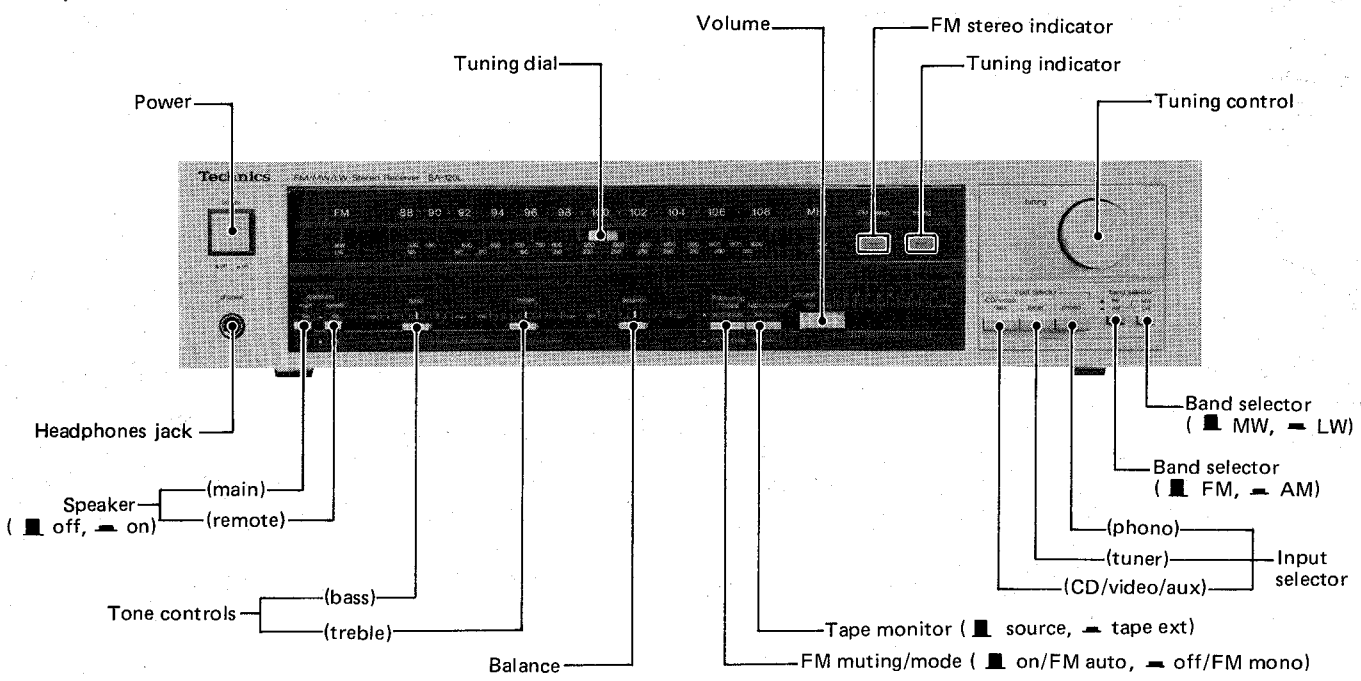

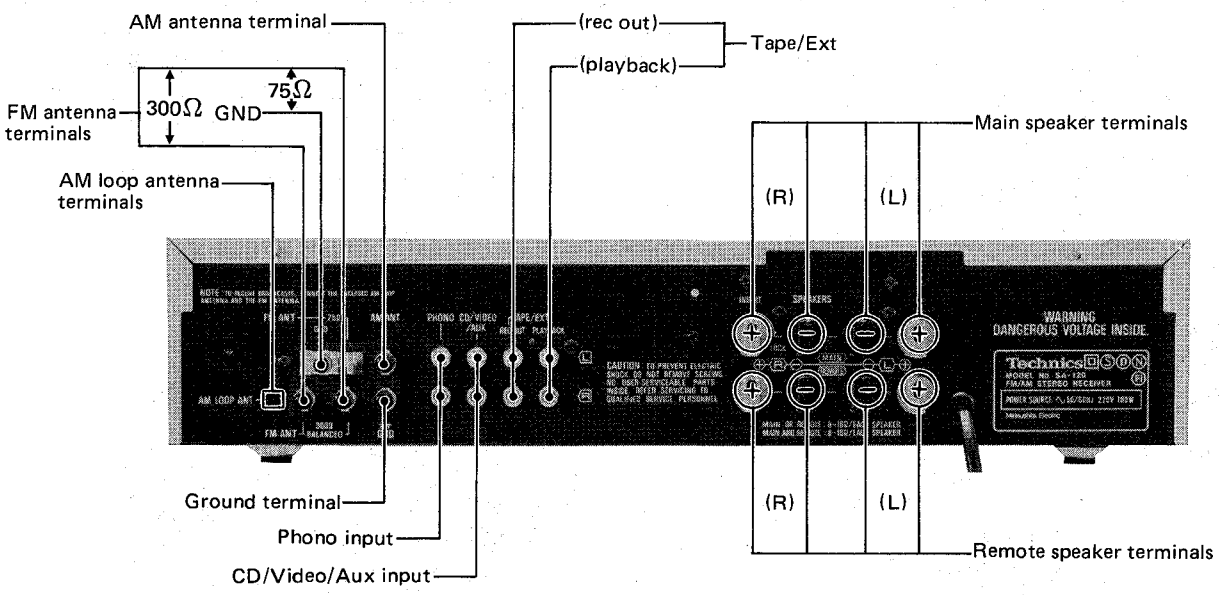

- Phono input capacitance is about 150pF.
- Series connection method is employed for the main and remote speaker connections of this set. Therefore, if both speaker changeover switches (main and remote) are turned "on" with the speaker unit connected only to main or remote speaker terminal, then no output signal will be delivered from the speaker unit.
- The power supply for this unit varies depending upon the areas. Also, the parts used for power supply are different.

* 220V(50/60Hz) for continental Europe.
* 240V(50/60Hz) for United Kingdom.

■ DISASSEMBLY INSTRUCTIONS

Ref. No. 1	How to remove the cabinet
Procedure 1	• Remove the 6 setscrews. (❶~❻)

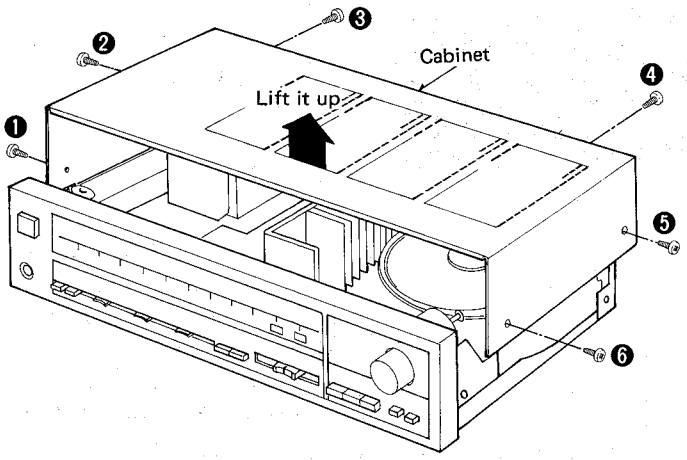

Ref. No. 2	How to remove the bottom board
Procedure 2	• Remove the 10 setscrews (❼ ~ ⓰)

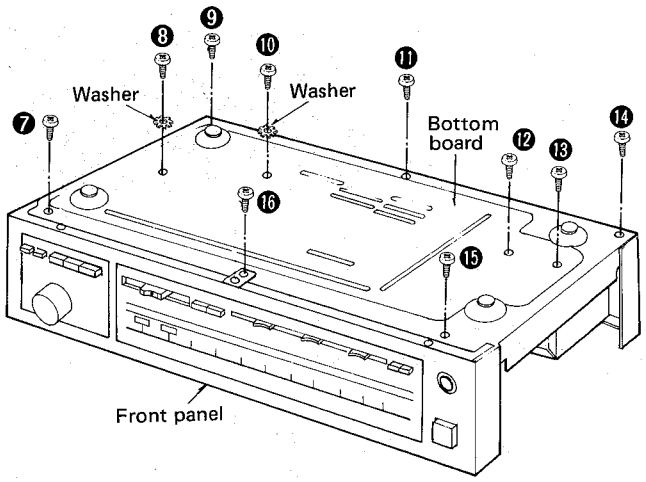

Ref. No. 3	How to remove the front panel
Procedure 1 →3	1. Remove the 3 setscrews. (⓱ ~ ⓳) 2. Release the 5 claws.

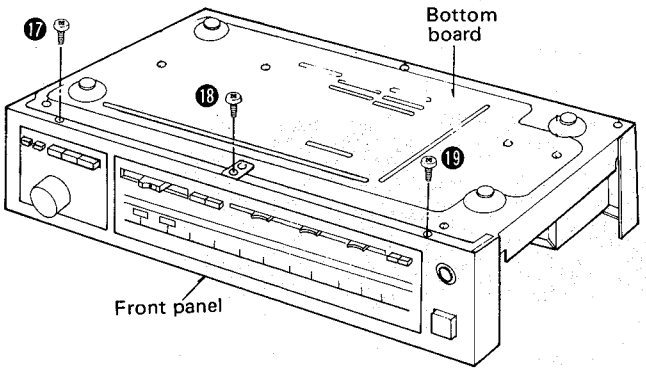

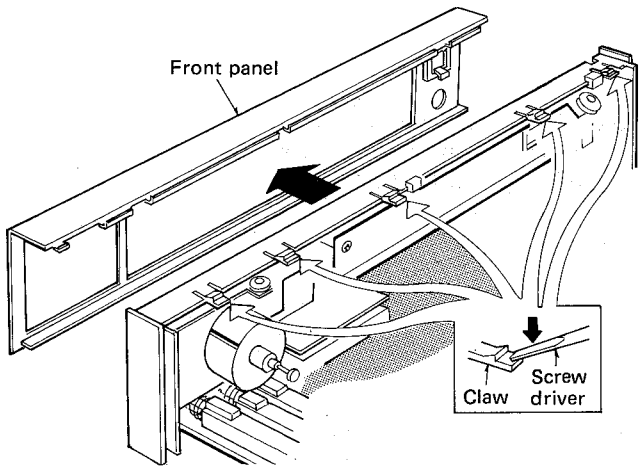

Ref. No. 4	How to remove the power amplifier IC
Procedure 1 →2 →4	1. Remove the 2 setscrews. (⓬, ⓭) 2. Detach the power transformer from rear panel in the direction of arrow Ⓐ. 3. Unsolder of power amplifier IC. 4. Remove the 2 setscrews. (⓴, ㉑)

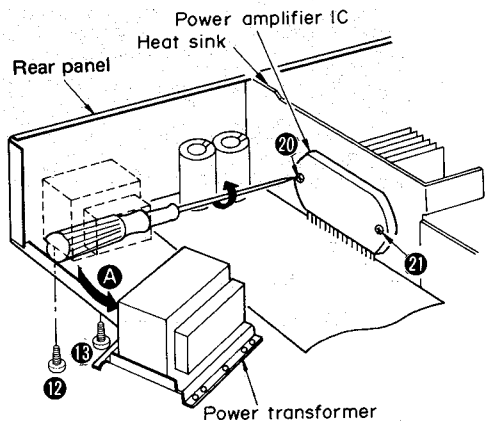

When mounting the power amplifier IC, apply silicone compound (SZZ0L15) to the rear side of power amplifier IC, and then follow the steps 1 ~ 4 reversely.

Ref. No. 5	How to remove the slide volume
Procedure 1 →5	

1. Set the dial to the start position (minimum frequency), then stick a cellophane tape the contact Ⓑ of dial cord so that the dial drum will not come loose from the dial cord.
2. Remove the 1 setscrew. (㉒)
3. Remove the dial cord from the pulley. (Ⓒ)

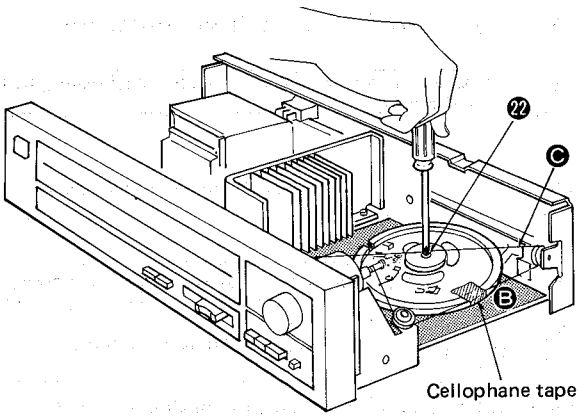

● Remove the 3 setscrews and 1 connector. (㉓ ~ ㉖)

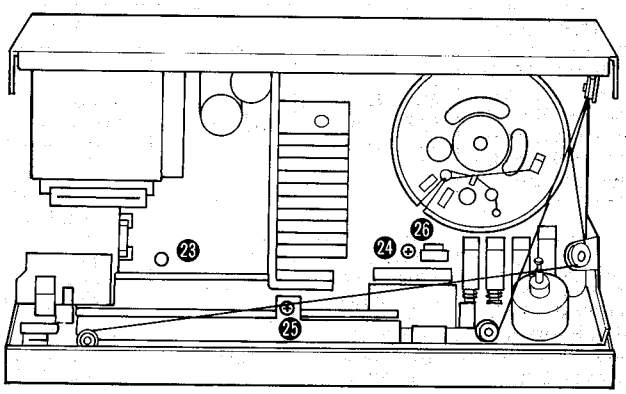

1. The claws projected (at 4 portions) from the slide volume printed circuit board are engaged with the slide volume.
2. Disengage the claws from by screwdriver of the like to remove the slide volume case.
3. Unsolder the slide volume.

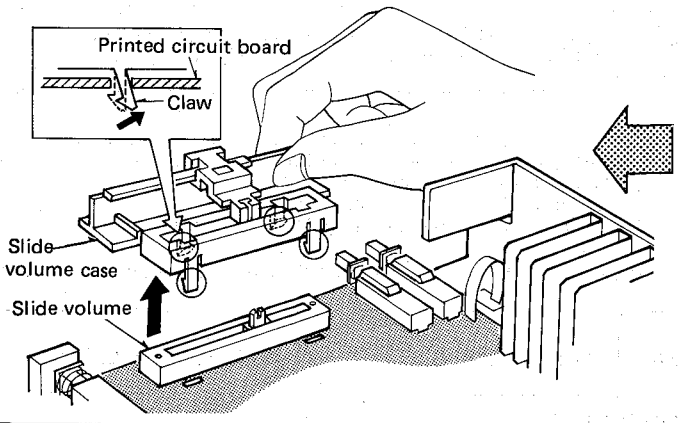

● Remove the front panel in the direction of the arrow.

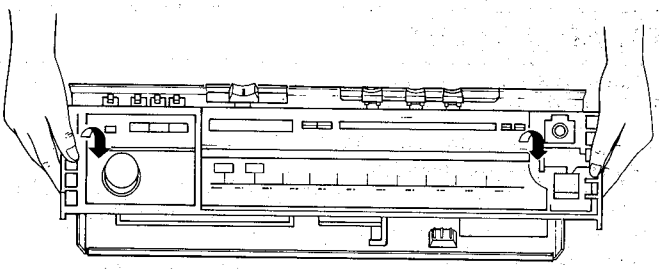

■ DIAL CORD INSTALLATION GUIDE

- **When setting the cord, follow the procedure given below**

1. The cord should be at least 180 cm long.
2. Completely turn the tuning gang (variable capacitor) counterclockwise. (Variable capacity : max. Frequency; min.) max. Frequency; min.)
3. Make a knot at the cord and as shouwn in Fig. 1
4. Set the spring to the knot, and set the cord in the order of 1 – 10.

Note: At step 7, pull the cord strongly, slacken the spring up to the mark of the durm, then go to steps 9 – 10 to set the cord.

5. Fix the cord terminal with adhesive.
6. Cut off the cord about 5 mm at its either end.

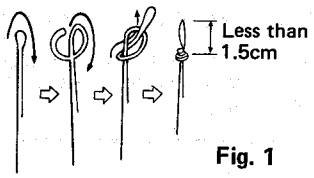

Fig. 1

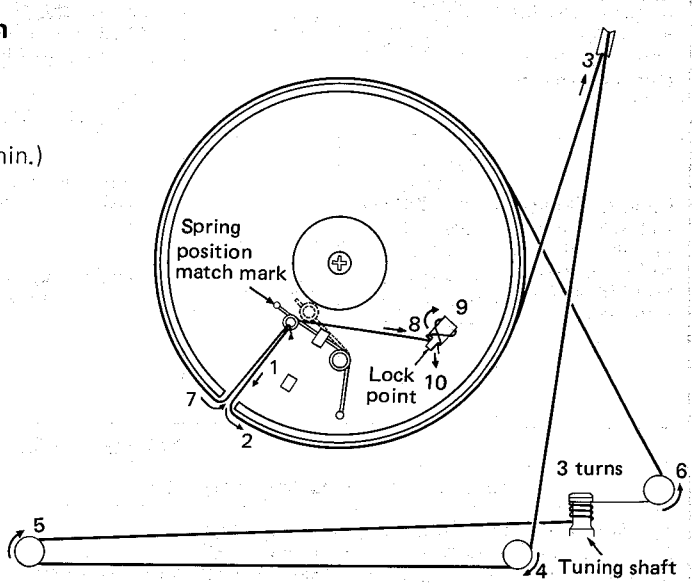

■ MEASUREMENTS AND ADJUSTMENTS

Note: FM antenna coil (L201) and AM IFT (T202) have been already adjusted, and require no adjustment.

AM ADJUSTMENT

*** Setting and equipment used**
1. AC electronic voltmeters (VTVM)
2. AM signal generator (AM-SG)
3. Set band selector to "AM" position.
4. Maintain line voltage at rated voltage.
5. Output of signal generator should be no higher than necessary to obtain an output reading.
6. Use a non-metal screwdriver for the adjustment.

Step No.	AM SIGNAL GENERATOR CONNECTION	AM SIGNAL GENERATOR FREQUENCY	DIAL SETTING	PREPARATIONS	PARTS ADJUSTED	ADJUSTING PROCEDURE
	[EK] only			**AM-IF ADJUSTMENT**		*** This adjustment is only for the United Kingdom, not necessary for others.**
1	Connect AM-SG to AM antenna terminal through 200pF capacitor referring to Fig. 2. (Weak input)	468kHz (30% Mod. with 400Hz)	468KHz	Connect AC VTVM or scope to "speaker" terminal of the set.	T202 (IFT)	1. Adjust for maximum output.
				MW-RF ADJUSTMENT		***Set band selector to "MW" position.**
2	Connect AM-SG to AM antenna terminal through 200pF capacitor referring to Fig. 2. (Weak input)	600kHz (30% Mod. with 400Hz)	600kHz	Connect AC VTVM or scope to "speaker" terminal of the set.	L205 (ANT Coil) L206 (OSC Coil)	1. Adjust for maximum output.
3		1500kHz (30% Mod. with 400Hz)	1500kHz	Connect AC VTVM or scope to "speaker" terminal of the set.	CT204 (OSC Trimmer) CT203 (ANT Trimmer)	1. Adjust for maximum output. 2. Repeat steps (2) and (3).
				LW-RF ADJUSTMENT		***Set band selector to "LW" position.**
4	Connect AM-SG to AM antenna terminal through 200pF capacitor referring to Fig. 2. (Weak input)	145kHz (30% Mod. with 400Hz)	145kHz	Connect AC VTVM or scope to "speaker" terminal of the set.	L250 (ANT Coil) L251 (OSC Coil)	1. Adjust for maximum output.
5		350kHz (30% Mod. with 400Hz)	350kHz	Connect AC VTVM or scope to "speaker" terminal of the set.	CT252 (OSC Trimmer) CT251 (ANT Trimmer)	1. Adjust for maximum output. 2. Repeat steps (4) and (5).

FM ADJUSTMENT

*** Setting and equipment used**
1. FM signal generator (FM-SG)
2. Oscilloscope.
3. DC electronic voltmeters (VTVM).
4. Frequency counter (19kHz and 108MHz measurable).
5. Set band selector to "FM" position.
6. FM muting/FM mode switch ... off/FM mono.
7. Other setting are the same as in AM adjustment.

*** FM signal generator (FM-SG)**
1. The standard input of the set is 60dB (1mV), 400Hz 100% modulation (Because of attenuation, using coaxial cables, SG output must be 6dB Plus. That is, when input is 60dB, SG output is to be 66dB.)

Step No.	FM SIGNAL GENERATOR CONNECTION	FM SIGNAL GENERATOR FREQUENCY	DIAL SETTING	PREPARATIONS	PARTS ADJUSTED	ADJUSTING PROCEDURE
				FM IF ADJUSTMENT		
6	Connect FM-SG to FM antenna terminal referring to Fig. 3.) (Apply 60dB to antenna terminal)	100MHz (100% Mod. with 400Hz)	100MHz	Connect DC VTVM to between TP201 and TP202 through choke coil (Refer to Fig. 3 .)	T201 (Discri. IFT)	1. Adjust T201 core so that voltage measured in signal mode is 0mV in 150mV range.
				FM-RF ADJUSTMENT	*** Connect TP201 and TP202**	
7	Connect FM-SG to FM antenna terminal referring to Fig. 3. (Apply 60dB to antenna terminal)	90MHz (100% Mod. with 400Hz) weak input	90 MHz	Connect scope to "speaker" terminal	L204 (OSC Coil) L202 (RF DET Coil)	• Add weak input so that noise is included in the output waveform. • Make the adjustment so that the output wave form is vertically symmetrical. AF output waveform 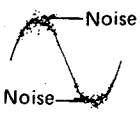 • Repeat the steps (7) and (8) until the frequency correctly matches the dial scale.
8		106MHz (100% Mod. with 400Hz) weak input.	106 MHz	Connect scope to "speaker" terminal	CT202 (OSC Trimmer) CT201 (RF DET Trimmer)	
				FM MPX V.C.O. ADJUSTMENT		
9	**USING A FREQUENCY COUNTER** 1. 100MHz 60dB non-modulated mono signal applied to set. 2. FM muting/FM mode switch to "on/FM auto". 3. Connect frequency counter to TP301 through resistor (100kΩ). 4. Adjust VR301 to 19kHz ±30 Hz. (Fig. 4)			**USING ALTERNATE SYSTEM** 1. Apply stereo signal from generator or stereo station to tuner. 2. Adjust **VR301** until stereo indicator lights up. Cement arm of **VR301** as shown in Fig. 5.		

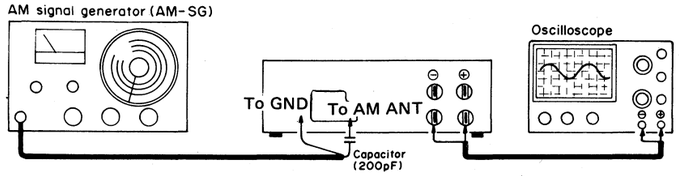

Fig. 2

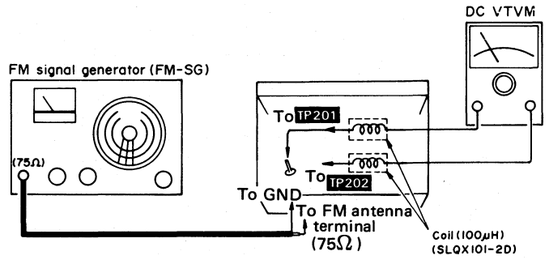

Fig. 3

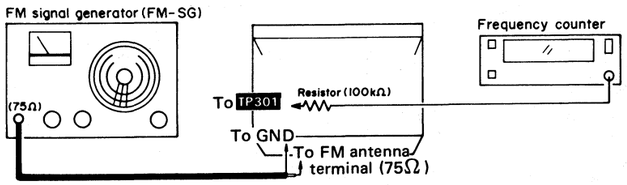

Fig. 4

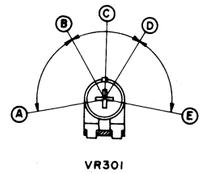

A–B, D–E: Stereo OFF Position.
B–D: Stereo ON Position. (indicator Lighting)
C: Adjust Point of Pilot Circuit.

Fig. 5

- **Check points**
  Overload detection circuit
  1 Connect 4Ω load to speaker terminal.
  2 Add 1kHz signal from the audio frequency oscillator to the set and adjust the sound volume control knob so that the output voltage is 5 volts.
  3 Connect 3.3Ω (2W) load to speaker terminal.
  4 Make sure that no output is delivered.
  * **If protection circuit turns OFF due to overload, the circuit and load will not restored their normal conditions unless power supply is once turned OFF and again turned ON.**

• Adjustment points

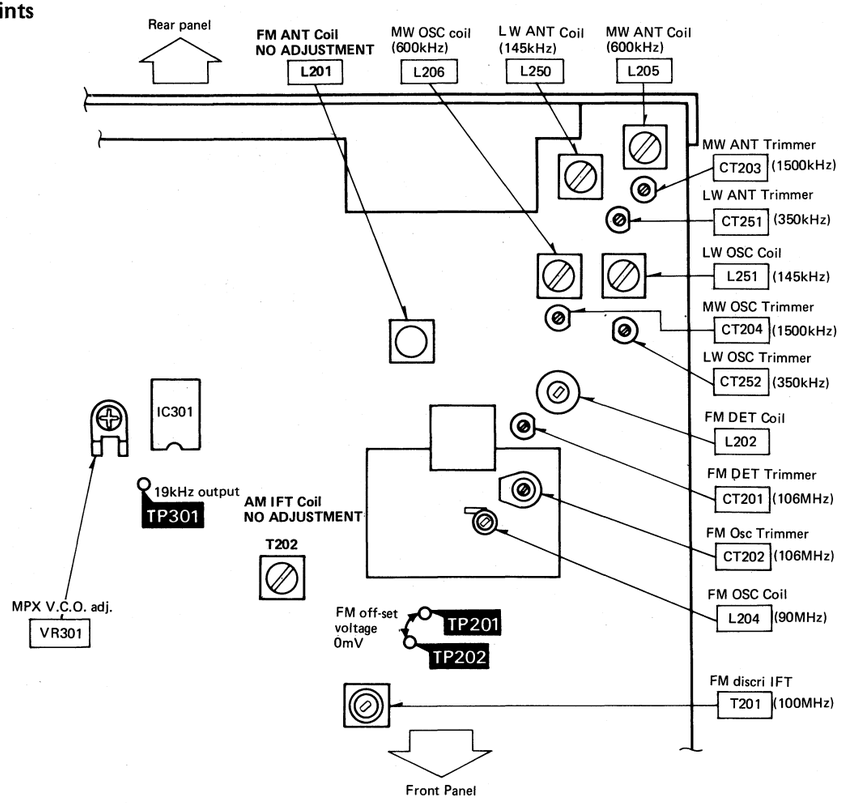

■ RESISTORS & CAPACITORS

Notes:
1. Part numbers are indicated on most mechanical parts. Please use this part number for parts orders.
2. Important safety notice: Components identified by ⚠ mark have special characteristics important for safety. When replacing any of these components use only manufacturer's specified parts.
3. The "Ⓢ" mark is service standard parts and may differ from production parts.
4. The unit of resistance is Ω. (ohm) K=1000Ω, M=1000kΩ.
5. The unit of capacitance is μF. (microfarad) P=10^{-6}μF.

Numbering System of Resistor

Example

ERD	25	F	J	101
Type	Wattage	Shape	Tolerance	Value

Resistor Type	Wattage	Tolerance
ERD : Carbon ERX : Metal Film ERG : Metal Oxide	25 : 1/4W S1 : 1/2W 1 : 1W 2 : 2W	J : ±5%

Numbering System of Capacitor

Example

ECKD	1H	102	M	D
Type	Voltage	Value	Tolerance	Peculiarity

ECEA	50	M	R47	R
Type	Voltage	Peculiarity use	Value	Special use

Capacitor Type	Voltage: ECEA Type	Voltage: Others	Tolerance
ECEA : Electrolytic ECCD : Ceramic ECKD : Ceramic ECQM : Polyester ECQP : Polypropylene ECET : Electrolytic ECQE : Polyester	0J : 6.3V 1A : 10V 1C : 16V 1E : 25V 1V : 35V 42 : 42V 1H : 50V 50 : 50V	1H : 50V DC KC : 400V AC	C : ±0.25pF J : ±5% K : ±10% Z : +80%, –20% P : +100%, –0%

Ref. No.	Part No.	Value
RESISTORS		
R201 Ⓢ	ERD25FJ102	1K
R202 Ⓢ	ERD25FJ220	22
R203 Ⓢ	ERD25FJ221	220
R204 Ⓢ	ERD25TJ474	470K
R205 Ⓢ	ERD25FJ471	470
R206 Ⓢ	ERD25TJ123	12K
R207 Ⓢ	ERD25FJ822	8.2K
R208 Ⓢ	ERD25FJ102	1K
R209 Ⓢ	ERD25FJ562	5.6K
R210 Ⓢ	ERD25TJ224	220K
R211 Ⓢ [EK]only	ERD25FJ821	820
R211 other Ⓢ	ERD25FJ471	470
R212 Ⓢ	ERD25FJ152	1.5K
R213 Ⓢ	ERD25TJ564	560K
R214 Ⓢ	ERD25TJ684	680K
R215 Ⓢ	ERD25FJ471	470
R216 Ⓢ	ERD25TJ824	820K
R217 Ⓢ	ERD25FJ152	1.5K
R218 Ⓢ	ERD25FJ122	1.2K
R220 Ⓢ	ERD25FJ102	1K
R221 Ⓢ	ERD25FJ331	330
R222 Ⓢ	ERD25FJ103	10K
R223 Ⓢ	ERD25FJ562	5.6K
R224 Ⓢ	ERD25FJ103	10K
R225,226 Ⓢ	ERD25FJ472	4.7K

Ref. No.	Part No.	Value
RESISTORS		
R227 Ⓢ	ERD25TJ154	150K
R228 Ⓢ	ERD25FJ122	1.2K
R229 Ⓢ	ERD25FJ821	820
R230 Ⓢ	ERD25FJ471	470
R231 Ⓢ	ERD25FJ102	1K
R232 Ⓢ	ERD25FJ151	150
R250 Ⓢ	ERD25FJ272	270
R251 Ⓢ	ERD25FJ121	120
R301,302 Ⓢ	ERD25FJ103	10K
R303 Ⓢ	ERD25TJ104	100K
R304[EK]only	ERDS1FJ470	47
R304 other Ⓢ	ERD25FJ470	47
R305,306 Ⓢ	ERD25TJ223	22K
R307,308 Ⓢ	ERD25FJ222	2.2K
R309,310 Ⓢ	ERD25TJ333	33K
R311 Ⓢ	ERD25TJ334	330K
R312 Ⓢ	ERD25TJ153	15K
R314 Ⓢ	ERD25FJ561	560
R315 Ⓢ	ERD25FJ102	1K
R401,402 Ⓢ	ERD25FJ391	390
R403,404 Ⓢ	ERD25TJ224	220K
R405,406 Ⓢ	ERD25TJ563	56K
R407,408 Ⓢ	ERD25FJ271	270
R409,410 Ⓢ	ERD25FJ680	68
R411,412 Ⓢ	ERD25TJ184	180K
R413,414 Ⓢ	ERD25TJ123	12K

Ref. No.	Part No.	Value
RESISTORS		
R415,416 Ⓢ	ERD25TJ563	56K
R417,418 Ⓢ	ERD25FJ102	1K
R501,502 Ⓢ	ERD25FJ222	2.2K
R503,504 Ⓢ	ERD25FJ222	2.2K
R505,506 Ⓢ	ERD25FJ561	560
R507,508 Ⓢ	ERD25TJ183	18K
R509,510 Ⓢ	ERD25FJ222	2.2K
R511,512 Ⓢ	ERD25TJ124	120K
R513,514 Ⓢ	ERD25TJ824	820K
R515,516 Ⓢ	ERD25TJ473	47K
R521,522 Ⓢ	ERD25FJ103	10K
R601,602 Ⓢ	ERD25FJ102	1K
R603,604 Ⓢ	ERD25TJ393	39K
R605,606 Ⓢ	ERD25FJ222	2.2K
R607,608 Ⓢ⚠	ERD25FJ272	2.7K
R609 Ⓢ⚠	ERG1ANJ152	1.5K
R610 ⚠	ERDS1FJ101	100
R611,612 Ⓢ	ERX2ANJR22	0.22
R613,614 ⚠	ERDS1FJ100	10
R615,616 Ⓢ	ERD25FJ222	2.2K
R617,618 Ⓢ	ERD25TJ153	15K
R619,620 Ⓢ	ERD25TJ123	12K
R621,622 Ⓢ	ERD25TJ123	12K
R623,624 Ⓢ	ERD25TJ473	47K
R625,626 Ⓢ⚠	ERD25TJ153	15K
R627,628 Ⓢ	ERD25FJ102	1K

Ref. No.	Part No.	Value
RESISTORS		
R629 Ⓢ	ERD25FJ102	1K
R630 Ⓢ⚠	ERD25TJ223	22K
R631,632 Ⓢ	ERG1ANJ331	330
R633 Ⓢ	ERD25FJ562	5.6K
R634 Ⓢ	ERD25TJ123	12K
R635 Ⓢ	ERD25TJ473	47K
R636 Ⓢ	ERD25TJ154	150K
R637 Ⓢ	ERD25TJ104	100K
R638 Ⓢ	ERG1ANJ152	1.5K
R639 Ⓢ	ERD25TJ184	180K
R640,641 Ⓢ⚠	ERD25FJ470	47
R643 Ⓢ⚠	ERD25FJ470	47
R644 Ⓢ⚠	ERD25FJ470	47
R645 Ⓢ⚠	ERD25FJ470	47
R647,648 Ⓢ	ERD25TJ104	100K
R649,650 ⚠	ERDS1FJ100	10
R701 ⚠	ERDS1FJ270	27
R702 Ⓢ	ERD25FJ821	820
R703 ⚠	ERDS1FJ152	1.5K
R704 Ⓢ	ERD25FJ121	120
R705 Ⓢ	ERD25FJ272	2.7K
R706 Ⓢ	ERD25FJ392	3.9K
R707 ⚠	ERDS1FJ152	1.5K
R708 Ⓢ	ERD25FJ221	220
R710 ⚠	ERD25FAJ2R2	2.2

To page 11.

■ CIRCUIT BOARDS AND WIRING CONNECTION DIAGRAM

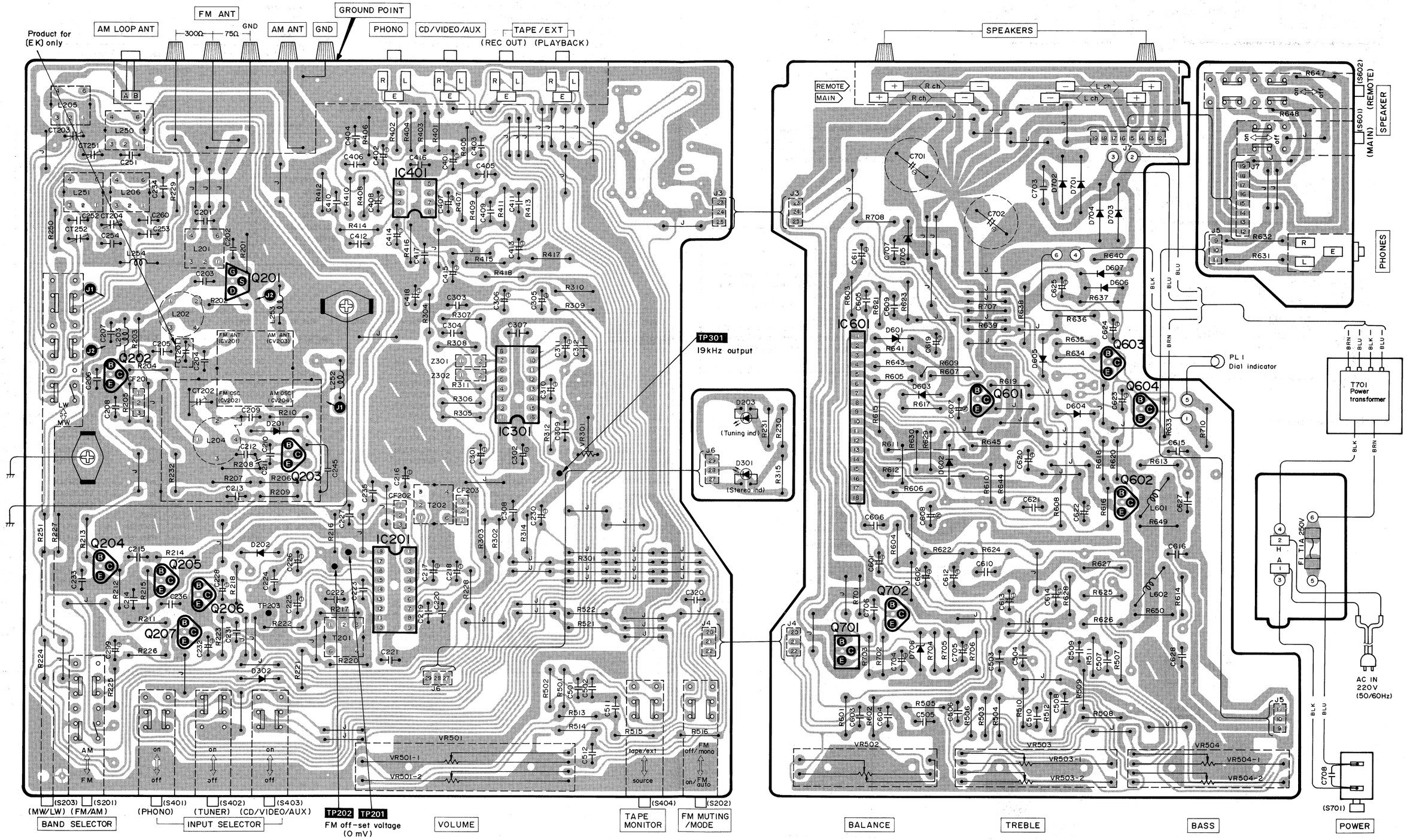

From page 8.

Ref. No.	Part No.	Value
CAPACITORS		
C201 Ⓢ	ECCD1H120KC	12P
C202 Ⓢ	ECCD1H180KC	18P
C203 Ⓢ	ECKD1H103ZF	0.01
C204 Ⓢ	ECCD1H180KC	18P
(EK) only		
C204 other Ⓢ	ECCD1H220KC	22P
C205 Ⓢ	ECCD1H010CC	1P
(EK) only		
C205 other Ⓢ	ECCD1H030CC	3P
C206 Ⓢ	ECCD1H090CC	9P
C207 Ⓢ	ECCD1H181K	180P
C208 Ⓢ	ECKD1H103ZF	0.01
C209 Ⓢ	ECCD1H050CC	5P
(EK) only		
C209 other Ⓢ	ECCD1H080CC	8P
C210 Ⓢ	ECCD1H390KC	39P
C211 Ⓢ	ECCD1H100KC	10P
C212 Ⓢ	ECKD1H102ZF	0.001
C213,214 Ⓢ	ECKD1H103ZF	0.01
C215 Ⓢ	ECCD1H151K	150P
C216 Ⓢ	ECEA1HS100	10
C217 Ⓢ	ECEA1AS101	100
C218 Ⓢ	ECEA25Z4R7	4.7
C219,220 Ⓢ	ECKD1H223ZF	0.022

Ref. No.	Part No.	Value
CAPACITORS		
C221	ECQM1H333KV	0.033
C222 Ⓢ	ECCD1H101K	100P
C223,224 Ⓢ	ECKD1H223ZF	0.022
C225 Ⓢ	ECEA1AS470	47
C226 Ⓢ	ECEA50ZR47	0.47
C227 Ⓢ	ECKD1H223ZF	0.022
C228 Ⓢ	ECEA1HS100	10
C230 Ⓢ	ECEA1HS100	10
C231	ECQM1H183KV	0.018
C232 Ⓢ	ECEA50Z2R2	2.2
C233 Ⓢ	ECCD1H270KC	27P
C234 Ⓢ	ECKD1H223ZF	0.022
C235 Ⓢ	ECCD1H220KC	22P
C236 Ⓢ	ECKD1H223ZF	0.022
C245 Ⓢ	ECKD1H102FZ	0.001
C251 Ⓢ	ECCD1H180KC	18P
C252	ECQP1181JZ	180P
C253	ECQP1361JZ	360P
C254 Ⓢ	ECCD1H820KC	82P
C260 Ⓢ	ECCD1H150KC	15P
C299 Ⓢ	ECEA1HS100	10
C301 Ⓢ	ECEA50Z1	1
C302 Ⓢ	ECEA1ES101	100
C303,304	ECQM1H223KV	0.022

Ref. No.	Part No.	Value
CAPACITORS		
C305,306 Ⓢ	ECEA25Z4R7	4.7
C307	ECQM1H473KV	0.047
C308 Ⓢ	ECKD1H103ZF	0.01
C309	ECQP1471JZ	470P
C310 Ⓢ	ECEA50ZR47	0.47
C311 Ⓢ	ECEA50Z1	1
C312 Ⓢ	ECKD1H103ZF	0.01
C320 Ⓢ	ECKD1H223ZF	0.022
C401,402 Ⓢ	ECEA50Z3R3	3.3
C403,404 Ⓢ	ECCD1H101K	100P
C405,406 Ⓢ	ECKD1H471KB	470P
C407,408 Ⓢ	ECEA1CS330	33
C409,410	ECQM1H223KV	0.022
C411,412	ECQM1H682KV	0.0068
C413,414 Ⓢ	ECEA50Z1	1
C415 Ⓢ	ECEA1CS330	33
C416 Ⓢ	ECKD1H473ZF	0.047
C417 Ⓢ	ECKD1H103ZF	0.01
C418 Ⓢ	ECEA1CS330	33
C501,502 Ⓢ	ECKD1H331KB	330P
C503,504	ECQM1H222KV	0.0022
C505,506	ECQM1H223KV	0.022
C507,508	ECQM1H183KV	0.018
C509,510	ECQM1H104KV	0.1

Ref. No.	Part No.	Value
CAPACITORS		
C511,512	ECQM1H333KV	0.033
C601,602 Ⓢ	ECEA50Z2R2	2.2
C603,604 Ⓢ	ECCD1H101K	100P
C605,606 Ⓢ	ECKD1H221KB	220P
C607,608 ⚠ Ⓢ	ECEA1HN3R3S	3.3
C609,610 Ⓢ	ECCD1H050CC	5P
C611,612 Ⓢ	ECEA1AS470	47
C613,614 Ⓢ	ECEA1HS100	10
C615,616	ECQM1H104KV	0.1
C619 Ⓢ	ECEA1HS470	47
C620 Ⓢ	ECEA1HS101	100
C621 Ⓢ	ECKD1H103ZF	0.01
C622 Ⓢ	ECEA1JS330	33
C623 Ⓢ	ECEA1HS100	10
C624,625 Ⓢ	ECEA1JS330	33
C627,628	ECQM1H104KV	0.1
C701,702 ⚠	ECETS42V472U	4700
C703 ⚠	ECQE1104KN	0.1
C704 Ⓢ	ECEA1ES101	100
C705 Ⓢ	ECEA1HS100	10
C706,707 Ⓢ	ECKD1H103ZF	0.01
C708 ⚠	ECKDKC103PF2	0.01

■ REPLACEMENT PARTS LIST (Electrical Parts)

Notes: 1. Part numbers are indicated on most mechanical parts. Please use this part numbe for parts orders.
2. Important safety notice:
Components identified by ⚠ mark have special characteristics important for safety.
When replacing any of these components use only manufacturer's specified parts.
3. The "Ⓢ" mark is service standard parts and many differ from production parts.
4. Bracketed indications in Ref. No. columns specify the areas. Parts without these indications can be used for all areas.

Ref. No.	Part No.	Part Name & Description
INTEGRATED CIRCUITS		
IC201	AN7273A	FM IF Det. & AM Convertor
IC301	SVIUPC1161C3	MPX
IC401	AN6553F	Equalizer
IC601	STK4152−2M	Power
TRANSISTORS		
Q201	2SK241−GR	FM-RF Amp.
Q202 Ⓢ	2SC1047−D	Mixer
Q203 Ⓢ	2SC1675−L	MF OSC
Q204,205 Ⓢ	2SC829−C	FM-IF Amp.
Q206,207 Ⓢ	2SC828AS	LED Drive, Muting
604,702		Regulator
Q601,602	2SA921−R	Over Load Det.
Q603 Ⓢ	2SA564AR	
Q701	2SD1265−O	Regulator
DIODES		
D201 Ⓢ	IS2687AA	FM AFC
D202	MA27W−A	
D203,301	LN846RP	L. E. D
D302 Ⓢ	MA162A	Switching
602~606		
D601 Ⓢ	SVDRD8.2EB	Zener, 8.2V
D607 Ⓢ ⚠	SVDSR1K2	Rectifier
D701~704 ⚠	SVDS2V20	Rectifier
D705	MA1160M	Zener, 16V
D706	MA1062M	Zener, 6.2V
COILS		
L201	SLA4N39	FM Antenna
L202	SLD4P71−P	FM Detector
L203,252~254	SLQZ12G1−D	Choke
L204	SL04P121−P	FM Oscillator
L205	SLA2C3−P	AM Antenna

Ref. No.	Part No.	Part Name & Description
L206	SL02C35−P	AM Oscillator
L250	SLA1C13−P	LW Antenna
L251	SLO1C13−P	LW Oscillator
L601,602	SLQY07G−30	Choke
TRANSFORMERS		
T201	SL14C539−P	FM IFT
T202	SL12C139−M	AM IFT
T701 (EK) only ⚠	SLT5M385	Power Source
T701 other ⚠	SLT5M383	Power Source
CERAMIC FILTERS		
CF201,202	SVFE107MS2−A	FM, 10.7MHz (Red)
	SVFE107MS2−B	FM, 10.675MHz (Blue)
	SVFE107MS2−C	FM, 10.725MHz (Orange)
	SVFE107MS2−D	FM, 10.650MHz (Black)
	SVFE107MS2−E	FM, 10.750MHz (White)
(Use pair ranks as same as CF201 and CF202)		
CF203 (EX) only	SVFSFU468B	468KHz
CF203 other	SVFSFU450B3	450KHz
VARIABLE RESISTORS		
VR301	EVN75AA00B53	VCO Adjustment, 5kΩ(B)
VR501	EWE00605A15S	Volume Control, 100kΩ(A)
VR502	EVD00305G15S	Balance Control, 100kΩ(G)
VR503,54	EWD00205C15S	Tone Control, 100kΩ(C)

Ref. No.	Part No.	Part Name & Description
VARIABLE CAPACITORS		
CT201 (EK) only	ECRHA010A11	Trimmer
CT202	ECV1ZW10X32E	Trimmer, FM OSC
CT203,204,251	SVCTZ03R200F	Trimmer, AM
252		Antenna
CV201	SVCCB42T916	Tuning Gang
COMPONENT COMBINATIONS		
Z301,302	EXRP181K473C	180pF, 47kΩ
LAMP		
PL1 ⚠	XAMR78S250	12V,0.22A
FUSE		
F1 ⚠	XBA2C10TRO	250V, T1A
SWITCHES		
S201	SSH1151	Band Selector (FM/AM)
S202,404	SSH1031	Mode, Tape Monitor
S203	SSH1063	Band Selector (LW/MW)
S401,402,403	SSH3069	Input Selector
S601	SSH1149	Speaker(Main)
S602	SSH1073	Speaker(Remote)
S701 ⚠	SSH1071	Power Source

■ BLOCK DIAGRAM

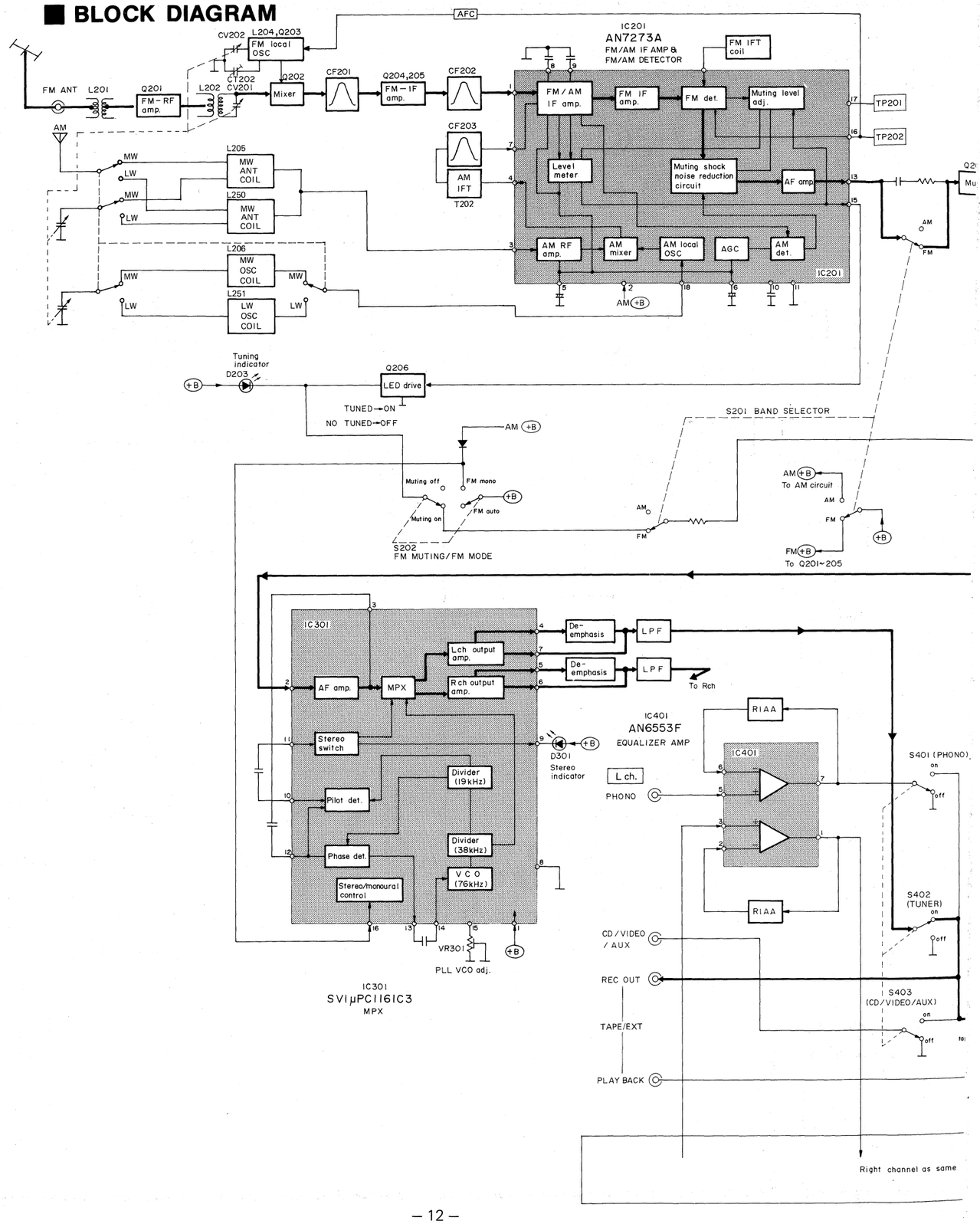

	Part No.	Value
TORS		
	ECQM1H333KV	0.033
Ⓢ	ECEA50Z2R2	2.2
Ⓢ	ECCD1H101K	100P
Ⓢ	ECKD1H221KB	220P
Ⓢ	ECEA1HN3R3S	3.3
Ⓢ	ECCD1H050CC	5P
Ⓢ	ECEA1AS470	47
Ⓢ	ECEA1HS100	10
	ECQM1H104KV	0.1
Ⓢ	ECEA1HS470	47
Ⓢ	ECEA1HS101	100
Ⓢ	ECKD1H103ZF	0.01
Ⓢ	ECEA1JS330	33
Ⓢ	ECEA1HS100	10
Ⓢ	ECEA1JS330	33
	ECQM1H104KV	0.1
⚠	ECETS42V472U	4700
⚠	ECQE1104KN	0.1
Ⓢ	ECEA1ES101	100
Ⓢ	ECEA1HS100	10
Ⓢ	ECKD1H103ZF	0.01
⚠	ECKDKC103PF2	0.01

s.

).	Part Name & Description
S	
11	Trimmer
32E	Trimmer, FM OSC
00F	Trimmer, AM
	Antenna
16	Tuning Gang
ATIONS	
73C	180pF, 47kΩ
0	12V, 0.22A
O	250V, T1A
	Band Selector (FM/AM)
	Mode,
	Tape Monitor
	Band Selector (LW/MW)
	Input Selector
	Speaker(Main)
	Speaker(Remote)
	Power Source

■ BLOCK DIAGRAM

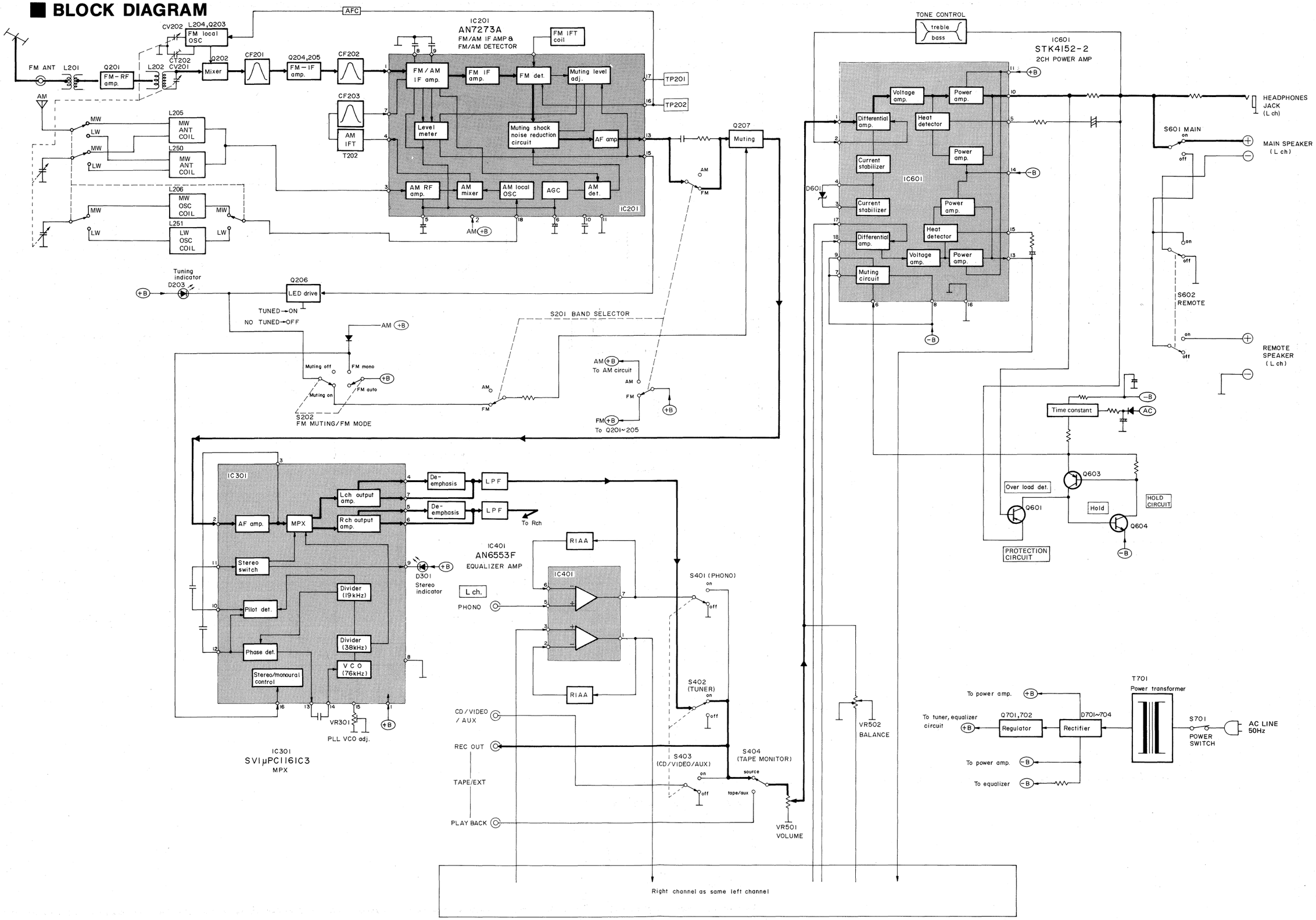

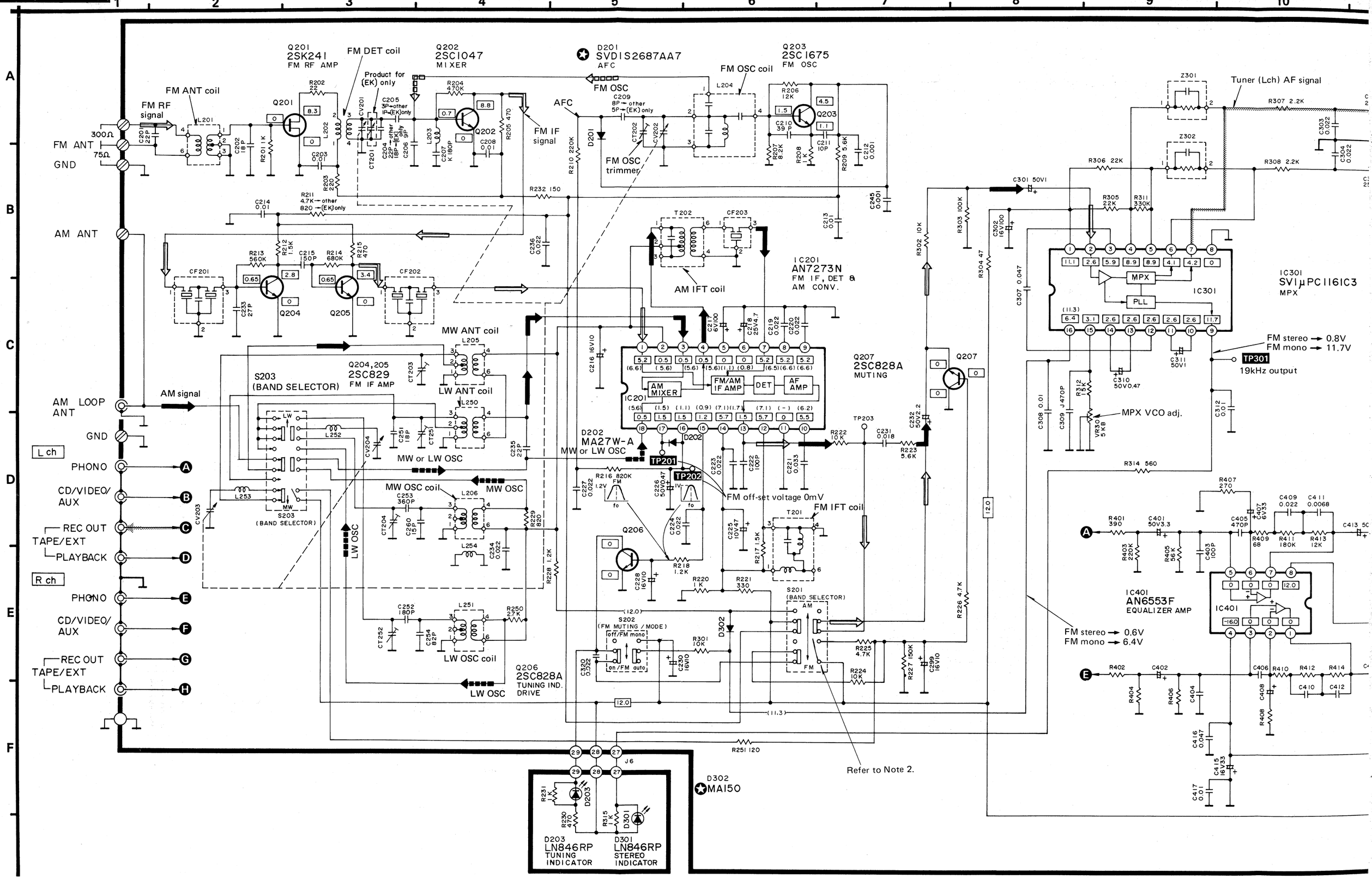
Q201
2SK241
FM RF AMP
FM DET coil
Q202
2SC1047
MIXER
D201
SVD1S2687AA7
AFC
Q203
2SC1675
FM OSC
FM OSC coil
FM ANT coil
FM RF signal
FM ANT
300Ω
75Ω
GND
FM IF signal
FM OSC trimmer
AM ANT
AM IFT coil
IC201
AN7273N
FM IF, DET & AM CONV.
MW ANT coil
LW ANT coil
S203
(BAND SELECTOR)
Q204,205
2SC829
FM IF AMP
AM signal
AM LOOP ANT
GND
L ch
PHONO
CD/VIDEO/AUX
REC OUT
TAPE/EXT
PLAYBACK
R ch
PHONO
CD/VIDEO/AUX
REC OUT
TAPE/EXT
PLAYBACK
MW or LW OSC
MW OSC coil
MW OSC
LW OSC
LW OSC coil
D202
MA27W-A
TP201
TP202
FM off-set voltage 0mV
FM IFT coil
Q206
2SC828A
TUNING IND. DRIVE
S202
(FM MUTING / MODE)
off/FM mono
on/FM auto
Q207
2SC828A
MUTING
S201
(BAND SELECTOR)
AM
FM
Refer to Note 2.
D302
MA150
D203
LN846RP
TUNING INDICATOR
D301
LN846RP
STEREO INDICATOR
Tuner (Lch) AF signal
IC301
SVIμPC1161C3
MPX
FM stereo → 0.8V
FM mono → 11.7V
TP301
19kHz output
MPX VCO adj.
IC401
AN6553F
EQUALIZER AMP
FM stereo → 0.6V
FM mono → 6.4V

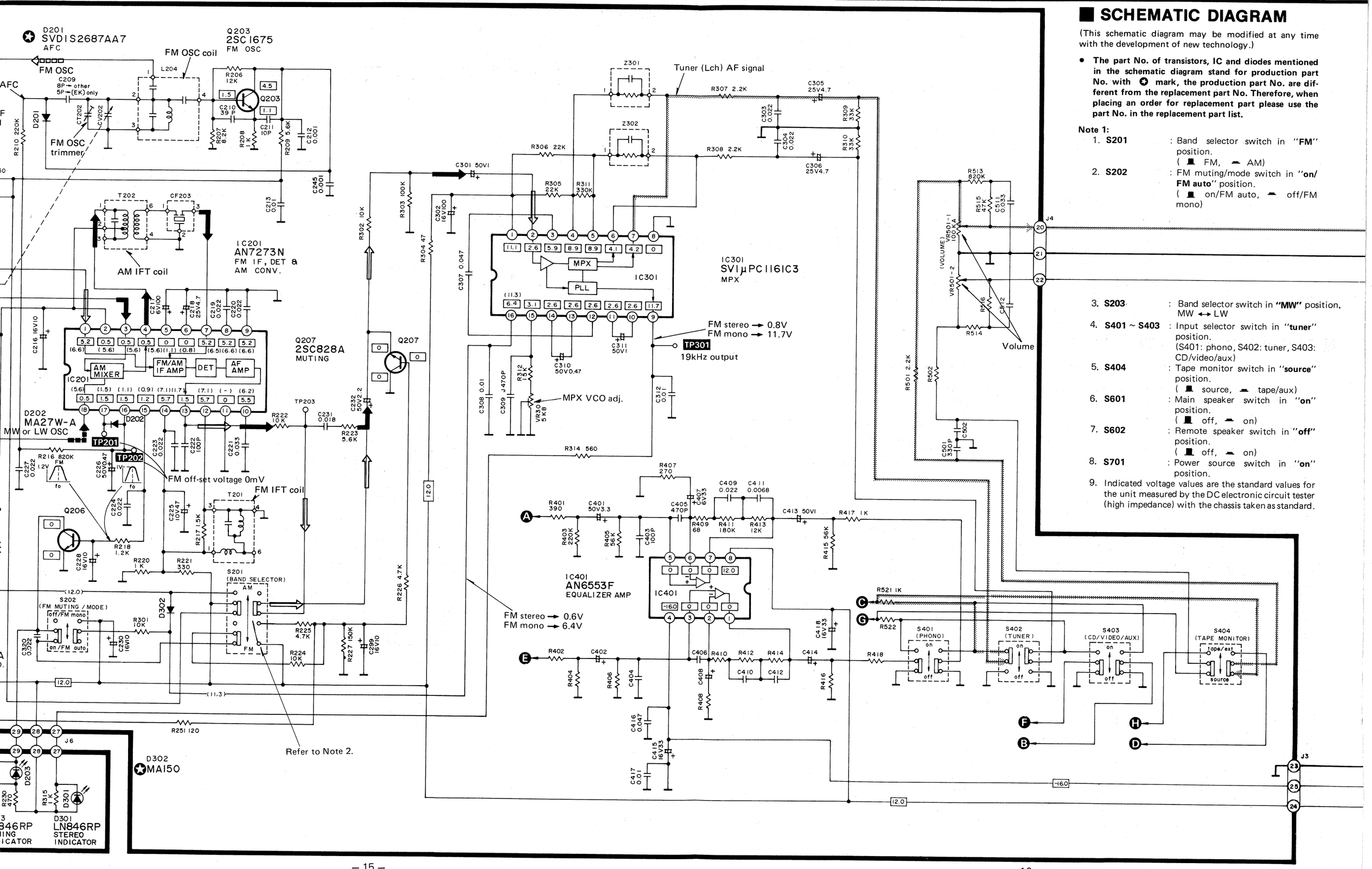

SCHEMATIC DIAGRAM

(This schematic diagram may be modified at any time with the development of new technology.)

- **The part No. of transistors, IC and diodes mentioned in the schematic diagram stand for production part No. with ✪ mark, the production part No. are different from the replacement part No. Therefore, when placing an order for replacement part please use the part No. in the replacement part list.**

Note 1:

1. **S201** : Band selector switch in "**FM**" position. (▙ FM, ▔ AM)
2. **S202** : FM muting/mode switch in "**on/FM auto**" position. (▙ on/FM auto, ▔ off/FM mono)
3. **S203** : Band selector switch in "**MW**" position. MW ↔ LW
4. **S401 ~ S403** : Input selector switch in "**tuner**" position. (S401: phono, S402: tuner, S403: CD/video/aux)
5. **S404** : Tape monitor switch in "**source**" position. (▙ source, ▔ tape/aux)
6. **S601** : Main speaker switch in "**on**" position. (▙ off, ▔ on)
7. **S602** : Remote speaker switch in "**off**" position. (▙ off, ▔ on)
8. **S701** : Power source switch in "**on**" position.
9. Indicated voltage values are the standard values for the unit measured by the DC electronic circuit tester (high impedance) with the chassis taken as standard.

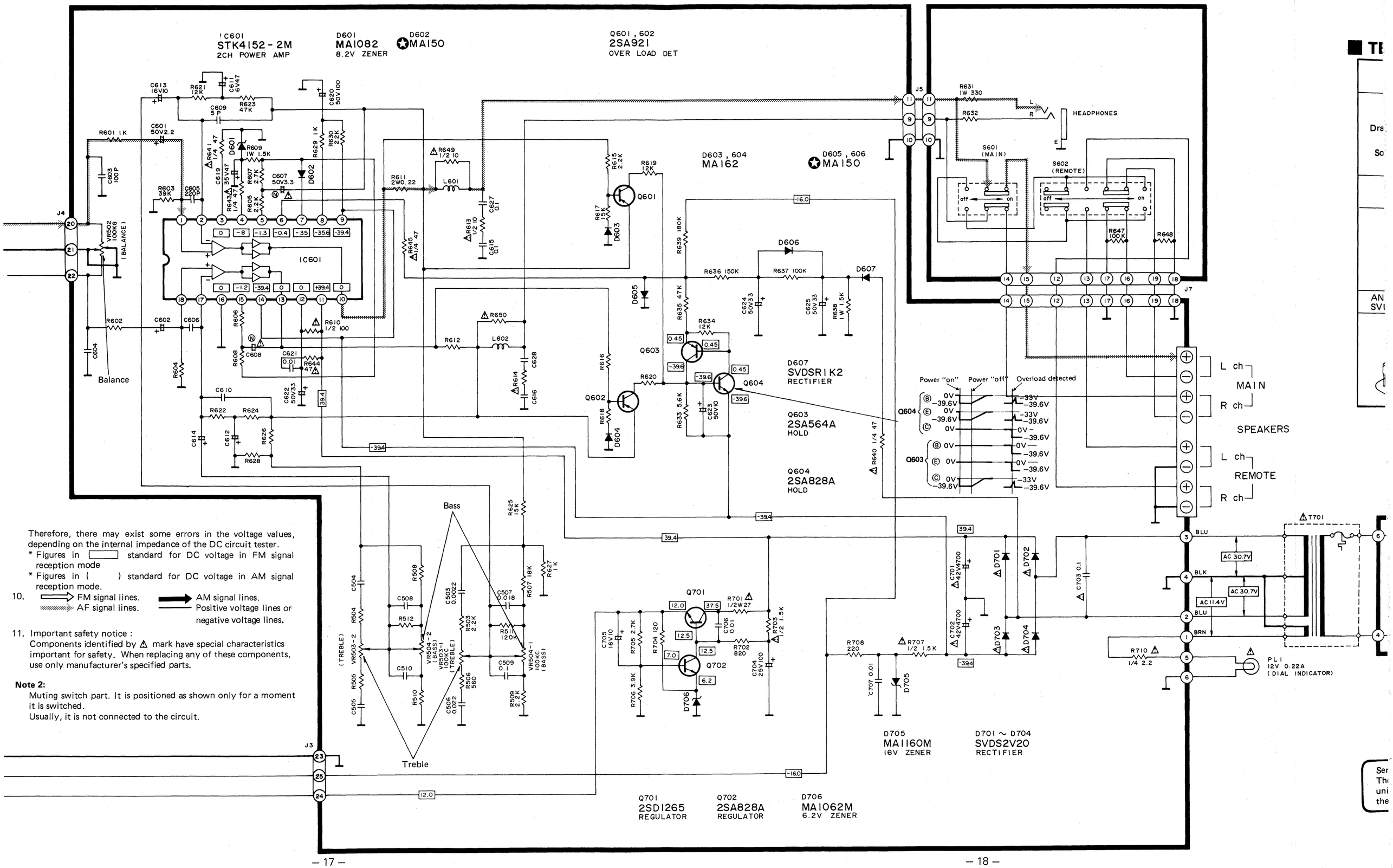

Therefore, there may exist some errors in the voltage values, depending on the internal impedance of the DC circuit tester.

* Figures in ▭ standard for DC voltage in FM signal reception mode
* Figures in ( ) standard for DC voltage in AM signal reception mode.

10. ⇨ FM signal lines. ➡ AM signal lines.
    ▒ AF signal lines. ▬ Positive voltage lines or negative voltage lines.

11. Important safety notice :
    Components identified by ⚠ mark have special characteristics important for safety. When replacing any of these components, use only manufacturer's specified parts.

Note 2:
Muting switch part. It is positioned as shown only for a moment it is switched.
Usually, it is not connected to the circuit.

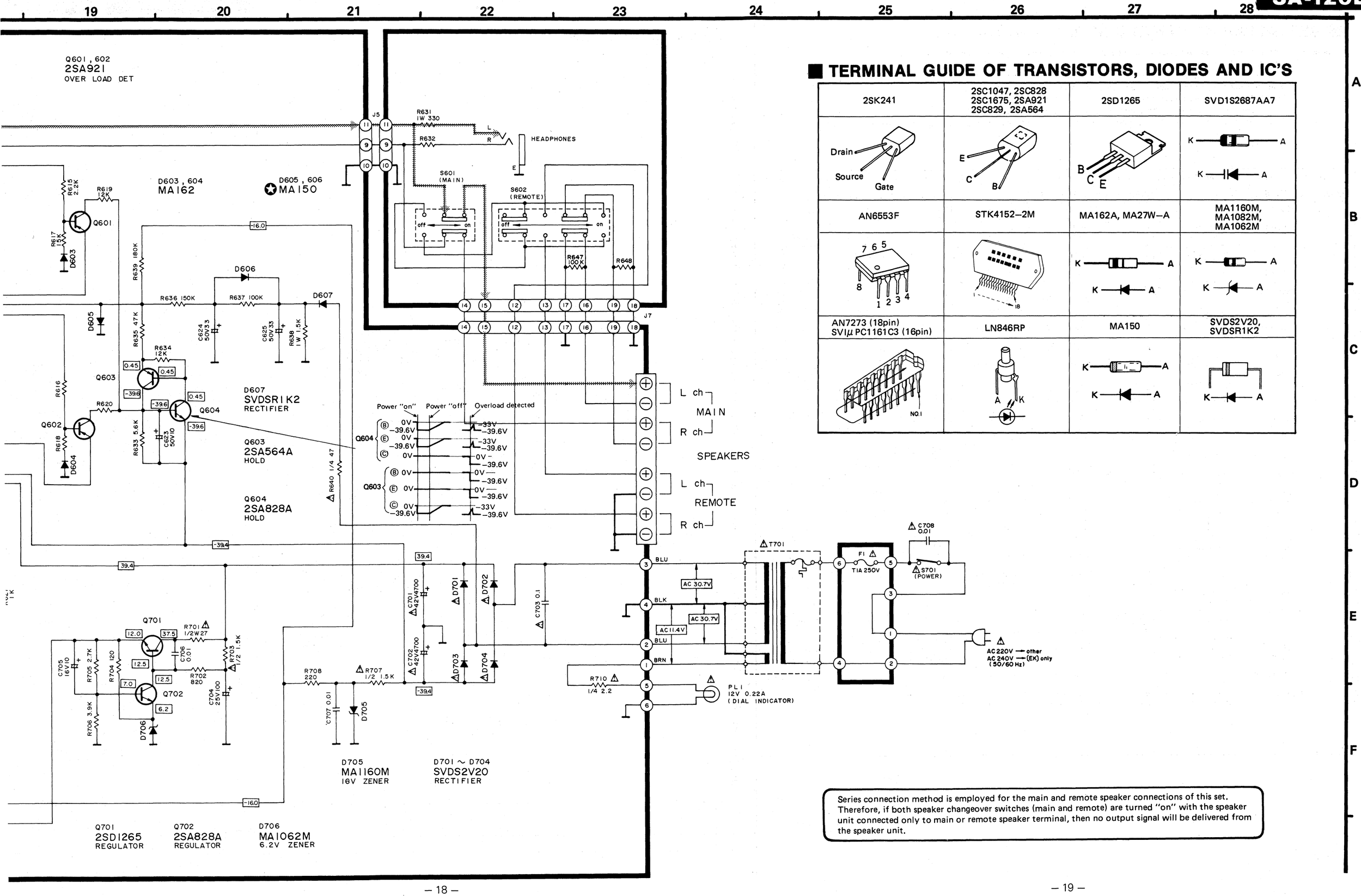

TERMINAL GUIDE OF TRANSISTORS, DIODES AND IC'S

2SK241	2SC1047, 2SC828 2SC1675, 2SA921 2SC829, 2SA564	2SD1265	SVD1S2687AA7
AN6553F	STK4152–2M	MA162A, MA27W–A	MA1160M, MA1082M, MA1062M
AN7273 (18pin) SVIμPC1161C3 (16pin)	LN846RP	MA150	SVDS2V20, SVDSR1K2

Series connection method is employed for the main and remote speaker connections of this set. Therefore, if both speaker changeover switches (main and remote) are turned "on" with the speaker unit connected only to main or remote speaker terminal, then no output signal will be delivered from the speaker unit.

■ REPLACEMENT PARTS LIST (Cabinet and Chassis Parts)

Notes:
1. Part numbers are indicated on most mechanical parts. Please use this part numbe for parts orders.
2. Important safety notice:
   Components identified by ⚠ mark have special characteristics important for safety.
   When replacing any of these components use only manufacturer's specjfied parts.
3. The "Ⓢ" mark is service standard parts and many differ from production parts.
4. The parenthesized numbers in the coℓumn of description stand for the quantity per set.
5. Bracketed indications in Ref. No. columns specify the areas. Parts without these indications can be used for all areas.

Ref. No.	Part No.	Part Name & Description
CABINET and CHASSIS PARTS		
1	SUS305	Bracket (1)
2 ○	SGWA120L−SE	Front Panel, Ass'y (Silver Type) (1)
2 Ⓚ	SGWA120L−KE	Front Panel, Ass'y (Black Type) (1)
3	SGU333−15	Dial Scale (1) (Silver Type)
4	SBN1091	Knob, Tuning (1)
5 ○	SGX7657−1	Front Sub Pane (Silver Type) (1)
5 Ⓚ	SGX7657−3	Front Sub Pane (Black Type) (1)
6 ○	SBD69−2T	Knob, Tone (3) (Silver Type)
6 Ⓚ	SBD69−3T	Knob, Tone (3) (Black Type)
7	SBC627	Button, Power Switch (1)
8	SHG6363	Spacer, Button (1)
9	SUS257	Spring, Button (9)
10	SBC583−1T	Button, Input Selector (3)
11	SBC483−8T	Button, Band Selector (1)
12	SUR152M	Bracket, Tuning Shaft (1)
13	SHR5253	Spacer, Drum (1)
14	SDD105	Drum, Dial (1)
15	SUS295−1	Spring, Dial Drum (1)
16	SDZ051−2	Cord, Dial (1.8m)
17	SDT8095−1	Tuning Shaft (1)
18	SDR31	Roller, Dial (4)
19	SGX7463−3	Ornament, Volume (1)
20	SHR411	Lock Pin (2)
21 ○	SBD77T	Knob, Volume (Silver Type) (1)
21 Ⓚ	SBD77−1T	Knob, Volume (Black Type) (1)
22	SBZ657−1	Slider (1)
23	SBC423T	Button (2)
24	SHR9727	Sheet (1)
25 ○	SBC483−6T	Button (3) (Silver Type)
25 Ⓚ	SBC483−8T	Button (3) (Black Type)

Ref. No.	Part No.	Part Name & Description
CABINET and CHASSIS PARTS		
26	SUG181	Guide, Pointer (1)
27	SGX7461−3	Ornament (1)
28	SBZ663−1	Slider (3)
29	SHP59	Spacer, Pointer (1)
30	SDP1167−1	Dial, Pointer (1)
31	SJJ71B	Jack, Headphne (1)
32	SUW1989	Bracket (1)
33 ○	SKCA121−SM	Cabinet (1) (Silver Type)
33 Ⓚ	SKCA121−KC	Cabinet (1) (Black Type)
34	SKUA120−SE	Bottom Board (1)
[34−1	[SKL245−2	Foot (4)
35	SJF8035−8N	Terminal Board (1)
36	SJF4815−2	Terminal Board (1)
37 [EK]	SGP6130−2C	Rear Panel (1)
37 [EF]	SGP6130−2D	Rear Panel (1)
37 [EW, EB]	SGP6130−2B	Rear Panel (1)
39 [EK] only	SHR129	Bushing, AC Cord (1)
39 other areas	SHR127	Bushing, AC Cord (1)
40 [EK] only ⚠	QFC1205M	AC Cord (1)
40 other areas ⚠	SJA138−3	AC Cord (1)
41	SJT347	Holder, Fuse (2)
42	SJS5327	Socket (1)
43	SMN1823	Bracket, P.C.B (1)
44	SMX435	Insulation Cover (1)
45	SHR9575	Spacer, Connection Rod (1)
46	SHR9667	Spacer, Connection Rod (1)
47	SUB149	Connection Rod (LW/MW) (1)
SCREWS		
N1	XTBS3+8BFZ1	Tapping with Detent, ⊕3×8 (11)
N2	XTBS3+8BFYR	Tapping with Detent, ⊕3×8 (8)
N3 Ⓢ	XTN3+8B	Tapping, ⊕3×8 (1)
N4 Ⓢ	XTB3+8BFZ	Tapping, ⊕3×8 (7)
N5	XSN26+5FZ	⊕2.6×5 (1)
N6 Ⓢ	XSN3+8BVS	⊕3×8 (2)
N7 Ⓢ	XTB3+16BFN	Tapping, ⊕3×16 (2)

Ref. No.	Part No.	Part Name & Description
CABINET and CHASSIS PARTS		
N8 ○	SNE2095−4	(Silver Type) (4)
N8 Ⓚ	SNE2095−5	(Black Type) (4)
N9 Ⓢ○	XTB3+8BFN	Tapping, ⊕3×8 (Silver Type) (2)
N9 ⓈⓀ	XTB3+8BFZ	Tapping, ⊕3×8 (Black Type) (2)
N17	XTBS3+8BFZ1	Tapping with Detent, ⊕3×8 (2)
N18	XTW3+8H	Tapping, ⊕3×8 (1)
N19	XTB3+8G	Tapping, ⊕3×8 (1)
WASHERS		
N10	RNW150−2	(9)
N11 Ⓢ	XWD11B	External Toothed Lock, ϕ11 (1)
N12 Ⓢ	XWG3	Plain, ϕ3 (2)
N13 Ⓢ	XWA26BFZ	Spring, ϕ2.6 (1)
N14 Ⓢ	XWC3B	External Toothed Lock, ϕ3 (2)
NUT		
N15 Ⓢ	XNS11	ϕ11 (1)
ACCESSORIES		
AI	SSA269	Cord, FM Antenna (1)
A2	SSA902	Loop Antenna (1)
A3	SMA231	Holder (1)
A4	SMA233−1	Holder (1)
A5	XTN3+10AFZ	Screw, Loop Antenna Holder (2)
A6	SQF12088	Instruction Book (1)
PACKING PARTS		
P1 ○	SPP699	Polyethylene Bag (Silver Type) (1)
P1 Ⓚ	SPP649	Polyethylene Bag (Black Type) (1)
P2	SPS4039	Pad, Front Side (1)
P3	SPS3515−3	Pad, Left Side (1)
P4	SPS3517−2	Pad, Right Side (1)
P5 [EK]	SPG4877	Carton Box (1)
P5 [EB, EW]	SPG4878	Carton Box (1)
P5 [EF]	SPG4879	Carton Box (1)
P6 Ⓚ	SGK1413	Label, (Black Type only) (2)

Area	
[EF]	France
[EK]	United Kingdom
[EB]	Belgium
[EW]	Switzerland

■ EXPLODED VIEW

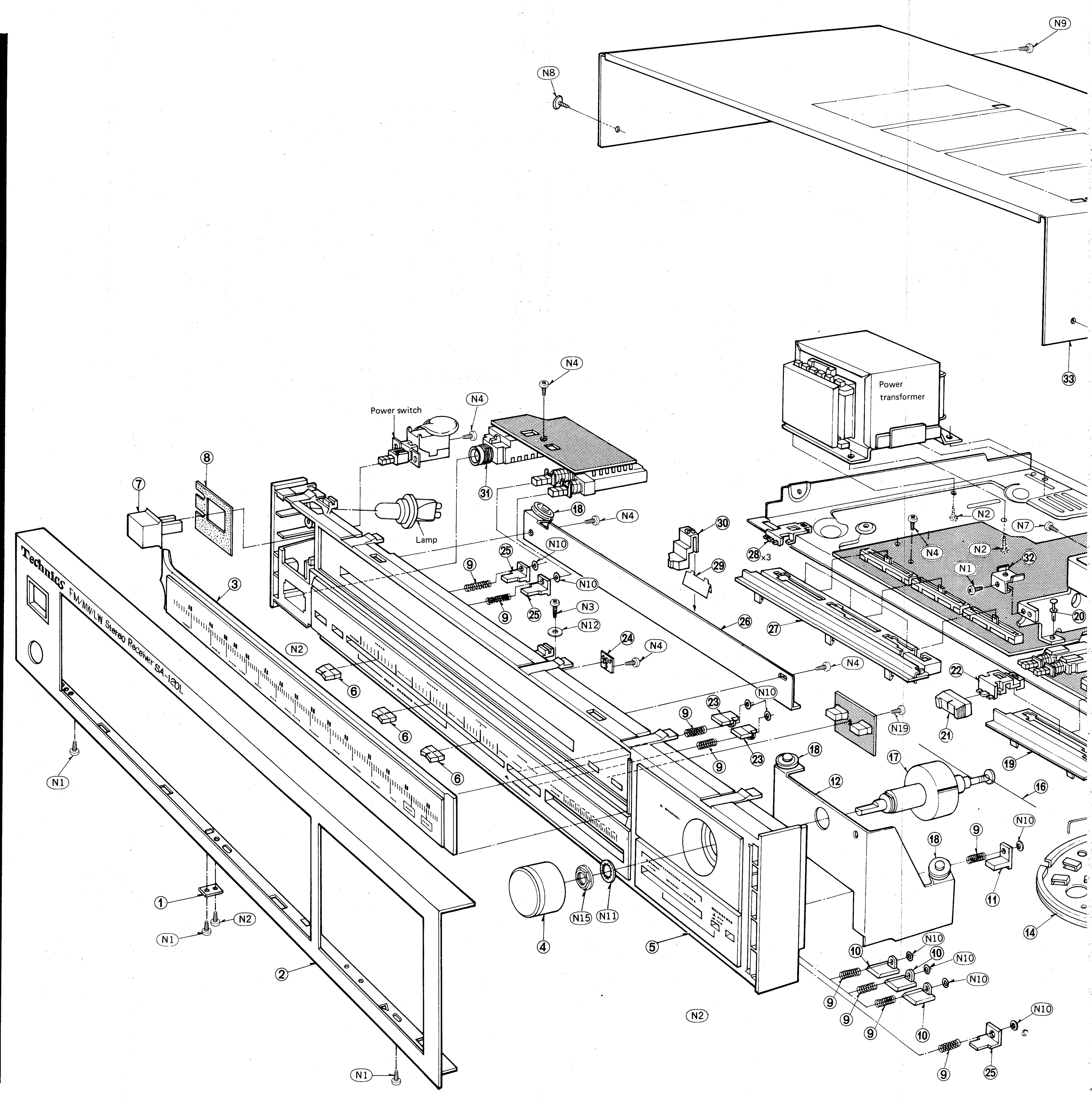

A	⑦ ⑧ ㉛ ⑱ ㉚ ㉝
B	③ ⑥ ⑥ ⑥ ⑨⑨㉕㉕ ㉔ ⑨㉓㉙㉖㉘㉗ ⑱⑫ ⑰⑳ ㉑㉒ ⑲㉜⑯ ⑳
C	① ② ④ ⑤ ⑨⑨⑩⑨ ⑩⑱⑨⑨ ⑪㉕ ⑭

as.

art Name & Description	
'S	
Silver Type)	(4)
Black Type)	(4)
apping,⊕3×	
(Silver Type)	(2)
apping,⊕3×	
(Black Type)	(2)
apping with	
etent,⊕3×8	(2)
apping,⊕3×8	(1)
apping,⊕3×8	(1)
	(9)
xternal Toothed	
ock, $\phi 11$	(1)
ain, $\phi 3$	(2)
pring, $\phi 2.6$	(1)
xternal Toothed	
ock, $\phi 3$	(2)
11	(1)
ord, FM Antenna	
	(1)
oop Antenna	(1)
older	(1)
older	(1)
crew, Loop	
ntenna Holder	(2)
struction Book	(1)
olyethylene Bag	
Silver Type)	(1)
olyethylene Bag	
Black Type)	(1)
ad, Front Side	(1)
ad, Left Side	(1)
ad, Right Side	(1)
arton Box	(1)
arton Box	(1)
arton Box	(1)
bel, (Black Type	
ly)	(2)

Kingdom
n
rland

 SA-120L

■ EXPLODED VIEW

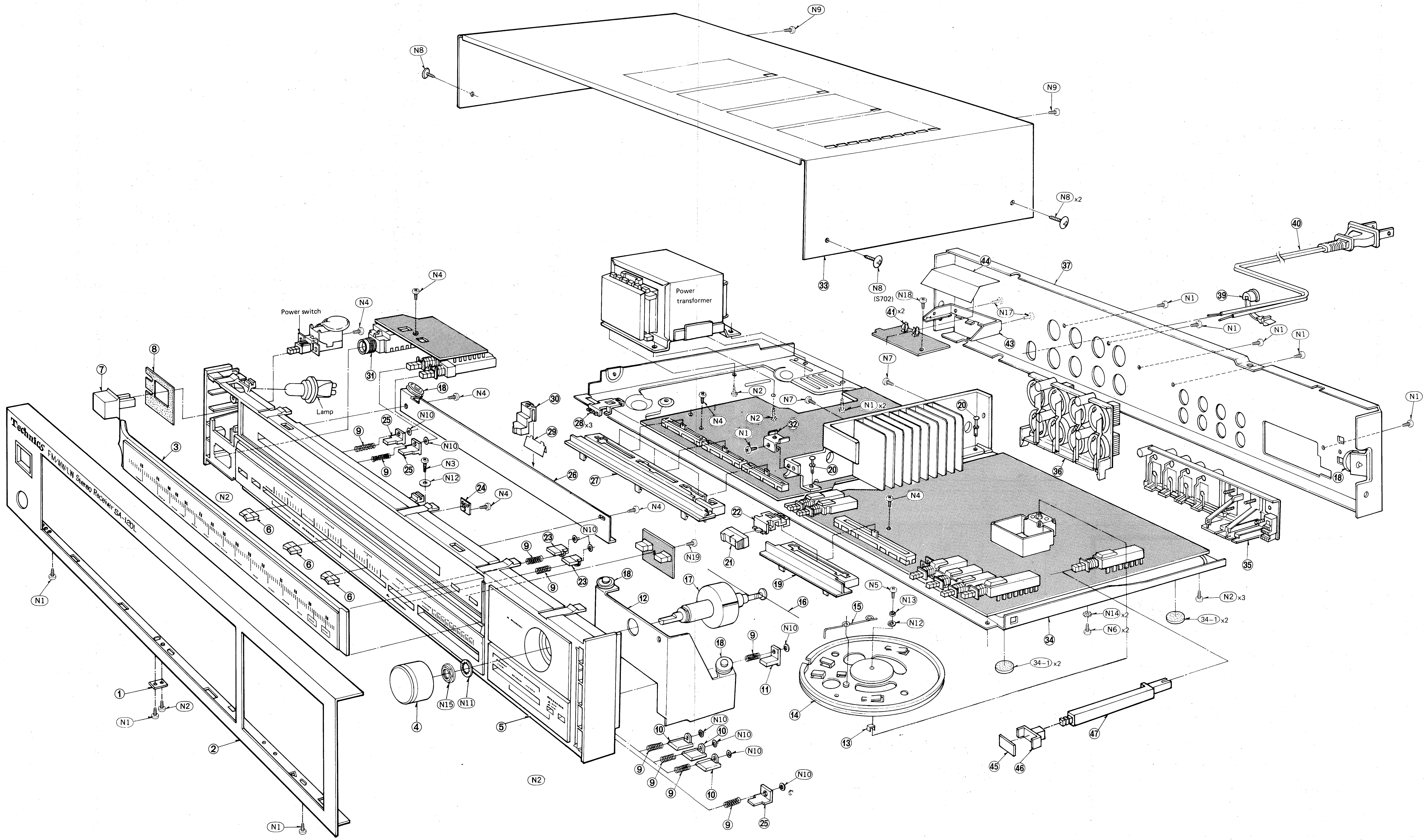

A	⑦ ⑧ ㉛ ⑱ ㉚ ㉝ ㊶ ⑳ ㊲ ㊴ ㊵ ㊷
B	③ ⑥ ⑥ ⑥ ⑨ ⑨ ㉕ ㉕ ㉔ ⑨ ㉓ ㉙ ㉖ ㉘ ㉗ ⑱ ⑫ ⑰ ⑳ ㉑ ㉒ ⑲ ㉜ ⑯ ⑳ ⑮ ㊱ ㉟ ⑱
C	① ② ④ ⑤ ⑨ ⑨ ⑩ ⑨ ⑩ ⑱ ⑨ ⑨ ⑪ ㉕ ⑭ ⑬ ㊺ ㊻ (34−1) ㉞ ㊼ (34−1)

Printed in Japan
840604600 Ⓚ SH/TN