ORDER NO. SD8001-1659

Service Manual

FM/AM Stereo Receiver

SA-202

[E],[EG],[XGH],
[XAL],[XA]

SA-202(K)

[E],[XGH]

SA-202

SA-202(K)

*** The colors of this model include silver and black. The black type model is provided with (K) in the Service Manual.**

Areas

- * [E] and [EG] are available in European and Scandinavia.
- * [XGH] is available in Holland.
- * [XAL] is available in Australia.
- * [XA] is available in Asia, Latin America, Middle East and Africa.

TECHNICAL SPECIFICATIONS

Specifications are subject to change without notice for further improvement.

[DIN 45 500]

AMPLIFIER SECTION

30 Hz~20 kHz continuous power output both channels driven	2 × 30W (4Ω) 2 × 30W (8Ω)
40 Hz~16 kHz continuous power output both channels driven	2 × 30W (4Ω) 2 × 30W (8Ω)
1 kHz continuous power output both channels driven	2 × 34W (4Ω) 2 × 32W (8Ω)
Total harmonic distortion	
rated power at 30 Hz~20 kHz	0.08% (4Ω) 0.04% (8Ω)
rated power at 40 Hz~16 kHz	0.08% (4Ω) 0.04% (8Ω)
rated power at 1 kHz	0.04% (4Ω,8Ω)
half power at 30 Hz~20 kHz	0.025% (8Ω)
half power at 1 kHz	0.009% (8Ω)
−26 dB power at 1 kHz	0.1% (4Ω)
50 mW power at 1 kHz	0.12% (4Ω)
Intermodulation distortion	
rated power at 250 Hz: 8 kHz=4:1, 4Ω	0.08%
rated power at 60 Hz: 7 kHz=4:1, SMPTE, 8Ω	0.04%
Power bandwidth both channels driven, −3 dB	10 Hz~25 kHz (4Ω)
Damping factor	10 (4Ω), 20 (8Ω)
Input sensitivity and impedance	
PHONO	2.5 mV/47kΩ
AUX	150 mV/27kΩ
TAPE REC/PLAY	180 mV/27kΩ
PHONO maximum input voltage (1 kHz, RMS)	130 mV
S/N	
rated power (4Ω) PHONO	70 dB (78 dB, IHF, A, 8Ω)
AUX	88 dB (95 dB, IHF, A, 8Ω)
−26 dB power (4Ω) PHONO	64 dB
AUX	66 dB
50 mW power (4Ω) PHONO, AUX	62 dB
Frequency response	
PHONO	RIAA standard curve ±0.8 dB (30 Hz~15 kHz)
AUX	7 Hz~45 kHz (−1 dB) ±0.8 dB (20 Hz~20 kHz)
Tone controls	
BASS	50 Hz, +10 dB~ −10 dB
TREBLE	20 kHz, +10 dB~ −10 dB
Loudness control (volume at −30 dB)	50 Hz, +9 dB
Output voltage and impedance	
TAPE, REC OUT	150 mV
TAPE, REC/PLAY	30 mV/82kΩ
Channel balance, AUX 250 Hz~6,300 Hz	±1.0 dB
Channel separation, AUX 1 kHz	55 dB
Headphones output level and impedance	400 mV/330Ω
Load impedance	
MAIN or REMOTE	4Ω~16Ω
MAIN and REMOTE	8Ω~16Ω

FM TUNER SECTION

Frequency range	88~108 MHz
Sensitivity	
S/N 30 dB	1.9 μV (300Ω), 1.3 μV (75Ω)
S/N 26 dB	1.7 μV (300Ω), 1.2 μV (75Ω)
S/N 20 dB	1.5 μV (300Ω), 0.9 μV (75Ω)
IHF usable sensitivity	1.9 μV (IHF '58)
IHF 46 dB stereo quieting sensitivity	22 μV/75Ω

Technics

Matsushita Electric Trading Co., Ltd.
P.O. Box 288, Central Osaka Japan

Total harmonic distortion	
MONO	0.18%
STEREO	0.3%
S/N	
MONO	60 dB (75 dB, IHF)
STEREO	58 dB (70 dB, IHF)
Frequency response	20 Hz~15 kHz, +1 dB~ −2 dB 20 Hz~14 kHz, +1.5 dB~ −1.5 dB
Alternate channel selectivity	68 dB
Capture ratio	1.2 dB
Image rejection at 98 MHz	55 dB
IF rejection at 98 MHz	70 dB
Spurious response rejection at 98 MHz	80 dB
AM suppression	50 dB
Stereo separation	
1 kHz	45 dB
10 kHz	35 dB
Carrier leak	
19 kHz	−30 dB (−40 dB, IHF)
38 kHz	−50 dB (−50 dB, IHF)
Channel balance (250 Hz~6,300 Hz)	±1.5 dB
Limiting point	1.2 μV
Power bandwidth	
IF amplifier	180 kHz
FM demodulator	1000 kHz
Antenna terminals	300Ω (balanced) 75Ω (unbalanced)

AM TUNER SECTION

Frequency range	525~1605 kHz
Sensitivity (S/N 20 dB)	30 μV, 300 μV/m
Selectivity	30 dB
Image rejection at 1,000 kHz	50 dB
IF rejection at 1,000 kHz	40 dB

GENERAL

Power consumption	360W
Power supply	AC 50 Hz/60 Hz, 110V/120V/220V/240V
Dimensions (W×H×D)	430 × 142 × 291 mm (16-15/16" × 5-19/32" × 11-15/16")
Weight	7.1 kg (15.7 lb.)

TECHNISCHE DATEN

Spezifikationen können infolge von Verbesserungen ohne Ankündigung geändert werden.

[DIN 45 500]

VERSTÄRKERTEIL

Dauerton-Ausgangsleistung bei 30 Hz ~ 20 kHz	
beide Kanäle ausgesteuert	2 × 30W (4 Ω) 2 × 30W (8 Ω)
Dauerton-Ausgangsleistung bei 40 Hz ~ 16 kHz	
beide Kanäle ausgesteuert	2 × 30W (4 Ω) 2 × 30W (8 Ω)
Dauerton-Ausgangsleistung bei 1 kHz	
beide Kanäle ausgesteuert	2 × 34W (4 Ω) 2 × 32W (8 Ω)
Gesamtklirrfaktor	
Nennleistung bei 30 Hz ~ 20 kHz	0.08% (4 Ω) 0.04% (8 Ω)
Nennleistung bei 40 Hz ~ 16 kHz	0.08% (4 Ω) 0.04% (8 Ω)
Nennleistung bei 1 kHz	0.04% (4 Ω, 8 Ω)
halbe Nennleistung bei 30 Hz ~ 20 kHz	0.025% (8 Ω)
halbe Nennleistung bei 1 kHz	0.009% (8 Ω)
−26 dB Leistung bei 1 kHz	0.1% (4 Ω)
50 mW Leistung bei 1 kHz	0.12% (4 Ω)
Intermodulationsfaktor	
Nennleistung bei 250 Hz: 8 kHz = 4:1, 4 Ω	0.08%
Nennleistung bei 60 Hz: 7 kHz = 4:1, nach SMPTE, 8 Ω	0.04%
Leistungsbandbreite	
beide Kanäle ausgesteuert bei −3 dB	10 Hz ~ 25 kHz (4 Ω)
Dämpfungsfaktor	10 (4 Ω), 20 (8 Ω)
Eingangsempfindlichkeit und -impedanz	
Phono	2.5 mV/47 kΩ
Aux	150 mV/27 kΩ
Tape Aufnahme/Wiedergabe (TAPE REC/PLAY)	180 mV/27 kΩ
Maximale TA-Eingangsspannung (1 kHz, eff.)	130 mV
Geräuschabstand	
Nennleistung (4 Ω) Phono	70 dB (78 dB, IHF, A, 8Ω)
Aux	88 dB (95 dB, IHF, A, 8Ω)
−26 dB Leistung (4 Ω) Phono	64 dB
Aux	66 dB
50 mW Leistung (4 Ω)	
Phono, Aux	62 dB
Frequenzgang	
Phono	RIAA-Standardkurve ±0.8 dB (30 Hz ~ 15 kHz)
Aux	7 Hz ~ 45 kHz(−1 dB) ±0.8 dB (20 Hz ~ 20 kHz)
Klangregler	
Baüregler (BASS)	50 Hz, +10 dB ~ −10 dB
Höhenregler (TREBLE)	20 kHz, +10 dB ~ −10 dB
Gehörrichtige Lautstärkekorrektur (Loudness)	
(bei −30 dB Ausgangsleistung)	50 Hz, +9 dB
Ausgangsspannung und -impedanz	
Tape Aufnahme (TAPE, REC OUT)	150 mV
Tape Aufnahme/Wiedergabe (TAPE REC/PLAY)	30 mV/82 kΩ
Kanalabweichung (Aux, 250 Hz ~ 6300 Hz)	±1.0 dB
Übersprechdämpfung (Aux, 1 kHz)	55 dB
Kopfhörerpegel und -impedanz	400 mV/330 Ω
Lautsprecherimpedanz	
MAIN oder REMOTE	4 Ω ~ 16 Ω
MAIN und REMOTE	8 Ω ~ 16 Ω

UKW-TUNERTEIL

Wellenbereich	88 ~ 108 MHz
Eingangsempfindlichkeit	
S/R 30 dB	1.9 μV (300 Ω), 1.3 μV (75 Ω)
S/R 26 dB	1.7 μV (300 Ω), 1.2 μV (75 Ω)
S/R 20 dB	1.5 μV (300 Ω), 0.9 μV (75 Ω)
Nutzempfindlichkeit nach IHF	1.9 μV (nach IHF '58)
Stereoumschaltschwelle bei 46 dB nach IHF	22 μV/75 Ω
Gesamtklirrfaktor	
Mono	0.18%
Stereo	0.3%
Geräuschabstand	
Mono	60 dB (75 dB nach IHF)
Stereo	58 dB (70 dB nach IHF)
Frequenzgang	20 Hz ~ 15 kHz (+1 dB ~ −2 dB) 20 Hz ~ 14 kHz (+1.5 dB ~ −1.5 dB)
Trennschärfe bei Störsender	68 dB
Einfangverhältnis	1.2 dB
Spiegelfrequenz-Dämpfung bei 98 MHz	55 dB
ZF-Dämpfung bei 98 MHz	70 dB
Ansprechdämpfung auf Nebenfrequenzen bei 98 MHz	80 dB
AM-Unterdrückung	50 dB
Übersprechdämpfung	
1 kHz	45 dB
10 kHz	35 dB
Trägerrest	
19 kHz	−30 dB (−40 dB nach IHF)
38 kHz	−50 dB (−50 dB nach IHF)
Kanalabweichung (250 Hz ~ 6300 Hz)	±1.5 dB

Begrenzereinsatz	1.2 μV
Bandbreite	
ZF-Verstärker	180 kHz
UKW-Demodulator	1000 kHz
Antennenanschluù	300 Ω (symmetrisch) 75 Ω (unsymmetrisch)

AM-TUNERTEIL

Wellenbereiche	525 ~ 1605 kHz
Eingangsempfindlichkeit (S/R 20 dB)	30 μV, 300 μV/m
Trennschärfe	30 dB
Spiegelfrequenz-Dämpfung bei 1000 kHz	50 dB
ZF-Dämpfung bei 1000 kHz	40 dB

ALLGEMEINE DATEN

Leistungsaufnahme	360 W
Netzspannung	Wechselstrom 50 Hz/60 Hz, 110V/120V/220V/240V
Abmessungen (B×H×T)	430 × 142 × 291 mm
Gewicht	7.1 kg

CARACTERISTIQUES TECHNIQUES

Sujet à changement sans préaris.

[DIN 45 500]

SECTION AMPLIFICATEUR

Puissance de sortie continue de 30 Hz~20 kHz, les deux canaux en circuit	2 × 30W (4Ω) 2 × 30W (8Ω)
Puissance de sortie continue de 40 Hz~16 kHz, les deux canaux en circuit	2 × 30W (4Ω) 2 × 30W (8Ω)
Puissance de sortie continue à 1 kHz les deux canaux en circuit	2 × 34W (4Ω) 2 × 32W (8Ω)
Distorsion harmonique totale	
à puissance nominale (30 Hz~20 kHz)	0.08% (4Ω) 0.04% (8Ω)
à puissance nominale (40 Hz~16 kHz)	0.08% (4Ω) 0.04% (8Ω)
à puissance nominale (1 kHz)	0.04% (4Ω, 8Ω)
à demi-puissance (30 Hz~20 kHz)	0.025% (8Ω)
à demi-puissance (1 kHz)	0.009% (8Ω)
puissance de −26 dB à 1 kHz	0.1% (4Ω)
puissance de 50 mW à 1 kHz	0.12% (4Ω)
Distorsion d'intermodulation	
à puissance nominale à 250 Hz: 8 kHz=4:1, 4Ω	0.08%
à puissance nominale à 60 Hz: 7 kHz=4:1, SMPTE, 8Ω	0.04%
Réponse de fréquences les deux canaux en circuit, −3 dB	10 Hz~25 kHz (4Ω)
Coefficient d'amortissement	10 (4Ω), 20 (8Ω)
Sensibilité et impédance d'entrée	
PHONO	2.5 mV/47kΩ
AUX (AUX)	150 mV/27kΩ
BANDE ENREGISTREMENT/LECTURE (TAPE REC/PLAY)	180 mV/27kΩ
PHONO (tension d'entrée maximum, 1 kHz RMS)	130 mV
Signal/Bruit	
à puissance nominale (4Ω)	
PHONO	70 dB (78 dB, IHF, A, 8Ω)
AUX	88 dB (95 dB, IHF, A, 8Ω)
puissance de −26 dB (4Ω)	
PHONO	64 dB
AUX	66 dB
puissance de 50 mW (4Ω)	
PHONO, AUX	62 dB
Réponse de fréquence	
PHONO	Courbe nominale RIAA ±0.8 dB (30 Hz~15 kHz)
AUX	7 Hz~45 kHz (−1 dB) ±0.8 dB (20 Hz~20 kHz)
Réglage de la tonalité	
BASSES (BASS)	50 Hz, +10 dB~ −10 dB
AIGUS (TREBLE)	20 kHz, +10 dB~ −10 dB
Compensateur physiologique (volume à −30 dB)	50 Hz, +9 dB
Tension de sortie et impédance	
SORTIE ENREGISTREMENT/BANDE, (TAPE, REC OUT)	150 mV
ENREGISTREMENT/LECTURE BANDE (TAPE REC/PLAY)	30 mV/82kΩ
Equilibrage des canaux, AUX 250 Hz~6 300 Hz	±1.0 dB
Séparation des canaux, AUX 1 kHz	55 dB
Niveau de sortie des casques et impédance	400 mV/330Ω
Impédance de charge	
PRINCIPALE ou AUXILIAIRE (MAIN or REMOTE)	4Ω~16Ω
PRINCIPALE et AUXILIAIRE (MAIN and REMOTE)	8Ω~16Ω

SECTION SYNTONISATEUR FM

Gamme de fréquence	88~108 MHz
Sensibilité	
S/B 30 dB	1.9 μV (300Ω), 1.3 μV (75Ω)
S/B 26 dB	1.7 μV (300Ω), 1.2 μV (75Ω)
S/B 20 dB	1.5 μV (300Ω), 0.9 μV (75Ω)
Sensibilité utilisable IHF	1.9 μV (IHF '58)
Sensibilité stéréo au seuil de 46 dB, IHF	22 μV/75Ω
Distorsion harmonique totale	
MONO	0.18%
STEREO	0.3%
Signal/Bruit	
MONO	60 dB (75 dB, IHF)
STEREO	58 dB (70 dB, IHF)
Réponse de fréquence	20 Hz~15 kHz, +1 dB~ −2 dB 20 Hz~14 kHz, +1.5 dB~ −1.5 dB
Sélectivité alternée par canal	68 dB
Taux de capture	1.2 dB
Rejection d'image à 98 MHz	55 dB
Rejection FI à 98 MHz	70 dB
Rejection de réponse parasite à 98 MHz	80 dB
Suppression AM	50 dB
Séparation stéréophonique	
1 kHz	45 dB
10 kHz	35 dB
Fuite de porteuse	
19 kHz	−30 dB (−40 dB, IHF)
38 kHz	−50 dB (−50 dB, IHF)
Equilibrage de canaux (250 Hz~6,300 Hz)	±1.5 dB
Point de limite	1.2 μV
Largeur de bande	
Amplificateur FI	180 kHz
Démodulateur FM	1000 kHz
Bornes d'antenne	300Ω (symétrique) 75Ω (asymétrique)

SECTION SYNTONISATEUR AM

Gamme de fréquence	525~1605 kHz
Sensibilité (S/B 20 dB)	30 μV, 300 μV/m
Sélectivité	30 dB
Réjection d'image à 1,000 kHz	50 dB
Réjection FI à 1,000 kHz	40 dB

DIVERS

Consommation	360W
Alimentation	CA 50 Hz/60 Hz, 110V/120V/220V/240V
Dimensions (L×H×Pr)	430 × 142 × 291 mm
Poids	7.1 kg

■ CONTENTS

	Page
NOTE (Speaker circuit fuse)	4
LOCATION OF CONTROLS	4
HOW TO REMOVE THE CABINET	5
HOW TO REMOVE THE FRONT PANEL AND THE BOTTOM BOARD	5
HOW TO REMOVE THE LED INDICATOR P.C.B.	6
HOW TO REMOVE THE POWER IC	6
BLOCK DIAGRAM	7
ADJUSTMENT POINTS	8
ADJUSTMENT INSTRUCTIONS (English)	8
ABGLEICHANWEISUNG (Deutsch) (Fur Deutschland)	9
INSTRUCTIONS D'ALIGNEMENT (Français)	11
BLOCK DIAGRAM OF IC'S	12
PRINTED CIRCUIT BOARD WIRING VIEW	13
EXPLODED VIEWS	16
REPLACEMENT PARTS LIST (Cabinet and Chassis Parts)	18
ACCESSORIES	18
REPLACEMENT PARTS LIST (Electric Parts)	19
SCHEMATIC DIAGRAM	21
DIAL CORD INSTALLATION GUIDE	23

■ NOTE (Speaker circuit fuses)

The unit is provided with the speaker circuit protection fuses at the right and left channels respectively. The fuse is to prevent the power IC from destruction, should the speaker terminals be short-circuited. Accordingly, if the unit fails to function upon completion of the speaker connections, check the speaker circuit protection fuses first of all for possible blowing.

■ LOCATION OF CONTROLS

• Front side view

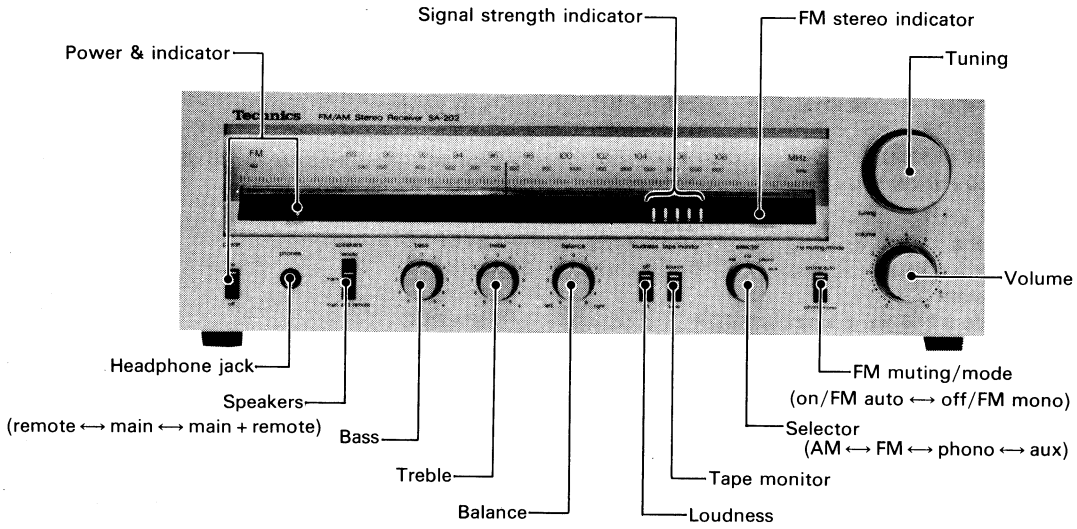

• Rear side view

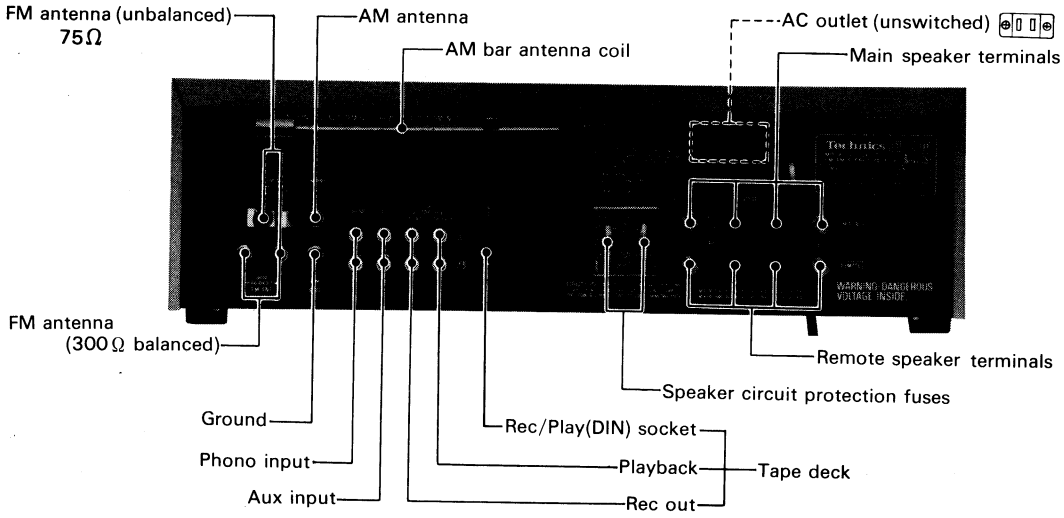

AC outlet is not equipped on units some areas.

- **Inside view**

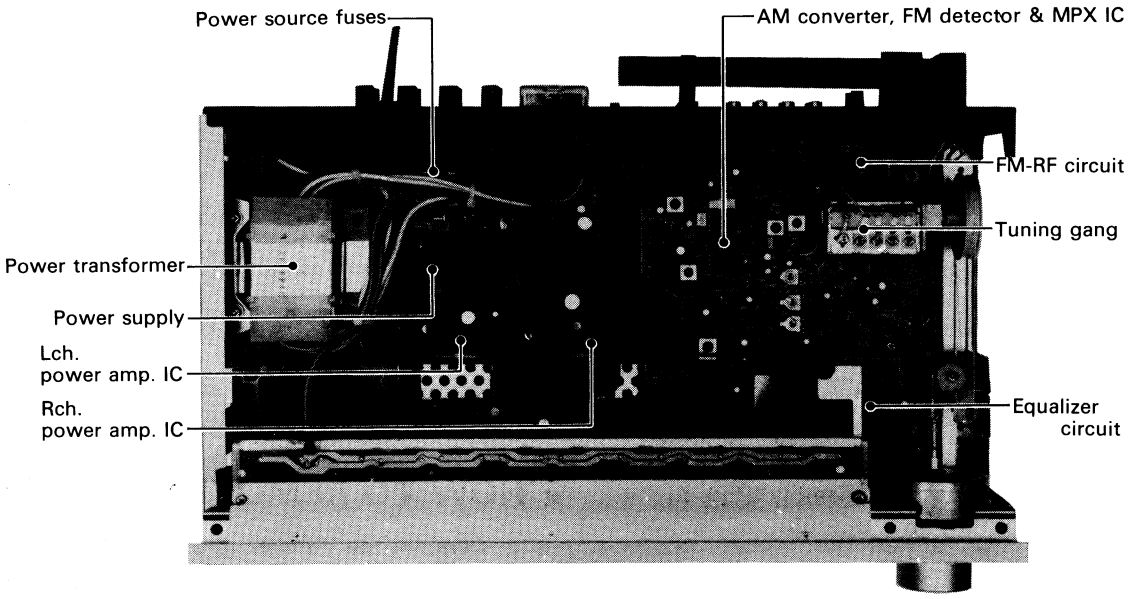

■ HOW TO REMOVE THE CABINET

1. Remove the 8 setscrews on the side and 3 setscrews on the back of the cabinet. [Fig. 1: Ⓐ]
2. Remove the cabinet.

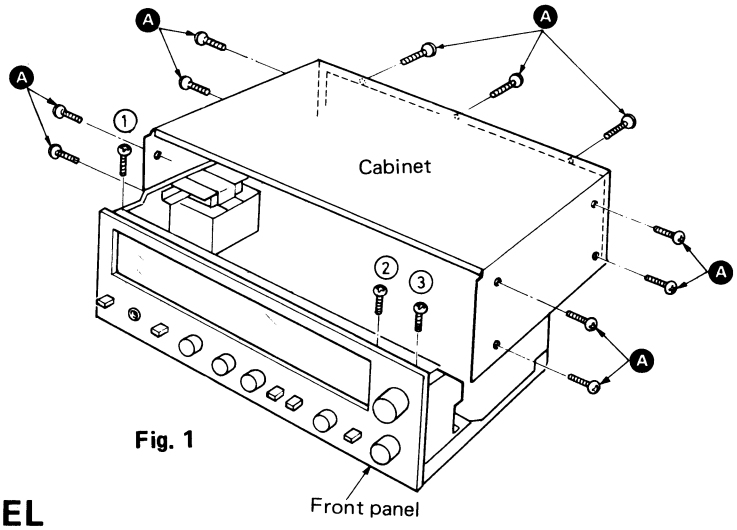

Fig. 1

■ HOW TO REMOVE THE FRONT PANEL AND THE BOTTOM BOARD

1. Remove the cabinet.
2. Remove the 3 setscrews [Fig. 1: ①~③] detach the front panel and remove the 4 setscrews [Fig. 2: ④~⑦] detach the bottom board and front panel.
3. pull the front panel outward from the front of the unit.
4. To remove the bottom board, remove the 11 setscrews [Fig. 2: ⑤, ⑥ and ⑧~⑯] detach the bottom board.

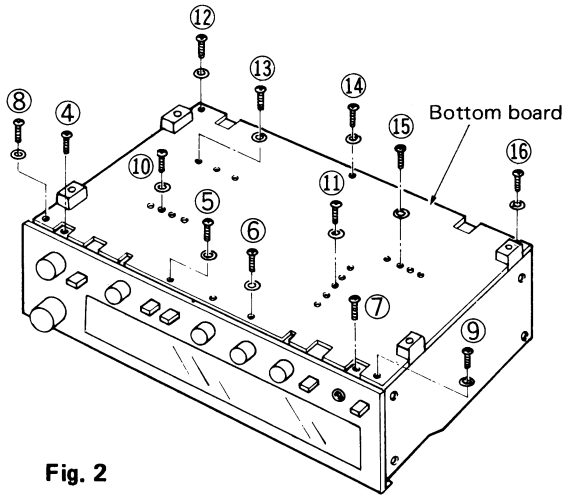

Fig. 2

■ HOW TO REMOVE THE LED INDICATOR P.C.B.

1. Remove the cabinet and front panel.
2. Remove the 2 setscrews [Fig. 3: ⑳,㉑] to detach the reflector plate in the direction of the arrow Ⓐ.
3. The dial scale is secured with the 2 lugs projected from the escutcheon of dial scale.
   Bend the lugs in the direction of the arrow Ⓑ to detach the dial scale in the direction of the arrow Ⓒ.
4. Remove the 2 setscrews [Fig. 4: ㉒,㉓] to detach the cover of dial pointer.
5. Remove the dial cord and pull out the dial pointer. Next, remove the 2 setscrews [Fig. 4: ㉔,㉕] to detach the escutcheon of dial scale in the direction of the arrow Ⓓ.
6. The LED(indicator) assembly is secured with the lugs projected from the escutcheon of dial scale. So, bend the lugs in the direction of the arrow Ⓔ to detach the LED(indicator) assembly. [Fig. 5].

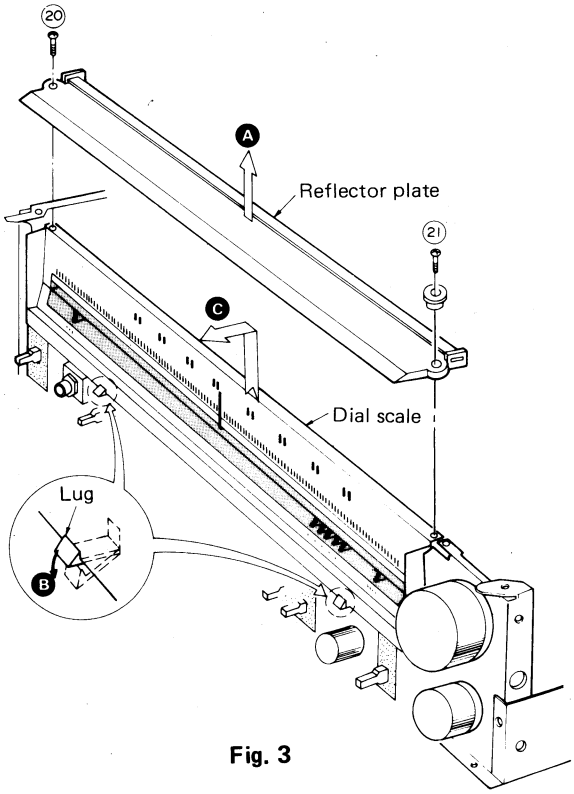

Fig. 3

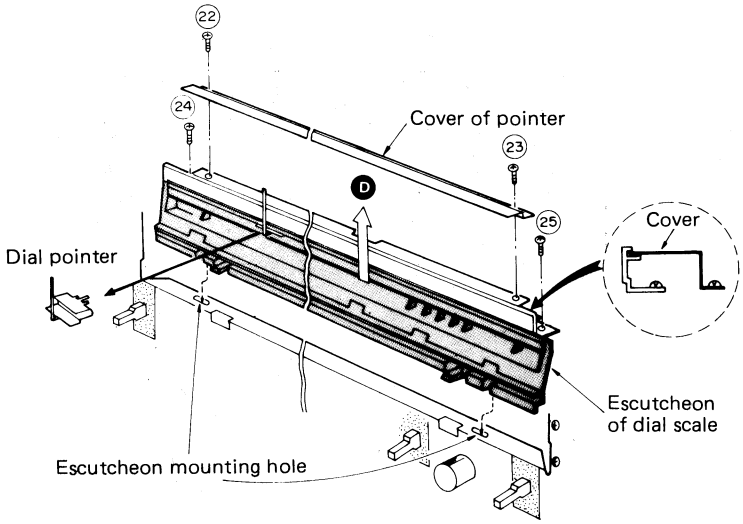

Fig. 4

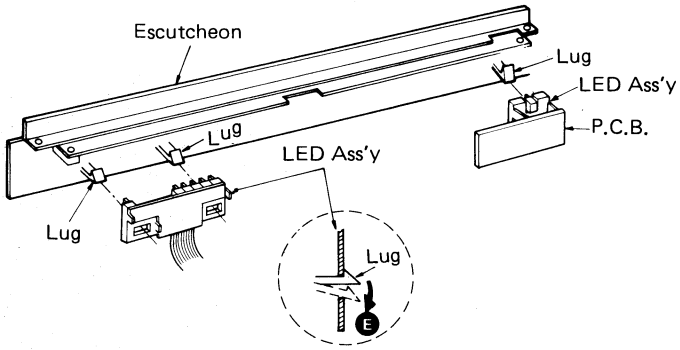

Fig. 5

■ HOW TO REMOVE THE POWER IC

1. Remove the cabinet and bottom board. (Refer to the sections "How to remove the cabinet" and "How to remove the front panel and the bottom board".)
2. Unsolder of power IC for both left channel and right channel.
3. Remove the transistor (Q701) press spring setscrew [Fig. 6: ㉖]to detach the spring.
4. Remove the 2 setscrews [Fig. 6: ㉗,㉘] the front chassis.
5. Remove the heat sink mounting 2 setscrews and 2 lock pins [Fig. 6: ㉙~㉜] from P.C.B. and bracket.
6. Remove the heat sink along with the power IC in the direction of the arrow Ⓕ. [Fig. 6]
7. Remove the 2 setscrews [Fig. 6: ㉝,㉞] used to secure the power IC on the heat sink, and then pull the power IC.
8. When mounting the power IC, apply silicone compound (or equivalent heat diffuser) to the back of power IC.

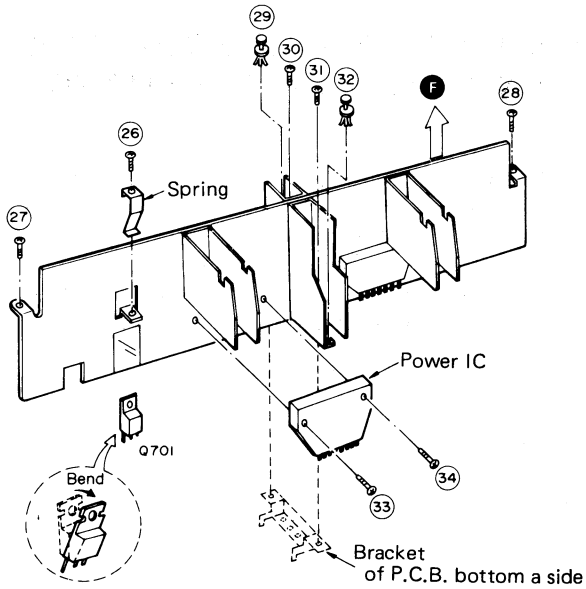

Fig. 6

■ BLOCK DIAGRAM

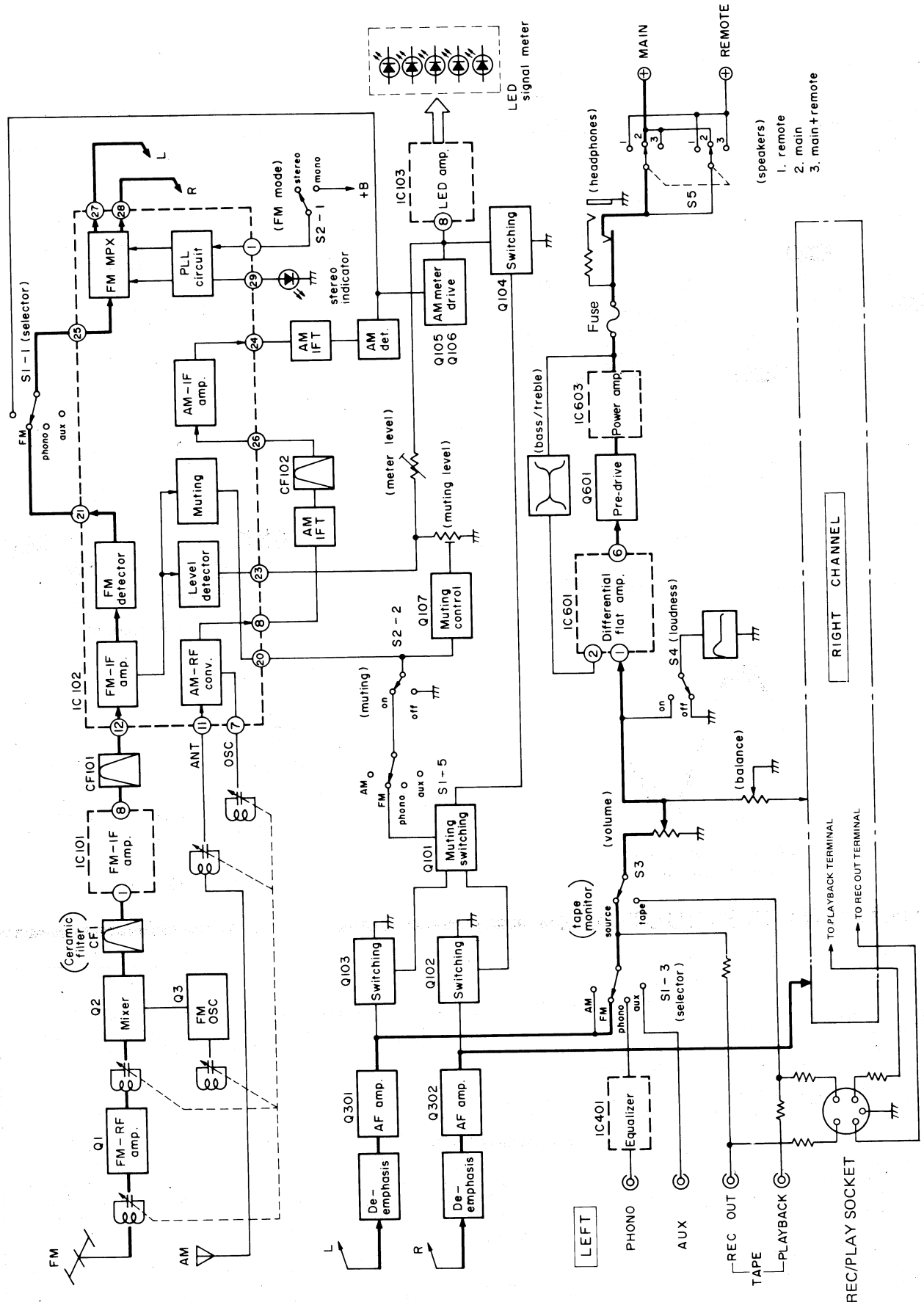

■ ADJUSTMENT POINTS

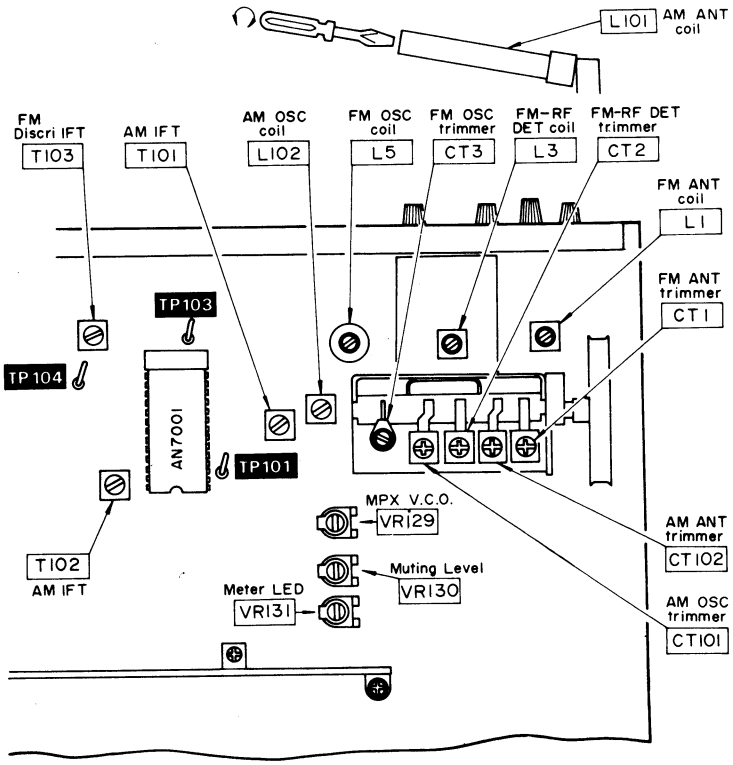

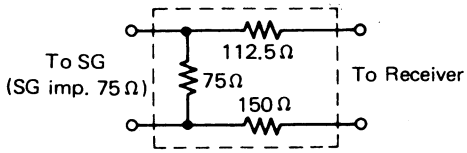

300Ω FM dummy antenna
Fig. 7 (Abb. 7)

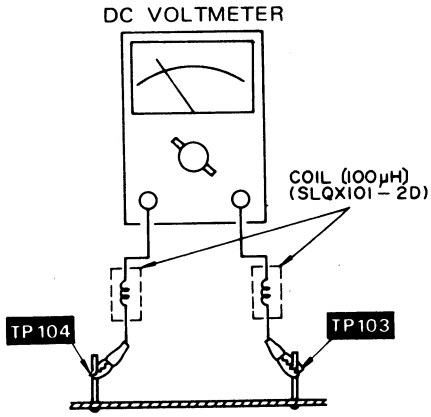

Fig. 8 (Abb. 8)

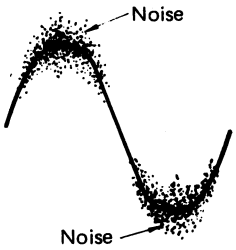

AF output wave form
Fig. 9 (Abb. 9)

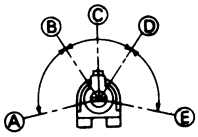

VR129

A–B,D–E: Stereo OFF Position.
B–D: Stereo ON Position (Indicator Lighting).
C: Adjust Point of MPX Circuit.

Fig. 10 (Abb. 10)

■ ADJUSTMENT INSTRUCTIONS ENGLISH

Notes:
1. Band selector switch ..... { AM (AM Adjustment) / FM (FM Adjustment)
2. FM muting & mode switch ..... off/mono
3. Maintain line voltage at rated voltage.
4. 300Ω FM dummy antenna ..... Refer to fig. 7.
5. Output of signal generator should be no higher than necessary to obtain an output reading.
6. Fix the bottom board before adjustment to chassis.
7. Adjustment the AM antenna coil (L101) position by using a screw driver so that it is at approximately 25 degrees to the rear panel.

	AM SIGNAL GENERATOR		DIAL SETTING	INDICATOR (VTVM or SCOPE)	ADJUSTMENT POINTS	REMARKS
	CONNECTION	FREQUENCY				
	AM ADJUSTMENT					
1	Higher side through 0.001μF to **AM** antenna trimmer terminal. Common to chassis.	450kHz (30% Mod. with 400 Hz)	Point of non-inter-ference	Connect AC VTVM or scope to "SPEAKER" terminals.	T101 (1st IFT) T102 (2nd IFT)	Adjust the input frequency and adjustment points so that the output becomes maximum.
2	Fashion loop of several turns of wire and radiate signal into loop of receiver.	600kHz (30% Mod. with 400Hz)	600kHz	Connect AC VTVM or scope to "SPEAKER" terminals.	L102 (OSC Coil) L101 (ANT Coil)	Adjust for maximum output, Adjust ferrite core of L101 by screw driver.
3	Fashion loop of several turns of wire and radiate signal into loop of receiver.	1500kHz (30% Mod. with 400Hz)	1500kHz	Connect AC VTVM or scope to "SPEAKER" terminals.	CT101 (OSC Trimmer) CT102 (ANT Trimmer)	Adjust for maximum output. Repeat steps (2) and (3).

	FM SIGNAL GENERATOR		DIAL SETTING	INDICATOR (VTVM or SCOPE)	ADJUSTMENT POINTS	REMARKS
	CONNECTION	FREQUENCY				
	FM RF ADJUSTMENT					
4	Connect to FM 300Ω antenna terminal through 300Ω FM dummy antenna.	90MHz (100% Mod. with 400Hz) weak input.	90MHz	Connect scope to "SPEAKER" terminal.	L5 (OSC Coil) L3 (RF DET Coil) L1 (ANT Coil)	• Add weak input so that noise is included in the output wave form. • Make the adjustment so that the output wave form is vertically symmetrical. (Fig. 9) • Repeat the steps (4) and (5) until the frequency correctly matches the dial scale.
5		106MHz (100% Mod. with 400Hz) weak input.	106MHz	Connect scope to "SPEAKER" terminal.	CT3 (OSC Trimmer) CT2 (RF DET Trimmer) CT1 (ANT Trimmer)	
	FM-IF ADJUSTMENT					
6	Connect to FM 300Ω antenna terminal through 300Ω FM dummy antenna.	No-Signal	100MHz	Connect DC VTVM to between **TP104** and **TP103** through choke coil. Refer to fig. 8.	T103 (Discriminator IFT)	• Adjust T103 core so that voltage measured in signal mode is 0V in 300mV range.
7		100MHz (100% Mod. with 400Hz) weak input.	100MHz	Connect DC VTVM to between **TP104** and **TP103** through choke coil. Connect scope to "SPEAKER" terminal.		• Add week input so that noise is included in the output wave form. • Make the tuning so that the output wave form is vertically symmetrical. (Fig. 9) • Adjust T103 core so that voltage measured in signal mode is 0V in 300mV range. • Repeat steps (6) and (7).
	SIGNAL METER LED (Light Emitting Diode) INDICATOR ADJUSTMENT					
8	Connect to FM 300Ω antenna terminal through 300Ω FM dummy antenna. Apply 45dB(178μV) to receiver.	100MHz (100% Mod. with 400Hz)	100MHz	Signal meter LED	VR131 (Meter LED)	• Adjust VR131 while observing the signal meter LED so that the indicator at 5th is about to turn on.
	FM MUTING LEVEL ADJUSTMENT					
9	Connect to FM 300Ω antenna terminal through 300Ω FM dummy antenna. Apply 16 dB (6.3μV) to receiver.	100MHz (100% Mod. with 400Hz)	100MHz	Connect AC VTVM or scope to "SPEAKER" terminals.	VR130 (Muting Level)	•FM muting/mode switch to "on/auto". •Adjust so that output can be obtained.

FM MPX V.C.O. ADJUSTMENT

	Using a frequency counter	Using alternate system
10	**1** 100MHz Non-modulated mono signal applied to receiver. **2** FM muting/mode switch to "on/FM auto". **3** Connect frequency counter to **TP101** through resistor (100kΩ). **4** Adjust **VR129** to 19kHz, ±30Hz.	**1** Apply stereo signal from generator or stereo station to receiver. **2** Adjust **VR129** until stereo indicator lights up. Cement arm of **VR129** as shown in fig. 10.

■ ABGLEICHANWEISUNG — DEUTSCH

(Für Deutschland)

Anmerkungen:

1. Bereichsschalter . . . . . { AM (MW Abgleich) / FM (UKW Abgleich)
2. FM Muting/Mode Schalter . . . . . off/mono
3. Netzspannung auf ihren Sollwert halten.
4. UKW-Kunstantenne, 300 ohm . . . Vgl. Abb. 7.
5. Der Ausgang des Meßsenders darf nicht höher sein als unbedingt notwendig für eine gute Ablesung.
6. Vor Einstellungen die Bodenplatte des Chassis befestigen.
7. Nittels eines Schraubenziehers die Stellung der Antennen-spule (L101) so einstellen, daß, sie gegen die Rückenplatte einen Winkel von ca. 25° macht.

	MW MESSENDER		SKALENZEIGEREINSTELLUNG DES TUNER	ANZEIGEGEIRÄT (Röhrenvoltmeter oder Oszillograph ozw. Klirrfaktor-Meßgerät)	ABGLEICHSPUNKTE	BEMERKUNGEN
	ANSCHLUSS	FREQUENZ				
	MW-ZF-ABGLEICH					
1	Heißes Ende des Meßsenders über einen 0.001μF Kondensator an den AM Antenneneingang schließen. Kaltes Ende an Masse.	450kHz (400Hz Modulat., 30%)	Kein Empfang	Wechselstrom Röhrenvoltmeter oder Oszillograph über den Lautsprecher schließen.	T101 (1, IFT) T102 (2, IFT)	Die Eingangsfrequenz und die Einstellungspunkte so adustieren, daß der Ausgang den maximalen Wert erreicht.

	UKW MESSENDER		SKALENZEI-GEREIN-STELLUNG DES TUNER	ANZEIGEGEIRÄT (Röhrenvoltmeter oder Oszillograph ozw. Klirrfaktor-Meßgerät)	ABGLIEICHS-PUNKTE	BEMERKUNGEN
	ANSCHLUSS	FREQUENZ				
	MW-HF-ABGLEICH					
2	Das Meßsendersignal induktiv in den Tuner speisen. Hierzu behelfsmäßig eine Rahmenantenne fertigen und an den Eingang schließen.	600kHz (400Hz Modulat., 30%)	600kHz	Wechselstrom Röhrenvoltmeter oder Oszillograph über den Lautsprecher schleißen.	L102 (Osc. Spule) L101 (Ant. Spule)	Auf max. Ausgang abgleichen. Den Ferritkern von L101 mit einem Schraubendreher justieren.
3	Das Meßsendersignal induktiv in den Tuner speisen. Hierzu behelfsmäßig eine Rahmenantenne fertigen und an den Eingang schließen.	1500kHz (400Hz Modulat., 30%)	1500kHz	Wechselstrom Röhrenvoltmeter oder Oszillograph über den Lautsprecher scheißen.	CT101 (Osc. Trimmer) CT102 (Ant. Trimmer)	Auf max. Ausgang abgleichen. Schritt (2) und (3) sing zu wiederholen.
	UKW-HF-ABGLEICH					
4	Meßsender über eine Kunstantenne an den UKW-Antenneneingang schließen.	87.5MHz (400Hz Modulat., 100% Schwacher Eingang	87.5MHz (Frequenz min.	Oszillograph über den Lautsprecher schließen.	L5 (Osc. Spule)	• Einen schwachen Eingang geben, bei dem Geräusch in der Ausgangswellenform enthalten wird. • So einstellen, daß die Ausgangswellenform vertikal symmetrisch wird. (Abb. 9) • Die Einstellung von (4), (5) und (6) wiederhoten, bis die Frequenz mit der Skala übereinstimmt.
5	Meßsender über eine Kunstantenne an den UKW-Antenneneingang schließen.	90MHz (400Hz Modulat., 100%) Schwacher Eingang	90MHz	Oszillograph über den Lautsprecher schließen.	L3 (Det. Spule) L1 (Ant. Spule)	
6	Meßsender über eine Kunstantenne an den UKW-Antenneneingang schließen.	106MHz (400Hz Modulat., Schwacher Eingang	106MHz	Oszillograph über den Lautsprecher schließen.	CT3 (Osc. Trimmer) CT2 (Det. Trimmer) CT1 (Ant. Trimmer)	
	UKW-ZF-ABGLEICH					
7	Meßsender über eine Kunstantenne an den UKW-Antenneneingang schließen.	Kein Signal	100MHz	Gleichstrom-Voltmeter zwischen **TP104** und **TP103** über Schutzdrossel anschließen. Vgl. Abb. 8	T103 (Diskriminator IFT)	• Den Kern von T103 so justieren, daß die gemessene Spannung im signallosen Modus 0V im 300mV Bereich beträgt. • Einen schwachen Eingang geben, bei dem Geräusch in der Ausgangswellenform enthalten wird. • So einstellen, daß die Ausgangswellenform vertikal symmetrisch wird. (Abb. 9) • Den Kern von T103 so justieren, daß die gemessene Spannung im signallosen Modus 0V im 300mV Bereich beträgt • Schritt (7) und (8) sing zu wiederholen.
8		100MHz (400Hz Modulat., 100%) Schwacher Eingang	100MHz	Gleichstrom-Voltmeter zwischen **TP104** und **TP103** über Schutzdrossel anschließen. Vgl. Abb. 8. Oszillograph über den Lautsprecher schließen.		
	ABGLEICHEN DES SIGNALMETER-LED (LICHTERZEUGENDE DIODE) – ANZEIGERS					
9	Meßsender über eine Kunstantenne an den UKW-Antenneneingang schließen. Meßsender auf 45dB (178μV) einstellen.	100MHz (400Hz Modulat., 100%)	100MHz	Signalmeter-LED	VR131 (Metervolumen)	Unter Beobachtung der Signalmeter-LED VR131so justieren, daß der Anzeiger am 5. fast aufzuleuchten beginnt.
	UKW-MUTING-ABGLEICH					
10	Meßsender über eine Kunstantenne an den UKW-Antenneneingang schließen. Meßsender auf 16dB (6.3μV) einstellen.	100MHz (400Hz Modulat., 100%)	100MHz	Röhrenvoltmeter oder Oszillograph über den Lautsprecher schließen.	VR130	FM Muting-Schalter auf "on/auto" So einstellen, daß ein Ausgang zu vernehmen ist.
	UKW-STEREO-DEKODER-ABGLEICH					
	Unter Verwendung eines Zählers			Alternativ-Meßmethode		
11	1. Unmoduliertes Mono-Signal 100MHz in das Gerät speisen. 2. FM muting/mode-Schalter auf "on/auto" stellen. 3. Zähler über einen Widerstand 100K ohm an **TP101** schließen. 4. **VR129** auf 19kHz ±30Hz einstellen.			1. Stereosignal entweder von einem Stereogenerator. oder einem Sender einspeisen. 2. **VR129** so einstellen, bis die Stereolampe auf leuchtet. Schleifer von **VR129** sichern, wie in Abb. 10 gezeigt.		

■ INSTRUCTIONS D'ALIGNEMENT

FRANÇAIS

Notes:
1. Sèlecteur de gamme . . . . . { AM (Alignement AM) / FM (Alignement FM)
2. Commutateur de silencieux/mode . off/mono
3. Conserver la tension du secteur à la tension nominale.
4. Antenne fictive FM 300Ω . . . . . Voir fig. 7.
5. Le signal du générateur ne doit pas être plus élevé qu'il n'est nécessaire à obtenir une lecture en sortie.
6. Fixer la plaque de base au châssis avant le réglage.
7. Régler la position de la bobine (L101) de l'antenne en utilisant un tournevis de telle sorte qu'alle soit environ à 25 degrés de la plaque arriére.

	AM/FM GENERATEUR		AIGUILLE SUR LE CADRAN	INDICATEUR (VOLT-METRE ELECTRONIQUE OSCILLOSCOPE OU DISTORSIONMETRE)	POINTS DE REGLAGE	OBSERVATIONS
	BRANCHEMENT	FREQUENCE				
	ALIGNMENT AM					
1	Côté chaud, à travers 0.001μF, sur le trimmer de l'antenne AM, point (**A**) commum an shâssis	450kHz (modulé à 30% par 400Hz)	Point sans signal	Branchez un c.a. voltmètre électronique ou un oscilloscope sur les bornes de haut-parleur de l'ampli-tuner.	T101(1 transfo FI) T102(2 transfo FI)	Régler la fréquence d'entrée et les points de réglage de telle sorte que la sortie devienne maximale.
2	Faire une boucle de quelgues tours et rayonner le signal dans le cadre du l'ampli-tuner.	600kHz (modulé à 30% par 400Hz)	600kHz	Branchez un c.a. voltmètre électronique ou un oscilloscope sur les bornes de haut-parleur de l'ampli-tuner.	L102 (bobine OSC) L101 (bobine ANT)	Régler au maximum de signal de sortie. Réglez le noyau ferrite de L101 à l'aide d'un tournevis.
3	Faire une boucle de quelgues tours et rayonner le signal dans le cadre du l'ampli-tuner	1500kHz (modulé à 30% per 400Hz)	1500kHz	Branchez un c.a. voltmètre électronique ou un oscilloscope sur les bornes de haut-parleur de l'ampli-tuner.	CT101 (trimmer OSC) CT102 (trimmer ANT)	Régler au maximum de signal de sortie. Recommencez les étapes (2) et (3).
	ALIGNEMENT RF-FM					
4	Branchez sur la prise d'antenne FM à travers une antenne fictive FM.	90MHz (modulé à 100% par 400Hz) Entrée faible	90MHz	Branchez un oscilloscope sur les bornes de haut-parleur de l'ampli-tuner.	L5 (bobine OSC) L3 (bobine DET) L1 (bobine ANT)	• Appliquer une entrée faible de telle sorte que le parasite soit compris dans la forme de l'onde de sortie. • Faire le réglage de telle sorte que la forme de l'onde de sortie soit verticalement symétrique. (Voir fig. 9) • Refaire les réglages (4) et (5) jusqu'à ce que la fréquence corresponde correctement avec l'échells du cadran.
5	Branchez sur la prise d'antenne FM à travers une antenne fictive FM.	106MHz (modulé à 100% par 400Hz) Entrée faible	106MHz	Branchez un oscilloscope sur les bornes de haut-parleur de l'ampli-tuner.	CT3 (trimmer OSC) CT2 (trimmer DET) CT1 (trimmer ANT)	
	ALIGNEMENT FI-FM					
6	Branchez sur la prise d'antenne FM à travers une antenne fictive FM.	Point sans signal	100MHz	Brancher le voltmètre électronique à c.c. aux bornes **TP104** et **TP103.** Voir fig. 8.	T103 (Transfo FI discri.)	• Régler le noyau T103 de telle sorte que le voltage mesuré dans le mode sans signal, soit de 0V dans la gamme das 300mV. • Appliquer une entrée faible de telle ssorte que le parasite soit compris dans la forme de l'onde de sortie. • Faire le réglage de telle sorte que la forme de l'onde de sortie soit verticalement symétrique. (Voir fig. 9) • Régler le noyau T103 de telle sorte que le voltage mesuré dans le mode sans signal, soit de 0V dans la gamme des 300mV. • Recommencez les étapes (6) et (7)
7		100MHz (modulé à 100% par 400Hz) Entrée faible	100MHz	Brancher le voltmètre électronique à c.c. aux bornes **TP104** et **TP103.** Branchez un oscilloscope sur les bornes de haut-parleur de l'ampli-tuner.		
	ALIGNEMENT DE L'INDICATEUR DE SIGNAL DE LA DIODE A EMISSION DE LUMIERE (DEL).					
8	Branchez sur la prise d'antenne FM à travers une antenne fictive FM. Niveau de sortie du générateur 45 dB (178μV).	100MHz (modulé à 100% par 400Hz)	100MHz	DEL du compteur à signal	R144 (Registor variable du compteur)	• Régler VR131 en observant la DEL du compteur à signal afin que l'indicateur au 5 ème est à presque tourner.
	REGLAGE DU SEUIL DU SILENCIEUX D'ACCORD					
9	Branchez sur la prise d'antenne FM à travers une antenne fictive FM. Niveau de sortie du générateur 16 dB (6.3μV).	100MHz (modulé à 100% par 400Hz)	100MHz	Branchez un c.a. voltmètre électronique ou un osicllosoope sur les bornes de haut-parleur de l'ampli-tuner.	VR130	Commutateur de silencieux sur "on/auto". Régler pour obtenir une lecture en sortie.

ALIGNEMENT DU PILOTE MULTIPLEX FM

	Avec un fréquencemétre	Par un outre système
10	1. Signal mono 100MHz non modulé appliqué à l'appareil. 2. Commutateur de silencieux sur "on/auto". 3. Branchez le fréquencemètre sur **TP101** à travers une résistance de 100kΩ. 4. Régler **VR129** sur 19kHz ±30Hz.	1. Appliquez à l'appareil un signal stéréo provenant d'un générateur ou de la réception d'un émetteur. 2. Réglar **VR129** jusqu à ce que l'indicateur de stéréophonic s'allume. Collez le curseur de **VR129** comme indiqué sur la fig. 10.

■ BLOCK DIAGRAM OF IC'S

- This is the basic block diagram of the inside circuit of IC. In an actual circuit, there may be sometimes idle terminals or some different functions other than the basic circuit.

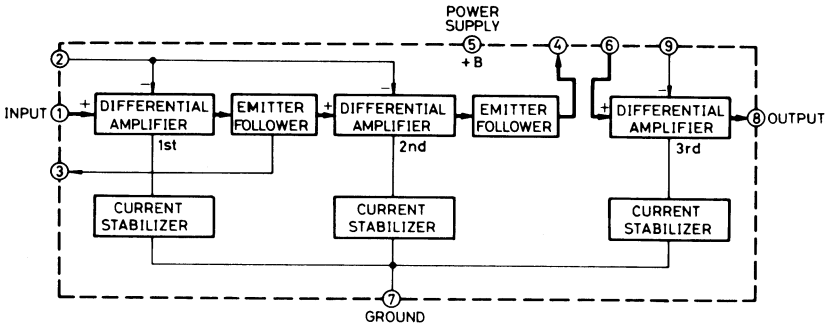

IC101 (AN278)
FM IF amplifier

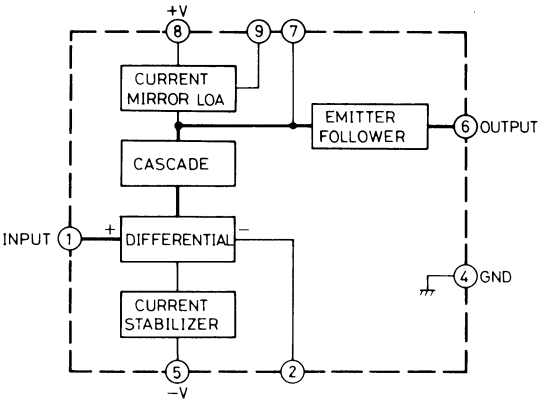

IC601, 602 (AN7060)
Differential amplifier

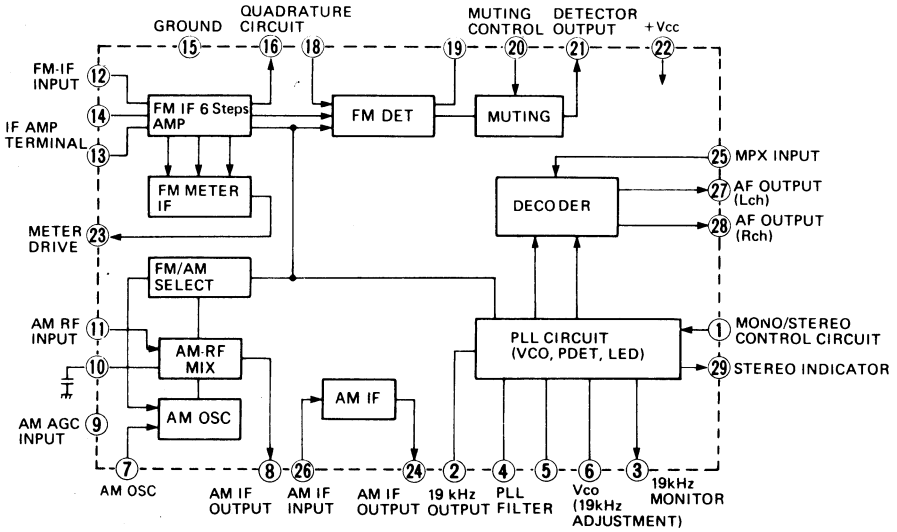

IC102 (AN7001ST)
AM converter, FM IF amplifier, detector & MPX

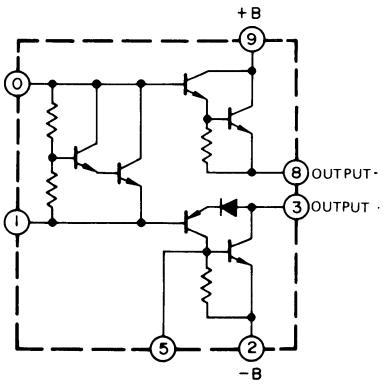

IC603, 604 (SVISTK0029N)
Power amplifier

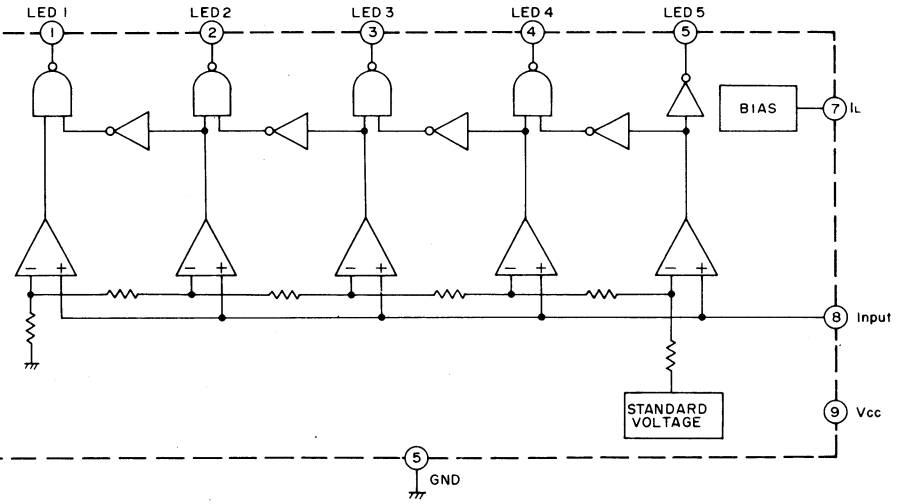

IC103 (AN6876)
LED drive amplifier

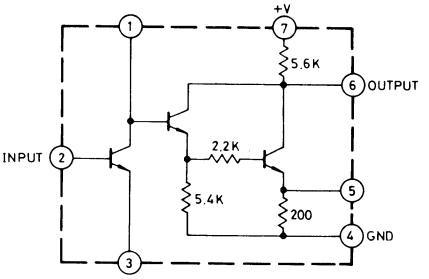

IC401, 402 (SVITA7129P)
Equalizer amplifier

■ PRINTED CIRCUIT BOARD WIRING VIEW

Ground (Earth) lines

- **Terminal guide of transistors and IC's**

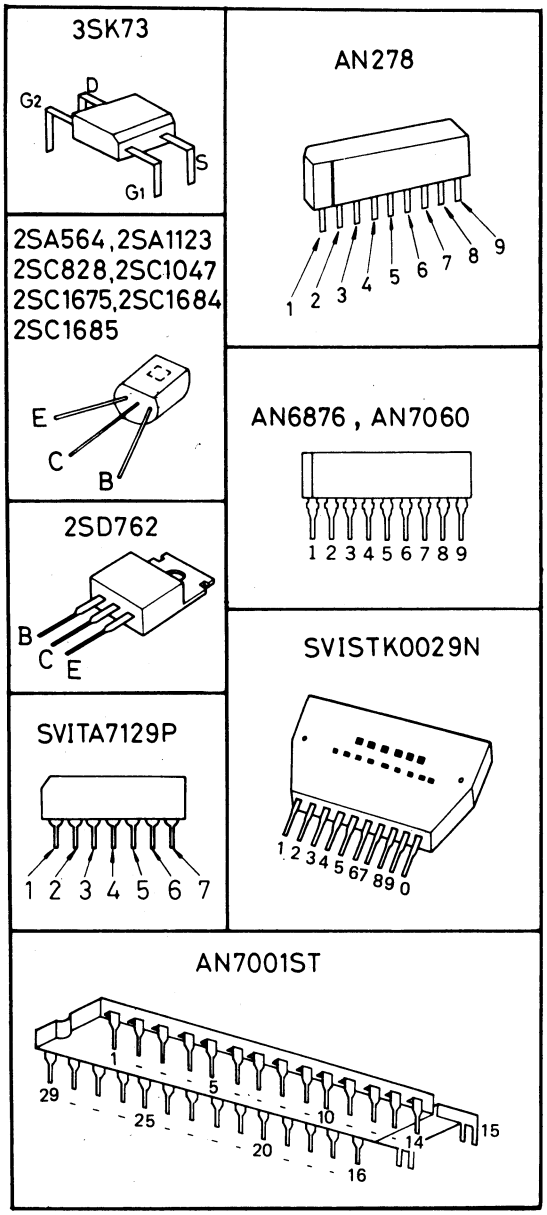

- Production part and standardized part of transistors and diodes

Ref. No.	Production Parts No.	Standardized Parts No.
Q101	2SA564	2SA666AI—R
Q102～107, 702	2SC828	2SC1328—T
D101, 103～106, 708	MA150	MA162
D107	SVDKB262E	RVDKB262C
D601	SVDMZ306B	RVDEQA0106S

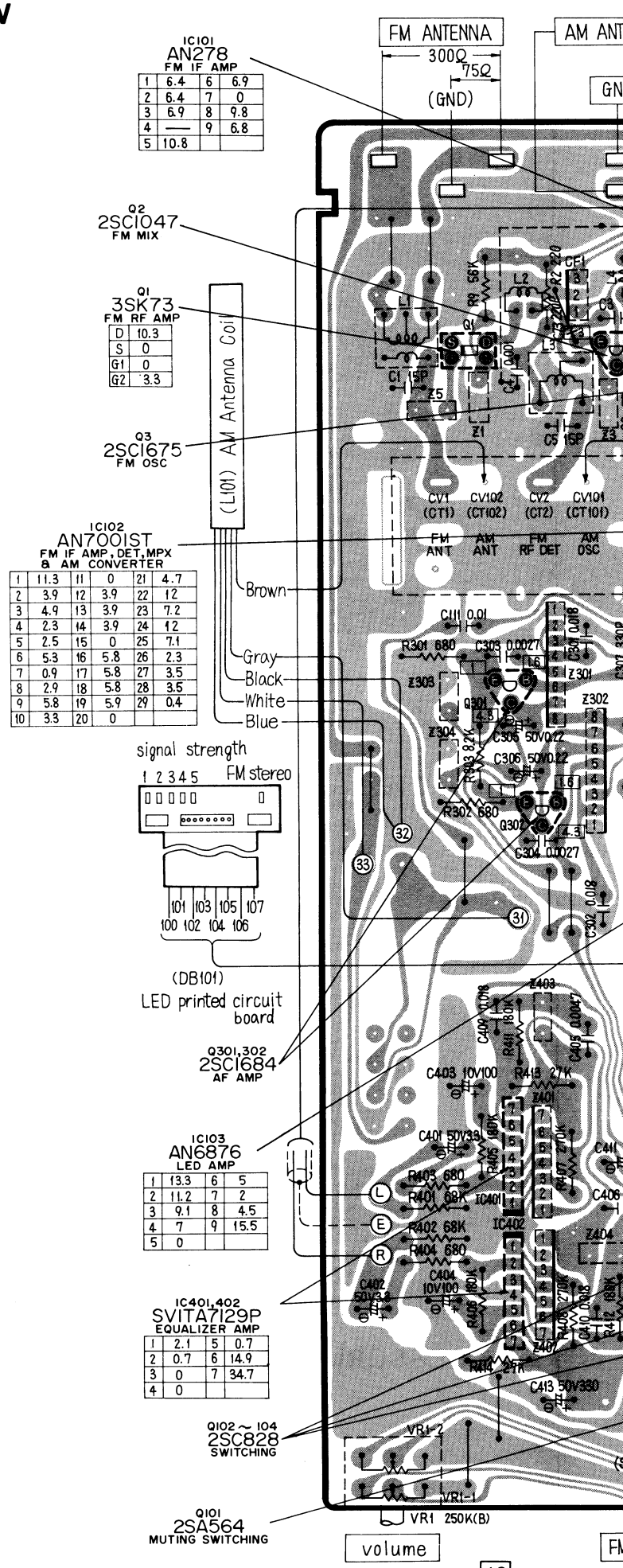

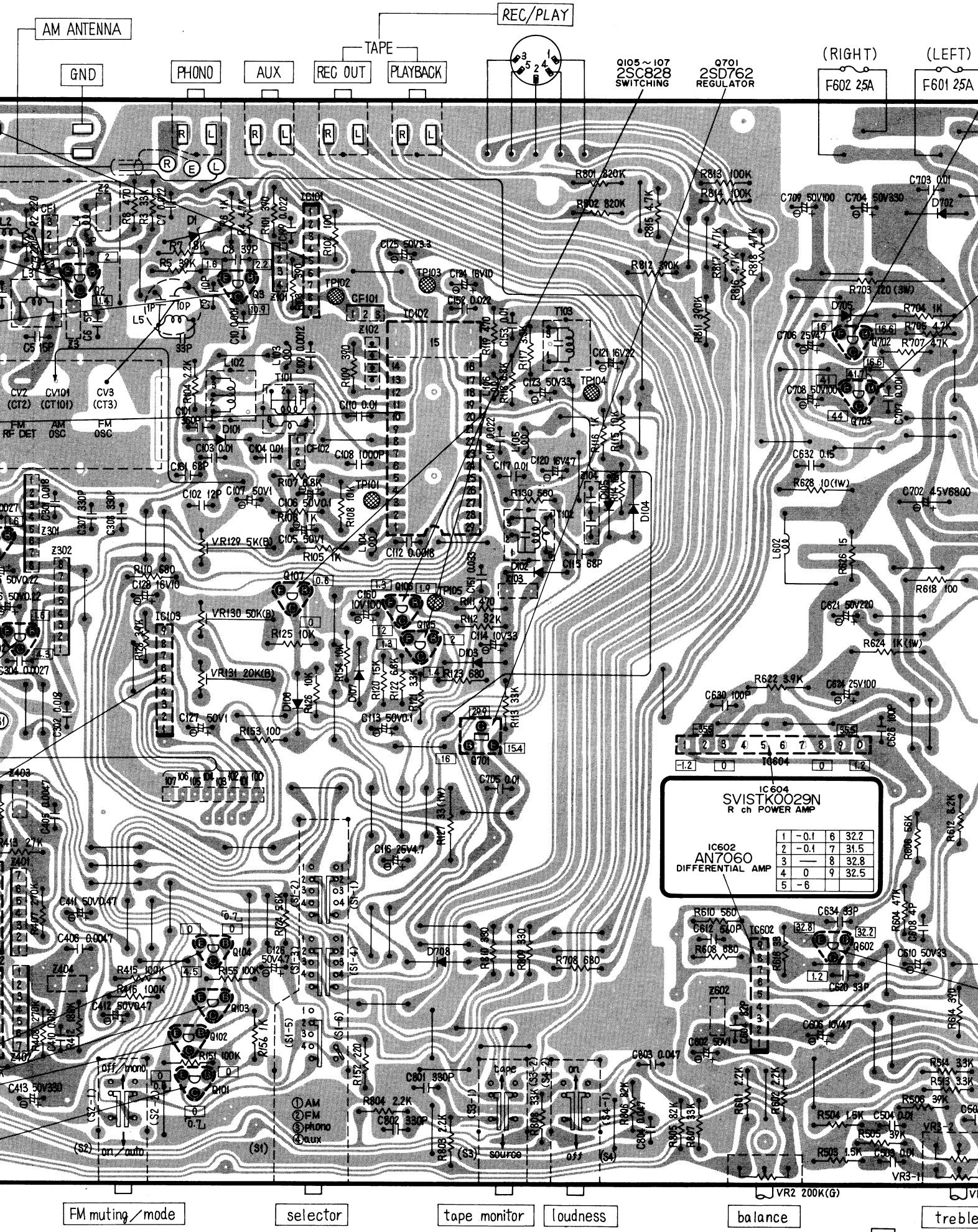
AM ANTENNA
GND
PHONO
AUX
TAPE
REC OUT
PLAYBACK
REC/PLAY
Q105 ~ 107
2SC828
SWITCHING
Q701
2SD762
REGULATOR
(RIGHT)
(LEFT)
F602 2.5A
F601 2.5A
IC604
SVISTK0029N
R ch POWER AMP
IC602
AN7060
DIFFERENTIAL AMP
① AM
② FM
③ phono
④ aux
off / mono
on / auto
tape
on
source
off
FM RF DET
AM OSC
FM OSC
FM muting / mode
selector
tape monitor
loudness
balance
treble

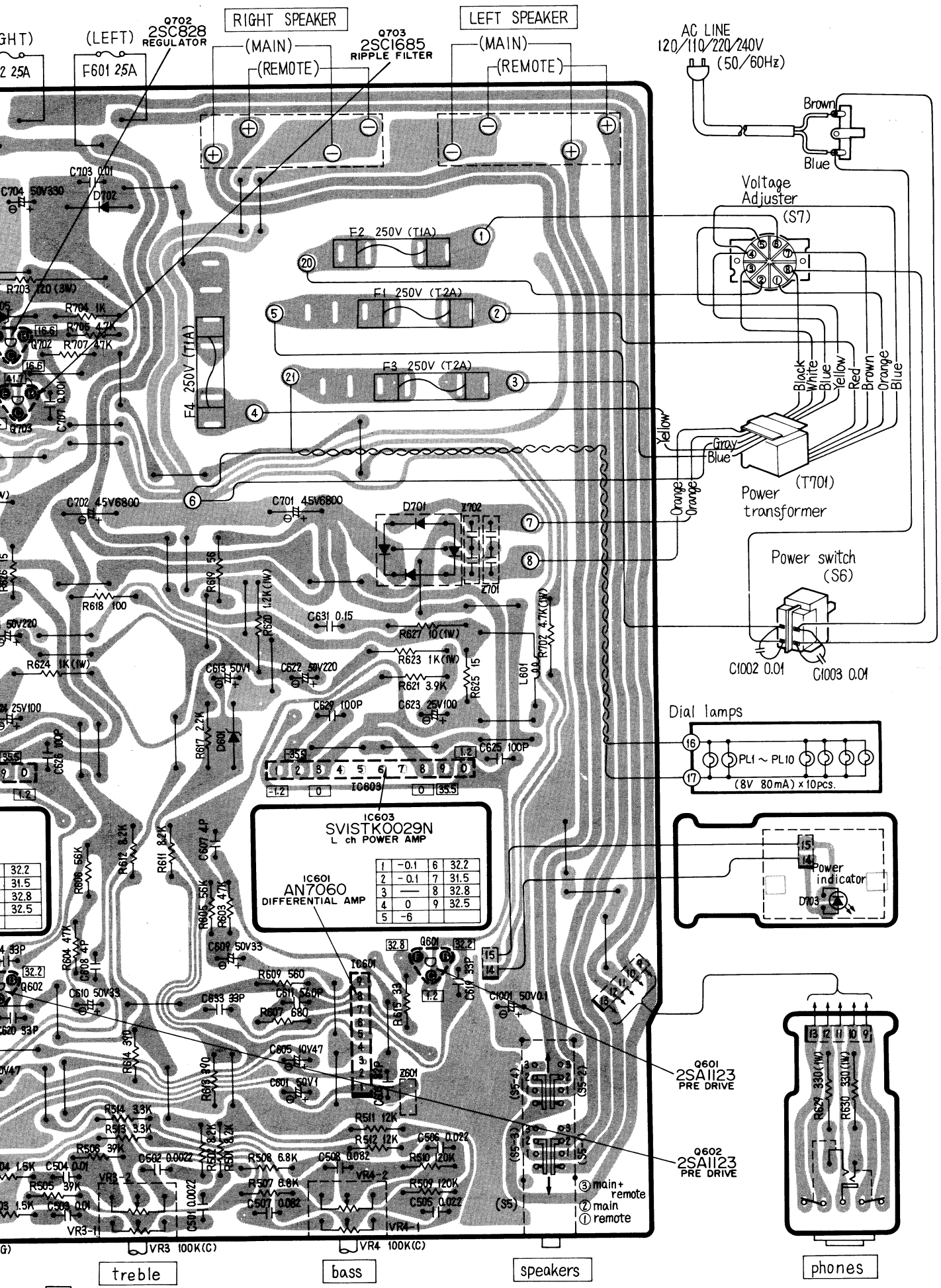
RIGHT SPEAKER
(MAIN)
(REMOTE)
LEFT SPEAKER
(MAIN)
(REMOTE)
Q702
2SC828
REGULATOR
Q703
2SC1685
RIPPLE FILTER
(LEFT)
F601 2.5A
AC LINE
120/110/220/240V
(50/60Hz)
Brown
Blue
Voltage
Adjuster
(S7)
F2 250V (T1A)
F1 250V (T2A)
F3 250V (T2A)
F4 250V (T1A)
Black
White
Blue
Yellow
Red
Brown
Orange
Blue
Yellow
Gray
Blue
Orange
Orange
(T701)
Power
transformer
Power switch
(S6)
C1002 0.01
C1003 0.01
Dial lamps
PL1 ~ PL10
(8V 80mA) x 10pcs.
Power
indicator
D703
IC603
SVISTK0029N
L ch POWER AMP
IC601
AN7060
DIFFERENTIAL AMP
Q601
2SA1123
PRE DRIVE
Q602
2SA1123
PRE DRIVE
③ main+
remote
② main
① remote
VR3 100K(C)
VR4 100K(C)
treble
bass
speakers
phones

■ EXPLODED VIEWS

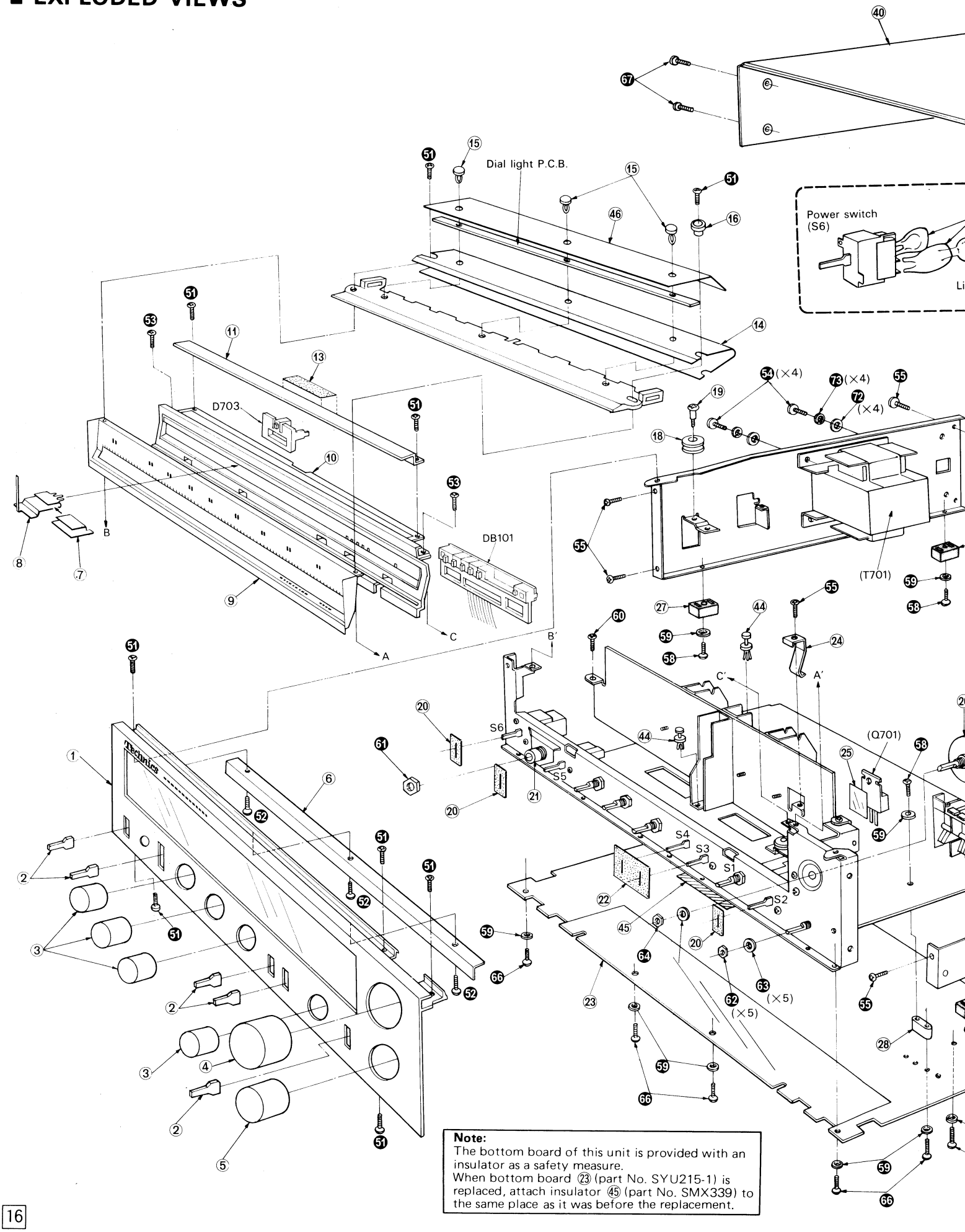

Note:
The bottom board of this unit is provided with an insulator as a safety measure.
When bottom board ㉓ (part No. SYU215-1) is replaced, attach insulator ㊺ (part No. SMX339) to the same place as it was before the replacement.

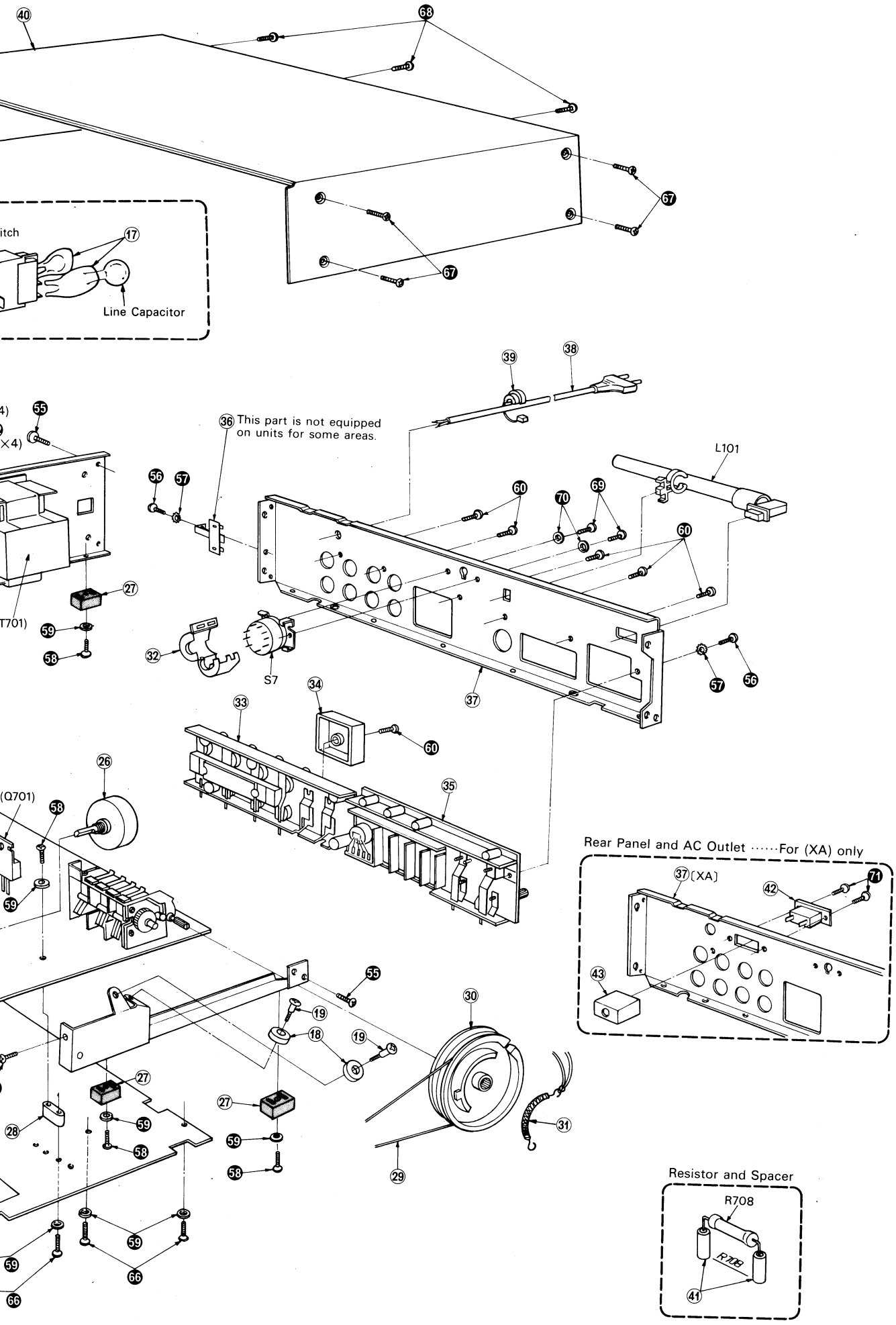

■ RE

NO

Ref.	
1	
1	
2	
2	
3	
3	
4	
4	
5	
5	
6	
6	
7	
8	
9	
9	
10	
11	
12	
13	
14	
15	
16	
17	
18	
19	
20	
21	
22	
23	
24	
25	
26	
27	
28	
29	
30	
31	
32	
33	
34	
35	
36	
37 [E]	
37 [XA]	
37 [XAL]	
37 [XGH,	
38 [XAL]	
38 [Other	
39 [XAL]	
39 [Other	
40	
40	
41	
42 [XA] or	
43 [XA] or	

■ ACC

■ REPLACEMENT PARTS LIST ····· Cabinet and Chassis Parts

NOTES:
1. Part numbers are indicated on most mechanical parts. Please use this part number for parts orders.
2. ⚠ indicates that only parts specified by the manufacturer be used for safety.
3. [K] -marked parts are used for black type only, while O -marked parts are for silver type only.
4. Parts other than [K] -and O -marked are used for both black and silver types.
5. Bracketed indications in Ref. No. columns specify the area. Parts without these indications can be used for all areas.

Black type model No. : SA-202(K)

Ref. No.		Part No.	Part Name & Description
		CABINET and CHASSIS PARTS	
1	O	SGWA202D	Panel, Front Ass'y
1	K	SGWA202KD	Panel, Front Ass'y (Black)
2	O	SBD29	Knob, Lever Switches
2	K	SBD29–1	Knob, Lever Switches (Black)
3	O	SBN887–1	Knob, Bass, Treble, Balance & Selector
3	K	SBN887–2	Knob, Bass, Treble, Balance & Selector (Black)
4	O	SBN881–1	Knob, Tuning
4	K	SBN881–2	Knob, Tuning (Black)
5	O	SBN885–1	Knob, Volume
5	K	SBN885–2	Knob, Volume (Black)
6	O	SDH491	Bracket, Front Panel
6	K	SDH491–1	Bracket, Front Panel (Black)
7		SDA81	Paper, Pointer Slide
8		SDP1143	Pointer
9	O	SKD3791	Scale, Dial
9	K	SKD3793	Scale, Dial (Black)
10		SXE889–1	Escutcheon, Dial Scale
11		SUV455	Cover, Dial Pointer
12		SDL23	Reflector Plate
13		SHS1013	Fiber, Dial Pointer Cover
14		SHP9293	Paper, Reflector
15		SHRA916–2	Latch, Dial
16		SHR9339	Spacer, Reflector M'tg Screw
17		SMXA65	Cover, Line Capacitor
18		**SDR8–1**	Pulley, Dial Cord
19		SHD3X1F	Shaft, Dial Pulley
20		SHS2425	Fiber, Lever Switch
21		XCJS6P21E–A	Jack, Headphones
22		SHS2427	Fiber, Lever Switch
23		SYU215–1	Bottom Board
24		SUS181	Spring, Transistor (Q701) Press
25		SMX181	Mica Plate, Transistor (Q701)
26		SDT8065	Shaft, Tuning (with Flywheel)
27		SKL237	Foot
28		SHE101	Mounting, Printed Circuit Board
29		SDZ051–2	Cord, Dial 200cm (78¾")
30		SDD47–1	Drum, Variable Capacitor
31		SDSA4121	Spring, Dial Cord
32		SUV453	Cover, Voltage Adjust Switch
33		SJF8021–1	Terminal, Speaker & Fuse
34		SUV337	Cover, Speaker Circuit Fuse
35		SJF8019–1	Terminal, Input
36		SJR205	Terminal, 2 pin
37 [E]		SGP2051–1A	Rear Panel
37 [XA]		SGP2051–2A	Rear Panel
37 [XAL]		SGP2051–3A	Rear Panel
37 [XGH, EG]		SGPA202K	Rear Panel (SGP2051–1A with Name Plate SGT21850)
38 [XAL] only	⚠	**QFC1207M**	AC Cord, Power Source
38 [Other Areas]	⚠	**SJA88**	AC Cord, Power Source
39 [XAL] only		SHR131	Bushing, AC Cord
39 [Other Areas]		SFSR4N4	Bushing, AC Cord
40	O	SKC250H	Cabinet
40	K	SKC250B	Cabinet (Black)
41		SMX51–3	Spacer, Resistor (R708)
42 [XA] only	⚠	SJS9205–1	Socket, AC Outlet
43 [XA] only		SMX13	Cover, AC Outlet
44		SHR401–1	Latch, Heat Sink M'tg
45		SMX339	Insulator, Bottom Board
46		SHP9311	Reflector, Paper
		NUTS, SCREWS and WASHERS	
51		**XTB3+10BFN**	Screw, Tapping, ⊕3x10 (Panel)
52		**XTB3+6BFN**	Screw, Tapping, ⊕3x6 (Bracket)
53		**XTS3+10B**	Screw, Tapping, ⊕3x10 (Escutcheon)
54		**XSN4+12BVS**	Screw, Tapping, ⊕4x10 (Transformer)
55		**XTB3+8BFN**	Screw, Tapping, ⊕3x8 (Chassis)
56		**XTB3+8BFZ**	Screw, Tapping, ⊕3x8 (Terminal)
57		**XWC3B**	Washer, External Toothed Lock, ϕ3
58		**XTV3+10BFN**	Screw, Tapping, ⊕3x10 (Foot)
59		**XWG3**	Washer, Plain, ϕ3
60		**XTB3+10BFZ**	Screw, Tapping, ⊕3x10 (Rear Panel)
61		**XNS12**	Nut, M12 (Headphones Jack)
62		**XNS8**	Nut, M8 (Volume, Bass, Treble etc.)
63		**XWV8**	Washer, Plain, ϕ8
64		**XNS11**	Nut, M11 (Tuning Shaft)
65		**XWV11**	Washer, Plain, ϕ11
66		**XTV3+12BFN**	Screw, Tapping, ⊕3x12 (Bottom Board)
67	O	**XTB4+8BFN**	Screw, Tapping, ⊕4x8 (Cabinet)
67	K	**XTB4+8BFZ**	Screw, Tapping, ⊕4x8 (Cabine)
68	O	**XTB3+8BFN**	Screw, Tapping, ⊕3x8 (Cabinet)
68	K	**XTB3+8BFN**	Screw, Tapping, ⊕3x8 (Cabinet)
69		**XSN3+6BVS**	Screw, ⊕3x6 (Voltage Adjustor)
70		**XWA3BFZ**	Washer, Spring, ϕ3
71 [XA] only		**XTN3+8BFZ**	Screw, Tapping, ⊕3x8 (AC Outlet)
72		**XWG4FZ**	Washer, Plain, ϕ4
73		**XWA4BFZ**	Washer, Spring, ϕ4
		ACCESSORIES	
A1		SSA267	Cord, FM Indoor Antenna
A2	⚠	XBA2C25SSO	Fuse, Speaker Circuit (2.5A 250V)
A3 [XA] only	⚠	SJP5213–1	Plug Adaptor
		PACKING PARTS	
P1		SPP649	Polyethylene Bag
P2 [XAL] only		SPS2535–1	Pad, Left Side
P2 [Other Areas]		SPS2535	Pad, Left Side
P3 [XAL] only		SPS2537–1	Pad, Right Side
P3 [Other Areas]		SPS2537	Pad, Right Side
P4 [E]	O	SPG2391	Carton Box
P4 [E]	K	SPG2393	Carton Box (Black Type Model)
P4 [XAL]		SPG2397	Carton Box
P4 [EG, XA, XGH]		SPG2395	Carton Box
P5		SQF10287	Instructions Book, Printed Matter

Areas

* [E] and [EG] are available in European and Scandinavia.
* [XGH] is available in Holland.
* [XAL] is available in Australia.
* [XA] is available in Asia, Latin America, Middle East and Africa.

■ ACCESSORIES

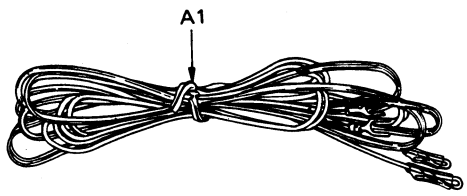

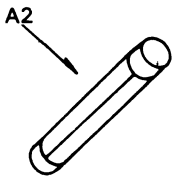

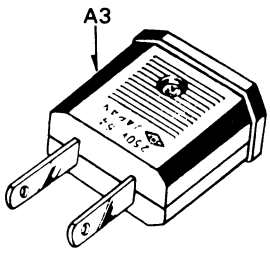

REPLACEMENT PARTS LIST ····· Electric Parts

OTES: 1. Part numbers are indicated on most mechanical parts
Please use this part number for parts orders
2. ⚠ indicates that only parts specified by the manufacturer
be used for safety.

Ref. No.		Part No.	Part Name & Description
INTEGRATED CIRCUIT			
C101		AN278	IC, FM IF Amplifier
C102		AN7001SW	IC, AM Converter, FM IF Amplifier, Detector & Stereo Decoder (MPX)
C103		AN6876	IC, LED Amplifier
C401, 402		SVITA7129P	IC, Equalizer Amplifier
C601, 602		AN7060F	IC, Differential Amplifier
C603, 604		SVISTK0029N	IC, Power Amplifier
TRANSISTORS			
Q1		3SK73–GR	Transistor, FM RF Amplifier
Q2		**2SC1047–C**	Transistor, FM Mixer
Q3		2SC1675–L1	Transistor, FM Local Oscillator
Q101		**2SA666AI–R**	Transistor, Switching
Q102~107, 702		**2SC1328–T**	Transistor, Switching & Regulator
Q301, 302		2SC1684–R	Transistor, AF Amplifier (Use in ranks R, S or T)
Q601, 602		2SA1123–R	Transistor, Pre Drive (Use in ranks R, S or T)
Q701		2SD762–O	Transistor, Regulator (Use in ranks O or P)
Q703		2SC1685–T	Transistor, Ripple Filter (Use in ranks S or T)
DIODES			
D1		**SVDMZ303B**	Diode, 3V Zener
D101, 103~106, 708		**MA162A**	Diode, AGC & Switching
D102		**2–OA99**	Diode, AM Detector
D107		**RVDKB262C**	Diode, Muting & Meter detector
D601		**RVDEQA0106S**	Diode, 6V, Zener
D701	⚠	**SVDS4VB10**	Rectifier
D702	⚠	**SVDSR1K2**	Rectifier
D703		LN01229P	Light Emitting Diode, Power
D705		**SVDRD16EB**	Diode, 16V Zener
DB101		LN06126P	Light Emitting Diode, Ass'y Signal Strength & Stereo Indicator
COILS and TRANSFORMERS			
L1		SLA4N15	Coil, FM Antenna
L2		**RLQY25S2**	Coil, Choke
L3		SLD4P13	Coil, FM RF Detector
L4		**RLQY15G5**	Coil, Choke
L5		SLO4P63–P	Coil, Oscillator
L101		SLF2D61	Coil, AM Antenna
L102		SLO2CI7	Coil, MW Oscillator
L103		SLQX101–3M	Coil, Choke
L104		SLQX393–1Z	Coil, Choke
L105		SLQX471–M	Coil, Choke
L106		SLQX180–2	Coil, Choke
L601, 602		SLQY15G–3P	Coil, Power Amplifier Output
T101		SLI2C129R–M	Transformer, AM IF
T102		SLI2C413R	Transformer, AM IF
T103		SLI4C509–P	Transformer, FM Discriminator
T701	⚠	SLT5N339	Transformer, Power Source
COMPONENT COMBINATIONS			
1		EXRP102Z223C	Component Combination, 22kΩ & 0.001μF
2		EXRP181K682C	Component Combination, 6.8kΩ & 180pF
3		EXRP103P102C	Component Combination, 1kΩ & 0.01μF
5		EXRP220K104C	Component Combination, 100kΩ & 22pF
101		EXF3YL01C	Component Combination, 0.01μF (x3)
102		EXF3SL04C	Component Combination, 0.01μF (x3)
103		EXRP103P472C	Component Combination, 4.7kΩ & 0.01μF
104, 701, 702		EXRFS203ZS	Component Combination, 0.01μF (x2)
301, 302		EXBH85085K	Component Combination, 10kΩ (x2) & 4.7kΩ (x3)
303, 304		EXRP182K104C	Component Combination, 100kΩ & 0.0018μF
401, 402		EXA6SD01C	Component Combination, Equalizer
403, 404		EXRP331K153C	Component Combination, 15kΩ & 330pF
601, 602		EXRP820K104C	Component Combination, 100kΩ & 82pF

Ref. No.		Part No.	Part Name & Description
CERAMIC FILTERS			
CF1, 101		SVFE107MS8–A	Ceramic Filter, Red, 10.7MHz
		SVFE107MS8–B	Ceramic Filter, Blue, 10.67MHz
		SVFE107MS8–C	Ceramic Filter, Orange, 10.73MHz
		SVFE107MS8–D	Ceramic Filter, Black, 10.64MHz
		SVFE107MS8–E	Ceramic Filter, White, 10.76MHz (Use pair ranks as same as CF1 and CF101)
CF102		SVFSFU450B	Ceramic Filter, AM 450kHz
FUSES			
F1	⚠	XBA2C20TRO	Fuse, T2A (250V) P.T. Primary
F2	⚠	XBA2C10TRO	Fuse, T1A (250V) P.T. Primary
F3	⚠	XBA2C20TRO	Fuse, T2A (250V)
F4	⚠	XBA2C10TRO	Fuse, T1A (250V)
F601, 602	⚠	XBA2C25SSO	Fuse, 2.5A (250V) Speaker Circuit
LAMPS			
PL1 ~ 10	⚠	XAMR68S8	Lamp, Dial (8V 80mA)
SWITCHES			
S1		SSR147	Swithch, Program Selector
S2		SSL149	Swithch, FM Muting/Mode
S3		SSL147	Swithch, Tape Monitor
S4		SSL149	Switch, Loudness
S5		SSL163	Switch, Speakers Selector
S6	⚠	ESL21210S	Switch, Power Source
S7	⚠	ESE37200	Switch, Voltage Adjuster
VARIABLE RESISTORS			
VR129		EVTS3MA00B53	PLL Voltage Adjustment, 5kΩ (B)
VR130		**EVLS3AA00B54**	FM Muting Level Adj., 50kΩ (B)
VR131		**EVLS3AA00B24**	Meter Sensitivity Adj., 20kΩ (B)
VR1		EWKK6A092BF5	Volume Control, 250kΩ (B)
VR2		EVHFDA505G25	Balance Control, 200kΩ (G)
VR3, 4		EWKGSA091C15	Treble & Bass Control, 100kΩ (C)
VARIABLE CAPACITOR			
CV1, 2, 3, 101, 102 [CT1, 2, 3, 101, 102]		ECV5MD34X71G	Tuning Gang, FM & AM (with Trimmer)

• Resistors and Capacitors

Ref. No.		Part No.	Part Name & Description
RESISTORS			
R2		**ERD25FJ221**	Carbon, 220Ω, 1/4W, ± 5%
R3		**ERD25TJ333**	Carbon, 33kΩ, 1/4W, ± 5%
R4		**ERD25FJ472**	Carbon, 4.7kΩ, 1/4W, ± 5%
R5		**ERD25TJ393**	Carbon, 39kΩ, 1/4W, ± 5%
R6		**ERD25FJ102**	Carbon, 1kΩ, 1/4W, ± 5%
R7		**ERD25FJ182**	Carbon, 1.8kΩ, 1/4W, ± 5%
R8		**ERD25FJ471**	Carbon, 470Ω, 1/4W, ± 5%
R9		**ERD25TJ563**	Carbon, 56kΩ, 1/4W, ± 5%
R101		**ERD25FJ391**	Carbon, 390Ω, 1/4W, ± 5%
R102		**ERD25FJ101**	Carbon, 100Ω, 1/4W, ± 5%

Ref. No.
R103
R104
R105, 106
R107
R108
R109
R110
R111
R112
R113
R114
R115
R116
R117
R118
R119
R120
R121
R122
R123
R124
R125, 126
R127
R128
R130
R151
R152
R153
R154
R155
R156
R301, 302
R303
R401, 402
R403, 404
R405, 406
R407, 408
R411, 412
R413, 414
R415, 516
R501, 502
R503, 504
R505, 506
R507, 508
R509, 510
R511, 512
R513, 514
R601, 602
R603, 604
R605, 606
R607, 608
R609, 610
R611, 612
R613, 614
R615, 616
R617
R618
R619
R620
R621, 622
R623, 624
R625, 626
R627, 628
R629, 630
R702
R703
R704
R705
R707
R708
R801, 802
R803, 804
R805, 806
R807, 808
R809, 810
R811, 812
R813, 814
R815, 816
R817, 818

Ref. No.		Part No.	Part Name & Description
R103		**ERD25FJ391**	Carbon, 390Ω, 1/4W, ± 5%
R104		**ERD25FJ222**	Carbon, 2.2kΩ, 1/4W, ± 5%
R105, 106		**ERD25FJ102**	Carbon, 1kΩ, 1/4W, ± 5%
R107		**ERD25FJ682**	Carbon, 6.8kΩ, 1/4W, ± 5%
R108		**ERD25FJ103**	Carbon, 10kΩ, 1/4W, ± 5%
R109		**ERD25FJ391**	Carbon, 390Ω, 1/4W, ± 5%
R110		**ERD25FJ681**	Carbon, 680Ω, 1/4W, ± 5%
R111		**ERD25FJ471**	Carbon, 470Ω, 1/4W, ± 5%
R112		**ERD25TJ823**	Carbon, 82kΩ, 1/4W, ± 5%
R113		**ERD25TJ333**	Carbon, 33kΩ, 1/4W, ± 5%
R114		**ERD25TJ183**	Carbon, 18kΩ, 1/4W, ± 5%
R115		**ERD25FJ103**	Carbon, 10kΩ, 1/4W, ± 5%
R116		**ERD25FJ102**	Carbon, 1kΩ, 1/4W, ± 5%
R117		**ERD25FJ332**	Carbon, 3.3kΩ, 1/4W, ± 5%
R118		**ERD25FJ682**	Carbon, 6.8kΩ, 1/4W, ± 5%
R119		**ERD25FJ471**	Carbon, 470Ω, 1/4W, ± 5%
R120		**ERD25TJ153**	Carbon, 15kΩ, 1/4W, ± 5%
R121		**ERD25FJ332**	Carbon, 3.3kΩ, 1/4W, ± 5%
R122		**ERD25FJ682**	Carbon, 6.8kΩ, 1/4W, ± 5%
R123		**ERD25FJ681**	Carbon, 680Ω, 1/4W, ± 5%
R124		**ERD25FJ562**	Carbon, 5.6kΩ, 1/4W, ± 5%
R125, 126		**ERD25FJ103**	Carbon, 10kΩ, 1/4W, ± 5%
R127		**ERG1ANJ330**	Metal Oxide, 33Ω, 1W, ± 5%
R128		**ERD25FJ392**	Carbon, 3.9kΩ, 1/4W, ± 5%
R130		**ERD25FJ561**	Carbon, 560Ω, 1/4W, ± 5%
R151		**ERD25TJ104**	Carbon, 100kΩ, 1/4W, ± 5%
R152		**ERD25FJ221**	Carbon, 220Ω, 1/4W, ± 5%
R153		**ERD25FJ101**	Carbon, 100Ω, 1/4W, ± 5%
R154		**ERD25FJ103**	Carbon, 10kΩ, 1/4W, ± 5%
R155		**ERD25TJ104**	Carbon, 100kΩ, 1/4W, ± 5%
R156		**ERD25FJ102**	Carbon, 1kΩ, 1/4W, ± 5%
R301, 302		**ERD25FJ681**	Carbon, 680Ω, 1/4W, ± 5%
R303		**ERD25TJ822**	Carbon, 8.2kΩ, 1/4W, ± 5%
R401, 402		**ERO25CKF6802**	Metal Film, 68kΩ, 1/4W, ± 1%
R403, 404		**ERD25FJ681**	Carbon, 680Ω, 1/4W, ± 5%
R405, 406		**ERO25CKF1803**	Metal Film, 180kΩ, 1/4W, ± 1%
R407, 408		**ERO25CKF2703**	Metal Film, 270kΩ, 1/4W, ± 1%
R411, 412		**ERD25TJ184**	Carbon, 180kΩ, 1/4W, ± 5%
R413, 414		**ERD25TJ273**	Carbon, 27kΩ, 1/4W, ± 5%
R415, 516		**ERO25CKF1003**	Metal Film, 100kΩ, 1/4W, ± 1%
R501, 502		**ERD25FJ822**	Carbon, 8.2kΩ, 1/4W, ± 5%
R503, 504		**ERD25FJ152**	Carbon, 1.5kΩ, 1/4W, ± 5%
R505, 506		**ERD25TJ393**	Carbon, 39kΩ, 1/4W, ± 5%
R507, 508		**ERD25FJ682**	Carbon, 6.8kΩ, 1/4W, ± 5%
R509, 510		**ERD25TJ124**	Carbon, 120kΩ, 1/4W, ± 5%
R511, 512		**ERD25TJ123**	Carbon, 12kΩ, 1/4W, ± 5%
R513, 514		**ERD25FJ332**	Carbon, 3.3kΩ, 1/4W, ± 5%
R601, 602		**ERD25FJ222**	Carbon, 2.2kΩ, 1/4W, ± 5%
R603, 604		**ERD25TJ473**	Carbon, 47kΩ, 1/4W, ± 5%
R605, 606		**ERD25TJ563**	Carbon, 56kΩ, 1/4W, ± 5%
R607, 608		**ERD25FJ681**	Carbon, 680Ω, 1/4W, ± 5%
R609, 610		**ERD25FJ561**	Carbon, 560Ω, 1/4W, ± 5%
R611, 612		**ERD25FJ822**	Carbon, 8.2kΩ, 1/4W, ± 5%
R613, 614	⚠	**ERD25FJ391**	Carbon, 390Ω, 1/4W, ± 5%
R615, 616	⚠	**ERD25FJ330**	Carbon, 33Ω, 1/4W, ± 5%
R617	⚠	**ERD50FJ222**	Carbon, 2.2kΩ, 1/2W, ± 5%
R618	⚠	**ERD50FJ101**	Carbon, 100Ω, 1/2W, ± 5%
R619	⚠	**ERD50FJ560**	Carbon, 56Ω, 1/2W, ± 5%
R620		**ERG1ANJ122**	Metal Oxide, 1.2kΩ, 1W, ± 5%
R621, 622	⚠	**ERD50FJ392**	Carbon, 3.9kΩ, 1/2W, ± 5%
R623, 624		**ERG1ANJ102**	Metal Oxide, 1kΩ, 1W, ± 5%
R625, 626	⚠	**ERD25FJ150**	Carbon, 15Ω, 1/4W, ± 5%
R627, 628		**ERG1ANJ100**	Metal Oxide, 10Ω, 1W, ± 5%
R629, 630		**ERG1ANJ331**	Metal Oxide, 330Ω, 1W, ± 5%
R702		**ERG1ANJ472**	Metal Oxide, 4.7kΩ, 1W, ± 5%
R703		**ERG3ANJ121**	Metal Oxide, 120Ω, 3W, ± 5%
R704	⚠	**ERD50FJ102**	Carbon 1kΩ, 1/2W, ± 5%
R705	⚠	**ERD25FJ472**	Carbon, 4.7kΩ, 1/4W, ± 5%
R707		**ERD25TJ473**	Carbon, 47kΩ, 1/4W, ± 5%
R708	⚠	**ERD25FJ681**	Carbon, 680Ω, 1/4W, ± 5%
R801, 802		ERO50CKF8203	Metal Film, 820kΩ, 1/2W, ± 1%
R803, 804		**ERD25FJ222**	Carbon, 2.2kΩ, 1/4W, ± 5%
R805, 806		**ERD25TJ823**	Carbon, 82kΩ, 1/4W, ± 5%
R807, 808		**ERD25TJ333**	Carbon, 33kΩ, 1/4W, ± 5%
R809, 810		**ERD25FJ331**	Carbon, 330Ω, 1/4W, ± 5%
R811, 812		**ERD25TJ394**	Carbon, 390kΩ, 1/4W, ± 5%
R813, 814		**ERD25TJ104**	Carbon, 100kΩ, 1/4W, ± 5%
R815, 816		**ERD25FJ472**	Carbon, 4.7kΩ, 1/4W, ± 5%
R817, 818		**ERD25FJ472**	Carbon, 4.7kΩ, 1/4W, ± 5%

Ref. No.		Part No.	Part Name & Description
		CAPACITORS	
C1		ECCD1H150KC	Ceramic, 15pF, 50V, ±10%
C3		ECCD1H030CC	Ceramic, 3pF, 50V, ±0.25pF
C4		ECKD1H102MDA	Ceramic, 0.001μF, 50V, ±20%
C5		ECCD1H150KC	Ceramic, 15pF, 50V, ±10%
C6		ECCD1H050CC	Ceramic, 5pF, 50V, ±0.25pF
C7		ECQM1H223KZ	Polyester, 0.022μF, 50V, ±10%
C8		ECCD1H390KC	Ceramic, 39pF, 50V, ±10%
C9		ECCD1H100KC	Ceramic, 10pF, 50V, ±10%
C10		ECKD1H102ZF	Ceramic, 0.001μF, 50V, +80 -20%
C15		ECCD1H050CC	Ceramic, 5pF, 50V, ±0.25pF
C71,72 [XAL] only	⚠	ECKDHS101MB	Ceramic, 100pF, 400VAC, ±20%
C73		ECKD1H221KB	Ceramic, 220pF, 50V, ±10%
C101		ECQP1361JZ	Polypropylene, 360pF, 100V, ±5%
C102		ECCD1H120KC	Ceramic, 12pF, 50V, ±10%
C103, 104		ECKD1H103ZF	Ceramic, 0.01μF, 50V, +80 -20%
C105		**ECEA50Z1**	Electrolytic, 1μF, 50V
C106		**ECEA50ZR1**	Electrolytic, 0.1μF, 50V
C107		**ECEA50Z1**	Electrolytic, 1μF, 50V
C108		ECQS1102JZ	Polystyrene, 1000pF, 125V, ±5%
C109		ECQM1H122JZ	Polyester, 0.0012μF, 50V, ±5%
C110, 111		ECKD1H103ZF	Ceramic, 0.01μF, 50V, +80 -20%
C112		ECQM1H182JZ	Polyester, 0.0018μF, 50V, ±5%
C113		**ECEA50ZR1**	Electrolytic, 0.1μF, 50V
C114		**ECEA1CS330**	Electrolytic, 33μF, 16V
C115		ECCD1H680K	Ceramic, 68pF, 50V, ±10%
C116		**ECEA25Z4R7**	Electrolytic, 4.7μF, 25V
C117		ECKD1H103ZF	Ceramic, 0.01μF, 50V, +80 -20%
C118		ECKD1H331KB	Ceramic, 330pF, 50V, ±10%
C119		ECKD1H223ZF	Cermic, 0.022μF, 50V, +80 -20%
C120		**ECEA1ES470**	Electrolytic, 47μF, 25V
C121		**ECEA1ES220**	Electrolytic, 22μF, 25V
C123		**ECEA50Z3R3**	Electrolytic, 3.3μF, 50V
C124		**ECEA1HS100**	Electrolytic, 10μF, 50V
C125		**ECEA50Z3R3**	Electrolytic, 3.3μF, 50V
C126		**ECEA1JS4R7**	Electrolytic, 4.7μF, 63V
C127, 128		**ECEA1HS100**	Electrolytic, 10μF, 50V
C129		ECCD1H070DC	Ceramic, 7pF, 50V, ±0.5pF
C151		ECKD1H333ZF	Ceramic, 0.033μF, 50V, +80 -20%
C152		ECQM1H223KZ	Polyester, 0.022μF, 50V, ±10%
C153		ECKD1H103ZF	Ceramic, 0.01μF, 50V, +80 -20%
C160		**ECEA1AS470**	Electrolytic, 47μF, 10V
C161		ECCD1H680K	Ceramic, 68pF, 50V, ±10%
C171 [XAL] only	⚠	ECKDHS102MD	Ceramic, 0.001μF, 400VAC, ±20%
C199		ECKD1H223ZF	Ceramic, 0.022μF, 50V, +80 -20%
C301, 302		ECQM1H183JZ	Polyester, 0.018μF, 50V, ±5%
C303, 304		ECQM1H272KZ	Polyester, 0.0027μF, 50V, ±10%
C305, 306		**ECEA50ZR22**	Electrolytic, 0.22μF, 50V
C307, 308		ECKD1H331KB	Ceramic, 330pF, 50V, ±10%
C401, 402		**ECEA50M3R3R**	Electrolytic, 3.3μF, 50V
C403, 404		**ECEA1AS101**	Electrolytic, 100μF, 10V
C405, 406		ECQM1H472JZ	Polyester, 0.0047μF, 50V, ±5%
C409, 410		ECQM1H183JZ	Polyester, 0.018μF, 50V, ±5%
C411, 412		**ECEA50MR47R**	Electrolytic, 0.47μF, 50V
C413		**ECEA1HS331**	Electrolytic, 330μF, 50V
C501, 502		ECQM1H222KZ	Polyester, 0.0022μF, 50V, ±10%
C503, 504		ECQM1H103KZ	Polyester, 0.01μF, 50V, ±10%
C505, 506		ECQM1H223KZ	Polyester, 0.022μF, 50V, ±10%
C507, 508		ECQM1H823KZ	Ceramic, 0.082μF, 50V, ±10%
C601, 602		**ECEA50M1R**	Electrolytic, 1μF, 50V
C603, 604		ECCD1H820K	Ceramic, 82pF, 50V, ±10%
C605, 606		**ECEA1AS470**	Electrolytic, 47μF, 10V
C607, 608		ECCD1H040CC	Ceramic, 4pF, 50V, ±0.25pF
C609, 610		**ECEA1JS330**	Electrolytic, 33μF, 63V
C611, 612		ECKD1H561KB	Ceramic, 560pF, 50V, ±10%
C613		**ECEA50Z1**	Electrolytic, 1μF, 50V
C619, 620		ECCD2H330K	Ceramic, 33pF, 500V, ±10%
C621, 622		**ECEA1VS221**	Electrolytic, 220μF, 35V
C623, 624		**ECEA1ES101**	Electrolytic, 100μF, 25V
C625, 626		ECCD2H101K	Ceramic, 100pF, 500V, ±10%
C629, 630		ECCD2H101K	Ceramic, 100pF, 500V, ±10%
C631, 632		ECQM1H154KZ	Polyester, 0.15μF, 50V, ±10%
C633, 634		ECCD2H330K	Ceramic, 33pF, 500V, ±10%
C701, 702		ECETS45V682U	Electrolytic, 6800μF, 45V
C703		ECKD1H103ZF	Ceramic, 0.01μF, 50V, +80 -20%
C704		**ECEA1HS331**	Electrolytic, 330μF, 50V
C705		ECKD1H103ZF	Ceramic, 0.01μF, 50V, +80 -20%
C706		**ECEA1ES470**	Electrolytic, 47μF, 25V
C707		ECKD1H102ZF	Ceramic, 0.001μF, 50V, +80 -20%
C708, 709		**ECEA1HS101**	Electrolytic, 100μF, 50V
C801, 802		ECKD1H331KB	Ceramic, 330pF, 50V, ±10%
C803, 804		ECQM1H473KZ	Polyester, 0.047μF, 50V, ±10%
C1001		**ECEA50ZR1**	Electrolytic, 0.1μF, 50V
C1002, 1003	⚠	ECKDKC103PF	Ceramic, 0.01μF, 400VAC, +100 -8%

- **Shorting Switch**

This unit uses a shorting switch. As illustrated below, the circuit is shorted to the next circuit without being opened. In the circuit diagram, the shaded area represents the common terminal.

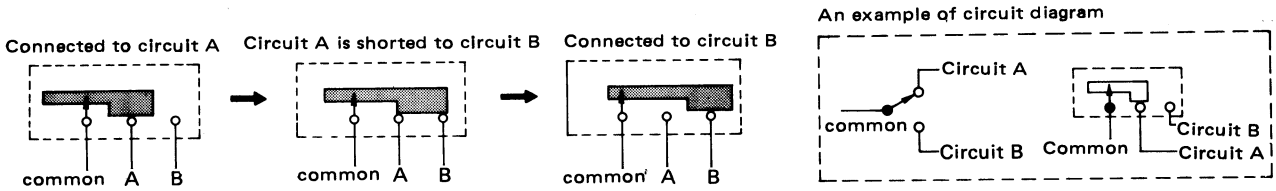

■ DIAL CORD INSTALLATION GUIDE

- **For threading a fresh cord, proceed as follows.**

1. Prepare a fresh cord more than 200cm (78-3/4") in length.
2. Bring the variable capacitor into a state where the drum is completely turned to the right (maximum capacity and lowest frequency for the variable capacitor).
3. Direct the cord in the order from 1 to 9.
4. Stretch the cord in such a tension as the spring length is elongated by 1.5 times that of the original state.
5. Fix the knot of the cord with the adhesive.

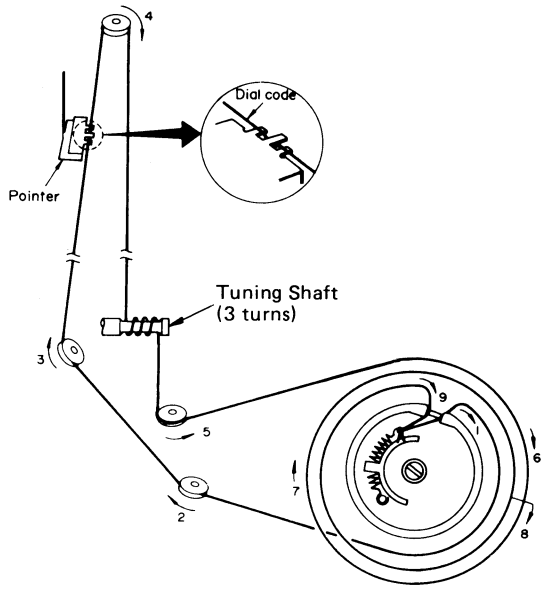

opened.

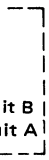

— MEMO —

Printed in Jap
80013500 ® I

t of new technology.

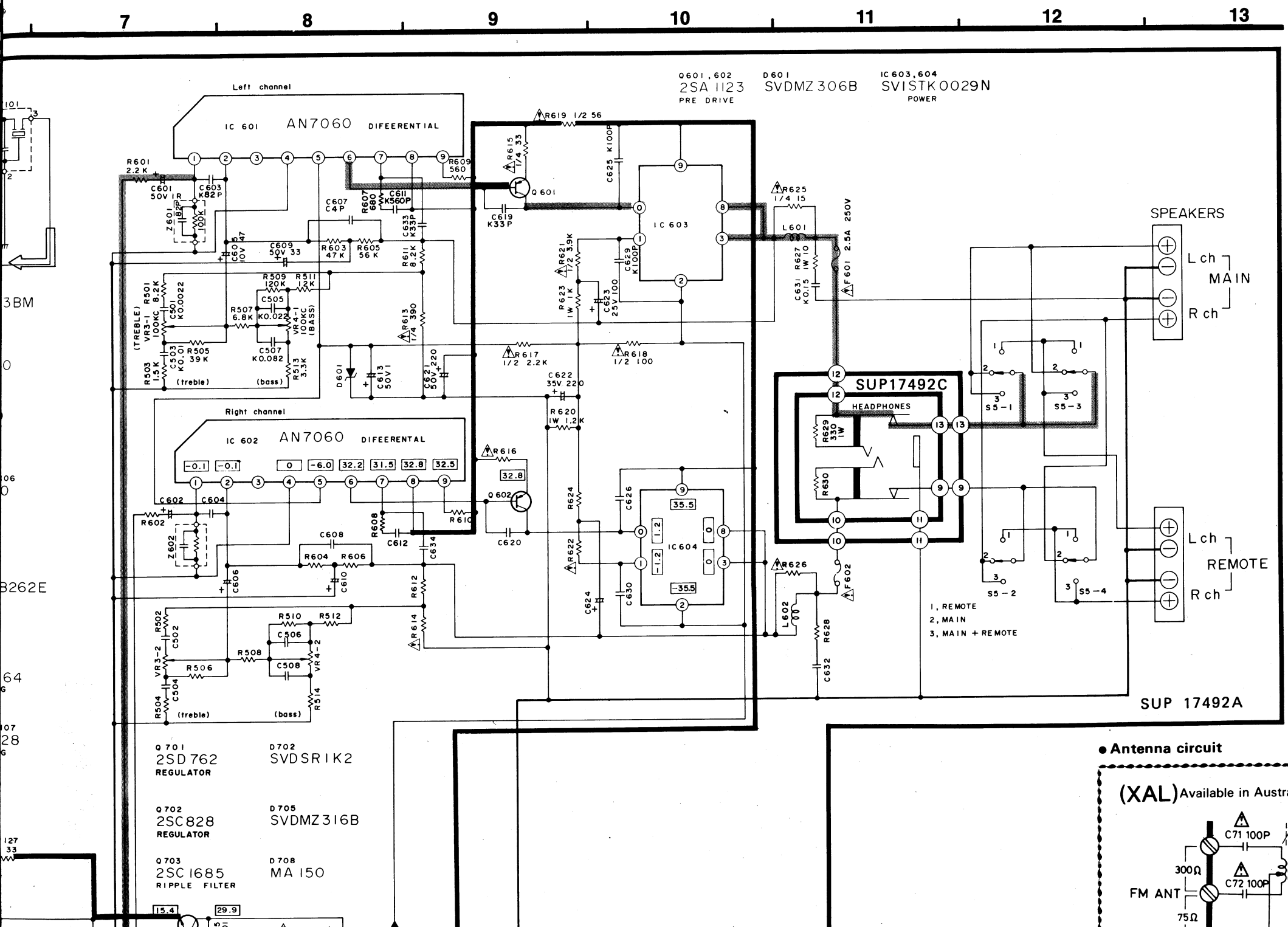

■ SCHEMATIC DIAGRAM …… MODEL SA-202

* This schematic diagram may be modified at any time with the development of new technology.

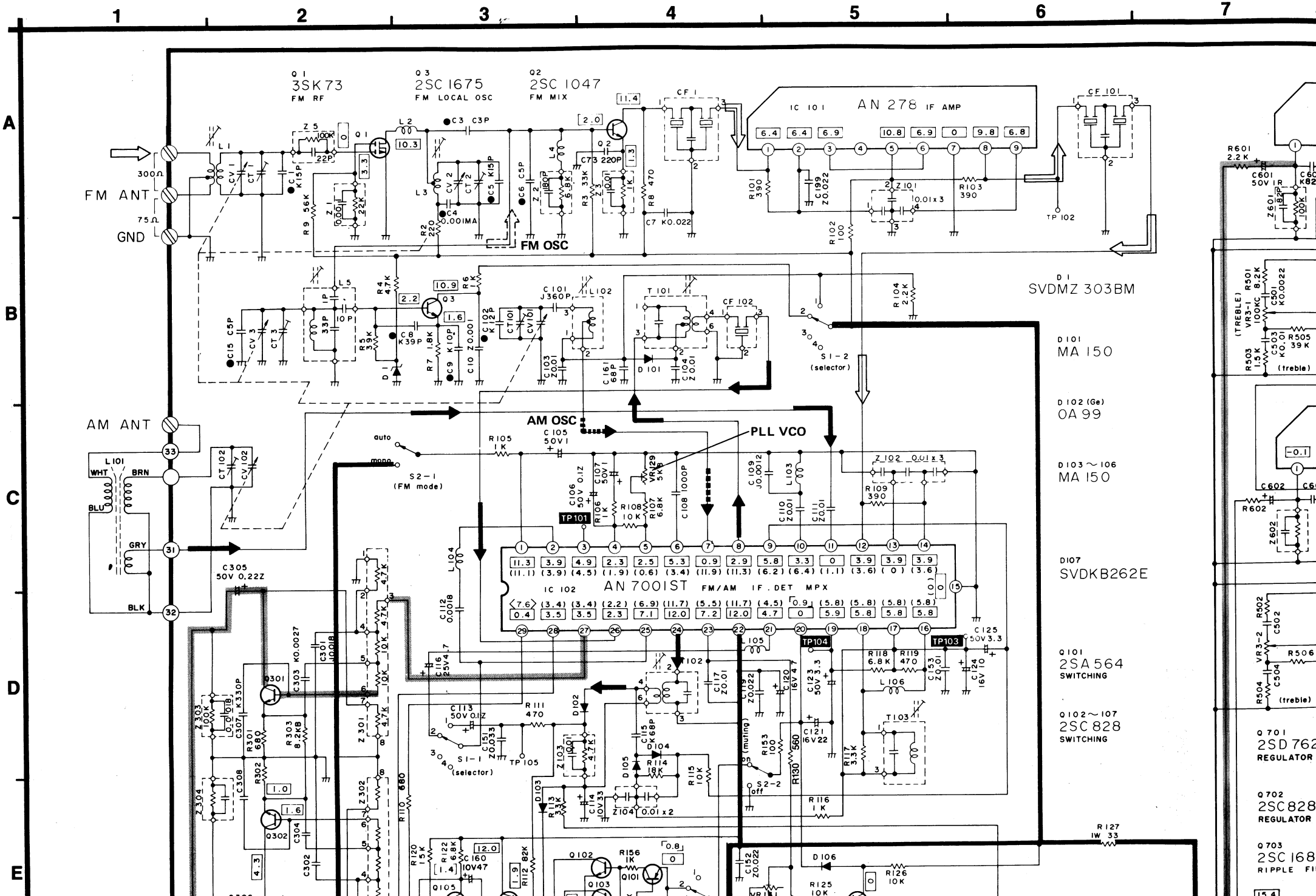

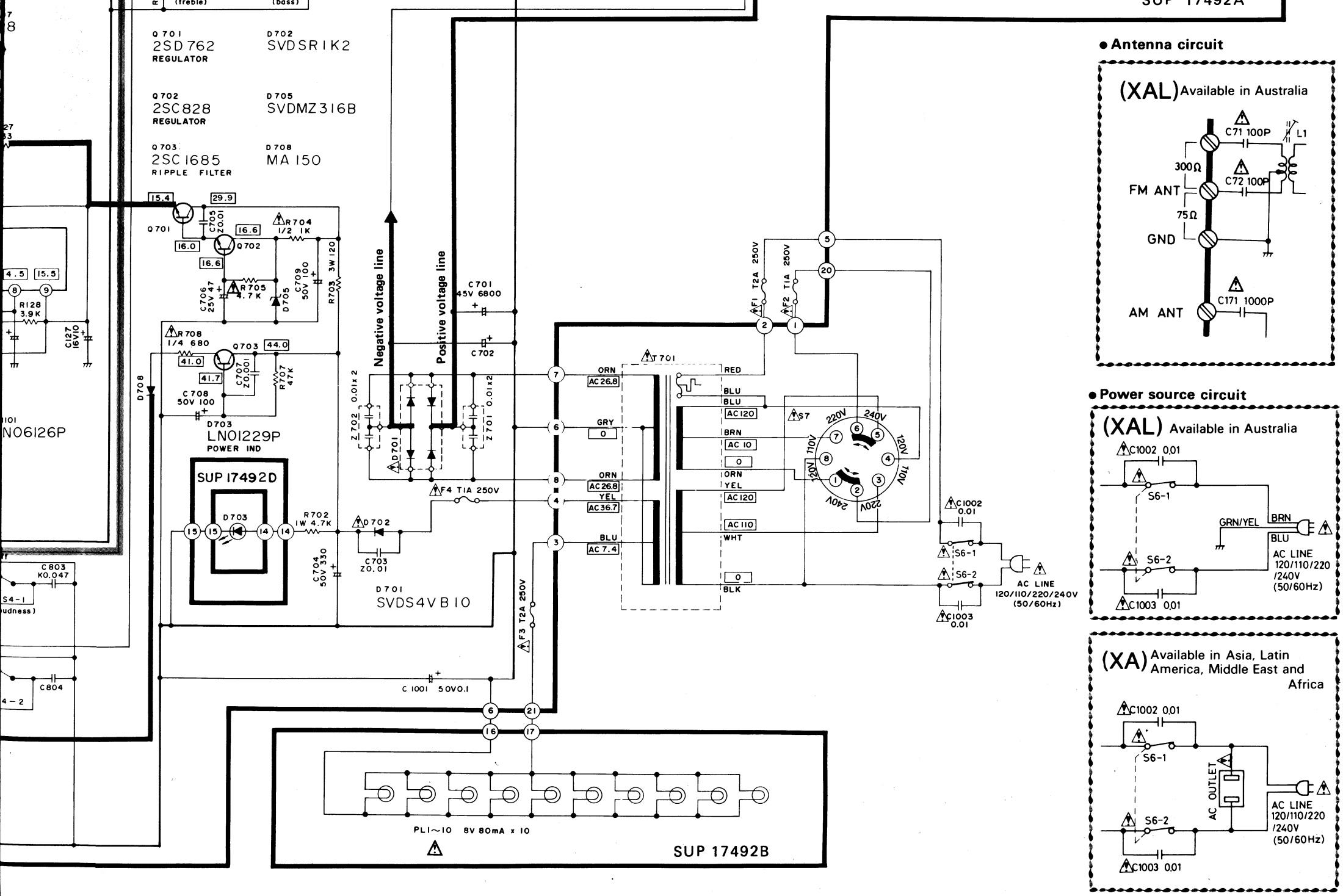

dard values for the unit measured by the DC impedance) with the chassis taken as standard. me errors in the voltage values, depending on DC circuit tester.

- Figures in [ ] stand for DC voltage in FM (60dB signal reception) mode.
- Figures in ( ) stand for DC voltage in AM mode.
- Figures in 〈 〉 stand for DC voltage in FM stereo signal reception mode.
- Figures in ⌈ ⌋ stand for DC voltage in FM (no signal) muting to on mode.

9. Signal lines
   ⇨ FM ➡ AM ➡ Audio Frequency
10. ▬ Positive voltage lines
11. ⚠ indicates that only parts specified by the manufacturer be used for safety.

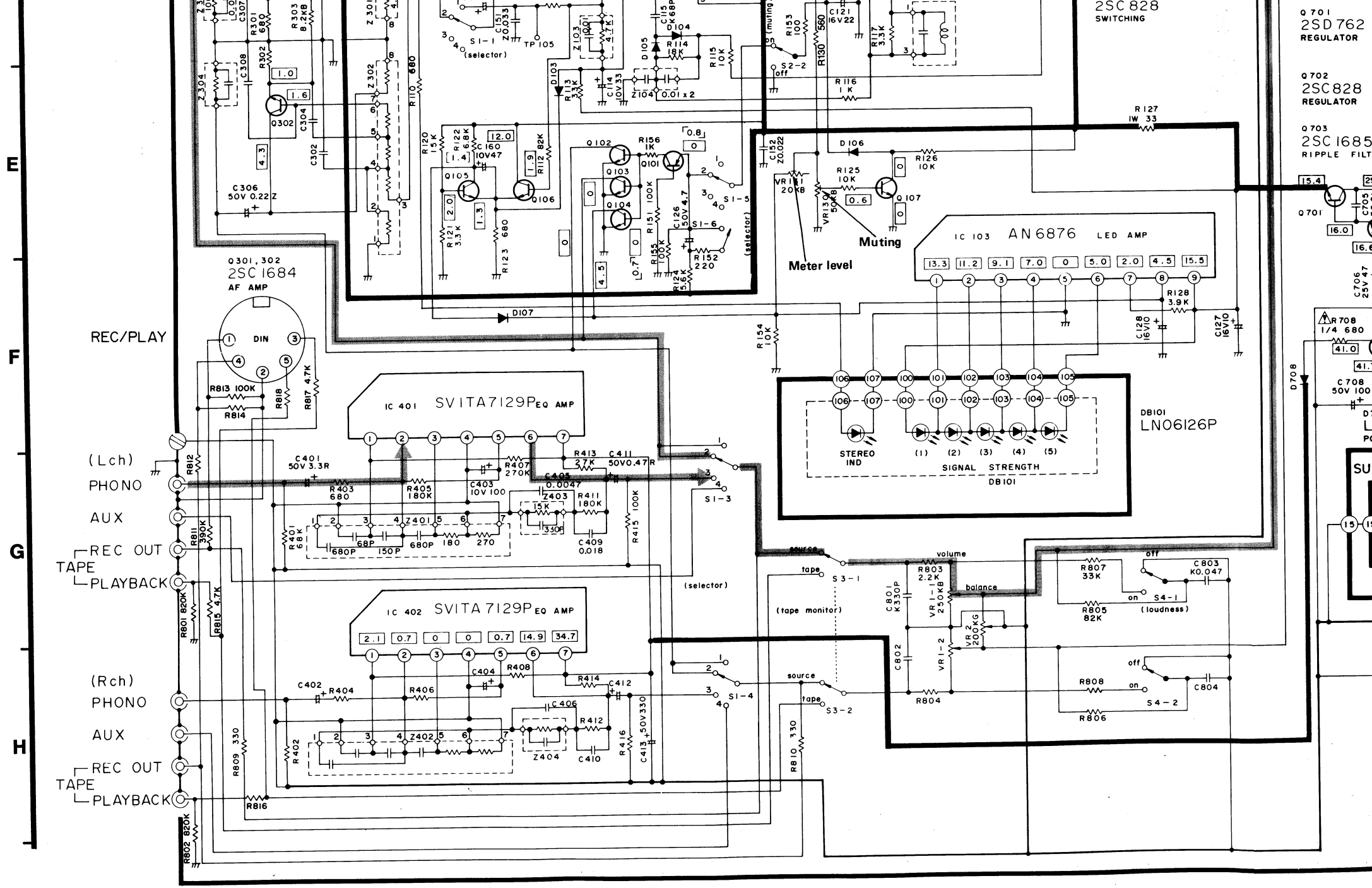

Notes:

1. **S1-1~S1-6:** Selector switch in **"FM"** position.
   ①AM ↔ ②FM ↔ ③phono ↔ ④aux
2. **S2-1, S2-2:** FM muting/mode switch in **"on/FM auto"** position.
3. **S3-1, S3-2:** Tape monitor switch in **"source"** position.
4. **S4-1, S4-2:** Loudness switch in **"off"** position.
5. **S5-1~S5-4:** Speakers switch in **"main"** position.
   ①remote ↔ ②main ↔ ③main + remote
6. **S6-1, S6-2:** Power source switch in **"on"** position.
7. **S7:** Voltage adjust switch in **"240V"** position.
   120V ↔ 110V ↔ 220V ↔ 240V
8. Indicated voltage are the standard values for the unit measured electronic circuit tester (high-impedance) with the chassis taken Therefore, there may exist some errors in the voltage values, de the internal impedance of the DC circuit tester.