ORDER NO. SD81082003C2

Service Manual

FM/MW/LW Stereo Receiver

SA-203L

[EK], [EB], [EX]

SA-203L (K)

[EX]

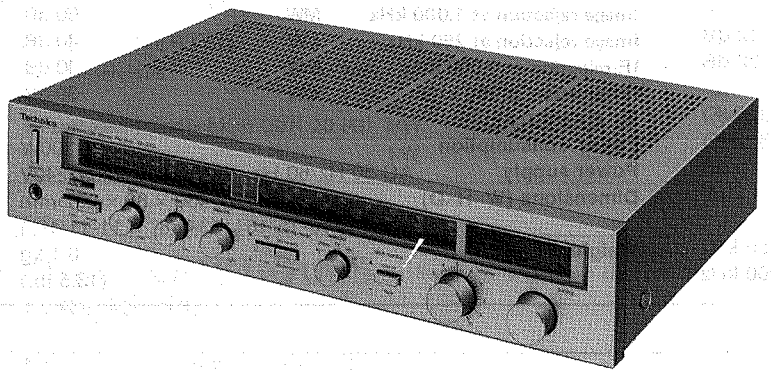

* The cabinet and front panel are available in black color and silver types.
* The black type model is provided with (K) in the Service Manual.

Areas

* [EK] is available in United Kingdom.
* [EB] is available in Belgium.
* [EX] is available in Switzerland and Scandinavia.

English

Specifications (DIN 45 500)

(Specifications are subject to change without notice for further improvement.)

■ AMPLIFIER SECTION

20 Hz~20 kHz continuous power output	
both channels driven	2 × 30W (4Ω)
	2 × 30W (8Ω)
40 Hz~16 kHz continuous power output	
both channels driven	2 × 30W (4Ω)
	2 × 30W (8Ω)
1 kHz continuous power output	
both channels driven	2 × 35W (4Ω)
	2 × 33W (8Ω)
Total harmonic distortion	
rated power at 20 Hz~20 kHz	0.08% (4Ω)
	0.04% (8Ω)
rated power at 40 Hz~16 kHz	0.08% (4Ω)
	0.04% (8Ω)
rated power at 1 kHz	0.04% (4Ω)
	0.04% (8Ω)
half power at 20 Hz~20 kHz	0.025% (8Ω)
half power at 1 kHz	0.009% (8Ω)
−26 dB power at 1 kHz	0.1% (4Ω)
50 mW power at 1 kHz	0.12% (4Ω)
Intermodulation distortion	
rated power at 250 Hz: 8 kHz=4:1, 4Ω	0.08%
rated power at 60 Hz: 7 kHz=4:1, SMPTE, 8Ω	0.04%
Power bandwidth	
both channels driven, −3 dB	10 Hz~30 kHz (4Ω)
Damping factor	15 (4Ω), 30 (8Ω)
S/N	
rated power (4Ω)	
PHONO	70 dB (IHF, A: 80 dB)
AUX, TAPE	88 dB (IHF, A: 95 dB)
−26 dB power (4Ω)	
PHONO	64 dB
AUX, TAPE	66 dB
50 mW power (4Ω)	
PHONO	62 dB
AUX, TAPE	62 dB
Input sensitivity and impedance	
PHONO	2.5 mV/47kΩ
AUX	150 mV/22kΩ
TAPE REC/PLAY	180 mV/22kΩ
PHONO maximum input voltage (1 kHz, RMS)	130 mV
Frequency response	
PHONO	RIAA standard curve ±0.8 dB (30 Hz~15 kHz)
AUX, TAPE	5 Hz~70 kHz (−3 dB) ±0.2 dB (20 Hz~20 kHz)
Tone controls	
BASS	50 Hz, +10 dB~ −10 dB
TREBLE	20 kHz, +10 dB~ −10 dB
Loudness control (volume at −30 dB)	50 Hz, +9 dB
Output voltage and impedance	
TAPE, REC OUT	150 mV
TAPE, REC/PLAY	30 mV/82kΩ
Channel balance, AUX 250 Hz~6,300 Hz	±1 dB
Channel separation, AUX 1 kHz	55 dB
Headphones output level and impedance	260 mV/330Ω
Load impedance	
MAIN or REMOTE	4Ω~16Ω
MAIN and REMOTE	8Ω~16Ω

■ FM TUNER SECTION

Frequency range	87.5~108 MHz
Sensitivity	
S/N 30 dB	1.9 μV (300Ω), 1.3 μV (75Ω)
S/N 26 dB	1.7 μV (300Ω), 1.2 μV (75Ω)
S/N 20 dB	1.5 μV (300Ω), 0.9 μV (75Ω)
IHF usable sensitivity	1.9 μV (IHF '58)
IHF 46 dB stereo quieting sensitivity	22 μV/75Ω
Total harmonic distortion	
MONO	0.15%
STEREO	0.2%
S/N	
MONO	60 dB (75 dB, IHF)
STEREO	58 dB (70 dB, IHF)

Technics

Matsushita Electric Trading Co., Ltd.
P.O. Box 288, Central Osaka Japan

English

Frequency response	20 Hz~15 kHz, +1 dB~ −2 dB
Alternate channel selectivity	75 dB
Capture ratio	1.2 dB
Image rejection at 98 MHz	55 dB
IF rejection at 98 MHz	75 dB
Spurious response rejection at 98 MHz	80 dB
AM suppression	50 dB
Stereo separation	
1 kHz	42 dB
10 kHz	32 dB
Carrier leak	
19 kHz	−30 dB (−35 dB, IHF)
38 kHz	−50 dB (−50 dB, IHF)
Channel balance (250 Hz~6,300 Hz)	±1.5 dB
Limiting point	1.2 μV
Bandwidth	
IF amplifier	180 kHz
FM demodulator	1000 kHz

■ AM TUNER SECTION

Frequency range	**MW**	525 ~ 1605 kHz
	LW	145 ~ 350 kHz
Sensitivity (S/N 20 dB)	**MW**	30μV, 300μV/m
	LW	45 μV
Selectivity (± 9 kHz)	**MW**	30 dB
	LW	30 dB
Image rejection at 1,000 kHz	**MW**	50 dB
Image rejection at 250 kHz	**LW**	40 dB
IF rejection at 1,000 kHz	**MW**	40 dB
IF rejection at 250 kHz	**LW**	30 dB

■ GENERAL

Power consumption	300W
Power supply	AC 50 Hz/60 Hz, 110V/120V/220V/240V
Dimensions (W×H×D)	430 × 86 × 297 mm (16-15/16" × 3-3/8" × 11-11/16")
Weight	6.1 kg (13.5 lb.)

Deutsch

TECHNISCHE DATEN (DIN 45 500)

(Spezifikationen Können infolge von Verbesserungen ohne Ankündigung geändert werden.)

■ VERSTÄRKERTEIL

Dauerton-Ausgangsleistung bei 20 Hz ~ 20 kHz	
beide Kanäle ausgesteuert	2 × 30W (4 Ω)
	2 × 30W (8 Ω)
Dauerton-Ausgangsleistung bei 40 Hz ~ 16 kHz	
beide Kanäle ausgesteuert	2 × 30W (4 Ω)
	2 × 30W (8 Ω)
Dauerton-Ausgangsleistung bei 1 kHz	
beide Kanäle ausgesteuert	2 × 35W (4 Ω)
	2 × 33W (8 Ω)
Gesamtklirrfaktor	
Nennleistung bei 20 Hz ~ 20 kHz	0,08% (4 Ω)
	0,04% (8 Ω)
Nennleistung bei 40 Hz ~ 16 kHz	0,08% (4 Ω)
	0,04% (8 Ω)
Nennleistung bei 1 kHz	0,04% (4 Ω)
	0,04% (8 Ω)
halbe Nennleistung bei 20 Hz ~ 20 kHz	0,025% (8 Ω)
halbe Nennleistung bei 1 kHz	0,009% (8 Ω)
−26 dB Leistung bei 1 kHz	0,1% (4 Ω)
50 mW Leistung bei 1 kHz	0,12% (4 Ω)
Intermodulationsfaktor	
Nennleistung bei 250 Hz: 8 kHz = 4:1, 4 Ω	0,08%
Nennleistung bei 60 Hz: 7 kHz = 4:1, nach SMPTE, 8 Ω	0,04%
Leistungsbandbreite	
beide Kanäle ausgesteuert bei −3 dB	10 Hz ~ 30 kHz (4 Ω)
Dämpfungsfaktor	15 (4 Ω), 30 (8 Ω)
Eingangsempfindlichkeit und -impedanz	
Phono	2,5 mV/47 kΩ
Aux	150 mV/22 kΩ
Tape Aufnahme/Wiedergabe (TAPE REC/PLAY)	180 mV/22 kΩ
Maximale TA-Eingangsspannung (1 kHz, eff.)	130 mV
Geräuschabstand	
Nennleistung (4 Ω)	
Phono	70 dB (nach IHF, A: 80 dB)
Aux, Tape	88 dB (nach IHF, A: 95 dB)
−26 dB Leistung (4 Ω)	
Phono	64 dB
Aux, Tape	66 dB
50 mW Leistung (4 Ω)	
Phono	62 dB
Aux, Tape	62 dB

Frequenzgang	
Phono	RIAA-Standardkurve ±0,8 dB (30 Hz ~ 15 kHz)
Aux, Tape	5 Hz ~ 70 kHz(−3 dB) ±0,2 dB (20 Hz ~ 20 kHz)
Klangregler	
Baßregler (BASS)	50 Hz, +10 dB ~ −10 dB
Höhenregler (TREBLE)	20 kHz, +10 dB ~ −10 dB
Gehörrichtige Lautstärkekorrektur (Loudness)	
(bei −30 dB Ausgangsleistung)	50 Hz, +9 dB
Ausgangsspannung und -impedanz	
Tape Aufnahme (TAPE REC OUT)	150 mV
Tape Aufnahme/Wiedergabe (TAPE REC/PLAY)	30 mV/82 kΩ
Kanalabweichung (Aux, 250 Hz ~ 6300 Hz)	±1 dB
Übersprechdämpfung (Aux, 1 kHz)	55 dB
Kopfhörerpegel und -impedanz	260 mV/330 Ω
Lautsprecherimpedanz	
MAIN oder REMOTE	4 Ω ~ 16 Ω
MAIN und REMOTE	8 Ω ~ 16 Ω

■ UKW-TUNERTEIL

Wellenbereich	87,5 ~ 108 MHz
Eingangsempfindlichkeit	
S/R 30 dB	1,9 μV (300 Ω), 1,3 μV (75 Ω)
S/R 26 dB	1,7 μV (300 Ω), 1,2 μV (75 Ω)
S/R 20 dB	1,5 μV (300 Ω), 0,9 μV (75 Ω)
Nutzempfindlichkeit nach IHF	1,9 μV (nach IHF '58)
Stereoumschaltschwelle bei 46 dB nach IHF	22 μV/75 Ω
Gesamtklirrfaktor	
Mono	0,15%
Stereo	0,2%
Geräuschabstand	
Mono	60 dB (75 dB nach IHF)
Stereo	58 dB (70 dB nach IHF)
Frequenzgang	20 Hz ~ 15 kHz (+1 dB ~ −2 dB)
Trennschärfe bei Störsender	75 dB
Einfangverhältnis	1,2 dB
Spiegelfrequenz-Dämpfung bei 98 MHz	55 dB
ZF-Dämpfung bei 98 MHz	75 dB
Ansprechdämpfung auf Nebenfrequenzen bei 98 MHz	80 dB
AM-Unterdrückung	50 dB
Übersprechdämpfung	
1 kHz	42 dB
10 kHz	32 dB

Deutsch

Trägerrest		
19 kHz		−30 dB (−35 dB nach IHF)
38 kHz		−50 dB (−50 dB nach IHF)
Kanalabweichung (250 Hz ~ 6300 Hz)		±1,5 dB
Begrenzereinsatz		1,2 μV
Bandbreite		
ZF-Verstärker		180 kHz
UKW-Demodulator		1000 kHz

■ AM-TUNERTEIL

Wellenbereiche	**MW**	525 ~ 1605 kHz
	LW	145 ~ 350 kHz
Eingangsempfindlichkeit (S/R 20 dB)	**MW**	30 μV, 300 μV/m
	LW	45 μV
Trennschärfe (± 9 kHz)	**MW**	30 dB
	LW	30 dB
Spiegelfrequenz-Dämpfung bei 1000 kHz	**MW**	50 dB
Spiegelfrequenz-Dämpfung bei 250 kHz	**LW**	40 dB
ZF-Dämpfung bei 1000 kHz	**MW**	40 dB
ZF-Dämpfung bei 250 kHz	**LW**	30 dB

■ ALLGEMEINE DATEN

Leistungsaufnahme	300 W
Netzspannung	Wechselstrom 50 Hz/60 Hz, 110V/120V/220V/240V
Abmessungen (B×H×T)	430 × 86 × 297 mm
Gewicht	6,1 kg

Français

CARACTERISTIQUES (DIN 45 500)

(Sujet à changement sans préaris.)

■ SECTION AMPLIFICATEUR

Puissance de sortie continue de 20 Hz~20 kHz, les deux canaux en circuit	2 × 30W (4Ω)
	2 × 30W (8Ω)
Puissance de sortie continue de 40 Hz~16 kHz, les deux canaux en circuit	2 × 30W (4Ω)
	2 × 30W (8Ω)
Puissance de sortie continue à 1 kHz les deux canaux en circuit	2 × 35W (4Ω)
	2 × 33W (8Ω)
Distorsion harmonique totale	
à puissance nominale (20 Hz~20 kHz)	0,08% (4Ω)
	0,04% (8Ω)
à puissance nominale (40 Hz~16 kHz)	0,08% (4Ω)
	0,04% (8Ω)
à puissance nominale (1 kHz)	0,04% (4Ω)
	0,04% (8Ω)
à demi-puissance (20 Hz~20 kHz)	0,025% (8Ω)
à demi-puissance (1 kHz)	0,009% (8Ω)
puissance de −26 dB à 1 kHz	0,1% (4Ω)
puissance de 50 mW à 1 kHz	0,12% (4Ω)
Distorsion d'intermodulation	
à puissance nominale à 250 Hz: 8 kHz=4:1, 4Ω	0,08%
à puissance nominale à 60 Hz: 7 kHz=4:1, SMPTE, 8Ω	0,04%
Réponse de fréquences les deux canaux en circuit, −3 dB	10 Hz~30 kHz (4Ω)
Coefficient d'amortissement	15 (4Ω), 30 (8Ω)
Sensibilité et impédance d'entrée	
PHONO	2,5 mV/47kΩ
AUX (AUX)	150 mV/22kΩ
BANDE ENREGISTREMENT/LECTURE (TAPE REC/PLAY)	180 mV/22kΩ
PHONO (tension d'entrée maximum, 1 kHz RMS)	130 mV
Signal/Bruit	
à puissance nominale (4Ω)	
PHONO	70 dB (IHF, A: 80 dB)
AUX, BANDE (AUX, TAPE)	88 dB (IHF, A: 95 dB)
puissance de −26 dB (4Ω)	
PHONO	64 dB
AUX, BANDE (AUX, TAPE)	66 dB
puissance de 50 mW (4Ω)	
PHONO	62 dB
AUX, BANDE (AUX, TAPE)	62 dB
Réponse de fréquence	
PHONO	Courbe nominale RIAA ±0,8 dB (30 Hz~15 kHz)
AUX, BANDE (AUX, TAPE)	5 Hz~70 kHz (−3 dB) ±0,2 dB (20 Hz~20 kHz)

Réglage de la tonalité	
BASSES (BASS)	50 Hz, +10 dB~ −10 dB
AIGUS (TREBLE)	20 kHz, +10 dB~ −10 dB
Compensateur physiologique (volume à −30 dB)	50 Hz, +9 dB
Tension de sortie et impédance	
SORTIE ENREGISTREMENT/BANDE (TAPE REC OUT)	150 mV
ENREGISTREMENT/LECTURE BANDE (TAPE REC/PLAY)	30 mV/82kΩ
Equilibrage des canaux, AUX 250 Hz~6 300 Hz	±1 dB
Séparation des canaux, AUX 1 kHz	55 dB
Niveau de sortie des casques et impédance	260 mV/330Ω
Impédance de charge	
PRINCIPALE ou AUXILIAIRE (MAIN or REMOTE)	4Ω~16Ω
PRINCIPALE et AUXILIAIRE (MAIN and REMOTE)	8Ω~16Ω

■ SECTION SYNTONISATEUR FM

Gamme de fréquence	87,5~108 MHz
Sensibilité	
S/B 30 dB	1,9 μV (300Ω), 1,3 μV (75Ω)
S/B 26 dB	1,7 μV (300Ω), 1,2 μV (75Ω)
S/B 20 dB	1,5 μV (300Ω), 0,9 μV (75Ω)
Sensibilité utilisable IHF	1,9 μV (IHF '58)
Sensibilité stéréo au seuil de 46 dB, IHF	22 μV/75Ω
Distorsion harmonique totale	
MONO	0,15%
STEREO	0,2%
Signal/Bruit	
MONO	60 dB (75 dB, IHF)
STEREO	58 dB (70 dB, IHF)
Réponse de fréquence	20 Hz~15 kHz, +1 dB~ −2 dB
Sélectivité alternée par canal	75 dB
Taux de capture	1,2 dB
Rejection d'image à 98 MHz	55 dB
Rejection FI à 98 MHz	75 dB
Rejection de réponse parasite à 98 MHz	80 dB
Suppression AM	50 dB
Séparation stéréophonique	
1 kHz	42 dB
10 kHz	32 dB
Fuite de porteuse	
19 kHz	−30 dB (−35 dB, IHF)
38 kHz	−50 dB (−50 dB, IHF)
Equilibrage de canaux (250 Hz~6,300 Hz)	±1,5 dB
Point de limite	1,2 μV
Largeur de bande	
Amplificateur FI	180 kHz
Démodulateur FM	1000 kHz

Français

■ SECTION SYNTONISATEUR AM

Gamme de fréquences	**PO (MW)**	525 ~ 1605 kHz
	GO (LW)	145 ~ 350 kHz
Sensibilité (S/N 20 dB)	**PO (MW)**	30 μV, 300 μV/m
	GO (LW)	45 μV
Sélectivité (± 9 kHz)	**PO (MW)**	30 dB
	GO (LW)	30 dB
Rejection d'image à 1000 kHz	**PO (MW)**	50 dB
Rejection d'image à 250 kHz	**GO (LW)**	40 dB
Rejection FI à 1000 kHz	**PO (MW)**	40 dB
Rejection FI à 250 kHz	**GO (LW)**	30 dB

■ DIVERS

Consommation	300W
Alimentation	CA 50 Hz/60 Hz, 110V/120V/220V/240V
Dimensions (L×H×Pr)	430 × 86 × 297 mm
Poids	6,1 kg

■ CONTENTS

	Page
LOCATION OF CONTROLS	4, 5
DISASSEMBLY INSTRUCTIONS	5 ~ 7
DIAL CORD INSTALLATION GUIDE	7
ADJUSTMENT POINTS	8
MEASUREMENTS AND ADJUSTMENTS (English)	9, 10
MESSUNGEN UND JUSTIERUNGEN (Deutsch)	10, 11
MESURAGES ET RÉGLAGES (Français)	11, 12
BLOCK DIAGRAM	13, 14
TECHNICAL GUIDE	15
VARIABLE RESISTORS	16
REPLACEMENT PARTS LIST (Electrical Parts)	16, 24, 25
CIRCUIT BOARD AND WIRING CONNECTION DIAGRAM	17, 18
SCHEMATIC DIAGRAM	19 ~ 23
EXPLODED VIEW	26, 27
REPLACEMENT PARTS LIST (Cabinet and Chassis Parts)	28

■ LOCATION OF CONTROLS

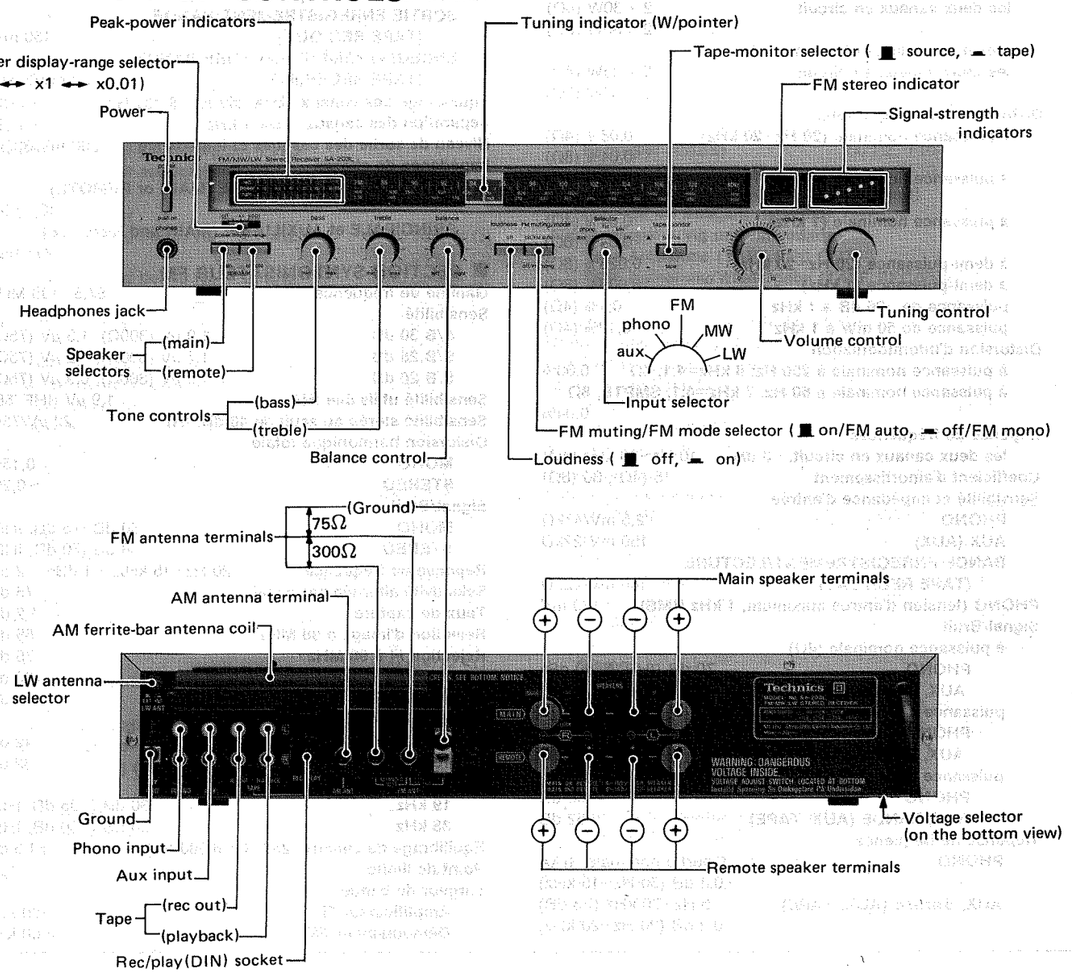

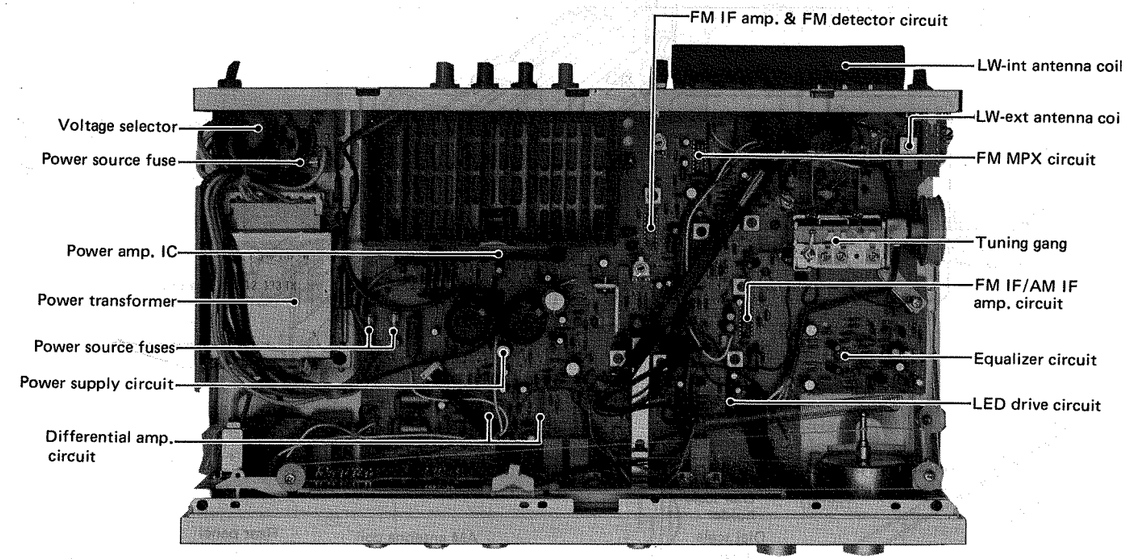

■ DISASSEMBLY INSTRUCTIONS

- **How to remove the cabinet**
1. Remove the 5 setscrews (Fig. 1: ❶ ~ ❺) of the cabinet.
2. Remove the cabinet.

- **How to remove the front panel**
1. Remove the cabinet. (Refer to the section **"How to remove the cabinet."**)
2. Remove the 4 setscrews (Fig. 1: ❻, ❼ and Fig. 2: ❽, ❾) of the front panel.
3. Remove the 1 setscrew (Fig. 1: Ⓐ) of the transparent plate bracket, then remove the front panel.

- **How to remove the dial scale**
1. Remove the cabinet. (Refer to the section **"How to remove the cabinet."**)
2. Remove the front panel. (Refer to the section **"How to remove the front panel."**)
3. Pull up the two claws at the bottom of the transparent plate in the direction of the arrow Ⓑ (Fig. 3).
4. Remove the dial indicator lamp and the 2 dial scale holder of the front chassis. (see Fig. 4)
5. Remove the dial scale.

- **How to remove the peak-power indicators printed circuit board**
1. Remove the cabinet. (Refer to the section **"How to remove the cabinet."**)
2. Remove the front panel. (Refer to the section **"How to remove the front panel."**)
3. Remove the power display/range knob (Fig. 3).
4. Remove the 2 setscrews (Fig. 3: ❿, ⓫) of the front chassis.
5. Remove the 2 lugs (Fig. 4: ⓬, ⓭) to detach the peak-power indicators printed circuit board.

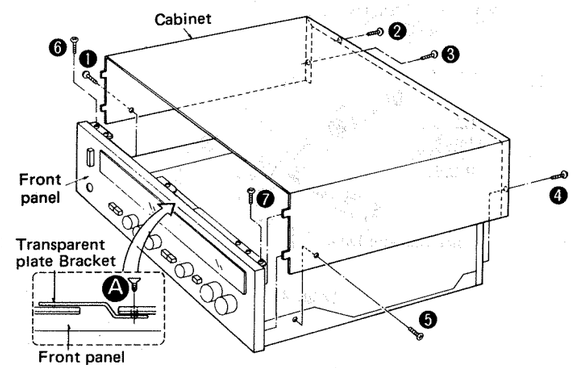

[Fig. 1]

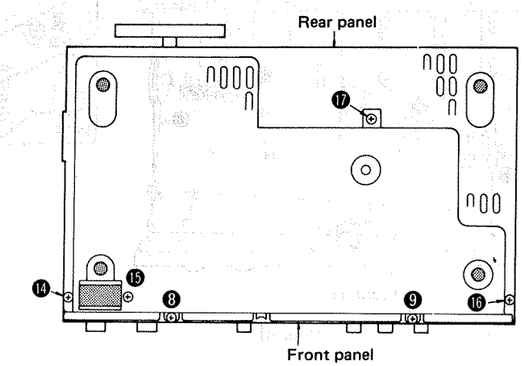

[Fig. 2]

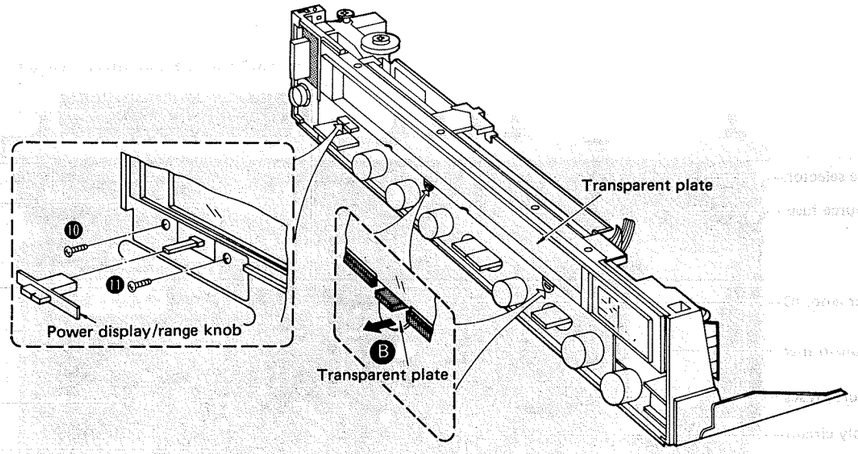

[Fig. 3]

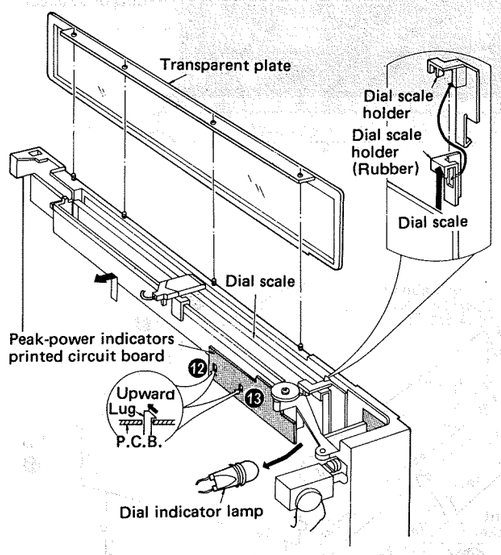

[Fig. 4]

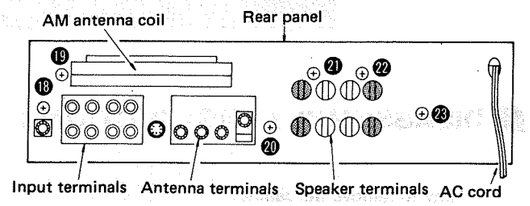

[Fig. 5]

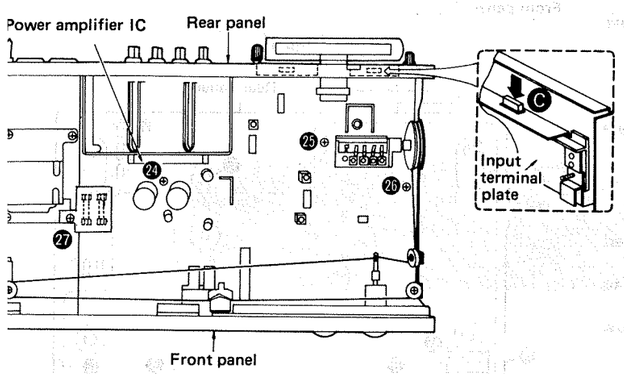

[Fig. 6]

- **How to remove the power amplifier IC**

1. Remove the cabinet. (Refer to the section "**How to remove the cabinet.**")
2. Remove the 6 setscrews (Fig. 2: ⑧, ⑨ and ⑭ ~ ⑰) and 6 setscrews (Fig. 5: ⑱ ~ ㉓).
3. Remove the 4 setscrews (Fig. 6: ㉔ ~ ㉗).
4. Pressing the claws of the input terminal plate and antenna terminal plate in the direction of arrow Ⓒ (Fig. 6), lift up the front panel in the direction of arrow Ⓓ (Fig. 7). Then, the front panel can be removed from the rear panel.
5. Remove the 2 setscrews (Fig. 8: ㉘, ㉙) of the heat-sink.
6. Unsolder the power amplifier IC. (Fig. 8).
7. Remove the 2 setscrews (Fig. 9: ㉚, ㉛) used to secure the power amplifier IC on the heat sink, and then pull the power amplifier IC.
8. When mounting the power amplifier IC, apply silicone compound (or equivalent heat diffuser) to the back of power amplifier IC.

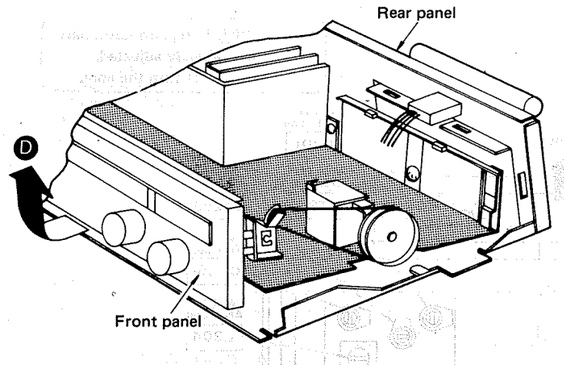

[Fig. 7]

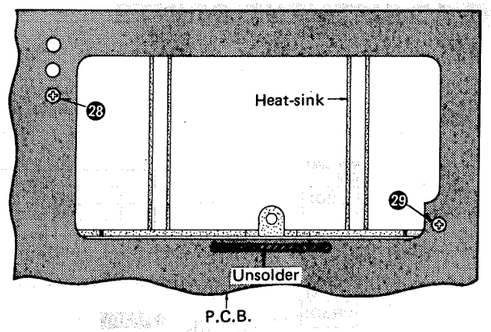

Bottom view

[Fig. 8]

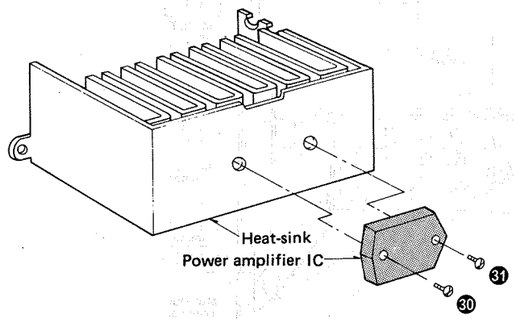

[Fig. 9]

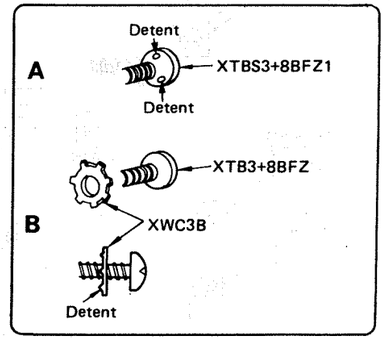

[Fig. 10]

Note 1:
When checking or repairing, remove the speaker from the speaker terminal. If it is necessary to check or repair without removing the speaker from the terminal, short-circuit the phono input terminal beforehand.

Note 2:
Setscrew ⑱ (Fig. 5) is screw with detents (Part No.: XTBS3+8BFZ1) as shown in Fig. 10-A in order to make the contact of electric circuit perfect.
Take care not to mix up these screws with other screws. When substituting, use a 3 x 8mm tapping screw (Part No.: XTB3+8BFZ) and toothed lock washer (Part No.: XWC3B) as shown in Fig. 10-B. The teeth of the lock washer should be positioned on the chassis side.

■ DIAL CORD INSTALLATION GUIDE

* For threading a fresh cord, proceed as follows.

1. Prepare a fresh cord more than 180cm (70-15/16") in length.
2. Bring the variable capacitor into a state where the drum is completely turned to the right (maximum capacity and lowest frequency for the variable capacitor.)
3. Direct the cord in the order from 1 to 7.
4. Stretch the cord in such a tension as the spring length is elongated by 1.5 times that of the original state.
5. Fix the knot of the cord with the adhesive.

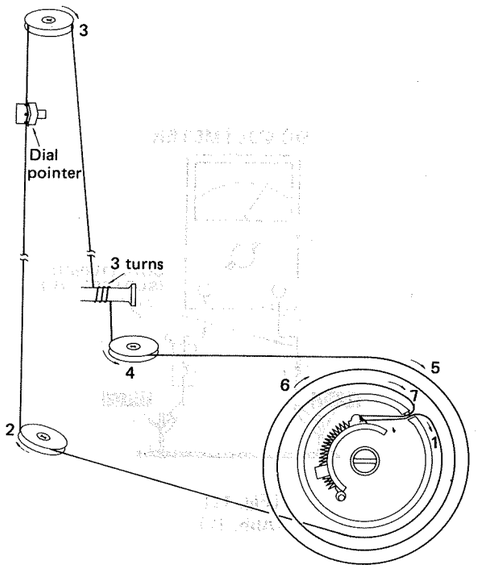

ADJUSTMENT POINTS

Notes: L301, L302 and L303 have been already adjusted. so, do not turn the core.

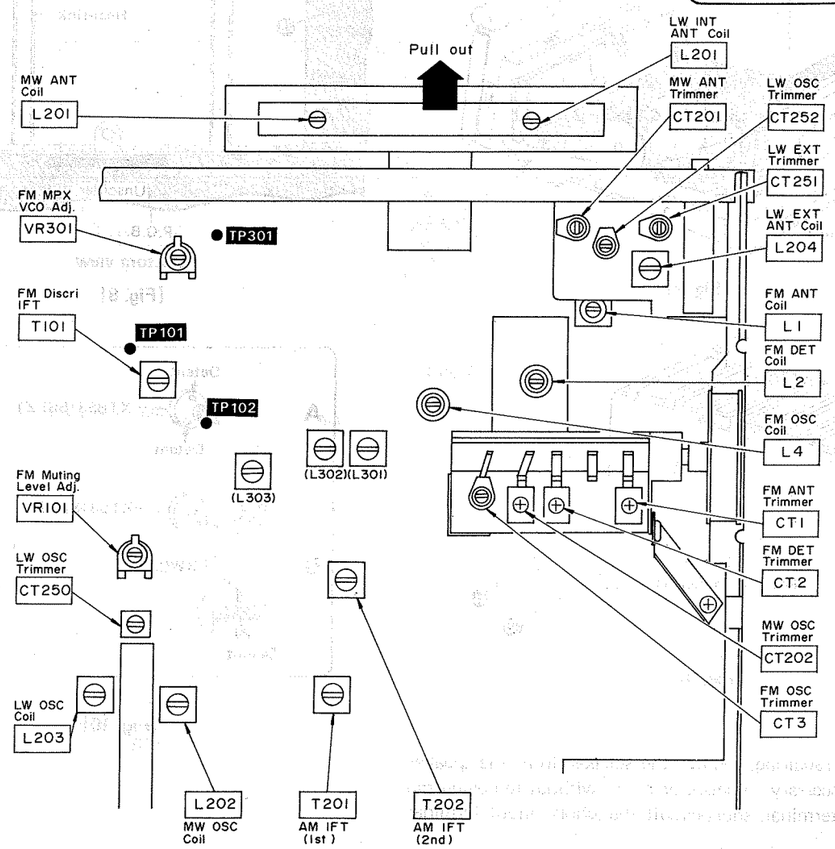

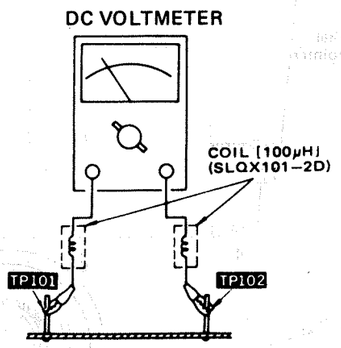

[Fig. 12]
(Abb. 12)

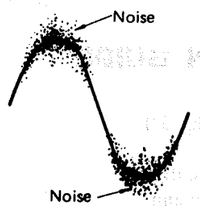

AF output wave form

[Fig. 13]
(Abb. 13)

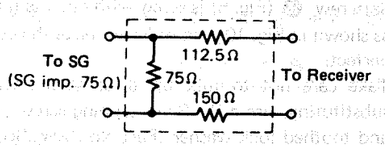

300Ω FM dummy antenna

[Fig. 11] (Abb. 11)

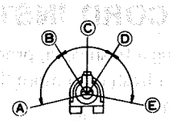

VR301

A – B, D – E: Stereo OFF Position.
B – D: Stereo ON Position (indicator lighting).
C: Adjust Point of Pilot Circuit.

[Fig. 14]
(Abb. 14)

MEASUREMENTS AND ADJUSTMENTS — English

Be sure to make the adjustments of MW and LW in the order of step No.

- **Setting and Equipment used**

1. AC and DC electronic voltmeters (VTVM).
2. AM signal generator (AM-SG)
3. FM signal generator (FM-SG)
4. Oscilloscope
5. Frequency counter (19kHz and 108MHz measurable).
6. Band selector switch . . { AM (MW/LW Adjustment) / FM (FM adjustment)
7. FM muting & modo switch . . . . . off/FM mono
8. Maintain line voltage at rated voltage.
9. LW antenna selector . . . . . { INT (LW-INT-RF Adjustment). / EXT (LW-EXT-RF Adjustment).
10. 300Ω FM dummy antenna . . . . . Refer to fig. 11.
11. Output of signal generator should be no higher than necessary to obtain an output reading.
12. Pull the AM ferrite-bar antenna (L201) outward.

- **Preparation of FM signal generator (FM-SG)**

1. Connect stereo modulator to FM-SG.
2. Apply SG output to antenna terminal of the set through 300Ω FM dummy antenna.
3. The standard input of the set is 60 dB (1mV), 400 Hz 100% modulation (Because of using dummy antenna, SG output must be 12 dB plus (IHF). That is, when input is 60 dB, SG output is to be 72 dB.)

Step No.	AM/FM SIGNAL GENERATOR CONNECTION	AM/FM SIGNAL GENERATOR FREQUENCY	DIAL SETTING	PREPARATIONS	PARTS ADJUSTED	ADJUSTING PROCEDURE
	MW/LW IF ADJUSTMENT					
1	Connect AM-SG to AM antenna terminal through 200pF capacitor. Common to chassis. (Powerful input)	450kHz (30% Mod. with 400 Hz) (For United Kingdom to 468kHz)	Point of non-inter-ference	Connect AC VTVM or scope to "SPEAKER" terminals.	T201 (1st IFT) T202 (2nd IFT)	• Adjust the input frequency and adjustment points so that the output becomes maximum.
	MW-RF ADJUSTMENT					
2	Connect AM-SG to AM antenna terminal through 200pF capacitor. Common to chassis. (Weak input)	600kHz (30% Mod. with 400Hz)	600kHz	Connect AC VTVM or scope to "SPEAKER" terminals.	L202 (MW OSC Coil) L201 (MW ANT Coil)	• Adjust for maximum output. Adjust L201 (MW Coil) by moving coil bobbin along ferrite core.
3		1500kHz (30% Mod. with 400Hz)	1500kHz	Connect AC VTVM or scope to "SPEAKER" terminals.	CT202 (MW OSC Trimmer) CT201 (MW ANT Trimmer)	• Adjust for maximum output. • Repeat steps (2) and (3).
	LW INT-RF ADJUSTMENT					
4	Connect AM-SG to AM antenna terminal through 200pF capacitor. Common to chassis. (Weak input)	145kHz (30% Mod. with 400Hz)	145kHz	Connect AC VTVM or scope to "SPEAKER" terminals.	L203 (LW OSC Coil) L201 (LW INT ANT Coil)	• Adjust for maximum output. • Adjust L201 (LW Coil) by moving coil bobbin along ferrite core.
5		350kHz (30% Mod. with 400Hz)	350kHz	Connect AC VTVM or scope to "SPEAKER" terminals.	CT250 (LW OSC Trimmer) CT252 (LW INT ANT Trimmer)	• Adjust for maximum output. • Repeat steps (4) and (5).
	LW EXT-RF ADJUSTMENT					
6	Connect AM-SG to AM antenna terminal through 200pF capacitor. Common to chassis. (Weak input)	145kHz (30% Mod. with 400Hz)	145kHz	Connect AC VTVM or scope to "SPEAKER" terminals.	L204 (LW EXT ANT Coil)	• Adjust for maximum output.
7		350kHz (30% Mod. with 400Hz)	350kHz	Connect AC VTVM or scope to "SPEAKER" terminals.	CT251 (LW EXT ANT Trimmer)	• Adjust for maximum output. • Repeat steps (6) and (7).
	FM-IF ADJUSTMENT					
8		No Signal	Point of non-inter-ference	Connect DV VTVM between TP101 and TP102 terminal through choke coil. (Refer to Fig. 12)	T101 (Discri. IFT)	• Adjust T101 core so that voltage measured in signal mode is 0V in 300mV range.
	FM-RF ADJUSTMENT					
9	Connect to FM 300Ω antenna terminal through 300Ω FM dummy antenna.	90MHz (100% Mod. with 400Hz) weak input.	90MHz	Connect scope to "SPEAKER" terminal.	L4 (OSC Coil) L2 (RF DET Coil) L1 (ANT Coil)	• Add weak input so that noise is included in the output wave form. • Make the adjustment so that the output wave form is vertically symmetrical (Fig. 13) • Repeat the steps (9) and (10) until the frequency correctly matches the dial scale.
10		106MHz (100% Mod.) with 400Hz) weak input.	106MHz	Connect scope to "SPEAKER" terminal.	CT3 (OSC Trimmer) CT2 (RF DET Trimmer) CT1 (ANT Trimmer)	

AM/FM SIGNAL GENERATOR CONNECTION	FREQUENCY	DIAL SETTING	PREPARATIONS	PARTS ADJUSTED	ADJUSTING PROCEDURE
FM MPX V.C.O ADJUSTMENT					
USING A FREQUENCY COUNTER			USING ALTERNATE SYSTEM		
1. 100MHz 60 dB Non-modulated mono signal applied to set. 2. FM muting/mode switch to "on/auto". 3. Connect frequency counter to TP301 through resistor (100kΩ). 4. Adjust **VR301** to 19kHz±30Hz.			1. Apply stereo signal from generator or stereo station to tuner. 2. Adjust **VR301** until stereo indicator lights up. Cement arm of **VR301** as shown in fig. 14.		
FM MUTING LEVEL ADJUSTMENT					
Connect FM-SG to FM antenna terminal through 300Ω FM dummy antenna. (Apply 16dB [product for [XA] only 12dB] to antenna terminal)	100MHz (100% Mod. with 400Hz)	100MHz	Connect AC VTVM or scope to "SPEAKER" terminals of the set.	VR101(Muting level)	1. With the FM muting/FM mode switch set to "on/auto", adjust VR101 so that the output is given with muting condition released.

■ MESSUNGEN UND JUSTIERUNGEN — Deutsch

(Für Deutschland) Darauf achten, die Justierung von MW und LW in der Reihenfolge der Schrittnummer vorzunehmen.

- **Stellungen und zu benutzende Geräte**

1. Elektronische Voltmeter für Wechsel-und Gleichstrom (VTVM).
2. AM (MW-Meßsender (AM-SG)
3. UKW-Meßsender (FM-SG)
4. Oszilloskop
5. Signalfrequenzmesser (meßbar für 19kHz und 108MHz).
6. Bereichsschalter . . . { AM (MW/LW Abgleich) / FM (UKW Abgleich)
7. FM Muting/Mode Schalter . . . . . off/FM mono.
8. Die Netzspannung auf ihren Sollwert einstellen.
9. LW-Antennenschalter . . . . . { INT (LW-INT-HF Abgleich) / EXT (LW-EXT-HF Abgleich)
10. UKW-Kunstantenne, 300 ohm . . Vgl. Abb. 11.
11. Der Ausgang des Meßsenders darf nicht höher sein als unbedingt notwendig für eine gute ablesung.
12. Die AM-Ferritstabantenne (L201) herausziehen.

- **Vorbereitung AM UKW-Messender (FM-SG)**

1. Stereo-Modulator an FM-SG anschließen.
2. SG-Ausgang über 300-ohm UKW Kunstantenne an den Antenneneingang des Gerätes schließen.
3. Der normale Eingang des Gerätes beträt 60 dB (1mV), 400Hz 100% Modulation. (Wegen Verwendung der Kunstantenne muß der Signalausgang 12 dB plus (IHF) sein: d.h. beim Eingang von 60 dB soll der Signalausgang 72 dB sein.)

AM/UKW MESSENDER ANSCHLUSS	FREQUENZ	SKALENZEIGERIEN STELLUNG DES TUNER	VORBEREITUNG	ABGLEICHSPUNKTE	ABGLEICHSVERFAHREN
MW/LW-ZF-ABGLEICH					
Einen MW-Signalgenerator über einen 200pF Kondensator mit dem MW-Antenneneingang verbinden. Die gemeinsame Leitung mit dem Chassis verbinden. (Starker Eingang)	450kHz (400Hz Modulat., 30%)	Kein Empfang	Wechselstrom Röhrenvoltmeter oder Oszillograph über den Lautsprecher schließen.	T201 (1. IFT) T202 (2. IFT)	Die Eingangsfrequenz und die Einstellungspunkte so adustieren, daß der Ausgang den maximalen Wert erreicht.
MW-HF-ABGLEICH					
Einen MW-Signal generator über einen 200pF kondensator mit dem MW-Antenneneingang verbinden. Die gemeinsame Leitung mit dem Chassis verbinden. (Schwacher Eingang)	600kHz (400Hz Modulat., 30%)	600kHz	Wechselstrom Röhrenvoltmeter oder Oszillograph über den Lautsprecher schließen.	L202 (MW Osc. Spule) L201 (MW Ant. Spule)	• Auf max. Ausgang abgleichen. • L201 (MW Spule) wird abgleichen, in dem die Spule am Ferritstab entlanggeschoben wird.
	1500kHz (400Hz Modulat., 30%)	1500kHz	Wechselstrom Röhrenvoltmeter oder Oszillograph über den Lautsprecher schließen.	CT202 (MW-Osc. Trimmer) CT201 (MW Ant. Trimmer)	• Auf max. Ausgang abgleichen. • Schritt (2) und (3) sind zu wiederholen.
LW INT-HF-ABGLEICH					
Einen MW-Signalgenerator über einen 200pF Kondensator mit dem MW-Antenneneingang verbinden. Die gemeinsame Leitung mit dem Chassis verbinden. (Schwacher Eingang)	145kHz (400Hz Modulat., 30%)	145kHz	Wechselstrom Röhrenvoltmeter oder Oszillograph über den Lautsprecher schließen.	L252 (LW Osc. Spule) L201 (LW INT Ant. Spule)	• Auf max. Ausgang abgleichen. • L201 (LW Spule) wird abgleichen, in dem die Spule am Ferritstab entlanggeschoben wird.
	350kHz (400Hz Modulat., 30%)	350kHz	Wechselstrom Röhrenvoltmeter oder Oszillograph über den Lautsprecher schließen	CT250 (LW Osc. Trimmer) CT252 (LW INT Ant. Trimmer)	• Auf max. Ausgang abgleichen. • Schritt (4) and (5) sind zu wiederholen.

Nr.	AM/UKW MESSENDER ANSCHLUSS	FREQUENZ	SKALENZEIGERIEN STELLUNG DES TUNER	VORBEREITUNG	ABGLEICHSPUNKTE	ABGLEICHSVERFAHREN
	LW EXT-HF-ABGLEICH					
6	Einen MW-Signalgenerator über einen 200pF Kondensator mit dem MW-Antenneneingang verbinden. Die gemeinsame Leitung mit dem Chassis verbinden. (Schwacher Eingang)	145kHz (400Hz Modulat., 30%)	145kHz	Wechselstrom Röhrenvoltmeter oder Oszillograph über den Lautsprecher schließen.	L204 (LW EXT Ant. Spule)	• Auf max. Ausgang abgleichen.
7		350kHz (400Hz Modulat., 30%)	350kHz	Wechselstrom Röhrenvoltmeter oder Oszillograph über den Lautsprecher schließen.	CT251 (LW EXT Ant. Trimmer)	• Auf max. Ausgang abgleichen. • Schritt (6) und (7) sind zu wieder holen.
	UKW-ZF-ABGLEICH					
8		Kein Signal	Kein Empfang	Ein Gleichstromrörenvoltmeter zwischen TP101 und TP102 über eine Drosselspule verbinden. (Siehe Abb. 12)	T101 (Diskriminator FT)	• Den Kern von T101 so justieren, daß die gemessene Spannung im signallosen im signallosen Modus 0V im 300mV Bereich beträgt.
	UKW-HF-ABGLEICH					
9	Meßsender über eine Kunstantenne an den UKW-Antenneneingang schließen.	90MHz (400Hz Modulat., 100%) Schwacher Eingang	90MHz	Oszillograph über den Lautsprecher schließen.	L4 (Osc. Spule) L2 (Det. Spule) L1 (Ant. Spule)	• Einen schwachen Eingang geben, bei dem Geräusch in der Ausgangswellenform enthalten wird. • So einstellen, daß die Ausgangswellenform vertikal symmetrisch wird. (Abb. 13) • Die Einstellung von (9), (10) wieder holen, bis dei Frequenz mit der Skala übereinstimmt.
10		106MHz (400Hz Modulat., 100%) Schwacher Eingang	106MHz	Oszillograph über den Lautsprecher schließen.	CT3 (Osc. Trimmer) CT2 (Det. Trimmer) CT1 (Ant. Trimmer)	

	UNTER VERWENDUNG EINES ZÄHLERS	ALTERNATIV-MEß METHODE
	UKW-STEREO-DEKODER-ABGLEICH	
11	1. Unmodulierts Mono-Signal 100MHz in das Gerät speisen. 2. FM muting/mode-Schalter auf "on/auto" stellen. 3. Zähler über einen Widerstand 100k ohm an TP301 schließen. 4. **VR301** auf 19kHz±30Hz einstellen.	1. Stereosignal entweder von einem Stereogenerator. oder einem Sender einspeisen. 2. **VR301** so einstellen, bis die Stereolampe auf leuchtet. Schleifer von **VR301** sichern, wie in Abb. 14 gezeigt.

	UKW-STUMMABSTIMMUNGS PEGELANZEIGER						
12	Meßsender über eine Kunstantenne an den UKW-Antenneneingang schließen. (16dB in den Antenneneingang leiten.)	100MHz (400Hz Modulat., 100%)	100MHz	Oszilloskop oder Wechselstrom-Voltmeter über den Lautsprecher schließen.	VR101 (UKW-Muting)	1. "Muting" Schalter auf "on" stellen. VR101 so einstellen. daß der Ausgang unter Bewirken der Dämpfung gegeben wird.

■ MESURAGES ET RÉGLAGES — Français

Veuillez régler PO et GO par ordre des numeros de procédélé

- **Réglage et équipement utilisé**

1. Voltmètres électronique de courant alternatif et de courant continu (VTVM).
2. Générateur du signal AM (AM-SG).
3. Générateur du signal FM (FM-SG).
4. Oscilloscope.
5. Compteur de fréquence (19kHz et 108MHz mesurable).
6. Sèlecteur de gamme . . { AM (Alignement MW/LW) / FM (Alignement FM)
7. Commutateur de silencieux/mode . . . off/FM mono
8. Conserver la tension du secteur à la tension nominale.
9. Antenne selecteur LW (GO) . . . . { INT (LW-INT Alignement) / EXT (LW-EXT Alignement)
10. Antenne fictive FM 300Ω . . . . . Voir fig. 11
11. Le signal du générateur ne doit pas être plus élevé qu'il n'est nécessaire à obtenir une lecture en sortie.
12. Retirer l'antenne à tige de ferrite (L201) de la modulation d'amplitude.

- **Préparation du générateur de signal FM (FM-SG)**

1. Brancher la commande de réglage stéréophonique à FM-SG.
2. Alimenter la sortie SG à la borne de l'antenne de l'appareil, par l'antenne fictive FM, 300 ohms.
3. L'entrée standard de l'appareil est de 60 dB (1mV), 400Hz, 100% de modulation (à cause de l'utilisation de l'antenne fictive, la sortie SG doit être de plus 12 dB (IHF). Ce qui signifie que quand l'entrée est de 60 dB, la sortie SG doit être de 72 dB.)

No.	AM/FM GENERATUEUR BRANCHEMENT	FREQUENCE	FREQUENCE D'AFFICHAGE PAR PREREGLAGE	PREPARATIONS	ELEMENTS REGLES	PROCEDURE DE REGLAGE
	ALIGNEMENT FI-MW (PO)-LW (G)					
1	Brancher le AM-SG à la borne de l'antenne AM par un condensateur de 200pF. Commun au châssis (Entrée sous puissante)	450kHz (modulè à 30% par 400Hz)	Point sans signal	Branchez un c.a. voltmètre électronique ou un oscilloscope sur les bornes de hautparleur de l'amplituner.	T201 (1 transfo FI) T202 (2 transfo FI)	• Régler la fréquence d'entrée et les points de réglage de telle sorte que la sortie devienne maximale.

No.	AM/FM GENERATEUS BRANCHEMENT	AM/FM GENERATEUS FREQUENCE	FREQUENCE D'AFFICHAGE PAR PREREGLAGE	PREPARATIONS	ELEMENTS REGLES	PROCEDURE DE REGLAGE
	ALIGNEMENT RF-MW (PO)					
2	Brancher le AM-SG à la borne de l'antenne AM par un condensateur de 200pF. Commun au châssis. (Entrée faible)	600kHz (modulé à 30% par 400Hz)	600kHz	Branchez un c.a. voltmètre électronique ou un oscilloscope sur les bornes de hautparleur de l'amplituner.	L202 (bobine OSC MW) L201 (bobine ANT MW)	• Réglez au maximum de signal de sortie. • Régler L201 (bobine MW) en déplacant la bobine le long du noyau de ferrite.
3		1500kHz (modulé à 30% par 400Hz)	1500kHz	Branchez un c.a. voltmètre électronique ou un oscilloscope sur les bornes de hautparleur de l'amplituner.	CT202 (trimmer OSC MW) CT201 (trimmer ANT MW)	• Réglez au maximum de signal de sortie. • Recommencez les étapes (2) et (3).
	ALIGNEMENT RF-LW (GO) INT					
4	Brancher le AM-SG à la borne de l'antenne AM par un condensateur de 200pF. Commun au châssis. (Entrée faible)	145kHz (modulé à 30% par 400Hz)	145kHz	Branchez un c.a. voltmètre électronique ou un oscilloscope sur les bornes de hautparleur de l'amplituner	L252 (bobine OSC LW) L201 (bobine ANT LW INT)	• Réglez au maximum de signal de sortie. • Régler L201 (bobine LW) en déplaçant la bobine le long du noyau de ferrite.
5		350kHz (modulé à 30% par 400Hz)	350kHz	Branchez un c.a. voltmètre électronique ou un oscilloscope sur les bornes de hautparleur de l'amplituner.	CT250 (trimmer OSC LW) CT252 (trimmer ANT LW INT)	• Réglez au maximum de signal de sortie. • Recommencez les étapes (4) et (5).
	ALIGNEMENT RF-LW (GO) EXT					
6	Brancher le AM-SG à la borne de l'antenne AM par un condensateur de 200pF. Commun au châssis. (Entrée faible)	145kHz (modulé à 30% par 400Hz)	145kHz	Branchez un c.a. voltmètre électronique ou un oscilloscope sur les bornes de hautparleur de l'amplituner	L204 (bobine ANT LW EXT)	• Réglez au maximum de signal de sortie.
7		350kHz (modulé à 30% par 400Hz)	350kHz	Branchez un c.a. voltmètre électronique ou un oscilloscope sur les bornes de hautparleur de l'amplituner.	CT251 (trimmer ANT LW EXT)	• Réglez au maximum de signal de sortie. • Recommencez les étapes (6) et (7).
	ALIGNEMENT FI-FM					
8		Sans signal	Point sans signal	Brancher le voltmètre électronique a.c.c. aux bornes TP101 et TP102. (Voir la Fig. 12)	T101 (Transfo FI discri.)	• Régler le noyau T101 de telle sorte que le voltage mesuré dans de mode sans signal, soti de 0V dans la gamme des 300mV.
	ALIGNEMENT RF-FM					
9	Branchez sur la prise d'antenne FM à travers une antenne fictive FM.	90MHz modulé à 100% par 400Hz) Entrée faible)	90MHz	Branchez un oscilloscope sur les bornes de haut-parleur de l'amplituner.	L4 (bobine OSC) L2 (bobine DET) L1 (bobine ANT)	• Appliquer une entrée faible de telle sorte que le parasite soit compris dans la forme de l'onde de sortie. • Faire le réglage de telle sorte que la forme de l'onde de sortie soit verticalement symétrique. (Voir fig. 13) • Refaire les réglages (9) et (10). jusqu'à ce que la fréquence corresponde correctement avec l'échells du cadran.
10		106 MHz (modulé à 100% par 400Hz) Entrée faible	106MHz	Branchez un oscilloscope sur les bornes de haut-parleur de l'amplituner.	CT3 (trimmer OSC) CT2 (trimmer DET) CT1 (trimmer ANT)	
	ALIGNEMENT DU PILOTE MULTIPLEX FM					
11	AVEC UN FRÉQUENCEMÉNTRE: 1. Signal mono 100MHz non modulé appliqué à l'appareil. 2. Commutateur de silencieux sur "on/auto". 3. Branchez le fréquencemètre sur TP301 à travers une 4. Régler **VR301** sur 19kHz±30Hz.			PAR UN OUTRE SYSTÈME: 1. Appliquez à l'appareil un signal stéréo provenant d'un générateur ou de la réception d'un émetteur. 2. Régler **VR301** jusqu à ce que l'indicateur de stéréophonic s'allume. collez le curseur le **VR301** comme indiqué sur la fig. 14.		
	REGLAGE DU SEUIL DU SILENCIEUX D'ACCORD					
12	Branchez sur la prise d'antenne FM à travers une antenne fictive FM. (Appliquer 16dB à la borne de l'antenne.)	100MHz (modulé à 100% par 400Hz)	100MHz	Branchez un c.a. voltmètre électronique ou un oscilloscope sur les bornes de haut-parleur de l'amplituner.	VR101	1. Avec le commutateur de mode/réglage silencieux "on/auto", régler le VR101 de telle sorte que la sortie fournie avec le réglage silencieux en position déclenchée.

BLOCK DIAGRAM

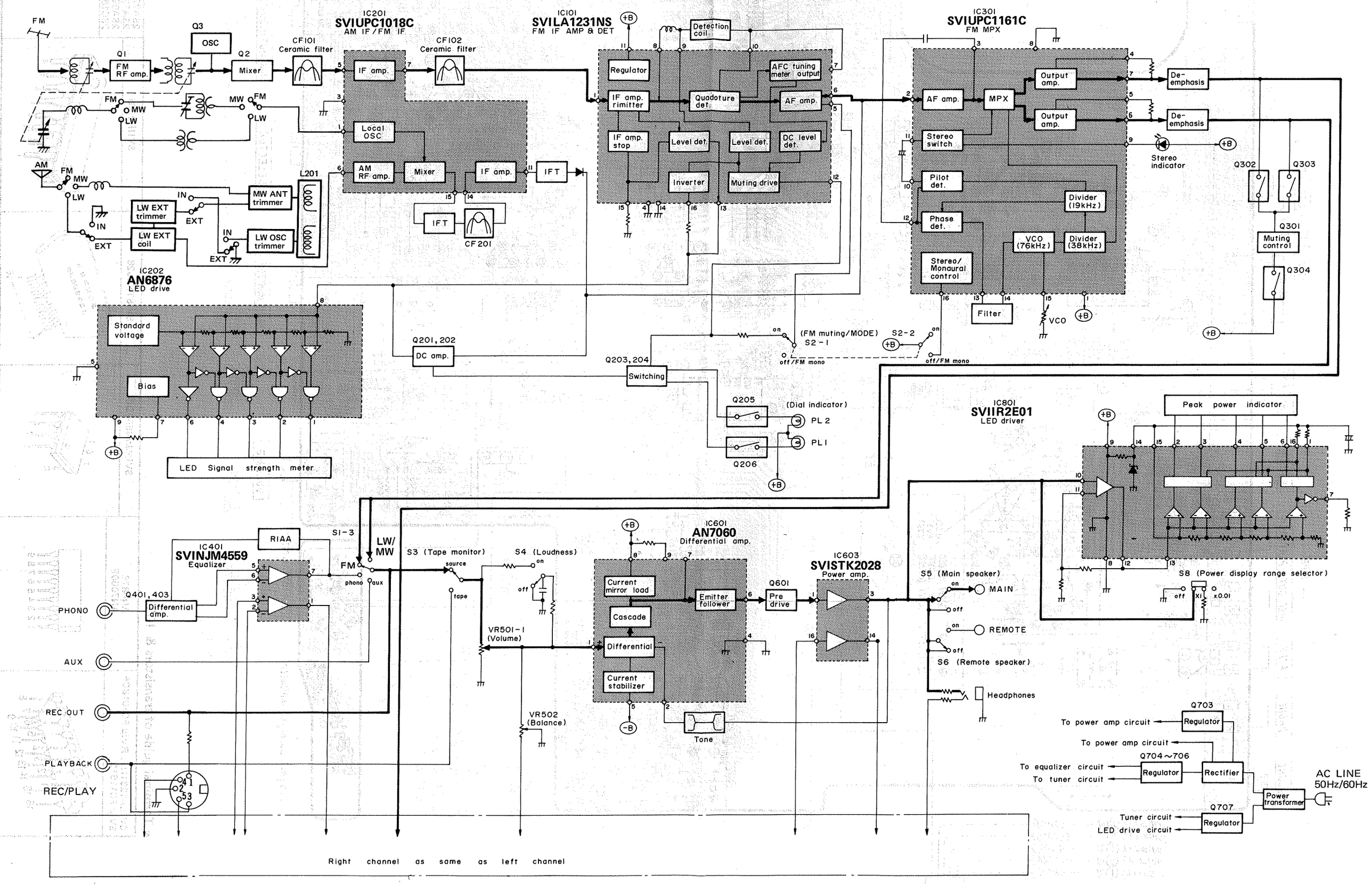

TECHNICAL GUIDE

The power amplifier IC (SVISTK2028) is provided with a protection circuit.

1. Muting (shock noise prevention) with power switch ON.

(1) When power is supplied, negative voltage is applied to the emitter of switching transistor (Q703).
(2) Positive voltage flows from the regulator (Q707) to R709 and R708 to turn D705 and Q703 ON. (It takes a few seconds until Q703 turns ON due to time constant of C706).
(3) When Q703 turns ON, negative voltage is applied to the pin ⑤ of input amplifier IC (AN7060) causing the input amplifier to operate.
* The signal is applied to the power amplifier a few seconds later so that shock noise can be prevented.

2. Muting (shock noise prevention) with power switch OFF.

(1) When power supply is cut off, the voltage applied to Q703 drops at the base faster than the negative voltage at the emitter connected to the large capacity condenser, thus turning off D705 and Q703.
(2) Input amplifier is off with Q703 off.
* The signal is cut off on the input side while the operation voltage of power amplifier still remains, thus preventing shock noise.

3. Operation of the protection circuit with speaker terminal short-circuited.

(1) Transistor Q7 in the power amplifier IC (SVISTK2028) is usually OFF, but when the speaker terminal is short-circuited to the ground, a large amount of current flows to Q6, causing a voltage to be generated at R5.
(2) The voltage causes Q7 to turn ON, then I_1 flows to raise the base potential of Q702. And Q702 turns ON.
(3) As Q702 is ON, I_2 flows to generate a voltage at R707, and then Q701 turns ON.
(4) I_3 flows with Q701 turned ON, I_3 flows to hold Q702 ON.
(5) The current flowing in R709 increases due to I_2, and the positive voltage from regulator (Q707) drops, causing D705 to turn off.
(6) In other words, Q703 turns OFF and the negative power supply to the input amplifier is discontinued.
* This condition continues until power supply switch is set OFF.

A few minutes after the power switch is set to ON, if no sound is produced while the operation is normal, cut off the power supply and check the speaker connections and the input equipment.

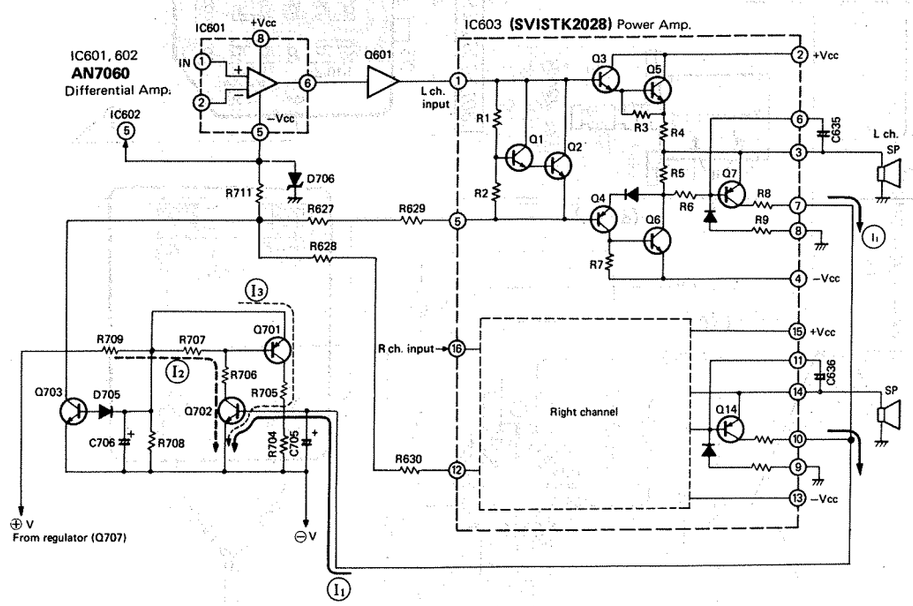

VARIABLE RESISTORS

• Alteration of resistance values according to the rotational angles of variable resistors

Alteration characteristics as shown below are often used for sets. All are intended to keep the frequency response of the set at optimum levels, and are used according to the types of circuits. For example, characteristic (B) is used for sound volume adjustment; (C) is for bass and treble sound quality adjustment; and (G) is for the adjustment of sound balance between the right and left.

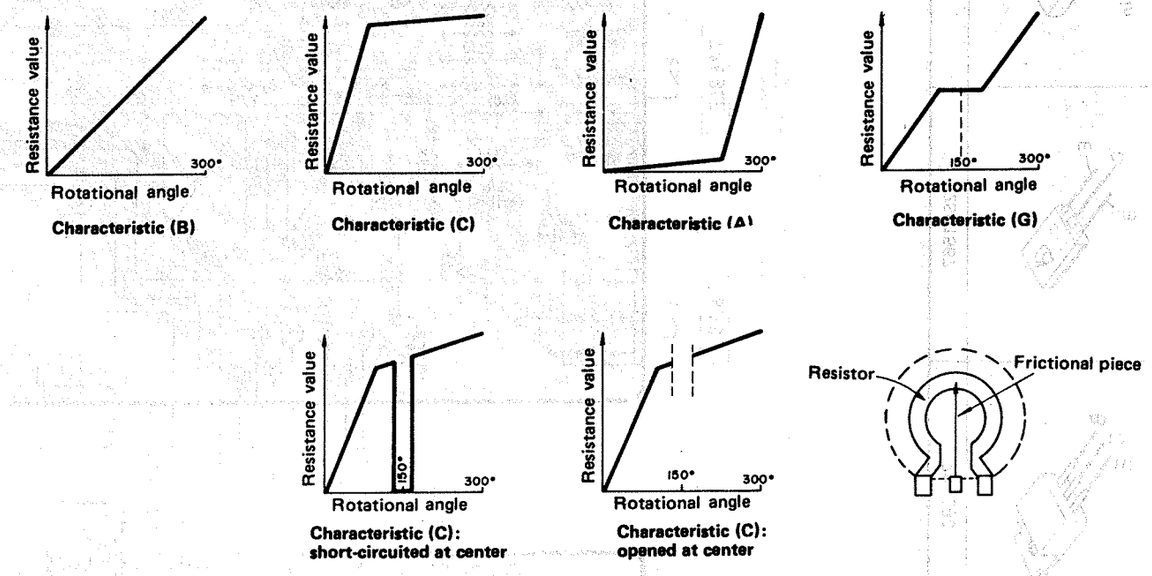

REPLACEMENT PARTS LIST (Electrical Parts)

Notes: 1. Part numbers are indicated on most mechanical parts. Please use this part number for parts orders.
2. Important safety notice:
Components identified by ⚠ mark have special characteristics important for safety.
When replacing any of these components, use only manufacturer's specified parts.
3. Bracketed indications in Ref. No. columns specify the area.
Parts without these indications can be used for all areas.

Ref. No.		Part No.	Part Name & Description
INTEGATED CIRCUITS			
IC101		SVILA1231NS	IC, FM IF Amplifier
IC201		**RVIUPC1018CF**	IC, AM Converter, FM IF Amplifier
IC202		AN6876	IC, LED Amplifier
IC301		SVIUPC1161C	IC, FM Stereo Decoder (MPX)
IC401		SVINJM4559DD	IC, Equalizer Amplifier
IC601, 602		AN7060F	IC, Differential Amplifier
IC603		SVISTK2028B	IC, Power Amplifier
IC801, 802		SVIIR2E01	IC, LED Driver
TRANSISTORS			
Q1		2SK195–H1	Transistor, FM RF Amplifier
Q2		2SC1674–M	Transistor, FM Mixer
Q3		2SC1675–L	Transistor, FM Local Oscillator
Q201		**2SC945–Q**	Transistor, Switching
Q202		2SA733–P1	Transistor, Switching (Use inranks P1 or P2)
Q203, 204		**2SC945–Q**	Transistor, Switching
Q205, 206		**2SC1318–Q**	Transistor, Switching (Use inranks Q or R)
Q301		2SA733–P1	Transistor, Switching
Q302, 303		**2SC945–Q**	Transistor, Muting
Q304		**2SA722–S**	Transistor, Switching (Use inranks R or S)
Q401 ~ 404		2SC2320L–F	Transistor, Differential Amplifier (Use in ranks E, F or G)
Q601, 602		2SA992	Transistor, Pre Drive
Q701		2SA1015–Y	Transistor, Hold (Use in ranks O or Y)
Q702		**2SC828AQ**	Transistor, Hold (Use in ranks Q or R)
Q703		2SC1815–G	Transistor, Regulator (Use in ranks BG, GR or BL)
Q704		**2SC1567–Q**	Transistor, Regulator (Use in ranks Q or R)
Q705		2SA1015–Y	Transistor, Regulator
Q706		2SA1123–R	Transistor, Regulator
Q707		2SD880–Y	Transistor, Regulator
Q708		2SK34–D1	Transistor, Hold (Use in ranks D1 or D2)

Ref. No.		Part No.	Part Name & Description
DIODES			
D101, 208		**MA162A**	Diode
D201		**20A90**	Diode, AM Detector
D202		SVDPR5532K	Light Emitting Diode, Stereo Indicator (Red)
D203 ~ 207		SVDAY2434D	Light Emitting Diode, Signal Strength Indicator (Yellow)
D301		**MA162A**	Diode, Detector
D701 ~ 704	⚠	SVDS2V20	Diode, Rectifier
D705		SVDMZL316A	Diode, 16V Zener
D706		SVDMZ306C	Diode, 6V Zener
D707		SVDMZL314C	Diode, 14V Zener
D708	⚠	SVDSR1K2	Diode, Rectifier
D709		SVDMZL314C3	Diode, 14V Zener
D801 ~ 810		SVDAY5533K–1	Light Emitting Diode (Yellow)
COILS and TRANSFORMERS			
L1		SLA4N15	Coil, FM Antenna
L2		SLD4P65–P	Coil, FM Detector
L3		ELQ5A77	Coil, Choke
L4		SLO4P95–P	Coil, FM Oscillator
L101		SLQX101–3M	Coil, FM Discri
L201		SLF6D7	Coil, AM Antenna
L202		SLO2C1–P	Coil, MW Oscillator
L204		SLA1C7	Coil, LW External Antenna
L205		SLQX391–P	Coil, Chock MW Oscillator
L251		SLO1C13–P	Coil, LW Oscillator
L299		RLQY15G5–Y	Coil, Choke
L301, 302		SLM1C63–M	Coil, Choke
L303		SLM1C61–P	Coil, Choke
L601, 602		SLQY15G–30	Coil, Choke
T101		SLI4C527–Z	Transformer, FM Detector
T201		SLI2C129R	Transformer, AM IFT (1st)
T202		SLI2C413R	Transformer, AM Oscillator
T701	⚠	SLT5M167–W	Transformer, Power Source

Continued on page 24

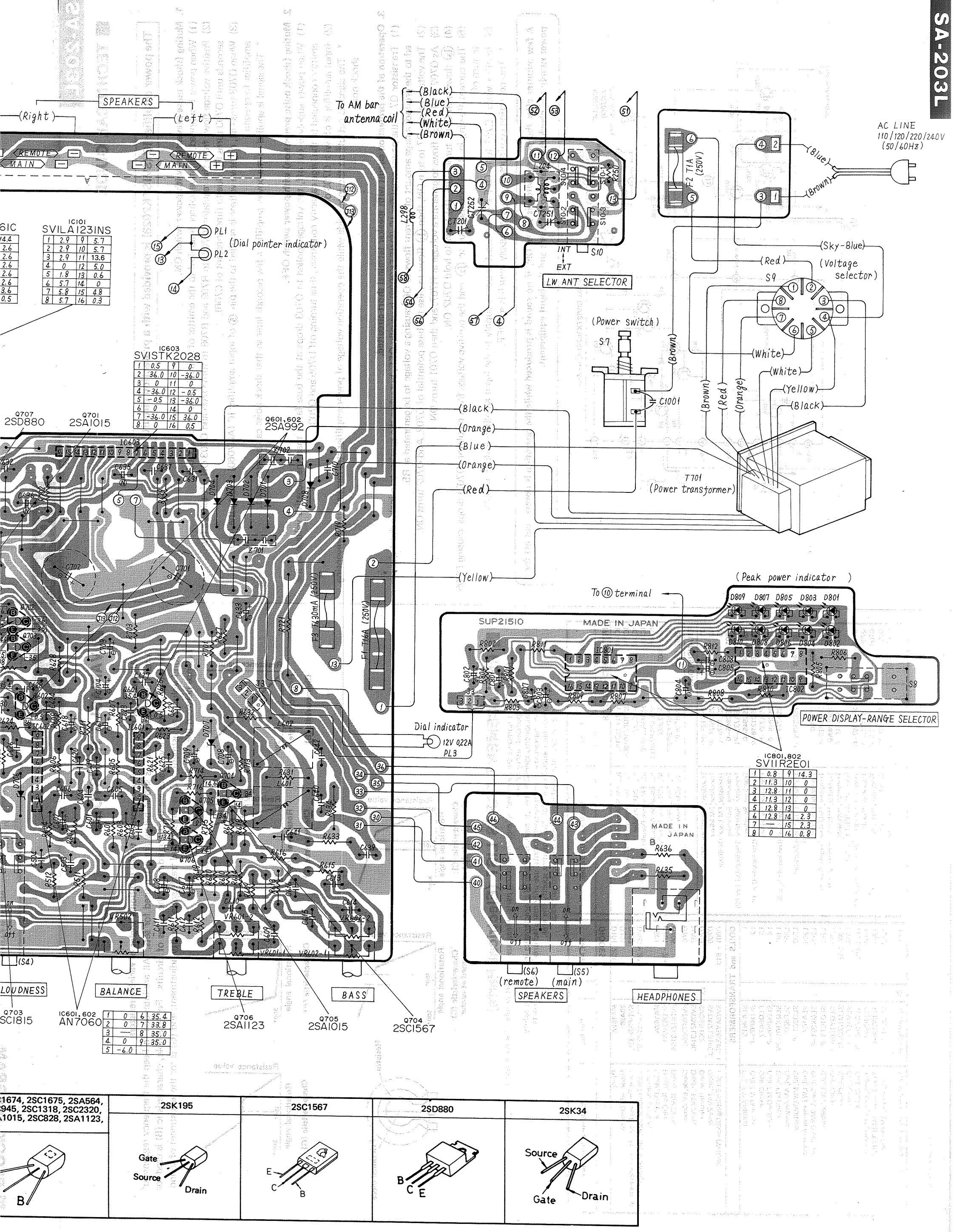

1	0.5	9	0
2	36.0	10	-36.0
3	0	11	0
4	-36.0	12	-0.5
5	-0.5	13	-36.0
6	0	14	0
7	-36.0	15	36.0
8	0	16	0.5

1	0.8	9	14.3
2	11.3	10	0
3	12.8	11	0
4	11.3	12	0
5	12.8	13	0
6	12.8	14	2.3
7	—	15	2.3
8	0	16	0.8

1	0	6	35.4
2	0	7	33.8
3	—	8	35.0
4	0	9	35.0
5	-6.0		

1674, 2SC1675, 2SA564, 945, 2SC1318, 2SC2320, 1015, 2SC828, 2SA1123,	2SK195	2SC1567	2SD880	2SK34
B	Gate, Source, Drain	E, C, B	B, C, E	Source, Gate, Drain

CIRCUIT BOARD AND WIRING CONNECTION DIAGRAM

Ground (Earth) lines

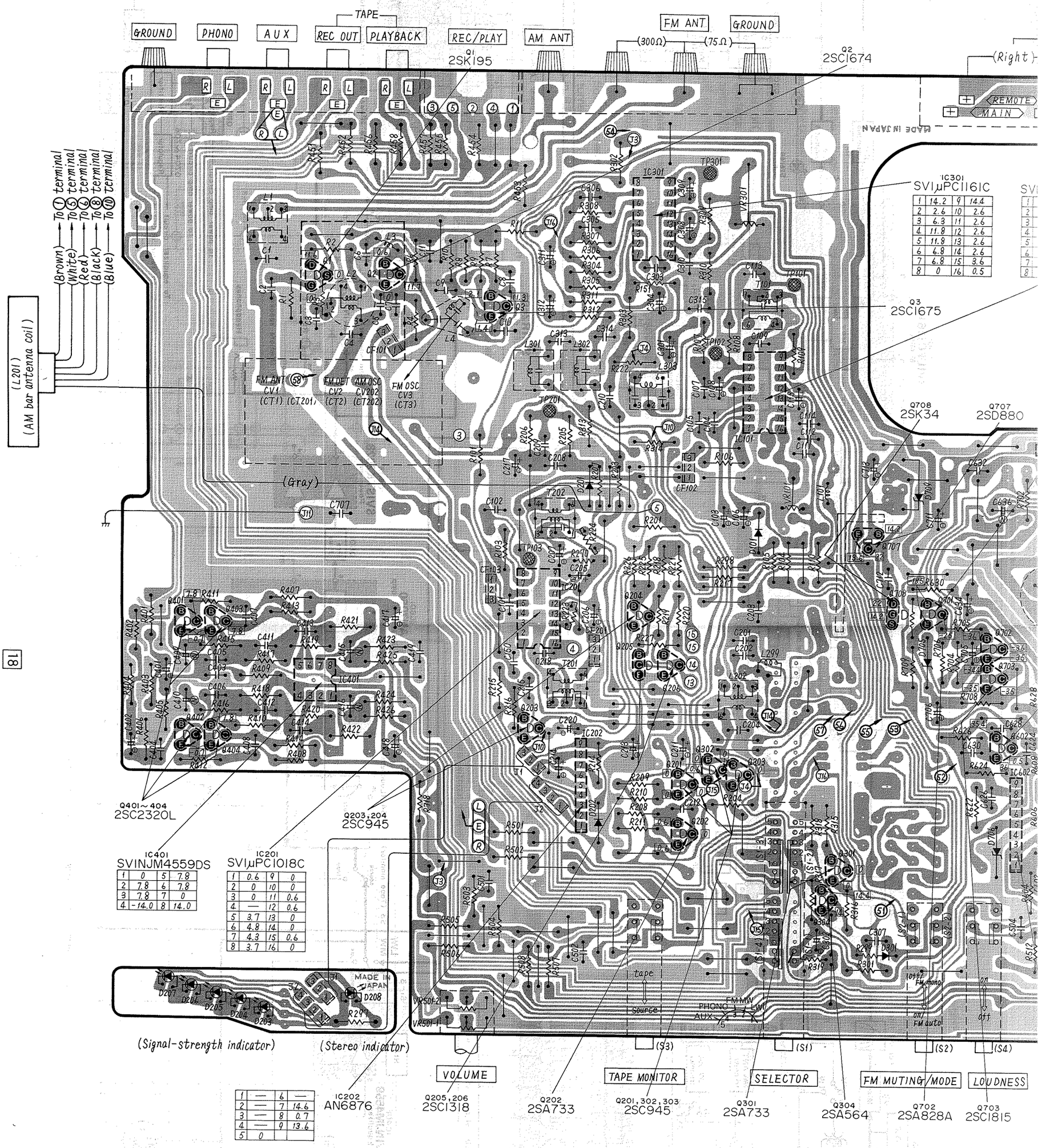

1	14.2	9	14.4
2	2.6	10	2.6
3	6.3	11	2.6
4	11.8	12	2.6
5	11.8	13	2.6
6	6.8	14	2.6
7	6.8	15	3.6
8	0	16	0.5

1	7.8	5	7.8
2	7.8	6	7.8
3	7.8	7	0
4	-14.0	8	14.0

1	0.6	9	0
2	0	10	0
3	0	11	0.6
4	—	12	0.6
5	3.7	13	0
6	4.8	14	0
7	4.3	15	0.6
8	3.7	16	0

1	—	6	—
2	—	7	14.6
3	—	8	0.7
4	—	9	13.6
5	0		

• Terminal guide of transistors & IC's

SVILA1231NS, RVIμPC1018CF SVIμPC1161C	AN6876 AN7060F	SVINJM4559DD	SVISTK2028	SVIIR2E01	2SA722, 2SC1674, 2SC167 2SA733, 2SC945, 2SC1318 2SA992, 2SA1015, 2SC828 2SC1815
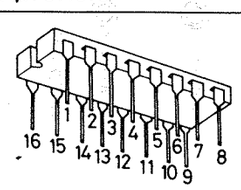	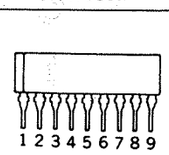	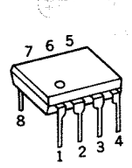	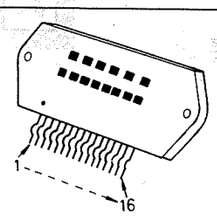	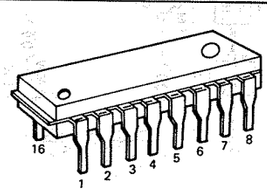	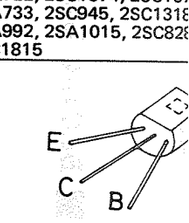

■ SCHEMATIC DIAGRAM ·····MODEL SA-203L

(This schematic diagram may be modified at any time with the development of new technology.)

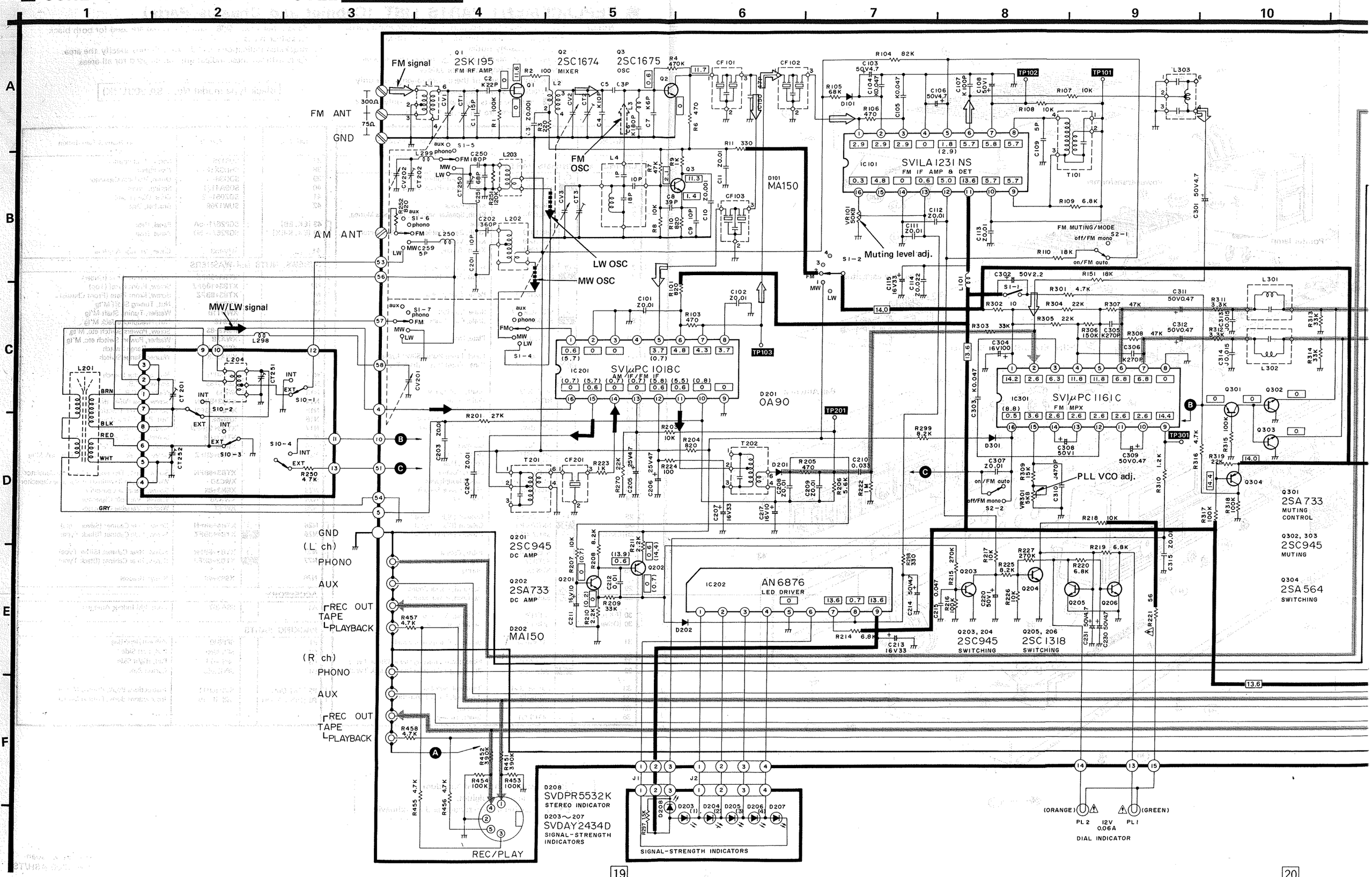

may be modified at any time with the development of new technology.)

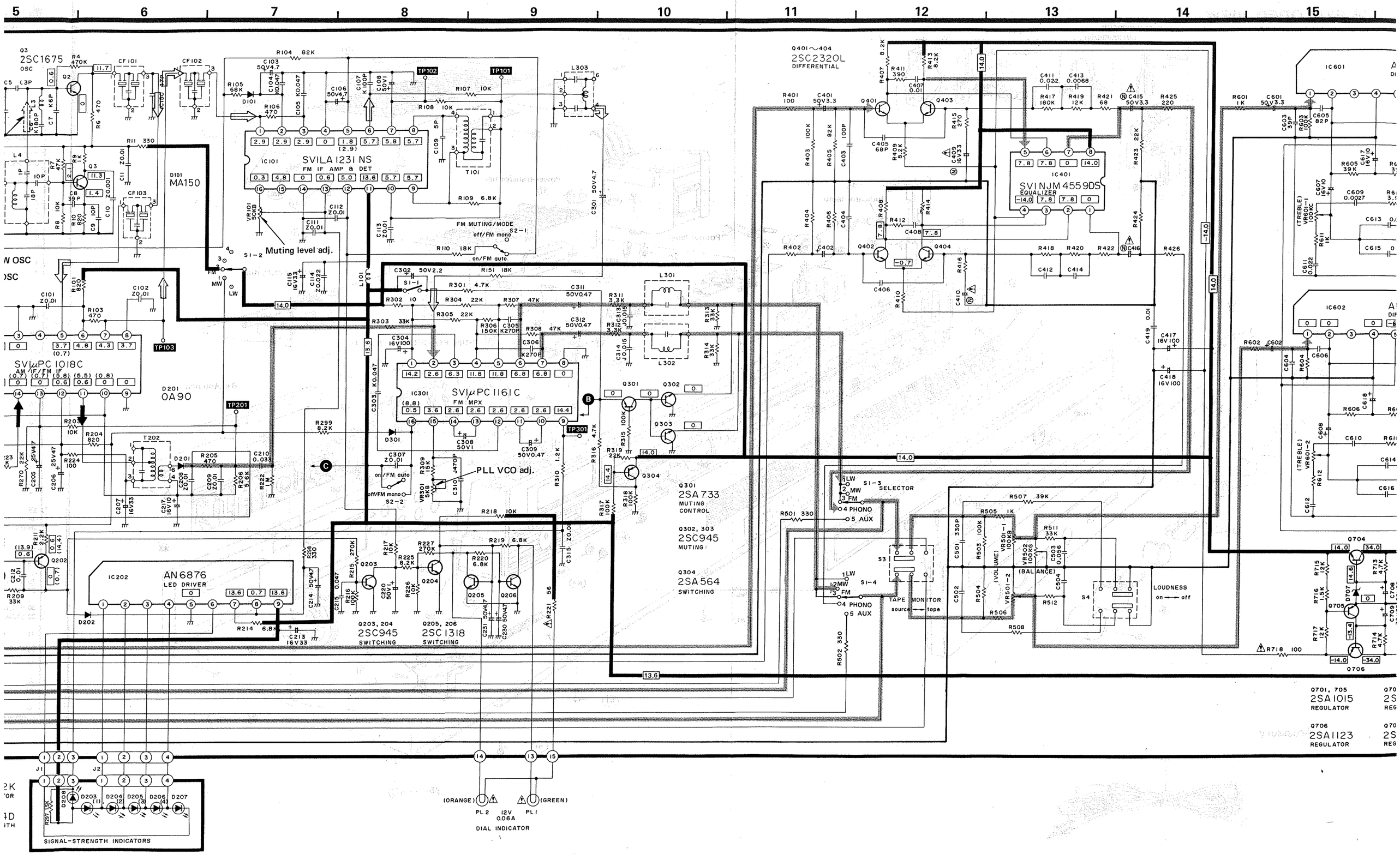

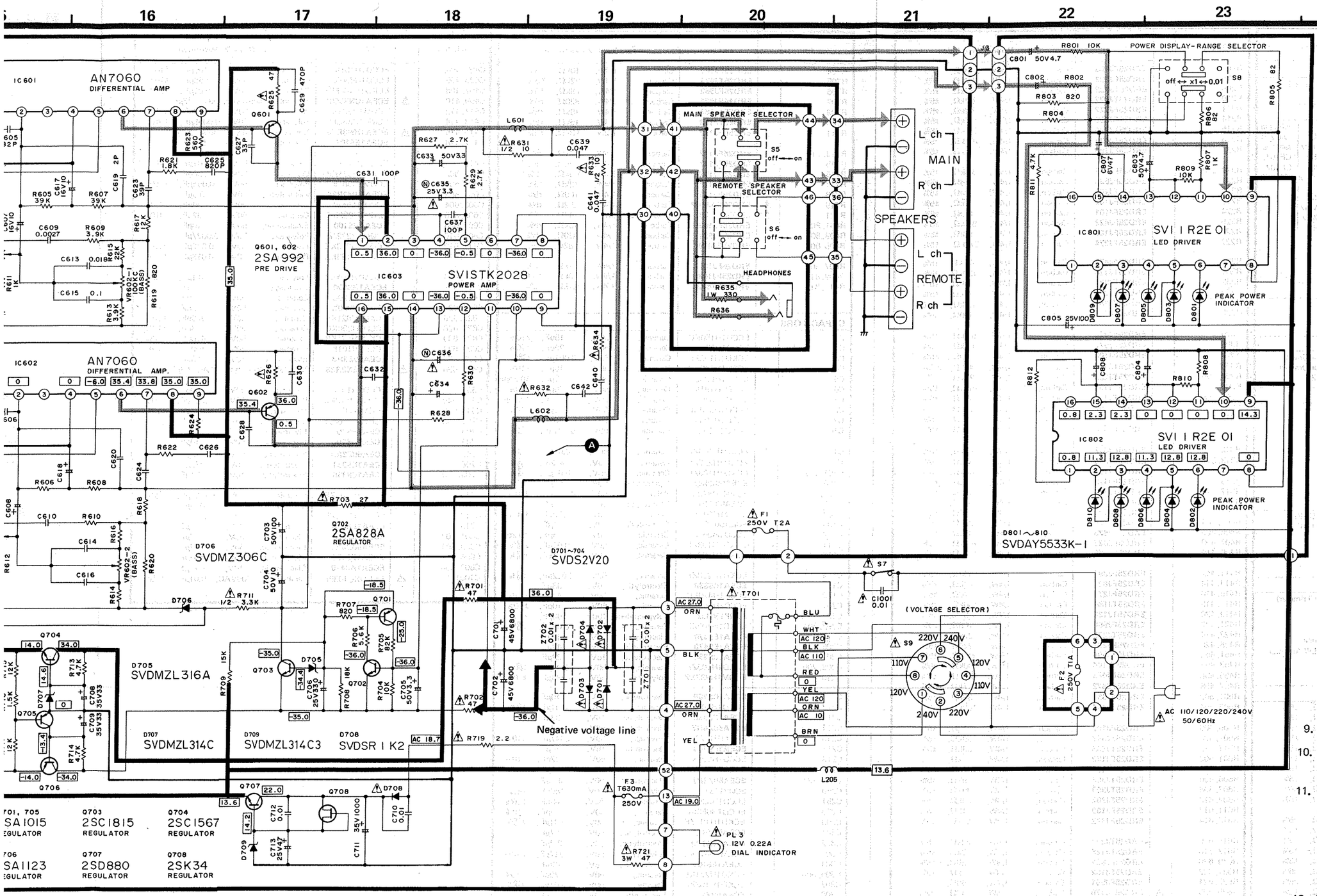

Notes:

1. **S1-1~S1-7** : Selector switch in "**FM**" position.
   LW ⟷ MW ⟷ FM ⟷ phono ⟷ aux .
2. **S2-1, S2-2** : FM muting/FM mode switch in **"on/FM auto"** position.
   ▙ on/FM auto, ▂ off/FM mono
3. **S3** : Tape monitor switch in "**source**" position.
   ▙ source, ▂ tape
4. **S4** : Loudness switch in "**off**" position.
   ▙ off, ▂ on
5. **S5** : Main speaker selector switch in "**on**" position.
6. **S6** : Remote speaker selector switch in "**off**" position.
7. **S7** : Power source switch in "**on**" position.
8. **S8** : Power display/range switch in "**x1**" position.
   off ⟷ x1 ⟷ x0.01
9. **S9** : Voltage selector switch in **"240V"** position.
   120V ⟷ 110V ⟷ 220V ⟷ 240V
10. **S10-1 ~ S10-4** : LW antenna selector switch in **"INT"** position.
    ▙ EXT, ▂ INT
11. Indicated voltage values are the standard values for the unit measured by the DC electronic circuit tester (high-impedance) with the chassis taken as standard. Therefore, there may exist some errors in the voltage values, depending on the internal impedance of the DC circuit tester.
    * Figures in ▭ standard for DC voltage in FM signal reception mode.
    * Figures in ( ) stand for DC voltage in MW/LW signal reception mode.
12. ⇨ FM signal lines, ➡ MW/LW signal lines
    ⇨ AF signal lines, ▬ Positive voltage lines
13. Important safety notice:
    Componetns identified by ⚠ mark have special characteristics important for safety. When replacing any of these components, use only manufacturer's specified parts.

Continued from page 16

Ref. No.		Part No.	Part Name & Description
COMPONENT COMBINATION			
Z701, 702		SXRFS203ZSM	Component Combination, 0.01μF x 2
CERAMIC FILTERS			
CF101, 103		SVFE107MA8A	Ceramic Filter, Red, 10.7MHz (Use pair ranks as same as CF101, CF102 and CF103)
		SVFE107MA8B	Ceramic Filter, Blue, 10.67MHz
		SVFE107MA8C	Ceramic Filter, Orange, 10.73MHz
		SVFE107MA8D	Ceramic Filter, Black, 10.64MHz
		SVFE107MA8E	Ceramic Filter, White, 10.76MHz
CF102		SVFE107MM–A	Ceramic Filter, Red, 10.7MHz
		SVFE107MM–B	Ceramic Filter, Blue, 10.68MHz
		SVFE107MM–C	Ceramic Filter, Orange, 10.72MHz
		SVFE107MM–D	Ceramic Filter, Brown, 10.66MHz
		SVFE107MM–E	Ceramic Filter, Gray, 10.74MHz
CF201 [EB, EX, K-EX]		SVFSFU450B	Ceramic Filter, AM 450kHz
CF201 [EK] only		SVFSFU468B	Ceramic Filter, AM 468kHz
FUSES			
F1	⚠	XBA2C20TRO	Fuse, T2A (250V)
F2	⚠	XBA2C10TRO	Fuse, T1A (250V)
F3	⚠	XBA2C06TRO	Fuse, T630mA (250V)
LAMPS			
PL1	⚠	XAMR86S300A	Lamp, Dial 12V 0.06A (Colour Green)
PL2	⚠	XAMR86S300	Lamp, Dial 12V 0.06A (Colour Orange)
PL3	⚠	XAMR78S250A	Lamp, Dial Indicator 12V 0.22A
SWITCHES			
S1–1 ~ 1 – 3		SSR169	Switch, Function
S2–1 ~ 2–2, S4		SSH2015	Switch, FM Muting. Loudness
S3		SSH165	Switch, Tape Monitor
S5		SSH2017	Switch, Speaker Selector
S7	⚠	ESB90619S	Switch, Power Source
S8		SSS53	Switch, Range Selector
S9	⚠	ESE37200	Switch, Voltage Adjuster
S10		SSH117	Switch, LW Antenna Selector
VARIABLE RESISTORS			
VR101		**EVNM4AA00B54**	Muting Level Adjustment 50kΩ (B)
VR301		EVTS3MA00B53	PLL Voltage Adjustment, 5kΩ (B)
VR501		EWJGFA066B15	Volume Control, 100kΩ (B)
VR502		EWHHMA531G15	Balance Control, 100kΩ (G)
VR601		EWJFC0066C15	Treble Control, 100kΩ (C)
VR602		EWJFCY066530	Bass Control, 100kΩ (C)
VARIABLE CAPACITOR			
[CV1, 2, 3, 201, 202]		ECV5MD34X87G	Tuning Gang, FM & AM (with Trimmer)
[CT1, 2, 3, 201, 202]			
[CT201,251,252]		ECV1ZW10X53N	Trimmer, [CT201] MW Antenna [CT251] LW EXT [CT252] LW Antenna
[CT250]		SVCTY122D221	Trimmer, LW Oscillator
RESISTORS			
R1		**ERD25TJ104**	Carbon, 1/4W, 100kΩ, ±5%
R2		**ERD25FJ101**	Carbon, 1/4W, 100Ω, ±5%
R3		**ERD25FJ221**	Carbon, 1/4W, 220Ω, ±5%
R4		**ERD25TJ474**	Carbon, 1/4W, 470kΩ, ±5%
R6		**ERD25FJ471**	Carbon, 1/4W, 470Ω, ±5%
R7		**ERD25TJ473**	Carbon, 1/4W, 47kΩ, ±5%
R8		**ERD25FJ103**	Carbon, 1/4W, 10kΩ, ±5%
R9		**ERD25FJ102**	Carbon, 1/4W, 1kΩ, ±5%
R10		**ERD25FJ821**	Carbon, 1/4W, 820Ω, ±5%
R11		**ERD25FJ331**	Carbon, 1/4W, 330Ω, ±5%
R101		**ERD25FJ821**	Carbon, 1/4W, 820Ω, ±5%
R103		**ERD25FJ471**	Carbon, 1/4W, 470Ω, ±5%
R104		**ERD25TJ823**	Carbon, 1/4W, 82kΩ, ±5%
R105		**ERD25TJ683**	Carbon, 1/4W, 68kΩ, ±5%
R106		**ERD25FJ471**	Carbon, 1/4W, 470Ω, ±5%
R107		**ERD25FJ103**	Carbon, 1/4W, 10kΩ, ±5%
R108		**ERD25FJ103**	Carbon, 1/4W, 10kΩ, ±5%
R109		**ERD25FJ682**	Carbon, 1/4W, 6.8kΩ, ±5%
R110		**ERD25TJ183**	Carbon, 1/4W, 18kΩ, ±5%
R151		**ERD25TJ183**	Carbon, 1/4W, 18kΩ, ±5%
R201		**ERD25TJ273**	Carbon, 1/4W, 27kΩ, ±5%
R203		**ERD25FJ103**	Carbon, 1/4W, 10kΩ, ±5%
R204		**ERD25FJ821**	Carbon, 1/4W, 820Ω, ±5%
R205		**ERD25FJ471**	Carbon, 1/4W, 470Ω, ±5%
R206		**ERD25FJ562**	Carbon, 1/4W, 5.6kΩ, ±5%

Ref. No.		Part No.	Part Name & Description
R207		**ERD25FJ103**	Carbon, 1/4W, 10kΩ, ±5%
R208		**ERD25FJ822**	Carbon, 1/4W, 8.2kΩ, ±5%
R209		**ERD25TJ333**	Carbon, 1/4W, 33kΩ, ±5%
R210		**ERD25TJ222**	Carbon, 1/4W, 2.2kΩ, ±5%
R211		**ERD25FJ222**	Carbon, 1/4W, 2.2kΩ, ±5%
R214		**ERD25FJ682**	Carbon, 1/4W, 6.8kΩ, ±5%
R215		**ERD25TJ274**	Carbon, 1/4W, 270kΩ, ±5%
R216		**ERD25TJ104**	Carbon, 1/4W, 100kΩ, ±5%
R217, 218		**ERD25FJ103**	Carbon, 1/4W, 10kΩ, ±5%
R219, 220		**ERD25FJ682**	Carbon, 1/4W, 6.8kΩ, ±5%
R221		**ERD25FJ560**	Carbon, 1/4W, 56Ω, ±5%
R222		**ERD25TJ105**	Carbon, 1/4W, 1MΩ, ±5%
R223		**ERD25FJ102**	Carbon, 1/4W, 1kΩ, ±5%
R224		**ERD25FJ101**	Carbon, 1/4W, 100Ω, ±5%
R225		**ERD25FJ822**	Carbon, 1/4W, 8.2kΩ, ±5%
R226		**ERD25FJ103**	Carbon, 1/4W, 10kΩ, ±5%
R227		**ERD25TJ274**	Carbon, 1/4W, 270kΩ, ±5%
R250		**ERD25FJ472**	Carbon, 1/4W, 4.7kΩ, ±5%
R251		**ERD25TJ124**	Carbon, 1/4W, 120kΩ, ±5%
R252		**ERD25FJ821**	Carbon, 1/4W, 820Ω, ±5%
R270		**ERD25TJ223**	Carbon, 1/4W, 22kΩ, ±5%
R297		**ERD25FJ152**	Carbon, 1/4W, 1.5kΩ, ±5%
R298		**ERD25FJ331**	Carbon, 1/4W, 330Ω, ±5%
R299		**ERD25FJ822**	Carbon, 1/4W, 8.2kΩ, ±5%
R301		**ERD25FJ472**	Carbon, 1/4W, 4.7kΩ, ±5%
R302		**ERD25FJ100**	Carbon, 1/4W, 10Ω, ±5%
R303		**ERD25TJ473**	Carbon, 1/4W, 47kΩ, ±5%
R304, 305		**ERD25TJ223**	Carbon, 1/4W, 22kΩ, ±5%
R306		**ERD25TJ154**	Carbon, 1/4W, 150kΩ, ±5%
R307, 308		**ERD25TJ473**	Carbon, 1/4W, 47kΩ, ±5%
R309		**ERD25TJ153**	Carbon, 1/4W, 15kΩ, ±5%
R310		**ERD25FJ122**	Carbon, 1/4W, 1.2kΩ, ±5%
R311		**ERD25FJ332**	Carbon, 1/4W, 3.3kΩ, ±5%
R312		**ERD25FJ332**	Carbon, 1/4W, 3.3kΩ, ±5%
R313, 314		**ERD25TJ333**	Carbon, 1/4W, 33kΩ, ±5%
R315		**ERD25TJ104**	Carbon, 1/4W, 100kΩ, ±5%
R316		**ERD25FJ472**	Carbon, 1/4W, 4.7kΩ, ±5%
R317, 318		**ERD25TJ104**	Carbon, 1/4W, 100kΩ, ±5%
R319		**ERD25TJ223**	Carbon, 1/4W, 22kΩ, ±5%
R401, 402		**ERD25FJ101**	Carbon, 1/4W, 100Ω, ±5%
R403, 404		**ERD25TJ104**	Carbon, 1/4W, 100kΩ, ±5%
R405, 406		**ERD25TJ823**	Carbon, 1/4W, 82kΩ, ±5%
R407, 408		**ERD25FJ822**	Carbon, 1/4W, 8.2kΩ, ±5%
R409, 410		**ERD25FJ822**	Carbon, 1/4W, 8.2kΩ, ±5%
R411, 412		**ERD25FJ391**	Carbon, 1/4W, 390Ω, ±5%
R413, 414		**ERD25FJ822**	Carbon, 1/4W, 8.2kΩ, ±5%
R415, 416		**ERD25FJ271**	Carbon, 1/4W, 270Ω, ±5%
R417, 418		**ERD25TJ184**	Carbon, 1/4W, 180kΩ, ±5%
R419, 420		**ERD25TJ123**	Carbon, 1/4W, 12kΩ, ±5%
R421, 422		**ERD25FJ680**	Carbon, 1/4W, 68Ω, ±5%
R423, 424		**ERD25TJ223**	Carbon, 1/4W, 22kΩ, ±5%
R425, 426		**ERD25FJ221**	Carbon, 1/4W, 220Ω, ±5%
R451, 452		**ERD25TJ394**	Carbon, 1/4W, 390kΩ, ±5%
R453, 454		**ERD25TJ104**	Carbon, 1/4W, 100kΩ, ±5%
R455, 456		**ERD25FJ472**	Carbon, 1/4W, 4.7kΩ, ±5%
R457, 458		**ERD25FJ472**	Carbon, 1/4W, 4.7kΩ, ±5%
R501, 502		**ERD25FJ331**	Carbon, 1/4W, 330Ω, ±5%
R503, 504		**ERD25TJ104**	Carbon, 1/4W, 100kΩ, ±5%
R505, 506		**ERD25FJ102**	Carbon, 1/4W, 1kΩ, ±5%
R507, 508		**ERD25TJ393**	Carbon, 1/4W, 39kΩ, ±5%
R511, 512		**ERD25TJ333**	Carbon, 1/4W, 33kΩ, ±5%
R601, 602		**ERD25FJ102**	Carbon, 1/4W, 1kΩ, ±5%
R603, 604		**ERD25TJ104**	Carbon, 1/4W, 100kΩ, ±5%
R605, 606		**ERD25TJ393**	Carbon, 1/4W, 39kΩ, ±5%
R607, 608		**ERD25TJ393**	Carbon, 1/4W, 39kΩ, ±5%
R609, 610		**ERD25FJ392**	Carbon, 1/4W, 3.9kΩ, ±5%
R611, 612		**ERD25FJ102**	Carbon, 1/4W, 1kΩ, ±5%
R613, 614		**ERD25FJ392**	Carbon, 1/4W, 3.9kΩ, ±5%
R615, 616		**ERD25TJ223**	Carbon, 1/4W, 22kΩ, ±5%
R617, 618		**ERD25TJ123**	Carbon, 1/4W, 12kΩ, ±5%
R619, 620		**ERD25FJ821**	Carbon, 1/4W, 820Ω, ±5%
R621, 622		**ERD25FJ182**	Carbon, 1/4W, 1.8kΩ, ±5%
R623, 624		**ERD25FJ561**	Carbon, 1/4W, 560Ω, ±5%
R625, 626	⚠	**ERD25FJ470**	Carbon, 1/4W, 47Ω, ±5%
R627, 628		**ERD25FJ272**	Carbon, 1/4W, 2.7kΩ, ±5%
R629, 630		**ERD25FJ272**	Carbon, 1/4W, 2.7kΩ, ±5%
R631, 632		**ERD50FJ100**	Carbon, 1/2W, 10Ω, ±5%
R633, 634		**ERD50FJ100**	Carbon, 1/2W, 10Ω, ±5%
R635, 636		ERG1ANJ331	Metal Oxide, 1W, 330Ω, ±5%
R701	⚠	**ERD25FJ470**	Carbon, 1/4W, 47Ω, ±5%
R702, 703	⚠	**ERD25FJ270**	Carbon, 1/4W, 27Ω, ±5%

Ref. No.		Part No.	Part Name & Description
R704		**ERD25FJ103**	Carbon, 1/4W, 10kΩ, ±5%
R705		**ERD25TJ823**	Carbon, 1/4W, 82kΩ, ±5%
R706		**ERD25FJ562**	Carbon, 1/4W, 5.6kΩ, ±5%
R707		**ERD25FJ821**	Carbon, 1/4W, 820Ω, ±5%
R708		**ERD25TJ183**	Carbon, 1/4W, 18kΩ, ±5%
R709		**ERD25TJ153**	Carbon, 1/4W, 15kΩ, ±5%
R711	⚠	**ERD50FJ332**	Carbon, 1/2W, 3.3kΩ, ±5%
R713, 714		**ERD25FJ472**	Carbon, 1/4W, 4.7kΩ, ±5%
R715		**ERD25TJ123**	Carbon, 1/4W, 12kΩ, ±5%
R716		**ERD25FJ152**	Carbon, 1/4W, 1.5kΩ, ±5%
R717		**ERD25TJ123**	Carbon, 1/4W, 12kΩ, ±5%
R718	⚠	**ERD25FJ101**	Carbon, 1/4W, 100Ω, ±5%
R719	⚠	**ERD25FAJ2R2**	Carbon, 1/4W, 2.2Ω, ±5%
R721	⚠	ERG3ANJ470	Metal Oxide, 3W, 47Ω, ±5%
R801, 802		**ERD25FJ103**	Carbon, 1/4W, 10kΩ, ±5%
R803, 804		**ERD25FJ821**	Carbon, 1/4W, 820Ω, ±5%
R805, 806		**ERD25FJ820**	Carbon, 1/4W, 82Ω, ±5%
R807, 808		**ERD25FJ102**	Carbon, 1/4W, 1kΩ, ±5%
R809, 810		**ERD25FJ103**	Carbon, 1/4W, 10kΩ, ±5%
R811, 812		**ERD25FJ472**	Carbon, 1/4W, 4.7kΩ, ±5%
CAPACITORS			
C1		ECCD1H150KC	Ceramic, 50V, 15pF, ±10%
C2		ECCD1H220K	Ceramic, 50V, 22pF, ±10%
C3		ECKD1H102ZF	Ceramic, 50V, 0.001μF, $^{+80}_{-20}$%
C4		ECCD1H100KC	Ceramic, 50V, 10pF, ±10%
C5		ECCD1H030C	Ceramic, 50V, 3pF, ±0.25pF
C6		ECCD1H181K	Ceramic, 50V, 180pF, ±10%
C7		ECCD1H060C	Ceramic, 50V, 6pF, ±0.25pF
C8		ECCD1H390KC	Ceramic, 50V, 39pF, ±10%
C9		ECCD1H100K	Ceramic, 50V, 10pF, ±10%
C10		ECKD1H102ZF	Ceramic, 50V, 0.001μF, $^{+80}_{-20}$%
C11		ECKD1H103ZF	Ceramic, 50V, 0.01μF, $^{+80}_{-20}$%
C25		ECKD1H223ZF	Ceramic, 50V, 0.022μF, $^{+80}_{-20}$%
C101, 102		ECKD1H103ZF	Ceramic, 50V, 0.01μF, $^{+80}_{-20}$%
C103		**ECEA50Z4R7**	Electrolytic, 50V, 4.7μF
C104, 105		ECQM1H473KZ	Polyester, 50V, 0.047μF, ±10%
C106		**ECEA50Z4R7**	Electrolytic, 50V, 4.7μF
C107		ECCD1H101K	Ceramic, 50V, 100pF, ±10%
C108		**ECEA50Z1**	Electrolytic, 50V, 1μF
C109		ECCD1H050C	Ceramic, 50V, 5pF, ±0.25pF
C111		ECKD1H103ZF	Ceramic, 50V, 0.01μF, $^{+80}_{-20}$%
C112, 113		ECKD1H103ZF	Ceramic, 50V, 0.01μF, $^{+80}_{-20}$%
C114		ECKD1H223ZF	Ceramic, 50V, 0.022μF, $^{+80}_{-20}$%
C115		**ECEA1CS330**	Electrolytic, 16V, 33μF
C150		ECCD1H470KC	Ceramic, 50V, 47pF, ±10%
C201		ECCD1H100K	Ceramic, 50V, 10pF, ±10%
C202		ECQP1361JZ	Polypropylene, 100V, 360pF, ±5%
C203, 204		ECKD1H103ZF	Ceramic, 50V, 0.01μF, $^{+80}_{-20}$%
C205		**ECEA1ES470**	Electrolytic, 25V, 47μF
C206		**ECEA1ES470**	Electrolytic, 25V, 47μF
C207		**ECEA1CS330**	Electrolytic, 16V, 33μF
C208, 209		ECKD1H103ZF	Ceramic, 50V, 0.01μF, $^{+80}_{-20}$%
C210		ECQM1H333KZ	Polyester, 50V, 0.033μF, ±10%
C211		**ECEA1CS100**	Electrolytic, 16V, 10μF
C212		ECKD1H103ZF	Ceramic, 50V, 0.01μF, $^{+80}_{-20}$%
C213		**ECEA1CS330**	Electrolytic, 16V, 33μF
C214		**ECEA50Z4R7**	Electrolytic, 50V, 4.7μF
C215		ECQM1H473KZ	Polyester, 50V, 0.047μF, ±10%
C217		**ECEA1CS100**	Electrolytic, 16V, 10μF
C218		ECCD1H220K	Ceramic, 50V, 22pF, ±10%
C220		**ECEA50Z1**	Electrolytic, 50V, 1μF
C230, 231		**ECEA50Z4R7**	Electrolytic, 50V, 4.7μF
C250		ECQP1181JZ	Polypropylene, 100V, 180pF, ±5%
C251		ECCD1H680K	Ceramic, 50V, 68pF, ±10%
C259		ECCD1H050KC	Ceramic, 50V, 5pF, ±10%
C299		ECKD1H103ZF	Ceramic, 50V, 0.01μF, $^{+80}_{-20}$%
C301		**ECEA50Z4R7**	Electrolytic, 50V, 4.7μF
C302		**ECEA50Z2R2**	Electrolytic, 50V, 2.2μF
C303		ECQM1H473KZ	Polyester, 50V, 0.047μF, ±10%
C304		**ECEA1ES101**	Electrolytic, 25V, 100μF
C305, 306		ECKD1H271KB	Ceramic, 50V, 270pF, ±10%
C307		ECKD1H103ZF	Ceramic, 50V, 0.01μF, $^{+80}_{-20}$%
C308		**ECEA50Z1**	Electrolytic, 50V, 1μF
C309		**ECEA50ZR47**	Electrolytic, 50V, 0.47μF
C310		ECQP1471JZ	Polypropylene, 100V, 470pF, ±5%
C311, 312		**ECEA50ZR47**	Electrolytic, 50V, 0.47μF
C313, 314		ECQM1H153JZ	Polyester, 50V, 0.015μF, ±5%
C315		ECKD1H103ZF	Ceramic, 50V, 0.01μF, $^{+80}_{-20}$%
C401, 402		**ECEA50M3R3S**	Electrolytic, 50V, 3.3μF

Ref. No.		Part No.	Part Name & Description
C403, 404		ECCD1H101K	Ceramic, 50V, 100pF, ±10%
C405, 406		ECCD1H680K	Ceramic, 50V, 68pF, ±10%
C407, 408		ECKD1H103MD	Ceramic, 50V, 0.01μF, ±20%
C409, 410	⚠	**ECEA1CN330S**	Non-polar Electrolytic, 50V, 33μF
C411, 412		ECQM1H223JZ	Polyester, 50V, 0.022μF, ±5%
C413, 414		ECQM1H682JZ	Polyester, 50V, 0.0068μF, ±5%
C415, 416	⚠	**ECEA1HN3R3S**	Non-polar Electrolytic, 50V, 3.3μF
C417, 418		**ECEA1ES101**	Electrolytic, 25V, 100μF
C419		ECKD1H103ZF	Ceramic, 50V, 0.01μF, $^{+80}_{-20}$%
C501, 502		ECKD1H331KB	Ceramic, 50V, 330pF, ±10%
C503, 504		ECQM1H563KZ	Polyester, 50V, 0.056μF, ±10%
C601, 602		**ECEA50M3R3S**	Electrolytic, 50V, 3.3μF,
C603, 604		ECCD1H390KC	Ceramic, 50V, 39pF, ±10%
C605, 606		ECCD1H820KC	Ceramic, 50V, 82pF, ±10%
C607, 608		**ECEA1HS100**	Electrolytic, 50V, 10μF
C609, 610		ECQM1H272JZ	Polyester, 50V, 0.0027μF, ±5%
C611, 612		ECQM1H223KZ	Polyester, 50V, 0.022μF, ±10%
C613, 614		ECQM1H183KZ	Polyester, 50V, 0.018μF, ±10%
C615, 616		ECQM1H104KZ	Polyester, 50V, 0.1μF, ±10%
C617, 618		**ECEA1HS100**	Electrolytic, 50V, 10μF
C619, 620		ECCD1H020C	Ceramic, 50V, 2pF, ±0.25pF
C623, 624		ECCD1H390KC	Ceramic, 50V, 39pF, ±10%
C625, 626		ECKD1H821KB	Ceramic, 50V, 820pF, ±10%
C627, 628		ECCD1H330KC	Ceramic, 50V, 33pF, ±10%
C629, 630		ECKD1H471KB	Ceramic, 50V, 470pF, ±10%
C631, 632		ECCD1H101K	Ceramic, 50V, 100pF, ±10%
C633, 634		**ECEA50Z3R3**	Electrolytic, 50V, 3.3μF
C635, 636	⚠	**ECEA1EN3R3S**	Non-Polar Electrolytic, 25V, 3.3μF
C637		ECCD1H101K	Ceramic, 50V, 100pF, ±10%
C639, 640		ECQM1H473KZ	Polyester, 50V, 0.047μF, ±10%
C641, 642		ECQM1H473KZ	Polyester, 50V, 0.047μF, ±10%
C701, 702		ECETS45V682U	Electrolytic, 45V, 6800μF
C703		**ECEA1HS101**	Electrolytic, 50V, 100μF
C704		**ECEA1HS100**	Electrolytic, 50V, 10μF
C705		**ECEA50Z3R3**	Electrolytic, 50V, 3.3μF
C706		**ECEA1ES331**	Electrolytic, 25V, 330μF
C708, 709		**ECEA1CS330**	Electrolytic, 16V, 33μF
C710		ECKD1H103ZF	Ceramic, 50V, 0.01μF, $^{+80}_{-20}$%
C711		**ECEA1VS102**	Electrolytic, 35V, 1000μF
C712		ECKD1H103ZF	Ceramic, 50V, 0.01μF, $^{+80}_{-20}$%
C713		**ECEA1ES470**	Electrolytic, 25V, 47μF
C801, 802		**ECEA50Z4R7**	Electrolytic, 50V, 4.7μF
C803, 804		**ECEA50Z4R7**	Electrolytic, 50V, 4.7μF
C805		**ECEA1ES101**	Electrolytic, 25V, 100μF
C807, 808		**ECEA1AS470**	Electrolytic, 10V, 47μF
C1001	⚠	ECKDKC103PF	Ceramic, 400VAC, 0.01μF, $^{+100}_{-0}$%

SA-203L

■ EXPLODED VIEW

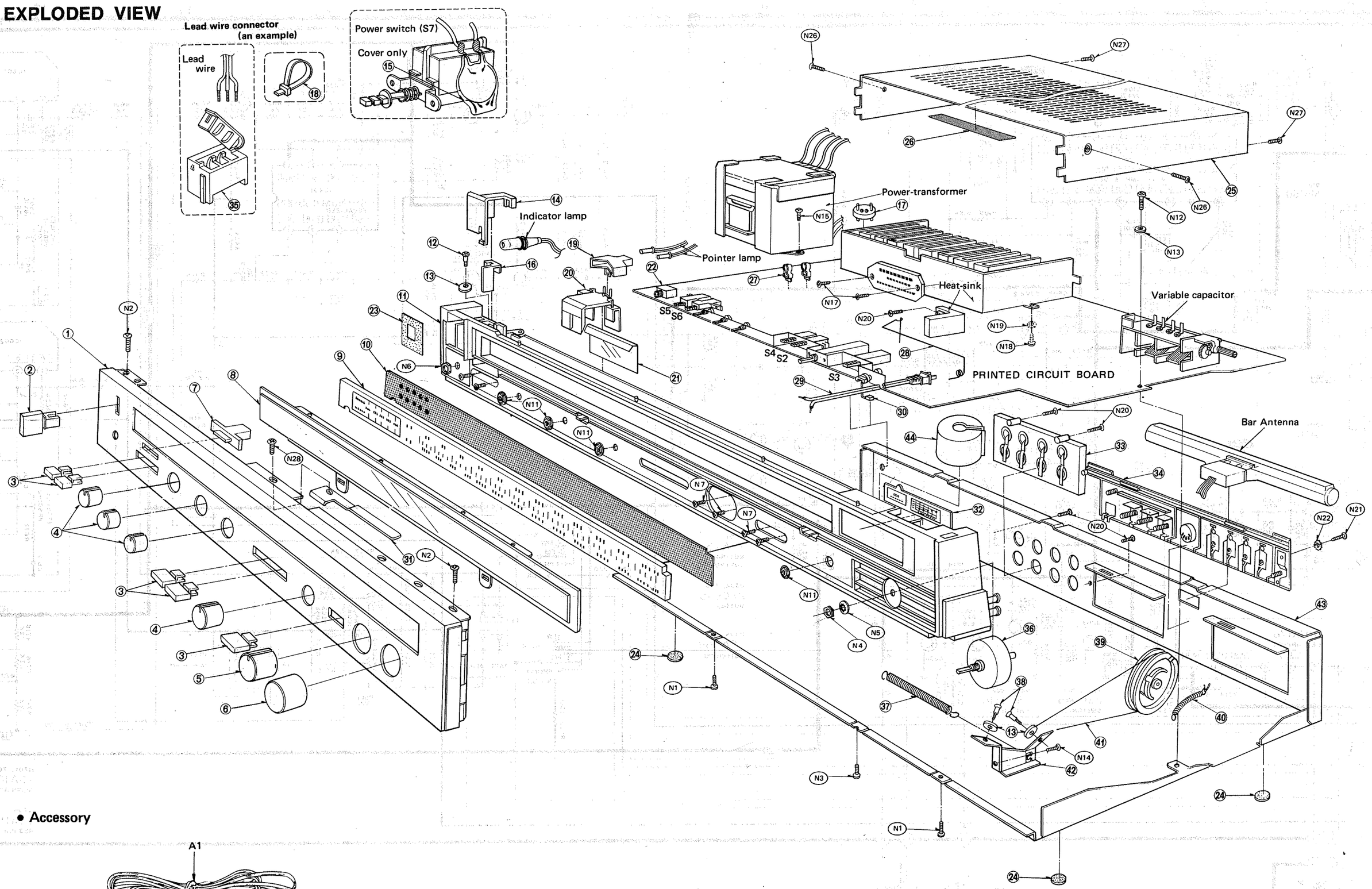

• Accessory

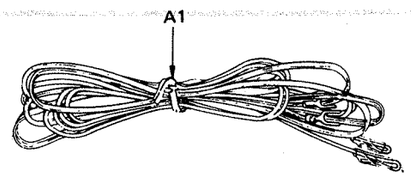

REPLACEMENT PARTS LIST (Cabinet and Chassis Parts)

Notes:
1. Part numbers are indicated on most mechanical parts. Please use this part number for parts orders.
2. Important safety notice: Components identified by ⚠ mark have special characteristics important for safety. When replacing any of these components, use only manufacturer's specified parts.
3. Ⓚ -marked parts are used for black only, while ○ marked parts are for silver type only.
4. Parts other than Ⓚ - and ○-marked are used for both black and silver types.
5. Bracketed indications in Ref. No. columns specify the area. Parts without these indications can be used for all areas.

Black type model No. : SA-203L (K)

Ref. No.		Part No.	Part Name & Description
CABINET and CHASSIS PARTS			
1	○	SYW405–3	Panel, Front (Silver Type)
1	Ⓚ	SYW405–4	Panel, Front (Black Type)
2		SBC301–5	Knob, Power
3		SBC369–2	Knob, Speaker Selector, Loudness Muting, Tape
4		SBN1019	Knob, Bass, Treble, Balance & Selector
5		SBN1049	Knob, Volume
6		SBN1051	Knob, Tuning
7	○	SBD35	Knob (Silver Type)
7	Ⓚ	SBD35–1	Knob (Black Type)
8		SGU215–1	Panel, Transparent
9	○	SKD4090–2	Scale, Dial (Silver Type)
9	Ⓚ	SKD4090–3	Scale, Dial (Black Type)
10		SGX7047–1	Plate, Dial
11	○	SUF305	Panel, Front Plate (Silver Type)
11	Ⓚ	SUF305–2	Panel, Front Plate (Black Type)
12		SHD3X27	Shaft, Dial Pulley
13		**RDR8–1**	Pulley, Dial
14		SHR9557	Holder, Dial Scale
15		SMXA65	Cover, Line Capacitor
16		SHG1589	Rubber, Dial Holder
17		SHE113	Clamper, P.C.B.
18		SHR301	Clamper, Pointer
19		SHG1587	Rubber, Pointer
20		SDP5083	Pointer, Dial
21		SHP53–3	Slider, Pointer
22		XCJ6P21B–A1	Jack, Headphones
23		SHS1045	Fiber, Power Switch
24		SKL245	Foot, Set
25	○	SKC750S1	Cabinet (Silver Type)
25	Ⓚ	SKC750B1	Cabinet (Black Type)
25 [EK] Only	○	SKC750S2	Cabinet (Silver Type)
26		SHS1009	Fiber, Cabinet
27		SJT347	Clip, Fuse
28		SUS233	Spring
29 [EK] only	⚠	**QFC1205M**	AC Cord, Power Source
29 [Other Areas]	⚠	**SJA88**	AC Cord, Power Source
30 [EK] only		SHR129	Bushimg, AC Cord
30 [Other Areas]		SHR127	Bushing, AC Cord
31		SUW1829	Bracket, Transparent Panel
32	○	SGX7045–1	Plate, Light Emitting Diode (Silver Type)
32	Ⓚ	SGX7045–2	Plate, Light Emitting Diode (Black Type)
33		SJF4813–1	Terminal, Speaker
34		SJF8033–1N	Terminal, Input & Antenna
35		SJS5327	Socket, 3P
36		SDT8081	Shaft, Tuning
37		SUS175	Spring, Dial Pointer
38		SHD3X1F–1	Dial Pulley
39		SDD38–1	Drum, Variable Capacitor
40		SDSA4121	Spring, Drum
41		SDZ051–2	Cord, Dial (1.8m)
42		SUW1769	Bracket, Dial
43 [EK, EB]		SGP2671–5A	Panel, Rear
43 [EX, K-EX]		SGP2671–5D	Panel, Rear
44		SUV453	Cover, Voltage Adjuster
SCREWS, NUTS and WASHERS			
N1		**XTB3+8BFZ**	Screw, Front Panel (Under)
N2		**XTB3+10BFZ**	Screw, Front Panel (Top)
N3		**XTB3+8BFZ**	Screw, Front Plate (Front Chassis)
N4		**XNS11**	Nut, Tuning Shaft M'tg
N5		**XWD11B**	Washer, Tuning Shaft M'tg
N6		**XNS12**	Nut, Headphone Jack M'tg
N7		**XSN3+8S**	Screw, Powers Switch etc. M'tg
N8		**XWA3B**	Washer, Powers Switch etc. M'tg
N9		**XSN26+5BN**	Screw, Range Switch
N10		**XWA26B**	Washer, Range Switch
N11		SNE4021	Nut, Selector Switch
N12		**XSN3+8S**	Screw, P.C.B.
N13		**XWG3**	Washer, P.C.B.
N14		**XTB3+8BFN**	Screw, Dial Pulley Bracket
N15		**XTB4+8BFN**	Screw, Power Transformer
N16		**XNG6E**	Nut, Power Transformer
N17		**XTB3+14BFN**	Screw, Power IC M'tg
N18		**XTN3+8B**	Screw, Heat Sink M'tg
N19		**XWG3**	Washer, Heat Sink M'tg
N20		**XTB3+8BFZ**	Screw, Speaker Terminals & Heat Sink M'tg
N21		**XTB3+8BFN**	Screw, Input Terminals & Variable Capacitor
N22		**XWC3C**	Washer, Input Terminals & Variable Capacitor
N23		**XSN3+8S**	Screw, Variable Capacitor
N24		**XWA3B**	Washer, Variable Capacitor
N25		**XWG3**	Washer, Variable Capacitor
N26	○	**XTB4+8BFN**	Screw, Side Cabinet (Silver Type)
N26	Ⓚ	**XTB4+8BFZ**	Screw, Side Cabinet (Black Type)
N27	○	**XTB3+8BFN**	Screw, Rear Cabinet (Silver Type)
N27	Ⓚ	**XTB3+8BFZ**	Screw, Rear Cabinet (Black Type)
N28		**XSS3+4S**	Screw, Bracket
ACCESSORY			
A1		SSA267	Cord, FM Indoor Antenna
PACKING PARTS			
P1		SPP649	Polyethylene Bag
P2		SPS3069–2	Pad, Left Side
P3		SPS3071–2	Pad, Right Side
P4		SPG3255	Carton Box
P5 [EK] Only		SQF10911	Instructions Book, Printed Matter
P5 [Other Areas]		SQF10915	Instructions Book, Printed Matter

Areas

* [EK] is available in United Kingdom.
* [EB] is available in Belgium.
* [EX] is available in Switzerland and Scandinavia.

Printed in Japan
81081900 ® SH/TS