ORDER NO. SD82022117C2

Service Manual

Direct Drive Automatic Turntable System

SL-DL5

[E], [EK], [XL], [EG], [EB], [EF], [XA], [EH], [Ei], [EC]

SL-DL5(K)

[E], [EG], [EH], [XA]

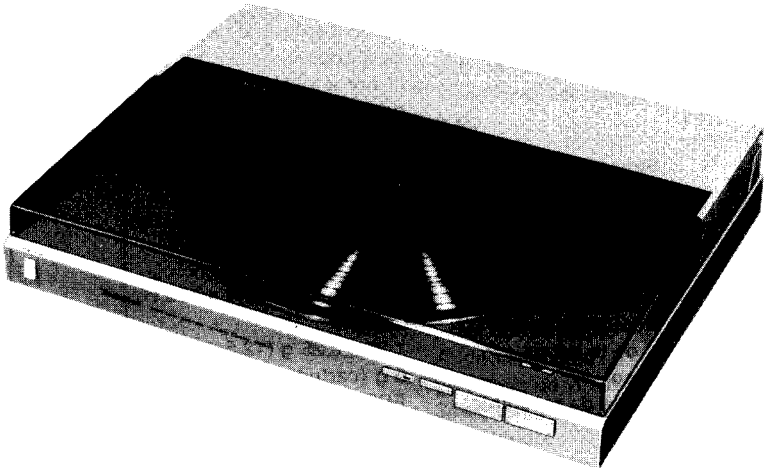

Areas

* [E] is available in Switzerland and Scandinavia.
* [EK] is available in United Kingdom.
* [XL] is available in Australia.
* [EG] is available in F.R. Germany.
* [EB] is available in Belgium.
* [EF] is available in France.
* [XA] is available in Southeast Asia, Oceania, Africa, Middle Near East and Central South America.
* [EH] is available in Holland.
* [Ei] is available in Italy.
* [EC] is available in Czechoslovakia.

*** The cabinet and dust cover are available in black color and silver types.**
*** The black type model is provided with (K) in the Service Manual.**

English

Specifications

Specifications are subject to change without notice for further improvement.
Weight and dimensions shown are approximate.

■ General

Power supply:	220 V, 50/60 Hz
Power consumption:	10 W
Dimensions: (W×H×D)	43 × 8,8 × 32,3 cm (16-59/64" × 3-1/2" × 12-23/32") 43 × 34,1 × 32,3 cm (16-59/64" × 13-27/64" × 12-23/32") (Maximum height when top (dust cover) is open.)
Weight:	5 kg (11 lb.)

■ Turntable section

Type:	Direct drive Automatic turntable Auto start/Auto lead-in Auto return Auto stop Repeat play Auto speed select Manual speed selection possible Auto size select Record presence detection
Drive method:	Direct drive
Motor:	Brushless DC motor
Drive control method:	F·G servo control
Turntable platter:	Aluminum die-cast Diameter 30 cm (12")
Turntable speeds:	33-1/3 rpm and 45 rpm Auto speed select (Manual selection possible)
Wow and flutter:	0.012% WRMS* 0.025% WRMS (JIS C5521) ±0.035% peak (IEC 98A Weighted)

*Measured by obtaining signal from built-in frequency generator of motor assembly.

Rumble:	−56 dB (IEC 98A Unweighted) −78 dB (IEC 98A Weighted)

■ Tonearm section

Type:	Dynamic balanced type Linear tracking tonearm 4-pivot gimbal suspension
Effective length:	10.5 cm (4-1/8")
Tracking error angle:	Within ±0.1°
Effective mass:	9 g (including cartridge)
Resonance frequency:	12 Hz
Tonearm drive motor:	DC motor
Phono cable capacitance:	150 pF

■ Cartridge section

Type:	Moving magnet stereo cartridge
Magnetic circuit:	All laminated core

Technics

Matsushita Electric Trading Co., Ltd.
P.O. Box 288, Central Osaka Japan

www.hifiengine.com

Frequency response:	10 Hz ~ 30 kHz 20 Hz ~ 10 kHz ±1 dB
Output voltage:	2.5 mV at 1 kHz, 5 cm/s. zero to peak lateral velocity (7 mV at 1 kHz, 10 cm/s. zero to peak 45° velocity [DIN 45 500])
Channel separation:	22 dB at 1 kHz
Channel balance:	Within 2 dB at 1 kHz
Recommended load impedance:	47 kΩ~100 kΩ
Compliance (dynamic):	12 × 10^{-6} cm/dyne at 100 Hz
Stylus pressure range:	1.25 ±0.25 g (12.5 ±2.5 mN)
Weight:	6.0 g (cartridge only)
Replacement stylus:	EPS-24CS

* **The product for destination [XA] is equipped with voltage selector.**
* **Power Supply:** 240V, 50/60Hz
  For United Kingdom and Australia ([EK] and [XL] areas)

Deutsch

TECHNISCHE DATEN

Änderungen der technischen Daten vorbehalten.
Die angegebenen Gewichts- und Abmessungsdaten sind circa Werte.

■ Allgemeine Daten

Stromversorgung:	220 V, 50/60 Hz Wechselstrom
Leistungsaufnahme:	10 W
Abmessungen: **(B×H×T)**	43 × 8,8 × 32,3 cm 43 × 34,1 × 32,3 cm (Maximale Höhe bei vollständig geöffnetem Gehäuseoberteil.)
Gewicht:	5 kg

■ Plattenspieler

Typ:	Direktangetriebener automatischer Plattenspieler Auto-Start/Auto-Zuführung Rückführautomatik Stopp-Automatik Wiederhol-Betrieb Automatische Drehzahlwahl Manuelle Drehzahlwahl möglich Automatische Plattengrößewahl Plattenpräsenz-Registrierung
Antrieb:	Direktantrieb
Motor:	Kollektorloser Gleichstrommotor
Antriebsregel-Methode:	FG-Servo-Steuerung
Plattenteller:	Aluminium-Druckguß Durchmesser 30 cm
Plattenteller-Drehzahlen:	33-1/3 und 45 U/min Automatische Drehzahlwahl (manuelle Wahl möglich)
Gleichlaufschwankungen:	0,012% WRMS* 0,025% WRMS (JIS C5521) ±0,035% Spitze (IEC 98A bewertet)

* Gemessen anhand von Signalen vom eingebauten Frequenzgenerator des Motorbauteils.

Rumpel-Fremdspannungsabstand:	−56 dB (IEC 98A unbewertet)
Rumpel-Geräuschspannungsabstand:	−78 dB (IEC 98A bewertet)

■ Tonarm

Typ:	Dynamisch ausbalancierter Tangential-Tonarm mit Kardanaufhängung mit 4-Punkt-Drehlager
Effektive Länge:	10,5 cm
Spurfehlwinkel:	Innerhalb ±0,1°
Effektive Masse:	9 g (einschließlich Tonabnehmer)
Resonanzfrequenz:	12 Hz
Tonarm-Antriebsmotor:	Gleichstrommotor

■ Tonabnehmer

Typ:	Stereo-Magnet-Tonabnehmer mit Einpunkt-Aufhängungssystem
Magnetkreis:	Ganzlamellenkern
Frequenzgang:	10 Hz bis 30 kHz 20 Hz bis 10 kHz ±1 dB
Ausgangsspannung:	2,5 mV bei 1 kHz 5 cm/s. Null-zu-Spitze, lateral [7 mV bei 1 kHz 10 cm/s. Null-zu-Spitze, 45° (DIN 45 000)]
Kanaltrennung:	22 dB bei 1 kHz
Kanalabweichung:	Innerhalb 2 dB bei 1 kHz
Empfohlene Endimpedanz:	47 kΩ ~ 100 kΩ
Nachgiebigkeit (dynamisch):	12 × 10^{-6} cm/dyn bei 100 Hz
Auflagekraft-Einstellbereich:	1,25 ±0,25 g (12,5 ±2,5 mN)
Gewicht:	6,0 g (nur Tonabnehmer)
Ersatznadel:	EPS-24CS

www.hifiengine.com

Français

CARACTERISTIQUES

Les spécifications sont susceptibles d'être modifiées sans préavis.
Le poids et les dimensions donnés sont approximatifs.

■ Généralités

Alimentation: 220 V, 50/60 Hz
Consommation: 10 W
Dimensions: 43 × 8,8 × 32,3 cm
(L×H×P) 43 × 34,1 × 32,3 cm (Hauteur maximum lorsque le dessus (couvercle protège-poussière) est ouvert.)
Poids: 5 kg

■ Platine de lecture

Type: Entraînement direct
Platine automatique
Départ automatique/Entrée automatique
Retour automatique
Arrêt automatique
Auditon répétée
Sélection de vitesse automatique
Sélection automatique du diamètre
Sélection de vitesse manuelle possible
Détection de la présence d'un disque
Système d'entraînement: Entraînement direct
Moteur: Moteur C.C. sans balai
Système de commande d'entrainement: Générateur de fréquences à servo-commande
Plateau de lecture: Aluminium moulé sous pression Diamètre 30 cm
Vitesses de la platine: 33-1/3 et 45 t/p.m. Sélecteur de vitesse automatique (Sélection manuelle possible)
Pleurage et scintillement: 0,012% de valeur efficace*
0,025% de valeur efficace (JIS C5521)
±0,035% de crête (IEC 98A Pondéré)

* Mesuré par l'obtention d'un signal provenant du générateur de fréquences incorporé de l'ensemble du moteur.

Ronflement: −56 dB (IEC 98A Non pondéré)
−78 dB (IEC 98A Pondéré)

■ Bras de lecture

Type: Bras de lecture d'alignement linéaire de type à équilibre dynamique avec suspension à la cardan à 4 pivots
Longueur effective: 105 mm
Angle d'erreur de piste: En deçà de ±0,1°
Masse réelle: 9 g (y compris la cellule pick-up)
Fréquence de résonance: 12 Hz
Moteur d'entraînement du bras de lecture: Moteur C.C.

■ Cellule pick-up

Type: Cellule pick-up stéréo à aimant mobile
Circuit magnétique: Noyau entièrement feuilleté
Réponse en fréquence: 10 Hz à 30 kHz
20 Hz à 10 kHz ±1 dB
Tension de sortie: 2,5 mV à 1 kHz; 5 cm/s. zéro à vitesse latérale de crête (7 mV à 1 kHz; 10 cm/s., zéro à vitesse 45° de crête [DIN 45 000])
Séparation des canaux: 22 dB à 1 kHz
Equilibrage des canaux: En deçà de 2 dB à 1 kHz
Impédance de charge recommandée: 47 kΩ~100 kΩ
Elasticité (dynamique): 12 × 10^{-6} cm/dyne à 100 Hz
Plage de la force verticale d'appui: 1,25 ±0,25 g (12,5 ±2,5 mN)
Poids: 6,0 g (cellule seule)
Remplacement de la pointe de lecture: EPS-24CS

Español

ESPECIFICACIONES

Las especificaciones quedan sujetas a cambios sin aviso previo.
Los peso y las dimensiones indicados son aproximados.

■ En general

Alimentación de corriente: 220 V, 50/60 Hz
Consumo de corriente: 10 W
Dimensiones: 43 × 8,8 × 32,3 cm
(Ancho×Alto×Prof.) 43 × 34,1 × 32,3 cm (Altura máxima cuando la parte de arriba (tapa contra el polvo) está abierta.)
Peso: 5 kg

■ Sección del plato giratorio

Tipo: Accionamiento directo
Plato giratorio automático
Arranque automático/ Comienzo automático
Retorno automático
Parada automática
Ejecución repetida
Selección automática de la velocidad
Es posible seleccionar la velocidad a mano
Selección automática del tamaño
Detección de presencia de disco
Método de accionamiento: Accionamiento directo
Motor: Motor de corriente continua sin escobillas
Método de control de accionamiento: Servocontrol por generador de frecuencias
Platillo del plato giratorio: Aluminio fundido 30 cm de diámetro

Velocidades del plato giratorio: 33-1/3 y 45 rpm
Selección automática de la velocidad
(También posibilidad de seleccionar a mano)
Ululaciones y trémolo: 0,012% WRMS*
0,025% WRMS (JIS C5521)
±0,035% cresta (IEC 98A Ponderado)

*Medido obteniendo una señal proveniente del generador de frecuencias incorporado del conjunto del motor.

Ruido de rodadura: −56 dB (IEC 98A No ponderado)
−78 dB (IEC 98A Ponderado)

■ Sección del brazo sonoro

Tipo: Brazo sonoro de seguimiento lineal de tipo con equilibrio dinámico con suspensión cardánica de 4 pivotes
Longitud efectiva: 10,5 cm
Angulo de error de seguimiento: Inferior a ±0,1° aproxim.
Masa efectiva: 9 g (incluyendo el cartucho)
Frecuencia de resonancia: 12 Hz
Motor de accionamiento del brazo sonoro: Motor de corriente continua

■ Sección del cartucho

Tipo: Cartucho estereofónico de imán móvil
Circuito magnético: Núcleo totalmente laminado
Respuesta de frecuencia: 10 Hz a 30 kHz
20 Hz a 10 kHz ±1 dB
Voltaje de salida: 2,5 mV a 1 kHz
Velocidad lateral de cero a cresta de 5 cm/s
(7 mV a 1 kHz. Velocidad de 45° de cero a cresta de 10 cm/s [DIN 45 000])
Separación de canales: 22 dB a 1 kHz
Equilibrio de canales: Inferior a 2 dB a 1 kHz
Impedancia de carga recomendada: 47 kΩ a 100 kΩ
Elasticidad (dinámica): 12 × 10^{-6} cm/dina a 100 Hz
Radio de presión de la aguja: 1,25 ±0,25 g (12,5 ±2,5 mN)
Peso: 6 g (cartucho solamente)
Aguja de recambio: EPS-24CS

■ CONTENTS

	Page
LOCATION OF CONTROLS	4, 5
DISASSEMBLY INSTRUCTIONS	6 ~ 8
HOW TO SET THE TONEARM DRIVE ROPE	9
CHECKING METHOD OF THE UNIT	9
MEASUREMENTS AND ADJUSTMENTS (English)	10 ~ 12
MESSUNGEN UND JUSTIERUNGEN (Deutsch)	13, 14
MESURAGES ET REGLAGES (Français)	15, 16
MEDICIONES Y AJUSTE (Español)	17, 18
REPLACEMENT PARTS (Electric Parts)	19
TIMING CHART	20
BLOCK DIAGRAM	21, 22
CIRCUIT BOARD AND WIRING CONNECTION DIAGRAM	23, 24
SCHEMATIC DIAGRAM	25, 26
EXPLODED VIEWS	27, 29
REPLACEMENT PARTS LIST (Cabinet and Chassis Parts)	29
PACKINGS	30

■ LOCATION OF CONTROLS

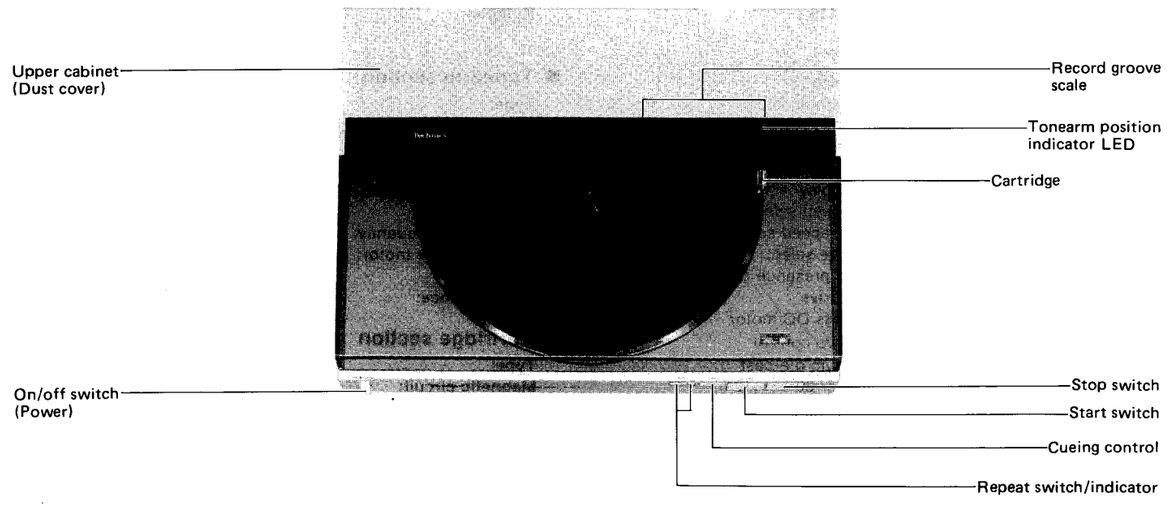

www.hifiengine.com

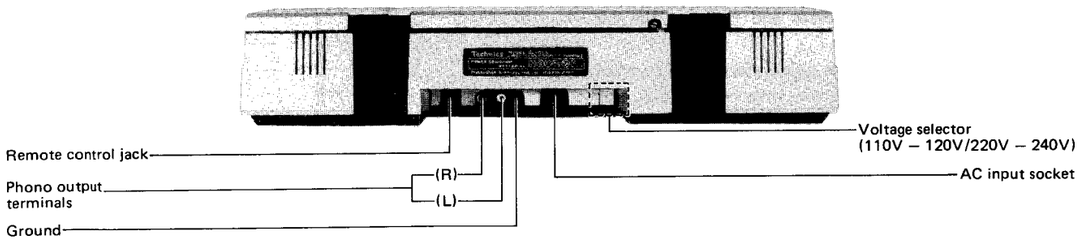

*** The product for destination [XA] is equipped with voltage selector.**

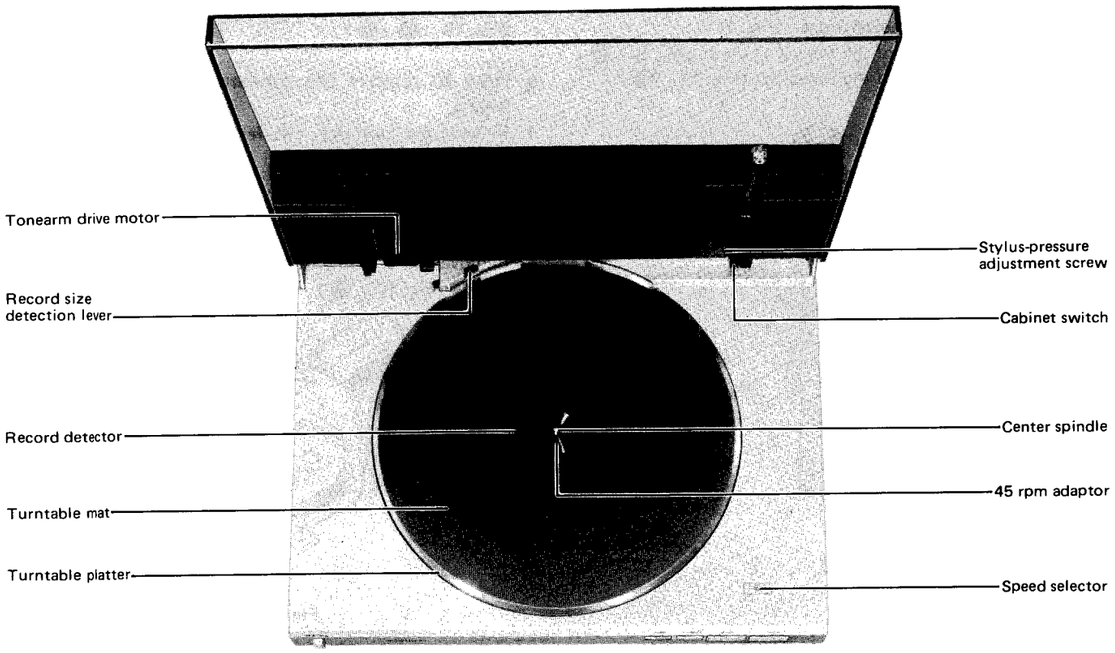

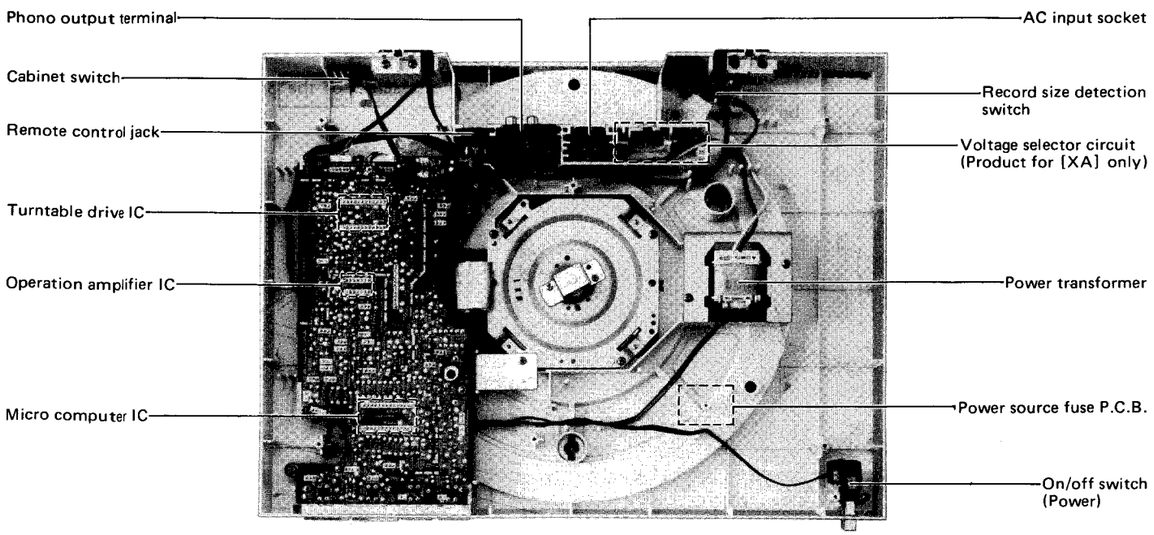

■ DISASSEMBLY INSTRUCTIONS

• How to remove the turntable

1. Open the upper cabinet.
2. Detach the 45 rpm adaptor as shown in **Fig. 1.**
3. Remove the turntable mat and lift up the turntable.
   * The turntable is tight fitted onto the center spindle. When removing the turntable, take care not to give damage to the upper cabinet arm motor cover and tonearm cover.
4. When putting the turntable mat on the turntable, match the projection of the turntable (record detector) with the hold of the turntable mat. **(See Fig. 2)**

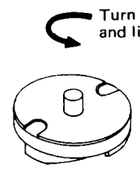

Fig. 1

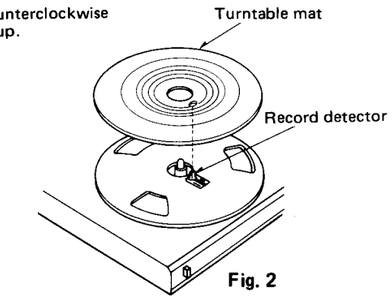

Fig. 2

• How to remove the bottom board

1. Remove the 45 rpm adaptor and turntable.
2. Turn over the body on a soft cloth taking care not to damage the upper cabinet and dust cover.
3. Remove the 6 setscrews. **(Fig. 3 : ❶ ~ ❻)**

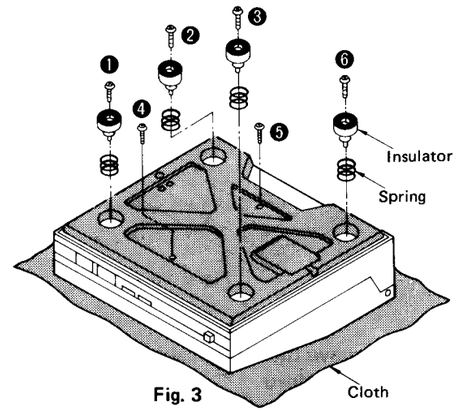

Fig. 3

• How to remove the main circuit printed board

1. Remove the bottom board. **(Refer to "How to remove the bottom board".)**
2. Release the holder of the stator frame lead connector and pull off the lead wire. **(Fig. 4)**
3. Remove the 6 setscrews **(Fig. 4 : ❼ ~ ⓬)** of the printed circuit board.
4. When mounting the printed circuit board . . . . .
   (1) Turn the record detecting sensor lever counterclockwise.
   (2) Insert the speed selector switch into the knob.
   (3) Connect the lead wire to the connector, close the holder and tighten the screws.

*** The printed circuit board is grounded to the chassis by screw ❿. When checking the conduction with screw ❿ removed, connect the earth terminal of the printed circuit board to the chassis (stator frame).**

• How to remove the stator frame

1. Remove the bottom board. **(Refer to "How to remove the bottom board".)**
2. Release the holder of the stator frame lead connector and pull of the lead wire. **(Fig. 4)**
3. Remove the 2 setscrews **(Fig. 4 : ❿, ⓭)** of the radiator.
4. Remove the 3 setscrews **(Fig. 4 : ⓮ ~ ⓰)** of the stator frame.

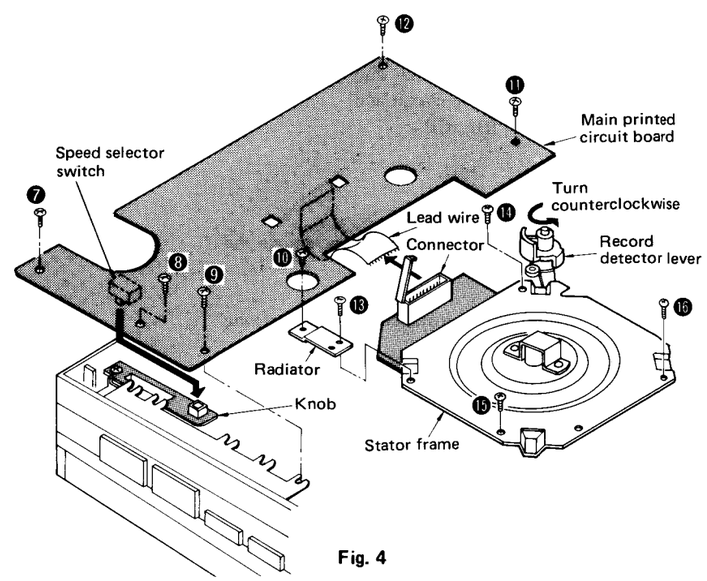

Fig. 4

- **How to remove the dust cover**

1. Open the upper cabinet.
2. Remove the 4 setscrews of the arm motor cover. **(Fig. 5 : ⑰ ~ ⑳).**
3. Remove the 5 setscrews of the dust cover. **(Fig. 5 : ㉑ ~ ㉓ and Fig. 6 : ㉔ , ㉕)**

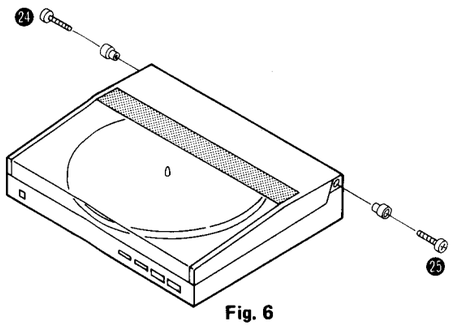

Fig. 6

- **How to remove the upper cabinet**
  (Separation of cabinet)

1. Remove the bottom board. **(Refer to "How to remove the bottom board".)**
2. Detach the output terminal from lower cabinet. **(Fig. 7)**
3. Pull out connectors ㉖ and ㉗ . **(Fig. 7)**
4. Remove the 4 setscrews of the hinge. **(Fig. 7 : ㉘ ~ ㉛)**
5. The hinge is engaged with the lower cabinet. The lower cabinet can be separated from the upper cabinet by lifting the cabinet while releasing the hinge claws. **(See Fig. 5 (A))**

- **How to remove the arm motor printed board**

1. Open the upper cabinet and detach the arm motor cover. **(Refer to "How to remove the dust cover".)**
2. Remove the setscrews ㉜ . **(Fig. 5)**
3. Release the claws with the nail and remove the position detecting circuit and the rest switch. **(Fig. 5 : (B), (C))**

- **How to remove the Hall element**

1. Remove the turntable. **(Refer to "How to remove the turntable".)**
2. Unsolder the Hall element.
   ***The Hall element should be installed with the marking side up as in Fig. 8.**
   With the marking side up, no problem will occur even when the leg is reversed in position.

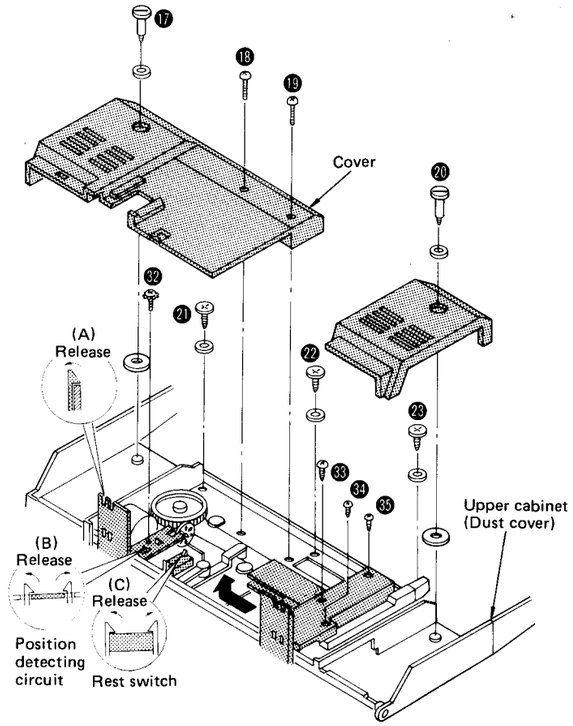

Fig. 5

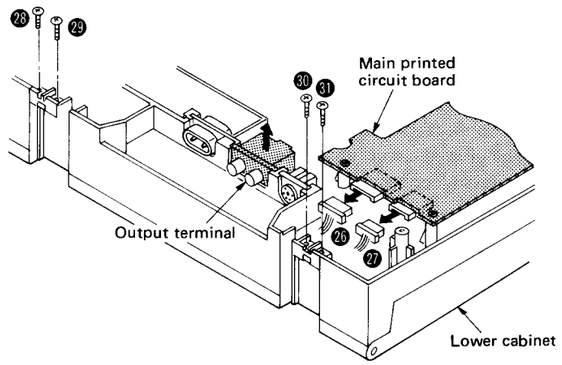

Fig. 7

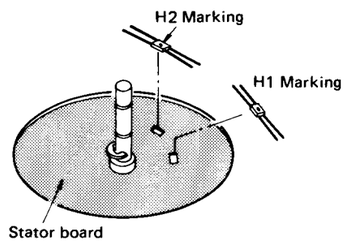

Fig. 8

- **How to remove the cartridge**

1. Open the upper cabinet.
2. Completely loosen the setscrew and pull out the cartridge. **(Fig. 9)**
3. When attaching the cartridge again, match the tonearm connector with the cartridge pin, then completely insert it and tighten the setscrew.

- **How to remove the tonearm**

1. Remove the cartridge. **(Refer to "How to remove the cartridge".)**
2. Remove the 3 setscrews of the tonearm cover **(Fig. 5 : ㉝ ~ ㉟)** and detach the cover in the direction of the arrow.
3. Unsolder 5 leads of the cartridge. **(Fig. 10)**
4. Remove the setscrew of the tonearm board. **(Fig. 10 : ㊱)**
5. Remove the setscrew of the tonearm. **(Fig. 11 : ㊲)**

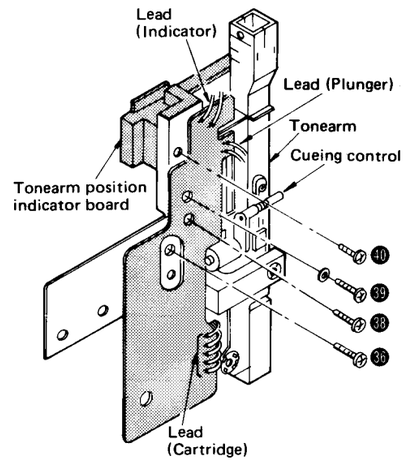

Fig. 10

- **How to remove the cabinet switch**

1. Remove the bottom board. **(Refer to "How to remove the bottom board".)**
2. Remove the setscrew of the cabinet switch. **(Fig. 12 : ㊶)**
3. When fitting the cabinet switch, be sure to open the upper cabinet.

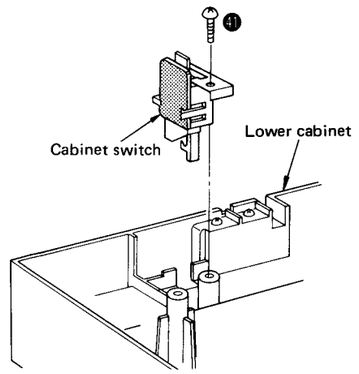

Fig. 12

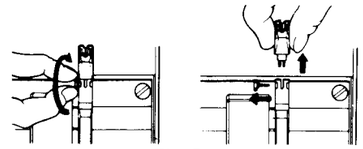

Fig. 9

- **How to remove the cueing control ass'y**

1. Remove the cartridge. **(Refer to "How to remove the cartridge".)**
2. Remove the tonearm cover. **(Refer to "How to remove the tonearm".)**
3. Unsolder 2 leads of the plunger.
4. Remove the 2 setscrews of the cueing control ass'y. **(Fig. 10 : ㊽ , ㊾)**

- **How to remove the tonearm position indicator board**

1. Remove the cartridge. **(Refer to "How to remove the cartridge".)**
2. Remove the tonearm cover. **(Refer to "How to remove the tonearm".)**
3. Unsolder 2 leads of the indicator. **(Fig. 10)**
4. Remove the setscrew of the tonearm position indicator board. **(Fig. 10 : ㊿)**

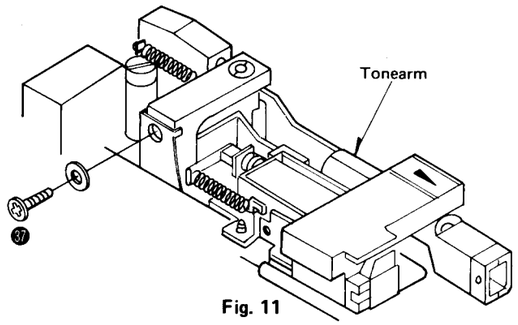

Fig. 11

- **How to remove the on/off switch**

1. Remove the bottom board. **(Refer to "How to remove the bottom board".)**
2. Pull out the knob.
3. Remove the setscrew of the on/off switch. **(Fig. 13 : ㊷)**

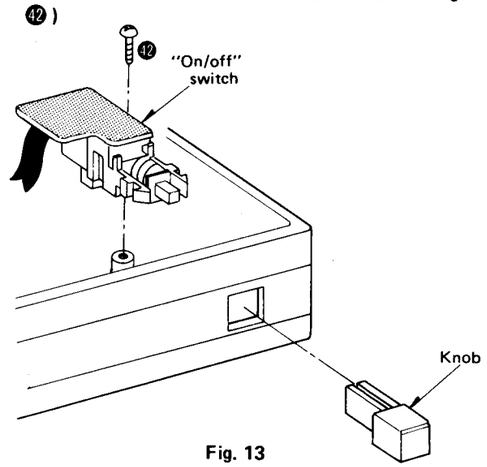

Fig. 13

■ HOW TO SET THE TONEARM DRIVE ROPE

Set the rope according to the following procedure.

1. Open the upper cabinet and remove the cartridge.
2. Remove the arm motor cover and tonearm cover.
3. Detach the arm drive wheel "C" ring ⑬ and washer ⑭, and remove the drive wheel. **(See Fig. 14)**
4. Turn over the arm drive wheel and set the rope in the order of 1 ~ 2. **(Fig. 15)**
5. Holding the rope set over the arm drive wheel with the hand, set the tope over the wheels in the order of 3 ~ 5 in **Fig. 16**.
6. After setting the rope, rotate the worm gear by hand until the tonearm matches the rope connector.
7. Rotate the worm gear by hand and check that the tonearm operates, and then fit the washer ⑭ and "C" ring ⑬ in place.

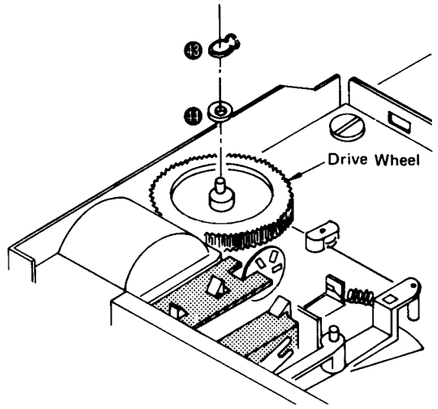

Fig. 14

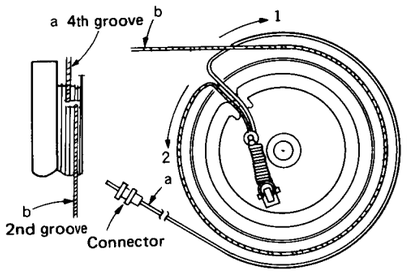

Fig. 15

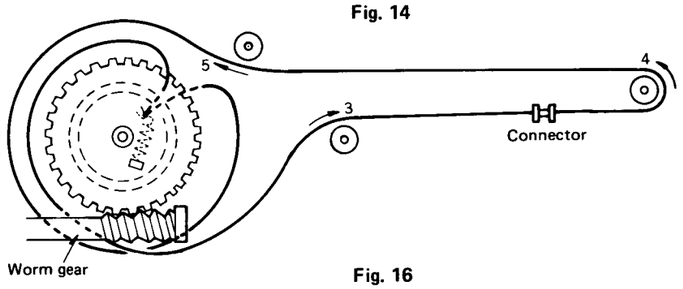

Fig. 16

■ CHECKING METHOD OF THE UNIT

The unit (circuit, etc.) can be checked and adjusted as follows:

- **Close the upper cabinet. (Check of the main circuit printed board.)**

1. Remove the bottom board.
2. Place the unit on the player repair table. **(Fig. 17)**
3. Put a record on the turntable and close the upper cabinet.
4. Set the power on/off switch to "on".
5. Press the start button to rotate the turntable.
6. Check the unit with a tester from below the bottom.

- **Open the upper cabinet. (Check of the tonearm drive unit and main circuit printed board.)**

1. Remove the bottom board.
2. Completely open the upper cabinet.
3. Secure the record detector with adhesive tape. **(Fig. 18)**
4. Fasten the cabinet release switch with adhesive tape. **(Fig. 19)**
5. Place the unit on the player repair table **(Fig. 20)** or carefully raise the unit after removing the 45-adaptor and turntable mat. **(Fig. 21)**.
6. Set the power on/off switch to "on".
7. Press the start button. (The record size 17 cm and the speed 45 r.p.m. are automatically detected, and the turntable starts rotating.)

***When raising the unit, take care because the turntable is not secured. It is desirable to use the player repair table.)**

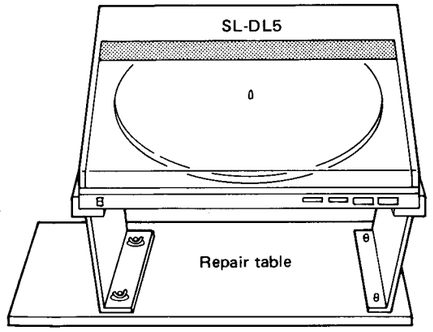

Fig. 17

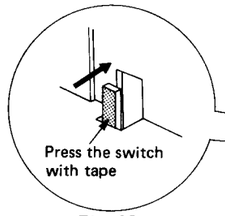

Fig. 18

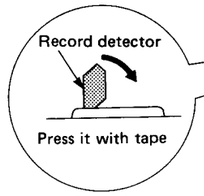

Fig. 19

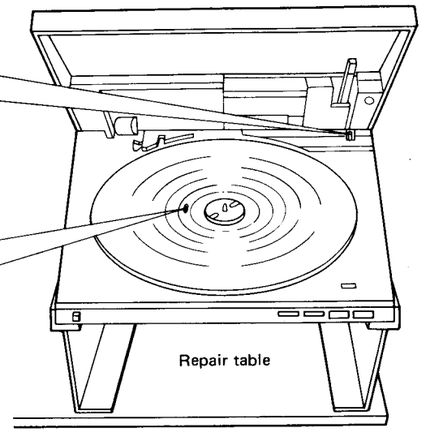

Fig. 20
(Abb. 1)

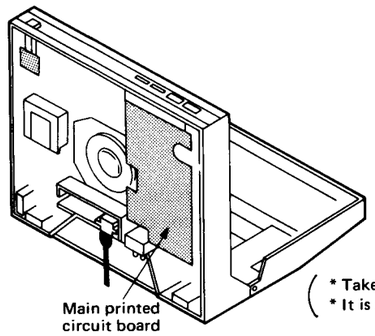

Fig. 21

(* Take care not to allow the unit to falle down.
* It is desirable to use a repair table for the repair job.)

■ MEASUREMENTS AND ADJUSTMENTS English

- **Diagram for printed circuit board adjustment**

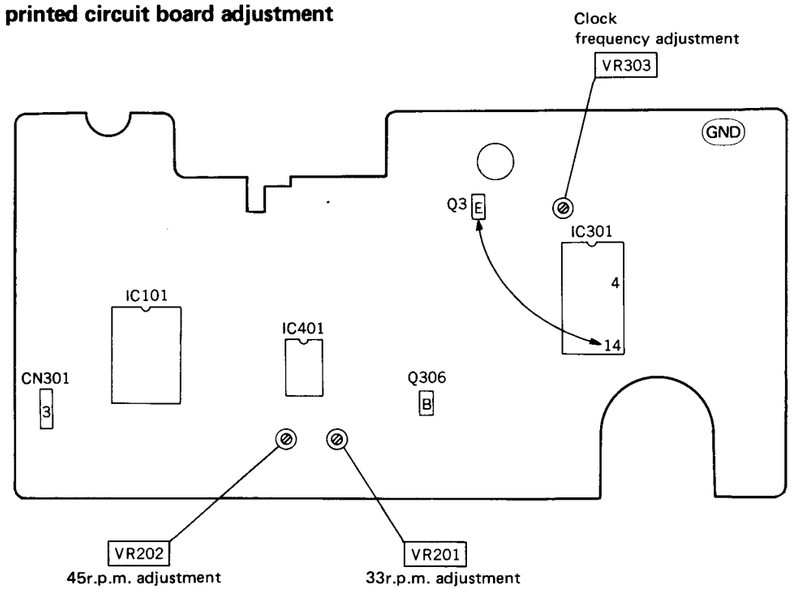

***Connect between Q3 Ⓔ and IC301 ⑭ for clock frequency adjustment.**
***Zwischen Q3 Ⓔ und IC301 ⑭ anschließen, für die Zeitgeberfrequenz.**
***Connecter entre Q3 Ⓔ et IC301 ⑭ pour le réglage de la fréquence des impulsions d'horloge.**
***Conectar entre Q3 Ⓔ y IC301 ⑭ para ajuste de frecuencia de reloj.**

www.hifiengine.com

- **Instruments used**

1. DC voltmeter
2. Oscilloscope or frequency counter

Step	Item	Adjustment procedure
1	**Auto start position**	1 Make sure that the tonearm is at the start position (on the rest). 2 Adjust by turning the auto start position adjusting screw. **Tonearm lowers inside the disc:** Turn the adjusting screw clockwise. **Tonearm lowers outside the disc:** Turn the adjusting screw anticlockwise. ***Be sure to use 30 cm record for the adjustment.** 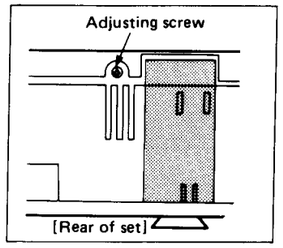
2	**Arm lift height**	1 Make the set as illustrated in **Fig. 20.** 2 Set the on/off switch to "on" and press the start switch to shift the tonearm inward. 3 Press the cueing control button so that the distance between the cartridge stylus tip and the guide rail is 27.7 mm. **To increase the distance . . . . .** turn the adjusting screw anticlockwise. **To decrease the distance . . . . .** turn the adjusting screw clockwise. 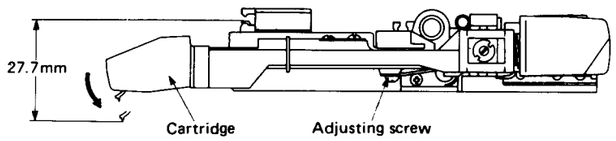
3	**Tonearm offset angle**	1 Make the set as illustrated in **Fig. 20.** 2 Set the on/off switch to "on" and press the start switch to shift the tonearm inward. 3 Turn the offset angle adjusting screw so that the arm center matches the V-groove of the lift bar. 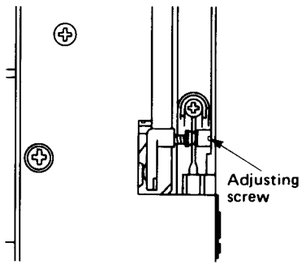

Step	Item	Adjustment procedure
4	**Servo gain and offset voltage**	1 Make the set as illustrated in **Fig. 20.** 2 Connect the DC voltmeter to TP315 (Q306) base or connector CN301 terminal ③ and TP3 (earth). 3 Set the on/off switch to "on" and press the start switch to shift the tonearm inward. 4 Remove the label of the tonearm cover. 5 Completely shift the tonearm to the right. Then, adjust VR501 so that the voltage is 3.6V. **(Servo gain adjustment)** 6 Set the tonearm to the center and make sure that the output voltage is 1.8V. If the voltage is not 1.8V, loosen the printed circuit board setscrew and move the board to the right of left by a screwdriver so that the output voltage becomes 1.8V. After the adjustment, tighten the printed circuit board setscrew. **(Offset adjustment)** 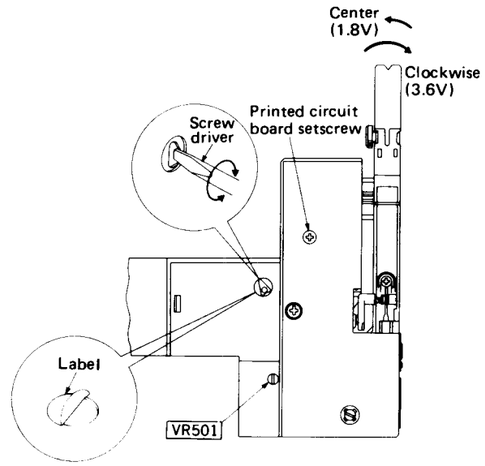
5	**Clock frequency**	1 Make the set as illustrated in **Fig. 20.** 2 Remove the tape from the cabinet switch. 3 Connect TP7 (Q3 emitter) to TP326 (IC301 pin 14) with clip lead or the like. 4 Connect the oscilloscope or frequency counter to TP316 (IC301 pin 4). 5 Set the on/off switch to "on". 6 Adjust VR301 so that the output waveform cycle is 40 μs ± 2 μs. Also, adjust VR301 so that the output frequency is 25 kHz ± 1.25 kHz. 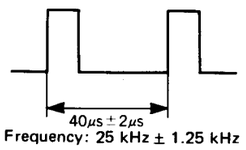
6	**Rotational speed**	1 Make the set as illustrated in **Fig. 20.** 2 Play a 17 cm record. 3 Turn VR202 to adjust the speed to the rated speed (45 rpm). 4 Play a 30 cm record. 5 Turn VR201 to adjust the speed to the rated speed (33-1/3 rpm). **Note: Be sure to adjust 45 rpm first.** 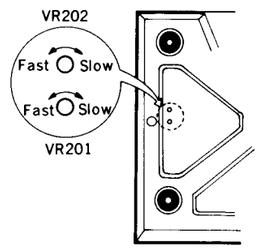

www.hifiengine.com

■ MESSUNGEN UND JUSTIERUNGEN ▬▬▬ Deutsch ▬▬▬

- **Zu verwendende Instrumente**

1. Elektronisches Gleichstrom-Voltmeter
2. Oszilloskop oder Frequenzzähler

Schritt	Gegenstand	Justiermethode
1	**Auto-Start-Position**	1 Überprüfen, daß der Tonarm in der Startposition (auf der Tonarmablage) ist. 2 Durch Drehen der Auto-Start-Positions-Justierschraube justieren. **Bei Absenken des Tonarms zu weit innen:** Die Justierschraube im Uhrzeigersinn drehen. **Bei Absenken des Tonarms zu weit außen:** Die Justierschraube entgegen dem Uhrzeigersinn drehen. ***Für die Justierung muß unbedingt eine 30 cm-Platte verwendet werden.** 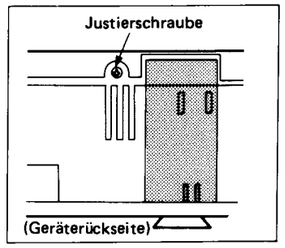
2	**Tonarm-lifthöhe**	1 Das Gerät so einstellen, wie in **Abb. 1** gezeigt. 2 Den Netzschalter auf ON stellen und die Starttaste drücken, um den Tonarm nach innen zu bewegen. 3 Die Lifttaste drücken, so daß der Abstand zwischen der Tonabnehmer-Nadelspitze und der Führungsschiene 27.7 mm beträgt. **Um den Abstand zu vergrößern . . . .** die Justierschraube entgegen dem Uhrzeigersinn drehen. **Um den Abstand zu verkleinern . . . .** die Justierschraube im Uhrzeigersinn drehen. 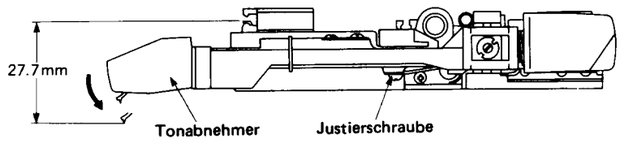
3	**Tonarm-Reibungs-winkel**	1 Das Gerät so einstellen, wie in **Abb. 1** gezeigt. 2 Den Netzschalter auf ON stellen und die Starttaste drücken, um den Tonarm nach innen zu bewegen. 3 Die Reibungswinkel-Justierschraube drehen, bis die Armmitte mit der V-Kerbe am Liftbalken übereinstimmt. 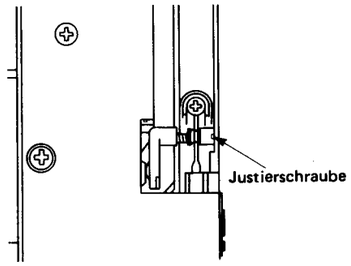

Schritt	Gegenstand	Justiermethode
4	**Servo-Verstärkungs- und Kompensations-Spannung**	1 Das Gerät so einstellen, wie in **Abb. 1** gezeigt. 2 Das elektronische Gleichstrom-Voltmeter an TP315 (Q306) Basis oder Anschluß CN301 Stift 2 und TP3 (Masse). 3 Den Netzschalter auf ON stellen und die Starttaste drücken, um den Tonarm nach innen zu bewegen. 4 Den Tonarm ganz nach rechts stellen. VR501 dann so einstellen, daß die Spannung 3.6V beträgt. **(Servo-Verstärkungs-Justierung)** 5 Den Tonarm in die Mitte stellen und überprüfen, daß die Ausgangsspannung 1.8V beträgt. 6 Falls die Spannung nicht 1.8V beträgt, die Platinen-Befestigungsschraube lösen und die Platine mit einem Schraubenzieher nach links oder rechts bewegen, bis die Ausgangsspannung 1.8V beträgt. Nach der Justierung, die Platinen-Befestigungs-schraube wieder festdrehen. **(Kompensationsspannungs-Justierung)** 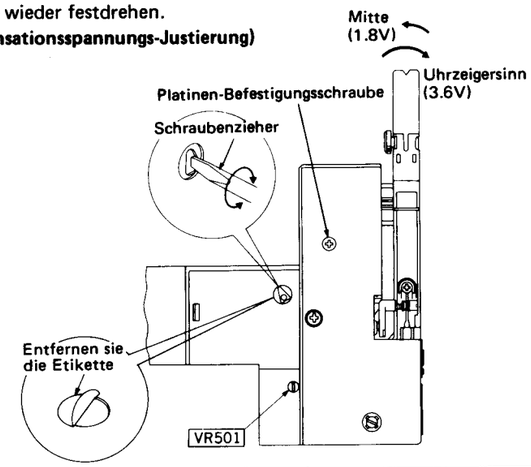
5	**Zeitgeberfrequenz**	1 Das Gerät so einstellen, wie in **Abb. 1** gezeigt. 2 Das Klebband vom Gehäuseschalter entfernen. 3 Mit einem Klemmenkabel o.ä. TP7 (Q3 Emitter) mit TP326 (IC301 Stift 14) verbinden. 4 Das Oszilloskop oder den Frequenzzähler an TP316 (IC301 Stift 4) anschließen. 5 Den Netzschalter auf ON stellen. 6 VR301 so justieren, daß der Ausgangswellenform-Zyklus 40μs ± 2μs beträgt. Ebenfalls VR301 so justieren, daß die Ausgangsfrequenz 25 kHz ± 1.25 kHz beträgt. 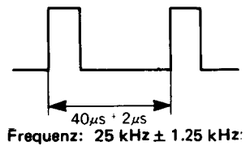
6	**Drehzahl**	1 Das Gerät so einstellen, wie in **Abb. 1** gezeigt. 2 Eine 17 cm-Platte abspielen. 3 VR202 drehen, um die Drehzahl auf die Nenndrehzahl zu justieren (45 U/min). 4 Eine 30 cm-Platte abspielen. 5 VR201 drehen, um die Drehzahl auf die Nenndrehzahl zu justieren (33-1/3 U/min). **Anmerkung: Unbedingt zuerst 45 U/min justieren.** 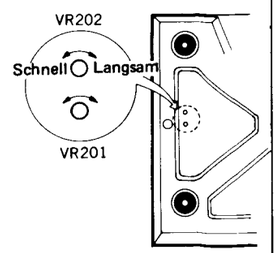

■ MESURAGES ET RÉGLAGES — Français

- **Appareils utilisés**

1. Voltmètre électronique à C.C.
2. Oscilloscope ou compteur de fréquence

Etape	Article	Procédure de réglage
1	**Position de démarrage automatique**	1 S'assurer que le bras de lecture est à la position de démarrage (sur l'accoudoir). 2 Ajuster en tournant la vis d'ajustement du positionnement de démarrage automatique. **Le bras de lecture s'abaisse à l'intérieur du disque:** Tourner la vis de réglage dans le sens des aiguilles d'une montre. **Le bras de lecture s'abaisse à l'extérieur du disque:** Tourner la vis de réglage dans le sens inverse des aiguilles d'une montre. ***S'assurer d'utiliser un disque de 30 cm pour la mise au point.** 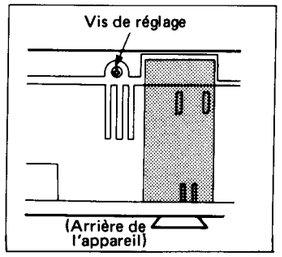
2	**Hauteur d'élévation du bras**	1 Effectuer le réglage comme il est illustrré à la **Fig. 20.** 2 Mettre l'interrupteur d'alimentation sur "on" (marche) et appuyer sur le bouton de mise en marche pour déplacer le bras de lecture vers l'intérieur. 3 Appuyer sur le bouton de pose/relevage de façon à ce que la distance entre l'extrémité de la pointe de lecture de la cellule pick-up et le rail de guidage soit de 27.7 mm. **Pour augmenter la distance . . . .** Tourner la vis de réglage dans le sens inverse des aiguilles d'une montre. **Pour diminuer la distance . . . .** Tourner la vis de réglage dans le sens des aiguilles d'une montre. 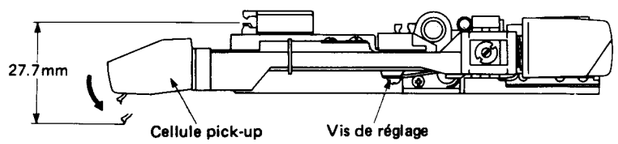
3	**Angle de décalage du bras de lecture**	1 Effectuer le réglage comme il est illustré à la **Fig. 20.** 2 Mettre l'interrupteur d'alimentation sur "on" (marche) et appuyer sur le bouton de mise en marche pour déplacer le bras de lecture vers l'intérieur. 3 Tourner la vis de réglage de l'angle de décalage de façon à ce que le centre du bras coincide avec la rainure en V de la tige d'élévation. 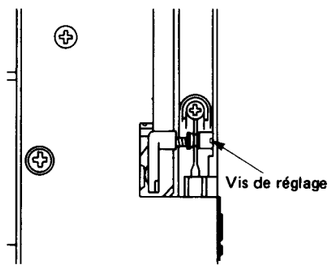

Etape	Article	Procédure de réglage
4	**Amplification servo-mécanique et tension de suppression.**	1 Effectuer le réglage comme il est illustré à la **Fig. 20.** 2 Brancher un voltmètre électronique à C.C. à la base de TP315 (Q306) ou à la borne 3 du connecteur CN301 et de TP3 (mise à la terre). 3 Mettre l'interrupteur d'alimentation sur "on" (marche) et appuyer sur le bouton de mise en marche pour déplacer le bras de lecture vers l'intérieur. 4 Déplacer complètement le bras de lecture vers la droite. Puis, ajuster VR501 de façon à ce que la tension soit de 3.6V. **(Réglage de l'amplification servo-mécanique.)** 5 Placer le bras de lecture au centre et s'assurer que la tension de sortie soit de 1.8V. 6 Si la tension n'est pas de 1.8V, desserrer la vis d'ajustage de la plaquette à circuits imprimés et déplacer la plaquette vers la droite ou vers la gauche avec un tournevis, de façon à ce que la tension de sortie soit de 1.8V. Après la mise au point, resserrer la vis d'ajustage de la plaquette à circuits imprimés. **(Mise au point du décentrement.)** 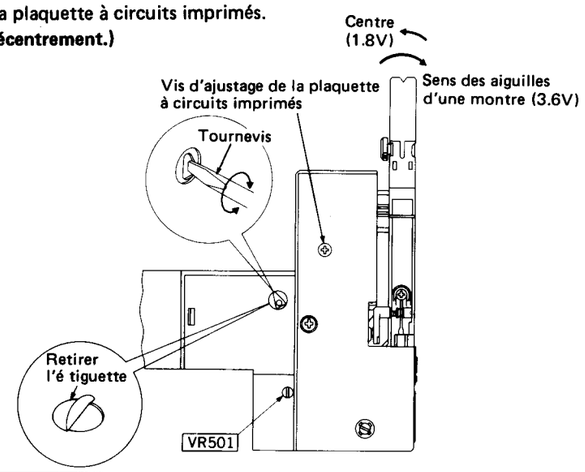
5	**Fréquence des impulsions d'horloge**	1 Effectuer le réglage comme il est montré à la **Fig. 20.** 2 Retirer la bande du dispositif de commutation du boîtier. 3 Connecter TP7 (émetteur Q3) à TP326 (broche 14 de IC301) avec un fil de raccordement à pince ou quelquechose de similaire. 4 Brancher l'oscilloscope ou le compteur de fréquence à TP316 (broche 4 de IC301). 5 Mettre l'interrupteur d'alimentation sur "on" (marche). 6 Régler VR301 de façon à ce que le cycle de la forme d'onde de sortie soit de 40μs ± 2μs. En outre, régler VR301 de façon à ce que la fréquence de sortie soit de 25 kHz ± 1.25 kHz. 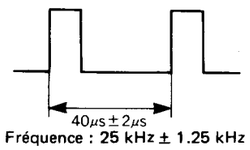
6	**Vitesse rotationnelle**	1 Effectuer le réglage comme il est illustré à la **Fig. 20.** 2 Faire jouer un disque de 17 cm. 3 Tourner VR202 pour ajuster la vitesse à la vitesse nominale de rotation (45 t/p.m.) 4 Faire jouer un disque de 30 cm. 5 Tourner VR201 pour régler la vitesse à la vitesse nominale de rotation (33-1/3 t/p.m.) **Note: S'assurer de régler tout d'abord un 45 t/p.m.** 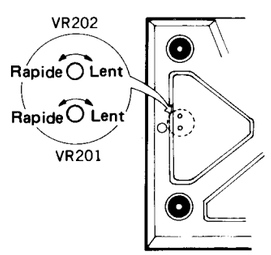

www.hifiengine.com

■ MEDICIONES Y AJUSTE — Español

- **Instrumentos usados**

1. Voltímetro electrónico CC.
2. Oscilloscopio o contador de frecuencia

Paso	Item	Procedimiento de ajuste
1	**Posición de arranque automático**	1 Asegúrese de que el brazo del fonocaptor está en la posición de arranque (en el soporte). 2 Ajuste girando el tornillo de ajuste de posición de arranque automático. **El brazo del fonocaptor baja dentro del disco:** Gire el tornillo de ajuste a la derecha. **El brazo del fonocaptor baja fuera del disco:** Gire el tornillo de ajuste a la izquierda. ***Para el ajuste, asegúrese de usar un disco de gramófono de 30 cm.** 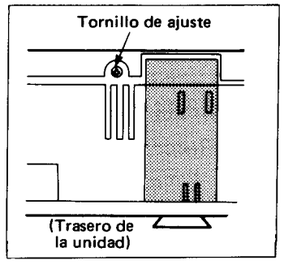
2	**Altura de alzo de brazo**	1 Coloque la unidad como se ilustra en la **Fig. 20**. 2 Conecte el interruptor de la corriente y apriete el botón de arranque para desviar el brazo del fonocaptor hacia dentro. 3 Apriete el botón de colocación en surco de la aguja, de manera que la distancia entre la punta de la aguja de la cápsula y el riel de guía sea 27.7 mm. **Para aumentar la distancia . . . .** gire el tornillo de ajuste a la izquierda. **Para disminuir la distancia . . . .** gire el tornillo de ajuste a la derecha. 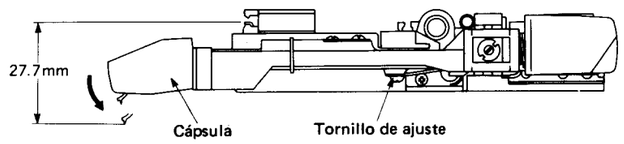
3	**Angulo del brazo del fonocaptor**	1 Coloque la unidad como se ilustra en la **Fig. 20**. 2 Conecte el interruptor de la corriente y apriete el botón de arranque para desviar el brazo del fonocaptor hacia dentro. 3 Gire el tornillo de ajuste del ángulo del brazo del fonocaptor de manera que el centro del brazo coincida con la ranura-V de la barra de alza. 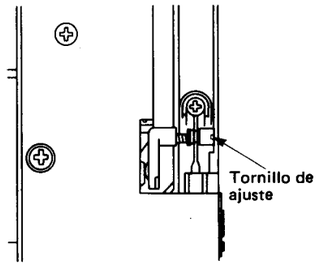

Paso	Item	Procedimiento de ajuste
4	**Contratensión y servoganancia**	1 Coloque la unidad como se ilustra en la **Fig. 20**. 2 Conecte el voltímetro electrónico CC a base de TP315 (Q306) o terminal 3 CN301 del conector y TP3 (tierra). 3 Conecte el interruptor de la corriente y apriete el botón de arranque para desviar el brazo del fonocaptor hacia dentro. 4 Desvíe completamente el brazo del fonocaptor a la derecha. Luego, ajuste VR501 de manera que la tensión sea 3.6V. **(Ajuste de servoganancia)** 5 Coloque el brazo del fonocaptor en el centro y asegúrese de que la tensión de salida sea 1.8V. 6 Si la tensión no es 1.8V, afloje el tornillo de fijación de la placa del circuito impreso y mueva la placa a la derecha o izquierda mediante un destornillador de manera que la tensión de salida se haga 1.8V. Después del ajuste, apriete el tornillo de fijación de la placa del circuito impreso. **(Ajuste de desviación)** 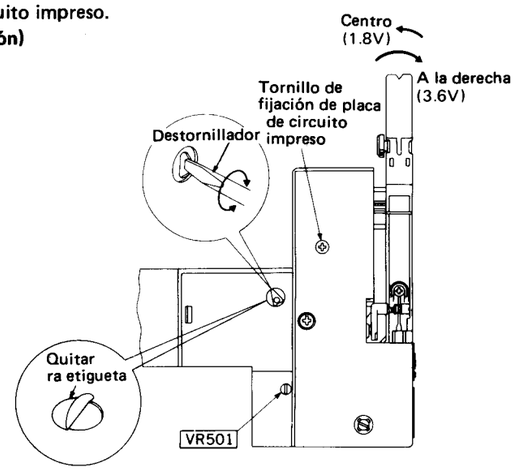
5	**Frecuencia de reloj**	1 Coloque la unidad como se ilustra en la **Fig. 20**. 2 Remueva la cinta del interruptor del gabinete. 3 Conecte TP7 (emisor Q3) a TP326 (púa 14 de IC301) con un cordón con presilla o algo parecido. 4 Conecte el oscilloscopio o el contador de frecuencia a TP316 (púa 4 de IC301). 5 Conecte el interruptor de la corriente. 6 Ajuste VR301 de manera que el ciclo de forma de onda de salida sea 40μs ± 2μs. También, ajuste VR301 de manera que la frecuencia de salida sea 25 kHz ± 1.25 kHz. 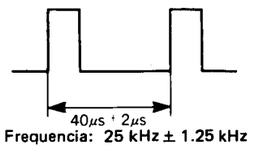
6	**Velocidad rotacional**	1 Coloque la unidad como se ilustra en la **Fig. 20**. 2 Toque un disco de 17 cm. 3 Gire VR202 para ajustar la velocidad a la velocidad de régimen (45 r.p.m.) 4 Toque un disco de 30 cm. 5 Gire VR201 para ajustar la velocidad a la velocidad de régimen (33-1/3 r.p.m.) **Nota: Asegúrese de ajustar a 45 r.p.m. primero.** 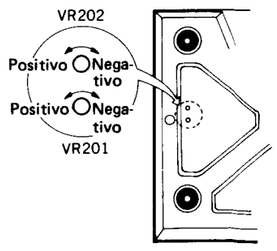

■ REPLACEMENT PARTS LIST...Electric Parts

Notes:
1. Part numbers are indicated on most mechanical parts. Please use this part number for parts orders.
2. Important safety notice: Components identified by ⚠ mark have special characteristics important for safety. When replacing any of these components, use only manufacturer's specified parts.
3. Bracketed indications in Ref. No. columns specify the area. Parts without these indications can be used for all areas.
4. The "S" mark is service standard parts and may differ from production parts.

Areas

* [E] is available in Switzerland and Scandinavia.
* [EK] is available in United Kingdom.
* [XL] is available in Australia.
* [EG] is available in F.R. Germany.
* [EB] is available in Belgium.
* [EF] is available in France.
* [XA] is available in Southeast Asia, Oceania, Africa, Middle Near East and Central South America.
* [EH] is available in Holland.
* [Ei] is available in Italy.
* [EC] is available in Czechoslovakia.

Ref. No.		Part No.	Part Name & Description
INTEGRATED CIRCUITS			
IC101		AN6636	IC, Drive
IC301		MN1421FPB	IC, Micro Computer
IC401		AN6554	IC, Operation Amplifier
TRANSISTORS			
Q1		2SD549	Transistor, Regulator
Q2		2SD636	Transistor, Regulator
Q3		2SD638	Transistor, Regulator
Q101, 102		2SD636	Transistor, Regulator & Switching
Q201		2SA1015-Y	Transistor, Switching
Q301 ~ 303		2SD636	Transistor, Switching
Q304		2SD892	Transistor, Cueing Control
Q305, 307		2SB641	Transistor, Switching
Q306		2SD636	Transistor, V/I Converter
Q308, 309		2SD636	Transistor, Wave form Shaping
Q310, 801 ~ 803		2SB641	Transistor, Wave form Shaping, Switching
Q401, 402		2SD592NC-R	Transistor, Tonearm Motor Control
Q403, 404		2SD638	Transistor, Tonearm Motor Control
DIODES			
D1	⚠	SVDSIRBA20Z	Rectifier
D2	S	MA1056	Diode
D301		MA1075A	Diode
D302		SVDPR5531K	Light Emitting Diode
D303 ~ 306	S	MA162A	Diode
D501	S	MA162A	Diode
D502		SVDPR3432S	Light Emitting Diode
PHOTO INTERRUPTERS			
PC501		ON1262	Photo Interrupter
PC601		ON1261	Photo Interrupter
RELAY			
RL501		SFDYAW6945	Relay, Muting
SWITCHES			
S1	⚠	SFDSC05N08	Switch, Power
S301		SFDSD05N01	Switch, Record Detector
S302 ~ 305		EVQQJR02K	Switch, Start, Stop, Repeat & Cueing
S306		SFDSHSW0699	Switch, Speed Select
S601		SFDSD2MSL-C	Switch, Rest
S701		SFDSC05N01	Switch, Disc Size Selector
S702		SFDSC05N02	Switch, Rest
S901 [XA] only	⚠	SFDSHXW225-2	Switch, Voltage Adjuster
VARIABLE RESISTORS			
VR201, 202		EVNM6AA00B14	Speed Adjustment, 10kΩ (B)
VR301		EVNK6JA00B24	Clock Frequency Adjustment, 20kΩ (B)
VR501		EVNK6JA00B53	Servo Gain Adjustment, 5kΩ (B)
FUSE			
F1 [XA]	⚠	XBA2C02T1B	Fuse, T200mA 250V
F1 [Other Areas]	⚠	XBA2C06T1B	Fuse, T630mA 250V
F2 [XA] only	⚠	XBA2C06T1B	Fuse, T630mA 250V
THERMISTER			
R504		ERTD2FFK251S	Thermister
HALL ELEMENT			
H1, 2		OH-001	Hall Element, Turntable Position Detector
POWER TRANSFORMER			
T1 [EK, XL]	⚠	SLT48DT4E	Power Transformer
T1 [XA	⚠	SLT57DT1A	Power Transformer
T1 [Other Areas]	⚠	SLT48DT3E	Power Transformer
RESISTORS			
R1	S	ERD25FJ472	Carbon, 1/4W, 4.7kΩ, ± 5%
R2	S	ERD25FJ331	Carbon, 1/4W, 330Ω, ± 5%
R3	S	ERD25FJ152	Carbon, 1/4W, 1.5kΩ, ± 5%
R4, 5	S	ERD25FJ332	Carbon, 1/4W, 3.3kΩ, ± 5%
R6	S	ERD25FJ330	Carbon, 1/4W, 33Ω, ± 5%
R101	S	ERX1ANJ2R7	Metal Oxide, 1W, 2.7kΩ, ± 5%
R102	S	ERD25FJ270	Carbon, 1/4W, 27Ω, ± 5%
R103	S	ERD25FJ182	Carbon, 1/4W, 1.8kΩ, ± 5%
R104	S	ERD25FJ332	Carbon, 1/4W, 3.3kΩ, ± 5%
R106	S	ERD25FJ562	Carbon, 1/4W, 5.6kΩ, ± 5%
R201	S	ERD25FJ102	Carbon, 1/4W, 1kΩ, ± 5%
R202	S	ERD25TJ153	Carbon, 1/4W, 15kΩ, ± 5%
R203	S	ERD25FJ102	Carbon, 1/4W, 1kΩ, ± 5%
R204	S	ERD25TJ153	Carbon, 1/4W, 15kΩ, ± 5%
R205, 206	S	ERD25TJ104	Carbon, 1/4W, 100kΩ, ± 5%
R207	S	ERO25CKF2702	Metal Film, 1/4W, 27kΩ, ± 5%
R208	S	ERD25FJ562	Carbon, 1/4W, 5.6kΩ, ± 5%
R209	S	ERO25CKF8202	Metal Film, 1/4W, 82kΩ, ± 1%
R210	S	ERD25FJ471	Carbon, 1/4W, 470Ω, ± 5%
R211	S	ERD25FJ472	Carbon, 1/4W, 4.7kΩ, ± 5%
R212	S	ERD25TJ333	Carbon, 1/4W, 33kΩ, ± 5%
R301	S	ERD25FJ103	Carbon, 1/4W, 10kΩ, ± 5%
R302, 303	S	ERD25FJ472	Carbon, 1/4W, 4.7kΩ, ± 5%
R304, 305	S	ERD25FJ472	Carbon, 1/4W, 4.7kΩ, ± 5%
R306	S	ERD25FJ102	Carbon, 1/4W, 1kΩ, ± 5%
R307	S	ERD25FJ472	Carbon, 1/4W, 4.7kΩ, ± 5%
R308	S	ERD25FJ331	Carbon, 1/4W, 330Ω, ± 5%
R310	S	ERD25FJ562	Carbon, 1/4W, 5.6kΩ, ± 5%
R312, 313	S	ERD25TJ333	Carbon, 1/4W, 33kΩ, ± 5%
R314, 315	S	ERD25TJ333	Carbon, 1/4W, 33kΩ, ± 5%
R316	S	ERD25TJ333	Carbon, 1/4W, 33kΩ, ± 5%
R317	S	ERD25FJ272	Carbon, 1/4W, 2.7kΩ, ± 5%
R318, 319	S	ERD25FJ332	Carbon, 1/4W, 3.3kΩ, ± 5%
R320	S	ERD25FJ272	Carbon, 1/4W, 2.7kΩ, ± 5%
R321, 322	S	ERD25FJ331	Carbon, 1/4W, 330Ω, ± 5%
R323	S	ERD25FJ562	Carbon, 1/4W, 5.6kΩ, ± 5%
R324	S	ERD25FJ103	Carbon, 1/4W, 10kΩ, ± 5%
R325	S	ERD25TJ333	Carbon, 1/4W, 33kΩ, ± 5%
R326	S	ERD25FJ222	Carbon, 1/4W, 2.2kΩ, ± 5%
R327	S	ERD25FJ103	Carbon, 1/4W, 10kΩ, ± 5%
R328	S	ERD25TJ153	Carbon, 1/4W, 15kΩ, ± 5%
R329, 330	S	ERD25FJ332	Carbon, 1/4W, 3.3kΩ, ± 5%
R331	S	ERD25FJ102	Carbon, 1/4W, 1kΩ, ± 5%
R332	S	ERD25FJ562	Carbon, 1/4W, 5.6kΩ, ± 5%
R333	S	ERD25FJ152	Carbon, 1/4W, 1.5kΩ, ± 5%
R334	S	ERD25FJ222	Carbon, 1/4W, 2.2kΩ, ± 5%
R335	S	ERD25TJ104	Carbon, 1/4W, 100kΩ, ± 5%
R336	S	ERD25FJ682	Carbon, 1/4W, 6.8kΩ, ± 5%
R337	S	ERD25TJ273	Carbon, 1/4W, 27kΩ, ± 5%
R338	S	ERD25FJ222	Carbon, 1/4W, 2.2kΩ, ± 5%
R339	S	ERD25TJ123	Carbon, 1/4W, 12kΩ, ± 5%
R340	S	ERD25FJ272	Carbon, 1/4W, 2.7kΩ, ± 5%
R341	S	ERD25FJ222	Carbon, 1/4W, 2.2kΩ, ± 5%
R401	S	ERD25TJ683	Carbon, 1/4W, 68kΩ, ± 5%
R402	S	ERD25TJ683	Carbon, 1/4W, 68kΩ, ± 5%
R403	S	ERD25FJ472	Carbon, 1/4W, 4.7kΩ, ± 5%
R404	S	ERD25FJ122	Carbon, 1/4W, 1.2kΩ, ± 5%
R405	S	ERD25FJ222	Carbon, 1/4W, 2.2kΩ, ± 5%
R406	S	ERD25FJ102	Carbon, 1/4W, 1kΩ, ± 5%
R407	S	ERD25TJ224	Carbon, 1/4W, 220kΩ, ± 5%
R408	S	ERD25FJ222	Carbon, 1/4W, 2.2kΩ, ± 5%
R409	S	ERD25FJ102	Carbon, 1/4W, 1kΩ, ± 5%
R410	S	ERD25TJ224	Carbon, 1/4W, 220kΩ, ± 5%
R411	S	ERD25FJ272	Carbon, 1/4W, 2.7kΩ, ± 5%
R412	S	ERD25FJ681	Carbon, 1/4W, 680Ω, ± 5%
R501	S	ERD25FJ331	Carbon, 1/4W 330Ω, ± 5%
R502	S	ERD25FJ561	Carbon, 1/4W, 560Ω, ± 5%
R503	S	ERD25FJ221	Carbon, 1/4W, 220Ω, ± 5%
R601	S	ERD25FJ681	Carbon, 1/4W, 680Ω, ± 5%
R801	S	ERD25TJ153	Carbon, 1/4W, 15kΩ, ± 5%
R802	S	ERD25TJ123	Carbon, 1/4W, 12kΩ, ± 5%
R803	S	ERD25TJ153	Carbon, 1/4W, 15kΩ, ± 5%
R804	S	ERD25TJ123	Carbon, 1/4W, 12kΩ, ± 5%
R805	S	ERD25TJ153	Carbon, 1/4W, 15kΩ, ± 5%
R806	S	ERD25TJ123	Carbon, 1/4W, 12kΩ, ± 5%
CAPACITORS			
C1, 2	S ⚠	ECKD1H223PF	Ceramic, 50V, 0.022μF, $^{+100\%}_{-0\%}$
C3	S ⚠	ECKD1H223PF	Ceramic, 50V, 0.022μF, $^{+100\%}_{-0\%}$
C4	S ⚠	ECEB1VS102	Electrolytic, 35V, 1000μF
C5	S	ECEA1HS100	Electrolytic, 50V, 10μF
C101	S	ECQM1H333JZ	Polyester, 50V, 0.033μF, ± 5%
C102	S	ECEA1ES101	Electrolytic, 25V, 100μF
C103, 104	⚠	ECEA1CN101S	Electrolytic, 16V, 100μF
C105	S	ECEA1CS330	Electrolytic, 16V, 33μF
C106	S	ECKD1H223PF	Ceramic, 50V, 0.022μF, $^{+100\%}_{-0\%}$
C201	S	ECQM1H104JZ	Polyester, 50V, 0.1μF, ± 5%
C202	S	ECEA25Z4R7	Electrolytic, 25V, 4.7μF
C203	S	ECQM1H104JZ	Polyester, 50V, 0.1μF, ± 5%
C204	S	ECQM1H473JZ	Polyester, 50V, 0.047μF, ± 5%
C205	S	ECQM1H333JZ	Polyester, 50V, 0.033μF, ± 5%
C206	S	ECQM1H224JZ	Polyester, 50V, 0.22μF, ± 5%
C207	S	ECQM1H104JZ	Polyester, 50V, 0.1μF, ± 5%
C208		ECQV05224JZ	TF, 50VDC, 0.22μF, ± 5%
C209	S	ECEA50Z3R3	Electrolytic, 50V, 3.3μF
C210	S	ECKD1H223PF	Ceramic, 50V, 0.022μF, $^{+100\%}_{-0\%}$
C211	S	ECKD2H102KB	Ceramic, 500V, 0.001μF, ± 5%
C301	S	ECCD1H101K	Ceramic, 50V, 100μF, ± 5%
C302	S	ECQM1H104KZ	Polyester, 50V, 0.1μF, ± 5%
C304	S	ECEA1AS101	Electrolytic, 10V, 100μF, ± 5%
C305	S	ECKD1H561KB	Ceramic, 50V, 560μF, ± 5%
C306		ECKF1E104ZV	Ceramic, 25V, 0.1μF, $^{+80\%}_{-20\%}$
C401	S	ECQM1H223JZ	Polyester, 50V, 0.022μF, ± 5%
C402	S	ECQM1H223JZ	Polyester, 50V, 0.022μF, ± 5%
C501	S	ECEA1ES101	Electrolytic, 25V, 100μF
C601		ECFB1B104ZRM	Ceramic, 50V, 0.1μF

■ TIMING CHART

• 30 cm Record

Start operation

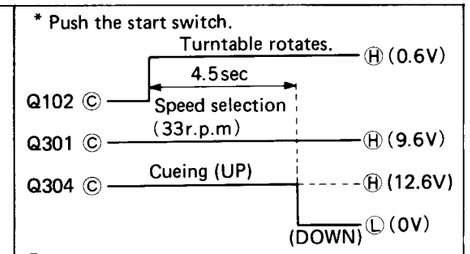

Cueing down operation

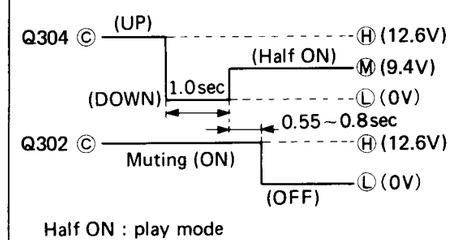

Cueing up operation

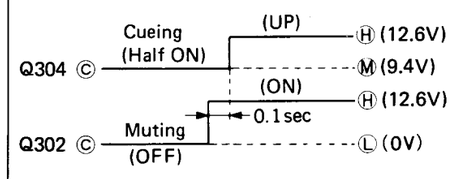

Manual search operation

- When start button is pushed in cueing up mode, the voltage between Q403 ⓒ and Q404 ⓒ becomes 4.0V. (Medium speed)
- When stop button is pushed in cueing up mode, the voltage between Q403 ⓒ and Q404 ⓒ becomes −4.0V. (Medium speed)

Return operation

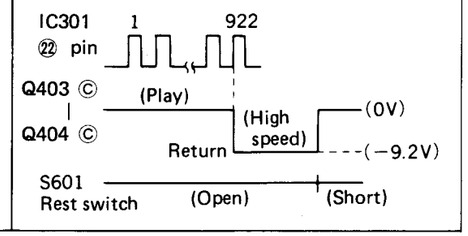

• 17 cm Record

Start operation

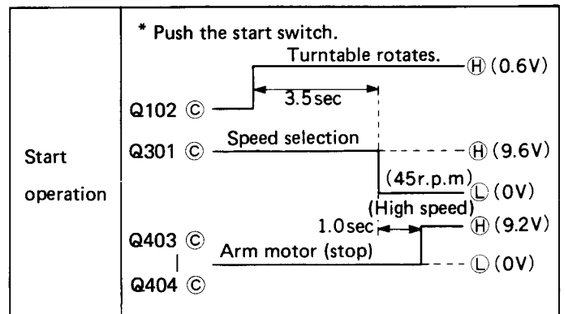

Lead-in operation

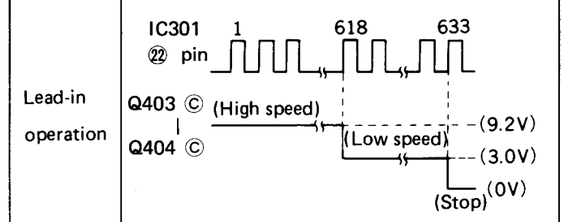

Cueing operation

Same as for 30 cm record.

Return operation

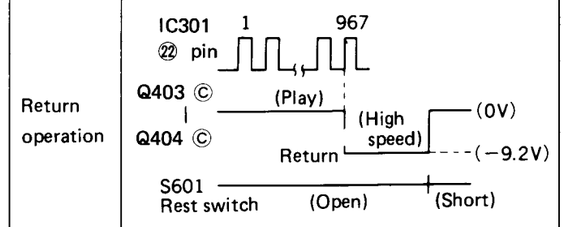

www.hifiengine.com

■ BLOCK DIAGRAM

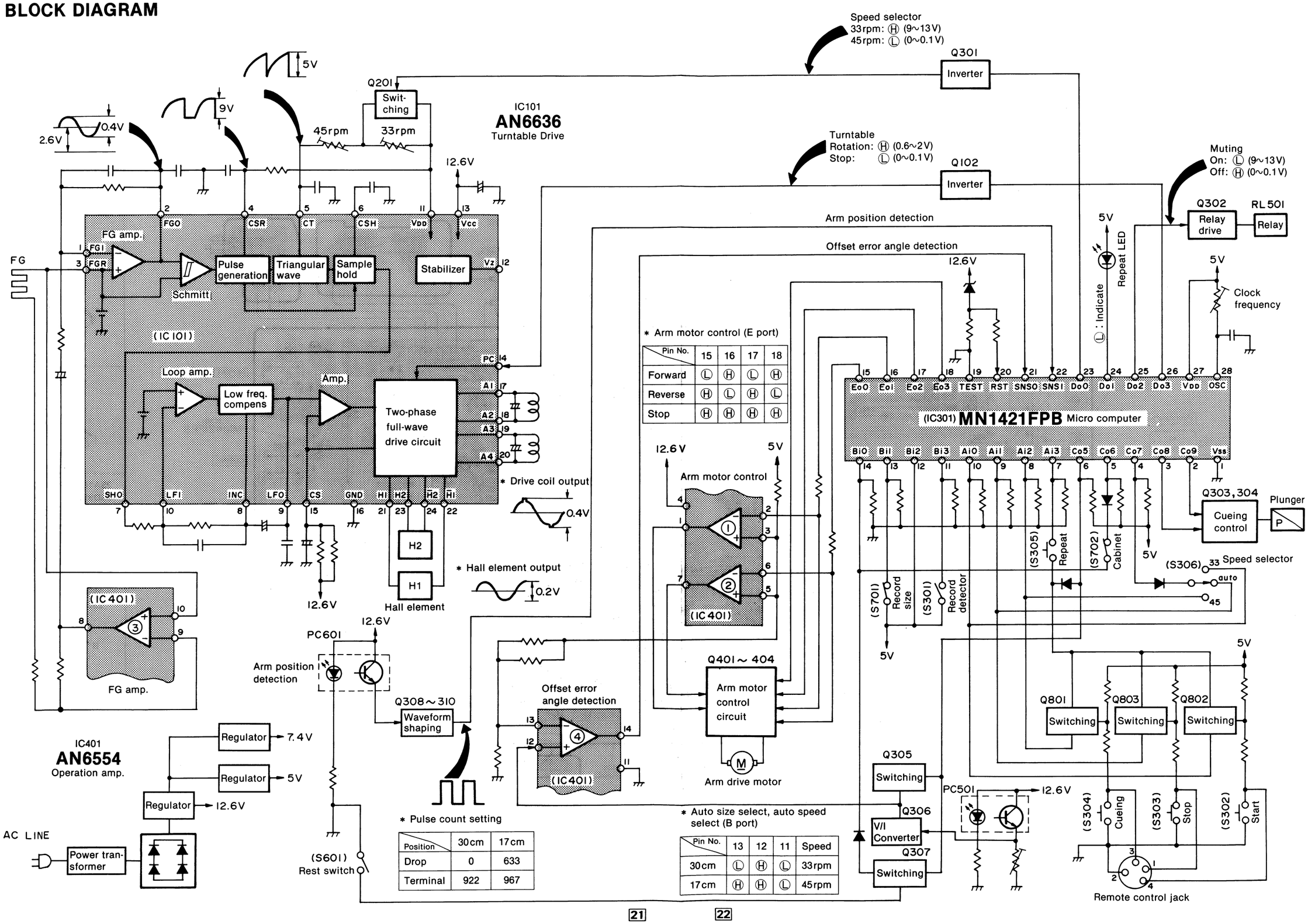

■ CIRCUIT BOARD AND WIRING CONNECTION DIAGRAM

Ground (Earth) lines

• Power source circuit for [XA] only.

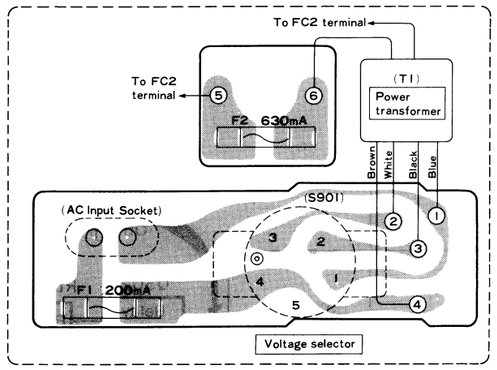

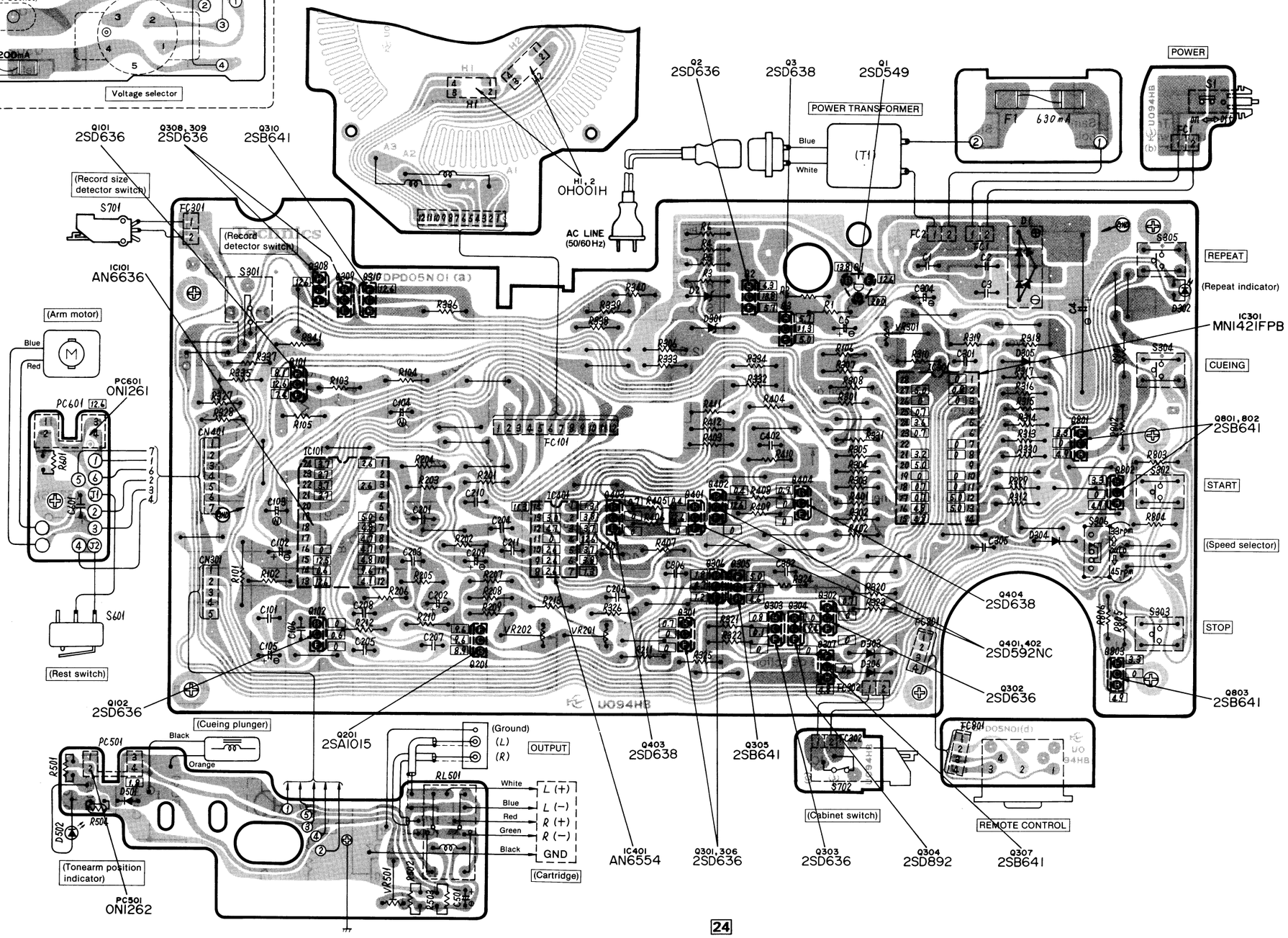

• Terminal guide of transistors, diodes and IC's

AN6636

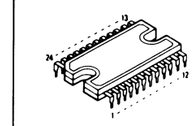

MN1421FPB

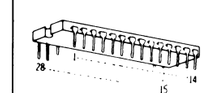

AN6554

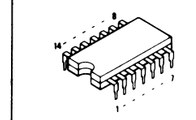

2SD549

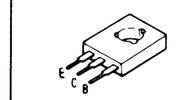

2SA1015, 2SD592NC
2SD892

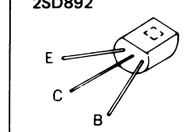

2SB641, 2SD636
2SD638

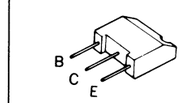

ON1261

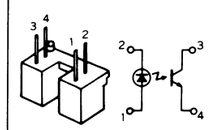

ON1262

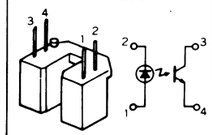

■ SCHEMATIC DIAGRAM (This schematic diagram may be modified at any time with the development of new technology.)

Notes:

1. **S1** : On/off switch in "**on**" position.
2. **S301** : Record detector switch in "**off**" position. (It is detects the record on the turn table.)
3. **S302** : Start switch in "**off**" position. (It is not pushed.)
4. **S303** : Stop switch in "**off**" position. (It is not pushed.)
5. **S304** : Cueing control switch in "**off**" position. (It is not pushed.)
6. **S305** : Repeat switch in "**off**" position. (It is not pushed.)
7. **S306** : Speed selector switch in "**auto**" position.
   33 rpm ◄► auto ◄► 45 rpm
8. **S601** : Rest switch in "**off**" position. (Tonearm is off the rest position.)
9. **S701** : Record size detector switch in "**on**" position. (17 cm record is on the turntable.)
10. **S702** : Cabinet switch in "**on**" position. (Upper cabinet is closed.)
11. **S901** : Voltage selector in "**110 – 120V**" position.
    110 – 120V ◄► 220 – 240V
12. Indicated voltage values are the standard values for the measured by the DC electronic circuit tester (high-impedance) with the chassis taken as standard. Therefore, there may exist some errors in the voltage values, depending on the internal impedance of the DC circuit tester or the set measured.
    * [ ] is the voltage at 45 rpm.
    * ( ) is the voltage at 33 rpm.
    * ( ) is the voltage when tonearm is in lead-in mode.
    * < > is the voltage when tonearm is in return mode.
    * ⌐ ⌙ is the voltage when turntable is in stop.
13. ▬ Positive voltage lines.
14. Important safety notice:
    Components identified by ⚠ mark have special characteristics important for safety.
    When replacing any of these components, use only manufacturer's specified parts.

• Power source circuit fot [XA] only.

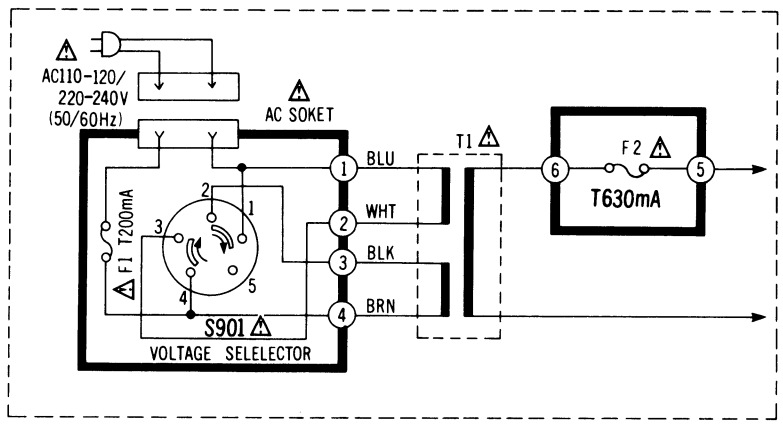

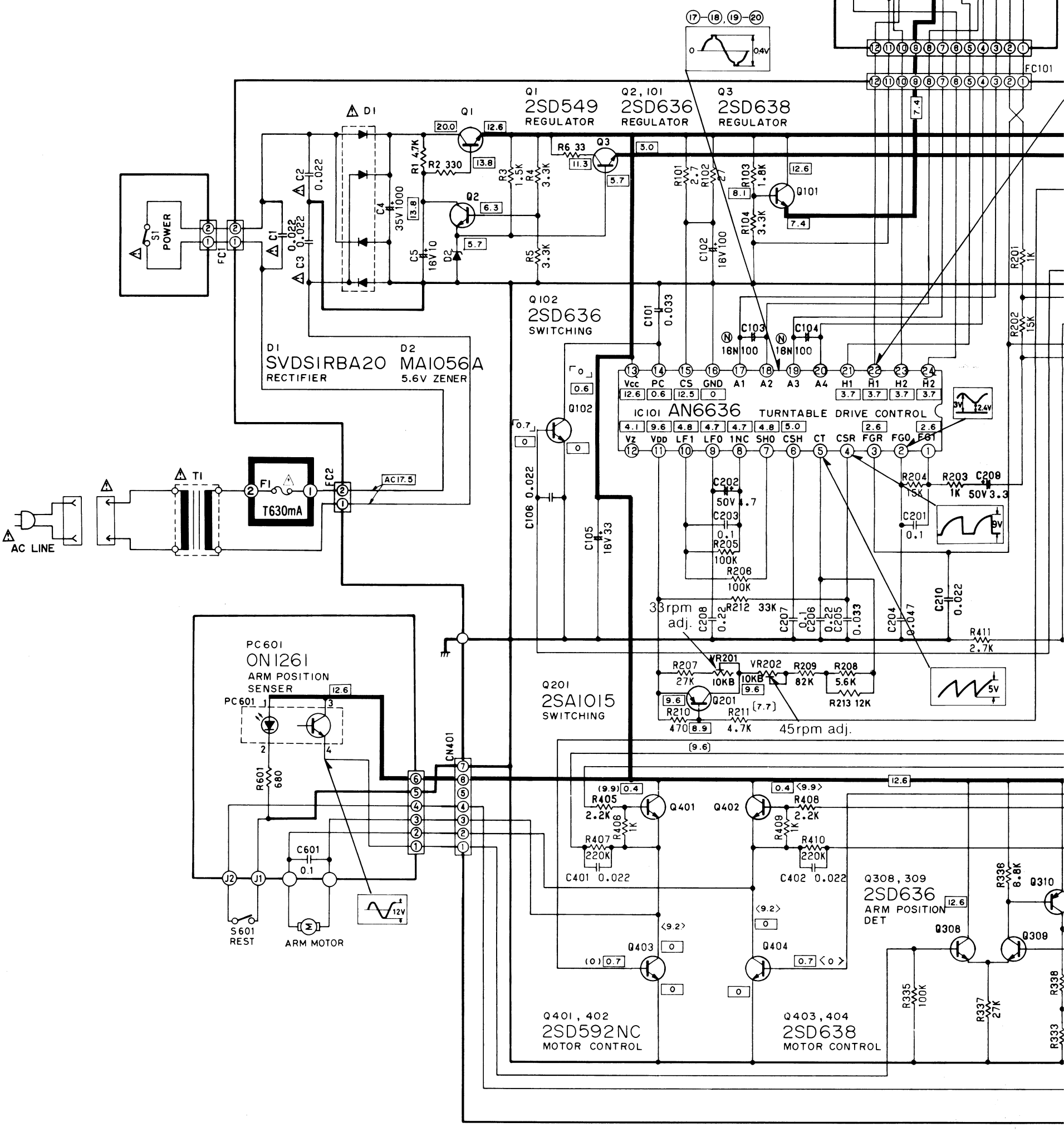

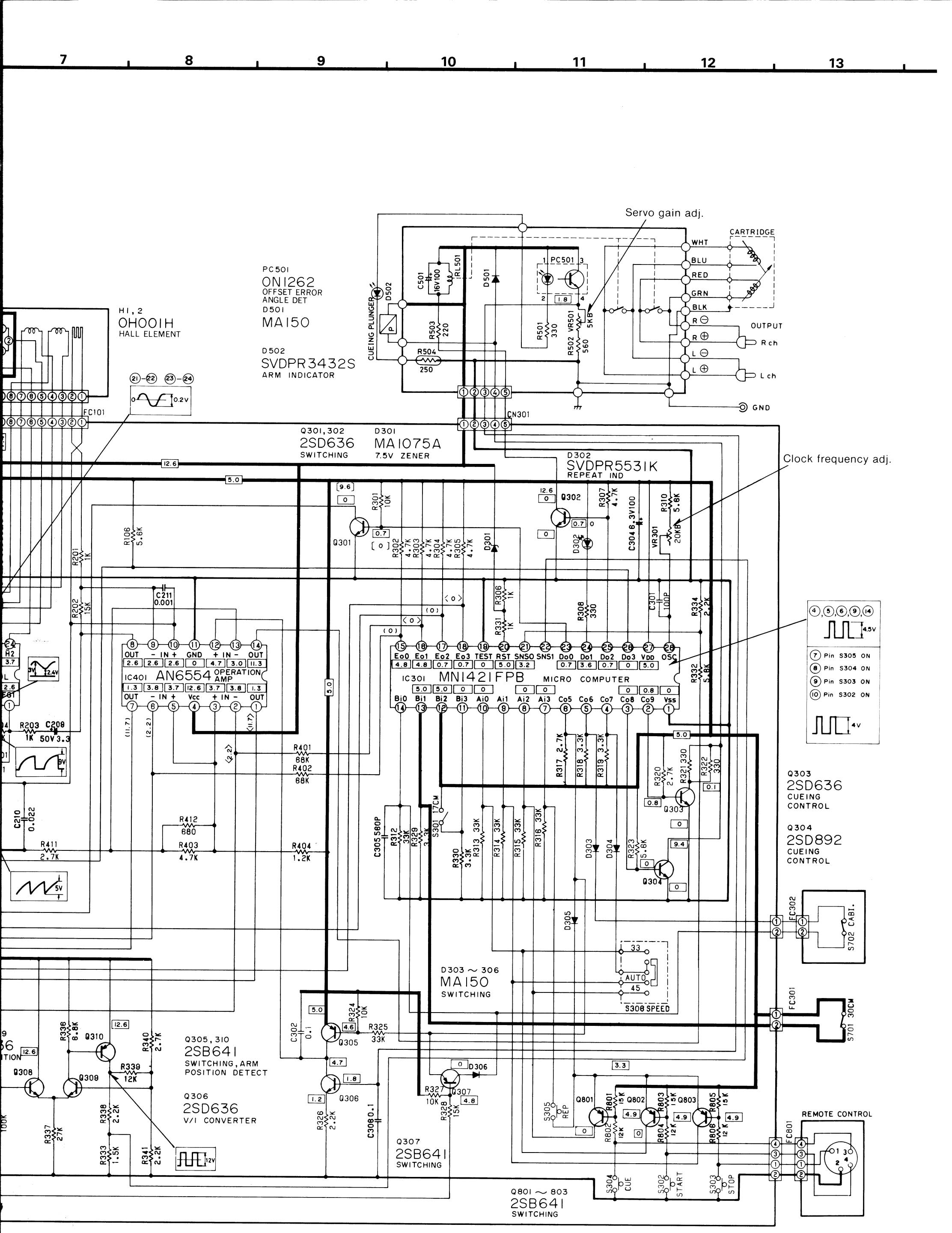
7
8
9
10
11
12
13
Servo gain adj.
CARTRIDGE
WHT
BLU
RED
GRN
BLK
R ⊖
R ⊕
L ⊖
L ⊕
OUTPUT
R ch
L ch
GND
PC501
ON1262
OFFSET ERROR
ANGLE DET
D501
MA150
D502
SVDPR3432S
ARM INDICATOR
CUEING PLUNGER
H1, 2
OH001H
HALL ELEMENT
FC101
CN301
Q301, 302
2SD636
SWITCHING
D301
MA1075A
7.5V ZENER
D302
SVDPR5531K
REPEAT IND
Clock frequency adj.
IC401
AN6554
OPERATION AMP
IC301
MN1421FPB
MICRO COMPUTER
Pin S305 ON
Pin S304 ON
Pin S303 ON
Pin S302 ON
Q303
2SD636
CUEING CONTROL
Q304
2SD892
CUEING CONTROL
FC302
S702 CABI.
FC301
S701 30CM
D303 ~ 306
MA150
SWITCHING
S308 SPEED
33
AUTO
45
Q305, 310
2SB641
SWITCHING, ARM POSITION DETECT
Q306
2SD636
V/I CONVERTER
Q307
2SB641
SWITCHING
Q801 ~ 803
2SB641
SWITCHING
REMOTE CONTROL
FC801
S305 REP
S304 CUE
S302 START
S303 STOP

■ EXPLODED VIEWS

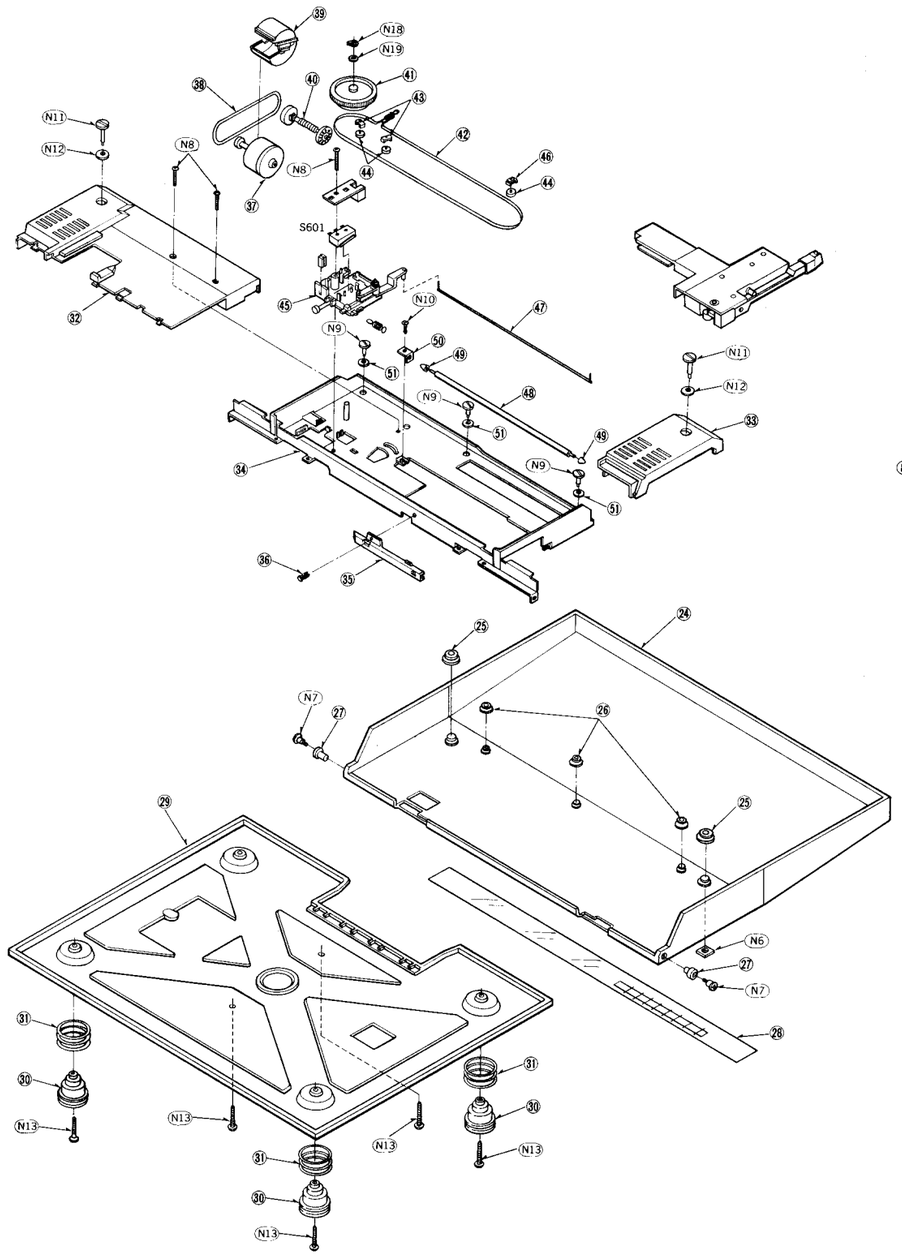

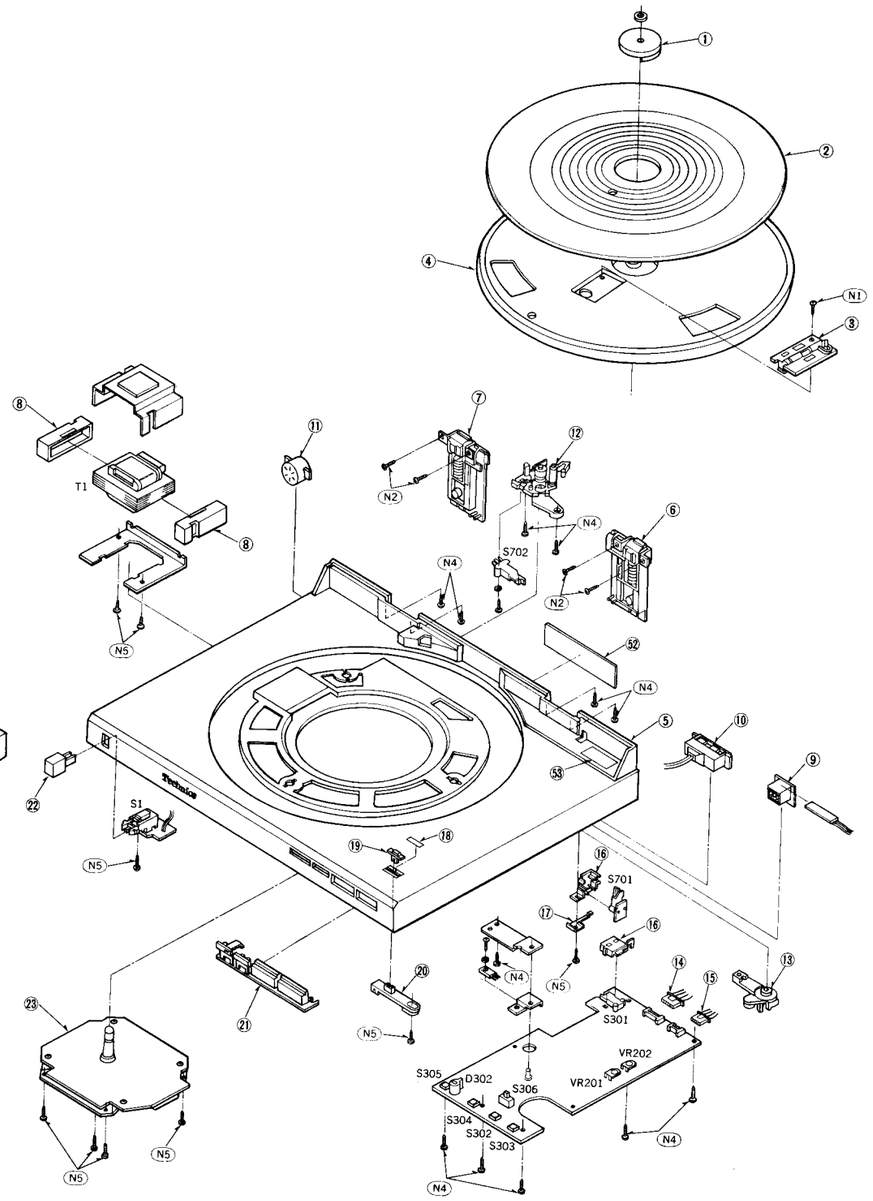

● **Tonearm**

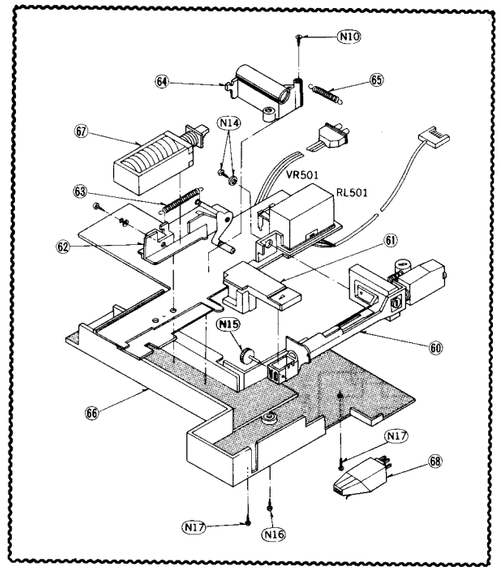

■ REPLACEMENT PARTS LIST.....Cabinet & Chassis Parts

Notes:
1. Part numbers are indicated on most mechanical parts. Please use this part number for parts orders.
2. Important safety notice: Components identified by ⚠ mark have special characteristics important for safety. When replacing any of these components, use only manufacturer's specified parts.
3. Bracketed indications in Ref. No. columns specify the area. Parts without these indications can be used for all areas.
4. The "S" mark is service standard parts and may differ from production parts.
5. [K] -marked parts are used for black only, while ○-marked parts are for silver type only.
6. Parts other than [K] -and ○-marked are used for both black and silver types.

Black type model No. : SL-DL5 (K)

Areas
- * [E] is available in Switzerland and Scandinavia.
- * [EK] is available in United Kingdom.
- * [XL] is available in Australia.
- * [EG] is available in F.R. Germany.
- * [EB] is available in Belgium.
- * [EF] is available in France.
- * [XA] is available in Southeast Asia, Oceania, Africa, Middle Near East and Central South America.
- * [EH] is available in Holland.
- * [Ei] is available in Italy.
- * [EC] is available in Czechoslovakia.

Ref. No.		Part No.	Part Name & Description
CABINET and CHASSIS PARTS			
1		SFWEC05N01	45 Adaptor
2		SFTGC05N01	Turntable Mat
3		SFUMC05N11A	Record Detector
4		SFTEC05N01A	Turntable
5	○	SFACD05N01	Cabinet
5	K	SFACD05S21	Cabinet (Black Type)
6		SFATC05N01A	Hinge, Right Side
7		SFATC05N02A	Hinge, Left Side
8		SFGCC05N02	Cushion Rubber, Power Transformer
8 [XA] only		SFGCC05X01	Cushion Rubber, Power Transformer
9	⚠	SFDJHSC0492	Socket, AC Power
9 [XA] only	⚠	SFDJHSC04912	Socket, AC Power
10		SFDHC05N02E	Socket, Input
11		SFDLD05N01	Socket, Remote Control
12		SFUMC05N07A	Record Size Detection Lever
13		SFUMC05N13E	Record Detector Lever
14		SFDJC05N02E	Connector Ass'y (7P)
15		SFDJC05N03E	Connector Ass'y (5P)
16		SFUMC05N15	Cover, Switch S301, 701
17		SFQPC05N01	Spring, S702
18	○	SFKKD05N02	Label, Speed Selector
18	K	SFKKD05S21	Label, Speed Selector (Black Type)
19		SFKTD05N02	Knob, Speed Selector
20		SFUMD05N03	Guide, Speed Selector Knob
21		SFKTC05N01E	Knob, Start, Stop Ass'y
22		SFKTD05N01	Knob, Power
23		SFMZD05N01Z	Stator Frame Ass'y
24	○	SFADD05N01E	Dust Cover
24	K	SFADD05S21E	Dust Cover (Black Type)
25		SFGCD05N01	Cushion Rubber (A)
26		SFGCC05N03	Cushion Rubber (B)
27		SFGCC05N06	Cushion Rubber (C)
28		SFKKD05N01	Surface Plate
29		SFAUD05N01	Bottom, Board
30		SFGAC05N01	Audio Insulator
31		SFQCC05N01	Spring, Audio Insulator
32		SFUMD05N01	Cover, Rest Switch Plate
33		SFUMD05N02	Cover, Right Side
34		SFUKD05N01A	Arm Drive Plate
35		SFUMC05N20	Guide, Lead Wire
36		SFUZC05N03	Latch
37		SFMHC05N01E	Arm Drive Motor
38		SFGBC10–01	Belt, Arm Drive (With Pulley)
39		SFGCC05N01	Cushion Rubber
40		SFUMC05N16A	Worm Ass'y
41		SFUMC05N17	Arm Drive Wheel
42		SFUZC05N02E	Arm Drive Rope Ass'y
43		SFUMC07–22	Stopper, Pulley
44		SFUMC05N22	Pulley
45		SFUMC05N02E	Plate, Rest Switch
46		SFUMC05N23	Stopper, Pulley
47		SFUZC05N01	Rod, Rest Switch
48		SFXJC05N01	Guide Rail
49		SFGCC05N05	Cushion Rubber
50		SFUPC05N03	Plate, Guide Rail
51		SFGCC05N04	Cushion Rubber
52 [E]		SFNND05S01	Name Plate
52 [EK, XL]		SFNND05G02	Name Plate
52 [XA]		SFNND05X01	Name Plate
52 [Other Areas]		SFNND05R01	Name Plate

Ref. No.		Part No.	Part Name & Description
53		SFNHC05X01	Label
TONE ARM PARTS			
60		SFPAM00501A	Tonearm
61		SFPAB00501E	Tonearm Position, Indicator
62		SFPJL00501E	Lift Plate Ass'y
63		SFPSP00504	Spring, Left
64		SFPAB00502	Bracket, Tonearm
65		SFPSP00503	Spring, Lead Wire
66		SFPCS00501	Cover, Arm Base
67		SFDZC05N01	Cueing Plunger
68	★	EPC–P24S	Cartridge
	★	EPS–24CS	Stylus
SCREWS, WASHERS and CIRCLIPS			
N1	S	XTN3+6BFZ	Screw, Tapping, ⊕ 3 x 6
N2	S	XTV3+6BFZ	Screw, Tapping, ⊕ 3 x 6
N3		XTV3+20BFN	Screw, Tapping, ⊕ 3 x 20
N4	S	XTV3+8BFN	Screw, Tapping, ⊕ 3 x 8
N5		XTW3+10Q	Screw, Tapping, ⊕ 3 x 10
N6		XNC3HS	Nut, ϕ3
N7		SFXGC05N03	Screw
N8	S	XTV3+20BFZ	Screw, Tapping, ⊕ 3 x 20
N9		SFXGC05N02	Screw
N10	S	XTV3+8BFZ	Screw, Tapping, ⊕ 3 x 8
N11		SFXGD05N01	Screw
N12		SFGCC05N04	Washer
N13		XTW3+20QFYR	Screw, Tapping, ⊕ 3 x 20
N14	S	XSN3+5S	Screw, Tapping, ⊕ 3 x 5
N15		SFPEV00502	Screw
N16	S	XTV3+10BFZ	Screw, Tapping, ⊕ 3 x 10
N17	S	XSN26+10BV	Screw, Tapping, ⊕ 2.6 x 10
N18		SFXW551D2	Washer
N19		XUB3FP	Washer, ϕ3
ACCESSORIES			
A1 [EK, XL]		SFNUD05G01	Instructions Book, Printed Matter
A1 [XA]		SFNUD05X01	Instructions Book, Printed Matter
A1 [EG]		SFNUD05R01	Instructions Book, Printed Matter
A1 [EF]		SFNUD05F01	Instructions Book, Printed Matter
A1 [Ei]		SFNUD05i01	Instructions Book, Printed Matter
A1 [Other Areas]		SFNUD05S01	Instructions Book, Printed Matter
A2		SFDHC05N01	Phono Cord
A3		SFDLC05N01	Ground Wire
A4 [EK]	S ⚠	RJA43Z	AC Cord
A4 [XL]	S ⚠	RJA26Z	AC Cord
A4 [Other Areas]	S ⚠	RJA20Z	AC Cord
A5 [XA] only	⚠	SFDKi19118	2P Plug
A6		SFUMC05N24	Adaptor, 25 cm Record
PACKING PARTS			
P1 [EF]	○	SFHPD05C01	Carton, Box
P1 [Other Areas]	○	SFHPD05M01	Carton, Box
P1	K	SFHPD05M21	Carton, Box (Black Type)
P2		SFHHD05N01	Pad, Front
P3		SFHHD05N02	Pad, Rear
P4		SFHDD05N01	Sheet, Turntable
P5		SFHKC05N01	Screw, Clamp
P6		SFHKC05N02	Spacer, Tonearm
P7		SFHSD05N01	Spacer, Dust Cover
P8		SFHSC05N02	Stopper, 45 Adaptor
P9		SFYH60X60	Polyethylene Bag, Unit
P10		SFYH15X20	Polyethylene Bag, Accessory
P11		SFYF05A06	Polyethylene Bag, 25 cm Record Adaptor

■ PACKINGS

1. Set the tonearm to the start position.
2. Attach the arm spacer.

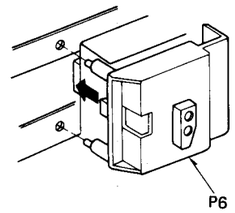

3. Attach the clamper, 45-adaptor holder and dust cover specer.
4. Stick the protection sheet on the top of dust cover.

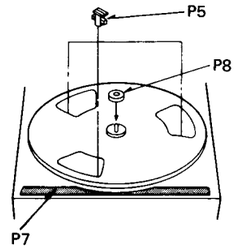

5. Put the set into the polyethylene bag and then pack it as illustrated.

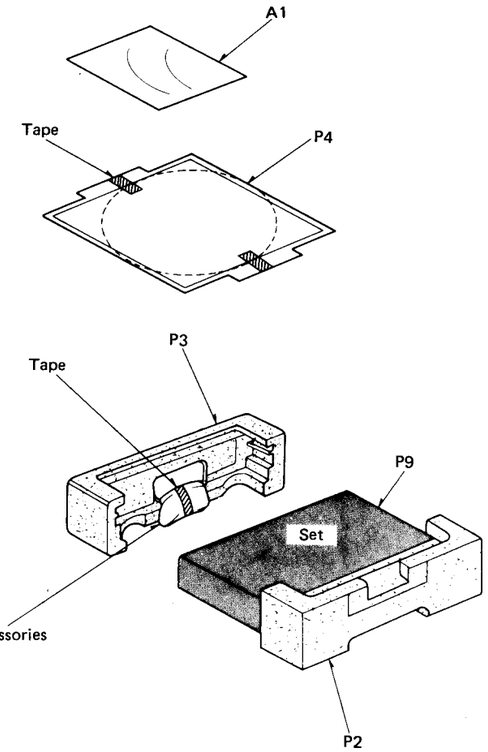

6. Plase the unit (with cushions attached) as illustrated.
7. Fold the flaps according to the line marks.
8. Seal the top with adhesive tape.
   * Use gum tape or adhesive cloth tape of 50mm wide at least.
9. For the edges, first fold the flap "a" and then flap "b", and staple. Remember to staple only flap "b". (Use 15 or 16mm staple)

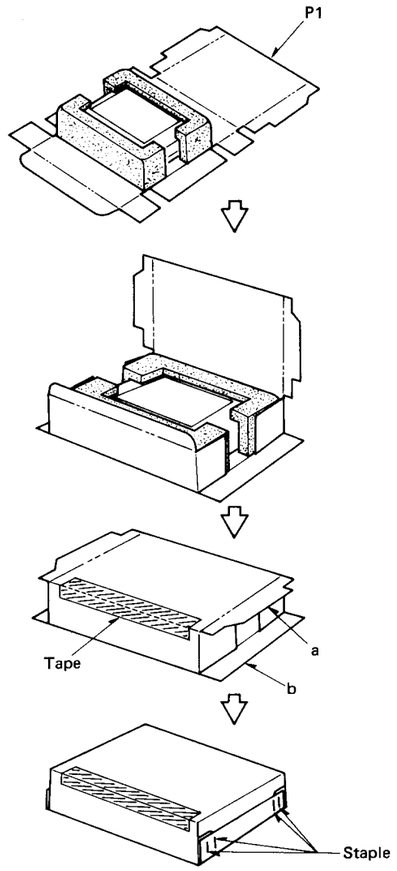

* Stapling positions are shown below.

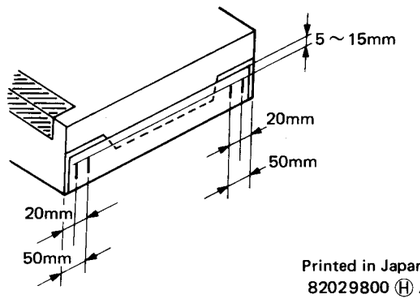

Printed in Japan
82029800 Ⓗ AM/YW

ORDER NO. SD82072258C4

Service Manual

Direct Drive Automatic Turntable System

SL-DL5/(K)

[PA], [PE], [PC]

* The colors of this model include silver and black.
* The black type model is provided with (K) in the Service Manual.

Areas

* [PA] is available in Far East PX.
* [PE] is available in European Military.
* [PC] is available in European Audio Club.

Please use this manual together with the Service manual for Model No. SL-DL5/(K) Order No. SD82022117C2.

CHANGES

■ REPLACEMENT PARTS LIST

Ref. No.	Change of Part No. SL-DL5/(K) (ORDER NO. SD82022117C2)		➡ SL-DL5/(K) [PA, PE, PC]	Part Name & Description	Per Set (Pcs.)	Remarks
SWITCH						
S901	SFDSHXW225–2	[XA] only	SFDSHXW225–2	Switch, Voltage Selector	1	
FUSES						
F1	XBA2C02T1B	[XA]	XBA2C02T1B	Fuse, T200mA 250V	1	
	XBA2C06T1B	[Other Areas]				
F2	XBA2C06T1B	[XA] only	XBA2C06T1B	Fuse, T630mA 250V	1	
POWER TRANSFORMER						
T1	SLT48DT4E	[EK, XL]	SLT57DT1A	Power Transformer, Power Source	1	
	SLT57DT1A	[XA]				
	SLT48DT3E	[Other Areas]				
CABINET and CHASSIS PARTS						
8	SFGCC05N02	[Other Areas]	SFGCC05X01	Rubber Cushion, Power Transformer	1	
	SFGCC05X01	[XA] only				
9	SFDJHSC0492	[Other Areas]	SFDJHSC04912	Socket, AC Cord	1	
	SFDJHSC04912	[XA] only				
52	SFNND05S01	[E, EC]	SFNND05P01 [PA, PE]	Name Plate	1	
	SFNND05G01	[EK, XL]				
	SFNND05X01	[XA]	SFNND05P02 [PC]	Name Plate	1	
	SFNND05R01	[Other Areas]				
68	PEC–P24S		EPC–P28	Cartridge	1	
	EPS–24CS		EPS–28ES	Stylus	1	

Technics

Panasonic Tokyo
Matsushita Electric Industrial Co., Ltd.
1-2, 1-chome, Shibakoen, Minato-ku, Tokyo 105 Japan

Matsushita Electric Trading Co., Ltd.
P.O. Box 288, Central Osaka Japan

www.hifiengine.com

Ref. No.	Change of Part No.		Part Name & Description	Per Set (Pcs.)	Remarks
	SL-DL5/(K) (ORDER NO. SD82022117C2)	➡ SL-DL5/(K) [PA, PE, PC]			
ACCESSORIES					
A1	SFNUD05G01 [EK, XL]	SFNUD05G01	Instruction Book	1	
	SFNUD05X01 [XA]				
	SFNUD05R01 [EG]				
	SFNUD05F01 [EF]				
	SFNUD05I01 [Ei]				
	SFNUD05S01 [Other Areas]				
A4	RJA43Z [EK]	QFC1100	AC Cord	1	
	RJA26Z [XL]				
	RJA20Z [Other Areas]				
A5	SFDK119118 [XA] only	Deletion	.....	0	
A7	Addtion	QJP0603S	Adaptor, Gimens	1	
PACKING PART					
P1	SFHPD05C01 [EF] only	SFHPD05M21	Carton Box (Black)	1	
	SFHPD05M01 [Other Areas]				

Printed in Japan
82070610 Ⓗ AM

www.hifiengine.com