ORDER NO. HAD8512311C0
A6

Service Manual

Compact Disc Player

SL-P500

COMPACT disc DIGITAL AUDIO

DIGITAL

Compact Disc Player

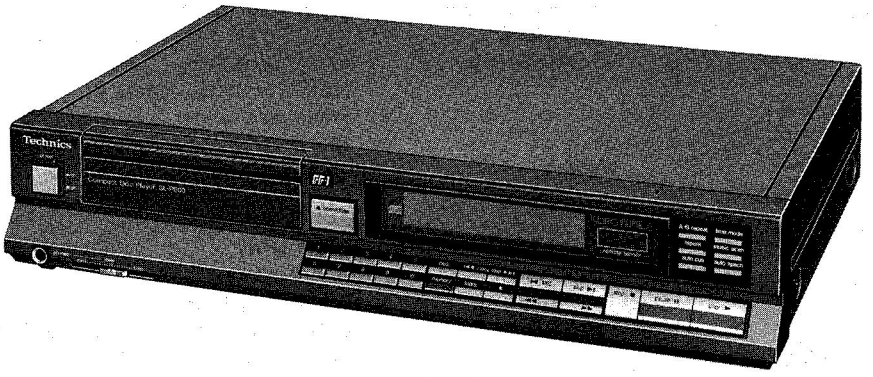

Color	Areas
(K)	[M].....U.S.A.
(K)	[MC]...Canada.
(K) (S)	[E].....Switzerland and Scandinavia.
(K) (S)	[EK]....United Kingdom.
(K) (S)	[XL]....Australia.
(K) (S)	[EG]...F.R. Germany.
(K) (S)	[EB]....Belgium.
(K) (S)	[EH]...Holland.
(K) (S)	[EF]....France.
(K) (S)	[Ei].....Italy.
(K) (S)	[XA]....Southeast Asia, Oceania, Africa, Middle Near East and Central South America.
(K) (S)	[PA]....East PX.
(K) (S)	[PE]....European Military.
(K) (S)	[PC]....European Audio Club.

Color

(K)...Black Type
(S)...Silver Type

■ CONTENTS

Technics

Matsushita Services Company
50 Meadowland Parkway,
Secaucus, New Jersey 07094

Panasonic Sales Company, Division of Matsushita Electric of Puerto Rico, Inc.
Ave. 65 De Infanteria, KM 9.7
Victoria Industrial Park
Carolina, Puerto Rico 00630

Panasonic Hawaii Inc.
91-238 Kauhi St. Ewa Beach
P.O. Box 774
Honolulu, Hawaii 96808-0774

Matsushita Electric of Canada Limited
5770 Ambler Drive, Mississauga,
Ontario, L4W 2T3

Matsushita Electric Trading Co., Ltd.
P.O. Box 288, Central Osaka Japan

Panasonic Tokyo Office
Matsushita Electric Trading Co., Ltd.
6th Floor, World Trade Center Bldg.,
No. 4-1, Hamamatsu-cho 2-Chome, Minato-ku,
Tokyo 105, Japan

■ SPECIFICATIONS

■ Audio

No. of channels: 2 (left and right, stereo)
Frequency response: 4—20,000 Hz ±0.2 dB
Dynamic range: More than 96 dB
S/N ratio: More than 102 dB
Harmonic distortion: 0.0012% (1 kHz, 0 dB)
Total harmonic distortion: 0.0025% (1 kHz, 0 dB)
Channel separation: More than 100 dB
Wow and flutter: Below measurable limit
Low-pass filter: High resolution digital filter

■ Signal Format

Sampling frequency: 44.1 kHz
Correction system: Technics Super Decoding Algorithm
D-A conversion: 16-bit linear

■ Pickup

Type: Fine-focus, one beam

Light source: Semiconductor laser
Wavelength: 780 nm
Traverse system: High-speed linear access system
Spindle system: Brushless DD motor

■ Functions

Automatic play: All tracks.
Random access play: Track number or index number.
Repeat play: Entire disc or programmed tracks.
A-B block repeat play.
Program repeat play.
Search: Forward/backward track skip.
Forward/backward index skip
Forward/backward manual search.
Program play: For up to 20 tracks
Index programming (max. 10 steps).
Display: Total tracks.
Programmed tracks.
Current track.
Index numbers.
The following four time modes display minutes and seconds according to the time mode select button setting:

① Disc remaining playing time.
② Track number and remaining playing time of current track.
③ Disc elapsed playing time.
④ Track number and elapsed playing time from beginning of current track.

Over indicator
Pause indicator
Digital attenuation indicator
A-B repeat indicator
Repeat/programmed repat indicator
Music scan indicator
Auto space indicator
Program order indicator
Auto cue indicator
Disc indicator.

Disc loading: Motor-driven horizontal type.
Headphone output level: 100 mW max. 32Ω (adjustable)

■ General

Power supply: For U.S.A. and Canada:
AC 120V, 60Hz
For Others:
AC 110~127/220~240V, 50/60Hz
Power consumption: 17 W
Output voltage: 2 V (at 0 dB)
Output impedance: Approx. 600Ω
Load impedance: More than 10 kΩ
Dimensions (W×D×H): 43×27.2×8.7 cm
(16 15/16"×10 23/32"×3 7/16")
When disc holder is opened
39.4 cm (15½") (D)
Weight: 4.6 kg (10.1 lbs.)

■ Infrared remote control unit

Dimensions (W×D×H): 6.5×15.5×1.8 cm
Batteries: UM-3 "AA" batteries or IEC R6 or equivalent (1.5 V×2)
Remote control functions: Numeric buttons (0 ~ 9)
Memory button
Clear button
A-B repeat button
Repeat button
Music scan button
Digital attenuation buttons
Recall button
Index button
Time mode select button
Forward and backward search buttons
Forward and backward skip buttons
Stop button
Pause button
Play button
Weight: 140 g (including batteries)

Specifications are subject to change without notice for further improvement.
Weight and dimensions are approximate.

■ SAFETY PRECAUTION (This "safety precautions" is applied only in U.S.A.)

1. Before servicing, unplug the power cord to prevent an electric shock.
2. When replacing parts, use only manufacturer's recommended components for safety.
3. Check the condition of the power cord. Replace if wear or damage is evident.
4. After servicing, be sure to restore the lead dress, insulation barriers, insulation papers, shields, etc.
5. Before returning the serviced equipment to the customer, be sure to make the following insulation resistance test to prevent the customer from being exposed to a shock hazard.

• INSULATION RESISTANCE TEST

1. Unplug the power cord and short the two prongs of the plug with a jumper wire.
2. Turn on the power switch.
3. Measure the resistance value with ohmmeter between the jumpered AC plug and each exposed metal cabinet part, such as screwheads antenna, control shafts, handle brackets, etc. Equipment with antenna terminals should read between 3MΩ and 5.2MΩ to all exposed parts. (Fig. A) Equipment without antenna terminals should read approximately infinity to all exposed parts. (Fig. B)

Note: Some exposed parts may be isolated from the chassis by design. These will read infinity.

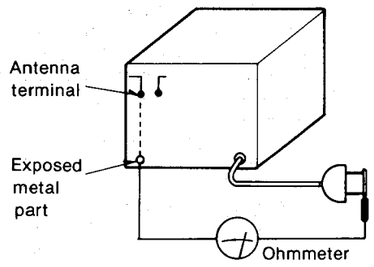

(Fig. A)

Resistance = 3MΩ—5.2MΩ

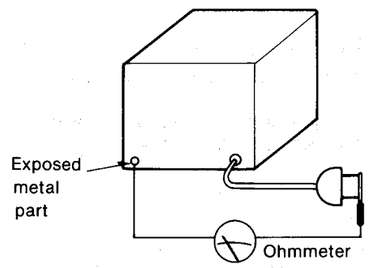

(Fig. B)

Resistance = Approx ∞

4. If the measurement is outside the specified limits, there is a possibility of a shock hazard. The equipment should be repaired and rechecked before it is returned to the customer.

■ PRECAUTION OF LASER DIODE

Caution: This product utilizes a laser diode.
ADVARSEL: I dette a apparat anvendes laser.

• Use of caution labels

Note: ○ Mark is used, × Mark is not used.

Areas	SRNZ010S01	SRNZ007S05	SQWD10	SRNZ010S02
[M]	×	○	×	×
[MC]	×	×	○	×
[E], [EK], [EG], [EB], [EH], [EF], [EI], [XL]	○	○	×	○
[XA]	×	○	×	×
[PA], [PE], [PC]	×	×	×	×

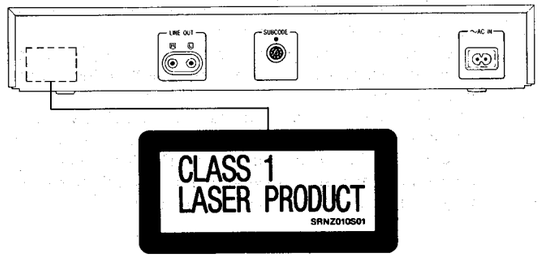

Obs:
Apparaten innehåller laser
Komponent av höger laserklass
än klass 1.

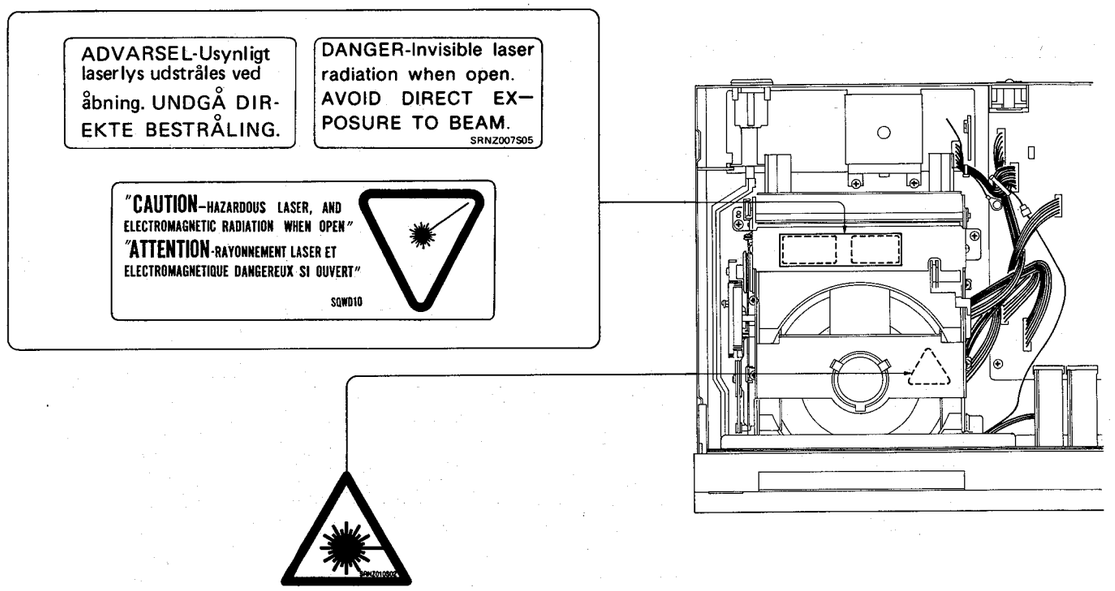

VAROITUS! Laite sisältää laserdiodin, joka lähettää näkymätöntä silmille vaarallista lasersäteilya

■ BEFORE USING THIS UNIT

1. Place a soft cloth under the unit to protect it from scratches.
2. Press the lock shaft on the bottom panel to the in position (▮ → ▬).

NOTE:
IF THE PLAYER IS TRANSPORTED AGAIN, PERFORM THE FOLLOWING, STEPS:
1) Remove the disc from the holder.
2) Press the lock shaft to the out position (▬ → ▮).
CAUTION:
Do not transport the player without locking the lock shaft. Severe damage will result.

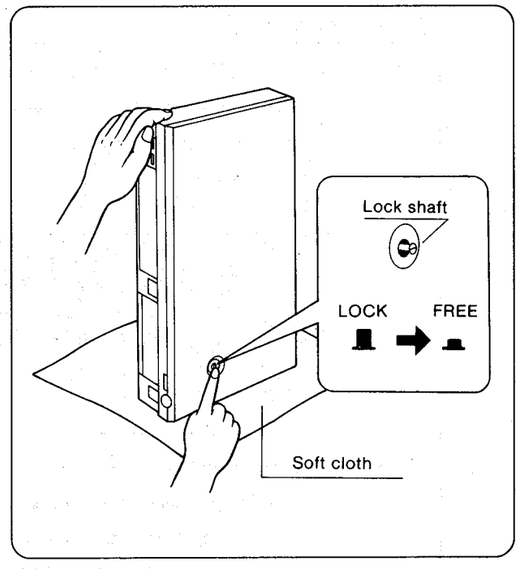

■ LOCATION OF CONTROLS

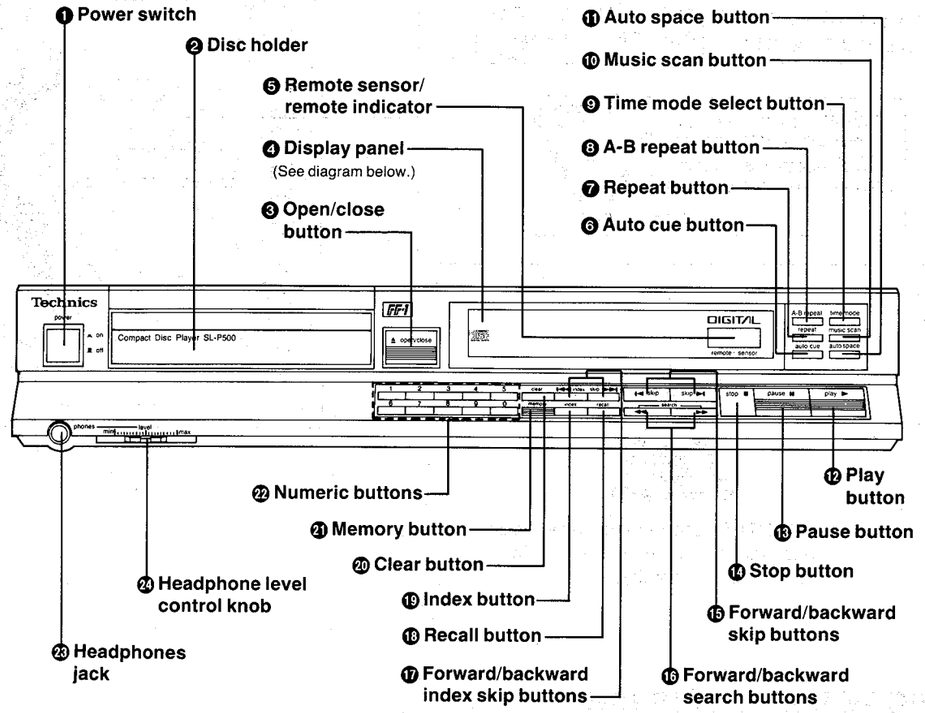

(Display panel section)

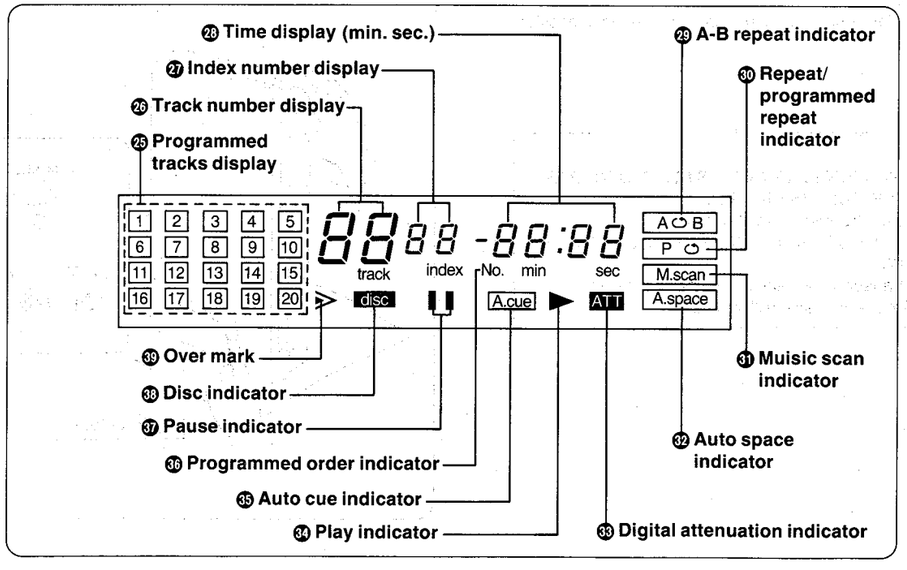

■ FUNCTIONS

❶ Power switch

Press (▙→▟) to switch power on and press again (▟→▙) to switch power off.

❷ Disc holder

The disc is inserted in this holder with the label side up.

❸ Open/close button

Press this button to open and close the disc holder.

❹ Display panel

(Please refer to items ❷❺ to ❸❾.)

❺ Remote sensor/remote indicator

Signals from the accessory infrared remote control unit are received here.

The remote indicator illuminates to show when a command from the remote control has been received.

❻ Auto cue button

Press this button to activate the auto cue mode in which the unit automatically switches to the standby mode immediately before the beginning of each track.
To resume disc play, press the play button.

❼ Repeat button

Press this button to activate the repeat mode.

❽ A-B repeat button

Press to repeat a section between two specified points A and B.

- The first time this button is pressed, the " A↻ " repeat indicator illuminates, and the starting point of the disc section to be played repeatedly is set.
- The second time this button is pressed the " A↻B " repeat indicator illuminates. The ending point of the repeat section is set.
- The section of the disc between these two points will now be played repeatedly until this button is pressed a third time to cancel the A-B repeat mode. This function is very convenient because it allows you to specify a section to be played repeatedly while listening to a disc.

❾ Time mode select button

Use this button to select the desired time display mode.

① Disc remaining playing time.
② Track number and remaining playing time of current track.
③ Disc elapsed playing time.
④ Track number and elapsed playing time from beginning of current track.

❿ Music scan button

Press to specify music scan play.

When this button is pressed, the first ten seconds (or the specified time) of each track on the disc or each programmed track is played. This is very useful for quickly determining the contents of a disc.
The time that each track is played can be set from 1 to 99 seconds by using the numeric buttons.
(programmable music scan function)

⓫ Auto space button

Press this button to set a silent interval of 3 seconds between the songs on a disc.
Note:
If auto space is used together with auto cue, only the auto cue function will operate.

⓬ Play button

Press this button to begin disc play.

- If pressed during disc play, the pickup returns to the beginning of the first track, playing the disc again.
- During program play, the pickup returns to the beginning of the current track.

(Auto-return play function)

> **Pickup:**
> The pickup is the device that reads the information on the disc surface using a laser. The pickup moves across the disc as the disc is played, but it is not visible from outside the cabinet.

⓭ Pause button

Press this button to briefly stop disc play.
To continue disc play, press the play button.

⓮ Stop button

Press this button to stop disc play.
Press this button to stop disc play and cancel all previous settings.
Note:
When this button is pressed, the player returns to the stop mode.

> **Stop mode:**
> In the stop mode, the pickup is at the beginning of the first track and the display shows the total number of tracks and total playing time of the disc.

⓯ Forward and backward skip buttons

Use these buttons to move the pickup to the beginning of the next track in the forward or backward direction (forward and backward skip play function).

- When one of the skip buttons is pressed during disc play or the pause mode, the pickup will skip the same number of tracks as the number of times the button is pressed.
- When one of the skip buttons is pressed during program disc play, the pick up will move to the beginning of the next or previous programmed track.
  - Press the forward skip (skip ►►) button to move the pickup forward.
  - Press the backward skip (◄◄ skip) button to move the pickup backward.
- When either of these button is held down, tracks are skipped continuoulsy (quick skip).

⑯ Forward and backward search buttons

Use these buttons to move the pickup forward or backward (manual search play function).

- When either of these buttons is pressed, the pickup will move slowly at first and then rapidly if the button is held down for more than about three seconds.
- Use the search buttons when the player is in the pause mode or during disc play to move the pickup to a specific point on the disc.
  - Press the forward search (►►) button to move the pickup forward.
  - Press the backward search (◄◄) button to move the pickup backward.
    Release the search button when the pickup has moved to the desired location (as shown by the display panel).
- During disc play, search can be performed while listening to the signal from the disc to aid in locating a specific point. The output level is decreased by 12 dB (¼) compared with the level during standard disc play.

⑰ Forward/backward index skip buttons

Use these buttons to move the pickup forward or backward to the beginning of a specific index. (forward and backward index skip function)

- When these buttons are used during disc play or when the unit is in the pause mode, the number of times the forward or backward index button is pressed determines the number of indexes that are skipped.
  Press the forward index (►►I) button to move the pickup forward.
  Press the backward index (I◄◄) button to move the pickup backward.
- If either button is held down, the pickup continuously skips over indexes until the button is released.
  Having this separate index skip button is very useful when playing discs which contain indexes.

> **Index:**
> In some compact discs, indexes are used to divide tracks into smaller sections for easy access. If a disc includes indexes, a list of the indexes will be contained in the liner note included with that disc.

⑱ Recall button

Press this button to display the disc play sequence in the memory.

When this button is pressed, the tracks and indexes stored in the memory for program disc play are shown one by one and the corresponding step numbers are shown in the No section.

⑲ Index button

Press this button to specify an index number instead of a track number.

⑳ Clear button

Use this button to clear individual program entire before program play is started.

If this button is pressed during program play, the entire program is cleared.

㉑ Memory button

Press this button to enter track numbers just specified by the numeric buttons in the memory.

- Up to 20 memory steps are possible.
- The letter "F" will be displayed if more than 20 memory steps are attempted.

㉒ Numeric buttons

Use these buttons to specify.

1. Track numbers
2. Index numbers
3. Music scan intervals (in seconds)
4. Times of repeat play (no. of cycles)

㉓ Headphones jack

When listening to music with stereo headphones, avoid listening for prolonged periods of time. Hearing experts advise against continuous extended play.

㉔ Headphone level control knob

Use to control the output level to the headphones.

㉕ Programmed tracks display

The programmed tracks display has the following three display modes.

1. **When a disc is loaded, this display shows the total number of tracks.**
   For example, the diagram below shows that the disc has 7 tracks and a total playing time of 49 minutes and 58 seconds.

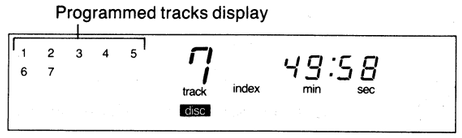

Note:

- If a disc containing more than 20 tracks is loaded, the > indicator will illuminate.
- The program display shows track numbers from 1 to 20. Programmed track numbers of 21 or higher are not displayed.

2. **If a track number is specified and then disc play is started.**
   The specified track number is displayed and then disc play begins. The border around the track number currently being played flashes on and off. For example, if track 3 is specified, the display appears as shown below at the beginning of the track.
   For example, the diagram below shows that disc play is to begin from track 3.

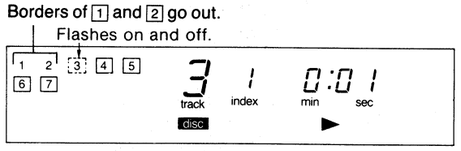

The borders of tracks 1 and 2 go out and the border of the current track flashes on and off.

3. **If track numbers are programmed and then disc play is started.**
   For example, if tracks 5, 3 and 1 are programmed in that order, the borders of those three track numbers illuminate and the border of the track being played flashes on and off.

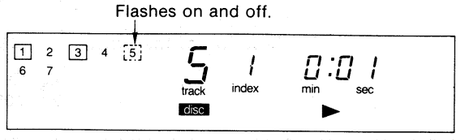

㉖ Track number display (track)

Track numbers up to 99 can be shown here.

Track numbers are displayed in a loop. Therefore, while the forward or backward skip button is depressed, the displayed track number will continue to change as follows:
(However, this is only possible when the unit is in the repeat play mode.)

- When the forward skip button is pressed.

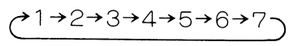

- When the backward skip button is pressed.

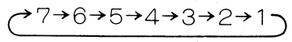

Note:
In the repeat play mode, it is not possible to skip backward from 1 to 7.

㉗ Index number display (index)

Index numbers up to 99 can be shown here.

On discs having no indexes, this display will always read "/".

㉘ Time display (min., sec.)

This display shows four time modes in minutes and seconds according to the current setting of the time mode select button ❾.

① Disc remaining playing time.
↓
② Track number and remaining playing time of current track.
↓
③ Disc elapsed playing time.
↓
④ Track number and elapsed playing time from beginning of current track.

㉙ A-B repeat indicator (A↻B)

Illuminates when the A-B repeat mode is activated by pressing the A-B repeat button.

- " A↻ " illuminates when the A-B repeat button is pressed once.
- " A↻B " illuminates when the A-B repeat button is pressed again.
- If the A-B repeat button is pressed a third time, this indicator turns off to show that A-B repeat has been cancelled.

㉚ Repeat/programmed repeat indicator (P ↻)

The repeat indicator (↻) illuminates when the repeat mode is activated for an entire disc or a program and goes out when repeat is switched off.
If the numeric buttons are used to specify the number of repeat cycles, the (P ↻) indicator illuminates. If the program repeat setting is cancelled, this indicator goes out.

㉛ Music scan indicator (M.scan)

Illuminates when the music scan button is pressed and goes out when the music scan play is cancelled.

㉜ Auto space indicator (A.space)

Illuminates when the auto space button is pressed to activate the auto space mode and goes out when the button is pressed again to cancel the auto space mode.

㉝ Digital attenuator indicator (ATT)

This indicator illuminates when the digital attenuation button (▼) of the remote control unit is pressed.
If the attenuation button (▲) is held down, this indicator goes out.

㉞ Play indicator (►)

Illuminates when the play button is pressed and goes out when disc play is stopped.

㉟ Auto cue indicator (A.cue)

Illuminates when the auto cue button is pressed to specify the standby mode.

㊱ Programmed order indicator (NO)

The programmed track numbers and corresponding program step numbers are displayed here one by one. Each time the recall button is pressed, the track number, program step, and (NO) will flash on.

㊲ Pause indicator (❚❚)

Illuminates when the pause button is pressed or auto cue function is activated and goes out when the pause mode or auto cue mode is cancelled.

㊳ Disc indicator (disc)

Illuminates when a disc is in the holder (if power is on) when the disc holder is closed. This indicator allows you to check in an instant whether or not a disc is loaded.

㊴ Over indicator (≥)

The (►) indicator illuminates when a disc containing more than 20 tracks is loaded. When disc play is started, the (≥) indicator illuminates instead and when disc play reaches track 21, the (>) indicator flashes on and off.

■ CONNEC

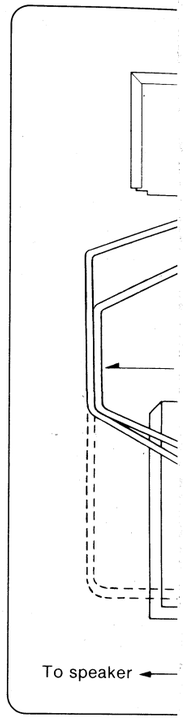

❶ Line out termir

These are the audi

- Connect the line
  TAPE PLAYBACI
- Do not connect t
  would with a cor

■ REMOTE

Remote contr

- The remote contr
  available on the pl
- The remote control
  digitally reduce (atte
  0 dB to −12 dB (c
  (Digital attenuatio
- The following opera
  control unit.

① Power on/off
② Disc holder open/
③ Auto space
④ Index skip
⑤ Auto cue
⑥ Headphone level

ds)
ycles)

ereo headphones, avoid
f time. Hearing experts
d play.

knob
to the headphones.

has the following three

display shows the total

shows that the disc has 7
e of 49 minutes and 58

49:58
min sec

racks is loaded, the >

numbers from 1 to 20.
21 or higher are not

and then disc play is

played and then disc play
track number currently
For example, if track 3 is
as shown below at the

shows that disc play is to

0:01
min sec
▶

go out and the border of
d off.

ned and then disc play

are programmed in that
track numbers illuminate
g played flashes on and

0:01
min sec
▶

㉖ Track number display (track)

Track numbers up to 99 can be shown here.

Track numbers are displayed in a loop. Therefore, while the forward or backward skip button is depressed, the displayed track number will continue to change as follows:
(However, this is only possible when the unit is in the repeat play mode.)

- When the forward skip button is pressed.

→1→2→3→4→5→6→7→

- When the backward skip button is pressed.

→7→6→5→4→3→2→1→

Note:
In the repeat play mode, it is not possible to skip backward from 1 to 7.

㉗ Index number display (index)

Index numbers up to 99 can be shown here.

On discs having no indexes, this display will always read "1".

㉘ Time display (min., sec.)

This display shows four time modes in minutes and seconds according to the current setting of the time mode select button ❾.

① Disc remaining playing time.
↓
② Track number and remaining playing time of current track.
↓
③ Disc elapsed playing time.
↓
④ Track number and elapsed playing time from beginning of current track.
↓

㉙ A-B repeat indicator (A↻B)

Illuminates when the A-B repeat mode is activated by pressing the A-B repeat button.

- " A↻ " illuminates when the A-B repeat button is pressed once.
- " A↻B " illuminates when the A-B repeat button is pressed again.
- If the A-B repeat button is pressed a third time, this indicator turns off to show that A-B repeat has been cancelled.

㉚ Repeat/programmed repeat indicator (P ↻)

The repeat indicator (↻) illuminates when the repeat mode is activated for an entire disc or a program and goes out when repeat is switched off.
If the numeric buttons are used to specify the number of repeat cycles, the (P ↻) indicator illuminates. If the program repeat setting is cancelled, this indicator goes out.

㉛ Music scan indicator (M.scan)

Illuminates when the music scan button is pressed and goes out when the music scan play is cancelled.

㉜ Auto space indicator (A.space)

Illuminates when the auto space button is pressed to activate the auto space mode and goes out when the button is pressed again to cancel the auto space mode.

㉝ Digital attenuator indicator (ATT)

This indicator illuminates when the digital attenuation button (▼) of the remote control unit is pressed.
If the attenuation button (▲) is held down, this indicator goes out.

㉞ Play indicator (▶)

Illuminates when the play button is pressed and goes out when disc play is stopped.

㉟ Auto cue indicator (A.cue)

Illuminates when the auto cue button is pressed to specify the standby mode.

㊱ Programmed order indicator (NO)

The programmed track numbers and corresponding program step numbers are displayed here one by one. Each time the recall button is pressed, the track number, program step, and (NO) will flash on.

㊲ Pause indicator (❚❚)

Illuminates when the pause button is pressed or auto cue function is activated and goes out when the pause mode or auto cue mode is cancelled.

㊳ Disc indicator (disc)

Illuminates when a disc is in the holder (if power is on) when the disc holder is closed. This indicator allows you to check in an instant whether or not a disc is loaded.

㊴ Over indicator (≫)

The (▶) indicator illuminates when a disc containing more than 20 tracks is loaded. When disc play is started, the (≫) indicator illuminates instead and when disc play reaches track 21, the (>) indicator flashes on and off.

■ CONNECTION

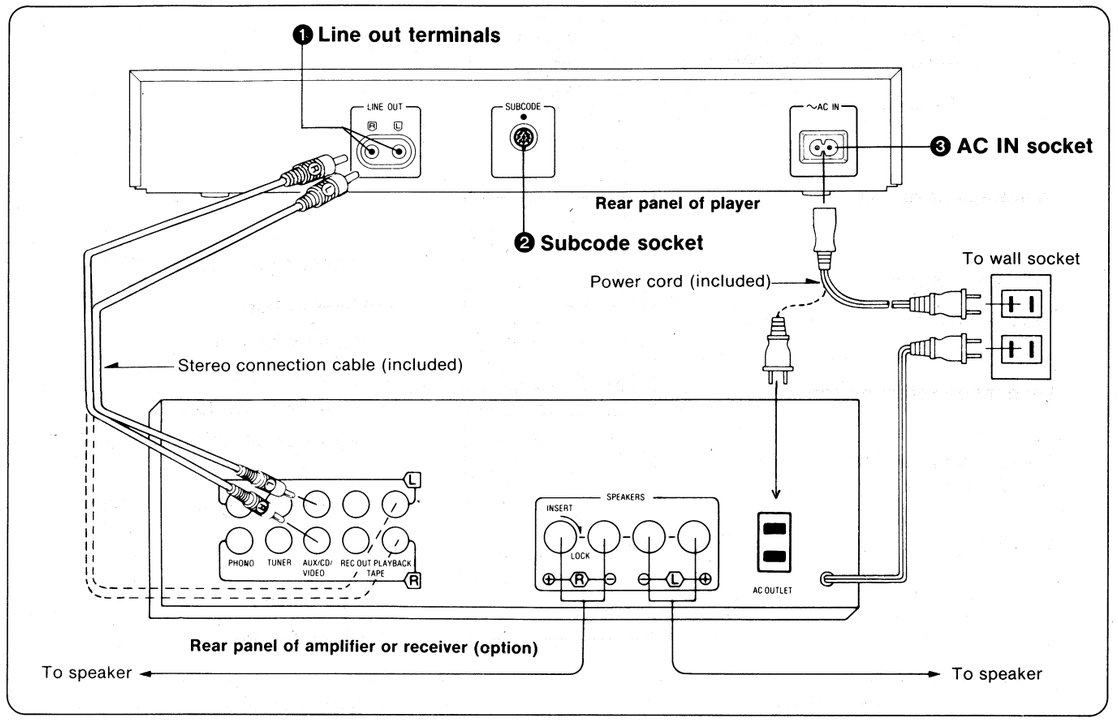

❶ Line out terminals (LINE OUT)

These are the audio output terminals.

- Connect the line out terminals to the AUX/CD/VIDEO or TAPE PLAYBACK terminals on your amplifier or receiver.
- Do not connect to the amplifier PHONO terminals, as you would with a conventional turntable.

❷ Subcode socket (SUBCODE)

The compact disc subcode signal is delivered through this socket.
This socket is provided for system interface with future components.
(Do not connect any components to this socket.)

❸ AC IN socket (AC IN)

Connect this socket to a wall socket using the power cord.

■ REMOTE CONTROL UNIT

Remote control unit facilities

- The remote control unit has the following capability not available on the player.
- The remote control unit, but not the player itself, allows you to digitally reduce (attenuate) the volume level in 2 dB steps from 0 dB to −12 dB (one fourth the original volume level). **(Digital attenuation function)**
- The following operations are not possible using the remote control unit.

① Power on/off
② Disc holder open/close
③ Auto space
④ Index skip
⑤ Auto cue
⑥ Headphone level control

■ Notes

- Always aim the remote control unit at the front panel receiver.
- The remote control unit can be used at an angle range of up to 30° from the direction in which the front panel faces.
- The remote control unit can not be used from a distance of more than 7 meters (23 ft.).

■ Remote control operation

Point the remote control unit at the front panel receiver and press the appropriate button(s). The front panel remote control indicator illuminates as long as each button is held down.

Parts identification

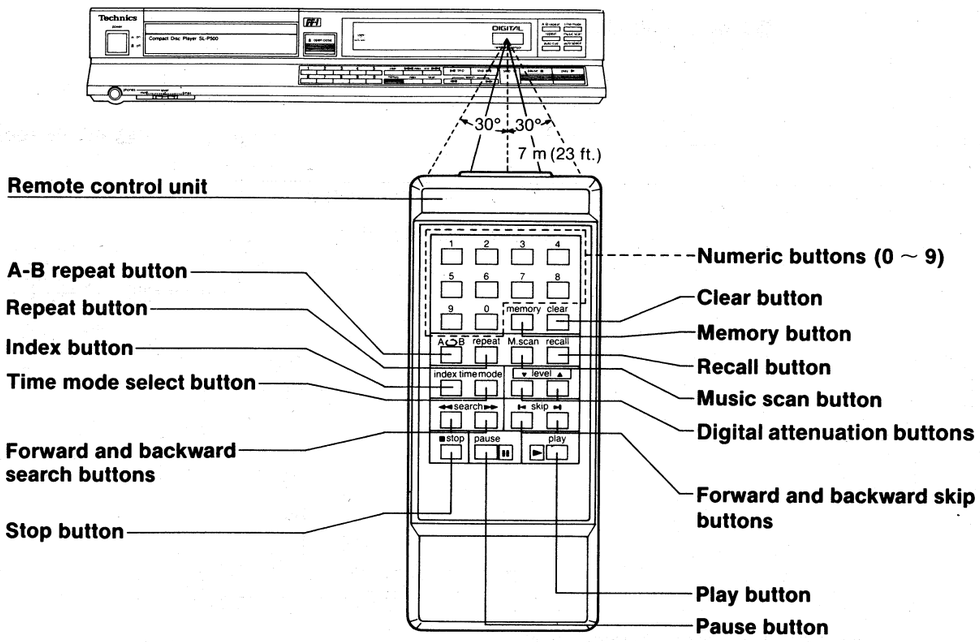

Procedure	Function/Notes
■ Digital attenuation function To raise the volume level press the ▲ button. To lower the volume level press the ▼ button. The volume level is altered in 2 dB steps each time either button is pressed.	•When the ▼ button is pressed to switch to the attenuation mode (other than 0 dB), the digital attenuation indicator on the display illuminates. 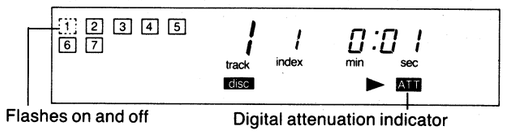 When the ▲ button is pressed to return to 0 dB, the indicator goes out. Volume is also returned to 0 dB automatically when power is switched off.

When using the remote control unit, press the buttons slowly and accurately to avoid mistaken operation.

■ HANDLING PRECAUTIONS FOR OPTICAL PICKUP

The laser diode in the optical pickup may break down due to potential difference caused by static electricity of clothes or human body.
So, be careful of electrostatic breakdown during repair of the optical pickup.

• Handling of optical pickup

1. Do not give excessive shock to the optical pickup because it is of extremely precise structure.
2. To prevent the breakdown of the laser diode, an anti-static shorting pin is inserted into the flexible board. When removing or connecting the short pin, finish the job in as short a time as possible.
3. Take care not to apply excessive stress to the flexible board.
4. Do not turn the variable resistor (laser power adjustment). It has already been adjusted.

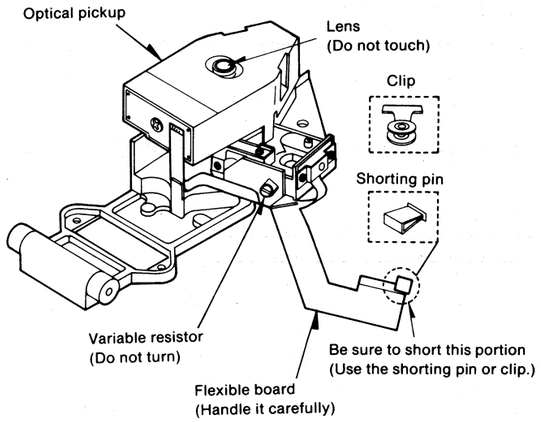

• Grounding for electrostatic breakdown prevention

1. Human body grounding
   Use the anti-static wrist strap to relieve the static electricity from your body.
2. Work table grounding
   Put a conductive material (sheet) or steel sheet on the area where the optical pickup is placed, and ground the sheet.

Caution:
The static electricity of your clothes will not be grounded through the wrist strap. So, take care not to let your clothes touch the optical pickup.

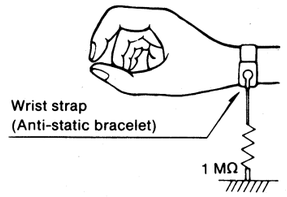

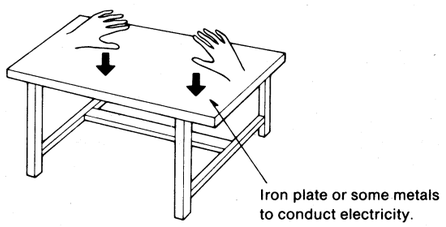

■ DISASSEMBL

CAUTION:
- It is very dangerous
- With the unit turne
- When doing the job

Ref. No. 1	How to re
Procedure 1	

Note: When doi the lock s unit. (See

• Remove the 4 sets

Ref. No. 2	How to re
Procedure 1 ➡ 2	• Remove i

1 Shift the disc holder forwar

Turn the inside ge

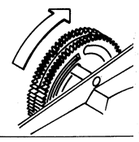

6 Remo the p of the

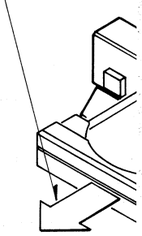

7 Remov directi

0 ~ 9)

buttons

ward skip

to the attenuation
on indicator on the

0:01
in sec
ATT
on indicator

0 dB, the indicator
utomatically when

ken operation.

■ HANDLING PRECAUTIONS FOR OPTICAL PICKUP

The laser diode in the optical pickup may break down due to potential difference caused by static electricity of clothes or human body.
So, be careful of electrostatic breakdown during repair of the optical pickup.

• Handling of optical pickup

1. Do not give excessive shock to the optical pickup because it is of extremely precise structure.
2. To prevent the breakdown of the laser diode, an anti-static shorting pin is inserted into the flexible board. When removing or connecting the short pin, finish the job in as short a time as possible.
3. Take care not to apply excessive stress to the flexible board.
4. Do not turn the variable resistor (laser power adjustment). It has already been adjusted.

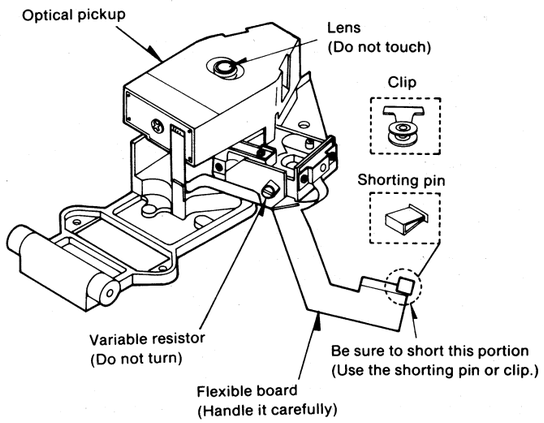

• Grounding for electrostatic breakdown prevention

1. Human body grounding
   Use the anti-static wrist strap to relieve the static electricity from your body.
2. Work table grounding
   Put a conductive material (sheet) or steel sheet on the area where the optical pickup is placed, and ground the sheet.

Caution:
The static electricity of your clothes will not be grounded through the wrist strap. So, take care not to let your clothes touch the optical pickup.

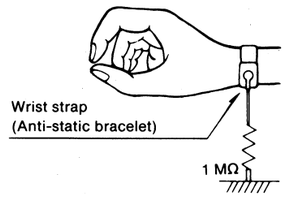

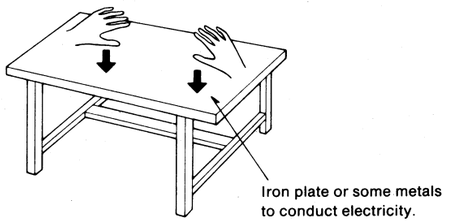

■ DISASSEMBLY INSTRUCTIONS

CAUTION:
- It is very dangerous to look at or touch laser radiation. (Laser radiation is invisible.)
- With the unit turned "on", laser radiation is emitted from the pickup lens.
- When doing the job, removing the cabinet and disc clamper of this unit, be sure to turn the power supply off.

Ref. No. 1	How to remove the cabinet
Procedure 1	

Note: When doing the job, Locking the lock shat at bottom of the unit. (See page 4.)

• Remove the 4 setscrews.

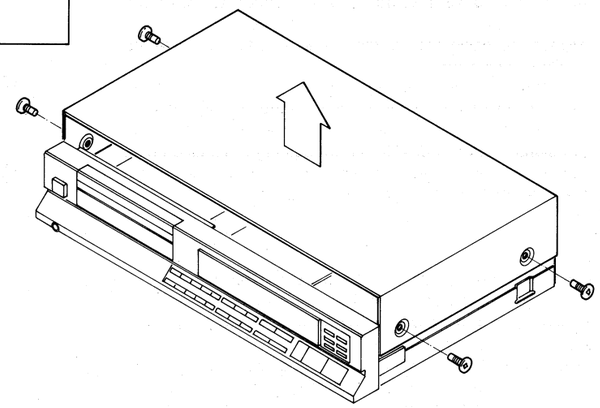

Ref. No. 2	How to remove the front panel
Procedure 1➡2	• Remove in the numerical order shown.

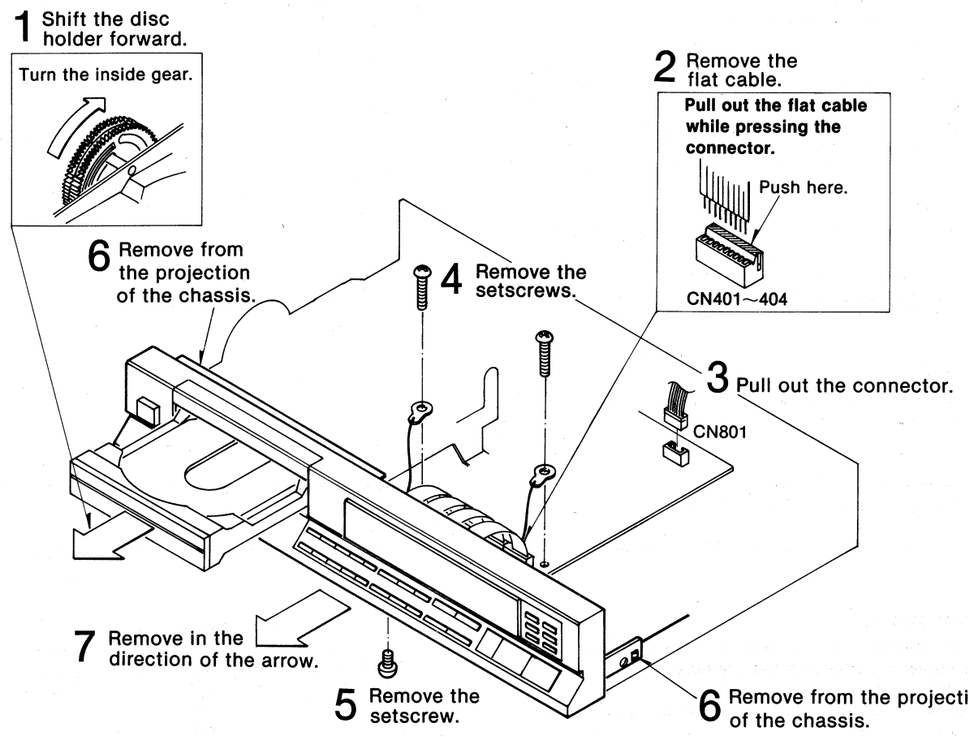

Ref. No. 3	How to remove the keyboard P.C.B.
Procedure 1➡2➡3	• Remove in the numerical order shown.

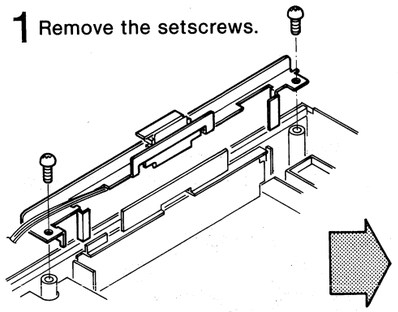

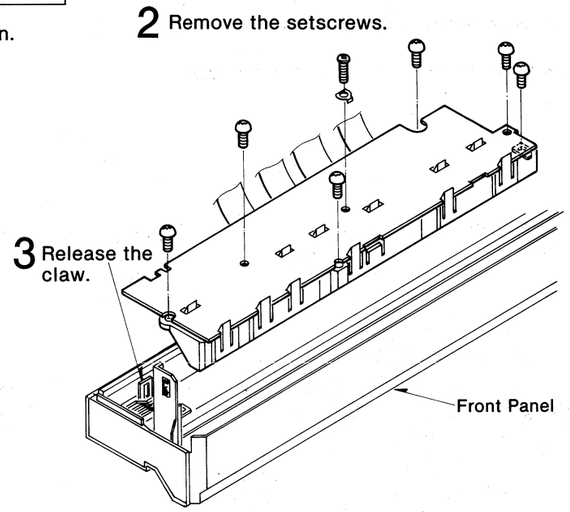

How to remove the operation buttons

• Release the claws of each button.

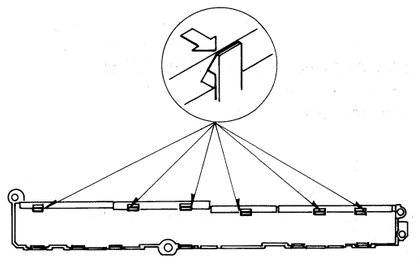

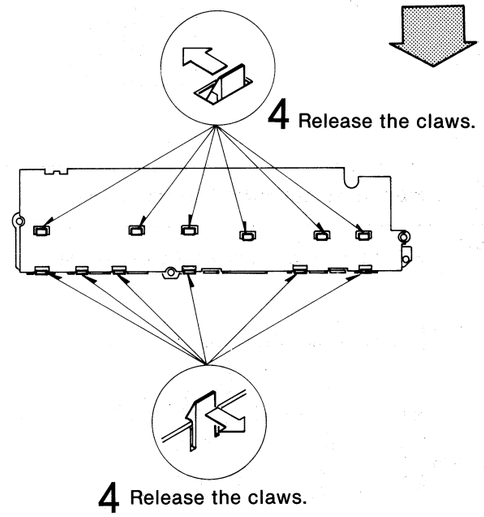

How to remove the headphones P.C.B.

• Remove in the numerical order shown.

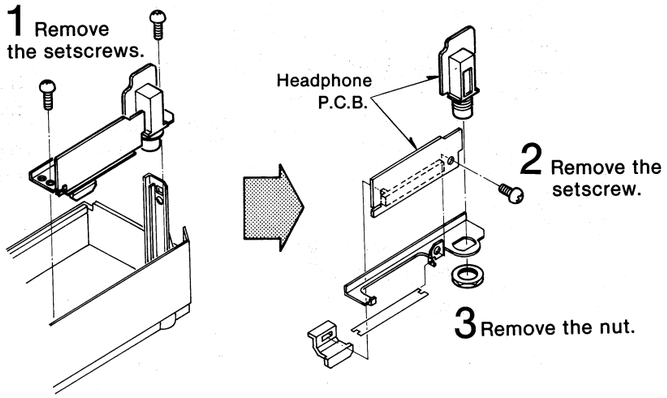

Ref. No. 4	How to remove the main P.C.B.
Procedure 1➡4	• Remove in the numerical order shown.

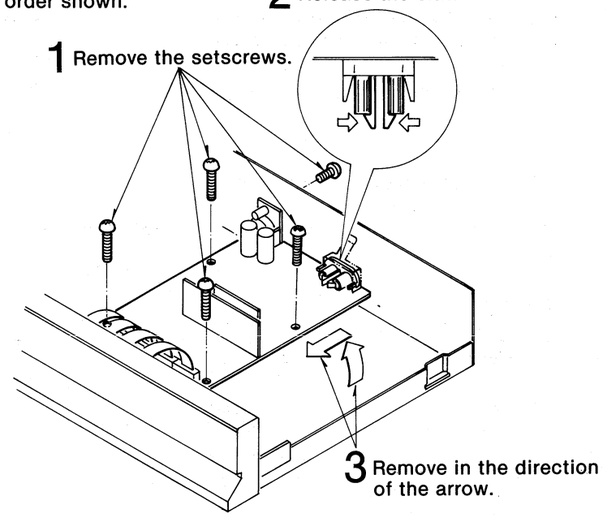

How to remove the digital P.C.B.

1. Remove the main P.C.B. and turn it over.
2. Remove the solder of digital P.C.B. by using a solder sucker.

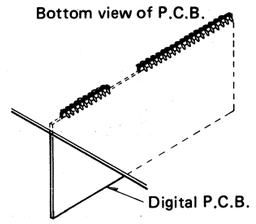

How to check the main P.C.B.

• When checking the soldered surfaces of the main P.C.B. and replacing the parts, do as shown.

Cautions:

1. Be sure to connect the P.C.B. shield plate and chassis lead wire.
2. Connect the power supply P.C.B. ground terminal to the chassis. (Do the job as shown by using the P.C.B. setscrew.)

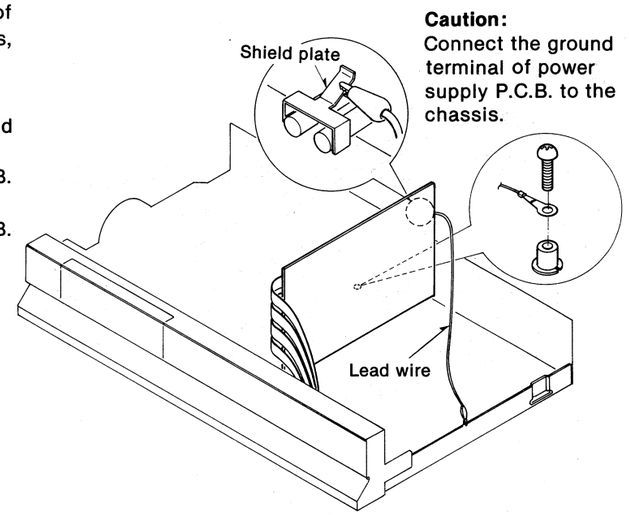

Ref. No. 5	How to remove the loading unit
Procedure 1➡2➡5	

Note: Locking the lock shaft at bottom of the unit. (See page 4)

• Remove in the numerical order shown.

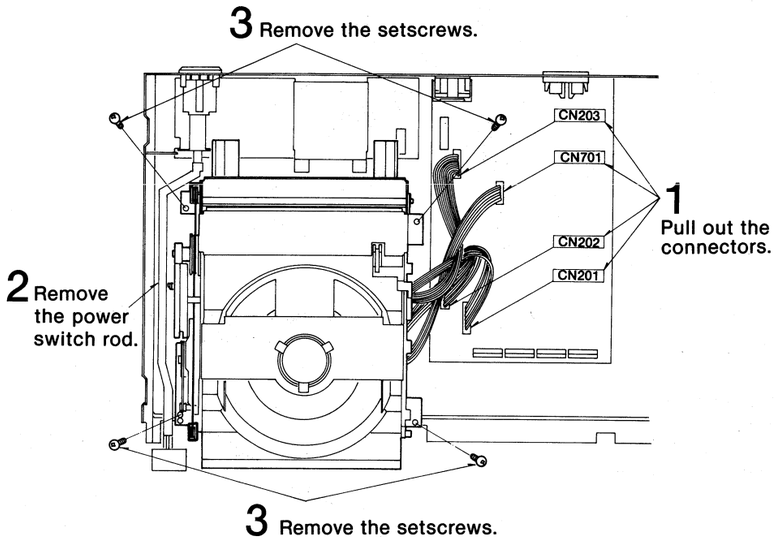

How to remove the magnet

• Insert a screwdriver between the magnet holder and clamper, then turn the holder in direction of the arrow.

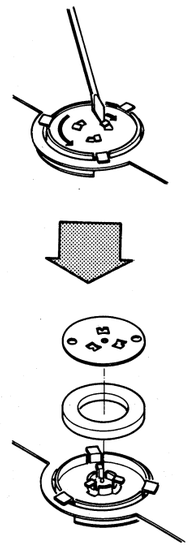

Ref. No. 6	How to remove the disc case
Procedure 5➡6	• Remove in the numerical order shown.

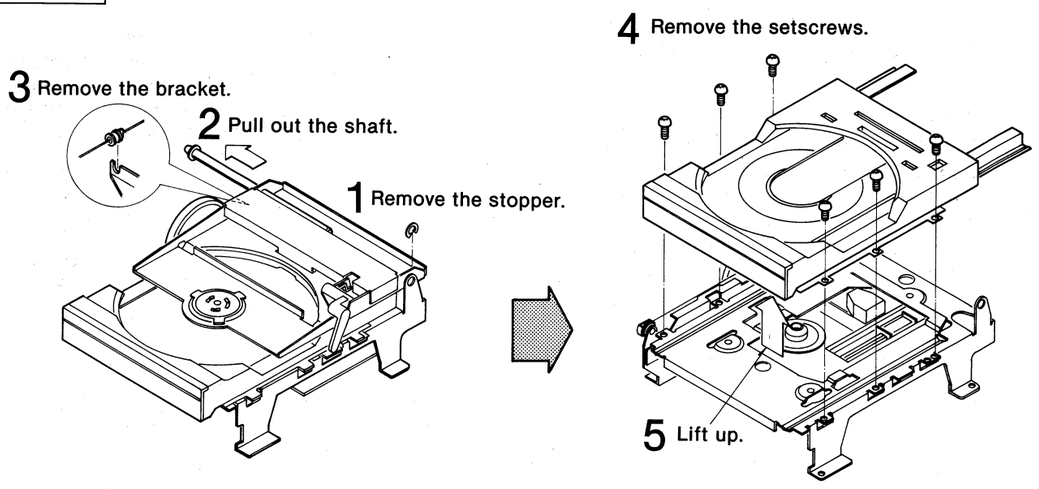

How to remove the disc tray

• Remove in the numerical order shown.

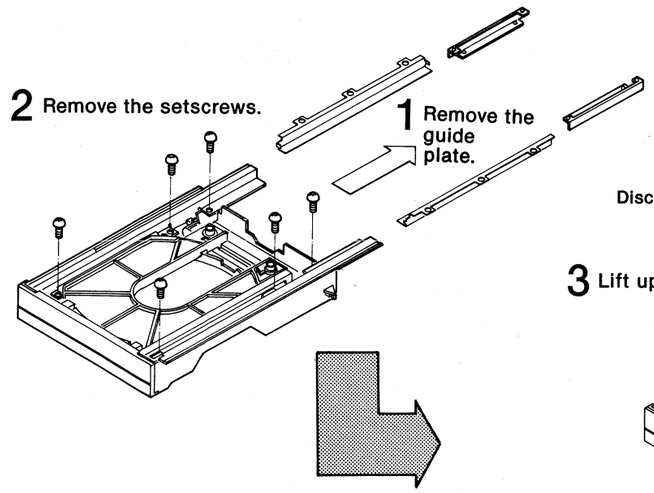

Note for assembly
The spring should be set as shown.

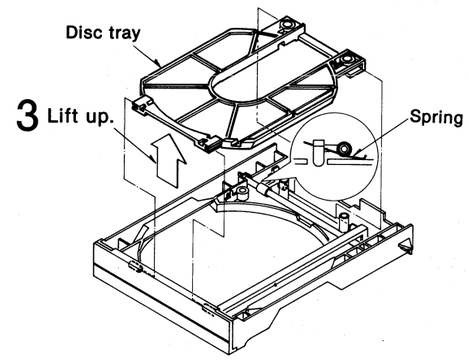

Ref. No. 7	How to remove the traverse deck
Procedure 5➡7	• Remove in the numerical order shown.

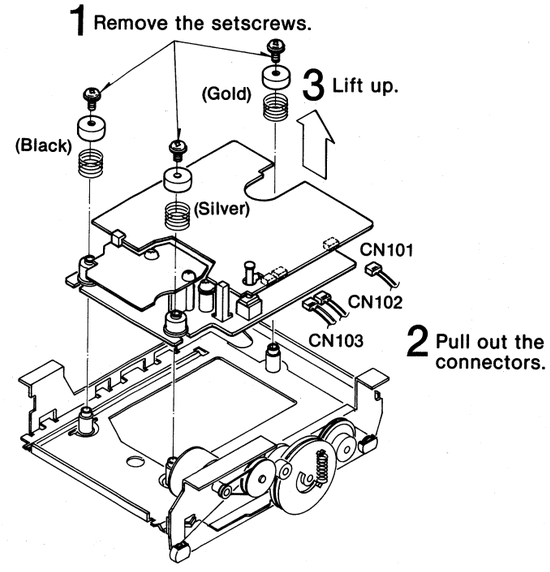

How to remove the spindle P.C.B.

• Remove the setscrews.

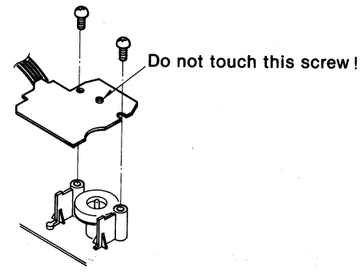

How to remove the open · close det. switch

• Remove the traverse deck and remove the setscrews.

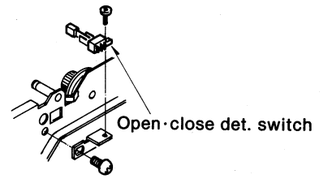

Ref. No. 8	How to remove the optical servo P.C.B.
Procedure 5➡8	

Refer to the optical pickup handling precautions (See page 11).

• Remove in the numerical order shown.

Cautions:
- When repairing with the optical servo P.C.B. opened, take special care not cut off the flexible board of the optical pickup.
- When the flexible board is removed, insert the short pin or clip into the board.

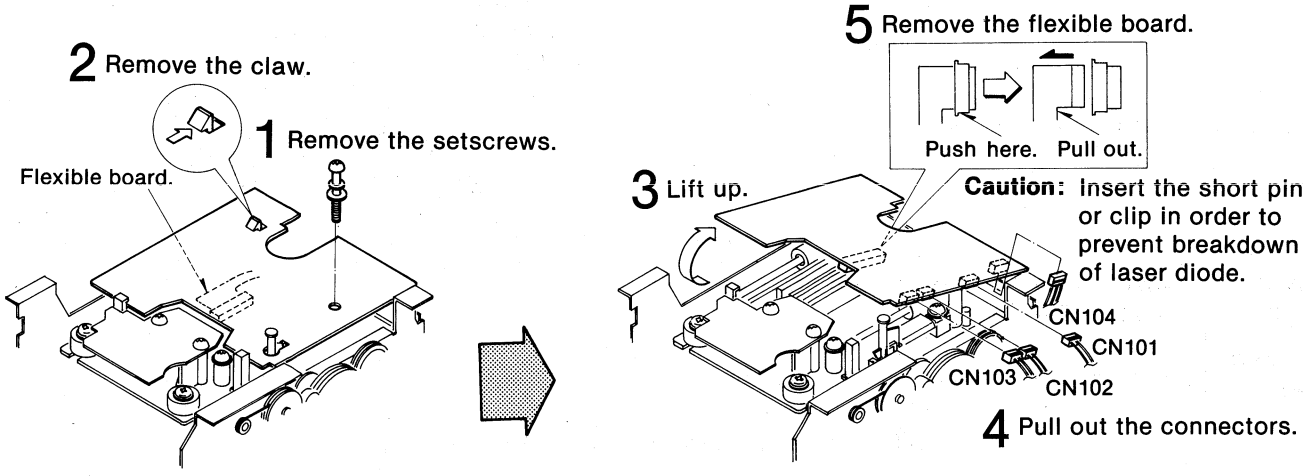

Ref. No. 9	How to remove the optical pickup
Procedure 5➡8➡9	

Refer to the optical pickup handling precautions (See page 11).

• Remove in the numerical order shown.

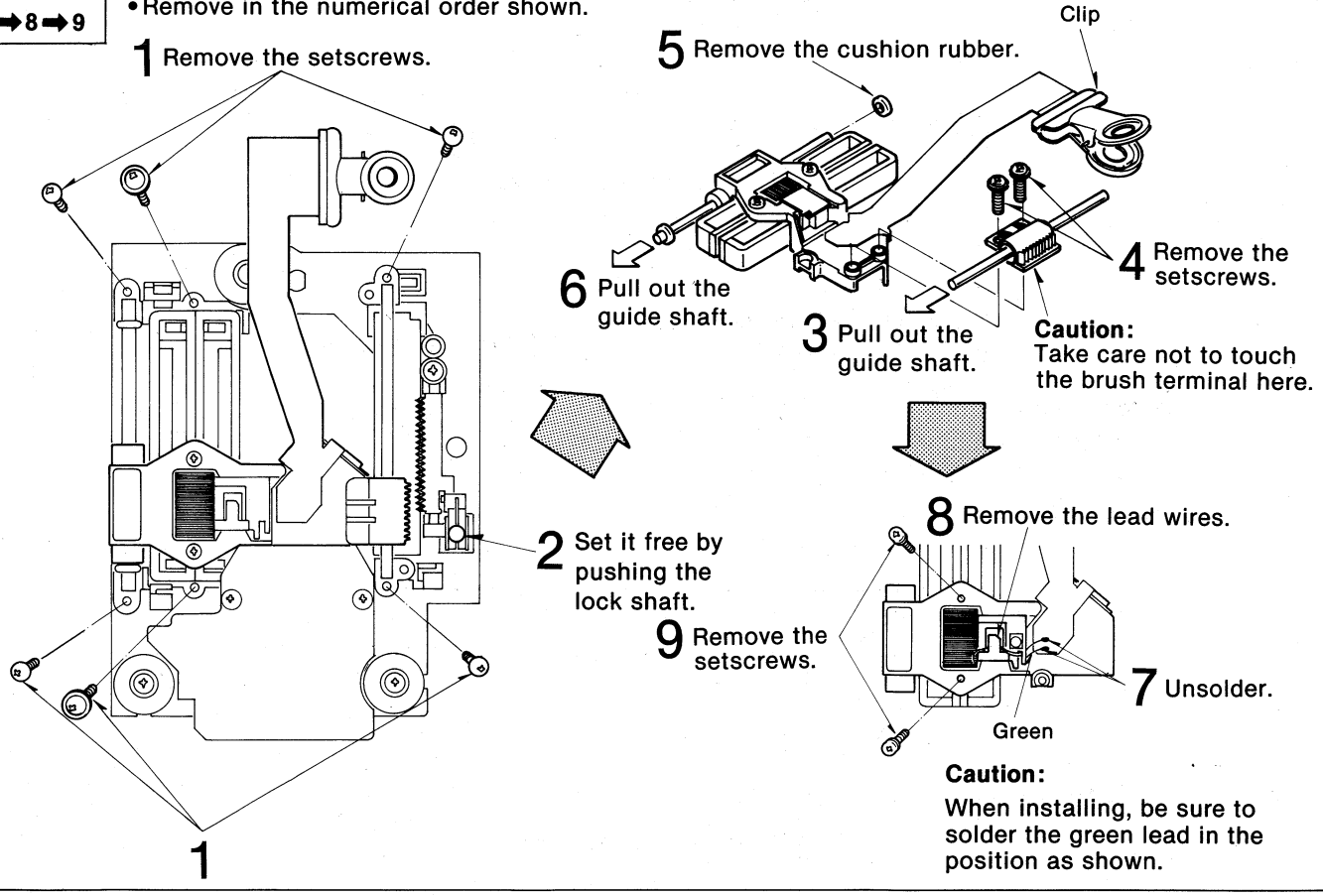

How to remove the drive coil

1. Remove the 2 yokes.
2. Pull out the drive coil.

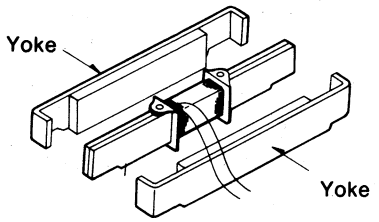

*DC resistance drive coil 36Ω±1.5Ω.

How to remove the resistance unit

1. Remove optical pickup.
2. Remove in the numerical order shown.

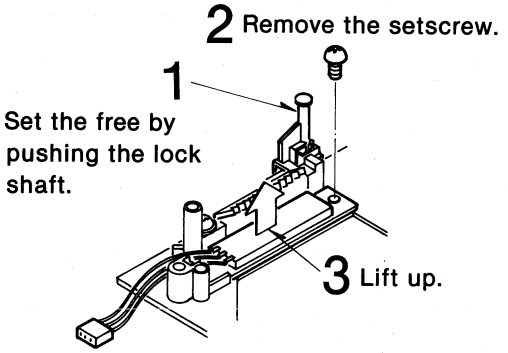

Ref. No. 10	How to remove mechanism plate and loading drive rope
Procedure 5➡10	• Remove in the numerical order shown.

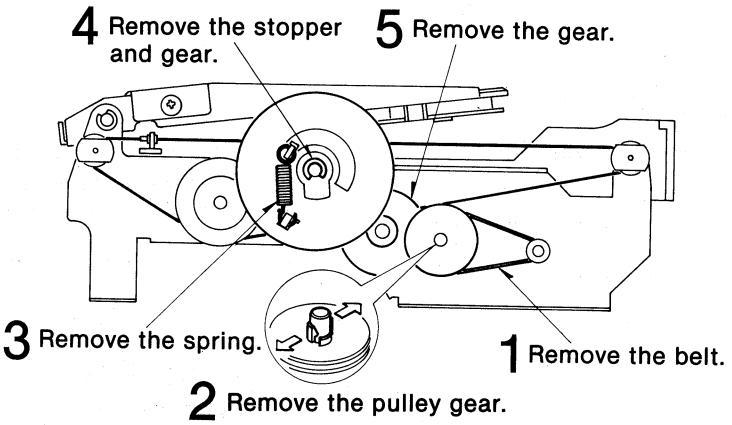

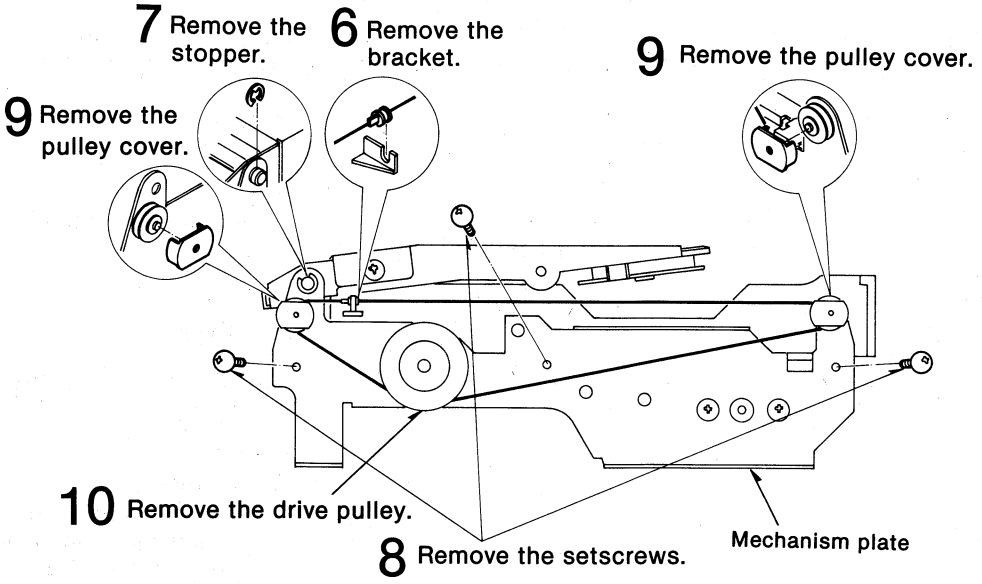

Ref. No. 11	How to set the loading drive rope
Procedure 5➡10➡11	• Carry out the job in the numerical order.

1 Set the rope over the drive pulley.

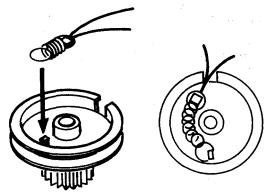

2 Set the drive pulley onto the shaft while pulling the rope by hand to hold the spring.

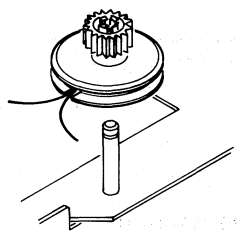

3 Pull the rope and bring the longer side to the right.

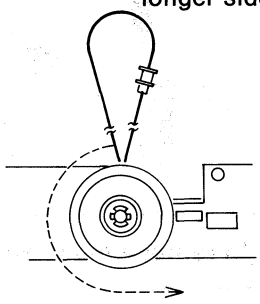

4 Set the rope in the numerical order.

5 Set the pulley cover.

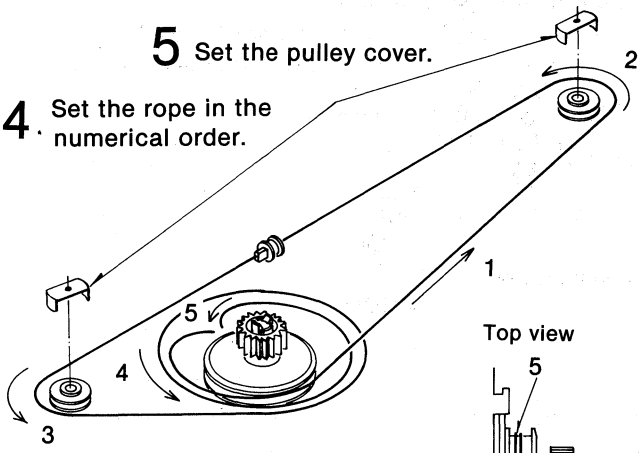

Top view

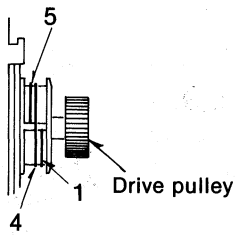

7 Fit the stopper in place.

8 Install the gears.

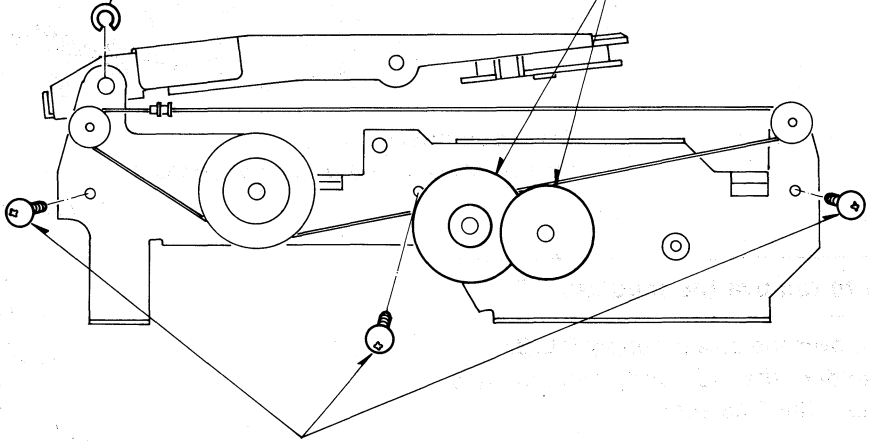

6 Fit the mechanism board to loading base.

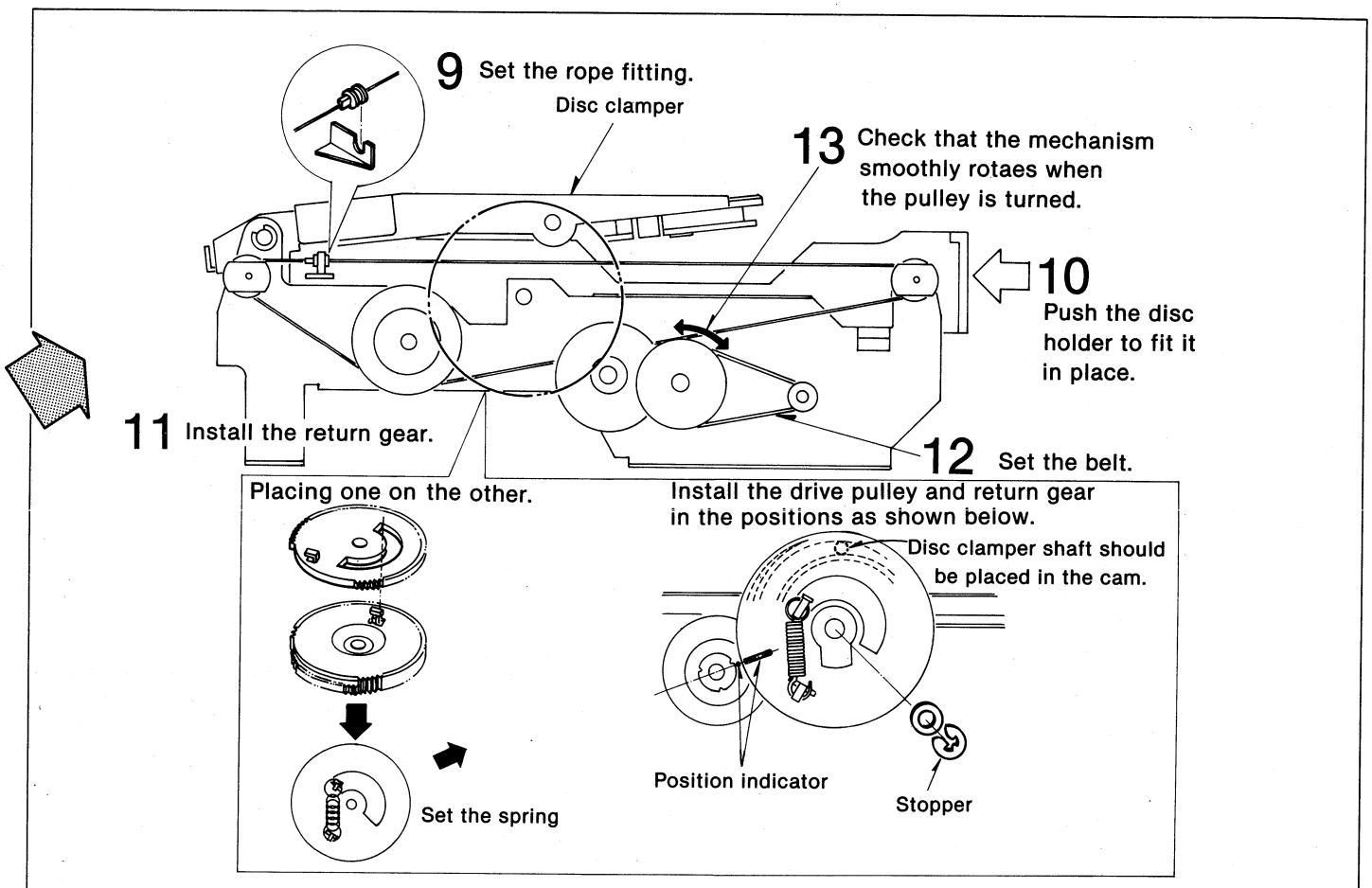

Ref. No. 12	How to remove the power supply P.C.B.
Procedure 1 ➡ 5 ➡ 12	• Remove in the numerical order shown.

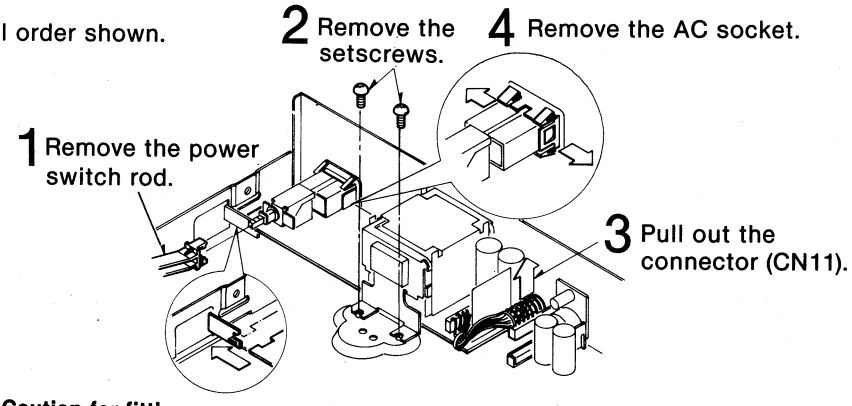

Caution for fitting:
Fit the P.C.B. in the groove of chassis.

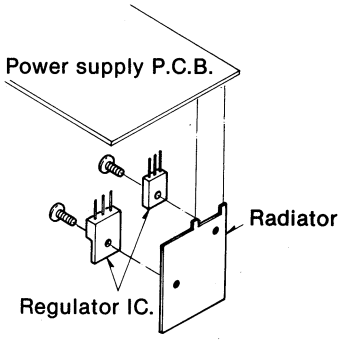

How to remove the regulator IC

1. Turn over the power supply P.C.B.
2. Unsolder the IC and radiator and remove the 2 setscrew.

Ref. No. 13	How to remove the bottom cover of remote control unit
Procedure 13	• Remove in the numerical order shown.

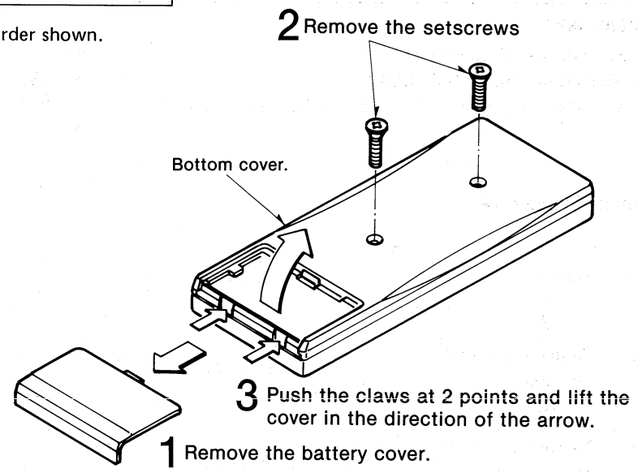

■ INTERNAL CONNECTIONS OF FL

• Grid connection diagram

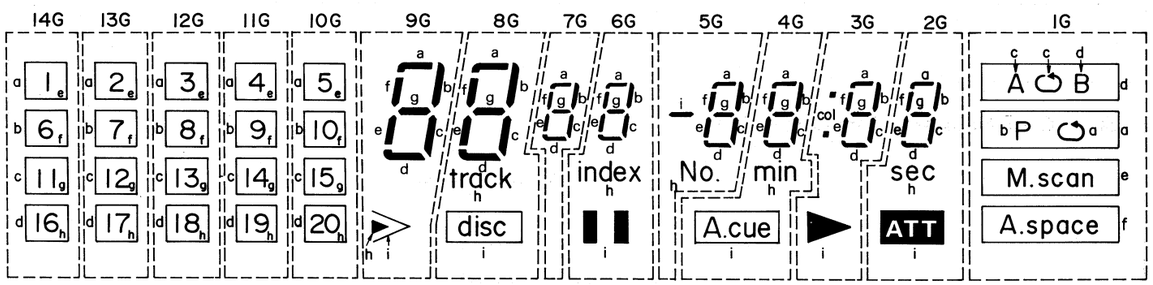

• Anode connection table

Pin No.	4 (14G)	6 (13G)	8 (12G)	10 (11G)	12 (10G)	15 (9G)	17 (8G)	19 (7G)	21 (6G)	23 (5G)	25 (4G)	28 (3G)	31 (2G)	35 (1G)
5(a)	1	2	3	4	5	a	a	a	a	a	a	a	a	↻
7(b)	6	7	8	9	10	b	b	b	b	b	b	b	b	P
9(c)	11	12	13	14	15	c	c	c	c	c	c	c	c	A↻
11(d)	16	17	18	19	20	d	d	d	d	d	d	d	d	B
30(e)	1	2	3	4	5	e	e	e	e	e	e	e	e	M.Scan
32(f)	6	7	8	9	10	f	f	f	f	f	f	f	f	A.Space
33(g)	11	12	13	14	15	g	g	g	g	g	g	g	g	—
34(h)	16	17	18	19	20	►	track	—	index	NO.	min	col	sec	—
36(i)	—	—	—	—	—	>	disc	—	❚❚	—	A.Cue	►	ATT	—

■ HOW TO REPLACE IC'S (Small outline type)

	Replacing procedure		Cautions
1	Reduce the amount of solder on each pin of the integrated circuit by use of a solder sucker.	(Example) H–130 Solder sucker	• Recommended tool .....Special soldering iron * H605M and H-130. * H605E and H-130. • Do not touch the soldering iron to the area for a long time. It may otherwise cause removal of the print foil. • When shifting the pin upward, do the job quickly while the solder is melting. If the solder is hard, it may cause removal or breakage of the print foil. • When using a pencil type soldering iron. 1. Completely remove the soider from each IC pin by use of solder sucker. 2. Raise each pin by means of an eyeleteer, hold the pliers then remove IC package from P.C.B.
2	Melt the solder on the pin (one electrode) with the soldering iron.		
3	While the solder is melting, shift the pin upward by the soldering iron to remove it from the foil.		
4	Remove each pin from the foil according to the above-mentioned procedure.		

*** Special soldering iron**
(Refer to Technical Information, ORDER NO. GAD84125486T1)...For U.S.A. and Canada
(Refer to Technical Information, ORDER NO. GAD84115476T8)...For others

•H–605 Spot Heater (hot-air solder iron)
This device that uses hot air to melt solder was developed to remove Flat-Pakage ICs, RHCs and chip parts.

•H–605M (For 120V power source)
•H–605E (For 200V/220V/240V power source)

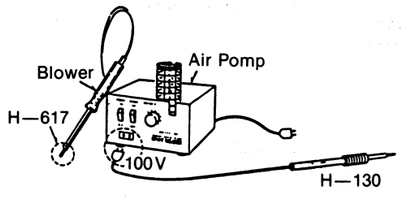

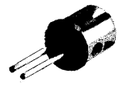

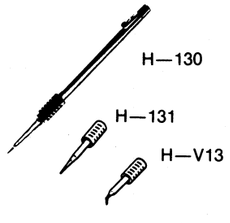

•H–617 Twin Nozzle (for spot heater)
Special nozzle for the removal of RHCs and chip resistors. (Nozzle diameter: 1.0mm×2)

•H–130 Slim Pencil Solder Iron
An ultrasmall ceramic heater solder iron is extremely handy for soldering chip parts, RHCs, ICs etc., to high-density circuit boards.
Features:

•Rated power:	100V, 15W
•Max. temp.:	400°C
•Heater:	ceramic (long life)
•Insulation resistance:	100MΩ
•Length:	178mm
•Weight:	16g (not including cord)

•H–131, H–V13 Cap Bits
Solder tip for the slim pencil Solder Iron and is composed of a bit holder and a corrosion resistance solder tip.
Permits changing of solder tips even while still hot.
•Solder tip: 0.3mm

■ MEASUREMENTS AND ADJUSTMENTS

Caution:
- It is very dangerous to look at or touch the laser beam. (Laser radiation is invisible.) With the unit turned "**on**", laser radiation is emitted from the pick-up lens. Be careful during adjustments in particular.
- The adjustment of this unit is basically the same as for SL-PJ11. (The adjusting points are partially different.) For the detail, refer to SL-PJ11 Service Manual (Order No. HAD8509261G0).

ADJUSTMENT POINTS

- **Servo P.C.B.**

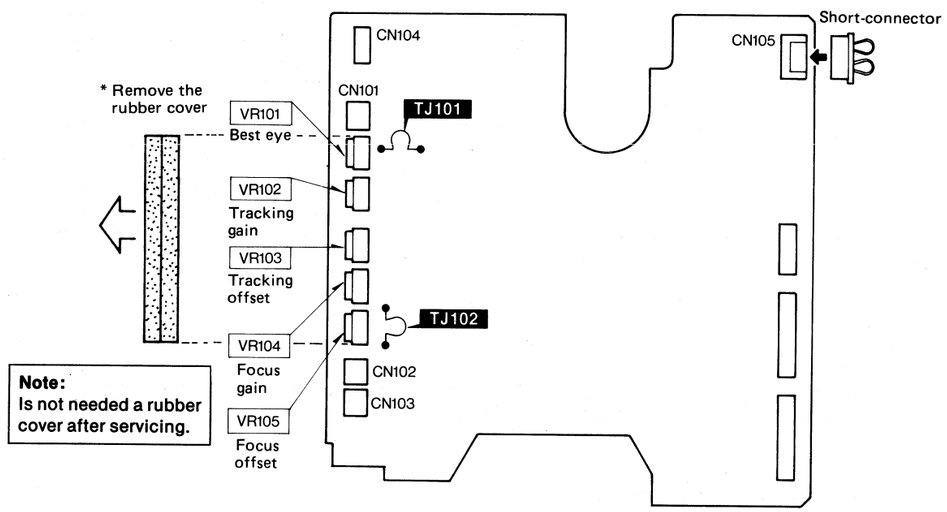

- **Main P.C.B.**

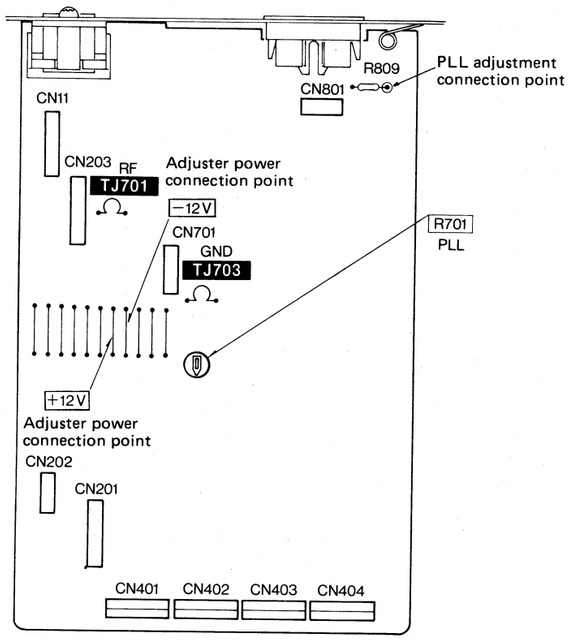

ELECTRICAL ADJUSTMENT

Equipment used
- Servo gain adjuster (SZZP1017F)
- Conversion connector (SZZP1032F)
- Two-channel oscilloscope (with trigger) of 30 MHz or over.
- Low frequency oscillator
- Test disc (SZZP1014F) (See page 29)
- Ordinary disc

Adjustment Procedure

Step 1:	Remove the cabinet.	. . . . . Page 12
Step 2:	Connect the servo gain adjuster.	. . . . . Page 24
Step 3:	Temporary setting of each VR.	. . . . . Page 25
Step 4:	Focus gain adjustment	. . . . . Page 25
Step 5:	Tracking gain adjustment.	. . . . . Page 25
Step 6:	Best eye (PD balance) adjustment	. . . . . Page 26
Step 7:	Focus offset adjustment	. . . . . Page 26
Step 8:	Tracking offset adjustment	. . . . . Page 26
Step 9:	PLL adjustment	. . . . . Page 27
Step 10:	Check of operation after adjustment	. . . . . Page 27

Servo Gain Adjuster and Its Connection

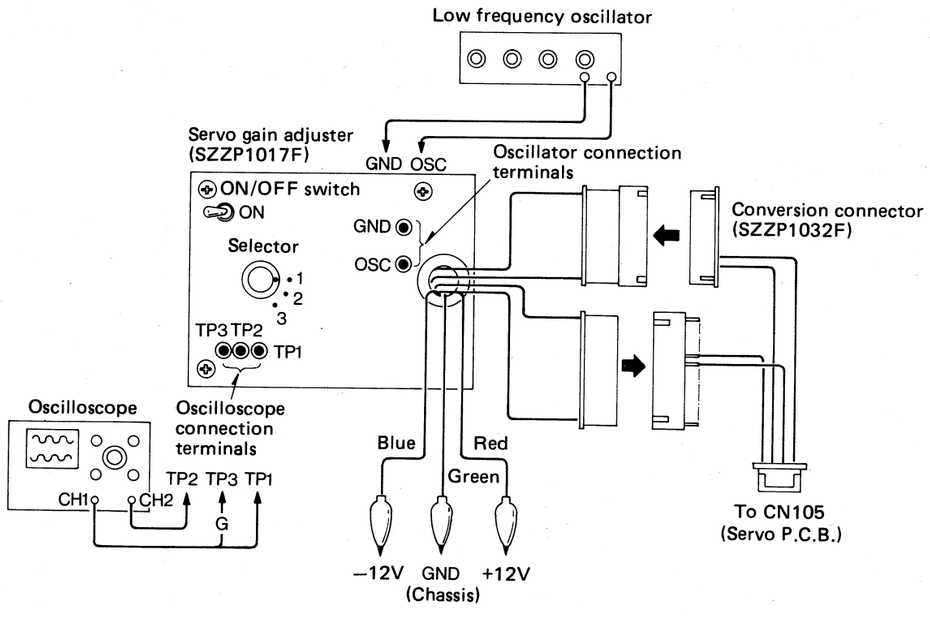

TEMPORARY SETTING OF EACH VR

1. Remove the rubber cover.
2. Temporarily set each VR of servo P.C.B. as shown.

Servo P.C.B.

FOCUS GAIN ADJUSTMENT

1. Adjust the low frequency oscillator to **750Hz** frequency and **150mVp-p** output voltage, and connect it to **OSC** and **GND** of servo gain adjuster.
2. Connect CH1 and CH2 of the oscilloscope to **TP1** and **TP2** of the servo gain adjuster. **(TP3 grounded)**
   Oscilloscope setting: VOLT..... 100mV (both channels)
   SWEEP..... 1msec.
   INPUT..... AC
3. Set the servo gain adjuster switch to "**2**". (Set the adjuster ON · OFF switch to "**ON**".)
4. Turn on the power switch and play the test disc.
5. With the adjuster switch shifted to "**3**", **750Hz** signal appears on the oscilloscope.
   So, adjust **VR104** so that the waveform amplitudes of both channels become equal to each other.

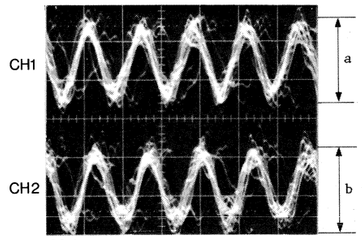

Make a = b

TRACKING GAIN ADJUSTMENT

1. Adjust the low frequency oscillator to **1.2kHz** frequency and **150mVp-p** output voltage.
2. Change the oscilloscope setting, making the oscilloscope connection the same as mentioned above.
   Oscilloscope setting: VOLT..... 100mV (both channels)
   SWEEP..... 0.5msec.
   INPUT..... DC
3. Set the servo gain adjuster switch to "**2**". (Set the adjuster ON · OFF switch to "**ON**".)
4. Turn on the power switch and play the test disc.
5. With the adjuster switch shifted to "**1**", **1.2kHz** signal appears on the oscilloscope.
   So, adjust **VR102** so that the waveform amplitudes of both channels become equal to each other.
6. Remove the connection for servo gain adjuster as it is not needed for other adjustment.
   With the connector inserted into CN105, connect it as shown.

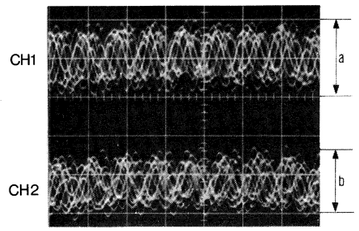

Make a = b

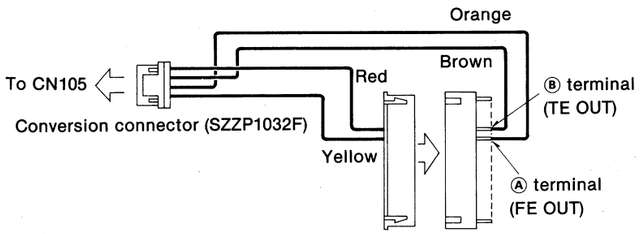

BEST EYE (PD BALANCE) ADJUSTMENT

1. Connect CH1 of the oscilloscope to **TJ701** (+) and **TJ703** (−) of the main P.C.B.
   Oscilloscope setting: VOLT.....200 mV
   SWEEP.....0.5 μsec.
   INPUT.....AC
2. Turn on the power supply and play the **track 13 or 8** (0.5mm black spot) of the test disc.
3. Adjust **VR101** so that the eye pattern of RF signal is widest open.

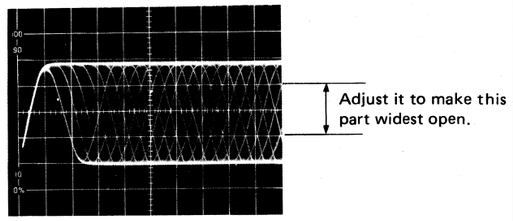

FOCUS OFFSET ADJUSTMENT

1. Connect CH1 of the oscilloscope to **TJ701** (+) and **TJ703** (−) of the main P.C.B., and the CH2 to conversion connector terminal Ⓐ.
   Oscilloscope setting: VOLT.....500 mV (CH1)
   100 mV (CH2)
   SWEEP.....0.5msec.
   INPUT.....AC (CH1)
   DC (CH2)
   MODE.....NORM (Trigger on CH1)
2. Play the **track 13 or 8** (0.5mm black spot) of test disc.
3. Trigger so that the waveform as shown appears on the oscilloscope, and adjust **VR105** to minimize the RF deression on CH1 and the wave amplitude on CH2.

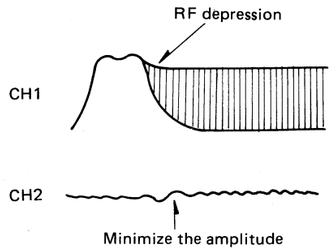

TRACKING OFFSET ADJUSTMENT

1. Connect CH1 of the oscilloscope to **TJ701** (+) and **TJ703** (−) of the main P.C.B., and the CH2 to conversion connector terminal Ⓑ.
   Oscilloscope setting: VOLT.....500 mV (CH1)
   100 mV (CH2)
   SWEEP.....0.5msec.
   INPUT.....AC (CH1)
   DC (CH2)
   MODE.....NORM (Trigger on CH1)
2. Play the **track 13 or 8** (0.5mm black spot) of test disc.
3. Trigger so that the waveform as shown appears on the oscilloscope, and adjust **VR103** to minimize the RF deression on CH1 and the wave amplitude on CH2.
4. After the adjustment, remove the connector and connect the short connector of CN105 in original position.

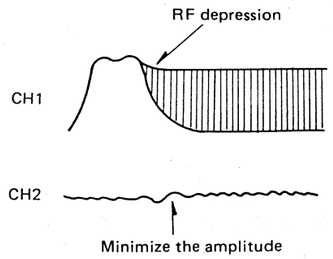

PLL ADJUSTMENT

1. Connect CH1 of the oscilloscope to **R809** (+) and chassis (−) of the main P.C.B.
   Oscilloscope setting: VOLT 1V
   SWEEP . . . . . 1 msec
   INPUT . . . . . DC
2. Play the **track 13 or 8** (0.5mm black spot) of the test disc.
3. Adjust **VR701** while observing the oscilloscope and set it in the middle of the range where the waveform is stable.

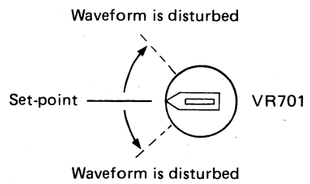

• **NG**

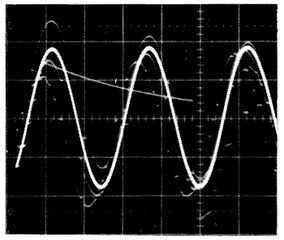

• **OK**

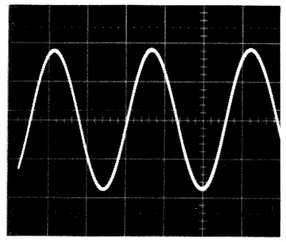

CHECK OF PLAY OPERATION AFTER ADJUSTMENT

• **Skip search check**

1. Play a common disc.
2. Push the skip button to check the skip search. (Both in forward and reverse modes).

• **Manual search check**

1. Play a common disc.
2. Push the manual search button to check that manual search can be smoothly made at low and high speeds. (Both in forward and reverse modes).

• **Check for defect**

1. Play the **track 13 or 8** of the test disc to check that there is no sound skip or noise. (Black spot)
2. Play the **track 14 or 10** of the test disc to check that there is no sound skip or noise. (Fingerprint)

OPTICAL PICKUP ADJUSTMENT

Equipment used

- Two-channel oscilloscope (with trigger) of 30 MHz or over.
- Test disc (SZZP1014F)
- Hexagonal wrench (SZZP1044C)

Adjustment Procedure

* If the optical pickup is replaced, adjust it according to the following procedure.

Step 1: Assemble the set to make it ready for power supply. . . . . Page 28

▼

Step 2: Temporary setting of each VR. . . . . Page 28

▼

Step 3: Turntable height adjustment. . . . . Page 28

Step 4: Mechanical adjustment . . . . . Page 29

▼

Step 5: Electrical adjustment . . . . . Page 24

State of Setting

1. Before assembling the set, remove the setscrew of servo P.C.B.
2. Remove the loading unit setscrew.
3. Pull out the front panel.

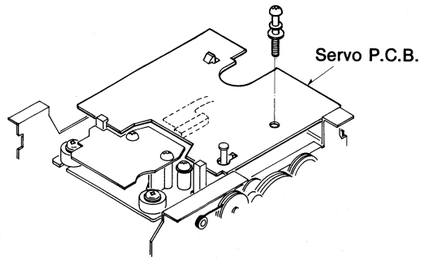

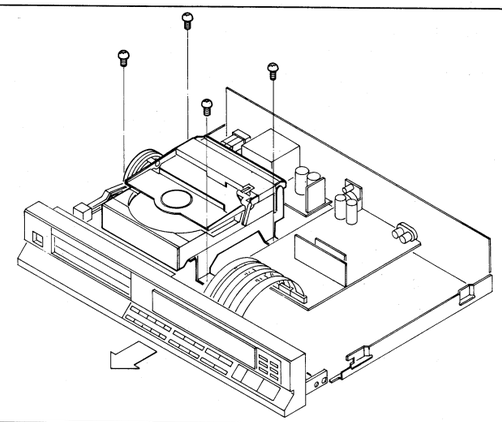

TEMPORARY SETTING OF EACH VR

1. Remove the rubber cover.
2. Temporarily set each VR of the servo P.C.B. shown.

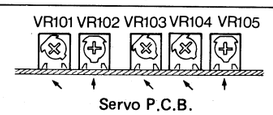

TURNTABLE HEIGHT ADJUSTMENT

1. Pull out CN105 of servo P.C.B. and connect the conversion connector (SZZP1032F).
   (Refer to "TRACKING GAIN ADJUSTMENT" Step 6)
2. Connect the oscilloscope to Connector terminal Ⓐ (+) and chassis (−) of servo P.C.B.
   Oscilloscope setting: VOLT . . . . . 100 mV
   SWEEP . . . . . 5 msec.
   INPUT . . . . . DC
3. Turn **on** the power switch and mount the test disc.
4. Set the DC zero balance of oscilloscope.
5. Play the test disc.
6. Hold up the loading unit by hand during play.
   Caution: Hold the unit horizontally without giving it vibrations.
7. Turn the adjusting screw so that the voltage at the waveform center of the oscilloscope is **0V**.
   Caution: Do not turn the adjusting screw excessively.
8. After the adjustment, apply screw-lock bond to the adjusting screw.
9. After adjustment, remove the conversion connector and connect the short connector of CN105 in original position.

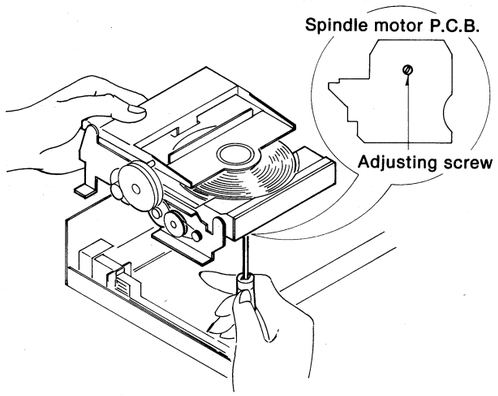

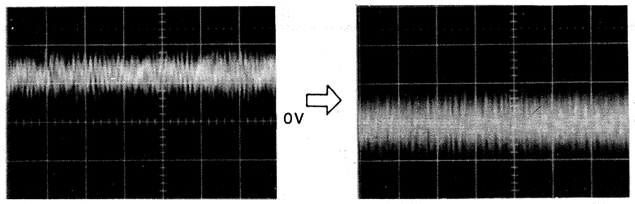

MECHANICAL ADJUSTMENT

1. Connect the oscilloscope to **TJ701** (+) and **TJ703** (–) of the main P.C.B.
   Oscilloscope setting: VOLT 0.5V
   SWEEP . . . . . 0.5 μsec.
   INPUT . . . . . AC
2. Turn **on** the power switch and mount the test disc.
3. Play the test disc.
4. Set the unit as shown with care not to give vibrations to the loading unit.
5. Pull out the connectors (CN101 ~ 103) of the servo P.C.B.
6. Alternately turn the optical pickup adjusting screws (2 pcs) with hexagonal wrench (SZZP1044C) so that the eye pattern of the waveform (RF signal) of the oscilloscope is widest open.

Cautions:

1. Take care not to damage the flexible board of optical pickup during adjustment.
2. Before installing the servo P.C.B., make sure that the condenser on the board is laid down.

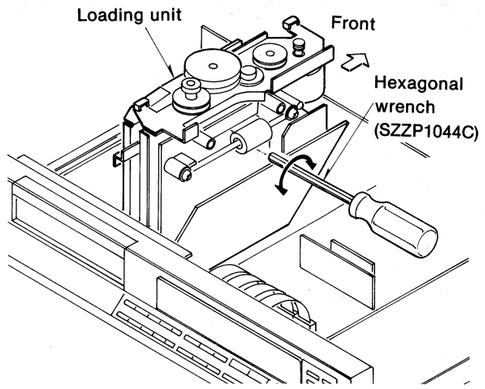

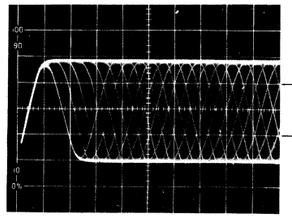

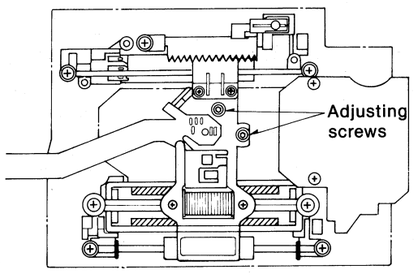

ELECTRICAL ADJUSTMENT

1. Fit the loading unit to the chassis.
2. Follow the procedure of "**Electrical adjustment**" mentioned earlier.

■ ABOUT TEST DISC (SZZP1014F)

- Old and new types of test discs are available.
- The track No. and the contents of record are different between the old and new types.

- Difference between old and new types.

Puporse	TR NO.	
	Old	New
0.5mm Black spot	13	8
Finger print	14, 15	10

■ TROUBLESHOOTING

Notes:

1. Carefully handle the compact disc because stain, dust or warping may cause generation of noise.
2. For the voltage value and waveform, refer to the schematic diagram. (The voltage value and waveform slightly varies depending on the measuring set and tester.)
3. Possible defects are mainly shown by the name of semi-conductor. The adjacent electronic circuits (such as C and R) are omitted.

- **Check the power supply circuit**

Check the 12V power supply (positive and negative voltage) [IC103, 104, 201, 801~804, 851 Focus·tracking Error amp. Coil drive and Traverse servo]
→ Check the voltage of D1 terminals ⊕, ⊖. — NO → AC cord, S1, D1, T1 defective
YES ↓
Check the voltage of IC1, 2 terminals ⓪. — NO → IC1, IC2 defective
YES ↓
Check the FL power supply. (FL illuminate)
→ Check the voltage of BTI terminal ①, ②. — NO → T1 defective
YES ↓
Check the collector voltage of Q13. — NO → Q13, D3, 13 defective
YES ↓
Check the 11.4V power supply (positive and negative voltage) [Q102~Q109 Focus and tracking coil drive, Traverse coil drive, Loading motor drive]
→ Check the voltage of D2 terminals ⊕, ⊖. — NO → D2, T1 defective
YES ↓
Check the voltage of IC4, 5 terminals. — NO → IC4, IC5 defective
YES ↓
Check the 7.8V power supply (positive and negative voltage) [IC501, 851 Spindle motor drive and headphone amp.]
→ Check the emitter voltages of Q11, 12 — NO → Q11, 12, D11, 12 defective
Ⓐ

Ⓐ YES ↓
Check the 5V power supply (positive and negative voltage) [IC101, Q101 Focus servo, tracking servo and Laser power control]
→ Check the emitter voltages of Q110, 111 — NO → Q110, 111, D101, 102 defective
YES ↓
Check the 5V power supply (positive and negative voltage) [IC202, 301~304, 401, 402, 601, 602, 1001, Q601~603, 801 Digital circuit, Data slice, PLL, System control, FL drive, Muting relay drive]
→ Check the voltage of IC11, 12 terminals ⓪. — NO → IC11, IC12 defective

- **Check the focus servo**

Check the power supply circuit.
YES ↓
Reset signal level is "H"? (IC402③) — NO → IC402 defective
YES ↓
Clock is oscillated (4.2336 MHz)? (IC302⑫) — NO → IC301, IC302 defective
YES ↓
Focus ON signal level is "L"? (IC401㊱) — NO → IC401, IC102 defective
YES ↓
Laser APC signal is ON? IC101 ⑤ : H, Q101 Ⓒ : L — NO → IC101, Q101 defective
YES ↓
Focus search signal (triangular wave) is emitted? (IC101㉟) — NO → IC101 defective
YES ↓
Focus lens moves up and down for a few seconds? (Not needed to set the disc) — NO → IC104, Q102, 103, optical pickup defective
Ⓑ

Ⓑ YES ↓
RF signal is emitted? (IC101㉛)
YES ↓
RF detection signal (is "L"? (IC101㉖)

- **Check the trackin**

Check the TRON sig ㉓)..."L" in play anc search/skip.
YES ↓
Tracking error signa (IC101⑮)
YES ↓
Track jump pulse is during search/skip? (IC101⑳)
YES ↓
Check the tracking h (IC101⑯)..."H" in s
YES ↓
Tracking coil drive s emitted? (Q105Ⓔ)

- **Check the traver**

Tracking error signa (IC103①)
YES ↓
Traverse drive signal (IC106Ⓔ)
YES ↓
KICK pulse is emitte mode? (IC401㉓, ㉔)

- **Check the loadin**

Loading motor close command signal is " (IC401㉝, ㉞)
YES ↓
Loading motor drive emitted? (Q108Ⓔ, C

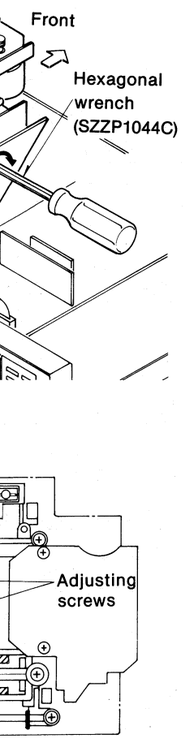

pes.

TR NO.	
	New
	8
5	10

■ TROUBLESHOOTING

Notes:

1. Carefully handle the compact disc because stain, dust or warping may cause generation of noise.
2. For the voltage value and waveform, refer to the schematic diagram. (The voltage value and waveform slightly varies depending on the measuring set and tester.)
3. Possible defects are mainly shown by the name of semi-conductor. The adjacent electronic circuits (such as C and R) are omitted.

• Check the power supply circuit

Check the 12V power supply
(positive and negative voltage)
IC103, 104, 201,
801~804, 851
Focus·tracking Error amp.
Coil drive and Traverse servo

Check the voltage of D1 terminals ⊕, ⊖. — NO → AC cord, S1, D1, T1 — defective
YES ↓

Check the voltage of IC1, 2 terminals ⓪. — NO → IC1, IC2 — defective
YES ↓

Check the FL power supply.
(FL illuminate)

Check the voltage of BTI terminal ①, ②. — NO → T1 — defective
YES ↓

Check the collector voltage of Q13. — NO → Q13, D3, 13 — defective
YES ↓

Check the 11.4V power supply
(positive and negative voltage)
Q102~Q109
Focus and tracking coil drive,
Traverse coil drive, Loading
motor drive

Check the voltage of D2 terminals ⊕, ⊖. — NO → D2, T1 — defective
YES ↓

Check the voltage of IC4, 5 terminals. — NO → IC4, IC5 — defective
YES ↓

Check the 7.8V power supply
(positive and negative voltage)
IC501, 851
Spindle motor drive and
headphone amp.

Check the emitter voltages of Q11, 12 — NO → Q11, 12, D11, 12 — defective
Ⓐ

Ⓐ
YES ↓

Check the 5V power supply
(positive and negative voltage)
IC101, Q101
Focus servo, tracking servo
and Laser power control

Check the emitter voltages of Q110, 111 — NO → Q110, 111, D101, 102 — defective
YES ↓

Check the 5V power supply
(positive and negative voltage)
IC202, 301~304, 401, 402,
601, 602, 1001, Q601~603, 801
Digital circuit, Data slice,
PLL, System control, FL
drive, Muting relay drive

Check the voltage of IC11, 12 terminals ⓪. — NO → IC11, IC12 — defective

• Check the focus servo

Check the power supply circuit.
YES ↓

Reset signal level is "H"? (IC402③) — NO → IC402 defective
YES ↓

Clock is oscillated (4.2336 MHz)? (IC302⑫) — NO → IC301, IC302 — defective
YES ↓

Focus ON signal level is "L"? (IC401㊱) — NO → IC401, IC102 — defective
YES ↓

Laser APC signal is ON?
IC101 ⑤ : H
Q101 Ⓒ : L — NO → IC101, Q101 — defective
YES ↓

Focus search signal (triangular wave) is emitted? (IC101㉟) — NO → IC101 defective
YES ↓

Focus lens moves up and down for a few seconds?
(Not needed to set the disc) — NO → IC104, Q102, 103 optical pickup — defective
Ⓑ

Ⓑ
YES ↓

RF signal is emitted? (IC101㉛) — NO → IC101 optical pickup — defective
YES ↓

RF detection signal (FLOCK) level is "L"? (IC101㉖) — NO → IC101 defective

• Check the tracking servo

Check the TRON signal (IC101 ㉓)..."L" in play and "H" in search/skip. — NO → IC401, IC101 — defective
YES ↓

Tracking error signal is emitted? (IC101⑮) — NO → IC101, IC104, Optical pickup — defective
YES ↓

Track jump pulse is emitted during search/skip? (IC101⑳) — NO → IC401, IC101 — defective
YES ↓

Check the tracking hold signal (IC101⑯)..."H" in search/skip. — NO → IC401, IC101 — defective
YES ↓

Tracking coil drive signal is emitted? (Q105Ⓔ) — NO → IC104, Q104, Q105, Cptical Pickup — defective

• Check the traverse servo

Tracking error signal is emitted? (IC103①) — NO → IC103 defective
YES ↓

Traverse drive signal is emitted? (IC106Ⓔ) — NO → Q106, Q107, Coil — defective
YES ↓

KICK pulse is emitted in skip mode? (IC401㉓, ㉔) — NO → IC401 defective

• Check the loading motor

Loading motor close/open command signal is "L"? (IC401㉝, ㉞) — NO → IC401 defective
YES ↓

Loading motor drive signal is emitted? (Q108Ⓔ, Q109Ⓔ) — NO → IC401, Q108, Q107 — defective

• Check the CLV servo

TRON signal level is at "L"? (IC302⑩) — NO → IC302, IC401 — defective
YES ↓

SRF signal is emitted? (IC302㉕) — NO → IC101, IC301, IC302 — defective
YES ↓

Spindle motor drive signal level is "L"? (IC302㊺) — NO → IC302 defective
YES ↓

Spindle motor drive signal level is "H"? (Q701Ⓒ) — NO → Q701, D701, IC501 — defective
YES ↓

Spindle motor control signal level is "H"? (IC302㊹) — NO → IC302, IC501 — defective
YES ↓

FG pulse is emitted? (IC302㊻) — NO → IC302, IC501 — defective

• Check the audio circuit

FRM, PCK signal emitted? (IC301③, ⑤) — NO → IC301, IC302 — defective
YES ↓

16-bit data signal is emitted? (IC803②, ③, ⑤~⑱) — NO → IC302, IC303, IC304, IC803 — defective
YES ↓

PAM signal is emitted? (IC803⑲) — NO → IC803 defective
YES ↓

Deglitch signal is emitted? (IC304㊱, ㊲) — NO → IC302, IC304, IC801, IC802, IC804 — defective
YES ↓

AF signal is emitted? (IC801, 802④) — NO → IC801, IC802, IC804 — defective
YES ↓

Muting ON signal level is "L"? (IC401⑧) — NO → IC401 defective
YES ↓

Relay terminal is open? — NO → Q801, RLY801 — defective

■ EXPLODED VIEWS

• Cabinet and chassis parts

• Connectors

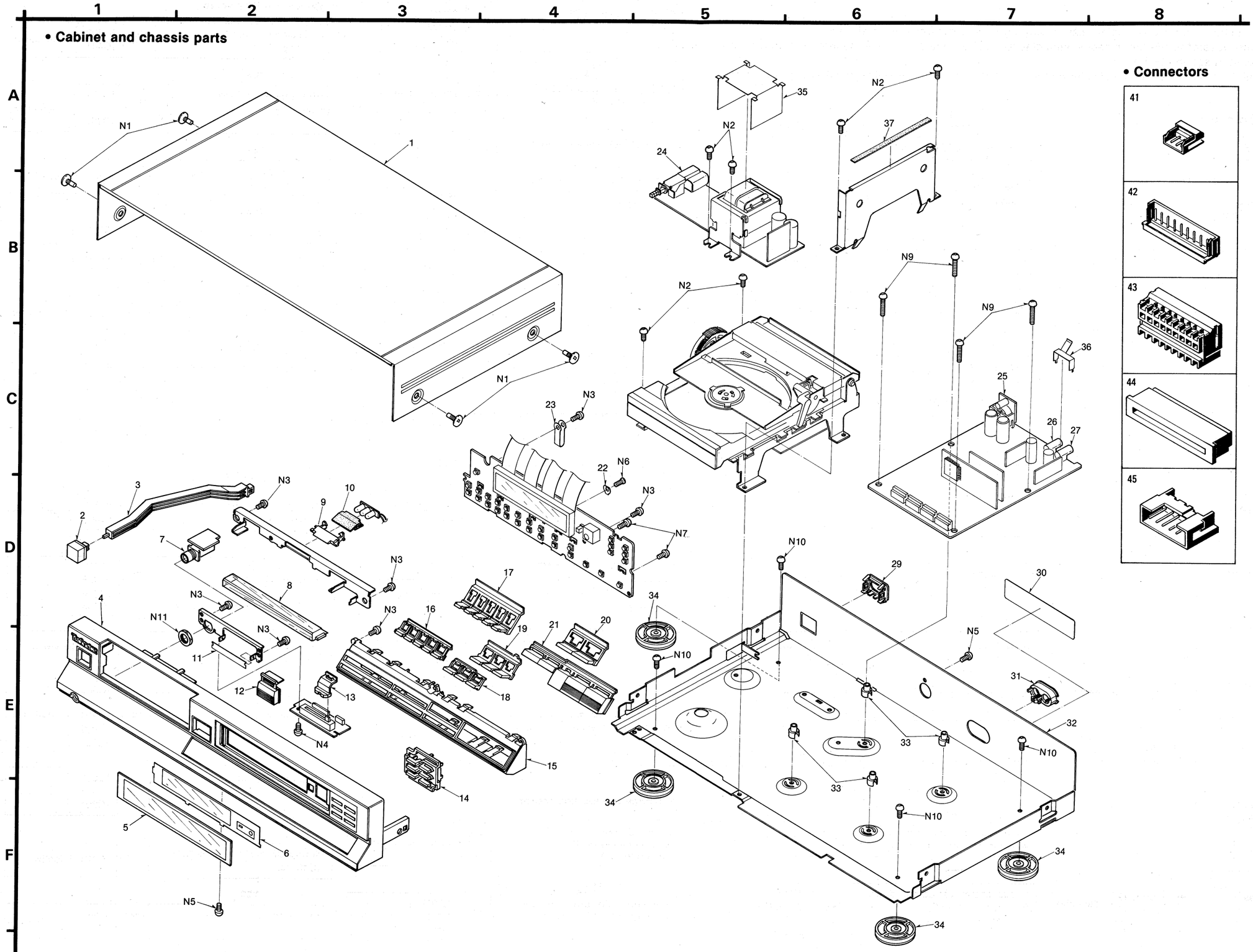

• Loading unit parts

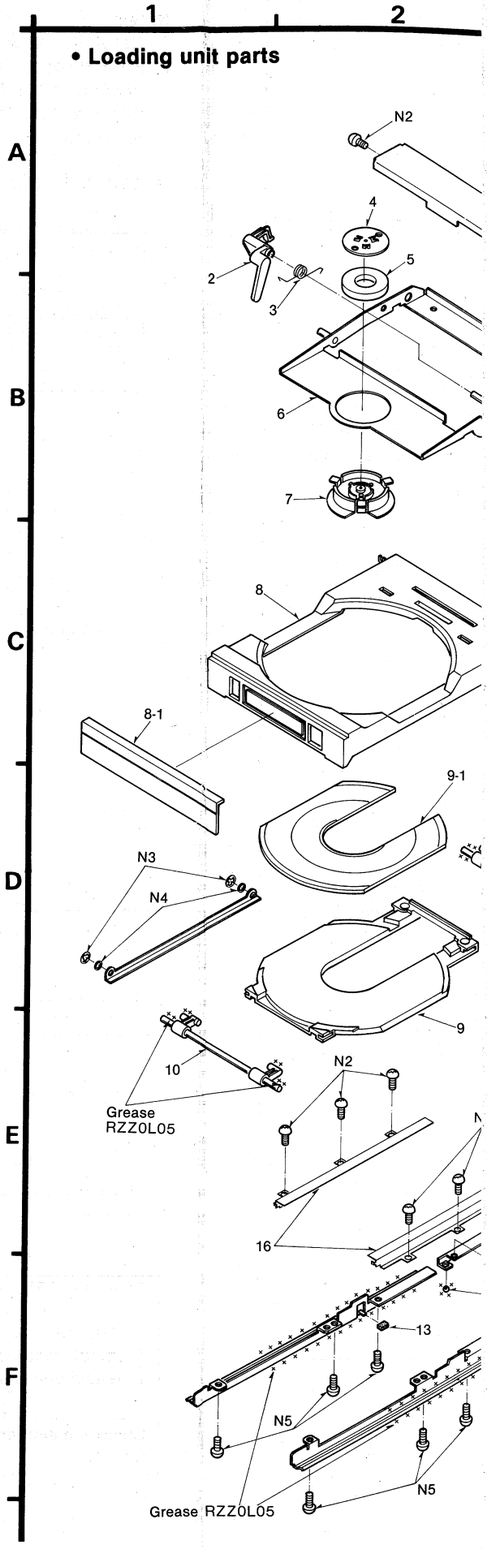

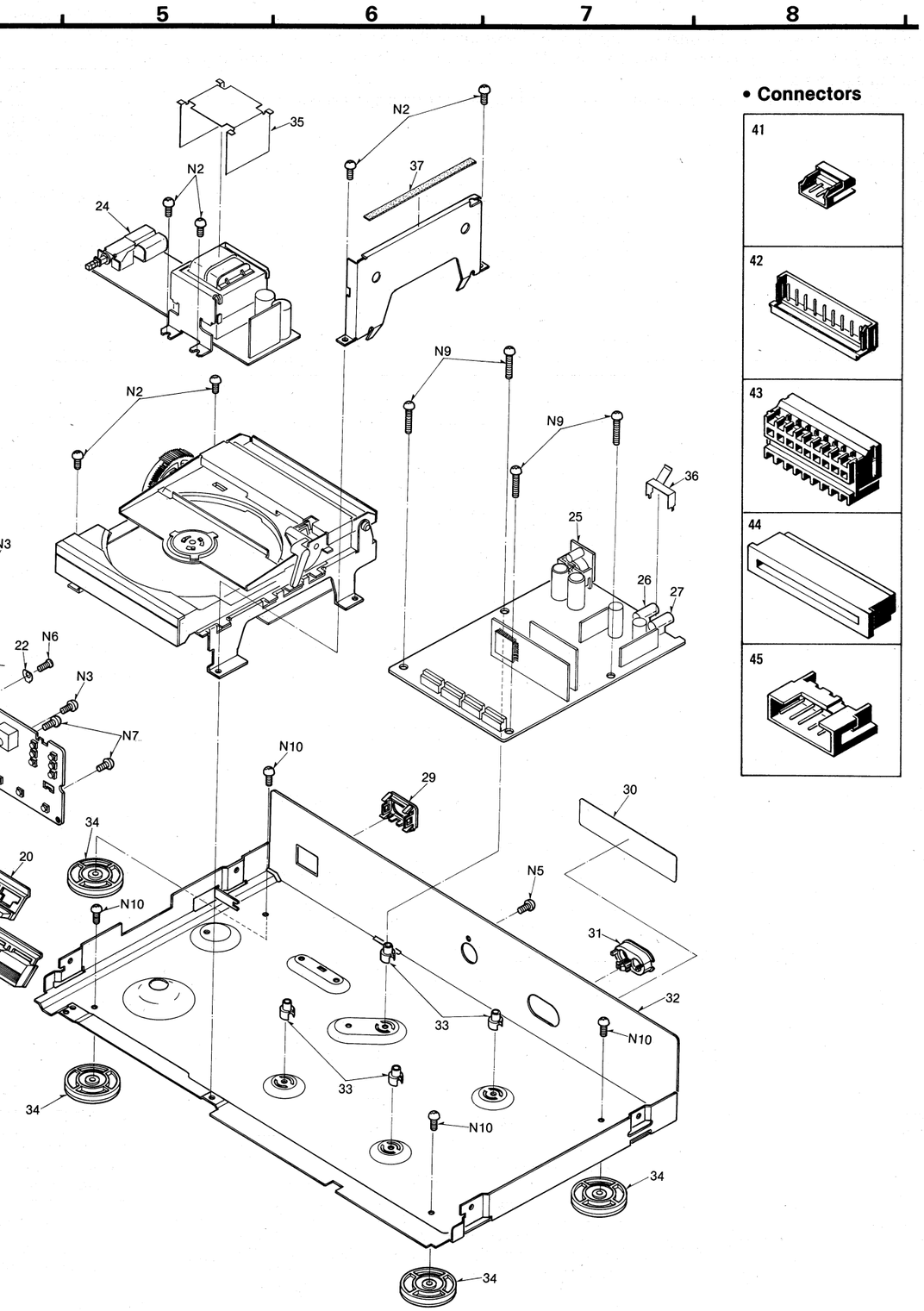

• Connectors

• Loading unit parts

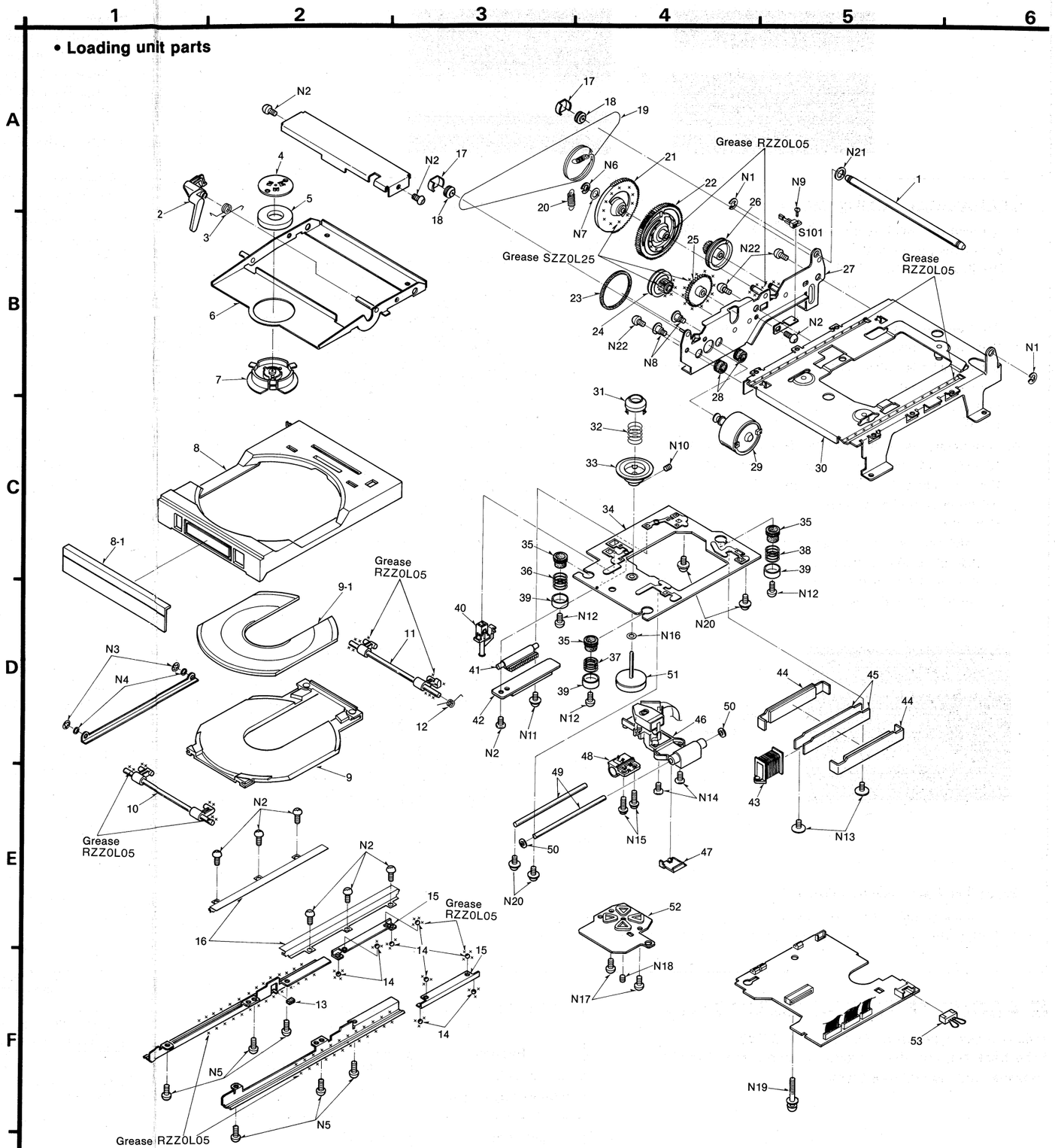

■ REPLACEMENT PARTS LIST

Color

(K)....Black Type
(S)....Silver Type

Notes:
1. Part numbers are indicated on most mechanical parts. Please use this part number for parts order.
2. Important safety notice: Components identified by ⚠ mark have special characteristics important for safety. When replacing any of these components, use only manufacturer's specified parts.
3. Bracketed indications in Ref. No. columns specify the area. Parts without these indications can be used for all areas.
4. The " S " mark is service standard parts and may differ from production parts.
5. Ⓚ-marked parts are used for black only, while ○-marked parts are for silver type only.
6. Part other than Ⓚ-and ○-marked are used for both black and silver types.
7. The parenthesized numbers in the columns of description stand for the quantity per set.

Color	Areas
(K)	[M].....U.S.A.
(K)	[MC]...Canada.
(K) (S)	[E].....Switzerland and Scandinavia.
(K) (S)	[EK]....United Kingdom.
(K) (S)	[XL]....Australia.
(K) (S)	[EG]....F.R. Germany.
(K) (S)	[EB]....Belgium.
(K) (S)	[EH]....Holland.
(K) (S)	[EF]....France.
(K) (S)	[Ei].....Italy.
(K) (S)	[XA]....Southeast Asia, Oceania, Africa, Middle Near East and Central South America.
(K) (S)	[PA]....East PX.
(K) (S)	[PE]....European Military.
(K) (S)	[PC]....European Audio Club.

Ref. No.	Part No.	Description
INTEGRATED CIRCUITS		
IC1	AN78M12	IC
IC2	AN79N12	IC
IC4, 5	⚠ SVIFU15	IC
IC11	⚠ AN78M05	IC
IC12	⚠ AN79N05	IC
IC101	AN8370S	IC
IC102	MN4053BS	IC
IC103, 104	AN6554NS	IC
IC201	AN6552	IC
IC202	AN6914	IC
IC301	AN8371S	IC
IC302	MN6617F	IC
IC303	MN4416S−12	IC
IC304	MN6618F	IC
IC401	MN15261PDE	IC
IC402	MN1280−R	IC
IC501	AN8280LF	IC
IC601	MN1551PDD	IC
IC602 [M, MC]	SVIBX1327M	IC
IC602 [Other areas]	SVIBX1328E	IC
IC801	SVIAL077L	IC
IC802	SVIAL077R	IC
IC803	SVIPCM54KP	IC
IC804	SVIM5238P	IC
IC851	SVINJM4556SA	IC
IC1001	MN4011B	IC
TRANSISTORS		
Q11	2SD973	Transistor
Q12	2SB793	Transistor
Q13	2SA1309	Transistor
Q101	2SC2021	Transistor
Q102	⚠ 2SD1055	Transistor
Q103	⚠ 2SB822	Transistor
Q104	⚠ 2SD1055	Transistor
Q105	⚠ 2SB822	Transistor
Q106	⚠ 2SD1055	Transistor
Q107	⚠ 2SB822	Transistor
Q108	⚠ 2SD1055	Transistor
Q109, 110	⚠ 2SB822	Transistor
Q111	⚠ 2SC2021	Transistor
Q201	2SK301	FET
Q202	UN4212	Transistor
Q203	2SA1309	Transistor

Ref. No.	Part No.	Description
TRANSISTORS		
Q401	UN4112	Transistor
Q600, 601, 603~610	UN4212	Transistor
Q701	UN4212	Transistor
Q801	UN4112	Transistor
DIODES		
D1	⚠ SVDS1WBAK20	Rectifier
D2	⚠ SVDS1WB40	Rectifier
D3	⚠ SVD1SR35200V	Rectifier
D11, 12	MA4082	Zener Diode
D13	MA4330	Zener Diode
D14	MA4082	Zener Diode
D101, 102	MA4056	Zener Diode
D401, 402, 406	MA165	Diode
D600~613	MA165	Diode
D614	LN846RP	LED
D640~642	SVDSLR−54MW4	LED
D701	MA4091	Zener Diode
D801, 802	MA4056	Zener Diode
D803	MA165	Diode
D1001~1009	MA165	Diode
CRYSTAL		
X301	SVQ16CKSS	16.39MHz
VARIABLE RESISTORS		
VR101	EVND1AA00B53	Variable Resistor, 5kΩ(B)
VR102, 103	EVND1AA00B14	Variable Resistor, 10kΩ(B)
VR104	EVND1AA00B53	Variable Resistor, 5kΩ(B)
VR105	EVND1AA00B14	Variable Rresistor, 10kΩ(B)
VR701	EVN38CA00B13	Variable Resistor, 1kΩ(B)
VR851	EWANA1X05A15	Variable Resistor, 100kΩ(A)

Ref. No.	Part No.	Description
RELAY		
RLY801	SFDYG5A237P	Muting
SWITCHES		
S1	⚠ ESB823V	Power
S2 Except for [M, MC]	⚠ SRDSHXW0251	Voltage Selector
S101	SRDSBSW97−2A	Open/Close Det.
S601~630	EVQQS405K	Operation
POWER TRANSFORMER		
T1 [M]	⚠ SLT54JL14A	Power Source
T1 [MC]	⚠ SLT54JS27C	Power Source
T1 Except for [M, MC]	⚠ SLT54JS40E	Power Source
COMPONENT COMBINATIONS		
Z601	EXBP811104K	100kΩ×11
C2, 3	EXRFS203ZS	0.01μF×2
FLUORESCENT DISPLAY TUBE		
FL601	SADD2	Display
HALL ELEMENT		
H501, 502	OH−003	Hall Element
FUSES		
F1 Except for [M, MC]	⚠ XBA2C025TB0S	250V, T250mA
F2 Except for [M, MC]	⚠ XBA2C012TB0S	250V, T125mA

Ref. No.	Part No.	Description
CABINET and CHASSIS PARTS		
1 ○	SKCD20E0S	Cabinet (1)
1 Ⓚ	SKCD20E0K	Cabinet (1)
2 ○	SBC666	Button, Power (1)
2 Ⓚ	SBC666−3	Button, Power (1)
3	SUBD3−1	Rod (1)
4 ○	SGYD30E0SB	Front Panel (1)
4 Ⓚ	SGYD30E0KB	Front Panel (1)
5	SGUD20−00A	Display Panel (1)
6	SDUD3	Filter (1)
7	SRDJHLJ15401	Headphone Jack (1)
8	SRKK001N05	Ornament Plate (1)
9	SRUM002N04	Disc Illumination (1)
10	SRGZ002N01	Holder (1)
11	SUVD2	Cover (1)
12 ○	SBCD60−0SA	Button (1)
12 Ⓚ	SBCD60	Button (1)
13 ○	SRKT002N02	Level Knob (1)
13 Ⓚ	SRKT002N22	Level Knob (1)
14 ○	SBCD40−0S	Button (1)
14 Ⓚ	SBCD40	Button (1)
15 ○	SRUM002N62	Case (1)
15 Ⓚ	SRUM002N52	Case (1)
16 ○	SRKT001N05	Button (1)
16 Ⓚ	SRKT001N35	Button (1)
17 ○	SRKT001N04	Button (1)
17 Ⓚ	SRKT001N34	Button (1)
18 ○	SRKT002N01	Button (1)
18 Ⓚ	SRKT002N31	Button (1)
19 ○	SRKT001N03	Button (1)
19 Ⓚ	SRKT001N33	Button (1)
20 ○	SRKT001N02	Button (1)
20 Ⓚ	SRKT001N32	Button (1)
21 ○	SRKT001N01	Button (1)
21 Ⓚ	SRKT001N31	Button (1)
22	SMTD4	Spacer (1)
23	SRUZ003N01	Clamper (1)
24 ⚠	SJVD0203B	AC Socket (1)
25	SJS6805	Sub-code Jack (1)
26	SJFD3−1	Output Jack (1)
27	SJFD3	Output Jack (1)
29 [XL]	SJVD0204A	Holder (1)
29 [Other areas]	SJVD0203A	Holder (1)
30 [MC]	SGTD41	Name Plate (1)
30 [E]	SGTD20	Name Plate (1)
30 [EK]	SGTD21	Name Plate (1)
30 [XL, EB, EH, EF, EI]	SGTD22	Name Plate (1)
30 [EG]	SGTD40	Name Plate (1)
30 [PA, PE, PC]	SGTD23	Name Plate (1)
31	SJFD1	Holder (1)
32 [M, MC]	SGPD20−00A	Chassis (1)
32 [Other areas]	SGPD20−20A	Chassis (1)
33	SHE185	Spacer (4)
34	SKLD1	Foot (4)
35	SMCD2−1	Shield Plate (1)
36	SMCD3−2	Shield Plate (1)
37	SHGD36	Cushion Rubber (1)
CONNECTORS		
41	EMCS0250ZL	2 Pin (White), CN103 (1)
41	EMCS0250ZLB	2 Pin (Blue), CN101 (1)
41	EMCS0250ZLR	2 Pin (Red), CN102 (1)

Ref. No.	Part No.	Description
CONNECTORS		
42	EMCS0350Z	3 Pin (White), CN104 (1)
42	EMCS0550Z	5 Pin (White), CN202, 801 (2)
42	EMCS0650Z	6 Pin (White), CN701 (1)
42	EMCS0950Z	9 Pin (White), CN11 (1)
42	EMCS0950ZMB	9 Pin (Blue), CN201 (1)
42	EMCS0950ZMR	9 Pin (Red), CN203 (1)
43	SJSD0905	9 Pin, CN401~404 (4)
44	SJS1703	17 Pin, CN106 (1)
45	EMCS0551ML	5 Pin, CN105 (1)
SCREWS and NUT (Cabinet and Chassis Parts)		
N1 ○	SRXG007N10	Screw (4)
N1 Ⓚ	SRXG007N51	Screw (4)
N2	XTV3+6JFYR	Screw, ⊕3×6 (6)
N3	XTV3+8G	Screw, ⊕3×8 (7)
N4	XTV3+6J	Screw, ⊕3×6 (1)
N5	XTV3+8JFZ	Screw, ⊕3×8 (2)
N6	XTV23+10G	Screw, ⊕2.3×10 (1)
N7	XTV3+10G	Screw, ⊕3×10 (2)
N9	XTV3+14JFYR	Screw, ⊕3×14 (3)
N10	XTV4+8JFZ	Screw, ⊕4×8 (4)
N11	XNS12	Nut, φ12 (1)
LOADING MECHANISM PARTS		
1	SUXD23	Shaft (1)
2	SIRD11	Lever (1)
3	SUSD21	Spring (1)
4	S0YD2	Yoke (1)
5	S0MD8	Magnet (1)
6	SIWD14	Plate (1)
7	SIRD6	Holder (1)
8 ○	SGWD20R0SA	Case (1)
8 Ⓚ	SGWD20R0KA	Case (1)
8-1 ○	SGWD20−0SA	Panel (1)
8-1 Ⓚ	SGWD20−0KA	Panel (1)
9	SIRD10E	Tray Ass'y (1)
9-1	SHGD32−1	Rubber (1)
10	SISD5	Lever A (1)
11	SISD6	Lever B (1)
12	SUSD20	Spring (1)
13	SHGD31	Rubber (1)
14	SRYB−3	Ball (8)
15	SIRD12	Spacer (2)
16	SIWD13	Bracket (2)
17	SFUMC07−22	Stopper (2)
18	SFUMC05N22	Pully (2)
19	SDZD1E	Rope Ass'y (1)
20	SUSD22−1	Spring (1)
21	SDGD17−1	Gear (1)
22	SDGD16	Gear (1)
23	SMBD1	Belt (1)
24	SDGD14	Gear (1)
25	SDGD15	Gear (1)
26	SDGD18	Gear (1)
27	SIWD10E	Plate (1)
28	SRGC001N01	Rubber (1)
29	SMNLP500−KN	Motor (With Capstan) (1)
30	SIWD9E	Loading Base (1)
31	SD0D8	Ring (1)
32	SRQA010N04	Spring (1)
33	SD0D7−1	Turntable (1)
34	SISD4E	Traverse Base (1)
35	SHGD9	Cushion (1)
36	SUSD24	Spring C (1)
37	SUSD12	Spring A (1)
38	SUSD13	Spring B (1)
39	SHRD3	Spacer (3)
40	SHRD4	Lock Unit (1)
41	SDGD13	Lock Gear (1)
42	EWS7AKA00Q53	Resistance Unit (1)
43	S0RD5E	Drive Coil (1)
44	S0YD3E	Yoke (2)
45	S0YD4	Yoke (2)
46 ⚠	S0AD20A	Optical Pickup Ass'y (1)
47	S0RD7	Cover (1)
48	EWSL03	Holder (1)
49	SUXD15	Shaft (1)

Ref. No.	Part No.	Description
LOADING MECHANISM PARTS		
50	SHGD10	Cushion (1)
51	SDMD2A	Rotor Ass'y (1)
52	SXPD220−1	Spindle P.C.B. Ass'y (1)
53	SRDJ001N14E	Short Connector (1)
SCREWS and WASHERS (Loarding Mechanism Parts)		
N1	XUC3FY	Washer, φ3 (2)
N2	XTV3+6J	Screw, ⊕3×6 (9)
N3	CSTW−24	Washer, φ2.4 (2)
N4	XWE26D5BN	Washer, φ2.6 (2)
N5	XTV3+8GFZ	Screw, ⊕3×8 (6)
N6	XUC3FT	Washer, φ3 (1)
N7	XWE4D8BW	Washer, φ4 (1)
N8	SFXGB20−01	Screw (2)
N9	XSN2+4	Screw, ⊕2×4 (1)
N10	XXE26D5	Screw, ⊖2.6×5 (1)
N11	XTW3+8T	Screw, ⊕3×8 (1)
N12	SFPEV13204	Screw (3)
N13	SFXGQ06N01	Screw (2)
N14	XYN26+C4	Screw, ⊕2.6×4 (2)
N15	XYN26+W8	Screw, ⊕2.6×8 (2)
N16	SRXW007N02	Washer (1)
N17	XTV3+8G	Screw, ⊕3×8 (3)
N18	SNSD9	Screw (1)
N19	SRXG007N11	Screw (1)
N20	SNSD10	Screw (4)
N21	XWE4E10	Washer, φ4 (1)
N22	XTV3+6JFZ	Screw, ⊕3×6 (3)
PACKING PARTS		
P1 [EF] ○	SPND53	Carton Box (1)
P1 [Other areas] ○	SPND52	Carton Box (1)
P1 [MC, EF] Ⓚ	SPND23	Carton Box (1)
P1 [Other areas] Ⓚ	SPND22	Carton Box (1)
P2	SPSD15	Pad (Front) (1)
P3	SPSD16	Pad (Rear) (1)
P4	SPSD32−1	Spacer (1)
P5	SFYH60×50	Polyethylene Bag, (1) Unit
P6	SRHZJ02N01	Polyethylene Bag, Remote Control Unit (1)
P7	XZB23X20C03	Polyethylene Bag, Accessories (1)
ACCESSORIES		
A1 [M]	SQUD31	Instruction Book (1)
A1 [MC]	SQUD32R	Instruction Book (1)
A1 [E, EH, EB]	SQUD37R	Instruction Book (1)
A1 [EK]	SQUD34	Instruction Book (1)
A1 [EI]	SQUD35	Instruction Book (1)
A1 [PA, PE, PC]	SQUD29	Instruction Book (1)
A1 [Other areas]	SQUD33	Instruction Book (1)
A2 [M, MC] ⚠	SJA170	AC Cord (1)
A2 [XL] ⚠	SJA173	AC Cord (1)
A2 [EK] ⚠	SFDAC05G02	AC Cord (1)
A2 [PA, PE, PC] ⚠	SJA168−1	AC Cord (1)
A2 [Other areas] ⚠	SJA171	AC Cord (1)
A3	SRDH001N01	Output Cord (1)
A4	UM−3N	Battery (2)
A5 [PA, PE, PC only] ⚠	SJP9215	Adaptor (1)
A6 [XA] only ⚠	SFDKI19118	2 Pin Plug (1)

■ REPLACEMENT PARTS LIST AND EXPLODED VIEW (Remote Control Unit)

● REMOTE CONTROL UNIT

Ref. No.	Part No.	Description
IC		
IC1 [M, MC]	MN6030CA	IC
IC1 [Other areas]	MN6030B	IC
TRANSISTOR		
Q1	UN1231	Transistor
DIODES		
D1	LN66S	LED
D2, 3	MA154WK	Diode
D4, 5	MA154WK	Diode
D6, 7	MA154WA	Diode
CERAMIC OSCILLATOR		
X1 [M, MC]	CSB455EBIT	455kHz
X1 [Other areas]	CSB420PB1	420kHz

Ref. No.		Part No.	Description	
CABINET and CHASSIS PARTS				
1		UR64PP124C	Panel	(1)
2	○	UR64CS119A	Top Cover	(1)
2	Ⓚ	UR64CS119	Top Cover	(1)
3		UR64SB125	Cover	(1)
4		UR64BT123A	Button	(27)
5		UR64CT122	Spacer	(1)
6	○	UR64CS120A	Bottom Cover	(1)
6	Ⓚ	UR64CS120	Bottom Cover	(1)
7		UR64LB126AF	Label	(1)
8	○	UR64EC121A	Battery Cover	(1)
8	Ⓚ	UR64EC121	Battery Cover	(1)
9		UR64TD128	Terminal ⊖	(1)
10		UR64TD127	Terminal ⊕	(1)
11		UR52TD101	Terminal	(1)
SCREW				
N1	○	XTS26+12GFC	Screw, ⊕2.6×12	(2)
N1	Ⓚ	XTS26+12GFZ	Screw, ⊕2.6×12	(2)

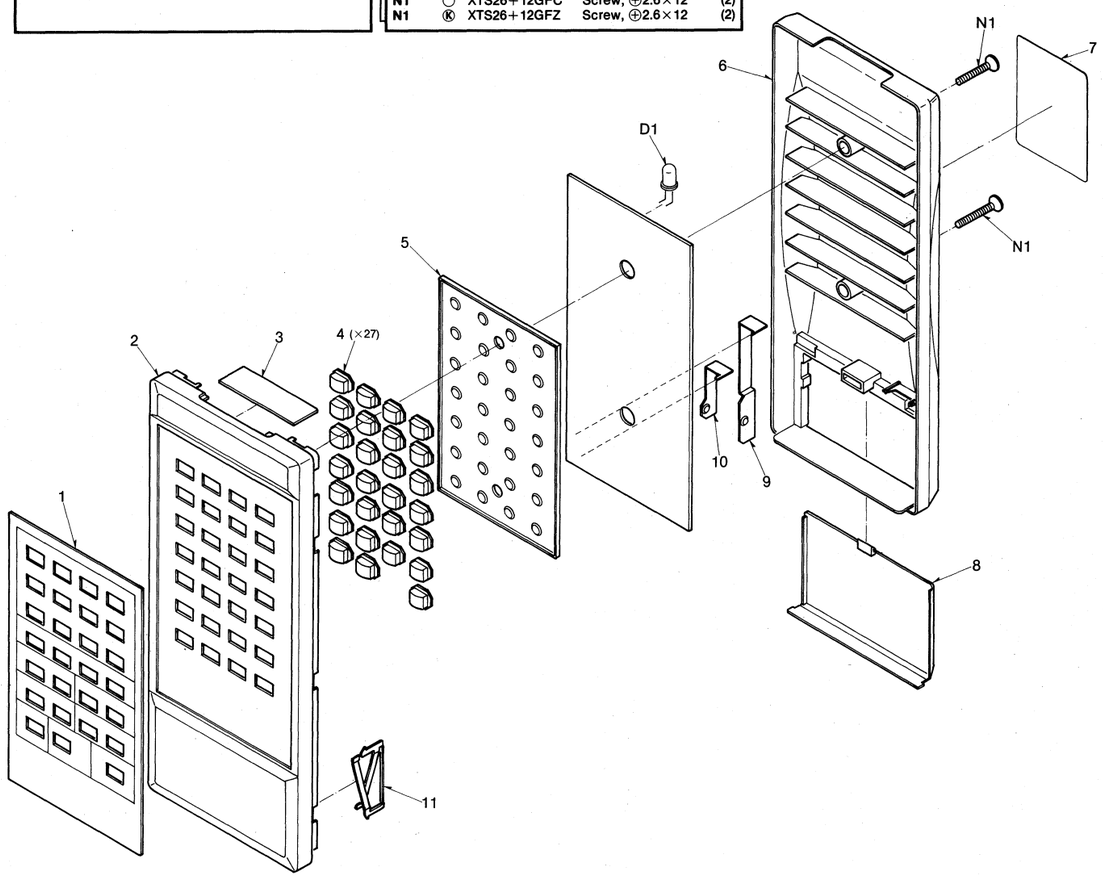

■ RESISTORS AND CAPACITORS

Notes: 1. Part numbers are indicated on most mechanical parts. Please use this part number for parts orders.
2. Important safety notice: Components identified by ⚠ mark have special characteristics important for safety. When replacing any of these components use only manufacturer's specified parts.
3. The " S " mark is service standard parts and may differ from production parts.
4. Unless otherwise specified. All resistors are in OHMS (Ω) K = 1000Ω, M = 1000kΩ. All capacitors are in MICORFARADS (μF), P = 10^{-6}μF.

Numbering System of Resistor

Example

ERD	S2	T	J	101
Type	Wattage (1/4W)	Shap	Tolerance (± 5%)	Value (1kΩ)

ERJ	8	GEY	J	102	⬚
Type	Wattage (1/8W)	Shape	Tolerance (± 5%)	Value (1kΩ)	Specialuse

Resistor Type	Wattage	Tolerance
ERD : Carbon	S2 : 1/4W	J : ± 5%
ERJ : Chip Type Carbon	8 : 1/8W	K : ± 10%
ERO : Metal Film		

Numbering System of Capacitor

Example

ECKD	1H	102	K	C
Type	Voltage (50V)	Value (0.001μF)	Tolerance (± 10%)	Peculiarity

ECEA	0G	KS	470	L
Type	Voltage (4V DC)	Peculiarity use	Value (47μF)	Special use

GR426	B	273	K	25
Type	Peculiarity	Value (0.027μF)	Tolerance (± 10%)	Voltage (25V)

Type	Voltage	Tolerance
ECEA, AR, REC : Electrolytic	**ECEA, AR, REC, ECEV Types**	F : ± 1 pF
ECEA..N, ARA...N : Non-Polar Electrolytic	0G : 4V	J : ± 5%
ECEV...N : Non-Polar Electrolytic (Chip Type)	0J : 6.3V	K : ± 10%
ECQV : TF	1A : 10V	M : ± 20%
ECQM : Polyester	1C : 16V	Z : +80 −20%
ECFR, ECKD, ECFF, ECKR : Ceramic	1E : 25V	N : ± 30%
RCBS : Ceramic (Axial Type)	1V : 35V	P : +100 −0%
	1H : 50V	
	Others	
	1E : 25V DC	
	1H : 50V DC	
	50 : 50V DC	
	2B : 125V DC	
	KC : 125V AC	

● Indication of RCBS type capacitor (Axial type)

● Rated voltage

The rated voltages are indicated by insulating paint colors.

Rated voltage (DC)	Paint color
16V	Pink
50V	Light-green

● Electrostatic capacity and characteristics

The nominal electrostatic capacites (PF), tolerances and temperature characteristics are indicated by color codes.

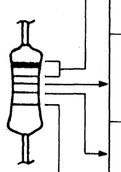

Color band	Brown	Red	Orange	Yellow	Green	Blue	Purple	Gray	White	Black	Gold	Silver
1st, 2nd color bands (Effective number of nominal electrostatic capacity)	1	2	3	4	5	6	7	8	9	0	—	—
3rd color band (Multiplier of nominal electrostatic capacity)	10^1	10^2	10^3	10^4	—	—	—	—	—	10^0	10^{-1}	10^{-2}
4th color band (Tolerances)	—	—	—	—	—	—	—	N	Z	M	J	K
5th color band (Temperature characteristic)												

● RESISTORS

Ref. No.	Part No.	Value
R11, 12	ERDS2TJ102	1K
R13	ERDS2TJ222	2.2K
R14	ERDS2TJ822	8.2K
R101, 102	ERDS2TJ821	820
R103	ERDS2TJ154	150K
R104, 105	ERDS2TJ104	100K
R106	ERDS2TJ154	150K
R107	ERDS2TJ101	100
R108	ERDS2TJ474	470K
R109	ERDS2TJ222	2.2K
R110	ERDS2TJ564	560K
R111	ERDS2TJ472	4.7K
R112	ERDS2TJ683	68K
R113	ERDS2TJ104	100K
R114	ERDS2TJ474	470K
R115	ERDS2TJ101	100
R116	ERDS2TJ332	3.3K
R117	ERDS2TJ564	560K
R119	ERDS2TJ222	2.2K
R120	ERDS2TJ101	100
R121	ERDS2TJ392	3.9K
R122	ERDS2TJ270	27
R123	ERDS2TJ3R3	3.3
R124	ERDS2TJ224	220K
R125	ERDS2TJ333	33K
R126	ERDS2TJ182	1.8K
R127	ERDS2TJ333	33K
R128	ERDS2TJ122	1.2K
R129	ERDS2TJ103	10K

Ref. No.	Part No.	Value
R131	ERDS2TJ472	4.7K
R132	ERDS2TJ103	10K
R133	ERDS2TJ153	15K
R134	ERDS2TJ101	100
R135	ERDS2TJ270	27
R136	ERDS2TJ3R3	3.3
R137	ERDS2TJ272	2.7K
R138, 139	ERDS2TJ333	33K
R140	ERDS2TJ122	1.2K
R141	ERDS2TJ153	15K
R142	ERDS2TJ272	2.7K
R143	ERDS2TJ683	68K
R144	ERDS2TJ473	47K
R145	ERDS2TJ154	150K
R146, 147	ERDS2TJ222	2.2K
R148	ERDS2TJ223	22K
R149	ERDS2TJ334	330K
R150	ERDS2TJ822	8.2K
R151, 152	ERDS2TJ682	6.8K
R153	ERDS2TJ822	8.2K
R154, 155	ERDS2TJ222	2.2K
R156, 157	ERDS2TJ102	1K
R158	ERDS2TJ471	470
R159	ERDS2TJ120	12
R160	ERDS2TJ153	15K
R161	ERDS2TJ272	2.7K
R162	ERDS2TJ102	1K
R163	ERDS2TJ104	100K
R201	ERDS2TJ223	22K

Ref. No.	Part No.	Value
R202	ERDS2TJ473	47K
R203	ERDS2TJ223	22K
R204~208	ERDS2TJ473	47K
R209	ERDS2TJ682	6.8K
R210	ERDS2TJ224	220K
R211	ERDS2TJ223	22K
R212	ERDS2TJ101	100
R213	ERDS2TJ392	3.9K
R214	ERDS2TJ101	100
R215	ERDS2TJ392	3.9K
R216, 217	ERDS2TJ222	2.2K
R218	ERDS2TJ473	47K
R301	ERDS2TJ224	220K
R302	ERDS2TJ333	33K
R303	ERDS2TJ221	220
R304	ERDS2TJ562	5.6K
R305	ERDS2TJ474	470K
R401~407	ERDS2TJ472	4.7K
R408~413	ERDS2TJ103	10K
R414	ERDS2TJ394	390K
R415	ERDS2TJ472	4.7K
R501	ERJ8GEYJ1R5V	1.5
R502	ERJ8GEYJ223V	22K
R503, 504	ERJ8GEYJ560V	56
R505	ERJ8GEYJ473V	47K
R601	ERDS2TJ105	1M
R602	ERDS2TJ271	270
R603	ERDS2TJ331	330
R701	ERDS2TJ154	150K

Ref. No.	Part No.	Value
R702	ERDS2TJ224	220K
R703, 704	ERDS2TJ102	1K
R705	ERDS2TJ123	12K
R706	ERDS2TJ103	10K
R707	ERDS2TJ472	4.7K
R708	ERDS2TJ561	560
R709	ERDS2TJ102	1K
R710	ERDS2TJ152	1.5K
R801, 802	ERDS2TJ222	2.2K
R803	EROS2TKG1101	1.1K
R804	EROS2CKG1101	1.1K
R805, 806	EROS2TKG1201	1.2K
R807	ERDS2TJ391	390
R808	ERDS2TJ104	100K
R809	ERDS2TJ391	390
R810	ERDS2TJ104	100K
R851, 852	ERDS2TJ820	82
R853, 854	ERDS2TJ123	12K
R855, 856	ERDS2TJ272	2.7K
R1001	ERDS2TJ223	22K
R1002, 1003	ERDS2TJ103	10K
REMOTE CONTROL UNIT		
R1	ERDS2TJ1R0	1

● CAPACITORS

Ref. No.	Part No.	Value
C1 ⚠	ECKDKC103PF	0.01
C4, 5	REC1E102M	1000
C6, 7	ARA1H010M0	1
C11, 12	ECEA1CU222	2200
C13, 14	ECEA0JU221	220
C15	ECEA1EU470	47
C18	ECEA1HU470	47
C19	ECEA1CU470	47
C101, 102	ECEA1CKS100	10
C103	RCBS1C103MYY	0.01
C104	ECQM1H104KV	0.1
C105	RCBS1H221KBY	220P
C106	ECEA1HSN010	1
C108	ECEA1HSN2R2	2.2
C109	ECEA1HSN0R1	0.1
C110	ECQM1H123KV	0.012
C111	ECQM1H152KV	0.0015
C112	ECQM1H223KV	0.022
C114	ECEA1HSN010	1
C115	ECEA1HSNR22	0.22
C116	ECQM1H123KV	0.012
C119	RCBS1C103MYY	0.01
C120, 121	RCBS1H102KBY	0.001
C122	RCBS1H681KBY	680P
C123, 124	RCBS1H102KBY	0.001
C125	ECEA1HKS0R1	0.1
C126	RCBS1H220JLY	22P
C127	ECEA1HKS010	1

Ref. No.	Part No.	Value
C128	ECFR1H104ZFM	0.1
C129, 130	ECEA1CKS100	10
C133	RCBS1H681KBY	680P
C134	ECEA0JKS220	22
C135	ECEA1HKS010	1
C136	RCBS1H221KBY	220P
C137	ECQM1H333KV	0.033
C138	RCBS1H682MXY	0.0068
C139	RCBS1H182MXY	0.0018
C140	ECEA1HKSR33	0.33
C141	ECEA0JKS470	47
C142, 143	ECEA0JKS220	22
C144	RCBS1C103MYY	0.01
C145	ECEA0JKS220	22
C146	ECQV1H104JZ	0.1
C147	RCBS1C103MYY	0.01
C148	ECKR1H102KB	0.001
C201, 202	ECQM1H104JV	0.1
C301	RCBS1H150JCY	15P
C302	ECEA1VKN2R2	2.2
C303	ECQM1H153KV	0.015
C304	ECQM1H154KV	0.15
C305	ECQM1H104KV	0.1
C306	RCBS1H102KBY	0.001
C307	ECEA1HUR47	0.47
C308	ECQM1H333KV	0.033
C309	RCBS1H102KBY	0.001
C310	ECQM1H104KV	0.1

Ref. No.	Part No.	Value
C312	RCBS1H220JCY	22P
C313	RCBS1H6R8KCY	6.8P
C314	ECQV1H104JZ	0.1
C315	RCBS1C103MYY	0.01
C317~319	RCBS1C103MYY	0.01
C320	ECQV1H104JZ	0.1
C321, 322	RCBS1H681KBY	680P
C401	ECEA0JU470	47
C402	ECFR1H104ZFM	0.1
C403	ECKR1H102KB	0.001
C404	ECKR1H103ZF	0.01
C501	ECEV1EV6R8R	6.8
C502	GR426B273K25	0.027
C503, 504	ECEV1CN4R7R	4.7
C505	GR426B104M25	0.1
C506	GR426F334Z25	0.33
C507	GR426F224Z25	0.22
C508, 509	GR426F104Z25	0.1
C510	GR426F104Z25	0.1
C601	RCBS1C103MYY	0.01
C701	ECQM1H333KV	0.033
C702	ECFR1H104ZFM	0.1
C703	ECEA0JU470	47
C801	AR1C221M0	220
C802	ECEA0JU470	47
C803	AR1C221M0	220
C804	ECEA0JU470	47
C805, 806	CQS2B391JCF	390P

Ref. No.	Part No.	Value
C807, 808	CQS2B103JCD	0.01
C809, 810	ARA1CN220M0T	22
C811, 812	ECKR1H102KB	0.001
C814, 815	ECKR1H102KB	0.001
C817	REC1E331M0	330
C818	ECKD1H221KB	220P
C850	RCBS1C103MYY	0.01
C851, 852	RCBS1C332MXY	0.0033
C853, 854	RCBS1C103MYY	0.01
C855	RCBS1C103MYY	0.01
C1001	ECKR1H221KB	220P
REMOTE CONTROL UNIT		
C1 [M, MC]	ECKD1H101KB	100P
C1 [Other areas]	ECKD1H471KB	470P
C2 [M, MC]	ECKD1H101KB	100P
C2 [Other areas]	ECKD1H121KB	120P

■ TERMINAL FUNCTION OF LSI

● MN6617 (Digital Signal Processing : EFM Decoder, Error Correction, CLV Servo)

Pin No.	Mark	I/O Devision	Function
1	BLKCK	O	Sub-code block (Q data) clock (75 Hz)
2	$\overline{\text{CLDCK}}$	O	Sub-code frame (Q data) clock (7.35 kHz)
3	$\overline{\text{SUBQ}}$	O	Sub-code (Q data) output
4	CRC	O	Sub-code (Q data) CRC check (Not used, open)
5	$\overline{\text{RST}}$	I	Reset signal input (reset at "L")
6	MLD	I	Command load input
7	MCLK	I	Command clock input
8	MDATA	I	Command data input
9	DMUTE	I	Muting control (muting ON at "H")
10	$\overline{\text{TRON}}$	I	Tracking servo ON signal (tracking servo ON at "L")
11	STAT	O	Processing condition (CRC, OTC, CLVOK, TT STOP) output
12	SMCK	O	Clock output (4.2336 MHz)
13	PMCK	O	Pitch control clock output (Not used, open)
14	ITC	I	Track counter input signal (Not used, connected to +5V)
15	$\overline{\text{TEST}}$	I	Test mode selection (Not used, connected to +5V)
16	X2	O	Clock output (16.9334 MHz)
17	X1	I	Clock input (16.9344 MHz)
18	SEL	I	DA output parallel/serial selection (serial at "L")
19	LDG/WDCK	O	L channel deglitch signal/serial data word clock.
20	RDG	O	R channel deglitch signal.
21	DEMPH	O	De-emphasis ON signal (de-emphasis ON at "H")
22	IPFLAG	O	Interpolation flag (interpolation at "H")
23	FLAG0	O	Error flag (error at "H")
24	FLAG6	O	16 K RAM address reset signal (reset at "H")
25	XCK	O	Clock (16.9334 MHz) output (Not used, open)
26	DA15/ SRDATA	O	16-bit data output/serial data output (MSB first)
27	DA14/ SRDATAX	O	16-bit data output/serial data output (LSB first)
28	DA13/SRCK	O	16-bit data output/serial data beat clock.
29	DA12/WDCK	O	16-bit data output/serial data word clock (Not used)
30	DA11/ BYTCK	O	16-bit data output/serial data byte clock (Not used)
31	GND	I	GND terminal
32	DA10/RIL	O	16-bit data output/RIL signal
33	DA9/RESY	O	16-bit data output/ Resynchronizing signal

Pin No.	Mark	I/O Devision	Function
34	DA8/FCLV	O	16-bit data output/Synchronizing detection signal (Not used)
35	DA7/ IPBYTE	O	16-bit data output/Interpolation flag for each byte (Not used)
36	DA6/IPSEL	I/O	16-bit data output/ interpolation inhibit (Not used)
37	DA5/FLAG5	O	16-bit data output/C2 decoder correction flag 3 (Not used)
38	DA4/FLAG4	O	16-bit data output/C2 decoder correction flag 2 (Not used)
39	DA3/FLAG3	O	16-bit data output/C2 decoder correction flag 1 (Not used)
40	DA2/FLAG2	O	16-bit data output/C1 decoder correction flag 2 (Not used)
41	DA1/FLAG1	O	16-bit data output/C1 decoder correction flag 1 (Not used)
42	DA0/FLCK0	O	16-bit data output/Crystal frame clock
43 ~ 50	D7 ~ D0	I/O	16 K RAM data output
51	RAMOE	O	16 K RAM $\overline{\text{OE}}$ signal
52	RAMWE	O	16 K RAM $\overline{\text{WE}}$ signal
53 ~ 63	RAMA 0 ~ RAMA10	O	16 K RAM address signal (RAMA0 : LSB, RAMA10: MSB)
64	PC	O	Spindle motor ON signal (ON at "L")
65	EC	O	Spindle motor drive signal
66	FG	I	Spindle motor FG signal input
67	——	——	——
68	——	——	——
69	——	——	——
70	——	——	——
71	——	——	——
72	PCK	I	PLL extract clock input
73	VDD	I	Power supply (connected to +5V)
74	EFM	I	EFM signal input (PLL)
75	SRF	I	EFM signal input (DSL)
76	DO	I	Drop-out signal (Drop-out at "H")
77	CLVS	O	11T stereo OK signal (OK at "H")
78	FPC	O	PLL frequency comparision signal
79	BSSEL	O	PLL frequency in take operation signal.
80	——	——	——
81	——	——	——
82	——	——	——
83	SUBC	O	Sub-code serial output data
84	SBCK	I	Clock for sub-code serial output

• MN6618 (Digital Filter)

Pin No.	Mark	I/O Device	Function
1	———	——	———
2	D012	O	16-bit parallel deta output
3	D011/SCK	O	16-bit parallel data output/ serial output bit clock
4	D010/SOUT	O	16-bit parallel data output/ serial output data
5	GND	I	GND terminal
6	D09	O	16-bit parallel data
7	———	——	———
8	D08	O	16-bit parallel data
9	D07	O	16-bit parallel data
10	———	——	———
11	———	——	———
12	D06	O	16-bit parallel data
13	D05	O	16-bit parallel data
14	D04	O	16-bit parallel data
15	D03/2RLCK	O	16-bit parallel data/RL signal
16	———	——	———
17	———	——	———
18	D02/WCK	O	16-bit parallel data/serial output word clock
19	D01	O	16-bit parallel data
20	D00	O	16-bit parallel data (LSB)
21	MDATA	I	Command data input

Pin No.	Mark	I/O Device	Function
22	———	——	———
23	MCLK	I	Command clock input
24	MLD	I	Command load input
25	———	——	———
26	$\overline{RST}$	I	Reset signal input (reset at "L")
27	VDD	I	Power supply (connected to +5V)
28	LRCK	I	R/L signal
29	———	——	———
30	SFT	I	Serial data input clock
31	SIN	I	Serial data input
32	———	——	———
33	X OUT	O	Clock output (Not used)
34	X IN	I	Clock input (16.9344 MHz)
35	OSEL	I	DA output parallel/serial selection. (parallel at "H")
36	LDGL	O	L channel deglitch signal
37	RDGL	O	R channel deglitch signal
38	VDD	I	Power supply (connected to +5V)
39	D015	O	16-bit parallel data (MSB)
40	D014	O	16-bit parallel data
41	———	——	———
42	D013	O	16-bit parallel data

• AN8371S (Data Slice and PLL)

Pin No.	Mark	I/O Devision	Function
1	VEE	I	Power supply (connected to –5V)
2	SRF	O	RF signal output data-sliced into digital value
3	EFM	O	EFM signal output synchronized with PCK
4	D·GND	I	GND terminal (digital system)
5	PCK	O	Clock output extracted from SRF
6	VCC	I	Power supply (connected to +5V)
7	VA	I	VCO free ran frequency adjusting current input
8	VC1	I	Capacitor connection for VCO oscillation frequency
9	VC2	I	Capacitor connection for VCO oscillation frequency
10	VR	I	Resistor connection for VCO oscillation frequency
11	PD	I	Capacitor connection for PLL DO protection

Pin No.	Mark	I/O Devision	Function
12	PL1	I	PLL loop filter constant connection
13	PL2	I	PLL loop filter constant connection
14	FPC	I	Frequency comparison error signal input.
15	RF	I	RF signal input
16	ARF	O	RF signal output with AGC applied
17	AGC	I	ARF signal input for AGF drop-out detection
18	AC	I	AGC loop filter constant connection
19	DO	O	Drop-out detection pulse output
20	A·GND	I	GND terminal (analog system)
21	DSL	I	RF signal input for data slicer
22	SLC	I	Slice level control signal input
23	FC1	I	Data slicer filter capacitor connection
24	FC2	I	Data slicer filter capacitor connection

• AN8370S (Optical Servo Control)

Pin No.	Mark	I/O Devision	Function
1	VEE	I	Power supply (connected to –5V)
2	LSA	I	Phase difference input (A)
3	GND	I	GND terminal
4	LSB	I	Phase difference input (B)
5	APC	O	Auto laser power control output
6	TEOUT	O	Tracking error signal output
7	TEG	I	Tracking error gain adjusting input
8	TE–	I	Phase difference-voltage conversion (–)
9	TE +	I	Phase difference-voltage conversion (+)
10	APC –	O	Laser power inversion input
11	C·MEM	I	Capacitor connection for phase difference memory
12	APC +	I	Laser power non-inversion input
13	VREF	O	Reference current generation
14	SENSE	O	Selector output (track-crossed)
15	HIN	I	Tracking hold circuit input
16	HOUT	O	Tracking hold circuit output
17	SPCNT	O	Track-cross speed control output (not used, grounded)
18	C·MSP	I	Track-cross reference speed setting capacitor connection (not used, grounded)
19	C·AF	I	Auto focus timer capacitor connection
20	KICK R/$\overline{F}$	O	Track kick signal output
21	VCC	I	Power supply (connected to +5V)
22	CNT1	I	Control input ($\overline{FOON}$: Focus servo ON signal)

Pin No	Mark	I/O Devision	Function
23	CNT2	I	Control input ($\overline{TRON}$: Tracking servo ON signal)
24	CNT3	I	Control input (KICKF : Kick direction [forward] command)
25	CNT4	I	Control input (KICKR : Kick direction [reverse] command)
26	$\overline{F·LOCK}$	O	Focus lock signal output
27	C·FBDO	O	Capacitor connection for inversion RF high speed detection
28	C·SBDO	O	Capacitor connection for inversion RF low speed detection
29	C·SBRT	O	Capacitor connection for non-inversion RF low speed detection
30	C · FBRT	O	Capacitor connection for non-inversion RF high speed detection
31	RF OUT	O	RF signal output
32	BDO	O	Drop-out detection output
33	RFIN	I	RF signal input
34	S·OUT	O	Focus search signal output
35	C·LW	I	Capacitor connection for triangular wave generation
36	FE·OUT	O	Focus error signal output
37	FEG	I	Focus error gain adjusting input
38	FE·REF	I	Focus error comparison voltage generation
39	PDB	I	Photo detector current input (B)
40	IVB	O	Current/voltage conversion output (B)
41	IVA	O	Current/voltage conversion output (A)
42	PDA	I	Photo detector current input (A)

• MN1551PDD (Remote Control Signal Processing)

Pin No.	Mark	Signal	I/O Device	Function
1	VDD	——	I	Power supply (connected to +5V)
2	P52	——	O	Data output
3	P52	——	O	Data output
4 ~ 6	P40 ~ P42	D0 ~ D2	I	Key strobe
7 ~ 10	P00 ~ P03	D3 ~ D6	I	Key strobe
11 ~ 14	P10 ~ P13	D7 ~ DA	I	Key strobe
15	P20	——	I	Remote control signal input
16	P21	——	——	———
17	P22	——	——	———

Pin No.	Mark	Signal	I/O Device	Function
18	P23	——	——	———
19	P30	——	O	LED drive output
20	P31	——	——	———
21	P32	——	——	———
22	P33	——	——	———
23	P50	——	——	———
24	P51	——	O	Key output
25	RST	RESET	I	Reset signal input
26	OSC2	——	I	———
27	OSC1	SMCK	I	Clock input
28	VSS	GND	I	GND terminal

• MN15261PDE (System Control and FL Drive)

Pin No.	Mark	Signal	I/O Device	Function
1	VSS	GND	I	GND terminal
2	X0	——	O	Not used (Open)
3	XI	——	I	Not used (Open)
4	P00	$\overline{\text{TTON}}$	O	Spindle motor control signal (ON · OFF command)
5	P01	M DATA	O	Command data output
6	P02	MCLK	O	Command clock output
7	P03	MLD	O	Command load output
8	P10	M-RELAY	O	Muting relay control
9	P11	D-MUTE	O	Muting control
10	P12	$\overline{\text{SYNC REC}}$	O	Synchro recording control (Not used)
11	P13	$\overline{\text{SYNC SRT}}$	O	Direct operation control (Not used)
12	$\overline{\text{SYNC}}$	——	O	Not used (Open)
13	$\overline{\text{RST}}$	RESET	I	Reset signal input (reset at "L")
14	$\overline{\text{IRQ}}$	BLOCK	I	Sub-code block (Q data) clock (75 Hz) input
15 ~ 18	P50 ~ P53	——	I	Key scan input
19	$\overline{\text{SBT}}$	$\overline{\text{CLDCK}}$	I	Sub-code frame clock (7.35 kHz)
20	$\overline{\text{SBD}}$	SUBQ	I	Sub-code Q data input
21	P20	SEEK	O	Rough search ON · OFF signal
22	P21	$\overline{\text{TRAV}}$	O	Traverse servo control signal
23	P22	$\overline{\text{REV}}$	O	Traverse reverse command signal
24	P23	$\overline{\text{FWD}}$	O	Traverse forward command signal
25	P30	CNT4	O	Optical servo IC control signal (KICKR : Kick direction [Reverse] command)
26	P31	CNT3	O	Optical servo IC control signal (KICKF : Kick direction [Forward] command)
27	P32	CNT2	O	Optical servo IC control signal ($\overline{\text{TRON}}$: Tracking servo)
28	P33	CNT1	O	Optical servo IC control signal ($\overline{\text{FOON}}$: Focus servo)
29	P40	STAT	I	Key input strobe and processing status input from signal processing LSI traverse position detection.
30	P41	$\overline{\text{COMP}}$	I	Traverse position input
31	P42	$\overline{\text{FLOCK}}$	I	Optical servo condition (focus) input
32	P43	$\overline{\text{SENSE}}$	I	Optical servo condition (track cross) input
33	PE0	$\overline{\text{CLOSE}}$	O	Loading motor close command (ON at "L")
34	PE1	$\overline{\text{OPEN}}$	O	Loading motor open command (ON at "L")
35	P60	$\overline{\text{FFRST}}$	O	Level control reset signal output
36	P61	——	O	——
37	DAC	DAC DATA	O	Traverse drive output
38	VPP	——	I	FL drive power supply (connected to −34V)
39 ~ 52	D0 ~ DD	——	O	FL grid signal and key scan signal
53 ~ 61	S8 ~ S0	——	O	FL anode signal
62	OSC 2	——	I	Not used (Open)
63	OSC 1	——	I	Clock input
64	VDD	——	I	Power supply (connected to +5V)

• AN8280LF (Spindle Motor Drive)

Pin No.	Mark	I/O Device	Function
1	FGP	O	FG pulse output
2	VCC	I	Power supply
3	PC	I	Motor drive command input and capacitor connection for phase compesation
4	SC	O	Current detection
5	B1	O	Spindle motor drive signal output
6	B2		
7	A2		
8	A1		
9	HB	O	Hall element bias voltage output
10	DCR	I	Reference voltage input
11	FAO	O	Loop filter amplifier constant connection
12	FIA	I	Spindle motor control and loop filter amplifier constant connection
13	H2−	I	Hall element's Hall voltage input (inversion)
14	H2+	I	Hall element's Hall voltage input (non-inversion)
15	HI−	I	Hall element's Hall voltage input (inversion)
16	HI+	I	Hall element's Hall voltage input (non-inversion)

• Remote control transmitter data code (MN6030).

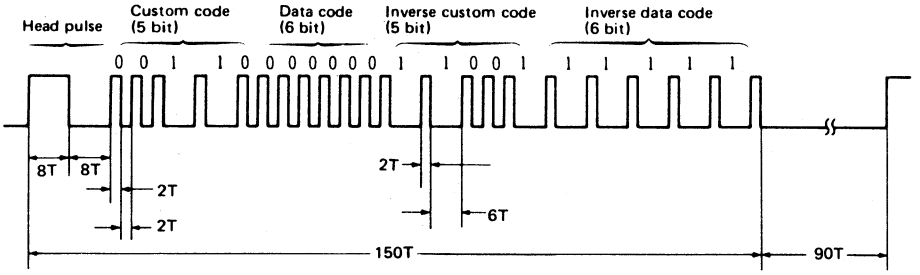

*1T = 0.420ms~0.424ms (U.S.A. and Canada)
1T = 0.454ms~0.460ms (Europe and Others)

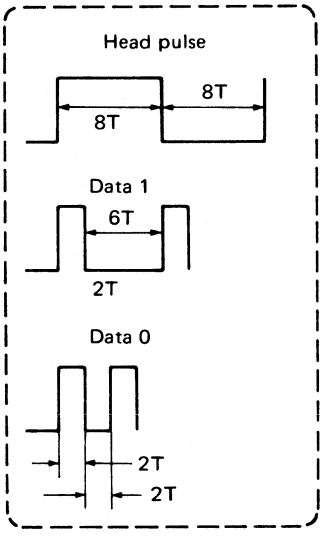

Button	Data Code
1	0 0 0 0 1 0
2	1 0 0 0 1 0
3	0 1 0 0 1 0
4	1 1 0 0 1 0
5	0 0 1 0 1 0
6	1 0 1 0 1 0
7	0 1 1 0 1 0
8	1 1 1 0 1 0
9	0 0 0 1 1 0
0	1 0 0 1 1 0
memory	0 1 0 1 0 1
index	0 0 0 1 0 1
time	1 0 0 1 0 1
stop	0 0 0 0 0 0

Button	Data Code
clear	1 1 0 1 0 0
A-B repeat	0 0 0 1 0 0
repeat	1 1 1 0 0 0
M scan	1 1 1 1 0 0
recall	1 0 0 1 0 0
◀◀ search	0 0 1 0 0 0
search ▶▶	1 0 1 0 0 0
⏮ skip	0 1 0 0 0 0
skip ⏭	1 1 0 0 0 0
⏸ pause	0 1 1 0 0 0
play ▶	0 1 0 1 0 0
▼ level	1 0 1 0 0 1
level ▲	0 0 1 0 0 1

• Terminal guide of IC's, transistors and diodes

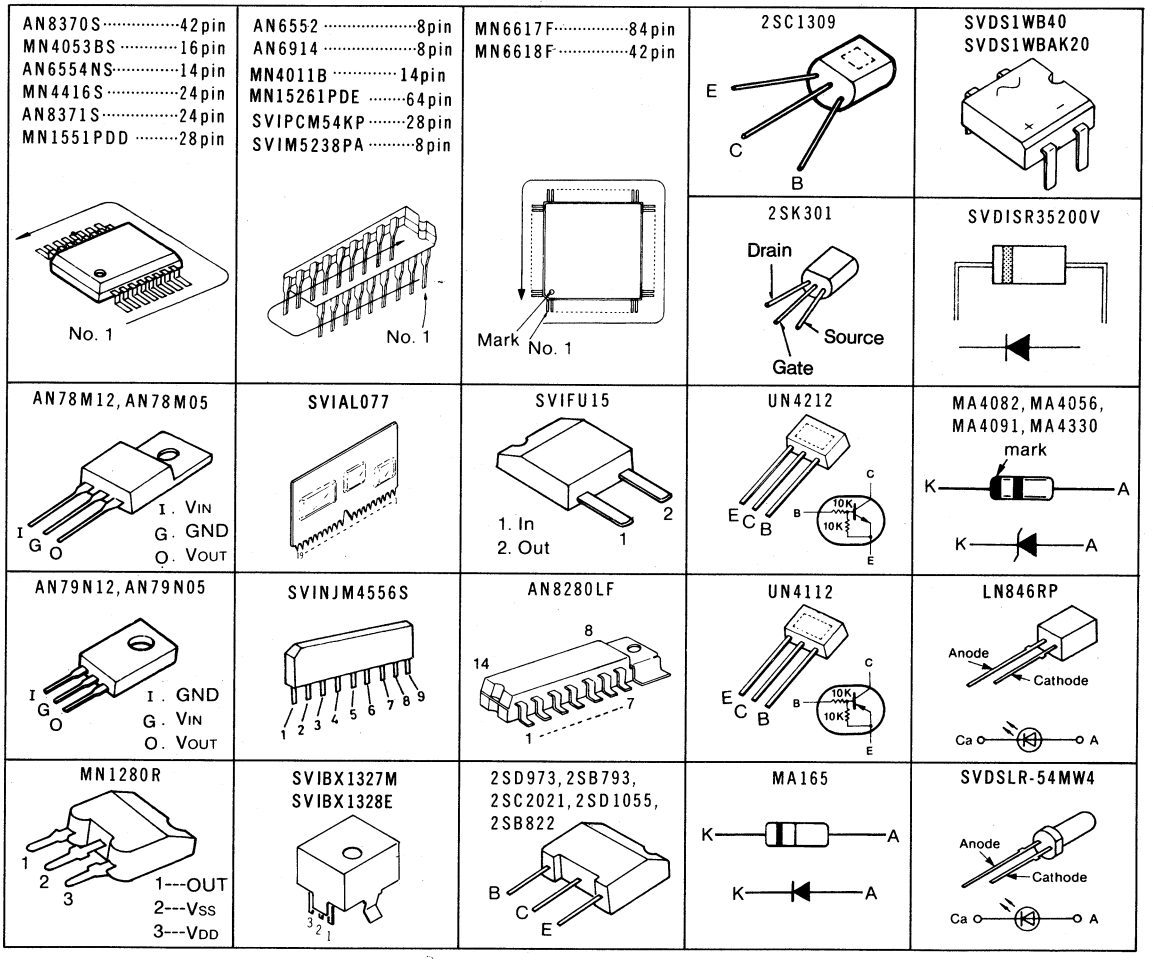

■ PRINTED CIRCUIT BOARD AND WIRING CONNECTION DIAGRAM

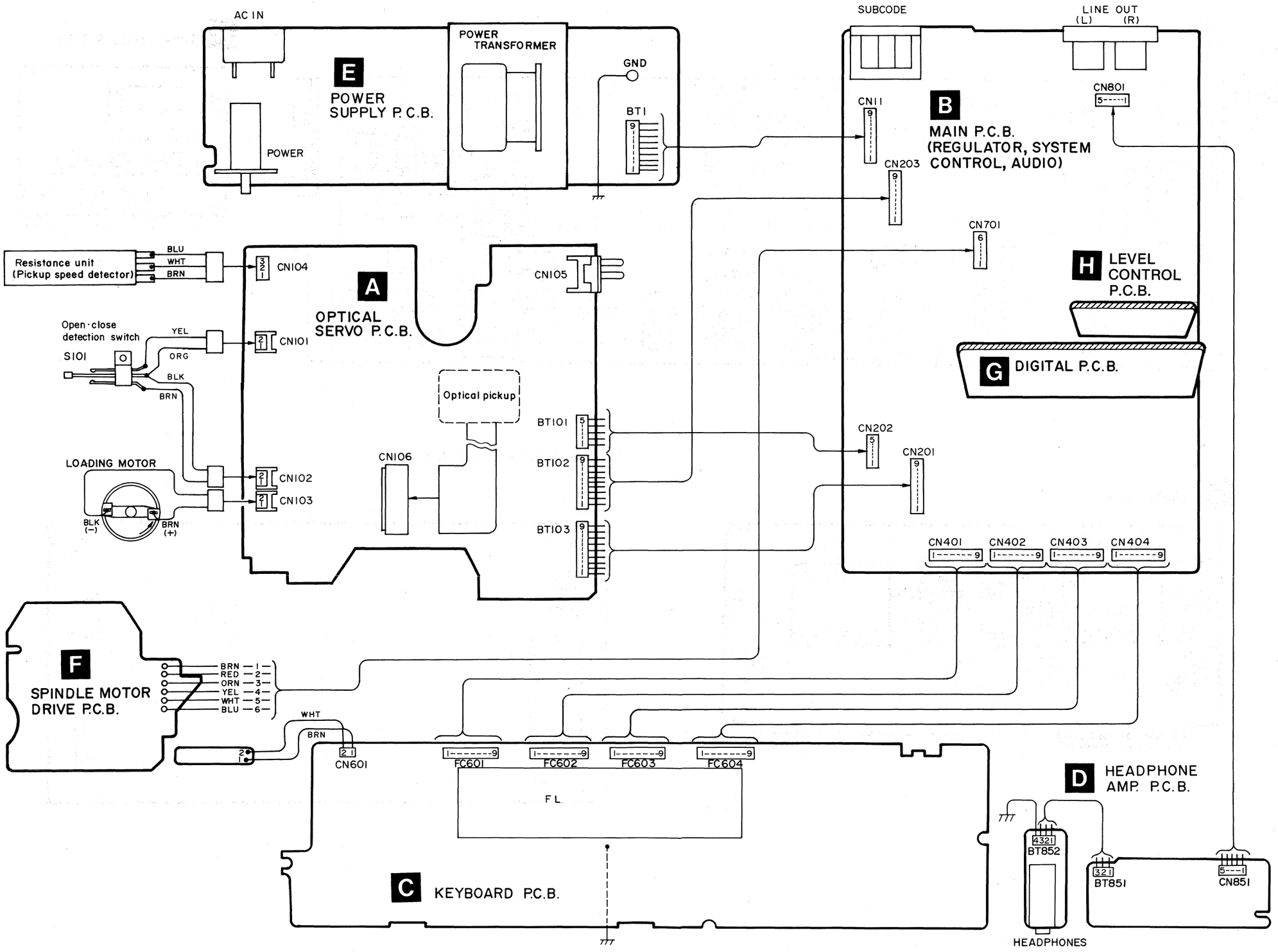

■ PRINTED CIRCUIT BOARDS

C (Keyboard P.C.)

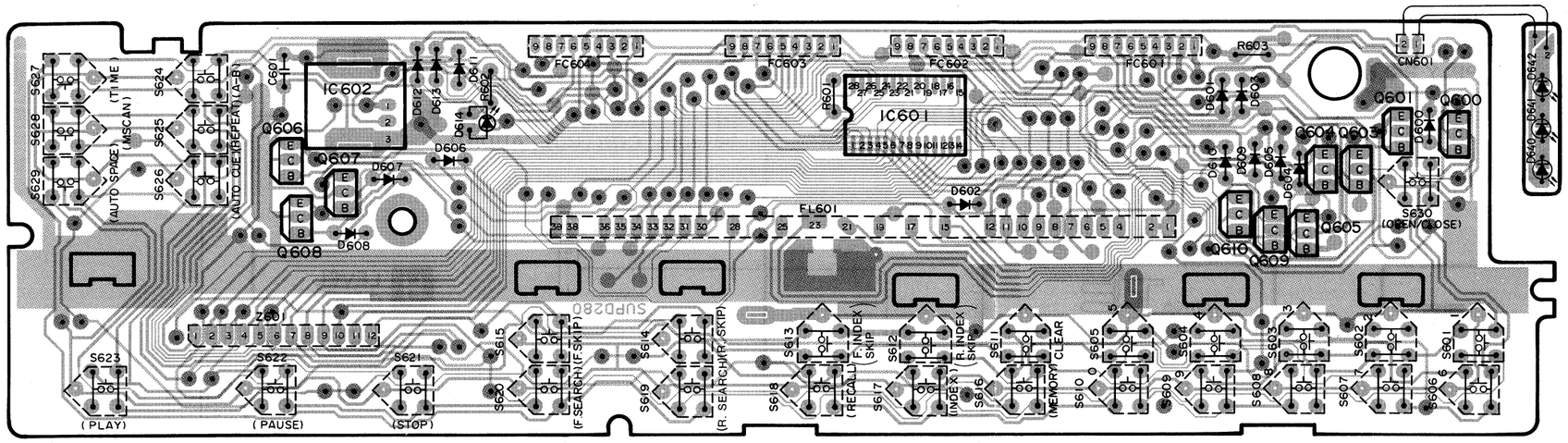

H (Level control P.C.)

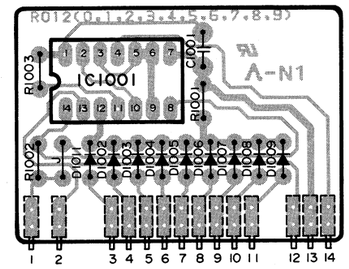

G (Digital P.C.)

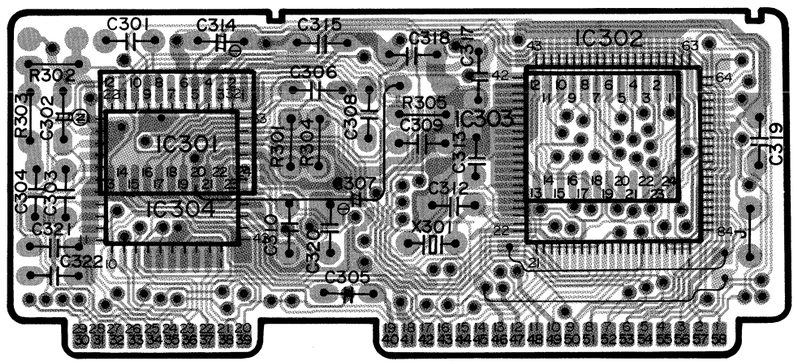

• **Remote Control Transmitter**

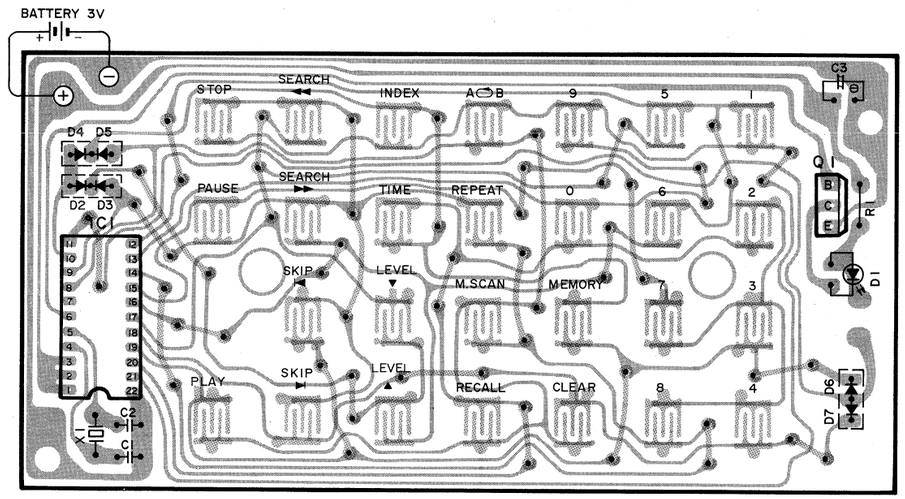

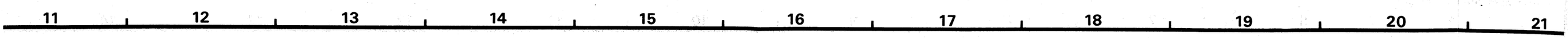

A (Optical servo P.C.B.)

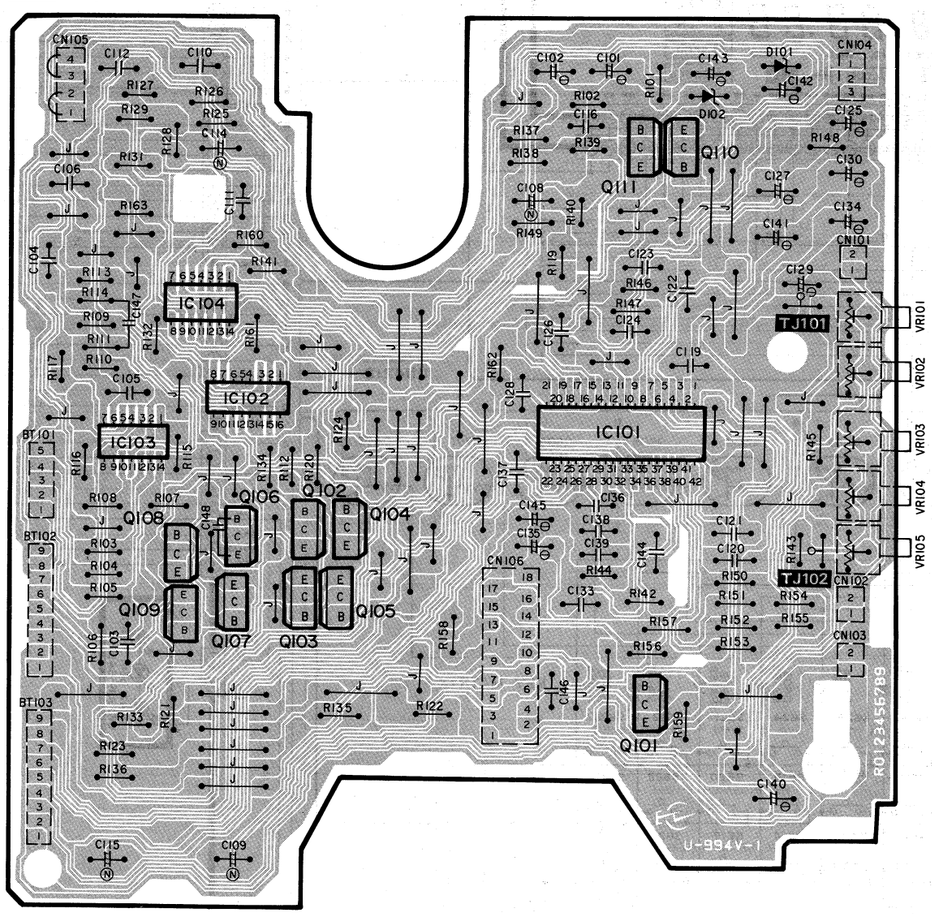

B (Main P.C.B.: Regulator, system control, audio)

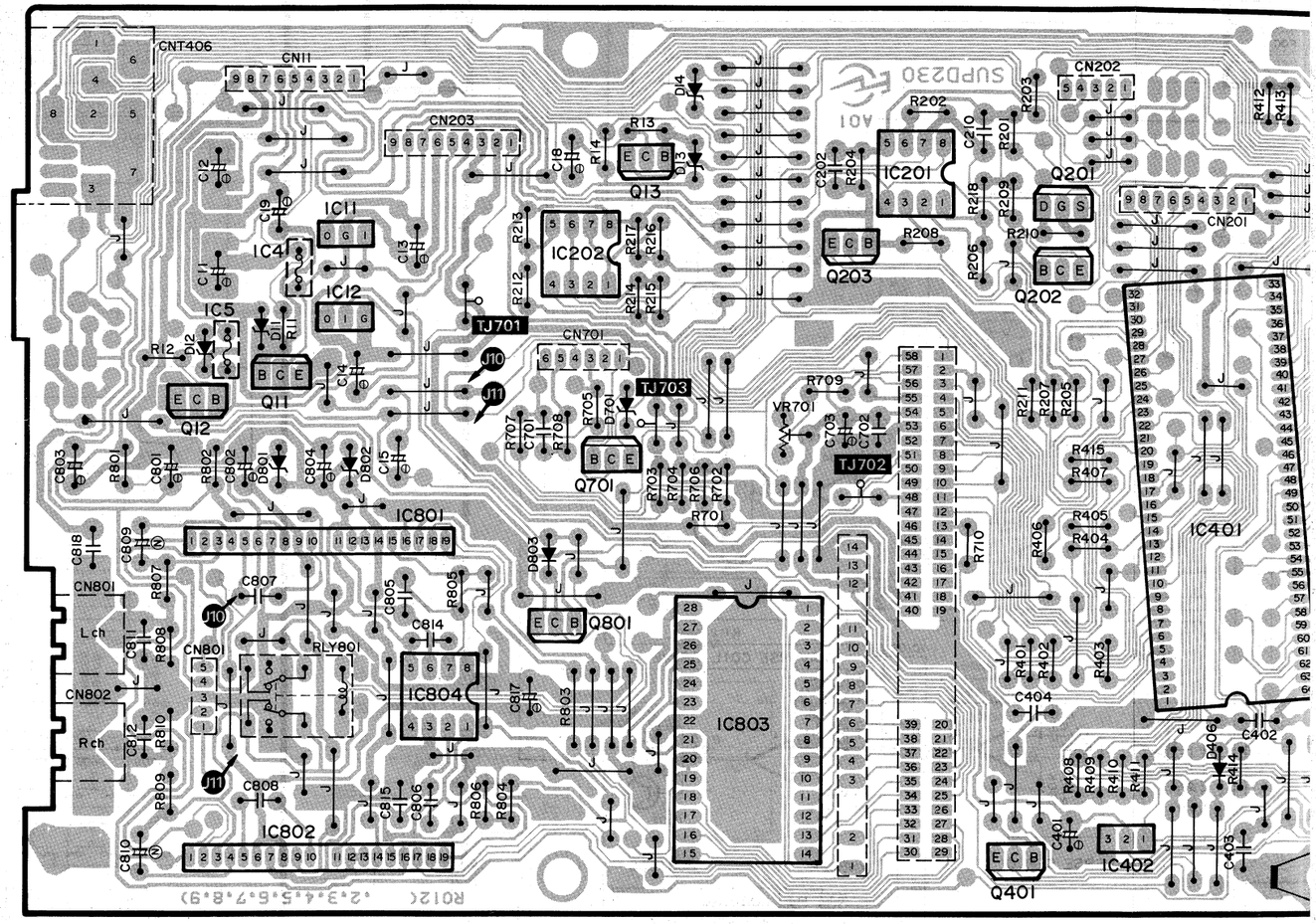

D (Headphone amp. P.C.B.)

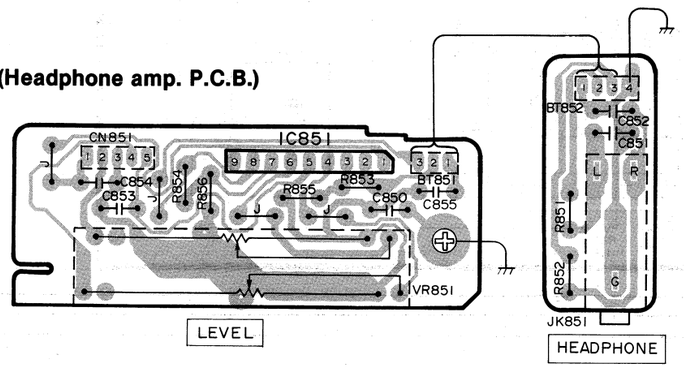

E (Power supply P.C.B.)

- For U.S.A. and Canada
- For Others

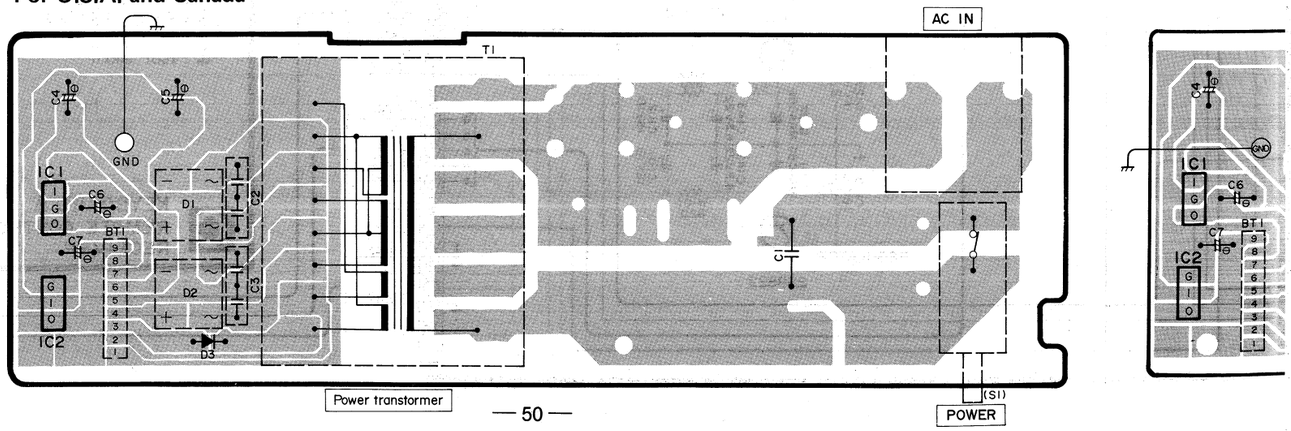

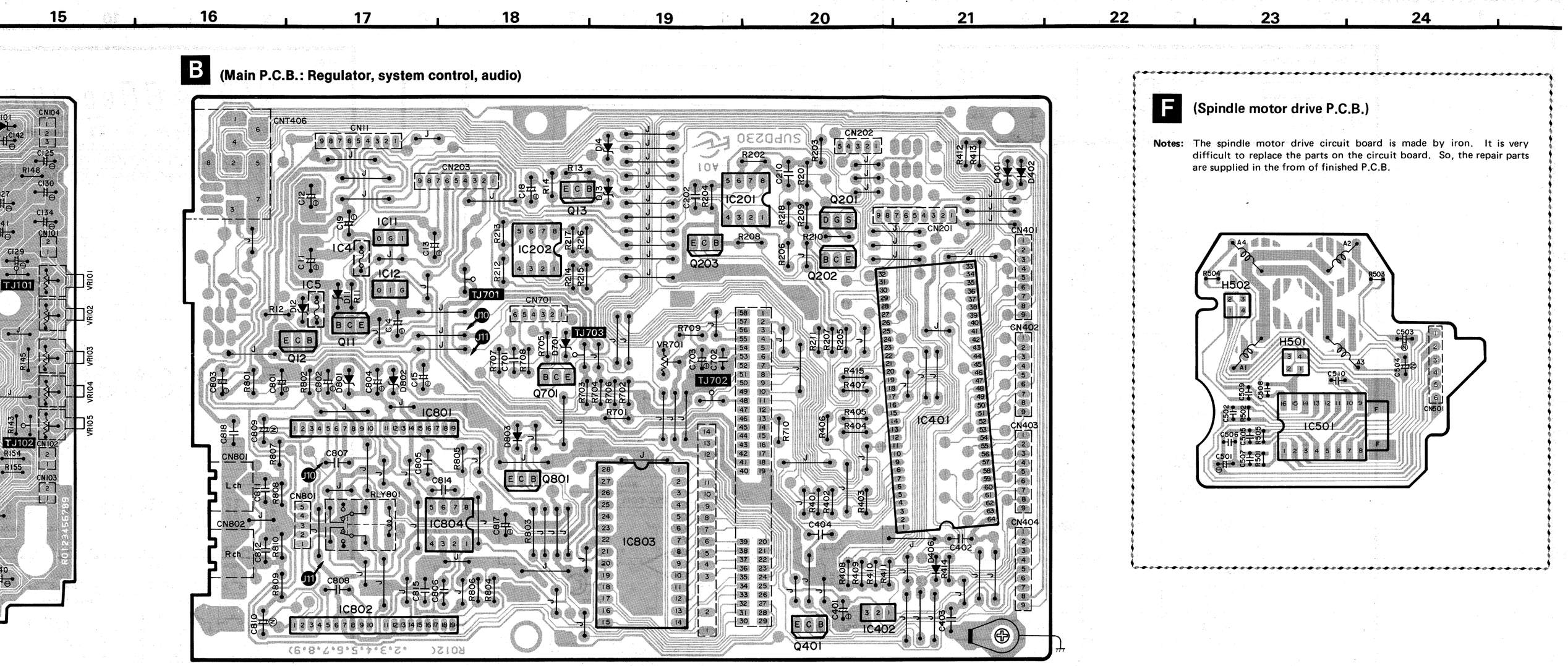

E (Power supply P.C.B.)

- **For U.S.A. and Canada**

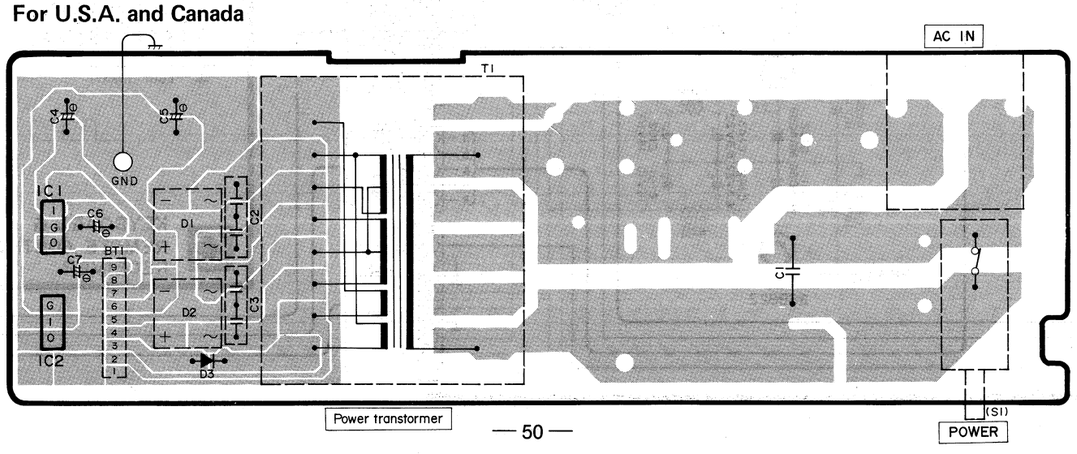

- **For Others**

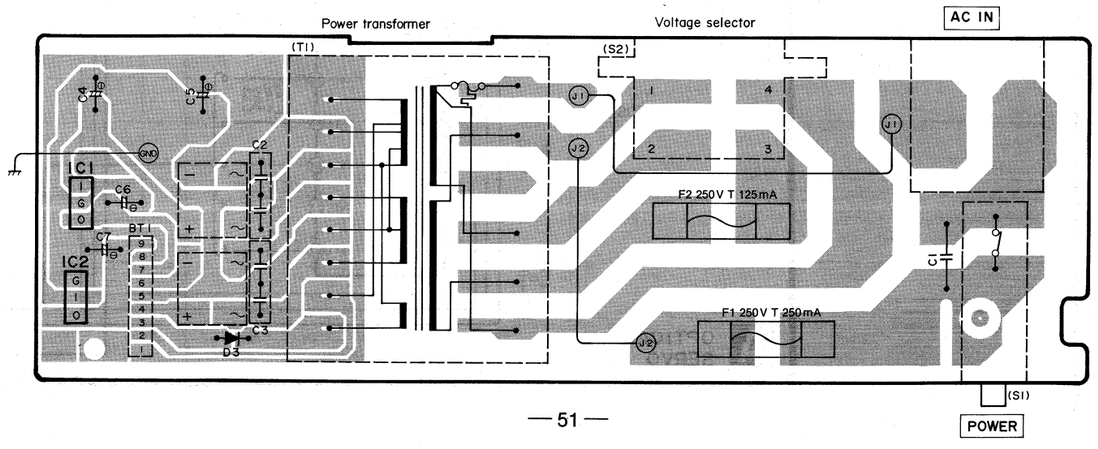

■ SCHEMATIC DIAGRAM (This schematic diagram may be modified at any time with the development of new technology.)

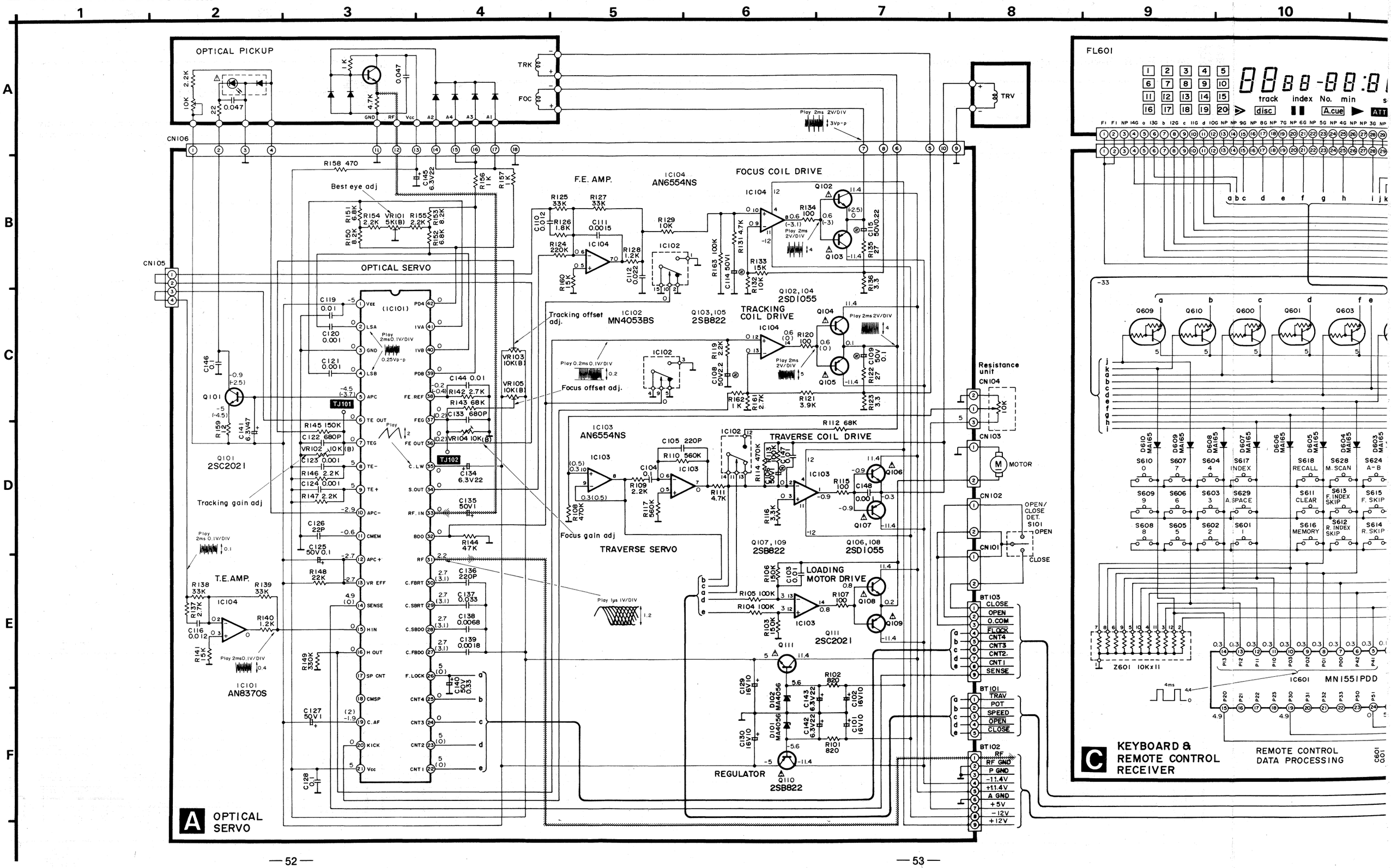

development of new technology.)

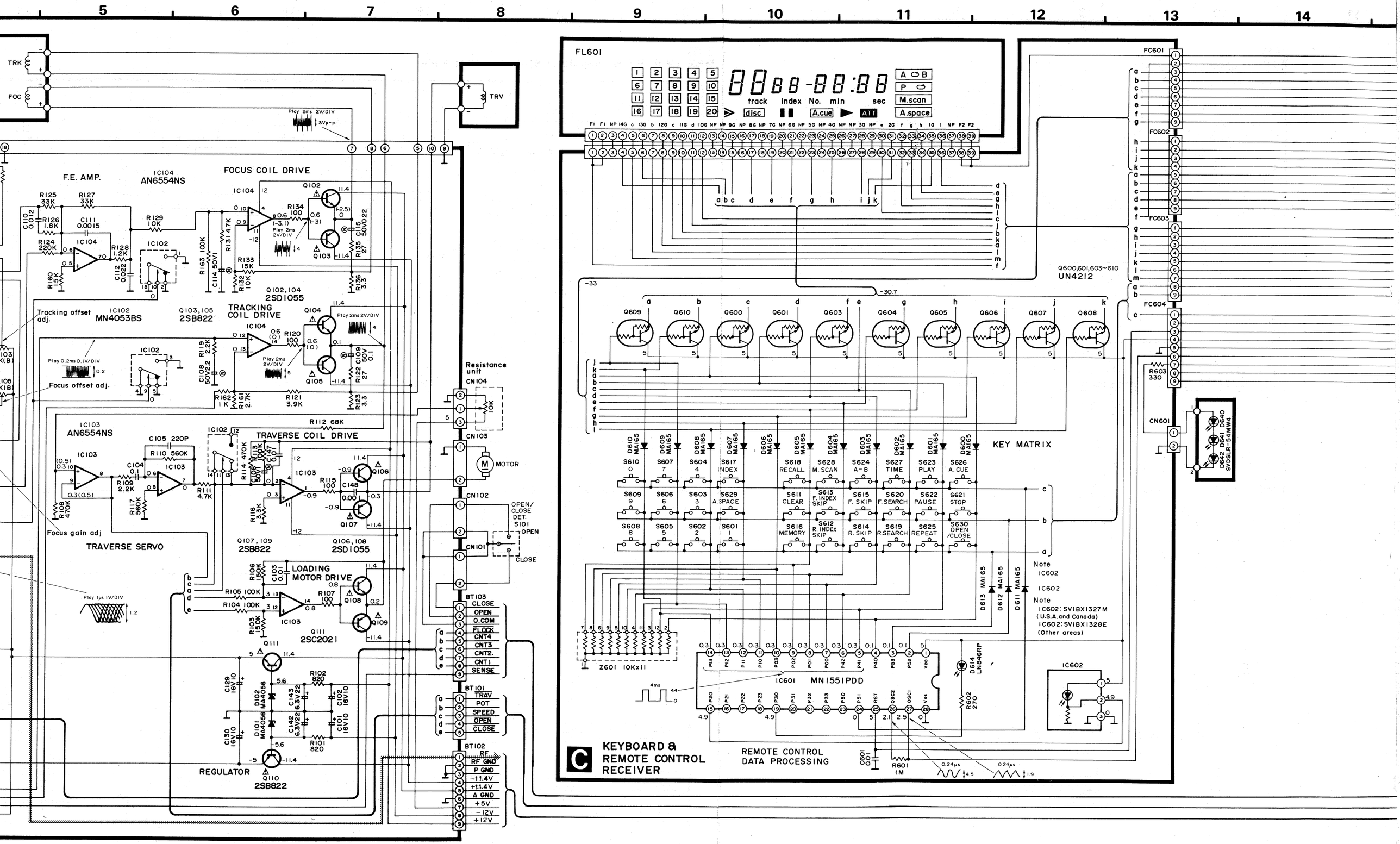

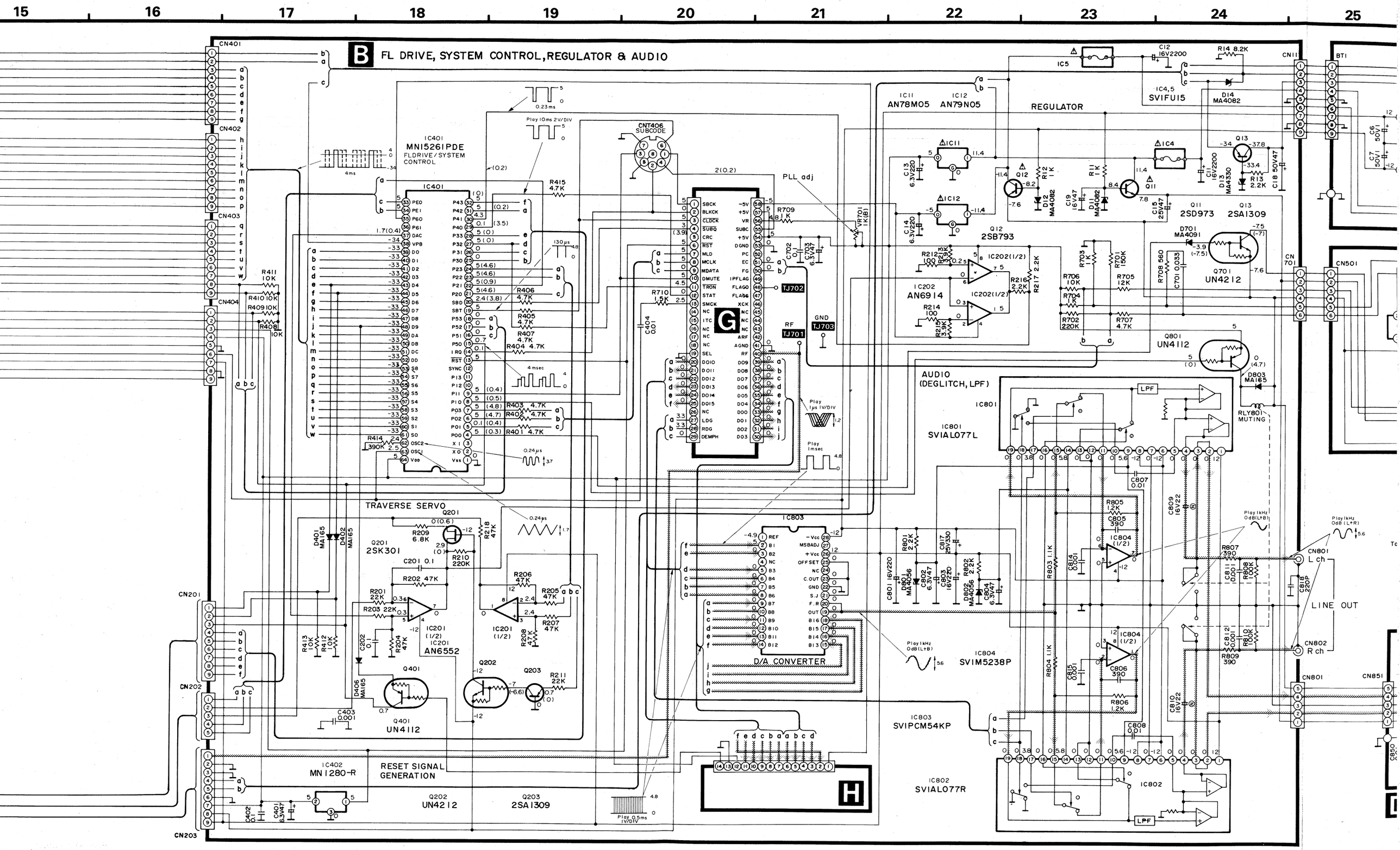
B
FL DRIVE, SYSTEM CONTROL, REGULATOR & AUDIO
IC401
MN15261PDE
FLDRIVE/SYSTEM CONTROL
CNT406 SUBCODE
TJ702
TJ701
TJ703
PLL adj
REGULATOR
IC11 AN78M05
IC12 AN79N05
IC4,5 SVIFU15
IC202 AN6914
Q12 2SB793
Q11 2SD973
Q13 2SA1309
Q701 UN4212
Q801 UN4112
D701 MA4091
AUDIO (DEGLITCH, LPF)
IC801 SVIAL077L
IC804 SVIM5238P
IC803 SVIPCM54KP
IC802 SVIAL077R
RLY801 MUTING
LINE OUT
L ch
R ch
TRAVERSE SERVO
Q201 2SK301
IC201 (1/2) AN6552
Q401 UN4112
Q202 UN4212
Q203 2SA1309
D/A CONVERTER
IC803
RESET SIGNAL GENERATION
IC402 MN1280-R
H
CN401
CN402
CN403
CN404
CN201
CN202
CN203
CN11
CN501
CN701
CN801
CN802
CN851

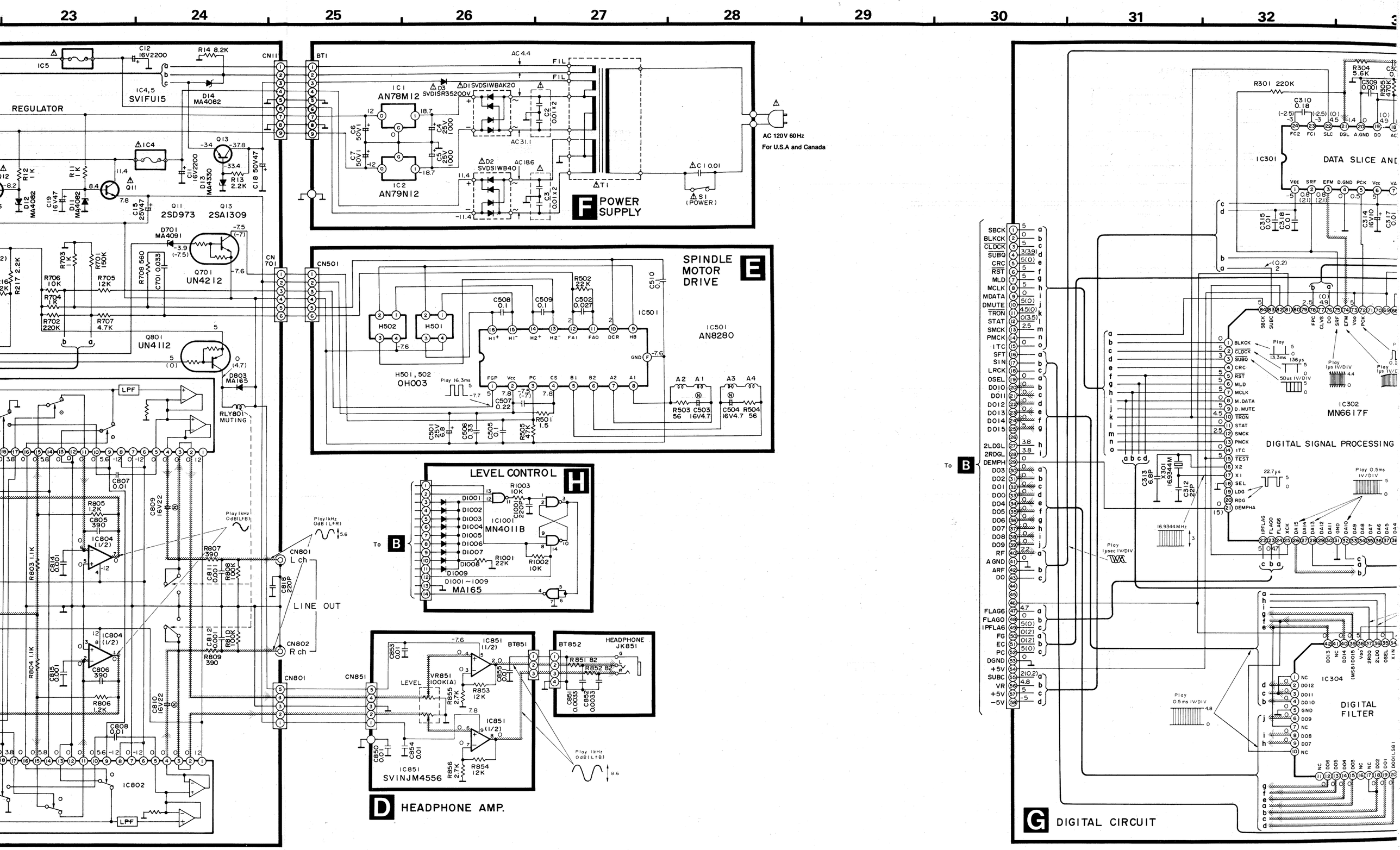
23
24
25
26
27
28
29
30
31
32
REGULATOR
IC5
IC4,5
SVIFU15
D14
MA4082
IC4
Q13
2SA1309
Q11
2SD973
D701
MA4091
Q701
UN4212
Q801
UN4112
D803
MA165
RLY801
MUTING
LPF
IC802
CN801
L ch
CN802
R ch
LINE OUT
Play 1kHz
0dB (L+R)
IC804
(1/2)
MN4011B
LEVEL CONTROL
H
To B
BT1
IC1
AN78M12
IC2
AN79N12
D1 SVDS1WBAK20
D2 SVDS1WB40
D3 SVDS1R35200V
T1
S1
(POWER)
AC 120V 60Hz
For U.S.A and Canada
F
POWER SUPPLY
CN501
SPINDLE
MOTOR
DRIVE
E
IC501
AN8280
H501, 502
OH003
Play 16.3ms
CN851
IC851
SVINJM4556
VR851
100K(A)
LEVEL
BT851
BT852
HEADPHONE
JK851
D
HEADPHONE AMP.
CN701
IC301
DATA SLICE AND
IC302
MN66617F
DIGITAL SIGNAL PROCESSING
X301
16.9344MHz
IC304
DIGITAL
FILTER
G
DIGITAL CIRCUIT

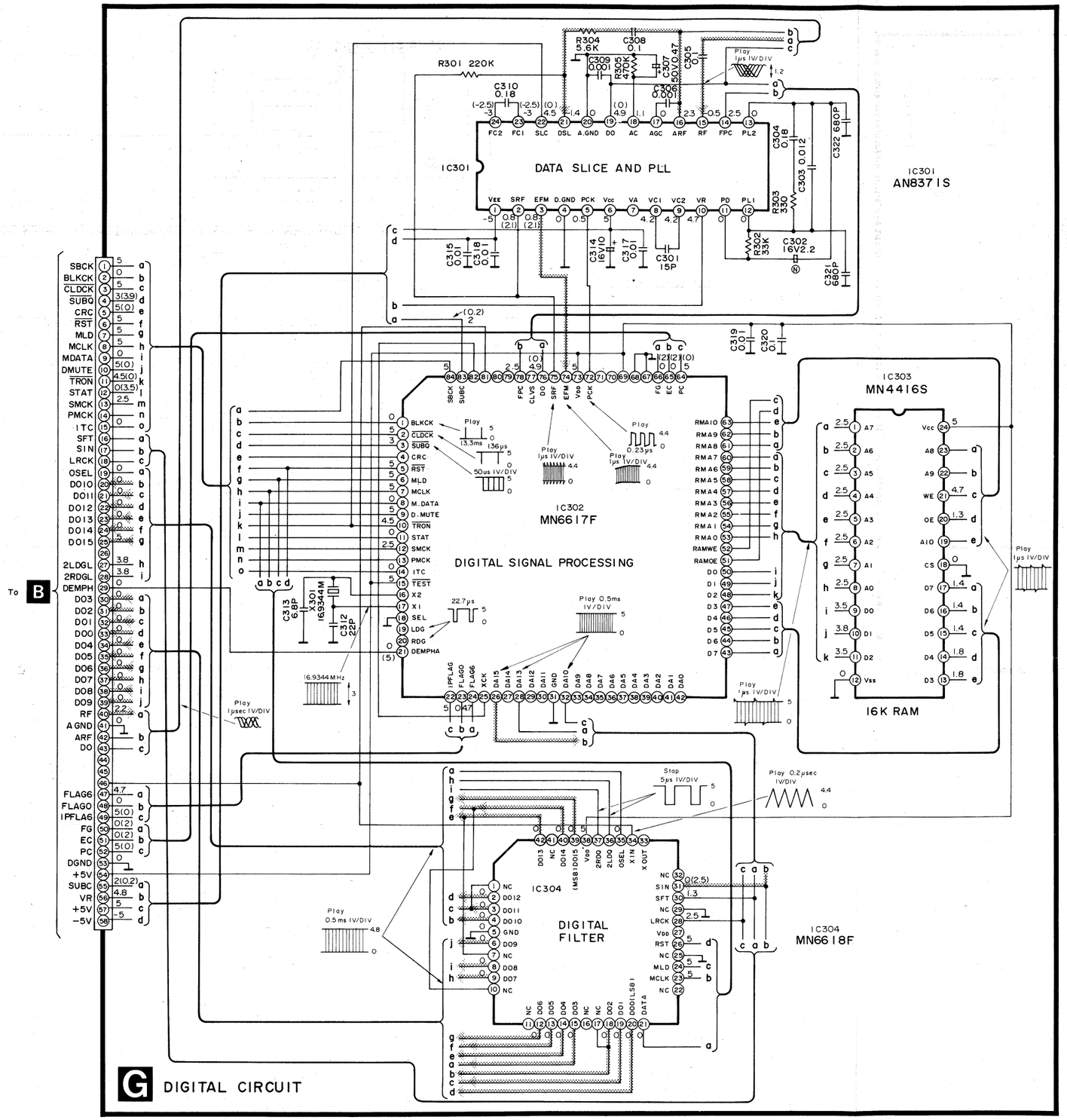

G DIGITAL CIRCUIT

• Power supply circuit

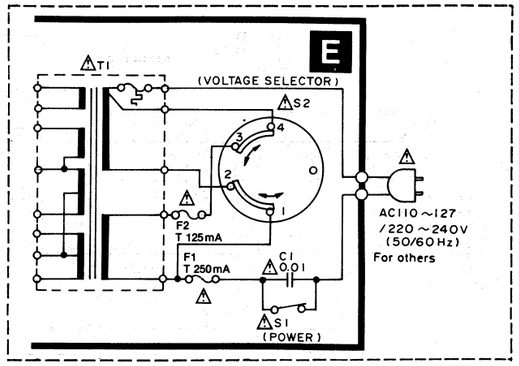

∗ Caution!

IC and LSI are sensitive to static electricity.
Secondary trouble can be prevented by taking care during repair.

- ∗ Cover the parts boxes made of plastics with aluminum foil.
- ∗ Ground the soldering iron.
- ∗ Put a conductive mat on the work table.
- ∗ Do not touch the legs of IC or LSI with the fingers directly.

Notes:

1. **S1** : Power switch.
2. **S2** : Voltage selector switch. (Except for [M] and [MC] areas)
3. **S101** : Disc holder open · close detection switch.
4. **S601~S610** : Numeric switch. (No. 1~0)
5. **S611** : Clear switch.
6. **S612** : Backward index skip switch.
7. **S613** : Forward index skip switch.
8. **S614** : Backward skip switch.
9. **S615** : Forward skip switch.
10. **S616** : Memory switch.
11. **S617** : Index switch.
12. **S618** : Recall switch.
13. **S619** : Backward search switch.
14. **S620** : Forward search switch.
15. **S621** : Stop switch.
16. **S622** : Pause switch.
17. **S623** : Play switch.
18. **S624** : A—B repeat switch.
19. **S625** : Repeat switch.
20. **S626** : Auto cue switch.
21. **S627** : Time mode switch.
22. **S628** : Music scan switch.
23. **S629** : Auto space switch.
24. **S630** : Open · Close switch.
25. The voltage value and waveform are the reference voltage of this unit measured by DC electronic voltmeter (high impedance) and oscilloscope on the basis of chassis. Accordingly, there may arise some error in voltage values and waveforms depending upon the internal impedance of the tester or the measuring unit.
    ∗ The parenthesized are the values of voltage generated during playing (Test disc 1kHz, L+R, 0dB), other are voltage values in stop mode.
26. Important safety notice:
    Components identified by ⚠ mark have special characteristics important for safety. When replacing any of these components, use only manufacturer's specified parts.
27. ——— : Positive voltage lines and negative voltage lines.
    ▒▒▒ : Audio signal lines.

■ SCHEMATIC DIAGRAM (Remote Control Unit)

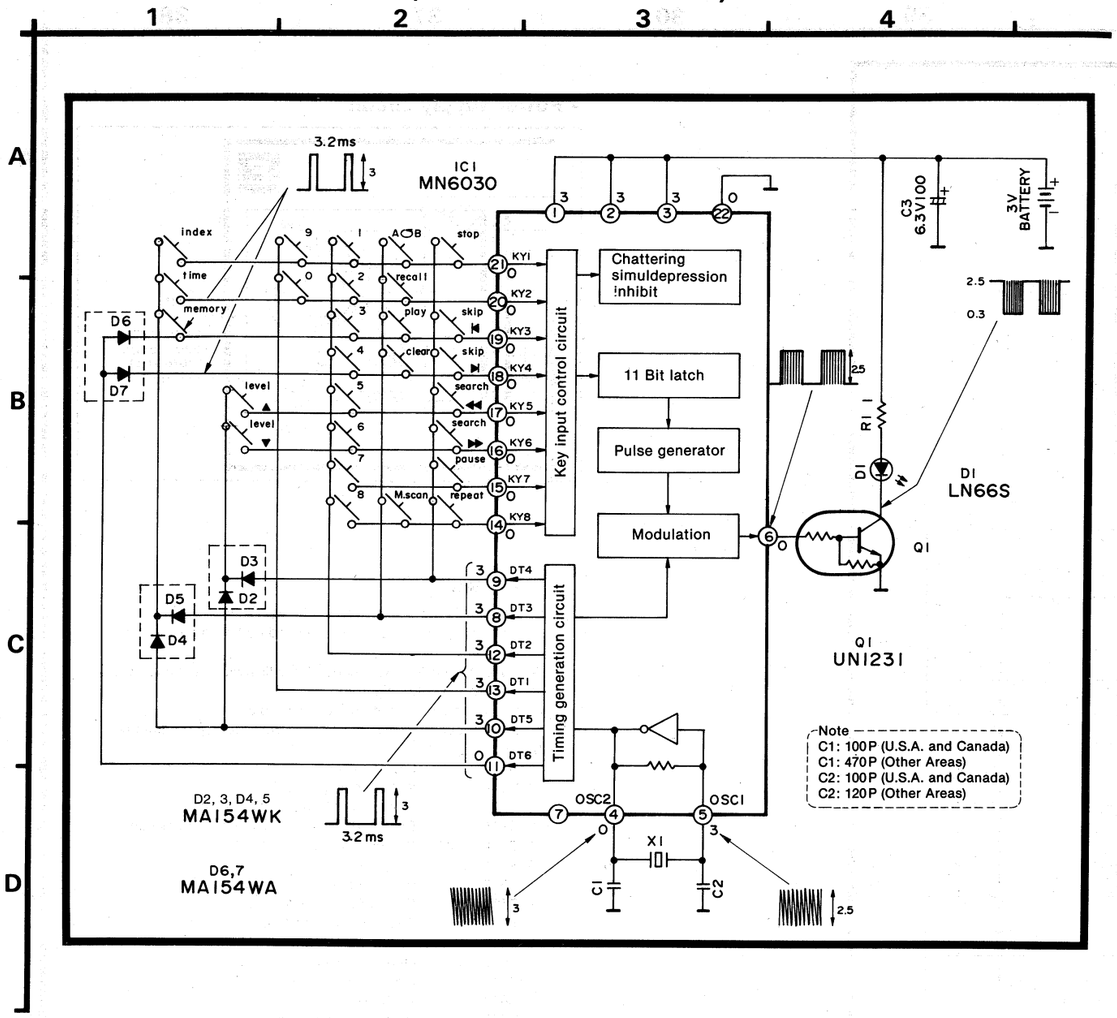

＊ Caution!

IC and LSI are sensitive to static electricity.
Secondary trouble can be prevented by taking care during repair.

- ＊ Cover the parts boxes made of plastics with aluminum foil.
- ＊ Ground the soldering iron.
- ＊ Put a conductive mat on the work table.
- ＊ Do not touch the legs of IC or LSI with the fingers directly.

■ BLOCK DIAGRAM

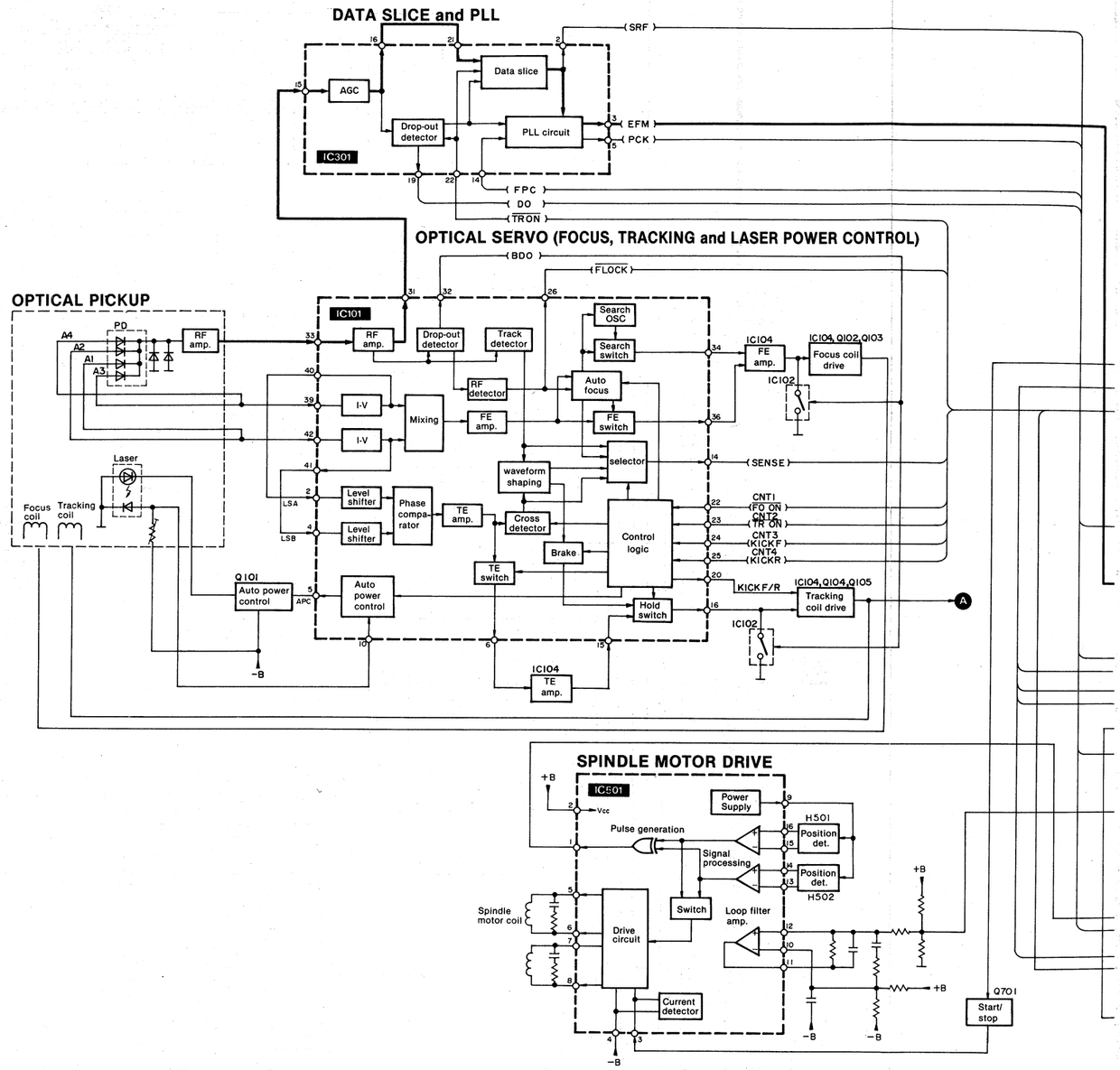

■ SCHEMATIC DIAGRAM (Remote Control Unit)

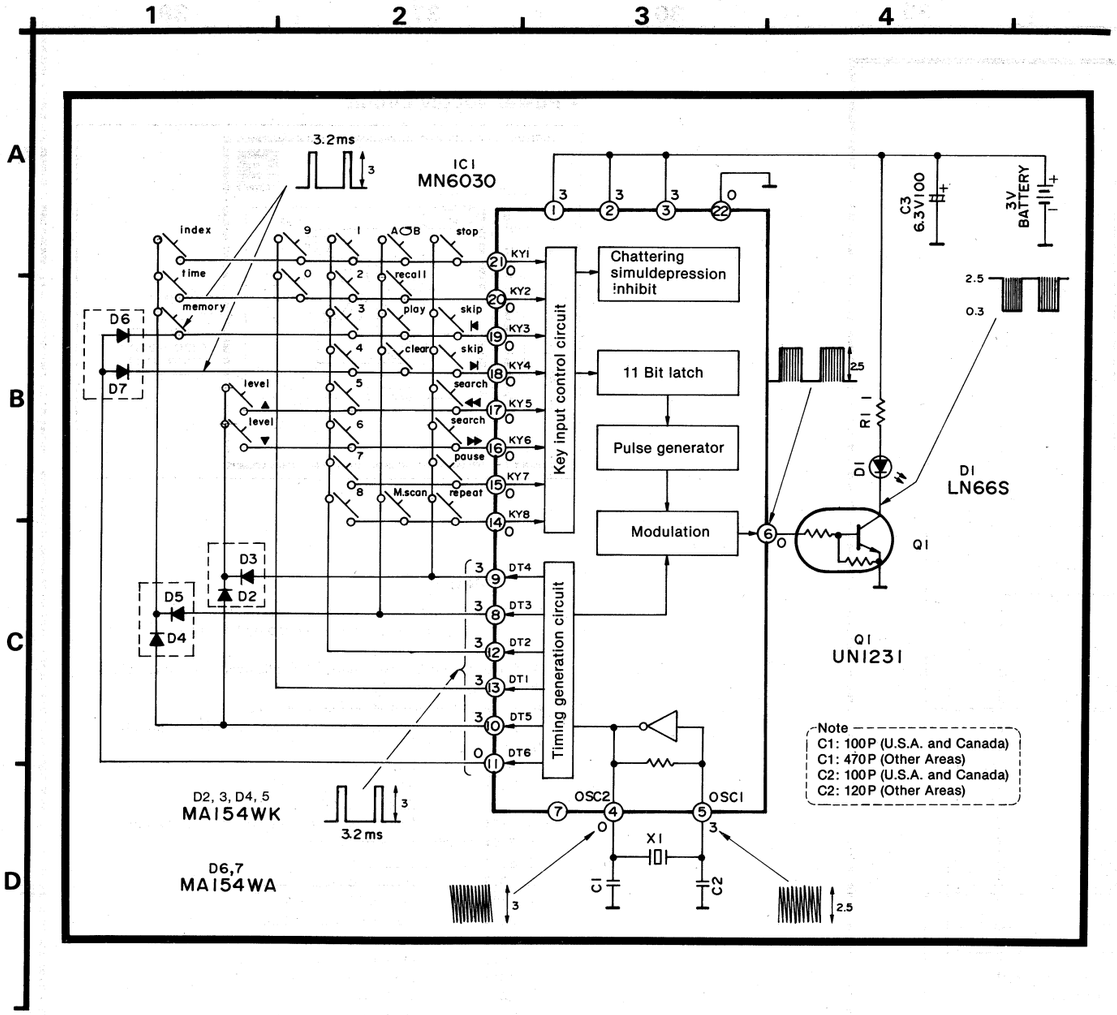

＊ Caution!

IC and LSI are sensitive to static electricity.
Secondary trouble can be prevented by taking care during repair.

- ＊ Cover the parts boxes made of plastics with aluminum foil.
- ＊ Ground the soldering iron.
- ＊ Put a conductive mat on the work table.
- ＊ Do not touch the legs of IC or LSI with the fingers directly.

■ BLOCK DIAGRAM

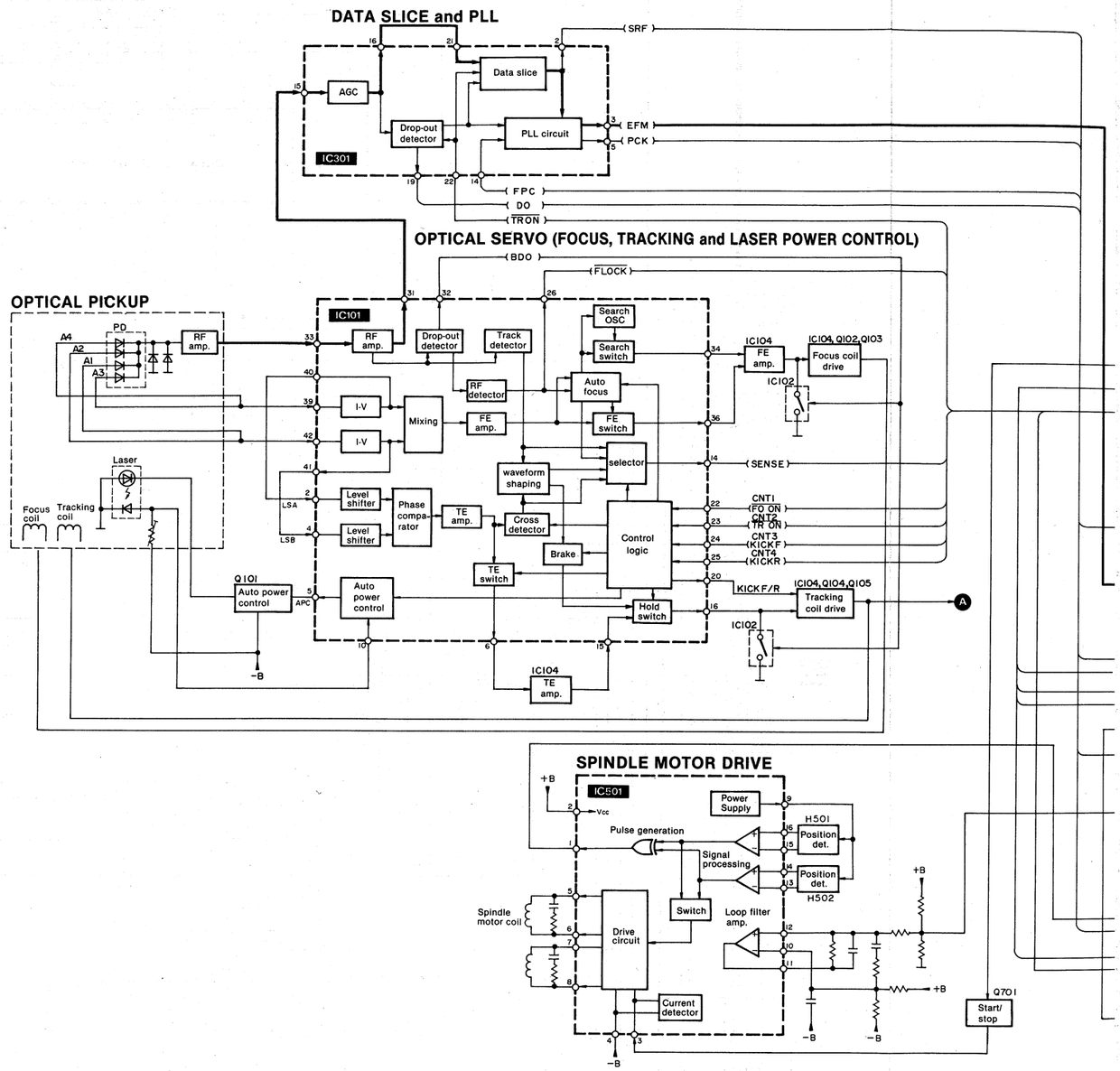

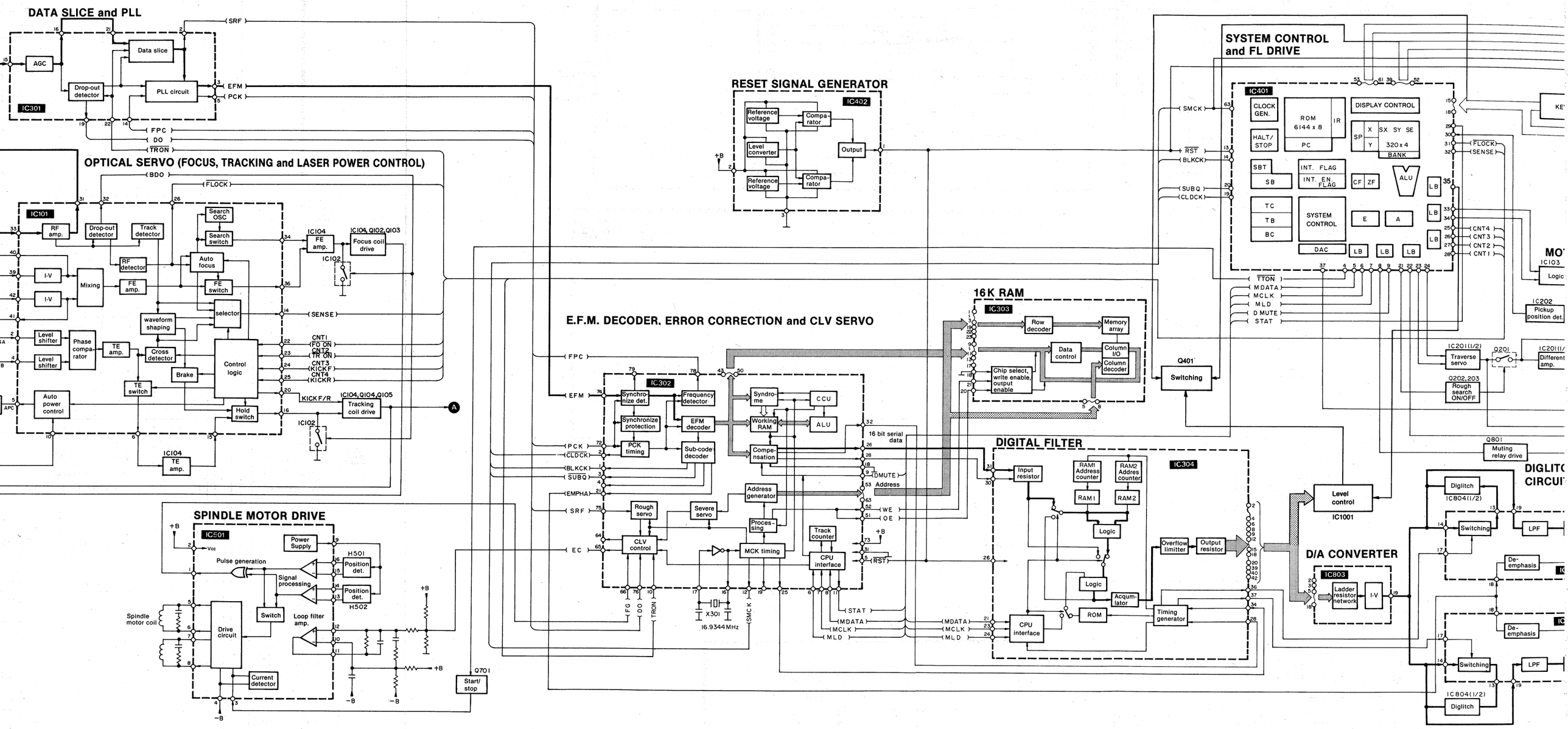
DATA SLICE and PLL
IC301
AGC
Data slice
Drop-out detector
PLL circuit
SRF
EFM
PCK
FPC
DO
TRON
OPTICAL SERVO (FOCUS, TRACKING and LASER POWER CONTROL)
IC101
RF amp.
Drop-out detector
Track detector
Search OSC
Search switch
Auto focus
FE switch
selector
RF detector
FE amp.
Mixing
I-V
waveform shaping
Level shifter
Phase comparator
TE amp.
Cross detector
Brake
Control logic
TE switch
Hold switch
Auto power control
IC104 FE amp.
IC104, Q102, Q103 Focus coil drive
IC102
IC104, Q104, Q105 Tracking coil drive
IC104 TE amp.
BDO
FLOCK
SENSE
CNT1 (FO ON)
CNT2 (TR ON)
CNT3 (KICKF)
CNT4 (KICKR)
KICKF/R
APC
RESET SIGNAL GENERATOR
IC402
Reference voltage
Comparator
Level converter
Output
+B
E.F.M. DECODER, ERROR CORRECTION and CLV SERVO
IC302
Synchronize det.
Synchronize protection
PCK timing
Frequency detector
EFM decoder
Sub-code decoder
Syndrome
Working RAM
CCU
ALU
Compensation
16 bit serial data
Address generator
Rough servo
Severe servo
Processing
CLV control
MCK timing
Track counter
CPU interface
DMUTE
Address
WE
OE
RST
EC
EMPHA
CLDCK
BLKCK
SUBQ
FG
SMCK
X301
16.9344MHz
STAT
MDATA
MCLK
MLD
16K RAM
IC303
Row decoder
Memory array
Data control
Column I/O
Column decoder
Chip select, write enable, output enable
Q401
Switching
SYSTEM CONTROL and FL DRIVE
IC401
CLOCK GEN.
HALT/STOP
ROM 6144 x 8
PC
IR
DISPLAY CONTROL
SP
X
Y
SX SY SE
320 x 4
BANK
SBT
SB
INT. FLAG
INT. EN. FLAG
CF ZF
ALU
TC
TB
BC
SYSTEM CONTROL
E
A
DAC
LB
SMCK
RST
BLKCK
SUBQ
CLDCK
FLOCK
SENSE
CNT4
CNT3
CNT2
CNT1
TTON
MDATA
MCLK
MLD
D MUTE
STAT
MO
IC103
Logic
IC202
Pickup position det.
IC201(1/2)
Traverse servo
Q201
IC201(1/2)
Different amp.
Q202, 203
Rough search ON/OFF
Q801
Muting relay drive
DIGITAL FILTER
IC304
Input resistor
RAM1 Address counter
RAM2 Addres counter
RAM1
RAM2
Logic
Acqumlator
ROM
CPU interface
Overflow limitter
Output resistor
Timing generator
Level control
IC1001
D/A CONVERTER
IC803
Ladder resistor network
I-V
DIGLITCH CIRCUIT
Diglitch
IC804(1/2)
Switching
LPF
De-emphasis
SPINDLE MOTOR DRIVE
IC501
Power Supply
Pulse generation
Signal processing
Position det.
H501
H502
Switch
Loop filter amp.
Drive circuit
Current detector
Spindle motor coil
Vcc
Q701
Start/stop

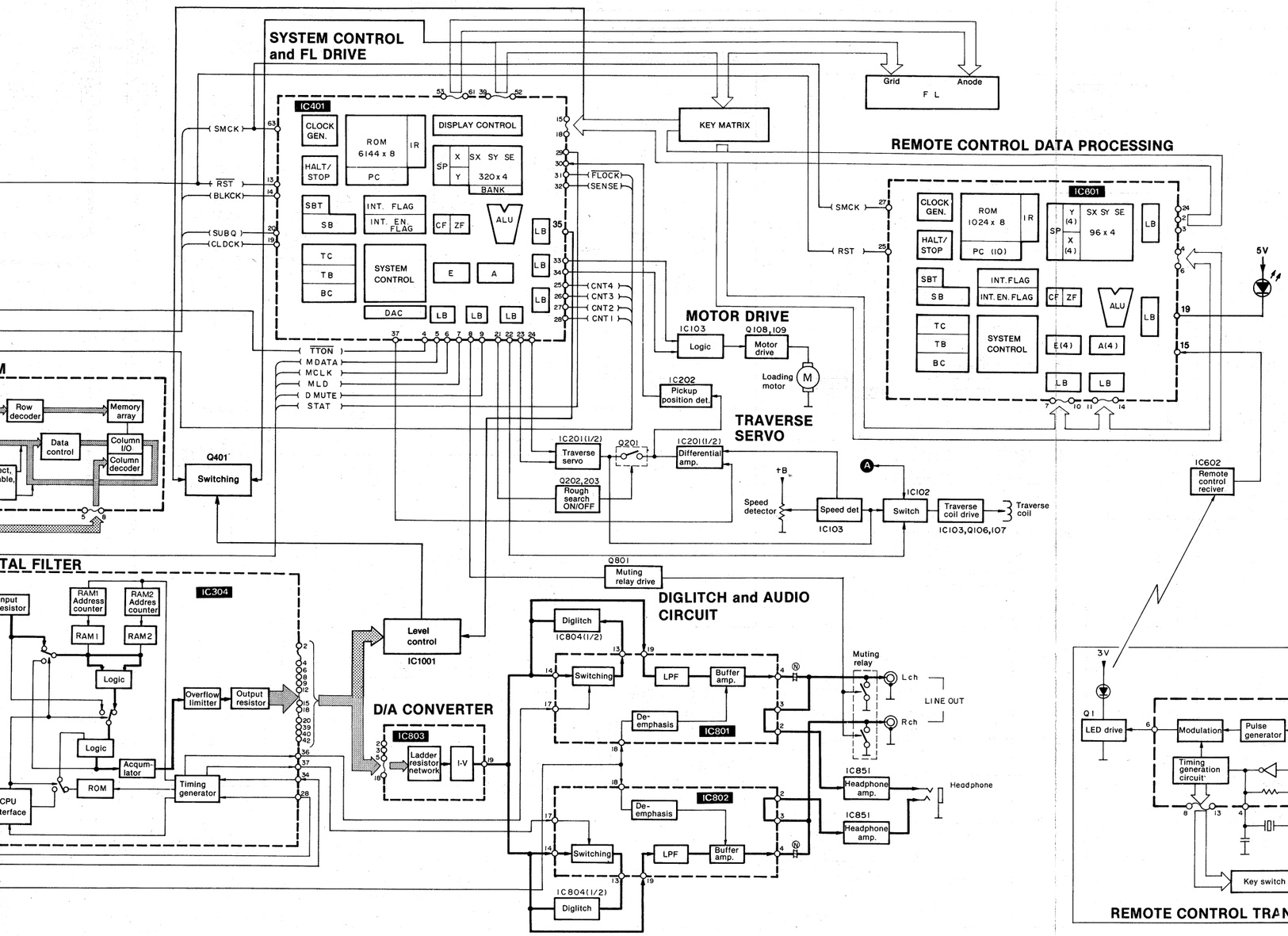

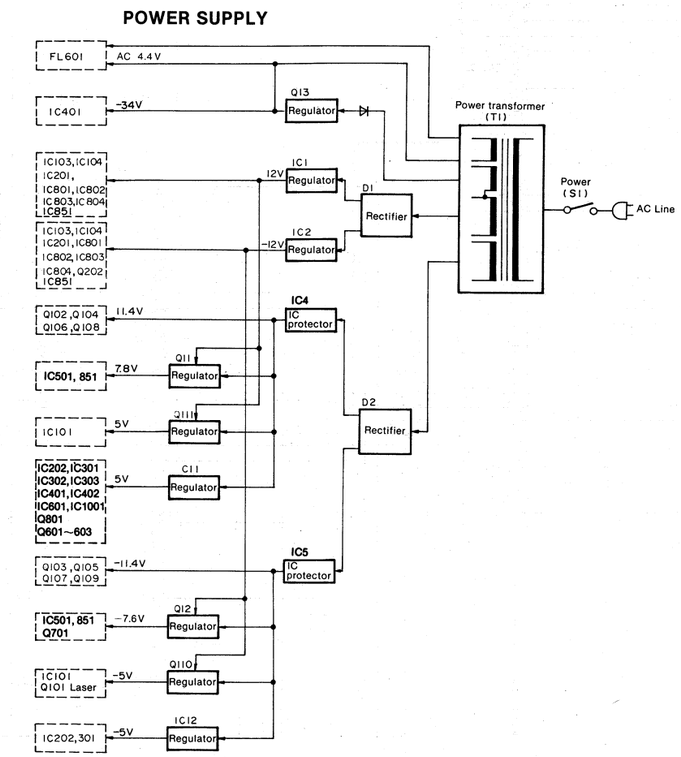

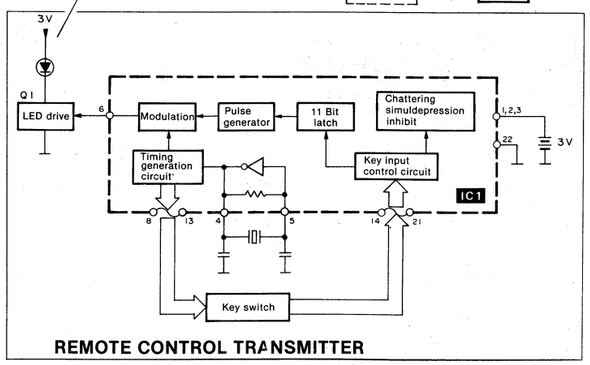

Printed in Japan
860109000 Ⓗ TK/HY

ORDER NO. HAD8706191S0
A6

Service Manual

Supplement

Compact Disc Player

SL-P500

COMPACT disc DIGITAL AUDIO

DIGITAL

Please file and use this supplement manual together with the service manual for Model No. SL-P500, Order No. HAD8512311C0.

Note:

- This supplement has been issued to inform you that the optical servo P.C.B. has been changed in units having serial number suffixes "E" or later. (Refer to "How to read the serial number" shown below).

● How to read the serial number

A E 4 1 3 1 A 2 6 5

- Production Line
- Year 6→1986, 7→1987, 8→1988, 9→1989
- Month 1~9→Jan.~Sep., J→Oct., K→Nov., L→Dec.
- Date
- Suffix
- Number

■ REPLACEMENT PARTS LIST

Ref. No.	Change of Part No. OLD	NEW	Description	Remarks
VARIABLE RESISTOR				
VR106	——	**EVND1AA00B53**	Tracking Balance Adj., 5KΩ (B)	Addition
RESISTORS				
R112	ERDS2TJ683	**ERDS2TJ473**	Carbon, 1/4W, 47KΩ, ±5%	Change
R113	ERDS2TJ104	**ERDS2TJ154**	Carbon, 1/4W, 150KΩ, ±5%	Change
R114	ERDS2TJ474	**ERDS2TJ824**	Carbon, 1/4W, 820KΩ, ±5%	Change
R119	ERDS2TJ222	**ERDS2TJ152**	Carbon, 1/4W, 1.5KΩ, ±5%	Change
R191, 192	——	**ERDS2TJ102**	Carbon, 1/4W, 1KΩ, ±5%	Addition
CAPACITORS				
C126	RCBS1H220JLY	**RCBS1H101KBY**	Ceramic, 50V, 100pF, ±10%	Change
C148	ECKD1H102KB	**RCBS1H102KBY**	Ceramic, 50V, 0.001μF, ±5%	Change
C191, 192	——	**RCBS1H820KBY**	Ceramic, 50V, 82pF, ±10%	Addition
C193, 194	——	**RCBS1H102KBY**	Ceramic, 50V, 0.001μF, ±5%	Addition

Technics

Matsushita Services Company
50 Meadowland Parkway,
Secaucus, New Jersey 07094

Panasonic Sales Company, Division of Matsushita Electric of Puerto Rico, Inc.
Ave. 65 De Infanteria, KM 9.7
Victoria Industrial Park
Carolina, Puerto Rico 00630

Panasonic Hawaii, Inc.
91-238, Kauhi St. Ewa Beach
P.O. Box 774
Honolulu, Hawaii 96808-0774

Matsushita Electric of Canada Limited
5770 Ambler Drive, Mississauga,
Ontario, L4W 2T3

Matsushita Electric Trading Co., Ltd.
P.O. Box 288, Central Osaka Japan

Panasonic Tokyo Office
Matsushita Electric Trading Co., Ltd.
6th Floor, world Trade Center Bldg.,
No. 4-1, Hamamatsu-cho 2-Chome,
Minato-ku, Tokyo 105, Japan

■ PRINTED CIRCUIT BOARD

A (Optical servo P.C.B.)

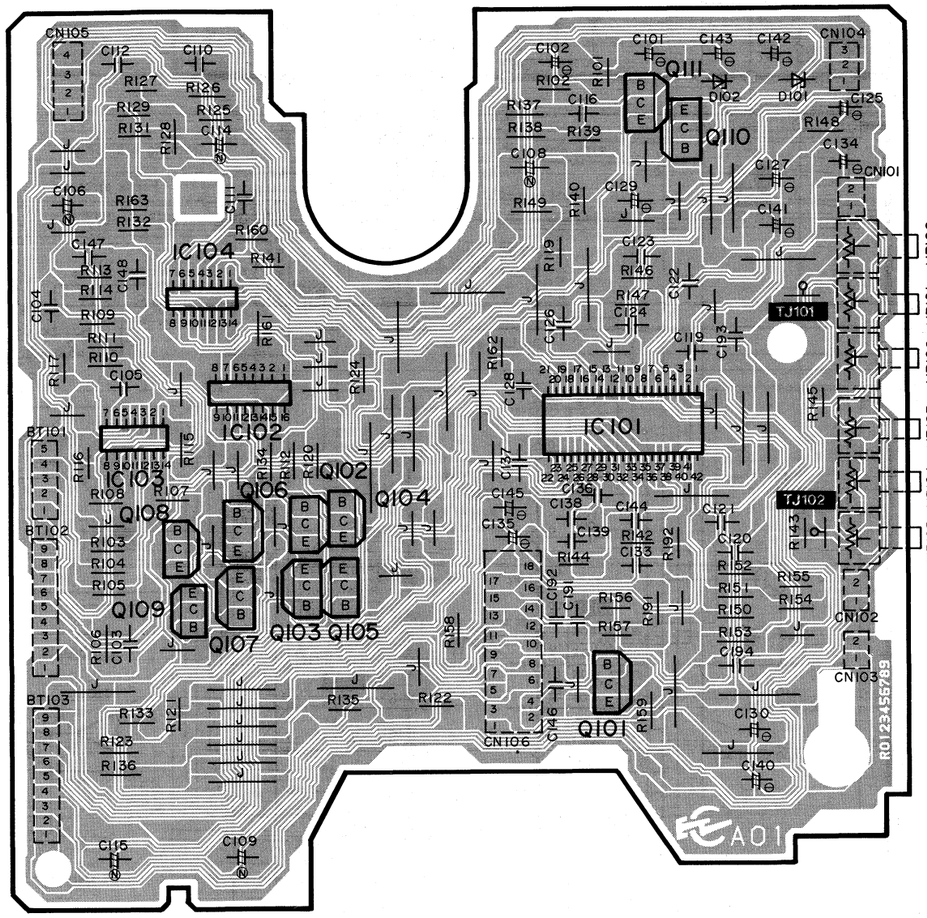

■ SCHEMATIC DIAGRAM (Optical servo circuit)

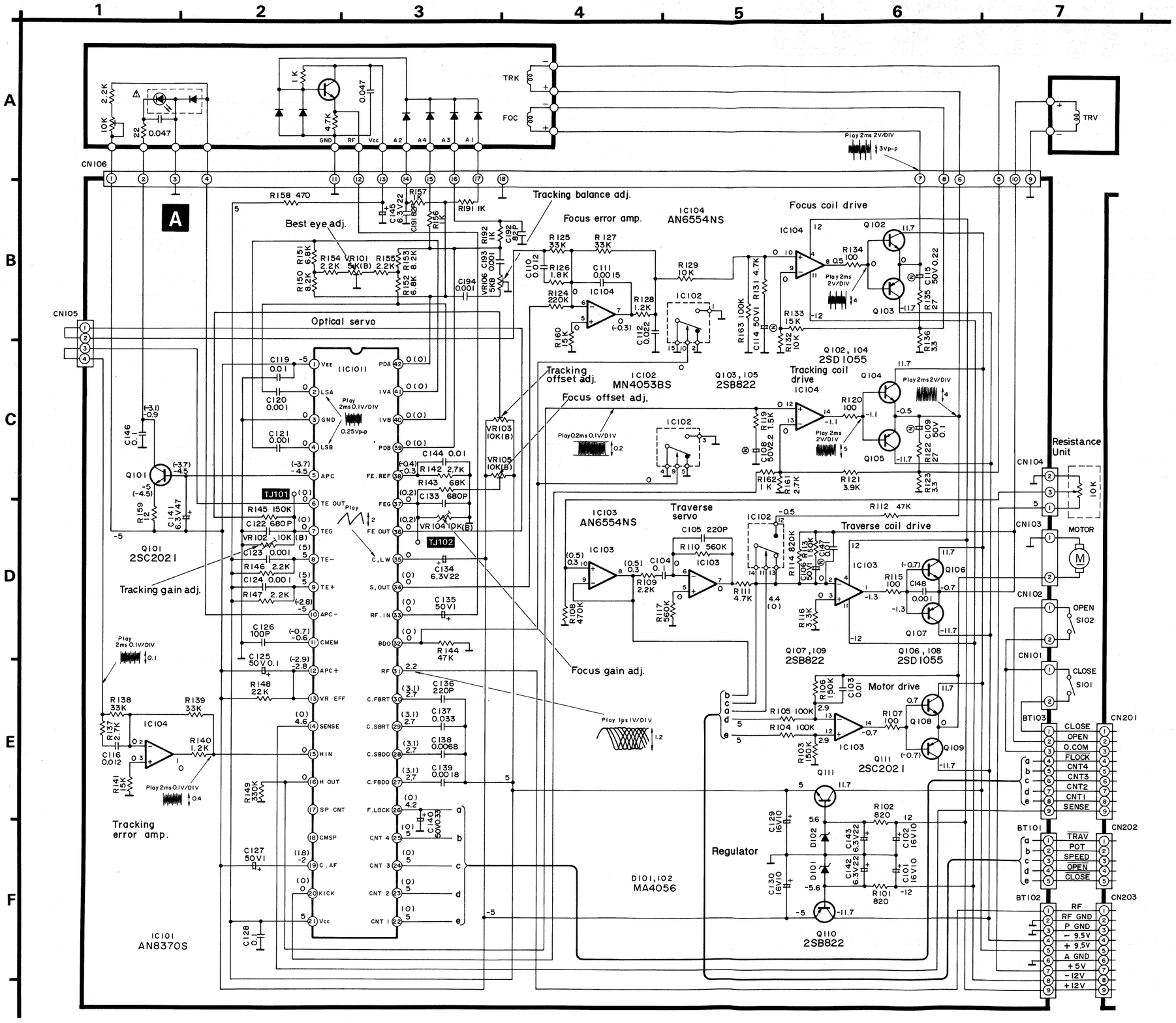

■ MEASUREMENTS AND ADJUSTMENTS

- **Addition of tracking balance adjustment**

TRACKING BALANCE ADJUSTMENT

Note: This adjustment must be done after all previous electrical adjustments have been done. (VR101, VR102, VR103, VR104 and VR105)

1. Remove the shorting connector from connector CN105 of the servo P.C.B. and connect the **test fixture** for tracking balance adjustment (**SZZP1053F**), to it.
2. Turn **ON** the power switch of the player and insert a test disc (**SZZP1014F** or **SZZP1054C**).
3. Set the player to the play mode and play **track No. 1**.
4. Connect CH-1 of the oscilloscope to point Ⓐ (+) and point Ⓑ (−) of the test fixture as shown in **Fig. A**.
   Oscilloscope setting: VOLT..... 20mV
   SWEEP..... 1msec.
   INPUT..... DC
5. Adjust **VR106** so that the DC voltage is **0±5mV** as shown in **Fig. B**.
6. Disconnect the test fixture, and reinsert the shorting connector to **CN105**.

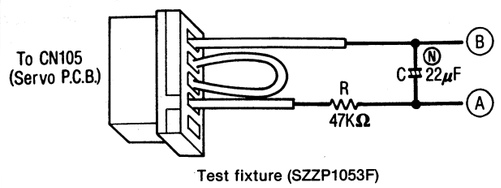

Test fixture (SZZP1053F)

Fig. A

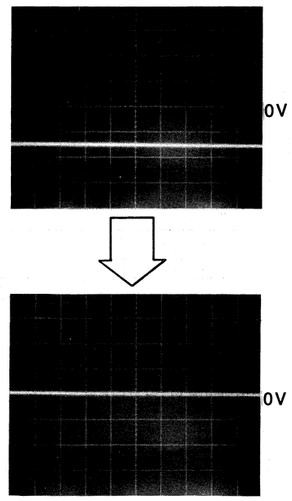

Fig. B

Printed in Japan
H870710250 AM