SERVICE MANUAL

SANSUI

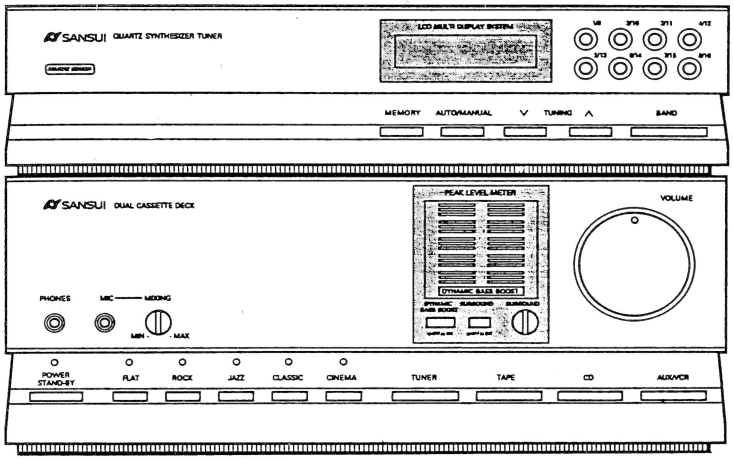

MC-3000
MC-3000L

MINI COMPONENT SYSTEM
<TUNER & AMPLIFIER Section>

CAUTION

1. Parts identified by the ⚠ symbol on the schematic diagram and the parts list are critical for safety. Use only replacement parts that have critical characteristics recommended by the manufacturer.
2. Make leakage-current or resistance measurements to determine that exposed parts are acceptably insulated from the supply circuit before returning the appliance to the customer.

NOTICE

1. The symbols UL, CSA, UK, EG, IPT, EU, SS and XX <EXPORT> on the parts list and the schematic diagram mean followings respectively.
   - UL..... Manufactured for U.S.A. market. (Underwriters Laboratories approved model.)
   - CSA..... Manufactured for Canadian market.
   - UK..... Manufactured for United Kingdom market.
   - EG..... Manufactured for F.R. Germany market.
   - IPT..... Manufactured for Italian market.
   - EU..... Manufactured for European market.
   - SS..... Manufactured for Saudi Arabian market.
   - XX..... Standard Version. <EXPORT>
   - NON MARK..... Common Parts.
2. Some printed circuit boards are not supplied assembled. To separate these in this service manual, the stock numbers are not indicated for these boards. However, stock numbers for individual parts are indicated.
3. Since some capacitors and resistors are omitted from parts lists in this service manual, refer to the Common Parts List for capacitors and resistors, which was issued on June 1987.
4. Abbreviations in this service manual are as follows.

Abbreviations List

N.I.R.	: Non-Inflammable Resistor	S.V.R.	: Semi Variable Resistor
C.C.	: Ceramic Capacitor	SW.	: Switch
E.C.	: Electrolytic Capacitor	E.B.	: Bi-Polar Electrolytic Capacitor
V.R.	: Variable Resistor		

Specifications

(MC-3000/3000L)

Power output (Front channel)
Min. RMS, both channels driven, from 20 to 20,000 Hz, with no more than 0.9% total harmonic distortion.
20 watts per channel into 8 ohms.

Load impedance.....8 to 16 ohms

Signal to noise ratio (Over all, 0 dB=1 watt, A-network)
TAPE, CD, AUX/VCR ..... 85 dB

Controls
DYNAMIC BASS BOOST (VOLUME: –30dB position)
..... +9 dB at 50 Hz

FM Section
Tuning range.....87.9 to 107.9 MHz
Usable sensitivity
Mono .....13.2 dBf (4.0 µV/IHF T-100)
50 dB quieting sensitivity
Mono.....18 dBf
Stereo.....40 dBf
Signal to noise ratio at 65 dBf
Mono.....76 dB
Stereo.....70 dB
Stereo separation.....40 dB at 1,000 Hz
Frequency response .....30 to 15,000 Hz +1 dB, –3 dB

AM Section
Tuning range.....530 to 1,600 kHz
Usable sensitivity.....55 dB/m (562 µV/m)
Signal to noise ratio.....40 dB (antenna input 80 dB/m)

LW Section (MC-3000L)
Tuning range.....153 to 281 kHz
Usable sensitivity..... 50 dB/m (1412 µV/m)

Others
Power requirements. ..... 120 V/220 V/240 V
50/60 Hz
For U.S.A. and Canada ..... 120 V (60 Hz)
Power consumption ..... 85 watts (max 110 VA)
Dimensions..... 280 mm (11-1/16") W
185 mm (7-5/16") H
282 mm (11-1/8") D
Weight.....5.5 kg (12.1 lbs) net

* **Design and specifications subject to changes without notice for improvements.**
* **Due to local laws and regulations, this unit sold in some areas are not equipped with variable voltage selectors.**

1. BLOCK DIAGRAM

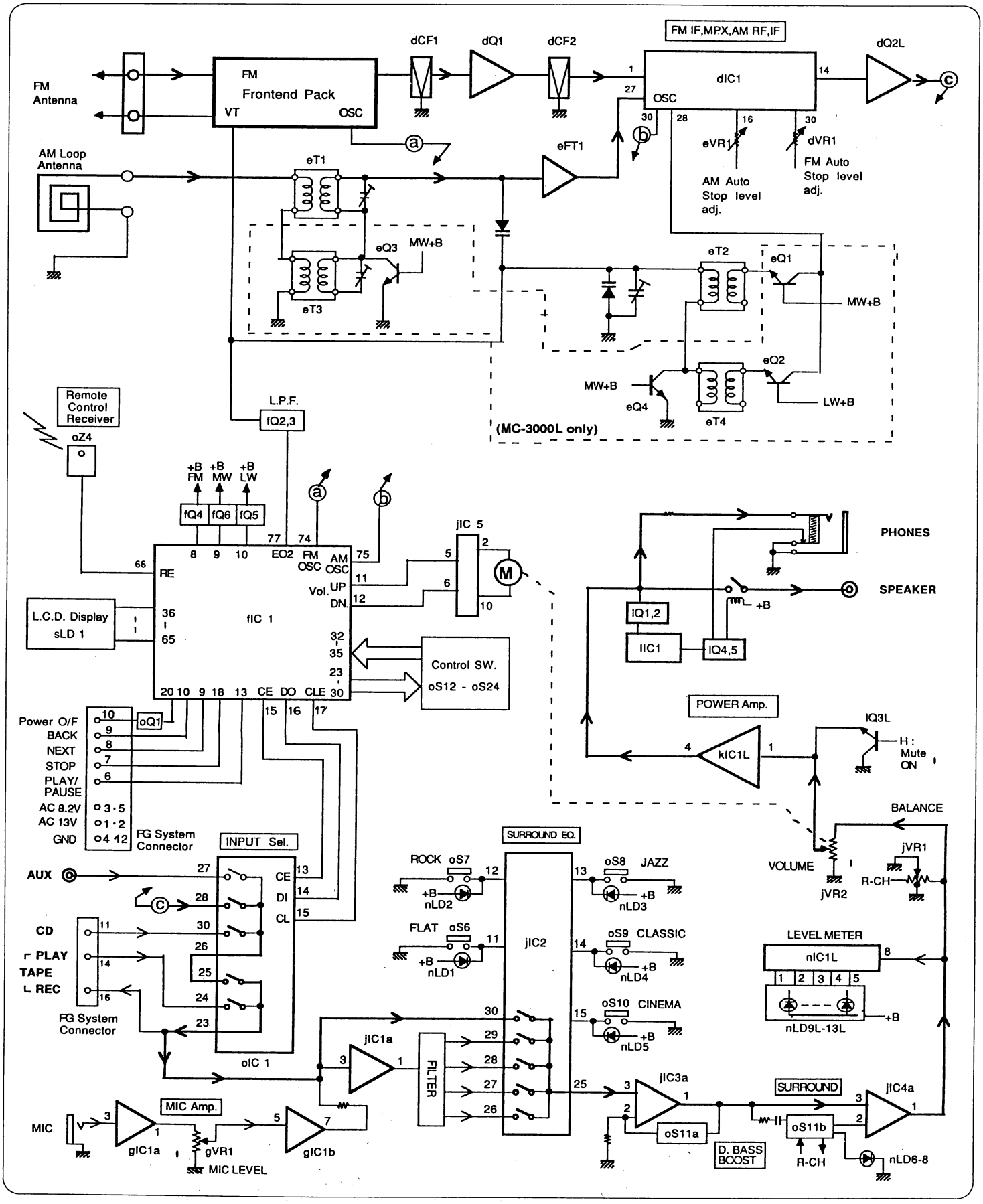

2. ADJUSTMENTS

Fig. 2-1. Adjustment Points of F-6475

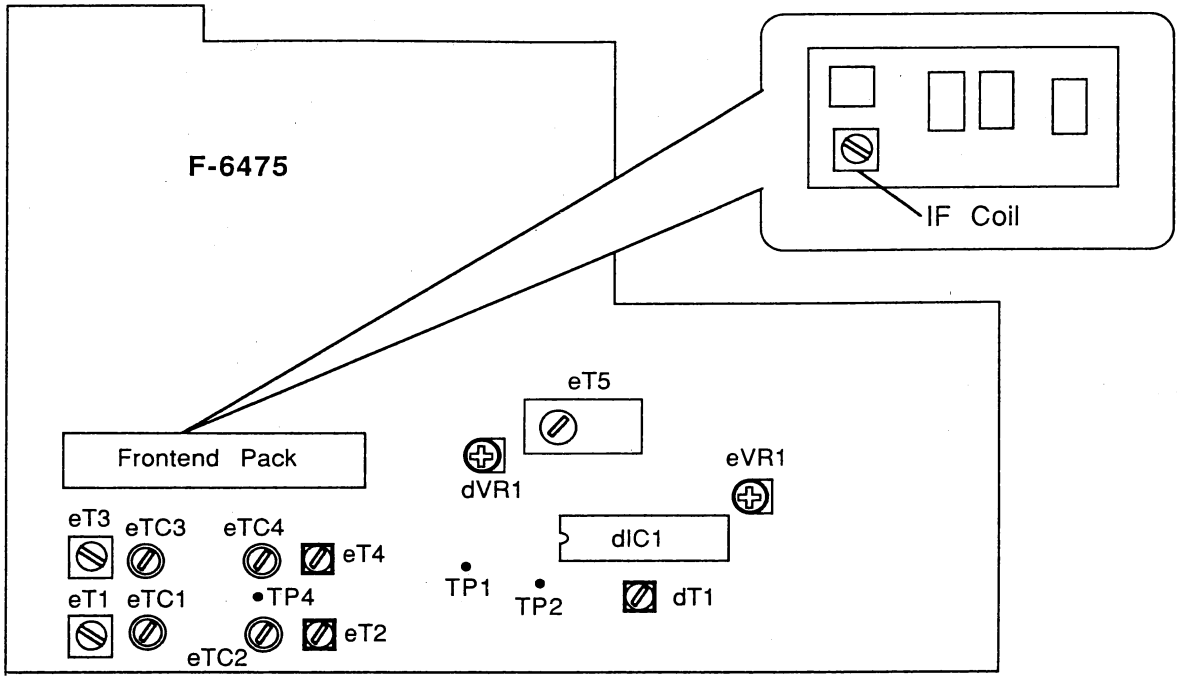

2-1. FM Adjustment (See Fig. 2-1 Adjustment Points of F-6475)

Note: 1. BAND Switch..... FM
2. AUTO/MANUAL Swith.....MANUAL (Steps 1, 2) ; AUTO (Step 3)
3. Connect as shown Fig. 2-2.
4. VOLUME..... Cencer

Fig. 2-2

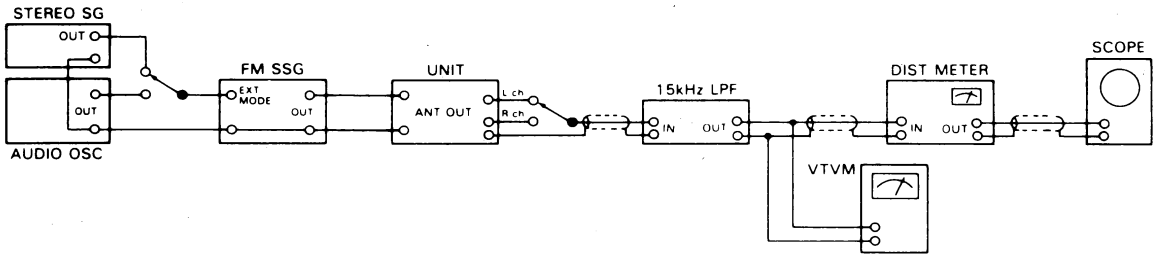

STEP	SUBJECT	FEED SIGNAL FROM	FEED SIGNAL TO	MEASURE OUTPUT	ADJUST	ADJUST FOR	REMARKS
1.	Discriminator Coil Adj.	No Input.	——	Between TP1 & TP2, (Across the dR9, F-6475) DC Volt Meter.	dT1 (F-6475)	DC 0V ± 30mV	
2.	Auto Stop Level Adj.	98MHz ANT Input, 22dBf (16.8dB), 1kHz (100% MOD.), FM SSG.	FM ANT Terminal	FL Display (Reception Frequency)	MANUAL TUNING, TUNING (∧, ∨) Switch	98.00MHz	
				Output L or R ch, VTVM & Oscilloscope.	dVR1 (F-6475)	Output signal comes out.	
3.	Distortion Adj.	98MHz ANT Input, 65dBf (59.8dB.), FM SSG, Pilot 19kHz (9% MOD), L-R MODE 1kHz + Pilot (100% MOD.) STEREO SG.	FM ANT Terminal	FL Display (Reception Frequency)	MANUAL TUNING, TUNING (∧, ∨) Switch	98.00MHz	
				Output L or R ch, VTVM & Oscilloscope.	IF Coil	Min.THD	

◆ NOTICE FOR FM ADJUSTMENT

There are two kind in indication of FM SSG output attenuator.

1. Attenuator with marking of 75 Ω open ..... open indication type.
2. Attenuator with marking of 75 Ω load or close ..... load or close indication type.

FM SG output level in this FM adjustment are described as open indication type.
To feed FM signal, a dummy antenna circuit as Fig. 2-3 must be connected between FM SG output and ANT terminal (300Ω) of the unit.

Fig. 2-3

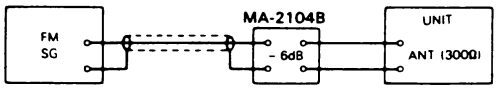

- The following table shows relations among FM SG attenuator indication (dB), available power ratio (dBf) and antenna terminal voltage (dB/μV) in each indication type.

	FM SG Attenuator Indication	Available Power Ratio	Antenna Terminal Voltage
Open indication type	0 dB 66 dB	-0.8 dBf 65.2 dBf	-6 dB/μV 60 dB/μV
Load or close indication type	0 dB 60 dB	5.2 dBf 65.2 dBf	0 dB/μV 60 dB/μV

2-2. AM (MW, LW) Adjustment (See Fig. 2-1. Adjustment Points of F-6475 on page 2)

Note: 1. BAND Switch..... AM (MC-3000),
BAND Switch..... MW (MC-3000L)
2. Connect AM loop antenna to AM antenna terminal.
3. Connect as shown Fig. 2-4.
4. VOLUME..... Center

Fig. 2-4

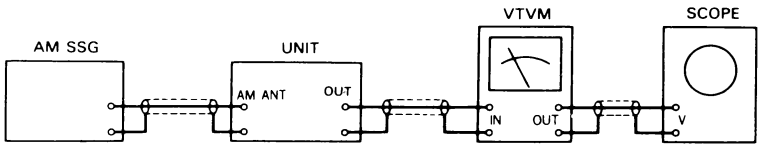

1) AM IF and MW (AM) Tuning Adjustment

STEP	SUBJECT	FEED SIGNAL FROM	FEED SIGNAL TO	MEASURE OUTPUT	ADJUST	ADJUST FOR	REMARKS
1.	531kHz (or 530kHz) Tuning Voltage Adj.	No Input.	——	FL Display (Reception Frequency)	MANUAL TUNING, TUNING (∧, ∨) Switch	531kHz (or 530kHz)	• Repeat precedures as stated in STEP 1 and 2.
				Between TP4 (F-6475) and GND, DC Volt Meter.	eT2 (F-6475)	DC 1.0V ± 0.1V	
2.	1602kHz (or 1720kHz) Tuning Voltage Adj.	No Input.	——	FL Display (Reception Frequency)	MANUAL TUNING, TUNING (∧, ∨) Switch	1602kHz (or 1720kHz)	
				Between TP4 (F-6475) and GND, DC Volt Meter.	eTC2 (F-6475)	8.0V ± 0.1V	
3.	603kHz (or 600kHz) RF Adj.	603kHz (or 600kHz) ANT Input, 50dB, 400Hz (30% MOD.), AM SSG	AM ANT Terminal	FL Display (Reception Frequency)	MANUAL TUNING, TUNING (∧, ∨) Switch	603kHz (or 600kHz)	•Repeat precedures as stated in STEP 3 and 4.
				SP Output L or R ch, VTVM & Oscilloscope.	eT1 (F-6475)	Max. Output	
4.	1404kHz (or 1400kHz) RF Adj.	1404kHz (or 1400kHz) ANT Input, 50dB, 400Hz (30% MOD.), AM SSG	AM ANT Terminal	FL Display (Reception Frequency)	MANUAL TUNING, TUNING (∧, ∨) Switch	1404kHz (or 1400kHz)	
				SP Output L or R ch, VTVM & Oscilloscope.	eTC1 (F-6475)	Max. Output	
5.	IF Coil Adj.	999kHz (or 1000kHz) ANT Input, 50dB, 400Hz (30% MOD.), AM SSG	AM ANT Terminal	SP Output L or R ch, VTVM & Oscilloscope.	eT5 (F-6475)	Max. Output	
6.	Signal Indicator Level Adj.	999kHz (or 1000kHz) ANT Input, 55dB, 400Hz (30% MOD.), AM SSG	AM ANT Terminal	FL Display (Reception Frequency)	MANUAL TUNING, TUNING (∧, ∨) Switch	999kHz (or 1000kHz)	
				Signal Indicator (FL Display)	eVR1 (F-6475)	Make all signal indicators lighting up.	

2) LW Tuning Adjustment <MC-3000L only>

Note: 1. BAND Switch.....LW

STEP	SUBJECT	FEED SIGNAL FROM	FEED SIGNAL TO	MEASURE OUTPUT	ADJUST	ADJUST FOR	REMARKS
1.	153kHz Tuning Adj.	No Input.	——	FL Display (Reception Frequency)	MANUAL TUNING, TUNING (∧, ∨) Switch	153kHz	• Repeat precedures as stated in STEP 1 and 2.
				Between TP4 (F-6475) and GND, DC Volt Meter.	eT4 (F-6475)	DC 1.0V ± 0.1V	
2.	281kHz Tuning Adj.	No Input.	——	FL Display (Reception Frequency)	MANUAL TUNING, TUNING (∧, ∨) Switch	281kHz	
				Between TP4 (F-6475) and GND, DC Volt Meter.	eTC4 (F-6475)	5.4V ± 0.1V	
3.	170kHz RF Adj.	170kHz ANT Input, 60dB, 400Hz (30% MOD.), AM SSG.	ANTENNA Terminal	FL Display (Reception Frequency)	MANUAL TUNING, TUNING (∧, ∨) Switch	170kHz	•Repeat precedures as stated in STEP 3 and 4.
				SP Output L or R ch, VTVM & Oscilloscope.	eT3 (F-6475)	Max. Output	
4.	261kHz RF Adj.	261kHz ANT Input, 60dB, 400Hz (30% MOD.), AM SSG.	Same as above.	FL Display (Reception Frequency)	MANUAL TUNING, TUNING (∧, ∨) Switch	261kHz	
				SP Output L or R ch, VTVM & Oscilloscope.	eTC3 (F-6475)	Max. Output	

3. P.C. BOARD LOCATION

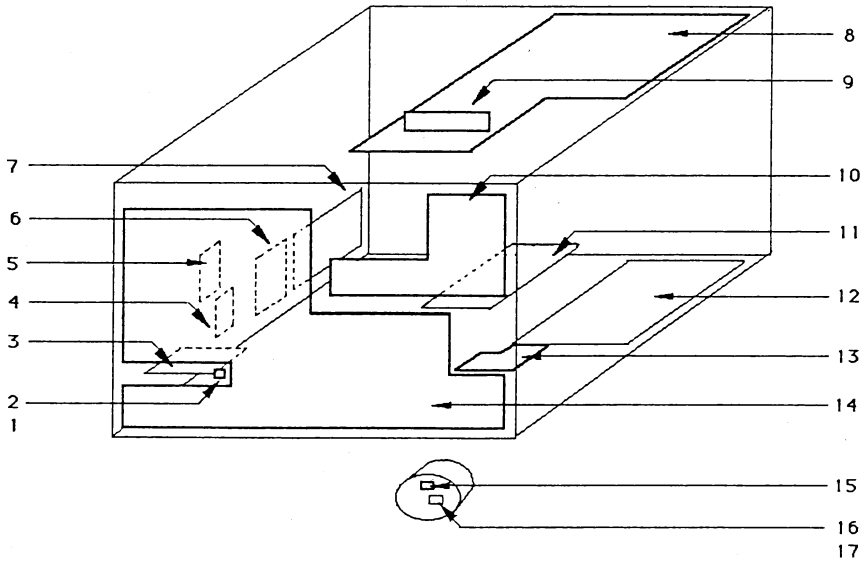

F-6475--- 8	F-6480---10	F-6485--- 7	F-6580---16
F-6476--- 5	F-6481--- 1	F-6486--- 4	F-6581---17
F-6477---13	F-6482--- 2	F-6487--- 9	
F-6478---14	F-6483---11	F-6498--- 6	
F-6479--- 3	F-6484---12	F-6499---15	

4. PARTS LIST OF CIRCUIT BOARD

4-1. F-6475 Tuner Board

<Stock No. C14C208811=XX, SS>
<Stock No. C14C208810=UL, CSA>
<Stock No. C14C208812=EU, UK>
<Stock No. C14C208813=EG, IPT>

Parts No.		Stock No.	Description
dZ2		7160228001	FM Pack (XX,UL,CSA,SS)
		7160228002	FM Pack (EU,UK,EG,IPT)
• Transistor			
dQ1		410522786L	2SC2786
dQ2		4105224587	2SC2458
	or	4100017402	2SC1740S
dQ3		41091114YS	DTA114YS
	or	4108922070	RN2207
dQ4		41092114YS	DTC114YS
	or	4108912070	RN1207
dQ5		410522786L	2SC2786
dQ6		410420114T	DTC114TS
	or	4108912110	RN1211
• IC			
dIC1		415201851N	LA1851N
dX01		4160500203	Quartz Element
⚠ dR2		4170247055	47Ω 1/2W N.I.R.
⚠ dR20		4170222055	22Ω 1/2W N.I.R.
dC4		7308622345	22000pF 25V C.C.
dC5		7308622345	22000pF 25V C.C.
dC6		7308622345	22000pF 25V C.C.
dC13		5105153132	15000pF 16V C.C. (XX,SS)
		5105183132	0.018μF 16V C.C. (UL,CSA)
		5105123132	0.012μF 16V C.C. (EU,UK,EG,IPT)
dCF1,2		4160200181	Ceramic Filter SFE 10.7MS2 (XX,UL,CSA,SS)
		4160200194	Ceramic Filter SFF 10.7MS3G (EU,UK,EG,IPT)
dT1		4340201430	FM IF Coil
dT51		4160228205	Filter, adj-CH (EG)
dVR1		5226203137	20kΩ S.V.R., FM Stop Level
dZ1		4560004069	4P Terminal, Antenna (XX,UL,CSA)
		4560002065	2P Terminal, Antenna (EU,UK,EG,IPT)
• Transistor			
eQ1,2		410420114T	DTC114TS (EU,UK,EG,IPT)
	or	4108912110	RN1211 (EU,UK,EG,IPT)
eQ3,4		410023327A	2SC3327 (EU,UK,EG,IPT)
• FET			
eFT1		41065192AY	2SK192A-Y
	or	41065192A7	2SK192A-GR
eD1		413000321S	Voltage V.C.Diode KV1236Z2
	or	4120112362	Voltage V.C.Diode SVC321
eC1		7308622345	22000pF 25V C.C.
eC3		7306010055	100pF 50V C.C.
eC4		7308622345	22000pF 25V C.C.
eC5		7306510115	10pF 50V C.C.
eC6		7308622345	22000pF 25V C.C.
eC9,10		5105473132	4700pF 16V C.C. (EU,UK,EG,IPT)
eC11		7308622345	22000pF 25V C.C.
eC14		7306510215	1000pF 50V C.C.
eC15		7308622345	0.022μF 25V C.C.
eTC1		5010300027	30pF Trimmer C.
eTC2		5010300027	30pF Trimmer C.
eTC3,4		5010300027	30pF Trimmer C. (EU,UK,EG,IPT)
eT1		4300103110	AM RF Coil
eT2		4330101830	AM RF Coil
eT3		4300200820	AM RF Coil (EU,UK,EG,IPT)
eT4		4330101840	AM RF Coil (EU,UK,EG,IPT)
eT5		4160500198	Ceramic Filter (XX,UL,CSA,SS)
		4160500199	Ceramie Filter (EU,UK,EG,IPT)
eVR1		5226103137	10kΩ S.V.R., AM Stop Level
• Transistor			
fQ1		41092114YS	DTC114YS (EU,UK,EG,IPT)
	or	4108912070	RN1207 (EU,UK,EG,IPT)
fQ2		4105224587	2SC2458
	or	410521740S	2SC1740S
fQ3		4105224587	2SC2458
	or	410521740S	2SC1740S
fQ4		41091114YS	DTA114YS
	or	4108922070	RN2207
fQ5		41091114YS	DTA114YS (EU,UK,EG,IPT)
	or	4108922070	RN2207 (EU,UK,EG,IPT)
fQ6		41091114YS	DTA114YS (EU,UK,EG,IPT)
	or	4108922070	RN2207 (EU,UK,EG,IPT)
• IC			
fIC1		4152723007	LC7230-8307
fX01		410090450M	Quartz Element
• Diode			
fD1		4121901330	1SS133
fD2		4121901330	1SS133
fD3		4121901330	1SS133
fD4		4121901330	1SS133
fD5		4121924730	1S2473T77
	or	4121415880	1S1588TP-3
⚠ fR13		4170247155	470Ω 1/2W N.I.R.
fC3		5105102141	1000pF 16V C.C.
fC4		5105102141	1000pF 16V C.C.
fC5		5154472205	4.7μF 5.5V E.C.
fC6		5105102141	1000pF 16V C.C.
fC8		5164229250	2.2μF 50V E.B.
fC9		5167339250	3.3μF 50V E.B.
fC10		5105103132	10000pF 16V C.C.
• Transistor			
oQ1		410921114YS	DTC114YS
	or	4108912070	RN1207
• IC			
oIC1		4152078210	LC7821
• Diode			
oD1–7		4121901330	1SS133
oD8		4121901330	1SS133 (XX,EU,UK,EG,IPT,SS)
oD9		4121901330	1SS133 (EU,UK,EG,IPT)
oD10		4121901330	1SS133 (XX,UL,CSA,SS)
oD11–14		4121901330	1SS133
oD21		4120924730	1S2473T77
	or	4121415880	1S1588TP-3
oZ1		4500800318	Terminal Board, AUX

<F-6475>

Parts No.	Stock No.	Description
oZ2	4570901250	FG Socket, System
sLD1	4110440143	L.C. Display HLC9861-01-2210

4-2. F-6476 Power Supply Sub-A Board

Parts No.	Stock No.	Description
⚠ mR6	4272022855	0.22Ω 2W N.I.R.
⚠ mR7	4272022855	0.22Ω 2W N.I.R.
⚠ mR8	4272022855	0.22Ω 2W N.I.R.

4-3. F-6477 MASTER VOLUME Board

Parts No.	Stock No.	Description
jC23	5104104131	0.1μF 16V C.C.
jVR2	5020215152	150kΩ V.R., MASTER V.R

4-4. F-6478 INPUT Selector & Control Amp. Board <Stock No. C14C208820>

Parts No.	Stock No.	Description
• IC		
jIC1	415904558D	NJM4558D
or	415904558X	NJM4558D-X
jIC2	4152078180	LC7818
jIC3	415904558D	NJM4558D
or	415904558X	NJM4558D-X
jIC4	415904558D	NJM4558D
or	415904558X	NJM4558D-X
jIC5	4152016410	LB1641
• Zener Diode		
jDZ1	412050047A	MTZ4.7A
or	412050047B	MTZ4.7B
jC4	7307822215	2200pF 50V C.C.
jC5	7307182215	8200pF 50V C.C.
jC6	7307818225	1800pF 50V C.C.
jC7	7306582115	820pF 50V C.C.
jC8	7307818225	1800pF 50V C.C.
jC9	7308622345	22000pF 25V C.C.
jC11	7307812215	1200pF 50V C.C.
jC12	5105473132	4700pF 16V C.C.
jC18	5105473132	4700pF 16V C.C.
jC22	7307110335	0.01μF 50V C.C.
jVR1	5020125151	250kΩ (W) V.R., BALANCE
• Transistor		
IQ3	4105224587	2SC2458
or	410521740S	2SC1740S
• Diode		
ID6,7	4121901330	1SS133
ID8	4120924730	1S2473T77
or	4121415880	1S158TP-3
ID9,10	4121901330	1SS133
IC9	5167109250	1μF 50V E.B.
•Transistor		
nQ1	410410114T	DTA114TS
or	4108922110	RN2211
nQ2	410420114T	DTC114TS
or	4108912110	RN1211

<F-6478>

Parts No.	Stock No.	Description
nQ3	4105224587	2SC2458
or	410521740S	2SC1740S
nQ4	4105224587	2SC2458
or	410521740S	2SC1740S
• IC		
nIC1	4159061440	BA6144
• Diode		
nD1	4121901330	1SS133
nD2–4	4120924730	1S2473T77
or	4121415880	1S1588TP-3
• LED		
nLD1	4120639104	SEL3910A, FLAT
nLD2	4120639104	SEL3910A, ROCK
nLD3	4120639104	SEL3910A, JAZZ
nLD4	4120639104	SEL3910A, CLASSIC
nLD5	4120639104	SEL3910A, CINEMA
nLD6	4120639133	SEL3913K, BASS Boost
nLD7	4120639133	SEL3913K, BASS Boost
nLD8	4120639133	SEL3913K, BASS Boost
nLD9	4120639133	SEL3913K, PEAK LEVEL Meter
nLD10	4120639133	SEL3913K, PEAK LEVEL Meter
nLD11	4120639133	SEL3913K, PEAK LEVEL Meter
nLD12	4120639133	SEL3913K, PEAK LEVEL Meter
nLD13	4120639133	SEL3913K, PEAK LEVEL Meter
nLD14	4120632102	SEL3210S, POWER
⚠ nR7	4272033055	33Ω 2W N.I.R.
oZ4	714001521X	Remote Receive Unit GP1U521X
oS1	4400000103	Push SW., AUX
oS2	4400000103	Push SW., TAPE
oS3	4400000103	Push SW., CD
oS4	4400000103	Push SW., TUNER
oS5	4400000103	Push SW., POWER
oS6	4400000103	Push SW., FLAT
oS7	4400000103	Push SW., ROCK
oS8	4400000103	Push SW., JAZZ
oS9	4400000103	Push SW., CLASSIC
oS10	4400000103	Push SW., CINEMA
oS11	4432000589	Push SW., BASS Boost/ Surround

4-5. F-6479 Mic Amp. Board

<Stock No. C14C208840>

Parts No.	Stock No.	Description
• IC		
gIC1	415904558D	NJM4558D
gVR1	5020124150	20kΩ V.R., Mic Level
gJ1	4500100316	Jack, Mic
⚠ kR12	4272022155	220Ω 2W N.I.R.
kC13	5163220225	22μF 25V E.B.
oJ1	4500100317	Jack, PHONES

4-6. F-6480 Preset Switch Board

<Stock No. C14C208850>

Parts No.	Stock No.	Description
oS12	4400000103	Push SW., Preset 4
oS13	4400000103	Push SW., Preset 3
oS14	4400000103	Push SW., Preset 2
oS15	4400000103	Push SW., Preset 1
oS16	4400000103	Push SW., Preset 8
oS17	4400000103	Push SW., Preset 7
oS18	4400000103	Push SW., Preset 6
oS19	4400000103	Push SW., Preset 5
oS20	4400000103	Push SW., UP
oS21	4400000103	Push SW., DOWN
oS22	4400000103	Push SW., AUTO/MA
oS23	4400000103	Push SW., MEMORY
oS24	4400000103	Push SW., BAND
oS26	4430102595	SLIDE SW., 9K/10K

4-7. F-6483 Power Amp. Board

<Stock No. C146202110>

Parts No.	Stock No.	Description
• IC		
⚠ kIC1	4159187520	SI-18752
⚠ kR4	4271047955	4.7Ω 1W N.I.R.

4-8. F-6484 Power Supply Board

<Stock No. C146202120>

Parts No.	Stock No.	Description
⚠ kR11	4271010055	10Ω 1W N.I.R.
• Transistor		
IQ1	4105224587	2SC2458
or	410521740S	2SC1740S
IQ2	4100010487	2SA1048
or	41000933SS	2SC1740S
IQ4	41091114YS	DTA114YS
or	4108922070	RN2207
IQ5	41092114YS	DTC114YS
or	4108912070	RN1207
• IC		
⚠ IIC1	415307317P	TA7317P
• Diode		
ID1	4120924730	1S2473T77
or	4121415880	1S1588TP-3
ID2	4120924730	1S2473T77
or	4121415880	1S1588TP-3
ID3	4138104002	1N4002
ID4	4138104002	1N4002
ID5	41301010E2	10E-2
or	4138104003	1N4003
⚠ IR1	4273022855	0.22Ω 3W N.I.R.
⚠ IR18	4170233155	330Ω 1/2W N.I.R.
IC1	5105223132	0.022μ F 16V C.C
IC5	5163101210	100μ F 6.3V E.B.
IRL1	4390000032	RELAY
or	4390000030	RELAY
• Transistor		
⚠ mQ1	410031761E	2SD1761
⚠ mQ2	4105224587	2SC2458
⚠ or	410521740S	2SC1740S

<F-6484>

Parts No.	Stock No.	Description
⚠ mQ3	410420114T	DTC114TS
⚠ or	4108912110	RN1211
⚠ mQ4	4105224587	2SC2458
⚠ or	410521740S	2SC1740S
• Diode		
⚠ mD1	4120RBA402	RBA-402
⚠ or	4130400041	KBU4D
⚠ mD2	4120DBB10B	DBB10B
⚠ or	4120DBB10C	DBB10C
⚠ or	413000004M	DF04M
⚠ or	413000002M	DF02M
•Zener Diode		
mDZ1,2	4120511205	RD12E-B1
or	4120521205	RD12E-B2
or	412150120X	05AZ12-X
or	412150120Y	05AZ12-Y
mDZ3	4120521305	RD13E-B2
or	4120531305	RD13E-B3
or	412150130X	05AZ13-Y
or	412150130Y	05AZ13-Z
⚠ mDZ4	4121520625	RD6.2E-B2
⚠ or	4121530625	RD6.2E-B3
⚠ or	412150062Y	05AZ6.2-Y
or	412150062Z	05AZ6.2-Z
mR1	4272039155	390Ω 2W N.I.R.
⚠ mR2	4272047155	470Ω 2W N.I.R.
mR4	4170210155	100Ω 1/2W N.I.R.
mC1,2	5158472235	4700μF 35V E.C
nR22	4170210055	10Ω 1/2W N.I.R.
oZ3	4560004079	4P Speaker Terminal

4-9. F-6485 Fuse Board

Parts No.	Stock No.	Description
⚠ pF1	5262150050	Fuse, 1.5A (XX,SS)
⚠	5262300050	Fuse, 3A (UL,CSA)
⚠	5267125060	Fuse, 1.25A (EU,UK,EG,IPT)
⚠ pS1	4410202155	Slide SW., Voltage Selector (XX,SS)

4-10. F-6486 Power Supply Sub-B Board

Parts No.	Stock No.	Description
⚠ mR9	4272022855	0.22Ω 2W N.I.R.

4-11. F-6487 LCD Lamp Board

Parts No.	Stock No.	Description
nPL1	4703126124	Pilot Lamp

4-12. F-6499 VOLUME Indicator Board

Parts No.	Stock No.	Description
• LED		
nLD15	4120607094	LTL-709Y

MC-3000/3000L (TU & Amp.)

5. OTEHER PARTS

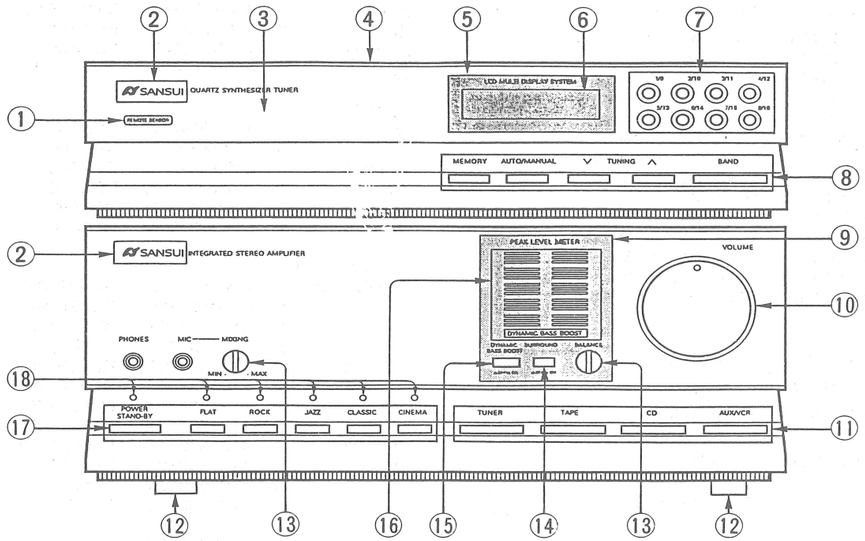

Parts List

Parts No.	Stock No.	Description
1	JS84641800	RC Filter
2	JS85022000	Log type Badge
3	JS84649200	Front Panel (MC-3000)
	JS84649300	Front Panel(MC-3000L)
4	JS84640900	Bonnet
5	JS84640300	T. DS Plate
6	2710777500	L.C.D. Filter
7	JS84640800	Knob,Preset 1-16
8	JS84641200	Knob,MEMORY,AUTO/MANUAL, TUNING,BAND
9	JS84640210	A. DS Plate
10	JS84640400	Knob,VOLUME
11	JS84641100	Knob,TUNER,TAPE,CD,AUX/VCR
12	JS84642500	Cushion for foot
13	JS84641500	Knob,BALANCE,MIC MIXING
14	JS84641700	Knob,SURROUND
15	JS84641600	Knob,D. BASS BOOST
16	JS84642000	A. METER Panel
17	JS84641000	Knob,POWER,FLAT,ROCK,JAZZ, CLASSIC,CINEMA
18	JS84642100	Indicator
⚠	420A769127	Power Transformer(XX,SS)
⚠	420A762118	Power Transformer(UL,CSA)
⚠	420A764119	Power Transformer(EU,UK,EG,IPT)
⚠	4630212065	Power Supply Cord(XX)
⚠	463021L066	Power Supply Cord(SS)
⚠	4631372070	Power Supply Cord(UL,CSA)
⚠	463221L065	Power Supply Cord(EU,EG,IPT)
⚠	463320L065	Power Supply Cord(UK)
	4580000024	Strain Relief (UL,CSA,SS,EU,UK,EG,IPT)
	458000023	Strain Relief(XX)

6. PARTS LOCATION ON CIRCUIT BOARD

6-1. F-6475 Tuner Board
Component Side

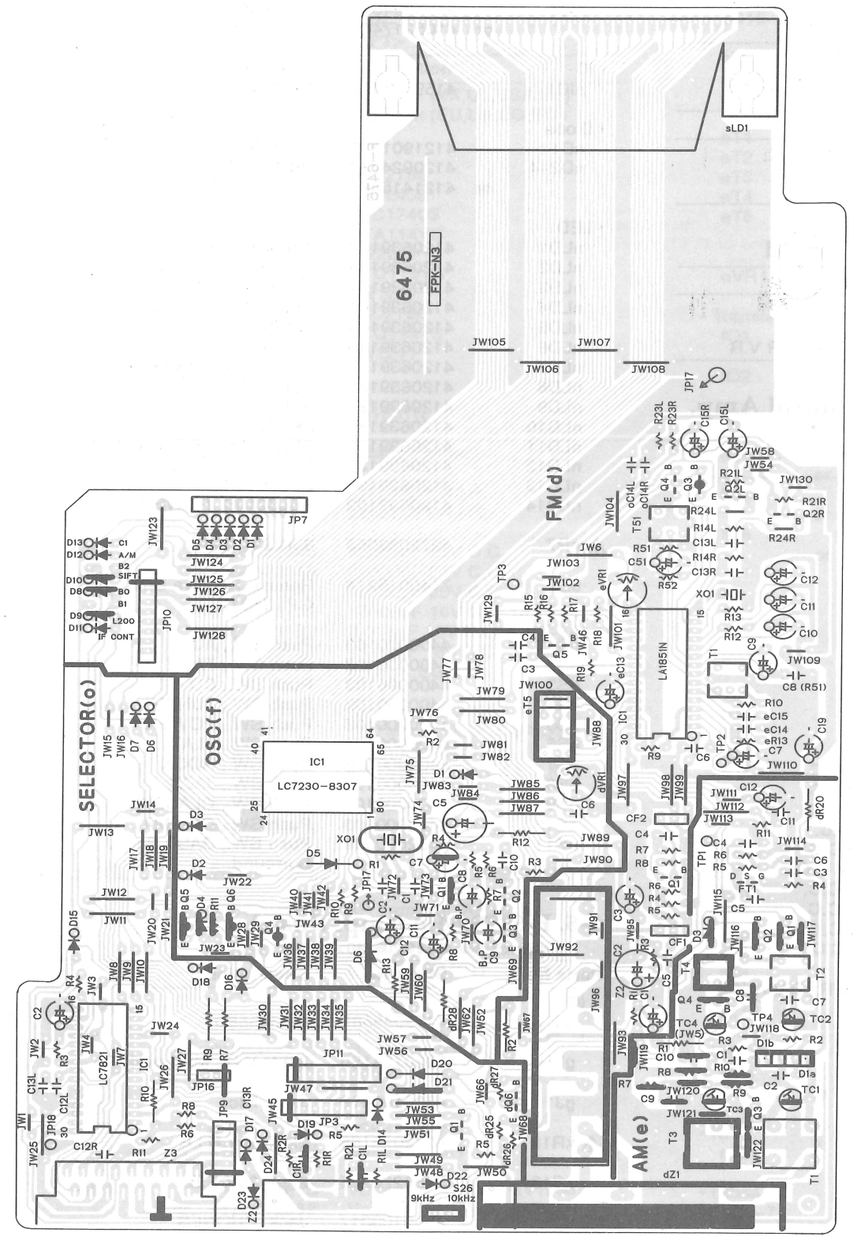

6-2. F-6476 Power Supply Sub-A Board
Component Side

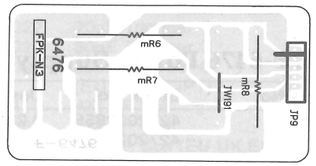

6-3. F-6477 MASTER VOLUME Board
Component Side

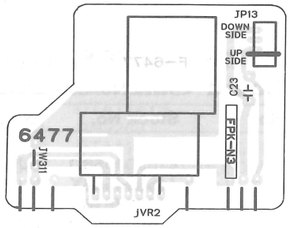

6-4. F-6479 Mic Amp. Board
Component Side

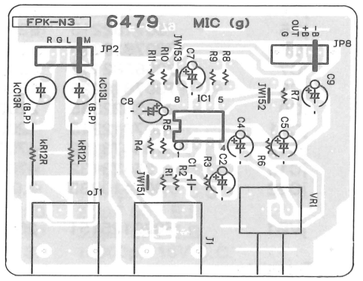

6-5. F-6481 or 6482 Stopper Board
Component Side

MC-3000/3000L (TU & Amp.)

6-6. F-6483 Power Amp. Board

Component Side

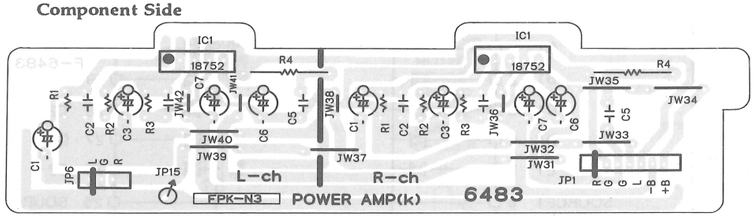

6-7. F-6480 Preset Switch Board

Component Side

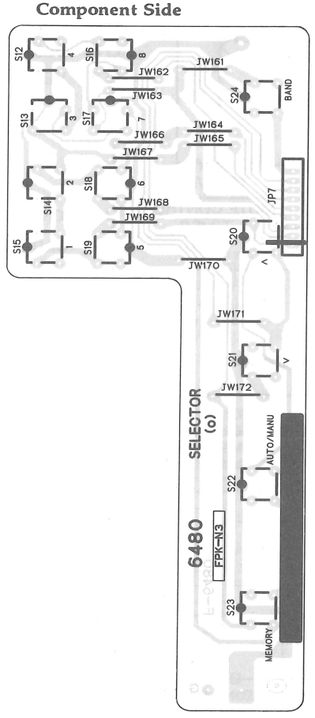

6-8. F-6478 INPUT Selector & Control Amp. Board

Component Side

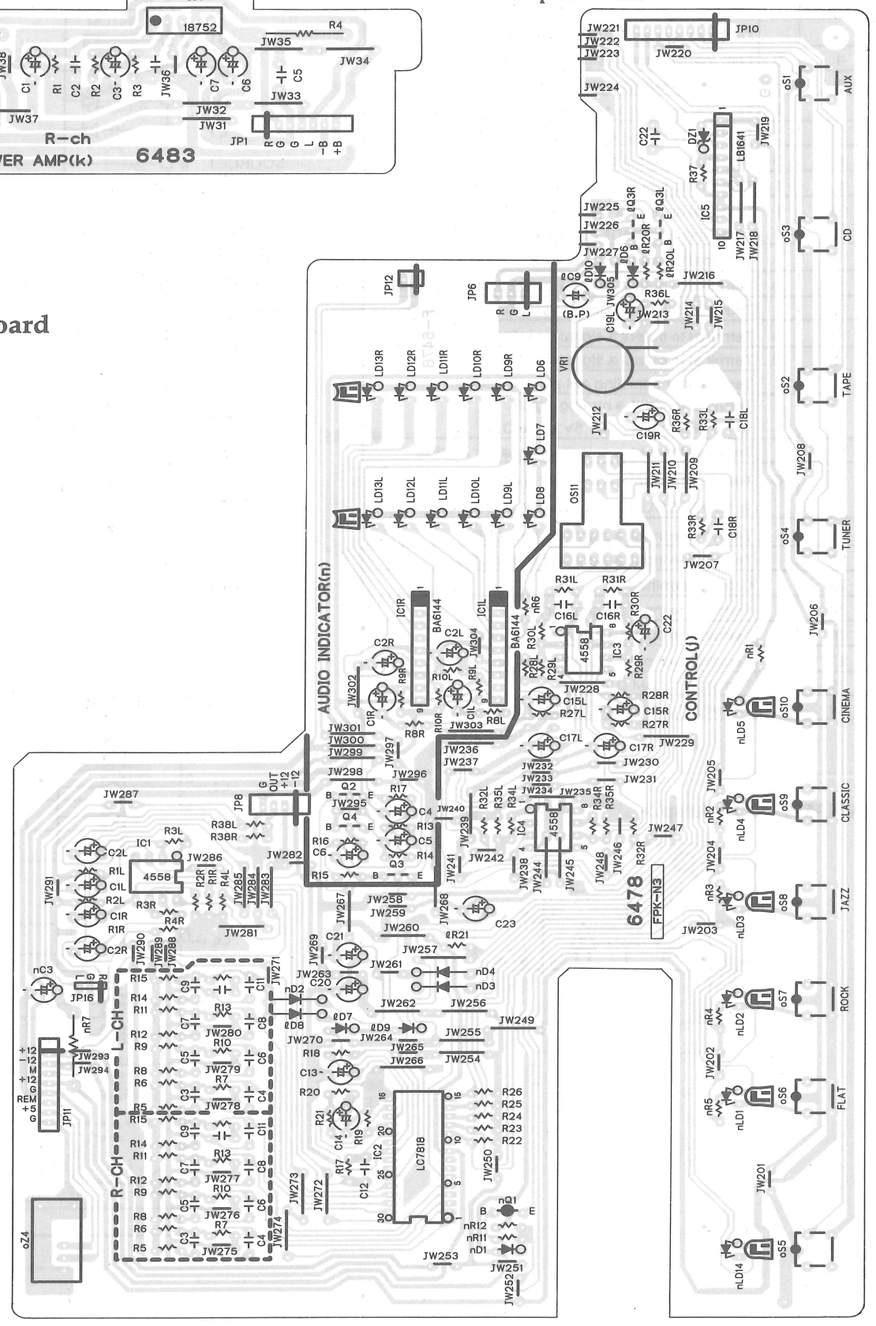

6-9. F-6484 Power Supply Board

Component Side

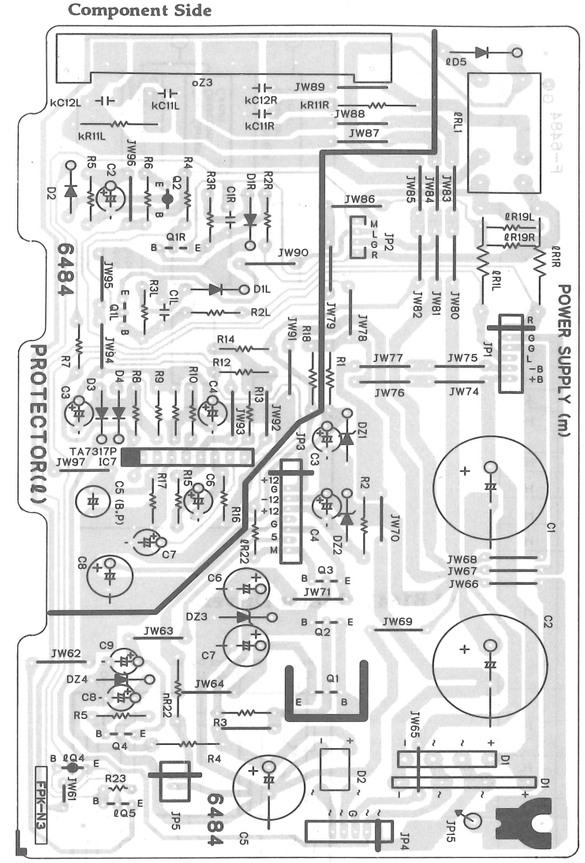

6-10. F-6485 Fuse Board

Component Side

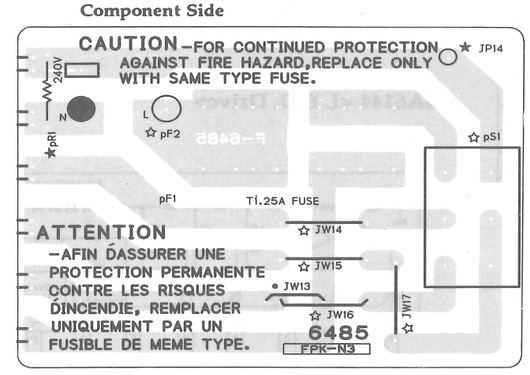

6-11. F-6486 Power Supply Sub-B Board

Component Side

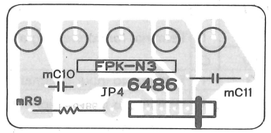

6-12. F-6487 LCD Lamp Board

Component Side

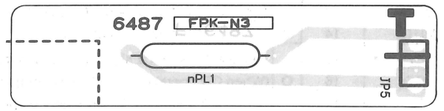

6-13. F-6498 Connector Board

Component Side

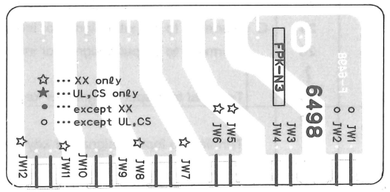

6-14. F-6499 VOLUME Indicator Board

Component Side

6-15. F-6580 or 6581 Stopper Board-B

Component Side

7. INTERIOR BLOCK DIAGRAM & TERMINAL FUNCTION OF IC

• LC7230-8307<System Control>

Pin Name	Pin No.	I/O	Description	Active
X IN	1	I	Terminal for connecting a oscillator of 4.5MHz .	—
X OUT	80	O		
REMO	3	I	Terminal to input a signal for remote controller.	L
$\overline{\text{STEREO}}$	4	I	Terminal to input a signal for FM STEREO indicator of display. When this terminal LOW,this indicator is lighted.	L
VOL	7	O	Terminal to input a VOLUME position signal for presetting.	H
$\overline{\text{FM}}$	8	O	Terminal to output a signal for selecting each band .	L
$\overline{\text{MW}}$	9			
$\overline{\text{LW}}$	10			
VU	11	O	Terminal to output a signal for volume up.	H
VD	12	O	Terminal to output a signal for volume down.	H
MO/ST	13	O	Terminal to output a signal for selecting FM mode.	H
MUTE	14	O	Terminal to output a signal for muting.	H
CE	15	O	Terminal to output a signal for serial data to LC7821.	H
DO	16		(When CD operation, NEXT signal output.)	H
CLK	17		(When CD operation, BACK signal output.)	⌐
IF CNT	18	O	Terminal to output a control signal for IF. (When CD operation, STOP signal output.)	H
NARROW	19	O	Terminal to output a signal for selecting IF width.	H
POWER OUT	20	O	Terminal to output a signal for POWER control.	H
A MUTE	21	O	Terminal to output a signal for audio muting.	H
STB	22	O	Terminal to output a signal for STB to 74HC375.	H
T7	23	O	(Terminal to output a signal for indication TAPE.)	H
T6	24		(Terminal to output a signal for indication TUNER.)	
T5	25		(Terminal to output a signal for indication AUX.)	
T4	26		(Terminal to output a signal for indication PHONO.)	
~	~			
T0	30		Terminal to output a signal for key scaning.	
K3	32	I	Terminal to input a signal for key input.	H
~	~			
K0	35			
K4	6	I	Terminal to input a signal for diode matrix.	H
K5	5			
S1	63	O	Terminal to output a segment signals for LCD.	—
~	~			
S28	36			
COM 1	65	O	Terminal to output a common signals for LCD.	—
COM 2	64			
$\overline{\text{HOLD}}$	67	I	Terminal to input a back-up signal.	L
$\overline{\text{SD}}$	69	I	When auto tuning operation, terminal to input a signal for receiving station.	L
HCTR	70	I	Terminal to input a FM IF signal.	—
LCTR	71	I	Terminal to input a AM IF signal.	—
FM IN	74	I	Terminal to input a signal for local oscillator from FM VCO.	—
AM IN	75	I	Terminal to input a signal for local oscillator from AM VCO.	—
E01,2	76,77	O	Terminal to output a comparison signal for phase.	—
$\overline{\text{INT}}$	66	I	Terminal to input a signal for remote.	⌐
VDD	31,73		Terminal to supply for positive voltage. +5V	—
VSS	76		Terminal to supply for voltage. GND	—

• TA7317P <Protector>

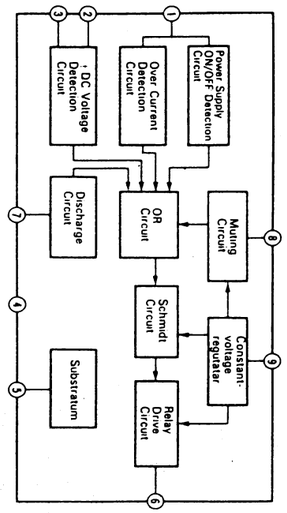

• LB1641 <Motor Driver>

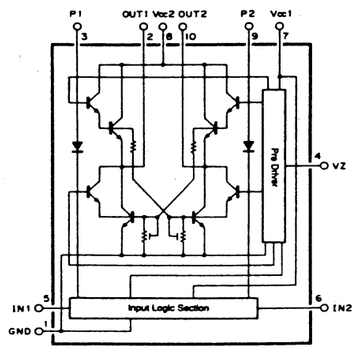

• BA6144 <L.E.D. Drive>

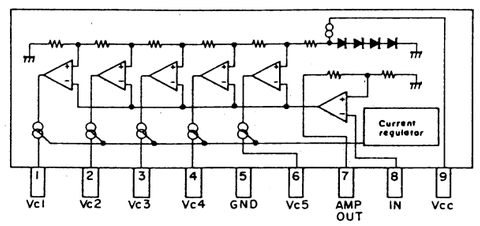

• LA1851N <Tuner>

Pin No.	I/O	Description
1	I	Terminal to input a signal for FM IF.
3		Terminal to supply for positive voltage. +5V
4	O	Terminal to output a signal for FM AFC.
5	O	Terminal to output a signal for AM demodulation.
6	I	Terminal to input a signal for AM demodulation.
7	O	Terminal to output a signal for FM discrimination.
8	O	Terminal to output a signal for FM demodulation.
9	I	Terminal to input a signal for FM demodulation.
10	I	Terminal to input a synchronizing signal for pilot. When this terminal is connected Vcc, VCO is stop.
11	I	Terminal to input a signal for PLL loop filter.
12	O	Terminal to output a signal for separation control.
13		Terminal for connecting a oscillator of 4.56MHz.
14	O	Terminal to output a signal for MPX L-ch.
15	O	Terminal to output a signal for MPX R-ch.
16		Terminal for adjusting AM auto stop level.
17	I	Terminal to input a muting signal . ≧ 1.5V:Mute ON , ≦1.5V: Mute OFF.
18	I	Terminal to input a selecting signal for AM/FM.
19	O	Terminal to output a IF count signal . ≧ 1.5V:IF COUNT ON , ≦1.5V: IF COUNT OFF.
21	I	Terminal to input a signal for tune LED.
22	I	Terminal to input a signal for stereo LED.
23		Ground terminal.
24	I	Terminal to input a signal for AM IF.
26	O	Terminal to output a signal for AM mixer.
27	I	Terminal to input a signal for AM RF.
29		Terminal for AM OSC.
30	O	Terminal for adjusting FM auto stop level.

• NJM4558D <OP Amp.>

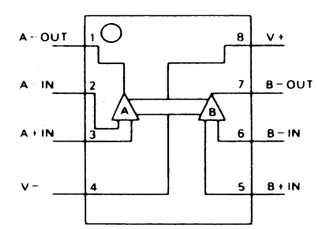

• LC7818 <Analog Electric Switch>

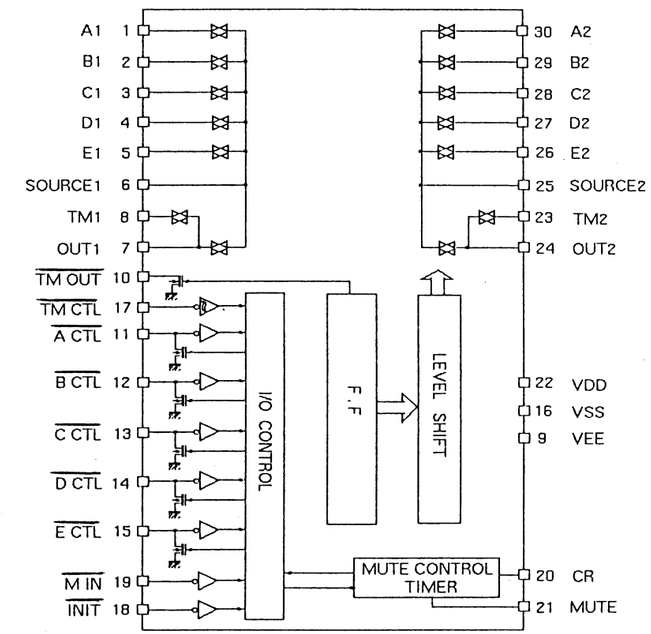

• LC7821 <Analog Electric Switch>

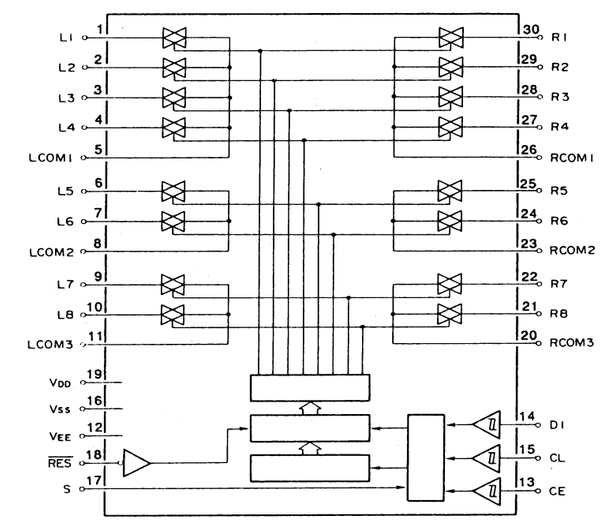

MC-3000/3000L (TU & Amp.)
MC-3000/3000L (TU & Amp.)

8. SCHEMETIC DIAGRAM

8-1. Tuner Section

* Design and specifications subject to change without notice for improvement.
* La présention et les spécifications sont susceptibles d'être modifiées sans préavis par suites d'améliorations éventuelles.
* Änderungen, die dem technischen Fortschritt dienen, bleiben vorbehalten.

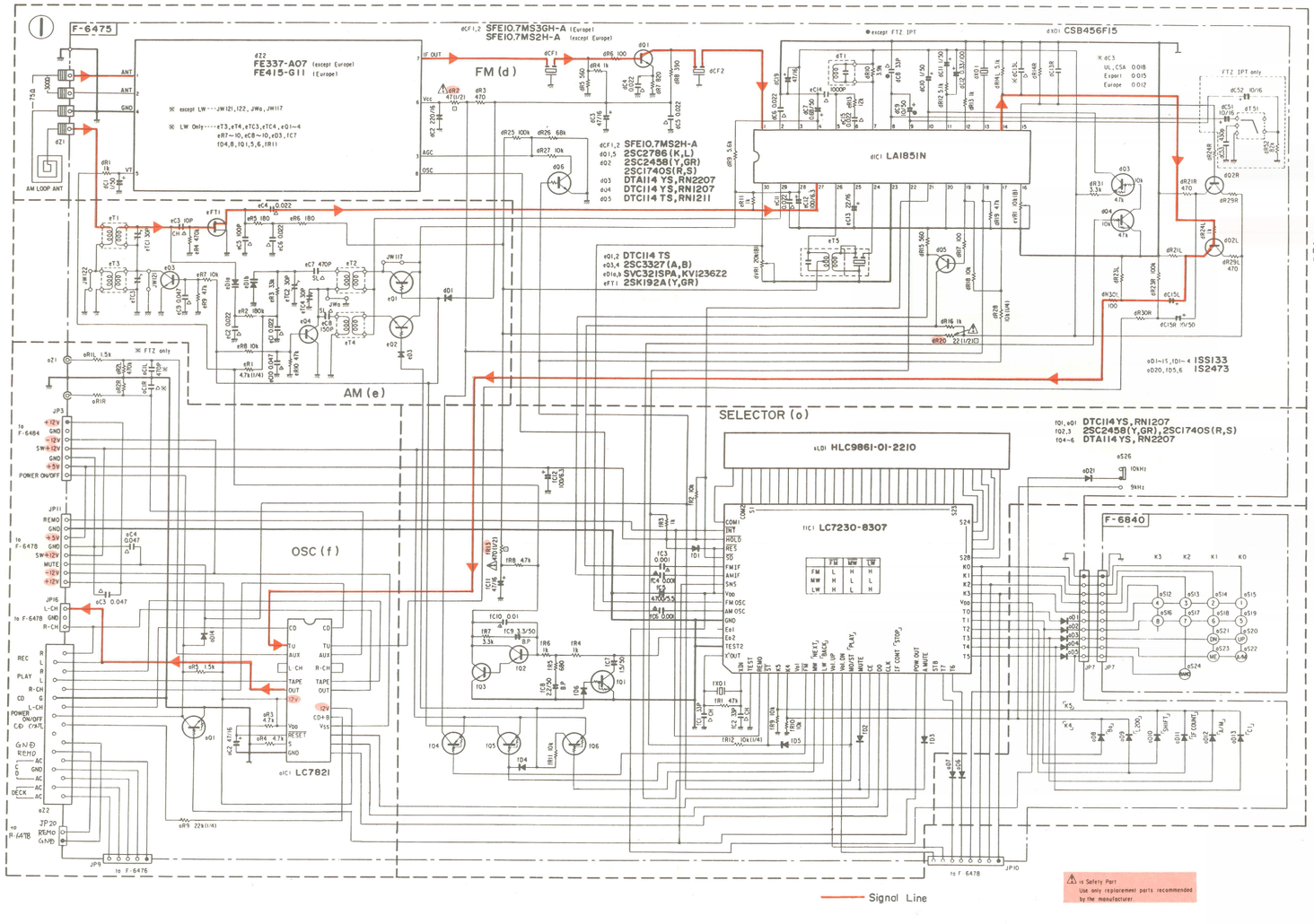

SYMBOL OF FUNCTION
(d) FM
(e) AM
(f) OSC
(o) SELECTOR

RESISTORS
Are in ohms, 1/6 Watts, ±5% Tolerance
Unless Otherwise Noted k kΩ

CAPACITORS
Are in μF, Unless Otherwise Noted P: pF

Electrolytic Capacitors
Capacitors (μF1/Volts (V))

SYMBOL
△ Ceramic
B.P Bi-Polar Electrolytic
□ Non-Inflammable Resistor

⚠ is Safety Part
Use only replacement parts recommended by the manufacturer.

Figers of Semi Conductor

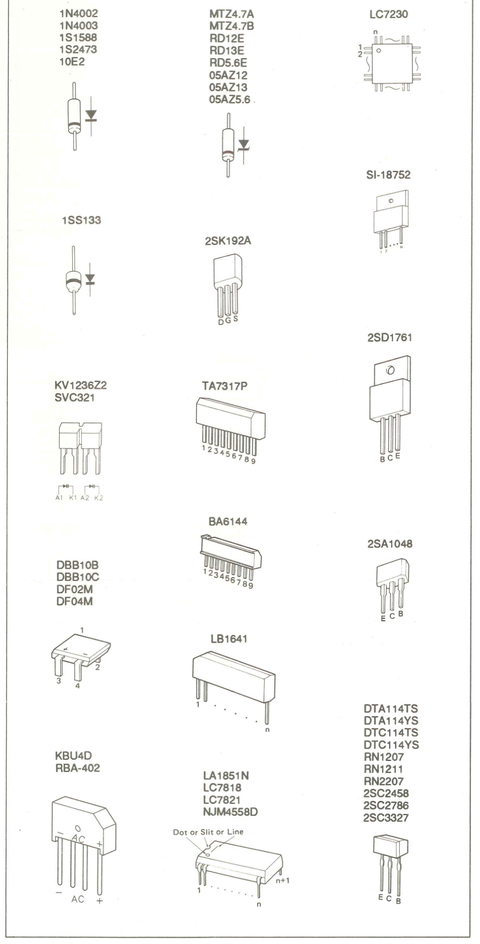

MC-3000/3000L
(TU & Amp.)

MC-3000/3000L
(TU & Amp.)

8-2. Amplifier Section

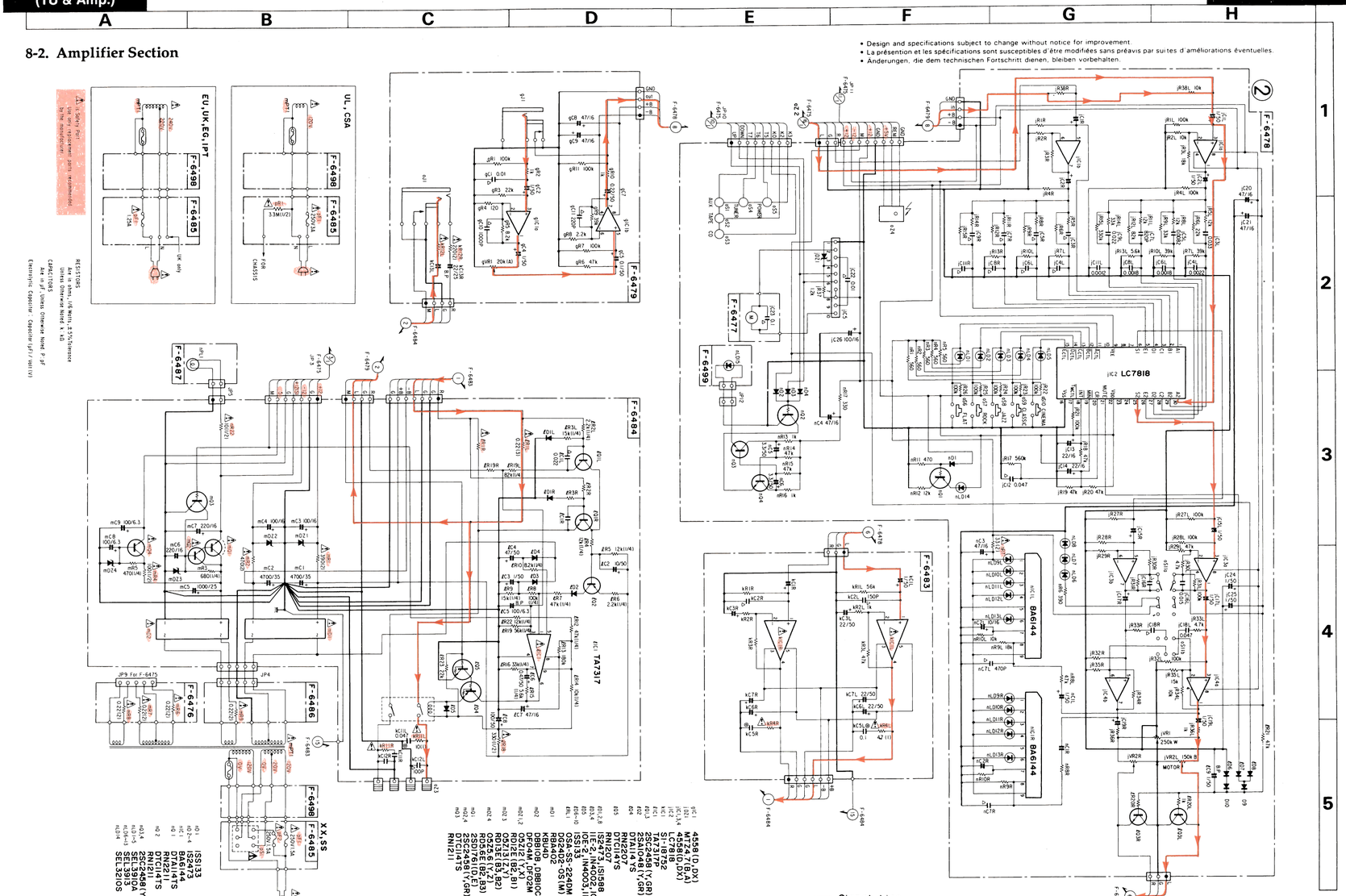

9. TERMINAL ASSIGNMENT OF HLC9861

No.	COM 1	COM 2	No.	COM 1	COM 2
1	COM 1		16	3e	3g
2		COM 2	17	3d	3c
3	MW	FM	18	3a	3h
4	AUTO	AM	19	4f	4b
5	1	LW	20	4e	4g
6	2	STEREO	21	4d	4c
7	MEMORY	AUTO TUNING	22	4a	X(4x)
8	MUTE	+50KHz	23	5e,f	5a
9	1b,c		24	5d	5g
10	KHz	MHz	25	5b,c	5i
11	2f	2a	26	6a,b,c,e,f	6d
12	2e	2g	27	7f	7b
13	2d	2c	28	7e	7g
14	2b	2h	29	7d	7c
15	3f	3b	30	7a	preset

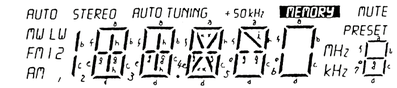

10. PACKING LIST & ACCESSORY LIST

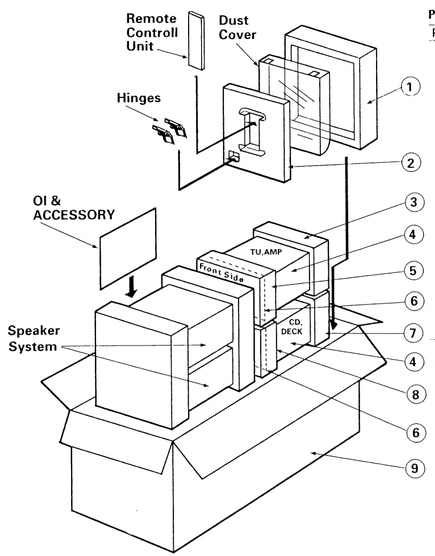

Parts List

Parts No.	Stock No.	Description
1	JS85044000	Styrofoam Packing(Dust Cover)
2	JS85043900	Styrofoam Packing(Re. Control ler)
3	JS85011100	Styrofoam Packing(TU,AMP-Rear)
4	9905405546	Vinyl Bag
5	JS85011200	Styrofoam Packing(TU,AMP-Front)
6	9001070228	Sheet for panel
7	JS85043500	Styrofoam Packing(Deck,CD-Rear)
8	JS85043400	Styrofoam Packing(Deck,CD-Front)
9	JS85044600	Carton Case (MC-3000)
	JS85044700	Carton Case (MC-3000L)
	71500RSF13	Remote Control ler RS-F13
	————	Dry Battery(SUM-3K)
	4300103140	AM Loop Antenna & Holder
	4570901260	Antenna Connector(EU,UK,EG,IPT)
	C488171262	FG Cable with connector
	5401300022	FM Antenna
	9080017840	Operating Instruction(E.F.S)
	9080017830	Operating Instruction(H.G.I.Sw)

Note:

E・F・S: English・French and Spanish Version

H・G・I・Sw: Hollands・German・Italian and Swedish Version

SANSUI

SANSUI ELECTRIC CO., LTD.: New River Building, 10-14, Shinkawa 1-chome, Chuo-ku Tokyo 104, Japan
PHONE: (0315566-1024 FAX: (0315566-1027 (International Division)

SANSUI USA INC.: 1290 Wall Street West, Lyndhurst, New Jersey 07071 U.S.A.
17150 South Margay Ave. Carson, California 90746 U.S.A.

SANSUI DEUTSCHLAND GMBH: Paul Ehrlich Strasse 8, 6074 Rödermark 2, F. R. Germany

山水電気株式会社 東京都中央区新川1-10-14 (〒104)

(SM2-215) Printed in Japan (1991. 01. P) <Stock No. 36556100>

MC-3000/3000L (TU & Amp.)
MC-3000/3000L (TU & Amp.)

8. SCHEMETIC DIAGRAM

8-1. Tuner Section

- Design and specifications subject to change without notice for improvement.
- La présention et les spécifications sont susceptibles d'être modifiées sans préavis par suites d'améliorations éventuelles.
- Änderungen, die dem technischen Fortschritt dienen, bleiben vorbehalten.

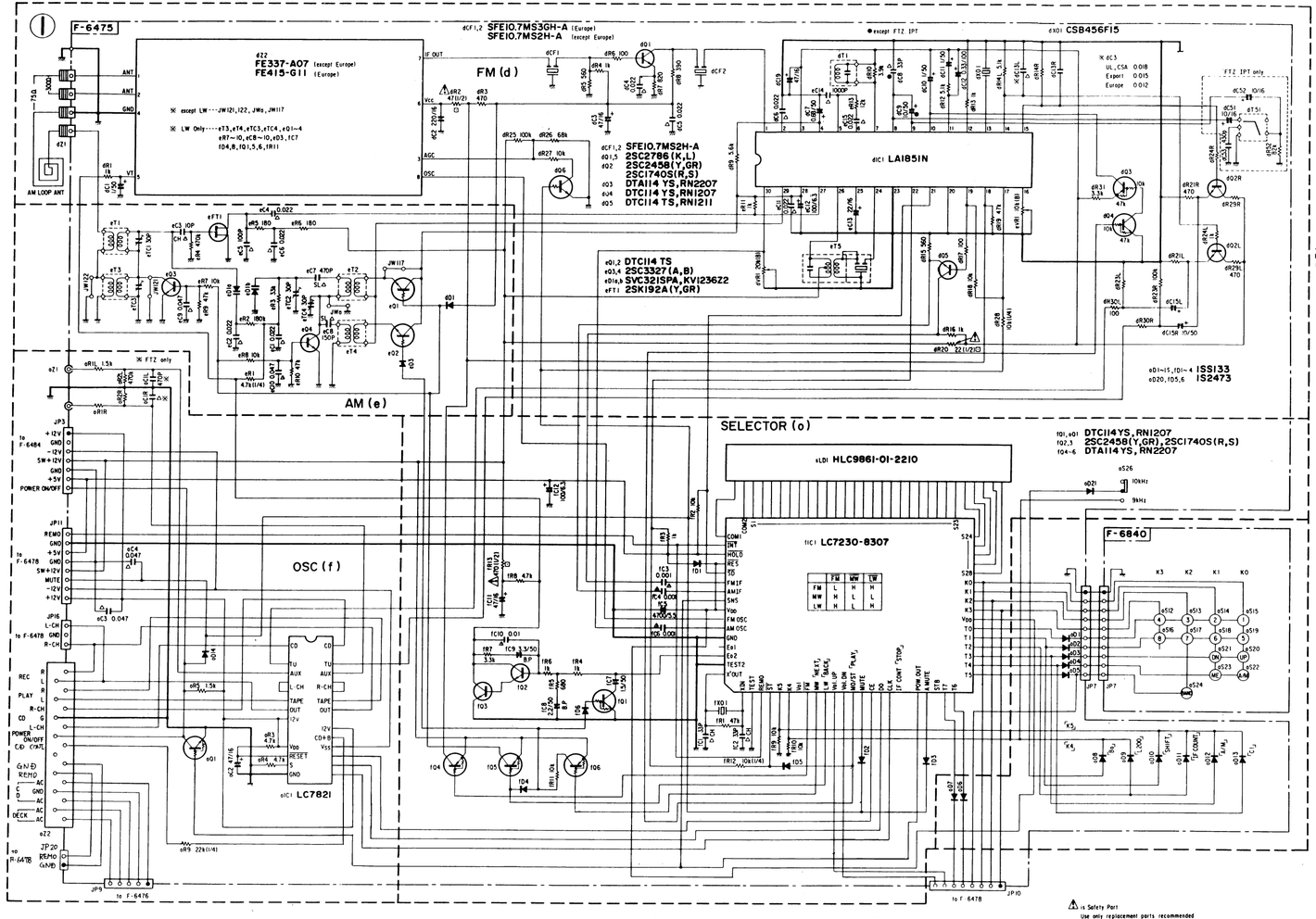

Figers of Semi Conductor

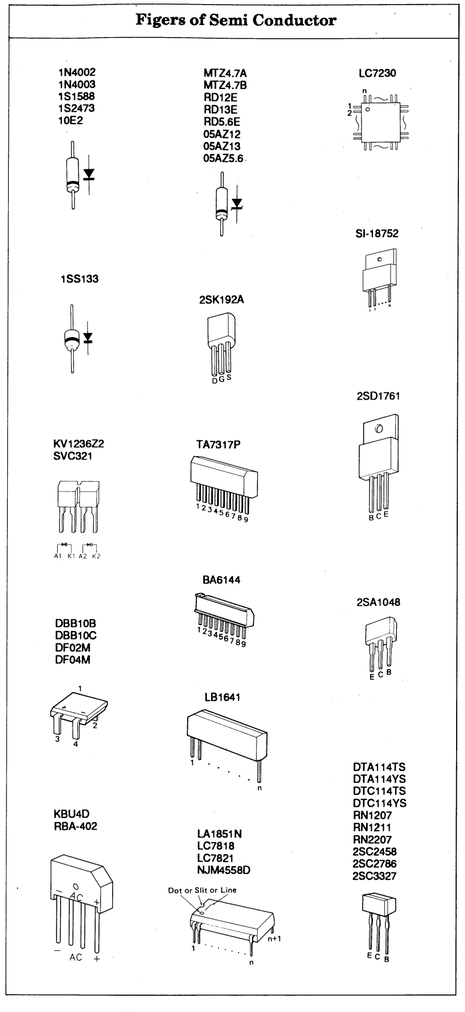

MC-3000/3000L
(TU & Amp.)
MC-3000/3000L
(TU & Amp.)

8-2. Amplifier Section

• Design and specifications subject to change without notice for improvement.
• La présention et les spécifications sont susceptibles d'être modifiées sans préavis par suites d'améliorations éventuelles.
• Änderungen, die dem technischen Fortschritt dienen, bleiben vorbehalten.

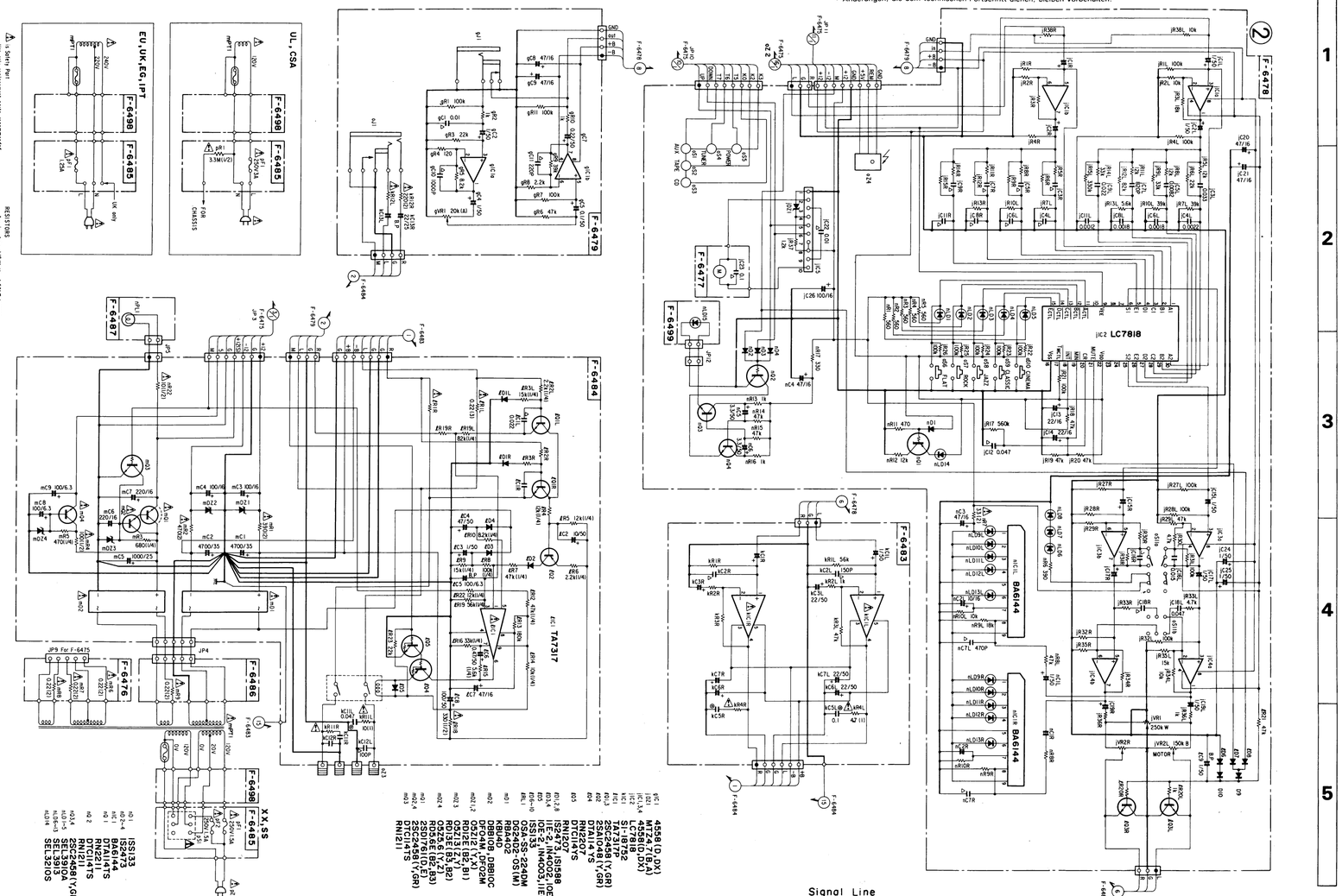

9. TERMINAL ASSIGNMENT OF HLC9861

No.	COM 1	COM 2	No.	COM 1	COM 2
1	COM 1		16	3e	3g
2		COM 2	17	3d	3c
3	MW	FM	18	3a	3h
4	AUTO	AM	19	4f	4b
5	1	LW	20	4e	4g
6	2	STEREO	21	4d	4c
7	MEMORY	AUTO TUNING	22	4a	X(4x)
8	MUTE	+50KHz	23	5e,f	5a
9	1b,c		24	5d	5g
10	KHz	MHz	25	5b,c	5i
11	2f	2a	26	6a,b,c,e,f	6d
12	2e	2g	27	7f	7b
13	2d	2c	28	7e	7g
14	2b	2h	29	7d	7c
15	3f	3b	30	7a	preset

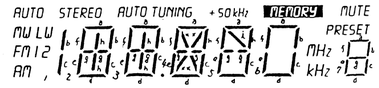

10. PACKING LIST & ACCESSORY LIST

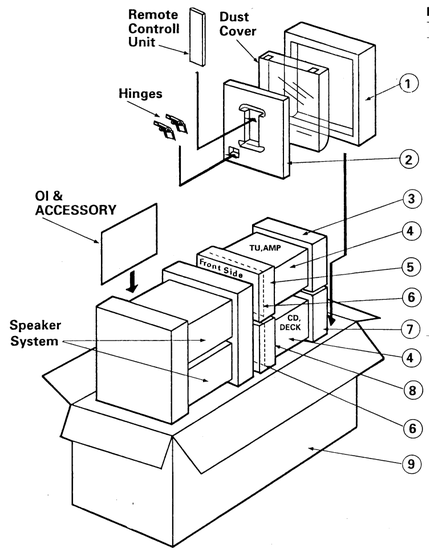

Parts List

Parts No.	Stock No.	Description
1	JS85044000	Styrofoam Packing(Dust Cover)
2	JS85043900	Styrofoam Packing(Re. Control ler)
3	JS85011100	Styrofoam Packing(TU,AMP-Rear)
4	9905405546	Vinyl Bag
5	JS85011200	Styrofoam Packing(TU,AMP-Front)
6	9001070228	Sheet for panel
7	JS85043500	Styrofoam Packing(Deck,CD-Rear)
8	JS85043400	Styrofoam Packing(Deck,CD-Front)
9	JS85044600	Carton Case (MC-3000)
	JS85044700	Carton Case (MC-3000L)
	71500RSF13	Remote Control ler RS-F13
	————	Dry Battery(SUM-3K)
	4300103140	AM Loop Antenna & Holder
	4570901260	Antenna Connector(EU,UK,EG,IPT)
	C488171262	FG Cable with connector
	5401300022	FM Antenna
	9080017840	Operating Instruction(E.F.S)
	9080017830	Operating Instruction(H.G.I.Sw)

Note:

E・F・S: English・French and Spanish Version

H・G・I・Sw: Hollands・German・Italian and Swedish Version

SANSUI

SANSUI ELECTRIC CO., LTD.: New River Building, 10-14, Shinkawa 1-chome, Chuo-ku Tokyo 104, Japan PHONE: (03)5566-1024 FAX: (03)5566-1027 (International Division)
SANSUI USA INC.: 1290 Wall Street West, Lyndhurst, New Jersey 07071 U.S.A. 17150 South Margay Ave. Carson, California 90746 U.S.A.
SANSUI DEUTSCHLAND GMBH: Paul Ehrlich Strasse 8, 6074 Rödermark 2, F. R. Germany
山水電気株式会社 東京都中央区新川1-10-14 (〒104)

(SM2-215) Printed in Japan (1991. 01. P) <Stock No. 36556100>